Nikola Tesla's Patent Collection
(1/1)
kokomoj0:AC Electro Magnetic Motor 433,700 August 5 1890AC Motor 433,701 August 5 1890AC Generator 447,921 March 10 1891 Alternating Motor 555,190 Feb 25 1896Aerial Transportation 1,655,114 January 3 1928Producing High Frequency 583,953 June 8 1897Producing High Frequency 577,670 Feb 23 1897Producing High Frequency and Potential 568,176 Sep 22 1896Producing High Frequency 568,180 Sep 22 1896Producing Ozone 568,177 Sep 22 1896 Utilization of Radiant Energy 685,957 Nov 5 1901 Transmission of Electrical Energy 649,621 May 15 1900 Transmitting Electrical Energy 1,119,732 Dec 1 1914 Utilizing Effects Transmitted From a Distance to a Receiving Device Through Natural Media 685,955 Nov 5 1901 Utilizing Effects Transmitted Through Natural Media 685,956 Nov 5 1901Armature for Electric Machine 417,794 Dec 24 1889Art of Transmitting Electrical Energy Through the Natural Mediums 787,412 Apr 18 1905Coil for Electro Magnets 512,340 Jan 9 1894Commutator for Dynamo Electric Machines 334,823 Jan 26 1886Commutator for Dynamo Electric Machines 382,845 May 15 1888Dynamo Electric Machine 359,748 March 22 1887 Dynamo Electric Machine 390,414 Oct 2 1888Dynamo Electric Machine 390,721 Oct 9 1888Dynamo Electric Machine 25 406,968 July 16 1889Dynamo Electric Machine or Motor 18 390,415 October 2 1888Electric Arc Lamp 2 335,786 February 9 1886Electric Arc Lamp 3 335,787 February 9 1886Electric Circuit Controller 77 609,246 August 16 1898Electric Circuit Controller 78 609,247 August 16 1898Electric Circuit Controller 79 609,248 August 16 1898Electric Circuit Controller 80 609,249 August 16 1898Electric Circuit Controller 82 609,251 August 16 1898Electric Circuit Controller 84 613,735 November 8 1898 Electric Generator 55 511,916 January 2 1894 Electric Incandescent Lamp 46 455,069 June 30

1891Electric Motor 30 416,194 December 3 1889 Electric Railway System 61 514,972 February 20 1894Electrical Circuit Controller 76 609,245 August 16 1898Electrical Circuit Controller 83 611,719 October 4 1898Electrical Condenser 50 464,667 December 8 1891Electrical Condenser 66 567,818 September 15 1896Electrical Conductor 57 514,167 February 6 1894Electrical Igniter for Gas Engines 81 609,250 August 16 1898Electrical Meter 45 455,068 June 30 1891Electrical Meter 62 514,973 February 20 1894Electrical Transformer 75 593,138 November 2 1897Electrical Transformer or Induction Device 38 433,702 August 5 1890 Electrical Transmission of Power 12 382,280 May 1 1888Electrical Transmission of Power 13 382,281 May 1 1888Electrical Transmission of Power 52 511,559 December 26 1893Electrical Transmission of Power 54 511,915 January 2 1894Electro Magnetic Motor 8 381,968 May 1 1888Electro Magnetic Motor 9 381,969 May 1 1888Electro Magnetic Motor 11 382,279 May 1 1888Electro Magnetic Motor 23 405,858 June 25 1889Electro Magnetic Motor 27 416,191 December 3 1889 Electro Magnetic Motor 29 416,193 December 3 1889Electro Magnetic Motor 31 416,195 December 3 1889Electro Magnetic Motor 33 418,248 December 31 1889Electro Magnetic Motor 34 424,036 March 25 1890Electro Magnetic Motor 39 433,703 August 5 1890Electro Magnetic Motor 40 445,207 January 27 1891Electro Magnetic Motor 44 455,067 June 30 1891Electro Magnetic Motor 47 459,772 September 22 1891Electro Magnetic Motor 49 464,666 December 8 1891Electromagnetic Motor 64 524,426 August 14 1894Flow Meter 109 1,365,547 January 11 1921Fluid Propulsion 100 1,061,142 April 29 1913Fountain 102 1,113,716 October 13 1914Frequency Meter 110 1,402,025 January 3 1922Incandescent Electric Light 60 514,170 February 6 1894Lightning Protector 105 1,266,175 May 14 1918Manufacture of Electrical Condensers, Coils, &c 73 577,671 February 23

1897Means for Generating Electric Currents 58 514,168 February 6 1894Means for Increasing the Intensity of Electrical Oscillations 90 685,012 October 22 1901Aerial Transportation 111 1,655,113 January 3 1928and Controlling Mechansim of Moving Vessels or Vehicles 85 613,809 November 8 1898and Electrical Conversion and Distribution 48 462,418 November 3 1891and Producing Currents of High Frequency 70 568,179 September 22 1896 Converting and Distributing Electric Currents 14 382,282 May 1 1888Electrical Power Transmission 24 405,859 June 25 1889Insulating Electric Conductors 88 655,838 August 14 1900 Insulating Electric Conductors 89 11,865 October 23 1900Intensifying and Utilizing Effects Transmitted Through Natural Media 91 685,953 November 5 1901Obtaining Direct from AC s 26 413,353 October 22 1889Operating Arc Lamps 41 447,920 March 10 1891Operating Electro Magnetic Motors 22 401,520 April 16 1889Operating Electro Magnetic Motors 28 416,192 December 3 1889Regulating Producing Currents of High Frequency 69 568,178 September 22 1896Signaling 97 723,188 March 17 1903 Utilizing Effects Transmitted Through Natural Media 92 685,954 November 5 1901Utilizing Radiant Energy 96 685,958 November 5 1901Pyromagneto Electric Generator 35 428,057 May 13 1890Reciprocating Engine 59 514,169 February 6 1894Regulator for Alternate Current Motors 20 390,820 October 9 1888Regulator for Dynamo Elecric Machines 6 350,954 October 19 1886Regulator for Dynamo Electric Machines 4 336,961 March 2 1886 Regulator for Dynamo Electric Machines 5 336,962 March 2 1886Ship's Log 107 1,314,718 September 2 1919Speed Indicator 104 1,209,359 December 19 1916Speed Indicator 106 1,274,816 August 6 1918Steam Engine 63 517,900 April 10 1894System of Electric Lighting 43 454,622 June 23 1891System of Electrical Distribution 10 381,970 May 1 1888System of Electrical Distribution 16 390,413 October 2 1888System of Electrical

Power Transmission 53 511,560 December 26 1893System of Electrical Transmission of Power 51 487,796 December 13 1892System of Signaling 98 725,605 April 14 1903System of Transmission of Electrical Energy 86 645,576 March 20 1900 Thermo Magnetic Motor 21 396,121 January 15 1889Turbine 101 1,061,206 May 6 1913Valvular Conduit 108 1,329,559 February 3 1920Here is a link for searching patents http://www.uspto.gov/patft/

pese: Nice Collection.Links to the above patents find in http://ch.to/FEhere are they: http://www.stormloader.com/members/pese/fe/tesla/Tesla_e_books.txtalso dirctly to "click-open" http://www.overunity.com/index.php/topic,2027.0.htmlG.Pese

kokomoj0:If you guys want another handy site here is rex: http://www.rexresearch.com/1index.htm Free Energy / Over-Unity: ADAMS: Motor ** ALEXANDER: Dyna-Motor ** D'ANGELO: Interatomic Ion Motor ** BALDINELLI: Dual Relay Charger ** BARBAT: Self-Sustaining Electrical Generator ** BAUMANN: Testatika Generator ** BEDINI: Motor-Generator ** BRITTEN: Antenna ** CHRISTIE & BRITS: Controller ** COLER: Stromzeuger ** CORREA: Pulsed Abnormal Glow Discharge ** ** CRAIG: Hall Effect Generator ** ** DEPALMA: N-Machine ** ECCLES: Electrolytic Cell ** ECKLIN: Permanent Magnet Motor / Stationary Armature Generator ** FRENETTE & PERKINS: Friction Heater ** FE Generators #1 ** FE Generators #2 ** ** GARY: Magnet Motor ** ** ** GRAY: Motor ** ** ** GRITSKEVITCH: Over-Unity Hydro-Magnetic Generator ** ** GULLEY: Self-Sustaining Electric Motor ** HENDERSHOT: Generator ** HODOWANEC: Magnetic Resonance Amplifier ** HUBBARD: Generator ** IMRIS: Optical Electrostatic Generator ** JAMISON: Energizer ** The Joe Cell ** JOHNSON: Magnet Motor ** KANAREV: Plasma Water Electrolysis ** KELLOGG: Photon-Proton Electric Generator ** KINCHELOE: N-Machine ** KOLDOMASOV: Reactor ** LAMBERTSON: WIN Generator ** MARKOVICH: ATREE ** McCLAIN & WOOTAN: MRA (#1) ** McCLAIN & WOOTAN: MRA (#2) ** McKIE: PODMOD ** MERKL: Chondriana & Life Crystals ** ** MEYERS: Absorber ** ** ** MILKOVIC: Two-Stage Mechanical Oscillator ** ** MINATO: Magnet Motor **

MOLLINET: Power Unit LE M3 ** MORAY: Generator ** MORAY: Beyond the Light Rays ** MORAY: Speech: Free Energy ** NELSON: Electron Trap ** NEWMAN: Motor ** PATRICK & BEARDEN: Motionless Electrical Generator ** PERRIGO: Generator ** PRENTICE: Antenna ** ** RAYLEIGH: Active Nitrogen ** ** REED: Magnetic Motor ** SCHAEFFER: Steam Generator ** SCHAPPELLER: Glowing Magnetism ** SCRAGG: HCl Motor ** SEARL: Generator ** SEARL (#3): Levity Disc Articles ** SEARL: Searl Effect Generator #4 ** SEIKE: G-Strain Amplifier/Monopolar Moebius Coil ** SEROGODSKY: Heat Engine ** SHOULDERS: Elektrum Validum ** STONEBURG: Self-Sustaining Electric Motor ** SWEET: Vacuum Triode Amplifier ** SZABO: Energy-by-Motion (EBM) Generator ** TEWARI: Space Power Generator ** TROMBLY: N-Machine ** YABLOTCHKOV: Over-Unity ES Amplifier ** YILDIZ: Electrical Generator ** ZINSSER: Kinetobaric Generator

kokomoj0:TESLA DICTIONARY OF ADVANCED RESEARCH TERMINOLOGY 1996 EDITION©1996 by Michael Riversong & J.W. McGinnisNOTE: A printed copy of this document is available through the Catalog section of this web site.Adiabatic 1. Any thermodynamic or magnetic process in which no heat or other energy is moving in or out of the process area. 2. When vapor is expanded or compressed without any transfer of heat either to the outside or from the environment to the vapor. (Wiseman) AetherAlternative spelling of Ether when used in the sense of a fundamental invisible substance permeating the entire Universe.Alpha ParticlesRadioactive emissions conceived as consisting of two protons and two neutrons travelling together. This could also be called a helium ion. These have a positive charge, travel slowly, and can damage physical matter by contact. They may draw electrons from the environment in order to balance charge. If the environment happens to be within a living body, that body will be weakened.Alternating current (AC)Electricity which reverses its direction of flow in a cyclic pattern according to its frequency. Tesla developed the first commercially used Alternating Current generators in 1893.AmperageAmount of electrons moving in an electrical flow. This is measured against time with an ammeter. One amp equals one coulomb of electrons moving past a point in one second.Ball Lightning

1. Any electrical discharge in free space which appears to have a spherical form. 2. When a pseudosphere of magnetic field lines and a catenoid of a surface of associated electric field lines interact to form a toroid. (Kovac) Beta ParticlesRadioactive emissions consisting mostly of stray electrons. These have a negative charge. In large numbers they can cause some damage to physical matter, such as radiation burns. Usually, they dissipate into the atmosphere and become negative ions, which are beneficial to life processes.BifilarUsually refers to wires folded back on themselves in a winding to increase efficiency. Can also mean the use of two wires in an assembly such as a transformer.BioelectromagneticsStudy of how living bodies respond to the presence of electromagnetic fields.Brown's GasHighly efficient form of matter demonstrated by Bulgarian-American researcher Yul Brown. It may be an elemental form preceding hydrogen. It is made by a proprietary process for dissociating water. There are indications that use of this gas can transmute radioactive wastes into more benign substances.CaduceusIn ancient times, a magical staff consisting of a golden rod with two serpents entwined around it. Now refers to any wire winding similar in form.CapacitanceHolding back of electrical current by a thin nonconducting layer. The current can then be discharged under the control of a circuit or an operator.The amount of capacitance is proportional to the relative strength of the non-conducting layer or area in comparison to the strength of the current.CatalystAnything which facilitates a chemical reaction, which is not directly changed or consumed by the process. CatalyticCatalysisAny process which involves the facilitation of a chemical reaction by a substance not directly changed or consumed by the reaction itself. Catenary, CatenoidShape formed by the curve of a loose string, under the influence of gravity, suspended by its two ends. A heated glass tube with the ends pulled apart will form a catenoid. (Kovac)Ch'iChinese concept of a characteristic which pervades all the Universe, having no mass, energy, or existence in time, but is essential as a foundation for all material and life. It is best described in the Tao Te Ching by Lao Tze. Also written as Ki (Japanese) or Qi (People's Republic of China).Chladni Plates

Special surfaces which transmit acoustic waves in such a way that sand or metal filings will form distinctive patterns based on the character of vibrations passing through the area. Named after German physicist Ernst Florens Friedrich Chladni, 1756-1827.CoherenceWhen waves have a continuous phase relationship with each other.Cohesion 1. Something sticking to something else. 2. Sympathetic negative attraction, its degree corresponding to the character of molecular density. (Keely) Cold FusionWhen atoms merge into a heavier element at temperatures typical of Earth's normal environment, thus generating energy. There are several possible chemical reactions in this class. Most of them involve some kind of catalysis.CoronaLuminous electromagnetic discharge, either visible or detectable by instruments, which suffuses an area of the atmosphere around the origin point of the phenomenon.CoulombMeasure of the estimate of the number of electrons physically present at any point. One Coulomb equals about 6.25 billion billion electrons, which has been standardized as one ampere of electricity in one second.Cosmic Rays 1. The highest possible frequencies of electromagnetism. These emanate from distant regions of space and can pass through all physical matter easily. 2. Unspecified waves of charged particles which come from outer space and hit the planet constantly, and can cause changes in physical matter on some level. In this sensed, these are not necessarily electromagnetic in nature. CryogenicsStudy of physical matter and associated waveforms at extremely cold temperatures, approaching those of deep space. Under these conditions, many elements suddenly become superconductors. Therefore, part of this study focuses on how to induce superconductivity at higher temperatures.CymaticsStudy of the response of physical substances to vibrations.DendriticLiterally means "tree-like", and can apply to anything which naturally branches out in this manner, including trees, rivers, lightning, and blood vessels.Dimension 1. Distance from one point to another in space. 2. An area of reality. Direct Current Electricity consisting of a flow of electrons in one direction. Static electricity and chemical battery current are examples.Drown, RuthDeveloper of a series of radionics instruments in the 1930's. These worked on a sympathetic

vibratory principle, and were said to treat patients remotely by acting on blood samples, hair, or photographs. Sometimes similar machines are named after her.DXAmateur radio term meaning "distance". Usually refers to communications from far points.DyneMetric standard measurement of force. An acceleration of one centimeter per second on one gram of mass.EideticDerived from Plato, who probably inherited the concept from Persians, who in turn probably inherited it from Egyptians. The ancient view of vision was very different from ours. It extended beyond mere objects. Ancient philosophers were well-versed in qualitative sciences, and had observed that matter in an ordinary state was radiant. Matter sends out its emanations in all directions, even in the dark. The human & animal eye is a special organ through which the aura is projected. When the mind is properly initiated and exercised, consciousness can actually leak through the eyes, and be projected. When that happens, a very special type of vision occurs. They gave a name to the radiance coming from the eye and from all objects: EIDOLA, which means literally "idea messages". What they're saying is, when the Eidola from your eyes and Eidola from objects meet, that creates perception. One can literally examine ideas which have no physical form, but which nevertheless radiate Eidola. Ideas can radiate Eidola. Descartes restored this idea in his discussions of "Ether". Eidolic vision is the ancient term; Eidetic is what the term became with the movement from qualitative to quantitative. Eidetic vision includes a special type of persistent afterimage, which has conscious qualities. This is all beyond neurology.It is an ability to process or reshape remembered forms and images. Memory is a reconnection with real things -- with eidetic or eidolic images.Eidolic = qualitativeEidetic = quantitativeEidetic imagery is carried with a set of lines, as a living thing. (Vassilaitos) NOTE: A similar concept, using different terminology, is developed in the book Scientology 8-8008 by L. Ron Hubbard.EidolicSee definition for Eidetic.Electricity 1. Any flow of electrons. 2. Low-frequency flow of electromagnetic energy, which under normal Earth conditions will tend to stay confined in wires or along set paths. Electrochemical Describes any reactions between chemical elements which

involve electricity, either as a product or as a catalyst. ElectrolysisPassage of electrical current through a fluid, in which the flow is accompanied by movement of ions. ElectrolyticElectromagneticSee Electromagnetism Electromagnetic FieldA region of space in which electrical and magnetic energy are charging the area. There are generally two components to the field: magnetic and electric, or space charge. These can be at widely varying levels relative to each other, which is an important consideration in environmental surveys.Electromagnetic SpectrumRange of frequencies of all energies which have been classified as electromagnetic. The slower the frequency of vibration relative to time, the longer the wavelength of the energy. In order from slowest to fastest, the frequency range encompasses the following energies:Alternating Current (AC) ElectricityVery Low Frequency (VLF) RadioAmplitude Modulation (AM) RadioShortwave (SW) RadioHigh Frequency (HF) RadioMicrowave, RadarInfrared (Heat)Visible LightUltraviolet LightX-RaysGamma RaysCosmic RaysElectromagnetismOne of the fundamental forms of energy in the Universe. It changes characteristics radically depending on its frequency and wavelength, which tend to correlate closely with each other. Generated in relatively pure form by numerous natural processes such as solar fusion, electromagnetism normally interacts with other energy forms. As of this writing, it is generally thought to travel at a constant speed, known as the "speed of light", or 186,000 miles per second. Larry Spring has demonstrated that electromagnetic energy usually travels through space as an expanding sphere, and will tend to do so until it encounters an obstacle.ElectromechanicalOf or pertaining to mechanical devices or systems electrically actuated, such as a solenoid (magnetic actuator) or an electrometer (electrostatically actuated). (Nurnberger) ElectromotiveThe potential of electrical force sufficient to create an obvious effect on matter, generally by moving it. ElectronSmall theoretical particle which is generally believed to normally orbit around the nucleus of an atom. It may under some conditions come loose from atoms in materials, such as metals, and create a flow of electrical current. Many physicists believe electrons are always composed of very small, unstable particles.Electrophoresis

Movement of suspended particles through a fluid when stimulated by an electrical force. An example is a laboratory process used in medicine to determine differences in motion of protein molecules. This can be used to tell if someone has had a heart attack, by applying the process to a sample of protein molecules from the heart muscle. ElectrostaticStationary separation of electrical charges. Element1. Any fundamental frequency of matter, expressed materially as a unique atomic structure, with its own chemical properties, conventionally illustrated in a table of periodic characteristics depending on which octave of material coherence the atomic structure resides.2. Term incorrectly applied to the Chinese conception of five natural forces. These forces are translated as Water, Wood, Fire, Earth, and Metal.ElopticType of radionic energy patterns observed and utilized by Dr. T. Galen Hieronymous. Equipotential SurfaceThe surface of anything where the electrical or magnetic potential is the same throughout.ErgA measurement of applied energy and work within the metric system. Standardized as one dyne of force applied through the distance of one centimeter.Ether 1. Fundamental medium of time and space, postulated by most 19th Century scientists but largely abandoned as a concept after 1900. This was originally used in attempts to explain how waves can propagate through an apparent vacuum. 2. A name for a specific chemical, also known as Chloroform. It was given this name because it evaporates easily and evenly permeates air. In medicine, it was one of the first generally used anesthetics, but was abandoned because of its extreme flammability. 3. A state of matter at plasma or above. (Pond) ExcitonIn a crystal, holes (vacancies) and electrons can become energetic, and move about the area. This phenomenon is key to the development of transistors and integrated circuits.Faraday CageBy setting up a room with grounded metal walls, it is possible to keep all electromagnetic waves from entering the area from outside. This is a good environment for research. Named for Michael Faraday, an early electrical researcher.FEAAbbreviation for Free Energy Accumulator. (Wiseman)FractalsMathematical equations which describe the general natural sequence of evolution applicable to matter and energy. Most dendritic

processes are best described this way.Free EnergyGaining power from an as yet unknown (or possibly unknowable) source.FrequencyRate of vibration of a force or wave, usually measured relative to local time.FusionWhen atoms merge into a heavier element. This generates energy across the electromagnetic spectrum. Until 1987, it was generally thought that this could only occur at extremely high temperatures typical of plasmas. Thus, an atomic fission explosion was deemed necessary to generate sufficient heat to produce a fusion explosion in hydrogen bombs. Attempts to fully control high-temperature fusion reactions have, as of this writing, universally failed, primarily due to borderline phenomena related to containment of the reactions. See Cold Fusion.Gamma RaysExtremely high frequencies of electromagnetic radiation. These will pass through physical matter, and may alter its structure if possessing sufficient intensity.GeobiologyThe study of energies coming from the Earth and how they affect life. GaussA measurement of magnetic force, named after Karl Friedrich Gauss, German physicist and mathematician, 1777-1855. See Magnetic Measurement Scale.Giga-One billion of any measurement.GravityOne of the fundamental forms of energy in the Universe. Its operation is not generally understood at this time. Gravity tends to be stable, although some researchers have found it forming into waves on occasion. As a force, it may be either a push, a pull, or both. According to conventional physics, it is the weakest of the four fundamental natural forces, but it operates over the greatest range. It is the observed tendency of material objects to be attracted to each other.GrungeRadio interference of either man-made or natural origin. See also QRM and QRN.HamSlang term for an amateur radio operator. Harmonic 1. Having to do with the resonance of one thing to another, through matching frequencies. A harmonic is a frequency that is a doubling or halving of another frequency. 2. In music, partial resonance between one frequency and another. (Pond) Certain intervals between tones may sound pleasant to the human ear, and thus are called harmonic. Partial resonance may also be a factor in chemistry and physics, but this area has not been explored as of this writing. HertzThe name of a German physicist

applied to the measurement of frequency in cycles per second. Heinrich Hertz, 1857-1894.HomopolarWhen only one electromagnetic pole is present in a particular structure. All charge is equally distributed.ImpedanceA measure of resistance to electrical current flow.ImplosionSudden inward collapse of matter. In many natural processes, this occurs in the form of a rapid vortex. Several engineering possibilities for harvesting energy from controlled implosions have been proposed, beginning with the work of German researcher Viktor Schauberger in the 1920's.Inert Gas Any of the so-called "Noble Gases" from the Periodic Table of the Elements. These elements normally do not combine with other elements. They are useful as buffers against chemical interactions, and appear to have interesting properties related to scalar-field interactions. The gases and their atomic numbers are: Helium 2, Neon 10, Argon 18, Krypton 36, Xenon 54, and Radon 86.Interferometer 1. Instrumentation which uses interference patterns between two waves to determine parameters of a wave. This can be used in optics, electronics, radio, astronomy, and acoustics. 2. An effect similar to an interference pattern. (Beardon) 3. Certain natural objects could be technically said to be interferometers, including planets, the human brain, and quartz crystals. What they have in common is a bipolar structure, which can serve simultaneously as a generator and background for detecting interference patterns. (Beardon) IonAn incomplete atom or a group of incomplete atoms, which thus has a charge. These can be simple, as in negative ions, which often consist of free electrons, or they can be fairly complex, as the nuclei of metal atoms with some or all electrons stripped off. Ions form because of dissociation (e.g. salt in water), strong radiation (UV, x-rays, radioactivity etc.), strong electrical forces (e.g. high voltage on a pointed electrode), radioactive decay, extreme heat, cold fusion and other processes. In general, negative ions have an excess of electrons, and positive ions lack electrons.IsotropicEverywhere the same. Can be applied to a geometric figure in space, or to a solution.Keely, John Ernst WorrellInventor and scientist who lived 1837 - 1898, considered the founder of the field of Sympathetic Vibratory Physics. He was noted for having developed a technology of

levitation, and motors which ran on acoustical energy. He assembled a remarkable set of laws which apply to chemistry and physics. Sometimes inventions similar to his are named after him. The primary source of information on his work in the 20th century has been Delta Spectrum Research, headed by Dale Pond.KiSee Ch'i.LC CircuitL stands for Inductance, and C stands for Capacitance. So this is any circuit in which inductance and capacitance are used in combination. This can create resonant phenomena.LightIntermediate frequencies of electromagnetic energy which happen to be visible to the sensory apparatus of our species.LightningLarge electrical discharge through the air. Can be generated by storms, Tesla coils, and atomic blasts.LuminousEmitting any kind of light. Magnetic 1. Having a tendency to attract or repel iron, depending on polarity. 2. Anything which attracts or repels another thing by invisible force. Magnetic Measurement ScaleNote that the items on this scale do not seem to precisely match in all cases. This is due to a current imperfect understanding of the nature of magnetism on the part of most, if not all, scientists.Maxwell: 1 Gauss per square centimeter.Gauss: one line of force per square centimeter during 1 second of time.Milligauss: One thousandth of a Gauss; the most commonly used measurement of AC electromagnetic fields in residential and commercial inspections.Weber: Enough magnetic force to induce 1 volt of electricity in a single-coil circuit during 1 second of time. 100,000,000 Maxwells.Tesla: 1 Weber per square meter; equals 10,000 Gauss.Magnetic Resonance Amplifier (MRA)A class of over-unity device involving regeneration of magnetic fields.Magneto Hydro Dynamics (MHD) 1. Treatment of plasma as a fluid in attempts to control high-temperature fusion reactions. 2. Process of applying magnetic fields to water and other fluids to modify their energy, and thus become effective agents for other purposes, such as medicine or industrial applications. Magnifying TransmitterDevice under development by Tesla which was intended to allow electrical energy to manifest at will anywhere on this planet. This project was the primary experiment at Wardencliffe when funding was cut off by J.P. Morgan in 1907, and so was never completed.MalilluminationWhen plants, animals, or humans have light which is missing essential

frequencies, and disease results. (Dr. John Ott)ManaA root word for "power", usually spiritual. This word is associated with the Kahuna priesthood of Hawaii.Maximum Usable FrequencyIn radio transmission, the highest frequency at which a signal can be transmitted between two points under current conditions. Factors which affect this can change from one hour to the next, and include the distance to be covered, geography of the intervening area, solar events, local weather conditions, and man-made disturbances. Abbreviated as MUF.Maya 1. Sanskrit term meaning illusion, referring to an ancient doctrine saying that all reality is illusory. 2. Name of a particular tribe whose home is in the Yucatan and Guatemala area of Central America. They created a remarkable civilization which suddenly disappeared. Their mathematical and calendar systems were the most accurate yet seen on this planet. About three hundred years after their disappearance, the Aztecs took much of their technology and used it to build their own civilization. Mega-One million of any measurement. Metempsychosis 1. The wandering of the soul during dreams & at death. (Vassilaitos) 2. Any transmigration of souls. MHDAbbreviation for Magneto Hydro Dynamics.MicrovitaMost fundamental building block of atomic particles, which contains a universal life and intelligence. This term was developed by the Indian guru P.R. Sarkar, late founder of the Ananda Marga Yoga Society.MilligaussSee Magnetic Measurement Scale.MontaukTown on the easternmost point of Long Island over 100 miles east of New York City. Experiments based on Tesla's technology were allegedly conducted in secret at an Air Force base there in the early 1980's.MRAAbbreviation for Magnetic Resonance Amplifier.MUF See Maximum Usable Frequency.Multiple Wave OscillatorA healing device using very wide bandwidth unmodulated radio waves, developed in France in the 1920's. Several researchers have made versions of this device. (Georges Lakhovsky)MWOSee Multiple Wave Oscillator.N-MachineOne of many magnetic-ring motor types, which is designed to produce more energy than it uses. (DePalma; Tewari)Nano-One-billionth of any measurement.Negative ChargeAn area where there is an excess of electrons. This was misnamed by early electrical researchers due to a misunderstanding of the

direction of current flow.Neutral CenterAll structures rest on a foundation of an indestructible and indivisible unit, which has no mass, time, or energy of its own. Descriptions of this concept resemble descriptions of the Chinese concept of Ch'i. (Keely)Non-HertzianAny waveform which propagates in space, but does not conform to the standard model of electromagnetic waves.Nuclear 1. Pertaining to the nucleus of an atom. 2. Energy which is generated as unstable atoms rapidly or slowly decay. OrgoneEnergy form first described by Dr. Wilhelm Reich. The term was derived from "orgasm", as Reich felt this energy is related to the phenomenon of human sexuality, and is also a primary motivating force of the Universe. Reich built several devices which collected orgone, and retransmitted it back to humans. He also used the energy to modify weather.Oscillation 1. Rhythmic vibration. This can be mechanical or electric. 2. Rhythmically recurring translatory (of an object about itself) movement. Oscillation is thus external rhythmic motion. (Pond) OscilloclastAn early Radionic device using resonant frequencies for the treatment of disease, developed about 1920. (Dr. Albert Abrams)OscilloscopeDevice which measures electrical energy waves and illustrates them on a screen.Over-UnityAny device which puts out more power than it consumes.OzoneThree oxygen atoms bound together. Normally, oxygen exists in Earth's atmosphere as two atoms bound together. Ozone has a distinctive set of characteristics and a smell which can be easily recognized. It can be formed by electric arcing in air, which is why it is often found in significant quantities on the trailing edges of thunderstorms. Ozone will react against parasitic bacteria, and can filter out several high frequencies of electromagnetic radiation.Philadelphia ExperimentIn October 1943, a US Navy ship was outfitted with electronic gear allegedly based on a design by Nikola Tesla. The object of the experiment was to render the ship invisible. According to most accounts, the experiment did make the ship invisible, and also suddenly transported it 200 miles away to Norfolk harbor, where it materialized briefly, and then re-materialized minutes later back in Philadelphia. When the crew came off the ship, they were all incurably insane. This experiment has spawned a great deal of literature.Photon1.

Theoretical particle of light. Tremendous controversies exist over whether light is a pure electromagnetic waveform, or is made of particles. Those who feel it forms into particles are further divided as to the nature and charge of theseparticles. As of this writing, photons have not yet been observed.2. Quantized bundle of light. (Pond)Photon BeltTheoretical region of space where some kind of light energy is present in greater amounts than in the region of space which our planet has been travelling through during recorded history. It has been said by several prophetic sources that once Earth moves into this area, there will be radical shifts in climate and consciousness.Piezoelectric Some crystals, especially quartz, will produce an electric charge when squeezed. This charge will typically be high voltage and low amperage.PiezoluminescenceSome crystals will emit light when squeezed. This will even happen with sugar crystals, which can be relatively entertaining if one looks in a mirror in a dark room while eating certain kinds of candy.Planck's ConstantAny radiation has a constant ratio of energy relative to its frequency. In our part of the Universe, this is expressed as a number: 6.547 x 10-27 ergs per second. Named after a German physicist, Max Planck, 1858-1947.Plasma 1. When matter is stripped of all electrons, and flows violently. This can occur at extremely high temperatures typical of stars. It is an energetic state higher than gas. 2. Liquid portion of blood in which cells are suspended. Positive ChargeAn area where there is a lack of electrons. This was misnamed by early electrical researchers due to a misunderstanding of flow direction. Potential 1. Any electrical voltage difference between two points. 2. Difference in energy level between two or more places. PropagationHow an electromagnetic wave moves through space or any medium, including its response to any other waves or solid objects which may be obstacles at the wave's frequency.Pseudosphere 1. To form a model of one, push the ends of a heated glass tube together. 2. When applied to gravity, a geometric object with the same properties as a sphere, but the equipotential surface of gravity is pushing rather than pulling. (Kovac) Psychotronic 1. Any unclassified energy having an effect on the interface between mind, matter, and/or spirit. This is sometimes

incorrectly used as a synonym for "Radionics". Derived from Greek "Psyche" which is both mind and spirit, and "Tronics", meaning instrumentation. The term was coined in France during the late '60's. The first Psychotronics Conference was in Prague in 1972. 2. Sometimes used as a slang term meaning unusual and awesome. PythagorasGreek educator who lived in the 6th century B.C. He developed the sciences of mathematics, philosophy, music, and medicine simultaneously, as an integrated whole. Much of his work, especially in mathematics and music, is the foundation of modern methods. PythagoreanQiSee Ch'i.QRMRadio operator's term for man-made interference. SEE GrungeQRNRadio operator's term for natural interference. SEE GrungeQSLRadio operator's code for acknowledging the receipt of a transmission. Many amateur operators, government stations, and commercial stations will send special QSL postcards in exchange for written reception reports.Quantum 1. Something which can be measured or counted. 2. This term has been applied to the theoretical fundamental constants of physics, as a specialized technical mathematical definition. 3. A given discrete quantity. RadioactivityEmanations from individual atoms of unstable isotopes of material elements. There are three generally recognized types of radioactivity: alpha particles, beta particles, and gamma rays. (See separate definitions for each.)RadionicsUse of invisible, largely unclassified energies to create effects on biological entities. It can operate equally well at any distance, because it is using resonant forces which are inherently non-locational.Reality In society, reality is strictly an agreement among people as to what is being observed or inferred. The same applies in science, although new discoveries can change the understanding of the agreement at any time.RegaugingFree change of magnetic scalar potential with little or no change in force fields. This phenomenon can be a way to make over-unity devices effective. (Beardon)ResonanceVibration of one thing or force in sympathy with another, because of a similarity or mutual harmonic characteristic.RFAbbreviation for Radio Frequency.Rife, Dr. Royal R.1888-1971. Developer of a type of electromagnetic resonant microscope and corresponding treatment equipment beginning in the mid-1920's. The treatment equipment pulsed precisely

calibrated low-frequency electricity through the patient's body. Rife was harassed by the United States Government and his laboratories were closed. Most of his equipment was destroyed. Several diagnostic and treatment devices have been named after him, although not all of these specifically use his principles.Scalar 1. Any quantity with magnitude which can be described by a number. Not associated with direction or location in space. 2. Same as Keely's Neutral Center, which is the full harmonic chord of the Universe. (Pond) Scalar WaveA wave form which is composed of compression and rarefaction, as sound waves. It does not necessarily move in any particular direction or have a specific location. (Beardon)Schumann ResonanceThere is a gap in the ionosphere of the Earth's atmosphere. It creates a massive electronic cavity in which a certain frequency can resonate constantly, as a sort of "signature" of this planet. That frequency is generally given as 7.83 cycles per second. According to some researchers, it may change over time. Several inventors have developed devices which are worn close to the body and constantly impart this frequency to a person, using the theory that having this "correction" in a person's biofield will create a defense against unnatural electromagnetic fields.SolitonA wave can propagate with no energy loss, and also retain its shape and speed after collision with another wave. In fact, it can absorb and feed on small waves.SomatidSmall biological entity which goes through a life cycle of its own inside a plant, animal, or human. It can, due to stress factors, manifest as bacteria and viruses. In more benign stages, it appears to play a role in cell division. (Naessens)Sonoluminescence Light which is generated as a result of sound energy.Strong Nuclear ForceOne of the four forces of nature recognized by conventional physics. That which holds atomic nuclei together. Believed to be the strongest of all natural forces, although it operates over a very small range. SubatomicAny particle smaller than an atom. Because of their size, the existence of these particles cannot be directly observed, but only inferred from the results of various experiments.Subtle EnergyA general term referring to any kind of waveform, emanation, or pattern which can have an effect and is difficult or impossible to quantify using

present technology.SynergeticsType of geometry developed by Buckminster Fuller, in which all relationships between forms are accounted by whole numbers only. Once understood, it can be applied to material forms, chemistry, geobiology, and physics as a common ground.Tachyon 1. Theoretical particle in physics usually connected with cosmic rays. Its name comes from an ancient Greek word for "speed", because it was thought to travel very fast. The particle has never been observed, and the name gradually fell out of favor in conventional physics. More recently, some researchers, inventors, and marketers have revived the term without defining it, which has led to some confusion. 2. Mutated particle, harmful to humans, which is created when a type of cosmic ray strikes the Earth and comes out the other side. Anyone who spends much time at a spot where these particles come out will have serious health problems. (Vince Wiberg) TensegrityStructural integrity created through tension of structural members. This is the opposite of compression structures, which for most of human history have comprised the majority of buildings. (Buckminster Fuller)Tesla 1. Nikola Tesla, who invented AC power generators, AC motors, radio transmitters, several mechanical turbines, and many other important items. He lived from 1857 - 1943. He was born and raised in Serbia, went to school in Hungary, and emigrated to the United States in 1884. For a brief time, he worked with Thomas Edison, and then broke away to form his own laboratory, where he produced his greatest inventions. 2. A measurement of magnetic force. (See Magnetic Measurement Scale) Tesla coilElectrical apparatus developed by Nikola Tesla. It is a type of transformer. In this, a current is raised in voltage and lowered in amperage. It has two coils, primary at the bottom and secondary at the top. At the top of the secondary coil, there may be a discharge of lightning. It has some use in radio, but during the period after Tesla's death was mostly used for demonstrations and decoration. Tesla had been using a giant version as a key component of his proposed universal energy transmission system during experiments at Wardencliffe and Colorado Springs.TetrahedronMost fundamental form of space, with four sides and a triangular base. According to Buckminster Fuller, can also be applied to thought forms and

conceptions of problems in the Universe.TrexarSpecially constructed wire composed of silver, gold, and platinum. (Keely)TopologyA branch of mathematics dealing in whole shapes and forms.Toroid, Torroid 1. Anything having a donut-like shape, including visible objects and invisible fields. 2. The only self-sustaining electromagnetic wave shape in nature. (Kovac) UltrasonicSound vibrations above the range of human hearing, which for most people extends to about 20,000 cycles per second.Unclassified EnergyAny pattern of energy or force which is not generally understood within the scope of modern physics or chemistry. This can apply to radionic, etheric, and subtle energies. The main point of this definition is that scientists are rarely in agreement as to the nomenclature for some observed energy. VacuumLack of matter in an area of space. So far, no pure vacuum has ever been observed anywhere, but this can be used as a relative descriptive term.Vector 1. Direction of a force along time in space. 2. Applied to any force which apparently has a specific direction. Vector WaveAny waveform which appears to travel in a specific direction.VedicHaving to do with certain respected, ancient scriptures of India. Some of these scriptures contain hints at types of energy production using resonant forces which exist in all life. VibrationRhythmical motion of a body within itself. (John Keely)VimanaA type of aircraft mentioned in the ancient Vedic scriptures of India.Violet Ray 1. Medical appliance invented by Tesla, which transmits a broad range of electrical frequencies through a glass applicator which should be placed on the skin. Named because the electricity has a purple color as it passes through the glass. 2. Any purple- or violet- colored electrical discharge. Vril Fundamental resonant energy which is inherent to planetary structure. It can, with training, be perceived as a radiant black light. (Vassilaitos)VoltageRelative pressure at which electrons are moving through a medium, such as a wire. This is the push that electrons potentially have in electricity. VortexEnergy formed into a spiral pattern. A good example of a rapid vortex would be a tornado. A small vortex is formed whenever a sink drains. Recently, this term has been used to denote as yet undefined geobiological patterns at certain locations.Vortices, VortexianWardencliffeLocation of Tesla's

main laboratory on the southern coast of Long Island, about 60 miles east of New York City. The laboratory was demolished in 1917.WattStandard measurement of electrical power, named after James Watt, inventor of the steam engine. This is usually expressed as current (amperage) multiplied by voltage.WaveMatter or energy with periodic changes in intensity while flowing.WaveformSince humans normally can't directly observe invisible radiations such as electromagnetism, an agreement as to their structure is based on instrumentation applied to electrical circuits. From that, we see certain patterns form on instrument readouts, and we can refer to these patterns as the form of the wave being observed. In many cases, what we are seeing on the readout may only be a cross-section of part of the wave.In cases where instrumentation is not available to provide a readout of a particular phenomenon, any illustration of the form of the waves involved must be regarded as a good guess.Weak Nuclear ForceOne of the four forces recognized by conventional physics. All explanations of this force are highly technical. In conventional physics, it has been observed only in the interactions of various subatomic particles, especially neutrinos.WeberSee Magnetic Measurement Scale.WindingRefers to wire wrapped around a rod, framework, or motor armature, usually in a tight spiral pattern.YangFundamental male, active principle of nature. Derived from ancient Chinese doctrines.YinFundamental female, receptive principle of nature. Derived from ancient Chinese doctrines.X-RayElectromagnetic energy at frequencies between ultraviolet light and Gamma Rays. These are used in medicine because they disturb matter to varying degrees as they pass through, and this disturbance can be recorded on photographic film.Z-RayTheoretical non-electromagnetic wave which can be channelled into a seriously destructive force.Zero-Point EnergyAll empty space is filled with a fluctuating energy. The term "zero point" refers to the fact that these fluctuations even continue at a temperature of absolute zero. It is possible that this energy could be made coherent, and thus tapped as a power source. (Moray King) http://home.earthlink.net/%7Erivedu/tesldic.html

Navigation

[0] Message Index

==========

INFORMATION FOR BUILDING CAPACITORS:

Comments

Material	Dielectric strength "K"	Puncture Voltage per Mil (0.001 inch)
Miscellaneous		
Vacuum	1.0	
Paper, bond	3.0	200
Paper, Royal Grey	3.0	200
Paper, telephone, treated	2.5 - 4	200 - 250 *
Paper, Parafin Coated	2 -3.5	
Paper, Kraft	2.2	
Oil, Castor	4.67	
Oil, Mineral, Squibb	2.7	200
Oil, Mineral	2.2	
Oil, Transformer	2.1 - 2.5	75 *
Rubber	3.0	
Rubber, Hard	3.0	160 - 500 *
Rubber, Vulcanized	3.2 - 3.9	

Fibre	5.0 – 7.5	150 – 180
Fibre, Red	5.0	
Mica	4.5 – 8.0	3800 – 5600
Mica, Ruby	5.4	3800 – 5600
Quartz	3.8 – 5.0	1000
Quartz (Fused)	4.2	150 – 200 *
Shellac	2.5 – 4.0	200 – 400
Spar Varnish	4.8 – 5.5	
Steatite, low loss	5.8	150 – 315
Steatites (Magnesium silicate,etc)	5.5 – 7.5	200 – 300
Cambric (Varnished)	4.0	2
Alsimag 196	5.7	
Gutta Percha	4.0	3
Amber	3.0 – 7.0	4
Resin	2.48 – 2.57	
Enamel	5.1	450
Mycalex	7.4	250
Silicone RTV	3.6	550
Wood	2.0 – 5.2	
Wax (Parafin)	2.1 – 2.5	250 – 450 *
Beeswax	2.9 – 3.0	
Slate	7.0	5
Barium titanate(25 C)	1200	

Bariam titanate	6000	
Titanium dioxide	125	
Cellulose acetate	3.3 - 3.9	250 - 600
Casein, Moulded	6.4	6
Polytetraflourethylene	2.0	A
Aluminum oxide	8.7	
Tantalum pentoxide	22	

Glass		
Glass	4.8 - 10	300
Plate Glass	6.8 - 8.4	
Pyrex Glass	4.8 - 10	335
Window Glass	7.6 - 7.8	200 - 250

Ceramics		
Cordierite ceramics	5.0 - 5.5	100
Magnesium titanate ceramic	12 - 18	150
Porcelain	5.1 - 7.5	40 - 280
Titanium dioxide ceramic	70 - 90	100
Titanium-zirconium dioxide ceramic	40 - 60	150

Plastics		
Bakelite	4.4 - 5.8	300
Bakelite, Mica filled	4.7	325 - 375
Epoxy Circuit Board	5.2	700
Formica	4.6 - 4.9	450 7
Nylon (lowest values of 3 types)	3.2	407
PVC (rigid type)	2.95	725
Plexiglass	2.8	450 - 990
Polyethylene	2.2 - 2.3	450 -

1200		
Polycarbonate (Lexan)	2.96	400
Polyethylene Terphthalate (Mylar)	3.0 - 3.1	7500
Polystyrene	2.5 - 2.6	500 - 700
Teflon	2.1	1000 - 2000
Gases		

Air (dry air at 1 atm)	1.0006	30 - 70
Air (20 atm, 19 deg. C)	1.0108	500 *
Carbon dioxide (1 atm, 0 deg. C)	1.000985	36 *
Carbon dioxide (20 atm, 15 deg. C)	1.020	
Hydrogen (1 atm,0 deg.C)	1.000264	26.1 *
Liquids		

Amonia (liquid)	22	
Benzene	2.28	
Carbon tetrachloride	2.24	8
Chlorinated diphenyl	6.5	9
Ethyl Alcohol (O C)	28.4	
Ethyl alchohol (20 deg.C)	25.8	
Methyl alchohol	33.1	
Water (distilled)	80 - 81	

LEGEND:

* = Measured in Kilovolts per centimeter. All others are Volts per mil (.001 inch) unless otherwise stated.

1 = Vulcanized means it has been melted, or heated in some way.

2 = Cambric is a finely woven white linen or cotton

fabric.
    3 = Gutta Percha is a rubbery substance made from the latex of tropical
        trees and is used in insulation, waterproofing, and dentist use it
        in thin sheets sometimes when working on teeth.
    4 = Amber is a hard, translucent, yellow, orange, or brownish yellow
        fossil resin, used in making ornamental objects like jewelry.
    5 = Slate is a fine grained metamorphic rock that splits into thin
        smooth faced layers. Black Boards for writting are made of this.
        Also used as roofing material in some areas.
    6 = Casein is a white, tasteless, oderless milk and cheese protein used
        in the manufacture of plastics, glues, paints, and food. The word
        'moulded' means it has been shaped by a mold.
    7 = Formica is a trademark for any of various high-pressure laminated
        plastic sheets of melamine and phenolic materials used for chemical
        and heat-resistant surfaces.
    8 = Carbon tetrachloride is a very toxic substance. It has also been
        shown to cause cancer in lab animals. It is banned in most labs. It
        is a liquid that was used as a strong solvent.
    9 = Chlorinated diphenyl is a liquid dielectric that is used to
        impregnate Kraft paper in small A.C. capacitors. This is a PCB
        and may cause cancer, handle carefully.
    A = Polytetraflourethylene films retain good properties even at
        200 degrees Celsius (200 C).

    atm = atmospheres (pressure of air at sea level is 1 atm).

deg.C = degrees Celsius.

Warning - Some liquids and gases listed may be explosive under the right conditions. Many solids can catch fire and burn. Use CAUTION and GOOD COMMON SENSE.

Note: Some books gave very different values for each substance so I have given you the highest and lowest values reported. The values will depend on the purity of the substance your using. If you know your substance is very pure then use the higher value reported. If you know your substance is contaminated or of poor quality then use the lower values reported. If you have unknown purity then use the average of the values given.

==========

EXPLAINATION OF EQUATIONS:

Here are some real handy equations. They are very simple and easy to use.

x = Multiply by

/ = divide by (may also use line seperating terms above and below line as in standard mathematics).

( ) = Terms in parentheses should be calculated first as in standard algebraic equations.

pi = 3.141592654. The circumferance of a circle divided by it's diameter will always give you this constant.

Z^2 = means the term "Z" multiplied by itself one time,"Z x Z".

Note: In some cases I do not use the symbol "x" but instead simply put the terms close together, example: "LC" instead of "L x C". This is standard for algebraic equations and means "multiply by".

==========

MATH FOR TESLA COILS

1. Determine your neon sign transformer (or other transformer's) Impedence:

$$Z = \frac{E}{I}$$

Z = Impedence
E = volts
I = current in Amps
Note: divide milliamps by 1000 to get Amps. 30 milliamps = .030 Amps.

The Impedence of the primary capacitor should match the Impedence of the transformer at 60 Hz (60 Hz is the AC cycle rate of common household wall sockets, at least in America).

2. To match Impedence and determine capacitor value:

$$C = \frac{1}{\quad\quad\quad\quad\quad\quad\quad\quad}$$

$$2 \times \pi \times Z \times .00006$$

C = capacitance in microfarads needed for primary capacitor.
Z = Impedence from equation one (Transformer Impedence)
pi = 3.141592654
Note: The .00006 is the 60 Hz AC, if you live outside the US then
substitute your cycle rate.

Next you need to find the Reactance of the primary capacitor at the
frequency you have choosen. Many times the frequency is decided by the
length of wire used on the secondary coil. See below for equations that
determine frequency by length of wire used on secondary.
When we find the Reactance , we can then find your needed Inductance
for the Primary coil.

3. To determine Reactance of capacitor:

$$X(C) = \frac{1}{2 \times \pi \times C \times F}$$

X(C) = capacitor Reactance
C = Capacitor value in microfarads, from equation 2)
F = Frequency in Mhz (megahertz)
pi = 3.141592654
Note: To convert kilohertz to megahertz simply divide by 1000.
190 Khz = .190 Mhz

4. To determine the Inductance needed for Primary coil:

Set X(L) = X(C)

X(L)

$$L = \frac{}{2 \times \pi \times F}$$

L = Inductance in microhenries needed for Primary Coil.
To get millihenries divide the answer by 1000.
X(L) = Reactance from equation 3, same as X(C).
F = frequency in Megahertz. Divide Khz by 1000 to get Mhz.
pi = 3.141592654

Now you know the values for your capacitor and primary coil. These values will give you the best ringing for your circuit (ie. more bang for your buck)! Use the equations below to finnish the project.

Note: Many people don't go to the trouble to work these equations out. They simply slap the parts together and then try to tune. If you work the equations out first you will save lots of time in tuning, you will at least be in the right ball park! Also, just because you worked it out on paper that doesn't mean it will work the first time you plug it in. Trial and error is a large part of the Tesla Coil hobby!

==========

CAPACITORS IN PARALLEL:

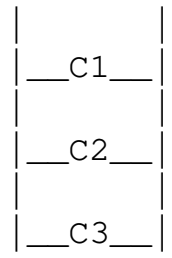

Capacitance = C1 + C2 + C3, etc...

Maximum voltage rating will be equal to the voltage rating of the lowest voltage capacitor of the group.

==========

CAPACITORS IN SERIES:

$$\text{Capacitance} = 1 \Big/ \frac{1}{C1} + \frac{1}{C2} + \frac{1}{C3}, \text{ etc...}$$

The total capacitance of several capacitors in series will always be LESS than that of the smallest capacitor.

Total voltage rating increases with number of capacitors in series.

Simply add the voltage ratings together.

When capacitors are placed in series to increase voltage rating they should have the same capacitance and voltage rating else voltages will divide unevenly, most likely causing failure.

==========

EQUATION 1: PLATE TYPE CAPACITORS

Capacitance (in picofarads) = (0.224 KA / d) (N-1)

$$C = \frac{0.224 \times \text{Dielectric Strength} \times \text{Area of plate}}{\text{distance between plates in inches}} \times (\text{Number of plates} - 1)$$

Note: to convert picofarads to microfarads divide by 1000000.

==========

EQUATION 2: LEYDEN JAR or SALT WATER TYPE CAPACITORS (jar/bottle type)

$$C = \frac{.0884\ k\ (\ pi\ \ r^2\ \ + 2\ \ pi\ \ r\ \ l\ )}{1{,}000{,}000\ t}$$

C = Capacitance in microfarads
k = dielectric strength
r = jar radius in centimeters
l = height of the jar portion used (in centimeters)
t = thickness of the jar wall in centimeters
pi = 3.141592654

r^2 = r x r (radius squared)

==========

EQUATION 3: FREQUENCY OF A CIRCUIT

$$f = \frac{1}{2\ pi\ \sqrt{L\ C}}$$

f = frequency in cycles per second

L = circuit inductance in henries
C = circuit capacitance in farads
pi = 3.141592654

The symbol " $\sqrt{}$ " means the square root
For a result "f" in Khz: enter "C" in microfarads, "L" in microhenries
and multiply result by 1000.

==========

EQUATION 4: INDUCTANCE OF A FLAT PANCAKE COIL

Picture a 1 inch flat ribbon that is about 30 feet long. Now, roll
that ribbon into a spiral that has all its sides about 1/2 inch apart.
Most common material is Aluminum Roof Flashing. Use plastic bolts to
hold sections of strips together if you have short pieces of ribbon.
This makes a good mechanical connection (you can't solder aluminum).

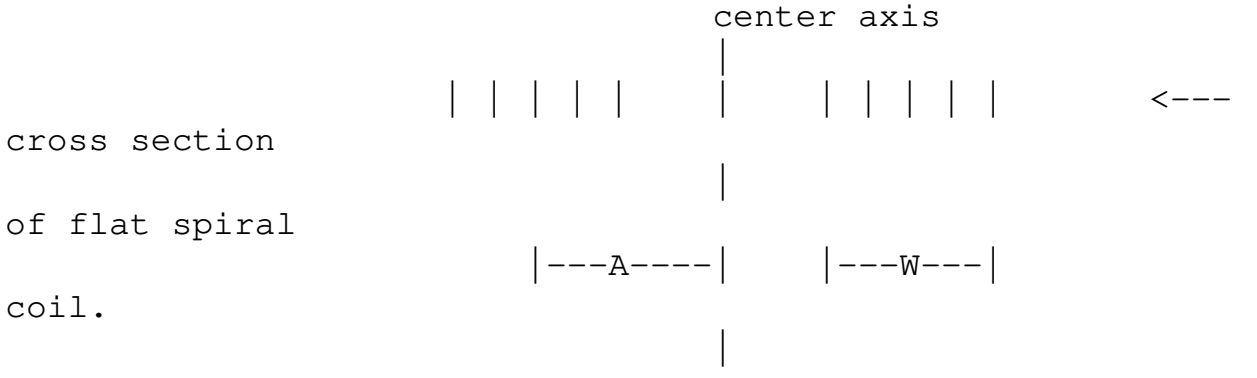

$$L = \frac{a^2 \times n^2}{8a + 11w}$$

L = inductance in microhenries.
a = average radius in inches as measured from the central axis to
the middle of the winding.
n = number of turns in the winding.
w = width of the coil in inches.
Note: Make sure you measure "a" from center axis - the very middle
of your secondary sitting inside of your primary.

==========

EQUATION 5: NUMBER OF TURNS FOR A HELICAL PRIMARY

$$N = \sqrt{\frac{L\,[(9 \times R) + (10 \times H)]}{R^2}}$$

N = Number of turns needed.
L = inductance in microhenries desired.
R = radius (inches).
H = height (inches).

The symbol " $\sqrt{}$ " means the square root, in this case of whole
equation.

==========

EQUATION 6: LENGTH OF WIRE NEEDED FOR DESIRED FREQUENCY OF COIL

$$L = \frac{300{,}000}{f} \sqrt{4 \times (3 / .9144)}$$

f = frequency, in Khz, that is desired for coil.
L = length of wire needed, in feet, for desired frequency.
/ = divided by.

Note - 300,000 is the speed of light in Kilometers per second. the term "3/.9144" is a conversion factor to turn meters to feet.
You don't have to understand this. Just thought I would tell those who were wondering.

==========

EQUATION 7: FRQUENCY OF COIL

$$f = \frac{300{,}000}{T \times W \times \pi \times (.9144 / 36) \times 4}$$

f = frequency of coil in Khz
T = number of turns on coil
W = width of the coil in inches
pi = 3.141592654

==========

EQUATION 8: CAPACITANCE OF A SPHERE IN SPACE

$$C = \frac{R}{9 \times 10^{9}}$$

C = capacitance in Farads
R = radius in meters

$9 \times 10^9 = 9{,}000{,}000{,}000$

Note: To convert Farads to microfarads simply multiply by 10^6 or in other words by 1,000,000.

==========

EQUATION 9: CAPACITANCE OF A SPHERE SUSPENDED IN A DIELECTRIC

$$C = \frac{K \times R}{9 \times 10^9}$$

C = capacitance in Farads
R = radius in meters
K = dielectric constant

Note: To convert Farads to microfarads simply multiply by 10^6 or in other words by 1,000,000.

==========

EQUATION 10: CAPACITANCE OF A TOROID

$$C = (1 + (0.2781 - d2/d1)) \times 2.8 \times \sqrt{2\pi (d1-d2)(d2/2)}$$

```
                                                  /
-------------------
                                              \/      4 pi


     C = capacitance in picofarads (+- 5% )
    d1 = outside diameter of toroid in inches
    d2 = diameter of cross section (cord) of toroid in
inches

    Equation courtesy of Bert Pool

============================================================
===========

    TESLA COIL SCHEMATIC
--------
                                                            |
| TC

--------

O

O
               SG   SC      FCC     PC   SG        P-COIL
O S-COIL
          O---------------OOOOO---------> <-----    O
O
      NST  O    |    |              |           |    O
O
          O    |    |              |           |    O
O
   -----O||O    *   ---            ---          |--->O
O
        O||O                                        O
O
   -----O||O    *   ---            ---               O
O
   110   | O    |    |              |                O
O
```

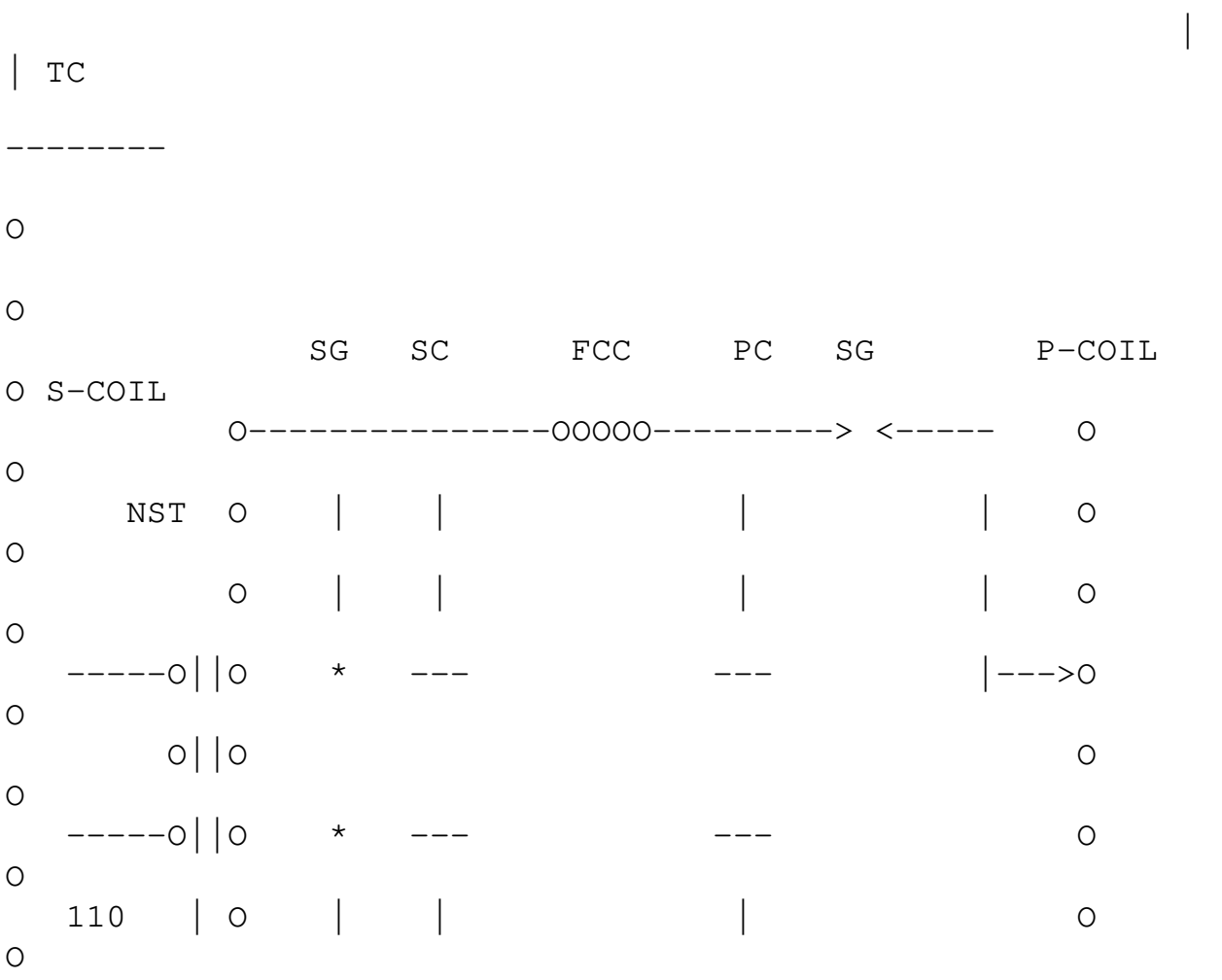

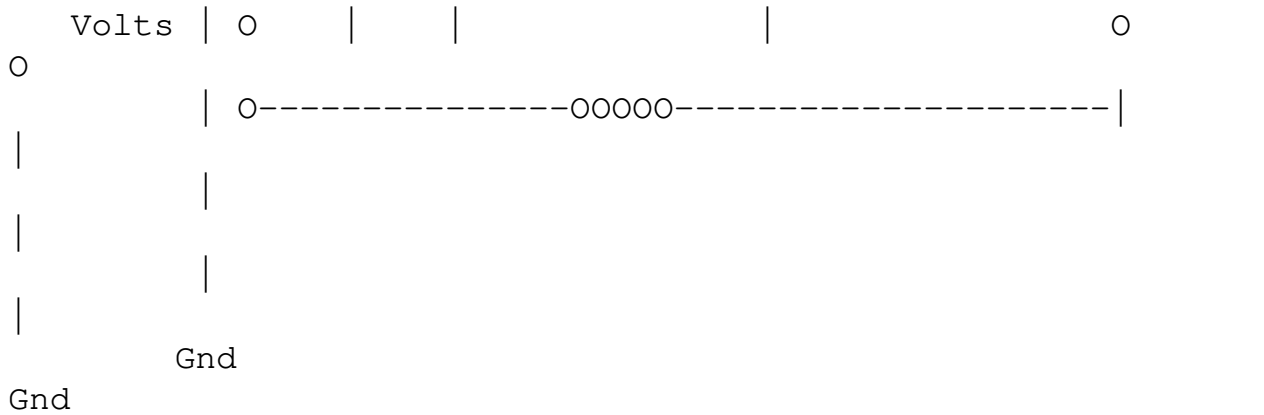

NST = Neon Sign Transformer, 110 volts primary, 15,000 volt secondary
at 30-60 miliamps.
SG = Safty Gap. A spark gap to insure your transformer doesn't get fried.
SC = Safty Capacitor. 300-500 picofarad rated at 50 KV.
FCC = Ferrite Core Choke. This prevents real high voltages from coming
back towards your transformer. It also seperates the capacitors.
PC = Primary Capacitor. Normally .01-.02 microfarads rated 50 KV.
SG = Spark Gap.
P-COIL = Primary Coil.
S-Coil = Secondary Coil.
TC = Terminal Capacitor. The big ball or coffee can on top.
Gnd = Ground.

Note: This is one of several possible schematics. It's just the one I
happen to use.

==========

Bibliography:

Books:

Theory and Applications of Electricity and Magnetism, Charles A.
Culver, 1947, McGraw Hill Book Company, Inc.

Concept In Physics, Third edition, Frankln Miller Jr., Thomas J.
Dillon, Malcom K. Smith, 1980, Harcourt Brace Jovanovich, Inc.

Tesla Coil Secrets, R.A. Ford, 1985, Lindsay Publications Inc.

Tesla Coil, George Trinkaus, 1989, High voltage Press @Lindsay
Publications.

High frequency Apparatus, Thomas Stanley Curtis, 1916, Lindsay
Publications.

Allied Electronics Data Handbook, 1970

Tesla Coil Design Manual, J.H. Couture, 1992

Radio Amateur's Handbook, 1972

Elements of Physics, 1964

Articles:

Popular Electronics, Make Your Own High Voltage Capacitors,
Anthony charlton.

==========

WARNING:

Only people who are experienced with High Voltage

devices should
attempt to build Tesla Coils. They can be very deadly if you don't
know what your doing. Remember, if they find you on the floor
turning blue and frothing at the mouth - THERE IS NO SECOND CHANCE!

A FEW Safety Tips:

1. Don't ever touch the machine when it is pluged in.
2. Use a safe methode to short out the primary capacitor after the
machine has been run.
3. Don't ever get close to a running Tesla coil, the Primary can
shoot hot white arcs at you that will kill you instantly!
4. Always have a small fire extinguisher close by.
5. Always use kickback preventer circuits so you don't send
15,000 volts back through the wall!
6. Pets, children, and irresponsible adults should be kept away from
your machine intirely!!!
7. Read many books on Tesla Coils and other High Voltage devices
and learn as much as you can about High Voltage Safety!

==========

Special thanks to Mr. Pool who caught some glaring errors in the second
draft and who contributed with an equation of his own.

I wrote this file because I felt there was a need for some real
information for those of us who actually build Tesla Coils, as opposed

to those who just talk of building them (Grin). I will be adding to this
file from time to time, so watch for updates. I hope it helps you out!

P.S. Let us not forget the words of Tesla, "Let the future tell the
truth and evaluate each one according to his work and accomplishments.
The present is theirs, the future, for which I really worked, is mine".

========== END OF FILE ==========

Twelve Star Publishing : Sourceworks

Tesla's Radiant Energy Patents

In 1901 Nikola Tesla was granted several patents for a system of radiant energy transmission and reception. The system utilized "natural media" such as the atmosphere and ground to transmit power with virtually no losses. A decade earlier, Tesla had destroyed the DC power industry with his superior AC system. Now he was poised to do it again, with broadcast power.The radiant energy system was revolutionary because it did away with wires and meters. Modest amounts of electric power would be available anywhere, at any time, for lighting and communications. Simply erect an aerial collector, attach the ground plate and plug in. Tesla's vision was to provide free electricity in the service of humanity.Unfortunately, this vision did not impress the financial backers in the utilities industry. With heavy investments in the AC system, there was little interest in supporting the more noble, but less profitable, radiant system. Tesla's demonstration plant at Wardenclyffe, Long Island, was never completed. Ironically, the perfected radiant system marks a turning point in his career. Though still popular with the press, few of his later inventions were ever put into production.The article that follows appeared in Scientific American, in November of 1901. It presents a technical overview of the radiant energy patents. There are two veiled references to the extraction of power from space, in excess of power received from the transmitting station.

Notes:

1)Tesla's radiant energy patents include #685954 through #685958. Also see #645576.

2)Two excellent references on Tesla and his work are:

-The Fantastic Inventions of Nikola Tesla, Adventures Unlimited Press, Kempton, IL, 1993. ISBN 0-932813-19-4- "The Broadcast Power of Nikola Tesla", by Gerry Vassilatos. Borderlands, Vol. LII, No. 2 - 3, 1996.

from Scientific American, November 30, 1901:

Tesla's Recent Patents

"Nikola Tesla has received several patents for a 'Method of Intensifying and Utilizing

Effects Transmitted Through Natural Media.' In one of these systems Tesla varies the potential point or region of the earth by imparting to it intermittent or alternating electrifications through one of the terminals of a suitable source of electrical disturbances which to heighten the effect, has its other terminal connected with an insulated body, preferably of large surface and at an elevation. Electrifications communicated to the earth spread in all directions, reaching a circuit which generally has its terminals arranged and connected similarly to those of the transmitting source and which operates upon a highly sensitive receiver.Another of Telsa's methods is based upon the fact that the atmospheric air, which behaves as an excellent insulator to currents generated by ordinary apparatus, becomes a conductor under the influence of currents or impulses of enormously high electromotive force. By such means air strata, which are easily accessible, are rendered available for the production of many desired effects at distances. Although either method may be employed, it is obviously desirable that the disturbance should be as powerful as possible and should be transmitted with a minimal loss. The loss reduces greatly both the intensity and the number of the co-operative impulses, and since the initial intensity of each of these is necessarily limited, only an insignificant amount of energy is thus available for a single operation of the receiver. Furthermore the energy obtained through the cooperation of the impulses is in the form of an extremely rapid vibration and unsuitable for the operation of ordinary receivers. To overcome the limitations of the two methods mentioned, Tesla reproduces arbitrarily varied or intermittent disturbances or effects; transmits these disturbances through the air to a distant receiving station, utilizes the energy derived from such disturbances at the receiving station to charge a condenser, and uses the accumulated potential so obtained to operate a receiving device.The apparatus which is employed at the receiving station consists in the combination of a storage device included in a circuit, connection points at a distance from the source of the disturbances and between which a difference of potential is created by such disturbances, a receiving circuit connected with the storage device, a receiver included in the receiving circuit, and a mechanism for closing the receiving circuit at any desired moment, thereby causing the receiver to be operated by the energy with which the storage device has been charged.In another method the energy stored is not, as in the previous instance, obtained from the energy of the disturbance effect transmitted from a distance, but from an independent source. The method in general consists in charging a storage device with energy from an independent source, controlling the charge of the device by the action of the effects or disturbances transmitted through the natural media and coincidently using the stored energy for operating a receiver. A condenser is used as the storage means.The invisible radiations of the spectrum and of vacuum tubes are generally considered to be vibrations of extremely small wave length. These radiations posses the property of charging and discharging conductors of electricity, the discharge being particularly noticeable when the conductor upon which the rays impinge is negatively electrified. It is usually held that these radiations ionize or render conducting the atmosphere through which they are propagated. Tesla's own experiments lead him, however, to conclusions more in accord with the theory he has already advanced, in which he holds that sources of such radiant energy throw off with great velocities minute particles of matter which are strongly electrified, and therefore capable of charging an electrical conductor, or even if

not so, of discharging an electrified conductor either by carrying off bodily its charge or otherwise.Tesla has taken out a patent based on a discovery which he has made, that when rays or radiations of this kind are permitted to fall upon an insulated conducting body connected with one of the terminals of a condenser while the other terminal is made by independent means to receive or carry away electricity, a current flows into the condenser as long as the insulated body is exposed to the rays. Under certain conditions an indefinite accumulation of electrical energy takes place. This energy after a suitable time interval during which the rays are allowed to act, may manifest itself in a powerful discharge, which can be utilized for the operation or control of mechanical or electrical devices or rendered useful in many other ways. The radiant energy is directed upon an elevated conductor, connected with one of the armatures of the condenser, positively electrified by the invisible radiations. The electricity is carried off from the other armature by connecting it with the ground. The accumulated energy is discharged through a suitable receiver."Back to Sourceworks

TREMENDOUS NEW POWER SOON TO BE UNLEASHEDNikola Tesla, Starting His 78th Year, Works on Revolutionary PowerProject and Also Is Completing Process for Photographing Thought.

The Kansas City Journal-Post ran this headline on September 10, 1933:

The following are quotes from this newspaper:'Several of these inventions or discoveries will be looked upon as 'miracles' by many people, for Mr. Tesla has long been a scientist years ahead of his time, one whose advanced theories have alternately stamped him a 'madman' and a wizard. Just as people ridiculed Copernicus' theory of the planetary system, the unenlightened jeered Tesla's pronouncement, years ago regarding cosmic rays. The pathfinder and the pioneer - and Mr. Tesla is both - are always condemned by the masses.'

'Mr. Tesla is the father of the alternating system of power transmission and radio, the induction motor and Tesla coil. Asked about his startling new scientific discoveries, one of which concerns the 'photographing of thought,' which will, he maintains, bring about a tremendous social revolution, he said:'My first and most important discovery concerns the harnessing of a new source of power, hitherto unavailable, to be developed through fundamentally novel machines of my invention.'

'Will the smashing of the atom lead to this new power energy? Let Mr. Tesla answer: 'The public is naturally led to expect a great revolution through the harnessing of atomic power, but this is an illusion. Atomic energy is not available for work...For the last thirty years I have warned my fellow scientists that there is nothing to be expected in this field...'

'I expect to photograph thoughts,' announced Mr. Tesla calmly, in the same tone of voice one might talk about the rain. Continued Mr. Tesla: 'In 1893...I became convinced that a definite image formed in thought must, by reflex action, produce a corresponding image on the retina, which can be read by suitable apparatus. This brought me to my system of television...'{I first came across Nikola Tesla not in Scientific American; not on Nova; not in Popular Mechanics...I came across the most amazing, scientific genius of all time in a magazine called Ancient Astronauts! The article was called: 'Nikola Tesla: The Man Who Fell To Earth' by Harry Imber. The first paragraph blew my mind and still does to this day. When I first read it, it was hardly believed. Everything I have read on Tesla after this

article has supported its credibility. The first paragraph deserves reprinting:'Nikola Tesla invented the 20th and 21st Century. A 'discoverer of new principles,' Tesla was the sole inventor of the alternating poly-phase current generators that light up every town in the world today. He was the original inventor of the radio, and placed his ideas in print and demonstrated them before the public 5 years before Marconi. By the turn of the century, he had discussed the feasibility of television; he created an atom smasher capable of evaporating rubies and diamonds; he built wireless neon lamps that gave off more light than today's conventional bulbs provide; he built precursors to the electron microscope, the laser and X-ray photographs. He sent his shadowgraphs to the discoverer of X-rays in 1895 as soon a Roentgen published his famous pictures. Tesla also created Kirlian-like photographs 75 years before they became famous. All of this took place before 1900!'John O'Neill, author of Prodigal Genius, describes Tesla's New York lab as: '...seemingly unearthly forces that with invisible fingers set objects whirling, caused globes and tubes of various shapes to glow resplendently in unfamiliar colors...transplanting the darkened room into one crackling with hissing sheets of flame which issued from monstrous coils.'Reproduced here is an old article called; The Inventor Who Smashed His Own Invention:

'Nikola Tesla - discoverer of the rotating magnetic field, which is the basis for AC electric current - once demolished one of his inventions to prevent disaster. In the 1890s, Tesla speculated about uses for resonance, the physical principle by which a high note from a soprano can shatter a glass. He invented a tiny oscillator that could produce vibrations with different frequencies and tested it on a half-constructed building. The girders trembled like a tree in a high wind.

Later, in his New York lab, Tesla fastened the machine to a pole and turned it on. The vibrations reached the local police station, where the furniture began dancing. Guessing that the source was the inventor, the police ran to the lab to find Tesla smashing his machine (with a sledgehammer). It was the only way to stop the vibrations. Tesla also postulated that by carefully timing the explosions, he could create waves of increasing force capable of shattering the earth. Scientists of the day denied the possibility.'(The above describes the only known earthquake to strike New York; and it was produced by Tesla.)A photomontage from The World Today illustrated Tesla's theory that the Earth itself could be 'split open like an apple' by applying the principle of mechanical resonance.Tesla had the idea of illuminating the oceans! Critics saw this as absurd. With a fully operational World System, we could light the oceans. Large, permanent, WIRELESS lights could illuminate the depths of the seas. Why not? Tesla also bounced a laser off the Moon...in the 19th Century! Was Tesla DaVinci in a past life?

Nikola had the idea that a large transmitter could create an impenetrable wall of force. A literal force-field could be wrapped around cities; and even wrapped around countries. He saw this as an end to war. The truth is an invisible hole at the very top of the protective bubble, like a hurricane's eye, would leave the transmitter open to attack. The invention also would not eliminate war in the hearts of individuals.One of Tesla's best friends was Mark Twain. When they first met is an interesting little story. What did these two brilliant men talk about at their first meeting? What was the subject these geniuses discussed? The weather. They talked about how: Everyone complains about the weather but no one does anything about it. Tesla DID do something about it. His devices

could make rain; attract lightning; repel clouds, storms and rain. We do not have to be stuck with any reality when intelligence can break traditional laws.Another odd and humorous event happened when Tesla asked Twain to test out another of his inventions. It was a platform that could be set for a wide range of frequencies. Clemens innocently stepped on the platform and it was made to vibrate. A few moments later, Twain cursed at Tesla and headed off toward the bathroom. Certain frequencies create certain physical reactions to the body. Tesla set his machine to cause an automatic-bathroom response!Tesla was placed on a United States 20 cent postage stamp; but only for the induction motor. The other scientists in his stamp block; Armstrong, Steinmetz and Farnsworth only became famous building on the work of Tesla.In 1901, when Marconi received world acclaim for sending a few 'clicks' across the Atlantic Ocean...Tesla had already developed and began construction of his Radio City. This tower 'Wardenclyffe' would have been able to transmit reproductions of photographic pictures (TV), news service, music, navigation service for ships and much more information which could be received anywhere in the world. (Tesla planned to contact Venus and Mars with his World Wireless!) Marconi literally stole the idea of radio right out of Tesla's lab. Marconi almost got away with it; Tesla was slow to capitalize on radio because he was so consumed with wireless principles applied to electricity.In a chart entitled: Wireless Telegraphy Mechanically Illustrated, Tesla's World System is shown simply. Over an ocean, a tuning-fork is placed horizontally. There is a connection between the waves and the tuning-fork. In the distance, is another similarly placed tuning-fork. The idea here is any signal, picture or transmission created at one tower (or tuning-fork) can be recreated at any tower (or tuning-fork) at any distance around the Earth. The planet itself responds like a liquid; Electromagnetic (EM) waves that can be reproduced anywhere. This means the wireless system can provide instant World television, radio, information, entertainment and communications. Like ripples on a lake; any signal is recreated at any tower: DISTANCE IS ANNIHILATED!Tesla's words, work and incredible accomplishments have inspired many others. Tesla's views of the future; what wonders electricity, if used properly, could achieve...have been such inspiration. Most people think he was drawing a blueprint for that undiscovered country known as the future. What enlightened readers should realize is that Tesla also provided a map of the ancient past. Everything that Tesla dreamed and feared for tomorrow, his 'war of Science,' has already happened long ago in Atlantis.To complete this Tesla tribute, there were others who followed in the master's footsteps:At 19, Alfred Hubbard built a coil and motor that ran his boat 10 knots an hour on Portage Bay in Seattle. In 1920, this 'fuelless' unit was called an 'atmospheric power generator.' Hubbard claimed it could operate for years; drive a large car; light an office building; and fly a plane around the world nonstop. Little is known about the Hubbard Coil. He was forced into obscurity because of what his motor would do to the present industries.Lester Hendershot developed a fuelless motor that could 'make its own electricity.' His system was 'based on electromagnetism applied to the rotary motion of the earth.' Dr. Frederick Hoffstetter rented a lecture hall in New York so Hendershot could demonstrate his motor. The motor never had a chance since Hoffstetter was only out to prove it a fraud. He even claimed that a battery was found inside. The inventor was ruined and nearly lost his life in an electrical accident.In 1960, Hendershot's device (now called a 'magnatronic generator') was researched by the U.S.

Navy's Office of Naval Research. The generator was reported to have lit a 100-watt lamp by 'induced radio frequency energy.' The project ended when Hendershot committed suicide.A Doctor of Electrical Engineering, T. Henry Moray wrote the book 'The Sea of Energy in Which the Earth Floats' in 1960. It contains results of a 50 year study with another type of 'atmospheric energy collector.' During FDR's reign, Moray became the chief engineer of the western branch of the Rural Electrification Agency. He built a device that weighed 55 pounds and produced up to 50,000 watts. An ignorant co-worker was so enraged by the strange principles Moray tested, that he destroyed the machine. By today's standards, the loss would be over a million dollars. Moray wrote that 'frequencies maybe developed which will balance the force of gravity to a point of neutralization.'Moray: 'It was during the Christmas holidays of 1911 that I began to realize the fact that the energy I was working with was not of a static nature but of an oscillating nature, and that the energy was not coming out of the Earth but that it rather was coming in to the Earth from some outside source.'

Copyright 2000-2002 by Doug Yurchey All rights reserved. Reprinted with Permission.

Back to Rich's Nikola Tesla Tribute

Excerpt from Secrets of Cold War Technology
by Gerry Vassilatos
pages 86-93

The following recital concerns Tesla's early developmental work on Radiant Energy:

The "fountain effects" which surrounded his station are not responsible for the ever-growing power observed by Tesla. This was the result of an incoming aetheric supply for which his Transmitter gave low-resistance passage. The incoming aetheric flow preferred the transmitter terminal to adjacent, more resistant rock. This gradual flow process soon evidenced itself in magnification effects, ever increasing volumes of flowing aether being measured in his system. Some have argued that Tesla merely stored energy in the earth, extracting it for use later. This is a basic error, the result of imagining the Colorado Springs experiment to be one consisting entirely of electrical effects (Grotz). It is in this light alone that we may comprehend the evident anomalous magnification of aetheric phenomena in his Colorado Springs photographs.

Once aetheric energy had been obtained from space, it had to be conveyed to consumers. Tesla had arranged for the automatic activation of aether rebroadcast circuits in the station. The downpouring aether were automatically shunted to side circuits through capacitors. In these side branches, aether pulsed through dielectrics and expanded over the surfaces of his smaller coils. Thus stimulated to more rapid pulsation rates, they were ready for "rebroadcast" . Being rebroadcast away from the station through large vacuum globes, poised on elevated

platforms, these were the aetheric pulsations which would be utilized in home and industry. Simple and compact receivers would be established in every home and factory, set to receive aetheric current through the ground. Tests were thrilling. Distant appliances, lamps and motors, responded to the powerful pulsations as if physically connected to the station by wire. A small house-like structure was established some 26 miles away from the station. In it, an aetheric power receiver was tuned to one of the rebroadcast rates. The 200 lamps housed within this structure, each of 50 watts rating, all remained brilliantly illuminated throughout the test runs. This apparently stimulated enough excitement and concern for word of this development to get back east.

Engineers were enraged. Those who had missed his most early shift from alternations to impulses, failed to comprehend the vast distinction between "stationary waves" and "standing waves". The quizzical use of specific terms such as these was a Tesla trademark, one designed to puzzle the minds of those who criticized him the most. With the exception of a very few colleagues who continually made related discoveries in aether physics, most academes had chosen to remain totally ignorant of the new study area. This for example was the case with the Teslian use of the term "frequency" and of "resonance" words which had completely different meanings for Tesla. Teslian "frequency" refers to the repetition of pulses per second. Teslian "resonance" refers to conditions in which aether flows with little or no resistance through systems, whether proximal or widely separated.

Photographs, which Tesla sent to his "financiers" , were analyzed and reexamined repeatedly for their encrypted meaning. None could decipher the cunning puzzle which Tesla had set before them. Tesla stated that photographs of the aetheric whitefire streamers required several minutes' exposure time before registering the faintest sort of impression. Most of the plates were therefore the results of more than 20 minutes' exposure time. There are a very few plates which, though stated to be the result of "one brief switch closure", are covered with dense, thick white streamers. One fraction of a second closure on the system switch resulted in a twenty minute or more aether avalanche. Magnifying Transformers continued discharging long after the initial impulse had been withdrawn.

AETHER POWER RECEIVERS

Tesla returned to New York exultant. He was about to establish a new world precedent. Venture capitalists were everywhere, looking for their opportunity to enter the "new energy" market. Unknown to Tesla,

his station, its tower, the large coils, the capacitors, and all the other marvelous apparatus, which demonstrated free aetheric power to the world, had been acquired for demolition. Tesla simply went forward, securing new funds from Morgan and others toward the development of a fully functional industry sized station in Long Island. Wardenclyffe Station. Wardenclyffe would be his greatest achievement. Here he would broadcast power to the world, along with a communications network which could span the globe with innumerable available channels. Aether wave communications. Several stations would augment the power of this first station, from which he proposed to rebroadcast 10,000 horsepower. The Station, a wonderful visionary structure which dominated the view of Shoreham, Long Island was not quite complete before it too was seized by court injunctions and torn down.

Tesla was summoned to appear in court. The amazing transcript of this proceeding has been secured by Mr. Leland Anderson who has since published a wonderful treatise with this transcript as the centerpiece. Tesla said he wept when he saw the ruined tower at Wardenclyffe. The train ride back from Shoreham was filled with tears and the recounting of every tragedy which marked his life. But the dreams did not die there. In the absence of financial means to construct his gigantic stations, Tesla found ways to build small systems which accomplished the very same objectives. Replacing the large overhead capacity terminal with material substitutes, radioactive metals in combination with other dense elements, Tesla was able to accrete and focus aether pulsations of super short duration.

Tesla was then plunged into a hellish time, where all but one would neither help or hear him. Dr. John Hammond requested Tesla to be the permanent guest on his family estate. There, amid the family life of Hammond Castle, Tesla shared his dreams and technology. Together, he and Dr. Hammond developed the science of robots and remote guidance. Tesla, impoverished by the inhuman treatment wrought on him by the financial establishment, was nonetheless quite alive and valuable to those having singular ambition to dominate the world radio trade. For a very long time, Nikola Tesla was considered "out of circulation. "

But later years turned a kindlier edge toward him. Long after his principle foe had died, other sought him out. Employed by the Rockefellers in their RCA venture, Tesla was given the task of restructuring the now failing Marconi System. David Sarnoff did not permit Tesla the dignity of working under his own name! Nevertheless it was Tesla, not Sarnoff, who redesigned the insufficient RCA radio systems to sufficiently turn a profit for the owners. It is

significant that Tesla was not allowed to change the basic design from wave radio to radiant communications. What he achieved required certain strange conversions within the wave radio circuitry, intensifying radiant signals until the operation was much improved, and then converting the amplified signals back to waves once again. All of this was achieved within the chassis, certain of which are now being studied. These Tesla experimental models are typical of the Tesla style, containing no resistors or other such components. These models use simple transmitter tubes and employ a great number of symmetrically disposed conical air coils.

While working for RCA under the name "Terbo", his mother's maiden name, Tesla maintained his two penthouse suites atop the Hotel New Yorker. One penthouse was his living quarters, the other a full scale research laboratory. Tesla designed and built small compact and portable aether energy receivers, a developmental path which he pursued to his passing. Tesla had long investigated the use of pure dielectric field energy, a stream of aether whose individual pulsations were so very ultrashort that science had never found a means to harness the energy impulses. Tesla later held the opinion that dielectric current was composed of radiant particles, aetheric in nature. He therefore sought natural sources in which native dielectric fields could be used as they were, without the need for mammoth voltage "shocks" to stigmata aetheric currents. Tesla knew that if dielectric aether streams could be directly engaged, a true world of the future would be in his grasp. Furthermore, the mass-production of thousands and ten thousands of such power receivers would be an unstoppable army. An army of miniatures which could never by torn down.

The implications were fathomless. Tesla had found a truly new and wonderful approach to an old problem. Once because his technology had not yet grown to the level where this was possible, he had to settle for impressing the naturally prolific aether streams with "extra" pulsations. The Transmitter method was costly, gargantuan, and an easy target for those who hated the notion of a future world where dreams rule humanity. Dielectric energy fascinated Tesla. It was everywhere, a natural emanation whose potentials far outproportioned conventional notions of power. Indeed, the early conception of natural radioactivity as an energetic source was nothing in comparison to the potential power inherent in dielectric streams. The new technology would use ultra-short pulsing aether streams, energies which occupied most of his latter press conferences in latter years. Study had convinced Tesla that the apparently smooth and native force characteristic of dielectric field energy was actually a particulate flux, a succession of ultrashort impulses. The derivation of such an

impulse train would solve all energy needs for eternity with an elegance far out-reaching his own Magnifier Transmitter.

Of a truth, dielectric energy was native source of incredible proportion and virtually eternal duration. Able to use such a kinetic source, one could dispense entirely with the Power Transmitters necessary in stimulating and impressing "extra pulsations" on the aether flow. Tesla often defined the dielectric field as a natural flow of aether particles, one which seemed impossible to utilize through lack of appropriate resistive materials. In order to obtain momentum from the flowing particles of a dielectric field, one required special matter poised in equally special symmetries. The otherwise continuous flow could be absorbed directly, being exchanged to utilities, appliances, and other applications.

Tesla had already considered the condition of charged particles, each representing a tightly constricted whorl of aether. The force necessarily exerted at close distances by such aetheric constrictions was incalculably large. Aetheric ponderance maintained particulate stability. Crystalline lattices were therefore places within which one could expect to find unexpected voltages. Indeed, the high voltages inherent in certain metallic lattices, intra-atomic field energies, are enormous. The close Coulomb gradient between atomic centers are electrostatic potentials reaching humanly unattainable levels. By comparison, the voltages which Tesla once succeeded in releasing were quite insignificant. In these balanced lattices, Tesla sought the voltages needed to initiate directed aetheric streams in matter. Once such a flow began, one could simply tap the stream for power. In certain materials, these aether streams might automatically produce the contaminating electrons, a source of energy for existing appliances. One could theoretically then "tailor" the materials needed to produce unexpected aetheric power with or without the attendant detrital particles. Tesla did mention the latent aetheric power of charge forces, the explosive potentials of bound aether, and the aetheric power inherent in matter. In these studies, Tesla sought replacement for the 100,000,000 volt initiating pulses which natural law required for the implementation of space aether. Tesla had long been forced to abandon those gigantic means by other, less natural laws.

Thereafter, Tesla shifted his attentions from the appreciation of the gigantic to an appreciation of the miniature. He sought a means for proliferating an immense number of small and compact aether power receivers. With one such device, Tesla succeeded in obtaining power to drive an electric car. But for the exceptional account which follows, we would have little information on this last period in Tesla's

productive life, one which very apparently did not cease its prolific streams of creativity to his last breath. The information comes through an unlikely source, one rarely mentioned by Tesla biographers. It chanced that an aeronautical engineer, Derek Ahlers, met with one of Tesla's nephews then living in New York. Theirs was an acquaintance lasting some 10 years, consisting largely of anecdotal commentaries on Dr. Tesla. Mr. Savo provided an enormous fund of knowledge concerning many episodes in Tesla's last years.

Himself an Austrian military man and a trained aviator, Mr. Savo was extremely opened about certain long-cherished incidents in which his uncle's genius was consistently made manifest. Mr. Savo reported that in 1931, he participated in an experiment involving aetheric power. Unexpectedly, almost inappropriately, he was asked to accompany his uncle on a long train ride to Buffalo. A few times in this journey, Mr. Savo asked the nature of their journey. Dr. Tesla remained unwilling to disclose any information, speaking rather directly to this issue. Taken into a small garage, Dr. Tesla walked directly to a Pierce Arrow, opened the hood and began making a few adjustments. In place of the engine, there was an AC motor. This measured a little more than 3 feet long, and a little more than 2 feet in diameter. From it trailed two very thick cables which connected with the dashboard. In addition, there was an ordinary 12-volt storage battery. The motor was rated at 80 horsepower. Maximum rotor speed was stated to be 30 turns per second. A 6-foot antenna rod was fitted into the rear section of the car.

Dr. Tesla stepped into the passenger side and began making adjustments on a "power receiver" which had been built directly into the dashboard. The receiver, no larger than a short-wave radio of the day, used 12 special tubes, which Dr. Tesla brought with him in a box-like case. Mr. Savo told Mr. Ahler that Dr. Tesla built the receiver in his hotel room, a device 2 feet in length, nearly 1 foot wide, a ½ foot high. These curiously constructed tubes having been properly installed in their sockets, Dr. Tesla pushed in 2 contact rods and informed Mr. Savo that power was now available to drive. Several additional meters read values which Dr. Tesla would not explain. No sound was heard. Dr. Tesla handed Mr. Savo the ignition key and told him to start the engine, which he promptly did. Yet hearing nothing, the accelerator was applied, and the car instantly moved. Tesla's nephew drove this vehicle without other fuel for an undetermined long interval. Mr. Savo drove a distance of 50 miles through the city and out to the surrounding countryside. The car was tested to speeds of 90 mph, with the speedometer rated to 120.

After a time, and with increasing distance from the city itself, Dr. Tesla felt free enough to speak. Having now become sufficiently impressed with the performance of both his device and the automobile. Dr. Tesla informed his nephew that the device could not only supply the needs of the car forever, but could also supply the needs of a household "with power to spare". When originally asked how the device worked, Tesla was initially adamant and refused to speak. Many who have read this "apocryphal account" have stated it to be the result of an "energy broadcast". This misinterpretation has simply caused further confusions concerning this stage of Tesla's work. He had very obviously succeeded in performing, with this small and compact device, what he had learned in Colorado and Shoreham.

As soon as they were on the country roads, clear of the more congested areas, Tesla began to lecture on the subject. Of the motive source he referred to "a mysterious radiation which comes out of the aether". The small device very obviously and effectively appropriated this energy. Tesla also spoke very glowingly of this providence, saying of the energy itself that "it is available in limitless quantities". Dr. Tesla stated that although "he did no know where it came from, mankind should be very grateful for its presence". The two remained in Buffalo for 8 days, rigorously testing the car in the city and countryside. Dr. Tesla also told Mr. Savo that the device would soon be used to drive boats, planes, trains, and other automobiles. Once, just before leaving the city limits, they stopped at a streetlight and a bystander joyfully commented concerning their lack of exhaust fumes. Mr. Savo spoke up whimsically, saying that they had "no engine". They left Buffalo and traveled to a predetermined location which Dr. Tesla knew, an old farmhouse barn some 20 miles from Buffalo. Dr. Tesla and Mr. Savo left the car in this barn, took the 12 tubes and the ignition key, and departed.

Later on, Mr. Savo heard a rumor that a secretary had spoken candidly about both the receiver and the test run, being promptly fired for the security breach. About a month after the incident, Mr. Savo received a call from a man who identified himself as Lee De Forest, who asked how he enjoyed the car. Mr. Savo expressed his joy over the mysterious affair, and Mr. De Forest declared Tesla the greatest living scientist in the world. Later, Mr. Savo asked his uncle whether or not the power receiver was being used in other applications. He was informed that Dr. Tesla had been negotiating with a major shipbuilding company to build a boat with a similarly outfitted engine. Asked additional questions, Dr. Tesla became annoyed. Highly concerned and personally strained over the security of this design, it seems obvious that Tesla was performing these tests in a desperate degree of secrecy for good

reasons. Tesla had already been the victim of several manipulations, deadly actions entirely sourced in a single financial house. For this reason, secrecy and care had become his only recent excess.

TESLA'S BIG MISTAKE?

Sept 1999 William Beaty

While experimenting with a long, thin Secondary coil from Tesla Coil, I suddenly connected up several things in my mind which had been separate up to that moment. After years of messing with Tesla Coils, I finally see what Tesla was up to with single wire transmission, with resonant coils, and with longitudinal waves. See if the following doesn't make sense.

fig. 1 A typical Tesla coil

If we wrap a single-layer coil of wire upon a very long plastic tube, we have a Tesla resonator as in Fig 1. In essence, this is an an electrical transmission line. We can inject AC into one end using a little primary coil wrapped around. Now examine Fig 2 below. We've placed a second "primary coil" at the far end of the long coil. This second coil acts as a "receive coil," and will collect the energy we had injected into the "transmit coil" at the other end. Since our long thin coil is actually a single piece of wire, we've managed to send electrical energy along a single wire. There is no electric circuit involved! This only can work because the long, thin coil will support slowly-moving electromagnetic waves, and the electron-sea within the metal of this coil behaves as if it's become compressible.

Now we put a metal sphere on either end to prevent corona from spewing out of the dangling wire tips, and we've built a simple electrical power system. Inject some high-freq AC power into the first "primary coil", and the same AC power comes out of the second "primary coil" at the far end. If we choose the correct value of load resistor for the "receive" coil, then all of the electromagnetic energy flowing along the long thin secondary will be absorbed by the receive coil without reflecting.

fig. 2 A single-wire transmission line

This is the infamous single wire transmission line. It apparantly uses longitudinal waves! However, there is nothing crackpot about it, since it obeys conventional physics: the propagating electric and magnetic fields are at 90 degrees to each other. Successive globs of positive and negative charge-imbalance are moving along the coil, and these globs/waves are linked to each other via the surrounding EM fields. The EM fields are

transverse. And the only thing which acts like a "longitudinal" wave is the density of free electrons in the wire. Is this crazy stuff? Nope. All circuits have longitudinal waves in their charge density. It's not much difference than a coax cable. Within a normal piece of coax, the electrons of the metal move as part of a compression wave, even though the EM fields within the cable's dielectric remain part of a transverse wave.
In conventional cables there are two conductors, and the voltage between them forms the "E" part of the EM wave. In the above one-wire coil device, the voltage between the travelling lumps of net-charge distributed along the long thin coil forms the "E" part of the wave. The single wire acts as its own "circuit." The motion of the net-charge is an electric current, and this creates the "M" part of the EM wave.
Interesting? A single wire transmission line! It doesn't violate the rule forbidding longitudinal EM waves. However, it violates the fundamental rule regarding electric circuits in that there *is* no circuit here. The two ends of the system are connected by a single wire. The charges within the coil flow back and forth, while the electrical energy flows along the coil from source to load.

fig. 3 An AC generator lights a bulb

HOWEVER, this is not unique. Once long ago I encountered an article about a single-wire transmission line. This had nothing to do with Tesla; it was about an old microwave transmission scheme called a Goubau transmission line or "G-line." The article was in an old copy of QST magazine (amateur radio mag) in the 1960s or '70s.
It turns out that you can send microwave or UHF signals along a *single* wire as long as that wire is coated with a dielectric. To do this, you start out with a normal coaxial cable. You strip the shield from a central section, then solder on a pair of large, cone-shaped copper horns which attach to the coax shield at either end of the coax cable. The dielectric-coated single wire extends between the ends of the coax. Sort of like this:

fig. 4 The Goubou or "G"-line

In the above diagram, the single-wire section between the two hollow cones can be as long as desired, but it must be fairly straight. Those cone-shaped parts must be about one wavelength across (or was it 1/2 wavelength? I don't remember exactly.) The metal cones act as "wave launchers" or "wave catchers". As the EM waves come out of the coax cable, the cones allow the waves to spread out and attach to the "G-line" part. There must be a plastic coating on the "G-line" wire, otherwise the waves will not lock onto it, and they will tend to wander away into space. The plastic tends to slow the waves below "c," so they bend slightly inwards towards the wire. The article noted that you could put a bend in the G-line, as long as it was a long, smooth bend of large radius. Because of the plastic coating, the waves would follow the bend. If there was no plastic coating, the waves would miss the bend and go straight out into space, missing

the "catcher cone" entirely.
Obviously this can only work with AC. There is no electric circuit, instead we have waves of "electron compression" which propagate along a single wire. Let's briefly look at a fluid analog. The fluid analogy of a conventional electric circuit is a closed loop of water-filled hose. To send energy to any part of the loop, we simply force the water in one part of the loop to begin flowing, and all the water in the entire loop must therefore flow as well. It acts like a drive belt. Might it be possible to break the circuit and use a straight-line hydraulic system? Can we send compression waves through the electrical "water" in the "hose" made of wire? Sure! That's what the G-line does. If we have a long hose with closed ends, we can send "sound waves" through the "water" of the hose, although we cannot create constant flowing DC as we can with the closed circuit hose-loop. These single-wire systems are inherently AC systems. They are analogous to sending sound energy along a fluid-filled tube.
Because there is only one conductor in the G-line, the "E" part of the EM wave must extend between successive lumps of net-charge which propagate along the wire. The "voltage" on the transmission line extends outwards as radial e-field flux, but rather than the flux connecting with a coaxial shield as it does in a normal cable, it curves around and connects with the opposite flux-lines which extend from another spot on the wire. The "M" component of the wave acts like the magnetic field around any normal wire: acting like circles which surround the wire. The energy flows lengthwise along the wire as is commonly shown by Poynting's vector (E x B).

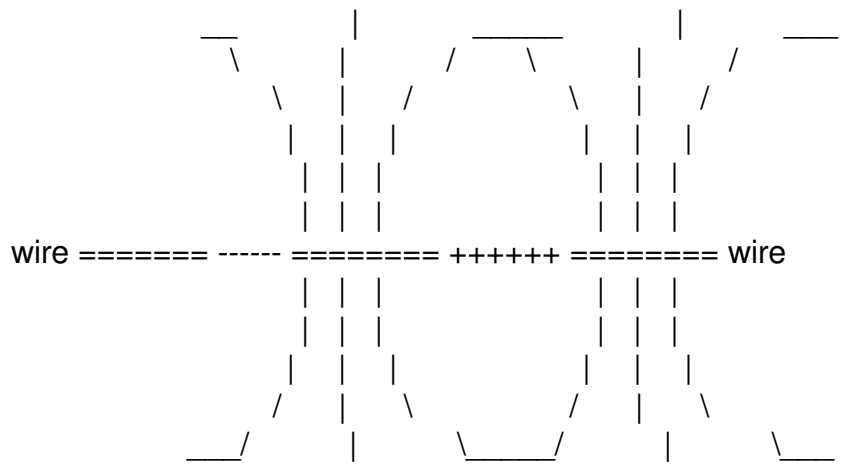

fig. 5 The e-field of the "G-Line", extending between propagating regions of opposite surface charge

So, here we have a one-wire transmission line based on transverse EM wave in space, and electron density waves within the wire. Inside the metal surface of that single wire, the electrons wiggle back and forth while the EM wave propagates outside at about the speed of light. It's almost like sound waves moving on the string of a tin-can telephone, but electrons take the place of those cellulose fibers, and the sound waves are replaced by transverse EM waves. But in the case of the "G-line," the energy gets stored in the

EM fields connected to the electrons, rather than being stored in the kinetic energy and potential energy of the string.
How does this relate to Tesla? Well, once we have the ability to send energy along a single wire, we should also have the ability to send energy along any conductor at all, as long as that conductor has a dielectric coating. Like this:

fig. 6 "G-line" with large conductive lump

Any large, metallic hunk could be stuck in series with the "G-line". Yes, there might be wave-reflections where the thin wire connects to the big metal hunk. But that's beside the point. With the above setup, we can send waves along the surface of a conductive object, while within the object itself the "electron sea" vibrates longitudinally. Hmmm. Where have I heard that before? I know. Nikola Tesla's "World System," in which he intended to transmit usable electrical energy to any receiver anywhere on the Earth.
In the above diagram, suppose the "hunk of conductor" is the entire planet Earth! Suppose the "cone shaped" launchers are replaced with an elevated sphere which supplies a "virtual ground" reference capacitance? Suppose the frequency of the waves is below the UHF band in frequency? The entire Earth will then behave as a "G-line" single wire transmission system.

fig. 7 Tesla-coil-based "G-line" spans planet Earth

In his writings, Tesla was convinced that his devices did not use the same physics as Hertzian waves. He was right... and wrong. When radio- frequency energy propagates through empty space, the E and the M components are transverse, and the waves propagate at 90 degrees to both of them. However, when EM energy is sent along a cable, we also have electrons involved: the electron-sea within the metal wires. The electrons slosh back and forth in the cable while the EM waves flow along outside of the metal surfaces. Why is this important? Because the physics of a transmission line is the physics of the "near field" of a coil or capacitor, not the physics of freely-propagating "Hertzian" waves. When Tesla sent energy around the Earth, he was treating the Earth as an electrical cable. His waves were coupled to the charges within the surface of the Earth. He was not transmitting pure radio waves, even though the frequency of the wave-energy might be the same as any normal radio wave. Instead he was using a one-wire transmission system where the conductive Earth served as the wire. Tesla's technology used "near field" effects of coils, capacitors, and transmission lines, not the dipole antennas that Hertzian waves use, and in that sense his waves were "non-Hertzian."

fig. 8 The ground acts as the transmission line

fig. 9 Charges vibrate, while energy flows sideways

But wait a minute. This stuff can only work if there is a dielectric substance coating the Earth. Without that coating, the waves will not slow and bend to follow the curve of the Earth, they will just fly out into space. The atmosphere supplies this coating, and the resistive earth also helps to slow the waves so they bend to follow the surface. And even better, there is a conductive ionosphere which will act a lot like the "shield" of a coaxial cable and force the waves to go around the Earth.

Tesla was using the ground as a transmission line. He was correct when he insisted that he was producing longitudinal waves in the "natural medium." He was correct in saying that the ground was not just a voltage reference. In this case the "natural medium" is the population of mobile ions in the dirt and oceans which cause the Earth act as a conductor. He was converting the Earth's surface into a "G-line" conductor. Any electrical device could intercept a portion of that energy, as long as that device was connected to the ground and to an elevated metal object.

So, what was Tesla's big mistake? Initially he did not realize that the Earth's atmosphere was critically important for his system to work. If the Earth had acted like a perfectly-conducting metal ball hanging in a vacuum, then Tesla's system would not have worked. The waves would have travelled along the ground and then shot straight out into space. His system would have been like a "G-line" with a sharp bend in the middle: except for a bit of diffraction, the waves refuse to follow the bend and instead go right off the cable and are lost. Because of the "dielectric" effect of the atmosphere, and also because a conductive ionosphere was present, Tesla's system was feasible. Yet any scientist of the time would "correctly" see that Tesla's system totally violates well-known theory. If Tesla had started out from known theory, he would never have pursued the path he did. Tesla actually started out with empirical observations that the Earth resonated electromagnetically like a struck bell. The atmosphere and the ionosphere made this so, but Tesla only knew that it worked, and he really did not know why, at least at first.

Tesla's other big mistake was in thinking that his wireless transmission system had nothing to do with "Hertzian" waves. In fact, the waves in a coaxial transmission line are not much different than the waves which fly off any dipole antenna connected to the end of that transmission line. Whether it is ruled by "near field" or "far field" equations, electromagnetism is electromagnetism.

Tesla's mistake was not really so big. Especially not a big mistake when compared to those contemporary scientists who were absolutely certain that the Earth *didn't* have any resonant frequencies, who *knew* that radio waves would not travel around the curve of the Earth, and who dismissed Tesla's wireless transmission system as crackpottery; as an unworkable violation of known physics. When "Schumann" VLF earth-resonance was rediscovered in the 1950s, nobody in the conventional sciences dared court the embarassment of admitting that Tesla had been right all along.

Tesla is mostly a hero among the non-scientist "underground," while in conventional circles he is still ridiculed for trying to distribute electric power without using wires, or rather, by sending it through the ground. Everyone (still) knows that this is impossible, even in theory.
Yeah, right.

Also See:
P. Nicholson: Non-hertzian Waves
Tesla FAQ (search on Zenneck Surface Wave)
Geog Goubau, "Surface waves and their Application to Transmission Lines," Journal of Applied Physics, Volume 21, Nov. (1950)
"Energy Sucking" antennas, tiny devices receive high wattage
Math and diagrams for "sucking" effect
Photon dies screaming (EM wo/quanta)

http://amasci.com/tesla/tmistk.html
Created and maintained by Bill Beaty. Mail me at: .
.
Date: Mon, 28 Aug 1995 13:25:40 -0600
From: Richard Quick <richard.quick@slug.org>
Subject: CAPACITOR 1/2

April 8, 1994
CAPACITR.ASC

High voltage capacitor construction, by Bert Pool.

First of all important warnings and disclaimers:

High voltage capacitors are very dangerous for several obvious and some not-so-obvious reasons. Most experimenters know that a capacitor can retain a significant voltage even after power has been removed.

Discharge all capacitors with a jumper cable before working on them. When discharging large capacitors, the jumper cable

needs a high wattage 100 ohm resistor to limit discharge current.

EVERY CAPACITOR IN A "SERIES" DESIGN TESLA CIRCUIT MUST BE DISCHARGED SEPARATELY! SHORTING ONE CAPACITOR WILL NOT DISCHARGE
OTHER CAPACITORS IN THE CIRCUIT!

Voltages and currents available on charged capacitors can be lethal. Use common sense. The capacitors described here are sealed and contain mineral oil. While mineral oil is not especially flammable, a catastrophic capacitor failure can result in pressure buildup and explosion if construction technique does not allow for release of pressure.

Mineral oil will burn - a catastrophic capacitor failure can also result in the release of oil which could ignite. It is highly suggested that experimenters keep on hand a fire extinguisher rated for oil fires.

Also, it is suggested that oil filled capacitor banks be stood in a metal pan large enough to contain the oil in case a capacitor container is breached or oil is released. This pan can prevent a mess, as well as help contain a potentially nasty fire!

I have built over a dozen oil filled high voltage capacitors, and I have had several failures due to construction shortcuts or material failures and I have NEVER experienced a dangerous buildup of pressure or a fire - but I know it CAN happen and I take measures to be prepared for such an eventuality. Many high power Tesla coils use "power pole" transformers; these too are filled with oil and the same precautions for prevention of explosion and fire apply here too.

As a high voltage experimenter, you take full responsibility for safe construction and operation of your capacitors and other high voltage devices.

Be safe, be careful, use common sense!

Keeping all these safety ideas in mind, presented is a method for building home-brew polyethylene capacitors which serve very well for Tesla coils, ZPE devices, etc.

The original design is not mine, it was conceived by Richard Hull of the Tesla Coil Builders of Richmond (TCBOR). TCBOR has an excellent

video showing step-by-step construction of this type of capacitor.

Other available video tapes provide excellent info on Tesla coil and Tesla magnifier construction. Richard Hull may be contacted at:

TCBOR,
7103 Hermitage Rd,
Richmond VA 23228.

CAPACITOR FUNDAMENTALS:

A simple capacitor consists of two conductive plates separated by an insulator. Capacitance is determined by the area of the plates, the distance between them and the "dielectric constant" of the insulator between the conducting plates.

This dielectric constant is represented by a number called "K". On the next page is a table of materials and their "K" and their puncture voltages taken from the "Radio Amateurs Handbook":

MATERIAL	"K"	PUNCTURE VOLTAGE PER MIL
AIR	1.0	240
BAKELITE	4.4 - 5.4	300
BAKELITE, MICA FILLED	4.7	325 - 375
FORMICA	4.6 - 4.9	450
WINDOW GLASS	7.6 - 8	200 - 250
PYREX GLASS	4.8	335
MICA	5.4	3800 - 5600
PLEXIGLASS	2.8	990
POLYETHYLENE	2.3	1200
POLYSTYRENE	2.6	500 - 700
PORCELAIN	5.1 - 5.9	40 - 100
QUARTZ	3.8	1000
TEFLON	2.1	1000 - 2000

A vacuum or air has a "K" of 1. If you put a piece of teflon between your plates (same spacing), the capacitance will increase 2.1 times and it will handle at least 5 to 7 times as much voltage.

If you used a piece of good quality glass, the capacitance might increase 8 times! (the voltage rating would increase only slightly).

The dielectric you choose will be determined by voltage, frequency (if using a.c.), durability (glass breaks very easily), cost and physical size.

MATERIALS AND SOURCES:

The capacitors we will build use polyethylene. Poly is very easy to work with, does not break, is inexpensive, readily available, has very good a.c. characteristics (very low loss), and has good high voltage properties. Mica would be even better, but it is VERY expensive and is not readily available.

Glass is o.k. as far as availability and cost goes, but it has very high internal losses for Tesla coil use, compared to poly. Glass is also very fragile to work with. I've made glass capacitors weighing over 600 pounds -NEVER AGAIN! You just can't beat making capacitors out of polyethylene.

Purchase two sheets of polyethylene sheet, 48 inches wide by 96 inches long. Each sheet will be cut lengthwise into three sheets, each 16 inches wide. All together, you will have 6 pieces of poly 16 inches wide by 96 inches long. This is enough material to make THREE capacitors. (You will cut several more sheets if you choose to use several thin layers of plastic instead of one single thick layer.)

The thickness of the poly sheets is determined by the voltage you will be placing on the capacitor. You have to take into account whether you are using d.c. or a.c.

If you are using d.c. voltage, calculate your poly thickness by using dielectric voltage rating of 600 volts per mil (one mil = .001 inch). Some charts show that poly can handle 1200 volts per mil - Tesla coil experience shows that this value is NOT conservative enough, even taking peak-to-peak values into account!

If you are using a.c., and especially with a Tesla coil, you have to de-rate the voltage ratings on the poly or you will have capacitor failure. For Tesla coils using input transformers from 9 kilovolts up to 15 kilovolts, use 90 mil thick polyethylene. If your input transformer is 7200 volts or less, you can use 60 mil poly.

*** Special construction note! Once you have determined the required capacitor dielectric thickness, it is MUCH better to make your dielectric from several thin sheets of poly instead of one single thick sheet. Example: If you need 90 mil thick poly, use

three 30 mil pieces stacked together to form a 90 mil dielectric. If you use multiple layers the insulation will be MUCH more robust than a single thick layer. The reason? If you were to use a single thick layer of poly and it had a manufacturing defect, odds are that the defect will extend all the way through the plastic. High voltage would force its way through the single defect to blow up your capacitor. If you have three or four thin layers stacked, every sheet might conceivably have a defect, BUT it would be almost impossible for all of the defects to be lined up to allow the high voltage to punch through. Odds would be that while one sheet might have a defect, you would still have several GOOD layers still providing protection. Professionally manufactured capacitors usually use this secret of layering.

*** From this point on, where the text describes using "a" piece of poly, you will probably instead be substituting three or even four thin sheets of poly for the reason described above. Keep this in mind during the construction process!

The capacitor described, using .0625 inch thick polyethylene will have a measured value of 0.0185 ufd with an a.c. working rating of 7500 volts r.m.s.*** A .090 inch thick polyethylene dielectric capacitor will have a value closer to 0.010 ufd, and can be used in Tesla coil circuits using a power source up to 15 kilovolts a.c.

*** TCBOR suggests that .060 thick poly will work @ 15,000 volts. My experience shows this is not always true. I recommend 90 mil poly for 12,000 to 15,000 volt operation.

As any coil builder knows, the resonant peak voltages go WAY above the source voltages! You must design sufficiently thick poly dielectric to handle this higher voltage.

Power LOSS in one of these caps in a Tesla coil configuration is LESS than 0.5 watt per cap! Thus, they don't suffer from internal r.f. losses which translate into heat failure.

A poly capacitor made with .060 poly should handle 36,000 volts d.c. and the .090 thick poly job should easily handle 54,000 volts d.c. These are very conservative ratings - good quality polyethylene might handle twice these ratings. Tesla coils, of course, use alternating current. The peak voltages generated in a resonant Tesla circuit are incredibly hard on a capacitor. This is why you

must "over-engineer" the voltage capabilities of your capacitors.

Capacitors may be placed in series to achieve higher voltage ratings, parallel for more capacitance. Combination series/parallel combinations may be used to achieve any desired capacitance and voltage rating.

As an example, let's say you've built several 0.01 ufd capacitors rated at 7,500 volts. You make the deal of your life and acquire a terrific 15,000 volt power transformer....only your capacitors can't handle this voltage. What to do? Assuming your coil requires a capacitance of 0.01 ufd, what kind of connections can you make to use the capacitors on hand?

First of all, you could connect two caps in series, as shown below:

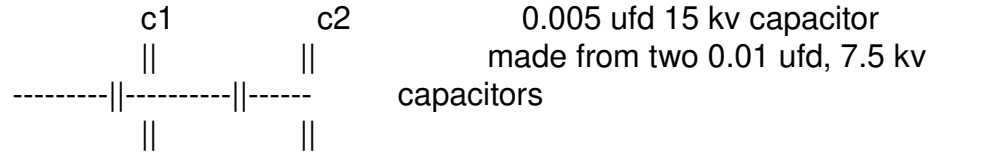

You now have a capacitor rated at 15,000 volts...BUT the capacitance is now only .005 ufd! You increased the voltage rating, but placing capacitors in series reduces the capacitance. Now what? We connect two more caps in series to create another 0.005 ufd capacitor, then we take our two 0.005 ufd caps and put them in PARALLEL. We end up with a 0.01 ufd capacitor rated at 15,000 volts:

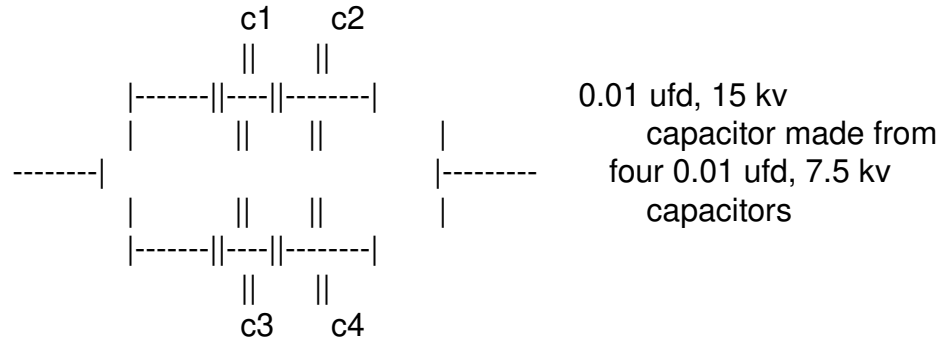

Because the transformer has an output of 15,000 volts, and we know the PEAK voltages will be much higher than this, we might wonder whether the capacitors we just wired together can handle the peak spikes. To reduce the chance of failure, we would be better off

placing THREE of our capacitors in series to achieve a voltage rating of 7,500 times 3 or a total of 22,500 volts. But what would our capacitance be if we do this? Right! The capacitance will be 0.01 divided by three or 0.03333 ufd. Guess what?! We need to parallel THREE sets of these caps to bring the capacitance back up to 0.01 ufd:

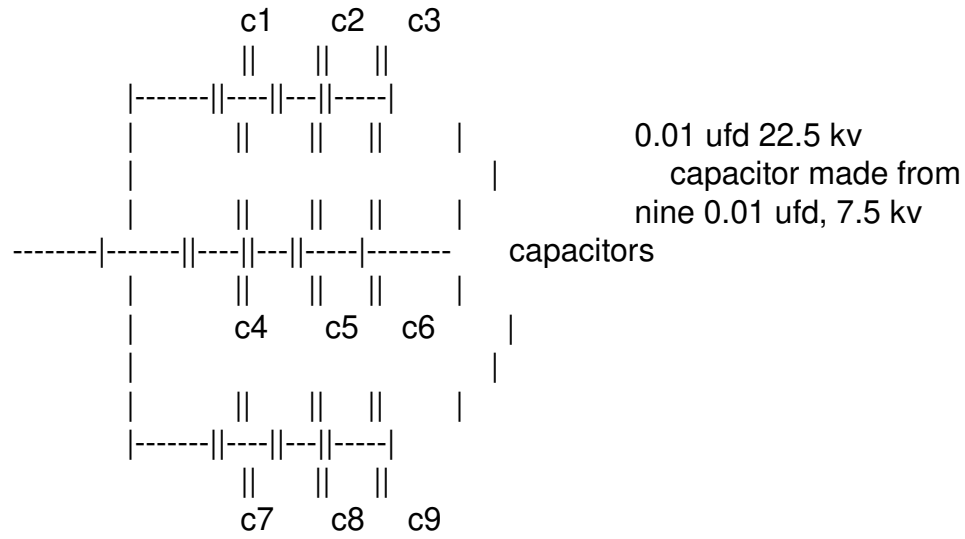

Using this method, you may build a capacitor rated for any capacitance and at any voltage rating! The down side is that you can use up a LOT of capacitors!

We will make our conductive plates out of aluminum roof flashing. You can buy a fifty foot roll of 14 inch wide aluminum roof flashing here in the Dallas area from Home Depot for about $22 (4-93). This is almost exactly the length you will need for three caps. The aluminum flashing, by the way, is about 10 mils thick. My local Home Depot charged me - $21.80 (4-93)

For a capacitor container, we use 6 inch diameter sdr 35 PVC pipe cut into 19 inch lengths.

PVC pipe comes in 13 foot lengths, $1.25 per foot, or $16.25 + tax (2-93). You will also need flat "glue on" pvc end caps for this pipe; $4.40 each, or $26.40 for six (enough for 3 caps). Do NOT get the rubber gasketed end caps - they are not flat on the end and the seals will not hold up once immersed in oil.

You will also need pvc primer and cement to glue the end caps to the

pvc pipe.

You will also need some 1/4 inch thick clear plexiglass sheet scraps, each piece large enough to cut a 6 inch diameter circle.

You will need plastic tie-wrap straps about 24 inches in length, or enough 12 inch straps to link together to form nine 24 inch long straps. Try to get straps that do not contain metal teeth inside the lock of the strap.

To make connection to the aluminum plates you will need some #10 screws, washers, and nuts. You will need two split-bolt electrical connectors to go on the top of each capacitor - Home Depot, $3.33 each. You will also need 3 or 4 feet of high voltage wire to connect the split-bolt output connectors to the aluminum plates.

You will need two inexpensive radiator drain petcocks (valves) from Chief Auto (#852079) for $2.99 each. We will use these valves to fill the capacitor with oil and/or attach a vacuum pump.

Finally, you need a very high quality mineral oil to fill the capacitor. I use SnapLube-100 from Tulco Oil in Arlington Texas, (817) 640-0051.

It comes in a five gallon re-sealable pail for $43.10, including tax. I've never had an oil related capacitor failure using this oil. SnapLube 100 is a highly refined non-carcinogenic oil containig no PCB's. Stay away from PCB oils. Any way, just about any good quality, low moisture mineral oil will work in these capacitors.

ACTUAL CONSTRUCTION:

BOTTOM PVC end caps:
Glue two 1/2 inch by 1/2 inch square pieces of plexiglass stock three inches long across the inside bottom of the BOTTOM end caps. Make sure these two strips are at least 1/4 inch away from the walls of the plastic end cap! You have to allow space for the wall of the pvc pipe to reach the bottom of the end cap.

The purpose of these spacers is to prevent the rolled capacitor from sitting directly on the bottom pvc end cap. The space allows any moisture in the oil to settle to the bottom of the cap - the capacitor will sit on these plexiglass supports above the moisture contaminated oil.

PVC case:
Cut three pieces of 6 inch diameter pvc pipe 19 inches long. Clean the pieces with alcohol. Prime ONE end of each pipe with pvc primer. Immediately swab bunches of pvc cement on the bottom 3 inches of each pipe. Swab the inside walls of three end caps which you prepared in the first step. IMMEDIATELY push an end cap onto the glue coated end of each of the three pipes. YOU WILL NOT GLUE A CAP ONTO THE TOP OF EACH PIPE YET - JUST THE BOTTOMS! As you push the bottom end caps on, twist them to help insure a good seal.

Take the remaining three end caps which will be used for the TOPS of the capacitors. Using a saber saw cut a five inch diameter hole in the end of each cap. This will leave a 1/2 inch pvc border surrounding the hole. Cut three 6 inch diameter circles out of your 1/4 thick plexiglass stock.

Next, we will score the TOP of the plexiglass with a sharp metal scribe in the shape of a big X, going from edge to edge. Below is a crude picture of these two cuts. Make the scribe marks at LEAST 1/32 inch deep.

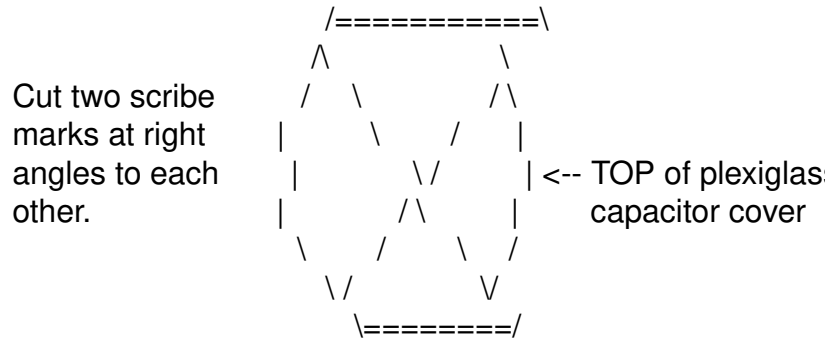

********** Important Safety Note **********
The purpose of the scribe marks is to provide starting places for CRACKS to occur should the capacitor fail and excess pressure occur. The plexiglass will bow outward and crack at the scribe marks, releasing pressure. MAKE SURE THAT THE SCRIBE MARKS ARE ON TOP WHEN YOU INSTALL THIS COVER!
****

Use pvc cement and glue a 6 inch plexiglass disk over the hole you just cut in the end of the top cap. MAKE SURE THE SCRIBE MARKS ARE ON TOP! Do this for all three top

end caps. You just created three TOP end caps with clear windows in the ends!

********** Safety Notes **********
The plexiglass will seal to the pvc, but pvc cement does not effectively bond plexiglass to pvc. This is good! Should the capacitor experience a pressure buildup due to electrical failure we WANT the plexiglass to crack and come loose and let the gasses out! The plexiglass cover also allows us to SEE a capacitor failure - the light from the arc shines out! The plexiglass cover serves as at least two important safety needs! Do NOT build a capacitor without this or some other form of over-pressure release mechanism!
****

Now let all pvc cement dry for 24 hours before doing any additional work on the pipes or end caps! See "PVC CONTINUED" below for completion of the TOP end caps after the glue has dried.

Aluminum:
Cut your aluminum flashing into six pieces, 14 inches wide (natural width) by 93 inches long. Use large scissors to make cuts. Cut all corners round (use a fifty cent piece to mark the curves on the corners) to reduce corona. Using a hand operated paper hole punch (any office supply has these), punch a hole in ONE end of EACH sheet, about 1/2 inch from the end, midway between the end corners. Take wet/dry sandpaper and sand all burrs and rough edges off the flashing. Preparation of the aluminum edges and corners is VERY important! Any burrs or roughness will result in capacitor failure!

Attach a length of high voltage wire to the hole in the aluminum using a wire terminal and # 10 hardware. The wire should be about 16 inches long. Do not do anything with the other end of the wire yet. Cut your screw off as short as possible, very close to the nut. DO NOT GET METAL FILINGS OR METAL DUST ON YOUR ALUMINUM FLASHING OR POLY! METAL DEBRIS MEANS CAPACITOR DEATH!

Poly sheet:
Place sheets of newspaper on a carpeted foor. Put one of

your poly sheets down on the newspaper and clean both sides with paper towels and alcohol. Measure a line 16 inches from the edge. Take a magic marker and draw a line down the length of your sheet, 16 inches from the edge. Go to the opposite edge and do the same, drawing another line down the length of the sheet. Your poly sheet should now be marked into THREE equal pieces, each 16" by 96". Using a box knife, carefully cut along these lines. You will have three pieces 16" by 96" long. When you complete these two cuts, carefully set the three pieces aside on a clean piece of paper. Next, clean, mark and cut your second piece of poly stock into three pieces. It is important that the poly you use is scratch-free and umblemished! Any imperfections can cause capacitor failure. You now have six 16" by 96" pieces of poly (again, if you are layering your poly, you will have several times this number of sheets.)

Assembly:
Place a 16" by 96" length of poly on your newspaper. Place one of your aluminum sheets on top of this first poly sheet. Align the aluminum so that you have an even 1 inch border of poly showing all the way down it's 93 inch length. Now scoot the aluminum towards the screw end so that the aluminum hangs over the END of the poly one inch.

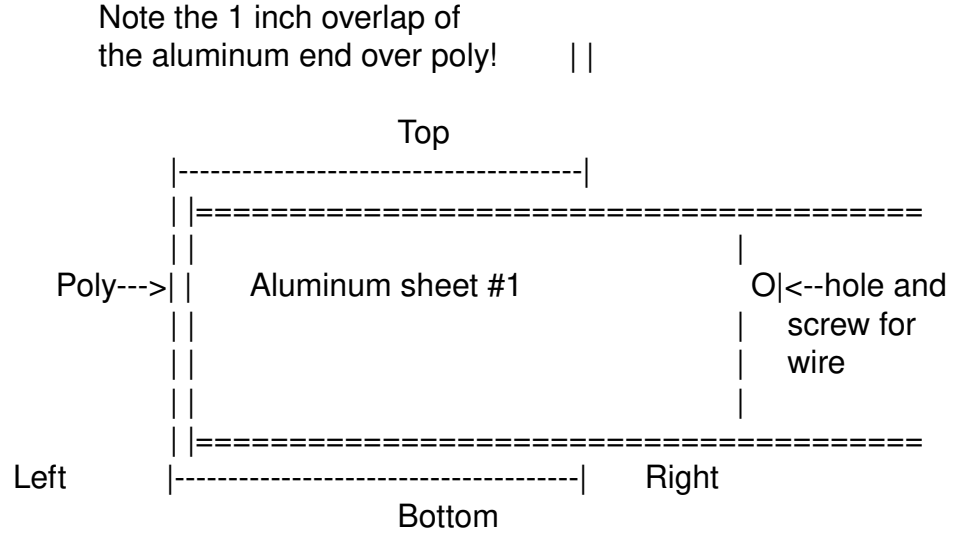

Place poly sheet #2 on top of the first aluminum sheet. Align this poly exactly on top of the first poly sheet.'

Place the final aluminum sheet on top of the second poly sheet. The screw end should be on the far end of the capacitor, OPPOSITE the first screw.

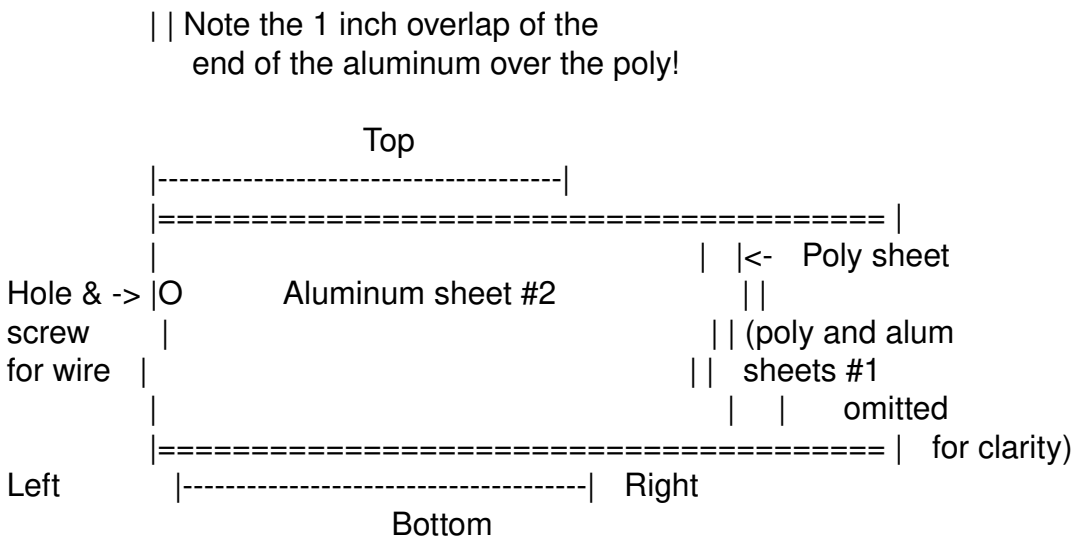

You should have a capacitor sandwich consisting of, from the bottom of the stack up, poly, aluminum, poly, and aluminum. Make sure that the screws on the two sheets of aluminum are NOT ON THE SAME END OF THE CAPACITOR!

Now carefully roll the capacitor up, starting on the left end. Make the core hole in the center of the roll about 2 inches across. Roll the capacitor up as TIGHT as possible! KEEP THE BORDERS ON EACH SIDE OF THE ALUMINUM STRAIGHT! If your aluminum gets too close to the edge of the capacitor, high voltage can arc around the edge of the poly, causing catastrophic failure. I really suggest getting a helper to help keep things lined up straight as you roll!

Once the capacitor is rolled up, you should have a cylinder 16 inches tall and about 4.5 to 5 inches in diameter. If your capacitor is much over 5 inches in diameter, then it won't fit inside the PVC pipe.

Take three plastic tie-wrap straps and tie the rolled capacitor up so that it can't unroll. The two wires should come out of the top of the capacitor - one from the inside of the roll, one on the outside. Place a scrap piece of poly between the head of the screw and the underlying poly sheet so that the screw won't puncture the underlying poly sheet.

PCV PREPERATION CONTINUED:

Carefully slide your rolled capacitor into one of the pvc pipes, making sure the wires are "up". You should have about a 1/2 inch space between the outside of your capacitor and the inside wall of your pvc pipe. The capacitor will sit on the two plexiglass spacers which keep the capacitor 1/2 inch above the bottom of the end cap (see step one).

Take two of the split-bolt connectors and set them on top of the plexiglass window on the TOP end cap. The head of the bolt will sit on top of the plexiglass. Place the two bolts opposite each other, about 5 inches apart.

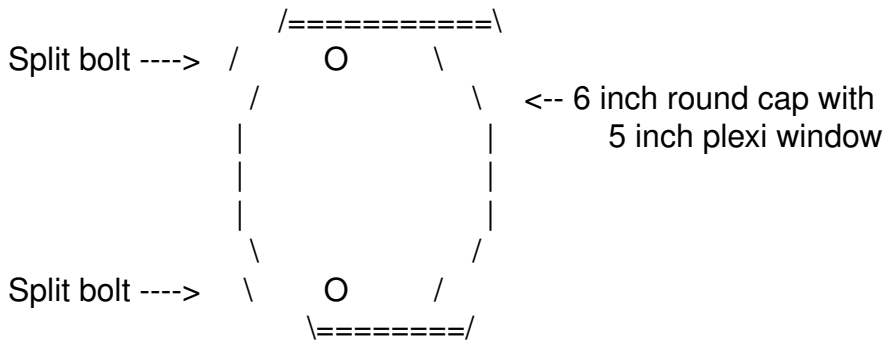

Mark the plexiglass with a marker right around the edges of the bolt where it sits on the plexiglass. Next, clamp the bolt in a vise. Drill two holes through the head of the bolts. We will use two 1.5 inch long # 10 screws through these holes to attach the bolts to the plexiglass.

Take the plexiglass window and prepare to drill holes in it. Place a drilled split-bolt on the plexiglass where we marked it earlier, and mark the new hole positions on the plexi. Drill the two holes. Coat the bottom of the split bolt with epoxy and attach the split-bolt connectors to the plexiglass window with 1.5 inch # 10 hardware as shown below. The epoxy is important to prevent oil leaks. Place epoxy on the screw threads where they pass through the split bolt and where they pass through the plexiglass:

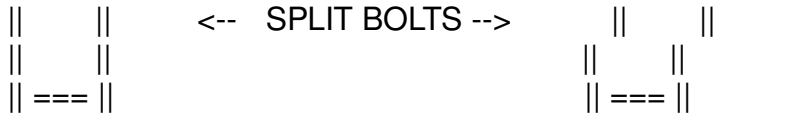

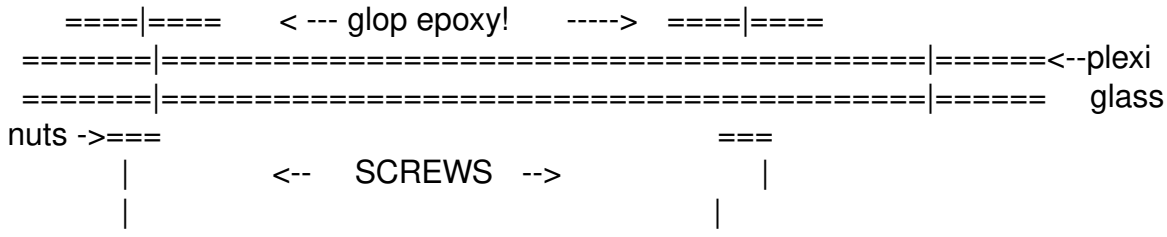

Note: each split-bolt is held on with TWO sets of screws and nuts!

Next, we drill and tap two holes in the plexiglass window for our two valves. Locate the holes for the valves as shown below:

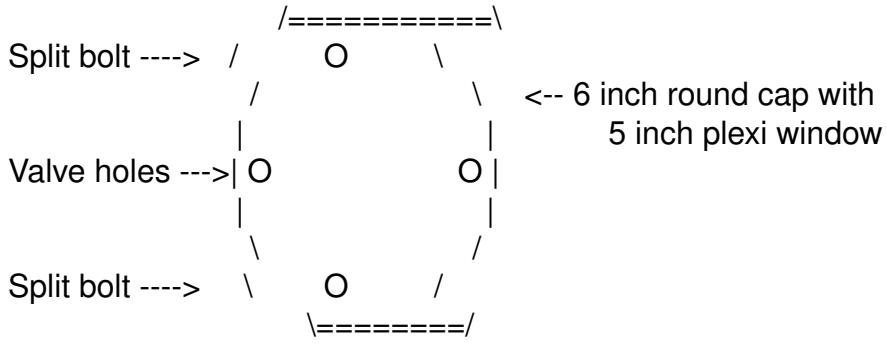

This arrangement keeps the split-bolts far apart, and the two valves will be far enough away to prevent problems.

The holes for the valves should be slightly smaller than the threaded portion of the valve. Be very careful tapping the plexiglass else it will split!

Coat the threads of the threaded end of the valves with epoxy and screw the valves into the holes. The epoxy will seal the threads closed to the plexiglass and will prevent oil leaks. Do not get epoxy inside the valve itself!

Give the expoy a several minutes to dry. Hold the end cap over the top of the capacitor. Test it to see how it fits down over the 6 inch pvc pipe. Make sure the screws holding the split-bolts do not come too close to the top of the capacitor. Lift the end cap off the capacitor. The wire from the inside of the capacitor will connect to a screw on one split-bolt connector; the other wire from the outside of the capacitor will connect to the OTHER split-bolt connector.

Measure and cut the wires so that they are as short as possible, YET STILL LONG ENOUGH TO REACH THE SCREWS HOLDING

THE SPLIT-BOLTS. Crimp and solder a round terminal connector on the end of the two capacitor wires. Attach each wire to one of the split-bolts using another couple of #10 nuts and washers.

Again, temporarily slide the top end cap on and check your wires for fit. If all looks ok, it is time to glue this puppy on!

First, open both vlaves so air can go through them. If you forget this step, you won't be able to push the TOP down over the pipe because of the trapped air!

Slather the outside top three inches of your pvc pipe with primer. Coat the inside walls of the end cap with primer too. Next, coat over the primer with lots of pvc cement. Quickly push the cap on the pipe, twisting back and forth to make a good seal.

Connect a vacuum pump to one of the valves with a length of 5/16 hose. While running the pump, apply additional glue around the lip of the cap where it touches the pipe. Listen for the hiss of air getting sucked in. If you find a leak, add pvc cement until it stops. Now is the time to find and fix any leaks! Once oil is introduced into the capacitor, leaks cannot be sealed with cement - the oil will prevent bonding!

Once you are satisfied the capacitor is leak-tight, let it sit for at least 24 hours to allow the pvc cement to completely dry. DO NOT PUT OIL IN A FRESHLY GLUED PIPE, OR YOU WILL HAVE ONE HELL OF A MESS!

After the glue has completely dried, test the end caps for complete seal one more time. DO NOT TEST FOR LEAKS BY PRESSURIZING THE PIPE! PRESSURIZING THE PIPE CAN RESULT IN A VERY DANGEROUS EXPLOSION SHOULD THE PLASTIC FAIL!

Once you are satisfied the plastic-to-plastic seals are good we can charge the capacitor with oil. Run a 5/16 rubber hose from one valve on the cap to a vacuum pump. Pump the cap down for one hour. This will help boil out any residual moisture and will help remove air from between the layers of poly and aluminum. Once it has been pumped down, run another 5/16 inch rubber hose from the other valve down into the 5 gallon

pail of oil - but do NOT open this valve yet. Turn your vacuum pump on. This will help to continue to produce a condition of reduced pressure in the capacitor. VERY slowly open the oil valve just a tiny bit. This will cause the oil to flow up the hose from the pail through the oil valve into the capacitor!

WARNING: Do NOT allow oil to enter the vacuum pump or permanent damage to the pump can result!

*** Be sure to slowly open the oil valve - the oil will want to foam up and enter the vacuum pump. Regulate the flow of oil so that the oil does not foam. Stop the flow of oil once the poly capacitor is under about 3/4 inch of oil.

Close the oil valve completely and let the vacuum pump suck air out between the plates of the capacitor. Again, the oil will want to foam up from all the entrapped air, so you will have to monitor the vacuum valve very closely to prevent oil from foaming up and entering the vacuum pump.

After a half hour or so, most of the air will be out of the capacitor - at least enough where you can open the vacuum valve so that the vacuum pump is going wide open. Be aware that you will get air bubbles coming up out of the capacitor even if you pump from now on 'til doomsday!

You will actually suck air THROUGH microscopic channels in the pvc pipe and end caps! Your goal is to get as much air out of the capacitor as is practicable - usually a couple of hours of vacuum pumping will do the job.

After the capacitor has been thoroughly pumped down, shut off the pump, disconnect the hoses. Slowly open one of the valves and let air into the space above the capacitor to relieve the vacuum. Close both valves on the capacitor to prevent additional air and moisture from entering the capacitor.

Next comes the really hard part: set the capacitor aside for at least one week, preferrable two weeks. Two or three times a day, gently rock the capacitor from side to side. This will help air bubbles to rise. DO NOT AGITATE THE OIL! The idea to remove air bubbles, not introduce more!

****

DO NOT ATTEMPT TO USE THE CAPACITOR IMMEDIATELY AFTER PUMPING IT DOWN! If you do, entrapped air will cause it to fail. I have learned this the hard way! The capacitor needs to sit for one to two weeks to allow air to rise out of the capacitor. The number one reason for premature failure of a new capacitor is due to running the capacitor with pockets of air trapped between the layers.

Failure can result from poor quality or imperfect polyethylene, insufficient poly thickness, burred aluminum edges, oil containing moisture (1 part water in 10,000 parts oil reduces the oil's insulation factor by 50% !!!) or entrapped air. Insufficient border spacing around the aluminum can also cause capacitor failure.

It is highly suggested that you open one of the valves on the capacitor when using with a Tesla coil or other high peak power source in case the capacitor should fail.

Having a valve open will vent a sudden build-up of pressure from the gases which come from the vaporized plastic which occurs when a capacitor fails. Close the valves whenever the cap is NOT in use to prevent moisture in the air from entering the capacitor.

The capacitor should be stored and transported standing upright. If the capacitor gets turned on its side, the air in the space above the capacitor will get back into the layers of poly and aluminum - and you don't want to have to go through the pump/wait process again!

Theoretically you could completely fill the capacitor with oil - providing you left a way for the oil to expand and contract with temperature changes, AND if you could build a 100% sealed PVC container. I assure you that doing this is harder than one would suspect! The pvc end caps may seep a tiny amount of oil THROUGH the plastic - pvc is not nearly as impermeable as we would be led to believe! Stand the caps upright in a large metal pan to contain any oil leakage.

The pan should be large enough to contain all the oil stored in one of the capacitors. The pan will contain leakage, and should you have a capacitor container failure and oil fire, the pan will contain the burning oil - definitely a plus!

Again, remember one reason why we put a clear plexiglass window on the top of the capacitor: it lets you see when you have a capacitor failure! If the capacitor fails, the high voltage arc will be visible through the clear window.

If you do have a capacitor failure, DISCONNECT POWER IMMEDIATELY! FAILURE TO DISCONNECT POWER CAN RESULT IN A CATASTROPHIC CAPACITOR FAILURE! DANGERS INCLUDE EXPLOSION AND AN INTENSE OIL FIRE!

********** LEARN FROM MY MISTAKES! **********
Due to impatience, I did not let some of my capacitors sit for a sufficient time before use, so they had air trapped in the layers. They failed. I built several capacitors with poly which was not thick enough to withstand the voltage of my transformer. They failed. In every case I quickly disconnected power. Not once have I had a "catastrophic" failure resulting in container failure or fire. But I ALWAYS keep a fire extinguisher rated for oil fires handy, just in case! So should you.

Note by Richard Quick: I have edited out a couple of paragraphs that instructed the user to burn up a couple of transformers by connecting directly to the capacitor and running about 10kV into the newly built cap! Bert indicated that the 60 cycle high voltage run into the cap would vibrate out the air bubbles. This is not correct. The caps are properly broken in by connecting to the Tesla coil and running with reduced spark gaps and reduced voltage. It is the pulse discharge of the spark gap when the tank circuit is firing that jars loose air bubbles, not a continous 60 cycle hum.

Also, Bert appears a little paranoid about oil fires and explosions. My experience is that these capacitors do not get warm. I have built and operated dozens of plastic/AL/oil capacitors: I have had plenty of failures, but never had an "incident". Mineral oil has a very high flash point. It needs to smoke before it will burn. The other thing is that there is no oxidizer in the capacitor. When a failure occurs, the cap may "burp" slightly, but there is zero chance of an explosive failure.
From: Thomas McGahee [SMTP:tom_mcgahee@sigmais.com]
Sent: Wednesday, April 08, 1998 10:40 AM
To: Tesla-2; tesla@pupman.com
Subject: AWG WIRE TABLE for Coilers

Fellow Coilers,
Attached is a plain ASCII text file AWG2.TXT

This file contains a Wire Chart for AWG Gauge
wire from #0000 to #40. It has extra goodies that I
thought coilers would enjoy, such as Turns Per Inch
and Feet Per Pound as well as resistance values.

I do not usually send attachments with my posts to the
TESLA and TESLA-2 lists, but I decided to send this as
an attachment to ensure that it gets through intact,
as it is a table that is more than 120 characters wide.

To print it on paper you may need to print it in a small font
or in landscape mode.

As it is, you should print it using a monospaced font, such
as Courier. Otherwise It may not print out in columns properly.

I hope that this Table of wire info is useful to many of
you. If there is enough demand for it, I could modify
the program I wrote so that it would produce also a
metric table. But I wanted to get the inch-based version
out to all of you as soon as it was finished.

Hope this helps,
Fr. Tom McGahee

AWG AMERICAN WIRE GAUGE TABLE FOR BARE COPPER WIRE
Compiled by Fr. Thomas McGahee tom_mcgahee@sigmais.com

This Table may be copied freely so long as credit is given to the author.
Originally compiled for use by those building Tesla coils on the TESLA and
TESLA-2 internet mailing lists.

Compiled in April 1998 based on information derived from various sources.
Since there were some discrepancies between data sources, the author has chosen
not to just copy the numbers found in those sources, but rather to write a
program that would generate the data based on a Best Fit mathematical model.
The author has checked the Diameter in mils results against the data contained in the
MACHINERY'S HANDBOOK, Twenty-First Edition, 1982, published by Industrial Press Inc.
All numbers shown are accurate to +/- 1 in the least significant digit position.

Column headings have been repeated to make the list more readable

AWG = American Wire Gauge size from 0000 to 40
Dia-mils = Diameter in mils (1 mil = .001 inch)
TPI = Turns Per Inch [Note that this is for BARE WIRE. Insulation thickness varies]
Dia-mm = Diameter in millimeters. This was included to help when dealing with metric Coilers.
Circ-mils = Cross sectional Area in Circular Mils. (circular mils = diameter in mils squared)
Ohms/Kft = Ohms Per 1,000 ft.
Ft/Ohm = Number of feet required for 1 Ohm of resistance
Ft/Lb = Feet Per Pound
Ohms/Lb = Ohms Per Pound
Lb/Kft = Pounds Per 1,000 feet
*AMPS = Conservative Amp Rating based on 750 circulare mils per Amp
MaxAmps = Maximum allowable current based on 500 circular mils per Amp. Do NOT exceed this rating.

AWG	Dia-mils	TPI	Dia-mm	Circ-mils	Ohms/Kft	Ft/Ohm	Ft/Lb
Ohms/Lb	Lb/Kft	*Amps	MaxAmps				
0000	459.99	2.1740	11.684	211592	0.0490	20402	1.5613
0.0001	640.48	282.12	423.18				
000	409.63	2.4412	10.405	167800	0.0618	16180	1.9688
0.0001	507.93	223.73	335.60				
00	364.79	2.7413	9.2657	133072	0.0779	12831	2.4826
0.0002	402.80	177.43	266.14				

AWG	Dia-mils	TPI	Dia-mm	Circ-mils	Ohms/Kft	Ft/Ohm	Ft/Lb
Ohms/Lb	Lb/Kft	*Amps	MaxAmps				
0	324.85	3.0783	8.2513	105531	0.0983	10175	3.1305
0.0003	319.44	140.71	211.06				
1	289.29	3.4567	7.3480	83690	0.1239	8069.5	3.9475
0.0005	253.33	111.59	167.38				
2	257.62	3.8817	6.5436	66369	0.1563	6399.4	4.9777
0.0008	200.90	88.492	132.74				
3	229.42	4.3588	5.8272	52633	0.1970	5075.0	6.2767
0.0012	159.32	70.177	105.27				
4	204.30	4.8947	5.1893	41740	0.2485	4024.7	7.9148
0.0020	126.35	55.653	83.480				
5	181.94	5.4964	4.6212	33101	0.3133	3191.7	9.9804
0.0031	100.20	44.135	66.203				

6	162.02	6.1721	4.1153	26251	0.3951	2531.1	12.585
0.0050	79.460	35.001	52.501				
7	144.28	6.9308	3.6648	20818	0.4982	2007.3	15.869
0.0079	63.014	27.757	41.635				
8	128.49	7.7828	3.2636	16509	0.6282	1591.8	20.011
0.0126	49.973	22.012	33.018				
9	114.42	8.7396	2.9063	13092	0.7921	1262.4	25.233
0.0200	39.630	17.456	26.185				

AWG	Dia-mils	TPI	Dia-mm	Circ-mils	Ohms/Kft	Ft/Ohm	Ft/Lb
Ohms/Lb	Lb/Kft	*Amps	MaxAmps				
10	101.90	9.8140	2.5881	10383	0.9989	1001.1	31.819
0.0318	31.428	13.844	20.765				
11	90.741	11.020	2.3048	8233.9	1.2596	793.93	40.122
0.0505	24.924	10.978	16.468				
12	80.807	12.375	2.0525	6529.8	1.5883	629.61	50.593
0.0804	19.765	8.7064	13.060				
13	71.961	13.896	1.8278	5178.3	2.0028	499.31	63.797
0.1278	15.675	6.9045	10.357				
14	64.083	15.605	1.6277	4106.6	2.5255	395.97	80.447
0.2031	12.431	5.4755	8.2132				
15	57.067	17.523	1.4495	3256.7	3.1845	314.02	101.44
0.3230	9.8579	4.3423	6.5134				
16	50.820	19.677	1.2908	2582.7	4.0156	249.03	127.91
0.5136	7.8177	3.4436	5.1654				
17	45.257	22.096	1.1495	2048.2	5.0636	197.49	161.30
0.8167	6.1997	2.7309	4.0963				
18	40.302	24.813	1.0237	1624.3	6.3851	156.62	203.39
1.2986	4.9166	2.1657	3.2485				
19	35.890	27.863	0.9116	1288.1	8.0514	124.20	256.47
2.0648	3.8991	1.7175	2.5762				

AWG	Dia-mils	TPI	Dia-mm	Circ-mils	Ohms/Kft	Ft/Ohm	Ft/Lb
Ohms/Lb	Lb/Kft	*Amps	MaxAmps				
20	31.961	31.288	0.8118	1021.5	10.153	98.496	323.41
3.2832	3.0921	1.3620	2.0430				
21	28.462	35.134	0.7229	810.10	12.802	78.111	407.81
5.2205	2.4521	1.0801	1.6202				
22	25.346	39.453	0.6438	642.44	16.143	61.945	514.23
8.3009	1.9446	0.8566	1.2849				
23	22.572	44.304	0.5733	509.48	20.356	49.125	648.44
13.199	1.5422	0.6793	1.0190				
24	20.101	49.750	0.5106	404.03	25.669	38.958	817.66

20.987 1.2230 0.5387 0.8081
25 17.900 55.866 0.4547 320.41 32.368 30.895 1031.1
33.371 0.9699 0.4272 0.6408
26 15.940 62.733 0.4049 254.10 40.815 24.501 1300.1
53.061 0.7692 0.3388 0.5082
27 14.195 70.445 0.3606 201.51 51.467 19.430 1639.4
84.371 0.6100 0.2687 0.4030
28 12.641 79.105 0.3211 159.80 64.898 15.409 2067.3
134.15 0.4837 0.2131 0.3196
29 11.257 88.830 0.2859 126.73 81.835 12.220 2606.8
213.31 0.3836 0.1690 0.2535

AWG	Dia-mils	TPI	Dia-mm	Circ-mils	Ohms/Kft	Ft/Ohm	Ft/Lb
Ohms/Lb	Lb/Kft	*Amps	MaxAmps				
30	10.025	99.750	0.2546	100.50	103.19	9.6906	3287.1
339.18	0.3042	0.1340	0.2010				
31	8.9276	112.01	0.2268	79.702	130.12	7.6850	4145.0
539.32	0.2413	0.1063	0.1594				
32	7.9503	125.78	0.2019	63.207	164.08	6.0945	5226.7
857.55	0.1913	0.0843	0.1264				
33	7.0799	141.24	0.1798	50.125	206.90	4.8332	6590.8
1363.6	0.1517	0.0668	0.1003				
34	6.3048	158.61	0.1601	39.751	260.90	3.8329	8310.8
2168.1	0.1203	0.0530	0.0795				
35	5.6146	178.11	0.1426	31.524	328.99	3.0396	10480
3447.5	0.0954	0.0420	0.0630				
36	5.0000	200.00	0.1270	25.000	414.85	2.4105	13215
5481.7	0.0757	0.0333	0.0500				
37	4.4526	224.59	0.1131	19.826	523.11	1.9116	16663
8716.2	0.0600	0.0264	0.0397				
38	3.9652	252.20	0.1007	15.723	659.63	1.5160	21012
13859	0.0476	0.0210	0.0314				
39	3.5311	283.20	0.0897	12.469	831.78	1.2022	26496
22037	0.0377	0.0166	0.0249				

AWG	Dia-mils	TPI	Dia-mm	Circ-mils	Ohms/Kft	Ft/Ohm	Ft/Lb
Ohms/Lb	Lb/Kft	*Amps	MaxAmps				
40	3.1445	318.01	0.0799	9.8880	1048.9	0.9534	33410
35040	0.0299	0.0132	0.0198				

From richard.quick@slug.orgSat Sep 2 13:01:29 1995
Date: Mon, 28 Aug 1995 22:24:22 -0600
From: Richard Quick <richard.quick@slug.org>
Reply to: usa-tesla@usa.net
To: billb@eskimo.com
Subject: AWG Wire Chart

AWG SIZE	D.C. OHMS PER 1000 FT	WIRE DIAM INCHES	APPROX. TURNS PER INCH, SOLID ENAMEL COVERED	FEET PER POUND
1	.1264	.2893	X	3.947
2	.1593	.2576	X	4.977
3	.2009	.2294	X	6.276
4	.2533	.2043	X	7.914
5	.3195	.1819	X	9.980
6	.4028	.1620	X	12.58
7	.5080	.1443	X	15.87
8	.6405	.1286	7.6	20.01
9	.8077	.1144	8.6	25.23
10	1.018	.1019	9.6	31.82
11	1.284	.0907	10.7	40.12
12	1.619	.0808	12.0	50.59
13	2.042	.0720	13.5	63.80
14	2.524	.0641	15	80.44
15	3.181	.0571	16.8	101.40
16	4.018	.0508	18.9	127.90
17	5.054	.0453	21.2	161.3
18	6.386	.0403	23.6	203.4
19	8.046	.0359	26.4	256.5
20	10.13	.0320	29.4	323.4
21	12.77	.0285	33.1	407.8
22	16.20	.0253	37.0	514.2
23	20.30	.0226	41.3	648.4
24	25.67	.0201	46.3	817.7
25	32.37	.0179	51.7	1031
26	41.02	.0159	58.0	1300
27	51.44	.0142	64.9	1639
28	65.31	.0126	72.7	2067
29	81.21	.0113	81.6	2607
30	103.7	.0100	90.5	3287
31	130.9	.0089	101	4145
32	162.0	.0080	113	5227
33	205.7	.0071	127	6591

34	261.3	.0063	143	8310
35	330.7	.0056	158	10480
36	414.8	.0050	175	13210
37	512.1	.0045	198	16660
38	648.2	.0040	224	21010
39	846.6	.0036	248	26500
40	1079	.0031	282	33410
41	1323	.0028		
42	1659	.0025		
43	2143	.0022		
44	2593	.0020		
45	3348	.00176		
46	4207	.00157		
47	5291	.00140		

****

For winding Tesla secondary coils the general consensus is to use number 22 AWG, or larger diameter, double Formvar Magnet wire. Often surplus partial spools of odd wire sizes are found, so I took time to post a more complete chart of AWG numbers and fractional diameters than is usually available. All information above is approximate despite the decimal places. Wire diameter, turns per inch, resistance, feet per pound, etc. all vary slightly from one manufacturer to another. Insulation thicknesses will vary depending upon type and the supplier. Turns per inch will also vary with the quality of the winding. In practice, Tesla coil windings are not perfect (nor do they need to be) so expect some slight variations from the specification table above.

Richard Quick

.. If all else fails... Throw another megavolt across it!
___ Blue Wave/QWK v2.12
Re: Tune Up- FAQ?

To: tesla@poodle.pupman.com
Subject: Re: Tune Up- FAQ?
From: Tesla List <tesla@stic.net>
Date: Sun, 15 Jun 1997 17:44:16 -0500
Approved: tesla@stic.net
Subject: Re: Tune Up- FAQ?
Date: Sun, 15 Jun 1997 18:11:59 -0400
From: "Thomas McGahee" <tom_mcgahee@sigmais.com>

To: "Tesla List" <tesla@pupman.com>

> From: Tesla List <tesla@pupman.com>
> To: tesla@poodle.pupman.com
> Subject: Tune Up- FAQ?
> Date: Sunday, June 15, 1997 5:48 PM
>
> Subject: Tune Up- FAQ?
> Date: Sun, 15 Jun 1997 16:29:52 +0000
> From: jmonty@mail.sat.net
> To: Tesla List <tesla@pupman.com>
>
>
> Is there an faq that instructs the novice with a new coil how to
tune
> it up and optimize it. Inquiring minds want to know..
> Thanks,
> Jeff Montgomery
> Palestine, Texas

Jeff,
There is a Tesla-2 list that is set up to help beginners.
Mike Hammer just posted a piece on this exact topic.
So I am copying it to the Tesla list in the hopes that it helps.

Fr. Tom McGahee

From: Mike Hammer <mhammer@misslink.net>
Date: Sat, 14 Jun 1997 14:51:40 -0500
Subject: Tesla coil tuning

Hello all,
Several people have asked me via email and on the
IRC Tesla channel about how to go about tuning
a coil and the steps to take.

So I thought I would share some info on the subject with
the list.

Once a Tesla coil is set up and ready to fire, certain steps
should be taken before power is applied. Don't expect to throw

full power into a new coil or a newly rearranged system. If you do you may damage components. The coil must be brought into tune and up to full power gradually.

The use of a variac is highly recommended for controlling the input voltage to whatever step up transformer you may be using. (neon, obit) Never throw full power to a coil until you are sure the system is in proper tune.

Set the primary circuit up first. Double check all of your connections. Run your grounds and double check those. Never take any connection for granted. Set the secondary into the primary and attach the RF ground. Use a small discharge terminal at first. A small spherical terminal works well at this point. A smaller terminal will break down and produce spark at a lower power level than a larger terminal. This allows you to search for the proper tune with less stress placed on components. If you dont have a smaller terminal and only have a large toroid place a point discharger on the toroid. Sparks will easily break out from such a point. Often times a well placed thumbtack will work well.

CLOSE YOUR SPARK GAPS DOWN!
I can't overemphasize this point. Don't run a lot of gap. This will limit the peak voltages in the primary to low levels while things are out of tune.
As things are brought closer to resonance the gap can be opened a little at a time to increase the primary energy level.

Apply a bit of power until the spark gap fires. If no spark breakout is seen from the discharge terminal don't worry. Use a flourescent bulb as an indicator. As the coil gets closer to resonance
the farther away and brighter the bulb will glow. Turn off the coil and move the tap connection on the primary coil a half turn and check the bulb brightness. Then move it a full turn in the opposite direction and note the brightness of the bulb again. This way you can determine the direction the tap needs to be moved to locate the proper tune.

Open the main and safety gaps up in steps. Apply the same voltage input (low power) and check for discharge. Once spark has begun to break out of the discharge terminal use it as a visual indicator of tune.

If you find the best tune point is with very few primary
turns then your primary cap is too large. Adding a larger toroid
to your secondary will lower its resonant frequency and allow
you to tap in more primary turns also.

If you get tuned all the way out to your last primary turn
and you still havnt found the resonant point then your primary
cap may be too small or your toroid too large.
This often happens with beginner coils wound with far too
many turns of small guage wire. The large number of secondary turns
causes the secondary resonant frequency to be very low and beyond the
range
of your primary circuit. Cutting down the secondary to no more than
900-1000
turns will help here.

A system in proper tune should not break down the safety gap often.
The
safety gap once set properly should not be too active. Once the coil
is in good tune the safety gap electrodes may be opened to the point
where it only fires occasionally.

If your safety gap is firing continuously then you may be out of tune
or you may be running too wide a main gap. Try closing down your main
gap
slightly and retuning for best output.

Hope this is helpful.

As always comments, criticism and large sums of money welcome.

TTYL!

Mike Hammer
mhammer@misslink.net

* Send list Replies to: Tesla-2@emachine.com

* To UNSUBSCRIBE from this list, put the command UNSUBSCRIBE TESLA-2
in the body of your message to: Listserv@Emachine.com

Processed with Listserv v2.93 for Wildcat v4
THEORETICAL ELECTROMAGNETIC STUDIES AND LEARNING ASSOCIATION, INC.
522 WEST THIRD STREET
LEADVILLE, COLORADO 80461
(719) 486-0133

THE INFLUENCE OF VEDIC PHILOSOPHY ON NIKOLA TESLA'S UNDERSTANDING OF FREE ENERGY

"The first thing to realize about the ether is its absolute continuity. A deep sea fish has probably no means of apprehending the existence of water; it is too uniformly immersed in it: and that is our condition in regard to the ether."
Sir Oliver Lodge, Ether and Reality.

ABSTRACT

Nikola Tesla used ancient Sanskrit terminology in his descriptions of natural phenomena. As early as 1891 Tesla described the universe as a kinetic system filled with energy which could be harnessed at any location. His concepts during the following years were greatly influenced by the teachings of Swami Vivekananda. Swami Vivekananda was the first of a succession of eastern yogi's who brought Vedic philosophy and religion to the west. After meeting the Swami and after continued study of the Eastern view of the mechanisms driving the material world, Tesla began using the Sanskrit words Akasha, Prana, and the concept of a luminiferous ether to describe the source, existence and construction of matter. This paper will trace the development of Tesla's understanding of Vedic Science, his correspondence with Lord Kelvin concerning these matters, and the relation between Tesla and Walter Russell and other turn of the century scientists concerning advanced understanding of physics. Finally, after being obscured for many years, the author will give a description of what he believes is the the pre-requisite for the free energy systems envisioned by Tesla .

TESLA'S EARLIER DESCRIPTION OF THE PHYSICAL UNIVERSE

By the year 1891, Nikola Tesla had invented many useful devices. These included a system of arc lighting (1886), the alternating current motor, power generation and transmission systems (1888), systems of electrical conversion and distribution by oscillatory discharges (1889), and a generator of high frequency currents (1890), to name a few. The most well known patent centers around an inspiration that

occurred while walking with a friend in a park in Budapest, Hungry. It was while observing the sunset that Tesla had a vision of how rotating electromagnetic fields could be used in a new form of electric motor. his led to the well known system of alternating current power distribution. In 1891 however, Tesla patented what one day may become his most famous invention. It is the basis for the wireless transmission of electrical power and is know as the Tesla Coil Transformer. It was during this year that Tesla made the following comments during a speech before the American Institute of Electrical Engineers;

"Ere many generations pass, our machinery will be driven by a power obtainable at any point in the universe. This idea is not novel... We find it in the delightful myth of Antheus, who derives power from the earth; we find it among the subtle speculations of one of your splendid mathematicians... Throughout space there is energy. Is this energy static or kinetic.? If static our hopes are in vain; if kinetic - and this we know it is, for certain - then it is a mere question of time when men will succeed in attaching their machinery to the very wheelwork of nature." 1

This description of the physical mechanisms of the universe was given before Tesla became familiar with the Vedic science of the eastern Nations of India, Tibet, and Nepal. This science was first popualized in the United States and the west during the three year visit of Swami Vivekananda.

VEDIC SCIENCE AND SWAMI VIVEKANANDA

The Vedas are a collection of writings consisting of hymns, prayers,

myths, historical accounting, dissertations on science, and the nature of reality, which date back at least 5,000 years. The nature of matter, antimatter, and the make up of atomic structure are described in the Vedas. The language of the Vedas is known as Sanskrit. The origin of Sanskrit is not fully understood. Western scholars suggest that it was brought into the Himalayas and thence south into India by the southward migrations of the Aryan culture. Paramahansa Yogananda and other historians however do not subscribe to that theory, pointing out that there is no evidence within India to substantiate such claims. 2

There are words in Sanskrit that describe concepts totally foreign to the western mind. Single words may require a full paragraph for translation into english. Having studied Sanskrit for a brief period during the late 70's, it finally occurred to this writer that Tesla's use of Vedic terminology could provide a key to understanding his view of electromagnetism and the nature of the universe. But where did Tesla learn Vedic concepts and Sanskrit terminology? A review of the well known biographies by Cheney, Hunt and Draper, and O'Neil 3,4,5, reveal no mention of Tesla's knowledge of Sanskrit. O'Neal however includes the following excerpt from an unpublished article called Man's Greatest Achievement;

"There manifests itself in the fully developed being , Man, a desire mysterious, inscrutable and irresistible: to imitate nature, to create, to work himself the wonders he perceives.... Long ago he recognized that all

perceptible matter comes from a primary substance, or tenuity beyond conception, filling all space, the Akasha or luminiferous ether, which is acted upon by the life giving Prana or creative force, calling into existence, in never ending cycles all things and phenomena. The primary substance, thrown into infinitesimal whirls of prodigious velocity, becomes gross matter; the force subsiding, the motion ceases and matter disappears, reverting to the primary substance."

According to Leland Anderson the article was written May 13th,

1907. Anderson also suggested that it was through association with Swami Vivekananda that Tesla may have come into contact with Sanskrit terminology and that John Dobson of the San Francisco Sidewalk Astronomers Association had researched that association. 6

Swami Vivekananda was born in Calcutta, India in 1863. He was inspired by his teacher, Ramakrishna to serve men as visible manifestations of God. In 1893 Swami Vivekananda began a tour of the west by attending the Parliament of Religions held in Chicago. During the three years that he toured the United States and Europe, Vivekananda met with many of the well known scientists of the time including Lord Kelvin and Nikola Tesla. 7 According to Swami Nikhilananda;

Nikola Tesla, the great scientist who specialized in the field of electricity, was much impressed to hear from the Swami his explanation of the Samkhya cosmogony and the theory of cycles given by the Hindus. He was particularly struck by the resemblance between the Samkhya theory of matter and energy and that of modern physics. The Swami also met in New York Sir William Thompson, afterwards Lord Kelvin, and Professor Helmholtz, two leading representatives of western science. Sarah Bernhardt, the famous French actress had an interview with the Swami and greatly admired his teachings. 8

It was at a party given by Sarah Bernhardt that Nikola Tesla probably first met Swami Vivekananda. 9 Sarah Bernhardt was playing the part of 'Iziel' in a play of the same name. It was a French version about the life of Bhudda. The actress upon seeing Swami Vivekananda in the audience, arranged a meeting which was also attended by Nikola Tesla. In a letter to a friend, dated February 13th, 1896, Swami Vivekananda noted the following;

...Mr. Tesla was charmed to hear about the Vedantic Prana and Akasha and the Kalpas, which according to him are the only theories modern science can entertain.....Mr Tesla thinks he can demonstrate that mathematically that force and matter are reducible to potential energy. I am to go see him next week to get this mathematical demonstration. 10

Swami Vivekananda was hopeful that Tesla would be able to show that what we call matter is simply potential energy because that would reconcile the teachings of the Vedas with modern science. The Swami

realized that "In that case, the Vedantic cosmology [would] be placed on the surest of foundations". The harmony between Vedantic theories and and western science was explained by the following diagram;

BRAHMAN = THE ABSOLUTE
| |
| |
MAHAT OR ISHVARA = PRIMAL CREATIVE ENERGY
| |
+---------+ +---------+
PRANA and AKASHA = ENERGY and MATTER

Tesla understood the Sanskrit terminology and philosophy and found that it was a good means to describe the physical mechanisms of the universe as seen through his eyes. It would behoove those who would attempt to understand the science behind the inventions of Nikola Tesla to study Sanskrit and Vedic philosophy.

Tesla apparently failed to show the identity of energy and matter. If he had, certainly Swami Vivekananda would have recorded that occasion. The mathematical proof of the principle did come until about ten years later when Albert Einstein published his paper on relativity. What had been known in the East for the last 5,000 years was then known to the West.

Brahman is defined as the one self existent impersonal spirit; the Divine Essence, from which all things emanate, by which they are sustained, and to which they return. Notice that this is very similar to the concept of the Great Spirit as understood by Native American cultures. Ishvara is the Supreme Ruler; the highest possible conception of the Absolute, which is beyond all thought. Mahat means literally the Great One, and is also interpreted as meaning universal mind or cosmic intelligence. Prana means energy (usually translated as life force) and Akasha means matter (usually translated as ether). Dobson points out that the more common translations for Akasha and

Prana are not quite correct, but that Tesla did understand their true meanings.

The meeting with Swami Vivekananda greatly stimulated Nikola Tesla's interest in Eastern Science. The Swami later remarked during a lecture in India, "I myself have been told by some of the best scientific minds of the day, how wonderfully rational the conclusions of the Vedanta are. I know of one of them personally, who scarcely has time to eat his meal, or go out of his laboratory, but who would stand by the hour to attend my lectures on the Vedanta; for, as he expresses it, they are so scientific, they so exactly harmonize with the aspirations of the age and with the conclusions to which modern science is coming at the present time". 11

TESLA AND LORD KELVIN

William S. Thompson was one of the prominent scientists and engineers of the 1800s. He developed analogies between heat and electricity and his work influenced the theories developed by James Clerk Maxwell, one of the founders of electromagnetic theory. Thompson supervised the successful laying of the Trans Atlantic Cable and for that work was knighted Lord Kelvin. Kelvin had endorsed Tesla's theories and proposed system for the wireless transmission of electrical power. 12 FootNOTE-Grotz PACE

Tesla continued to study Hindu and Vedic philosophy for a number of years as indicated by the following letter written to him by Lord Kelvin.

15, Eaton Place
London, S.W.
May 20, 1902

Dear Mr. Tesla,

I do not know how I can ever thank you enough for the

most kind letter of May, 10, which I found in my cabin in the Lucania, with the beautiful books which you most kindly sent me along with it: -"The Buried Temple", "The Gospel of Bhudda", Les Grands Inities", the exquisite edition of Rossetti's "House of Life", and last but not least the Century Magazine for June, 1900 with the splendid and marvelous photographs on pp. 176, 187, 190, 191, 192, full of electrical lessons.

We had a most beautiful passage across the Atlantic, much the finest I have ever had. I was trying hard nearly all the way, but quite unsuccessfully, to find something definite as to the functions of ether in respect to plain, old fashioned magnetism. A propos of this, I have instructed the publishers, Messrs. Macmillan, to send you at the Waldorf a copy of my book (Collection of Separate Papers) on Electrostatics and Magnetism. I shall be glad if you will accept it from me as a very small mark of my gratitude to you for your kindness. You may possibly find something interesting in the articles on Atmospheric Electricity which it contains.

Lady Kelvin joins me in kind regards, and I remain,

Yours always truly,

Kelvin

Thank you also warmly for the beautiful flowers 13

TESLA AND RUSSELL

Walter Russell was one of the most accomplished artists, sculptors, writers and scientists of this century. His periodic chart of the elements accurately predicted the location and characteristics of four elements years before they were discovered in laboratories. These are now known as Deuterium, Tritium, Neptunium, and Plutonium. Russell apparently entered into a heightened state of awareness after being struck by lightning. He began several weeks of drawing and writing about the basic nature and make up of the physical universe. Russells' family finally called the family doctor to determine if Russell should

be committed to an mental institution. The doctor, upon seeing the results of Russells weeks of work, said that he did not know what Russell was doing, but that he definitely was not mad.

Although the exact time and occasion of their meeting has not yet been determined, Nikola Tesla and Walter Russell did meet and discuss their respective cosmologies. 14 Tesla recognized the wisdom and power of Russells' teaching and urged Russell to lock up his knowledge in a safe for 1,000 years until man was ready for it. 15

WHY FREE ENERGY HASN'T HAPPENED YET

COMMENTS, POSSIBILITIES AND SOCIO ECONOMIC IMPLICATIONS

Although Tesla did not accept many of the tenants of relativity and quantum theory and never made the connection between matter and energy, he did recognize the possibility of free and unlimited energy as demonstrated by the following statement.

Can Man control [the] grandest, most awe inspiring of all processes in nature?...If he could do this, he would have powers almost unlimited and supernatural... He could cause planes to collide and produce his suns and stars, his heat and light. He could originate and develop life in all its infinite forms....[Such powers] would place him beside his creator, make him fulfill his ultimate destiny. 16

We see that Tesla is asking a question, speculating, searching for an answer. If Tesla had developed free energy sources or learned how to manipulate space time and gravity, during the time of his most public and productive years, (up until about 1920), he would have had answers to those questions.

Tesla's most misunderstood invention is popularly known as the "Death Ray". It was simply a particle beam weapon which he proposed in 1937 and was fabricated under contracts with Alcoa Aluminum and the English and Italian governments. 17 It used electrostatic propulsion techniques and similar devices are being developed today by the Strategic Defense Initiative Organization (SDIO) and the US Army Strategic Defense Command. 18

So we see that mankind has not yet harnessed the infinite power of

the universe as envisioned by Nikola Tesla. The question remains, why not?

Free energy devices, if they are feasible, are not about smaller faster microcircuits or a bigger better mouse traps. This is a technology which may revolutionize the socio-economic status quo on planet Earth. At this moment the big pie is unevenly divided. One quarter of the population on this rock, the third stone from the sun, consumes three quarters of the yearly resource output. As one can easily deduce, from a brief study of world affairs, there are about three billion people who have just about had it with this scenario. There are wars starvation and strife in every nook and cranny of the planet. So what do we do about it?

Spaceship Earth Needs A Flight Plan

Either we divide the pie more evenly or we make the pie larger. The first option requires that our standard of living must fall so that the standard of living in the third world may rise. The second option allows us to maintain our standard of living while we help raise the standard of living of under privileged nations. This we must do. It is our destiny. It is our responsibility. It is our final test.

Thirty thousand people starve to death every day on this planet, most of them are children. Nations fight nations, war is part of our lives. What drives our economy in the western world, allows us to enjoy a high standard of living, a life of leisure compared to our neighbors south of the imaginary line called a border? Many answers both economic,

social, political, and spiritual can be given. We do know that the standard of living that a nation enjoys is directly related energy consumption.

Energy drives the economies of nations and Tesla's life long goal was to make electric power equally available to all people any where on this planet. He continued to promote his plan for the wireless transmission of power in the yearly interviews he gave on his birthday as late as 1940. 19 Electrical power allows on site processing of raw materials. Electrical power can run pumps from water wells in areas

affected by drought. Electrical power delivered to the poverty stricken areas of the world can make the pie larger, can help bring about the needed economic equality which is our birth right.

Why hasn't power been made equally available to all people and nations? Why haven't the much touted free energy devices described by Tom Bearden, John Bedini, Bruce DePalma, and others ever materialized? Perhaps because "easy things are seldom done for the same reason that impossible things are rarely done: no one will pay for anything believed to be easy or impossible". 20 Perhaps because when we talk about power there is more there than one would initially visualize. What we are talking about is personal power, national power, planetary power, karmic power and the power of love.

The sages tell us that in order to enjoy power we have to let go of power, to overcome ourselves. As an example this author can describe one of his recent experiences. After a very successful symposium celebrating the 100th year after Nikola Tesla arrived in the United States 21, a non profit corporation, 501(c)(3), was formed specifically to encourage and pursue research into the inventions and discoveries of Nikola Tesla. Two years later, after a second symposium, several of the founding members approached the board of directors with a proposal to validate Tesla's claim that wireless transmission of power was possible. Board members suggested that permission be obtained from the FCC, an environmental impact statement be filed with the EPA, and we should go form "our own non profit corporation". 22 It was also decided that since there was no procedure to cover research, the organization could not be involved.

Another goal of the organization had been to establish a museum to be named the Nikola Tesla Museum of Science and Technology. We proposed that since 60 -70 billion dollars are given away to non profit organizations annually, we had as good a chance as any other organization for obtaining funding, for a museum or research. We reasoned that:

"Since only 16% of the museums in this country are science museums, this museum in honor of Nikola Tesla will help educate the public in technological areas. With the need for economic revitalization of industry in Colorado, 1986is the time to begin supporting the scientific education of our region. With the current statistics showing that the United States is falling behind the world technologically, the effort to educate the public is becoming more important, and the surge of public awareness of Nikola Tesla's inventions makes him an appropriate namesake for a science and

technology museum." 23

The board moved to table our proposal indefinitely.

What had happened? Of the 15 - 20 people that had started the organization only four remained as part of the governing body. Three of those members were opposed to research. The collective mind of the board of directors had become the antithesis of the momentum Tesla had gained in his lifetime. Unlike the independent inventor and businessman, the board was now composed of members who were bureaucrats and paper pushers for Fortune 500 companies. Tesla was a vegetarian, the board members all ate meat. Tesla did not ask for permission to be inventive and strike out on bold new adventures, the board needed approval from higher sources. The dichotomies were endless.

Tesla's visions have been delayed for 89 years. The squabbling started with Thomas Edison, J.P. Morgan and Nikola Tesla himself. 24 It continues to this day. Perhaps the reason for the delay of wireless power transmission or free energy devices lies even deeper within the human psyche. Is it possible that we could compare the Tesla story to a biblical story? Bruce Gordan thinks so. In Gordan's analysis Tesla's attempt at building a prototype magnifying transmitter parallels Genesis 11:1-9. 25

"The message; human curiosity and technological derring-do makes God nervous; God demolishes project, confounds language". Gordan further outlines the the scenario as follows:

"ISOMORPHISM"

BIBLE STORY TESLA TALE

Human Efforts Tesla Projects
Tower of Babel Wardenclyffe Tower
God Money (J.P. Morgan)

Demolition and Confounding to maintain Withdrawal of Morgan's

Status Quo of God drunk on power above, Financial Support and humanity groveling in ignorance below. subsequent suppression of Tesla's work in orthodox science & engineering circles Perpetuation of mediocre technology for energy generation, storage,distribu- tion, to maintain favorable cash flow for existing system for energy management by forcing continued combustion of scarce fuels, keep consumers, paying, paying, paying.....

"When everything is perfect, the right time shows up." 26 This is equivalent to saying, "Absolute knowledge in the hands of one whose heart is not yet tender, would be a terrible weapon. 27 We might postulate that technological developments do not occur until the planet is ready. The recent examination of the theory of Gaia credits the Earth with an intelligence. "Thousands of years ago, by means of seeing, sorcerers became aware that the Earth was sentinent and that its awareness could affect the awareness of humans." 28 By implication of reciprocity the reverse could be true. The group or collective unconscious is still struggling with the result of quantum

and relativity theory. We as a race were ready for nuclear power, every thing was perfect and the right time showed up. Soon we will have put the technology to good use or abandon it to insure our survival as a species.

SO WHAT DO YOU DO ABOUT IT

FREE ENERGY: CREATING AN IDEA WHOSE TIME HAS COME

Wireless transmission of power and free energy have not happened yet, perhaps we aren't ready, perhaps the Earth isn't ready. Pogo said it best, " we have met the enemy and it is us." In the Jungian view of collective unconscious, things happen when the time is right, we get what we agree to. We need a flight plan. And that plan must realize that,

WHEN THE POWER OF LOVE

OVERCOMES

THE LOVE OF POWER

THERE WILL BE

PEACE

[Source; Girls Lavatory, Boulder High School, Boulder, Colorado] Described as "Post Industrial, neo-technical, teen-age graffiti."

"So astounding are the facts in this connection, that it would seem as though the Creator, himself had electrically designed this planet...."

Nikola Tesla describing what is now known as Schumann Resonance (7.8 Hz) in "The Transmission of Electrical Energy Without Wires As A Means Of Furthering World Peace", Electrical World And Engineer, January 7, 1905, PP 21-24.

FOOTNOTES

1. Ratzlaff, John, Tesla Said, Tesla Book Company, PO Box 1649, Greenville, TX 75401, 1984.

2. Yogananda, Paramahansa, Autobiography of a Yogi, Self Realization Fellowship,, 3880 San Rafael Ave., Los Angeles, CA 90065, 1985.

3. Cheney, Margaret, Man Out of Time, Prentice Hall, 1981.

4. Hunt, Inez and Draper. Wanetta, W., Lightning In His

Hand, The Life Story Of Nikola Tesla, Omni Publications, Hawthorne, CA, 1981.

5. O'Neal, John, J., Prodigal Genius, The Life Of Nikola Tesla, Ives Washington, Inc., 1944.

6. Anderson, Leland, personal communication. See also Anderson, L.I., and Ratzlaff, J.T., Dr. Nikola Tesla Bibliography, Ragusan Press, 936 Industrial Avenue, Palo Alto, CA 94303, 1979.

7. Nikhilananda, Swami, Vivekananda, The Yogas and Other Works, Ramakrishna-Vivekananda Center, New York, 1973.

8. Nikhilananda, Swami.

9. Dobson, John, personal communication.

7. Dobson, John, Advaita Vedanta and Modern Science, Vedanta Book Center, 5423 S. Hyde Park, Chicago, IL 60615, 1979.

10. Nikhilananda, Swami.

11. Burke, Marie Louise, Swami Vivekananda in the West, New Discoveries, The World Teacher, Advaita Ashrama, Mayavati, India, 1985, p. 500

12. Grotz, T., "Artificially Stimulated Resonance of the Earth's Schumann Cavity Waveguide", Proceedings of the Third International New Energy Technology Symposium/Exhibition, June 25th-28th, 1988, Hull, Quebec, Planetary Association for Clean Energy, 191 Promenade du Portage/600, Hull, Quebec J8X 2K6 Canada

13. From the personal collection of L. Anderson.

14. Russell, Lao. personal communication.

15. The University of Science and Philosophy, Swannanoa, Waynesboro, VA 22980, (703) 942-5161.

16. First written by Tesla on May 13, 1907, for the "Actors Fair Fund", text transcribed from an A.L.S. in the collections of the Bakken Library of Electricity in Life. The article later appeared in the "New York American", July 6, 1930, pg. 10.

17. Tesla, Nikola, The New Art of Projecting Concentrated Non-Dispersive Energy Through Natural Media, Proceedings of the Tesla Centennial Symposium, Grotz, T. & Rauscher, E., Editors, 1984.

18. Turchi, P.J.,Conte, D.,Seiler, S., Electrostatic Acceleration of Microprojectiles to Ultrahypervelocities, "Proceedings of the Seventh Pulsed Power Conference", June 12th-14th, Monterey, California, Jointly Sponsored by the DOD, DOE, and the IEEE Electron Devices Society.

19. "Death Ray for Planes", New York Times, September 20, 1940.

20. Pawlicki, T.B., Exploring Hyperspace, 848 Fort Street, Victoria, B.C., Canada, electronic book on floppy disk, 1988, (Log onto the TESLA BBS at (719) 486-2775 for copy of ASCII text files)

21. Broad, William J., "Tesla a Bizarre Genius, Regains Aura of Greatness", New York Times, Aug. 28th, 1984

22. El-Kareh, E., Elswick, S., memo, 1987.

23. Grotz, T., & Sheppard, J., The Nikola Tesla Museum of Science and Technology submitted to the Board of Directors of the International Tesla Society, December 12th, 1986. [Available as an ASCII text file on the TESLA BBS (719) 486-2775]

24. Cheney, Margaret, Tesla, Man Out of Time, Prentice Hall Inc, Englewood Cliffs, NJ, 1981.

25. Gordan, Bruce, private communication, 1988.

26. Arguelles, Jose & Lloydine, personal communication.

27. Hercules, Michael, The Circle of Love, published by the author.

28. Castenada, Carlos, The Power of Silence, Further Lessons of don Jaun, Simon and Schuster, New York, 1987, Pg. 120.

FURTHER INFORMATION ABOUT TESLA

TESLA BBS: This is a full featured computer Bulletin Board Service for access to information about current research and the life and times of Nikola Tesla. A subsection of the Colorado Mountain College BBS, it may be contacted using a computer and 300/1200/2400 baud modems at (719) 486-2775.

The Tesla Memorial Society The Tesla Coil Builders Association
% Nicholas Kosanovich % Harry Goldman
453 Martin Road RD #6 Box 181
Lackawanna, NY 14218 Glenns Falls, NY 12801
(716) 822-0281 (518) 792-1003

The Tesla Book Company High Voltage Press
PO Box 1649 PO Box 532
Greenville, TX 75401 Claremont, CA 91711
(214) 454-6819

Mr. Toby Grotz, President, Wireless Engineering, is an electrical engineer and has 16 years experience in the field of geophysics, aerospace and industrial research and design. While working for the Geophysical Services Division of Texas Instruments and at the University of Texas at Dallas, Mr. Grotz was introduced to and worked with the geophysical concepts which are of importance to the wireless transmission of power.

As a Senior Engineer at Martin Marietta, Mr. Grotz designed and supervised the construction of industrial process control systems and

designed and built devices and equipment for use in research and development and for testing space flight hardware.

Mr. Grotz also worked for the public utility industry installing mini computer based pollutant measuring data acquisition systems in

fossil fuel power plants and as a results engineer in a nuclear power plant. Mr. Grotz organized and chaired the 1984 Tesla Centennial Symposium and the 1986 International Tesla Symposium and was president of the International Tesla Society, a not for profit corporation formed as a result the first symposium.

As Project Manager for Project Tesla, Mr. Grotz aided in the design and construction of a recreation of the equipment Nikola Tesla used for wireless transmission of power experiments in 1899 in Colorado Springs. Mr. Grotz received his B.S.E.E. from the University of Connecticut in 1973.

If you have comments or other information relating to such topics as this paper covers, please upload to KeelyNet or send to the Vangard Sciences address as listed on the first page. Thank you for your consideration, interest and support.

Jerry W. Decker.....Ron Barker.....Chuck Henderson
Vangard Sciences/KeelyNet

If we can be of service, you may contact
Jerry at (214) 324-8741 or Ron at (214) 484-3189
---Twelve Star Publishing : Sourceworks
Tesla's Radiant Energy Patents
In 1901 Nikola Tesla was granted several patents for a system of radiant energy transmission and reception. The system utilized "natural media" such as the atmosphere and ground to transmit power with virtually no losses. A decade earlier, Tesla had destroyed the DC power industry with his superior AC system. Now he was poised to do it again, with broadcast power.The radiant energy system was revolutionary because it did away with wires and meters. Modest amounts of electric power would be available

anywhere, at any time, for lighting and communications. Simply erect an aerial collector, attach the ground plate and plug in. Tesla's vision was to provide free electricity in the service of humanity.Unfortunately, this vision did not impress the financial backers in the utilities industry. With heavy investments in the AC system, there was little interest in supporting the more noble, but less profitable, radiant system. Tesla's demonstration plant at Wardenclyffe, Long Island, was never completed. Ironically, the perfected radiant system marks a turning point in his career. Though still popular with the press, few of his later inventions were ever put into production.The article that follows appeared in Scientific American, in November of 1901. It presents a technical overview of the radiant energy patents. There are two veiled references to the extraction of power from space, in excess of power received from the transmitting station.
Notes:
1)Tesla's radiant energy patents include #685954 through #685958. Also see #645576.
2)Two excellent references on Tesla and his work are:
-The Fantastic Inventions of Nikola Tesla, Adventures Unlimited Press, Kempton, IL, 1993. ISBN 0-932813-19-4- "The Broadcast Power of Nikola Tesla", by Gerry Vassilatos. Borderlands, Vol. LII, No. 2 - 3, 1996.
from Scientific American, November 30, 1901:
Tesla's Recent Patents
"Nikola Tesla has received several patents for a 'Method of Intensifying and Utilizing Effects Transmitted Through Natural Media.' In one of these systems Tesla varies the potential point or region of the earth by imparting to it intermittent or alternating electrifications through one of the terminals of a suitable source of electrical disturbances which to heighten the effect, has its other terminal connected with an insulated body, preferably of large surface and at an elevation. Electrifications communicated to the earth spread in all directions, reaching a circuit which generally has its terminals arranged and connected similarly to those of the transmitting source and which operates upon a highly sensitive receiver.Another of Telsa's methods is based upon the fact that the atmospheric air, which behaves as an excellent insulator to currents generated by ordinary apparatus, becomes a conductor under the influence of currents or impulses of enormously high electromotive force. By such means air strata, which are easily accessible, are rendered available for the production of many desired effects at distances. Although either method may be employed, it is obviously desirable that the disturbance should be as powerful as possible and should be transmitted with a minimal loss. The loss reduces greatly both the intensity and the number of the co-operative impulses, and since the initial intensity of each of these is necessarily limited, only an insignificant amount of energy is thus available for a single operation of the receiver. Furthermore the energy obtained through the cooperation of the impulses is in the form of an extremely rapid vibration and unsuitable for the operation of ordinary receivers. To overcome the limitations of the two methods mentioned, Tesla reproduces arbitrarily varied or intermittent disturbances or effects; transmits these disturbances through the air to a distant receiving station, utilizes the energy derived from such disturbances at the receiving station to charge a condenser, and uses the accumulated potential so obtained to operate a receiving device.The apparatus which is employed at the receiving station consists in the combination of a storage device included in a circuit,

connection points at a distance from the source of the disturbances and between which a difference of potential is created by such disturbances, a receiving circuit connected with the storage device, a receiver included in the receiving circuit, and a mechanism for closing the receiving circuit at any desired moment, thereby causing the receiver to be operated by the energy with which the storage device has been charged.In another method the energy stored is not, as in the previous instance, obtained from the energy of the disturbance effect transmitted from a distance, but from an independent source. The method in general consists in charging a storage device with energy from an independent source, controlling the charge of the device by the action of the effects or disturbances transmitted through the natural media and coincidently using the stored energy for operating a receiver. A condenser is used as the storage means.The invisible radiations of the spectrum and of vacuum tubes are generally considered to be vibrations of extremely small wave length. These radiations posses the property of charging and discharging conductors of electricity, the discharge being particularly noticeable when the conductor upon which the rays impinge is negatively electrified. It is usually held that these radiations ionize or render conducting the atmosphere through which they are propagated. Tesla's own experiments lead him, however, to conclusions more in accord with the theory he has already advanced, in which he holds that sources of such radiant energy throw off with great velocities minute particles of matter which are strongly electrified, and therefore capable of charging an electrical conductor, or even if not so, of discharging an electrified conductor either by carrying off bodily its charge or otherwise.Tesla has taken out a patent based on a discovery which he has made, that when rays or radiations of this kind are permitted to fall upon an insulated conducting body connected with one of the terminals of a condenser while the other terminal is made by independent means to receive or carry away electricity, a current flows into the condenser as long as the insulated body is exposed to the rays. Under certain conditions an indefinite accumulation of electrical energy takes place. This energy after a suitable time interval during which the rays are allowed to act, may manifest itself in a powerful discharge, which can be utilized for the operation or control of mechanical or electrical devices or rendered useful in many other ways. The radiant energy is directed upon an elevated conductor, connected with one of the armatures of the condenser, positively electrified by the invisible radiations. The electricity is carried off from the other armature by connecting it with the ground. The accumulated energy is discharged through a suitable receiver."Back to Sourceworks

TREMENDOUS NEW POWER SOON TO BE UNLEASHEDNikola Tesla, Starting His 78th Year, Works on Revolutionary PowerProject and Also Is Completing Process for Photographing Thought.

The Kansas City Journal-Post ran this headline on September 10, 1933:

The following are quotes from this newspaper:'Several of these inventions or discoveries will be looked upon as 'miracles' by many people, for Mr. Tesla has long been a scientist years ahead of his time, one whose advanced theories have alternately stamped him a 'madman' and a wizard. Just as people ridiculed Copernicus' theory of the planetary system, the unenlightened jeered Tesla's pronouncement, years ago regarding cosmic rays. The pathfinder and the pioneer - and Mr. Tesla is both - are always condemned by the masses.'

'Mr. Tesla is the father of the alternating system of power transmission and radio, the induction motor and Tesla coil. Asked about his startling new scientific discoveries, one of which concerns the 'photographing of thought,' which will, he maintains, bring about a tremendous social revolution, he said:'My first and most important discovery concerns the harnessing of a new source of power, hitherto unavailable, to be developed through fundamentally novel machines of my invention.'

'Will the smashing of the atom lead to this new power energy? Let Mr. Tesla answer: 'The public is naturally led to expect a great revolution through the harnessing of atomic power, but this is an illusion. Atomic energy is not available for work...For the last thirty years I have warned my fellow scientists that there is nothing to be expected in this field...'

'I expect to photograph thoughts,' announced Mr. Tesla calmly, in the same tone of voice one might talk about the rain. Continued Mr. Tesla: 'In 1893...I became convinced that a definite image formed in thought must, by reflex action, produce a corresponding image on the retina, which can be read by suitable apparatus. This brought me to my system of television...'{I first came across Nikola Tesla not in Scientific American; not on Nova; not in Popular Mechanics...I came across the most amazing, scientific genius of all time in a magazine called Ancient Astronauts! The article was called: 'Nikola Tesla: The Man Who Fell To Earth' by Harry Imber. The first paragraph blew my mind and still does to this day. When I first read it, it was hardly believed. Everything I have read on Tesla after this article has supported its credibility. The first paragraph deserves reprinting:'Nikola Tesla invented the 20th and 21st Century. A 'discoverer of new principles,' Tesla was the sole inventor of the alternating poly-phase current generators that light up every town in the world today. He was the original inventor of the radio, and placed his ideas in print and demonstrated them before the public 5 years before Marconi. By the turn of the century, he had discussed the feasibility of television; he created an atom smasher capable of evaporating rubies and diamonds; he built wireless neon lamps that gave off more light than today's conventional bulbs provide; he built precursors to the electron microscope, the laser and X-ray photographs. He sent his shadowgraphs to the discoverer of X-rays in 1895 as soon a Roentgen published his famous pictures. Tesla also created Kirlian-like photographs 75 years before they became famous. All of this took place before 1900!'John O'Neill, author of Prodigal Genius, describes Tesla's New York lab as: '...seemingly unearthly forces that with invisible fingers set objects whirling, caused globes and tubes of various shapes to glow resplendently in unfamiliar colors...transplanting the darkened room into one crackling with hissing sheets of flame which issued from monstrous coils.'Reproduced here is an old article called; The Inventor Who Smashed His Own Invention:

'Nikola Tesla - discoverer of the rotating magnetic field, which is the basis for AC electric current - once demolished one of his inventions to prevent disaster. In the 1890s, Tesla speculated about uses for resonance, the physical principle by which a high note from a soprano can shatter a glass. He invented a tiny oscillator that could produce vibrations with different frequencies and tested it on a half-constructed building. The girders trembled like a tree in a high wind.

Later, in his New York lab, Tesla fastened the machine to a pole and turned it on. The vibrations reached the local police station, where the furniture began dancing. Guessing

that the source was the inventor, the police ran to the lab to find Tesla smashing his machine (with a sledgehammer). It was the only way to stop the vibrations. Tesla also postulated that by carefully timing the explosions, he could create waves of increasing force capable of shattering the earth. Scientists of the day denied the possibility.'(The above describes the only known earthquake to strike New York; and it was produced by Tesla.)A photomontage from The World Today illustrated Tesla's theory that the Earth itself could be 'split open like an apple' by applying the principle of mechanical resonance.Tesla had the idea of illuminating the oceans! Critics saw this as absurd. With a fully operational World System, we could light the oceans. Large, permanent, WIRELESS lights could illuminate the depths of the seas. Why not? Tesla also bounced a laser off the Moon...in the 19th Century! Was Tesla DaVinci in a past life?
Nikola had the idea that a large transmitter could create an impenetrable wall of force. A literal force-field could be wrapped around cities; and even wrapped around countries. He saw this as an end to war. The truth is an invisible hole at the very top of the protective bubble, like a hurricane's eye, would leave the transmitter open to attack. The invention also would not eliminate war in the hearts of individuals.One of Tesla's best friends was Mark Twain. When they first met is an interesting little story. What did these two brilliant men talk about at their first meeting? What was the subject these geniuses discussed? The weather. They talked about how: Everyone complains about the weather but no one does anything about it. Tesla DID do something about it. His devices could make rain; attract lightning; repel clouds, storms and rain. We do not have to be stuck with any reality when intelligence can break traditional laws.Another odd and humorous event happened when Tesla asked Twain to test out another of his inventions. It was a platform that could be set for a wide range of frequencies. Clemens innocently stepped on the platform and it was made to vibrate. A few moments later, Twain cursed at Tesla and headed off toward the bathroom. Certain frequencies create certain physical reactions to the body. Tesla set his machine to cause an automatic-bathroom response!Tesla was placed on a United States 20 cent postage stamp; but only for the induction motor. The other scientists in his stamp block; Armstrong, Steinmetz and Farnsworth only became famous building on the work of Tesla.In 1901, when Marconi received world acclaim for sending a few 'clicks' across the Atlantic Ocean...Tesla had already developed and began construction of his Radio City. This tower 'Wardenclyffe' would have been able to transmit reproductions of photographic pictures (TV), news service, music, navigation service for ships and much more information which could be received anywhere in the world. (Tesla planned to contact Venus and Mars with his World Wireless!) Marconi literally stole the idea of radio right out of Tesla's lab. Marconi almost got away with it; Tesla was slow to capitalize on radio because he was so consumed with wireless principles applied to electricity.In a chart entitled: Wireless Telegraphy Mechanically Illustrated, Tesla's World System is shown simply. Over an ocean, a tuning-fork is placed horizontally. There is a connection between the waves and the tuning-fork. In the distance, is another similarly placed tuning-fork. The idea here is any signal, picture or transmission created at one tower (or tuning-fork) can be recreated at any tower (or tuning-fork) at any distance around the Earth. The planet itself responds like a liquid; Electromagnetic (EM) waves that can be reproduced anywhere. This means the wireless system can provide instant World television, radio, information,

entertainment and communications. Like ripples on a lake; any signal is recreated at any tower: DISTANCE IS ANNIHILATED!Tesla's words, work and incredible accomplishments have inspired many others. Tesla's views of the future; what wonders electricity, if used properly, could achieve...have been such inspiration. Most people think he was drawing a blueprint for that undiscovered country known as the future. What enlightened readers should realize is that Tesla also provided a map of the ancient past. Everything that Tesla dreamed and feared for tomorrow, his 'war of Science,' has already happened long ago in Atlantis.To complete this Tesla tribute, there were others who followed in the master's footsteps:At 19, Alfred Hubbard built a coil and motor that ran his boat 10 knots an hour on Portage Bay in Seattle. In 1920, this 'fuelless' unit was called an 'atmospheric power generator.' Hubbard claimed it could operate for years; drive a large car; light an office building; and fly a plane around the world nonstop. Little is known about the Hubbard Coil. He was forced into obscurity because of what his motor would do to the present industries.Lester Hendershot developed a fuelless motor that could 'make its own electricity.' His system was 'based on electromagnetism applied to the rotary motion of the earth.' Dr. Frederick Hoffstetter rented a lecture hall in New York so Hendershot could demonstrate his motor. The motor never had a chance since Hoffstetter was only out to prove it a fraud. He even claimed that a battery was found inside. The inventor was ruined and nearly lost his life in an electrical accident.In 1960, Hendershot's device (now called a 'magnatronic generator') was researched by the U.S. Navy's Office of Naval Research. The generator was reported to have lit a 100-watt lamp by 'induced radio frequency energy.' The project ended when Hendershot committed suicide.A Doctor of Electrical Engineering, T. Henry Moray wrote the book 'The Sea of Energy in Which the Earth Floats' in 1960. It contains results of a 50 year study with another type of 'atmospheric energy collector.' During FDR's reign, Moray became the chief engineer of the western branch of the Rural Electrification Agency. He built a device that weighed 55 pounds and produced up to 50,000 watts. An ignorant co-worker was so enraged by the strange principles Moray tested, that he destroyed the machine. By today's standards, the loss would be over a million dollars. Moray wrote that 'frequencies maybe developed which will balance the force of gravity to a point of neutralization.'Moray: 'It was during the Christmas holidays of 1911 that I began to realize the fact that the energy I was working with was not of a static nature but of an oscillating nature, and that the energy was not coming out of the Earth but that it rather was coming in to the Earth from some outside source.'
Copyright 2000-2002 by Doug Yurchey All rights reserved. Reprinted with Permission.
Back to Rich's Nikola Tesla Tribute
TESLA PAGE
GOOD STUFF
NEW STUFF
SEARCH
TESLA'S BIG MISTAKE?
Sept 1999 William Beaty
While experimenting with a long, thin Secondary coil from Tesla Coil, I suddenly connected up several things in my mind which had been separate up to that moment. After years of messing with Tesla Coils, I finally see what Tesla was up to with single

wire transmission, with resonant coils, and with longitudinal waves. See if the following doesn't make sense.

fig. 1 A typical Tesla coil

If we wrap a single-layer coil of wire upon a very long plastic tube, we have a Tesla resonator as in Fig 1. In essence, this is an an electrical transmission line. We can inject AC into one end using a little primary coil wrapped around. Now examine Fig 2 below. We've placed a second "primary coil" at the far end of the long coil. This second coil acts as a "receive coil," and will collect the energy we had injected into the "transmit coil" at the other end. Since our long thin coil is actually a single piece of wire, we've managed to send electrical energy along a single wire. There is no electric circuit involved! This only can work because the long, thin coil will support slowly-moving electromagnetic waves, and the electron-sea within the metal of this coil behaves as if it's become compressible.
Now we put a metal sphere on either end to prevent corona from spewing out of the dangling wire tips, and we've built a simple electrical power system. Inject some high-freq AC power into the first "primary coil", and the same AC power comes out of the second "primary coil" at the far end. If we choose the correct value of load resistor for the "receive" coil, then all of the electromagnetic energy flowing along the long thin secondary will be absorbed by the receive coil without reflecting.

fig. 2 A single-wire transmission line

This is the infamous single wire transmission line. It apparantly uses longitudinal waves! However, there is nothing crackpot about it, since it obeys conventional physics: the propagating electric and magnetic fields are at 90 degrees to each other. Successive globs of positive and negative charge-imbalance are moving along the coil, and these globs/waves are linked to each other via the surrounding EM fields. The EM fields are transverse. And the only thing which acts like a "longitudinal" wave is the density of free electrons in the wire. Is this crazy stuff? Nope. All circuits have longitudinal waves in their charge density. It's not much difference than a coax cable. Within a normal piece of coax, the electrons of the metal move as part of a compression wave, even though the EM fields within the cable's dielectric remain part of a transverse wave.
In conventional cables there are two conductors, and the voltage between them forms the "E" part of the EM wave. In the above one-wire coil device, the voltage between the travelling lumps of net-charge distributed along the long thin coil forms the "E" part of the wave. The single wire acts as its own "circuit." The motion of the net-charge is an electric current, and this creates the "M" part of the EM wave.
Interesting? A single wire transmission line! It doesn't violate the rule forbidding longitudinal EM waves. However, it violates the fundamental rule regarding electric

circuits in that there *is* no circuit here. The two ends of the system are connected by a single wire. The charges within the coil flow back and forth, while the electrical energy flows along the coil from source to load.

fig. 3 An AC generator lights a bulb

HOWEVER, this is not unique. Once long ago I encountered an article about a single-wire transmission line. This had nothing to do with Tesla; it was about an old microwave transmission scheme called a Goubau transmission line or "G-line." The article was in an old copy of QST magazine (amateur radio mag) in the 1960s or '70s.
It turns out that you can send microwave or UHF signals along a *single* wire as long as that wire is coated with a dielectric. To do this, you start out with a normal coaxial cable. You strip the shield from a central section, then solder on a pair of large, cone-shaped copper horns which attach to the coax shield at either end of the coax cable. The dielectric-coated single wire extends between the ends of the coax. Sort of like this:

fig. 4 The Goubou or "G"-line

In the above diagram, the single-wire section between the two hollow cones can be as long as desired, but it must be fairly straight. Those cone-shaped parts must be about one wavelength across (or was it 1/2 wavelength? I don't remember exactly.) The metal cones act as "wave launchers" or "wave catchers". As the EM waves come out of the coax cable, the cones allow the waves to spread out and attach to the "G-line" part. There must be a plastic coating on the "G-line" wire, otherwise the waves will not lock onto it, and they will tend to wander away into space. The plastic tends to slow the waves below "c," so they bend slightly inwards towards the wire. The article noted that you could put a bend in the G-line, as long as it was a long, smooth bend of large radius. Because of the plastic coating, the waves would follow the bend. If there was no plastic coating, the waves would miss the bend and go straight out into space, missing the "catcher cone" entirely.
Obviously this can only work with AC. There is no electric circuit, instead we have waves of "electron compression" which propagate along a single wire. Let's briefly look at a fluid analog. The fluid analogy of a conventional electric circuit is a closed loop of water-filled hose. To send energy to any part of the loop, we simply force the water in one part of the loop to begin flowing, and all the water in the entire loop must therefore flow as well. It acts like a drive belt. Might it be possible to break the circuit and use a straight-line hydraulic system? Can we send compression waves through the electrical "water" in the "hose" made of wire? Sure! That's what the G-line does. If we have a long hose with closed ends, we can send "sound waves" through the "water" of the hose, although we cannot create constant flowing DC as we can with the closed circuit hose-loop. These single-wire systems are inherently AC systems. They are analogous to sending sound

energy along a fluid-filled tube.
Because there is only one conductor in the G-line, the "E" part of the EM wave must extend between successive lumps of net-charge which propagate along the wire. The "voltage" on the transmission line extends outwards as radial e-field flux, but rather than the flux connecting with a coaxial shield as it does in a normal cable, it curves around and connects with the opposite flux-lines which extend from another spot on the wire. The "M" component of the wave acts like the magnetic field around any normal wire: acting like circles which surround the wire. The energy flows lengthwise along the wire as is commonly shown by Poynting's vector (E x B).

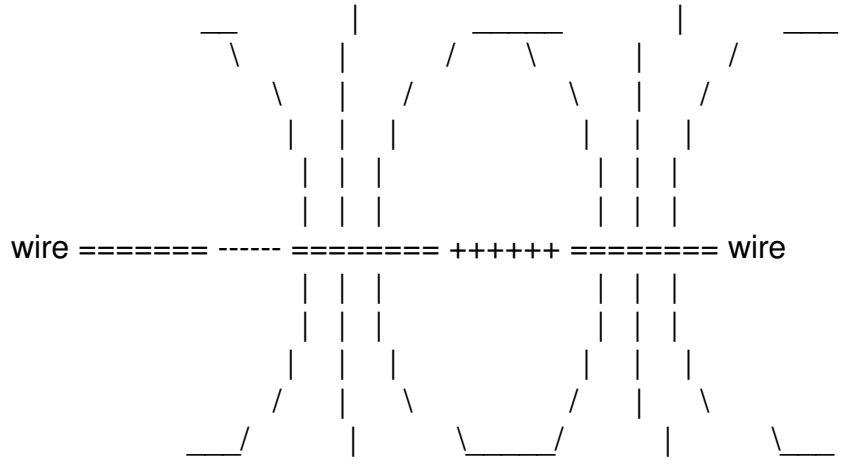

fig. 5 The e-field of the "G-Line", extending between propagating regions of opposite surface charge

So, here we have a one-wire transmission line based on transverse EM wave in space, and electron density waves within the wire. Inside the metal surface of that single wire, the electrons wiggle back and forth while the EM wave propagates outside at about the speed of light. It's almost like sound waves moving on the string of a tin-can telephone, but electrons take the place of those cellulose fibers, and the sound waves are replaced by transverse EM waves. But in the case of the "G-line," the energy gets stored in the EM fields connected to the electrons, rather than being stored in the kinetic energy and potential energy of the string.
How does this relate to Tesla? Well, once we have the ability to send energy along a single wire, we should also have the ability to send energy along any conductor at all, as long as that conductor has a dielectric coating. Like this:

fig. 6 "G-line" with large conductive lump

Any large, metallic hunk could be stuck in series with the "G-line". Yes, there might be wave-reflections where the thin wire connects to the big metal hunk. But that's beside

the point. With the above setup, we can send waves along the surface of a conductive object, while within the object itself the "electron sea" vibrates longitudinally. Hmmm. Where have I heard that before? I know. Nikola Tesla's "World System," in which he intended to transmit usable electrical energy to any receiver anywhere on the Earth. In the above diagram, suppose the "hunk of conductor" is the entire planet Earth! Suppose the "cone shaped" launchers are replaced with an elevated sphere which supplies a "virtual ground" reference capacitance? Suppose the frequency of the waves is below the UHF band in frequency? The entire Earth will then behave as a "G-line" single wire transmission system.

fig. 7 Tesla-coil-based "G-line" spans planet Earth

In his writings, Tesla was convinced that his devices did not use the same physics as Hertzian waves. He was right... and wrong. When radio- frequency energy propagates through empty space, the E and the M components are transverse, and the waves propagate at 90 degrees to both of them. However, when EM energy is sent along a cable, we also have electrons involved: the electron-sea within the metal wires. The electrons slosh back and forth in the cable while the EM waves flow along outside of the metal surfaces. Why is this important? Because the physics of a transmission line is the physics of the "near field" of a coil or capacitor, not the physics of freely-propagating "Hertzian" waves. When Tesla sent energy around the Earth, he was treating the Earth as an electrical cable. His waves were coupled to the charges within the surface of the Earth. He was not transmitting pure radio waves, even though the frequency of the wave-energy might be the same as any normal radio wave. Instead he was using a one-wire transmission system where the conductive Earth served as the wire. Tesla's technology used "near field" effects of coils, capacitors, and transmission lines, not the dipole antennas that Hertzian waves use, and in that sense his waves were "non-Hertzian."

fig. 8 The ground acts as the transmission line

fig. 9 Charges vibrate, while energy flows sideways

But wait a minute. This stuff can only work if there is a dielectric substance coating the Earth. Without that coating, the waves will not slow and bend to follow the curve of the Earth, they will just fly out into space. The atmosphere supplies this coating, and the resistive earth also helps to slow the waves so they bend to follow the surface. And even better, there is a conductive ionosphere which will act a lot like the "shield" of a coaxial

cable and force the waves to go around the Earth.
Tesla was using the ground as a transmission line. He was correct when he insisted that he was producing longitudinal waves in the "natural medium." He was correct in saying that the ground was not just a voltage reference. In this case the "natural medium" is the population of mobile ions in the dirt and oceans which cause the Earth act as a conductor. He was converting the Earth's surface into a "G-line" conductor. Any electrical device could intercept a portion of that energy, as long as that device was connected to the ground and to an elevated metal object.
So, what was Tesla's big mistake? Initially he did not realize that the Earth's atmosphere was critically important for his system to work. If the Earth had acted like a perfectly-conducting metal ball hanging in a vacuum, then Tesla's system would not have worked. The waves would have travelled along the ground and then shot straight out into space. His system would have been like a "G-line" with a sharp bend in the middle: except for a bit of diffraction, the waves refuse to follow the bend and instead go right off the cable and are lost. Because of the "dielectric" effect of the atmosphere, and also because a conductive ionosphere was present, Tesla's system was feasible. Yet any scientist of the time would "correctly" see that Tesla's system totally violates well-known theory. If Tesla had started out from known theory, he would never have pursued the path he did. Tesla actually started out with empirical observations that the Earth resonated electromagnetically like a struck bell. The atmosphere and the ionosphere made this so, but Tesla only knew that it worked, and he really did not know why, at least at first.
Tesla's other big mistake was in thinking that his wireless transmission system had nothing to do with "Hertzian" waves. In fact, the waves in a coaxial transmission line are not much different than the waves which fly off any dipole antenna connected to the end of that transmission line. Whether it is ruled by "near field" or "far field" equations, electromagnetism is electromagnetism.
Tesla's mistake was not really so big. Especially not a big mistake when compared to those contemporary scientists who were absolutely certain that the Earth *didn't* have any resonant frequencies, who *knew* that radio waves would not travel around the curve of the Earth, and who dismissed Tesla's wireless transmission system as crackpottery; as an unworkable violation of known physics. When "Schumann" VLF earth-resonance was rediscovered in the 1950s, nobody in the conventional sciences dared court the embarassment of admitting that Tesla had been right all along.
Tesla is mostly a hero among the non-scientist "underground," while in conventional circles he is still ridiculed for trying to distribute electric power without using wires, or rather, by sending it through the ground. Everyone (still) knows that this is impossible, even in theory.
Yeah, right.

Also See:
P. Nicholson: Non-hertzian Waves

Tesla FAQ (search on Zenneck Surface Wave)
Geog Goubau, "Surface waves and their Application to Transmission Lines," Journal of Applied Physics, Volume 21, Nov. (1950)
"Energy Sucking" antennas, tiny devices receive high wattage
Math and diagrams for "sucking" effect
Photon dies screaming (EM wo/quanta)

http://amasci.com/tesla/tmistk.html
Created and maintained by Bill Beaty. Mail me at: .
.
Excerpt from Secrets of Cold War Technology
by Gerry Vassilatos
pages 86-93

The following recital concerns Tesla's early developmental work on Radiant Energy:

The "fountain effects" which surrounded his station are not responsible for the ever-growing power observed by Tesla. This was the result of an incoming aetheric supply for which his Transmitter gave low-resistance passage. The incoming aetheric flow preferred the transmitter terminal to adjacent, more resistant rock. This gradual flow process soon evidenced itself in magnification effects, ever increasing volumes of flowing aether being measured in his system. Some have argued that Tesla merely stored energy in the earth, extracting it for use later. This is a basic error, the result of imagining the Colorado Springs experiment to be one consisting entirely of electrical effects (Grotz). It is in this light alone that we may comprehend the evident anomalous magnification of aetheric phenomena in his Colorado Springs photographs.

Once aetheric energy had been obtained from space, it had to be conveyed to consumers. Tesla had arranged for the automatic activation of aether rebroadcast circuits in the station. The downpouring aether were automatically shunted to side circuits through capacitors. In these side branches, aether pulsed through dielectrics and expanded over the surfaces of his smaller coils. Thus stimulated to more rapid pulsation rates, they were ready for "rebroadcast" . Being rebroadcast away from the station through large vacuum globes, poised on elevated platforms, these were the aetheric pulsations which would be utilized

in home and industry. Simple and compact receivers would be established in every home and factory, set to receive aetheric current through the ground. Tests were thrilling. Distant appliances, lamps and motors, responded to the powerful pulsations as if physically connected to the station by wire. A small house-like structure was established some 26 miles away from the station. In it, an aetheric power receiver was tuned to one of the rebroadcast rates. The 200 lamps housed within this structure, each of 50 watts rating, all remained brilliantly illuminated throughout the test runs. This apparently stimulated enough excitement and concern for word of this development to get back east.

Engineers were enraged. Those who had missed his most early shift from alternations to impulses, failed to comprehend the vast distinction between "stationary waves" and "standing waves". The quizzical use of specific terms such as these was a Tesla trademark, one designed to puzzle the minds of those who criticized him the most. With the exception of a very few colleagues who continually made related discoveries in aether physics, most academes had chosen to remain totally ignorant of the new study area. This for example was the case with the Teslian use of the term "frequency" and of "resonance" words which had completely different meanings for Tesla. Teslian "frequency" refers to the repetition of pulses per second. Teslian "resonance" refers to conditions in which aether flows with little or no resistance through systems, whether proximal or widely separated.

Photographs, which Tesla sent to his "financiers" , were analyzed and reexamined repeatedly for their encrypted meaning. None could decipher the cunning puzzle which Tesla had set before them. Tesla stated that photographs of the aetheric whitefire streamers required several minutes' exposure time before registering the faintest sort of impression. Most of the plates were therefore the results of more than 20 minutes' exposure time. There are a very few plates which, though stated to be the result of "one brief switch closure", are covered with dense, thick white streamers. One fraction of a second closure on the system switch resulted in a twenty minute or more aether avalanche. Magnifying Transformers continued discharging long after the initial impulse had been withdrawn.

AETHER POWER RECEIVERS

Tesla returned to New York exultant. He was about to establish a new world precedent. Venture capitalists were everywhere, looking for their opportunity to enter the "new energy" market. Unknown to Tesla, his station, its tower, the large coils, the capacitors, and all the

other marvelous apparatus, which demonstrated free aetheric power to the world, had been acquired for demolition. Tesla simply went forward, securing new funds from Morgan and others toward the development of a fully functional industry sized station in Long Island. Wardenclyffe Station. Wardenclyffe would be his greatest achievement. Here he would broadcast power to the world, along with a communications network which could span the globe with innumerable available channels. Aether wave communications. Several stations would augment the power of this first station, from which he proposed to rebroadcast 10,000 horsepower. The Station, a wonderful visionary structure which dominated the view of Shoreham, Long Island was not quite complete before it too was seized by court injunctions and torn down.

Tesla was summoned to appear in court. The amazing transcript of this proceeding has been secured by Mr. Leland Anderson who has since published a wonderful treatise with this transcript as the centerpiece. Tesla said he wept when he saw the ruined tower at Wardenclyffe. The train ride back from Shoreham was filled with tears and the recounting of every tragedy which marked his life. But the dreams did not die there. In the absence of financial means to construct his gigantic stations, Tesla found ways to build small systems which accomplished the very same objectives. Replacing the large overhead capacity terminal with material substitutes, radioactive metals in combination with other dense elements, Tesla was able to accrete and focus aether pulsations of super short duration.

Tesla was then plunged into a hellish time, where all but one would neither help or hear him. Dr. John Hammond requested Tesla to be the permanent guest on his family estate. There, amid the family life of Hammond Castle, Tesla shared his dreams and technology. Together, he and Dr. Hammond developed the science of robots and remote guidance. Tesla, impoverished by the inhuman treatment wrought on him by the financial establishment, was nonetheless quite alive and valuable to those having singular ambition to dominate the world radio trade. For a very long time, Nikola Tesla was considered "out of circulation. "

But later years turned a kindlier edge toward him. Long after his principle foe had died, other sought him out. Employed by the Rockefellers in their RCA venture, Tesla was given the task of restructuring the now failing Marconi System. David Sarnoff did not permit Tesla the dignity of working under his own name! Nevertheless it was Tesla, not Sarnoff, who redesigned the insufficient RCA radio systems to sufficiently turn a profit for the owners. It is significant that Tesla was not allowed to change the basic design from

wave radio to radiant communications. What he achieved required certain strange conversions within the wave radio circuitry, intensifying radiant signals until the operation was much improved, and then converting the amplified signals back to waves once again. All of this was achieved within the chassis, certain of which are now being studied. These Tesla experimental models are typical of the Tesla style, containing no resistors or other such components. These models use simple transmitter tubes and employ a great number of symmetrically disposed conical air coils.

While working for RCA under the name "Terbo", his mother's maiden name, Tesla maintained his two penthouse suites atop the Hotel New Yorker. One penthouse was his living quarters, the other a full scale research laboratory. Tesla designed and built small compact and portable aether energy receivers, a developmental path which he pursued to his passing. Tesla had long investigated the use of pure dielectric field energy, a stream of aether whose individual pulsations were so very ultrashort that science had never found a means to harness the energy impulses. Tesla later held the opinion that dielectric current was composed of radiant particles, aetheric in nature. He therefore sought natural sources in which native dielectric fields could be used as they were, without the need for mammoth voltage "shocks" to stigmata aetheric currents. Tesla knew that if dielectric aether streams could be directly engaged, a true world of the future would be in his grasp. Furthermore, the mass-production of thousands and ten thousands of such power receivers would be an unstoppable army. An army of miniatures which could never by torn down.

The implications were fathomless. Tesla had found a truly new and wonderful approach to an old problem. Once because his technology had not yet grown to the level where this was possible, he had to settle for impressing the naturally prolific aether streams with "extra" pulsations. The Transmitter method was costly, gargantuan, and an easy target for those who hated the notion of a future world where dreams rule humanity. Dielectric energy fascinated Tesla. It was everywhere, a natural emanation whose potentials far outproportioned conventional notions of power. Indeed, the early conception of natural radioactivity as an energetic source was nothing in comparison to the potential power inherent in dielectric streams. The new technology would use ultra-short pulsing aether streams, energies which occupied most of his latter press conferences in latter years. Study had convinced Tesla that the apparently smooth and native force characteristic of dielectric field energy was actually a particulate flux, a succession of ultrashort impulses. The derivation of such an impulse train would solve all energy needs for eternity with an

elegance far out-reaching his own Magnifier Transmitter.

Of a truth, dielectric energy was native source of incredible proportion and virtually eternal duration. Able to use such a kinetic source, one could dispense entirely with the Power Transmitters necessary in stimulating and impressing "extra pulsations" on the aether flow. Tesla often defined the dielectric field as a natural flow of aether particles, one which seemed impossible to utilize through lack of appropriate resistive materials. In order to obtain momentum from the flowing particles of a dielectric field, one required special matter poised in equally special symmetries. The otherwise continuous flow could be absorbed directly, being exchanged to utilities, appliances, and other applications.

Tesla had already considered the condition of charged particles, each representing a tightly constricted whorl of aether. The force necessarily exerted at close distances by such aetheric constrictions was incalculably large. Aetheric ponderance maintained particulate stability. Crystalline lattices were therefore places within which one could expect to find unexpected voltages. Indeed, the high voltages inherent in certain metallic lattices, intra-atomic field energies, are enormous. The close Coulomb gradient between atomic centers are electrostatic potentials reaching humanly unattainable levels. By comparison, the voltages which Tesla once succeeded in releasing were quite insignificant. In these balanced lattices, Tesla sought the voltages needed to initiate directed aetheric streams in matter. Once such a flow began, one could simply tap the stream for power. In certain materials, these aether streams might automatically produce the contaminating electrons, a source of energy for existing appliances. One could theoretically then "tailor" the materials needed to produce unexpected aetheric power with or without the attendant detrital particles. Tesla did mention the latent aetheric power of charge forces, the explosive potentials of bound aether, and the aetheric power inherent in matter. In these studies, Tesla sought replacement for the 100,000,000 volt initiating pulses which natural law required for the implementation of space aether. Tesla had long been forced to abandon those gigantic means by other, less natural laws.

Thereafter, Tesla shifted his attentions from the appreciation of the gigantic to an appreciation of the miniature. He sought a means for proliferating an immense number of small and compact aether power receivers. With one such device, Tesla succeeded in obtaining power to drive an electric car. But for the exceptional account which follows, we would have little information on this last period in Tesla's productive life, one which very apparently did not cease its prolific

streams of creativity to his last breath. The information comes through an unlikely source, one rarely mentioned by Tesla biographers. It chanced that an aeronautical engineer, Derek Ahlers, met with one of Tesla's nephews then living in New York. Theirs was an acquaintance lasting some 10 years, consisting largely of anecdotal commentaries on Dr. Tesla. Mr. Savo provided an enormous fund of knowledge concerning many episodes in Tesla's last years.

Himself an Austrian military man and a trained aviator, Mr. Savo was extremely opened about certain long-cherished incidents in which his uncle's genius was consistently made manifest. Mr. Savo reported that in 1931, he participated in an experiment involving aetheric power. Unexpectedly, almost inappropriately, he was asked to accompany his uncle on a long train ride to Buffalo. A few times in this journey, Mr. Savo asked the nature of their journey. Dr. Tesla remained unwilling to disclose any information, speaking rather directly to this issue. Taken into a small garage, Dr. Tesla walked directly to a Pierce Arrow, opened the hood and began making a few adjustments. In place of the engine, there was an AC motor. This measured a little more than 3 feet long, and a little more than 2 feet in diameter. From it trailed two very thick cables which connected with the dashboard. In addition, there was an ordinary 12-volt storage battery. The motor was rated at 80 horsepower. Maximum rotor speed was stated to be 30 turns per second. A 6-foot antenna rod was fitted into the rear section of the car.

Dr. Tesla stepped into the passenger side and began making adjustments on a "power receiver" which had been built directly into the dashboard. The receiver, no larger than a short-wave radio of the day, used 12 special tubes, which Dr. Tesla brought with him in a box-like case. Mr. Savo told Mr. Ahler that Dr. Tesla built the receiver in his hotel room, a device 2 feet in length, nearly 1 foot wide, a ½ foot high. These curiously constructed tubes having been properly installed in their sockets, Dr. Tesla pushed in 2 contact rods and informed Mr. Savo that power was now available to drive. Several additional meters read values which Dr. Tesla would not explain. No sound was heard. Dr. Tesla handed Mr. Savo the ignition key and told him to start the engine, which he promptly did. Yet hearing nothing, the accelerator was applied, and the car instantly moved. Tesla's nephew drove this vehicle without other fuel for an undetermined long interval. Mr. Savo drove a distance of 50 miles through the city and out to the surrounding countryside. The car was tested to speeds of 90 mph, with the speedometer rated to 120.

After a time, and with increasing distance from the city itself, Dr.

Tesla felt free enough to speak. Having now become sufficiently impressed with the performance of both his device and the automobile. Dr. Tesla informed his nephew that the device could not only supply the needs of the car forever, but could also supply the needs of a household "with power to spare". When originally asked how the device worked, Tesla was initially adamant and refused to speak. Many who have read this "apocryphal account" have stated it to be the result of an "energy broadcast". This misinterpretation has simply caused further confusions concerning this stage of Tesla's work. He had very obviously succeeded in performing, with this small and compact device, what he had learned in Colorado and Shoreham.

As soon as they were on the country roads, clear of the more congested areas, Tesla began to lecture on the subject. Of the motive source he referred to "a mysterious radiation which comes out of the aether". The small device very obviously and effectively appropriated this energy. Tesla also spoke very glowingly of this providence, saying of the energy itself that "it is available in limitless quantities". Dr. Tesla stated that although "he did no know where it came from, mankind should be very grateful for its presence". The two remained in Buffalo for 8 days, rigorously testing the car in the city and countryside. Dr. Tesla also told Mr. Savo that the device would soon be used to drive boats, planes, trains, and other automobiles. Once, just before leaving the city limits, they stopped at a streetlight and a bystander joyfully commented concerning their lack of exhaust fumes. Mr. Savo spoke up whimsically, saying that they had "no engine". They left Buffalo and traveled to a predetermined location which Dr. Tesla knew, an old farmhouse barn some 20 miles from Buffalo. Dr. Tesla and Mr. Savo left the car in this barn, took the 12 tubes and the ignition key, and departed.

Later on, Mr. Savo heard a rumor that a secretary had spoken candidly about both the receiver and the test run, being promptly fired for the security breach. About a month after the incident, Mr. Savo received a call from a man who identified himself as Lee De Forest, who asked how he enjoyed the car. Mr. Savo expressed his joy over the mysterious affair, and Mr. De Forest declared Tesla the greatest living scientist in the world. Later, Mr. Savo asked his uncle whether or not the power receiver was being used in other applications. He was informed that Dr. Tesla had been negotiating with a major shipbuilding company to build a boat with a similarly outfitted engine. Asked additional questions, Dr. Tesla became annoyed. Highly concerned and personally strained over the security of this design, it seems obvious that Tesla was performing these tests in a desperate degree of secrecy for good reasons. Tesla had already been the victim of several manipulations,

deadly actions entirely sourced in a single financial house. For this reason, secrecy and care had become his only recent excess.

Renewable Energy Discussion on various alternative energy, renewable energy, & free energy technologies. Also any discussion about the environment, global warming, and other related topics are welcome here.

#1 (permalink)
05-11-2007, 08:44 PM

Aaron
Energetic Scientist

Join Date: Feb 2007
Location: Washington State
Posts: 646
My Profile

The purpose of this thread is to discuss what radiant energy is.

#2 (permalink)
05-12-2007, 02:34 AM

lighty
Junior Member

Join Date: Apr 2007
Location: Croatia
Posts: 19
My Profile

@Lindemann

I watched your DVD of lecture on radiant energy. Some of the requirements as I understand them are:

1. The mass of material of primary and secondary has to be equal as precisely as possible. That is the requirement proposed by Tesla regarding his high frequency coils and especially his flat archimedean spiral coils. I may be way of the track on this one but it seems to me that the amount of the dielectric charge (or rather the density of dielectric lines of force) are in some way proportional to the mass of the conductor or rather to the number of atoms available in order to resonate and produce radiant energy event. For example I've conducted a number of experiments in which I compared the highly saturated high quality ferrite core with small airgap (in order to increase the saturation point and to store more magnetic flux in the airgap- I'm talking about 0.1mm airgap and smaller number of turns of conductor. I compared it with the extremely heavy coils with smaller core (in this case Metglas ones- I used them for their high permeability and extremely narrow hysteresis curve) and open geometry (pretty much similar to the Bedini SG coil). Of course one can produce pretty much the same voltage spikes on both coils but the coil with the more conductor mass exhibit a somewhat different properties. For example the discharge of the capacitor filled with the Back-EMF from the ferrite core showed different properties compared to the discharge of the capacitors filled with the BEMF from the massive coil. I'm talking here mostly about visual and auditive quality of the discharge. My guess is that a mass of conductor definitely plays some role in the way coil produces BEMF.

2. The surface area of the conductors definitely plays a role in radiant energy release. The fact is that a Litz wire or a flat strip of conductor material shows much better properties dealing with sudden impulses. I also compared several types of wire in the pretty much similar conditions (same core, same number of ampere turns, same current

and same saturation of core. The BEMF curve of the Litz wire and flat strip wire are much more steeper (thus more sudden in time) and goes to the much higher voltage. I couldn't believe a geometry could make such a difference but it did. My guess is that a conductor tube would exhibit pretty much similar characteristics- in fact I used copper tubing for Tesla induction coils primaries and they definitely show more appropriate behavior and less loses than the full conductor profiles. Of course much of that behavior can be attributed to the lower impedance those kind of big surface conductor shows when dealing with sudden impulses. The other thing I observed is that Litz wire coils sometimes gain by separating of their turns somewhat. The flat strip conductors also benefit if one winds them in a way to be oriented edgewise to each other. It surely lower their inter-capacitance and probably contribute to the lowering of the impedance of coil itself. Skin effect also plays a role in that effect but I'm not sure to what extent.

3. For Tesla resonant system it's advisable to have secondary set to 1/4 wavelength of the resonant frequency. Tesla himself advise in that direction and although I never experimentally tried that rule I guess there must be some rationale behind it. I know that if some conditions are met a stationary wave can be produced and in energy transfer it plays significant role. To be honest I'm still learning about this stuff so please cope with me as much as you can.

4. When talking about BEMF as a kind of radiant event I've learned that inductance plays significant role. With higher inductance one usually gets more severe potential gradient change (measuring with an oscilloscope it means one gets higher voltage spikes). With lowering of capacitive component of impedance voltage spikes go even higher- it's probably why flat strip conductor (for one layer coils- I've never tried multilayer coils of this type) shows significant advantage over ordinary round- profile conductor. It's surface is also extremely large so it could also play a role regarding a skin effect.

So here it is- and although there is so much more I could say about the results I obtained for now I will reduce my ranting on refining my knowledge on the phenomena I talked about. I've based my conclusions on practical experiments but my interpretation oethe results might be wrong so feel free to correct me. I'm always glad if someone disprove my conclusions with solid arguments so that I can learn more about the topic in question.

#3 (permalink)
05-12-2007, 03:51 AM
Peter Lindemann
Member

Join Date: Apr 2007
Posts: 50

My Profile

Lighty, excellent!

Lighty,

Thank you for opening up such an intelligent conversation. The most important thing here is not to be "right" or "wrong", but that you are learning, experimenting, and thinking deeply about what you are seeing in your experiments! Congratulations.

There are two issues here. The first issue is the PRODUCTION of radiant energy and the second is the EFFICIENT TRANSFER of radiant energy.

The first issue is covered by Tesla in his work on the "Method of Conversion", that is, the conversion of "normal electricity" into "longitudinal waves of electrostatic force" otherwise known as Radiant Energy. As I show in my DVD, Tesla's Radiant Energy patents clearly state that Radiant Energy is defined as electrostatic charge CONVEYED by Radiant Matter. Radiant Matter is made up of neutral particles of mass at least 100 times smalled than electrons. The general "Method of Conversion" is to charge an inductor with intermittent DC current, and collect the inductive discharges in a capacitor. Then, discharge the capacitor into another inductor of high self-inductance and low impedance, to raise the voltage even higher for use in lighting systems or stepper type motors. When studying Tesla's "Method of Conversion" it becomes obvious that he was talking about a very broad phenomena. The original diagram shows SIX different processes, all of which produce variations on the Method.

The term "Radiant Energy" evolved from Tesla's friendship with and admiration of Sir William Crookes. Crookes invented the Radiometer, a device Tesla referred to as the most elegant motor ever devised. Crookes was studying the effects relating to the emissions from incandescent matter. The question was, when a piece of mass is heated to the point where it starts to emit light and heat, what EXACTLY is coming out of the matter that conveys these properties into the surrounding space? The Radiometer demonstrated that these emissions had MASS and could convey a PHYSICAL FORCE to another object. Tesla came to believe that ANY source of light and heat, such as the Sun, was emitting "whatever" is emitted when MATTER RADIATES! Whatever that was, was termed "Radiant Matter." Since it could go right through the glass enclosure of the Radiometer WITHOUT disrupting the vacuum inside, the determination was that the particle size was INFINITESIMALLY SMALL. Tesla's later experiments determined that these Radiant Matter particles where the primary CONVEYOR of electrostatic charge.

When I can, I will discuss the second issue you bring up.

Peter

#4 (permalink)
05-12-2007, 06:51 AM

Aaron
Energetic Scientist

Join Date: Feb 2007
Location: Washington State
Posts: 646
My Profile

back emf vs. collapsed magnetic field

Quote:
Originally Posted by lighty
For example the discharge of the capacitor filled with the Back-EMF from the ferrite core showed different properties compared to the discharge of the capacitors filled with the BEMF from the massive coil. I'm talking here mostly about visual and auditive quality of the discharge. My guess is that a mass of conductor definitely plays some role in the way coil produces BEMF.
Hi Lighty,

To my understanding, back emf and the collapsed coil's voltage potential are two different things that happen at two different times.

The back emf is happening at the exact same time that a current is induced into a coil. There is the forward induction and then the back emf is counter induced and is explained by the Lenz law.

After the coil is charged and the back emf event happens and the coil power is turned off, the build up magnetic field collapses in reverse polarity and fills the capacitor with voltage potential free or mostly free of electron current and therefore no back emf in that event since it is for the most part, just voltage potential and not current.

So when Bedini's circuits for example are charging capacitors, it does so with radiant energy or the voltage potential free of current instead of charging a capacitor with back emf or electron current.

Someone else may be able to clarify the distinction between back emf/counter current and voltage potential/collapsed field

#5 (permalink)
05-12-2007, 11:11 AM

lighty
Junior Member

Join Date: Apr 2007
Location: Croatia
Posts: 19
My Profile

I think the main problem is the lack of proper terminology practice. I use the term to label the induced EMF of the higher value and reverse polarity than the voltage of the source inducing the original current flow (and thus magnetic field) that manifests itself when the conductance of the coil circuit goes suddenly to zero and the magnetic field collapses very fast. Now look at this very vague definition that is somewhat contradictory in itself Counter-electromotive force - Wikipedia, the free encyclopedia

When I think of it I cannot remember a proper term used in electronics. The phenomena is mostly labeled as detrimental as it might burn out the semiconductor devices (and thus all the protective snubber circuitry usually engineered in the circuitry) and simply calls it "transient phenomena". While that term is appropriate because it is transient phenomena it's at the same time very vague so no luck there. Just look at here Snubber - Wikipedia, the free encyclopedia In relation to the transil diodes it's only mentioned that they protect circuit from the "voltage spikes". Transient voltage suppression diode - Wikipedia, the free encyclopedia

So what would be the proper terminology for that fast transient phenomena?

Last edited by lighty : 05-12-2007 at 11:13 AM.

#6 (permalink)
05-12-2007, 05:10 PM
Peter Lindemann
Member

Join Date: Apr 2007
Posts: 50
My Profile

What is Back EMF?

Quote:
Originally Posted by lighty

I think the main problem is the lack of proper terminology practice. I use the term to label the induced EMF of the higher value and reverse polarity than the voltage of the source inducing the original current flow (and thus magnetic field) that manifests itself when the conductance of the coil circuit goes suddenly to zero and the magnetic field collapses very fast. Now look at this very vague definition that is somewhat contradictory in itself Counter-electromotive force - Wikipedia, the free encyclopedia

When I think of it I cannot remember a proper term used in electronics. The phenomena is mostly labeled as detrimental as it might burn out the semiconductor devices (and thus all the protective snubber circuitry usually engineered in the circuitry) and simply calls it "transient phenomena". While that term is appropriate because it is transient phenomena it's at the same time very vague so no luck there. Just look at here Snubber - Wikipedia, the free encyclopedia In relation to the transil diodes it's only mentioned that they protect circuit from the "voltage spikes". Transient voltage suppression diode - Wikipedia, the free encyclopedia

So what would be the proper terminology for that fast transient phenomena?
Lighty, Aaron, and anybody else who cares,

OK folks, here is the real answer. The Wikipedia definition for Counter Electromotive Force (CEMF) actually covers the territory pretty well. It is just a little short on detail. Technically, BACK EMF is the reverse voltage generated in an electric motor that is responsible for holding back the current when the motor speeds up. My DVD Electric Motor Secrets shows exactly what the BACK EMF is and how it works.

CEMF is any other reverse induction in an inductor that slows down the increase or decrease in the applied current. This process is described by Lenz Law, where ANY induced current opposes the movement of the magnetic field that induced it. So, when a DC square-wave pulse is applied to a coil of wire, the voltage reaches its maximum value nearly instantaneously, whereas the current rises to its maximum value on a ramp-wave with a specific time constant. The current cannot rise instantaneously, like the voltage, because the current in one turn of the coil is causing CEMF inductions in other turns of the coil nearby. So the current fights itself to reach its maximum value. These processes only happen when the current is CHANGING, either rising or dropping in value.

In the older books, the distinction between these two processes, or the names used to describe them was not made. Many names for electrical processes changed in the 1950's and 1960's. Cycles-per-second became Hertz, CEMF became Back EMF and lots of other things. It is no wonder that there is confusion about these things.

The most important thing to understand in all of this is that all of these phenomena follow ELECTROMAGNETIC INDUCTION LAWS. Currents are induced in relationship to the strength of the magnetic field and voltages are induced based on the rate-of-change

of that flux. In standard transformer operations, voltages in the output winding (secondary) cannot exceed the voltage in the input winding (primary) times the turns ratio between the primary and the secondary.

The appearance of the very short duration, very high voltage transient, when the current powering an inductor on DC is shut OFF, does not follow these Laws, especially on CLOSE OBSERVATION. John Bedini has spent 30 years studying this situation and has articulated most accurately the conditions to maximize the production of this voltage spike. I refer to this situation as the energy of "the inductive collapse", since that distinguishes it from other varieties of CEMFs. The voltage producing phenomena produces a different QUALITY of electricity, according to the "Method of Conversion" described by Tesla. In fact, charging and discharging an inductor is the FIRST STEP in Tesla's "Method of Conversion" and the first step in the process of producing PURE Radiant Energy.

According to Tesla, the "fast transient phenomena" is a Longitudinal Wave, a time compressed zone of electrostatic charge or pure voltage, traveling ahead of the electron current. It appears BEFORE the current starts moving and is separate and distinct from it.

I hope this helps.

Peter

Last edited by Peter Lindemann : 05-15-2007 at 05:33 AM.

#7 (permalink)
05-13-2007, 12:54 AM

lighty
Junior Member

Join Date: Apr 2007
Location: Croatia
Posts: 19
My Profile

Quote:
Originally Posted by Peter Lindemann
Thank you for opening up such an intelligent conversation. The most important thing here is not to be "right" or "wrong", but that you are learning, experimenting, and thinking deeply about what you are seeing in your experiments! Congratulations.

Well, thank you but I owe that fact mostly to you since it's been your article on MWO published by BSRF which interested me in this area of research in the first place. I really have nothing but respect for your research and for your skills as the talented popularizer of hard to understand topics.

Quote:
The general "Method of Conversion" is to charge an inductor with intermittent DC current, and collect the inductive discharges in a capacitor.
Indeed it's the basic principle used by Tesla as it's obvious simply by observing the designs of various Tesla oscillators (as he called them himself). There is one thing I observed that is not so obvious at the first look. The polarity of the "fast transient phenomena" of the induction discharge used will to some degree determine the behavior of the system. For example I discovered by experiment that the - polarity of the inductive discharge doesn't behave the same as the + polarity of the inductive discharge. One would think that they're the same because it's the same if you watch either polarity voltage on the oscilloscope but in reality there are some strange things going on with semiconductors when using - polarity of the inductive discharge as well as some very odd behavior of the oscilloscope probe itself. I suspect that grounding of the oscilloscope is interacting with the - polarity of inductive discharge and it causes some serious troubles during the measurement rendering them practically unusable. I alway wondered why Bedini uses handheld oscilloscope. The thing about handhelds is that they should behave much more stable because of their floating power supply is not connected to ground in any way.

Also, if one end of the inductive discharge coil is grounded the transient voltage effect is diminished to some extent or at least changed slightly in it's nature. My guess is that any ground path in the circuit will simply allow the excessive dielectric charge to be leveled out with the surrounding media and thus effectively neutralizing it to some extent. Maybe I'm mistaken but to me it seems only logical.

As I wrote earlier there are some rules that I find must be observed in order to get the better results but I was wondering if you could elaborate some more on the best design of the coils for inductive discharge and on the methods of achieving the highest inductance with least impedance. I mean one could lower the capacitive component of impedance the way I described before but is there some other things that should be observed in order to achieve optimal results?

Your input on this matter would be much appreciated.

#8 (permalink)
05-13-2007, 01:18 AM

lighty

Junior Member

Join Date: Apr 2007
Location: Croatia
Posts: 19
My Profile

Quote:
Originally Posted by Peter Lindemann
I refer to this situation is the energy of "the inductive collapse", since that distinguishes it from other varieties of CEMFs.
OK, now that is indeed a good description of what is going on and I choose to use that term in the future instead of the more vague Back-EMF.

Quote:
It appears BEFORE the current starts moving and is separate and distinct from it.
Indeed. Now, it would be most useful if one could limit the movement of the electrons during the charging of capacitors with the inductive collapse voltage or rather with the dielectric charge. One could of course try putting an inductor between inductive collapse inductor and the capacitor in order to limit the electron flow to capacitor. Now, if that capacitor is then discharged into next inductor and then the same electron move limiting inductor is used to limit the electron flow to the next stage capacitor one could maybe make a kind of cascade connection to purify the dielectric charge toward the end of such cascade. Do you have any ideas on how to do that?

In one experiment I used + polarity of the inductive collapse and I put an aircore inductor in series with it. Now, when the opposite end of the series inductor was slowly removed from the ground (to where it was connected in the first place) there was produced an extremely powerful continuous arc of the most peculiar nature (of course the inductive collapse coil was in the high frequency function all the time). First of all it was a rather constant arc without any interruptions and it could be drawn a few millimeters before becoming extinguished. The other peculiar thing was the fact that the arc produced a sound just like the high frequency plasma. The spectra of arc was green to blue and it produced extreme heat enough for me to weld two small pieces of steel together. And all of that exclusively by using the inductive discharge of very small magnitude and with rather low power used to power the inductive collapse coil with rather low voltages gained in the range of 95-120V but I must again accentuate the fact that I used the + polarity of the inductive collapse. My guess is that a kind of positive plasma was induced that showed some rather peculiar phenomena. Now, I tried doing the same with the - polarity of the inductive collapse but I was simply unable to make anything work because the system had common ground and it rendered extraction of

the - polarity practically impossible.

Quote:
I hope this helps.
You're being most helpful indeed!

#9 (permalink)
05-13-2007, 10:43 AM
Mario
Junior Member

Join Date: Apr 2007
Posts: 4
My Profile

Hi Lighty,

Have you tried a caduceus coil? It's supposed to have no impedance at all and a very narrow induction field in that, if you want to get two coils in resonance you have to align them with the precision of a laser beam.
Here you can download a doc.:

http://www.stealthskater.com/Documen...E/Caduceus.doc

regards

Mario

#10 (permalink)
05-13-2007, 12:02 PM

lighty
Junior Member

Join Date: Apr 2007
Location: Croatia
Posts: 19
My Profile

@Mario

No, I didn't try using Caduceus coil for the purpose of inductive discharge. I could try it in the next time period in order to discern the truth from myth. Lindemann got it right- there is a lot of theoretical work out there but much less practical experiments to prove or disprove those theories.

But you gave me an incentive to try it- at least to see if the claims about extremely low impedance are correct.

#11 (permalink)
05-13-2007, 12:16 PM
Mario
Junior Member

Join Date: Apr 2007
Posts: 4
My Profile

Hi Lighty,

I'm experimenting myself working on John's solid state circuits. I will try a caduceus coil soon, but first I have a lot of different options to test. Let me know how it works out if you get a chance to play with it!

regards

Mario

#12 (permalink)
05-13-2007, 06:24 PM
Peter Lindemann
Member

Join Date: Apr 2007
Posts: 50
My Profile

Lighty, two answers.....

Lighty,

You are really learning this material, and it is very gratifying to see.

OK, how do you separate the electron flow (current) from the neutral particle flow (voltage)? Believe it or not, Tesla's simple method does it. So does John Bedini's methods. When an inductor is charged with DC current, the intensity of its magnetic field is described by the "ampere-turns" of the coil. When the magnetic field discharges, the voltage it produces is described by the "rate-of-change" of the flux. The flux changes are resisted by themselves, as we have discussed, due to Lenz Law effects.

So, if you discharge your inductive collapse energy into a capacitor, here is what happens. If the capacitor starts at ZERO volts, the first few inductive collapses deliver CURRENT pulses to bring the capacitor up to the voltage level of the source powering the coil. As this process continues, once the voltage in the capacitor gets ABOVE the power source charging the coil, the balance switches, and the coil must start generating more voltage to keep getting above the voltage already in the capacitor. If you have a current probe on your oscilloscope, watch the current pulses going into the cap. The energy of the inductive collapse constantly adjusts to produce more and more voltage and less and less current to keep the capacitor charging up.

Now it gets interesting. IF your inductor has a magnetic field that is completely closed down, like a standard transformer, the voltage level you can charge your capacitor to is only a few times higher than your power source. But, as John Bedini has shown, if the inductor is totally OPEN to the environment, (no closed magnetic field) the voltage produced by the inductive collapse can easily attain 30 times the level of your power supply. With really good air-core coils, I have seem some of John's oscillators produce voltages 50 times higher than the supply.

The question is why? The answer is LENZ LAW! As the capacitor charges up above the supply voltage, current CANNOT be pushed into the capacitor by standard ELECTROMAGNETIC INDUCTION LAWS. There is NO turns ratio gain for voltage production, so all voltage gain is by Tesla's ELECTROSTATIC INDUCTION LAWS. As the current in the discharge drops, the magnetic field can collapse faster and faster because the Back EMF caused by current is diminishing. This INCREASES the "rate-of-change" of flux and the voltage can rise to higher values.

At a certain point, there is no current left, at which point the voltage can rise to VERY HIGH VALUES. This is what Tesla discovered as he scaled these systems up.

So, the coil design suitable to receive the discharge of this capacitor is the primary coil of Tesla's flat spiral or conical coil "TRANSFORMER". That primary coil is always described as "a few turns of stout wire or copper strap." Look at the designs of the coils built by Eric Dollard in the old Borderlands videos. Why? The capacitor can take all of

the VOLTAGE you put in it and discharge it in less than a microsecond, creating a HUGE CHANGE of dielectric flux, the quality of which is very low on electron movement. This is the time compressed electrostatic wave. The time-compression is all the time it took to charge the cap is given back in an instant.

The other thing you are seeing is the truth that "electricity is electricity" is a false theory. Electricity can and does appear as a wide variety of different QUALITIES of energy, depending on how the circuit is set up. Only experimental work will show you this. So, again, congratulations.

Keep up the great work.

Peter

#13 (permalink)
05-13-2007, 09:58 PM

lighty
Junior Member

Join Date: Apr 2007
Location: Croatia
Posts: 19
My Profile

Quote:
Originally Posted by Peter Lindemann
If the capacitor starts at ZERO volts, the first few inductive collapses deliver CURRENT pulses to bring the capacitor up to the voltage level of the source powering the coil. As this process continues, once the voltage in the capacitor gets ABOVE the power source charging the coil, the balance switches, and the coil must start generating more voltage to keep getting above the voltage already in the capacitor. If you have a current probe on your oscilloscope, watch the current pulses going into the cap. The energy of the inductive collapse constantly adjusts to produce more and more voltage and less and less current to keep the capacitor charging up.
Indeed you're right- the effects you're describing are exactly what I was referring to in one of my earlier posts. I called it a "transformer effect" because in those first few pulses when the electron flow is charging the capacitor one can observe that there is anomalous current consumption going on in the "primary". I suspected that it also has something to do with the fact that Bedini is using a full bridge rectifier in his "secondary" and that such configuration is allowing for inductive coupling to transfer energy to the capacitor. I then used only a single diode in order to reduce that effect caused by

inductive transfer from "primary" to "secondary". Indeed, a single diode did reduce the anomalous current consumption on the "primary" during the "charging phase" prior to inductive collapse. It's easily seen with the current clamp and fast DSO. It was then that by chance I observed that the negative and positive polarity of the inductive collapse charge doesn't behave the same way. I won't go further into that because I already wrote about that.

Quote:
But, as John Bedini has shown, if the inductor is totally OPEN to the environment, (no closed magnetic field) the voltage produced by the inductive collapse can easily attain 30 times the level of your power supply. With really good air-core coils, I have seem some of John's oscillators produce voltages 50 times higher than the supply.
In fact 50 times higher voltage is easily achieved if a proper geometry, a proper core material and electronics are used. I can normally achieve a 18V/900V ratio and more is possible but for some reasons of design I have to use the semiconductors in the capacitive discharge circuit and I have to reduce voltage to remain <1kV to prevent a possible semiconductor voltage breakthrough. As I discovered several requirements have to be observed to achieve higher voltage impulses to capacitor and among them is the speed of diode (I use special extremely fast diodes), a semiconductor used to energize the coil should be chosen and driven in a way that would allow for extremely fast shutdown of current through coil and low leakage current after, a high-permeability narrow hysteresis material should be used (I use one form of material similar to Metglas), a precise control of the saturation point of core in order to shut down energizing semiconductor device in the exact moment of highest saturation in order to prevent losses and excessive heating of the components, and finally one should use as high frequency as possible (the coil in configuration I'm using is going up to 6kHz and is limited solely by the inductance of the coil and the time necessary to fully saturate the core). It took me quite some time to get a necessary understanding and control of the processes involved in order to meet all those requirements and still I learn something new every time I try some new approach.

Quote:
The capacitor can take all of the VOLTAGE you put in it and discharge it in less than a microsecond, creating a HUGE CHANGE of dielectric flux, the quality of which is very low on electron movement. This is the time compressed electrostatic wave.
Exactly! A sudden change of the dielectric flux is what's Tesla was lecturing about and the thing that usually perplexes people is the fact that there is almost no electron movement involved but rather an electrostatic impulse of great magnitude able to produce a some sort of dielectric avalanche in the secondary. Of course that's the underlying principle but several things have to be observed in order for everything to work as described by Tesla such as the proper impulse control, the appropriate sparkgap, the position of the sparkgap in the system etc. I'm just getting into this field

and I plan to do several experiments of my own in the near future.

Quote:
Keep up the great work.
I'm doing the best I can and I can thank you for getting me interested in these topics several years back when I read your articles on MWO published by BSRF and especially with your book The Secrets of Cold Electricity. That was my primer in this field of research so I thank you for writing all down so eloquently and concise.

#14 (permalink)
05-14-2007, 09:19 AM

Shad
Junior Member

Join Date: May 2007
Location: Croatia
Posts: 9
My Profile

question to Dr. Lindemann

Dear Dr. Lindemann

As I understand to create the time compressed electrostatic wave and HUGE CHANGE of dielectric flux in the flat spiral or conical coil "TRANSFORMER" the spark gap is an important medium.

From the personal writings of Nikola Tesla, as well as from your lectures I understand that dialectrica used in a spark gap is very important.

Above you discussed the first step of radiant energy conversion, please allow me to scrutinize and analyze the second step.

In one of your lectures you said that the spike must be created in a way in the spark gap, that it will crack only once.

Tesla in in his personal notes says the same - the electric ark must be avoided. He describes that this electric ark is created in conductive gases, such as air, on the molecular level and the molecules are charged and discharged that quickly that thereby light is created. In this way light currents are caused and the energy is lost, therefore he made a magnetic spark gap to interrupt the electric ark. The best would be a dialectrica, such as vacuum, or something similar, that would lock up the spike, thus isolating it,

while it 'bolts' through the spark gap.

The external appearance would be that 'is cracks only once', since no electric ark is created.

Could you give some suggestion on what dialectrica would be suitable for this kind of spark gap?

My greatest sympathies go towards vacuum tubes, but since they are very difficult to be manufactured, I would do a compromise and try liquid dialectrica, such as compressing transformer-oil, liquid hexane, or other liquid dialectrica in a spark gap.

What do you think about this? What kind of spark gaps did Dollard use?

Thank you very much and best of greetings,
Shad

#15 (permalink)
05-15-2007, 05:12 AM
Peter Lindemann
Member

Join Date: Apr 2007
Posts: 50
My Profile

Let's look at fundamentals..

Quote:
Originally Posted by Shad
Dear Dr. Lindemann

As I understand to create the time compressed electrostatic wave and HUGE CHANGE of dielectric flux in the flat spiral or conical coil "TRANSFORMER" the spark gap is an important medium.

From the personal writings of Nikola Tesla, as well as from your lectures I understand that dialectrica used in a spark gap is very important.

Above you discussed the first step of radiant energy conversion, please allow me to scrutinize and analyze the second step.

In one of your lectures you said that the spike must be created in a way in the spark gap, that it will crack only once.

Tesla in in his personal notes says the same - the electric ark must be avoided. He describes that this electric ark is created in conductive gases, such as air, on the molecular level and the molecules are charged and discharged that quickly that thereby light is created. In this way light currents are caused and the energy is lost, therefore he made a magnetic spark gap to interrupt the electric ark. The best would be a dialectrica, such as vacuum, or something similar, that would lock up the spike, thus isolating it, while it 'bolts' through the spark gap.

The external appearance would be that 'is cracks only once', since no electric ark is created.

Could you give some suggestion on what dialectrica would be suitable for this kind of spark gap?

My greatest sympathies go towards vacuum tubes, but since they are very difficult to be manufactured, I would do a compromise and try liquid dialectrica, such as compressing transformer-oil, liquid hexane, or other liquid dialectrica in a spark gap.

What do you think about this? What kind of spark gaps did Dollard use?

Thank you very much and best of greetings,
Shad
Shad,

Dollard used large vacuum triodes for his Magnifying Transmitter, and glass enclosed hydrogen spark arresters for the other BSRF demonstrations.

But let's start at the beginning. What was Tesla trying to do? He was trying to produce a simple DC square-wave pulse train. But he didn't have ANY electronic control devices. No 555 timer chips. No transistors. No vacuum tubes. He only had coils, capacitors, mechanical contacters, and spark gaps.

So, what does Tesla's longitudinal electrostatic wave-front look like? It looks like a DC square-wave pulse train where the pulse repetition rate is one million impulses per second, the duty-cycle is 10% On and 90% OFF, and the voltage in each impulse is 50,000 volts DC or more. This is what Tesla wants the circuit to do. This is what he wants to create by the discharge of his capacitor stage in the circuit.

So, if the spark gap is his "circuit controller" then he only wants a "single crack" each time the capacitor discharges. Just a single, unidirectional impulse of electrostatic charge to proceed forward before the circuit shuts off again. Then, the capacitor can charge up again for the 900 nanoseconds the spark gap is quiet and then discharge all of the stored energy again in 100 nanoseconds. Then repeat indefinitely.

It creates a "staccato of electrostatic bursts." Don't make this mysterious, because it is not. It is no more difficult to understand than the output of a 555 timer chip. Its just that we are talking about very high voltage DC, and very high pulse repetition rates. What is difficult is finding the circuit components that allow you to create these conditions without self-destructing!

In my Tesla's Radiant Energy DVD I go through all of Tesla's patents and discuss the various methods he used. They included spark gaps quenched by magnets, spark gaps quenched by blasts of hot air, spark gaps in insulating oil, spark gaps across rotating contacters. All of these methods work to one degree or another.

In the 1920's, as vacuum tubes started becoming available, John Bedini and I are convinced that Tesla went to Lee DeForest and had him build the first experimental Thyratrons. This is a family of circuit controlling devices specifically designed to conduct a unidirectional impulse, only when triggered, and then automatically shut off when the voltage drops to ZERO. This is most easily seen today in the function of the Thyrister, the simplest of which is the SCR. The problem with SCRs today is that they are not designed to shut OFF fast enough for the purposes of these circuits.

I hope this helps.

Peter

#16 (permalink)
05-15-2007, 08:53 PM

Shad
Junior Member

Join Date: May 2007
Location: Croatia
Posts: 9
My Profile

Thank you, Peter, for your detailed reply!

I am not a blind believer, but prefer to really understand things. Allow me to analyze some more this point.

I disagree with you, but this does not necessarily mean that I am right. It's not about my opinion, nor your opinion, but merely about the truth and scientific facts. Discussing with you, is meant to get there, to see the truth from the right angle. If I am wrong, please

correct me!

[quote=Peter Lindemann;2397]Shad,

Quote:
Originally Posted by Peter Lindemann
It creates a "staccato of electrostatic bursts." Don't make this mysterious, because it is not. It is no more difficult to understand than the output of a 555 timer chip. Its just that we are talking about very high voltage DC, and very high pulse repetition rates. What is difficult is finding the circuit components that allow you to create these conditions without self-destructing!

Peter
I think things are not that easy, that we can only talk about very high voltage DC, and very high pulse repetition rates. If it was that simple, we would not have to bother so much about inductive collapses, spark gaps, and could simply take a microwave oven and do the same

Tesla in his writing clearly says that this has nothing to do with AC or DC or very high pulse repetition rates. He describes the properties of dielectricity in neat details and I succeeded to reproduce some of these effects, to also practically convince myself that those were not merely some theories in Tesla's head, but they in fact function that way.

For example, Tesla says when a dielectric or electrostatic spark bolts in an air spark-gap it produces an ark, whereby even the air can heat up and light be caused. He described that light and heat are caused by 'molecular friction' of the air molecules, by charging and discharging. Frequencies with Millions of pulse repetition rates develop here.

My own experiment shows that really light and heat can be developed when an electrostatic spark bolts through the gap. No mystery for me here, rather easy to understand, although I was not really able to measure the frequencies, but I guess it must be quiet high. I even tried to move dielectric transformer oil or veggie oils by electrostatic discharge, as it is described in some of Tesla’s experiments. And – it works. The oil started rotating similar to a tornado. The discharges had a very striking effect on magnetic materials, such as slightly magnetic stainless steel, whereby even the electrodes dissociated. If the electrodes was put into a dielectric liquid, nothing would happen. Especially fast was the dissociation at the weld-seam. A specific kind of non-magnetic stainless steel in these remained unimpaired. Iron wire by the discharge of these electrostatic discharges heated up that quickly, as Tesla described it, whereby the non-magnetic stainless steel conducted without heating up.
Plastic in air will be shot through, like bombed by the sparks, shaving wholes as done by a molecular machine-gun.

So, all this won’t happen with AC or DC high voltage, as Tesla says in his writings – and I tried it, it really doesn’t work.

So, for me it is nothing mysterious if Tesla says that conductive gases, such as air and other should be avoided, because they destroy the material, causing energy losses.

He depicts his air-magnetic spark-gap as a compromise, because there losses are caused. The air molecules are charged and discharged and energy is lost as of light and warmth. He explains that if a better dielectrica was used, which would not allow the energy being ‘radiated away’ as light and warmth they system would be more efficient, which makes sense to me.

Maybe I am wrong, but to simply say scalar waves simply are high-voltage staccato DC, in my understanding is wrong. As you said yourself in your lectures Tesla described that what we understand as electrons are made of much smaller particles. He didn’t mystify and clearly said that current is made out of molecular electricity, positive and negative electrostatic charges. He claimed that if these two charges unite and cancel and if they are moved on, in the orbit a magnetic field will be caused. And this is the magnetic field in our current, AC or DC, or the magnetic field in permanent or electro-magnets.

My question now around these spark gaps was: how to reduce losses in a spark gap without unnecessarily waste dielectricity?

We saw the video from Dollard and it surely all works the way you described it, but I cannot accept that scalar-field are staccato very high pulse repetition rates.

Please don’t take my challenging opinion personal, this merely is a scientific discussion and analyzing with a friendly mind. No negative criticism.

Best of greetings,
Shad

#17 (permalink)
05-16-2007, 01:23 AM

lighty
Junior Member

Join Date: Apr 2007
Location: Croatia
Posts: 19
My Profile

@Shad

I must concur with you about the fundamental difference between dielectric field transfer impulse and the electrons current impulse. The most obvious difference is that an dielectric impulse should not produce a movement of electrons in any way or at least reduce them to a minimum. The moment the arc is formed the electron current flow starts and the dielectric field consisting of monopoles is transformed or rather the monopoles are recombined into a dipole electrons thus all the energy is dissipated in the form of heat and light.

The thyratron is but a triggered switch and while it's suitable for transfer of high currents hydrogen's conductivity is allowing the electrons current to form thus effectively transforming and dissipating dielectric impulse into light and heat.

The analogy about DC square wave with short duty cycle is rather awkward because in the case of what Tesla called "discharge crack" (or rather the spark instead of arc) the duty cycle duration should be much shorter than 10%. Ideally the duty cycle duration should be infinitesimally short in order to facilitate the potential transfer before the monopoles recombination and electron current flow starts.

One of the ways is to prevent any form of arc forming while allowing the spark to discharge. As Tesla said, any kind of pre-discharge corona or glow forming is a good sign that the arc is going to form and basically it makes it a bad sign. So, one of the solutions was to use some form of magnetic spark disruptor which original purpose was to allow the spark to jump over but as soon as any arc would start to form a strong magnetic field between electrodes would simply disrupt it. In that way a strong electron flow would get significantly reduced and most of the discharge waveform ringing would be prevented as well as the potential and current backlash back to the condenser. We're of course talking about ideal circumstances and however well constructed the magnetic disruptor will not yield ideal results. In fact the results are far from ideal but much better than those obtained with the ordinary sparkgap both stationary and rotating.

Another, simpler way to prevent forming of arc and allowing the spark to jump is the use of the oil filled sparkgap in which the oil is serving the purpose of the dielectric which disallow the forming of strong arc (if the distance between electrodes is set correctly) and which closes the ionized path behind spark. The disadvantage of using this form of sparkgap is the fact that it can be used only at lower frequency range and with limited success compared with the magnetic disruptor. The advantage of using oil as an dielectric is the fact that in specific circumstances and configuration the dielectric discharge is being magnified with the dielectric itself. It can be than observed that a spark can then jump at much further distance and it's color is changed from blue to white while there are no temperature changes present whatsoever.

Let me be clear on this one- the magnetic disruptor sparkgap is far from ideal and it requires a heavy dose of tweaking with several parameters before it works correctly but it's certainly a definite improvement over the ordinary sparkgap. Tesla talked about

infinitesimally (ideally) short impulses where no electron current is made possible. That's certainly cannot be achieved with a thyratron no matter how short the duty cycle is. Of course some effects will be noticed but that's far from the things Tesla described in his lectures.

That's my educated guess and opinion based on reading of Tesla and some practical experiments. Of course that doesn't mean I'm correct in all of my assertions and conclusions.

#18 (permalink)
05-16-2007, 05:20 AM
Peter Lindemann
Member

Join Date: Apr 2007
Posts: 50
My Profile

To Shad and Lighty

Gentlemen,

I agree with both of you completely. Perhaps the simplicity of my example was too extreme. I was trying to create an image to convey an idea. A DC square-wave was what Tesla was trying to create. But you are both correct, a simple chopped DC electron current was not Tesla's goal. The intermittent timed release of packets of electrostatic charge was the goal. We all agree on this.

We all understand the situation quite well. That you are both able to get into a detailed description of these circuit functions and describe them in your own words is EXCELLENT. That you are both so clear and confident in your knowledge that you feel free to challenge me, a person you believe to be an expert, is even more IMPRESSIVE.

Tesla was the real expert. I do not consider myself an expert in this field. We are all just trying to understand what Tesla discovered. I am honored to be able to help you clarify your growing understanding. And that is the point. In the end, it will be YOUR UNDERSTANDING that you have. It is, in fact, impossible for me to convey my understanding to you. The real MEANING of things arises from within your own mind. It is not possible to transfer MEANING from person to person. There is no such thing as "teaching". There is only "learning" and the opportunity for it.

Personally, I do not believe that total agreement in these discussions is or should be the goal. Honest, intelligent men rarely agree on every detail of a scientific discussion. The

goal is the free exchange of ideas and the ability to disagree in a civil manner, with mutual respect. In this regard, I am honored to share my thoughts with you.

Peter

#19 (permalink)
05-16-2007, 06:15 PM

Shad
Junior Member

Join Date: May 2007
Location: Croatia
Posts: 9
My Profile

Dear Peter

Thanks for your nice words!

The purpose of this forum is to exchange ideas and realization, and to individually or jointly try to assemble the radiant-energy-jigsaw-puzzle, how it works, and how to practically use it, for oneself, the community and well-being in common.

I cannot call myself an expert, for 15 years I have 'theoretically' occupied with this subject matter, and still study on, this is never-ending - and the last eight years I do intensive research and experiments and have innovations on the field of radiant energy.

The theory in the head usually is easy and logical, but to then practically apply it is often full of obstacles and problems, and really hard work, accompanied by high financial investments.

So, it is not easy, but feasible.

Radiant energy is not only some spook in some free-energy-freaks' brains but real energy! The fact that it is so hard to tap and convert this energy in my eyes only is a lack of knowledge, which in my case like a jigsaw-puzzle, which with the years gets more and more pieces and I receive a more and more clearer picture of the whole.

I think it is important that we, who have some slight clue of what radiant energy is, and also practically experiment with it, should also exchange and try to boot each other with this knowledge. We should also try to somehow spread the knowledge, because our

environment is on the edge and we will leave a destroyed planet without solutions to our heirs.

Tom Bearden, John Bedini, Jeane Manning, Prof. Meyl, people like you, Peter, and some other researchers of this field who contribute are in my eyes are very significant, as they do not only ignorantly watch how things go on, but try to change something. If nothing more, than at least spread the knowledge, which is one of the most important things.

To add something to my mail from yesterday - in my practical experiments I realized that with dielectricity also fields can be build up, which are similar to magnetic fields, but much more in interaction with our ambient. The first time I observed this was in my experiments with my Neutrino-egg. When I pumped the water with high velocity through my neutrino-egg a dielectric field built up, which even blocked the current in nearby light bulbs. The lamps went off with a loud blow, and the fuses burned out. The pump that ran the Neutrino-egg was powered by a 12V battery, and was not connected to that bulb which ran on 220V from the grid. We taped the experiment on video and when my wife brought the lamp closer to the Neutrino-egg, so I could see better, it simply blew off.

The first time we thought this was chance, but it happen very often, and only if the lamp was brought closer to the unit, while this one ran at high velocity.
Back then I did not have any real explanation, why this happened. I back then also reported this to my friend Dr. Patrick Flanagan, who at this time sponsored my work. Also he was quiet baffled and could not really explain the effect. And Dr. Patrick Flanagan back then and still today is THE expert on radiant energy. Later then I learned when a dielectrica charges, it builds up a field, which can even move magnetic fields.

So the field was that strong, that it blocked the current flow in that light-bulb. Dielectric materials have some kind of permeability for dielectricity, as I see. This would also explain the moving of oil in my experiments. From this it is evident to me that matter is full with these dielectric charges and if such charges are created one has influence on the matter through this energy, whereby the electric energy which we use in our everyday lives is limited only to conductive materials and electromagnetic devices that can receive it.

Dielectricity can influence everything, all matter without exception. The nicest about this is that our atmosphere and our Earth are charged from space with this kind of energy, and that we only have to find a profitable way to tap and apply it.

So please, if someone has ideas or wants to add something to this jigsaw puzzle, please stand up now and post it here, share it. If this is too public, also private exchange is possible. I know that there are many readers here that do not like to see this energy become applied for the broad masses…

Best regards,

Shad

#20 (permalink)
05-16-2007, 11:01 PM

lighty
Junior Member

Join Date: Apr 2007
Location: Croatia
Posts: 19
My Profile

Quote:
Originally Posted by Shad
Dielectric materials have some kind of permeability for dielectricity, as I see. This would also explain the moving of oil in my experiments.

While a strong whirling motion of liquid dielectric as well as it's movement in upward direction (against gravity) was interesting enough, even more impressive was the spark discharge magnification effect which proved that polarized and over-saturated dielectric produce a strong dielectric field in it's own vicinity which can significantly elongate the spark discharge in it's vicinity up to several hundred percent. The effect of such magnified discharge could be felt a meter and half away directly on the skin and hair as the sudden change of pressure of the surrounding media. The same device spark discharge without the dielectric magnification effect produced an effect that could hardly be felt even as close as several centimeters from the point of discharge.

The other effect that I observed only once was in the vicinity of such discharges when an ordinary incandescent lightbulb (with resistive filament and no high vacuum) started to grow it's intensity of light to a significant degree. Even a few days later and after the lightbulb was moved to another location it showed that same stronger light volume which had a different nature of it's visible spectrum much more like a neon or xenon lamp. Regrettably I was clumsy enough to break the bulb after only but a short measurement of it's resistive values (which was within the normal tolerances). To my great disappointment we were never able to reproduce that effect again.

Anyway- I agree with both of you that a scientific discussion must be civilized and often people can only agree to disagree. In fact in science the worst enemy of the further advancement is superego of the scientists who neglect to see beyond their own theories while basking in it's own self-importance. The other enemy is the complacency and

worshiping of such people by followers who accept everything the "authority" says without rationally questioning rationale behind their statements. I for one can accept somebody's point of view only if that person backs it up with well explained arguments. Anything other than that is a blind leap of faith.

That being said I think we should continue our discussion of radiant energy in hope that something constructive might come out of it.

#21 (permalink)
05-17-2007, 11:08 PM
Peter Lindemann
Member

Join Date: Apr 2007
Posts: 50
My Profile

Shad and Lighty

Gentlemen,

Thank you both for volunteering some of your original experimental findings. Most interesting! I had not heard of any of these effects before, and would like to learn more.

Shad, please tell us more about your "neutrino-egg" device. What is it? How do you run it? What is its primary purpose, since extinguishing light bulbs at a distance was an unexpected side-effect? Have you come to a deeper understanding of the effect at this point?

Lighty, have you discovered or theorized a reason for the light bulbs unusual behavior yet?

These are both important discoveries, only experimentation could uncover. No amount of brilliant logic could have predicted these events.

I salute you both!

Peter

#22 (permalink)
05-18-2007, 08:26 AM

Shad

Junior Member

Join Date: May 2007
Location: Croatia
Posts: 9
My Profile

Hi Peter et all

Please see my answers below.

Quote:
Originally Posted by Peter Lindemann
Shad, please tell us more about your "neutrino-egg" device. What is it?
It is a device in which a neutrino-diffusion-process occurs.
I gave it the name according to the theory of Prof. DDr. Meyl (www.k-meyl.de) who claims that neutrinos are scalar-waves, such as Dr. Tesla had described them.

It received the ‘nickname’ neutrino-egg from Stefan Hartmann from Berlin (www.overunity.com), after he viewed and published video-material of my experiment. The first Neutrino-diffuser (ND) was egg-shaped.

In simple words, the dielectric charges in this device are converted to mechanical energy.

Quote:
Originally Posted by Peter Lindemann
What is its primary purpose, since extinguishing light bulbs at a distance was an unexpected side-effect?
The main purpose if my ND is to convert liquids from their liquid state of aggregation to gaseous.
You can see a very simple description on my (purposely simple) website:
http://www.geocities.com/waterpowers/FuelCracker.html

I cannot give any further technical data to this device as I am bound by contract I have with industry. But the physics I can reveal is much more important than the technical data.

Quote:
Originally Posted by Peter Lindemann
How do you run it?
With a pump. My toy model was run a windscreen-water-pump for cars, ca. 12V/10W. Gasoline, kerosene, diesel or even water are converted to gas - the process is cold, no

heating/warming effects. This process is highly efficient; to achieve the same results with heat or mechanical energy one would have to invest ca. 5x more energy.
Gas can be produce on demand.

Quote:
Originally Posted by Peter Lindemann
Have you come to a deeper understanding of the effect at this point?
Yes, and this is the important part of this message.

The atoms have a dielectric charge, not electromagnetic, as we all might have learned in school. The electromagnetic charge is produced by the manipulation or proper interaction of these dielectric charges. The atoms communicate among each other and are in constant exchange with this energy. They vibrate or oscillate and in this way become sender and receiver of this energy. They have a memory on how much energy they received and sent off. The atoms are a kind of ‘cosmic wind-mills’, which constantly absorb energy from vacuum, transform it and ‘radiate it off’. (forgive my funny English…)

If the atoms are artificially triggered, as an example here, in a mechanical way with molecular friction and fluid-dynamics, they will absorb a much higher amount of dielectric charges and ‘radiate it off’.

Water for example has a specific permeability and capacity on how much charge it can take, before it discharges. Thereby a very big dielectric field is created, composed of these charges, which absorbs water molecules from the ambient, in this special case from the air. The higher the frequency of the triggered molecules, the more charge will be absorbed by the water molecules.

You can even measure how much dielectric charge for example a water drop has got. A simple way here would be the Lord Kelvin water drop-experiment. This link shows a simple way to verify this: []Lord Kelvin’s Water Drop Experiment Demonstrator - Science Kit.

One can measure how much dielectric energy a water drop has in its normal condition and after being artificially triggered. These dielectric charges or fields are a great resistance for electrons, current-flow, magnetic fields, etc. or vice versa. If the dielectric field is strong enough, it will repel or ban electromagnetic from its ambient.

The field in the ND was strong enough to block the current flow in the bulb.

The most important to understand is, that our Earth, our atmosphere are full of these dielectric charges, and that they can be tapped and be bundled to a field, which can be used for mechanical work, similar to magnetic fields we use now.

These dielectric charges are monopole (also called unipolar) charges and attract their opposite pole and same-poled charged repel one another. They act like tiny monopole

magnets.

If one creates strong (unipolar) dielectric fields they will attract opposite-poled dielectric charges from the ambient, may it be earth or air, or will repel the charge if it same-poled. These charges are able to transform matter from one element to the other, as for example water to air, whereby water would expands for ca. 2000x. Today we use nuclear power plants to generate heat and steam to produce pressure which runs steam turbines.

Dielectric charges can create the same pressure by converting the element water to air. But it is also possible, but I haven't tried this, to convert air in the same with dielectric charges to vacuum or gravity fields. I met the engineer of Viktor Schauberger, who still is alive, he was present when Schauberger made these levitation experiments. In the future when time, place and circumstances will allow me, I will try to replicate these experiments, since I already was able to do part of it.
As you can see the dielectric charges can be used for mechanical or practical work.

In my eyes and understanding the bolt of lighting hides the key to free energy. The one who will profoundly analyze this will find a way how to tap dielectric negative energy from the earth.

Best regards,
Shad

Last edited by Shad : 05-18-2007 at 09:06 PM. Reason: link missing

#23 (permalink)
05-18-2007, 02:37 PM

lighty
Junior Member

Join Date: Apr 2007
Location: Croatia
Posts: 19
My Profile

Quote:
Originally Posted by Peter Lindemann
Lighty, have you discovered or theorized a reason for the light bulbs unusual behavior yet?
As I said I have ran into a bit of a problem while trying to replicate the effect. I know that

several conditions seems to be significant.

1. Lightbulb was turned on while exposed to the strong changing dielectric field. I tried exposing lightbulbs with no power supply connected but no luck so there.
2. The electrostatic machine and the lightbulb were connected to the same wall outlet so they shared mutual phase and ground.
3. The lightbulb was exposed to the strong changing dielectic field for prolonged length of time (15-20 minutes).
4. Since the lighbulb had an isolated metal shield around it (like in the normal table lamps) there could be that some kind of capacitive coupling occurred during the exposure to the strong changing dielectric field.

As I said previously- we had several similar lightbulbs to compare it with, no visible changes appeared on the glass and the resistance of the filament remained within normal tolerance compared to the other similar lightbulbs available to me.

The nature of light emitted was very much like the xenon lamps and the intensity of light was almost 50% stronger. In fact it was a 100W lightbulb that gave light as a 150W type.

The effect stayed consistent even when the lightbulb was moved to another location and even after a few days. The effect was so noticeable that a colleague of mine who didn't know the whole story asked me why did I replaced my table lamp lightbulb with such a bright and more powerful one.

Before I managed to accidentally break the lamp I haven't had time to measure it's temperature (I think it was as hot as a normal 100W lamp but I cannot be sure now) or spectrum of emitted light. What a shame!

It seems that as with the Shad's Neutrino Diffusor's resonator a several precise and very particular demands must be met before the effect can be reproduced. Shad spent years of his life perfecting the construction of ND and to be honest after the lightbulb broke I simply didn't spend much more time reconstructing the proper conditions needed to reproduce the lightbulb effect. My point is that as opposed to the ND which is fully understood and reproducible if one observe several seemingly unimportant and precise details in order to get it to work the lightbulb effect was a fluke yet to be understood. In fact at that time so many more interesting dielectricity effects presented themselves that the lightbulb incident was of minor interest to me.

However, my theory is that the vacuum dielectric in the lightbulb was excited with the heat and EM radiation from the AC current in a way that allowed for the strong changing dielectric field to polarize dielectric (vacuum or even glass although my bet lies with the former one) permanently in a way that would allow the heat or EM radiation from AC

current to excite it even further. In fact I suspect that to a certain point the lightbulb started to behave like a discharge tube of low pressure but with a heat and EM radiation of AC current as the exciting agents.

That's all of course a wild speculation. Further experiments should be done in order to be able to reproduce the effect and the one could measure temperature, light spectrum, power consumption, EM field as well as dielectric field in order to determine what is really going on.

Last edited by lighty : 06-27-2007 at 12:20 PM.

#24 (permalink)
05-28-2007, 10:30 AM

Shad
Junior Member

Join Date: May 2007
Location: Croatia
Posts: 9
My Profile

one more though...

Dear Peter, Lighty, and all

I would like to add something to my last message and am curious to hear your opinion. In my understanding the universe also is a universe of frequencies (broad band of frequencies). Each element is a frequency occupying a band width of space. Groups or combinations of elements can, as a unit, cover a broader band width of space.

The atom is a manifestation and is both positive and negative in character; therefore, space also has two basic properties that is, positive and negative.

Atom energy, or any other energy derived from changing the form or state of physical material, is energy taken from atomic structure.

With the right theory it is possible to tap energy in abundance from the driver of the atom (space energy) without taking it from atomic structure.

Atomic power with its penalty of contamination is not necessary, as the basic atomic energy can be tapped before it is material substance. Then there are no contaminations or harmful side effects, because nothing is destroyed and because the energy is only used, even as the wind is used by the windmill.

Radiant energy in my opinion is a result of distorted and nonlinear space and energy in common is a result of distorted space.

As example:
Magnetism is a distortion of space, a distortion within the atomic structure of the magnet material or copper coil which extends into the space surrounding it.

As an illustration, we consider an undistorted area of space before us. We move an activated magnet into this area of space and the result is that this previously undistorted and linear space is now. That is, two poles exist in relation to the magnet; an N pole and an S pole.

At the N pole we have a lack of S pole and at the S pole we have a lack of N pole. Or, at each end of the magnet, we have a lack of balanced space. In other words, distorted space, (a low pressure area) now exists at each pole.

Any non-polarized material within the band width of magnetism and electricity
(a paramagnetic material) will migrate to the low pressure area at either pole, while a polarized object (another magnet) will demonstrate the law of opposites attracting and similars repelling each other. The above theory of expansion and/or contraction holds true as cause of magnetism in all types of permanent magnets or electromagnets.

An inductive collapse of a coil, the so-called collapsing field could now be described as space returning back to linearity with a slap. That is the positive and the negative closing in from opposite directions and filling a rapidly diminishing area and then suddenly coming together; perhaps even bringing about a slight crossing of bands, or a short circuit of electric space which would be like a miniature bolt of lightning.
The collapsing field of an electromagnet is a distortion of ether/vacuum space which is elastic in his property and cause of the resulting mono-polar electrostatic charge.

In this way it is possible to tap energy in abundance from the driver of the atom (space energy) without taking it from atomic structure. This is why I like to describe the atom like a cosmic energy windmill.

Best of greetings,
Shad

« Previous Thread | Next Thread »

LinkBacks (?)
LinkBack to this Thread: http://www.energeticforum.com/renewable-energy/473-radiant-energy.html
Posted By
For
Type
Date
Renewable Energy
This thread
Refback
05-12-2007 08:12 PM

Posting Rules
You may not post new threads
You may not post replies
You may not post attachments
You may not edit your posts

vB code is On
Smilies are On
[IMG] code is On
HTML code is Off
Trackbacks are On
Pingbacks are On
Refbacks are On

All times are GMT. The time now is 10:46 PM.

-- Default Style -- Aaron's Test
Energetic Forum - Archive - Privacy Statement - Top

Powered by vBulletin® Version 3.6.4
Copyright ©2000 - 2007, Jelsoft Enterprises Ltd.
Search Engine Optimization by vBSEO 3.0.0 RC8
2007 Copyright ? Energetic Forum? A Non Profit Corporation - All Rights Reserved
Radiant Energy:

Unraveling Tesla’s Greatest Secret

By Ken Adachi

June 1, 2001

[The story you are about to read is derived from a carefully researched paper presented by Dr. Peter Lindemann before a private audience in Irvine, California on September 12, 2000. The lecture was titled “The Free Energy Secrets of Cold Electricity” . It detailed the story of Radiant Energy and its successful application by Edwin Gray in an over unity motor design which Gray debuted in 1973. The real detective work (& credit) in uncovering Tesla’s discovery of Radiant energy came from author Gerry Vassilatos in his recent book, “Secrets of Cold War Technology” without which Lindemann could not have solved the enigma of Gray’s Radiant circuit design. This lecture delivered the goods. The secret of Tesla’s Radiant Energy has finally been revealed in manifold detail and only awaits the industry of those who care to study and understand it. Part1 presents a general overview of Tesla’s discovery and the political, intrigues that led to its subsequent suppression. Part 2 will detail the nuts and bolts of how Tesla produced Radiant Energy with block diagrams, schematics, and drawings from Tesla’s original patents to illustrate all of the necessary elements and parameters required. Additional details on Gray’s modern adaptation of Tesla’s Radiant circuitry and a brief look at Eric Dollard, the only man to successfully recreate Tesla’s Colorado Springs Magnifying transmitter and reproduce the pure steaming white rays of Radiant energy in 1986 exactly as described by Tesla in his Colorado journals. Ken Adachi]

Of all the great inventions and discoveries of Nikola Tesla, nothing stood out with greater potential benefit to the whole of humanity than his discovery of Radiant Energy in 1889. The series of observations that led to the discovery of Radiant energy initially grew out of experiments that Tesla had conducted in an attempt to duplicate the results that Heinrich Hertz had claimed to achieve in affirming the existence of electromagnetic waves, the discovery of which Hertz announced in 1887. While replicating Hertz’s experiments, Tesla experimented with violently abrupt DC electrical discharges and discovered a new force in the process. Only after conducting exhaustive experimental trials for the next three years, did Tesla announce this stupendous discovery in a paper published in December, 1892, entitled “The Dissipation of Electricity”. Incredibly, most academicians of the day completely missed the mark in understanding the true significance of his paper. Noted scientists such as Sir Oliver Lodge, mistakenly thought that Tesla was referring to high frequency AC electricity in the operation of the Tesla Transformer, a huge blunder that remains to this day in the misnaming and misinterpretation of the Tesla Coil. The transformer that Tesla referred to in the 1892 paper did not operate on magnetic/electric field induction created by alternating currents. It operated in an entirely new domain of physics based on abrupt discharges of electrostatic potentials and the subsequent release of kinetic Radiant Energy from the omnipresent ether. Tesla was now operating under entirely new rules which he referred

to as “dynamic” electro-static forces and had, by now, completely abandoned any further interest in the AC waveform. The genesis of the Lodge misunderstanding, however, began a few years earlier with the publication of certain mathematical formulas by a brilliant Scotsman named James Clerk Maxwell. Maxwell’s EquationsUsing mathematical models, James Clerk Maxwell had earlier suggested that two different types of electrical disturbances could possibly exist in Nature. One type was a longitudinal electric wave which required alternating concentrations of densified and rarefied pulsations of electrostatic fields that moved along a single vector (today, we refer to these as standing waves or scalar waves). Maxwell ultimately rejected this idea because he was convinced that this type of wave propagation was impossible to achieve, but his assumption was erroneous and would later portend formidable consequences for Tesla and the world at large. Maxwell’s second wave postulation was that of a transverse electromagnetic wave that exhibited a rapid alternation of electric fields along a fixed axis that radiated away from its point of origin at the speed of light and was detectable at great distances. Maxwell had more faith in the existence of this type of wave and encouraged experimenters to look in this direction. It was the discovery of this type of wave that Hertz had laid claim to, but Tesla was meticulous and fastidious in replicating Hertz’s experimental parameters and he could not obtain the results claimed by Hertz.

Tesla discovered a fundamental flaw in Hertz’s experiment: Hertz had failed to take into account he presence of air in his experiments. Hertz had mistakenly identified electrostatic inductions or electrified shockwaves as true electromagnetic waves. Tesla was saddened to bring this news to the distinguished academician, but felt scientific honesty was paramount if progress was to be achieved. Tesla visited Hertz in Germany and personally demonstrated the experimental error to him. Hertz agreed with Tesla and had planned to withdraw his claim, but reputations, political agendas, national pride, and above all, powerful financial interests, intervened in that decision and set the stage for a major rift in the ‘accepted’ theories that soon became transformed into the fundamental “laws” of the electric sciences that have held sway in industry and the halls of academia to the present day.

Tesla’s introduction to the phenomena of Radiant Energy began with early observations by linesmen working for Thomas Edison, Tesla’s former employer

DC AnomaliesBefore Tesla’s invention of the Polyphase AC generator became the industry standard and overtook Thomas Edison’s use of DC generators, the DC electrical system was the only system available to deliver electricity to America’s homes and factories. Due to the resistance offered by long transmission lines, Edison had to produce very high DC voltages from his generators in order to deliver enough voltage and current to its final destination. He also had to provide additional ‘pumping’ stations along the way to boost the sagging voltage which dwindled from line losses. A curious anomaly occurred in the very first instant of throwing the power switch at the generating station: Purple/blue colored spikes radiated in all directions along the axis of the power lines for just a moment. In addition, a stinging, ray-like shocking sensation was felt by those who stood near the transmission lines. In some cases, when very large DC voltages surged from the generators, the “stinging” sensation was so great that occasionally a blue spike jumped from the line and grounded itself through a workman,

killing him in the process.
Tesla realized almost immediately that electrons were not responsible for such a phenomena because The blue spike phenomena ceased as soon as the current stated flowing in the lines. Something else was happening just before the electrons had a chance to move along the wire. At the time, no one seemed to be very interested in discovering why these dramatic elevations in static electrical potential were taking place, but rather, engineering design efforts were focused on eliminating and quenching this strange anomaly which was considered by everyone to be a nuisance-except Tesla. Tesla viewed it as a powerful, yet unknown form of energy which needed to be understood and harnessed if possible. The phenomena only exhibited itself in the first moment of switch closure, before the electrons could begin moving. There seemed to be a “bunching” or “choking” effect at play, but only briefly. Once the electrons began their movement within the wire, all would return to normal. What was this strange energy that was trying to liberate itself so forcefully at the moment of switch closure? .
Tesla, Genius Out of TimeIn the later quarter of the 19th century, Tesla was alone in his opposition to the fundamental views of the nature of electrical forces as described by three of the biggest names in electric science: James Clerk Maxwell, Herman Von Helmholtz, and Heinrich Hertz. Tesla possessed a broader vision of the cosmos because his keen sense of awareness and especially his natural intuitive insights gave him a deeper understanding of the role that the ether (or aether) played in the manifestations of all

electrical phenomena while his contemporaries focused their attention exclusively on the electromagnetic component (assuming that no other component could be involved). This lack of etheric insight by his contemporaries (with the exception of Sir William Crookes) and the heated controversy that the mere mention of the ether had engendered was to cause Tesla ridicule and sarcasm from men of inferior intellect for decades. The ether controversy largely dissipated in the academic arena after the publication of Eienstein’s Theory of Relativity (1905) and the Michaelson-Morley Experiment which essentially declared that the ether ‘theory’ was dead, but Tesla’s insights and deductions concerning the role of the ether were correct all along.
The ether existed then and it exists now, despite the lock step denials by mainstream science, past or present. Rudolf Steiner, another man of genius, affirmed that the ether was composed of four fractions which he described as 1) the Light Ether, 2) the Warmth Ether, 3) the Chemical Ether, and 4) the Life Ether, a combination of the first three. Tesla’s New York and Colorado experiments confirmed for him that Radiant energy was bound up within the elusive ether, but could be made manifest by the creation of an abrupt disruption in the equilibrium of the ether fractions using one way, high magnitude pulses of short duration.This was the key that unlocked Radiant Energy.
“See the excitement coming!”These were the words that Tesla used at the end of his pivotal 1892 December lecture, “The Dissipation of Electricity”. He was brimming over with buoyancy and optimism for the future In the 1890's, Tesla conducted a large number of experiments which confirmed his theory and refined his understanding of the special conditions required for Radiant energy to express itself. He later expanded his New York work with the large scale experimental trials conducted at Colorado Springs,

Colorado in 1899.

Tesla, the humanitarian, wanted more than anything to share this enormous discovery with his fellow man. Tesla spoke of practical applications of radiant energy that were so wide reaching that they could have created a profound and immense leap into the future for all of mankind in practically every sector of daily life:
Unlimited electricity could be made available anywhere and at any time, by merely pushing a rod into the ground and turning on the electrical appliance. Homes, farms, offices, factories, villages, libraries, museums, street lights, etc., could have all their lighting needs met by merely hanging ordinary light bulbs or fluorescent tubes anywhere desired- without the need for wiring -and produce brilliant white light 24 hours a day. Motor energy for any imagined use such as industrial applications, transportation, tractors, trucks, trains, boats, automobiles, air ships or planes could be powered freely- anywhere on the planet from a single Magnifying Transmitter. This new form of energy even had the ability to elevate human consciousness to levels of vastly improved comprehension and mental clarity. Undreamed of therapeutic applications to improve human health and to eliminate disease conditions could have been achieved fully 100 years ago had Tesla been allowed to complete his commercial development of Radiant Energy. But powerful barons of industry, chiefly in the person of John Pierpont Morgan, colluded to deny him the financial backing he needed and in doing so, effectively denied mankind one of Nature's most abundant and inexhaustible gifts of free energy.
The Magnifying TransmitterThe closest Tesla came to a world wide industrial application of his Radiant Energy dream was the construction of his huge Magnifying Transmitter at Shoreham, Long Island, a site which he named Wardenclyffe. Following his return to New York City from Colorado Springs in 1899, Tesla was jubilant and full of enthusiasm to implement his plan for the commercial application of Radiant energy. He turned to JP Morgan for a substantial portion of the funding to finance the huge project at Wardenclyffe.

Morgan was chiefly concerned with turning a profit from overseas radio transmissions since Marconi was fast locking up the market and Morgan, ever the aggressor, wanted a share of the market. When Tesla told him that the transmitter could transmit "intelligence" to the world, Morgan assumed that he meant ordinary radio communications, but Tesla was not referring to ordinary radio transmissions. He was talking about something much bigger, but avoided revealing all to Morgan during this early phase of the Wardenclyffe project. Some considerable time later, Tesla eventually felt compelled to tell Morgan the larger possibilities offered by the Magnifying Transmitter when he needed more funding to complete the project. Tesla thought that Morgan would be overwhelmed by his expanded explanation of the true capacities of the transmitter and would be anxious to complete the work, but Tesla's assumption had backfired and Morgan refused to lay out any more money for the transmitter. Sadly, the enormous benefits that could have been made available to society by Tesla's Magnifying Transmitter project, died then and there.
Morgan & WestinghouseMorgan had already orchestrated circumstances in Tesla's life in order to force Tesla to be dependent on him for financial backing. During an earlier

period, when Tesla himself had millions from his Polyphase AC generator royalty payments and other earnings, Morgan wanted to woo Tesla with a deal that effectively gave Morgan majority control over his patent rights and projects, but Tesla turned him down, telling Morgan that he had enough money of his own to fund his projects. While returning to his hotel from that very meeting with Morgan, however, Tesla was told that his laboratory had been burned to the ground. It represented a tremendous loss to Tesla and it shook him deeply. Everyone, of course, felt convinced that Morgan was behind the arson. In order to save face, Morgan was embarrassed by Tesla into putting up the money to pay for the rebuilding of a new lab as an act of "philanthropy". From that time forward, however, other financial backers were not to be found. Morgan was powerful enough to black list Tesla among the Eastern Establishment elites that previously had hobnobbed and feted with Tesla as if he was one of their own. Black listing and ostracization by officialdom and financiers lifted somewhat after Morgan's death, but generally continued to haunt Tesla for the rest of his life.

Before the turn of the century, Tesla also willingly gave up millions, perhaps billions, in royalty earnings to George Westinghouse in an unprecedented act of friendship. Westinghouse had believed in the superiority of Tesla's AC system and provided the money to build Tesla's big AC generators at Niagra Falls, NY. Tesla was paid millions up front for his patents, but was also due to receive royalty earnings for every kilowatt of power produced. When Westinghouse ran into financial difficulties at a later date, Tesla tore up his royalty contract in order to save Westinghouse from financial ruin. Had he not done that, Tesla would have had enough money from royalties to keep him ensconced in great wealth for the rest of his life.

The story is frequently told that when Morgan found out from Tesla that the true purpose of the Wardenclyffe transmitter was to provide free electricity to the world, he abruptly pulled the funding. That's not completely accurate. The economic conditions were recessionary at the time and the stock market had taken a considerable dip that year. Morgan wasn't interested in risking any more capital in perilous times on a project he couldn't fully fathom and wasn't completely convinced of. Tesla held land ownership of the Wardenclyffe site and tower, but no further work was done after 1910. In 1914, Tesla was deeply in debt and signed over the deed of Wardenclyffe Station to pay off years of back rent due to the owners of the New Yorker Hotel where he was living (he occupied two penthouse suites in the hotel). In 1917, the hotel owners had the tower demolished and its parts sold for salvage. Despite the loss of Wardenclyffe, Tesla continued to refine his understanding of Radiant Energy and miniaturize the equipment needed to produce it. He eventually was able to reduce the equipment down to the size of a suit case.

Copyright 2001 Ken Adachi & Educate-Yourself.org All Rights Reserved.
Reposting is only allowed without editing or abbreviation and placement of originating url and author's name at top of article.

Next time, Part 2: The nuts and bolts of producing Radiant Energy and Gray's Radiant design circuitry.

Australian and European readers interested in obtaining the video tape of Dr. Lindemann's 2 hour and 50 minute lecture, "The Free Energy Secrets of Cold Electricity"

can send $29.95 (US$) for VHS or $33.95 for PAL plus $11 air shipping. A 150 page companion book of the same title which includes the complete narrative, enlarged views of the slides, diagrams, schematics, photographs and patents demonstrated during the lecture, along with complete copies of the Gray and Tesla patents and additional materials not included in the lecture is also available for $29.95 plus $11 air shipment. Book and video together, add $15 air shipping. Make US checks or money orders payable to:
USA readers, include $4 for Priority Flat Rate mail
K. AdachiPO Box 3046Costa Mesa, CA 92628
See our home page for more information: http://educate-yourself.org
http://educate-yourself.org/radiantenergystory.html

Where in the World is all the Free Energy?
The spread of working free-energy technologies has been prevented by wealthy elites governments, deluded inventors and con men, as well as a non-demanding public.
Extracted from Nexus Magazine, Volume 8, Number 4PO Box 30, Mapleton Qld 4560 Australia. editor@nexusmagazine.comTelephone: +61 (0)7 5442 9280; Fax: +61 (0)7 5442 9381From our web page at: www.nexusmagazine.com
©2001 by Peter Lindemann, DScClear Tech, Inc.PO Box 37Metaline Falls, WA 99153, USATelephone: (509) 446 2353Email: support@free-energy.wsWebsite: www.free-energy.cc

In the late 1880s, trade journals in the electrical sciences were predicting "free electricity" in the near future. Incredible discoveries about the nature of electricity were becoming commonplace. Nikola Tesla was demonstrating "wireless lighting" and other wonders associated with high-frequency currents. There was an excitement about the future like never before.
Within 20 years there would be automobiles, airplanes, movies, recorded music, telephones, radio and practical cameras. The Victorian age was giving way to something totally new. For the first time in history, common people were encouraged to envision a utopian future filled with abundant modern transportation and communication as well as jobs, housing and food for everyone. Disease would be conquered and so would poverty. Life was getting better, and this time everyone was going to get "a piece of the pie".
So what happened? In the midst of this technological explosion, where did the energy breakthroughs go? Was all of this excitement about "free electricity", which happened just before the beginning of the last century, just wishful thinking that "real science" eventually disproved?
CURRENT STATE OF TECHNOLOGY
Actually, the answer to that question is "No". In fact, the opposite is true. Spectacular energy technologies were developed right along with the other breakthroughs. Since that time, multiple methods for producing vast amounts of energy at extremely low cost have been developed. None of these technologies has made it to the "open" consumer

market as an article of commerce, however. Exactly why this is true will be discussed shortly.But first, I would like to describe to you a short list of "free energy" technologies that I am currently aware and that are proven beyond all reasonable doubt. The common feature connecting all of these discoveries is that they use a small amount of one form of energy to control or release a large amount of a different kind of energy. Many of them in some way tap the underlying aether field--a source of energy conveniently ignored by "modern" science.

1. Radiant EnergyNikola Tesla's Magnifying Transmitter, T. Henry Moray's Radiant Energy Device, Edwin Gray's EMA Motor and Paul Baumann's Testatika Machine all run on "radiant energy". This natural energy form (mistakenly called "static" electricity) can be gathered directly from the environment or extracted from ordinary electricity by the method called "fractionation". Radiant energy can perform the same wonders as ordinary electricity, at less than 1% of the cost. It does not behave exactly like electricity, however, and this has contributed to the scientific community's misunderstanding of it. The Methernitha Community in Switzerland currently has five or six working models of fuelless, self-running devices that tap this energy.

2. Permanent-Magnet-Powered MotorsDr Robert Adams (New Zealand) has developed astounding designs of electric motors, generators and heaters that run on permanent magnets. One such device draws 100 watts of electricity from the source, generates 100 watts to recharge the source and produces over 140 BTUs of heat in two minutes!Dr Tom Bearden (USA) has two working models of a permanent-magnet-powered electrical transformer. It uses a 6-watt electrical input to control the path of a magnetic field coming out of a permanent magnet. By channelling the magnetic field, first to one output coil and then to a second output coil, and by doing this repeatedly and rapidly in a "ping-pong" fashion, the device can produce a 96-watt electrical output with no moving parts. Bearden calls his device a Motionless Electromagnetic Generator, or MEG. Jean-Louis Naudin has duplicated Bearden's device in France. The principles for this type of device were first disclosed by Frank Richardson (USA) in 1978.Troy Reed (USA) has working models of a special magnetised fan that heats up as it spins. It takes exactly the same amount of energy to spin the fan, whether it is generating heat or not.Beyond these developments, multiple inventors have identified working mechanisms that produce motor torque from permanent magnets alone.

3. Mechanical HeatersThere are two classes of machines that transform a small amount of mechanical energy into a large amount of heat.The best of these purely mechanical designs are the rotating cylinder systems designed by Frenette (USA) and Perkins (USA). In these machines, one cylinder is rotated within another cylinder with about an eighth of an inch of clearance between them. The space between the cylinders is filled with a liquid such as water or oil, and it is this "working fluid" that heats up as the inner cylinder spins.Another method uses magnets mounted on a wheel to produce large eddy currents in a plate of aluminium, causing the aluminium to heat up rapidly. These magnetic heaters have been demonstrated by Muller (Canada), Adams (NZ) and Reed (USA).All of these systems can produce 10 times more heat than standard methods using the same energy input.

4. Super-Efficient ElectrolysisWater can be broken into hydrogen and oxygen using electricity. Standard chemistry books claim that this process requires more energy than

can be recovered when the gases are recombined. This is true only under the worst-case scenario.When water is hit with its own molecular resonant frequency, using a system developed by Stan Meyer (USA) and again recently by Xogen Power, Inc., it collapses into hydrogen and oxygen gas with very little electrical input. Also, using different electrolytes (additives that make the water conduct electricity better) changes the efficiency of the process dramatically. It is also known that certain geometric structures and surface textures work better than others do. The implication is that unlimited amounts of hydrogen fuel can be made to drive engines (like in your car) for the cost of water.Even more amazing is the fact that a special metal alloy was patented by Freedman (USA) in 1957, which spontaneously breaks water into hydrogen and oxygen with no outside electrical input and without causing any chemical changes in the metal itself. This means that this special metal alloy can make hydrogen from water, for free, forever.

5. Implosion/Vortex EnginesAll major industrial engines use the release of heat to cause expansion and pressure to produce work, like in your car engine. Nature uses the opposite process of cooling to cause suction and vacuum to produce work, like in a tornado.Viktor Schauberger (Austria) was the first to build working models of Implosion Engines in the 1930s and 1940s. Since that time, Callum Coats has written extensively on Schauberger's work in his book Living Energies, and subsequently a number of researchers have built working models of Implosion Turbine Engines. These are fuelless engines that produce mechanical work from energy accessed from a vacuum. There are also much simpler designs that use vortex motions to tap a combination of gravity and centrifugal force to produce a continuous motion in fluids.

6. Cold Fusion TechnologyIn March 1989, two chemists, Martin Fleischmann and Stanley Pons, from Brigham Young University, Utah (USA), announced that they had produced atomic fusion reactions in a simple tabletop device. The claims were "debunked" within six months and the public lost interest.Nevertheless, cold fusion is very real. Not only has excess heat production been repeatedly documented, but also low-energy atomic element transmutation has been catalogued, involving dozens of different reactions! This technology definitely can produce low-cost energy and scores of other important industrial processes.

7. Solar-Assisted Heat PumpsThe refrigerator in your kitchen is the only "free energy machine" you currently own. It's an electrically operated heat pump. It uses one amount of energy (electricity) to move three amounts of energy (heat). This gives it a "co-efficient of performance" (COP) of about three. Your refrigerator uses one amount of electricity to pump three amounts of heat from the inside of the refrigerator to the outside of the refrigerator. This is its typical use, but it is the worst possible way to use the technology. Here's why.A heat pump pumps heat from the "source" of heat to the "sink" or place that absorbs the heat. The "source" of heat should obviously be hot and the "sink" for heat should obviously be cold for this process to work the best. In your refrigerator, it's exactly the opposite. The "source" of heat is inside the box, which is cold, and the "sink" for heat is the room temperature air of your kitchen, which is warmer than the source. This is why the COP remains low for your kitchen refrigerator. But this is not true for all heat pumps.COPs of 8 to 10 are easily attained with solar-assisted heat pumps. In such a device, a heat pump draws heat from a solar collector and dumps the

heat into a large underground absorber, which remains at 55°F (12.78°C); mechanical energy is extracted in the transfer. This process is equivalent to that of a steam engine that extracts mechanical energy between the boiler and the condenser, except that it uses a fluid which "boils" at a much lower temperature than water.One such system, tested in the 1970s, produced 350 hp, measured on a dynamometer, in a specially designed engine from just 100 square feet of solar collector. (This is not the system promoted by Dennis Lee.) The amount of energy it took to run the compressor (input) was less than 20 hp, so this system produced more than 17 times more energy than it took to keep it going! It could power a small neighbourhood from the roof of a hot-tub gazebo, using exactly the same technology that keeps the food cold in your kitchen.
Currently there is an industrial-scale heat pump system set up just north of Kona, Hawaii, which generates electricity from temperature differences in ocean water.
There are dozens of other systems that I have not mentioned, and many of them are as viable and well tested as the ones I have just recounted.
But this short list is sufficient to make my point: free energy technology is here, now. It offers the world pollution-free, energy abundance for everyone, everywhere.
It is now possible to stop the production of "greenhouse gases" and shut down all of the nuclear power plants. We can now desalinate unlimited amounts of seawater at an affordable price and bring adequate fresh water to even the most remote habitats. Transportation and production costs for just about everything can drop dramatically. Food can even be grown in heated greenhouses in the winter, anywhere.
All of these wonderful benefits that can make life on this planet so much easier and better for everyone have been postponed for decades. Why? Whose purposes are served by this postponement?

UNSEEN ENEMIES OF FREE ENERGY TECHNOLOGY

There are four gigantic forces that have worked together to create this situation. To say that there is and has been a "conspiracy" to suppress this technology only leads to a superficial understanding of the world and it places the blame for this completely outside of ourselves. Our willingness to remain ignorant and actionless in the face of this situation has always been interpreted by two of these forces as "implied consent".
So, besides "a non-demanding public", what are the other three forces impeding the availability of free energy technology?

1. The Money MonopolyIn standard economic theory, there are three classes of industry: capital, goods and services. Within the first class, capital, there are also three sub-classes: natural capital, currency and credit. Natural capital relates to raw materials (such as a gold mine) and sources of energy (such as an oil well or hydroelectric dam). Currency relates to the printing of paper "money" and the minting of coins; these functions are usually the job of government. Credit relates to the lending of money for interest and its extension of economic value through deposit loan accounts. From this, it is easy to see that energy functions in the economy in the same way as gold, the printing of money by the government or the issuing of credit by a bank.

In the United States, and in most other countries around the world, there is a "money monopoly" in place. I am "free" to earn as much "money" as I want, but I will only be paid in Federal Reserve notes. There is nothing I can do to be paid in gold certificates or some other form of "money". This money monopoly is solely in the hands of a small

number of private stock banks, and these banks are owned by the wealthiest families in the world. Their plan is eventually to control 100 per cent of all the capital resources of the world and thereby control everyone's life through the availability (or non-availability) of all goods and services. An independent source of wealth (a free energy device) in the hands of each and every person in the world would ruin their plans for world domination, permanently. Why this is true is easy to see.

Currently, a nation's economy can be either slowed down or sped up by the raising or lowering of interest rates. But if an independent source of capital (energy) were present in the economy, and any business or person could raise more capital without borrowing it from a bank, this centralised throttling action on interest rates would simply not have the same effect. Free energy technology changes the value of money. The wealthiest families and the issuers of credit do not want any competition. It's that simple. They want to maintain their current monopoly control of the money supply. For them, free energy technology is not just something to suppress, it must be permanently forbidden!

So, the wealthiest families and their central banking institutions are the first force operating to postpone the public availability of free energy technology. Their motivations are the imagined "divine right to rule", greed and their insatiable need to control everything except themselves. The weapons they have used to enforce this postponement include intimidation, "expert" debunkers, buying and shelving of technology, murder and attempted murder of the inventors, character assassination, arson and a wide variety of financial incentives and disincentives to manipulate possible supporters. They have also promoted the general acceptance of a scientific theory that states that free energy is impossible (the laws of thermodynamics).

2. National GovernmentsThe second force operating to postpone the public availability of free energy technology is national governments. The problem here is not so much related to competition in the printing of currency but the maintenance of "national security".

The fact is, the world out there is a jungle and humans can be counted upon to be very cruel, dishonest and sneaky. It is government's job to "provide for the common defence". For this, "police powers" are delegated by the executive branch of government to enforce "the rule of law". Most of us who consent to the rule of law do so because we believe it is the right thing to do, for our own benefit. However, there are always a few individuals who believe that their own benefit is best served by behaviour that does not voluntarily conform to the generally agreed upon social order. These people choose to operate outside of "the rule of law" and are considered outlaws, criminals, subversives, traitors, revolutionaries or terrorists.

Most national governments have discovered by trial and error that the only foreign policy that really works over time is a policy called "tit for tat". What this means to you and me is that governments treat each other the way they are being treated. There is a constant "jockeying" for position and influence in world affairs, and the "strongest" party wins! In economics it's called "the Golden Rule", which states that "the one with the gold makes the rules". So it is with politics, also, but its appearance is more Darwinian. It's simply "survival of the fittest".

In politics, however, the "fittest" has come to mean the strongest party that is also willing to fight the dirtiest. Absolutely every means available is used to maintain an advantage

over the "adversary", and everyone else is the "adversary" regardless of whether they are considered friend or foe. This includes outrageous psychological posturing, lying, cheating, spying, stealing, assassination of world leaders, proxy wars, alliances and shifting alliances, treaties, foreign aid and the presence of military forces wherever possible.

Like it or not, this is the psychological and actual arena in which national governments operate. No national government will ever do anything that gives an adversary an advantage simply for free. Never! It's national suicide. Any activity by any individual, inside or outside the country, which is interpreted as giving an adversary an edge or advantage in any way, will be deemed a threat to "national security". Always!

Free energy technology is a national government's worst nightmare! Openly acknowledged, free energy technology sparks an unlimited arms race by all governments in a final attempt to gain absolute advantage and domination. Think about it. Do you think Japan will not feel intimidated if China gets free energy? Do you think Israel will sit by quietly as Iraq acquires free energy? Do you think India will allow Pakistan to develop free energy? Do you think the USA would not try to stop Osama bin Laden from getting free energy?

Unlimited energy available in the current state of affairs on this planet will lead to an inevitable reshuffling of the "balance of power". This could become an all-out war to prevent "the other" from having the advantage of unlimited wealth and power. Everybody will want it, and at the same time will want to prevent everyone else from getting it.

So, national governments are the second force operating to postpone the public availability of free energy technology. Their motivation is "self-preservation". This self-preservation operates on three levels: first, by not giving undue advantage to an external enemy; second, by preventing individualised action (anarchy) capable of effectively challenging official police powers within the country; and third, by preserving income streams derived from taxing energy sources currently in use.

Their weapons include preventing the issuance of patents on national security grounds, and the legal and illegal harassment of inventors with criminal charges, tax audits, threats, phone taps, arrest, arson, theft of property during shipment, and a host of other intimidations which make the business of building and marketing a free energy machine impossible.

3. Delusion and Dishonesty in the FE MovementThe third force operating to postpone the public availability of free energy technology consists of the group of deluded inventors and outright charlatans and con men. On the periphery of the extraordinary scientific breakthroughs that constitute the real free energy technologies lies a shadow world of unexplained anomalies, marginal inventions and unscrupulous promoters. The first two forces have constantly used the media to promote the worst examples of this group, to distract the public's attention and to discredit the real breakthroughs by associating them with the obvious frauds.

Over the last 100 years, dozens of stories have surfaced about unusual inventions. Some of these ideas have so captivated the public's imagination that a mythology about these systems continues to this day. Names like Keely, Hubbard, Coler and Hendershot immediately come to mind. There may be real technologies behind these names, but there simply isn't enough technical data available in the public domain to make a

determination. These names remain associated with a free energy mythology, however, and are cited by debunkers as examples of fraud. But the idea of free energy taps very deeply into the human subconscious mind.

However, a few inventors with marginal technologies that demonstrate useful anomalies have mistakenly exaggerated the importance of their invention. Some of these inventors also have mistakenly exaggerated the importance of themselves for having invented it. A combination of "gold fever" and/or a "Messiah complex" appears, wholly distorting any future contribution they may make. While the research thread they are following may hold great promise, they begin to trade enthusiasm for facts, and the value of the scientific work from that point on suffers greatly. There is a powerful yet subtle seduction that can warp a personality if they believe that "the world rests on their shoulders" or that they are the world's "saviour".

Strange things also happen to people when they think they are about to become extremely rich. It takes a tremendous spiritual discipline to remain objective and humble in the presence of a working free energy machine. Many inventors' psyches become unstable by the inventors' just believing they have a free energy machine. As the quality of the science deteriorates, some inventors also develop a "persecution complex" that makes them very defensive and unapproachable. This process precludes them from ever really developing a free energy machine, and fuels the fraud mythologies tremendously.

Then there are the outright con men. In the last 15 years, there is one person in the USA who has raised the free energy con to a professional art. He has raised more than US$100,000,000, has been barred from doing business in the state of Washington, has been jailed in California, and he's still at it. He always talks about a variation of one of the real free energy systems, sells people on the idea that they will get one of these systems soon, but ultimately sells them only promotional information that gives no real data about the energy system itself. He has mercilessly preyed upon the Christian and Patriot communities in the USA and is still going strong.

This person's current scam involves signing up hundreds of thousands of people for locations where he will install a free energy machine. In exchange for letting him put the FE generator in their home, they will get free electricity for life and his company will sell the excess energy back to the local utility company. After becoming convinced that they will receive free electricity for life, with no out-front expenses, they gladly buy a video--which helps draw their friends into the scam as well. Once you understand the power and motivations of the first two forces I have discussed, it is obvious that this person's current "business plan" cannot be implemented. This one person has probably done more harm to the free energy movement in the USA than any other force, by destroying people's trust in the technology.

So, the third force postponing the public availability of free energy technology is delusion and dishonesty within the movement itself. The motivations are self-aggrandisement, greed, want of power over others and a false sense of self-importance. The weapons used are lying, cheating, the "bait and switch" con, self-delusion and arrogance, combined with lousy science.

4. A Non-Demanding PublicThe fourth force operating to postpone the public availability of free energy technology is all of the rest of us. It may be easy to see how narrow and

despicable the motivations of the other forces are, but actually these motivations are still very much alive in each of us as well.

Like the wealthiest families, don't we each secretly harbour illusions of false superiority and the want to control others instead of ourselves? Also, wouldn't we "sell out" if the price were high enough--say, take $1 million dollars in cash, today? Or, like the governments, don't we each want to ensure our own survival? If caught in the middle of a full, burning theatre, do we panic and push all the weaker people out of the way in a mad scramble for the door? Or, like the deluded inventor, don't we trade a comfortable illusion once in a while for an uncomfortable fact? And don't we like to think more of ourselves than others give us credit for? Or don't we still fear the unknown, even if it promises a great reward?

You see, really, all four forces are just different aspects of the same process, operating at different levels in the society. There is really only one force preventing the public availability of free energy technology, and that is the unspiritually motivated behaviour of the human animal. In the last analysis, free energy technology is an outward manifestation of Divine Abundance. It is the engine of the economy of an enlightened society--where people voluntarily behave in a respectful and civil manner towards each other; where each member of the society has everything they need and does not covet what their neighbour has; where war and physical violence are socially unacceptable behaviours; and where people's differences are at least tolerated, if not enjoyed.

The appearance of free energy technology in the public domain is the dawning of a truly civilised age. It is an epochal event in human history. Nobody can "take credit" for it. Nobody can "get rich" on it. Nobody can "rule the world" with it. It is, simply, a gift from God. It forces us all to take responsibility for our own actions and for our own self-disciplined self-restraint when needed. The world as it is currently ordered cannot have free energy technology without being totally transformed by it into something else. This "civilisation" has reached the pinnacle of its development because it has birthed the seeds of its own transformation. The unspiritualised human animals cannot be trusted with free energy. They will only do what they have always done, which is take merciless advantage of each other or kill each other and themselves in the process.

If you go back and read Ayn Rand's Atlas Shrugged (1957) or the Club of Rome's report, The Limits To Growth (1972), it becomes obvious that the wealthiest families have understood this for decades. Their plan is to live in "the world of free energy" but permanently freeze the rest of us out. But this is not new. Royalty has usually always considered the general population (us) to be their subjects. What is new is that you and I can now communicate with each other better than at any time in the past. The Internet offers us, the fourth force, an opportunity to overcome the combined efforts of the other forces that are preventing the spread of free energy technology.

THE OPPORTUNITY FOR A JUST SOCIETY

What is starting to happen is that inventors are publishing their work instead of patenting it and keeping it secret. More and more, people are "giving away" information on these technologies in books, videos and websites. While there is still a great deal of useless information about free energy on the Internet, the availability of good information is rising rapidly. Check out the list of websites and other resources at the end of this article.

It is imperative that you begin to gather all the information you can on real free energy

systems. The reason for this is simple. The first two forces will never allow an inventor or a company to build and sell a free energy machine to you! The only way you will ever get one is if you build it yourself (or get a friend to build it). This is exactly what thousands of people are already quietly starting to do. You may feel wholly inadequate to the task, but start gathering information now. You may be just a link in the chain of events for the benefit of others. Focus on what you can do now, not on how much is still to be done. Small private research groups are working out the details as you read this. Many are committed to publishing their results on the Internet.

All of us constitute the fourth force. If we stand up and refuse to remain ignorant and actionless, we can change the course of history. It is the aggregate of our combined action that can make a difference. Only the mass action that represents our consensus can create the world we want. The other three forces will not help us put a fuelless power plant in our basement. They will not help us be free from their manipulations. Nevertheless, free energy technology is here. It is real, and it will change everything about the way we live, work and relate to each other. In the last analysis, free energy technology makes greed and the fear for survival obsolete. But like all exercises of spiritual faith, we must first manifest the generosity and trust in our own lives.

The source of free energy is inside of us. It is that excitement of expressing ourselves freely. It is our spiritually guided intuition expressing itself without distraction, intimidation or manipulation. It is our open-heartedness. Ideally, the free energy technologies underpin a just society where everyone has enough food, clothing, shelter, self-worth and the leisure time to contemplate the higher spiritual meanings of life. Do we not owe it to each other to face down our fears and take action to create this future for our children's children? Perhaps I am not the only one waiting to act on a greater Truth.

Free energy technology is here. It has been here for decades. Communications technology and the Internet have torn the veil of secrecy off this remarkable fact. People all over the world are starting to build free energy devices for their own use. The bankers and the governments do not want this to happen but cannot stop it. Tremendous economic instabilities and wars will be used in the near future to distract people from joining the free energy movement. There will essentially be no major media coverage of this aspect of what is going on. It will simply be reported as wars and civil wars erupting everywhere, leading to UN "peacekeeper" occupation in more and more countries. Western society is spiralling down towards self-destruction due to the accumulated effects of long-term greed and corruption. The general availability of free energy technology cannot stop this trend. It can only reinforce it. However, if you have a free energy device, you may be better positioned to survive the political/social/economic transition that is underway. No national government will survive this process. The question is, who will ultimately control the emerging World Government: the first force or the fourth force?

The last Great War is almost upon us. The seeds are planted. After this will come the beginning of a real civilisation. Some of us who refuse to fight will survive to see the dawn of the world of free energy. I challenge you to be among the ones who try.

About the Author:Peter Lindemann, DSc, became interested in Free Energy in 1973 when he was introduced to the work of Edwin Gray. By 1981 he had developed his own

free energy systems based on variable reluctance generators and pulsed motor designs. During the 1980s he worked off and on with both Bruce DePalma and Eric Dollard. In 1988 he joined the board of Borderland Sciences Research Foundation and served until 1999. During this period he authored more than 20 articles for The Journal of Borderland Research.

Dr Lindemann is a leading authority on the practical applications of aether technology and cold electricity. Currently he is a Research Associate of Dr Robert Adams in New Zealand, as well as a close collaborator with Trevor James Constable in the USA. He is also Director of Research for Clear Tech, Inc. in the USA.

Dr Lindemann's book, The Free Energy Secrets of Cold Electricity, is reviewed in this issue; the companion video was reviewed last issue (8/03). Both are available from Clear Tech, Inc., www.free-energy.cc, and Adventures Unlimited, www.adventuresunlimitedpress.com, in the USA.

Resources: Books€ Adams, Robert, DSc, Applied Modern 20th Century Aether Science, Aethmogen Technologies, Whakatane, New Zealand, special update 2001, 2nd edition.€ Aspden, Harold, Dr, Modern Aether Science, Sabberton, UK, 1972.€ Coats, Callum, Living Energies, Gateway Books, UK, 1996.€ Lindemann, Peter, DSc, The Free Energy Secrets of Cold Electricity, Clear Tech, Inc., USA, 2001.€ Manning, Jeane, The Coming Energy Revolution: The Search for Free Energy, Avery Publishing Group, USA, 1996.€ Rand, Ayn, Atlas Shrugged, Random House, 1957.€ Vassilatos, Gerry, Secrets of Cold War Technology: Project HAARP and Beyond, Adventures Unlimited Press, USA, 1999.

Resources: Websites€ http://energy21.terrashare.com/Developed by Geoff Egel in Australia. Best site on the Net!

€ www.free-energy.cc/Developed by Clear Tech, Inc. and Dr Peter Lindemann.

€ http://jnaudin.free.fr/Developed by JLN Labs in France.

€ www.1dove.com/fe/index.htmlJim's Free Energy Page in the USA.

€ www.keelynet.com/Developed by Jerry Decker in the USA.

€ www.xogen.comSite for super electrolysis technology.

€ www.rumormillnews.comExcellent site for all kinds of alternative news, with many links.

Resources: PatentsMost of these patents can be viewed at www.delphion.com/. This is a sample of inventions that produce free energy:€ Tesla: USP #685,957 (1901)€ Freedman: USP #2,796,345 (1957)€ Richardson: USP #4,077,001 (1978)€ Frenette: USP #4,143,639 (1979)€ Perkins: USP #4,424,797 (1984)€ Gray: USP #4,595,975 (1986)€ Meyer: USP #4,936,961 (1990)€ Chambers (Xogen): USP #6,126,794 (1998).

Reproduced From NEXUS MAGAZINE
www.nexusmagazine.com

Return to top of page

The Following Links Are To Related Articles On This Web Site:

Go to: Aliens, Abductions And UFO's Page
Go to: The Alien Question Page
Go to: Interview with Zecharia Sitchin
THE TRUTH IS OUT THERE!
The Dark Side Gardner, Satanism, Royalty and the Annunaki
Hyperborea And The Quest For Mystical Enlightenment
The Dark Gods
Brain Zapping - Electronic Mind Control - Deals also with Aliens Part I and II
History Of The Golden Ages
Uncovering The Secret Tradition
Agartha and the Lord of the World
A Prophecy from the Inner Earth?
The Influence Of Vedic Philosophy On Nicola Tesla
Radiant Energy - Unraveling Tesla's Greatest Secret
Vedic Science:The Manifestation Of Kali In The Universe
Unmasking the Grand Deception
The Cosmic Battle
The Cosmic Grand Deception/Theosophical Classic About Atlantis
The Cult Of The Serpent
Stanzas Of Dzayan/Theosophical Classic
The Story Of Hans Hoerbiger's Cosmic Ice Theory
UFO's And The Occult Third Reich

 Copyright © 1999 - 2007 All rights reserved. [Gnostic Liberation Front]. www.gnosticliberationfront.com

==========

INFORMATION FOR BUILDING CAPACITORS:

Material	Dielectric strength "K"	Puncture Voltage per Mil (0.001 inch)	Comments
Miscellaneous			
Vacuum	1.0		
Paper, bond	3.0	200	
Paper, Royal Grey	3.0	200	
Paper, telephone, treated	2.5 - 4	200 - 250	*
Paper, Parafin Coated	2 -3.5		
Paper, Kraft	2.2		
Oil, Castor	4.67		
Oil, Mineral, Squibb	2.7	200	
Oil, Mineral	2.2		
Oil, Transformer	2.1 - 2.5	75	*
Rubber	3.0		
Rubber, Hard	3.0	160 - 500	*
Rubber, Vulcanized	3.2 - 3.9		1
Fibre	5.0 - 7.5	150 -	

180			
	Fibre, Red	5.0	
	Mica	4.5 - 8.0	3800 - 5600
	Mica, Ruby	5.4	3800 - 5600
	Quartz	3.8 - 5.0	1000
	Quartz (Fused)	4.2	150 - 200 *
	Shellac	2.5 - 4.0	200 - 400
	Spar Varnish	4.8 - 5.5	
	Steatite, low loss	5.8	150 - 315
	Steatites (Magnesium silicate,etc)	5.5 - 7.5	200 - 300
	Cambric (Varnished)	4.0	
2			
	Alsimag 196	5.7	
	Gutta Percha	4.0	
3			
	Amber	3.0 - 7.0	
4			
	Resin	2.48 - 2.57	
	Enamel	5.1	450
	Mycalex	7.4	250
	Silicone RTV	3.6	550
	Wood	2.0 - 5.2	
	Wax (Parafin)	2.1 - 2.5	250 - 450 *
	Beeswax	2.9 - 3.0	
	Slate	7.0	
5			
	Barium titanate(25 C)	1200	
	Bariam titanate	6000	
	Titanium dioxide	125	

Cellulose acetate	3.3 – 3.9	250 – 600
Casein, Moulded	6.4	6
Polytetraflourethylene	2.0	A
Aluminum oxide	8.7	
Tantalum pentoxide	22	
Glass		

Glass	4.8 – 10	300
Plate Glass	6.8 – 8.4	
Pyrex Glass	4.8 – 10	335
Window Glass	7.6 – 7.8	200 – 250
Ceramics		

Cordierite ceramics	5.0 – 5.5	100
Magnesium titanate ceramic	12 – 18	150
Porcelain	5.1 – 7.5	40 – 280
Titanium dioxide ceramic	70 – 90	100
Titanium-zirconium dioxide ceramic	40 – 60	150
Plastics		

Bakelite	4.4 – 5.8	300
Bakelite, Mica filled	4.7	325 – 375
Epoxy Circuit Board	5.2	700
Formica	4.6 – 4.9	450 7
Nylon (lowest values of 3 types)	3.2	407
PVC (rigid type)	2.95	725
Plexiglass	2.8	450 – 990
Polyethylene	2.2 – 2.3	450 – 1200
Polycarbonate (Lexan)	2.96	400

Polyethylene Terphthalate (Mylar)	3.0 - 3.1	7500
Polystyrene	2.5 - 2.6	500 - 700
Teflon	2.1	1000 - 2000
Gases		
Air (dry air at 1 atm)	1.0006	30 - 70
Air (20 atm, 19 deg. C)	1.0108	500 *
Carbon dioxide (1 atm, 0 deg. C)	1.000985	36 *
Carbon dioxide (20 atm, 15 deg. C)	1.020	
Hydrogen (1 atm,0 deg.C)	1.000264	26.1 *
Liquids		
Amonia (liquid)	22	
Benzene	2.28	
Carbon tetrachloride	2.24	8
Chlorinated diphenyl	6.5	9
Ethyl Alcohol (O C)	28.4	
Ethyl alchohol (20 deg.C)	25.8	
Methyl alchohol	33.1	
Water (distilled)	80 - 81	

LEGEND:

* = Measured in Kilovolts per centimeter. All others are Volts per mil (.001 inch) unless otherwise stated.

1 = Vulcanized means it has been melted, or heated in some way.

2 = Cambric is a finely woven white linen or cotton fabric.

3 = Gutta Percha is a rubbery substance made from the

latex of tropical
trees and is used in insulation, waterproofing, and dentist use it
in thin sheets sometimes when working on teeth.
4 = Amber is a hard, translucent, yellow, orange, or brownish yellow
fossil resin, used in making ornamental objects like jewelry.
5 = Slate is a fine grained metamorphic rock that splits into thin
smooth faced layers. Black Boards for writting are made of this.
Also used as roofing material in some areas.
6 = Casein is a white, tasteless, oderless milk and cheese protein used
in the manufacture of plastics, glues, paints, and food. The word
'moulded' means it has been shaped by a mold.
7 = Formica is a trademark for any of various high-pressure laminated
plastic sheets of melamine and phenolic materials used for chemical
and heat-resistant surfaces.
8 = Carbon tetrachloride is a very toxic substance. It has also been
shown to cause cancer in lab animals. It is banned in most labs. It
is a liquid that was used as a strong solvent.
9 = Chlorinated diphenyl is a liquid dielectric that is used to
impregnate Kraft paper in small A.C. capacitors. This is a PCB
and may cause cancer, handle carefully.
A = Polytetraflourethylene films retain good properties even at
200 degrees Celsius (200 C).

atm = atmospheres (pressure of air at sea level is 1 atm).
deg.C = degrees Celsius.

Warning - Some liquids and gases listed may be explosive under the right conditions. Many solids can catch fire and burn. Use CAUTION and GOOD COMMON SENSE.

Note: Some books gave very different values for each substance so I have given you the highest and lowest values reported. The values will depend on the purity of the substance your using. If you know your substance is very pure then use the higher value reported. If you know your substance is contaminated or of poor quality then use the lower values reported. If you have unknown purity then use the average of the values given.

==========

EXPLAINATION OF EQUATIONS:

Here are some real handy equations. They are very simple and easy to use.

x = Multiply by

/ = divide by (may also use line seperating terms above and below line as in standard mathematics).

( ) = Terms in parentheses should be calculated first as in standard algebraic equations.

pi = 3.141592654. The circumferance of a circle divided by it's diameter will always give you this constant.

Z = means the term "Z" multiplied by itself one time,"Z x Z".

Note: In some cases I do not use the symbol "x" but instead simply
put the terms close together, example: "LC" instead of "L x C".
This is standard for algebraic equations and means "multiply by".

==========

MATH FOR TESLA COILS

1. Determine your neon sign transformer (or other transformer's)
Impedence:

$$Z = \frac{E}{I}$$

Z = Impedence
E = volts
I = current in Amps
Note: divide milliamps by 1000 to get Amps. 30 milliamps = .030 Amps.

The Impedence of the primary capacitor should match the Impedence of the
transformer at 60 Hz (60 Hz is the AC cycle rate of common household
wall sockets, at least in America).

2. To match Impedence and determine capacitor value:

$$C = \frac{1}{2 \times \pi \times Z \times .00006}$$

C = capacitance in microfarads needed for primary capacitor.

Z = Impedence from equation one (Transformer Impedence)

pi = 3.141592654

Note: The .00006 is the 60 Hz AC, if you live outside the US then substitute your cycle rate.

Next you need to find the Reactance of the primary capacitor at the frequency you have choosen. Many times the frequency is decided by the length of wire used on the secondary coil. See below for equations that determine frequency by length of wire used on secondary. When we find the Reactance , we can then find your needed Inductance for the Primary coil.

3. To determine Reactance of capacitor:

$$X(C) = \frac{1}{2 \times pi \times C \times F}$$

X(C) = capacitor Reactance

C = Capacitor value in microfarads, from equation 2)

F = Frequency in Mhz (megahertz)

pi = 3.141592654

Note: To convert kilohertz to megahertz simply divide by 1000.

190 Khz = .190 Mhz

4. To determine the Inductance needed for Primary coil:

Set X(L) = X(C)

$$L = \frac{X(L)}{2 \times pi \times F}$$

L = Inductance in microhenries needed for Primary Coil.
To get millihenries divide the answer by 1000.
X(L) = Reactance from equation 3, same as X(C).
F = frequency in Megahertz. Divide Khz by 1000 to get Mhz.
pi = 3.141592654

Now you know the values for your capacitor and primary coil. These values will give you the best ringing for your circuit (ie. more bang for your buck)! Use the equations below to finnish the project.

Note: Many people don't go to the trouble to work these equations out. They simply slap the parts together and then try to tune. If you work the equations out first you will save lots of time in tuning, you will at least be in the right ball park! Also, just because you worked it out on paper that doesn't mean it will work the first time you plug it in. Trial and error is a large part of the Tesla Coil hobby!

==========

CAPACITORS IN PARALLEL:

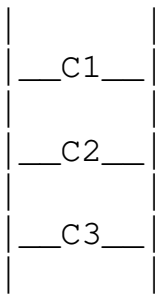

Capacitance = C1 + C2 + C3, etc...

Maximum voltage rating will be equal to the voltage rating of the
lowest voltage capacitor of the group.

==========

CAPACITORS IN SERIES:

$$\text{Capacitance} = 1 \Big/ \frac{1}{C1} + \frac{1}{C2} + \frac{1}{C3}, \text{ etc...}$$

The total capacitance of several capacitors in series will always be
LESS than that of the smallest capacitor.

Total voltage rating increases with number of capacitors in series.
Simply add the voltage ratings together.
When capacitors are placed in series to increase voltage rating they
should have the same capacitance and voltage rating else voltages will
divide unevenly, most likely causing failure.

==========

EQUATION 1: PLATE TYPE CAPACITORS

Capacitance (in picofarads) = (0.224 KA / d) (N-1)

$$C = \frac{0.224 \times \text{Dielectric Strength} \times \text{Area of plate}}{\text{distance between plates in inches}} \times (\text{Number of plates} - 1)$$

Note: to convert picofarads to microfarads divide by 1000000.

==========

EQUATION 2: LEYDEN JAR or SALT WATER TYPE CAPACITORS (jar/bottle type)

$$C = \frac{.0884\ k\ (\ pi\ \ r^2\ + 2\ \ pi\ \ r\ \ l\ )}{1{,}000{,}000\ t}$$

C = Capacitance in microfarads
k = dielectric strength
r = jar radius in centimeters
l = height of the jar portion used (in centimeters)
t = thickness of the jar wall in centimeters
pi = 3.141592654

$r^2 = r \times r$ (radius squared)

==========

EQUATION 3: FREQUENCY OF A CIRCUIT

$$f = \frac{1}{2\ pi\ \sqrt{L\ C}}$$

f = frequency in cycles per second
L = circuit inductance in henries
C = circuit capacitance in farads

pi = 3.141592654

The symbol " $\sqrt{}$ " means the square root
For a result "f" in Khz: enter "C" in microfarads, "L" in microhenries
and multiply result by 1000.

==========

EQUATION 4: INDUCTANCE OF A FLAT PANCAKE COIL

Picture a 1 inch flat ribbon that is about 30 feet long. Now, roll
that ribbon into a spiral that has all its sides about 1/2 inch apart.
Most common material is Aluminum Roof Flashing. Use plastic bolts to
hold sections of strips together if you have short pieces of ribbon.
This makes a good mechanical connection (you can't solder aluminum).

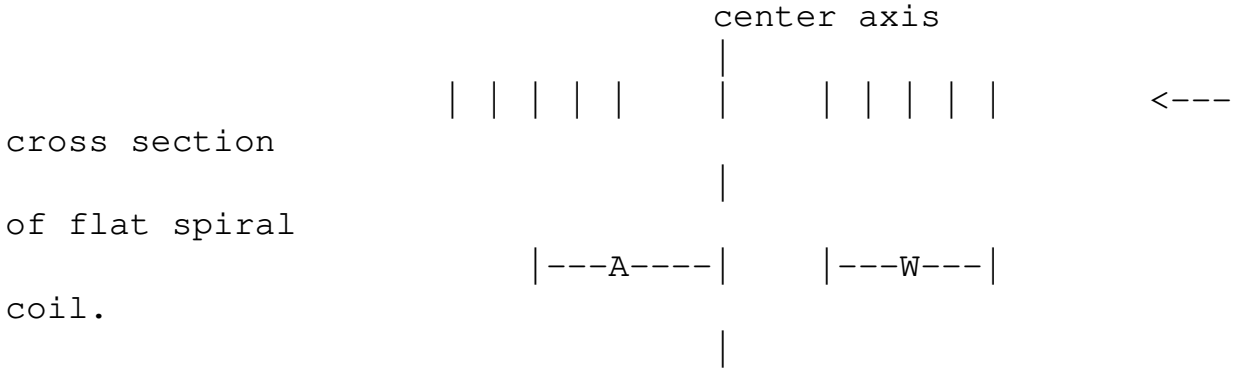

$$L = \frac{a^2 x n^2}{8a + 11w}$$

L = inductance in microhenries.

a = average radius in inches as measured from the central axis to
the middle of the winding.
n = number of turns in the winding.
w = width of the coil in inches.
Note: Make sure you measure "a" from center axis - the very middle
of your secondary sitting inside of your primary.

==========

EQUATION 5: NUMBER OF TURNS FOR A HELICAL PRIMARY

$$N = \sqrt{\frac{L\,[(9 \times R) + (10 \times H)]}{R^2}}$$

N = Number of turns needed.
L = inductance in microhenries desired.
R = radius (inches).
H = height (inches).

The symbol " $\sqrt{}$ " means the square root, in this case of whole
equation.

==========

EQUATION 6: LENGTH OF WIRE NEEDED FOR DESIRED FREQUENCY OF COIL

$$L = \frac{300{,}000}{f} \sqrt{4 \times (3 / .9144)}$$

f = frequency, in Khz, that is desired for coil.
L = length of wire needed, in feet, for desired frequency.
/ = divided by.

Note - 300,000 is the speed of light in Kilometers per second. the term "3/.9144" is a conversion factor to turn meters to feet.
You don't have to understand this. Just thought I would tell those who were wondering.

==========

EQUATION 7: FRQUENCY OF COIL

$$f = \frac{300{,}000}{T \times W \times \pi \times (.9144 / 36) \times 4}$$

f = frequency of coil in Khz
T = number of turns on coil
W = width of the coil in inches
pi = 3.141592654

==========

EQUATION 8: CAPACITANCE OF A SPHERE IN SPACE

$$C = \frac{R}{9 \times 10^{9}}$$

C = capacitance in Farads
R = radius in meters

$9 \times 10^9 = 9{,}000{,}000{,}000$

10^6

Note: To convert Farads to microfarads simply multiply by 10^6 or in other words by 1,000,000.

EQUATION 9: CAPACITANCE OF A SPHERE SUSPENDED IN A DIELECTRIC

$$C = \frac{K \times R}{9 \times 10^9}$$

C = capacitance in Farads
R = radius in meters
K = dielectric constant

10^6

Note: To convert Farads to microfarads simply multiply by 10^6 or in other words by 1,000,000.

EQUATION 10: CAPACITANCE OF A TOROID

$$C = (1 + (0.2781 - d2/d1)) \times 2.8 \times \sqrt{2\pi (d1-d2)(d2/2)}$$

\/ 4 pi

C = capacitance in picofarads (+- 5%)
d1 = outside diameter of toroid in inches
d2 = diameter of cross section (cord) of toroid in inches

Equation courtesy of Bert Pool

==========

TESLA COIL SCHEMATIC

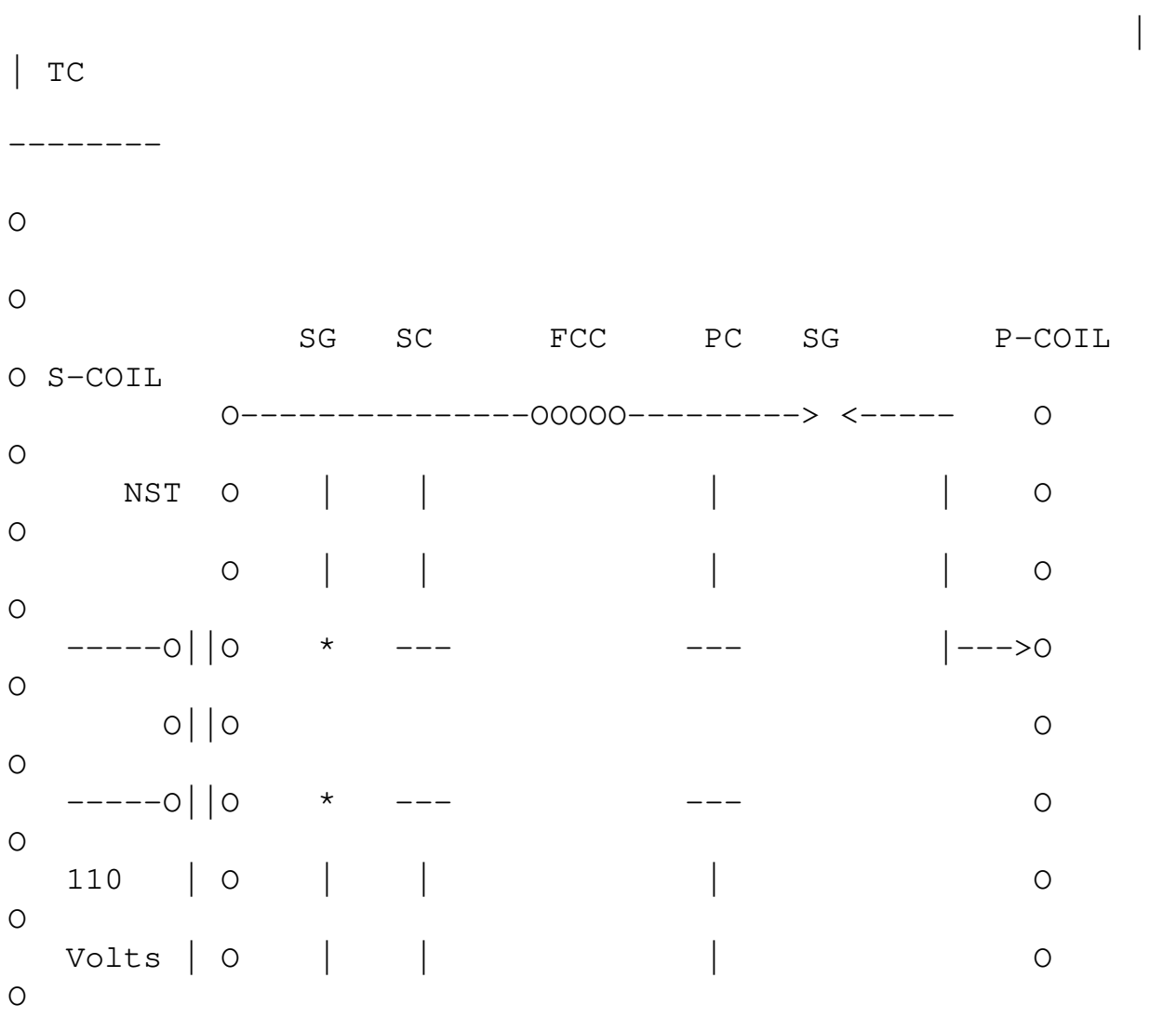

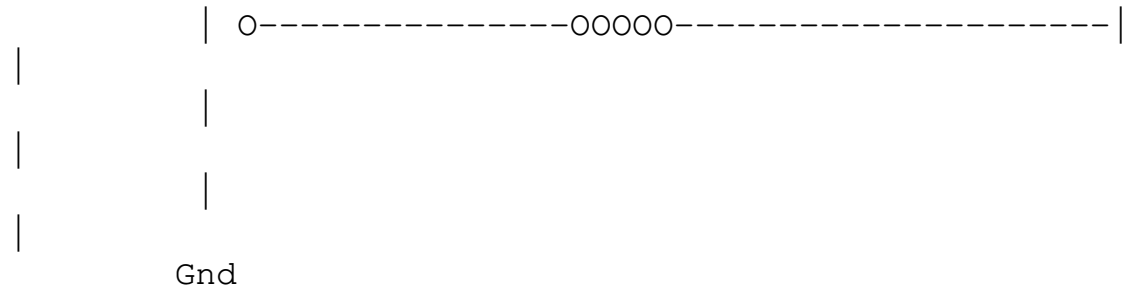

NST = Neon Sign Transformer, 110 volts primary, 15,000 volt secondary at 30-60 miliamps.
SG = Safty Gap. A spark gap to insure your transformer doesn't get fried.
SC = Safty Capacitor. 300-500 picofarad rated at 50 KV.
FCC = Ferrite Core Choke. This prevents real high voltages from coming back towards your transformer. It also seperates the capacitors.
PC = Primary Capacitor. Normally .01-.02 microfarads rated 50 KV.
SG = Spark Gap.
P-COIL = Primary Coil.
S-Coil = Secondary Coil.
TC = Terminal Capacitor. The big ball or coffee can on top.
Gnd = Ground.

Note: This is one of several possible schematics. It's just the one I happen to use.

==========

Bibliography:

Books:

Theory and Applications of Electricity and Magnetism,

Charles A.
Culver, 1947, McGraw Hill Book Company, Inc.

Concept In Physics, Third edition, Frankln Miller Jr., Thomas J.
Dillon, Malcom K. Smith, 1980, Harcourt Brace Jovanovich, Inc.

Tesla Coil Secrets, R.A. Ford, 1985, Lindsay Publications Inc.

Tesla Coil, George Trinkaus, 1989, High voltage Press @Lindsay
Publications.

High frequency Apparatus, Thomas Stanley Curtis, 1916, Lindsay
Publications.

Allied Electronics Data Handbook, 1970

Tesla Coil Design Manual, J.H. Couture, 1992

Radio Amateur's Handbook, 1972

Elements of Physics, 1964

Articles:

Popular Electronics, Make Your Own High Voltage Capacitors,
Anthony charlton.

==========

WARNING:

Only people who are experienced with High Voltage devices should
attempt to build Tesla Coils. They can be very deadly if

you don't
know what your doing. Remember, if they find you on the floor
turning blue and frothing at the mouth - THERE IS NO SECOND CHANCE!

A FEW Safety Tips:

1. Don't ever touch the machine when it is pluged in.
2. Use a safe methode to short out the primary capacitor after the
machine has been run.
3. Don't ever get close to a running Tesla coil, the Primary can
shoot hot white arcs at you that will kill you instantly!
4. Always have a small fire extinguisher close by.
5. Always use kickback preventer circuits so you don't send
15,000 volts back through the wall!
6. Pets, children, and irresponsible adults should be kept away from
your machine intirely!!!
7. Read many books on Tesla Coils and other High Voltage devices
and learn as much as you can about High Voltage Safety!

==========

Special thanks to Mr. Pool who caught some glaring errors in the second
draft and who contributed with an equation of his own.

I wrote this file because I felt there was a need for some real
information for those of us who actually build Tesla Coils, as opposed
to those who just talk of building them (Grin). I will be adding to this

file from time to time, so watch for updates. I hope it helps you out!

P.S. Let us not forget the words of Tesla, "Let the future tell the
truth and evaluate each one according to his work and accomplishments.
The present is theirs, the future, for which I really worked, is mine".

========== END OF FILE ==========

THE STRANGE LIFE OF NIKOLA TESLA.

The Strange Life of Nikola Tesla

Editors Note, August 28, 1995

This text has been entered by John R.H. Penner from a small booklet found in a
used bookstore for $2.50. The only form of date identification is the name of the
original purchaser, Arthua Daine (?), dated April 29, 1978. The book appears to be considerably older, made with typewriters, and then
photocopied and stapled. The only other significant features of the booklet is that it
contains four photocopied photographs of Tesla, and was originally forty pages
long. I must apologise for the qualitty of the scans, but the originals were of very
poor quality, and this is the best that could be obtained after touching-up in
Photoshop.

The book has no Copyright identification, nor any means of contacting the
publishers. As far as I am aware, this autobiography is no longer available in printed
form anywhere.

In the interest of making this important text available to the wider public, I have retyped the entire text word-for-word as it originally appears into this electronic format. The only words which appear in this file, that are not in the original book are this Editors Note, and the Introduction. I have exactly maintained page numbers as they appear in the original - including the somewhat odd artifact of Chapter 1 starting on page two.

If anyone knows how to reach the original publisher, please contact me at the below address, so proper credit may be given where it is due.

John Roland Hans Penner
464 Scott Street
St. Catharines, Ontario
L2M 3W7, Canada
Phone: 905.646.3551
eMail: J.Penner@GEnie.GEIS.com

This file may be freely redistributed as long as it's content is not modified in any way. It may not be sold or published for profit unless specifically authorised prior to publication by the express permission of Kolmogorov- Smirnov Publishing, or John R.H. Penner. Unless otherwise notified, this work is Copyright ©1995 by John R.H. Penner.

Introduction

Nikola Tesla was born in Croatia (then part of Austria-Hungary) on July 9, 1856, and died January 7, 1943. He was the electrical engineer who invented the AC (alternating current) induction motor, which made the

universal transmission and
distribution of electricity possible. Tesla began his studies in physics and
mathematics at Graz Polytechnic, and then took philosophy at the University of
Prague. He worked as an electrical engineer in Budapest, Hungary, and
subsequently in France and Germany. In 1888 his discovery that a magnetic field
could be made to rotate if two coils at right angles are supplied with AC current
90° out of phase made possible the invention of the AC induction motor. The major
advantage of this motor being its brushless operation, which many at the time
believed impossible.
Tesla moved to the United States in 1884, where he worked for Thomas Edison
who quickly became a rival – Edison being an advocate of the inferior DC power
transmission system. During this time, Tesla was commissioned with the design of
the AC generators installed at Niagara Falls. George Westinghouse purchased the
patents to his induction motor, and made it the basis of the Westinghouse power
system which still underlies the modern electrical power industry today.
He also did notable research on high-voltage electricity and wireless
communication; at one point creating an earthquake which shook the ground for
several miles around his New York laboratory. He also devised a system which
anticipated world-wide wireless communications, fax machines, radar, radio-guided
missiles and aircraft.

iii.The Strange Life of Nikola Tesla iv
NIKOLA TESLA IS THE TRUE UNSUNG
PROPHET OF THE ELECTRIC AGE!;

without whom our radio, auto ignition,
telephone, alternating current power
generation and transmission, radio and
television would all have been impossible.
Yet his life and times have vanished largely
from public access.
This AUTOBIOGRAPHY is released to remedy this
situation, and to fill this “BLACK HOLE”
in information space.
©Kolmogorov- Smirnov Publishing..The Strange Life of Nikla Tesla v.The Strange Life of Nikola Tesla vi
October 13, 1933.The Strange Life of Nikla Tesla 1.The Strange Life of Nikola Tesla
Chapter 1
My Early Life
By Nikola Tesla
The progressive development of man is vitally dependent on invention. It is the
most important product of his creative brain. Its ultimate purpose is the complete
mastery of mind over the material world, the harnessing of the forces of nature to
human needs. This is the difficult task of the inventor who is often misunderstood
and unrewarded. But he finds ample compensation in the pleasing exercises of his
powers and in the knowledge of being one of that exceptionally privileged class
without whom the race would have long ago perished in the bitter struggle against
pitiless elements. Speaking for myself, I have already had more than my full
measure of this exquisite enjoyment; so much, that for many years my life was little
short of continuous rapture. I am credited with being one of the hardest workers and
perhaps I am, if thought is the equivalent of labour, for I have devoted to it almost
all of my waking hours. But if work is interpreted to be a definite performance in a
specified time according to a rigid rule, then I may be the

worst of idlers.
Every effort under compulsion demands a sacrifice of life-energy. I never paid such a price. On the contrary, I have thrived on my thoughts. In attempting to give a connected and faithful account of my activities in this story of my life, I must dwell, however reluctantly, on the impressions of my youth and the circumstances and events which have been instrumental in determining my career. Our first endeavours are purely instinctive promptings of an imagination vivid and undisciplined. As we grow older reason asserts itself and we become more and more systematic and designing. But those early impulses, though not immediately productive, are of the greatest moment and may shape our very destinies. Indeed, I feel now that had I understood and cultivated instead of suppressing them, I would have added substantial value to my bequest to the world. But not until I had attained manhood did I realise that I was an inventor.
This was due to a number of causes. In the first place I had a brother who was gifted to an extraordinary degree; one of those rare phenomena of mentality which biological investigation has failed to explain. His premature death left my earth parents disconsolate. (I will explain my remark about my “earth parents” later.) We owned a horse which had been presented to us by a dear friend. It was a magnificent animal of Arabian breed, possessed of almost human intelligence, and was cared for and petted by the whole family, having on one occasion saved my dear father’s life under remarkable circumstances.
My father had been called one winter night to perform an urgent duty and while

crossing the mountains, infested by wolves, the horse became frightened and ran
away, throwing him violently to the ground. It arrived home bleeding and
exhausted, but after the alarm was sounded, immediately dashed off again, returning
to the spot, and before the searching party were far on the way they were met by my
father, who had recovered consciousness and remounted, not realising that he had
been lying in the snow for several hours. This horse was responsible for my
brother’s injuries from which he died. I witnessed the tragic scene and although so
many years have elapsed since, my visual impression of it has lost none of its force.
The recollection of his attainments made every effort of mine seem dull in
comparison. Anything I did that was creditable merely caused my parents to feel
their loss more keenly. So I grew up with little confidence in myself.
2.The Strange Life of Nikla Tesla
But I was far from being considered a stupid boy, if I am to judge from an incident
of which I have still a strong remembrance. One day the Aldermen were passing
through a street where I was playing with other boys. The oldest of these venerable
gentlemen, a wealthy citizen, paused to give a silver piece to each of us. Coming to
me, he suddenly stopped and commanded, “Look in my eyes.” I met his gaze, my
hand outstretched to receive the much valued coin, when to my dismay, he said,
“No, not much; you can get nothing from me. You are too smart.”
They used to tell a funny story about me. I had two old aunts with wrinkled faces,
one of them having two teeth protruding like the tusks of an elephant, which she

buried in my cheek every time she kissed me. Nothing would scare me more then
the prospects of being by these affectionate, unattractive relatives. It happened that
while being carried in my mother's arms, they asked who was the prettier of the
two. After examining their faces intently, I answered thoughtfully, pointing to one
of them, "This here is not as ugly as the other."
Then again, I was intended from my very birth, for the clerical profession and this
thought constantly oppressed me. I longed to be an engineer, but my father was
inflexible. He was the son of an officer who served in the army of the Great
Napoleon and in common with his brother, professor of mathematics in a prominent
institution, had received a military education; but, singularly enough, later
embraced the clergy in which vocation he achieved eminence. He was a very
erudite man, a veritable natural philosopher, poet and writer and his sermons were
said to be as eloquent as those of Abraham a-Sancta-Clara. He had a prodigious
memory and frequently recited at length from works in several languages. He often
remarked playfully that if some of the classics were lost he could restore them. His
style of writing was much admired. He penned sentences short and terse and full of
wit and satire. The humorous remarks he made were always peculiar and
characteristic. Just to illustrate, I may mention one or two instances.
Among the help, there was a cross-eyed man called Mane, employed to do work
around the farm. He was chopping wood one day. As he swung the axe, my father,
who stood nearby and felt very uncomfortable, cautioned him, "For God's sake,

Mane, do not strike at what you are looking but at what you intend to hit.”
On another occasion he was taking out for a drive, a friend who carelessly permitted
his costly fur coat to rub on the carriage wheel. My father reminded him of it
saying, “Pull in your coat; you are ruining my tire.”
He had the odd habit of talking to himself and would often carry on an animated
conversation and indulge in heated argument, changing the tone of his voice. A
casual listener might have sworn that several people were in the room.
Although I must trace to my mother’s influence whatever inventiveness I possess,
the training he gave me must have been helpful. It comprised all sorts of exercises –as,
guessing one another’s thoughts, discovering the defects of some form of
expression, repeating long sentences or performing mental calculations. These daily
lessons were intended to strengthen memory and reason, and especially to develop
the critical sense, and were undoubtedly very beneficial.
My mother descended from one of the oldest families in the country and a line of
inventors. Both her father and grandfather originated numerous implements for
household, agricultural and other uses. She was a truly great woman,

of rare skill, courage and fortitude, who had braved the storms of life and passed
through many a trying experience. When she was sixteen, a virulent pestilence
swept the country. Her father was called away to administer the last sacraments to
the dying and during his absence she went alone to the assistance of a neighbouring
family who were stricken by the dread disease. She bathed, clothed and laid out the

bodies, decorating them with flowers according to the custom of the country and
when her father returned he found everything ready for a Christian burial.
My mother was an inventor of the first order and would, I believe, have achieved
great things had she not been so remote from modern life and its multifold
opportunities. She invented and constructed all kinds of tools and devices and wove
the finest designs from thread which was spun by her. She even planted seeds,
raised the plants and separated the fibres herself. She worked indefatigably, from
break of day till late at night, and most of the wearing apparel and furnishings of the
home were the product of her hands. When she was past sixty, her fingers were still
nimble enough to tie three knots in an eyelash.
There was another and still more important reason for my late awakening. In my
boyhood I suffered from a peculiar affliction due to the appearance of images, often
accompanied by strong flashes of light, which marred the sight of real objects and
interfered with my thoughts and action. They were pictures of things and scenes
which i had really seen, never of those imagined. When a word was spoken to me
the image of the object it designated would present itself vividly to my vision and
sometimes I was quite unable to distinguish weather what I saw was tangible or not.
This caused me great discomfort and anxiety. None of the students of psychology or
physiology whom i have consulted, could ever explain satisfactorily these
phenomenon. They seem to have been unique although I was probably predisposed
as I know that my brother experienced a similar trouble. The theory I have

formulated is that the images were the result of a reflex action from the brain on the retina under great excitation. They certainly were not hallucinations such as are produced in diseased and anguished minds, for in other respects i was normal and composed. To give an idea of my distress, suppose that I had witnessed a funeral or some such nerve-wracking spectacle. The, inevitably, in the stillness of night, a vivid picture of the scene would thrust itself before my eyes and persist despite all my efforts to banish it. If my explanation is correct, it should be possible to project on a screen the image of any object one conceives and make it visible. Such an advance would revolutionise all human relations. I am convinced that this wonder can and will be accomplished in time to come. I may add that I have devoted much thought to the solution of the problem.

I have managed to reflect such a picture, which i have seen in my mind, to the mind of another person, in another room. To free myself of these tormenting appearances, I tried to concentrate my mind on something else I had seen, and in this way I would often obtain temporary relief; but in order to get it I had to conjure continuously new images. It was not long before I found that I had exhausted all of those at my command; my ‘reel’ had run out as it were, because I had seen little of the world — only objects in my home and the immediate surroundings. As I performed these mental operations for the second or third time, in order to chase the appearances from my vision, the remedy gradually lost all its force. Then I instinctively commenced to make excursions beyond the limits of the small world

of which I had knowledge, and I saw new scenes. These were at first very blurred
and indistinct, and would flit away when I tried to concentrate my attention upon
them. They gained in strength

and distinctness and finally assumed the concreteness of real things. I soon
discovered that my best comfort was attained if I simply went on in my vision
further and further, getting new impressions all the time, and so I began to travel; of
course, in my mind. Every night, (and sometimes during the day), when alone, I
would start on my journeys — see new places, cities and countries; live there, meet
people and make friendships and acquaintances and, however unbelievable, it is a
fact that they were just as dear to me as those in actual life, and not a bit less intense
in their manifestations.
This I did constantly until I was about seventeen, when my thoughts turned
seriously to invention. Then I observed to my delight that i could visualise with the
greatest facility. I needed no models, drawings or experiments. I could picture them
all as real in my mind. Thus I have been led unconsciously to evolve what I
consider a new method of materialising inventive concepts and ideas, which is
radially opposite to the purely experimental and is in my opinion ever so much
more expeditious and efficient.
The moment one constructs a device to carry into practice a crude idea, he finds
himself unavoidably engrossed with the details of the apparatus. As he goes on
improving and reconstructing, his force of concentration diminishes and he loses
sight of the great underlying principle. Results may be

obtained, but always at the sacrifice of quality. My method is different. I do not rush into actual work. When I get an idea, I start at once building it up in my imagination. I change the construction, make improvements and operate the device in my mind. It is absolutely immaterial to me whether I run my turbine in thought or test it in my shop. I even note if it is out of balance. There is no difference whatever; the results are the same. In this way I am able to rapidly develop and perfect a conception without touching anything. When I have gone so far as to embody in the invention every possible improvement I can think of and see no fault anywhere, I put into concrete form this final product of my brain. Invariably my device works as I conceived that it should, and the experiment comes out exactly as I planned it. In twenty years there has not been a single exception. Why should it be otherwise?

Engineering, electrical and mechanical, is positive in results. There is scarcely a subject that cannot be examined beforehand, from the available theoretical and practical data. The carrying out into practice of a crude idea as is being generally done, is, I hold, nothing but a waste of energy, money, and time.

My early affliction had however, another compensation. The incessant mental exertion developed my powers of observation and enabled me to discover a truth of great importance. I had noted that the appearance of images was always preceded by actual vision of scenes under peculiar and generally very exceptional conditions, and I was impelled on each occasion to locate the original impulse. After a while

this effort grew to be almost automatic and I gained great facility in connecting
cause and effect. Soon I became aware, to my surprise, that every thought I
conceived was suggested by an external impression. Not only this but all my actions
were prompted in a similar way. In the course of time it became perfectly evident to
me that I was merely an automation endowed with power OF MOVEMENT
RESPONDING TO THE STIMULI OF THE SENSE ORGANS AND THINKING AND ACTING ACCORDINGLY. The practical result of this was the art of
teleautomatics which has been so far carried out only in an imperfect manner. Its
latent possibilities will, however be eventually shown. I have been years planning
self-controlled automata and believe that mechanisms can be produced which will
act as if possessed of reason, to a limited degree, and will create a revolution in
many commercial and industrial departments. I was about twelve years of age when
I first succeeded in banishing an image from my vision by wilful effort, but I never
had any control over the flashes of light to which

I have referred. They were, perhaps, my strangest and [most] inexplicable
experience. They usually occurred when I found myself in a dangerous or
distressing situations or when i was greatly exhilarated. In some instances i have
seen all the air around me filled with tongues of living flame. Their intensity,
instead of diminishing, increased with time and seemingly attained a maximum
when I was about twenty-five years old.
While in Paris in 1883, a prominent French manufacturer sent me an invitation to a
shooting expedition which I accepted. I had been long

confined to the factory and
the fresh air had a wonderfully invigorating effect on me.
On my return to the city
that night, I felt a positive sensation that my brain had
caught fire. I was a light as
though a small sun was located in it and I passed the whole
night applying cold
compressions to my tortured head. Finally the flashes
diminished in frequency and
force but it took more than three weeks before they wholly
subsided. When a
second invitation was extended to me, my answer was an
emphatic NO!
These luminous phenomena still manifest themselves from time
to time, as when a
new idea opening up possibilities strikes me, but they are
no longer exciting, being
of relatively small intensity. When I close my eyes I
invariably observe first, a
background of very dark and uniform blue, not unlike the sky
on a clear but starless
night. In a few seconds this field becomes animated with
innumerable scintillating
flakes of green, arranged in several layers and advancing
towards me. Then there
appears, to the right, a beautiful pattern of two systems of
parallel and closely
spaced lines, at right angles to one another, in all sorts
of colours with yellow,
green, and gold predominating. Immediately thereafter, the
lines grow brighter and
the whole is thickly sprinkled with dots of twinkling light.
This picture moves
slowly across the field of vision and in about ten seconds
vanishes on the left,
leaving behind a ground of rather unpleasant and inert grey
until the second phase is
reached. Every time, before falling asleep, images of
persons or objects flit before
my view. When I see them I know I am about to lose
consciousness. If they are

absent and refuse to come, it means a sleepless night. To what an extent imagination played in my early life, I may illustrate by another odd experience.

Like most children, I was fond of jumping and developed an intense desire to support myself in the air. Occasionally a strong wind richly charged with oxygen blew from the mountains, rendering my body light as cork and then I would leap and float in space for a long time. It was a delightful sensation and my disappointment was keen when later I undeceived myself. During that period I contracted many strange likes, dislikes and habits, some of which I can trace to external impressions while others are unaccountable. I had a violent aversion against the earing of women, but other ornaments, as bracelets, pleased me more or less according to design. The sight of a pearl would almost give me a fit, but I was fascinated with the glitter of crystals or objects with sharp edges and plane surfaces.

I would not touch the hair of other people except, perhaps at the point of a revolver.

I would get a fever by looking at a peach and if a piece of camphor was anywhere in the house it caused me the keenest discomfort. Even now I am not insensible to some of these upsetting impulses. When I drop little squares of paper in a dish filled with liquid, I always sense a peculiar and awful taste in my mouth. I counted the steps in my walks and calculated the cubical contents of soup plates, coffee cups and pieces of food, otherwise my meal was unenjoyable. All repeated acts or operations I performed had to be divisible by three and if I missed I felt impelled to do it all over again, even if it took hours. Up to the age

of eight years, my

character was weak and vacillating. I had neither courage or strength to form a firm
resolve. My feelings came in waves and surges and variated unceasingly between
extremes. My wishes were of consuming force and like the heads of the hydra, they
multiplied. I was oppressed by thoughts of pain in life and death and religious fear.
I was swayed by superstitious belief and lived in constant dread of the spirit of evil,
of ghosts and ogres and other unholy monsters of the dark. Then all at once, there
came a tremendous change which altered the course of my whole existence.
Of all things I liked books best. My father had a large library and whenever I could
manage I tried to satisfy my passion for reading. He did not permit it and would fly
in a rage when he caught me in the act. He hid the candles when he found that I was
reading in secret. He did not want me to spoil my eyes. But I obtained tallow, made
the wicking and cast the sticks into tin forms, and every night I would bush the
keyhole and the cracks and read, often till dawn, when all others slept and my
mother started on her arduous daily task.
On one occasion I came across a novel entitled ‘Aoafi,’ (the son of Aba), a Serbian
translation of a well known Hungarian writer, Josika. This work somehow
awakened my dormant powers of will and I began to practice self-control. At first
my resolutions faded like snow in April, but in a little while I conquered my
weakness and felt a pleasure I never knew before — that of doing as I willed.
In the course of time this vigorous mental exercise became second to nature. At the

outset my wishes had to be subdued but gradually desire and will grew to be identical. After years of such discipline I gained so complete a mastery over myself that I toyed with passions which have meant destruction to some of the strongest men. At a certain age I contracted a mania for gambling which greatly worried my parents. To sit down to a game of cards was for me the quintessence of pleasure.

My father led an exemplary life and could not excuse the senseless waste of my time and money in which I indulged. I had a strong resolve, but my philosophy was bad. I would say to him, 'I can stop whenever I please, but it it worth while to give up that which I would purchase with the joys of paradise?' On frequent occasions he gave vent to his anger and contempt, but my mother was different. She understood the character of men and knew that one's salvation could only be brought about through his own efforts. One afternoon, I remember, when I had lost all my money and was craving for a game, she came to me with a roll of bills and said, 'Go and enjoy yourself. The sooner you lose all we possess, the better it will be. I know that you will get over it.' She was right. I conquered my passion then and there and only regretted that it had not been a hundred times as strong. I not only vanquished but tore it from my heart so as not to leave even a trace of desire.

Ever since that time I have been as indifferent to any form of gambling as to picking teeth. During another period I smoked excessively, threatening to ruin my health. Then my will asserted itself and I not only stopped but destroyed all inclination.

Long ago I suffered from heart trouble until I discovered

that it was due to the
innocent cup of coffee I consumed every morning. I
discontinued at once, though I
confess it was not an easy task. In this way I checked and
bridled other habits and
passions, and have not only preserved my life but derived an
immense amount of
satisfaction from what most men would consider privation and
sacrifice.
After finishing the studies at the Polytechnic Institute and
University, I had a
complete nervous breakdown and while the malady lasted I
observed many
phenomena, strange and unbelievable...
7.The Strange Life of Nikola Tesla
Chapter 2
I shall dwell briefly on these extraordinary experiences, on
account of their possible
interest to students of psychology and physiology and also
because this period of
agony was of the greatest consequence on my mental
development and subsequent
labours. But it is indispensable to first relate the
circumstances and conditions
which preceded them and in which might be found their
partial explanation.
From childhood I was compelled to concentrate attention upon
myself. This caused
me much suffering, but to my present view, it was a blessing
in disguise for it has
taught me to appreciate the inestimable value of
introspection in the preservation of
life, as well as a means of achievement. The pressure of
occupation and the
incessant stream of impressions pouring into our
consciousness through all the
gateways of knowledge make modern existence hazardous in
many ways. Most
persons are so absorbed in the contemplation of the outside
world that they are
wholly oblivious to what is passing on within themselves.

The premature death of millions is primarily traceable to this cause. Even among those who exercise care, it is a common mistake to avoid imaginary, and ignore the real dangers. And what is true of an individual also applies, more or less, to a people as a whole.

Abstinence was not always to my liking, but I find ample reward in the agreeable experiences I am now making. Just in the hope of converting some to my precepts and convictions I will recall one or two.

A short time ago I was returning to my hotel. It was a bitter cold night, the ground slippery, and no taxi to be had. Half a block behind me followed another man, evidently as anxious as myself to get under cover. Suddenly my legs went up in the air. At the same instant there was a flash in my brain. The nerves responded, the muscles contracted. I swung 180 degrees and landed on my hands. I resumed my walk as though nothing had happened when the stranger caught up with me. "How old are you?" he asked, surveying me critically.

"Oh, about fifty-nine," I replied, "What of it?"

"Well," said he, "I have seen a cat do this but never a man." About a month ago I wanted to order new eye glasses and went to an oculist who put me through the usual tests. He looked at me incredulously as I read off with ease the smallest print at considerable distance. But when I told him I was past sixty he gasped in astonishment. Friends of mine often remark that my suits fit me like gloves but they do not know that all my clothing is made to measurements which were taken nearly fifteen years ago and never changed. During this same period my weight has not varied one pound. In this connection I may tell a funny

story.
One evening, in the winter of 1885, Mr. Edison, Edward H. Johnson, the President
of the Edison Illuminating Company, Mr. Batchellor, Manager of the works, and
myself, entered a little place opposite 65 Firth Avenue, where the offices of the
company were located. Someone suggested guessing weights and I was induced to
step on a scale. Edison felt me all over and said: “Tesla weighs 152 lbs. to an
ounce,” and he guessed it exactly. Stripped I weighed 142 pounds, and that is still
my weight. I whispered to Mr. Johnson; “How is it possible that Edison could guess
my weight so closely?”

“Well,” he said, lowering his voice. “I will tell you confidentially, but you must not
say anything. He was employed for a long time in a Chicago slaughter-house where
he weighed thousands of hogs every day. That’s why.”
My friend, the Hon. Chauncey M. Dupew, tells of an Englishman on whom he
sprung one of his original anecdotes and who listened with a puzzled expression,
but a year later, laughed out loud. I will frankly confess it took me longer than that
to appreciate Johnson’s joke. Now, my well-being is simply the result of a careful
and measured mode of living and perhaps the most astonishing thing is that three
times in my youth I was rendered by illness a hopeless physical wreck and given up
by physicians. MORE than this, through ignorance and lightheartedness, I got into
all sorts of difficulties, dangers and scrapes from which I extricated myself as by
enchantment. I was almost drowned, entombed, lost and frozen. I had hair-breadth
escapes from mad dogs, hogs, and other wild animals. I

passed through dreadful
diseases and met with all kinds of odd mishaps and that I am whole and hearty
today seems like a miracle. But as I recall these incidents to my mind I feel
convinced that my preservation was not altogether accidental, but was indeed the
work of divine power. An inventor's endeavour is essentially life saving. Whether
he harnesses forces, improves devices, or provides new comforts and conveniences,
he is adding to the safety of our existence. He is also better qualified than the
average individual to protect himself in peril, for he is observant and resourceful. If
I had no other evidence that I was, in a measure, possessed of such qualities, I
would find it in these personal experiences. The reader will be able to judge for
himself if I mention one or two instances.
On one occasion, when about fourteen years old, I wanted to scare some friends
who were bathing with me. My plan was to dive under a long floating structure and
slip out quietly at the other end. Swimming and diving came to me as naturally as to
a duck and I was confident that I could perform the feat. Accordingly I plunged into
the water and, when out of view, turned around and proceeded rapidly towards the
opposite side. Thinking that I was safely beyond the structure, I rose to the surface
but to my dismay struck a beam. Of course, I quickly dived and forged ahead with
rapid strokes until my breath was beginning to give out. Rising for the second time,
my head came again in contact with a beam. Now I was becoming desperate.
However, summoning all my energy, I made a third frantic attempt but the result
was the same. The torture of suppressed breathing was

getting unendurable, my
brain was reeling and I felt myself sinking. At that moment, when my situation
seemed absolutely hopeless, I experienced one of those flashes of light and the
structure above me appeared before my vision. I either discerned or guessed that
there was a little space between the surface of the water and the boards resting on
the beams and, with consciousness nearly gone, I floated up, pressed my mouth
close to the planks and managed to inhale a little air, unfortunately mingled with a
spray of water which nearly choked me. Several times I repeated this procedure as
in a dream until my heart, which was racing at a terrible rate, quieted down, and I
gained composure. After that I made a number of unsuccessful dives, having
completely lost the sense of direction, but finally succeeded in getting out of the
trap when my friends had already given me up and were fishing for my body. That
bathing season was spoiled for me through recklessness but I soon forgot the lesson
and only two years later I fell into a worse predicament. There was a large flour mill with a dam across the river near the city where I was
studying at the time. As a rule the height of the water was only two or three inches
above the dam and to swim to it was a sport not very dangerous in which I often
indulged. One day I went alone to the river to enjoy

myself as usual. When I was a short distance from the masonry, however, I was
horrified to observe that the water had risen and was carrying me along swiftly. I
tried to get away but it was too late. Luckily, though, I saved myself from being
swept over by taking hold of the wall with both hands. The

pressure against my
chest was great and I was barely able to keep my head above
the surface. Not a soul
was in sight and my voice was lost in the roar of the fall.
Slowly and gradually I
became exhausted and unable to withstand the strain longer.
Just as I was about to
let go, to be dashed against the rocks below, I saw in a
flash of light a familiar
diagram illustrating the hydraulic principle that the
pressure of a fluid in motion is
proportionate to the area exposed and automatically I turned
on my left side. As if
by magic, the pressure was reduced and I found it
comparatively easy in that
position to resist the force of the stream. But the danger
still confronted me. I knew
that sooner or later I would be carried down, as it was not
possible for any help to
reach me in time, even if I had attracted attention. I am
ambidextrous now, but then
I was left-handed and had comparatively little strength in
my right arm. For this
reason I did not dare to turn on the other side to rest and
nothing remained but to
slowly push my body along the dam. I had to get away from
the mill towards which
my face was turned, as the current there was much swifter
and deeper. It was a long
and painful ordeal and I came near to failing at its very
end, for I was confronted
with a depression in the masonry. I managed to get over with
the last ounce of my
strength and fell in a swoon when I reached the bank, where
I was found. I had torn
virtually all the skin from my left side and it took several
weeks before the fever
had subsided and I was well. These are only two of many
instanced, but they may
be sufficient to show that had it not been for the
inventor’s instinct, I would not

have lived to tell the tale.
Interested people have often asked me how and when I began to invent. This I can only answer from my present recollection in the light of which, the first attempt I recall was rather ambitious for it involved the invention of an apparatus and a method. In the former I was anticipated, but the later was original. It happened in this way. One of my playmates had come into the possession of a hook and fishing tackle which created quite an excitement in the village, and the next morning all started out to catch frogs. I was left alone and deserted owing to a quarrel with this boy. I had never seen a real hook and pictured it as something wonderful, endowed with peculiar qualities, and was despairing not to be one of the party. Urged by necessity, I somehow got hold of a piece of soft iron wire, hammered the end to a sharp point between two stones, bent it into shape, and fastened it to a strong string.
I then cut a rod, gathered some bait, and went down to the brook where there were frogs in abundance. But I could not catch any and was almost discouraged when it occurred to me dangle the empty hook in front of a frog sitting on a stump. At first he collapsed but by and by his eyes bulged out and became bloodshot, he swelled to twice his normal size and made a vicious snap at the hook. Immediately I pulled him up. I tried the same thing again and again and the method proved infallible.
When my comrades, who in spite of their fine outfit had caught nothing, came to me, they were green with envy. For a long time I kept my secret and enjoyed the monopoly but finally yielded to the spirit of Christmas. Every boy could then do the

same and the following summer brought disaster to the frogs.
In my next attempt, I seem to have acted under the first instinctive impulse which
later dominated me, — to harness the energies of nature to the service of man. I did
this through the medium of May bugs, or June bugs as they are called in America,
which were a veritable pest in that country and sometimes broke the branches of
trees by the sheer weight of their bodies. The

bushes were black with them. I would attach as many as four of them to a cross-piece,
rotably arranged on a thin spindle, and transmit the motion of the same to a
large disc and so derive considerable ‘power.’ These creatures were remarkably
efficient, for once they were started, they had no sense to stop and continued
whirling for hours and hours and the hotter it was, the harder they worked. All went
well until a strange boy came to the place. He was the son of a retired officer in the
Austrian army. That urchin ate May-bugs alive and enjoyed them as though they
were the finest blue-point oysters. That disgusting sight terminated my endeavours
in this promising field and I have never since been able to touch a May-bug or any
other insect for that matter.
After that, I believe, I undertook to take apart and assemble the clocks of my
grandfather. In the former operation I was always successful, but often failed in the
latter. So it came that he brought my work to a sudden halt in a manner not too
delicate and it took thirty years before I tackled another clockwork again.
Shortly thereafter, I went into the manufacture of a kind of pop-gun which
comprised a hollow tube, a piston, and two plugs of hemp.

When firing the gun, the
piston was pressed against the stomach and the tube was
pushed back quickly with
both hands. the air between the plugs was compressed and
raised to a high
temperature and one of them was expelled with a loud report.
The art consisted in
selecting a tube of the proper taper from the hollow stalks
which were found in our
garden. I did very well with that gun, but my activities
interfered with the window
panes in our house and met with painful discouragement.
If I remember rightly, I then took to carving swords from
pieces of furniture which I
could conveniently obtain. At that time I was under the sway
of the Serbian national
poetry and full of admiration for the feats of the heroes. I
used to spend hours in
mowing down my enemies in the form of corn-stalks which
ruined the crops and
netted me several spankings from my mother. Moreover, these
were not of the
formal kind but the genuine article.
I had all this and more behind me before I was six years old
and had passed through
one year of elementary school in the village of Smiljan
where my family lived. At
this juncture we moved to the little city of Gospic nearby.
This change of residence
was like a calamity to me. It almost broke my heart to part
from our pigeons,
chickens and sheep, and our magnificent flock of geese which
used to rise to the
clouds in the morning and return from the feeding grounds at
sundown in battle
formation, so perfect that it would have put a squadron of
the best aviators of the
present day to shame. In our new house I was but a prisoner,
watching the strange
people I saw through my window blinds. My bashfulness was
such that I would

rather have faced a roaring lion than one of the city dudes who strolled about. But
my hardest trial came on Sunday when I had to dress up and attend the service.
There I met with an accident, the mere thought of which made my blood curdle like
sour milk for years afterwards. It was my second adventure in a church. Not long
before, I was entombed for a night in an old chapel on an inaccessible mountain
which was visited only once a year. It was an awful experience, but this one was
worse.
There was a wealthy lady in town, a good but pompous woman, who used to come
to the church gorgeously painted up and attired with an enormous train and
attendants. One Sunday I had just finished ringing the bell in the belfry and rushed
downstairs, when this grand dame was sweeping out and I jumped on her train. It
tore off with a ripping noise which sounded like a salvo of musketry

fired by raw recruits. My father was livid with rage. He gave me a gentle slap on the
cheek, the only corporal punishment he ever administered to me, but I almost feel it
now. The embarrassment and confusion that followed are indescribably. I was
practically ostracised until something else happened which redeemed me in the
estimation of the community.
An enterprising young merchant had organised a fire department. A new fire engine
was purchased, uniforms provided and the men drilled for service and parade. The
engine was beautifully painted red and black. One afternoon, the official trial was
prepared for and the machine was transported to the river. The entire population

turned out to witness the great spectacle. When all the speeches and ceremonies
were concluded, the command was given to pump, but not a drop of water came
from the nozzle. The professors and experts tried in vain to locate the trouble. The
fizzle was complete when I arrived at the scene. My knowledge of of the
mechanism was nil and I knew next to nothing of air pressure, but instinctively I felt
for the suction hose in the water and found that it had collapsed. When I waded in
the river and opened it up, the water rushed forth and not a few Sunday clothes were
spoiled. Archimedes running naked through the streets of Syracuse and shouting
Eureka at the top of his voice did not make a greater impression than myself. I was
carried on the shoulders and was hero of the day.
Upon settling in the city I began a four years course in the so-called Normal School
preparatory to my studies at the College or Real-Gymnasium. During this period my
boyish efforts and exploits as well as troubles, continued. Among other things, I attained the unique distinction of champion crow catcher in
the country. My method of procedure was extremely simple. I would go into the
forest, hide in the bushes, and imitate the call of the birds. Usually I would get
several answers and in a short while a crow would flutter down into the shrubbery
near me. After that, all I needed to do was to throw a piece of cardboard to detract
its attention, jump up and grab it before it could extricate itself from the
undergrowth. In this way I would capture as many as I desired. But on one occasion
something occurred which made me respect them. I had caught a fine pair of birds
and was returning home with a friend. When we left the

forest, thousands of crows
had gathered making a frightful racket. In a few minutes they rose in pursuit and
soon enveloped us. The fun lasted until all of a sudden I received a blow on the
back of my head which knocked me down. Then they attacked me viciously. I was
compelled to release the two birds and was glad to join my friend who had taken
refuge in a cave.
In the school room there were a few mechanical models which interested me and
turned my attention to water turbines. I constructed many of these and found great
pleasure in operating them. How extraordinary was my life an incident may
illustrate. My uncle had no use for this kind of pastime and more than once rebuked
me. I was fascinated by a description of Niagara Falls I had perused, and pictured in
my imagination a big wheel run by the falls. I told my uncle that I would go to
America and carry out this scheme. Thirty years later I was my ideas carried out at
Niagara and marvelled at the unfathomable mystery of the mind.
I made all kinds of other contrivances and contraptions but among those, the
arbalests I produced were the best. My arrows, when short, disappeared from sight
and at close range traversed a plank of pine one inch thick. Through the continuous
tightening of the bows I developed a skin on my stomach much like that of a
crocodile and I am often wondering whether it is due to this exercise

that I am able even now to digest cobble-stones! Nor can I pass in silence my
performances with the sling which would have enabled me to give a stunning

exhibit at the Hippodrome. And now I will tell of one of my feats with this unique implement of war which will strain to the utmost the credulity of the reader.

I was practising while walking with my uncle along the river. The sun was setting, the trout were playful and from time to time one would shoot up into the air, its glistening body sharply defined against a projecting rock beyond. Of course any boy might have hit a fish under these propitious conditions but I undertook a much more difficult task and I foretold to my uncle, to the minutest detail, what I intended doing. I was to hurl a stone to meet the fish, press its body against the rock, and cut it in two. It was no sooner said than done. My uncle looked at me almost scared out of his wits and exclaimed “Vade retra Satanae!” and it was a few days before he spoke to me again. Other records, however great, will be eclipsed but I feel that I could peacefully rest on my laurels for a thousand years.

13.The Strange Life of Nikola Tesla

Chapter 3

How Tesla Conceived The Rotary Magnetic Field

At the age of ten I entered the Real gymnasium which was a new and fairly well equipped institution. In the department of physics were various models of classical scientific apparatus, electrical and mechanical. The demonstrations and experiments performed from time to time by the instructors fascinated me and were undoubtedly a powerful incentive to invention. I was also passionately fond of mathematical studies and often won the professor’s praise for rapid calculation. This was due to my acquired facility of visualising the figures and performing the operation, not in

the usual intuitive manner, but as in actual life. Up to a certain degree of complexity
it was absolutely the same to me whether I wrote the symbols on the board or
conjured them before my mental vision. But freehand drawing, to which many
hours of the course were devoted, was an annoyance I could not endure. This was
rather remarkable as most of the members of the family excelled in it. Perhaps my
aversion was simply due to the predilection I found in undisturbed thought. Had it
not been for a few exceptionally stupid boys, who could not do anything at all, my
record would have been the worst.
It was a serious handicap as under the then existing educational regime drawing
being obligatory, this deficiency threatened to spoil my whole career and my father
had considerable trouble in rail-roading me from one class to another.
In the second year at that institution I became obsessed with the idea of producing
continuous motion through steady air pressure. The pump incident, of which I have
been told, had set afire my youthful imagination and impressed me with the
boundless possibilities of a vacuum. I grew frantic in my desire to harness this
inexhaustible energy but for a long time I was groping in the dark. Finally,
however, my endeavours crystallised in an invention which was to enable me to
achieve what no other mortal ever attempted. Imagine a cylinder freely rotatable on
two bearings and partly surrounded by a rectangular trough which fits it perfectly.
The open side of the trough is enclosed by a partition so that the cylindrical segment
within the enclosure divides the latter into two compartments entirely separated

from each other by air-tight sliding joints. One of these compartments being sealed
and once for all exhausted, the other remaining open, a perpetual rotation of the
cylinder would result. At least, so I thought.
A wooden model was constructed and fitted with infinite care and when I applied
the pump on one side and actual observed that there was a tendency to turning, I
was delirious with joy. Mechanical flight was the one thing I wanted to accomplish
although still under the discouraging recollection of a bad fall I sustained by
jumping with an umbrella from the top of a building. Every day I used to transport
myself through the air to distant regions but could not understand just how I
managed to do it. Now I had something concrete, a flying machine with nothing
more than a rotating shaft, flapping wings, and; - a vacuum of unlimited power!
From that time on I made my daily aerial excursions in a vehicle of comfort and
luxury as might have befitted King Solomon. It took years before I understood that
the atmospheric pressure acted at right angles to the surface of the cylinder and that
the slight rotary effort I observed was due to a leak! Though this knowledge came
gradually it gave me a painful shock.
14.The Strange Life of Nikla Tesla
I had hardly completed my course at the Real Gymnasium when I was prostrated
with a dangerous illness or rather, a score of them, and my condition became so
desperate that I was given up by physicians. During this period I was permitted to
read constantly, obtaining books from the Public Library which had been neglected
and entrusted to me for classification of the works and preparation of catalogues.

One day I was handed a few volumes of new literature unlike anything I had ever
read before and so captivating as to make me utterly forget me hopeless state. They
were the earlier works of Mark Twain and to them might have been due the
miraculous recovery which followed. Twenty-five years later, when I met Mr.
Clements and we formed a friendship between us, I told him of the experience and
was amazed to see that great man of laughter burst into tears...
My studies were continued at the higher Real Gymnasium in Carlstadt, Croatia,
where one of my aunts resided. She was a distinguished lady, the wife of a Colonel
who was an old war-horse having participated in many battles, I can never forget
the three years I passed at their home. No fortress in time of war was under a more
rigid discipline. I was fed like a canary bird. All the meals were of the highest
quality and deliciously prepared, but short in quantity by a thousand percent. The
slices of ham cut by my aunt were like tissue paper. When the Colonel would put
something substantial on my plate she would snatch it away and say excitedly to
him; "Be careful. Niko is very delicate."
I had a voracious appetite and suffered like Tantalus.
But I lived in an atmosphere of refinement and artistic taste quite unusual for those
times and conditions. The land was low and marshy and malaria fever never left me
while there despite the enormous amounts of qunine I consumed. Occasionally the
river would rise and drive an army of rats into the buildings, devouring everything,
even to the bundles of fierce paprika. These pests were to me a welcome diversion. I
thinned their ranks by all sorts of means, which won me the

unenviable distinction
of rat-catcher in the community. At last, however, my course was completed, the
misery ended, and I obtained the certificate of maturity which brought me to the
cross-roads.
During all those years my parents never wavered in their resolve to make me
embrace the clergy, the mere thought of which filled me with dread. I had become
intensely interested in electricity under the stimulating influence of my Professor of
Physics, who was an ingenious man and often demonstrated the principles by
apparatus of his own invention. Among these I recall a device in the shape of a
freely rotatable bulb, with tinfoil coating, which was made to spin rapidly when
connected to a static machine. It is impossible for me to convey an adequate idea of
the intensity of feeling I experienced in witnessing his exhibitions of these
mysterious phenomena. Every impression produced a thousand echoes in my mind.
I wanted to know more of this wonderful force; I longed for experiment and
investigation and resigned myself to the inevitable with aching heart. Just as I was
making ready for the long journey home I received word that my father wished me
to go on a shooting expedition. It was a strange request as he had been always
strenuously opposed to this kind of sport. But a few days later I learned that the
cholera was raging in that district and, taking advantage of an opportunity, I
returned to Gospic in disregard to my parent’s wishes. It is incredible how
absolutely ignorant people were as to the causes of this scourge which visited the
country in intervals of fifteen to twenty years. They

thought that the deadly agents
were transmitted through the air and filled it with pungent odours and smoke. In the
meantime they drank infested water and died in heaps. I contracted the dreadful

disease on the very day of my arrival and although surviving the crisis, I was
confined to bed for nine months with scarcely any ability to move. My energy was
completely exhausted and for the second time I found myself at Death's door.
In one of the sinking spells which was thought to be the last, my father rushed into
the room. I still see his pallid face as he tried to cheer me in tones belying his
assurance. "Perhaps," I said, "I may get well if you will let me study engineering."
"You will go to the best technical institution in the world," he solemnly replied, and
I knew that he meant it. A heavy weight was lifted from my mind but the relief
would have come too late had it not been for a marvellous cure brought through a
bitter decoction of a peculiar bean. I came to life like Lazarus to the utter
amazement of everybody.
My father insisted that I spend a year in healthful physical outdoor exercise to
which I reluctantly consented. For most of this term I roamed in the mountains,
loaded with a hunter's outfit and a bundle of books, and this contact with nature
made me stronger in body as well as in mind. I thought and planned, and conceived
many ideas almost as a rule delusive. The vision was clear enough but the
knowledge of principles was very limited.
In one of my invention I proposed to convey letters and packages across the seas,
through a submarine tube, in spherical containers of

sufficient strength to resist the
hydraulic pressure. The pumping plant, intended to force the water through the tube,
was accurately figured and designed and all other particulars carefully worked out.
Only one trifling detail, of no consequence, was lightly dismissed. I assumed an
arbitrary velocity of the water and, what is more, took pleasure in making it high,
thus arriving at a stupendous performance supported by faultless calculations.
Subsequent reflections, however, on the resistance of pipes to fluid flow induced me
to make this invention public property.
Another one of my projects was to construct a ring around the equator which would,
of course, float freely and could be arrested in its spinning motion by reactionary
forces, thus enabling travel at a rate of about one thousand miles an hour,
impracticable by rail. The reader will smile. The plan was difficult of execution, I
will admit, but not nearly so bad as that of a well known New York professor, who
wanted to pump the air from the torrid to temperate zones, entirely forgetful of the
fact that the Lord had provided a gigantic machine for this purpose.
Still another scheme, far more important and attractive, was to derive power from
the rotational energy of terrestrial bodies. I had discovered that objects on the
earth’s surface owing to the diurnal rotation of the globe, are carried by the same
alternately in and against the direction of translatory movement. From this results a
great change in momentum which could be utilised in the simplest imaginable
manner to furnish motive effort in any habitable region of the world. I cannot find
words to describe my disappointment when later I realised

that I was in the
predicament of Archimedes, who vainly sought for a fixed
point in the universe.
At the termination of my vacation I was sent to the Poly-
Technic School in Gratz,
Styria (Austria), which my father had chosen as one of the
oldest and best reputed
institutions. That was the moment I had eagerly awaited and
I began my studies
under good auspices and firmly resolved to succeed. My
previous training was
above average, due to my father's teaching and opportunities
afforded. I had
acquired the knowledge of a number of languages and waded
through the books of
several libraries, picking up information more or

less useful. Then again, for the first time, I could choose
my subjects as I liked, and
free-hand drawing was to bother me no more.
I had made up my mind to give my parents a surprise, and
during the whole first
year I regularly started my work at three o'clock in the
morning and continued until
eleven at night, no Sundays or holidays excepted. As most of
my fellow-students
took things easily, naturally I eclipsed all records. In the
course of the year I passed
through nine exams and the professors thought I deserved
more than the highest
qualifications. Armed with their flattering certificated, I
went home for a short rest,
expecting triumph, and was mortified when my father made
light of these hard-won
honours.
That almost killed my ambition; but later, after he had
died, I was pained to find a
package of letters which the professors had written to him
to the effect that unless
he took me away from the Institution I would be killed
through overwork.

Thereafter I devoted myself chiefly to physics, mechanics and mathematical studies,
spending the hours of leisure in the libraries.
I had a veritable mania for finishing whatever I began, which often got me into
difficulties. On one occasion I started to read the works of Voltaire, when I learned,
to my dismay that there were close to one hundred large volumes in small print
which that monster had written while drinking seventy-two cups of black coffee per
diem. It had to be done, but when I laid aside that last book I was very glad, and
said, “Never more!”
My first year’s showing had won me the appreciation and friendship of several
professors. Among these, Professor Rogner, who was teaching arithmetical subjects
and geometry; Professor Poeschl, who held the chair of theoretical and experimental
physics, and Dr. Alle, who taught integral calculus and specialised in differential
equations. This scientist was the most brilliant lecturer to whom I ever listened. He
took a special interest in my progress and would frequently remain for an hour or
two in the lecture room, giving me problems to solve, in which I delighted. To him I
explained a flying machine I had conceived, not an illusory invention, but one based
on sound, scientific principles, which has become realisable through my turbine and
will soon be given to the world. Both Professors Rogner and Poeschl were curious
men. The former had peculiar ways of expressing himself and whenever he did so,
there was a riot, followed by a long embarrassing pause. Professor Poeschl was a
methodical and thoroughly grounded German. He had enormous feet, and hands
like the paws of a bear, but all of his experiments were

skilfully performed with
clock-like precision and without a miss. It was in the second year of my studies that
we received a Gramoe Dyname from Paris, having the horseshoe form of a
laminated field magnet, and a wire wound armature with a commutator. It was
connected up and various effects of the currents were shown. While Professor
Poeschl was making demonstrations, running the machine was a motor, the brushes
gave trouble, sparking badly, and I observed that it might be possible to operate a
motor without these appliances. But he declared that it could not be done and did
me the honour of delivering a lecture on the subject, at the conclusion he remarked,
“Mr. Tesla may accomplish great things, but he certainly will never do this. It
would be equivalent to converting a steadily pulling force, like that of gravity into a
rotary effort. It is a perpetual motion scheme, an impossible idea.” But instinct is
something which transcends knowledge. We have, undoubtedly, certain finer fibres
that enable us to perceive truths when logical deduction, or any other wilful effort
of the brain, is futile.
For a time I wavered, impressed by the professor’s authority, but soon

became convinced I was right and undertook the task with all the fire and boundless
confidence of my youth. I started by first picturing in my mind a direct-current
machine, running it and following the changing flow of the currents in the armature.
Then I would imagine an alternator and investigate the progresses taking place in a
similar manner. Next I would visualise systems comprising motors and generators

and operate them in various ways.
The images I saw were to me perfectly real and tangible. All my remaining term in
Gratz was passed in intense but fruitless efforts of this kind, and I almost came to
the conclusion that the problem was insolvable.
In 1880 I went to Prague, Bohemia, carrying out my father's wish to complete my
education at the University there. It was in that city that I made a decided advance,
which consisted in detaching the commutator from the machine and studying the
phenomena in this new aspect, but still without result. In the year following there
was a sudden change in my views of life.
I realised that my parents had been making too great sacrifices on my account and
resolved to relieve them of the burden. The wave of the American telephone had
just reached the European continent and the system was to be installed in Budapest,
Hungary. It appeared an ideal opportunity, all the more as a friend of our family
was at the head of the enterprise.
It was here that I suffered the complete breakdown of the nerves to which I have
referred. What I experienced during the period of the illness surpasses all belief. My
sight and hearing were always extraordinary. I could clearly discern objects in the
distance when others saw no trace of them. Several times in my boyhood I saved the
houses of our neighbours from fire by hearing the faint crackling sounds which did
not disturb their sleep, and calling for help. In 1899, when I was past forty and
carrying on my experiments in Colorado, I could hear very distinctly thunderclaps
at a distance of 550 miles. My ear was thus over thirteen times more sensitive, yet at
that time I was, so to speak, stone deaf in comparison with

the acuteness of my
hearing while under the nervous strain.
In Budapest I could hear the ticking of a watch with three rooms between me and
the time-piece. A fly alighting on a table in the room would cause a dull thud in my
ear. A carriage passing at a distance of a few miles fairly shook my whole body.
The whistle of a locomotive twenty or thirty miles away made the bench or chair on
which I sat, vibrate so strongly that the pain was unbearable. The ground under my
feet trembled continuously. I had to support my bed on rubber cushions to get any
rest at all. The roaring noises from near and far often produced the effect of spoken
words which would have frightened me had I not been able to resolve them into
their accumulated components. The sun rays, when periodically intercepted, would
cause blows of such force on my brain that they would stun me. I had to summon all
my will power to pass under a bridge or other structure, as I experienced the
crushing pressure on the skull. In the dark I had the sense of a bat, and could detect
the presence of an object at a distance of twelve feet by a peculiar creepy sensation
on the forehead. My pulse varied from a few to two hundred and sixty beats and all
the tissues of my body with twitchings and tremors, which was perhaps hardest to
bear. A renowned physician who have me daily large doses of Bromide of
Potassium, pronounced my malady unique and incurable.
It is my eternal regret that I was not under the observation of experts in physiology
and psychology at that time. I clung desperately to life, but

never expected to recover. Can anyone believe that so

hopeless a physical wreck
could ever be transformed into a man of astonishing strength and tenacity; able to
work thirty-eight years almost without a day's interruption, and find himself still
strong and fresh in body and mind? Such is my case. A powerful desire to live and
to continue the work and the assistance of a devoted friend, an athlete,
accomplished the wonder. My health returned and with it the vigour of mind.
In attacking the problem again, I almost regretted that the struggle was soon to end.
I had so much energy to spare. When I understood the task, it was not with a resolve
such as men often make. With me it was a sacred vow, a question of life and death.
I knew that I would perish if I failed. Now I felt that the battle was won. Back in the
deep recesses of the brain was the solution, but I could net yet give it outward
expression.
One afternoon, which is ever present in my recollection, I was enjoying a walk with
my friend in the City Park and reciting poetry. At that age, I knew entire books by
heart, word for word. One of these was Goethe's "Faust." The sun was just setting
and reminded me of the glorious passage, "Sie ruckt und weicht, der Tag ist
uberlebt, Dort eilt sie hin und fordert neues Leben. Oh, daß kein Flugel mich vom
Boden hebt Ihr nach und immer nach zu streben! Ein schöner Traum indessen sie
entweicht, Ach, au des Geistes Flügein wird so leicht Kein korperlicher Flugel sich
gesellen!" As I uttered these inspiring words the idea came like a flash of lightening
and in an instant the truth was revealed. I drew with a stick on the sand, the diagram
shown six years later in my address before the American

Institute of Electrical
Engineers, and my companion understood them perfectly. The images I saw were
wonderfully sharp and clear and had the solidity of metal and stone, so much so that
I told him, “See my motor here; watch me reverse it.” I cannot begin to describe my
emotions. Pygmalion seeing his statue come to life could not have been more
deeply moved. A thousand secrets of nature which I might have stumbled upon
accidentally, I would have given for that one which I had wrested from her against
all odds and at the peril of my existence...
19.The Strange Life of Nikola Tesla
Chapter 4
The Discovery of the
Tesla Coil and Transformer
(The Basic Part of Every Radio and T.V.)
For a while I gave myself up entirely to the intense enjoyment of picturing
machines and devising new forms. It was a mental state of happiness about as
complete as I have ever known in life. Ideas came in an uninterrupted stream and
the only difficulty I had was to hold them fast. The pieces of apparatus I conceived
were to me absolutely real and tangible in every detail, even to the minutest marks
and signs of wear. I delighted in imagining the motors constantly running, for in this
way they presented to the mind’s eye a fascinating sight. When natural inclination
develops into a passionate desire, one advances towards his goal in seven-league
boots. In less than two months I evolved virtually all the types of motors and
modifications of the system which are now identified with my name, and which are
used under many other names all over the world. It was, perhaps, providential that

the necessities of existence commanded a temporary halt to this consuming activity
of the mind.
I came to Budapest prompted by a premature report concerning the telephone
enterprise and, as irony of fate willed it, I had to accept a position as draughtsman in
the Central Telegraph Office of the Hungarian Government at a salary which I deem
it my privilege not to disclose. Fortunately, I soon won the interest of the Inspector-in-
Chief and was thereafter employed on calculations, designs and estimates in
connection with new installations, until the Telephone exchange started, when I
took charge of the same. The knowledge and practical experience I gained in the
course of this work, was most valuable and the employment gave me ample
opportunities for the exercise of my inventive faculties. I made several
improvements in the Central Station apparatus and perfected a telephone repeater or
amplifier which was never patented or publicly described but would be creditable to
me even today. In recognition of my efficient assistance the organiser of the
undertaking, Mr. Puskas, upon disposing of his business in Budapest, offered me a
position in Paris which I gladly accepted.
I never can forget the deep impression that magic city produced on my mind. For
several days after my arrival, I roamed through the streets in utter bewilderment of
the new spectacle. The attractions were many and irresistible, but, alas, the income
was spent as soon as received. When Mr. Puskas asked me how I was getting along
in the new sphere, I described the situation accurately in the statement that “The last
twenty-nine days of the month are the toughest.” I led a

rather strenuous life in what
would now be termed “Rooseveltian fashion.” Every morning, regardless of the
weather, I would go from the Boulevard St. Marcel, where I resided, to a bathing
house on the Seine; plunge into the water, loop the circuit twenty-seven times and
then walk an hour to reach Ivry, where the Company’s factory was located. There I
would have a wood-chopper’s breakfast at half-past seven o’clock and then eagerly
await the lunch hour, in the meanwhile cracking hard nuts for the Manager of the
Works, Mr. Charles Batchellor, who was an intimate friend and assistant of Edison.
Here I was thrown in contact with a few Americans who fairly fell in love with my
because of my proficiency in Billiards! To these men I explained my invention and
one of them, Mr. D. Cunningham, foreman of

the Mechanical Department, offered to form a stock company. The proposal seemed
to me comical in the extreme. I did not have the faintest conception of what he
meant, except that it was an American way of doing things. Nothing came of it,
however, and during the next few months I had to travel from one place to another
in France and Germany to cure the ills of the power plants. On my return to Paris, I submitted to one of the
administrators of the Company, Mr.
Rau, a plan for improving their dynamos and was given an opportunity. My success
was complete and the delighted directors accorded me the privilege of developing
automatic regulators which were much desired. Shortly after, there was some
trouble with the lighting plant which had been installed at the new railroad station in
Straßburg, Alsace. The wiring was defective and on the

occasion of the opening ceremonies, a large part of a wall was blown out through a short-circiut, right in the presence of old Emperor William I. The German Government refused to take the plant and the French Company was facing a serious loss. On account of my knowledge of the German language and past experience, I was entrusted with the difficult task of straightening out matters and early in 1883, I went to Straßburg on that mission.

Some of the incidents in that city have left an indelible record on my memory. By a curious coincidence, a number of the men who subsequently achieve fame, lived there about that time. In later life I used to say, "There were bacteria of greatness in that old town." Others caught the disease, but I escaped!" The practical work, correspondence, and conferences with officials kept me preoccupied day and night, but as soon as I was able to manage, I undertook the construction of a simple motor in a mechanical shop opposite the rail-road station, having brought with me from Paris some material for that purpose. The consummation of the experiment was, however, delayed until the summer of that year, when I finally had the satisfaction of seeing the rotation effected by alternating currents of different phase, and without sliding contacts or commutator, as I had conceived a year before. It was an exquisite pleasure but not to compare with the delirium of joy following the first revelation.

Among my new friends was the former Mayor of the city, Mr. Sauzin, whom I had already, in a measure, acquainted with this and other inventions of mine and whose support I endeavoured to enlist. He was sincerely devoted to

me and put my project
before several wealthy persons, but to my mortification, found no response. He
wanted to help me in every possible way and the approach of the first of July, 1917,
happens to remind me of a form of “assistance” I received from that charming man,
which was not financial, but none the less appreciated. In 1870, when the Germans
invaded the country, Mr. Sauzin had buried a good sized allotment of St. Estephe of
1801 and he came to the conclusion that he knew no worthier person than myself, to
consume that precious beverage. This, I may say, is one of the unforgettable
incidents to which I have referred. My friend urged me to return to Paris as soon as
possible and seek support there. This I was anxious to do, but my work and
negotiations were protracted, owing to all sorts of petty obstacles I encountered, so
that at times the situation seemed hopeless. Just to give an idea of German
thoroughness and “efficiency,” I may mention here a rather funny experience.
An incandescent lamp of 16 c.p. was to be placed in a hallway, and upon selected
the proper location, I ordered the “monteur” to run the wires. After working for a
while, he concluded that the engineer had to be consulted and this was done. The
latter made several objections but ultimately agreed that the lamp should be placed
two inches from the spot I had assigned, whereupon the work proceeded. Then the
engineer became worried and told me that Inspector Averdeck should be notified.
That important person was called,

he investigated, debated, and decided that the lamp should be shifted back two

inches, which was the placed I had marked! It was not long, however, before
Averdeck got cold feet himself and advised me that he had informed Ober-Inspector
Hieronimus of the matter and that I should await his decision. It was several days
before the Ober-Inspector was able to free himself of other pressing duties, but at
last he arrived and a two hour debate followed, when he decided to move the lamp
two inches further. My hopes that this was the final act, were shattered when the
Ober-Inspector returned and said to me, "Regierungsrath Funke is particular that I
would not dare to give an order for placing this lamp without his explicit approval."
Accordingly, arrangements for a visit from that great man were made. We started
cleaning up and polishing early in the morning, and when Funke came with his
retinue he was ceremoniously received. After two hours of deliberation, he
suddenly exclaimed, "I must be going!," and pointing to a place on the ceiling, he
ordered me to put the lamp there. It was the exact spot which I had originally
chosen! So it went day after day with variations, but I was determined to achieve, at
whatever cost, and in the end my efforts were rewarded.
By the spring of 1884, all the differences were adjusted, the plant formally
accepted, and I returned to Paris with pleasing anticipation. One of the
administrators had promised me a liberal compensation in case I succeeded, as well
as a fair consideration of the improvements I had made to their dynamos and I
hoped to realise a substantial sum. There were three administrators, whom I shall
designate as A, B, and C for convenience. When I called on A, he told me that B

had the say. This gentleman thought that only C could decide, and the latter was
quite sure that A alone had the power to act. After several laps of this circulus
viciousus, it dawned upon me that my reward was a castle in Spain.
The utter failure of my attempts to raise capital for development was another
disappointment, and when Mr. Bachelor pressed me to go to America with a view
of redesigning the Edison machines, I determined to try my fortunes in the Land of
Golden Promise. But the chance was nearly missed. I liquefied my modest assets,
secured accommodations and found myself at the railroad station as the train was
pulling out. At that moment, I discovered that my money and tickets were gone.
What to do was the question. Hercules had plenty of time to deliberate, but I had to
decide while running alongside the train with opposite feeling surging in my brain
like condenser oscillations. Resolve, helped by dexterity, won out in the nick of
time and upon passing through the usual experience, as trivial and unpleasant, I
managed to embark for New York with the remnants of my belongings, some
poems and articles I had written, and a package of calculations relating to solutions
of an unsolvable integral and my flying machine. During the voyage I sat most of
the time at the stern of the ship watching for an opportunity to save somebody from
a watery grave, without the slightest thought of danger. Later, when I had absorbed
some of the practical American sense, I shivered at the recollection and marvelled at
my former folly. The meeting with Edison was a memorable event in my life. I was
amazed at this wonderful man who, without early advantages

and scientific training,
had accomplished so much. I had studied a dozen languages,
delved in literature
and art, and had spent my best years in libraries reading
all sorts of stuff that fell
into my hands, from Newton's "Principia" to the novels of
Paul de Kock, and felt
that most of my life had been squandered. But it did not
take long before I
recognised that it was the best thing I could have done.
Within a few weeks I had
won Edison's confidence, and it came about in this way.
The S.S. Oregon, the fastest passenger steamer at that time,
had both of

its lighting machines disabled and its sailing was delayed.
As the super-structure
had been built after their installation, it was impossible
to remove them from the
hold. The predicament was a serious one and Edison was much
annoyed. In the
evening I took the necessary instruments with me and went
aboard the vessel where
I stayed for the night. The dynamos were in bad condition,
having several short-circuits
and breaks, but with the assistance of the crew, I succeeded
in putting them
in good shape. At five o'clock in the morning, when passing
along Fifth Avenue on
my way to the shop, I met Edison with Bachelor and a few
others, as they were
returning home to retire. "Here is our Parisian running
around at night," he said.
When I told him that I was coming from the Oregon and had
repaired both
machines, he looked at me in silence and walked away without
another word. But
when he had gone some distance I heard him remark,
"Bachelor, this is a good
man." And from that time on I had full freedom in directing
the work. For nearly a

year my regular hours were from 10:30 A.M. until 5 o'clock the next morning without a day's exception. Edison said to me, "I have had many hard working assistants, but you take the cake." During this period I designed twenty-four different types of standard machines with short cores and uniform pattern, which replaced the old ones. The Manager had promised me fifty thousand dollars on the completion of this task, but it turned out to be a practical joke. This gave me a painful shock and I resigned my position.

Immediately thereafter, some people approached me with the proposal of forming an arc light company under my name, to which I agreed. Here finally, was an opportunity to develop the motor, but when I broached the subject to my new associates they said, "No, we want the arc lamp. We don't care for this alternating current of yours." In 1886 my system of arc lighting was perfected and adopted for factory and municipal lighting, and I was free, but with no other possession than a beautifully engraved certificate of stock of hypothetical value. Then followed a period of struggle in the new medium for which I was not fitted, but the reward came in the end, and in April, 1887, the TESLA Electric Co. was organised, providing a laboratory and facilities. The motors I built there were exactly as I had imagined them. I made no attempt to improve the design, but merely reproduced the pictures as they appeared to my vision and the operation was always as I expected.

In the early part of 1888, an arrangement was made with the Westinghouse Company for the manufacture of the motors on a large scale. But great difficulties

had still to be overcome. My system was based on the use of low frequency currents
and the Westinghouse experts had adopted 133 cycles with the objects of securing
advantages in transformation. They did not want to depart with their standard forms
of apparatus and my efforts had to be concentrated upon adapting the motor to these
conditions. Another necessity was to produce a motor capable of running efficiently
at this frequency on two wire, which was not an easy accomplishment.
At the close of 1889, however, my services in Pittsburgh being no longer essential, I
returned to New York and resumed experimental work in a Laboratory on Grand
Street, where I began immediately the design of high-frequency machines. The
problems of construction in this unexplored field were novel and quite peculiar, and
I encountered many difficulties. I rejected the inductor type, fearing that it might not
yield perfect sine waves, which were so important to resonant action. Had it not
been for this, I could have saved myself a great deal of labour. Another
discouraging feature of the high-frequency alternator seemed to be the inconstancy
of speed which threatened to impose serious limitations to its use. I had already
noted in my demonstrations before the American Institution of Electrical Engineers,
that several times

the tune was lost, necessitating readjustment, and did not yet foresee what I
discovered long afterwards, - a means of operating a machine of this kind at a speed
constant to such a degree as not to vary more than a small fraction of one revolution
between the extremes of load. From many other

considerations, it appeared
desirable to invent a simpler device for the production of electric oscillations.
In 1856, Lord Kelvin had exposed the theory of the condenser discharge, but no
practical application of that important knowledge was made. I saw the possibilities
and undertook the development of induction apparatus on this principle. My
progress was so rapid as to enable me to exhibit at my lecture in 1891, a coil giving
sparks of five inches. On that occasion I frankly told the engineers of a defect
involved in the transformation by the new method, namely, the loss in the spark
gap. Subsequent investigation showed that no matter what medium is employed,
-be it air, hydrogen, mercury vapour, oil, or a stream of electrons, the efficiency is
the same. It is a law very much like the governing of the conversion of mechanical
energy. We may drop a weight from a certain height vertically down, or carry it to
the lower level along any devious path; it is immaterial insofar as the amount of
work is concerned. Fortunately however, this drawback is not fatal, as by proper
proportioning of the resonant, circuits of an efficiency of 85 percent is attainable.
Since my early announcement of the invention, it has come into universal use and
wrought a revolution in many departments, but a still greater future awaits it.
When in 1900 I obtained powerful discharges of 1,000 feet and flashed a current
around the globe, I was reminded of the first tiny spark I observed in my Grand
Street laboratory and was thrilled by sensations akin to those I felt when I
discovered the rotating magnetic field.

Chapter 5

As I review the events of my past life I realise how subtle are the influences that shape our destinies. An incident of my youth may serve to illustrate. One winter's day I managed to climb a steep mountain, in company with other boys. The snow was quite deep and a warm southerly wind made it just suitable for our purpose. We amused ourselves by throwing balls which would roll down a certain distance, gathering more or less snow, and we tried to out-do one another in this sport.

Suddenly a ball was seen to go beyond the limit, swelling to enormous proportions until it became as big as a house and plunged thundering into the valley below with a force that made the ground tremble. I looked on spell-bound incapable of understanding what had happened. For weeks afterward the picture of the avalanche was before my eyes and I wondered how anything so small could grow to such an immense size.

Ever since that time the magnification of feeble actions fascinated me, and when, years later, I took up the experimental study of mechanical and electrical resonance, I was keenly interested from the very start. Possibly, had it not been for that early powerful impression I might not have followed up the little spark I obtained with my coil and never developed my best invention, the true history of which I will tell.

Many technical men, very able in their special departments, but dominated by a pedantic spirit and near-sighted, have asserted that excepting the induction motor, I have given the world little of practical use. This is a grievous mistake. A new idea must not be judged by its immediate results. My alternating

system of power
transmission came at a psychological moment, as a long sought answer to pressing
industrial questions, and although considerable resistance had to be overcome and
opposing interests reconciled, as usual, the commercial introduction could not be
long delayed. Now, compare this situation with that confronting my turbines, for
example. One should think that so simple and beautiful an invention, possessing
many features of an ideal motor, should be adopted at once and, undoubtedly, it
would under similar conditions. But the prospective effect of the rotating field was
not to render worthless existing machinery; on the contrary, it was to give it
additional value. The system lent itself to new enterprise as well as to improvement
of the old. My turbine is an advance of a character entirely different. It is a radical
departure in the sense that its success would mean the abandonment of the
antiquated types of prime movers on which billions of dollars have been spent.
Under such circumstances, the progress must needs be slow and perhaps the
greatest impediment is encountered in the prejudicial opinions created in the minds
of experts by organised opposition.
Only the other day, I had a disheartening experience when I met my friend and
former assistant, Charles F. Scott, now professor of Electric Engineering at Yale. I
had not seen him for a long time and was glad to have an opportunity for a little
chat at my office. Our conversation, naturally enough, drifted on my turbine and I
became heated to a high degree. “Scott,” I exclaimed, carried away by the vision of
a glorious future, “My turbine will scrap all the heat

engines in the world.” Scott
stroked his chin and looked away thoughtfully, as though making a mental
calculation. “That will make quite a pile of scrap,” he said, and left without another
word!
These and other inventions of mine, however, were nothing more than steps

forward in a certain directions. In evolving them, I simply followed the inborn
instinct to improve the present devices without any special thought of our far more
imperative necessities. The “Magnifying Transmitter” was the product of labours
extending through years, having for their chief object, the solution of problems
which are infinitely more important to mankind than mere industrial development.
If my memory serves me right, it was in November, 1890, that I performed a
laboratory experiment which was one of the most extraordinary and spectacular
ever recorded in the annal of Science. In investigating the behaviour of high
frequency currents, I had satisfied myself that an electric field of sufficient intensity
could be produced in a room to light up electrodeless vacuum tubes. Accordingly, a
transformer was built to test the theory and the first trial proved a marvellous
success. It is difficult to appreciate what those strange phenomena meant at the
time. We crave for new sensations, but soon become indifferent to them. The
wonders of yesterday are today common occurrences. When my tubes were first
publicly exhibited, they were viewed with amazement impossible to describe. From
all parts of the world, I received urgent invitations and numerous honours and other

flattering inducements were offered to me, which I declined. But in 1892 the demand became irresistible and I went to London where I delivered a lecture before the institution of Electrical Engineers.

It has been my intention to leave immediately for Paris in compliance with a similar obligation, but Sir James Dewar insisted on my appearing before the Royal Institution. I was a man of firm resolve, but succumbed easily to the forceful arguments of the great Scotchman. He pushed me into a chair and poured out half a glass of a wonderful brown fluid which sparkled in all sorts of iridescent colours and tasted like nectar. "Now," said he, "you are sitting in Faraday's chair and you are enjoying whiskey he used to drink." (Which did not interest me very much, as I had altered my opinion concerning strong drink). The next evening I have a demonstration before the Royal Institution, at the termination of which, Lord Rayleigh addressed the audience and his generous words gave me the first start in these endeavours. I fled from London and later from Paris, to escape favours showered upon me, and journeyed to my home, where I passed through a most painful ordeal and illness.

Upon regaining my health, I began to formulate plans for the resumption of work in America. Up to that time I never realised that I possessed any particular gift of discovery, but Lord Rayleigh, whom I always considered as an ideal man of science, had said so and if that was the case, I felt that I should concentrate on some big idea.

At this time, as at many other times in the past, my thoughts turned towards my

Mother’s teaching. The gift of mental power comes from God, Divine Being, and if we concentrate our minds on that truth, we become in tune with this great power.

My Mother had taught me to seek all truth in the Bible; therefore I devoted the next few months to the study of this work.

One day, as I was roaming the mountains, I sought shelter from an approaching storm. The sky became overhung with heavy clouds, but somehow the rain was delayed until, all of a sudden, there was a lightening flash and a few moments after, a deluge. This observation set me thinking. It was manifest that the two phenomena were closely related, as cause and effect, and a little reflection led me to the conclusion that the electrical energy involved in the precipitation of the water was inconsiderable, the function of the lightening being much like that of a sensitive trigger. Here was a stupendous possibility of

achievement. If we could produce electric effects of the required quality, this whole planet and the conditions of existence on it could be transformed. The sun raises the water of the oceans and winds drive it to distant regions where it remains in a state of most delicate balance. If it were in our power to upset it when and wherever desired, this might life sustaining stream could be at will controlled. We could irrigate arid deserts, create lakes and rivers, and provide motive power in unlimited amounts. This would be the most efficient way of harnessing the sun to the uses of man. The consummation depended on our ability to develop electric forces of the order of those in nature.

It seemed a hopeless undertaking, but I made up my mind to

try it and immediately
on my return to the United States in the summer of 1892, after a short visit to my
friends in Watford, England; work was begun which was to me all the more
attractive, because a means of the same kind was necessary for the successful
transmission of energy without wires.
At this time I made a further careful study of the Bible, and discovered the key in
Revelation. The first gratifying result was obtained in the spring of the succeeding
year, when I reaching a tension of about 100,000,000 volts — one hundred million
volts — with my conical coil, which I figured was the voltage of a flash of
lightening. Steady progress was made until the destruction of my laboratory by fire,
in 1895, as may be judged from an article by T.C. Martin which appeared in the
April number of the Century Magazine. This calamity set me back in many ways
and most of that year had to be devoted to planning and reconstruction. However, as
soon as circumstances permitted, I returned to the task.
Although I knew that higher electric-motive forces were attainable with apparatus
of larger dimensions, I had an instinctive perception that the object could be
accomplished by the proper design of a comparatively small and compact
transformer. In carrying on tests with a secondary in the form of flat spiral, as
illustrated in my patents, the absence of streamers surprised me, and it was not long
before I discovered that this was due to the position of the turns and their mutual
action. Profiting from this observation, I resorted to the use of a high tension
conductor with turns of considerable diameter, sufficiently separated to keep down

the distributed capacity, while at the same time preventing undue accumulation of
the charge at any point. The application of this principle enabled me to produce
pressures of over 100,000,000 volts, which was about the limit obtainable without
risk of accident. A photograph of my transmitter built in my laboratory at Houston
Street, was published in the Electrical Review of November, 1898.
In order to advance further along this line, I had to go into the open, and in the
spring of 1899, having completed preparations for the erection of a wireless plant, I
went to Colorado where I remained for more than one year. Here I introduced other
improvements and refinements which made it possible to generate currents of any
tension that may be desired. Those who are interested will find some information in
regard to the experiments I conducted there in my article, “The Problem of
Increasing Human Energy,” in the Century Magazine of June 1900, to which I have
referred on a previous occasion.
I will be quite explicit on the subject of my magnifying transformer so that it will be
clearly understood. In the first place, it is a resonant transformer, with a secondary
in which the parts, charged to a high potential, are of considerable area and arranged
in space along ideal enveloping surfaces of very large radii of curvature, and at
proper distances from one another, thereby

insuring a small electric surface density everywhere, so that no leak can occur even
if the conductor is bare. It is suitable for any frequency, from a few to many
thousands of cycles per second, and can be used in the production of currents of

tremendous volume and moderate pressure, or of smaller amperage and immense electromotive force. The maximum electric tension is merely dependent on the curvature of the surfaces on which the charged elements are situated and the area of the latter. Judging from my past experience there is no limit to the possible voltage developed; any amount is practicable. On the other hand, currents of many thousands of amperes may be obtained in the antenna. A plant of but very moderate dimensions is required for such performances. Theoretically, a terminal of less than 90 feet in diameter is sufficient to develop an electromotive force of that magnitude, while for antenna currents of from 2,000-4,000 amperes at the usual frequencies, it need not be larger than 30 feet in diameter. In a more restricted meaning, this wireless transmitter is one in which the Hertzwave radiation is an entirely negligible quantity as compared with the whole energy, under which condition the damping factor is extremely small and an enormous charge is stored in the elevated capacity.

Such a circuit may then be excited with impulses of any kind, even of low frequency and it will yield sinusoidal and continuous oscillations like those of an alternator. Taken in the narrowest significance of the term, however, it is a resonant transformer which, besides possessing these qualities, is accurately proportioned to fit the globe and its electrical constants and properties, by virtue of which design it becomes highly efficient and effective in the wireless transmission of energy.

Distance is then ABSOLUTELY ELIMINATED, THERE BEING NO DIMINUATION IN THE INTENSITY of the transmitted impulses. It is even

possible to make the actions increase with the distance from the plane, according to an exact mathematical law. This invention was one of a number comprised in my "World System" of wireless transmission which I undertook to commercialise on my return to New York in 1900.

As to the immediate purposes of my enterprise, they were clearly outlined in a technical statement of that period from which I quote, "The world system has resulted from a combination of several original discoveries made by the inventor in the course of long continued research and experimentation. It makes possible not only the instantaneous and precise wireless transmission of any kind of signals, messages or characters, to all parts of the world, but also the inter-connection of the existing telegraph, telephone, and other signal stations without any change in their present equipment. By its means, for instance, a telephone subscriber here may call up and talk to any other subscriber on the Earth. An inexpensive receiver, not bigger than a watch, will enable him to listen anywhere, on land or sea, to a speech delivered or music played in some other place, however distant."

These examples are cited merely to give an idea of the possibilities of this great scientific advance, which annihilates distance and makes that perfect natural conductor, the Earth, available for all the innumerable purposes which human ingenuity has found for a line-wire. One far-reaching result of this is that any device capable of being operated through one or more wires (at a distance obviously restricted) can likewise be actuated, without artificial conductors and with the same

facility and accuracy, at distances to which there are no limits other than those imposed by the physical dimensions of the earth. Thus, not only will entirely new fields for commercial exploitation be opened up by this ideal method of transmission, but the old ones vastly extended. The World System is based on the application of the following import and inventions and discoveries:

1) The Tesla Transformer: This apparatus is in the production of elec-28.The Strange Life of Nikla Tesla trical vibrations as revolutionary as gunpowder was in warfare. Currents many times stronger than any ever generated in the usual ways and sparks over one hundred feet long, have been produced by the inventor with an instrument of this kind.

2) The Magnifying Transmitter: This is Tesla's best invention, a peculiar transformer specially adapted to excite the earth, which is in the transmission of electrical energy when the telescope is in astronomical observation. By the use of this marvellous device, he has already set up electrical movements of greater intensity than those of lightening and passed a current, sufficient to light more than two hundred incandescent lamps, around the Earth.

3) The Tesla Wireless System: This system comprises a number of improvements and is the only means known for transmitting economically electrical energy to a distance without wires. Careful tests and measurements in connection with an experimental station of great activity, erected by the inventor in Colorado, have demonstrated that power in any desired amount can be conveyed, clear across the Globe if necessary, with a loss not exceeding a few per

cent.
4) The Art of Individualisation: This invention of Tesla is to primitive Tuning, what refined language is to unarticulated expression. It makes possible the transmission of signals or messages absolutely secret and exclusive both in the active and passive aspect, that is, non-interfering as well as non-interferable. Each signal is like an individual of unmistakable identity and there is virtually no limit to the number of stations or instruments which can be simultaneously operated without the slightest mutual disturbance.
5) The Terrestrial Stationary Waves: This wonderful discovery, popularly explained, means that the Earth is responsive to electrical vibrations of definite pitch, just as a tuning fork to certain waves of sound. These particular electrical vibrations, capable of powerfully exciting the Globe, lend themselves to innumerable uses of great importance commercially and in many other respects.
The “first World System” power plant can be put in operation in nine months. With this power plant, it will be practicable to attain electrical activities up to ten million horse-power and it is designed to serve for as many technical achievements as are possible without due expense. Among these are the following:
1) The inter-connection of existing telegraph exchanges or offices all over the world;
2) The establishment of a secret and non-interferable government telegraph service;
3) The inter-connection of all present telephone exchanges or offices around the Globe;
4) The universal distribution of general news by telegraph or telephone, in

conjunction with the Press;
5) The establishment of such a “World System” of intelligence transmission for
exclusive private use;
6) The inter-connection and operation of all stock tickers of the world;
7) The establishment of a World system — of musical distribution, etc.;
8) The universal registration of time by cheap clocks indicating the hour with
astronomical precision and requiring no attention whatever;
9) The world transmission of typed or hand-written characters, letters, checks, etc.;
10) The establishment of a universal marine service enabling the navigators of all
ships to steer perfectly without compass, to determine the exact location, hour and
speak; to prevent collisions and disasters, etc.;

11) The inauguration of a system of world printing on land and sea;
12) The world reproduction of photographic pictures and all kinds of drawings or
records...”
I also proposed to make demonstration in the wireless transmission of power on a
small scale, but sufficient to carry conviction. Besides these, I referred to other and
incomparably more important applications of my discoveries which will be
disclosed at some future date. A plant was built on Long Island with a tower 187
feet high, having a spherical terminal about 68 feet in diameter. These dimensions
were adequate for the transmission of virtually any amount of energy. Originally,
only from 200 to 300 K.W. were provided, but I intended to employ later several
thousand horsepower. The transmitter was to emit a wave-complex of special
characteristics and I had devised a unique method of

telephonic control of any
amount of energy. The tower was destroyed two years ago
(1917) but my projects
are being developed and another one, improved in some
features will be
constructed.
On this occasion I would contradict the widely circulated
report that the structure
was demolished by the Government, which owing to war
conditions, might have
created prejudice in the minds of those who may not know
that the papers, which
thirty years ago conferred upon me the honour of American
citizenship, are always
kept in a safe, while my orders, diplomas, degrees, gold
medals and other
distinctions are packed away in old trunks. If this report
had a foundation, I would
have been refunded a large sum of money which I expended in
the construction of
the tower. On the contrary, it was in the interest of the
Government to preserver it,
particularly as it would have made possible, to mention just
one valuable result, the
location of a submarine in any part of the world. My plant,
services, and all my
improvements have always been at the disposal of the
officials and ever since the
outbreak of the European conflict, I have been working at a
sacrifice on several
inventions of mine relating to aerial navigation, ship
propulsion and wireless
transmission, which are of the greatest importance to the
country. Those who are
well informed know that my ideas have revolutionised the
industries of the United
States and I am not aware that there lives an inventor who
has been, in this respect,
as fortunate as myself, — especially as regards the use of
his improvements in the
war.

I have refrained from publicly expressing myself on this subject before, as it seemed improper to dwell on personal matters while all the world was in dire trouble. I would add further, in view of various rumours which have reached me, that Mr. J. Pierpont Morgan did not interest himself with me in a business way, but in the same large spirit in which he has assisted many other pioneers. He carried out his generous promise to the letter and it would have been most unreasonable to expect from him anything more. He had the highest regard for my attainments and gave me every evidence of his complete faith in my ability to ultimately achieve what I had set out to do. I am unwilling to accord to some small-minded and jealous individuals the satisfaction of having thwarted my efforts. These men are to me nothing more than microbes of a nasty disease. My project was retarded by laws of nature. The world was not prepared for it. It was too far ahead of time, but the same laws will prevail in the end and make it a triumphal success.

30.The Strange Life of Nikla Tesla

Chapter 6

No subject to which I have ever devoted myself has called for such concentration of mind, and strained to so dangerous a degree the finest fibres of my brain, as the systems of which the Magnifying transmitter is the foundation. I put all the intensity and vigour of youth in the development of the rotating field discoveries, but those early labours were of a different character. Although strenuous in the extreme, they did not involve that keen and exhausting discernment which had to be exercised in attacking the many problems of the wireless.

Despite my rare physical endurance at that period, the abused nerves finally rebelled and I suffered a complete collapse, just as the consummation of the long and difficult task was almost in sight. Without doubt I would have paid a greater penalty later, and very likely my career would have been prematurely terminated, had not providence equipped me with a safety device, which seemed to improve with advancing years and unfailingly comes to play when my forces are at an end. So long as it operates I am safe from danger, due to overwork, which threatens other inventors, and incidentally, I need no vacations which are indispensable to most people. When I am all but used up, I simply do as the darkies who "naturally fall asleep while white folks worry."

To venture a theory out of my sphere, the body probably accumulates little by little a definite quantity of some toxic agent and I sink into a nearly lethargic state which lasts half an hour to the minute. Upon awakening I have the sensation as though the events immediately preceding had occurred very long ago, and if I attempt to continue the interrupted train of thought I feel veritable nausea. Involuntarily, I then turn to other and am surprised at the freshness of the mind and ease with which I overcome obstacles that had baffled me before. After weeks or months, my passion for the temporarily abandoned invention returns and I invariably find answers to all the vexing questions, with scarcely any effort. In this connection, I will tell of an extraordinary experience which may be of interest to students of psychology.

I had produced a striking phenomenon with my grounded transmitter and was

endeavouring to ascertain its true significance in relation to the currents propagated through the earth. It seemed a hopeless undertaking, and for more than a year I worked unremittingly, but in vain. This profound study so entirely absorbed me, that I became forgetful of everything else, even of my undermined health. At last, as I was at the point of breaking down, nature applied the preservative inducing lethal sleep. Regaining my senses, I realised with consternation that I was unable to visualise scenes from my life except those of infancy, the very first ones that had entered my consciousness. Curiously enough, these appeared before my vision with startling distinctness and afforded me welcome relief. Night after night, when retiring, I would think of them and more and more of my previous existence was revealed. The image of my mother was always the principal figure in the spectacle that slowly unfolded, and a consuming desire to see her again gradually took possession of me. This feeling grew so strong that I resolved to drop all work and satisfy my longing, but I found it too hard to break away from the laboratory, and several months elapsed during which I had succeeded in reviving all the impressions of my past life, up to the spring of 1892. In the next picture that came out of the mist of oblivion, I saw myself at the Hotel de la Paix in Paris, just coming to from one of my peculiar sleeping spells, which had

been caused by prolonged exertion of the brain. Imagine the pain and distress I felt, when it flashed upon my mind that a dispatch was handed to me at that very moment, bearing the sad news that my mother was dying. I

remembered how I
made the long journey home without an hour of rest and how she passed away after
weeks of agony.
It was especially remarkable that during all this period of partially obliterated
memory, I was fully alive to everything touching on the subject of my research. I
could recall the smallest detail and the least insignificant observations in my
experiments and even recite pages of text and complex mathematical formulae.
My belief is firm in a law of compensation. The true rewards are ever in proportion
to the labour and sacrifices made. This is one of the reasons why I feel certain that
of all my inventions, the magnifying Transmitter will prove most important and
valuable to future generations. I am prompted to this prediction, not so much by
thoughts of the commercial and industrial revolution which it will surely bring
about, but of the humanitation consequences of the many achievements it makes
possible. Considerations of mere utility weigh little in the balance against the higher
benefits of civilisation. We are confronted with portentous problems which can not
be solved just by providing for our material existence, however abundantly. On the
contrary, progress in this direction is fraught with hazards and perils not less
menacing than those born from want and suffering. If we were to release the energy
of atoms or discover some other way of developing cheap and unlimited power at
any point on the globe, this accomplishment, instead of being a blessing, might
bring disaster to mankind in giving rise to dissension and anarchy, which would
ultimately result in the enthronement of the hated regime of

force. The greatest
good will come from technical improvements tending to unification and harmony,
and my wireless transmitter is preeminently such. By its means, the human voice
and likeness will be reproduced everywhere and factories driven thousands of miles
from waterfalls furnishing power. Aerial machines will be propelled around the
earth without a stop and the sun’s energy controlled to create lakes and rivers for
motive purposes and transformation of arid deserts into fertile land. Its introduction
for telegraphic, telephonic and similar uses, will automatically cut out the statics
and all other interferences which at present, impose narrow limits to the application
of the wireless. This is a timely topic on which a few words might not be amiss.
During the past decade a number of people have arrogantly claimed that they had
succeeded in doing away with this impediment. I have carefully examined all of the
arrangements described and tested most of them long before they were publicly
disclosed, but the finding was uniformly negative. Recent official statement from
the U.S. Navy may, perhaps, have taught some beguilable news editors how to
appraise these announcements at their real worth. As a rule, the attempts are based
on theories so fallacious, that whenever they come to my notice, I can not help
thinking in a light vein. Quite recently a new discovery was heralded, with a
deafening flourish of trumpets, but it proved another case of a mountain bringing
forth a mouse. This reminds me of an exciting incident which took place a year ago,
when I was conducting my experiments with currents of high frequency.

Steve Brodie had just jumped off the Brooklyn Bridge. The feat has been vulgarised since by imitators, but the first report electrified New York. I was very impressionable then and frequently spoke of the daring printer. On a hot afternoon I felt the necessity of refreshing myself and stepped into

one of the popular thirty thousand institutions of this great city, where a delicious twelve per cent beverage was served, which can now be had only by making a trip to the poor and devastated countries of Europe. The attendance was large and not over-distinguished and a matter was discussed which gave me an admirable opening for the careless remark, “This is what I said when I jumped off the bridge.” No sooner had I uttered these words, than I felt like the companion of Timothens, in the poem of Schiller. In an instant there was pandemonium and a dozen voices cried, “It is Brodie!” I threw a quarter on the counter and bolted for the door, but the crowd was at my heels with yells, - “Stop, Steeve!”, which must have been misunderstood, for many persons tried to hold me up as I ran frantically for my haven of refuge. By darting around corners I fortunately managed, through the medium of a fire escape, to reach the laboratory, where I threw off my coat, camouflaged myself as a hard-working blacksmith and started the forge. But these precautions proved unnecessary, as I had eluded my pursuers. For many years afterward, at night, when imagination turns into spectres the trifling troubles of the day, I often thought, as I tossed on the bed, what my fate would have been, had the mob caught me and found out that I was not Steve Brodie!

Now the engineer who lately gave an account before a technical body of a novel remedy against statics based on a "heretofore unknown law of nature," seems to have been as reckless as myself when he contended that these disturbances propagate up and down, while those of a transmitter proceed along the earth. It would mean that a condenser as this globe, with its gaseous envelope, could be charged and discharged in a manner quite contrary to the fundamental teachings propounded in every elemental text book of physics. Such a supposition would have been condemned as erroneous, even in Franklin's time, for the facts bearing on this were then well known and the identity between atmospheric electricity and that developed by machines was fully established. Obviously, natural and artificial disturbances propagate through the earth and the air in exactly the same way, and both set up electromotive forces in the horizontal, as well as vertical sense.

Interference can not be overcome by any such methods as were proposed. The truth is this: In the air the potential increases at the rate of about fifty volts per foot of elevation, owing to which there may be a difference of pressure amounting to twenty, or even forty thousand volts between the upper and lower ends of the antenna. The masses of the charged atmosphere are constantly in motion and give up electricity to the conductor, not continuously, but rather disruptively, this producing a grinding noise in a sensitive telephonic receiver. The higher the terminal and the greater the space encompast by the wires, the more pronounced is the effect, but it must be understood that it is purely

local and has little to do with
the real trouble.
In 1900, while perfecting my wireless system, one form of apparatus compressed
four antennae. These were carefully calibrated in the same frequency and connected
in multiple with the object of magnifying the action in receiving from any direction.
When I desired to ascertain the origin of the transmitted impulse, each diagonally
situated pair was put in series with a primary coil energising the detector circuit. In
the former case, the sound was loud in the telephone; in the latter it ceased, as
expected, – the two antennae neutralising each other, but the true statics manifested
themselves in both instances and I had to devise special preventives embodying
different principles. By employing receivers connected to two points of the ground,
as suggested by me long ago, this trouble caused by the charged air, which is very
serious in the structures as now built, is nullified and besides, the liability of all
kinds of interference is reduced to about one-half because of the directional
character of the circuit. This was perfectly self-evident, but

came as a revelation to some simple-minded wireless folks whose experience was
confined to forms of apparatus that could have been improved with an axe, and they
have been disposing of the bear’s skin before killing him. If it were true that strays
performed such antics, it would be easy to get rid of them by receiving without
aerials. But, as a matter of fact, a wire buried in the ground which, conforming to
this view, should be be absolutely immune, is more susceptible to certain

extraneous impulses than one placed vertically in the air. To state it fairly, a slight progress has been made, but not by virtue of any particular method or device. It was achieved simply by discerning the enormous structures, which are bad enough for transmission but wholly unsuitable for reception and adopting a more appropriate type of receiver. As I have said before, to dispose of this difficulty for good, a radical change must be made in the system and the sooner this is done the better.

It would be calamitous, indeed, if at this time when the art is in its infancy and the vast majority, not excepting even experts, have no conception of its ultimate possibilities, a measure would be rushed through the legislature making it a government monopoly. This was proposed a few weeks ago by Secretary Daniels and no doubt that distinguished official has made his appeal to the Senate and House of Representatives with sincere conviction. But universal evidence unmistakably shows that the best results are always obtained in healthful commercial competition. there are, however, exceptional reasons why wireless should be given the fullest freedom of development. In the first place, it offers prospects immeasurably greater and more vital to betterment of human life than any other invention or discovery in the history of man. Then again, it must be understood that this wonderful art has been, in its entirety, evolved here and can be called “American” with more right and propriety than the telephone, the incandescent lamp or the aeroplane.

Enterprising press agents and stock jobbers have been so successful in spreading

misinformation, that even so excellent a periodical as the *Scientific American*, accords the chief credit to a foreign country. The Germans, of course, gave us the Hertz waves and the Russian, English, French and Italian experts were quick in using them for signalling purposes. It was an obvious application of the new agent and accomplished with the old classical and unimproved induction coil, scarcely anything more than another kind of heliography. The radius of transmission was very limited, the result attained of little value, and the Hertz oscillations, as a means for conveying intelligence, could have been advantageously replaced by sound waves, which I advocated in 1891. Moreover, all of these attempts were made three years after the basic principles of the wireless system, which is universally employed today, and its potent instrumentalities had been clearly described and developed in America.

No trace of those Hertzian appliances and methods remains today. We have proceeded in the very opposite direction and what has been done is the product of the brains and efforts of citizens of this country. The fundamental patents have expired and the opportunities are open to all. The chief argument of the Secretary is based on interference. According to his statement, reported in the New York Herald of July 29th, signals from a powerful station can be intercepted in every village in the world. In view of this fact, which was demonstrated in my experiments in 1900, it would be of little use to impose restrictions in the United States.

As throwing light on this point, I may mention that only recently an odd looking

gentleman called on me with the object of enlisting my services in the construction
of world transmitters in some distant land. “We have no money,”

he said, “but carloads of solid gold, and we will give you a liberal amount.” I told
him that I wanted to see first what will be done with my inventions in America, and
this ended the interview. But I am satisfied that some dark forces are at work, and as
time goes on the maintenance of continuous communication will be rendered more
difficult. The only remedy is a system immune against interruption. It has been
perfected, it exists, and all that is necessary is to put it in operation.
The terrible conflict is still uppermost in the minds and perhaps the greatest
importance will be attached to the magnifying Transmitter as a machine for attack
and defence, more particularly in connection with TELAUTAMATICS. This
invention is a logical outcome of observations begun in my boyhood and continued
throughout my life. When the first results were published, the Electrical Review
stated editorially that it would become one of the “most potent factors in the
advance of civilisation of mankind.” The time is not distant when this prediction
will be fulfilled. In 1898 and 1900, it was offered by me to the Government and
might have been adopted, were I one of those who would go to Alexander’s
shepherd when they want a favour from Alexander!
At that time I really thought that it would abolish war, because of its unlimited
destructiveness and exclusion of the personal element of combat. But while I have
not lost faith in its potentialities, my views have changed

since. War can not be
avoided until the physical cause for its recurrence is
removed and this, in the last
analysis, is the vast extent of the planet on which we live.
Only though annihilation
of distance in every respect, as the conveyance of
intelligence, transport of
passengers and supplies and transmission of energy will
conditions be brought
about some day, insuring permanency of friendly relations.
What we now want
most is closer contact and better understanding between
individuals and
communities all over the earth and the elimination of that
fanatic devotion to
exalted ideals of national egoism and pride, which is always
prone to plunge the
world into primeval barbarism and strife. No league or
parliamentary act of any
kind will ever prevent such a calamity. These are only new
devices for putting the
weak at the mercy of the strong.
I have expressed myself in this regard fourteen years ago,
when a combination of a
few leading governments, a sort of Holy alliance, was
advocated by the late Andrew
Carnegie, who may be fairly considered as the father of this
idea, having given to it
more publicity and impetus than anybody else prior to the
efforts of the President.
While it can not be denied that such aspects might be of
material advantage to some
less fortunate peoples, it can not attain the chief
objective sought. Peace can only
come as a natural consequence of universal enlightenment and
merging of races,
and we are still far from this blissful realisation, because
few indeed, will admit the
reality – that God made man in His image – in which case all
earth men are alike.
There is in fact but one race, of many colours. Christ is

but one person, yet he is of
all people, so why do some people think themselves better
than some other people?
As I view the world of today, in the light of the gigantic
struggle we have
witnessed, I am filled with conviction that the interests of
humanity would be best
served if the United States remained true to its traditions,
true to God whom it
pretends to believe, and kept out of “entangling alliances.”
Situated as it is,
geographically remote from the theatres of impending
conflicts, without incentive to
territorial aggrandisement, with inexhaustible resources and
immense population
thoroughly imbued with the spirit of liberty and right, this
country is placed in a
unique and privileged position. It is

thus able to exert, independently, its colossal strength and
moral force to the benefit
of all, more judiciously and effectively, than as a member
of a league.
I have dwelt on the circumstances of my early life and told
of an affliction which
compelled me to unremitting exercise of imagination and
self-observation. This
mental activity, at first involuntary under the pressure of
illness and suffering,
gradually became second nature and led me finally to
recognise that I was but an
automaton devoid of free will in thought and action and
merely responsible to the
forces of the environment. Our bodies are of such complexity
of structure, the
motions we perform are so numerous and involved and the
external impressions on
our sense organs to such a degree delicate and elusive, that
it is hard for the average
person to grasp this fact. Yet nothing is more convincing to
the trained investigator

than the mechanistic theory of life which had been, in a measure, understood and propounded by Descartes three hundred years ago. In his time many important functions of our organisms were unknown and especially with respect to the nature of light and the construction and operation of the eye, philosophers were in the dark.

In recent years the progress of scientific research in these fields has been such as to leave no room for a doubt in regard to this view on which many works have been published. One of its ablest and most eloquent exponents is, perhaps, Felix le Dantec, formerly assistant of Pasteur. Professor Jacques Loeb has performed remarkable experiments in heliotropism, clearly establishing the controlling power of light in lower forms of organisms and his latest book, "Forced Movements," is revelatory. But while men of science accept this theory simply as any other that is recognised, to me it is a truth which I hourly demonstrate by every act and thought of mine. The consciousness of the external impression prompting me to any kind of exertion, – physical or mental, is ever present in my mind. Only on very rare occasions, when I was in a state of exceptional concentration, have I found difficulty in locating the original impulse. The by far greater number of human beings are never aware of what is passing around and within them and millions fall victims of disease and die prematurely just on this account. The commonest, every-day occurrences appear to them mysterious and inexplicable. One may feel a sudden wave of sadness and rack his brain for an explanation, when he might have noticed that it was caused by a cloud cutting off the rays

of the sun. He may see the
image of a friend dear to him under conditions which he construes as very peculiar,
when only shortly before he has passed him in the street or seen his photograph
somewhere. When he loses a collar button, he fusses and swears for an hour, being
unable to visualise his previous actions and locate the object directly. Deficient
observation is merely a form of ignorance and responsible for the many morbid
notions and foolish ideas prevailing. There is not more than one out of every ten
persons who does not believe in telepathy and other psychic manifestations,
spiritualism and communion with the dead, and who would refuse to listen to
willing or unwilling deceivers?
Just to illustrate how deeply rooted this tendency has become even among the clear-headed
American population, I may mention a comical incident. Shortly before the
war, when the exhibition of my turbines in this city elicited widespread comment in
the technical papers, I anticipated that there would be a scramble among
manufacturers to get hold of the invention and I had particular designs on that man
from Detroit who has an uncanny faculty for accumulating millions. So confident
was I, that he would turn up some day, that I declared this as certain to my secretary
and assistants. Sure enough, one fine morning a body of engineers from the Ford
Motor Company presented them-36.The Strange Life of Nikla Tesla
selves with the request of discussing with me an important project. “Didn’t I tell
you?,” I remarked triumphantly to my employees, and one of them said, “You are
amazing, Mr. Tesla. Everything comes out exactly as you

predict.”
As soon as these hard-headed men were seated, I of course, immediately began to
extol the wonderful features of my turbine, when the spokesman interrupted me and
said, “We know all about this, but we are on a special errand. We have formed a
psychological society for the investigation of psychic phenomena and we want you
to join us in this undertaking.” I suppose these engineers never knew how near they
came to being fired out of my office.
Ever since I was told by some of the greatest men of the time, leaders in science
whose names are immortal, that I am possessed of an unusual mind, I bent all my
thinking faculties on the solution of great problems regardless of sacrifice. For
many years I endeavoured to solve the enigma of death, and watched eagerly for
every kind of spiritual indication. But only once in the course of my existence have
I had an experience which momentarily impressed me as supernatural. It was at the
time of my mother’s death.
I had become completely exhausted by pain and long vigilance, and one night was
carried to a building about two blocks from our home. As I lay helpless there, I
thought that if my mother died while I was away from her bedside, she would surely
give me a sign. Two or three months before, I was in London in company with my
late friend, Sir William Crookes, when spiritualism was discussed and I was under
the full sway of these thoughts. I might not have paid attention to other men, but
was susceptible to his arguments as it was his epochal work on radiant matter,
which I had read as a student, that made me embrace the electrical career. I reflected

that the conditions for a look into the beyond were most favourable, for my mother
was a woman of genius and particularly excelling in the powers of intuition. During
the whole night every fibre in my brain was strained in expectancy, but nothing
happened until early in the morning, when I fell in a sleep, or perhaps a swoon, and
saw a cloud carrying angelic figures of marvellous beauty, one of whom gazed upon
me lovingly and gradually assumed the features of my mother. The appearance
slowly floated across the room and vanished, and I was awakened by an
indescribably sweet song of many voices. In that instant a certitude, which no words
can express, came upon me that my mother had just died. And that was true. I was
unable to understand the tremendous weight of the painful knowledge I received in
advance, and wrote a letter to Sir William Crookes while still under the domination
of these impressions and in poor bodily health. When I recovered, I sought for a
long time the external cause of this strange manifestation and, to my great relief, I
succeeded after many months of fruitless effort.
I had seen the painting of a celebrated artist, representing allegorically one of the
seasons in the form of a cloud with a group of angels which seemed to actually float
in the air, and this had struck me forcefully. It was exactly the same that appeared in
my dream, with the exception of my mother’s likeness. The music came from the
choir in the church nearby at the early mass of Easter morning, explaining
everything satisfactorily in conformity with scientific facts.
This occurred long ago, and I have never had the faintest reason since to change my

views on psychical and spiritual phenomena, for which there is no foundation. The
belief in these is the natural outgrowth of intellectual development. Religious
dogmas are no longer accepted in their orthodox meaning, but every individual
clings to faith in a supreme power of some kind.
37.The Strange Life of Nikola Tesla
We all must have an ideal to govern our conduct and insure contentment, but it is
immaterial whether it be one of creed, art, science, or anything else, so long as it
fulfils the function of a dematerialising force. It is essential to the peaceful existence
of humanity as a whole that one common conception should prevail. While I have
failed to obtain any evidence in support of the contentions of psychologists and
spiritualists, I have proved to my complete satisfaction the automatism of life, not
only through continuous observations of individual actions, but even more
conclusively through certain generalisations. these amount to a discovery which I
consider of the greatest moment to human society, and on which I shall briefly
dwell.
I got the first inkling of this astonishing truth when I was still a very young man, but
for many years I interpreted what I noted simply as coincidences. Namely,
whenever either myself or a person to whom I was attached, or a cause to which I
was devoted, was hurt by others in a particular way, which might be best popularly
characterised as the most unfair imaginable, I experienced a singular and
undefinable pain which, for the want of a better term, I have qualified as “cosmic”
and shortly thereafter, and invariably, those who had inflicted it came to grief. After

many such cases I confided this to a number of friends, who had the opportunity to convince themselves of the theory of which I have gradually formulated and which may be stated in the following few words: Our bodies are of similar construction and exposed to the same external forces. This results in likeness of response and concordance of the general activities on which all our social and other rules and laws are based. We are automata entirely controlled by the forces of the medium, being tossed about like corks on the surface of the water, but mistaking the resultant of the impulses from the outside for the free will. The movements and other actions we perform are always life preservative and though seemingly quite independent from one another, we are connected by invisible links. So long as the organism is in perfect order, it responds accurately to the agents that prompt it, but the moment that there is some derangement in any individual, his self-preservative power is impaired.

Everybody understands, of course, that if one becomes deaf, has his eyes weakened, or his limbs injured, the chances for his continued existence are lessened. But this is also true, and perhaps more so, of certain defects in the brain which drive the automaton, more or less, of that vital quality and cause it to rush into destruction. A very sensitive and observant being, with his highly developed mechanism all intact, and acting with precision in obedience to the changing conditions of the environment, is endowed with a transcending mechanical sense, enabling him to evade perils too subtle to be directly perceived. When he comes in contact with

others whose controlling organs are radically faulty, that sense asserts itself and he
feels the “cosmic” pain.
The truth of this has been borne out in hundreds of instances and I am inviting other
students of nature to devote attention to this subject, believing that through
combined systematic effort, results of incalculable value to the world will be
attained. The idea of constructing an automaton, to bear out my theory, presented
itself to me early, but I did not begin active work until 1895, when I started my
wireless investigations. During the succeeding two or three years, a number of
automatic mechanisms, to be actuated from a distance, were constructed by me and
exhibited to visitors in my laboratory.
In 1896, however, I designed a complete machine capable of a multitude of
operations, but the consummation of my labours was delayed until late in 1897.

This machine was illustrated and described in my article in the Century Magazine
of June, 1900; and other periodicals of that time and when first shown in the
beginning of 1898, it created a sensation such as no other invention of mine has
ever produced. In November, 1898, a basic patent on the novel art was granted to
me, but only after the Examiner-in-Chief had come to New York and witnessed the
performance, for what I claimed seemed unbelievable. I remember that when later I
called on an official in Washington, with a view of offering the invention to the
Government, he burst out in laughter upon my telling him what I had accomplished.
Nobody thought then that there was the faintest prospect of perfecting such a

device. It is unfortunate that in this patent, following the advice of my attorneys, I indicated the control as being affected through the medium of a single circuit and a well-known form of detector, for the reason that I had not yet secured protection on my methods and apparatus for individualisation. As a matter of fact, my boats were controlled through the joint action of several circuits and interference of every kind was excluded.

Most generally, I employed receiving circuits in the form of loops, including condensers, because the discharges of my high-tension transmitter ionised the air in the (laboratory) so that even a very small aerial would draw electricity from the surrounding atmosphere for hours.

Just to give an idea, I found, for instance, that a bulb twelve inches in diameter, highly exhausted, and with one single terminal to which a short wire was attached, would deliver well on to one thousand successive flashes before all charge of the air in the laboratory was neutralised. The loop form of receiver was not sensitive to such a disturbance and it is curious to note that it is becoming popular at this late date. In reality, it collects much less energy than the aerials or a long grounded wire, but it so happens that it does away with a number of defects inherent to the present wireless devices.

In demonstrating my invention before audiences, the visitors were requested to ask questions, however involved, and the automaton would answer them by signs. This was considered magic at the time, but was extremely simple, for it was myself who gave the replies by means of the device.

At the same period, another larger telautomatic boat was

constructed, a photograph
of which was shown in the October 1919 number of the
Electrical Experimenter. It
was controlled by loops, having several turns placed in the
hull, which was made
entirely water-tight and capable of submergence. The
apparatus was similar to that
used in the first with the exception of certain special
features I introduced as, for
example, incandescent lamps which afforded a visible
evidence of the proper
functioning of the machine. These automata, controlled
within the range of vision of
the operator, were, however, the first and rather crude
steps in the evolution of the
art of Telautomatics as I had conceived it.
The next logical improvement was its application to
automatic mechanisms beyond
the limits of vision and at great distances from the centre
of control, and I have ever
since advocated their employment as instruments of warfare
in preference to guns.
The importance of this now seems to be recognised, if I am
to judge from casual
announcements through the press, of achievements which are
said to be
extraordinary but contain no merit of novelty, whatever. In
an imperfect manner it
is practicable, with the existing wireless plants, to launch
an aeroplane, have it
follow a certain approximate course, and perform some
operation at a distance of
many hundreds of miles. A machine of this kind can also be
mechanically
controlled in several ways and I have no doubt

that it may prove of some usefulness in war. But there are
to my best knowledge, no
instrumentalities in existence today with which such an
object could be
accomplished in a precise manner. I have devoted years of

study to this matter and
have evolved means, making such and greater wonders easily realisable.
As stated on a previous occasion, when I was a student at college I conceived a
flying machine quite unlike the present ones. The underlying principle was sound,
but could not be carried into practice for want of a prime-mover of sufficiently great
activity. In recent years, I have successfully solved this problem and am now
planning aerial machines *devoid of sustaining planes, ailerons, propellers, and
other external* attachments, which will be capable of immense speeds and are very
likely to furnish powerful arguments for peace in the near future. Such a machine,
sustained and propelled *entirely by reaction*, is shown on one of the pages of my
lectures, and is supposed to be controlled either mechanically, or by wireless
energy. By installing proper plants, it will be practicable to *project a missile of this
kind into the air and drop it* almost on the very spot designated, which may be
thousands of miles away.
But we are not going to stop at this. Telautomats will be ultimately produced,
capable of acting as if possessed of their own intelligence, and their advent will
create a revolution. As early as 1898, I proposed to representatives of a large
manufacturing concern the construction and public exhibition of an automobile
carriage which, left to itself, would perform a great variety of operations involving
something akin to judgment. But my proposal was deemed chimerical at the time
and nothing came of it.
At present, many of the ablest minds are trying to devise expedients for preventing

a repetition of the awful conflict which is only theoretically ended and the duration
and main issues of which I have correctly predicted in an article printed in the SUN
of December 20, 1914. The proposed League is not a remedy but, on the contrary,
in the opinion of a number of competent men, may bring about results just the
opposite.
It is particularly regrettable that a punitive policy was adopted in framing the terms
of peace, because a few years hence, it will be possible for nations to fight without
armies, ships or guns, by weapons far more terrible, to the destructive action and
range of which there is virtually no limit. Any city, at a distance, whatsoever, from
the enemy, can be destroyed by him and no power on earth can stop him from doing
so. If we want to avert an impending calamity and a state of things which may
transform the globe into an inferno, we should push the development of flying
machines and wireless transmission of energy without an instant’s delay and with
all the power and resources of the nation.
40.COPYRIGHT INFORMATION:

All of the information on this CD-ROM, and contained on the author's website, is copyright 2002 by Tim Ventura. The author is the sole owner of all the documentation contained on the CD-ROM. Any reproduction of this information, either in electronic or physical form, is restricted and requires the explicit permission of Tim Ventura.

FILE FORMAT INFORMATION:

The files on this cd-rom fall into several categories of document types, which may require you to install software on your personal computer to be readable.

1. WORD DOCUMENTS: The entire collection of construction and testing documents have been included in MS-Word format, which can be viewed using either Microsoft Word or MS-Word viewer. The MS-Word viewer is a free download available from Microsoft, Inc.

2. PDF DOCUMENTS: For individuals unable to open MS-Word format documents, I have converted all of the documents on this CD-ROM into the Adobe PDF document format. These files can be opened using the Adobe PDF reader available from Adobe, Inc.

3. GRAPHICS: All of the graphics on this CD-ROM are in the JPEG graphic format, which can be viewed using most available picture editing software. If you are unable to view these files by clicking on them, try opening the files using your web-browser's "Open File" feature.

4. VIDEO: All of the video files on this CD-ROM are in the MPEG file format, which is supported by most video-playback software. If you are unable to view these files by clicking on them, you may be required to download a plugin for either Windows Media Player or Real Media Player.

Radiant Energy:

Unraveling Tesla's Greatest Secret

http://educate-yourself.org

http://educate-yourself.org/radiantenergystory.html

Where in the World is all the Free Energy?

Volume 8, Number 4

editor@nexusmagazine.com
www.nexusmagazine.com

support@free-energy.ws www.free-energy.cc

CURRENT STATE OF TECHNOLOGY

1. Radiant Energy

2. Permanent-Magnet-Powered Motors

3. Mechanical Heaters

4. Super-Efficient Electrolysis

5. Implosion/Vortex Engines

6. Cold Fusion Technology

7. Solar-Assisted Heat Pumps

UNSEEN ENEMIES OF FREE ENERGY TECHNOLOGY

1. The Money Monopoly

2. National Governments

3. Delusion and Dishonesty in the FE Movement

4. A Non-Demanding Public

THE OPPORTUNITY FOR A JUST SOCIETY

About the Author:

www.free-energy.cc
www.adventuresunlimitedpress.com,

Resources: Books

Resources: Websites http://energy21.terrashare.com

www.free-energy.cc

http://jnaudin.free.fr/

www.1dove.com/fe/index.html

www.keelynet.com

www.xogen.com

www.rumormillnews.com

Resources: Patents www.delphion.com/

www.nexusmagazine.com

Attachment.png ¬

Attachment.png ¬

Return to top of page

Go to: Aliens, Abductions And UFO's Page
Go to: The Alien Question Page
Go to: Interview with Zecharia Sitchin
THE TRUTH IS OUT THERE!

The Dark Side Gardner, Satanism, Royalty and the Annunaki

Hyperborea And The Quest For Mystical Enlightenment

The Dark Gods

Brain Zapping - Electronic Mind Control - Deals also with Aliens Part I and II

History Of The Golden Ages

Uncovering The Secret Tradition

Agartha and the Lord of the World

A Prophecy from the Inner Earth?

The Influence Of Vedic Philosophy On Nicola Tesla

Radiant Energy - Unraveling Tesla's Greatest Secret

Vedic Science:The Manifestation Of Kali In The Universe

Unmasking the Grand Deception

The Cosmic Battle

The Cosmic Grand Deception/Theosophical Classic About Atlantis

The Cult Of The Serpent

Stanzas Of Dzayan/Theosophical Classic

The Story Of Hans Hoerbiger's Cosmic Ice Theory

UFO's And The Occult Third Reich

Revised: July 08, 2007 . Communication: discoverer73(at symbol)hotmail.com **Go to Home Page** **Go to Index of All Articles Pages** **Read the Disclaimer** Last modified: July 08, 2007 Copyright © 1999 - 2007 All rights reserved. [Gnostic Liberation Front].
www.gnosticliberationfront.com

Attachment.png ¬

Register	FAQ	Members List	Calendar	Today's Posts	Search	My Blog	Profiles

Renewable Energy Discussion on various alternative energy, renewable energy, & free energy technologies. Also any discussion about the environment, global warming, and other related topics are welcome here.

Attachment.png ¬

	LinkBack (1) Attachment.png ¬	Thread Tools Attachment.png ¬

Attachment.png ¬ #1 (**permalink**)
Attachment.png ¬ 05-11-2007, 08:44 PM

Attachment.png ¬ **Radiant Energy**

The purpose of this thread is to discuss what radiant energy is. Attachment.png ¬Attachment.png ¬Attachment.png ¬Attachment.png ¬ Attachment.png ¬

#2 (**permalink**) Attachment.png ¬ 05-12-2007, 02:34 AM

Attachment.png ¬

@Lindemann

I watched your DVD of lecture on radiant energy. Some of the requirements as I understand them are:

1. The mass of material of primary and

secondary has to be equal as precisely as possible. That is the requirement proposed by Tesla regarding his high frequency coils and especially his flat archimedean spiral coils. I may be way of the track on this one but it seems to me that the amount of the dielectric charge (or rather the density of dielectric lines of force) are in some way proportional to the mass of the conductor or rather to the number of atoms available in

order to resonate and produce radiant energy event. For example I've conducted a number of experiments in which I compared the highly saturated high quality ferrite core with small airgap (in order to increase the saturation point and to store more magnetic flux in the airgap- I'm talking about 0.1mm airgap and smaller number of turns of conductor. I compared it with the extremely heavy coils with smaller core (in this case Metglas

ones- I used them for their high permeability and extremely narrow hysteresis curve) and open geometry (pretty much similar to the Bedini SG coil). Of course one can produce pretty much the same voltage spikes on both coils but the coil with the more conductor mass exhibit a somewhat different properties. For example the discharge of the capacitor filled with the Back-EMF from the ferrite core showed different properties

compared to the discharge of the capacitors filled with the BEMF from the massive coil. I'm talking here mostly about visual and auditive quality of the discharge. My guess is that a mass of conductor definitely plays some role in the way coil produces BEMF.

2. The surface area of the conductors definitely plays a role in radiant energy release. The fact is that a Litz wire or a flat strip of conductor material shows much better

properties dealing with sudden impulses. I also compared several types of wire in the pretty much similar conditions (same core, same number of ampere turns, same current and same saturation of core. The BEMF curve of the Litz wire and flat strip wire are much more steeper (thus more sudden in time) and goes to the much higher voltage. I couldn't believe a geometry could make such a difference but it did. My guess is that a conductor

tube would exhibit pretty much similar characteristics- in fact I used copper tubing for Tesla induction coils primaries and they definitely show more appropriate behavior and less loses than the full conductor profiles. Of course much of that behavior can be attributed to the lower impedance those kind of big surface conductor shows when dealing with sudden impulses. The other thing I observed is that Litz wire coils sometimes gain by

separating of their turns somewhat. The flat strip conductors also benefit if one winds them in a way to be oriented edgewise to each other. It surely lower their inter-capacitance and probably contribute to the lowering of the impedance of coil itself. Skin effect also plays a role in that effect but I'm not sure to what extent.

3. For Tesla resonant system it's advisable to have secondary set to 1/4 wavelength of the resonant frequency.

Tesla himself advise in that direction and although I never experimentally tried that rule I guess there must be some rationale behind it. I know that if some conditions are met a stationary wave can be produced and in energy transfer it plays significant role. To be honest I'm still learning about this stuff so please cope with me as much as you can.

4. When talking about BEMF as a kind of radiant event I've learned

that inductance plays significant role. With higher inductance one usually gets more severe potential gradient change (measuring with an oscilloscope it means one gets higher voltage spikes). With lowering of capacitive component of impedance voltage spikes go even higher- it's probably why flat strip conductor (for one layer coils- I've never tried multilayer coils of this type) shows significant advantage over ordinary

round-profile conductor. It's surface is also extremely large so it could also play a role regarding a skin effect.

So here it is- and although there is so much more I could say about the results I obtained for now I will reduce my ranting on refining my knowledge on the phenomena I talked about. I've based my conclusions on practical experiments but my interpretatio n oethe results might be wrong so feel free to

correct me. I'm always glad if someone disprove my conclusions with solid arguments so that I can learn more about the topic in question. Attachment.png ¬ Attachment.png ¬Attachment.png ¬Attachment.png ¬Attachment.png ¬ Attachment.png ¬

#3 (permalink) Attachment.png ¬ 05-12-2007, 03:51 AM

Attachment.png ¬ **Lighty, excellent!**

Lighty,

Thank you for opening up such an

intelligent conversation. The most important thing here is not to be "right" or "wrong", but that you are learning, experimenting, and thinking deeply about what you are seeing in your experiments! Congratulations.

There are two issues here. The first issue is the PRODUCTION of radiant energy and the second is the EFFICIENT TRANSFER of radiant energy.

The first issue is covered by Tesla in his

work on the "Method of Conversion", that is, the conversion of "normal electricity" into "longitudinal waves of electrostatic force" otherwise known as Radiant Energy. As I show in my DVD, Tesla's Radiant Energy patents clearly state that Radiant Energy is defined as electrostatic charge CONVEYED by Radiant Matter. Radiant Matter is made up of neutral particles of mass at least 100 times smalled than electrons. The general

"Method of Conversion" is to charge an inductor with intermittent DC current, and collect the inductive discharges in a capacitor. Then, discharge the capacitor into another inductor of high self-inductance and low impedance, to raise the voltage even higher for use in lighting systems or stepper type motors. When studying Tesla's "Method of Conversion" it becomes obvious that he was talking about a very broad phenomena. The original

diagram shows SIX different processes, all of which produce variations on the Method.

The term "Radiant Energy" evolved from Tesla's friendship with and admiration of Sir William Crookes. Crookes invented the Radiometer, a device Tesla referred to as the most elegant motor ever devised. Crookes was studying the effects relating to the emissions from incandescent matter. The question was, when a

piece of mass is heated to the point where it starts to emit light and heat, what EXACTLY is coming out of the matter that conveys these properties into the surrounding space? The Radiometer demonstrated that these emissions had MASS and could convey a PHYSICAL FORCE to another object. Tesla came to believe that ANY source of light and heat, such as the Sun, was emitting "whatever" is emitted when MATTER RADIATES!

Whatever that was, was termed "Radiant Matter." Since it could go right through the glass enclosure of the Radiometer WITHOUT disrupting the vacuum inside, the determinatio n was that the particle size was INFINITESIM ALLY SMALL. Tesla's later experiments determined that these Radiant Matter particles where the primary CONVEYOR of electrostatic charge.

When I can, I will discuss the second issue you

bring up.

Peter
Attachment.png ¬Attachment.png ¬Attachment.png ¬Attachment.png ¬ Attachment.png ¬

#4 (permalink)
Attachment.png ¬ 05-12-2007, 06:51 AM

Attachment.png ¬ **back emf vs. collapsed magnetic field**

Quote:

Hi Lighty,

To my understanding, back emf and the collapsed coil's voltage potential are two different things that happen at two different times.

The back emf is happening at the exact same time that a current is induced into a coil. There is the forward induction and then the back emf is counter induced and is explained by the Lenz law.

After the coil is charged and the back emf event happens and the coil power is turned off, the build up magnetic field collapses in reverse polarity and fills the capacitor with voltage potential free or mostly free of electron

current and therefore no back emf in that event since it is for the most part, just voltage potential and not current.

So when Bedini's circuits for example are charging capacitors, it does so with radiant energy or the voltage potential free of current instead of charging a capacitor with back emf or electron current.

Someone else may be able to clarify the distinction between back emf/counter current and

voltage potential/collapsed field Attachment.png ¬Attachment.png ¬Attachment.png ¬Attachment.png ¬ Attachment.png ¬

#5 (**permalink**) Attachment.png ¬ 05-12-2007, 11:11 AM

Attachment.png ¬

I think the main problem is the lack of proper terminology practice. I use the term to label the induced EMF of the higher value and reverse polarity than the voltage of the source inducing the original

current flow (and thus magnetic field) that manifests itself when the conductance of the coil circuit goes suddenly to zero and the magnetic field collapses very fast. Now look at this very vague definition that is somewhat contradictory in itself Counter-electromotive force - Wikipedia, the free encyclopedia

When I think of it I cannot remember a proper term used in electronics. The phenomena

is mostly labeled as detrimental as it might burn out the semiconductor devices (and thus all the protective snubber circuitry usually engineered in the circuitry) and simply calls it "transient phenomena". While that term is appropriate because it is transient phenomena it's at the same time very vague so no luck there. Just look at here Snubber - Wikipedia, the free encyclopedia In relation to the transil diodes it's only mentioned

that they protect circuit from the "voltage spikes". Transient voltage suppression diode - Wikipedia, the free encyclopedia

So what would be the proper terminology for that fast transient phenomena? Attachment.png ¬

Last edited by lighty : 05-12-2007 at 11:13 AM.

Attachment.png ¬Attachment.png ¬Attachment.png ¬Attachment.png ¬ Attachment.png ¬

#6 (permalink) Attachment.png ¬ 05-12-2007, 05:10 PM

Attachment.png ¬ **What is Back EMF?**

Quote:

Lighty, Aaron, and anybody else who cares,

OK folks, here is the real answer. The Wikipedia definition for Counter Electromotive Force (CEMF) actually covers the territory pretty well. It is just a little short on detail. Technically, BACK EMF is the reverse voltage generated in an electric motor that is responsible for holding back the

current when the motor speeds up. My DVD *Electric Motor Secrets* shows exactly what the BACK EMF is and how it works.

CEMF is any other reverse induction in an inductor that slows down the increase or decrease in the applied current. This process is described by Lenz Law, where ANY induced current opposes the movement of the magnetic field that induced it. So, when a DC square-wave pulse is applied to a coil of wire, the voltage

reaches its maximum value nearly instantaneously, whereas the current rises to its maximum value on a ramp-wave with a specific time constant. The current cannot rise instantaneously, like the voltage, because the current in one turn of the coil is causing CEMF inductions in other turns of the coil nearby. So the current fights itself to reach its maximum value. These processes only happen when the current is CHANGING, either rising or dropping

in value.

In the older books, the distinction between these two processes, or the names used to describe them was not made. Many names for electrical processes changed in the 1950's and 1960's. Cycles-per-second became Hertz, CEMF became Back EMF and lots of other things. It is no wonder that there is confusion about these things.

The most important thing to understand in all of this is that all of these

phenomena follow ELECTROMAGNETIC INDUCTION LAWS. Currents are induced in relationship to the strength of the magnetic field and voltages are induced based on the rate-of-change of that flux. In standard transformer operations, voltages in the output winding (secondary) cannot exceed the voltage in the input winding (primary) times the turns ratio between the primary and the secondary.

The

appearance of the very short duration, very high voltage transient, when the current powering an inductor on DC is shut OFF, does not follow these Laws, especially on CLOSE OBSERVATIO N. John Bedini has spent 30 years studying this situation and has articulated most accurately the conditions to maximize the production of this voltage spike. I refer to this situation as the energy of "the inductive collapse",

since that distinguishes it from other varieties of CEMFs. The voltage producing phenomena produces a different QUALITY of electricity, according to the "Method of Conversion" described by Tesla. In fact, charging and discharging an inductor is the FIRST STEP in Tesla's "Method of Conversion" and the first step in the process of producing PURE Radiant Energy.

According to Tesla, the "fast transient phenomena"

is a Longitudinal Wave, a time compressed zone of electrostatic charge or pure voltage, traveling ahead of the electron current. It appears BEFORE the current starts moving and is separate and distinct from it.

I hope this helps.

Peter

Last edited by Peter Lindemann : 05-15-2007 at 05:33 AM.

Attachment.png ¬Attachment.png ¬Attachment.png ¬Attachment.png ¬ Attachment.png ¬

#7 (**permalink**)

Attachment.png ¬ 05-13-2007, 12:54 AM

Attachment.png ¬

Quote:

Well, thank you but I owe that fact mostly to you since it's been your article on MWO published by BSRF which interested me in this area of research in the first place. I really have nothing but respect for your research and for your skills as the talented popularizer of hard to understand topics. Attachment.png ¬Attachment

.png ¬Attachment .png ¬

Quote:

Indeed it's the basic principle used by Tesla as it's obvious simply by observing the designs of various Tesla oscillators (as he called them himself). There is one thing I observed that is not so obvious at the first look. The polarity of the "fast transient phenomena" of the induction discharge used will to some degree determine the behavior of the

system. For example I discovered by experiment that the - polarity of the inductive discharge doesn't behave the same as the + polarity of the inductive discharge. One would think that they're the same because it's the same if you watch either polarity voltage on the oscilloscope but in reality there are some strange things going on with semiconductors when using - polarity of the inductive discharge as well as some

very odd behavior of the oscilloscope probe itself. I suspect that grounding of the oscilloscope is interacting with the - polarity of inductive discharge and it causes some serious troubles during the measuremen t rendering them practically unusable. I alway wondered why Bedini uses handheld oscilloscope. The thing about handhelds is that they should behave much more stable because of their floating power supply is not

connected to ground in any way.

Also, if one end of the inductive discharge coil is grounded the transient voltage effect is diminished to some extent or at least changed slightly in it's nature. My guess is that any ground path in the circuit will simply allow the excessive dielectric charge to be leveled out with the surrounding media and thus effectively neutralizing it to some extent. Maybe I'm mistaken but to me it seems only

logical.

As I wrote earlier there are some rules that I find must be observed in order to get the better results but I was wondering if you could elaborate some more on the best design of the coils for inductive discharge and on the methods of achieving the highest inductance with least impedance. I mean one could lower the capacitive component of impedance the way I described before but is there some other things that should

be observed in order to achieve optimal results?

Your input on this matter would be much appreciated.
Attachment.png ¬
Attachment.png ¬Attachment.png ¬Attachment.png ¬Attachment.png ¬
Attachment.png ¬

#8 (permalink)
Attachment.png ¬ 05-13-2007, 01:18 AM

Attachment.png ¬

Quote:

OK, now that is indeed a good description of what is going on and I choose to

use that term in the future instead of the more vague Back-EMF. Attachment.png ¬

Quote:

Indeed. Now, it would be most useful if one could limit the movement of the electrons during the charging of capacitors with the inductive collapse voltage or rather with the dielectric charge. One could of course try putting an inductor between inductive collapse inductor and the capacitor in order to

limit the electron flow to capacitor. Now, if that capacitor is then discharged into next inductor and then the same electron move limiting inductor is used to limit the electron flow to the next stage capacitor one could maybe make a kind of cascade connection to purify the dielectric charge toward the end of such cascade. Do you have any ideas on how to do that?

In one experiment I used + polarity of the inductive collapse and

I put an aircore inductor in series with it. Now, when the opposite end of the series inductor was slowly removed from the ground (to where it was connected in the first place) there was produced an extremely powerful continuous arc of the most peculiar nature (of course the inductive collapse coil was in the high frequency function all the time). First of all it was a rather constant arc without any interruptions and it could be drawn a

few millimeters before becoming extinguished. The other peculiar thing was the fact that the arc produced a sound just like the high frequency plasma. The spectra of arc was green to blue and it produced extreme heat enough for me to weld two small pieces of steel together. And all of that exclusively by using the inductive discharge of very small magnitude and with rather low power used to power the inductive collapse coil

with rather low voltages gained in the range of 95-120V but I must again accentuate the fact that I used the + polarity of the inductive collapse. My guess is that a kind of positive plasma was induced that showed some rather peculiar phenomena. Now, I tried doing the same with the - polarity of the inductive collapse but I was simply unable to make anything work because the system had common ground and it rendered extraction of the - polarity

practically impossible.

Quote:

You're being most helpful indeed! Attachment.png ¬ Attachment.png ¬Attachment.png ¬Attachment.png ¬Attachment.png ¬ Attachment.png ¬

#9 (**permalink**) Attachment.png ¬ 05-13-2007, 10:43 AM

Attachment.png ¬

Hi Lighty,

Have you tried a caduceus coil? It's supposed to have no impedance at all and a very narrow

induction field in that, if you want to get two coils in resonance you have to align them with the precision of a laser beam. Here you can download a doc.:

http://www.stealthskater.com/Documen...E/Caduceus.doc

regards

Mario
Attachment.png ¬Attachment.png ¬Attachment.png ¬Attachment.png ¬ Attachment.png ¬

#**10** (**permalink**)
Attachment.png ¬ 05-13-2007, 12:02 PM

Attachment.png ¬

@Mario

No, I didn't try using Caduceus coil for the purpose of inductive discharge. I could try it in the next time period in order to discern the truth from myth. Lindemann got it right- there is a lot of theoretical work out there but much less practical experiments to prove or disprove those theories.

But you gave me an incentive to try it- at least to see if

the claims about extremely low impedance are correct.Attachment.png ¬ Attachment.png ¬Attachment.png ¬Attachment.png ¬Attachment.png ¬ Attachment.png ¬

#11 (permalink) Attachment.png ¬ 05-13-2007, 12:16 PM

Attachment.png ¬

Hi Lighty,

I'm experimenting myself working on John's solid state circuits. I will try a caduceus coil soon, but first I have a

lot of different options to test. Let me know how it works out if you get a chance to play with it!

regards

Mario
Attachment.png ¬Attachment.png ¬Attachment.png ¬Attachment.png ¬ Attachment.png ¬

#12 (permalink) Attachment.png ¬ 05-13-2007, 06:24 PM

Attachment.png ¬ **Lighty, two answers.....**

Lighty,

You are really learning this material, and

it is very gratifying to see.

OK, how do you separate the electron flow (current) from the neutral particle flow (voltage)? Believe it or not, Tesla's simple method does it. So does John Bedini's methods. When an inductor is charged with DC current, the intensity of its magnetic field is described by the "ampere-turns" of the coil. When the magnetic field discharges, the voltage it produces is described by the "rate-of-change" of

the flux. The flux changes are resisted by themselves, as we have discussed, due to Lenz Law effects.

So, if you discharge your inductive collapse energy into a capacitor, here is what happens. If the capacitor starts at ZERO volts, the first few inductive collapses deliver CURRENT pulses to bring the capacitor up to the voltage level of the source powering the coil. As this process continues, once the voltage in the capacitor

gets ABOVE the power source charging the coil, the balance switches, and the coil must start generating more voltage to keep getting above the voltage already in the capacitor. If you have a current probe on your oscilloscope, watch the current pulses going into the cap. The energy of the inductive collapse constantly adjusts to produce more and more voltage and less and less current to keep the capacitor charging up.

Now it gets interesting. IF your inductor has a magnetic field that is completely closed down, like a standard transformer, the voltage level you can charge your capacitor to is only a few times higher than your power source. But, as John Bedini has shown, if the inductor is totally OPEN to the environment, (no closed magnetic field) the voltage produced by the inductive collapse can easily attain 30 times the level of your power supply. With

really good air-core coils, I have seem some of John's oscillators produce voltages 50 times higher than the supply.

The question is why? The answer is LENZ LAW! As the capacitor charges up above the supply voltage, current CANNOT be pushed into the capacitor by standard ELECTROMAGNETIC INDUCTION LAWS. There is NO turns ratio gain for voltage production, so all voltage gain is by Tesla's ELECTROSTATIC

INDUCTION LAWS. As the current in the discharge drops, the magnetic field can collapse faster and faster because the Back EMF caused by current is diminishing. This INCREASES the "rate-of-change" of flux and the voltage can rise to higher values.

At a certain point, there is no current left, at which point the voltage can rise to VERY HIGH VALUES. This is what Tesla discovered as he scaled these systems up.

So, the coil

design suitable to receive the discharge of this capacitor is the primary coil of Tesla's flat spiral or conical coil "TRANSFORMER". That primary coil is always described as "a few turns of stout wire or copper strap." Look at the designs of the coils built by Eric Dollard in the old Borderlands videos. Why? The capacitor can take all of the VOLTAGE you put in it and discharge it in less than a microsecond, creating a HUGE CHANGE of dielectric flux, the

quality of which is very low on electron movement. This is the time compressed electrostatic wave. The time-compression is all the time it took to charge the cap is given back in an instant.

The other thing you are seeing is the truth that "electricity is electricity" is a false theory. Electricity can and does appear as a wide variety of different QUALITIES of energy, depending on how the circuit is set up. Only experimental work will

show you this. So, again, congratulations.

Keep up the great work.

Peter
Attachment.png ¬Attachment.png ¬Attachment.png ¬Attachment.png ¬ Attachment.png ¬

#13 (permalink) Attachment.png ¬ 05-13-2007, 09:58 PM

Attachment.png ¬

Quote:

Indeed you're right- the effects you're describing are exactly what I was referring to in one of my

earlier posts. I called it a "transformer effect" because in those first few pulses when the electron flow is charging the capacitor one can observe that there is anomalous current consumption going on in the "primary". I suspected that it also has something to do with the fact that Bedini is using a full bridge rectifier in his "secondary" and that such configuration is allowing for inductive coupling to transfer energy to the

capacitor. I then used only a single diode in order to reduce that effect caused by inductive transfer from "primary" to "secondary". Indeed, a single diode did reduce the anomalous current consumption on the "primary" during the "charging phase" prior to inductive collapse. It's easily seen with the current clamp and fast DSO. It was then that by chance I observed that the negative and positive polarity of the inductive collapse

charge doesn't behave the same way. I won't go further into that because I already wrote about that.

Quote:

In fact 50 times higher voltage is easily achieved if a proper geometry, a proper core material and electronics are used. I can normally achieve a 18V/900V ratio and more is possible but for some reasons of design I have to use the semiconductors in the capacitive discharge circuit and I have to reduce voltage to remain <1kV to prevent a possible semiconductor voltage breakthrough. As I discovered several

#14 (permalink)
Attachment.png
¬ 05-14-2007, 09:19 AM

Attachment.png ¬ **question to Dr. Lindemann**

Dear Dr. Lindemann

As I understand to create the time compressed electrostatic wave and HUGE CHANGE of dielectric flux in the flat spiral or conical coil "TRANSFORMER" the spark gap is an important medium.

From the personal writings of Nikola Tesla, as well as from your lectures I

understand that dialectrica used in a spark gap is very important.

Above you discussed the first step of radiant energy conversion, please allow me to scrutinize and analyze the second step.

In one of your lectures you said that the spike must be created in a way in the spark gap, that it will crack only once.

Tesla in in his personal notes says the same - the electric ark must be avoided. He

describes that this electric ark is created in conductive gases, such as air, on the molecular level and the molecules are charged and discharged that quickly that thereby light is created. In this way light currents are caused and the energy is lost, therefore he made a magnetic spark gap to interrupt the electric ark. The best would be a dialectrica, such as vacuum, or something similar, that would lock up the spike, thus isolating it, while it 'bolts'

through the spark gap.

The external appearance would be that 'is cracks only once', since no electric ark is created.

Could you give some suggestion on what dialectrica would be suitable for this kind of spark gap?

My greatest sympathies go towards vacuum tubes, but since they are very difficult to be manufacture d, I would do a compromise and try liquid dialectrica, such as compressing transformer-oil, liquid hexane, or other liquid dialectrica in

#15 (permalink)
Attachment.png
¬ 05-15-2007, 05:12 AM

Attachment.png ¬ **Let's look at fundamentals..**

Quote:

Shad,

Dollard used large vacuum triodes for his Magnifying Transmitter, and glass enclosed hydrogen spark arresters for the other BSRF demonstrations.

But let's start at the beginning. What was Tesla trying to do? He was trying to produce a

simple DC square-wave pulse train. But he didn't have ANY electronic control devices. No 555 timer chips. No transistors. No vacuum tubes. He only had coils, capacitors, mechanical contacters, and spark gaps.

So, what does Tesla's longitudinal electrostatic wave-front look like? It looks like a DC square-wave pulse train where the pulse repetition rate is one million impulses per second, the duty-cycle is 10% On and 90% OFF,

and the voltage in each impulse is 50,000 volts DC or more. This is what Tesla wants the circuit to do. This is what he wants to create by the discharge of his capacitor stage in the circuit.

So, if the spark gap is his "circuit controller" then he only wants a "single crack" each time the capacitor discharges. Just a single, unidirectional impulse of electrostatic charge to proceed forward before the circuit shuts off again. Then, the capacitor can

charge up again for the 900 nanoseconds the spark gap is quiet and then discharge all of the stored energy again in 100 nanoseconds . Then repeat indefinitely.

It creates a "staccato of electrostatic bursts." Don't make this mysterious, because it is not. It is no more difficult to understand than the output of a 555 timer chip. Its just that we are talking about very high voltage DC, and very high pulse repetition rates. What is difficult is

finding the circuit components that allow you to create these conditions without self-destructing!

In my *Tesla's Radiant Energy* DVD I go through all of Tesla's patents and discuss the various methods he used. They included spark gaps quenched by magnets, spark gaps quenched by blasts of hot air, spark gaps in insulating oil, spark gaps across rotating contacters. All of these methods work to one degree or another.

In the 1920's, as vacuum tubes started becoming available, John Bedini and I are convinced that Tesla went to Lee DeForest and had him build the first experimental Thyratrons. This is a family of circuit controlling devices specifically designed to conduct a unidirectional impulse, only when triggered, and then automatically shut off when the voltage drops to ZERO. This is most easily seen today in the function of the

Thyrister, the simplest of which is the SCR. The problem with SCRs today is that they are not designed to shut OFF fast enough for the purposes of these circuits.

I hope this helps.

Peter
Attachment.png ¬Attachment.png ¬Attachment.png ¬Attachment.png ¬ Attachment.png ¬

#16 (permalink) Attachment.png ¬ 05-15-2007, 08:53 PM

Attachment.png ¬

Thank you,

Peter, for your detailed reply!

I am not a blind believer, but prefer to really understand things. Allow me to analyze some more this point.

I disagree with you, but this does not necessarily mean that I am right. It's not about my opinion, nor your opinion, but merely about the truth and scientific facts. Discussing with you, is meant to get there, to see the truth from the right angle. If I am wrong, please

correct me!

[quote=Peter Lindemann;2397]Shad,

Quote:

I think things are not that easy, that we can only talk about very high voltage DC, and very high pulse repetition rates. If it was that simple, we would not have to bother so much about inductive collapses, spark gaps, and could simply take a microwave oven and do the
same Attach ment.png ¬

Tesla in his writing clearly says that this has nothing to do

with AC or DC or very high pulse repetition rates. He describes the properties of dielectricity in neat details and I succeeded to reproduce some of these effects, to also practically convince myself that those were not merely some theories in Tesla's head, but they in fact function that way.

For example, Tesla says when a dielectric or electrostatic spark bolts in an air spark-gap it produces an ark, whereby even the air can heat up and light be

caused. He described that light and heat are caused by 'molecular friction' of the air molecules, by charging and discharging. Frequencies with Millions of pulse repetition rates develop here.

My own experiment shows that really light and heat can be developed when an electrostatic spark bolts through the gap. No mystery for me here, rather easy to understand, although I was not really able to measure the frequencies,

but I guess it must be quiet high. I even tried to move dielectric transformer oil or veggie oils by electrostatic discharge, as it is described in some of Tesla's experiments. And – it works. The oil started rotating similar to a tornado. The discharges had a very striking effect on magnetic materials, such as slightly magnetic stainless steel, whereby even the electrodes dissociated. If the electrodes was put into

a dielectric liquid, nothing would happen. Especially fast was the dissociation at the weld-seam. A specific kind of non-magnetic stainless steel in these remained unimpaired. Iron wire by the discharge of these electrostatic discharges heated up that quickly, as Tesla described it, whereby the non-magnetic stainless steel conducted without heating up. Plastic in air will be shot through, like bombed by the sparks, shaving

wholes as done by a molecular machine-gun.

So, all this won’t happen with AC or DC high voltage, as Tesla says in his writings – and I tried it, it really doesn’t work.

So, for me it is nothing mysterious if Tesla says that conductive gases, such as air and other should be avoided, because they destroy the material, causing energy losses.

He depicts his air-magnetic spark-gap as a

compromise, because there losses are caused. The air molecules are charged and discharged and energy is lost as of light and warmth. He explains that if a better dielectrica was used, which would not allow the energy being ‘radiated away’ as light and warmth they system would be more efficient, which makes sense to me.

Maybe I am wrong, but to simply say scalar waves simply are high-voltage staccato DC, in my understandin

g is wrong. As you said yourself in your lectures Tesla described that what we understand as electrons are made of much smaller particles. He didn’t mystify and clearly said that current is made out of molecular electricity, positive and negative electrostatic charges. He claimed that if these two charges unite and cancel and if they are moved on, in the orbit a magnetic field will be caused. And this is the magnetic field in our current, AC or DC, or the magnetic

field in permanent or electro-magnets.

My question now around these spark gaps was: how to reduce losses in a spark gap without unnecessaril y waste dielectricity?

We saw the video from Dollard and it surely all works the way you described it, but I cannot accept that scalar-field are staccato very high pulse repetition rates.

Please don’t take my challenging opinion personal, this merely is a scientific

discussion and analyzing with a friendly mind. No negative criticism.

Best of greetings, Shad
Attachment.png ¬Attachment.png ¬Attachment.png ¬Attachment.png ¬ Attachment.png ¬

#17 (permalink) Attachment.png ¬ 05-16-2007, 01:23 AM

Attachment.png ¬

@Shad

I must concur with you about the fundamental difference

between dielectric field transfer impulse and the electrons current impulse. The most obvious difference is that an dielectric impulse should not produce a movement of electrons in any way or at least reduce them to a minimum. The moment the arc is formed the electron current flow starts and the dielectric field consisting of monopoles is transformed or rather the monopoles are recombined into a dipole electrons thus all the energy is

dissipated in the form of heat and light.

The thyratron is but a triggered switch and while it's suitable for transfer of high currents hydrogen's conductivity is allowing the electrons current to form thus effectively transforming and dissipating dielectric impulse into light and heat.

The analogy about DC square wave with short duty cycle is rather awkward because in the case of what Tesla called

"discharge crack" (or rather the spark instead of arc) the duty cycle duration should be much shorter than 10%. Ideally the duty cycle duration should be infinitesimally short in order to facilitate the potential transfer before the monopoles recombination and electron current flow starts.

One of the ways is to prevent any form of arc forming while allowing the spark to discharge. As Tesla said, any kind of pre-

discharge corona or glow forming is a good sign that the arc is going to form and basically it makes it a bad sign. So, one of the solutions was to use some form of magnetic spark disruptor which original purpose was to allow the spark to jump over but as soon as any arc would start to form a strong magnetic field between electrodes would simply disrupt it. In that way a strong electron flow would get significantly reduced and most of the

discharge waveform ringing would be prevented as well as the potential and current backlash back to the condenser. We're of course talking about ideal circumstances and however well constructed the magnetic disruptor will not yield ideal results. In fact the results are far from ideal but much better than those obtained with the ordinary sparkgap both stationary and rotating.

Another, simpler way to prevent forming of

arc and allowing the spark to jump is the use of the oil filled sparkgap in which the oil is serving the purpose of the dielectric which disallow the forming of strong arc (if the distance between electrodes is set correctly) and which closes the ionized path behind spark. The disadvantage of using this form of sparkgap is the fact that it can be used only at lower frequency range and with limited success compared with the magnetic disruptor.

The advantage of using oil as an dielectric is the fact that in specific circumstance s and configuration the dielectric discharge is being magnified with the dielectric itself. It can be than observed that a spark can then jump at much further distance and it's color is changed from blue to white while there are no temperature changes present whatsoever.

Let me be clear on this one- the magnetic disruptor sparkgap is

far from ideal and it requires a heavy dose of tweaking with several parameters before it works correctly but it's certainly a definite improvement over the ordinary sparkgap. Tesla talked about infinitesimally (ideally) short impulses where no electron current is made possible. That's certainly cannot be achieved with a thyratron no matter how short the duty cycle is. Of course some effects will be noticed but

that's far from the things Tesla described in his lectures.

That's my educated guess and opinion based on reading of Tesla and some practical experiments. Of course that doesn't mean I'm correct in all of my assertions and conclusions.
Attachment.png ¬Attachment.png ¬Attachment.png ¬Attachment.png ¬ Attachment.png ¬

#18 (permalink)
Attachment.png ¬ 05-16-2007, 05:20 AM

Attachment.png ¬ **To Shad and Lighty**

Gentlemen,

I agree with both of you completely. Perhaps the simplicity of my example was too extreme. I was trying to create an image to convey an idea. A DC square-wave was what Tesla was trying to create. But you are both correct, a simple chopped DC electron current was not Tesla's goal. The intermittent timed release of packets of electrostatic charge was the goal. We all agree on

this.

We all understand the situation quite well. That you are both able to get into a detailed description of these circuit functions and describe them in your own words is EXCELLENT. That you are both so clear and confident in your knowledge that you feel free to challenge me, a person you believe to be an expert, is even more IMPRESSIVE. Attachment.png ¬

Tesla was the real expert. I do not consider myself an

expert in this field. We are all just trying to understand what Tesla discovered. I am honored to be able to help you clarify your growing understanding. And that is the point. In the end, it will be YOUR UNDERSTANDING that you have. It is, in fact, impossible for me to convey my understanding to you. The real MEANING of things arises from within your own mind. It is not possible to transfer MEANING from person to person. There is no such thing as "teaching".

There is only "learning" and the opportunity for it.

Personally, I do not believe that total agreement in these discussions is or should be the goal. Honest, intelligent men rarely agree on every detail of a scientific discussion. The goal is the free exchange of ideas and the ability to disagree in a civil manner, with mutual respect. In this regard, I am honored to share my thoughts with you.Attachment.png ¬

Peter

Attachment.png ¬Attachment.png ¬Attachment.png ¬Attachment.png ¬ Attachment.png ¬

#19 (permalink) Attachment.png ¬ 05-16-2007, 06:15 PM

Attachment.png ¬

Dear Peter

Thanks for your nice words!

The purpose of this forum is to exchange ideas and realization, and to individually or jointly try to assemble the radiant-energy-jigsaw-puzzle, how

it works, and how to practically use it, for oneself, the community and well-being in common.

I cannot call myself an expert, for 15 years I have 'theoretically' occupied with this subject matter, and still study on, this is never-ending - and the last eight years I do intensive research and experiments and have innovations on the field of radiant energy.

The theory in the head usually is easy and logical, but to then

practically apply it is often full of obstacles and problems, and really hard work, accompanied by high financial investments.

So, it is not easy, but feasible.

Radiant energy is not only some spook in some free-energy-freaks' brains but real energy! The fact that it is so hard to tap and convert this energy in my eyes only is a lack of knowledge, which in my case like a jigsaw-puzzle, which with the years gets

more and more pieces and I receive a more and more clearer picture of the whole.

I think it is important that we, who have some slight clue of what radiant energy is, and also practically experiment with it, should also exchange and try to boot each other with this knowledge. We should also try to somehow spread the knowledge, because our environment is on the edge and we will leave a destroyed planet without solutions to

our heirs.

Tom Bearden, John Bedini, Jeane Manning, Prof. Meyl, people like you, Peter, and some other researchers of this field who contribute are in my eyes are very significant, as they do not only ignorantly watch how things go on, but try to change something. If nothing more, than at least spread the knowledge, which is one of the most important things.

To add something to

my mail from yesterday - in my practical experiments I realized that with dielectricity also fields can be build up, which are similar to magnetic fields, but much more in interaction with our ambient. The first time I observed this was in my experiments with my Neutrino-egg. When I pumped the water with high velocity through my neutrino-egg a dielectric field built up, which even blocked the current in nearby light bulbs. The lamps went off with a loud blow,

and the fuses burned out. The pump that ran the Neutrino-egg was powered by a 12V battery, and was not connected to that bulb which ran on 220V from the grid. We taped the experiment on video and when my wife brought the lamp closer to the Neutrino-egg, so I could see better, it simply blew off.

The first time we thought this was chance, but it happen very often, and only if the lamp was brought closer to the unit, while this one ran

at high velocity. Back then I did not have any real explanation, why this happened. I back then also reported this to my friend Dr. Patrick Flanagan, who at this time sponsored my work. Also he was quiet baffled and could not really explain the effect. And Dr. Patrick Flanagan back then and still today is THE expert on radiant energy. Later then I learned when a dielectrica charges, it builds up a field, which can even move

magnetic fields.

So the field was that strong, that it blocked the current flow in that light-bulb. Dielectric materials have some kind of permeability for dielectricity, as I see. This would also explain the moving of oil in my experiments. From this it is evident to me that matter is full with these dielectric charges and if such charges are created one has influence on the matter through this energy, whereby the electric

energy which we use in our everyday lives is limited only to conductive materials and electromagn etic devices that can receive it.

Dielectricity can influence everything, all matter without exception. The nicest about this is that our atmosphere and our Earth are charged from space with this kind of energy, and that we only have to find a profitable way to tap and apply it.

So please, if someone has ideas or wants to add something to

this jigsaw puzzle, please stand up now and post it here, share it. If this is too public, also private exchange is possible. I know that there are many readers here that do not like to see this energy become applied for the broad masses…

Best regards,
Shad
Attachment.png ¬Attachment.png ¬Attachment.png ¬Attachment.png ¬ Attachment.png ¬

#20 (permalink) Attachment.png ¬ 05-16-2007, 11:01 PM

Attachment.png ¬

Quote:

While a strong whirling motion of liquid dielectric as well as it's movement in upward direction (against gravity) was interesting enough, even more impressive was the spark discharge magnification effect which proved that polarized and over-saturated dielectric produce a strong dielectric field in it's own vicinity which can significantly

elongate the spark discharge in it's vicinity up to several hundred percent. The effect of such magnified discharge could be felt a meter and half away directly on the skin and hair as the sudden change of pressure of the surrounding media. The same device spark discharge without the dielectric magnification effect produced an effect that could hardly be felt even as close as several centimeters from the point of discharge.

The other effect that I observed only once was in the vicinity of such discharges when an ordinary incandescent lightbulb (with resistive filament and no high vacuum) started to grow it's intensity of light to a significant degree. Even a few days later and after the lightbulb was moved to another location it showed that same stronger light volume which had a different nature of it's visible spectrum much more

like a neon or xenon lamp. Regrettably I was clumsy enough to break the bulb after only but a short measuremen t of it's resistive values (which was within the normal tolerances). To my great disappointme nt we were never able to reproduce that effect again. Attach ment.png ¬

Anyway- I agree with both of you that a scientific discussion must be civilized and often people can only agree to disagree. In fact in science the worst enemy of the further advancement is superego of the scientists who neglect to see beyond their own theories while basking in it's own self-importance. The other enemy is the complacency and worshiping of such people by followers who accept everything the "authority"

#21 (permalink)
Attachment.png
¬ 05-17-2007, 11:08 PM

Attachment.png ¬ **Shad and Lighty**

Gentlemen,

Thank you both for volunteering some of your original experimental findings. Most interesting! I had not heard of any of these effects before, and would like to learn more.

Shad, please tell us more about your "neutrino-egg" device. What is it? How do you run it? What is its primary purpose,

since extinguishing light bulbs at a distance was an unexpected side-effect? Have you come to a deeper understandin g of the effect at this point?

Lighty, have you discovered or theorized a reason for the light bulbs unusual behavior yet?

These are both important discoveries, only experimentat ion could uncover. No amount of brilliant logic could have predicted these events.

I salute you both! Attachment.png ¬

Peter
Attachment.png ¬Attachment.png ¬Attachment.png ¬Attachment.png ¬ Attachment.png ¬

#22 (permalink) Attachment.png ¬ 05-18-2007, 08:26 AM

Attachment.png ¬

Hi Peter et all

Please see my answers below.

Quote:

It is a device in which a neutrino-diffusion-process occurs.
I gave it the name

according to the theory of Prof. DDr. Meyl (www.k-meyl.de) who claims that neutrinos are scalar-waves, such as Dr. Tesla had described them.

It received the 'nickname' neutrino-egg from Stefan Hartmann from Berlin (www.overunity.com), after he viewed and published video-material of my experiment. The first Neutrino-diffuser (ND) was egg-shaped.

In simple words, the

dielectric charges in this device are converted to mechanical energy.

Quote:

The main purpose if my ND is to convert liquids from their liquid state of aggregation to gaseous. You can see a very simple description on my (purposely simple) website: http://www.geocities.com/waterpowers/FuelCracker.html

I cannot give any further technical data to this device as I am bound by

contract I have with industry. But the physics I can reveal is much more important than the technical data.

Quote:

With a pump. My toy model was run a windscreen-water-pump for cars, ca. 12V/10W. Gasoline, kerosene, diesel or even water are converted to gas - the process is cold, no heating/warming effects. This process is highly efficient; to achieve the same results with heat or mechanical energy one would have

to invest ca. 5x more energy.
Gas can be produce on demand.

Quote:

Yes, and this is the important part of this message.

The atoms have a dielectric charge, not electromagn etic, as we all might have learned in school.
The electromagn etic charge is produced by the manipulation or proper interaction of these dielectric charges. The atoms communicate among each other and are in

constant exchange with this energy. They vibrate or oscillate and in this way become sender and receiver of this energy. They have a memory on how much energy they received and sent off. The atoms are a kind of ‘cosmic wind-mills’, which constantly absorb energy from vacuum, transform it and ‘radiate it off’. (forgive my funny English…)

If the atoms are artificially triggered, as an example here, in a mechanical

way with molecular friction and fluid-dynamics, they will absorb a much higher amount of dielectric charges and ‘radiate it off’.

Water for example has a specific permeability and capacity on how much charge it can take, before it discharges. Thereby a very big dielectric field is created, composed of these charges, which absorbs water molecules from the ambient, in this special case from the air. The

higher the frequency of the triggered molecules, the more charge will be absorbed by the water molecules.

You can even measure how much dielectric charge for example a water drop has got. A simple way here would be the Lord Kelvin water drop-experiment. This link shows a simple way to verify this: []Lord Kelvin’s Water Drop Experiment Demonstrator - Science Kit.

One can measure how much

dielectric energy a water drop has in its normal condition and after being artificially triggered. These dielectric charges or fields are a great resistance for electrons, current-flow, magnetic fields, etc. or vice versa. If the dielectric field is strong enough, it will repel or ban electromagn etic from its ambient.

The field in the ND was strong enough to block the current flow in the bulb.

The most important to

understand is, that our Earth, our atmosphere are full of these dielectric charges, and that they can be tapped and be bundled to a field, which can be used for mechanical work, similar to magnetic fields we use now.

These dielectric charges are monopole (also called unipolar) charges and attract their opposite pole and same-poled charged repel one another. They act like tiny monopole magnets.

If one creates strong (unipolar) dielectric fields they will attract opposite-poled dielectric charges from the ambient, may it be earth or air, or will repel the charge if it same-poled. These charges are able to transform matter from one element to the other, as for example water to air, whereby water would expands for ca. 2000x. Today we use nuclear power plants to generate heat and steam to produce pressure

which runs steam turbines.

Dielectric charges can create the same pressure by converting the element water to air. But it is also possible, but I haven’t tried this, to convert air in the same with dielectric charges to vacuum or gravity fields. I met the engineer of Viktor Schauberger, who still is alive, he was present when Schauberger made these levitation experiments. In the future when time, place and circumstance s will allow

me, I will try to replicate these experiments, since I already was able to do part of it. As you can see the dielectric charges can be used for mechanical or practical work.

In my eyes and understandin g the bolt of lighting hides the key to free energy. The one who will profoundly analyze this will find a way how to tap dielectric negative energy from the earth.

Best regards,
Shad

Last edited by Shad : 05-18-

2007 at 09:06 PM. Reason: link missing

Attachment.png ¬Attachment.png ¬Attachment.png ¬Attachment.png ¬ Attachment.png ¬

#23 (permalink)
Attachment.png ¬ 05-18-2007, 02:37 PM

Attachment.png ¬

Quote:

As I said I have ran into a bit of a problem while trying to replicate the effect. I know that several conditions seems to be significant.

1. Lightbulb was turned on while

exposed to the strong changing dielectric field. I tried exposing lightbulbs with no power supply connected but no luck so there.
2. The electrostatic machine and the lightbulb were connected to the same wall outlet so they shared mutual phase and ground.
3. The lightbulb was exposed to the strong changing dielectic field for prolonged length of time (15-20 minutes).
4. Since the lighbulb had an isolated metal shield around it (like in the

normal table lamps) there could be that some kind of capacitive coupling occurred during the exposure to the strong changing dielectric field.

As I said previously- we had several similar lightbulbs to compare it with, no visible changes appeared on the glass and the resistance of the filament remained within normal tolerance compared to the other similar lightbulbs available to me.

The nature of light emitted was very much like the xenon lamps and the intensity of light was almost 50% stronger. In fact it was a 100W lightbulb that gave light as a 150W type.

The effect stayed consistent even when the lightbulb was moved to another location and even after a few days. The effect was so noticeable that a colleague of mine who didn't know the whole story asked me why did I replaced my table lamp lightbulb with such a

bright and more powerful one.

Before I managed to accidentally break the lamp I haven't had time to measure it's temperature (I think it was as hot as a normal 100W lamp but I cannot be sure now) or spectrum of emitted light. What a shame!

It seems that as with the Shad's Neutrino Diffusor's resonator a several precise and very particular demands must be met before the

effect can be reproduced. Shad spent years of his life perfecting the construction of ND and to be honest after the lightbulb broke I simply didn't spend much more time reconstructin g the proper conditions needed to reproduce the lightbulb effect. My point is that as opposed to the ND which is fully understood and reproducible if one observe several seemingly unimportant and precise details in order to get it to work the lightbulb

effect was a fluke yet to be understood. In fact at that time so many more interesting dielectricity effects presented themselves that the lightbulb incident was of minor interest to me.

However, my theory is that the vacuum dielectric in the lightbulb was excited with the heat and EM radiation from the AC current in a way that allowed for the strong changing dielectric field to polarize dielectric (vacuum or

even glass although my bet lies with the former one) permanently in a way that would allow the heat or EM radiation from AC current to excite it even further. In fact I suspect that to a certain point the lightbulb started to behave like a discharge tube of low pressure but with a heat and EM radiation of AC current as the exciting agents.

That's all of course a wild speculation. Further experiments should be done in order to be able to reproduce

the effect and the one could measure temperature, light spectrum, power consumption, EM field as well as dielectric field in order to determine what is really going on.

Last edited by lighty : 06-27-2007 at 12:20 PM.

Attachment.png ¬Attachment.png ¬Attachment.png ¬Attachment.png ¬ Attachment.png ¬

#24 (permalink) Attachment.png ¬ 05-28-2007, 10:30 AM

Attachment.png ¬ **one more though...**

Dear Peter, Lighty, and all

I would like to add something to my last message and am curious to hear your opinion.
In my understandin g the universe also is a universe of frequencies (broad band of frequencies). Each element is a frequency occupying a band width of space. Groups or combinations of elements can, as a unit, cover a broader band width of space.

The atom is a

manifestation and is both positive and negative in character; therefore, space also has two basic properties that is, positive and negative.

Atom energy, or any other energy derived from changing the form or state of physical material, is energy taken from atomic structure.

With the right theory it is possible to tap energy in abundance from the driver of the atom (space energy) without taking it from atomic structure.

Atomic power with its penalty of contaminatio n is not necessary, as the basic atomic energy can be tapped before it is material substance. Then there are no contaminatio ns or harmful side effects, because nothing is destroyed and because the energy is only used, even as the wind is used by the windmill.

Radiant energy in my opinion is a result of distorted and nonlinear space and energy in common is a result of distorted

space.

As example: Magnetism is a distortion of space, a distortion within the atomic structure of the magnet material or copper coil which extends into the space surrounding it.

As an illustration, we consider an undistorted area of space before us. We move an activated magnet into this area of space and the result is that this previously undistorted and linear space is now. That is, two poles exist in relation to

the magnet; an N pole and an S pole.

At the N pole we have a lack of S pole and at the S pole we have a lack of N pole. Or, at each end of the magnet, we have a lack of balanced space. In other words, distorted space, (a low pressure area) now exists at each pole.

Any non-polarized material within the band width of magnetism and electricity (a paramagnetic material) will migrate to the low

pressure area at either pole, while a polarized object (another magnet) will demonstrate the law of opposites attracting and similars repelling each other. The above theory of expansion and/or contraction holds true as cause of magnetism in all types of permanent magnets or electromagn ets.

An inductive collapse of a coil, the so-called collapsing field could now be described as space returning back to

linearity with a slap. That is the positive and the negative closing in from opposite directions and filling a rapidly diminishing area and then suddenly coming together; perhaps even bringing about a slight crossing of bands, or a short circuit of electric space which would be like a miniature bolt of lightning. The collapsing field of an electromagnet is a distortion of ether/vacuum space which is elastic in his

property and cause of the resulting mono-polar electrostatic charge.

In this way it is possible to tap energy in abundance from the driver of the atom (space energy) without taking it from atomic structure. This is why I like to describe the atom like a cosmic energy windmill.

Best of greetings, Shad

Attachment.png ¬Attachment.png ¬Attachment.png ¬Attachment.png ¬ Attachment.png ¬

Attachment.png ¬

« Previous Thread | Next Thread »

Attachment.png ¬ LinkBacks (?) LinkBack to this Thread: http://www.energeticforum.com/renewable-energy/473-radiant-energy.html			
Posted By	**For**	**Type**	**Date**
Renewable Energy	This thread	Refback	05-12-2007 08:12 PM

All times are GMT. The time now is 10:46 PM.

Powered by vBulletin® Version 3.6.4
Copyright ©2000 - 2007, Jelsoft Enterprises Ltd.

Search Engine Optimization by vBSEO 3.0.0 RC8
2007 Copyright ? Energetic Forum? A Non Profit Corporation - All Rights Reserved

The New Wizard of the West

An interview with Tesla, the Modern Miracle-Worker, who is Harnessing the Rays of the Sun; has Discovered Ways of Transmitting Power without Wires and of Seeing by Telephone; has Invented a Means of Employing Electricity as a Fertiliser; and, Finally, is Able to Manufacture Artificial Daylight.

By Chauncy Montgomery M'Govern

From Pearson's Magazine, May 1899

Tesla's proposed arrangement of balloon stations
for transmitting electricity without wires

NOT to stagger on being shown through the laboratory of Nikola Tesla requires the possession of an uncommonly sturdy mind. No person can escape a feeling of giddiness when permitted to pass into this miracle-factory and contemplate for a moment the amazing feats which this young man can accomplish by the mere turning of a hand.

Fancy yourself seated in a large, well- lighted room, with mountains of curious-looking machinery on all sides. A tall, thin young man walks up to you, and by merely snapping his fingers creates instantaneously a ball of leaping red flame, and holds it calmly in his hands. As you gaze you are surprised to see it does not burn his fingers. He lets it fall upon his clothing, on his hair, into your lap, and, finally, puts the ball of flame into a wooden box. You are amazed to see that nowhere does the flame leave the slightest trace, and you rub your eyes to make sure you are not asleep.

The odd flame having been extinguished as miraculously as it appeared, the tall, thin young man next signals to his assistants to close up all the windows. When this has been done the room is as dark as a cave. A moment later you hear the young man say in the laboured accentuation of the foreigner: " Now, my friends, I will make for you some daylight." Quick as a flash the whole laboratory is filled with a strange light as beautiful as that of the moon, but as strong as that of old Sol. As you glance up at the closed shutters on each window, you see that each of them is as tight as a vice, and that no rays are coming through them. Cast your eyes wherever you will you can see no trace of the source of the odd light.

Scarcely have you begun to marvel when the light goes out by a touch on a button by the young man's hand. The room is in darkness again until the same laboured accentuation causes the reopening of all the shutters. Some animal is now brought out from a cage, it is tied to a platform, an electric current is applied to its body and in a second the animal is dead. The tall young man calls your attention to the fact that the indicator registers only one thousand volts, and the dead animal being removed, he jumps upon the platform himself, and his assistants apply the same current to the dismay of the spectators.

You feel a creeping sensation course up your back, and you see the indicator slowly mounting up to nine

hundred, and then one thousand volts, and you involuntarily close your eyes, expecting the young man to fall dead before you the very next minute. But he does not budge. Quickly the indicator goes up, up, up, until presently it shows that ten thousand volts, then two million volts of electricity are pouring through the frame of the tall young man, who does not move a muscle.

Nikola Tesla holding in his hands balls of flame

At a sign, the current is stopped, the room is again made dark as night, and presently the visitor sees the sharply-defined black silhouette of the young man, with a beautiful halo of electricity in the background, formed by myriads of tongues of electric flame which are darting out from every quarter of the tall, thin frame. The place is lighted once more, and as the young man comes up to you and shakes your hand, you twist it about in the same fashion as you have seen people do who hold the handles of a strong electric battery. The young man is literally a human electric " live wire."

To tell of these and a thousand other wonders that Tesla does in a trice gives only a faint conception of their effect on the visitor. To really appreciate them one must see, hear, and feel them in the flesh. It is a scientific treat of a lifetime, but it is a treat that few can enjoy, for the laboratory of Tesla is securely locked against everyone not provided with an introduction from a personal friend of the audacious wizard.

"Oh, pshaw! these are only a few play- things," Nikola Tesla replies when the visitor puts into words the astonishment he has experienced; " none of these amount to anything--they are of no value to the great world of science. But come over here and I will show you something that will make a big revolution in every business and home as soon as I am able to get the thing into working form," and then he leads the way through a forest of queer-looking discs and mysterious coils of copper and steel, until the party reaches a raised wall of masonry, on which reposes a long cylinder of glass filled with water, and surrounded by a circle of large mirrors. The roof over this apparatus is of glass, and as the sun pours its rays through this, the rays strike the mirrors and are reflected again towards the glass cylinder, magnifying glasses intensifying the heat of the rays before they strike the cylinder.

Nikola Tesla

"This is the experimental model of the apparatus with which I hope some day to so harness the rays of the sun that heavenly body will operate every machine in our factories, propel every train and carriage in our streets, and do all the cooking in our homes, as well as furnish all the light that man may need by night as well as by day. It will, in short, replace all wood and coal as a producer of motive power and heat and electric lighting

The plan of Nikola Tesla to harness the rays of the sun to do man's bidding is probably the boldest engineering feat that he or anyone else has ever attempted. Though the idea is so great, its principle is so simple that a schoolboy can readily comprehend it. It consists of concentrating the heat of the sun on one spot (the glass cylinder) by the series of complicated mirrors and magnifying glasses until the resulting heat is something terrific.

This manufactured heat is directed upon the cylinder filled with water. This water is chemically prepared so that in a short time the water has evaporated into steam and has passed from the cylinder through a pipe and into another chamber, In the latter place this sun-made steam is made to operate a steam-engine of ordinary construction, the horse-power of which will be determined by the size of the apparatus by which the sun generates steam in that spot. This steam-engine is used to generate electricity. And this electricity can be either used at once or else stored up in storage batteries to be used on days when there

is no sunlight.

It will be seen that the object of this plan of Tesla is to do away with coal, wood, or other fuel, in the manufacture of steam. The remainder of his invention calls for the use of this sun-made steam-pressure, as steam-pressure made from coal is at present in use, throughout the world. The advantage of this Tesla invention is that the cost of manufacturing steam to generate electricity, which would propel say one hundred tram cars, would be infinitely smaller than the cost of the coal required to produce the power to do the same work. The cost of manufacturing the electricity to operate these one hundred tram cars by the Tesla plan, when once the sun station has been completed, would only be a sufficient amount to pay the salaries of a few engineers in charge of the sun-station.

"In this way electricity will be so cheapened," says Mr. Tesla," that it will be possible for the poorest factory-owner to use it as a power at a smaller cost than steam. Electricity will in this way supplant steam as a motive power on all railways and -- in the shape of storage batteries -- on all water vessels. And the humblest citizen will profit by the new system of producing electricity; for he can have it in his home to do all his cooking and lighting and heating. and it will be even cheaper for him than coal, wood, or petroleum."

It is, of course, not the intention of Mr. Tesla that one sun-station will provide all the electricity for the whole world. His scheme is that in every city and town the local authorities shall build one or more of these sun-stations by public taxation for the use of the whole population, just as these cities now have waterworks and gas plants. Each factory and home will then get its supply of electricity from the nearest sun-station by ordinary electric wires.

Any person can appreciate the big boon that Tesla will confer on humanity by the early completion of this master task. Among other things it will solve a question that has been occupying the minds of scientific men for a long time, viz: As the supply of coal in the earth will be exhausted in about: thousand years, what are we going to do for fuel?" It was when Tesla first thought about the question that he turned his mind to the invention of some form of making power that would not depend upon coal. The plan to harness the sun's rays is the result.

Quite independent of his scheme to harness old Sol, but yet capable of cooperation with it, is Tesla's invention to transmit electrical power without the use of wires, this consists of a means of generating electricity in one spot, where it can be done with little cost, and transmitting the electricity to some other spot where it is impossible to generate electricity except at a big outlay of money.

Of course, it is now possible to transmit electrical power from one place to another by the use of electrical cables, but the cost of these transmitting cables is nearly as great as would be the cost of generating the electricity itself in the locality to which it is desired to transmit it. By the use of Tesla's invention, the atmosphere takes the place of the electrical cables in the transmission of the power, and as the use of the atmosphere would be free, the cost of the transmission of electricity from one city to another would be merely nominal.

To make the atmosphere take the part of the costly cables, Tesla's plan is to erect large power stations at every spot where a great waterfall like Niagara, for instance, makes the cost of generating electricity only trifling when the apparatus has once been constructed.

Above each of the stations Tesla wants to build a high tower, over which will be suspended a large balloon. As the electricity is generated in the station below it is conveyed by cables to the tower, and thence to the balloon, where the electricity is set free into the atmosphere. As the atmosphere at this

height is much rarefied, and as Tesla has demonstrated rarefied atmosphere to be a good conductor of electricity, the electricity which is thus set free will be carried on by the atmosphere to any indefinite distance.

The second part of the Tesla plan for transmitting electrical power without wires calls for the erection of receiving stations wherever desired. These will act as sort of receivers and storage houses for the electricity set free into the atmosphcre at the generating station miles away. Over each of the receiving stations will be put up a tower and a balloon, which will be equipped with the apparatus necessary to absorb the free electricity in the atmosphere and send it to the receiving station below, from which it can be sent out on wires to light the surrounding country and drive all the machinery of that particular district.

It will be observed that in this scheme Tesla depends on getting his electricity through the agency of the waterfalls, while in the previous scheme he depends upon the agency of the sun for the same purpose but the inventor is far from believing that the two schemes will conflict. He believes that when both inventions come into popular use they will work together for the common good of man. "The agency of waterfalls to generate electricity could be used when that agency is most convenient in view of natural conditions," says Tesla, "and the agency of the sun could be used in all other cases. But my scheme of transmitting electrical energy without wires can be applied with equally good results to both systems."

Of all the great inventions which Tesla has well on the way towards that point where they can be given to the world for every-day use, his wireless telegraphy invention is the furthest advanced, All that is necessary now is the formation of a company to put up the public station. The principle of this invention is almost too well known now to bear extended explanation. Briefly described, it consists of constructing an apparatus to stir up the electric currents in the earth in such a way that their disturbance will be felt on a second apparatus fitted up in a different part of the world. Different disturbances of the electric currents produce correspondingly different impressions on the second apparatus --the receiver--and in this way an intelligible code is readily arranged.

For the benefit of non-scientific people the great inventor has described for me his wire-less telegraphy invention in the following words:

"Imagine you have on a table before you an immense rubber bag snugly filled with water. I take a rubber tube with a piston-rod in it and insert the tube into the rubber bag. When I press on the piston-rod I compress the water in the bag so that it expands the bag.

"When I withdraw the piston," continued Tesla, " the bag will shrink just so much as there is water drawn up into my tube; and now if I put a second tube with a piston-rod into the bag at the other end, at every pressure of the first piston-rod the effect will be felt and measured in the second tube. Now if a certain action of one piston-rod indicates a certain word or a certain sentence, if you watch the other piston-rod carefully you may easily read it. This is exactly what takes place in wireless telegraphy," concluded Tesla; " let the rubber bag stand for the earth, the water for the electric currents in the earth, and the two tubes and piston-rods for a sending oscillator and receiving oscillator. One sort of disturbance by one oscillator means a certain sentence, and when this particular disturbance is recorded on the second oscillator the operator there knows exactly how to interpret it."

The "oscillators" to which the inventor refers are huge discs on which are insulated hundreds of coils of copper wire whose ends connect with the centre of the disc, where there is a huge round copper ball. They are really the only apparatus required for wireless telegraphy. To operate them Tesla simply turns the transmitting oscillator face downwards, and turns on a current which causes immense tongues of

visible electric flashes to leap from the ball into the ground. The receiving oscillator has a delicate contrivance which throbs with each disturbance of the earth's electric currents and records them on a specially contrived apparatus.

Not the least fascinating of Tesla's numerous inventions is one to which he has given the name of "visual telegraphy." With this apparatus one person has only to look into the receiver of an ordinary telephone in one city, and, while talking to a friend a thousand miles away, he can watch the expression on the other's face, criticise the cut of his new suit of clothing, or advise him what to do for that tired look about the eyes. In this invention the experimental apparatus has proved thoroughly successful. The principle of this invention is that just as much as sound-waves make an impression on the immediate atmosphere, so do light waves make their impression.

Nikola Tesla's wireless telegraphy apparatus

"Now, as sound waves of the human voice are transmitted miles and miles by the present telephone after their impression is made on the telephone transmitter," says Mr. Tesla, "just so my experiments have demonstrated that the light waves of the human body can be transmitted by a different sort of telephone miles and miles away. All we need is the invention of a new transmitter. As the impressions of light waves are so many times more delicate than the impressions of sound waves, it follows that to transmit the impression of the human face, for instance, we require a transmitter many times more delicate. Now, selenium being an extremely sensitive substance, I have utilised this material in the construction of the transmitter which I have just described, and I have found it to be perfectly satisfactory."

To make our homes, our offices, and the streets at midnight as light as day, is another of the great tasks which Mr. Tesla set out for himself many years ago. His hope was to invent a new kind of electric light which would have the strong, steady glow of sunlight.

That Tesla has succeeded in his dream to make artificial daylight there can be no doubt. To every visitor of his laboratory he shows numerous balls of glass of different sizes which look like miniature suns. The glass balls are perfectly empty, there are no wires in them, nor are there any wires on the outside of them. They do not burn the fingers when they are touched. The light does not hurt the eyes as sunlight and ordinary electric light do.

By the time this article is published, a number of the leading New York and Chicago photographers will have their studios supplied with the new artificial daylight.

The hand of Nikola Tesla, taken by his wonderful artificial daylight, just perfected. This is the first photograph made by the light of the future

"The reason I have chosen to introduce the new daylight to the photographers first," says the inventor, " is that I believe them to be the severest critics, and most hard to please in the matter of light. If it succeeds with them, a new light will succeed everywhere."

Not the least ingenious of Tesla's great schemes is his invention to fertilise impoverished land by electricity. When Tesla has a company formed to put this invention on the market it will no longer be necessary for the farmer to spend half his year's receipts in purchasing fertilisers. He has only to buy an electric fertiliscr of his own, which he can secure for a trifle at the nearest town.

Dumping a few loads of loose earth into the fertiliser, it comes out at the other end, ready to be spread over the surface of the impoverished ground, where it will insure for the following season the luxurious

crop of the virgin soil.

The explanation which Mr. Tesla gives of just why so simple a piece of work should be productive of such wonderful results is not difficult to comprehend. " Everyone knows," says he, " that the constituent of a fertiliser which makes the ground productive is its nitrogen. Everybody knows also that nitrogen forms four-fifths of the volume of the atmosphere above that piece of unfertile land. This being the case it occurred to me: 'Where is the sense in the farmer buying expensive nitrogen when he has it free of cost at his own door? All the agriculturist needs is some method by which he can separate some of this nitrogen from the atmosphere above the ground and place it on the surface.' And it was to discover this means that I set to work."

As far as the non-technical eye can perceive, the working model of the electric fertiliser consists of nothing but an upright copper cylinder with a removable top, with a spiral coil of wire running throughout the length of the cylinder. Through the bottom of the cylinder are two wires, which connect with a specially constructed dynamo. A quantity of loose earth, treated by a secret chemical preparation in liquid form, is shovelled into the cylinder, an electric current is passed through the confined atmosphere; the oxygen and hydrogen are thus expelled, and the nitrogen which remains is absorbed into the loose earth. There is thus produced as strong a fertiliser for a nominal price at home as it is possible to purchase at a large cost miles and miles away.

Mention is made in this paper of only those inventions of Mr. Tesla which have passed beyond the experimental stage. But there are hundreds of other promised wonders in the yet incipient stage of development in the great inventor's miracle-factory. As I have heard one of his admirers express it, an enumeration of these " sounds like the dream of a half-intoxicated god." Signalling to other planets, raising of certain of the dead by electricity, ending all wars by a terrible machine -- these are a few suggestions selected at random.

Nikola Tesla is a young man yet, and on this account many of his promises have been looked upon by older scientists as but fanciful dreams of a youthful mind. He has scarcely ever made any invention whichthe scientific world has accepted as possible on the first public announcement. But sooner or later the scientific wiseacres have been compelled to admit that Tesla has proven their theories to be wrong.

How these conservative scientists sneered at Tesla's "Utopian audacity" when he first suggested that man should harness the great Niagara Falls! But they humbled their pride sufficiently to be present when the enterprise was formally completed. Again, when he announced the invention of the "Tesla coil" they set him down as "pipe-dreamer." But a few of the brightest of them set to work seriously on the "coil" with the result that one of them -- Rontgen -- discovered his famous X-Rays. No one who is privileged to know Tesla personally, to have heard him explain his plans, and to have been shown through his unique workshop, has the slightest doubt that every one of his promises will be fulfilled in an equally successful way.

Posted April 29 2004

Tesla: The Electric Magician

by D. Trull
Enigma Editor
dtrull@parascope.com

Despite his relative obscurity, the greatest genius of all time may have been Nikola Tesla. With over 700 patents in his name, Tesla shaped our current technological landscape more than any other individual. How, then, did this great man end up dying destitute and in obscurity? Did Tesla's extraordinary mind decline into insanity... or was he simply far, far ahead of his time?

In this epic-length series, ParaScope takes a look at the early life and bizarre eccentricities of the great inventor, and his hard-fought first victory with the alternating current engine.

(c) Copyright 1996 ParaScope, Inc.

- 1: The Man Behind the Mind
- 2: The Fight for AC
- 3: Free Energy
- 4: Tesla's Death Ray
- 5: His Wildest Dreams
- 6: The Forgotten Genius

Tesla's early life was tormented by various afflictions.

1: The Man Behind the Mind

In the small village of Smiljan, Croatia (then Austria-Hungary), Nikola Tesla was born exactly at the stroke of midnight between July 9 and 10, 1856 -- an incidental schism that befits the beginnings of a man who always seemed out of time with the world around him.

From early childhood, it was apparent that Nikola possessed an extraordinary mind. His father, Milutin Tesla, was a minister who trained Nikola to strengthen his memory and reasoning skills through a variety of regular mental exercises. But Tesla gave the highest credit for his talents to his mother's side of the family, whom he referred to as a long line of inventors. Despite Djouka Tesla's lack of formal education, she created numerous original tools for sewing and other tasks around her household.

Tesla had an older brother, Dane, whom he considered his superior in every way. When Nikola was five and Dane was twelve, Nikola was jealous of Dane's white stallion, which their father said Nikola was too young to ride. One day Nikola used a blow gun to shoot a pea at the horse, causing it to throw Dane from its back. Dane later died from his injuries. Feelings of guilt over this tragedy haunted Tesla throughout his life. No matter how great his achievements, he always believed that Dane could have outdone him.

During his early life, Tesla was stricken with illness time and time again. He suffered a peculiar affliction in which blinding flashes of light would appear before his eyes, often accompanied by hallucinations. Much of the time the visions were linked to a word or idea he might come across; just by hearing the name of an item, he would involuntarily envision it in realistic detail. The flashes and images caused Tesla great discomfort, and by the time he reached his teens he had taught himself to repress them from occurring except in certain times of stress. When they did happen, they sometimes had a nature that might

be described as psychic.

In one case, the young Tesla recklessly attempted to swim beneath a large floating structure that extended further than he realized. Finding himself trapped in the dark water with no sign of the surface, a flash appeared, and with it a vision of a small opening to air. Tesla's vision turned out to be correct, and the strange curse apparently saved him from drowning. Upon the deaths of his father and mother, Tesla claimed to have detailed premonitions just before each passing. In his later years, Tesla boasted of successfully transmitting an image from his mind into that of a person in another room.

Shortly after his graduation from high school, Tesla suffered a devastating bout with cholera and nearly died. He was bedridden for nine months, and doctors announced that he would not live much longer. Tesla was occupying his still-active mind by reading as much as his body would permit, when he encountered a strange new kind of literature: "Innocents Abroad," by Mark Twain. Tesla was captivated by the humor and humanity of this up-and-coming American author, whose work so raised his spirits that he made a miraculously abrupt recovery to health. Years later in the United States, Tesla met Samuel Clemens and was able to thank him for having saved his life. Clemens went on to become one of Tesla's few close friends.

Tesla underwent another debilitating trauma a few years after recovering from cholera. This time, the nature of the illness and its causes were a complete mystery. Tesla's physical senses, which had always been remarkably acute, seemed to go inexplicably into overdrive, paralyzing him with an overabundance of sensation. The ticking of a pocket watch had become painfully deafening to him, even from several rooms away. He needed rubber cushion inserted beneath the feet of his bed to lessen the vibrations from outside passersby, which felt to him like an earthquake. Exposure to light was excruciating not only for his eyes, but to the surface of his skin, as well. After a time, the crippling condition eased, and Tesla returned to normal sensory perception with a mental breakthrough that led him to the invention of the alternating current motor.

The physical and emotional travails of Tesla's early life undoubtedly helped shape him into the singular man he was: a man of immense brilliance, and a nearly equal level of eccentricity. Tesla shunned physical contact with other people, with a special aversion to touching hair. To avoid shaking hands with people he met, he lied that he had injured his hands in a laboratory accident. He apparently never took part in a romantic relationship of any kind. A female acquaintance who grew enamored of Tesla reportedly once took the initiative to kiss him, causing the startled inventor to flee in agony. Still, Tesla exhibited some appreciation for feminine beauty by demanding that his secretaries conform to an exacting standard of dress and physique. His female employees were forbidden to wear pearls, which Tesla for some reason found hideously

repulsive.

Other behaviors of Tesla's seemed to drift into the realm of compulsive-obsessive disorder. He required any repeated actions in his daily life (such as the footsteps he took in a walk) to be divisible by three, and would keep repeating them until he arrived at a suitable total. Quantities of twenty-seven were the most prized of all, since that number was three cubed. Tesla also felt compelled to calculate the exact volume of his food before he ate it. This involved measuring his meal portions with a ruler and dipping pieces in water to determine how many cubic centimeters they displaced. He was especially fond of saltine crackers because of their uniformity of volume. Many times, such as during the heat of a major project, Tesla would forget to eat altogether, and work for days without sleep. At one point his all-consuming devotion to the laboratory brought on an exhaustion so severe that for several days he lost all memory of who he was.

Tesla asserted that it was not until he reached adulthood that he discovered he was an inventor. He discounted his early years (perhaps unreasonably) as a time of undisciplined impulses, entirely lacking focus. But he did invent a wide array of creations and schemes as a child. The first was a simple hook-and-line device for catching frogs. All his young friends imitated it, and the mechanisms performed so well that the local frog population was nearly eradicated. He also built a miniature water wheel which was unique in that it propelled itself without blades. This memory would later inspire his innovation of the bladeless turbine.

The young Tesla created a remarkable machine powered by another natural energy source: June bugs (or, as Europeans call them, May bugs). He glued sixteen of the live insects to the blades of a small windmill-like structure, and they set the rotor spinning vigorously in their vain attempt to fly away. Some accounts have jokingly cited this effort as one of Tesla's rare failures, although the inventor himself remained rather proud of the June bug motor. In his autobiography, Tesla explained why he discontinued his research into insect energy:

"These creatures were remarkably efficient, for once they were started, they had no sense to stop and continued whirling for hours and hours and the hotter it was, the harder they worked. All went well until a strange boy came to the place. He was the son of a retired officer in the Austrian army. That urchin ate May-bugs alive and enjoyed them as though they were the finest blue-point oysters."

Adding one more entry to his long list of idiosyncrasies, after beholding that spectacle Tesla refused ever to touch another insect again.

- Next: The Fight for AC
- Tesla Index

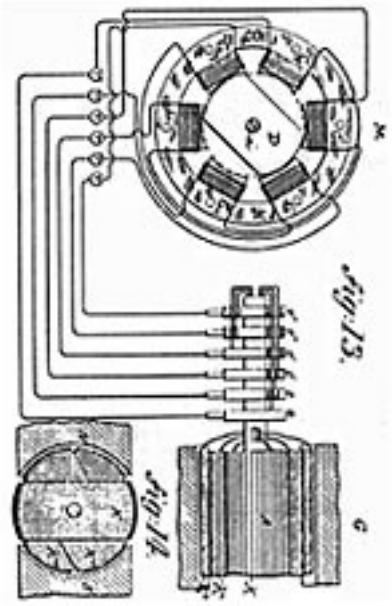

This diagram from a 1888 patent shows Tesla's AC motor.

2: The Fight for AC

Tesla began his college education at Graz Polytechnic Institute, pursuing studies of the topic that fascinated him above all others: electricity. He had done fairly well in grade school, but his lack of facility at freehand drawing kept him from excelling in technical courses. But in college, Tesla was delighted to find, he was permitted to focus exclusively on what he was best at.

He studied feverishly almost around the clock, in a routine that began at 3 a.m. and ended at 11 p.m., every day. He aimed to impress his parents with his scholarly achievements, in part because his father had been reluctant to send him to the university, wishing Nikola would follow in his footsteps in the clergy. He also entertained fantasies of going to America and teaming up with the reigning leader of electrical invention, Thomas Edison, so that their combined forces might revolutionize the world.

Tesla was an extraordinary student who frequently enraged his professors, questioning the technological status quo with an insight that surpassed his instructors'. He rebelled most stringently against the acceptance of direct current as the sole means of delivering electrical power. It was plain to him that DC was inefficient and incapable of adequately transmitting power over long distances, and there had to be a better way. There was talk of a theoretical "alternating current" system, but no one had figured out how to make it work. AC was frowned upon as a fanciful dream by the scientific establishment, in much the same way as cold fusion is regarded today. Tesla's merest suggestion of AC brought scorn in his lecture halls, but he was never discouraged enough to abandon the enticing riddle.

In the middle of Tesla's sophomore year of college, his father was felled by a stroke. Nikola returned home, and his father died soon after. Tesla never returned to the Polytechnic Institute. Lacking funds for tuition, he took a job at a government telegraph office. Tesla despaired for his interrupted education,

but held on to his dream of becoming an electrical pioneer.

It was at this time that Tesla endured his ordeal with hypersensitivity that reduced him to a bedridden invalid. Considering the depressing turns his life had just taken, the bizarre affliction could possibly have been psychosomatic in origin. Whatever its cause, when Tesla finally emerged from the prolonged fugue state, he was armed with a powerful new insight on how alternating current could be successfully attained.

His great mental leap was this: two coils positioned at right angles and supplied with alternating current 90 out of phase could make a magnetic field rotate, with no need for the cumbersome commutator used in direct current motors. Tesla knew it would work without even having to build it and test it. Constructing it mentally and letting it run in his mind was proof enough for him.

This was Tesla's method for developing inventions throughout his career: no journals, no blueprints, no prototypes. The propensity for turning ideas into concrete visualizations which had tormented him in his youth was now turned to Tesla's advantage. He believed his technique was not only a valid one, but actually superior to the common practice of getting everything down on paper and conducting tentative trials. "The moment one constructs a device to carry into practice a crude idea, he finds himself unavoidably engrossed with the details of the apparatus," Tesla wrote in his autobiography. "As he goes on improving and reconstructing, his force of concentration diminishes and he loses sight of the great underlying principle."

Tesla now possessed the answer, but the problem of putting it into practice remained. In 1882 he found employment with Continental Edison Company in Paris, distinguishing himself as a fine engineer. Two years later he traveled to New York to meet the company's president, Thomas Edison himself.

It was not the harmonious meeting of the minds Tesla had once dreamed of. Edison regarded the hotshot European with contempt, and assuredly held no intentions of collaborating with him on some harebrained AC scheme. Edison viewed AC as a pipe dream at best, or, at worst, a threat to usurp his DC-based empire.

Tesla tried to make the best of the situation by offering to improve Edison's existing technology to the highest level possible. He promised to increase the efficiency of the DC dynamos by 25%, within two months' time. The skeptical Edison said he would pay Tesla fifty thousand dollars if he succeeded.

Exerting a massive, virtually non-stop effort, Tesla accomplished the feat, enhancing the dynamos by an even better margin than he proposed. But when he asked for his fifty thousand dollars, Edison refused to honor the deal,

claiming that he had only been joking. Infuriated, Tesla quit and never worked for Edison again.

Tesla was soon approached by a group of investors who wished to market the arc lamp he had developed. Thus was the Tesla Electric Company founded. Tesla was eager to seize this opportunity to bring AC into existence at last, but his investors wanted nothing to do with it -- so Tesla found himself rejected by the company that bore his own name.

That company soon ran afoul of financial hardships, leaving Tesla's stock shares worthless and stripping him of his rights to the arc light. Penniless, his enterprising spirit finally broken, one of the world's most brilliant men was reduced to shoveling in a labor crew for a dollar a day. He planned on committing suicide on his upcoming thirtieth birthday, at the stroke of midnight.

Before that could happen, A. K. Brown of Western Union learned of Tesla's plight. Aghast, Brown was determined to restore the genius to a worthy place, and offered to furnish him with a laboratory of his own. And what's more, Brown wanted Tesla to pursue the possibilities of alternating current.

Granted a blessed salvation, Tesla immediately went to work assembling his AC dynamo at last. It functioned in reality precisely as it had all those years inside his head. Tesla demonstrated his invention in a heavily publicized lecture, and instantly became the toast of the engineering community.

Among the AC converts in the lecture's audience was George Westinghouse, who negotiated with Tesla to manufacture the dynamos. The first application of the new technology: Niagara Falls. Westinghouse won the coveted contract to harness Niagara, bidding half of what Edison bid for the installation of a DC system. In 1895, the Niagara AC power system enjoyed a flawless inauguration, transmitting electricity to Buffalo twenty-two miles away -- a complete impossibility in the suddenly outmoded world of direct current. No longer a curious luxury reserved for the urban upper class, electric power in the home would now be commonplace.

For the first time in his life, Nikola Tesla was an indisputable success.

Next: Free Energy
Tesla Index

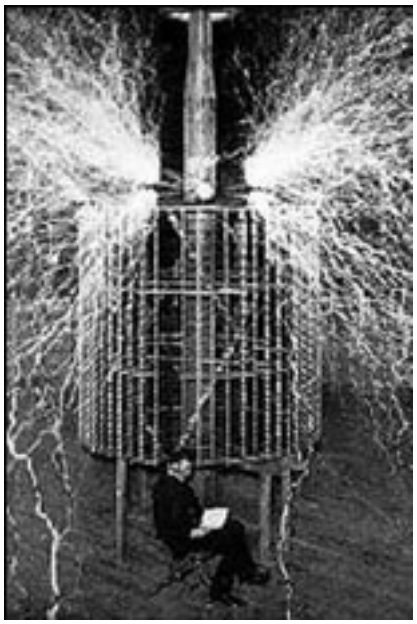

Another busy day in Tesla's Colorado Springs laboratory.

3: Free Energy

From the beginning of A. K. Brown's and George Westinghouse's fortuitous partnerships with Tesla, the inventor was at work on other projects above and beyond the AC dynamo. Able to devote himself to the unhindered realization of his countless ideas, he would later recall these years of his life as "little short of continuous rapture."

Tesla's New York laboratory was a hive of continuous activity, with a small staff of assistants working solely from their employer's verbal instructions. His distaste for putting ideas down on paper, coupled with his tendency to get bored with a completed invention and move on to the next challenge, led Tesla to toss aside a large number of creations that he never even bothered to patent. Once, when exhaustion left Tesla in a state of temporary amnesia, his assistant filed for patents on many of the unregistered inventions on Tesla's behalf, and had the master sign the papers while still incapacitated. Tesla's shunning of documentation was of some benefit when fire destroyed the lab in 1895, right after the success at Niagara. The loss was a setback, but not a catastrophic one, since the most valuable of the laboratory's assets remained intact in Tesla's brain.

In 1891, Tesla developed the invention by which his name is most commonly known today: the Tesla coil. Simple enough for today's hobbyists and science-fair entrants to construct in fully functional homemade models, it was nonetheless a remarkable innovation which remains the basis for radios, televisions and other modern means of wireless communication.

Tesla became known for the lectures at which he demonstrated his inventions and concepts with a theatrical flair. Many attendees were laymen who had little comprehension of what Tesla said, but were mesmerized by the bolts of lightning that leapt from his ominously humming coils, and the unwired light bulbs that lit at the touch of Tesla's hand. These spectacular displays led Tesla to be popularly regarded as some sort of magician -- a title that was bestowed

not in ridicule, but in awe.

The wireless transmission of energy would become the ultimate pursuit of Tesla's career. He discovered that a vacuum tube held in proximity to a Tesla coil would burst into illumination, without wires, without even a filament inside the glowing tube. Electrical resonance was the key to this discovery. By determining the frequency of the needed electrical current, Tesla was able to turn a series of different lights on and off selectively, from yards away. He had just become an American citizen in 1891, and this new technology was to be his gift of thanks to his adoptive country: a means of transmitting energy instantly, across any distance, through thin air. Free energy for everyone.

One of Tesla's assistants reportedly questioned the implications of putting such an energy distribution plan into practice. He wondered what incentive there would be for the electrical power establishment to begin giving away its goods for free, and whether Tesla could possibly be "allowed" to introduce such an arrangement. The presence of such doubts enraged Tesla, who was convinced, somewhat naively, that his plan would be accepted simply because it was the right thing to do.

As the years passed, Tesla's vision of wireless energy grew even grander in scope. He solved one of the problems implicit in his first theory, which was that transmission of power through air over long distances would result in a significant loss of energy. Rather than using air as a medium, he decided to send energy through the ground. This makes little sense in conventional electrical terms, whereby the earth's surface is regarded as, literally, "the ground" -- a sinkhole used for discharging excess current from a conductor. But Tesla found that if it were charged highly enough, the ground could become the conductor itself. In this way, the entire planet could be transformed into a colossal electric transmitter.

In 1899, as logistics prevented him from conducting the necessary experiments within the confines of New York City, Tesla headed west. A Colorado attorney named Leonard Curtis, who had previously defended Tesla in court, offered to help Tesla set up a testing facility in Colorado Springs. Curtis was also an officer of the local power company, and provided electricity to Tesla at no cost.

Tesla and his assistants built a one-of-a-kind laboratory on the outskirts of town, which looked like a large barn topped by a 180-foot metal tower. This was Tesla's "magnifying transformer," which he called the greatest of his inventions.

The townspeople of Colorado Springs were naturally curious about what this great inventor was up to, and respected the signs around the perimeter of the compound reading "KEEP OUT -- GREAT DANGER!" Still, they soon felt the effects of Tesla's apparatus. Sparks leapt from the ground as people walked the

streets, singeing their feet through their shoes. The grass around the Tesla building glowed with a faint blue light. Metal objects held near fire hydrants would draw miniature lightning bolts from several inches away. Switched-off light bulbs within 100 feet of the tower spontaneously lit.

And Tesla was only tuning up his equipment. These were the side effects of adjusting the magnifying transformer into perfect resonance with the earth. Once it was properly calibrated, Tesla was ready to conduct his career's boldest symphony, using the entire planet as his orchestra.

Late one night in the fall of 1899, Tesla fired up his machine at full blast, in hopes of producing a phenomenon he called resonant rise. His tower pumped ten million volts into the earth's surface. The current raced through the earth at the speed of light, powerful enough to keep from dying out over the course of its journey. When it reached the opposite side of the planet, it bounced back, like ripples of water returning to their origin. Upon returning, the current was greatly weakened; but Tesla was sending out a series of pulses which reinforced one another, resulting in a tremendous cumulative effect.

At ground zero, where Tesla and his assistant stood bedazzled, the resonant rise manifested itself in an unearthly display of lightning that still stands as the most powerful man-made electrical surge in history. The returning current formed an arc of lightning that stretched skyward from Tesla's tower and progressively grew to an incredible 130 feet long. Apocalyptic crashes of thunder were heard twenty-two miles away. Tesla had been concerned that there might be an upper limit to generating resonant surges, but now he believed the potential was limitless. The demonstration did come to an unexpected halt, but that was because the power surge caused the overloaded Colorado Springs power generator to burst into flames. Tesla received no further free power from the plant's furious owners.

He returned to New York in search of backing for the global implementation of a resonant energy system. Now cognizant of the business world's inevitable reluctance to support giving away free energy, Tesla pitched his new project as a means of transmitting communication, rather than electrical power. Decades before the birth of the Internet, Tesla was envisioning an information superhighway that was a far more sophisticated communication network than the one we use today.

George Westinghouse passed on the idea. Tesla next proposed it to J. P. Morgan, the wealthiest man in America, who had previously declined to finance the inventor. The idea of a monopoly on world communications intrigued Morgan, and he enabled Tesla to build a new laboratory on Long Island. Named Wardenclyffe, it was to be a bigger and better version of his Colorado facility.

While Tesla worked on the project, a string of accidents and bad luck struck Wardenclyffe, and he was beginning to run out of money. Morgan's funds and enthusiasm seemed to evaporate. In a last-ditch effort to keep his investor from deserting him, Tesla revealed to Morgan that his true goal was not to replace the telegraph, but to replace the conventional transmission of electricity. Morgan responded by withdrawing his support entirely.

Tesla would never get another opportunity to bring free energy to the world.

- Next: Tesla's Death Ray
- Tesla Index

Tesla's Wardenclyffe laboratory, where he tested his death ray.

4: Tesla's Death Ray

Given that Tesla's inventions generally possessed an element of social conscience, of doing good for humanity, it may seem surprising that he created a number of devices with military applications. And the notion of the Tesla harnessing his mind for purposes of war may seem immensely frightening. After all, this is the man who boasted that with his resonance generator he could split the earth in two... and no one was ever quite sure whether he was joking.

The first Tesla invention with a proposed military use was his automaton technology, with which the labor of human beings could be performed by machines. Specifically, Tesla produced remote-controlled boats and submarines. He demonstrated the wireless ship at an exposition in Madison Square Garden in 1898. The automaton apparatus was so advanced, it used a form of voice recognition to respond to the verbal commands of Tesla and volunteers from the audience.

In public, Tesla spoke only of the humanitarian virtues of the invention: it would lessen the toils and drudgery of mankind and keep human lives out of harm's way. But Tesla actually had his hopes on a contract with the U.S. military. In a presentation before the War Department, Tesla argued that his unmanned torpedo craft could obliterate the Spanish Armada and end the war with Spain in an afternoon. The government never took Tesla up on his offer.

Tesla then decided to pitch the automated submarine to private industry, and submitted it for the approval of J. P. Morgan. According to some accounts, Morgan offered to manufacture Tesla's vessels, but only if Tesla would agree to marry Morgan's daughter. Such a deal was of course anathema to Tesla, and he and Morgan would not work together until Wardenclyffe, a couple of years later.

Tesla eventually landed a successful military contract -- with the German

Marine High Command. The product here was not unmanned sea craft, but sophisticated turbines which Admiral von Tirpitz used to great success in his fleet of warships. After J. P. Morgan cut off his support of Wardenclyffe, this foreign contract was Tesla's only substantial source of income. Upon the outbreak of World War I, Tesla chose to forfeit his German royalties, lest he be charged with treason.

Nearly broke, and finding the United States on the brink of war, Tesla dreamed up a new invention that might interest the military: the death ray.

The mechanism behind Tesla's death ray is not well understood. It was apparently some sort of particle accelerator. Tesla said it was an outgrowth of his magnifying transformer, which focused its energy output into a thin beam so concentrated it would not scatter, even over huge distances. He promoted the device as a purely defensive weapon, intended to knock down incoming attacks -- making the death ray the great-great grandfather of the Strategic Defense Initiative.

It is not certain if Tesla ever used the death ray, or indeed if he even succeeded in building one. But the following is the often-related story of what happened one night in 1908 when Tesla tested the foreboding weapon.

At the time, Robert Peary was making his second attempt to reach the North Pole. Cryptically, Tesla had notified the expedition that he would be trying to contact them somehow. They were to report to him the details of anything unusual they might witness on the open tundra. On the evening of June 30, accompanied by his associate George Scherff atop Wardenclyffe tower, Tesla aimed his death ray across the Atlantic towards the arctic, to a spot which he calculated was west of the Peary expedition.

Tesla switched on the device. At first, it was hard to tell if it was even working. Its extremity emitted a dim light that was barely visible. Then an owl flew from its perch on the tower's pinnacle, soaring into the path of the beam. The bird disintegrated instantly.

That concluded the test. Tesla watched the newspapers and sent telegrams to Peary in hopes of confirming the death ray's effectiveness. Nothing turned up. Tesla was ready to admit failure when news came of a strange event in Siberia.

On June 30, a massive explosion had devastated Tunguska, a remote area in the Siberian wilderness. Five hundred thousand square acres of land had been instantly destroyed. Equivalent to ten to fifteen megatons of TNT, the Tunguska incident is the most powerful explosion to have occurred in human history -- not even subsequent thermonuclear detonations have surpassed it. The explosion was audible from 620 miles away. Scientists believe it was caused by either a meteorite or a fragment of a comet, although no obvious

impact site or mineral remnants of such an object were ever found.

Nikola Tesla had a different explanation. It was plain that his death ray had overshot its intended target and destroyed Tunguska. He was thankful beyond measure that the explosion had -- miraculously -- killed no one. Tesla dismantled the death ray at once, deeming it too dangerous to remain in existence.

Six years later, the onset of the First World War caused Tesla to reconsider. He wrote to President Wilson, revealing his secret death ray test. He offered to rebuild the weapon for the War Department, to be used purely as a deterrent. The mere threat of such destructive force, he claimed, would cause the warring nations to agree at once to establish lasting peace.

The only response to Tesla's proposal was a form letter of appreciation from the president's secretary. The death ray was never reconstructed, and for that we should probably all be thankful.

Tesla made one one further attempt to aid in his country's war effort. In 1917, he conceived of a sending station that would emit exploratory waves of energy, enabling its operators to determine the precise location of distant enemy craft. The War Department rejected Tesla's "exploring ray" as a laughing stock.

A generation later, a new invention exactly like this helped the Allies win World War II. It was called radar.

Next: His Wildest Dreams

Tesla Index

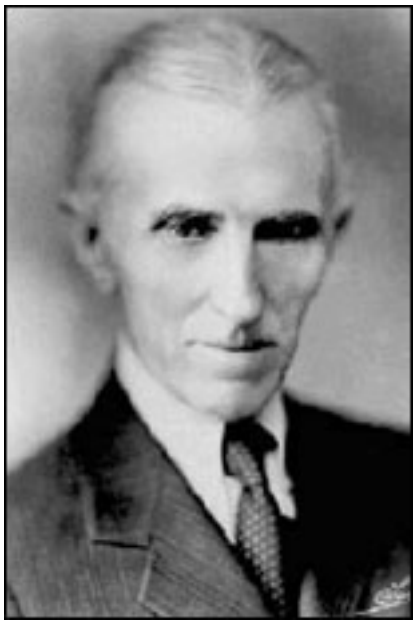

Tesla's ideas seemed to grow markedly weirder in his later years.

5: His Wildest Dreams

Forever restless, and untethered by concerns of practicality and marketability, Tesla's mind spawned a vast miscellany of odd inventions. Many of these were never developed beyond the concept stage, and the ideas seemed to grow markedly weirder in the final years of Tesla's life.

Invention was normally a deliberate process for Tesla, his every intention and goal fully formed before he and his crew lifted a finger. But there were times when he stumbled upon a new discovery by mistake. Tesla performed his first experiments with resonance technology at his New York laboratory by firing up a small oscillator, which caused a minor amount of vibration. Suddenly, an alarmed squad of police officers stormed into the lab, demanding that Tesla stop at once. Manhattan was shaking for miles around. Tesla had not taken into account how resonance waves grow stronger the further they travel from their source. He had unintentionally created what became known as Tesla's earthquake machine.

Tesla also applied his resonance engines in bizarre forms of physical therapy. He created machines that flooded the human body with electrical currents and strong vibrations, intended to soothe aches and promote healing. And Tesla wasn't just the inventor of the "electrotherapeutic" device -- he was also a client. He reportedly became somewhat addicted to administering the treatment to himself, insisting that a session with the machine rejuvenated him on his long stretches of work without food or sleep. Tesla once let his friend Samuel Clemens try out the healing machine. The author is said to have enjoyed the experience tremendously -- until the vibrations brought him a case of spontaneous diarrhea. Tesla marketed this invention, and the Tesla Electrotherapeutic Company was one of the few commercial enterprises of his old age that was marginally successful.

Tesla gained another accidental revelation during his testing of the magnifying

transformer in Colorado Springs. One evening during the construction of the device, the apparatus began to sound out a series of precise clicks, similar to Morse code. Tesla was convinced that these were signals being sent by extraterrestrial life. Tesla had expressed his belief in life on Mars, and now he thought he had proof. He later conceived of transmitters for communicating with Martians, espousing his view that the establishment of peaceful relations with our neighbors from outer space was among the most pressing duties that lay before humanity.

In his later years, Tesla was fascinated with the idea of light as both a particle and a wave -- the fundamental proposition of what would become quantum physics. This field of inquiry led to the development of his death ray. Tesla also had the idea of creating a "wall of light" by manipulating electromagnetic waves in a certain pattern. This mysterious wall of light would enable time, space, gravity and matter to be altered at will, and engendered an array of Tesla proposals that seem to leap straight out of science fiction, including anti-gravity airships, teleportation and time travel.

The single weirdest invention Tesla ever proposed was probably the "thought photography" machine. He reasoned that a thought formed in the mind created a corresponding image in the retina, and the electrical data of this neural transmission could be read and recorded in a machine. The stored information could then be processed through an artificial optic nerve and played back as visual patterns on a viewscreen.

It's a pity Tesla never made this last invention a reality. With the dearth of written notes and documentation he left behind for modern science to study, we can only conclude that Tesla's weirdest ideas were misconceived fantasies -- maybe even symptoms of madness. Nothing less than a comprehensive recorded catalog of his brain waves could prove otherwise.

- Next: The Forgotten Genius
- Tesla Index

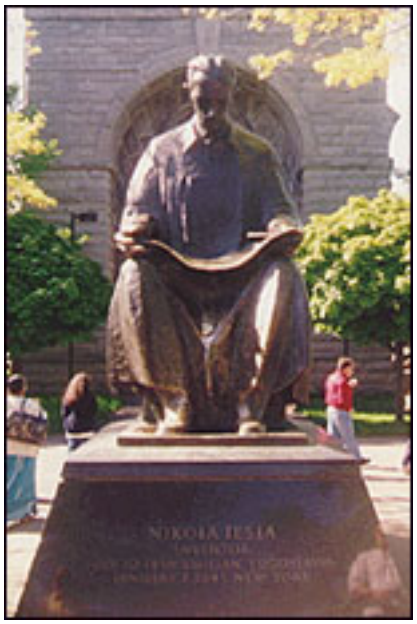

Tesla died penniless in obscurity, but his legacy is slowly gaining recognition.

6: The Forgotten Genius

On January 7, 1943, Nikola Tesla died in New York City at the age of 87. He was virtually penniless, living at the dilapidated Hotel New Yorker in a room that he shared with a flock of pigeons, which he considered his only friends.

The thriving industries he had built had long since turned their backs on him. The scientific community shunned him and his eccentric views. To the general public, he was either unknown or an object of ridicule, a lunatic whose ravings were fit only for sensational tabloids. The popular Max Fleischer "Superman" cartoons of the 1940s pitted the Man of Steel against the death rays and electromagnetic terrors of a scheming mad scientist, whose name was Tesla.

How could this have happened? Whatever his flaws, however far afield he may have strayed at times, Tesla surely deserved better than this. Modern society owes him just as much as the people of his time did, if not more, and yet we have forgotten him.

There are several schools of thought on the question of Tesla's fall into obscurity. The first, and probably the most irrefutable, is that Tesla failed to make the history books because he failed as a businessman. The most successful people aren't necessarily the most brilliant, but those who can play the game to reach the top. Tesla was a disciple of the pure sciences as opposed to applied science, with little facility at figuring out how to profit from his ideas. His business associates often did not act on behalf of his best interests, and Tesla himself made scores of bad financial decisions.

For example, in the wake of Tesla's successful implementation of AC, he stood to collect an enormous amount of wealth. He had signed a contract with Westinghouse which could conceivably have put him among the richest men in America. But when George Westinghouse told Tesla that the financial drain of

the arrangement would put his company's future in jeopardy, Tesla ripped the contract to shreds, as a gesture of friendship. Had he held Westinghouse to the deal, or at least negotiated for a fraction of it, Tesla would have died in luxury, and may have preserved his notoriety much more fittingly.

Other analysts take the blame off Tesla's shoulders, and propose that big business and the U.S. government conspired to suppress the inventor's genius. At the top of the suspected conspirator list is Thomas Edison. Edison despised his former employee's success with AC, and it is known that he set out on a campaign to smear Tesla's name. He held demonstrations at which animals were lethally electrocuted with AC-powered devices, in a deceptive and inhumane effort to warn the public of the danger posed by Tesla and Westinghouse's "unsafe" new electrical system. Edison also sat on the War Department advisory board that rejected Tesla's proposals of the death ray and his radar-like device.

J. P. Morgan is also implicated in the anti-Tesla cover-up. Morgan counted on increasing his already monumental wealth by exploiting Tesla's ideas, until he learned that Tesla was considering the free distribution of energy -- a terrifying idea to any self-respecting capitalist. He ended his funding of Tesla's experiments at once, and some think he used his considerable clout to ensure that no one else would bankroll Tesla's threatening schemes.

The government, which had always held Tesla at arm's length when he attempted to pitch a proposal, became suddenly fascinated with his work as soon as he died. The FBI ordered the Office of Alien Property to seize all of Tesla's papers and possessions. This confiscation was unequivocally illegal, since Tesla had been an American citizen since 1891.

The records of Tesla's work were judged to pose no threat to national security, and the FBI's file on Tesla was closed in 1943. It was reopened in 1957 in the wake of reports that the Russians were performing mysterious Tesla technology experiments. Many are convinced the Pentagon has followed suit with top-secret Tesla-based projects of its own, the most infamous being HAARP, the High-frequency Active Auroral Research Program. Reminiscent of Tesla's giant magnifying transmitter, only pointed in the opposite direction, the $30-million experiment is designed to pump enormous quantities of energy into the atmosphere over Alaska. The purposes of HAARP are unclear, although researchers probing the project have called it everything from a communications and surveillance network to a mass mind-control device.

A final theory is that Tesla ruined his reputation with his own outlandish inventions and claims. Some claim that Tesla went wrong as soon as he struck upon his quest for wireless energy. Others believe that he descended into insanity or senility when he began to speak of death rays and Martians. Tesla never accepted the work of Albert Einstein, which he criticized as being vague

and incoherent. Given his adherence to these beliefs, many question how great a scientist Tesla could have been.

Strictly speaking, such arguments are probably correct. To the best of modern scientific knowledge, Tesla's free energy system simply would not work, there are no signals broadcast from Mars, and the theory of relativity is sound. But there are two things left to consider.

First, even if Tesla's later ideas were dead wrong, they by no means diminish the immense quantity of very right ideas that he contributed to our world. And second, it bears remembering that alternating current was also perceived as unrealistic Tesla gibberish for quite some time before its true brilliance was finally proven. There is the possibility, however remote, that Tesla's most bizarre concepts will be validated at some point in the future, when science finally catches up with him. Only time will tell.

For now, Tesla's true legacy is increasingly being recognized, bit by bit. The Supreme Court ruled shortly after his death that Tesla was the legal inventor of radio, not Guglielmo Marconi. Similarly, Tesla has been rightfully acknowledged as the inventor of the fluorescent bulb, the vacuum tube amplifier and the X-ray machine. History books are now starting to include these facts. Finding exposure in our current so-called "information age," in which technology is king and strange new ideas are tolerated more and more, Tesla is becoming something of a folk hero. This may run the risk of reducing Tesla and his work to an Internet fad, but any effort that keeps his name alive is worthwhile.

The final fate of Tesla's Wardenclyffe laboratory was strangely fraught with meaning. In 1917, it was consigned to demolition. Tesla's money for its upkeep had run dry, and its meager remaining contents were reportedly coveted by German spies. As a preemptive move, it was dynamited. But the proud steel tower of Wardenclyffe remained. The demolition crew blasted the site repeatedly, but the tower would not collapse. They had to return at a later date and dynamite it once more. It fell to the ground, but did not explode, nor did it shatter into pieces upon its thunderous impact.

Tesla Index

4.5" Tesla Coil System

Some interesting observations:

60Hz resonance: The MMC capacitor described below has a measured capacitance of .01066uF. The measurement was done using high-dollar govt. equipment, so it's there. Using a 15kV 60mA transformer, the impedance matching formula 1 / (2 * pi * F * C) calls to use a .0106uF capacitor...so this is the value I have used. Even though this might not be the optimum capacitance to use for this xfmr, but It's really cool because of the 60Hz resonant charging of the capacitor - I've never heard a sound quite like it. When slowly turning up the variac, my spark gap fires at about 5 - 10% of the 120VAC input voltage...not even enough to register on my voltmeter. At full power (and only at full power), the transformer screams a 120Hz whine - even heard above the output spark noise and spark gap.

Long component lifetime: My MMC cap is rated at 6kVAC. I have it in series with my primary coil, and this in series with my 15kV neon sign transformer and spark gap. Total runtime on the capacitor is 2.5 hours so far. I have NEVER used a safety gap, and I have NEVER used a filter network of any kind on this coil. Being reasonable, It's safe to say that my capacitor is seeing 20kV spikes regularly, along with a solid continuous 15kV from the xfmr. So why has my 6kVAC capacitor lasted so long?? Beats me. Sure - there are 15 or so individual capacitors that are split open, but the sucker still measures right on .01uF, and my coil still runs exactly the same. So far, I have replaced only 2 little blue caps because of internal arcing. I have not touched the others. Anyway I ran the numbers using the MMC lifetime expectancy formula and it came out to be one hour if my math was correct. I find it strange that I've somehow measled my way out of capacitor and transformer failure. The 15kV 30mA NST has never been touched (It's a jefferson by the way). No safety gap, no chokes, and an extremely underrated capacitor...yet it still performs flawlessly after 200% of its (calculated, theorized) lifetime is used up. OH - and the spark gap spacing has been set at .4" for the past hour of coil operation. I believe that my capacitor and/or transformer should've been toast a loooong time ago. So why hasn't it been?? I have no clue. Do you? Fill me in...please! The email is pyrotrons@aol.com

THE SYSTEM AS A WHOLE:

- Transformer
- Capacitor
- Spark Gap
- Pri and Sec coils
- Toroids
- No safety gap, no chokes, nothing for protection

POWER TRANSFORMER:

- Neon Sign Transformer
- 110VAC 60Hz input
- 15kV 60mA output
- 250kohm secondary winding impedance @ 60Hz.
- 900W power output

SECONDARY COIL:

- winding is 21" on 4.5" O.D. PVC form 22" long
- 14.26" circumference
- 960 turns #24 nylon insulated magnet wire @ 47.2 TPI
- Fr - abt. 370kHz unloaded
- Fr - 200kHz w/ 23pF topload
- 20.4 mH inductance
- Self C - 8.5pF (calculated w/ Medhurst formula)
- sealed w/ 4 coats of 2-part epoxy

CAPACITOR:

- MMC Design
- Uses the Philips KP/MMKP polypropylene cap's
- Each capacitor rated 6.2nF @ 2kVDC, 600VAC
- 17 strings in parallel, 10 capacitors in each string
- One string C = .6272nF (.0006272uF)
- Total C of 17 strings = measured .010663uF
- Dissipation Factor = measured .00031
- Max rated VDC = 20kV
- Max rated VAC = only 6kV
- *** Small Note: After putting several hours of runtime on the cap with this system, I counted 20 capacitors that were split open due to internal heating. (there are 170 caps total). But - the thing continues to run on just fine! ***AS OF 10:45pm CST on JAN 20: After about a one-minute run, i started noticing a funny smell. Something caught my eye, and i immediately slammed the off switch down when i saw one of the little blue capacitors of my MMC on fire. It's kind of interesting...the coil's output showed no signs of a problem while the MMC was burning. No big deal, it wont take me 5 minutes to replace the cheap little blue cap :)

FLAT PRIMARY COIL:

This coil was designed to run with a 6" secondary coil, but i'm using it for my 4.5" secondary. There is a huge space (oh...2.5") between the two coils. Im sure this isn't the best coil for the job, but it works SO much better than the aluminum primary that i was using before. With the Al primary, maximum sparklength never exceeded 2.5 feet. Now with the new flat copper primary, I'm easily getting 3 foot arcs. I'm wondering what will happen if i go ahead and solder another turn or two inside the coil. (I just did...several inches of sparklength gained, also a noticeable increase in arc channel current)

- 15 turns of 1/4" O.D. copper tube, 1/4" between turns.
- Tubing is mounted in notches on Lexan standoffs, each standoff being 1" tall.
- Lexan standoffs are epoxied onto square plexiglass base
- Haven't measured the inductance yet - i just know it works!
- 6.5" I.D
- Don't know the O.D.

SPARK GAP:

- RQ design
- 10 copper tubes, each 7/8" O.D. 3" long
- all tubes bolted to inside of 6" PVC pipe section
- Gap spacing is completely adjustable from 0" to 5/8"
- 63 CFM fan mounted on end opposite electrodes
- gap gets warm after a 1 minute, full power run
- Max sparklength @ .35" gap spacing - 36".

TOPLOAD CAPACITANCE:

- Two Al dryer duct toroids sitting on top of each other.
- Both toroid cross-sections = 3.5"
- Top toroid O.D. = 20"
- Bottom toroid O.D. = 14"
- Estimated 20 - 25pF capacitance
- Mounting technique...sits on a pie pan :)

Matching a topload to a secondary coil:

The topload needs to be matched to the secondary coil for best performance. To do this, follow the instructions below, using the two equations provided.

$$X_L = (2 * pi * Fr * L)$$

$$C = \frac{\frac{1}{Xc}}{(2 * pi * Fr)}$$

In the first equation, plug in the coil's UNLOADED resonant frequency in Hertz (Hz) and its inductance in Henries (H). Do the multiplication, and your answer will be coil's inductive reactance in ohms. Next, set Xl = Xc in the second equation. Plug in the same resonant frequency value, then do the math. Take the inverse of Xc, and divide this by the product of 2, pi, and F. Your answer will be the necessary topload capacitance value in Farad's. Multiply this by 10^-12 to get the answer in picofarads (pF). Now all you have to do is design your topload (sphere or toroid...doesnt matter) for this value. Matching a toroid to a secondary coil is very important for good performance...it will insure that the coil's energy will be efficiently transferred into the topload.

Dont operate your coil near sensitive electronics!!

What does a Tesla Coil Sound like??

Back to the main page

TESLA TRIES TO PREVENT WORLD WAR TWO

by John J. O'Neill

Previous Article Next Article

(The unpublished Chapter 34 of *Prodigal Genius*)

When Tesla was talking as a scientist he was opposed to wars on moral, economic and all practical and theoretical grounds. But like most scientists, when he stopped thinking as a scientist, and let his emotions rule his thoughts, he found exceptions in which he felt some wars and situations were justifiable. As a scientist he was unwilling to have the discoveries of scientists applied to the purposes of war makers, but when in the emotional phase of his nature took the ruling position he was then willing to apply his genius to devising measures that would prevent wars by supplying protective devices.

This attitude is exemplified in the following statement which he prepared in the twenties but did not publish:

"At present many of the ablest minds are trying to devise expedients for preventing a repetition of the awful conflict which is only theoretically ended and the duration and main issues of which I correctly predicted in an article printed in the Sun of December 20, 1914. The League is not a remedy but, on the contrary, in the opinion of a number of competent men, may bring about results just the opposite. It is particularly regrettable that a punitive policy was adopted in framing the terms of peace because a few years hence it will be possible for nations to fight without armies, ships or guns, by weapons far more terrible, to the destructive action and range of which there is virtually no limit. Any city at any distance whatsoever from the enemy can be destroyed by him and no power on earth can stop him from doing so. If we want to avert an impending calamity and a state of things which may transform this globe into an inferno, we should push the development of flying machines and wireless transmission of energy without an instant's delay and with all the power and resources of the nation."

Tesla saw preventative possibilities in his new invention which embodied "death ray" characteristics and which was made several years after the foregoing statement was written. He saw it providing a curtain of protection which any country, no matter how small, could use as a protection against invasion. While he might offer it as a defensive weapon, however, there would be nothing to stop military men from using it as a weapon of offense.[1]

While I did not know the nature of Tesla's plan I was convinced that it did embody many discoveries that would be of commercial value, and these were the angles he should seek to develop. I felt that if he could be induced to develop some minor phase of his work that would have immediate commercial use he could derive an income from it which would enable him to proceed with his more elaborate plans. To this end I sought to gain some insight into his thoughts, that would enable me to get a practical plan into operation. This was no secret to Tesla and he successfully parried every thrust I made.

The clearest conception I got, and that was largely from scattered remarks, and by making deductions from them, concerned a possible manner in which one phase of his curtain of protection might operate. This was a "war" angle and as such it did not interest me, but since it involved "lightning balls," or "fireballs," I was very curious. Fireballs had always fascinated me, and I had read everything I could lay my hands on about them.

A fireball is a strange phenomenon associated with lightning. Some of the energy of the lightning stroke appears to become locked into a ball shaped structure which may be of any size from a couple of inches to a foot in diameter. It looks like a perfect sphere, brightly incandescent and floats like a bubble, being easily carried by air currents. They may last for a short time, from a fraction of a second to many seconds. In this interval, during which they stay fairly close to the ground, they may come close to many objects without damaging them or being damaged by them. Suddenly, for no known reason, the ball explodes doing as much damage as a bomb, if close to structures, and no damage if in the open.

The fireball looked to me like a gigantically enlarged model of the tiny electron, one of the building blocks of matter, which acts as if it were just a spherical area of space in which an amount of energy was crystallized to give it structure. I felt that if it were possible to discover how a large amount of energy was stored in this fairy bubble structure of a fireball a new insight might be gained into the structure of the electron and other fundamental particles of matter. Also this method of storing energy could be applied to a thousand useful purposes.

When I approached Tesla with pleas along this line to develop this possible phase of his discovery he would evade direct reply by indulging in a, not always, tolerant lecture on my gullibility in believing theories about the complex structure of the atom. While he had in earlier years discussed some of his experiences with fireballs in his laboratory at Colorado Springs and explained his theory of their formation, he would not in later years permit himself to be drawn into a discussion of them as a possible part of his system. This, of course, made me suspicious that the clue was "hot" but I could be completely wrong in my conclusions. Tesla was very

quick in detecting my technique when I sought to narrow the field down by trying to get him to deny statements when he was adamant to direct questions.

Tesla became familiar with the destructive characteristics of fireballs in his experiments at Colorado Springs in 1899. He produced them quite by accident and saw them, more than once, explode and shatter his tall mast and also destroy apparatus within his laboratory. The destructive action accompanying the disintegration of a fireball, he declared, takes place with inconceivable violence.

He studied the process by which they were produced, not because he wanted to produce them but in order to eliminate the conditions in which they were created. It is not pleasant, he related, to have fireballs explode in your vicinity for they will destroy anything they come in contact with.

It will be necessary to reconstruct his statements from very fragmentary notes and a long distance memory.

Parasitic oscillations, or circuits, within the main circuit were a source of danger from this cause. Points of resistance in the main circuits could result in minor oscillating circuits between terminals or between two points of resistance and these minor circuits would have a very much higher period of oscillation than the main circuit and could be set into oscillation by the main current of lower frequency.

Even when the principle oscillating circuit was adjusted for the greatest efficiency of operation by the diminution of all sources of losses the fireballs continued to occur but these were due to stray high frequency charges from random earth currents.

From these experiences it became apparent that the fireballs resulted from the interaction of two frequencies, a stray higher frequency wave imposed on the lower frequency free oscillations of the main circuit.

As the free oscillation of the main circuit builds up from the zero point to the quarter wave length node it passes through various rates of change. In a current of shorter wavelength the rates of change will be steeper. When the two currents react on each other the resultant complex will contain a wave in which there is an extremely steep rate of change, and for the briefest instant currents may move at a tremendous rate, at the rate of millions of horsepower.

This condition acts as a trigger which may cause the total energy of the powerful longer wave to be discharged in an infinitesimally small interval of time and at a proportionally tremendously great rate of energy movement which cannot confine itself to the metal circuit and is released into surrounding space with inconceivable violence.

It is but a step, from learning how a high frequency current can explosively discharge a lower frequency current, to using the principle to design a system in which these explosions can be produced by intent. The following process appears a possible one but no evidence is available that it is the one Tesla evolved: An oscillator, such as he used to send power wirelessly around the earth at Colorado Springs, is set in operation at a frequency to which a given warship is resonant. The complex structure of a ship would provide a great number of spots in which electrical oscillations will be set up of a much higher frequency than those coursing through the ship as a whole. These parasite currents will react on the main current causing the production of fireballs which by their explosions will destroy the ship, even more effectively than the explosion of the magazine which would also take place. A second oscillator may be used to transmit the shorter wavelength current.

Somewhat later I learned the reason for Tesla's reticence to discuss the details. This came shortly after Stanley Baldwin replaced Neville Chamberlin as Prime Minister of Great Britain.

Tesla revealed that he had carried on negotiations with Prime Minister Chamberlin for the sale of his ray system to Great Britain for $30,000,000 on the basis of his presentation that the device would provide complete protection for the British Isles against any enemy approaching by sea or air, and would provide an offensive weapon to which there was no defense. He was convinced, he declared, of the sincerity of Mr. Chamberlin and his intent to adopt the device as it would have prevented the outbreak of the then threatening war, and would have made possible the continuation—under the duress which this weapon would have made possible—of the working agreement involving France, Germany and Britain to maintain the status quo in Europe. When Chamberlin failed, at the Munich conference, to retain this state of European equilibrium it was necessary to get rid of Chamberlin and install a new Prime Minister who could make the effort to shift one corner of the triangle from Germany to Russia. Baldwin found no virtue in Tesla's plan and preemptorially ended negotiations.

Tesla was greatly disappointed by the collapse of his negotiations with the British Government. With it there collapsed his hopes of providing a demonstration of his most recent, and, what he considered, his most important discoveries. He did not, however, dwell on the subject; beyond the single conversation he did not mention the matter again. He did not get another chance to finance the

demonstration of these discoveries.

During the period in which the negotiations were being carried on, Tesla declared, efforts had been made to steal the invention. His room had been entered and his papers examined but the thieves, or spies, left empty handed. There was no danger, he said, that his invention could be stolen for he had at no time committed any part of it to paper. He could trust his memory to preserve every fine detail of his investigations. This was true, he said, of all of his later major discoveries.

The nature of his system makes little difference now; he has gone and has taken it with him. Perhaps, if there is any communication from beyond the veil that separates this life from whatever exists hereafter, Tesla may look down upon earth's struggling mortals and find some way of dropping a hint concerning what he accomplished; but, if the situation is such that this cannot take place, then we must await until the human race produces another Tesla.

1 The "death ray," also known as "teleforce," was Tesla's particle-beam defense weapon. See Nikola Tesla's Teleforce & Telegeodynamics Proposals for details.

TESLA'S DEATH RAY
A RECONSTRUCTIVE POSTULATE
BY TIMOTHY VENTURA

INTRODUCTION:

Nikola Tesla, the practical inventor of the alternating current, the Tesla-Coil, and over 700 other patented inventions, is also known for his assertion to have invented a method of projecting an extremely potent "death-ray" through space to destroy predetermined targets.

The July 11, 1934 issue of the New York Times ran a story concerning this supposed invention of his, which he claimed to be powerful enough destroy, "10,000 planes 250 miles away...without a trace."

"My apparatus projects particles which may be relatively large or of microscopic dimensions, enabling us to convey to a small area at a great distance trillions of times more energy than is possible with rays of any kind. Many thousands of horsepower can thus be transmitted by a stream thinner than a hair, so that nothing can resist."

"Teleforce, said Tesla, was based on four new inventions, of which two had already been tested: 1. a method of producing rays on the free air without a vacuum; 2. a method of producing 'very great electrical force'; 3. a method of amplifying this force; 4. a new method for producing 'tremendous electrical propelling force.'"

EXAMINATION:

Several aspects of the "Death Ray" have intrigued modern researchers--one of the most important of those being Tesla's expertise in fields related to his description of the device. When Tesla's experimentation with High Voltage Alternating Currents is examined, as well as his unique approach to visualizing the way in which electricity is manipulated, a picture of expertise emerges that tends to lend credence to his "Death Ray" device.

Many engineers have speculated that the "Death Ray" was actually a variation of the more commonly known "particle-beam"--a weapon popular in the annals of science fiction. Particle beams--steady streams of electrons, protons, neutrons, or ions--are a product of particle accelerators, and to date, there has been no known way to use a particle beam as a weapon. Particle beams do have extremely destructive capabilities, however, the apparatus now used to generate them requires accelerators miles in diameter using billions of Joules of energy. Although Tesla never claimed to have invented a "portable model", there are photos of him with a scale model of his weapon, igniting gunpowder from a distance of a few feet. Particle beams are even more inefficient when used in an atmosphere, which tends to scatter and absorb the beam to

such a great extent as to render it virtually useless--thus, a "hair-thin" beam would be a seeming mechnical impossibility.

THEORETICAL CONSIDERATIONS:

In a hopefully accurate approximation of the thought processes that occupied Tesla while designing this device, one must fully consider that nearly all of his work revolved around High Voltage Alternating Currents. In fact, his death ray is publicized as being based on his designs for the wireless electrical transmission of power. While based on unidisputable scientific principles, most of Tesla's work fell in between the areas of physics and engineering. Hence, when Tesla wanted to transmit a focussed beam of energy, his thought processes might have gone as thus:

There are three means (if not more) of directly transmitting electrical energy from one location to a remote location in a "wireless" fashion: 1. The broadcasting of Electromagnetic waves from point A to point B--where those waves excite atoms to produce electricity. This method is feasible for power transmission and weapons applications, but unfortunately is impractical to technology except in the microwave region of the spectrum. Tesla's equipment, being primarily alternator-based and not using any solid-state components, could not have reached a high enough frequency by orders of magnitude to transmit microwave-band energy. 2. Direct-current transmission of energy from source to target. This is the principle of particle accelerators--the electrons or other particles are moved in a linear fashion through the accelerator, to be then directed at a target. This method of wireless transmission was also impractical to Tesla, because it requires a mechnical arrangement that is monumentally expensive, complicated, and energy-consumptive, and produces a beam that is unfocusable, easily distorted and dissapated, and has an effective distance measured in feet, not miles. 3. Alternating current transmission of power--the longitudinal wave interference device. An alternating current at a high voltage--such as those that Tesla worked with for his entire career--could be a means of providing transmission of power between remote locations with substantially smaller losses. Alternating atmosheric currents, however, have several drawbacks--including the fact that they are inherently unfocussed in nature. The possible solutions to this problem will be discussed below.

There are a few various possibilities for the transmission of power, and Tesla probably entertained them all. The real problem, of course, was simply "how to get electricity to point B". Tesla wouldn't have even cared if it came from point A, which brings two choices to mind. Firstly, the transmission of power from Point A to Point B requires a few things. Since electricity moves from a point with a high potential to a point with a low (or opposite) potential, it was in Tesla's best interests to have the "target"

Point B at a lower electrical potential than the surrounding environment--otherwise, the electrons would get "lost" after only a few feet. Tesla would have considered this potential difference to be the only thing of any import to the transmission of power, and hence, why move the electricity from Point A at all--simply make Point B a lower potential than its surrounding environment.

Tesla would have wanted a device that could create a "positive" potential (at least temporarily) around the target object. Once that target was "ionized" to a high enough voltage, electrons from the surrounding environment would simply flood into the target due to electrostatic attraction. Once he had created a device that could positively ionize an object at a distance, he simply had to arrange a terminal at Point A with a high opposite potential to supply electrons, which would then literally be pulled to the target source. Apparently, the easiest way to do this also tends to focus the beam of electrons, creating a directed bolt of lightening from A to B.

THE WEAPON:

Tesla's Death Ray lies somewhere in between wave mechanics and electrical engineering--and is thus easily missed by the increasingly specialized numbers of scientists and technicians in the world today. He basically used A Fresnel Lens to focus a "Longtudinal-Wave", hence creating a focussed electrostatic potential at the target. This "fresnel" effect is also responsible for the focussing of the subsequent electron beam from A to B.

Tesla concept used longitudinal waves--which are not really waves at all. Longitudinal Waves correspond to variations in pressure (such as acoustics), and in electricity, they correspond to variations in electrostatic potential--such as those produced by an AC current "travelling" through the atmosphere. Longitudinal electrical waves can be focused with a Fresnel lens like ordinary waves, meaning that the "wave amplitudes" add at the focal point--Hence, the environment receives a theoretical potential of -15 volts, and the target recieves -30 volts. A multizoned Fresnel Lens would undoubtably increase this focal potential a great deal more than a single zoned lens, but a single-zone lens has an infinite number of focal points at regularly spaced intervals, whereas a multizoned lens has only one...

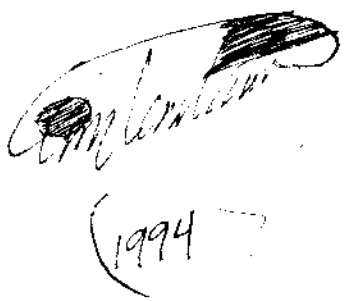

1994

Tesla, God's Firmament and Earthquakes

TERRA RESEARCH & CONSULTING, Larry Park, 12-February-2004

Science took a wrong turn in 1887

Science has taken a wrong turn in 1887 when Albert A. Michelson and Edward W. Morley conducted a famous experiment, called the Michelson-Morley Experiment. This wrong turn formed an errant foundation our current physics and science rests upon, starting from Albert Einstein (Einstein's Postulates & special theory of relativity) to modern day electromagnetic theory. This wrong turn will rock science to its foundation when realized. It will shatter theories and rewrite a century of books. Among the most devastating will be a crumbling of modern astrophysical theory on formation of our universe (big bang, age of, redshift, and more). Yet, an early scientist was acutely aware of this errant path, but considered it a blessing. Why? A quote:

> "I am even grateful to Einstein and others because through their erroneous theories they lead mankind away from that dangerous path I followed." ”

Who is this scientist? It was Nikola Tesla, inventor of our current AC electrical power system. What does this have to do with earthquakes? This wrong turn has kept science from understanding a power which permeates our universe and is the power inside an earthquake. But this power is the fear Tesla expressed in 'dangerous path'. It is a fear that mankind will develop this power for the harm of mankind, rather than for the benefit of mankind.

This article is a bit lengthy and a little technical at times, please bear with me, there are a number of points to assemble here. But they are touched upon briefly.

Earthquakes are predictable

Now is the time where science needs to correct this wrong turn. Why? Too many people are suffering the tragedy of earthquakes in the world. These deaths may be averted. How? The earthquake energy starts hours to days before the ground shakes and is reliably detectable to give warning. Tesla accidentally stumbled across this effect in a resonance experiment, yet everyone has misinterpreted the real physics of what actually happened since today's science or understanding is based on this wrong turn. Earthquakes are predictable. Technology exists now that proves this and the real physics behind the earthquake. More on this further in article.

Science built foundation on 'sand'

Before explanation, let me state that a good part of science is based on proper observations and theory. Science assumes a solid foundation, such as an analogy of 'built upon rock'. However, if 'built upon sand' the foundation will shift and everything above could come crashing down. Already today, astrophysicists are searching for 'missing mass' in our universe, referred to as 'dark matter' as theories are having difficulty in explaining our universe and its formation. New Hubble space telescope discoveries have led to viewing galaxies far distant and beyond original land based telescope observations. This causes problems for light 'red shift' and original expanding universe theory (i.e. galaxy speeding away faster than light - how can we view its light if so). The Standard Model of particle physics has some serious problems - it cannot explain the 'dark energy' or 'dark matter' that astrophysicists are looking for. Theories are continually modified to account for a 'shifting' foundation. A foundation error can ripple throughout science.

'You are wrong, Mr. Einstein - ether does exist!'

Pretty powerful words. Again purported from Nikola Tesla's discovered manuscripts. It continues.

> "They say much about the Einstein's theory now. According to Einstein the ether does not exist and many people agree with him. But it is a mistake in my opinion. Ether's opponents refer to the experiments of Maykelson - Morli [Michelson-Morley] who made attempts to detect the Earth's movement relative to the fixed-bed ether. These experiments failed, however it didn't mean the ether's non-existence. I always based as fact the existence of mechanical ether in my works and therefore I could achieve positive success." Nikola Tesla, [transcribed manuscript,(found in old fire-helmet as small manuscript book used as lining)].

Tesla knew of the existence of 'ether' or a 'medium' which the Michelson-Morley experiment tested to determine its existence as Tesla developed technology that interacted with the ether. The Michelson-Morley experiment didn't take into account a 'swirling' of the ether matching the earth's rotation. Einstein thus formed his famous Special theory of Relativity based on this erroneous indication of ether's non-existence. Tesla continues,

> "What is the ether and why is it so difficult to detect it? I reflected on this matter for a seriously long time and here are the outcomes I have been led to: I think that all the contradictions about whether the ether exists or not are the result of wrong interpretation of ether's properties. The ether has always been presented as an aeroform environment [gaseous]. That was the essential mistake. The ether has a very strong density. It is known that of more dense a substance, the higher is the speed of wave propagation within it. When comparing acoustic speed in the air and the light speed I have drawn a conclusion that ether density is several thousand times higher than air density. It is not the ether that is aeroform [gaseous] but the material world is an aeroform to the ether!" Nikola Tesla

In other words, ether is a medium that permeates our entire universe but we don't see it like we see and feel objects in our world. Yet this ether is intensely linked to every atom in existence. An analogy is that ether exists as an intimate shadow to us and our world, but it is not directly observable. This intimate shadow is far denser than atoms in our world. This intimate shadow exists even in empty regions of space. It exists everywhere in our universe.

Is "Ether" God's Firmament?

Some think of it as a 'firmament' that our universe exists within. Tesla continues,

> "A good example for such an interaction becomes apparent in gravitation, which should rather be named, universal compression. I think the material bodies do not gravitate between each other but it is the ether that makes one material body to press to another."
>
> "We wrongly call this phenomenon gravitation."
>
> "We can also feel ether's reaction when sudden acceleration or braking."
>
> "The stars, planets and all the universe appeared from the ether when some part of it, due to certain reasons, became less dense."
>
> "It can be compared with formation of blebs [air bubbles] in boiling water although such a comparison is only rough. The ether tries to return itself to its initial state by compressing our world, but intrinsic electric charge within material the world

substance obstructs this. It is similar to that when the water compresses blebs [air bubbles] filled with hot water steam. Until the steam does get cold the water is unable to compress the bleb. With time, having lost the intrinsic electric charge, our world will be compressed with the ether and is going to turn into ether."

"Having come out of the ether once - so it will go back into the ether." Nikola Tesla

Certainly, Tesla had a much different viewpoint than current scientific theory has today on matter formation. But Tesla was intimate with understanding of this 'medium' of ether and had time to investigate its effects in our world. His working understanding of ether led him to uniquely insightful realizations.

Other modern day scientists are re-discovering what Tesla understood. The staggering amount of energy in this 'ether' has scientists in awe. So much so that they speak of God. The interactive energy of the ether is known to science today as "Zero Point Energy" or ZPE.

ZERO POINT ENERGY
Setterfield
http://www.setterfield.org/zpe.htm

"Question: I have been reading your article about Zero Point Energy, and I am fascinated by it. I was hoping you could elaborate on how in on cubic centimeter it contains more energy than all stars and space, that really baffles me."

"Setterfield: Thank you for the question. It lets me know there have been some misunderstandings, and I am happy for a chance to clear them up."

"The Zero Point Energy (ZPE) is indeed pervasive throughout the whole volume of space. Each cubic centimeter has the same amount of ZPE. It is an extremely large amount, but not quite as large as you seem to have been led to believe. **Certainly, each cc [cubic centimeter] contains more energy than expended by all the stars in OUR GALAXY in a million years, but this is a 'few degrees' less than all the stars in space! How is this possible?"**

"Think about a rubber band. Stretch it. Stretch it more. Until it is almost ready to break. You have just invested it with quite a bit of energy - all contained in that little bit of rubber."

"In the Bible, we read twelve times that God says He stretched the heavens. If this verb is correct, and I believe it is, then the entire fabric of space has been invested with energy past our ability to even imagine it. This is why each cc of space has such an enormous amount of energy in it. We cannot feel it because it is all around us and in us equally - and, besides, we're used to it! But it is there. The pressure of our atmosphere gives a good picture. You cannot feel fourteen pounds per square inch of pressure on your skin, but it is there. On the other hand, if that pressure were suddenly (or even slowly) released, you would literally explode. The same with the ZPE."

"I hope this helps. The energy itself is from God - from his action in stretching out the heavens."

Zero Point Energy in our universe becomes a mind boggling thought. For a cube about 1/3 an inch square is contained more energy than expended by ALL of the stars in OUR GALAXY in a million years!

Science 'goofed' on assuming ether is non-existent

Another 'goof' in science is that since ether didn't exist (Michelson-Morley experiment interpretation) is that this pesky term in Maxwell's equations could be fudged - or assumed to be zero. Scientist Oliver Heavyside didn't like the increasing complexity in solving equations in the full equation forms. By assuming this term 'non-physical' it allowed the simplification of equations and thus working with them. Turns out, this pesky term is not zero at all and is real. Oops.

What does this mean? It means that science has missed the fact of existence of this term. It means that this term implies an ability to interact with Scalar Field Effects - or Scalar waves. Tesla knew of these. He called them Longitudinal waves. And what does Longitudinal waves propagate within? A medium or the 'ether'.

How does Scalar Field Effects, Ether, and Zero Point Energy tie together? It means that the tremendous energy of ZPE can manifest in our world in a synchronized way. The earthquake. (for description of scalar waves see prior articles).

Did Tesla really cause an earthquake?

To date, all who have studied an experiment Tesla performed in New York have completely missed the physics of what Tesla did that day. It is profound. I will reveal enough detail of the physics to prove to science that there is a true secret to earthquakes. This secret is what makes easy the early detection of earthquakes. This secret will radically change existing earthquake theory.

> New York World - Telegram
> July 11, 1935
>
> "I was experimenting with vibrations, I had one of my machines going and I wanted to see if I could get it in tune with the vibration of the building. I put it up notch after notch. There was a peculiar cracking sound."
>
> "I asked my assistants where did the sound come from. They did not know. I put the machine up a few more notches. There was a louder cracking sound. I knew I was approaching the vibration of the steel building. I pushed the machine a little higher."
>
> "Suddenly all the heavy machinery in the place was flying around. I grabbed a hammer and broke the machine. The building would have been about our ears in another few minutes. Outside in the street there was pandemonium. The police and ambulances arrived. I told my assistants to say nothing. We told the police it must have been an earthquake. That's all they ever knew about it." Nikola Tesla

What Tesla was doing was using an air powered mechanical oscillator to resonate a girder in a building. He was adjusting it to find a precise resonant frequency. Other reports describe earlier experiments when he resonated a two foot long and two inch thick metal bar using this oscillator. When "in tune" with this bar, and after a long wait, unusual phenomena developed. The steel bar began to tremble, increasing in its trembling until it dialated and contracted like a 'beating heart' - until it finally broke. After this experiment is when Tesla resonated a building girder.

Other versions of what happened are written:

> "After setting the little machine up, he proceeded to putter about the lab on other projects that needed attention. Meanwhile, for blocks around, chaos reigned as objects fell off shelves, furniture moved across floors, windows shattered, and pipes broke. The pandemonium didn't go unnoticed in the local precinct house where prisoners panicked and police officers fought to keep coffee and donuts from flying off desks. Used as they were to the frequent calls about diabolical noises and flashes

> from Mr. Tesla's block, they hightailed it over. Racing up the stairs and into the lab, they found the inventor smashing the vibrator into bits with a sledgehammer. Turning to them in accustomed old-world aplomb, he apologized calmly: 'Gentlemen, I am sorry. You are just a trifle too late to witness my experiment. I found it necessary to stop it suddenly and unexpectedly in an unusual way."

There is a reason Tesla had to smash it with a sledgehammer. The device froze its controls. Huh? A hint develops from more:

> "One source has it that the device 'bonded to the metal on an atomic level' and Tesla was unable to get at the controls, but it seems more likely that the wild movements of the girder, combined with the panic that he might bring the neighborhood down, moved Tesla to this unsubtle action."

Even the writer thought it too far fetched that the device 'bonded on the atomic level' - thus the commentary 'but it seems more likely…" Again, this demonstrates how people have missed what truly happened. It did bond on an atomic level.

Reports do not dispute that the surrounding area (blocks) ground was moving (shaking). How could a simple oscillator result in metric tons of oscillatory motion in the earth?

Remember the steel bar that was undulating like a 'beating heart'? This describes an elastic property that the steel developed AND that a force within the steel at an atomic level was dialating and contracting itself.

Before I get into the physics of exactly what happens, I want to illustrate how material science today has partially discovered resonant effects in structures of metals.

Vibratory Stress Relief (VSR)

In metal component fabrication, an undesirable effect develops within the metals that degrade its quality. Residual Stresses in metals are introduced from fabrication, machining or assembly. To reduce these stresses, a heat process called Thermal Stress Relief (TSR) can reduce/modify the internal stresses. TSR is typically done in large furnaces by heating to high temperatures followed by slowing cooling. Of course, science today recognizes that heat will soften the metal. This occurs from atomic vibration (heat). The lattice structure of the metal becomes more elastic. Stresses (strain) within the lattice structure shift to even out.

When materials become more elastic, they are said to change in rigidity. Science uses a rigidity factor called Young's Modulus or Modulus of Elasticity.

Materials scientists have found that the same stress relief can be achieved by a process of vibrating the metal part at its precise resonant frequency.

> VIBRATORY STRESS RELIEF
> William F. Hahn
> http://ceer.alfred.edu/research/vibratory.htm

> "..The results show that the frequency producing the greatest stress relief occurs at the resonant frequency (natural frequency). The reduction of residual stress after resonant vibratory treatment can attain 97%. Sub-resonant VSR treatments get less or no residual stress relief, depending on the frequency level applied."

This process saves a great amount of heat energy to do the same stress relief using just vibration. This gives an indication of small amounts of energy applied in a resonant fashion has a notable heat energy equivalence - irregardless of the heat loss from the furnace.

These scientists are on to something. But what happens when you vibrate in an unabated, escalating process? A whole series of mechanisms combine. It involves known phenomena in physics referred to as Casimir effect, Van der Waals force, Coulomb forces, and a coherence effect similarly found in LASER's. (other more detailed effects such as photonic spectra of longitudinal wave are skipped to keep from getting too complex).

LASER's, Casimir, Van der Waals, ZPE, and Coulomb café

Most people are familiar with the popular laser pointing devices. Laser light is unique in that it is a powerful beam of 'coherent' light. Coherent light means vibrating light with the same momentum, frequency, and phase. This type of light is 'triggered' in a material by an escalating light 'bouncing' back and forth between mirrored ends in an energized material. It is simply a photonic version of people doing 'the wave' in a stadium. Energized electrons in an atom are triggered into emitting a 'photon' of light as 'the wave' comes through. It is synchronized light - or coherent light.

When heat is applied to metal, the atoms will vibrate in a random way. This is like billiard balls bouncing off each other. The atoms have forces that keep them connected together even though they are vibrating. These connecting forces are charge based - like static electricity - and these forces are magnetic based - like magnets. These forces are described as Coulomb forces and Van der Waals forces. When heat (vibration) is applied to metal, the metal will start to soften. This softening effect is the changing of the Modulus of Elasticity (it becomes more rubbery). What is happening is that the vibratory movement is affecting the Coulomb forces and Van der Waals forces as these forces act on very small distances. Vibration changes some of the distances (and other complex effects).

Now let's throw in Casimir and ZPE. This is where it gets interesting. Science has proven the existence in one famous experiment of Zero Point Energy by the Casimir effect. This effect creates a powerful force when very smooth metal plates are moved together to very tiny separation distances. The Zero Point Energy then very strongly pushes the plates together as the middle becomes a void of the Zero Point Energy in this region. The result is energy comes from ZPE into our world. This violates in essence the second law of thermodynamics - translation: free energy or energy not from plates that is put into plates.

Now, back to vibration. All vibration should include three forces; Coulomb force, Van der Waals force, and Casimir effects at the atomic level. Dr. Willis Lamb in the 1940's measured a single atomic effect called the 'Lamb Shift'. This is an effect where Zero Point Energy affected the atom and caused a upward 'shift' in the orbital levels of the electrons. Now we are up to four types of factors.

Heat is considered a random vibration and will result in an average summation of effects. The net result is a softening of the mass as heat rises. However, if vibration were created that was very precise and involved the organized movement of the mass in a synchronized (coherent) way, the interesting phenomena start to occur.

Energy grows and is 'magnified'

Tesla was correct in stating how a little oscillator can create tons of force. It comes from within the atoms. Coherent vibration will cause atoms to synchronously collide in greater and greater intensity. This intensity pushes atoms closer together as the synchronous 'wave' bounces back and forth from the ends in a resonating material (such as a metal bar). This is a metal version of a light laser. Instead of triggering light photons, the atoms are physically rebounding from each other using the added Zero Point Energy in a miniature Casimir effect way. The rebound has more energy than the initial collision.

This escalation of energy within the resonating material will continue to grow as long as the coherent vibration wave is maintained - such as with small control energy of a precision oscillator. At a certain point, the Coulomb forces and Van der Waal forces are overwhelmed, the lattice structure of the material will become very elastic. At the same time, the power of the synchronized motion within the atomic structure will cause the material to undulate or expand and contract like a 'beating heart'.

This atomic interaction is how the oscillator became 'bonded at the atomic level' to the metal beam. It reveals the highly excited atomic condition.

Longitudinal waves spread to nearby mass

Longitudinal waves or scalar waves are induced into the surrounding medium ('ether' as Tesla referred) and begins to cohere synchronized movement of ordinary rock, dirt, or in other words, simple mass. This mass will then move to the symphony of these waves in unison. Remember that the energy for all of this is coming from the incredibly huge available energy - Zero Point Energy - that permeates everything (and the universe) as local waves in this medium cause its release. This is where the metric tons of force come from. This is how it spreads many blocks away. This is how rock transforms into a rubbery and undulating motion. This is the secret of the earthquake*.

But this whole process takes time to build. In nature, the process for natural earthquakes can take days to weeks in building in this coherent resonance.

(*note that this process does not apply to landslides, rock bursts, or traditional rock failure)

Faults are natural scalar resonators

I have equipment that can map unseen faults by detecting the scalar presence of resonating faults deep below. Faults are natural scalar resonant structures. Pressure within strained faults lead to a complex process where a sudden flash or scalar pulse occurs. This pulse is a highly effective stimulant to escalate a resonating fault. Increased scalar resonance leads to increasing pressure as the nearby rock atomic structure changes in its Modulus of Elasticity (becomes more rubbery). This leads to another series - flash - resonation - Elasticity change, etc. Scalar resonance is a wave developing process in the surrounding medium or 'ether'. It is not detectable with traditional seismographs. What is needed is the equivalent type of equipment such as a 'scalar seismograph'. I refer to this technology as a 'Mass Resonant Sensory Device'. This type of device measures the change in mass effects from the developing resonant energy**.

(**note that this energy is also elusive to traditional electromagnetic, magnetic, or electrostatic methods. Energy tends to be neutral to traditional devices - only elusive artifacts appear)

Crust 'softens' or changes Modulus of Elasticity

The earth's crust will change in its rigidity over time as a resonant series escalates. This is how and why P-waves are detected as moving slower in the crust prior to large earthquakes. Not all processes lead to the final climax of the earthquake burst as complex interaction of other faults and stress transfer processes occur.

Powerful burst is genesis of earthquake timing

When the resonant escalation process develops a climax can occur. This is where a powerful burst of energy develops a strong wave in the earth. This wave is typically in the 10's of milli Hertz range in period. The energy will then slowly transition upwards in frequency.

After many hours this energy approaches the primary resonant shaking frequency of the typical earthquake motion. Flashing from the hypocenter is the outward synchronous dialation and contraction of the earthquake.

Below are real data from recent earthquakes in the Pacific Northwest. These are from 'scalar seismograph' technology that recorded the transition of energy in frequency shifting.

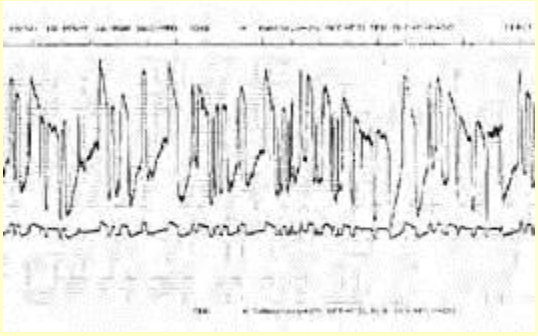

Waveform of 22 milli Hertz burst. Tick marks on top designate 1 minute. Amplitude in millivolts from scale of instrument gain. Waveform for reference only. (precursor days prior).

Waveform (top trace) of hundreds of milli Hertz transition phase of scalar energy. Precursor recording was for magnitude 5.0 near Vancouver Island Region December 18, 2003 PST. Top tick marks designate 1 minute intervals. (precursor hours prior).

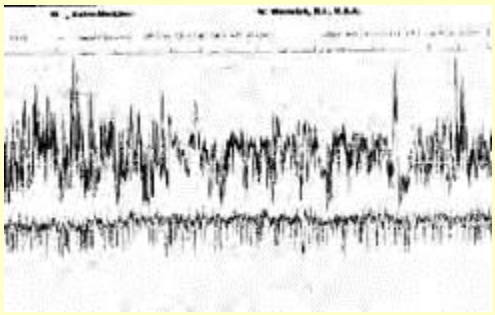

Brittle fracture theory vs Mass Resonance & ZPE

Plate tectonics provides an excellent model to crustal pressures. Brittle fracture theory - or sudden rupture of a strained fault - is an excellent model in identifying areas of strain. These points of strain are important in identifying areas of potential 'flash' processes. However, from locus of strain (points of high pressure & shear) to the resulting earthquake is inserted a new process or theory. I realize that this represents a very difficult acceptance position or viewpoint to the masses of trained seismological theory, but science cannot ignore the physics regardless of past assumptions or 'turns' taken.

Intense debate on old models

Debate can be intense - even in discussing affects of syzygy (sun, moon, tidal alignment - dynamic pressures in earth). However, these debates will be in error on both sides until the delay process of Mass Resonance to earthquake variable timing are understood. My equipment records the strongest bursts (genesis) of recordings via 'scalar seismographs' at syzygy timings. However, the delay process can fool statistical analysis methods as events can move outside of 'brittle fracture' only type models.

Besides these interactions are the ways the energy will seek to dominate in a region before a climax burst series. This energy competes with other regions in vast distances which tend to space events evenly in time and location. More so for smaller quakes. However, when a strong event 'wins' it is dominant in subsequent events. Thus the clustering of what science calls 'aftershocks'. Really, they are independent earthquakes, but in a pre-dominant region mode (scalar).

Give the Dogs a break

In the debates, scientists will distance themselves from reports of animal disruptions associated with earthquakes. These effects on animals are real. Scalar based instrumentation record 'impulses' which cause atmospheric infrasonic pulses, tones, and even pressure

changes in biological tissues. The effects of scalar energy are myriad prior to earthquakes as the energy works its way to climax, and then to final frequency genesis.

Effects range as ionization or a localized 'Lamb shift' in atomics in biological tissue. This can affect resonant tissues in animals and people. Not all people detect factors as the energy is extremely selective in mass. Tesla was aware of this too. He knew of the vast number of unique channels to transmit or receive through by the tuning of a mass body - he used a device called 'sensitive device' or a 'cohere-er'.

This precursory energy also is at the root of Luminous Phenomena associated with earthquakes. This energy also causes upper atmospheric disturbances including the ionosphere.

Virtual Ear tones in humans is the result of modulation of tissues within the ear. It is not from direct acoustical tones. This is also how traditional acoustic equipment will not detect its presence. The fact that only certain people can detect the 'tones' goes back to the 'mass resonant' structure in the tissues which can vary from person to person. Ear Tone sensitive people detect the spectral harmonic component of the base wave that is moving up in frequency. From person to person, the time at which the tone is detected will vary too. This is due again to the resonant structure differences between people.

NOT all animal disruptions are reliable. This is due to processes that occur that lead up to the final climax burst. This earth activity is real and animals are more sensitive to all of the processes. This is why animal plots to earthquake plots can be statistically elusive. Animals can be fooled by geologic conditions to energy - deep and lateral on emissions. Again, this adds to variability in overall statistical correlation. Only using appropriate primary MRSD devices are the reliable precursors detected.

Protect turf, theory, expertise - or…..

Unfortunately, what can be done with equipment with modest cost and with unprecedented accuracy will likely obsolete very expensive current projects funded to uncover the mystery of earthquakes. This is not stated lightly. The development of technology that sees the true process will represent a threat.

Regardless of how many experts say a theory must be so does not mean it is so. This situation represents the hardest position science would face, a singular voice against decades of scientific thought, papers, publications, and beliefs.

Nikola Tesla was right. Science took a wrong turn. Nikola Tesla did cause an earthquake. Science misses the true causes. Back then it was a singular voice - Tesla. He was disbelieved by the throngs that followed Einstein.

History will likely repeat itself. But the Firmament will remain.

Article © Terra Research & Consulting 20034 All photos & plots by Terra Research.

see also:

Earth Changes
New Scalar Paradigm
Yellowstone Volcano
Volcanoes in the West
Tesla and Earthquakes

THE STRANGE LIFE OF NIKOLA TESLA

Editors Note, August 28, 1995

This text has been entered by John R.H. Penner from a small booklet found in a used bookstore for $2.50. The only form of date identification is the name of the original purchaser, Arthua Daine (?), dated April 29, 1978.

The book appears to be considerably older, made with typewriters, and then photocopied and stapled. The only other significant features of the booklet is that it contains four photocopied photographs of Tesla, and was originally forty pages long. I must apologise for the qualitty of the scans, but the originals were of very poor quality, and this is the best that could be obtained after touching-up in Photoshop.

The book has no Copyright identification, nor any means of contacting the publishers. As far as I am aware, this autobiography is no longer available in printed form anywhere.

In the interest of making this important text available to the wider public, I have retyped the entire text word-for-word as it originally appears into this electronic format. The only words which appear in this file, that are not in the original book are this Editors Note, and the Introduction. I have exactly maintained page numbers as they appear in the original – including the somewhat odd artifact of Chapter 1 starting on page two.

If anyone knows how to reach the original publisher, please contact me at the below address, so proper credit may be given where it is due.

John Roland Hans Penner
464 Scott Street
St. Catharines, Ontario
L2M 3W7, Canada
Phone: 905.646.3551
eMail: J.Penner@GEnie.GEIS.com

This file may be freely redistributed as long as it's content is not modified in any way. It may not be sold or published for profit unless specifically authorised prior to publication by the express permission of Kolmogorov- Smirnov Publishing, or John R.H. Penner. Unless otherwise notified, this work is Copyright ©1995 by John R.H. Penner.

Introduction

Nikola Tesla was born in Croatia (then part of Austria-Hungary) on July 9, 1856, and died January 7, 1943. He was the electrical engineer who invented the AC (alternating current) induction motor, which made the universal transmission and distribution of electricity possible. Tesla began his studies in physics and mathematics at Graz Polytechnic, and then took philosophy at the University of Prague. He worked as an electrical engineer in Budapest, Hungary, and subsequently in France and Germany. In 1888 his discovery that a magnetic field could be made to rotate if two coils at right angles are supplied with AC current 90° out of phase made possible the invention of the AC induction motor. The major advantage of this motor being its brushless operation, which many at the time believed impossible.

Tesla moved to the United States in 1884, where he worked for Thomas Edison who quickly became a rival – Edison being an advocate of the inferior DC power transmission system. During this time, Tesla was commissioned with the design of the AC generators installed at Niagara Falls. George Westinghouse purchased the patents to his induction motor, and made it the basis of the Westinghouse power system which still underlies the modern electrical power industry today.

He also did notable research on high-voltage electricity and wireless communication; at one point creating an earthquake which shook the ground for several miles around his New York laboratory. He also devised a system which anticipated world-wide wireless communications, fax machines, radar, radio-guided missiles and aircraft.

NIKOLA TESLA IS THE TRUE UNSUNG PROPHET OF THE ELECTRIC AGE!; without whom our radio, auto ignition, telephone, alternating current power generation and transmission, radio and television would all have been impossible.

Yet his life and times have vanished largely from public access.

This AUTOBIOGRAPHY is released to remedy this situation, and to fill this “BLACK HOLE” in information space.

©Kolmogorov- Smirnov Publishing.

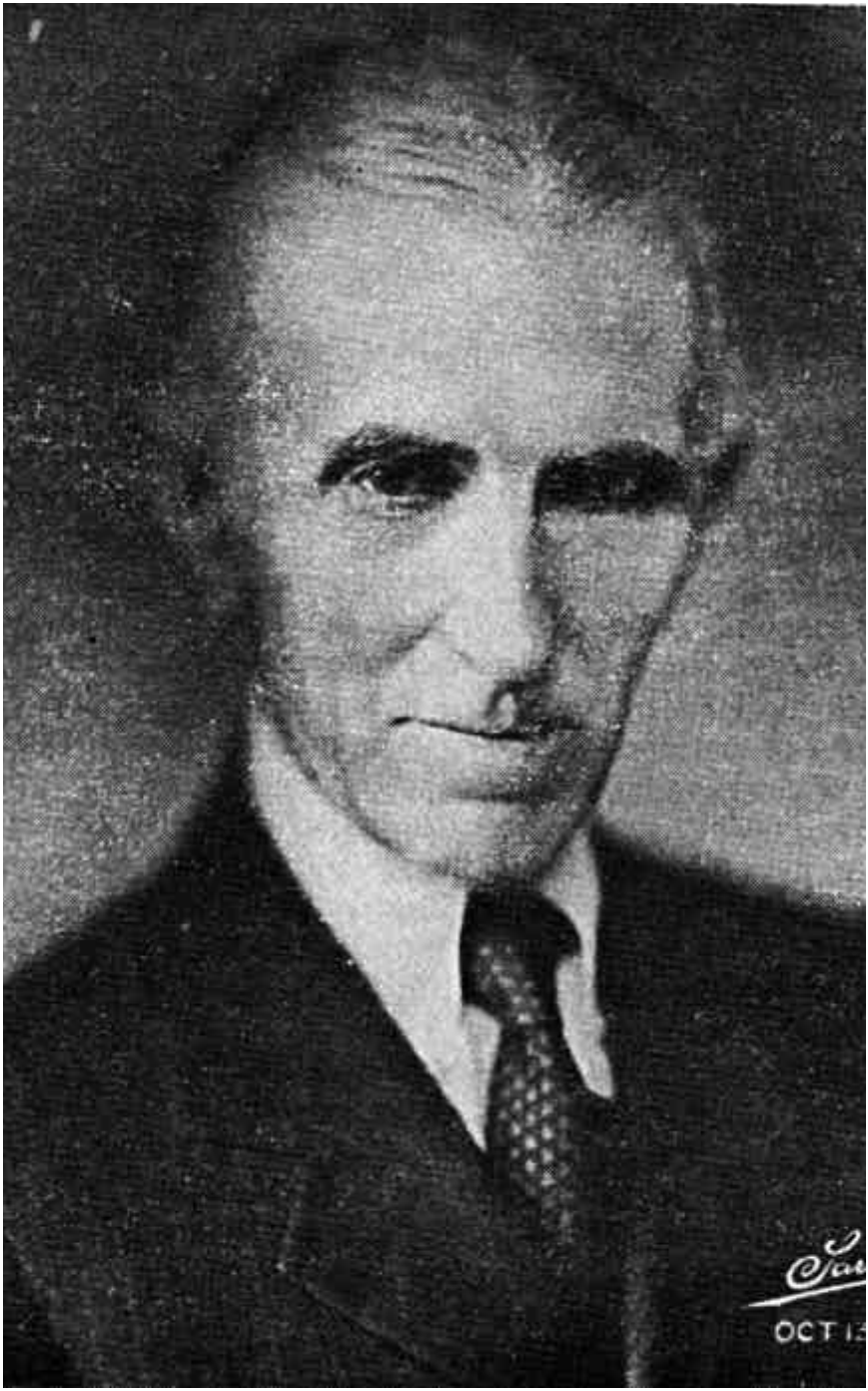

October 13, 1933

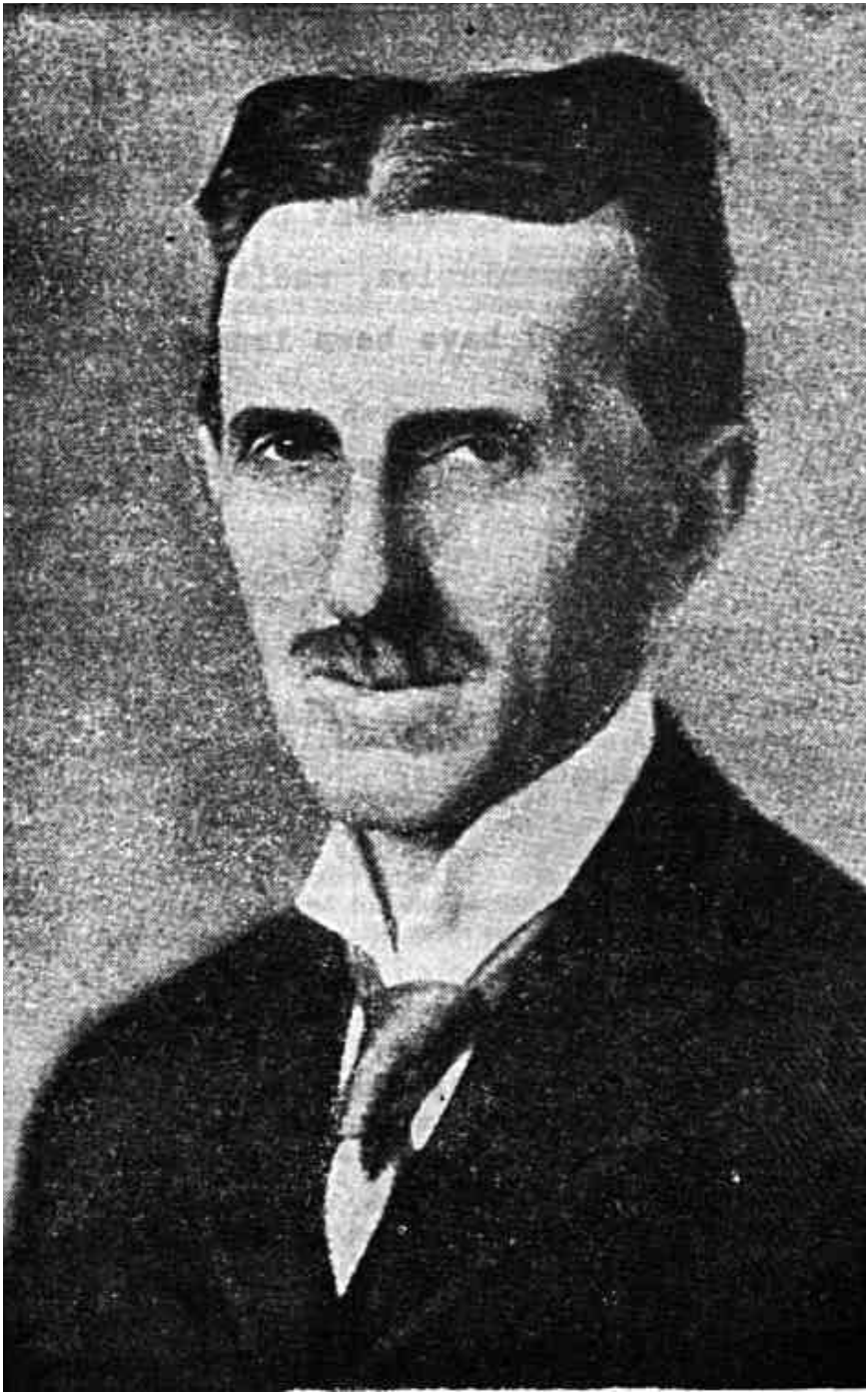

Chapter 1
My Early Life

By Nikola Tesla

The progressive development of man is vitally dependent on invention. It is the most important product of his creative brain. Its ultimate purpose is the complete mastery of mind over the material world, the harnessing of the forces of nature to human needs. This is the difficult task of the inventor who is often misunderstood and unrewarded. But he finds ample compensation in the pleasing exercises of his powers and in the knowledge of being one of that exceptionally privileged class without whom the race would have long ago perished in the bitter struggle against pitiless elements. Speaking for myself, I have already had more than my full measure of this exquisite enjoyment; so much, that for many years my life was little short of continuous rapture. I am credited with being one of the hardest workers and perhaps I am, if thought is the equivalent of labour, for I have devoted to it almost all of my waking hours. But if work is interpreted to be a definite performance in a specified time according to a rigid rule, then I may be the worst of idlers.

Every effort under compulsion demands a sacrifice of life-energy. I never paid such a price. On the contrary, I have thrived on my thoughts. In attempting to give a connected and faithful account of my activities in this story of my life, I must dwell, however reluctantly, on the impressions of my youth and the circumstances and events which have been instrumental in determining my career. Our first endeavours are purely instinctive promptings of an imagination vivid and undisciplined. As we grow older reason asserts itself and we become more and more systematic and designing. But those early impulses, though not immediately productive, are of the greatest moment and may shape our very destinies. Indeed, I feel now that had I understood and cultivated instead of suppressing them, I would have added substantial value to my bequest to the world. But not until I had attained manhood did I realise that I was an inventor.

This was due to a number of causes. In the first place I had a brother who was gifted to an extraordinary degree; one of those rare phenomena of mentality which biological investigation has failed to explain. His premature death left my earth parents disconsolate. (I will explain my remark about my “earth parents” later.) We owned a horse which had been presented to us by a dear friend. It was a magnificent animal of Arabian breed, possessed of almost human intelligence, and was cared for and petted by the whole family, having on one occasion saved my dear father’s life under remarkable circumstances.

My father had been called one winter night to perform an urgent duty and while crossing the mountains, infested by wolves, the horse became frightened and ran away, throwing him violently to the ground. It arrived home bleeding and exhausted, but after the alarm was sounded, immediately dashed off again, returning to the spot, and before the searching party were far on the way they were met by my father, who had recovered consciousness and remounted, not realising that he had been lying in the snow for several hours. This horse was responsible for my brother’s injuries from which he died. I witnessed the tragic scene and although so many years have elapsed since, my visual impression of it has lost none of its force. The recollection of his attainments made every effort of mine seem dull in comparison. Anything I did that was creditable merely caused my parents to feel their loss more keenly. So I grew up with little confidence in myself.

But I was far from being considered a stupid boy, if I am to judge from an incident of which I have still a strong remembrance. One day the Aldermen were passing through a street where I was playing with other boys. The oldest of these venerable gentlemen, a wealthy citizen, paused to give a silver piece to each of us. Coming to me, he suddenly stopped and commanded, "Look in my eyes." I met his gaze, my hand outstretched to receive the much valued coin, when to my dismay, he said, "No, not much; you can get nothing from me. You are too smart."

They used to tell a funny story about me. I had two old aunts with wrinkled faces, one of them having two teeth protruding like the tusks of an elephant, which she buried in my cheek every time she kissed me. Nothing would scare me more then the prospects of being by these affectionate, unattractive relatives. It happened that while being carried in my mother's arms, they asked who was the prettier of the two. After examining their faces intently, I answered thoughtfully, pointing to one of them, "This here is not as ugly as the other."

Then again, I was intended from my very birth, for the clerical profession and this thought constantly oppressed me. I longed to be an engineer, but my father was inflexible. He was the son of an officer who served in the army of the Great Napoleon and in common with his brother, professor of mathematics in a prominent institution, had received a military education; but, singularly enough, later embraced the clergy in which vocation he achieved eminence. He was a very erudite man, a veritable natural philosopher, poet and writer and his sermons were said to be as eloquent as those of Abraham a-Sancta-Clara. He had a prodigious memory and frequently recited at length from works in several languages. He often remarked playfully that if some of the classics were lost he could restore them. His style of writing was much admired. He penned sentences short and terse and full of wit and satire. The humorous remarks he made were always peculiar and characteristic. Just to illustrate, I may mention one or two instances.

Among the help, there was a cross-eyed man called Mane, employed to do work around the farm. He was chopping wood one day. As he swung the axe, my father, who stood nearby and felt very uncomfortable, cautioned him, "For God's sake, Mane, do not strike at what you are looking but at what you intend to hit."

On another occasion he was taking out for a drive, a friend who carelessly permitted his costly fur coat to rub on the carriage wheel. My father reminded him of it saying, "Pull in your coat; you are ruining my tire."

He had the odd habit of talking to himself and would often carry on an animated conversation and indulge in heated argument, changing the tone of his voice. A casual listener might have sworn that several people were in the room.

Although I must trace to my mother's influence whatever inventiveness I possess, the training he gave me must have been helpful. It comprised all sorts of exercises - as, guessing one another's thoughts, discovering the defects of some form of expression, repeating long sentences or performing mental calculations. These daily lessons were intended to strengthen memory and reason, and especially to develop the critical sense, and were undoubtedly very beneficial.

My mother descended from one of the oldest families in the country and a line of inventors. Both her father and grandfather originated numerous implements for household, agricultural and other uses. She was a truly great woman,

of rare skill, courage and fortitude, who had braved the storms of life and passed through many a trying experience. When she was sixteen, a virulent pestilence swept the country. Her father was called away to administer the last sacraments to the dying and during his absence she went alone to the assistance of a neighbouring family who were stricken by the dread disease. She bathed, clothed and laid out the bodies, decorating them with flowers according to the custom of the country and when her father returned he found everything ready for a Christian burial.

My mother was an inventor of the first order and would, I believe, have achieved great things had she not been so remote from modern life and its multifold opportunities. She invented and constructed all kinds of tools and devices and wove the finest designs from thread which was spun by her. She even planted seeds, raised the plants and separated the fibres herself. She worked indefatigably, from break of day till late at night, and most of the wearing apparel and furnishings of the home were the product of her hands. When she was past sixty, her fingers were still nimble enough to tie three knots in an eyelash.

There was another and still more important reason for my late awakening. In my boyhood I suffered from a peculiar affliction due to the appearance of images, often accompanied by strong flashes of light, which marred the sight of real objects and interfered with my thoughts and action. They were pictures of things and scenes which i had really seen, never of those imagined. When a word was spoken to me the image of the object it designated would present itself vividly to my vision and sometimes I was quite unable to distinguish weather what I saw was tangible or not. This caused me great discomfort and anxiety. None of the students of psychology or physiology whom i have consulted, could ever explain satisfactorily these phenomenon. They seem to have been unique although I was probably predisposed as I know that my brother experienced a similar trouble. The theory I have formulated is that the images were the result of a reflex action from the brain on the retina under great excitation. They certainly were not hallucinations such as are produced in diseased and anguished minds, for in other respects i was normal and composed. To give an idea of my distress, suppose that I had witnessed a funeral or some such nerve-wracking spectacle. The, inevitably, in the stillness of night, a vivid picture of the scene would thrust itself before my eyes and persist despite all my efforts to banish it. If my explanation is correct, it should be possible to project on a screen the image of any object one conceives and make it visible. Such an advance would revolutionise all human relations. I am convinced that this wonder can and will be accomplished in time to come. I may add that I have devoted much thought to the solution of the problem.

I have managed to reflect such a picture, which i have seen in my mind, to the mind of another person, in another room. To free myself of these tormenting appearances, I tried to concentrate my mind on something else I had seen, and in this way I would often obtain temporary relief; but in order to get it I had to conjure continuously new images. It was not long before I found that I had exhausted all of those at my command; my ‘reel’ had run out as it were, because I had seen little of the world — only objects in my home and the immediate surroundings. As I performed these mental operations for the second or third time, in order to chase the appearances from my vision, the remedy gradually lost all its force. Then I instinctively commenced to make excursions beyond the limits of the small world of which I had knowledge, and I saw new scenes. These were at first very blurred and indistinct, and would flit away when I tried to concentrate my attention upon them. They gained in strength

and distinctness and finally assumed the concreteness of real things. I soon discovered that my best comfort was attained if I simply went on in my vision further and further, getting new impressions all the time, and so I began to travel; of course, in my mind. Every night, (and sometimes during the day), when alone, I would start on my journeys — see new places, cities and countries; live there, meet people and make friendships and acquaintances and, however unbelievable, it is a fact that they were just as dear to me as those in actual life, and not a bit less intense in their manifestations.

This I did constantly until I was about seventeen, when my thoughts turned seriously to invention. Then I observed to my delight that i could visualise with the greatest facility. I needed no models, drawings or experiments. I could picture them all as real in my mind. Thus I have been led unconsciously to evolve what I consider a new method of materialising inventive concepts and ideas, which is radially opposite to the purely experimental and is in my opinion ever so much more expeditious and efficient.

The moment one constructs a device to carry into practice a crude idea, he finds himself unavoidably engrossed with the details of the apparatus. As he goes on improving and reconstructing, his force of concentration diminishes and he loses sight of the great underlying principle. Results may be obtained, but always at the sacrifice of quality. My method is different. I do not rush into actual work. When I get an idea, I start at once building it up in my imagination. I change the construction, make improvements and operate the device in my mind. It is absolutely immaterial to me whether I run my turbine in thought or test it in my shop. I even note if it is out of balance. There is no difference whatever; the results are the same. In this way I am able to rapidly develop and perfect a conception without touching anything. When I have gone so far as to embody in the invention every possible improvement I can think of and see no fault anywhere, I put into concrete form this final product of my brain. Invariably my device works as I conceived that it should, and the experiment comes out exactly as I planned it. In twenty years there has not been a single exception. Why should it be otherwise? Engineering, electrical and mechanical, is positive in results. There is scarcely a subject that cannot be examined beforehand, from the available theoretical and practical data. The carrying out into practice of a crude idea as is being generally done, is, I hold, nothing but a waste of energy, money, and time.

My early affliction had however, another compensation. The incessant mental exertion developed my powers of observation and enabled me to discover a truth of great importance. I had noted that the appearance of images was always preceded by actual vision of scenes under peculiar and generally very exceptional conditions, and I was impelled on each occasion to locate the original impulse. After a while this effort grew to be almost automatic and I gained great facility in connecting cause and effect. Soon I became aware, to my surprise, that every thought I conceived was suggested by an external impression. Not only this but all my actions were prompted in a similar way. In the course of time it became perfectly evident to me that I was merely an automation endowed with power OF MOVEMENT RESPONDING TO THE STIMULI OF THE SENSE ORGANS AND THINKING AND ACTING ACCORDINGLY. The practical result of this was the art of teleautomatics which has been so far carried out only in an imperfect manner. Its latent possibilities will, however be eventually shown. I have been years planning self-controlled automata and believe that mechanisms can be produced which will act as if possessed of reason, to a limited degree, and will create a revolution in many commercial and industrial departments. I was about twelve years of age when I first succeeded in banishing an image from my vision by wilful effort, but I never had any control over the flashes of light to which

I have referred. They were, perhaps, my strangest and [most] inexplicable experience. They usually occurred when I found myself in a dangerous or distressing situations or when i was greatly exhilarated. In some instances i have seen all the air around me filled with tongues of living flame. Their intensity, instead of diminishing, increased with time and seemingly attained a maximum when I was about twenty-five years old.

While in Paris in 1883, a prominent French manufacturer sent me an invitation to a shooting expedition which I accepted. I had been long confined to the factory and the fresh air had a wonderfully invigorating effect on me. On my return to the city that night, I felt a positive sensation that my brain had caught fire. I was a light as though a small sun was located in it and I passed the whole night applying cold compressions to my tortured head. Finally the flashes diminished in frequency and force but it took more than three weeks before they wholly subsided. When a second invitation was extended to me, my answer was an emphatic NO!

These luminous phenomena still manifest themselves from time to time, as when a new idea opening up possibilities strikes me, but they are no longer exciting, being of relatively small intensity. When I close my eyes I invariably observe first, a background of very dark and uniform blue, not unlike the sky on a clear but starless night. In a few seconds this field becomes animated with innumerable scintillating flakes of green, arranged in several layers and advancing towards me. Then there appears, to the right, a beautiful pattern of two systems of parallel and closely spaced lines, at right angles to one another, in all sorts of colours with yellow, green, and gold predominating. Immediately thereafter, the lines grow brighter and the whole is thickly sprinkled with dots of twinkling light. This picture moves slowly across the field of vision and in about ten seconds vanishes on the left, leaving behind a ground of rather unpleasant and inert grey until the second phase is reached. Every time, before falling asleep, images of persons or objects flit before my view. When I see them I know I am about to lose consciousness. If they are absent and refuse to come, it means a sleepless night. To what an extent imagination played in my early life, I may illustrate by another odd experience.

Like most children, I was fond of jumping and developed an intense desire to support myself in the air. Occasionally a strong wind richly charged with oxygen blew from the mountains, rendering my body light as cork and then I would leap and float in space for a long time. It was a delightful sensation and my disappointment was keen when later I undeceived myself. During that period I contracted many strange likes, dislikes and habits, some of which I can trace to external impressions while others are unaccountable. I had a violent aversion against the earing of women, but other ornaments, as bracelets, pleased me more or less according to design. The sight of a pearl would almost give me a fit, but I was fascinated with the glitter of crystals or objects with sharp edges and plane surfaces. I would not touch the hair of other people except, perhaps at the point of a revolver. I would get a fever by looking at a peach and if a piece of camphor was anywhere in the house it caused me the keenest discomfort. Even now I am not insensible to some of these upsetting impulses. When I drop little squares of paper in a dish filled with liquid, I always sense a peculiar and awful taste in my mouth. I counted the steps in my walks and calculated the cubical contents of soup plates, coffee cups and pieces of food, otherwise my meal was unenjoyable. All repeated acts or operations I performed had to be divisible by three and if I missed I felt impelled to do it all over again, even if it took hours. Up to the age of eight years, my

character was weak and vacillating. I had neither courage or strength to form a firm resolve. My feelings came in waves and surges and variated unceasingly between extremes. My wishes were of consuming force and like the heads of the hydra, they multiplied. I was oppressed by thoughts of pain in life and death and religious fear. I was swayed by superstitious belief and lived in constant dread of the spirit of evil, of ghosts and ogres and other unholy monsters of the dark. Then all at once, there came a tremendous change which altered the course of my whole existence.

Of all things I liked books best. My father had a large library and whenever I could manage I tried to satisfy my passion for reading. He did not permit it and would fly in a rage when he caught me in the act. He hid the candles when he found that I was reading in secret. He did not want me to spoil my eyes. But I obtained tallow, made the wicking and cast the sticks into tin forms, and every night I would bush the keyhole and the cracks and read, often till dawn, when all others slept and my mother started on her arduous daily task.

On one occasion I came across a novel entitled 'Aoafi,' (the son of Aba), a Serbian translation of a well known Hungarian writer, Josika. This work somehow awakened my dormant powers of will and I began to practice self-control. At first my resolutions faded like snow in April, but in a little while I conquered my weakness and felt a pleasure I never knew before — that of doing as I willed.

In the course of time this vigorous mental exercise became second to nature. At the outset my wishes had to be subdued but gradually desire and will grew to be identical. After years of such discipline I gained so complete a mastery over myself that I toyed with passions which have meant destruction to some of the strongest men. At a certain age I contracted a mania for gambling which greatly worried my parents. To sit down to a game of cards was for me the quintessence of pleasure. My father led an exemplary life and could not excuse the senseless waste of my time and money in which I indulged. I had a strong resolve, but my philosophy was bad. I would say to him, 'I can stop whenever I please, but it it worth while to give up that which I would purchase with the joys of paradise?' On frequent occasions he gave vent to his anger and contempt, but my mother was different. She understood the character of men and knew that one's salvation could only be brought about through his own efforts. One afternoon, I remember, when I had lost all my money and was craving for a game, she came to me with a roll of bills and said, 'Go and enjoy yourself. The sooner you lose all we possess, the better it will be. I know that you will get over it.' She was right. I conquered my passion then and there and only regretted that it had not been a hundred times as strong. I not only vanquished but tore it from my heart so as not to leave even a trace of desire.

Ever since that time I have been as indifferent to any form of gambling as to picking teeth. During another period I smoked excessively, threatening to ruin my health. Then my will asserted itself and I not only stopped but destroyed all inclination. Long ago I suffered from heart trouble until I discovered that it was due to the innocent cup of coffee I consumed every morning. I discontinued at once, though I confess it was not an easy task. In this way I checked and bridled other habits and passions, and have not only preserved my life but derived an immense amount of satisfaction from what most men would consider privation and sacrifice.

After finishing the studies at the Polytechnic Institute and University, I had a complete nervous breakdown and while the malady lasted I observed many phenomena, strange and unbelievable...

Chapter 2

I shall dwell briefly on these extraordinary experiences, on account of their possible interest to students of psychology and physiology and also because this period of agony was of the greatest consequence on my mental development and subsequent labours. But it is indispensable to first relate the circumstances and conditions which preceded them and in which might be found their partial explanation.

From childhood I was compelled to concentrate attention upon myself. This caused me much suffering, but to my present view, it was a blessing in disguise for it has taught me to appreciate the inestimable value of introspection in the preservation of life, as well as a means of achievement. The pressure of occupation and the incessant stream of impressions pouring into our consciousness through all the gateways of knowledge make modern existence hazardous in many ways. Most persons are so absorbed in the contemplation of the outside world that they are wholly oblivious to what is passing on within themselves. The premature death of millions is primarily traceable to this cause. Even among those who exercise care, it is a common mistake to avoid imaginary, and ignore the real dangers. And what is true of an individual also applies, more or less, to a people as a whole.

Abstinence was not always to my liking, but I find ample reward in the agreeable experiences I am now making. Just in the hope of converting some to my precepts and convictions I will recall one or two.

A short time ago I was returning to my hotel. It was a bitter cold night, the ground slippery, and no taxi to be had. Half a block behind me followed another man, evidently as anxious as myself to get under cover. Suddenly my legs went up in the air. At the same instant there was a flash in my brain. The nerves responded, the muscles contracted. I swung 180 degrees and landed on my hands. I resumed my walk as though nothing had happened when the stranger caught up with me. “How old are you?” he asked, surveying me critically.

“Oh, about fifty-nine,” I replied, “What of it?”

“Well,” said he, “I have seen a cat do this but never a man.” About a month ago I wanted to order new eye glasses and went to an oculist who put me through the usual tests. He looked at me incredulously as I read off with ease the smallest print at considerable distance. But when I told him I was past sixty he gasped in astonishment. Friends of mine often remark that my suits fit me like gloves but they do not know that all my clothing is made to measurements which were taken nearly fifteen years ago and never changed. During this same period my weight has not varied one pound. In this connection I may tell a funny story.

One evening, in the winter of 1885, Mr. Edison, Edward H. Johnson, the President of the Edison Illuminating Company, Mr. Batchellor, Manager of the works, and myself, entered a little place opposite 65 Firth Avenue, where the offices of the company were located. Someone suggested guessing weights and I was induced to step on a scale. Edison felt me all over and said: “Tesla weighs 152 lbs. to an ounce,” and he guessed it exactly. Stripped I weighed 142 pounds, and that is still my weight. I whispered to Mr. Johnson; “How is it possible that Edison could guess my weight so closely?”

“Well,” he said, lowering his voice. “I will tell you confidentially, but you must not say anything. He was employed for a long time in a Chicago slaughter-house where he weighed thousands of hogs every day. That’s why.”

My friend, the Hon. Chauncey M. Dupew, tells of an Englishman on whom he sprung one of his original anecdotes and who listened with a puzzled expression, but a year later, laughed out loud. I will frankly confess it took me longer than that to appreciate Johnson’s joke. Now, my well-being is simply the result of a careful and measured mode of living and perhaps the most astonishing thing is that three times in my youth I was rendered by illness a hopeless physical wreck and given up by physicians. MORE than this, through ignorance and lightheartedness, I got into all sorts of difficulties, dangers and scrapes from which I extricated myself as by enchantment. I was almost drowned, entombed, lost and frozen. I had hair-breadth escapes from mad dogs, hogs, and other wild animals. I passed through dreadful diseases and met with all kinds of odd mishaps and that I am whole and hearty today seems like a miracle. But as I recall these incidents to my mind I feel convinced that my preservation was not altogether accidental, but was indeed the work of divine power. An inventor’s endeavour is essentially life saving. Whether he harnesses forces, improves devices, or provides new comforts and conveniences, he is adding to the safety of our existence. He is also better qualified than the average individual to protect himself in peril, for he is observant and resourceful. If I had no other evidence that I was, in a measure, possessed of such qualities, I would find it in these personal experiences. The reader will be able to judge for himself if I mention one or two instances.

On one occasion, when about fourteen years old, I wanted to scare some friends who were bathing with me. My plan was to dive under a long floating structure and slip out quietly at the other end. Swimming and diving came to me as naturally as to a duck and I was confident that I could perform the feat. Accordingly I plunged into the water and, when out of view, turned around and proceeded rapidly towards the opposite side. Thinking that I was safely beyond the structure, I rose to the surface but to my dismay struck a beam. Of course, I quickly dived and forged ahead with rapid strokes until my breath was beginning to give out. Rising for the second time, my head came again in contact with a beam. Now I was becoming desperate. However, summoning all my energy, I made a third frantic attempt but the result was the same. The torture of suppressed breathing was getting unendurable, my brain was reeling and I felt myself sinking. At that moment, when my situation seemed absolutely hopeless, I experienced one of those flashes of light and the structure above me appeared before my vision. I either discerned or guessed that there was a little space between the surface of the water and the boards resting on the beams and, with consciousness nearly gone, I floated up, pressed my mouth close to the planks and managed to inhale a little air, unfortunately mingled with a spray of water which nearly choked me. Several times I repeated this procedure as in a dream until my heart, which was racing at a terrible rate, quieted down, and I gained composure. After that I made a number of unsuccessful dives, having completely lost the sense of direction, but finally succeeded in getting out of the trap when my friends had already given me up and were fishing for my body. That bathing season was spoiled for me through recklessness but I soon forgot the lesson and only two years later I fell into a worse predicament.

There was a large flour mill with a dam across the river near the city where I was studying at the time. As a rule the height of the water was only two or three inches above the dam and to swim to it was a sport not very dangerous in which I often indulged. One day I went alone to the river to enjoy

myself as usual. When I was a short distance from the masonry, however, I was horrified to observe that the water had risen and was carrying me along swiftly. I tried to get away but it was too late. Luckily, though, I saved myself from being swept over by taking hold of the wall with both hands. The pressure against my chest was great and I was barely able to keep my head above the surface. Not a soul was in sight and my voice was lost in the roar of the fall. Slowly and gradually I became exhausted and unable to withstand the strain longer. Just as I was about to let go, to be dashed against the rocks below, I saw in a flash of light a familiar diagram illustrating the hydraulic principle that the pressure of a fluid in motion is proportionate to the area exposed and automatically I turned on my left side. As if by magic, the pressure was reduced and I found it comparatively easy in that position to resist the force of the stream. But the danger still confronted me. I knew that sooner or later I would be carried down, as it was not possible for any help to reach me in time, even if I had attracted attention. I am ambidextrous now, but then I was left-handed and had comparatively little strength in my right arm. For this reason I did not dare to turn on the other side to rest and nothing remained but to slowly push my body along the dam. I had to get away from the mill towards which my face was turned, as the current there was much swifter and deeper. It was a long and painful ordeal and I came near to failing at its very end, for I was confronted with a depression in the masonry. I managed to get over with the last ounce of my strength and fell in a swoon when I reached the bank, where I was found. I had torn virtually all the skin from my left side and it took several weeks before the fever had subsided and I was well. These are only two of many instanced, but they may be sufficient to show that had it not been for the inventor's instinct, I would not have lived to tell the tale.

Interested people have often asked me how and when I began to invent. This I can only answer from my present recollection in the light of which, the first attempt I recall was rather ambitious for it involved the invention of an apparatus and a method. In the former I was anticipated, but the later was original. It happened in this way. One of my playmates had come into the possession of a hook and fishing tackle which created quite an excitement in the village, and the next morning all started out to catch frogs. I was left alone and deserted owing to a quarrel with this boy. I had never seen a real hook and pictured it as something wonderful, endowed with peculiar qualities, and was despairing not to be one of the party. Urged by necessity, I somehow got hold of a piece of soft iron wire, hammered the end to a sharp point between two stones, bent it into shape, and fastened it to a strong string. I then cut a rod, gathered some bait, and went down to the brook where there were frogs in abundance. But I could not catch any and was almost discouraged when it occurred to me dangle the empty hook in front of a frog sitting on a stump. At first he collapsed but by and by his eyes bulged out and became bloodshot, he swelled to twice his normal size and made a vicious snap at the hook. Immediately I pulled him up. I tried the same thing again and again and the method proved infallible. When my comrades, who in spite of their fine outfit had caught nothing, came to me, they were green with envy. For a long time I kept my secret and enjoyed the monopoly but finally yielded to the spirit of Christmas. Every boy could then do the same and the following summer brought disaster to the frogs.

In my next attempt, I seem to have acted under the first instinctive impulse which later dominated me, — to harness the energies of nature to the service of man. I did this through the medium of May bugs, or June bugs as they are called in America, which were a veritable pest in that country and sometimes broke the branches of trees by the sheer weight of their bodies. The

bushes were black with them. I would attach as many as four of them to a cross-piece, rotably arranged on a thin spindle, and transmit the motion of the same to a large disc and so derive considerable 'power.' These creatures were remarkably efficient, for once they were started, they had no sense to stop and continued whirling for hours and hours and the hotter it was, the harder they worked. All went well until a strange boy came to the place. He was the son of a retired officer in the Austrian army. That urchin ate May-bugs alive and enjoyed them as though they were the finest blue-point oysters. That disgusting sight terminated my endeavours in this promising field and I have never since been able to touch a May-bug or any other insect for that matter.

After that, I believe, I undertook to take apart and assemble the clocks of my grandfather. In the former operation I was always successful, but often failed in the latter. So it came that he brought my work to a sudden halt in a manner not too delicate and it took thirty years before I tackled another clockwork again.

Shortly thereafter, I went into the manufacture of a kind of pop-gun which comprised a hollow tube, a piston, and two plugs of hemp. When firing the gun, the piston was pressed against the stomach and the tube was pushed back quickly with both hands. the air between the plugs was compressed and raised to a high temperature and one of them was expelled with a loud report. The art consisted in selecting a tube of the proper taper from the hollow stalks which were found in our garden. I did very well with that gun, but my activities interfered with the window panes in our house and met with painful discouragement.

If I remember rightly, I then took to carving swords from pieces of furniture which I could conveniently obtain. At that time I was under the sway of the Serbian national poetry and full of admiration for the feats of the heroes. I used to spend hours in mowing down my enemies in the form of corn-stalks which ruined the crops and netted me several spankings from my mother. Moreover, these were not of the formal kind but the genuine article.

I had all this and more behind me before I was six years old and had passed through one year of elementary school in the village of Smiljan where my family lived. At this juncture we moved to the little city of Gospic nearby. This change of residence was like a calamity to me. It almost broke my heart to part from our pigeons, chickens and sheep, and our magnificent flock of geese which used to rise to the clouds in the morning and return from the feeding grounds at sundown in battle formation, so perfect that it would have put a squadron of the best aviators of the present day to shame. In our new house I was but a prisoner, watching the strange people I saw through my window blinds. My bashfulness was such that I would rather have faced a roaring lion than one of the city dudes who strolled about. But my hardest trial came on Sunday when I had to dress up and attend the service. There I met with an accident, the mere thought of which made my blood curdle like sour milk for years afterwards. It was my second adventure in a church. Not long before, I was entombed for a night in an old chapel on an inaccessible mountain which was visited only once a year. It was an awful experience, but this one was worse.

There was a wealthy lady in town, a good but pompous woman, who used to come to the church gorgeously painted up and attired with an enormous train and attendants. One Sunday I had just finished ringing the bell in the belfry and rushed downstairs, when this grand dame was sweeping out and I jumped on her train. It tore off with a ripping noise which sounded like a salvo of musketry

fired by raw recruits. My father was livid with rage. He gave me a gentle slap on the cheek, the only corporal punishment he ever administered to me, but I almost feel it now. The embarrassment and confusion that followed are indescribably. I was practically ostracised until something else happened which redeemed me in the estimation of the community.

An enterprising young merchant had organised a fire department. A new fire engine was purchased, uniforms provided and the men drilled for service and parade. The engine was beautifully painted red and black. One afternoon, the official trial was prepared for and the machine was transported to the river. The entire population turned out to witness the great spectacle. When all the speeches and ceremonies were concluded, the command was given to pump, but not a drop of water came from the nozzle. The professors and experts tried in vain to locate the trouble. The fizzle was complete when I arrived at the scene. My knowledge of of the mechanism was nil and I knew next to nothing of air pressure, but instinctively I felt for the suction hose in the water and found that it had collapsed. When I waded in the river and opened it up, the water rushed forth and not a few Sunday clothes were spoiled. Archimedes running naked through the streets of Syracuse and shouting Eureka at the top of his voice did not make a greater impression than myself. I was carried on the shoulders and was hero of the day.

Upon settling in the city I began a four years course in the so-called Normal School preparatory to my studies at the College or Real-Gymnasium. During this period my boyish efforts and exploits as well as troubles, continued.

Among other things, I attained the unique distinction of champion crow catcher in the country. My method of procedure was extremely simple. I would go into the forest, hide in the bushes, and imitate the call of the birds. Usually I would get several answers and in a short while a crow would flutter down into the shrubbery near me. After that, all I needed to do was to throw a piece of cardboard to detract its attention, jump up and grab it before it could extricate itself from the undergrowth. In this way I would capture as many as I desired. But on one occasion something occurred which made me respect them. I had caught a fine pair of birds and was returning home with a friend. When we left the forest, thousands of crows had gathered making a frightful racket. In a few minutes they rose in pursuit and soon enveloped us. The fun lasted until all of a sudden I received a blow on the back of my head which knocked me down. Then they attacked me viciously. I was compelled to release the two birds and was glad to join my friend who had taken refuge in a cave.

In the school room there were a few mechanical models which interested me and turned my attention to water turbines. I constructed many of these and found great pleasure in operating them. How extraordinary was my life an incident may illustrate. My uncle had no use for this kind of pastime and more than once rebuked me. I was fascinated by a description of Niagara Falls I had perused, and pictured in my imagination a big wheel run by the falls. I told my uncle that I would go to America and carry out this scheme. Thirty years later I was my ideas carried out at Niagara and marvelled at the unfathomable mystery of the mind.

I made all kinds of other contrivances and contraptions but among those, the arbalests I produced were the best. My arrows, when short, disappeared from sight and at close range traversed a plank of pine one inch thick. Through the continuous tightening of the bows I developed a skin on my stomach much like that of a crocodile and I am often wondering whether it is due to this exercise

that I am able even now to digest cobble-stones! Nor can I pass in silence my performances with the sling which would have enabled me to give a stunning exhibit at the Hippodrome. And now I will tell of one of my feats with this unique implement of war which will strain to the utmost the credulity of the reader.

I was practising while walking with my uncle along the river. The sun was setting, the trout were playful and from time to time one would shoot up into the air, its glistening body sharply defined against a projecting rock beyond. Of course any boy might have hit a fish under these propitious conditions but I undertook a much more difficult task and I foretold to my uncle, to the minutest detail, what I intended doing. I was to hurl a stone to meet the fish, press its body against the rock, and cut it in two. It was no sooner said than done. My uncle looked at me almost scared out of his wits and exclaimed "Vade retra Satanae!" and it was a few days before he spoke to me again. Other records, however great, will be eclipsed but I feel that I could peacefully rest on my laurels for a thousand years.

Chapter 3
How Tesla Conceived The Rotary Magnetic Field

At the age of ten I entered the Real gymnasium which was a new and fairly well equipped institution. In the department of physics were various models of classical scientific apparatus, electrical and mechanical. The demonstrations and experiments performed from time to time by the instructors fascinated me and were undoubtedly a powerful incentive to invention. I was also passionately fond of mathematical studies and often won the professor's praise for rapid calculation. This was due to my acquired facility of visualising the figures and performing the operation, not in the usual intuitive manner, but as in actual life. Up to a certain degree of complexity it was absolutely the same to me whether I wrote the symbols on the board or conjured them before my mental vision. But freehand drawing, to which many hours of the course were devoted, was an annoyance I could not endure. This was rather remarkable as most of the members of the family excelled in it. Perhaps my aversion was simply due to the predilection I found in undisturbed thought. Had it not been for a few exceptionally stupid boys, who could not do anything at all, my record would have been the worst.

It was a serious handicap as under the then existing educational regime drawing being obligatory, this deficiency threatened to spoil my whole career and my father had considerable trouble in rail-roading me from one class to another.

In the second year at that institution I became obsessed with the idea of producing continuous motion through steady air pressure. The pump incident, of which I have been told, had set afire my youthful imagination and impressed me with the boundless possibilities of a vacuum. I grew frantic in my desire to harness this inexhaustible energy but for a long time I was groping in the dark. Finally, however, my endeavours crystallised in an invention which was to enable me to achieve what no other mortal ever attempted. Imagine a cylinder freely rotatable on two bearings and partly surrounded by a rectangular trough which fits it perfectly. The open side of the trough is enclosed by a partition so that the cylindrical segment within the enclosure divides the latter into two compartments entirely separated from each other by air-tight sliding joints. One of these compartments being sealed and once for all exhausted, the other remaining open, a perpetual rotation of the cylinder would result. At least, so I thought.

A wooden model was constructed and fitted with infinite care and when I applied the pump on one side and actual observed that there was a tendency to turning, I was delirious with joy. Mechanical flight was the one thing I wanted to accomplish although still under the discouraging recollection of a bad fall I sustained by jumping with an umbrella from the top of a building. Every day I used to transport myself through the air to distant regions but could not understand just how I managed to do it. Now I had something concrete, a flying machine with nothing more than a rotating shaft, flapping wings, and; - a vacuum of unlimited power! From that time on I made my daily aerial excursions in a vehicle of comfort and luxury as might have befitted King Solomon. It took years before I understood that the atmospheric pressure acted at right angles to the surface of the cylinder and that the slight rotary effort I observed was due to a leak! Though this knowledge came gradually it gave me a painful shock.

I had hardly completed my course at the Real Gymnasium when I was prostrated with a dangerous illness or rather, a score of them, and my condition became so desperate that I was given up by physicians. During this period I was permitted to read constantly, obtaining books from the Public Library which had been neglected and entrusted to me for classification of the works and preparation of catalogues.

One day I was handed a few volumes of new literature unlike anything I had ever read before and so captivating as to make me utterly forget me hopeless state. They were the earlier works of Mark Twain and to them might have been due the miraculous recovery which followed. Twenty-five years later, when I met Mr. Clements and we formed a friendship between us, I told him of the experience and was amazed to see that great man of laughter burst into tears...

My studies were continued at the higher Real Gymnasium in Carlstadt, Croatia, where one of my aunts resided. She was a distinguished lady, the wife of a Colonel who was an old war-horse having participated in many battles, I can never forget the three years I passed at their home. No fortress in time of war was under a more rigid discipline. I was fed like a canary bird. All the meals were of the highest quality and deliciously prepared, but short in quantity by a thousand percent. The slices of ham cut by my aunt were like tissue paper. When the Colonel would put something substantial on my plate she would snatch it away and say excitedly to him; “Be careful. Niko is very delicate.”

I had a voracious appetite and suffered like Tantalus.

But I lived in an atmosphere of refinement and artistic taste quite unusual for those times and conditions. The land was low and marshy and malaria fever never left me while there despite the enormous amounts of qunine I consumed. Occasionally the river would rise and drive an army of rats into the buildings, devouring everything, even to the bundles of fierce paprika. These pests were to me a welcome diversion. I thinned their ranks by all sorts of means, which won me the unenviable distinction of rat-catcher in the community. At last, however, my course was completed, the misery ended, and I obtained the certificate of maturity which brought me to the cross-roads.

During all those years my parents never wavered in their resolve to make me embrace the clergy, the mere thought of which filled me with dread. I had become intensely interested in electricity under the stimulating influence of my Professor of Physics, who was an ingenious man and often demonstrated the principles by apparatus of his own invention. Among these I recall a device in the shape of a freely rotatable bulb, with tinfoil coating, which was made to spin rapidly when connected to a static machine. It is impossible for me to convey an adequate idea of the intensity of feeling I experienced in witnessing his exhibitions of these mysterious phenomena. Every impression produced a thousand echoes in my mind. I wanted to know more of this wonderful force; I longed for experiment and investigation and resigned myself to the inevitable with aching heart. Just as I was making ready for the long journey home I received word that my father wished me to go on a shooting expedition. It was a strange request as he had been always strenuously opposed to this kind of sport. But a few days later I learned that the cholera was raging in that district and, taking advantage of an opportunity, I returned to Gospic in disregard to my parent’s wishes. It is incredible how absolutely ignorant people were as to the causes of this scourge which visited the country in intervals of fifteen to twenty years. They thought that the deadly agents were transmitted through the air and filled it with pungent odours and smoke. In the meantime they drank infested water and died in heaps. I contracted the dreadful

disease on the very day of my arrival and although surviving the crisis, I was confined to bed for nine months with scarcely any ability to move. My energy was completely exhausted and for the second time I found myself at Death's door.

In one of the sinking spells which was thought to be the last, my father rushed into the room. I still see his pallid face as he tried to cheer me in tones belying his assurance. "Perhaps," I said, "I may get well if you will let me study engineering." "You will go to the best technical institution in the world," he solemnly replied, and I knew that he meant it. A heavy weight was lifted from my mind but the relief would have come too late had it not been for a marvellous cure brought through a bitter decoction of a peculiar bean. I came to life like Lazarus to the utter amazement of everybody.

My father insisted that I spend a year in healthful physical outdoor exercise to which I reluctantly consented. For most of this term I roamed in the mountains, loaded with a hunter's outfit and a bundle of books, and this contact with nature made me stronger in body as well as in mind. I thought and planned, and conceived many ideas almost as a rule delusive. The vision was clear enough but the knowledge of principles was very limited.

In one of my invention I proposed to convey letters and packages across the seas, through a submarine tube, in spherical containers of sufficient strength to resist the hydraulic pressure. The pumping plant, intended to force the water through the tube, was accurately figured and designed and all other particulars carefully worked out. Only one trifling detail, of no consequence, was lightly dismissed. I assumed an arbitrary velocity of the water and, what is more, took pleasure in making it high, thus arriving at a stupendous performance supported by faultless calculations. Subsequent reflections, however, on the resistance of pipes to fluid flow induced me to make this invention public property.

Another one of my projects was to construct a ring around the equator which would, of course, float freely and could be arrested in its spinning motion by reactionary forces, thus enabling travel at a rate of about one thousand miles an hour, impracticable by rail. The reader will smile. The plan was difficult of execution, I will admit, but not nearly so bad as that of a well known New York professor, who wanted to pump the air from the torrid to temperate zones, entirely forgetful of the fact that the Lord had provided a gigantic machine for this purpose.

Still another scheme, far more important and attractive, was to derive power from the rotational energy of terrestrial bodies. I had discovered that objects on the earth's surface owing to the diurnal rotation of the globe, are carried by the same alternately in and against the direction of translatory movement. From this results a great change in momentum which could be utilised in the simplest imaginable manner to furnish motive effort in any habitable region of the world. I cannot find words to describe my disappointment when later I realised that I was in the predicament of Archimedes, who vainly sought for a fixed point in the universe.

At the termination of my vacation I was sent to the Poly-Technic School in Gratz, Styria (Austria), which my father had chosen as one of the oldest and best reputed institutions. That was the moment I had eagerly awaited and I began my studies under good auspices and firmly resolved to succeed. My previous training was above average, due to my father's teaching and opportunities afforded. I had acquired the knowledge of a number of languages and waded through the books of several libraries, picking up information more or

less useful. Then again, for the first time, I could choose my subjects as I liked, and free-hand drawing was to bother me no more.

I had made up my mind to give my parents a surprise, and during the whole first year I regularly started my work at three o'clock in the morning and continued until eleven at night, no Sundays or holidays excepted. As most of my fellow-students took things easily, naturally I eclipsed all records. In the course of the year I passed through nine exams and the professors thought I deserved more than the highest qualifications. Armed with their flattering certificated, I went home for a short rest, expecting triumph, and was mortified when my father made light of these hard-won honours.

That almost killed my ambition; but later, after he had died, I was pained to find a package of letters which the professors had written to him to the effect that unless he took me away from the Institution I would be killed through overwork. Thereafter I devoted myself chiefly to physics, mechanics and mathematical studies, spending the hours of leisure in the libraries.

I had a veritable mania for finishing whatever I began, which often got me into difficulties. On one occasion I started to read the works of Voltaire, when I learned, to my dismay that there were close to one hundred large volumes in small print which that monster had written while drinking seventy-two cups of black coffee per diem. It had to be done, but when I laid aside that last book I was very glad, and said, "Never more!"

My first year's showing had won me the appreciation and friendship of several professors. Among these, Professor Rogner, who was teaching arithmetical subjects and geometry; Professor Poeschl, who held the chair of theoretical and experimental physics, and Dr. Alle, who taught integral calculus and specialised in differential equations. This scientist was the most brilliant lecturer to whom I ever listened. He took a special interest in my progress and would frequently remain for an hour or two in the lecture room, giving me problems to solve, in which I delighted. To him I explained a flying machine I had conceived, not an illusory invention, but one based on sound, scientific principles, which has become realisable through my turbine and will soon be given to the world. Both Professors Rogner and Poeschl were curious men. The former had peculiar ways of expressing himself and whenever he did so, there was a riot, followed by a long embarrassing pause. Professor Poeschl was a methodical and thoroughly grounded German. He had enormous feet, and hands like the paws of a bear, but all of his experiments were skilfully performed with clock-like precision and without a miss. It was in the second year of my studies that we received a Gramoe Dyname from Paris, having the horseshoe form of a laminated field magnet, and a wire wound armature with a commutator. It was connected up and various effects of the currents were shown. While Professor Poeschl was making demonstrations, running the machine was a motor, the brushes gave trouble, sparking badly, and I observed that it might be possible to operate a motor without these appliances. But he declared that it could not be done and did me the honour of delivering a lecture on the subject, at the conclusion he remarked, "Mr. Tesla may accomplish great things, but he certainly will never do this. It would be equivalent to converting a steadily pulling force, like that of gravity into a rotary effort. It is a perpetual motion scheme, an impossible idea." But instinct is something which transcends knowledge. We have, undoubtedly, certain finer fibres that enable us to perceive truths when logical deduction, or any other wilful effort of the brain, is futile.

For a time I wavered, impressed by the professor's authority, but soon

became convinced I was right and undertook the task with all the fire and boundless confidence of my youth. I started by first picturing in my mind a direct-current machine, running it and following the changing flow of the currents in the armature. Then I would imagine an alternator and investigate the progresses taking place in a similar manner. Next I would visualise systems comprising motors and generators and operate them in various ways.

The images I saw were to me perfectly real and tangible. All my remaining term in Gratz was passed in intense but fruitless efforts of this kind, and I almost came to the conclusion that the problem was insolvable.

In 1880 I went to Prague, Bohemia, carrying out my father's wish to complete my education at the University there. It was in that city that I made a decided advance, which consisted in detaching the commutator from the machine and studying the phenomena in this new aspect, but still without result. In the year following there was a sudden change in my views of life.

I realised that my parents had been making too great sacrifices on my account and resolved to relieve them of the burden. The wave of the American telephone had just reached the European continent and the system was to be installed in Budapest, Hungary. It appeared an ideal opportunity, all the more as a friend of our family was at the head of the enterprise.

It was here that I suffered the complete breakdown of the nerves to which I have referred. What I experienced during the period of the illness surpasses all belief. My sight and hearing were always extraordinary. I could clearly discern objects in the distance when others saw no trace of them. Several times in my boyhood I saved the houses of our neighbours from fire by hearing the faint crackling sounds which did not disturb their sleep, and calling for help. In 1899, when I was past forty and carrying on my experiments in Colorado, I could hear very distinctly thunderclaps at a distance of 550 miles. My ear was thus over thirteen times more sensitive, yet at that time I was, so to speak, stone deaf in comparison with the acuteness of my hearing while under the nervous strain.

In Budapest I could hear the ticking of a watch with three rooms between me and the time-piece. A fly alighting on a table in the room would cause a dull thud in my ear. A carriage passing at a distance of a few miles fairly shook my whole body. The whistle of a locomotive twenty or thirty miles away made the bench or chair on which I sat, vibrate so strongly that the pain was unbearable. The ground under my feet trembled continuously. I had to support my bed on rubber cushions to get any rest at all. The roaring noises from near and far often produced the effect of spoken words which would have frightened me had I not been able to resolve them into their accumulated components. The sun rays, when periodically intercepted, would cause blows of such force on my brain that they would stun me. I had to summon all my will power to pass under a bridge or other structure, as I experienced the crushing pressure on the skull. In the dark I had the sense of a bat, and could detect the presence of an object at a distance of twelve feet by a peculiar creepy sensation on the forehead. My pulse varied from a few to two hundred and sixty beats and all the tissues of my body with twitchings and tremors, which was perhaps hardest to bear. A renowned physician who have me daily large doses of Bromide of Potassium, pronounced my malady unique and incurable.

It is my eternal regret that I was not under the observation of experts in physiology and psychology at that time. I clung desperately to life, but

never expected to recover. Can anyone believe that so hopeless a physical wreck could ever be transformed into a man of astonishing strength and tenacity; able to work thirty-eight years almost without a day's interruption, and find himself still strong and fresh in body and mind? Such is my case. A powerful desire to live and to continue the work and the assistance of a devoted friend, an athlete, accomplished the wonder. My health returned and with it the vigour of mind.

In attacking the problem again, I almost regretted that the struggle was soon to end. I had so much energy to spare. When I understood the task, it was not with a resolve such as men often make. With me it was a sacred vow, a question of life and death. I knew that I would perish if I failed. Now I felt that the battle was won. Back in the deep recesses of the brain was the solution, but I could net yet give it outward expression.

One afternoon, which is ever present in my recollection, I was enjoying a walk with my friend in the City Park and reciting poetry. At that age, I knew entire books by heart, word for word. One of these was Goethe's "Faust." The sun was just setting and reminded me of the glorious passage, "Sie ruckt und weicht, der Tag ist uberlebt, Dort eilt sie hin und fordert neues Leben. Oh, daß kein Flugel mich vom Boden hebt Ihr nach und immer nach zu streben! Ein schöner Traum indessen sie entweicht, Ach, au des Geistes Flügein wird so leicht Kein korperlicher Flugel sich gesellen!" As I uttered these inspiring words the idea came like a flash of lightening and in an instant the truth was revealed. I drew with a stick on the sand, the diagram shown six years later in my address before the American Institute of Electrical Engineers, and my companion understood them perfectly. The images I saw were wonderfully sharp and clear and had the solidity of metal and stone, so much so that I told him, "See my motor here; watch me reverse it." I cannot begin to describe my emotions. Pygmalion seeing his statue come to life could not have been more deeply moved. A thousand secrets of nature which I might have stumbled upon accidentally, I would have given for that one which I had wrested from her against all odds and at the peril of my existence...

Chapter 4
The Discovery of the Tesla Coil and Transformer

(The Basic Part of Every Radio and T.V.)

For a while I gave myself up entirely to the intense enjoyment of picturing machines and devising new forms. It was a mental state of happiness about as complete as I have ever known in life. Ideas came in an uninterrupted stream and the only difficulty I had was to hold them fast. The pieces of apparatus I conceived were to me absolutely real and tangible in every detail, even to the minutest marks and signs of wear. I delighted in imagining the motors constantly running, for in this way they presented to the mind's eye a fascinating sight. When natural inclination develops into a passionate desire, one advances towards his goal in seven-league boots. In less than two months I evolved virtually all the types of motors and modifications of the system which are now identified with my name, and which are used under many other names all over the world. It was, perhaps, providential that the necessities of existence commanded a temporary halt to this consuming activity of the mind.

I came to Budapest prompted by a premature report concerning the telephone enterprise and, as irony of fate willed it, I had to accept a position as draughtsman in the Central Telegraph Office of the Hungarian Government at a salary which I deem it my privilege not to disclose. Fortunately, I soon won the interest of the Inspector-in-Chief and was thereafter employed on calculations, designs and estimates in connection with new installations, until the Telephone exchange started, when I took charge of the same. The knowledge and practical experience I gained in the course of this work, was most valuable and the employment gave me ample opportunities for the exercise of my inventive faculties. I made several improvements in the Central Station apparatus and perfected a telephone repeater or amplifier which was never patented or publicly described but would be creditable to me even today. In recognition of my efficient assistance the organiser of the undertaking, Mr. Puskas, upon disposing of his business in Budapest, offered me a position in Paris which I gladly accepted.

I never can forget the deep impression that magic city produced on my mind. For several days after my arrival, I roamed through the streets in utter bewilderment of the new spectacle. The attractions were many and irresistible, but, alas, the income was spent as soon as received. When Mr. Puskas asked me how I was getting along in the new sphere, I described the situation accurately in the statement that "The last twenty-nine days of the month are the toughest." I led a rather strenuous life in what would now be termed "Rooseveltian fashion." Every morning, regardless of the weather, I would go from the Boulevard St. Marcel, where I resided, to a bathing house on the Seine; plunge into the water, loop the circuit twenty-seven times and then walk an hour to reach Ivry, where the Company's factory was located. There I would have a wood-chopper's breakfast at half-past seven o'clock and then eagerly await the lunch hour, in the meanwhile cracking hard nuts for the Manager of the Works, Mr. Charles Batchellor, who was an intimate friend and assistant of Edison. Here I was thrown in contact with a few Americans who fairly fell in love with my because of my proficiency in Billiards! To these men I explained my invention and one of them, Mr. D. Cunningham, foreman of

the Mechanical Department, offered to form a stock company. The proposal seemed to me comical in the extreme. I did not have the faintest conception of what he meant, except that it was an American way of doing things. Nothing came of it, however, and during the next few months I had to travel from one place to another in France and Germany to cure the ills of the power plants.

On my return to Paris, I submitted to one of the administrators of the Company, Mr. Rau, a plan for improving their dynamos and was given an opportunity. My success was complete and the delighted directors accorded me the privilege of developing automatic regulators which were much desired. Shortly after, there was some trouble with the lighting plant which had been installed at the new railroad station in Straßburg, Alsace. The wiring was defective and on the occasion of the opening ceremonies, a large part of a wall was blown out through a short-circiut, right in the presence of old Emperor William I. The German Government refused to take the plant and the French Company was facing a serious loss. On account of my knowledge of the German language and past experience, I was entrusted with the difficult task of straightening out matters and early in 1883, I went to Straßburg on that mission.

Some of the incidents in that city have left an indelible record on my memory. By a curious coincidence, a number of the men who subsequently achieve fame, lived there about that time. In later life I used to say, “There were bacteria of greatness in that old town.” Others caught the disease, but I escaped!” The practical work, correspondence, and conferences with officials kept me preoccupied day and night, but as soon as I was able to manage, I undertook the construction of a simple motor in a mechanical shop opposite the rail-road station, having brought with me from Paris some material for that purpose. The consummation of the experiment was, however, delayed until the summer of that year, when I finally had the satisfaction of seeing the rotation effected by alternating currents of different phase, and without sliding contacts or commutator, as I had conceived a year before. It was an exquisite pleasure but not to compare with the delirium of joy following the first revelation.

Among my new friends was the former Mayor of the city, Mr. Sauzin, whom I had already, in a measure, acquainted with this and other inventions of mine and whose support I endeavoured to enlist. He was sincerely devoted to me and put my project before several wealthy persons, but to my mortification, found no response. He wanted to help me in every possible way and the approach of the first of July, 1917, happens to remind me of a form of “assistance” I received from that charming man, which was not financial, but none the less appreciated. In 1870, when the Germans invaded the country, Mr. Sauzin had buried a good sized allotment of St. Estephe of 1801 and he came to the conclusion that he knew no worthier person than myself, to consume that precious beverage. This, I may say, is one of the unforgettable incidents to which I have referred. My friend urged me to return to Paris as soon as possible and seek support there. This I was anxious to do, but my work and negotiations were protracted, owing to all sorts of petty obstacles I encountered, so that at times the situation seemed hopeless. Just to give an idea of German thoroughness and “efficiency,” I may mention here a rather funny experience.

An incandescent lamp of 16 c.p. was to be placed in a hallway, and upon selected the proper location, I ordered the “monteur” to run the wires. After working for a while, he concluded that the engineer had to be consulted and this was done. The latter made several objections but ultimately agreed that the lamp should be placed two inches from the spot I had assigned, whereupon the work proceeded. Then the engineer became worried and told me that Inspector Averdeck should be notified. That important person was called,

he investigated, debated, and decided that the lamp should be shifted back two inches, which was the placed I had marked! It was not long, however, before Averdeck got cold feet himself and advised me that he had informed Ober-Inspector Hieronimus of the matter and that I should await his decision. It was several days before the Ober-Inspector was able to free himself of other pressing duties, but at last he arrived and a two hour debate followed, when he decided to move the lamp two inches further. My hopes that this was the final act, were shattered when the Ober-Inspector returned and said to me, "Regierungsrath Funke is particular that I would not dare to give an order for placing this lamp without his explicit approval." Accordingly, arrangements for a visit from that great man were made. We started cleaning up and polishing early in the morning, and when Funke came with his retinue he was ceremoniously received. After two hours of deliberation, he suddenly exclaimed, "I must be going!," and pointing to a place on the ceiling, he ordered me to put the lamp there. It was the exact spot which I had originally chosen! So it went day after day with variations, but I was determined to achieve, at whatever cost, and in the end my efforts were rewarded.

By the spring of 1884, all the differences were adjusted, the plant formally accepted, and I returned to Paris with pleasing anticipation. One of the administrators had promised me a liberal compensation in case I succeeded, as well as a fair consideration of the improvements I had made to their dynamos and I hoped to realise a substantial sum. There were three administrators, whom I shall designate as A, B, and C for convenience. When I called on A, he told me that B had the say. This gentleman thought that only C could decide, and the latter was quite sure that A alone had the power to act. After several laps of this circulus viciousus, it dawned upon me that my reward was a castle in Spain.

The utter failure of my attempts to raise capital for development was another disappointment, and when Mr. Bachelor pressed me to go to America with a view of redesigning the Edison machines, I determined to try my fortunes in the Land of Golden Promise. But the chance was nearly missed. I liquefied my modest assets, secured accommodations and found myself at the railroad station as the train was pulling out. At that moment, I discovered that my money and tickets were gone. What to do was the question. Hercules had plenty of time to deliberate, but I had to decide while running alongside the train with opposite feeling surging in my brain like condenser oscillations. Resolve, helped by dexterity, won out in the nick of time and upon passing through the usual experience, as trivial and unpleasant, I managed to embark for New York with the remnants of my belongings, some poems and articles I had written, and a package of calculations relating to solutions of an unsolvable integral and my flying machine. During the voyage I sat most of the time at the stern of the ship watching for an opportunity to save somebody from a watery grave, without the slightest thought of danger. Later, when I had absorbed some of the practical American sense, I shivered at the recollection and marvelled at my former folly. The meeting with Edison was a memorable event in my life. I was amazed at this wonderful man who, without early advantages and scientific training, had accomplished so much. I had studied a dozen languages, delved in literature and art, and had spent my best years in libraries reading all sorts of stuff that fell into my hands, from Newton's "Principia" to the novels of Paul de Kock, and felt that most of my life had been squandered. But it did not take long before I recognised that it was the best thing I could have done. Within a few weeks I had won Edison's confidence, and it came about in this way.

The S.S. Oregon, the fastest passenger steamer at that time, had both of

its lighting machines disabled and its sailing was delayed. As the super-structure had been built after their installation, it was impossible to remove them from the hold. The predicament was a serious one and Edison was much annoyed. In the evening I took the necessary instruments with me and went aboard the vessel where I stayed for the night. The dynamos were in bad condition, having several short-circuits and breaks, but with the assistance of the crew, I succeeded in putting them in good shape. At five o'clock in the morning, when passing along Fifth Avenue on my way to the shop, I met Edison with Bachelor and a few others, as they were returning home to retire. "Here is our Parisian running around at night," he said. When I told him that I was coming from the Oregon and had repaired both machines, he looked at me in silence and walked away without another word. But when he had gone some distance I heard him remark, "Bachelor, this is a good man." And from that time on I had full freedom in directing the work. For nearly a year my regular hours were from 10:30 A.M. until 5 o'clock the next morning without a day's exception. Edison said to me, "I have had many hard working assistants, but you take the cake." During this period I designed twenty-four different types of standard machines with short cores and uniform pattern, which replaced the old ones. The Manager had promised me fifty thousand dollars on the completion of this task, but it turned out to be a practical joke. This gave me a painful shock and I resigned my position.

Immediately thereafter, some people approached me with the proposal of forming an arc light company under my name, to which I agreed. Here finally, was an opportunity to develop the motor, but when I broached the subject to my new associates they said, "No, we want the arc lamp. We don't care for this alternating current of yours." In 1886 my system of arc lighting was perfected and adopted for factory and municipal lighting, and I was free, but with no other possession than a beautifully engraved certificate of stock of hypothetical value. Then followed a period of struggle in the new medium for which I was not fitted, but the reward came in the end, and in April, 1887, the TESLA Electric Co. was organised, providing a laboratory and facilities. The motors I built there were exactly as I had imagined them. I made no attempt to improve the design, but merely reproduced the pictures as they appeared to my vision and the operation was always as I expected.

In the early part of 1888, an arrangement was made with the Westinghouse Company for the manufacture of the motors on a large scale. But great difficulties had still to be overcome. My system was based on the use of low frequency currents and the Westinghouse experts had adopted 133 cycles with the objects of securing advantages in transformation. They did not want to depart with their standard forms of apparatus and my efforts had to be concentrated upon adapting the motor to these conditions. Another necessity was to produce a motor capable of running efficiently at this frequency on two wire, which was not an easy accomplishment.

At the close of 1889, however, my services in Pittsburgh being no longer essential, I returned to New York and resumed experimental work in a Laboratory on Grand Street, where I began immediately the design of high-frequency machines. The problems of construction in this unexplored field were novel and quite peculiar, and I encountered many difficulties. I rejected the inductor type, fearing that it might not yield perfect sine waves, which were so important to resonant action. Had it not been for this, I could have saved myself a great deal of labour. Another discouraging feature of the high-frequency alternator seemed to be the inconstancy of speed which threatened to impose serious limitations to its use. I had already noted in my demonstrations before the American Institution of Electrical Engineers, that several times

the tune was lost, necessitating readjustment, and did not yet foresee what I discovered long afterwards, – a means of operating a machine of this kind at a speed constant to such a degree as not to vary more than a small fraction of one revolution between the extremes of load. From many other considerations, it appeared desirable to invent a simpler device for the production of electric oscillations.

In 1856, Lord Kelvin had exposed the theory of the condenser discharge, but no practical application of that important knowledge was made. I saw the possibilities and undertook the development of induction apparatus on this principle. My progress was so rapid as to enable me to exhibit at my lecture in 1891, a coil giving sparks of five inches. On that occasion I frankly told the engineers of a defect involved in the transformation by the new method, namely, the loss in the spark gap. Subsequent investigation showed that no matter what medium is employed, –be it air, hydrogen, mercury vapour, oil, or a stream of electrons, the efficiency is the same. It is a law very much like the governing of the conversion of mechanical energy. We may drop a weight from a certain height vertically down, or carry it to the lower level along any devious path; it is immaterial insofar as the amount of work is concerned. Fortunately however, this drawback is not fatal, as by proper proportioning of the resonant, circuits of an efficiency of 85 percent is attainable. Since my early announcement of the invention, it has come into universal use and wrought a revolution in many departments, but a still greater future awaits it.

When in 1900 I obtained powerful discharges of 1,000 feet and flashed a current around the globe, I was reminded of the first tiny spark I observed in my Grand Street laboratory and was thrilled by sensations akin to those I felt when I discovered the rotating magnetic field.

Chapter 5

As I review the events of my past life I realise how subtle are the influences that shape our destinies. An incident of my youth may serve to illustrate. One winter's day I managed to climb a steep mountain, in company with other boys. The snow was quite deep and a warm southerly wind made it just suitable for our purpose. We amused ourselves by throwing balls which would roll down a certain distance, gathering more or less snow, and we tried to out-do one another in this sport. Suddenly a ball was seen to go beyond the limit, swelling to enormous proportions until it became as big as a house and plunged thundering into the valley below with a force that made the ground tremble. I looked on spell-bound incapable of understanding what had happened. For weeks afterward the picture of the avalanche was before my eyes and I wondered how anything so small could grow to such an immense size.

Ever since that time the magnification of feeble actions fascinated me, and when, years later, I took up the experimental study of mechanical and electrical resonance, I was keenly interested from the very start. Possibly, had it not been for that early powerful impression I might not have followed up the little spark I obtained with my coil and never developed my best invention, the true history of which I will tell.

Many technical men, very able in their special departments, but dominated by a pedantic spirit and near-sighted, have asserted that excepting the induction motor, I have given the world little of practical use. This is a grievous mistake. A new idea must not be judged by its immediate results. My alternating system of power transmission came at a psychological moment, as a long sought answer to pressing industrial questions, and although considerable resistance had to be overcome and opposing interests reconciled, as usual, the commercial introduction could not be long delayed. Now, compare this situation with that confronting my turbines, for example. One should think that so simple and beautiful an invention, possessing many features of an ideal motor, should be adopted at once and, undoubtedly, it would under similar conditions. But the prospective effect of the rotating field was not to render worthless existing machinery; on the contrary, it was to give it additional value. The system lent itself to new enterprise as well as to improvement of the old. My turbine is an advance of a character entirely different. It is a radical departure in the sense that its success would mean the abandonment of the antiquated types of prime movers on which billions of dollars have been spent. Under such circumstances, the progress must needs be slow and perhaps the greatest impediment is encountered in the prejudicial opinions created in the minds of experts by organised opposition.

Only the other day, I had a disheartening experience when I met my friend and former assistant, Charles F. Scott, now professor of Electric Engineering at Yale. I had not seen him for a long time and was glad to have an opportunity for a little chat at my office. Our conversation, naturally enough, drifted on my turbine and I became heated to a high degree. "Scott," I exclaimed, carried away by the vision of a glorious future, "My turbine will scrap all the heat engines in the world." Scott stroked his chin and looked away thoughtfully, as though making a mental calculation. "That will make quite a pile of scrap," he said, and left without another word!

These and other inventions of mine, however, were nothing more than steps

forward in a certain directions. In evolving them, I simply followed the inborn instinct to improve the present devices without any special thought of our far more imperative necessities. The "Magnifying Transmitter" was the product of labours extending through years, having for their chief object, the solution of problems which are infinitely more important to mankind than mere industrial development.

If my memory serves me right, it was in November, 1890, that I performed a laboratory experiment which was one of the most extraordinary and spectacular ever recorded in the annal of Science. In investigating the behaviour of high frequency currents, I had satisfied myself that an electric field of sufficient intensity could be produced in a room to light up electrodeless vacuum tubes. Accordingly, a transformer was built to test the theory and the first trial proved a marvellous success. It is difficult to appreciate what those strange phenomena meant at the time. We crave for new sensations, but soon become indifferent to them. The wonders of yesterday are today common occurrences. When my tubes were first publicly exhibited, they were viewed with amazement impossible to describe. From all parts of the world, I received urgent invitations and numerous honours and other flattering inducements were offered to me, which I declined. But in 1892 the demand became irresistible and I went to London where I delivered a lecture before the institution of Electrical Engineers.

It has been my intention to leave immediately for Paris in compliance with a similar obligation, but Sir James Dewar insisted on my appearing before the Royal Institution. I was a man of firm resolve, but succumbed easily to the forceful arguments of the great Scotchman. He pushed me into a chair and poured out half a glass of a wonderful brown fluid which sparkled in all sorts of iridescent colours and tasted like nectar. "Now," said he, "you are sitting in Faraday's chair and you are enjoying whiskey he used to drink." (Which did not interest me very much, as I had altered my opinion concerning strong drink). The next evening I have a demonstration before the Royal Institution, at the termination of which, Lord Rayleigh addressed the audience and his generous words gave me the first start in these endeavours. I fled from London and later from Paris, to escape favours showered upon me, and journeyed to my home, where I passed through a most painful ordeal and illness.

Upon regaining my health, I began to formulate plans for the resumption of work in America. Up to that time I never realised that I possessed any particular gift of discovery, but Lord Rayleigh, whom I always considered as an ideal man of science, had said so and if that was the case, I felt that I should concentrate on some big idea.

At this time, as at many other times in the past, my thoughts turned towards my Mother's teaching. The gift of mental power comes from God, Divine Being, and if we concentrate our minds on that truth, we become in tune with this great power. My Mother had taught me to seek all truth in the Bible; therefore I devoted the next few months to the study of this work.

One day, as I was roaming the mountains, I sought shelter from an approaching storm. The sky became overhung with heavy clouds, but somehow the rain was delayed until, all of a sudden, there was a lightening flash and a few moments after, a deluge. This observation set me thinking. It was manifest that the two phenomena were closely related, as cause and effect, and a little reflection led me to the conclusion that the electrical energy involved in the precipitation of the water was inconsiderable, the function of the lightening being much like that of a sensitive trigger. Here was a stupendous possibility of

achievement. If we could produce electric effects of the required quality, this whole planet and the conditions of existence on it could be transformed. The sun raises the water of the oceans and winds drive it to distant regions where it remains in a state of most delicate balance. If it were in our power to upset it when and wherever desired, this might life sustaining stream could be at will controlled. We could irrigate arid deserts, create lakes and rivers, and provide motive power in unlimited amounts. This would be the most efficient way of harnessing the sun to the uses of man. The consummation depended on our ability to develop electric forces of the order of those in nature.

It seemed a hopeless undertaking, but I made up my mind to try it and immediately on my return to the United States in the summer of 1892, after a short visit to my friends in Watford, England; work was begun which was to me all the more attractive, because a means of the same kind was necessary for the successful transmission of energy without wires.

At this time I made a further careful study of the Bible, and discovered the key in Revelation. The first gratifying result was obtained in the spring of the succeeding year, when I reaching a tension of about 100,000,000 volts — one hundred million volts — with my conical coil, which I figured was the voltage of a flash of lightening. Steady progress was made until the destruction of my laboratory by fire, in 1895, as may be judged from an article by T.C. Martin which appeared in the April number of the Century Magazine. This calamity set me back in many ways and most of that year had to be devoted to planning and reconstruction. However, as soon as circumstances permitted, I returned to the task.

Although I knew that higher electric-motive forces were attainable with apparatus of larger dimensions, I had an instinctive perception that the object could be accomplished by the proper design of a comparatively small and compact transformer. In carrying on tests with a secondary in the form of flat spiral, as illustrated in my patents, the absence of streamers surprised me, and it was not long before I discovered that this was due to the position of the turns and their mutual action. Profiting from this observation, I resorted to the use of a high tension conductor with turns of considerable diameter, sufficiently separated to keep down the distributed capacity, while at the same time preventing undue accumulation of the charge at any point. The application of this principle enabled me to produce pressures of over 100,000,000 volts, which was about the limit obtainable without risk of accident. A photograph of my transmitter built in my laboratory at Houston Street, was published in the Electrical Review of November, 1898.

In order to advance further along this line, I had to go into the open, and in the spring of 1899, having completed preparations for the erection of a wireless plant, I went to Colorado where I remained for more than one year. Here I introduced other improvements and refinements which made it possible to generate currents of any tension that may be desired. Those who are interested will find some information in regard to the experiments I conducted there in my article, “The Problem of Increasing Human Energy,” in the Century Magazine of June 1900, to which I have referred on a previous occasion.

I will be quite explicit on the subject of my magnifying transformer so that it will be clearly understood. In the first place, it is a resonant transformer, with a secondary in which the parts, charged to a high potential, are of considerable area and arranged in space along ideal enveloping surfaces of very large radii of curvature, and at proper distances from one another, thereby

insuring a small electric surface density everywhere, so that no leak can occur even if the conductor is bare. It is suitable for any frequency, from a few to many thousands of cycles per second, and can be used in the production of currents of tremendous volume and moderate pressure, or of smaller amperage and immense electromotive force. The maximum electric tension is merely dependent on the curvature of the surfaces on which the charged elements are situated and the area of the latter. Judging from my past experience there is no limit to the possible voltage developed; any amount is practicable. On the other hand, currents of many thousands of amperes may be obtained in the antenna. A plant of but very moderate dimensions is required for such performances. Theoretically, a terminal of less than 90 feet in diameter is sufficient to develop an electromotive force of that magnitude, while for antenna currents of from 2,000-4,000 amperes at the usual frequencies, it need not be larger than 30 feet in diameter. In a more restricted meaning, this wireless transmitter is one in which the Hertzwave radiation is an entirely negligible quantity as compared with the whole energy, under which condition the damping factor is extremely small and an enormous charge is stored in the elevated capacity. Such a circuit may then be excited with impulses of any kind, even of low frequency and it will yield sinusoidal and continuous oscillations like those of an alternator. Taken in the narrowest significance of the term, however, it is a resonant transformer which, besides possessing these qualities, is accurately proportioned to fit the globe and its electrical constants and properties, by virtue of which design it becomes highly efficient and effective in the wireless transmission of energy. Distance is then ABSOLUTELY ELIMINATED, THERE BEING NO DIMINUATION IN THE INTENSITY of the transmitted impulses. It is even possible to make the actions increase with the distance from the plane, according to an exact mathematical law. This invention was one of a number comprised in my "World System" of wireless transmission which I undertook to commercialise on my return to New York in 1900.

As to the immediate purposes of my enterprise, they were clearly outlined in a technical statement of that period from which I quote, "The world system has resulted from a combination of several original discoveries made by the inventor in the course of long continued research and experimentation. It makes possible not only the instantaneous and precise wireless transmission of any kind of signals, messages or characters, to all parts of the world, but also the inter-connection of the existing telegraph, telephone, and other signal stations without any change in their present equipment. By its means, for instance, a telephone subscriber here may call up and talk to any other subscriber on the Earth. An inexpensive receiver, not bigger than a watch, will enable him to listen anywhere, on land or sea, to a speech delivered or music played in some other place, however distant."

These examples are cited merely to give an idea of the possibilities of this great scientific advance, which annihilates distance and makes that perfect natural conductor, the Earth, available for all the innumerable purposes which human ingenuity has found for a line-wire. One far-reaching result of this is that any device capable of being operated through one or more wires (at a distance obviously restricted) can likewise be actuated, without artificial conductors and with the same facility and accuracy, at distances to which there are no limits other than those imposed by the physical dimensions of the earth. Thus, not only will entirely new fields for commercial exploitation be opened up by this ideal method of transmission, but the old ones vastly extended. The World System is based on the application of the following import and inventions and discoveries:

1) The Tesla Transformer: This apparatus is in the production of elec-

trical vibrations as revolutionary as gunpowder was in warfare. Currents many times stronger than any ever generated in the usual ways and sparks over one hundred feet long, have been produced by the inventor with an instrument of this kind.

2) The Magnifying Transmitter: This is Tesla's best invention, a peculiar transformer specially adapted to excite the earth, which is in the transmission of electrical energy when the telescope is in astronomical observation. By the use of this marvellous device, he has already set up electrical movements of greater intensity than those of lightening and passed a current, sufficient to light more than two hundred incandescent lamps, around the Earth.

3) The Tesla Wireless System: This system comprises a number of improvements and is the only means known for transmitting economically electrical energy to a distance without wires. Careful tests and measurements in connection with an experimental station of great activity, erected by the inventor in Colorado, have demonstrated that power in any desired amount can be conveyed, clear across the Globe if necessary, with a loss not exceeding a few per cent.

4) The Art of Individualisation: This invention of Tesla is to primitive Tuning, what refined language is to unarticulated expression. It makes possible the transmission of signals or messages absolutely secret and exclusive both in the active and passive aspect, that is, non-interfering as well as non-interferable. Each signal is like an individual of unmistakable identity and there is virtually no limit to the number of stations or instruments which can be simultaneously operated without the slightest mutual disturbance.

5) The Terrestrial Stationary Waves: This wonderful discovery, popularly explained, means that the Earth is responsive to electrical vibrations of definite pitch, just as a tuning fork to certain waves of sound. These particular electrical vibrations, capable of powerfully exciting the Globe, lend themselves to innumerable uses of great importance commercially and in many other respects. The "first World System" power plant can be put in operation in nine months. With this power plant, it will be practicable to attain electrical activities up to ten million horse-power and it is designed to serve for as many technical achievements as are possible without due expense. Among these are the following:

1) The inter-connection of existing telegraph exchanges or offices all over the world;
2) The establishment of a secret and non-interferable government telegraph service;
3) The inter-connection of all present telephone exchanges or offices around the Globe;
4) The universal distribution of general news by telegraph or telephone, in conjunction with the Press;
5) The establishment of such a "World System" of intelligence transmission for exclusive private use;
6) The inter-connection and operation of all stock tickers of the world;
7) The establishment of a World system — of musical distribution, etc.;
8) The universal registration of time by cheap clocks indicating the hour with astronomical precision and requiring no attention whatever;
9) The world transmission of typed or hand-written characters, letters, checks, etc.;
10) The establishment of a universal marine service enabling the navigators of all ships to steer perfectly without compass, to determine the exact location, hour and speak; to prevent collisions and disasters, etc.;

11) The inauguration of a system of world printing on land and sea;
12) The world reproduction of photographic pictures and all kinds of drawings or records..."

I also proposed to make demonstration in the wireless transmission of power on a small scale, but sufficient to carry conviction. Besides these, I referred to other and incomparably more important applications of my discoveries which will be disclosed at some future date. A plant was built on Long Island with a tower 187 feet high, having a spherical terminal about 68 feet in diameter. These dimensions were adequate for the transmission of virtually any amount of energy. Originally, only from 200 to 300 K.W. were provided, but I intended to employ later several thousand horsepower. The transmitter was to emit a wave-complex of special characteristics and I had devised a unique method of telephonic control of any amount of energy. The tower was destroyed two years ago (1917) but my projects are being developed and another one, improved in some features will be constructed.

On this occasion I would contradict the widely circulated report that the structure was demolished by the Government, which owing to war conditions, might have created prejudice in the minds of those who may not know that the papers, which thirty years ago conferred upon me the honour of American citizenship, are always kept in a safe, while my orders, diplomas, degrees, gold medals and other distinctions are packed away in old trunks. If this report had a foundation, I would have been refunded a large sum of money which I expended in the construction of the tower. On the contrary, it was in the interest of the Government to preserver it, particularly as it would have made possible, to mention just one valuable result, the location of a submarine in any part of the world. My plant, services, and all my improvements have always been at the disposal of the officials and ever since the outbreak of the European conflict, I have been working at a sacrifice on several inventions of mine relating to aerial navigation, ship propulsion and wireless transmission, which are of the greatest importance to the country. Those who are well informed know that my ideas have revolutionised the industries of the United States and I am not aware that there lives an inventor who has been, in this respect, as fortunate as myself, — especially as regards the use of his improvements in the war.

I have refrained from publicly expressing myself on this subject before, as it seemed improper to dwell on personal matters while all the world was in dire trouble. I would add further, in view of various rumours which have reached me, that Mr. J. Pierpont Morgan did not interest himself with me in a business way, but in the same large spirit in which he has assisted many other pioneers. He carried out his generous promise to the letter and it would have been most unreasonable to expect from him anything more. He had the highest regard for my attainments and gave me every evidence of his complete faith in my ability to ultimately achieve what I had set out to do. I am unwilling to accord to some small-minded and jealous individuals the satisfaction of having thwarted my efforts. These men are to me nothing more than microbes of a nasty disease. My project was retarded by laws of nature. The world was not prepared for it. It was too far ahead of time, but the same laws will prevail in the end and make it a triumphal success.

Chapter 6

No subject to which I have ever devoted myself has called for such concentration of mind, and strained to so dangerous a degree the finest fibres of my brain, as the systems of which the Magnifying transmitter is the foundation. I put all the intensity and vigour of youth in the development of the rotating field discoveries, but those early labours were of a different character. Although strenuous in the extreme, they did not involve that keen and exhausting discernment which had to be exercised in attacking the many problems of the wireless.

Despite my rare physical endurance at that period, the abused nerves finally rebelled and I suffered a complete collapse, just as the consummation of the long and difficult task was almost in sight. Without doubt I would have paid a greater penalty later, and very likely my career would have been prematurely terminated, had not providence equipped me with a safety device, which seemed to improve with advancing years and unfailingly comes to play when my forces are at an end. So long as it operates I am safe from danger, due to overwork, which threatens other inventors, and incidentally, I need no vacations which are indispensable to most people. When I am all but used up, I simply do as the darkies who "naturally fall asleep while white folks worry."

To venture a theory out of my sphere, the body probably accumulates little by little a definite quantity of some toxic agent and I sink into a nearly lethargic state which lasts half an hour to the minute. Upon awakening I have the sensation as though the events immediately preceding had occurred very long ago, and if I attempt to continue the interrupted train of thought I feel veritable nausea. Involuntarily, I then turn to other and am surprised at the freshness of the mind and ease with which I overcome obstacles that had baffled me before. After weeks or months, my passion for the temporarily abandoned invention returns and I invariably find answers to all the vexing questions, with scarcely any effort. In this connection, I will tell of an extraordinary experience which may be of interest to students of psychology.

I had produced a striking phenomenon with my grounded transmitter and was endeavouring to ascertain its true significance in relation to the currents propagated through the earth. It seemed a hopeless undertaking, and for more than a year I worked unremittingly, but in vain. This profound study so entirely absorbed me, that I became forgetful of everything else, even of my undermined health. At last, as I was at the point of breaking down, nature applied the preservative inducing lethal sleep. Regaining my senses, I realised with consternation that I was unable to visualise scenes from my life except those of infancy, the very first ones that had entered my consciousness. Curiously enough, these appeared before my vision with startling distinctness and afforded me welcome relief. Night after night, when retiring, I would think of them and more and more of my previous existence was revealed. The image of my mother was always the principal figure in the spectacle that slowly unfolded, and a consuming desire to see her again gradually took possession of me. This feeling grew so strong that I resolved to drop all work and satisfy my longing, but I found it too hard to break away from the laboratory, and several months elapsed during which I had succeeded in reviving all the impressions of my past life, up to the spring of 1892. In the next picture that came out of the mist of oblivion, I saw myself at the Hotel de la Paix in Paris, just coming to from one of my peculiar sleeping spells, which had

been caused by prolonged exertion of the brain. Imagine the pain and distress I felt, when it flashed upon my mind that a dispatch was handed to me at that very moment, bearing the sad news that my mother was dying. I remembered how I made the long journey home without an hour of rest and how she passed away after weeks of agony.

It was especially remarkable that during all this period of partially obliterated memory, I was fully alive to everything touching on the subject of my research. I could recall the smallest detail and the least insignificant observations in my experiments and even recite pages of text and complex mathematical formulae.

My belief is firm in a law of compensation. The true rewards are ever in proportion to the labour and sacrifices made. This is one of the reasons why I feel certain that of all my inventions, the magnifying Transmitter will prove most important and valuable to future generations. I am prompted to this prediction, not so much by thoughts of the commercial and industrial revolution which it will surely bring about, but of the humanitation consequences of the many achievements it makes possible. Considerations of mere utility weigh little in the balance against the higher benefits of civilisation. We are confronted with portentous problems which can not be solved just by providing for our material existence, however abundantly. On the contrary, progress in this direction is fraught with hazards and perils not less menacing than those born from want and suffering. If we were to release the energy of atoms or discover some other way of developing cheap and unlimited power at any point on the globe, this accomplishment, instead of being a blessing, might bring disaster to mankind in giving rise to dissension and anarchy, which would ultimately result in the enthronement of the hated regime of force. The greatest good will come from technical improvements tending to unification and harmony, and my wireless transmitter is preeminently such. By its means, the human voice and likeness will be reproduced everywhere and factories driven thousands of miles from waterfalls furnishing power. Aerial machines will be propelled around the earth without a stop and the sun's energy controlled to create lakes and rivers for motive purposes and transformation of arid deserts into fertile land. Its introduction for telegraphic, telephonic and similar uses, will automatically cut out the statics and all other interferences which at present, impose narrow limits to the application of the wireless. This is a timely topic on which a few words might not be amiss.

During the past decade a number of people have arrogantly claimed that they had succeeded in doing away with this impediment. I have carefully examined all of the arrangements described and tested most of them long before they were publicly disclosed, but the finding was uniformly negative. Recent official statement from the U.S. Navy may, perhaps, have taught some beguilable news editors how to appraise these announcements at their real worth. As a rule, the attempts are based on theories so fallacious, that whenever they come to my notice, I can not help thinking in a light vein. Quite recently a new discovery was heralded, with a deafening flourish of trumpets, but it proved another case of a mountain bringing forth a mouse. This reminds me of an exciting incident which took place a year ago, when I was conducting my experiments with currents of high frequency.

Steve Brodie had just jumped off the Brooklyn Bridge. The feat has been vulgarised since by imitators, but the first report electrified New York. I was very impressionable then and frequently spoke of the daring printer. On a hot afternoon I felt the necessity of refreshing myself and stepped into

one of the popular thirty thousand institutions of this great city, where a delicious twelve per cent beverage was served, which can now be had only by making a trip to the poor and devastated countries of Europe. The attendance was large and not over-distinguished and a matter was discussed which gave me an admirable opening for the careless remark, "This is what I said when I jumped off the bridge." No sooner had I uttered these words, than I felt like the companion of Timothens, in the poem of Schiller. In an instant there was pandemonium and a dozen voices cried, "It is Brodie!" I threw a quarter on the counter and bolted for the door, but the crowd was at my heels with yells, – "Stop, Steeve!", which must have been misunderstood, for many persons tried to hold me up as I ran frantically for my haven of refuge. By darting around corners I fortunately managed, through the medium of a fire escape, to reach the laboratory, where I threw off my coat, camouflaged myself as a hard-working blacksmith and started the forge. But these precautions proved unnecessary, as I had eluded my pursuers. For many years afterward, at night, when imagination turns into spectres the trifling troubles of the day, I often thought, as I tossed on the bed, what my fate would have been, had the mob caught me and found out that I was not Steve Brodie!

Now the engineer who lately gave an account before a technical body of a novel remedy against statics based on a "heretofore unknown law of nature," seems to have been as reckless as myself when he contended that these disturbances propagate up and down, while those of a transmitter proceed along the earth. It would mean that a condenser as this globe, with its gaseous envelope, could be charged and discharged in a manner quite contrary to the fundamental teachings propounded in every elemental text book of physics. Such a supposition would have been condemned as erroneous, even in Franklin's time, for the facts bearing on this were then well known and the identity between atmospheric electricity and that developed by machines was fully established. Obviously, natural and artificial disturbances propagate through the earth and the air in exactly the same way, and both set up electromotive forces in the horizontal, as well as vertical sense. Interference can not be overcome by any such methods as were proposed. The truth is this: In the air the potential increases at the rate of about fifty volts per foot of elevation, owing to which there may be a difference of pressure amounting to twenty, or even forty thousand volts between the upper and lower ends of the antenna. The masses of the charged atmosphere are constantly in motion and give up electricity to the conductor, not continuously, but rather disruptively, this producing a grinding noise in a sensitive telephonic receiver. The higher the terminal and the greater the space encompast by the wires, the more pronounced is the effect, but it must be understood that it is purely local and has little to do with the real trouble.

In 1900, while perfecting my wireless system, one form of apparatus compressed four antennae. These were carefully calibrated in the same frequency and connected in multiple with the object of magnifying the action in receiving from any direction. When I desired to ascertain the origin of the transmitted impulse, each diagonally situated pair was put in series with a primary coil energising the detector circuit. In the former case, the sound was loud in the telephone; in the latter it ceased, as expected, – the two antennae neutralising each other, but the true statics manifested themselves in both instances and I had to devise special preventives embodying different principles. By employing receivers connected to two points of the ground, as suggested by me long ago, this trouble caused by the charged air, which is very serious in the structures as now built, is nullified and besides, the liability of all kinds of interference is reduced to about one-half because of the directional character of the circuit. This was perfectly self-evident, but

came as a revelation to some simple-minded wireless folks whose experience was confined to forms of apparatus that could have been improved with an axe, and they have been disposing of the bear's skin before killing him. If it were true that strays performed such antics, it would be easy to get rid of them by receiving without aerials. But, as a matter of fact, a wire buried in the ground which, conforming to this view, should be be absolutely immune, is more susceptible to certain extraneous impulses than one placed vertically in the air. To state it fairly, a slight progress has been made, but not by virtue of any particular method or device. It was achieved simply by discerning the enormous structures, which are bad enough for transmission but wholly unsuitable for reception and adopting a more appropriate type of receiver. As I have said before, to dispose of this difficulty for good, a radical change must be made in the system and the sooner this is done the better.

It would be calamitous, indeed, if at this time when the art is in its infancy and the vast majority, not excepting even experts, have no conception of its ultimate possibilities, a measure would be rushed through the legislature making it a government monopoly. This was proposed a few weeks ago by Secretary Daniels and no doubt that distinguished official has made his appeal to the Senate and House of Representatives with sincere conviction. But universal evidence unmistakably shows that the best results are always obtained in healthful commercial competition. there are, however, exceptional reasons why wireless should be given the fullest freedom of development. In the first place, it offers prospects immeasurably greater and more vital to betterment of human life than any other invention or discovery in the history of man. Then again, it must be understood that this wonderful art has been, in its entirety, evolved here and can be called "American" with more right and propriety than the telephone, the incandescent lamp or the aeroplane.

Enterprising press agents and stock jobbers have been so successful in spreading misinformation, that even so excellent a periodical as the *Scientific American*, accords the chief credit to a foreign country. The Germans, of course, gave us the Hertz waves and the Russian, English, French and Italian experts were quick in using them for signalling purposes. It was an obvious application of the new agent and accomplished with the old classical and unimproved induction coil, scarcely anything more than another kind of heliography. The radius of transmission was very limited, the result attained of little value, and the Hertz oscillations, as a means for conveying intelligence, could have been advantageously replaced by sound waves, which I advocated in 1891. Moreover, all of these attempts were made three years after the basic principles of the wireless system, which is universally employed today, and its potent instrumentalities had been clearly described and developed in America.

No trace of those Hertzian appliances and methods remains today. We have proceeded in the very opposite direction and what has been done is the product of the brains and efforts of citizens of this country. The fundamental patents have expired and the opportunities are open to all. The chief argument of the Secretary is based on interference. According to his statement, reported in the New York Herald of July 29th, signals from a powerful station can be intercepted in every village in the world. In view of this fact, which was demonstrated in my experiments in 1900, it would be of little use to impose restrictions in the United States.

As throwing light on this point, I may mention that only recently an odd looking gentleman called on me with the object of enlisting my services in the construction of world transmitters in some distant land. "We have no money,"

he said, “but carloads of solid gold, and we will give you a liberal amount.” I told him that I wanted to see first what will be done with my inventions in America, and this ended the interview. But I am satisfied that some dark forces are at work, and as time goes on the maintenance of continuous communication will be rendered more difficult. The only remedy is a system immune against interruption. It has been perfected, it exists, and all that is necessary is to put it in operation.

The terrible conflict is still uppermost in the minds and perhaps the greatest importance will be attached to the magnifying Transmitter as a machine for attack and defence, more particularly in connection with TELAUTAMATICS. This invention is a logical outcome of observations begun in my boyhood and continued throughout my life. When the first results were published, the Electrical Review stated editorially that it would become one of the “most potent factors in the advance of civilisation of mankind.” The time is not distant when this prediction will be fulfilled. In 1898 and 1900, it was offered by me to the Government and might have been adopted, were I one of those who would go to Alexander’s shepherd when they want a favour from Alexander!

At that time I really thought that it would abolish war, because of its unlimited destructiveness and exclusion of the personal element of combat. But while I have not lost faith in its potentialities, my views have changed since. War can not be avoided until the physical cause for its recurrence is removed and this, in the last analysis, is the vast extent of the planet on which we live. Only though annihilation of distance in every respect, as the conveyance of intelligence, transport of passengers and supplies and transmission of energy will conditions be brought about some day, insuring permanency of friendly relations. What we now want most is closer contact and better understanding between individuals and communities all over the earth and the elimination of that fanatic devotion to exalted ideals of national egoism and pride, which is always prone to plunge the world into primeval barbarism and strife. No league or parliamentary act of any kind will ever prevent such a calamity. These are only new devices for putting the weak at the mercy of the strong.

I have expressed myself in this regard fourteen years ago, when a combination of a few leading governments, a sort of Holy alliance, was advocated by the late Andrew Carnegie, who may be fairly considered as the father of this idea, having given to it more publicity and impetus than anybody else prior to the efforts of the President. While it can not be denied that such aspects might be of material advantage to some less fortunate peoples, it can not attain the chief objective sought. Peace can only come as a natural consequence of universal enlightenment and merging of races, and we are still far from this blissful realisation, because few indeed, will admit the reality – that God made man in His image – in which case all earth men are alike. There is in fact but one race, of many colours. Christ is but one person, yet he is of all people, so why do some people think themselves better than some other people?

As I view the world of today, in the light of the gigantic struggle we have witnessed, I am filled with conviction that the interests of humanity would be best served if the United States remained true to its traditions, true to God whom it pretends to believe, and kept out of “entangling alliances.” Situated as it is, geographically remote from the theatres of impending conflicts, without incentive to territorial aggrandisement, with inexhaustible resources and immense population thoroughly imbued with the spirit of liberty and right, this country is placed in a unique and privileged position. It is

thus able to exert, independently, its colossal strength and moral force to the benefit of all, more judiciously and effectively, than as a member of a league.

I have dwelt on the circumstances of my early life and told of an affliction which compelled me to unremitting exercise of imagination and self-observation. This mental activity, at first involuntary under the pressure of illness and suffering, gradually became second nature and led me finally to recognise that I was but an automaton devoid of free will in thought and action and merely responsible to the forces of the environment. Our bodies are of such complexity of structure, the motions we perform are so numerous and involved and the external impressions on our sense organs to such a degree delicate and elusive, that it is hard for the average person to grasp this fact. Yet nothing is more convincing to the trained investigator than the mechanistic theory of life which had been, in a measure, understood and propounded by Descartes three hundred years ago. In his time many important functions of our organisms were unknown and especially with respect to the nature of light and the construction and operation of the eye, philosophers were in the dark.

In recent years the progress of scientific research in these fields has been such as to leave no room for a doubt in regard to this view on which many works have been published. One of its ablest and most eloquent exponents is, perhaps, Felix le Dantec, formerly assistant of Pasteur. Professor Jacques Loeb has performed remarkable experiments in heliotropism, clearly establishing the controlling power of light in lower forms of organisms and his latest book, "Forced Movements," is revelatory. But while men of science accept this theory simply as any other that is recognised, to me it is a truth which I hourly demonstrate by every act and thought of mine. The consciousness of the external impression prompting me to any kind of exertion, – physical or mental, is ever present in my mind. Only on very rare occasions, when I was in a state of exceptional concentration, have I found difficulty in locating the original impulse. The by far greater number of human beings are never aware of what is passing around and within them and millions fall victims of disease and die prematurely just on this account. The commonest, every-day occurrences appear to them mysterious and inexplicable. One may feel a sudden wave of sadness and rack his brain for an explanation, when he might have noticed that it was caused by a cloud cutting off the rays of the sun. He may see the image of a friend dear to him under conditions which he construes as very peculiar, when only shortly before he has passed him in the street or seen his photograph somewhere. When he loses a collar button, he fusses and swears for an hour, being unable to visualise his previous actions and locate the object directly. Deficient observation is merely a form of ignorance and responsible for the many morbid notions and foolish ideas prevailing. There is not more than one out of every ten persons who does not believe in telepathy and other psychic manifestations, spiritualism and communion with the dead, and who would refuse to listen to willing or unwilling deceivers?

Just to illustrate how deeply rooted this tendency has become even among the clear-headed American population, I may mention a comical incident. Shortly before the war, when the exhibition of my turbines in this city elicited widespread comment in the technical papers, I anticipated that there would be a scramble among manufacturers to get hold of the invention and I had particular designs on that man from Detroit who has an uncanny faculty for accumulating millions. So confident was I, that he would turn up some day, that I declared this as certain to my secretary and assistants. Sure enough, one fine morning a body of engineers from the Ford Motor Company presented them-

selves with the request of discussing with me an important project. “Didn’t I tell you?,” I remarked triumphantly to my employees, and one of them said, “You are amazing, Mr. Tesla. Everything comes out exactly as you predict.”

As soon as these hard-headed men were seated, I of course, immediately began to extol the wonderful features of my turbine, when the spokesman interrupted me and said, “We know all about this, but we are on a special errand. We have formed a psychological society for the investigation of psychic phenomena and we want you to join us in this undertaking.” I suppose these engineers never knew how near they came to being fired out of my office.

Ever since I was told by some of the greatest men of the time, leaders in science whose names are immortal, that I am possessed of an unusual mind, I bent all my thinking faculties on the solution of great problems regardless of sacrifice. For many years I endeavoured to solve the enigma of death, and watched eagerly for every kind of spiritual indication. But only once in the course of my existence have I had an experience which momentarily impressed me as supernatural. It was at the time of my mother’s death.

I had become completely exhausted by pain and long vigilance, and one night was carried to a building about two blocks from our home. As I lay helpless there, I thought that if my mother died while I was away from her bedside, she would surely give me a sign. Two or three months before, I was in London in company with my late friend, Sir William Crookes, when spiritualism was discussed and I was under the full sway of these thoughts. I might not have paid attention to other men, but was susceptible to his arguments as it was his epochal work on radiant matter, which I had read as a student, that made me embrace the electrical career. I reflected that the conditions for a look into the beyond were most favourable, for my mother was a woman of genius and particularly excelling in the powers of intuition. During the whole night every fibre in my brain was strained in expectancy, but nothing happened until early in the morning, when I fell in a sleep, or perhaps a swoon, and saw a cloud carrying angelic figures of marvellous beauty, one of whom gazed upon me lovingly and gradually assumed the features of my mother. The appearance slowly floated across the room and vanished, and I was awakened by an indescribably sweet song of many voices. In that instant a certitude, which no words can express, came upon me that my mother had just died. And that was true. I was unable to understand the tremendous weight of the painful knowledge I received in advance, and wrote a letter to Sir William Crookes while still under the domination of these impressions and in poor bodily health. When I recovered, I sought for a long time the external cause of this strange manifestation and, to my great relief, I succeeded after many months of fruitless effort.

I had seen the painting of a celebrated artist, representing allegorically one of the seasons in the form of a cloud with a group of angels which seemed to actually float in the air, and this had struck me forcefully. It was exactly the same that appeared in my dream, with the exception of my mother’s likeness. The music came from the choir in the church nearby at the early mass of Easter morning, explaining everything satisfactorily in conformity with scientific facts.

This occurred long ago, and I have never had the faintest reason since to change my views on psychical and spiritual phenomena, for which there is no foundation. The belief in these is the natural outgrowth of intellectual development. Religious dogmas are no longer accepted in their orthodox meaning, but every individual clings to faith in a supreme power of some kind.

We all must have an ideal to govern our conduct and insure contentment, but it is immaterial whether it be one of creed, art, science, or anything else, so long as it fulfils the function of a dematerialising force. It is essential to the peaceful existence of humanity as a whole that one common conception should prevail. While I have failed to obtain any evidence in support of the contentions of psychologists and spiritualists, I have proved to my complete satisfaction the automatism of life, not only through continuous observations of individual actions, but even more conclusively through certain generalisations. these amount to a discovery which I consider of the greatest moment to human society, and on which I shall briefly dwell.

I got the first inkling of this astonishing truth when I was still a very young man, but for many years I interpreted what I noted simply as coincidences. Namely, whenever either myself or a person to whom I was attached, or a cause to which I was devoted, was hurt by others in a particular way, which might be best popularly characterised as the most unfair imaginable, I experienced a singular and undefinable pain which, for the want of a better term, I have qualified as "cosmic" and shortly thereafter, and invariably, those who had inflicted it came to grief. After many such cases I confided this to a number of friends, who had the opportunity to convince themselves of the theory of which I have gradually formulated and which may be stated in the following few words: Our bodies are of similar construction and exposed to the same external forces. This results in likeness of response and concordance of the general activities on which all our social and other rules and laws are based. We are automata entirely controlled by the forces of the medium, being tossed about like corks on the surface of the water, but mistaking the resultant of the impulses from the outside for the free will. The movements and other actions we perform are always life preservative and though seemingly quite independent from one another, we are connected by invisible links. So long as the organism is in perfect order, it responds accurately to the agents that prompt it, but the moment that there is some derangement in any individual, his self-preservative power is impaired.

Everybody understands, of course, that if one becomes deaf, has his eyes weakened, or his limbs injured, the chances for his continued existence are lessened. But this is also true, and perhaps more so, of certain defects in the brain which drive the automaton, more or less, of that vital quality and cause it to rush into destruction. A very sensitive and observant being, with his highly developed mechanism all intact, and acting with precision in obedience to the changing conditions of the environment, is endowed with a transcending mechanical sense, enabling him to evade perils too subtle to be directly perceived. When he comes in contact with others whose controlling organs are radically faulty, that sense asserts itself and he feels the "cosmic" pain.

The truth of this has been borne out in hundreds of instances and I am inviting other students of nature to devote attention to this subject, believing that through combined systematic effort, results of incalculable value to the world will be attained. The idea of constructing an automaton, to bear out my theory, presented itself to me early, but I did not begin active work until 1895, when I started my wireless investigations. During the succeeding two or three years, a number of automatic mechanisms, to be actuated from a distance, were constructed by me and exhibited to visitors in my laboratory.

In 1896, however, I designed a complete machine capable of a multitude of operations, but the consummation of my labours was delayed until late in 1897.

This machine was illustrated and described in my article in the Century Magazine of June, 1900; and other periodicals of that time and when first shown in the beginning of 1898, it created a sensation such as no other invention of mine has ever produced. In November, 1898, a basic patent on the novel art was granted to me, but only after the Examiner-in-Chief had come to New York and witnessed the performance, for what I claimed seemed unbelievable. I remember that when later I called on an official in Washington, with a view of offering the invention to the Government, he burst out in laughter upon my telling him what I had accomplished. Nobody thought then that there was the faintest prospect of perfecting such a device. It is unfortunate that in this patent, following the advice of my attorneys, I indicated the control as being affected through the medium of a single circuit and a well-known form of detector, for the reason that I had not yet secured protection on my methods and apparatus for individualisation. As a matter of fact, my boats were controlled through the joint action of several circuits and interference of every kind was excluded.

Most generally, I employed receiving circuits in the form of loops, including condensers, because the discharges of my high-tension transmitter ionised the air in the (laboratory) so that even a very small aerial would draw electricity from the surrounding atmosphere for hours.

Just to give an idea, I found, for instance, that a bulb twelve inches in diameter, highly exhausted, and with one single terminal to which a short wire was attached, would deliver well on to one thousand successive flashes before all charge of the air in the laboratory was neutralised. The loop form of receiver was not sensitive to such a disturbance and it is curious to note that it is becoming popular at this late date. In reality, it collects much less energy than the aerials or a long grounded wire, but it so happens that it does away with a number of defects inherent to the present wireless devices.

In demonstrating my invention before audiences, the visitors were requested to ask questions, however involved, and the automaton would answer them by signs. This was considered magic at the time, but was extremely simple, for it was myself who gave the replies by means of the device.

At the same period, another larger telautomatic boat was constructed, a photograph of which was shown in the October 1919 number of the Electrical Experimenter. It was controlled by loops, having several turns placed in the hull, which was made entirely water-tight and capable of submergence. The apparatus was similar to that used in the first with the exception of certain special features I introduced as, for example, incandescent lamps which afforded a visible evidence of the proper functioning of the machine. These automata, controlled within the range of vision of the operator, were, however, the first and rather crude steps in the evolution of the art of Telautomatics as I had conceived it.

The next logical improvement was its application to automatic mechanisms beyond the limits of vision and at great distances from the centre of control, and I have ever since advocated their employment as instruments of warfare in preference to guns. The importance of this now seems to be recognised, if I am to judge from casual announcements through the press, of achievements which are said to be extraordinary but contain no merit of novelty, whatever. In an imperfect manner it is practicable, with the existing wireless plants, to launch an aeroplane, have it follow a certain approximate course, and perform some operation at a distance of many hundreds of miles. A machine of this kind can also be mechanically controlled in several ways and I have no doubt

that it may prove of some usefulness in war. But there are to my best knowledge, no instrumentalities in existence today with which such an object could be accomplished in a precise manner. I have devoted years of study to this matter and have evolved means, making such and greater wonders easily realisable.

As stated on a previous occasion, when I was a student at college I conceived a flying machine quite unlike the present ones. The underlying principle was sound, but could not be carried into practice for want of a prime-mover of sufficiently great activity. In recent years, I have successfully solved this problem and am now planning aerial machines *devoid of sustaining planes, ailerons, propellers, and other external* attachments, which will be capable of immense speeds and are very likely to furnish powerful arguments for peace in the near future. Such a machine, sustained and propelled *entirely by reaction*, is shown on one of the pages of my lectures, and is supposed to be controlled either mechanically, or by wireless energy. By installing proper plants, it will be practicable to *project a missile of this kind into the air and drop it* almost on the very spot designated, which may be thousands of miles away.

But we are not going to stop at this. Telautomats will be ultimately produced, capable of acting as if possessed of their own intelligence, and their advent will create a revolution. As early as 1898, I proposed to representatives of a large manufacturing concern the construction and public exhibition of an automobile carriage which, left to itself, would perform a great variety of operations involving something akin to judgment. But my proposal was deemed chimerical at the time and nothing came of it.

At present, many of the ablest minds are trying to devise expedients for preventing a repetition of the awful conflict which is only theoretically ended and the duration and main issues of which I have correctly predicted in an article printed in the SUN of December 20, 1914. The proposed League is not a remedy but, on the contrary, in the opinion of a number of competent men, may bring about results just the opposite.

It is particularly regrettable that a punitive policy was adopted in framing the terms of peace, because a few years hence, it will be possible for nations to fight without armies, ships or guns, by weapons far more terrible, to the destructive action and range of which there is virtually no limit. Any city, at a distance, whatsoever, from the enemy, can be destroyed by him and no power on earth can stop him from doing so. If we want to avert an impending calamity and a state of things which may transform the globe into an inferno, we should push the development of flying machines and wireless transmission of energy without an instant's delay and with all the power and resources of the nation.

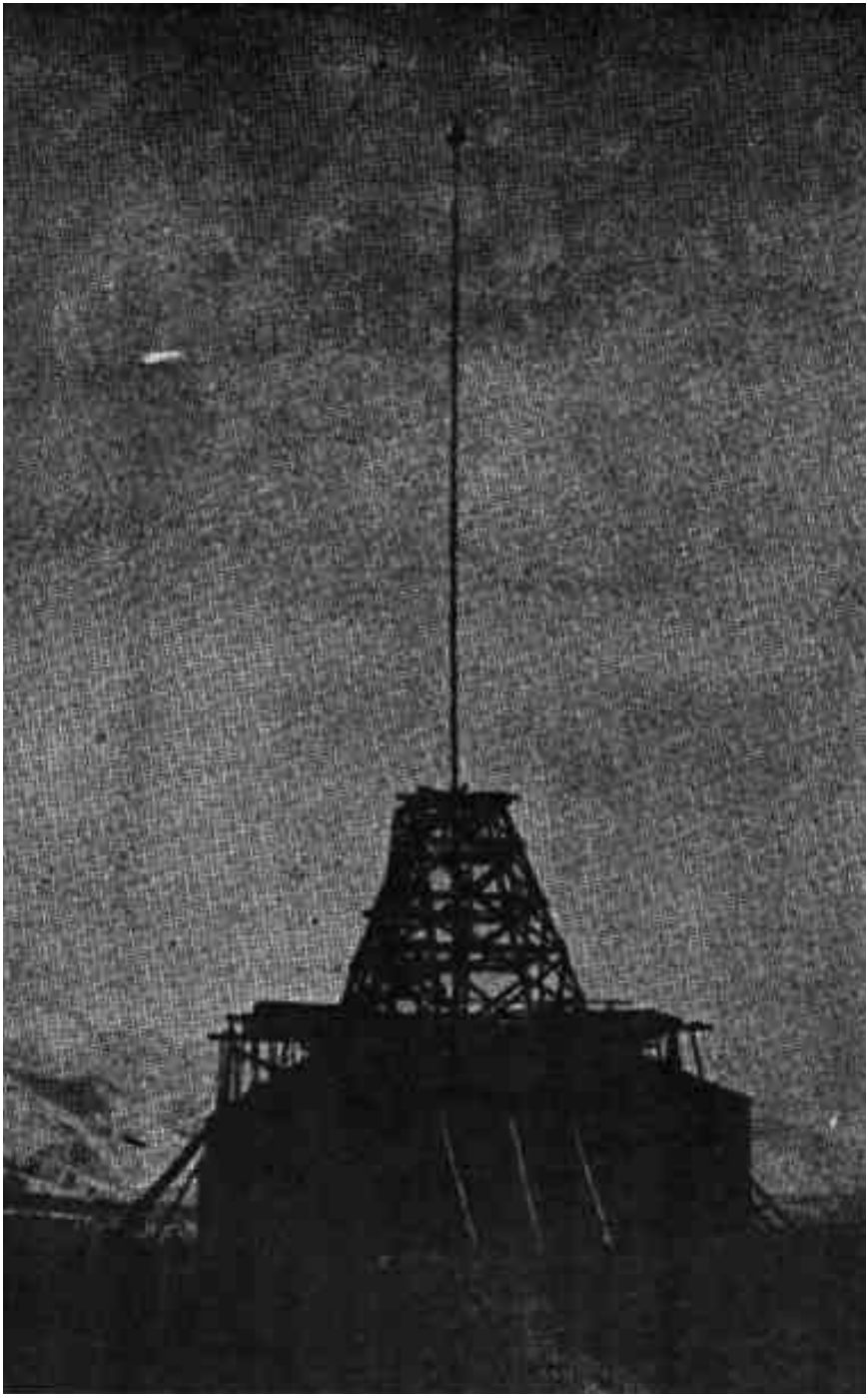

PowerPedia:Tesla's Dynamic Theory of Gravity

From PESWiki

The following is alternative information pertaining to the Dynamic Theory of Gravity published at
Wikipedia (http://en.wikipedia.org/wiki/Dynamic_theory_of_gravity).

This Dynamic Theory of Gravity neither appears nor is mentioned anywhere in standard Tesla informative sites and is still classified, with literally thousands and thousands of other pages he wrote. Luckily, through his collected articles and lectures one can still catch his references to his mainstream work and dream, which was, contrary to what many believe, the development of an ultimate flying machine (check "My Inventions"). The typical misinformation is that his flying machine was an aerodynamic one, due to a patent on a VTOL aircraft he presented ("method of aerial transportation Jan 3, 1928") which even if unique and first of it's kind, was not his real "Flivver". The "veritable rope of air" he refers to in one of his interviews was a direct analogy to the ether carriers bringing in "tubes of force" to maintain his flying machine exactly where he wanted it or to move it in any direction at incredible speed and incredible acceleration. It is imperative to understand Tesla's life as a "whole", not only study his work. He was continuously busy with further developing his theories and bringing them into practice and would not be satisfied until he reached a practical status. His rotating magnetic field or "alternator" coupled with his bladeless turbine and his high voltage coils were all developed for this purpose. He said himself, while he was at college that he conceived of this flying machine, but had not yet discovered a way to power and propel it (a "prime mover of sufficiently great activity"). He took his first step with his rotating magnetic field and understood intuitively that the laws of electromagnetics were somehow connected to gravity: the passage from Goethe's Faust clearly spells it out. On that occasion, he not only solved his alternating magnetic field problem, but took the first step into understanding "nature's wheelwork". Amazingly, when he arrived in the U.S.---after being robbed of his money and suitcase---he still had in his possession, tightly kept under his arm, his drawings not only of his AC motor (which he had built and tested in Paris prior to his departure), but most importantly drawings and plans for his flying machine.

Tesla said he had fully developed his Dynamic Theory of Gravity and "worked it out in all its details" in 1893-94. This ether-based theory explained gravity and directly linked it to electromagnetic phenomena, explaining also that the sun and all stars emit "primary solar rays" (which produce secondary radiations). Tesla demonstrated that all bodies have electrical content and as such, are all moving charges as our earth hurls through space at incredible speed (hence 'dynamic'). He demonstrated, through the use of his particular evacuated tubes and high voltage coils powered by special HF alternators, how earth emanates "microwaves" and how it behaves as a charged sphere. Based on these discoveries and their confirmation at Colorado Springs, he developed and tested his first electromagnetic flying machine that could fly "devoid of

sustaining wings, propellers or gas bags".

It is important to understand Tesla's ether concept which was unique. Tesla's ether is in fact a medium, "a perfect fluid" that wets everything in which are immersed "independent carriers". It behaves as a solid to light (high frequency) and is transparent to matter. Tesla demonstrated how this ether could be "polarized" and made "rigid" through a particular HF alternator and single terminal coil (ex. 1892 lecture in London) and 2 metal plates which he "suspended" in the air making the space between them rigid "privately" on one another. In 1894 he invented a special bulb which augmented this technology to created what he called "veritable ropes of air" which were "tubes of force" which could suspend or accelerated his ship in any direction.

Another important Tesla concept connected to his ether theory and DToG are his "primary solar rays". Grossolaneously, the sun acts as a "generator" for our solar system. It emits enormous amounts of radiation which Tesla calls primary solar rays. These rays in turn, hit various particles in space which give rise to secondary radiation which is much weaker. The primary solar rays reach the various planets imparting momentum to them which are constantly at right angles in respect to their trajectory from the sun (this explains why planets revolve around stars, a theory later proven by Hannes Alfven). Tesla often repeated that nothing in the universe is standing still (this is why he called his theory "dynamic") because if it were, all matter would "decay" back to the ether (we are hurling through space at incredible speed sitting on our planet). In fact, Tesla stated that if we could shield any radioactive element from these rays, it would cease to be radioactive.

This in turn underlines one of his major discoveries that put him in direct contrast with the re-emerging Relativity theory, which is that energy does not directly originate from matter or vice versa, but that matter behaves as a medium for forces to act upon or to act through, and that without matter there is no Energy (nor Force) and vice versa (he said a body without force is like a body without a mind). All this energy (more modernly viewed as "ZPE") comes from the environment (through ether) and reverts back to the environment giving life to matter, a "closed circuit" in one way or the other (more efficiently or less). It is omnipresent, day or night, and is "re-emitted" by every star in our universe (which naturally includes our sun).

Tesla knew every "body" had an electrical content, and as such, interacted with the surrounding ether. The earth is like a charged sphere hurling through space (thus a current, hence magnetic field), around the sun, powered by it's primary rays (and giant electric currents along "frozen magnetic lines of force", according to the works of Alfven mentioned in "The Big Bang Never Happened" by Lehrner).

We can observe the effects of solar flares through earth's magnetic field and auroras at the poles and we experience high voltage distribution overloads in certain areas due to high energy/radiation "bursts". While we rotate and revolve around our sun at great speed, a portion of the ether is polarized (is "rigidified" by "rapidly varying electrostatic forces" emitted by the earth) and carried along by the electric field of the earth which decreases with the inverse square of the distance from the earth. Tesla measured these electrostatic emissions with a

special tube.

Here come into play the "tubes of force" (Faraday, Lord Kelvin, Maxwell, J.J. Thomson) that---due to our independent charge ratio depending on our density and electrical content---are absorbed by our bodies and impart a downward momentum creating the sensation of a "gravity field". It is the interaction between the electrical content of every "dynamic" body with ether carriers (comprising tubes of force) that results in momentum being imparted to a body (an electromagnetic to mechanical interconversion). It is an endless "circuit loop" that continuously keeps everything in motion in our universe (Tesla's "Wheelwork of Nature") which if understood can give us the ability to achieve "any desired result".

This "carrier exchange" is constant, but can be artificially manipulated using HV DC and HV HF AC potentials in order to block or reduce it (Tesla's Flying Machine[1] (*http://www.pritchardschool.com/Teslas_Flying_Machine.pdf*). Every moving body in our universe transverses this omni-directional radiation and interacts with the ether since all bodies have electrical content. The most important fact of all is that we can use the ether to convert the weaker, mechanical force, to the much stronger electromagnetic one (2*10E40 times stronger). This holds the key to doing much more "work" in the same period of time. This exchange is constantly occurring in our universe and is it's unlimited "prime mover".

Tesla never referred to "space-time". He considered time as a mere man-made "measure" of the rate at which events occur such as a distance travelled (in miles or kms) in a certain period of time, for a frame of reference. He considered the "curving" of space to be absurd (putting it in gentle terms) saying humorously that a if a moving body curved space the "equal and opposite" reaction of space on the body would "straighten space back out".

One must keep in mind that Einstein was "playing around" with the ether theories of the time (he had access to patents and documentation as he worked as a library clerk at the Swiss patent office since 1902) and certainly gave a good look at them, before the Relativistic theory popped up for the second time (this theory dates back to R. Boscovich, 1711-1787). Einstein himself said "The secret to creativity is knowing how to hide your sources". He has been "caught" more than once (even recently) plagiarizing other's people work without giving any credit.

Ether is the "ultimate" medium (Tesla often interchanged the term "medium" with "ether") - being a perfect fluid and transporting independent carriers. Tesla said that electromagnetic radiation was propagated "like sound waves in the ether".

I will continue to update this page until I feel that my expose' sufficiently resembles Tesla's Dynamic Theory of Gravity based on my research.

I thank William Lyne for his major efforts in uncovering Nikola Tesla's major achievement through his two books Pentagon Aliens and Occult Ether Physics which provide a vast amount of information on this subject and for helping me in editing this document.

Tesla's FBI File, Enclosure 1

NIKOLA TESLA'S FBI FILES
ENCLOSURE I
MAIN FILE
(Complete)..

Access *

Complete summary of relevant information found in the 156 pages
(158 including the FBI deleted page sheets)
of Enclosure # I of my Freedom of Information Act (FOIA)
request of the Nikola Tesla FBI files.
Page numbers are sequential from the title sheet to the end
as received from the FBI.

The XXXXXX seen on some pages will indicate material
has been blacked out, some pages were %90 black!

Page #-|------DATE-----|--------FROM--------|---------TO---------|

1- .....Title sheet.....Nikola Tesla....MAIN FILE....156 Pages
2- .....Apr 3, 1950 | J. Edgar Hoover | XXXXXX |
Summary> This is a letter to XXXXX form J.Edgar stating the
FBI has never been in possession of Dr. Tesla's papers.
3- .....Apr xx, xxxx | J. edgar Hoover | XXXXX |
Summary> This is a very poor copy of another request for Tesla's
papers. This time FBI refers them to the Office of Alien Property
4- .....Oct 1, 1940 | J. Edgar Hoover | XXXXXX |
Summary> Letter from Hoover to XXXXXX acknowledging receipt of a
letter Sep 24, 1940.
5- .....Jan 12, 1943 | FBI NY Foxworth | Director FBI |
Summary> Dept of Justice teletype states Tesla died Jan 8, rather
than Thursday, Jan 7 as XXXXX stated in teletype. On the night of
Jan 8, Sava Kosanovic, George Clark, and Kenneth Sweezey visited
Tesla's hotel room with a representative of Shaw Walker Co. In order to
open the Tesla's safe. Kosanovich was looking for Tesla's will. Three
asst. managers of the hotel New Yorker as well as representatives of
Yugoslavian Consulate present. Sweezey took a book. safe closed and
a new combination in the possession of Kosanovich. Saturday, Jan 9,
Gorsuch and XXXXXXX Fitzgerald of Alien Property Control went to the
hotel and seized the property of Tesla, consisting of about two
truckloads of material, sealed all articles and transferred them to
the Manhattan Storage and Warehouse Co. NY, where they are now located.
At that time there were also thirty barrels and bundles belonging to
Tesla which had been there since 1934. These also have been sealed.
6- .....Cont.5- Tesla also had some property allegded by INFORMANT
FITZGEARLD in this case Tesla had an invention in a safe deposit
box at the Govonor Clinton Hotel. He placed it there in 1932. The
hotel will not release it till a bill is paid. They will inform
us if anyone attempts to get it. Sweezey is a writer for Popular
Mechanics and is desirous to publish Tesla's biography. Clark is
employed by RCA. A trained person should review Tesla's notes.
The name Foxworth is typed at the bottom of this page.
7- .....Jan 9, 1943 | FBI NY Foxworth | Director FBI |
Summary> This looks like the teletype that proceeded the one
of page 5 & 6. States Sava Kosanovich was intensley disliked by
Tesal is trying to gain posession of Tesla's effects. Spanel

thinks SAva will make this information available to the enemy.
Spanel was in telephonic communication with Dr. Dlozado, an
advisor to Vice President Wallace, and was told to lose no time
in doing what he could to preserve Tesla's effects. Bloyce Fitzgearld
who had been quite close to Tesla, advised the NY office about Tesla's
death and of Sava Kosanovick, George Clark and Sweezey breaking into
Tesla's safe. Tesla told Fitzgearld he had completed and perfected his
experiments in connection with the wireless transmission of power.
8- .....Cont.7- Fitzgearld talks of a new torpedo and knows the where
abouts of plans. He also says that a working model that cost
$10,000 to build, is in the safety deposit box of the Governor
Clinton hotel. He thinks the model has to do with Tesla's
Death Ray or the wireless transmission of electrical current.
Bureau is requested to advise immediately what action to take.
9- .....Jan 11, 1943 | D.M. Ladd | Agents |
Summary> This looks like a memo sent to all agents from Hoover
basically explaining everything in the two preceeding teletypes.
10- .....Cont.9- The NY office was instructed to discuss and take
the matter up with the State's Attorney in NY City with possibility
of taking Kosanovich into custody on a burglary charge and obtain
the papers he took from the safe.It is pointed out that any activities
be handled in a MOST SECRET FASHION IN ORDER TO
AVOID ANY PUBLICITY IN RESPECT TO TESLA'S INVENTIONS.
EVERY PRECAUTION TAKEN TO PRESERVE THE SECRECY OF
TESLA'S INVENTIONS.
There is a hand written note at the bottom of this page that says
L.M.C. Smith is handling this with Alien Property Custodian so
there appears to be no need for us to mess around in it.(initals
appears to be EH.
11- .....Jan 12, 1943 | Edw. A. Tamm | Mr. Ladd |
Summary> A memo, Mr. Tamm tells Mr. Ladd that the Alien Property
Custodian's Office will handel the matter and the Bureau should
take no action.
12- .....Apr 16, 1948 | XXXXXX | J. Edgar Hoover |
Summary> A letter from a student at Milwaukee School of Engineering
requesting Tesla's papers so he can complete a thesis on
13- .....Cont.12- Letter states he knows some of Tesla's stuff is
under National Security.
14- .....Apr 17, 1950 | SAC NY | Director, FBI |
Summary> April 7, 1950 agents interviewed Mr. L.V. Potts, vice
president of the Mahattan Warehouse and Storage Co. He relates
process necessary to gain access to things stored there.In
review of Tesla's effects, only one visit had been made. This one
session took place on Jan 26 and 27, 1943 by agents of Alien
Property to review the effects.
The Tesla effects are stored in rooms 5J and 5L of the storage Co.
Mr. Michael King the floor supervisor for 10 years states the only
time anyone examined Tesla's effects was in early 1943. He states
that at that time numerious photographs were taken with what would
tend to indicate microfilm equipment. Mr. King added that several of
group wore U.S. Navy uniforms, the civilians were referred to as
federal authorities.
15- .....Cont.14- Intervewing agents explained to Mr. Potts that the
examination made as mentioned, was not instigated by the Bureau,
nor had the Bureau taken part in the examination. CLOSED
16- .....Aug 18, 1953 | XXXXXX | FBI Washington D.C. |
Summary> A letter to the FBI requestingTesla's effects including
personal letters, periodicals,rare books and a collection of patents
issued to Tesla. This person has contacted the Office of Alien Property
and the Bureau of Naval Research and the Dept. of Commerce with no
results....
" -I am especially interested in the research work in which

Tesla was engaged in his later years. There are various unpublished
works, such as a 10-page typewritten statement presented in 1937 at a
meeting of several well-known editors outlining his discoveries and
giving a resume of his work in the fields of gravity and cosmic ray
research, ect. Also, Tesla prepared various papers, one of which was
in effect to secure the Pierre Gutzman Prize from the Institute of
France. My inquiry is in effort to determine whether any of these
documents, as well as others, are at this time available. " 17- .....Aug 26, 1952 | John Edgar Hoovr |
XXXXXXX|
Summary> This is the standard reply used by the FBI to the request
for Tesla infromation to the page 16 request. It tells the requester
to contact Roland F. Kirks, Assistant Attorney General for help.
It also shows a cc. ,carbon copy to Kirks...incoming.
18- ......May 5, 1953 | L.L. Laughlin | A.H. Belmont |
Summary> Memo about information in the book /Prodigal Genius/ which
states the FBI took Tesla's effects after his death. The memo also
refers to the request made by the student from Milwaukee (page-12)
19- .....Cont.18- Mr Laughlin states he called XXXXX and told him to
contact the Alien Property office.
The book Prodical Genius is not in the Bureau library but a copy will
be obtained and a determination can be made as to what futher action
should be taken.
Addendum..5-14-53..page 277 of the /Prodigal Genius/ states that
the FBI took papers from Tesla's safe. Since this work was published
inn 1944 no objection would be raised with the publisher at this time.
The individual that raised the question has been set stright.No action.
20- .....Feb 19, 1954 | SCA New York | Director, FBI |
Summary> This is a memo about letters in the possession of Mr. George
H. Scherff, Jr. which he recieved from Leland I. Anderson. Mr. Anderson
was requesting any writings that Mr. Scherff may have from Tesla.
Scherff was an associate of Dr. Tesla in 1914 and that his father was
Dr. Tesla's private secretary for years. Mr. Scherff says he has quite
a bit of Tesla's writings and he does not know Mr. Anderson and wants
to if Tesla's papers would be of value to a foreign government.
21- .....Feb 3, 1954 | Leland I. Anderson | Mr. George H. Scherff, JR.
Summary> This is a copy of the letter mentioned in the previous memo.
In the letter Mr. Anderson is asking Mr.Schreff for any parers
which he may have regarding Tesla. He states he has been collecting
Tesla's papers for some time to publish them.
22- .....Cont.21- This was an enclosure with Mr. Anderson's letter.
It is an outline of /Tesla-International/. An organization which
Mr. Anderson founded to bring Tesla's name back to life.
23- .....Cont.23- This is a photocopy of the envelop this letter came
to Mr. Schreff in. It was registered.
24- .....Feb 12, 1953 | Leland I. Anderson | Mr. George H. Scherff, JR.
Summary> This appears to be a second letter to Mr. Schreff. Mr.
Anderson says he is glad to get a reply and goes into detail
about the people and places he been to to get all the Tesla effects
he can. He is sending the first two Tesla journals to him. He is looking
for information as to the where abouts of a lady mentioned in O'neill's
book that has many Tesla documents. She feared a run in with the Army and
moved to the mid-west. Anderson writes of the sad death of O'Neill and
Edwin Armstrong. He mentions the purchase of 70 pieces of Tesla related
material of Robert U. Johnson.
25- .....Cont.24- States James.A. McChesney of Long Island has many
correspondence between Tesla and George Sylvester Viereck.
Anderson ask if Schreff has one of the brochures that Tesla
issued Feb 1904. It came in a large square envelope bearing a
large red wax seal with the initials /N.T./ stamped thereon.
He wants to reproduce it for the orginazation. Anderson writes
about the upcoming 1956 Tesla Centenary. Wants help organizing
something here in the US.

26- .....Cont.25- This is a REAL bad photocopy of an announcement
from /Tesla-International/ about the avalibility of a reprinting
of literature of somesort. Thats all I can makeout.
27- .....Cont.26- This is a photocopy of the envelope that contained
the previous correspondence. It was Special Delivery.
28- .....Sep 24, 1940 | XXXXXX | J. Edgar Hoover |
Summary> A letter from someone concerned about an article in the
9/22/1940 N.Y. Times that made references to Tesla's Teleforce and
/Death Ray/ for planes. They were concerned someone may kidnap and
torture Tesla for this information.
29- .....Cont.28- This is a photocopy of the NY Times article. The author
states he has known Tesla for many years and Tesla who is 84 now, still
retains full intellectual vigor. The article goes on to explain the
/Teleforce/ and seems amazingly similar to present day particle beam
devices.
30- .....Mar 10, 1954 | SAC New York | Director, FBI |
Summary> A memo about two letters from Leland I. Anderson which
George Schreff orginally sent to the Bureau.
31- .....Jun 25, 1955 | Kenneth M. Swezey | J. Edgar Hoover |
Summary> This letter from Swezey states that when he and Savy
Kosanovic, and others opened Tesla's safe, the only article removed
was a volumn of greetings from prominent people wishing Tesla well on his
75th birthday. A set of keys and the Edison medal were left in the safe.
The safe was never opened again.
32- .....Cont.31- Until it arrived in Belgrade at Tesla's Museum.
Mr. Kosanovic opened the safe to find the keys and the Edison medal
were missing. The keys were later found in a box outside the safe
but the Edison Medal was never found. A duplicate for the museum is in
the works.Swezey ask the FBI to help strighten out the dis-information
about the safe opening and help find or replace the Edison Medal.
33- .....Cont.32- This is a photocopy of an article from Power magazine May 1955
which Swezey included with his letter. It traces Tesla's inventions
and his forgotten inportance in our society.
34- .....Page Missing?
35- .....Unknown | Unknown | Unknown |
Summary> Page two of a documment marked Secret. I lost, or the FBI
didn't send page one. So I'll start here...
This documment is referring to Tesla's death Jan 7, 1943 and goes
into Tesla's life and inportance. States he was naturalized in 1889.
Mentiones his patents on Neon and flourescent lights, but made little
money on them, although continued to do experiments leading to devices
of great potential worth, which he never patented. He donated papers to
the Tesla Institute in Belgrade in 1930's. There were reports copies of
Tesla's effects existed in the US.
36- .....Cont.35- Also, the Soviet Union has had access to Tesla's papers
which influenced their research in energy weapons. Butler's
expertise is in Beam weapons and has searched libraries at WPAFB.
and is unable to find Tesla's papers. Reports have the Alien
Property Custodian shipping some of Tesla's papers to a research lab
at WPAFB. XXXXX travels to Washington DC. on FTD business and can
review FBI files at FBIHQ relating to Tesla and Kosanovic.Bureau
should consider granting XXXXX of FTD offical access to files.
37- .....Cont.36- Leads/ New York / at New York / Cincinnatti / at Dayton
Ohio. Remain in contact XXXXX.
38- .....Arp 1, 1981 | Allen J. MacLaren USAF | Roger S. Young FBI |
Summary> This is a letter to Mr. Young thanking him for the effort
that he went to in getting Tesla's data.
This letter has FOIA # 356,608 on it. That was assigned to my request.
39- .....Jul 21, 1981 | XXXXX | Director, FBI |
Summary> This is a request for Tesla's papers the FBI may have. The
requester's name is blacked out.
40- ..... Cont.39- This is page two of the lengthy request.

41- .....Aug 7, 1981 | Roger S. Young FBI | XXXXX |
Summary> This is the answer to the request for Tesla's effects
that the FBI may have. FBI says they never had them and was forwarding
the communication to the Dept. of Justice.
42- .....Aug 18, 1983 | SAC, Cincinnati | Director, FBI |
Summary>********. This is a HOOT!..IT'S 1983.******
.... Verbatim...
This communication is classified / Secret / in it's entirety.
Re telephone call of SA XXXXXXXX, Cincinnati Division, to Supervisor
XXXXXXXX FBIHQ, on 8/11/83.
Enclosed for Bureau and New York is one copy each of pertinent pages from
the 1981 book titled /Tesla: Man out of Time/ by Margaret Cheney, with
important passages underlined.
For information of Bureau and New York XXX-3 lines-XXX at Wright-Patterson
Air Force Base (WPAFB) and XXX-2 lines-XXX also at WPAFB, have both been
in contact with SA XXX at Dayton, Ohio RA regarding possible FBI.
****Can you believe this...The FBI photocopied Cheney's book and
UNDERLINED the important parts!!!****
43-63.....These are photocopies of pages of/ Tesla: Man out of time/.
there are two pages of the book on each one. The main thing underlined
is relating to Sava Kosanovic's actions.
64- .....Nov 10, 1975 | Clarence M. Kelley | XXXXX |
Summary> This is a letter from Director Kelley acknowledging
receipt of an FOIA request for Tesla's files. The letter was
forwared to the FBI from the Dept. of Justice Oct 22.
Kelley writes the person XXXXXX that the FBI will not indicate
wheather or not they have such files. Then he says a notarized
authorization from Tesla's next of kin directing the FBI to release
any information their files may contain. This does not infer that we
do or do not have the info you requested.
65- .....Oct 17, 1975 | XXXXX | Deputy Attorney General |
Summary> This is the orginal FOIA request for Tesla's files noted
in the above page. It is to the Dept of Justice. The person wants
to see the Tesla files if the Dept of Justice has them and if they
don't, where are they!
66- .....Apr 30, 1976 | C. M. Kelley | XXXXX |
Summary> A letter from Kelley thanking someone for a letter with
enclosures. A note at the bottom says the FBI never had Tesla's files
and again points to the Dept of Justice, Alien Property.
67-68.....These are copies of the enclosures noted it the previous letter
They are from /Design News/. The article is about project Tesla
headed by Robert K. Golka and Dr. Robert W. Bass. The project is
about ball lightning.
69- .....Apr 20, 1976 | XXXXX | C.M. Kelley FBI Director |
Summary> This letter states that Mr. Allen and MR. Ruchlehaus,
former acting director of the FBI, contacted XX in 1973 regarding
the unavialability of American microfilm records of Nikola Tesla's
unpublished diary. Below quoted...from letter...
At the time I discounted the possibility that these unpublished
discoveries had military significance. But because of experiments
now underway at Hill AFB, I now suspect such military applications
exist and feel it imperative that you be notified, particularly in view
of the fact that the Soviets have primary access to the ENTIRE collection
Two photos of each page exist.
After Tesla's death, scientist from the Navy and OSS performed a
cursory examination of the diary and notes, which if my memory
serves me correctly, was one month long, hardly enough time to decipher
Tesla's torturous hadrwriting. Though in English.
According to the museum director (1971), the Soviets had made copies of
some portions, but not the Colorado Springs diary, which number 500 pages
,20 that directly pertain to ball lightning, and 20 or so relevant to the
equipment construction. (we copied the most significant portions, but feel

more exists.
XXXXXXXX an article XXX magazine, EDN (an electrical engineering magazine
, but only with the very recent reciept of an unpublished manuscript from
John J. O'Neill's book /Prodigal Genius/ did I place credence on Tesla's
later calim to military applications. Incidentally, some of O'Neill's
discriptions were inaccurate and exagerated, as we have exceeded Tesla's
results and are familiar with the experiments. At any rate, there are
three possible military applicatoins.
70- .....Cont.69- First, Tesla claimed that the lightning balls
(which destroyed his equipment) could be used to destroy aircraft.
XXX saw one inside his plane and most AF personal fear these
/ rf-balls/ as they call them.
Second, it is a suspicion of mine that ball lightning, if injected
with lithium, could produce a cheap fusion bomb.
Third-- and this may be no more than a suspicion-- the propulsion
mode of ball lightning involves electro-gravitic interaction by which
means air vehicles of revolutionary configuration may be constructed.
There are no presently-known laws of physics that can account for the
propulsion (400 mph or so when following an airliner). Other hitherto
unsuspected applications may exist.
None of these applications were the goal of Project Tesla, which
centered on producing ball lightning as Tesla did and studying it as
a plasma confinement technique for fusion reactors. Incidentally,
Tesla's claim to setting up standing waves on the earth's surface
(wireless power) was erroneous and involved techniques similar to
Project Sanguine, that is, using the earth's atmosphere as a wave
guide XXX is aware of our research.
Signed XXXX. P.S. I am notifying the CIA.
71-74.....Photo copies of Chapter 34 from John J. O'Neill's book.
I do not know if these are the unpublished pages of same or if
they are the same that appear in the published book. They mention
/lightning balls or fire balls/ and Tesla's plan to build a defence
system for Great Britain.
75- .....Jun 16, ???? | United States Senate | XXXXXX |
Summary> A note..Please return all correspondence to the Attention
of XXXXXX FBI.
76-77.....Jun ?, 1976 | XXXXX | XXXXX |
Summary> This is a hand written letter to someone in the Senate
Office Building, room 5241. It is a request for Tesla's papers
from a substitute Milwaukee Public School and scientist. It says
the FBI took the papers after his death.
78- .....Jun 23, 1976 | C.M. Kelley | Senator XXXXX |
Summary> This is a letter of responce to the handwritten letteron
the previous page. Tells the Senator the FBI was not involved.
79- .....Jul 26, 1979 | XXXXX | Mr. Webster |
Summary> Another handwritten letter wanting Tesla information.
This person says he has almost everyting Tesla has written and to
futher his studies want's what the FBI has on Tesla.
80- .....Aug 6, 1979 | William L. Bailey | XXXXX |
This looks like a responce to the previous letter. It says, again
the FBI has NO Tesla papers. Also goes on to say that the person
will have to make a seprate FOIA request if he wants to get the FBI
documents. The letter must request documents regarding the specific
topic of interest.
81- .....Feb 2, 1980 | XXXXX | Mr. Bresson |
Summary> A memo about disclosing Nikola Tesla information. It states
Bufile 100-2237 is mostly inquiry type correspondence. Copies of the
remaining material in the file totaling 29 pages , has been processed
for disclosure. Bufile 190-16504-4 be considered the preprocessed release
appropriate for futher request.
82- .....Date form was printed 10/10/79/ | Thomas H. Bresson | ????? |
Summary> This is a photocopy of an FBI Internal Routing Action Slip.

There is a handwritten note..I would prefer IPU being altered that
any request for Tesla file be refered directly to XXXX where upon
she would see that appropriate release is made.
83- .....NO date | XXXXX | Tom |
Summary> This is a handwritten note.. Tom- It is my understanding
that EVERY case which is completed through disclosure is /preprocessed/
IPU reading room maintains ONLY these /preprocessed/ cases which have been
deemed to have sufficient public interest to warrent inclusion in the
Reading Room. The question therefore, is : Does the Tesla material fit
the criteria for inclusion in the FOIA Reading Room? I Think not. XXX
84- .....Feb 9, 1981 | A. J. MacLaren USAF | Director, FBI |
Summary> This is a memo from LtColonel MacLaren at the Strategic and
Space Systems requesting Tesla's papers." We believe that certain of Tesla's
papers may contain basic principles which would be of considerable value
to certain ongoing research within the DoD. It would be very helpful to
have access to his papers." At the bottonm of the page are hand written
notes stating all information contained herein is unclassified 4-8-93.
It also has my FOIPA No. 356,608?
85- .....Mar 10, 1981 | Robert S. Young | Colonel MacLaren |
Summary> This is a responce to MacLaren's letter. Young's title
is ..Assistant Director in Charge..Office of Congressional and
Public Affairs. Young states that the FBI did not participate in the
handling of Tesla's papers. His papers were exhimined by representatives
of the Office of Alien Property, the Navy Department and the Office of
Scientific Research and Development.A complete search of our indices is
being made to determine if we have any information that might be useful to
you. A note at the bottom of the page states..IN previous request we have said
that the Office of Alien Property of the Dept. of Justice impounded Tesla's
papers. However the Office of Foreign Litigation, Civil Division, indicats
that Dr. Tesla'spapers are not in their possession.
86- .....Mar 20,1981 | Robert S. Young | LtColonel MacLeram |
Summary> This is another letter to MacLearn futher explaining that the
FBI didn't have Tesla's papers. He says the Unites States Naval Researce
and the Office of Naval Intelligance were at the Jan 26,27 1943 exhimination
of Tesla's papers in Manhattan. It was the opinion of all there that there
was NO information in Tesla's papers of scientific or millitary importance.
87- .....Cont.86-more notes to MacLearn telling him once in Oct 26, 1945
XXXXXX(I am Sure the blanked out name is Bloyce Fitzgearld) a young
scientist who had been Tesla's protege, called in person at our New York
Field Office. With him were XXXXX (I have think this states three army
officers were with him.) and XXXXX from the research development unit at
Wright Field, Dayton, Ohio. The men carried a letter signed by XXXXX requesting
the FBI allow the bearers of the letter access to the effects of Nikola Tasla
(65-47943-15). Young tells Maclearn to contact the other agencies for more
information.
88- .....Cont.87-last note from Young. He states that from 1973-1980 the
FBI has recieved 20 FOIA request for Tesla's papers.
89- .....XXX 29, 1955 | XXXXX | XXXXX |
Summary> This is a photocopy of a page from the American Srbobran
It tells of the progress of Leland I Anderson, head of the Tesla
Society headquartered at University of Minnesota, getting Dr. Tesla
proper recognition. Talks of the Teslian publication that Anderson
puts out. It mentions an article in POWER magazine

90- .....Jun 29,1955 | A.H. Belmont | L.V. Boardman |
Summary> Mr. Belmont relates to a letter the bureau received dated
6-25-1955 from Kenneth M. Swezey which ask the FBI to help locate the
gold Edison metal which was missing from Tesla's safe when it arrived
at the Belgrade museum.Swezey mentions two publications, The Prodigal
Genius, and The Genius who Walked Alone, that state the FBI was present
at the opening of Mr. Tesla's safe the day he died 1-8-43. 91- .....Cont.90-Recommendation that Sweey be
advised bureau did not

participate in the handeling of Tesla's effects.
92- .....Jun 30,1955 | J. Edgar Hoover | Mr. Kenneth Swezey|
Summary> This is the letter to Mr. Swezey which was recommended in
page 91. It states the FBI was not involved in Tesla's effects.
93- .....Aug 1, 1955 | XXX | J. Edgar Hoover |
Summary> This is another letter requesting whatever material the
FBI has concerning Tesla.
94- .....Aug 11, 1955 | John Edgar Hoover | XXX |
Summary> Answer to the letter of page 93. It states the FBI has
no Tesla effects.
95- .....Sep 10, 1955 | XXX | John Edgar Hoover |
Summary> This is kind of interesting...This letter was written by
the same person requesting Tesla information back on page 93.
It was from a typewriter with a bad capital (M) and is easily
seen to be from the same typewriter. The letter shows XXX wrote
the office of Alien Property seeking the where abouts of Tesla's
effects after the FBI said they had no information. Mr. XXX states
he received a letter from Mr. Henry G. Hilken-that department-File
Number HGH:N SM: elk 017-3566, in which I am told that office "NEVER
HAD CUSTODY, NOR HAS VESTED, any property of Nikola Tesla".
96- .....Sep 20, 1955 | John Edgar Hoover | XXX |
Summary> This is a short reply to the previous letter of page 95.
Restates the fact that the FBI can furnish additional information on
Tesla.
97- .....Jun 29, 1955 | The American Srbobran | XXX |
Summary> This looks like a copy of a form that was printed in the
June 29, 1955 American Srbobran, Pittsburg, Penn. It is a request
to Postmaster General Hon. Auther E. Summerfield, to issue a 1956
commemorative stamp on the centennial of Tesla's birthday.
It is sad it wasn't until September 21, 1983 such a stamp was issued.
98-102...This is a photocopy of an article in June 1955 Coronet magazine
It is by Alfred Sinks and is quite good. It seems to be most of what
we now know of Tesla's life.
103-.....Sep 28, 1955 | The American Srbobran | XXX |
Summary> This is a photocopy from The American Srbobran which
states a bust of Tesla will be placed at the Monastery at Libertyville
Ill. If the $3000.00 can be raised.
104-.....Oct 24, 1955 | The American Srbobran | XXX |
Summary> This is a photocopy from The American Srbobran which
states a portrait of Tesla which was used on the cover of Time
magazine has been sold at auction and it's location is unknown.
It is 53"x48" and was painted by Princess Vilma Lwoff-Parlaghy.
105-106..Nov 14, XXXX | The American Srbobran | XXX |
Summary> This is a photocopy from The American Srbobran which
updates the status of a bust of Tesla to be placed at the Monastery
at Libertyville, Ill. It list names and ammounts of contribution.
107-.....Jun 23,1956 | XXX | FBI |
Summary> A letter requesting information the FBI holds about Tesla.
108-.....Jun 29, 1956 |John Edgar Hoover | XXX |
Summary> Answer to the previous letter of page 107. Again the FBI
claims to have NO Tesla information.
109-112 ...July 25, 1957 | SAC, New York | Director FBI |
Summary> A very interesting 4 page memorandum about an informant's
story telling of a Tesla set which was finished by Tesla engineers in
1950 which enabled interplanetary communication. The set was in the
posession of a Mr.John Storm and his wife Margaret. It also tells
of a 9-22-40 New York Times article about Tesla's "Death Ray".
You will want copies of this!
113-.....Mar 7,1958 | XXX | J. Edgar Hoover |
Summary> A letter requesting Tesla's FBI files.
114-.....Mar 14,1958 | J. Edgar Hoover | XXX |
Summary> Reply to previous letter of page 113. The FBI has no Tesla

files.
There is a note at the bottom of the page of interest!
"NOTE: Bufiles reflect no record on correspondent".
How about that...the FBI looks up the people that make a Tesla request
to see if they have a file on THEM!
I have seen this note on other request but just now realized the importance
of it.
115-158 ..The last 43 pages are 19 request for Tesla information from
June 24, 1959 - Nov 13, 1975. They are of moderate interest and
are all about the same with the same responce...no files on Tesla.
********** THE END **********

Tesla's FBI File, Enclosure 2

NIKOLA TESLA'S FBI FILES
ENCLOSURE II
References
(Complete..)

Complete summary of relevant information found in the 96 pages
(107 including the FBI deleted page sheets)
of Enclosure # II of my Freedom of Information Act (FOIA)
request of the Nikola Tesla FBI files.
Page numbers are sequential from the title sheet to the end
as received from the FBI.

The XXXXXX seen on some pages indicate material has been
blacked out, some pages were %90 black !

Page #-|------DATE-----|--------FROM--------|--------TO--------|

1- .....Title sheet.....Nikola Tesla....References....96 Pages
2- .....Feb./12/1937 | ? | J.E Hoover |
Summary-Tesla's possible involvement in unexplained plane crashes.
3- cont.-2
4- .....FBI deleted page sheet...indicates 6 pages deleted (b)(1)
5- .....Jan/11/1943 | FBI Wash. DC. | FBI-Mr. Ladd |
Summary-> Memo about Tesla's death Jan/7/1943. Sava Kosanovich
and George Clark and Kenneth Sweezey with a locksmith opened
Tesla's safe on Jan/7/1943 asking what action to take.
6- .....Jan/21/1943 | FBI-memo | J.E. Hoover |
Summary-> Memo info that Kosanovich might give Tesla info to the
enemy.Bureau files reveals considerable info concerning
Tesla and his inventions and Tesla was a speaker at a meeting
on June/4/1922 of Friends of Soviet Russia.
7- Cont.-6
8- .....Mar/19/1943 | FBI-E.E Conroy | J.E. Hoover |
Summary-> Kosanovich matter was now handled as an Alien Enemy
Custodial Detention matter and case is considered closed.
9- .....Mar/29/1943 | FBI memo | FBI memo |
Summary-> Abe Spanel explaining who Tesla was and his
importance. Bloyce Fitzgerald was Tesla's secretary.
10- Cont.-9
11- .....Jul./17/1943 | FBI-memo | FBI-memo |
Summary-> Info about a woman that his info about Tesla's safe
being opened. But did not follow up because the FBI closed
the case.
12- .....none | FBI-memo | FBI-Mr.Ladd |
Summary-> The before mentioned woman be interrogated!
13- .....Oct./17/1945 | FBI-memo | FBI-memo |
Summary-> Talks of the death ray and Spanel was trying to get
Tesla's papers. Spanel was boyhood friend of Bloyce
Fitzgerald who is a 29 year old Army Private at Wright Field
,Dayton Ohio. Bloyce Fitzgerald knew of Tesla's secret
experiments and had developed an anti-tank gun.
14- .....cont.-13 Spanel got Bloyce Fitzgerald a job at Higgens Ship
Building Co.
Bloyce Fitzgerald was fired in Sep/1944 .At present Bloyce
Fitzgerald is director of secret project at Wright Field though he
is an Army Private? Working on death ray. Mentions a Sep/22/1940
NY Times article about death ray. Spanel is pro-Russian, Kosanovich

in Yugoslavia with a government job.

Page #-|------DATE-----|----------FROM----------|----------TO----------|

15- .....cont.-14 Spanel definitely a communist.Fitzgerald contacted Henry Ford for funding.Tesla had performed experiments at Pikes Peek using the suns rays to build up a huge electrical energy. Bloyce Fitzgerald said the whole earth could have free electricity.
16- .....cont.-15 Tesla's 75 packing cases and trunks at NY. Charlotte Muzar Kosanovich's agent is paying rent.Sweezey is editor of Popular Science Magazine. Others at opening of safe.
17- .....Jan/29/1943 | John G. Trump | Walter Gorsuch |
Summary-> Trump had looked at Tesla's stuff at the Alien Property Custodian on Jan/26-27/1943. Did not look at trunks. They had been in basement of hotel for ten years unopened.He found NO scientific notes.
18- .....cont.-17 Tesla was only speculative in old age.
19-24-.....cont.-18 People at inventory proceedings. Some of them from Navy intelligence. A not very complete inventory of holdings at the Alien Property Custodian.
All these pages must be reviewed as they are summaries them selves.
25-35-.....A long list and profile of persons associated with Nikola Tesla.
36- .....June/ 8/1949 | FBI Memo | FBI Memo |
Summary-> Sava N.Kosanovic Yugoslav Ambassador took possession of Tesla's files, later turned them over to Alien Enemy Custodian.
37- * Apr/ 3/1950 | FBI Memo D.M. Ladd | FBI Director |
Summary-> Sava Kosanovic contacts FBI to get the microfilm copies of Tesla's papers. Army may have copied them in 1945. Bloyce Fitzgerald's name fits the blacked out area ! October 1945 _____ and 3 Army members went to NY FBI office to get help to get papers from Alien Property Custodian. FBI said no.
38- Cont.-37
39- **.....Apr/17/1950 | FBI Memo SAC, NY | FBI Director |
Summary-> FBI interviewed J.V.Potts, VP of Manhattan Storage Co. NY. The Tesla items stored there were viewed only once Jan/26-27/1943. Michael King, floor manager where Tesla's items were stored, stated the people took numerous photographs and had microfilm equipment. Some of the people wore US Navy uniforms and during the two day examination, other assistants were referred to only as "Federal Authorities".
40- .....Cont.-38 investigation closed.
41- .....FBI deleted page sheet...indicates 4 pages deleted (b)(1)
42- .....Aug/20/1976 | FBI Memo SAC, Buffalo | FBI Director |
Summary-> Info about the Tesla Monument being unveiled at Niagara
43- .....Aug./20/1976 | FBI Memo | FBI Memo |
Summary-> More info about the Tesla Monument. 1,000 people there.
44- .....Cont.-43 reference Niagara Falls Gazette articles about event.
45- .....Cont.-44 reference Niagara Falls Gazette articles about event.
46- .....Cont.-45 reference Niagara Falls Gazette articles about event.

Page #-|------DATE-----|----------FROM----------|----------TO----------|

47- .....FBI deleted page sheet...indicates 6 pages deleted (b)(1)
48- .....July/7/1975 | Unknown | FBI Dir.C.M. Kelly |
Summary-> Director Kelly responding to a request for Tesla's papers. Told them FBI didn't have any.
49- .....Feb./ /1943 | Unknown | Unknown |
Summary-> Copy of a newsletter about Slav and Czechoslovak interest during the war. Many names checked off copies. Tesla there too.
50- .....Cont.-49 newsletter article.
51- .....Cont.-50 newsletter article.

52- .....Cont.-51 newsletter article.
53- .....Cont.-52 newsletter article.
54- .....Cont.-53 newsletter article.
55- .....FBI deleted page sheet...indicates 1 pages deleted (b)(2)
56- .....FBI deleted page sheet...indicates 4 pages deleted
(b)(1),(2),(7)D
57- .....Jun/23/1984 | FBI Memo | FBI Memo |
Summary-> Info about the magazine "The Slavic American"
58- .....Cont.-57 table of contents for "Slavic American" magazine.
59- .....Cont.-58 table of contents for "Slavic American" magazine.
60- .....Cont.-59 table of contents for "Slavic American" magazine.
61- .....Cont.-60 table of contents for "Slavic American" magazine.
62- .....FBI deleted page sheet...indicates 4 pages deleted (b)(1),(2)
63- .....Winter/1947 | Unknown | Unknown |
Summary-> Cover of" The Slavic American" magazine.
64- .....Cont.-63 article in magazine about Tesla.
65- .....Cont.-64 article in magazine about Tesla.
66- .....Cont.-65 article in magazine about Tesla.
67- .....Apr/11/1949 | FBI Memo SAC, NY | FBI Director |
Summary-> Memo attached to two copies of Slavic American
magazine.
68- .....Fall/1948 | FBI Memo SAC, NY | FBI Director |
Summary-cover of the magazine Slavic American.
69- .....Cont.-68 article by Louis Adamic about the American way of life.
70- .....Cont.-69 article by Louis Adamic about the American way of life.
71- .....Cont.-70 article by Louis Adamic about the American way of life.

Page #-|------DATE-----|----------FROM----------|----------TO----------|

72- .....Cont.-71 article by Louis Adamic about the American way of life.
73- .....Cont.-72 article by Louis Adamic about the American way of life.
74- .....Nov./13/1943 | FBI Case sheet | Unknown |
Summary-> Blacked out case sheet ? a date of July 17,1943 ?
75- .....Cont.-74 I think this page must be an attachment to page 74 and
has Sava Kosanovic tried to get Tesla's papers. One informant
said Sava was pro-Axis. The Bureau advised by letter of Jan 21,1943
that it's files revealed confidential information concerning
Nikola Tesla and his inventions and advised that one Nicola Tesla
who might be identical with Nikola Tesla, made a speech in
Springfield, Mass on July 4,1922 under the auspices of the friends
of Soviet Russia.
76- ***..Jan/30/1950 | FBI Memo L.B. Nichols | Mr. Tolson |
Summary->These next three pages are too important to be summarized,
so they are entered mostly as is. The XXXXXXX will indicate areas
blacked out by the FBI.
XXXXXXX called yesterday and said he wanted to see me.
I asked him (?) if there was anything special he wanted to discuss.
He said yes two things.
1. The case of Nikola Tesla and Abraham N. Spanel,XXXXXXXXXXXX
Our files reflect that Nicola Tesla was one of the world's
outstanding scientist and in fact designed the generators installed
at Niagara Falls. He died in New York on January 7, 1943, and is
supposed to have left details and plans for a so-called death ray.
XXXXXXXXXXXXXXXX.
Our files also reflect that Colonel Erskine of Military Intelligence
called us on Jan. 9,1943, advising that Tesla had died, that A. Spanel
had communicated with the War Department regarding this death, that
Tesla had a nephew named Sava Kosanovich who had taken possession of
Tesla's papers and Spanel thought the papers might be used against our
government.
We made an immediate inquiry in New York and the first report was
that Kosanovich and others entered Tesla's room with the aid of a

locksmith, broke into a safe containing some of Tesla's valuable
papers and formula.
Coincident with this, on Jan. 8, L.M.C. Smith called Mr. Tamm
regarding the death of Tesla and Smith stated he was talking to
the Alien Property Custodian about seizing these items.
We interviewed Spanel who expressed concern over Tesla's effects
and Spanel stated that Kosanovich had turned over the effects of
Tesla to the Alien Property Custodian. Spanel further stated the
day DEFORE Tesla died, he tried to get in touch with the War
Department to make available certain patents.
77-***.....Cont.-76 In 1945, we talked to a Private Bloyce Fitzgerald,
who stated he had been associated with Tesla, and that the Army
believed that Tesla's death ray is the only defense against the
atom bombs.
It was very clear we had no responsibility for Tesla's effects,
that the Alien Property Custodian seized them and we learned
later that Naval authorities made microfilms of all his papers.
Kosanovich communicated with the Bureau on March 29, 1950, and
under date of April 3, 1950, in response to his request for the
microfilms of the papers of Tesla, who was a relative of
Kosanovich, we advised Kosanovich that this Bureau had never
been in possession of Tesla's papers.
Senator XXXXXXX furnished the Bureau five communications
received fron a XXXXXXXXXXXXXXXXXX which pertained primarily
to Abraham Spanel. This individual mentioned the FBI at length
in these communications, pointing out that Mr. Foxworth had
called in on the Tesla case but was killed shortly thereafter.
He further stated that he was associated with Fitzgerald and as
such came in touch with Tesla. He stated the FBI investigated
this matter but their hands were tied, that there was nothing
the FBI could do as they had been stopped from a higher level,
that XXXXXXXXXXX the FBI agent he dealt with, resigned and
requested XXXXXXXXXXXXX never to discuss the matter with him
again, that he had a wife and family to consider and that the
last hope was Congress. These communications were furnished to
the Department on September 19, 1950.
78-***.....Cont.77-We did have an Agent XXXXXXXXXXXXX who entered on
duty XXXXXXXXXXXXXXX resigned XXXXXXXXXXX(3 lines)
The file does not indicate that we have ever interviewed XXXXX
on the basis of XXXXXXXXXXXXXX allegiations.
I think we should see what specifics XXXXXX wants. I think we
can tell him on the Tesla papers the Alien Property Custodian
was going to seize the papers and that we learned Spanel had
called the War Department about the papers falling into the
wrong hands. XXXXXXXXXX(10 lines)
79- .....Aug 30,1946 | D.M. Ladd | E.G. Fitch |
Summary> 50% of this page is blacked out.
A note concerning information from Colonel Grombach,
special intelligence, War Dept. about XXXXXXXXX and his mistress.
XXXXX Nikola Tesla, residing in Cleveland, Ohio.
80- .....Jun 11,1952 | Washington Field Office | Bureau |
Summary> 90% blacked out. XXX subject in interview and signed
statement says XXX (?). Espionage-R
81- .....Cont.80-Blacked out 95%. XXXXX History prior to entering
the US XXXXX
82- .....Cont.81-Blacked out 80%. XXXXX wanted to meet Tesla to help
Yogoslav progress in engineering and equipment
83- .....Cont.82-Blacked out 80%. XXXXX says Kosanovic would be effect
Ambassador because he was Tesla's nephew and knew Mayor LA Guardia.
84- .....FBI deleted page sheet...indicates 2 pages deleted (b)(1)
85- .....Mar 28,1960 | Washington Field Office | Bureau |
Summary> Loyalty of employees of the United Nations and Other

International Organizations.
List of 10 references dated 1960 ?
86- .....Cont.85-Blacked out 95%. XXXXX has been interviewed.
87- .....Cont.86-Blacked out 99%. XXXXX was interviewed Jun 7, 1947
by SAs of Chicago office.
88- .....Cont.87-Blacked out 80%. page almost identical to 83.
89- .....?.?.1942 | From ? | To ? |
Summary> This page shows the photocopy of the title page of the
book /Current Biography/
90- .....Cont.89- This is a photocopy of a page from the /Current
Biography/ which has Nikola Tesla noted as the inventor of the
Death Beam !

Page #-|------DATE-----|----------FROM----------|----------TO----------|

91- .....Mar 13, 1948 | Director FBI | SAC New York |
Summary> Memo states a copy of the /Plain Truth/ is attached.
92- .....Cont.91- Photocopy of two pages from the /Plain Truth/
Story is about the Red Ambassador, Sava Kosanovich.
93- .....Cont.92- Photocopy of two pages from the /Plain Truth/
Story was authored by Bogdan Raditsa
94- .....Cont.93- Photocopy of one page from the /Plain Truth/
Story says Kosanovich is ambassador of a puppet state in
Stalin's empire.
95- .....Feb 20, 1945 | From XXXX | To XXXX |
Summary> Memo about a newspaper article in a Serbian paper.
96- .....Cont.95- Blacked out 50%. Talks of the ownership of the
Slobodna Rec.
97- .....Cont.96- More info on the newspaper, how they intend to
raise money.
98- .....Nov 7, 1947 | SAC, Pittsburgh | Director, FBI |
Summary> Memo of the speach that Kosanovich gave to the 2nd.
Serbian Congress Oct 26 in Pittsburgh, Pa.
99- .....Cont.98- More text of the speach by Kosanovich,
100- .....Cont.99- More text of the speach by Kosanovich,
101- .....FBI deleted page sheet...indicates 3 pages deleted (b)(7)(C)(D)
102- .....May 8, 1945 | SAC, Pittsburgh | Director, FBI |
Summary> Blacked out 50%.Memo about a radio repair man installing
a Hammerlund H.Q. receiver #120X at the home of XXXXXXX. The radio
was purchased under high priority and once belonged to Tesla's son.
103- .....Aug 20, 1946 | Washington DC | Bureau |
Summary> Blacked out 20%.Memo about a story in the Washington Post
relative to an interview with Sava Kosanovic. War over Trieste.
104- .....Cont.102- another story in the Evening Star about Kosanovic
New Envoy Disclaims Any Yugoslav Plans for Coup at Trieste.
Goes on to state Kosanovic is the nephew of Nikola Tesla.
105- .....FBI deleted page sheet...indicates 2 pages deleted (b)(1)
106- .....FBI deleted page sheet...indicates 4 pages deleted (b)(1)
107- .....Nov 18, 1942 | Indianapolis, Indiana | Bureau |
Summary> Memo concerning the American Slav Congress and info
entitled /News Flashes from Czechoslovak under Nazi Dominations.

Tesla's Idea Of Nuclear Energy

Posted by Stephen Campbell on March 9, 2003 11:17:23 UTC

Nikola Tesla had the unique idea that no matter produced any more energy than received from the environment, he believed atomic power was an illusion, for example: a quantity of uranium or radium does not produce or generate the alpha/beta /gamma radiation, it simply acts as a transceiver of a "raw primordial form of electrical energy" and then radiates this energy in the various forms of alpha/beta/gamma, same case with a permanent magnet, its molecular structure is as such to receive this raw energy which is manifest itself in a form in which we know of as a magnetic field, research of Tesla's notes and lectures reveals he had discovered a different manifestation of electrical energy, he called this "dynamic electrostatic" sometimes referred to as "radiant energy" or "cold current", this effect he noted with impulse apparatus, specifically, what is known as the "tesla coil" this device is actually a D.C. powered impulse transformer, whereas a magnetic field is utilized at a right angle to disrupt an electric spark discharge, to produce ultra-rapid and short duration impulses, this produces an amazing silver/white fluidic energy discharge , and what tesla called the "stinging rays" ,Tesla's discovery of artificial "fireballs" is connected to this line of research, fireballs are produced when metallic vapors are subjected to explosive discharges/impulses, or a resistance is subjected to high energy explosive electrical impulses to thus produce a cloud of vapor, which becomes a fireball "ball lightning" which is a giant molecule, with a very short life span, it may be possible to produce a stable "plasmoid" in a non-vacuum utilizing Tesla's electrostatic impulse ideas, this could be the ultimate energy power source!.

TESLA'S NEW DISCOVERY

by Nikola Tesla

Previous Article Next Article

The Sun, New York, January 30, 1901

Capacity of Electrical Conductors is Variable, Not Constant, and Formulas Will Have to Be Rewritten — Capacity Varies With Absolute Height Above Sea Level, Relative Height From Earth and Distance From the Sun

Nikola Tesla announced yesterday another new discovery in electricity. This time it is a new law and by reason of it, Mr. Tesla asserts, a large part of technical literature will have to be rewritten. Ever since anything has been known about electricity, scientific men have taken for granted that the capacity of an electrical conductor is constant. When Tesla was experimenting in Colorado he found out that this capacity is not constant — but variable. Then he determined to find out the law governing this phenomenon. He did so, and all this he explained to The Sun yesterday. Here is what he said:

"Since many years scientific men engaged in the study of physics and electrical research have taken it for granted that certain quantities, entering continuously in their estimates and calculations, are fixed and unalterable. The exact determination of these quantities being of particular importance in electrical vibrations, which are engrossing more and more the attention of experimenters all over the world, it seems to be important to acquaint others with some of my observations, which have finally led me to the results now attracting universal attention. These observations, with which I have long been familiar, show that some of the quantities referred to are variable and that, owing to this, a large portion of the technical literature is defective. I shall endeavor to convey the knowledge of the facts I have discovered in plain language, devoid as much as possible of technicalities."

"It is well known that an electric circuit compacts itself like a spring with a weight attached to it. Such a spring vibrates at a definite rate, which is determined by two quantities, the pliability of the spring and the mass of the weight. Similarly an electric circuit vibrates, and its vibration, too, is dependent on two quantities, designated as electrostatic capacity and inductance. The capacity of the electric circuit corresponds to the pliability of the spring and the inductance to the mass of the weight."

"Exactly as mechanics and engineers have taken it for granted that the pliability of the spring remains the same, no matter how it be placed or used, so electricians and physicists have assumed that the electrostatic capacity of a conducting body, say of a metallic sphere, which is frequently used in experiments, remains a fixed and unalterable quantity, and many scientific results of the greatest importance are dependent on this assumption. Now, I have discovered that this capacity is not fixed and unalterable at all. On the contrary, it is susceptible to great changes, so that under certain conditions it may amount to many times its theoretical value, or may eventually be smaller. Inasmuch as every electrical conductor, besides possessing an inductance, has also a certain amount of capacity, owing to the variations of the latter, the inductance, too, is seemingly modified by the same causes that tend to modify the capacity. These facts I discovered some time before I gave a technical description of my system of energy transmission and telegraphy without wires, which, I believe, became first known through my Belgian and British patents."

"In this system, I then explained, that, in estimating the wave-length of the electrical vibration in the transmitting and receiving circuits, due regard must be had to the velocity with which the vibration is propagated through each of the circuits, this velocity being given by the product of the wave-length and the number of vibrations per second. The rate of vibration being, however, as before stated, dependent on the capacity and inductance in each case, I obtained discordant values."

"Continuing the investigation of this astonishing phenomenon I observed that the capacity varied with the elevation of the conducting surface above the ground and I soon ascertained the law of this variation. The capacity increased as the conducting surface was elevated, in open space, from one-half to three-quarters of 1 percent per foot of elevation. In buildings, however, or near large structures, this increase often amounted to 50 percent per foot of elevation, and this alone will show to what extent many of the scientific experiments recorded in technical literature are erroneous. In determining the length of the coils or conductors such as I employ in my system of wireless telegraphy, for instance, the rule which I have given is, in view of the above, important to observe."

"Far more interesting, however, for men of science is the fact I observed later, that the capacity undergoes an annual variation with a maximum in summer, and a minimum in winter. In Colorado, where I continued with improved methods of investigations begun in New York, and where I found the rate of increase slightly greater, I furthermore observed that there was a diurnal variation with a maximum during the night. Further, I found that sunlight causes a slight increase in

capacity. The moon also produces an effect, but I do not attribute it to its light."

"The importance of these observations will be better appreciated when it is stated that owing to these changes of a quantity supposed to be constant an electrical circuit does not vibrate at a uniform rate, but its rate is modified in accordance with the modifications of the capacity. Thus a circuit vibrates a little slower at an elevation than when at a lower level. An oscillating system, as used in telegraphy without wires, vibrates a little quicker when the ship gets into the harbor than when on open sea. Such a circuit oscillates quicker in the winter than in the summer, though it be at the same temperature, and a trifle quicker at night than in daytime, particularly if the sun is shining."

"Taking together the results of my investigations I find that this variation of the capacity and consequently of the vibration period is evidently dependent, first, on the absolute height above sea level, though in a smaller degree; second, on the relative height of the conducting surface or capacity with respect to the bodies surrounding it; third, on the distance of the earth from the sun, and fourth, on the relative change of the circuit with respect to the sun, caused by the diurnal rotation of the earth. These facts may be of particular interest to meteorologists and astronomers, inasmuch as practical methods of inquiry may result from these observations, which may be useful in their respective fields. It is probable that we shall perfect instruments for indicating the altitude of a place by means of a circuit, properly constructed and arranged, and I have thought of a number of other uses to which this principle may be put."

"It was in the course of investigations of this kind in Colorado that I first noted certain variations in electrical systems arranged in peculiar ways. These variations I first discovered by calculating over the results I had previously noted, and it was only subsequently that I actually perceived them. It will thus be clear that some who have ventured to attribute the phenomena I have observed to ordinary atmospheric disturbances have made a hasty conclusion."

Colorado Springs

Oct. 23, 1899

Experiments to further ascertain the influence of elevation upon capacity.

The coil referred to on a previous occasion was finished with exactly 689 turns on a drum of eight feet in length and 14" diam. The wire used was cord No. 20 as before stated so that the approximate estimate of self-induction and other particulars holds good. The coil was set up upright outside of the building at some distance to reduce any errors due to the influence of the woodwork. From the building extended a structure of dry pine to a height of about sixty feet from the ground. This framework supported, on a projecting crossbeam, a pulley (wood) with cord for pulling up a ball or other object to any desired height within the limits permitted and this beam also carried on its extreme end and close to the pulley a strong glass bottle within which was fastened a bare wire No. 10, which extended vertically downward to the top of the coil. The bottle was an ordinary Champagne bottle, from which the wine had been poured out! and the bottom broken in. It was forced neck downward into a hole bored into the beam and fastened besides with a cord. A tapering plug of hard wood was wedged into the neck and into this plug was fastened the wire. The bottle was finally filled with melted wax.

The whole arrangement is illustrated in the sketch shown in which b is the bottle with wooden plug p supported on beam B also carrying pulley p, over which passes the cord for pulling up the object, which in this case is shown as the sphere C. The spheres used were of wood and hollow and covered very smoothly with tin foil and any points of the foil were pressed in so as to be below the surface of the sphere. . . .

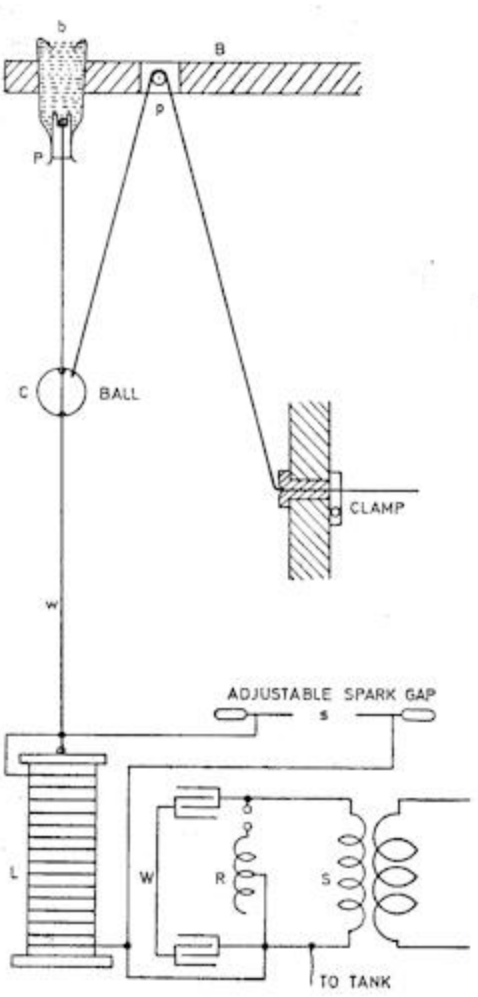

[Colorado Springs Notes, pp. 235, 236]

Genius Inventor Tesla's Work Was Stolen By The US Government, And Never Declassified.

Nikola Tesla was an electrical inventor, and lived during the late 1800's into the mid-1900's. He was a brilliant person, yet was an enigma to practically everyone. Known for his eccentric lifestyle, Tesla nevertheless maintained a rather high social profile, despite his prolific inventiveness. Tesla had a good number of friends, one of which was Samuel Clemons, also known as Mark Twain.

Tesla's main claim to fame lay with his invention of the alternating current motor. Tesla believed that alternating current was vastly superior to (Edison's) direct current, but the problem was the lack of a practical motor. Alternating current is practical because of the fact that it can be altered or converted to suit a variety of situations. For example, if the voltage is made quite high, then the current necessary for a specific level of power is very low. This low current then becomes very efficient when sending electrical power over very long wires. (This is the reason why the power lines running across the countryside are at very high voltages.)

Tesla also worked with radio-frequency electromagnetic waves, and despite the claims made by Marconi, actually did invent the idea of Radio as we know it today. (There are numerous patents which bear this out.) In working with radio waves, Tesla created the Tesla coil as a means to generate and receive this form of energy.

Tesla went on to experiment with actual wireless transmission of electrical power. In Colorado Springs, Colorado, he built a laboratory to develop this. The Colorado Springs lab contained the largest Tesla Coil ever built, even today. Called the 'Magnifying Transmitter', it was capable of generating some 300,000 watts of power, and (reportedly) could produce a bolt of lightning 130 feet long. According to local acounts, Tesla actually managed to successfully transmit about 30 to 50 thousand watts of power without wires using the 'Transmitter'.

Tesla was also a great mechanical engineer, and patented dozens of devices ranging from speedometers to extremely efficient electrical generators. One unique device was his bladeless turbine. Instead of using fan-type blades, Tesla's turbine utilized solid disks of metal, and relied on what is called the 'boundry-layer effect'. His turbine ran on either compressed air or steam, and was so efficient that a device held in the hand could produce well over 10 horsepower! Today, this bladeless technology is being used in a special type of non-clogging pump designed for the oil industry. (In fact, the thicker the stuff it pumps, the more efficiently it pumps it!)

Tesla had a knack for visualizing inventions in their final, finished form. He also would envision a great many other ideas and concepts, which only later in this century would come to pass. One such idea was the creation of a large ring that would encircle the earth. Built on scaffolding, once completed, the scaffolding would be removed, and the ring would remain stationary. 20th century geosynchronous satellites work in a similar way.

Tesla was also responsible for a great many other inventions and devices that we take for granted today. He postulated the ability to locate objects in the air or in the ground by using radio waves. Today, we call it RADAR, and when used to peer into the human body, MRI. Tesla also created radio-control devices. His work with special gas-filled lamps set the stage for the creation of fluorescent lighting.

Tesla eventually died, literally pennyless, on January 7th, 1943. On the following day, agents of the War Department and FBI seized Tesla's laboratory and all of his personal effects. They have never been returned or accounted for. It is rather sad that a man who gave the world so much, received so little for his efforts. History books have been unkind as well. Even today, many texts still credit Marconi with the invention of radio, despite the Supreme Court decision which overruled the Marconi patent, awarding it to Tesla. In many parts of this country, people still refer to the electric utility as the 'Edison Company', even though they use the Tesla-Westinghouse alternating current system, NOT Edison's direct current. At the Niagra Falls power generating station, a small statue of Tesla is purposely left unilluminated at night. It has been said that Tesla is the Forgotten Father of Technology. Tesla himself once commented "... The present is theirs. (skeptics of the day) The future, for which I really worked, is mine." How true indeed.

Excerpts from DOCUMENT DECLASSIFIED BY The US Atomic Energy

Commission on 12-10-94, subsequently reclassified on 12-29-94:

Report by unnamed research associate with US Dept. of Energy 1976

... 1899 research financed by John Jacob Astor. Tesla's Colorado Springs tests were well remembered by local residents. With a 200 foot pole topped by a large copper sphere rising above his laboratory he generated potentials that discharged lightning bolts up to 135 feet long. Thunder from the released energy could be heard 15 miles away in Cripple Creek. People walking along the streets were amazed to see sparks jumping between their feet and the ground, and flames of electricity would spring from a tap when anyone turned them on for a drink of water. Light bulbs within 100 feet of the experimental tower glowed when they were turned off. Horses at the livery stable received shocks through their metal shoes and bolted from the stalls. Even insects were affected: Butterflies became electrified and "helplessly swirled in circles - their wings spouting blue halos of 'St. Elmo's Fire.'" The most pronounced effect, and the one that captured the attention of Department Of Defense, occurred at the Colorado Springs Electric Company generating station. One day while Tesla was conducting a high power test, the crackling from inside the laboratory suddenly stopped. Bursting into the lab Tesla demanded to know why his assistant had disconnected the coil. The assistant protested that he had not done anything. The power from the city's generator, the assistant said, must have quit. When the angry Tesla telephoned the power company he received an equally angry reply that the electric company had not cut the power, but that Tesla's experiment had destroyed the generator! While running his transmitter at a power level of "several hundred kilowatts" high frequency currents were set up in the electric company's generators. These powerful currents "caused heavy sparks to jump thru the windings and destroy the insulation." When the insulation failed, the generator shorted out and was destroyed.

1935 statement to Liberty magazine: "My invention requires a large plant, but once it is established it will be possible to destroy anything, men or machines, approaching within a radius of hundreds of miles". He had created a device which, according to contemporary reports, used a powerful ultra-violet beam to make the air conducting so that high energy current could be directed to the target. He said: "My apparatus projects particles which may be relatively large or of microscopic dimensions, enabling us to convey to a small area at a great distance trillions of times more energy than is possible with rays of any kind. Many thousands of horsepower can be thus transmitted by a stream thinner than a hair, so that nothing can resist". Apparently what Tesla had in mind with this defensive system was a large scale version of his Colorado Springs lightning bolt machine. As airplanes or ships entered the electric field of his charged tower, they would set up a conducting path for a stream of high energy particles that would destroy the intruder's electrical system.

There is another, more powerful system alluded to in Tesla's writings. When Tesla realized, as he pointed out in 1900 that "economic forces would not allow the development of a new type of electrical generator able to supply power without burning fuel" he "was led to recognize [that] the transmission of electrical energy to any distance through the media as by far the best solution of the great problem of harnessing the sun's energy for the use of man." His idea was that a relatively few generating plants located near waterfalls would supply his very high energy transmitters which, in turn, would send power through the earth to be picked up wherever it was needed. The plan would require several of his transmitters to rhythmically pump huge amounts of electricity into the earth at pressures on the order of 100 million volts. The earth would become like a huge ball inflated to a great electrical potential, but pulsing to Tesla's imposed beat. Receiving energy from this high pressure reservoir only would require a person to put a rod into the ground and connect it to a receiver operating in unison with the earth's electrical motion. As Tesla described it, "the entire apparatus for lighting the average country dwelling will contain no moving parts whatever, and could be readily carried about in a small valise." However, the difference between a current that can be used to run, say, a sewing machine and a current used as a method of destruction, however, is a matter of timing. If the amount of electricity used to run a sewing machine for an hour is released in a millionth of a second, it would have a very different, and negative, effect on the sewing machine.

If the sending of currents through the earth is possible from the viewpoint of modern physics, the question remains of whether Tesla actually demonstrated the weapons application of his power transmitter or whether it remained an unrealized plan on the part of the inventor. Circumstantial evidence points to there having been a test of this weapon.

1900: Tesla returned from Colorado Springs after a series of important tests of wireless power transmission. It was during these tests that his magnifying transmitter sent out waves of energy causing the destruction of the power company's generator. He received financial backing from J. Pierpont Morgan of $150,000 to build a radio transmitter for signaling Europe. With the first portion of the money he obtained 200 acres of land at Shoreham, Long Island and built an enormous tower 187 feet tall topped with a 55 ton, 68 foot metal dome. He called the research site "Wardenclyffe." As Tesla was just getting started, investors were rushing to buy stock offered by the Marconi company. Supporters of the Marconi Company include his old adversary Edison. On December 12th, Marconi sent the

first transatlantic signal, the letter "S," from Cornwall, England to Newfoundland. He did this with, as the financiers noted, equipment copied from Tesla's pending patents, but on a smaller scale. Thinking that government employees have betrayed his secrets to Marconi and Edison, Tesla becomes secretive, banning all government researchers and officials from his site, and refusing to publish his work.

1904: Tesla writes for the Electrical World, "The Transmission of Electrical Energy Without Wires," noting that the globe, even with its great size, responds to electrical currents like a small metal ball. Tesla declares to the press the completion of Wardenclyffe. He successfully transmits power into the earth and "reads" it at testing stations in Canada and Colorado.

1904: The Colorado Springs power company sues for electricity used at that experimental station. Tesla's Colorado laboratory is torn down and is sold for lumber to pay the $180 judgement; his electrical equipment is put in storage.

1905: Equipment is stolen from the Colorado location. Witnesses implicate 2 employees of George Westinghouse of Westinghouse Electric. They are arrested, post bond, and vanish. Neither are ever seen again. The equipment is never recovered.

1907: When commenting on the destruction of the French ship Iena, Tesla notes in a letter that he has built and tested remotely controlled torpedoes, but that electrical waves would be more destructive. "As to projecting wave energy to any particular region of the globe ... this can be done by my devices," he wrote. Further, he claimed that "the spot at which the desired effect is to be produced can be calculated very closely, assuming the accepted terrestrial measurements to be correct."

1908: Tesla repeated the idea of destruction by electrical waves on April 21st. His letter to an associate stated, "When I spoke of future warfare I meant that it should be conducted by direct application of electrical waves without the use of aerial engines or other implements of destruction." He added: "This is not a dream. Even now wireless power plants could be constructed by which any region of the globe might be rendered uninhabitable without subjecting the population of other parts to serious danger or inconvenience." One month later, the event in Siberia occurred:

June 30, 1908: An explosion estimated to be equivalent to 10-15 megatons of TNT flattened 500,000 acres of pine forest near the Stony Tunguska River in central Siberia. Whole herds of reindeer were destroyed. The explosion was heard over a radius of 620 miles.

When an expedition was made to the area in 1927 to find evidence of the meteorite presumed to have caused the blast, no impact crater was found. No meteorite was found. When the ground was drilled for pieces of nickel, iron, or stone, the main constituents of meteorites, none were found down to a depth of 118 feet. Many explanations have been given for the Tunguska event. The officially accepted version is that a 100,000 ton fragment of Encke's Comet, composed mainly of dust and ice, entered the atmosphere at 62,000 mph, heated up, and exploded over the earth's surface creating a fireball and shock wave but no crater. Alternative versions of the disaster see a renegade mini-black hole or an alien space ship crashing into the earth with the resulting release of energy. Associating Tesla with the Tunguska event comes close to putting the inventor's power transmission idea in the same speculative category as ancient astronauts. However, by looking at the above chronology, it can be seen that real historical facts point to the possibility that this event was caused by a test firing of Tesla's energy weapon.

The explosion in Siberia occurred at 9:05pm e.s.t. on a day when Tesla had sent all of his employees home for the evening and locked the compound. He had remained in the laboratory. At the moment of the event, power outages occurred simultaneously in New York and along the eastern seaboard. Tesla went to New York the following day where he obsessed over news reports from the region for several days before returning home.

In 1907 and 1908, Tesla wrote about the destructive effects of his energy transmitter. His Wardenclyffe transmitter was much larger than the Colorado Springs device that destroyed the power station's generator. His new transmitter would be capable of effects many orders of magnitude greater than the Colorado device. In 1915, he said he had already built a transmitter that "... may be used to destroy property and life."

The evidence is circumstantial but, to use the language of criminal investigation, Tesla had motive and means to be the cause of the Tunguska event. He also seems to confess to such a test having taken place before 1915. His transmitter could generate energy levels and frequencies that would release the destructive force of 10 megatons, or more, of TNT. The nature of the Tunguska event, also, is not inconsistent with what would happen during the sudden release of wireless power. No fiery object was reported in the skies at that time by professional or amateur astronomers as would be expected when a 200,000,000 pound object enters the atmosphere. Finally, there is the absence of an impact crater. Because there is no material object to impact, an explosion caused by broadcast power would not leave a crater. Given Tesla's general pacifistic nature it is noteworthy that this event occurred in the most uninhabited place in the northern hemisphere. Not a single human died in the explosion. It is difficult to believe that fate alone chose such a remote locale.

The theory that N. Tesla is responsible for this event is fraught with credibility. Perhaps, Nikola Tesla did shake the world in a way that has been kept secret for over 80 years.

From the time Tesla ceased to cooperate with the US Government, he was branded as a "mad scientist". However, one by one his inventions have found their way into the public sphere.

EXCERPTS:

IV. Apparatus for Transformation by Condenser Discharges; Damped Waves

Tesla

This work [Fig. 31] was begun already in 1889. This type of apparatus is identified with my name as certain as the law of gravitation is with that of Newton. I know that some have claimed that Professor Thomson also invented the so-called Tesla coil, but those feeble chirps ne'er went beyond Swampscott. Professor Thomson is an odd sort of man; very ingenious, but he never was a wireless expert; he never could be. Moreover, it is important to realize that this principle is universally employed everywhere. The greatest men of science have told me that this was my best achievement and, in connection with this apparatus [referring to schematics of Fig. 31], I may say that a lot of liberties have been taken. For instance, a man fills this space [break D] with hydrogen; he employs all my instrumentalities, everything that is necessary, but calls it a new wireless system -- the Poulsen arc. I cannot stop it. Another man puts in here [referring to space between self-inductive lines L L] a kind of gap -- he gets a Nobel prize for doing it. My name is not mentioned. Still another man inserts here [conductor B] a mercury[-arc] rectifier. That is my friend Cooper Hewitt. But, as a matter of fact, those devices have nothing to do with the performance.

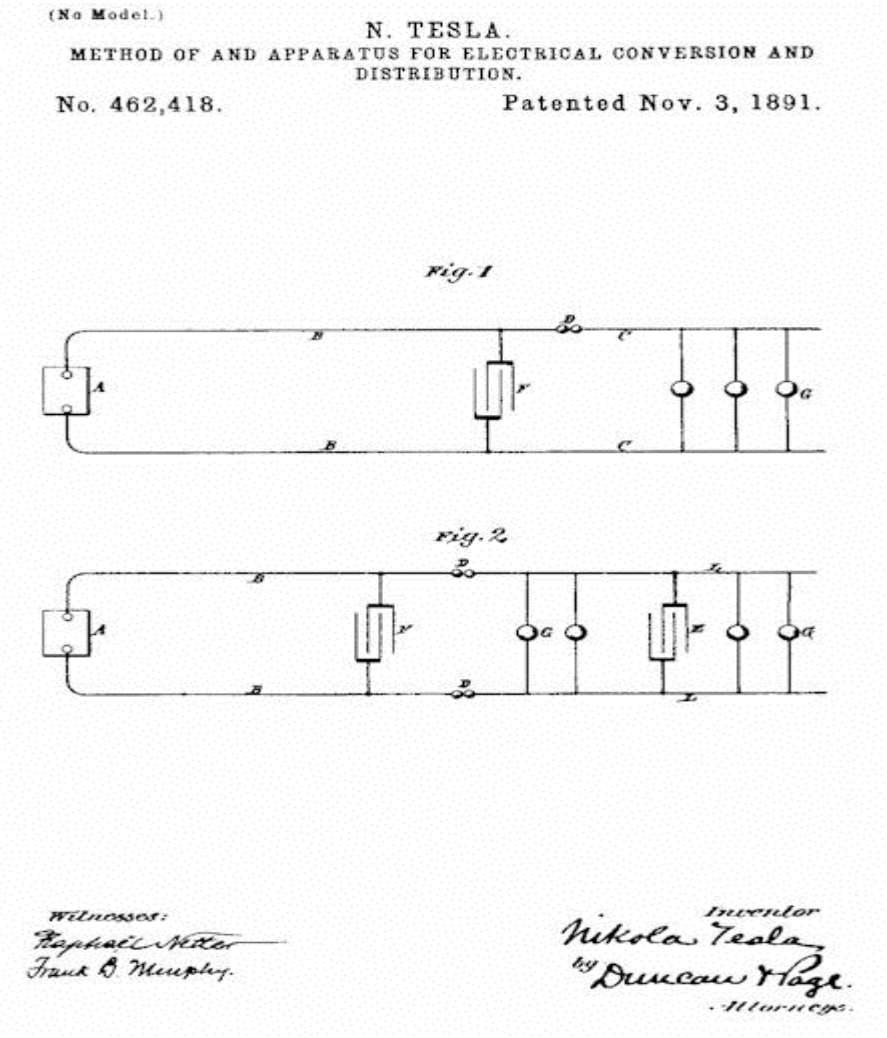
(No Model.)

N. TESLA.

METHOD OF AND APPARATUS FOR ELECTRICAL CONVERSION AND DISTRIBUTION.

No. 462,418. Patented Nov. 3, 1891.

Fig. 1

Fig. 2

Witnesses:
Raphael Netter
Frank B. Murphy.

Inventor
Nikola Tesla
by Duncan & Page.
Attorneys.

Figure 31. **Method of Transformation of electrical energy by oscillatory condenser discharges described in U.S. Patent No. 462,418 of November 3, 1891. Application filed February 4, 1891. Announcement of this invention was made in Tesla's**

lecture before the American Institute of Electrical Engineers at Columbia College, May 20, 1891, where it was predicted that this apparatus afforded vast possibilities and would play an important part in the future. Illustrated and described in T.C Martin book, Figs. 126 and 127, pp. 191-194.

If these men knew what I do, they would not touch my arrangements; they would leave my apparatus as it is. Marconi puts in here [break D] two wheels. I showed only one wheel; he shows two. And he says, "See what happens when the wheels are rotated; a wonderful thing happens!" What is the wonderful thing? Why, when the teeth of the wheels pass one another, the currents are broken and interrupted. That is the wonderful thing that happens? The Lord himself could not make anything else happen unless he broke his own laws. So, in this way, invention has been degraded, debased, prostituted, more in connection with my apparatus than in anything else. Not a vestige of invention as a creative effort is in the thousands of arrangements that you see under the name of other people -- not a vestige of invention. It is exactly like in car couplings on which 6,000 patents have been taken out; but all the couplings are constructed and operated exactly the same way. The inventive effort involved is about the same as that of which a 30-year-old mule is capable. This is a fact.

This is one of most beautiful things ever produced in the way of apparatus: I take a generator of any kind. With the generator I charge a condenser. Then I discharge the condenser under conditions which result in the production of vibrations. Now, it was known since Lord Kelvin that the condenser discharge would give this vibration, but I perfected my apparatus to such a degree that it became an instrument utilizable in the arts, in a much broader way than Lord Kelvin had contemplated as possible. In fact, years afterwards when Lord Kelvin honored me by presenting to the British Association one of my oscillators of a perfected form, he said that it was "a wonderful development and destined to be of great importance."

[Returning to a discussion of Fig. 31], [E] is supposed to be a condenser. That [A] is the generator. Now then, supposing that this is a generator of steady pressure. I can obtain oscillations of any frequency I desire. I can make them damped or undamped. I can make them of one direction or alternating in direction as I choose. At G are devices which operate -- lamps, or anything else. Some experimenters who have gone after me have found a difficulty. They said,

"No, we cannot produce a constant train of oscillations."

Well, it is not my fault. I never have had the slightest difficulty. I produced constant oscillations and I have described how I produced them. Anyone who has no more than my own skill can do it.

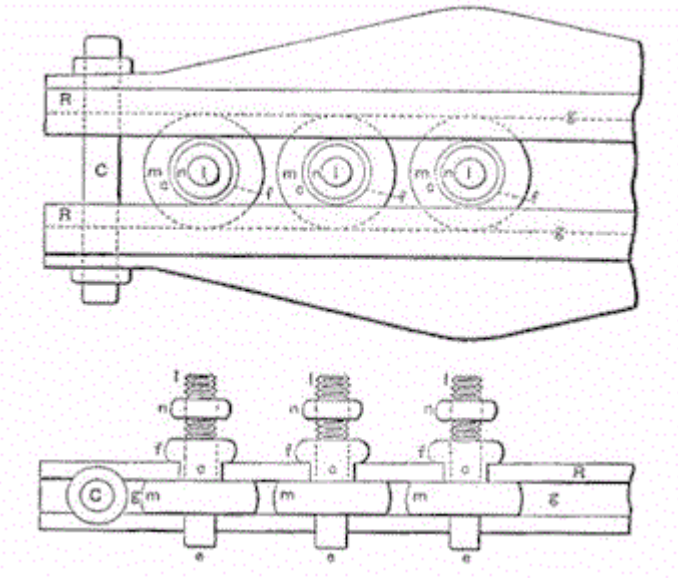

Figure 32.
Quenched spark gap. (Tesla at that time pointed out the future of quenching and showed that oscillations can be maintained without a spark being visible to the naked eye between the knobs.) Illustrated in T.C. Martin book, Figs. 135 and 136, p. 211.

This [Fig. 32] is another improvement in that particular device, which was the weakness of the

invention and which I tried to eliminate. This device incorporated many spark gaps in series. It had a peculiar feature; namely, through the great number of gaps, I was able, as I have pointed out in my writings, to produce oscillations without even a spark being visible between the knobs. This device is now known in the art as the "quenched spark gap." Professor Wein has formulated a beautiful theory about it, which I understand has netted him the Nobel prize. Wein's theories are admirable. The only trouble is that he has overlooked one very important fact. It is this: If the apparatus is properly designed and operated, there is no use for the quenched gap, for the oscillations are continuous anyway. The radio men who came after me had the problem before them of making a bell sound, and they immersed it in mercury. Now, you know mercury is heavy. When they struck their bell, the mercury did not permit it to vibrate long because it took away all the energy. I put my bell in a vacuum and make it vibrate for hours. I have designed circuits in connection with an enterprise in 1898 for transmission of energy which, once started, would vibrate three years, and even after that the oscillations could still be detected. Professor Wein's theory is very beautiful, but it really has no practical meaning. It will become useless as soon as the inefficient apparatus of the day, with antennae that radiate energy rapidly, [are] replaced by a scientifically designed oscillator which does not give out energy except when it gets up to a tremendous electromagnetic momentum.

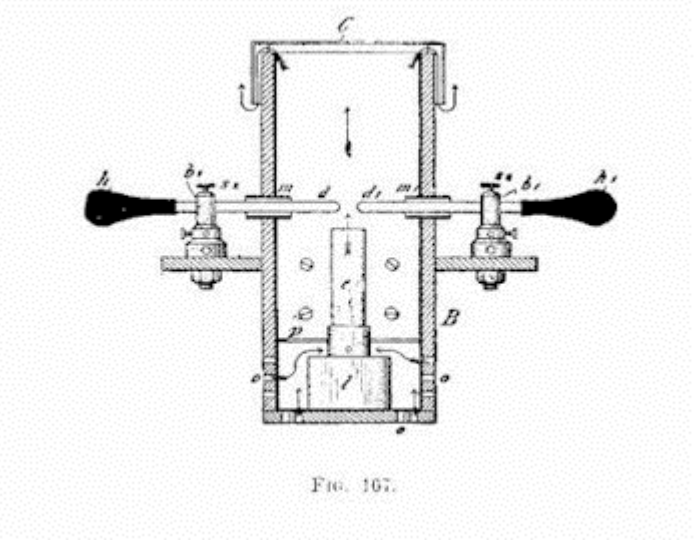

Fig. 167.

Figure 33.
The discharger working in an atmosphere, chiefly consisting of hydrogen, still further weakened by heat. The use of hydrogen in this connection has been claimed as a discovery and patented. Presented in Tesla's lectures before the Pranklin Institute and the National Electric Light Association. T.C. Martin book, Fig. 167. pp. 307-308.

In this form of break [Fig. 33], I changed the atmosphere in which the arc was operating. The atmosphere was mostly hydrogen, and with this device I performed my experiments before the Franklin Institute in Philadelphia and the National Electric Light Association in St. Louis. This has been used by Poulsen and it is now called the "Poulsen arc" and "Poulsen system." But, of course, there is no invention in it. I am on record with prior publications, and besides, the hydrogen does not have any other effect except that it lowers the tension under which the device can operate. It has the disadvantage of producing asymmetrical or distorted waves, and the impulses obtained are not best suited for tuning.

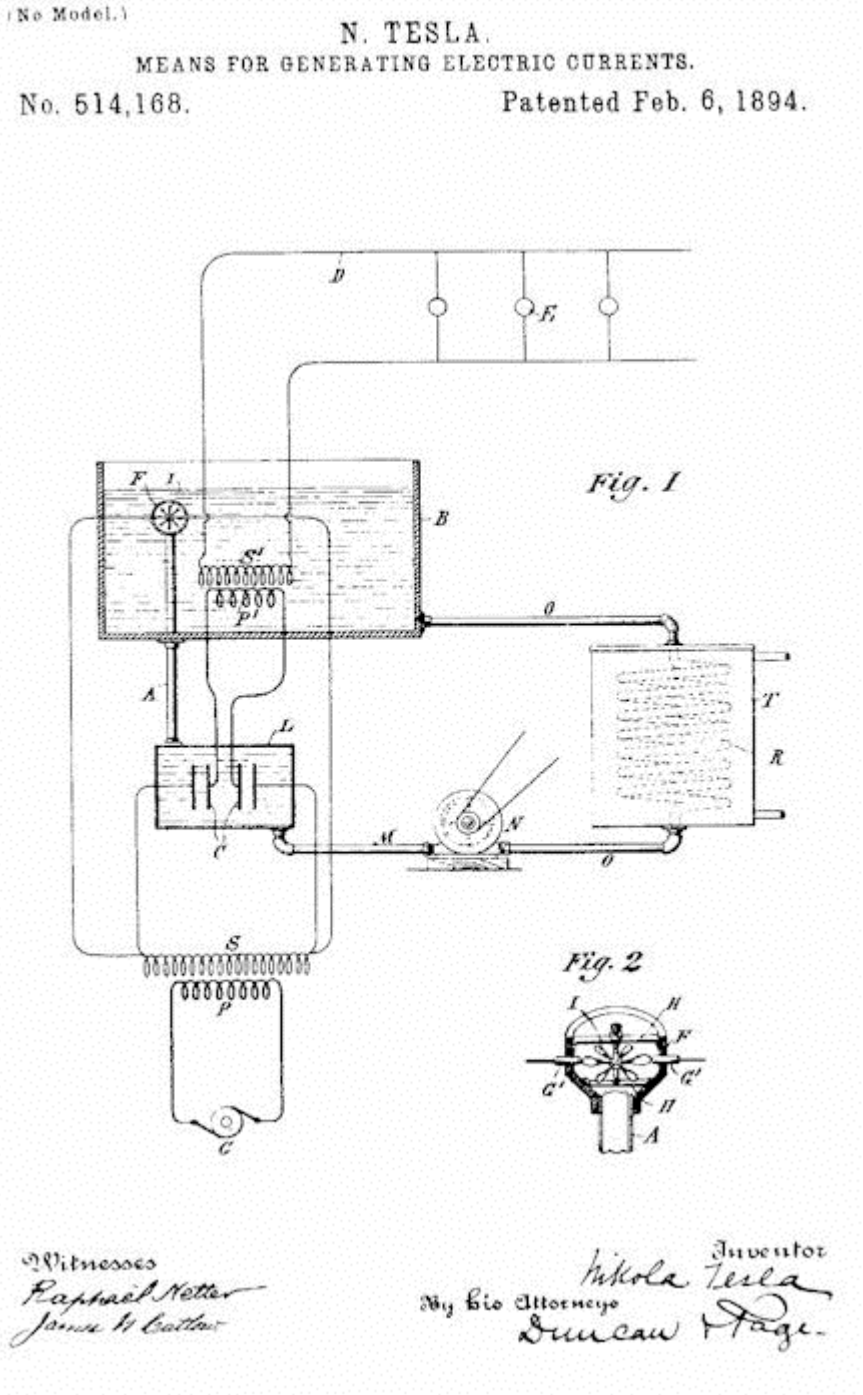

Figure 34.
Oscillatory apparatus with interrupter in oil. Exhibited in the Chicago Exposition of 1893 before Helmholtz. Described in U.S. Patent No. 514,168 of February 6. 1894. Application filed August 2, 1893.

This [Fig. 34] is the apparatus used in the Chicago Exposition of 1893, at which time I explained for the first time to Professor Helmholtz my plan for transmitting energy. After I had shown Professor Helmholtz and other scientific men there certain phenomena, he asked me,

"Now, what is all this intended for?"

I told him I was trying to develop an apparatus for transmitting energy without wire for telegraphy, telephony, and other purposes. When I explained to Professor Helmholtz the whole idea, I said,

"Excellency, do you think that my plan is realizable?"

He replied,

"Why, certainly it is, but first you must produce the apparatus."

I started then and there to produce the apparatus.

Counsel

Was that conversation at the the Chicago Exposition?

Tesla

Yes. It took place in a pavilion which was built especially for exhibiting my inventions and discoveries. I believe Professor Wedding was there and some other scientists whom I cannot remember now. I showed Professor Helmholtz my vacuum tubes and performed many other experiments.

Counsel

Will you describe this apparatus in a little more detail?

Tesla

The apparatus [Fig. 34], as you see, comprised primary and secondary coils immersed in a large tank of oil. The break was automatically effected by means of a turbine. The oil was circulated by a pump, and the current [i.e., stream flow] of oil drove the turbine which effected the make and break. Owing to the fact that the oil used was a very good insulator, rapidly flowing and of great dielectric strength, these make-and-break points were very close together, and the arcs extremely short. The effects were accordingly more intense. Here [T in Diag. 1 of Fig. 34] is a cooler through which the oil was circulated. The oil was forced through the gaps at great speed, and as it flowed out it was supplied again to the tank and the current driving the turbine.

Counsel

That device [Diag. 2 of Fig. 34] you call a turbine?

Tesla

Yes. It had vanes like those of a propeller and constituted a rotary break in the circuit.

Counsel

What was your prime source [of power]?

Tesla

The primary source was an alternator with a frequency of 133 cycles and, if I recollect rightly, the pressure [at the secondary] was about 20,000 volts. I may have had 10,000 volts. I am not sure what it was, but it must have been certainly from 10,000 to 20,000 volts -- within that range.

Counsel

I notice you have two sets of transformers in there marked S and S', have you not?

Tesla

This [S'] is my oscillatory circuit. That [S] is the transformer from which the condenser was charged. Here [at S] we had 20,000 volts, or whatever it was, from the commercial transformer and here [at S'] is my secondary which generated the high frequency currents. The rotary gap is shown in detail [Diag. 2 of Fig. 34].

I had a special reason for showing this. To meet that great man Helmholtz and other scientific men, and to bring before them for the first time the results of years of previous labor, was an important moment in my life -- particularly because Professor Helmholtz gave me the assurance himself that what I explained to him was realizable, provided that I could produce the apparatus. I was very much encouraged.

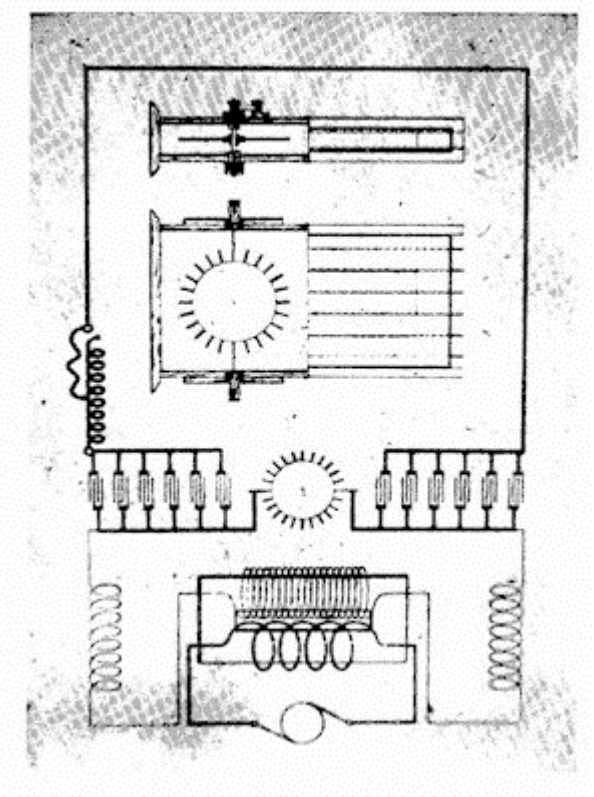

Figure 35.
Apparatus with mechanical break as installed on a large scale in the laboratory at South Fifth Avenue and subsequently at 46 East Houston Street. Described in U.S. Patent No. 645,576 of March 20, 1900. Application filed September 2, 1897.

This [Fig. 35] is the apparatus I had at 35 South Fifth Avenue and also Houston Street. It shows the whole arrangement as I had it for the demonstration of effects which I investigated.[*] This cable you see [square loop in top half of Fig. 35] is stretched around the hall. These are my condensers. There is the mechanically operated break, and that is a transformer charged from the generator. That is the way I had it for the production of current effects which were rather of damped character because, at that period, I used circuits of great activity which radiated rapidly. In the Houston Street laboratory, I could take in my hands a coil tuned to my body and collect 3/4 horsepower anywhere in the room without tangible connection, and I have often disillusioned my visitors in regard to such wonderful effects. Sometimes, I would produce flames shooting out from my head and run a motor in my hands, or light six or eight lamps. They could not understand these manifestations of energy and thought that it was a genuine transmission of power. I told them that these phenomena were wonderful, but that a system of transmission, based on the same principle, was absolutely worthless. It was a transmission by electromagnetic waves. The solution lay in a different direction. I am showing you this [diagram] simply as a typical form of apparatus of that period, and if you go over the literature of the present day you will find that the newest arrangements have nothing better to show.

Counsel

What was the make and break frequency that you got from that apparatus?

Tesla

It was 5,000, 6,000 -- sometimes higher still. I had two oppositely rotating discs which I will show you and with which I could have reached, probably, 15,000 or 18,000.

Counsel

What wave frequencies did you develop?

Tesla

I could operate from a few thousand up to a million per second, if I wanted.

Counsel

What did you actually use?

Tesla

In these demonstrations, which I showed these effects, these most powerful effects that were the sight of New York at that time, I operated with frequencies from 30,000 to 80,000. At that time I could pick up a wire, coil it up, and tell what the vibration would be, without any test, because I was experimenting day and night.

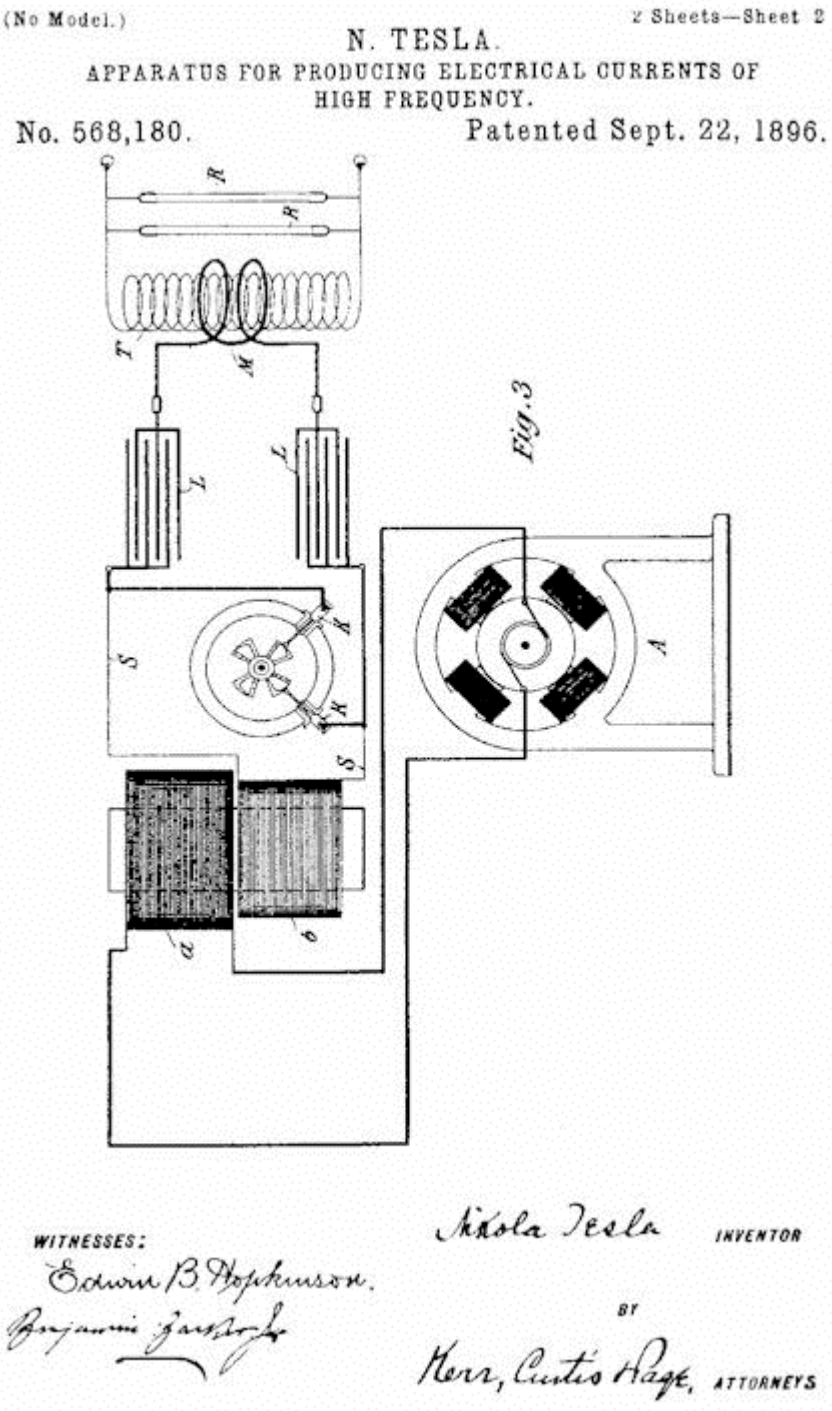

Figure 36.
Isochronous mechanical break used in the laboratory at 35 South Fifth Avenue. Described in U.S. Patent Nos. 568,179 and 568,180 of September 22, 1896. Applications filed July 6 and 9, 1896. (Diagram taken from Patent No. 568,180.)

This [Fig. 36] is a form of break which I developed in working with alternators. I recognized that it was of tremendous advantage to break at the peak of the wave. If I used just an ordinary break, it would make and break the current at low as well as high points of the wave. Of this apparatus I had two forms; one in which I drove the break right from the shaft of the dynamo and the other in which I drove it with an isochronous motor. Then, by a movement of these knobs (K K), I would make the adjustments so that the makes would occur exactly at the top of the wave. That is a form of break which is embodied in hundreds of patents and used now extensively.

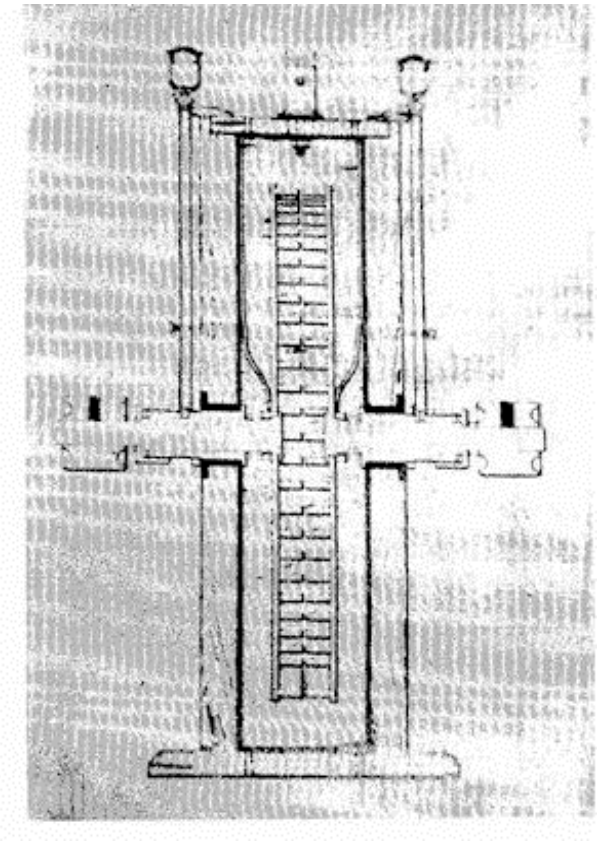

Figure 37.
Mechanical break with two oppositely rotating discs used for the purpose of increasing the number of breaks and alternating oscillations practically undamped. (Subsequently patented by others.)

Here [Fig. 37] I show an apparatus that was installed in the Houston Street laboratory prior to the other break because I wanted to get as high a number of impulses as possible. The drawing dates from the spring of 1896. It is a break with which I could reach from 15,000 to 18,000 interruptions per second. I used it very much until later I found it was not necessary. That is the innocent device which Marconi thought a great invention.

Counsel

This is also a rotary gap?

Tesla

Yes, and it consists of two discs of aluminum, with teeth of aluminum on the side. They were rotated by two motors in opposite directions, and as they rotated they alternately closed and opened the circuit. In some instances I used an uneven number of teeth on one and and even number on the other so that I could produce as many breaks as I desired. I will show you later an apparatus more perfect than this one, and of a different kind, in which I have 24 stationary contacts, and 25 rotating elements that established the contact and broke it, so that by one revolution I obtained 24 times 25, or 600 interruptions [per revolution].

Counsel

Whenever you say "the break", you mean "a spark gap"?

Tesla Yes; otherwise I use the term "circuit controller," preferably.

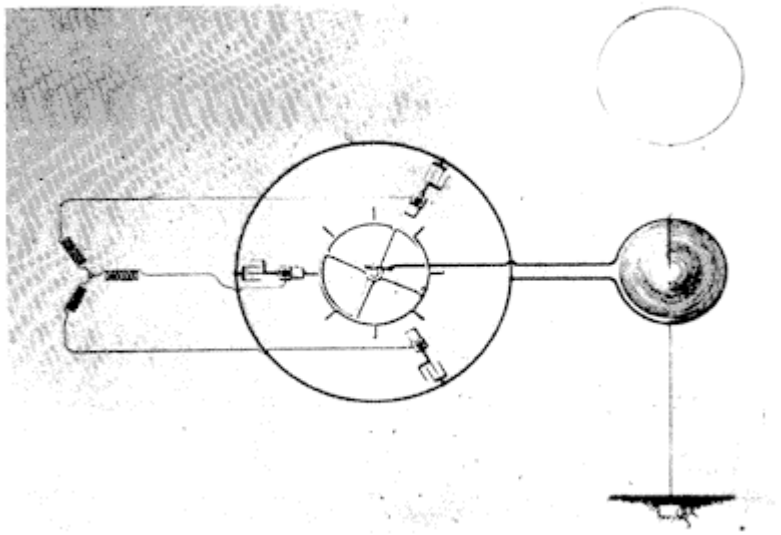

Figure 38.
Use of multi-phase generator with mechanical break. Experiments in the laboratory at 35 South Fifth Avenue and subsiquently.

This [Fig. 38] illustrates another development in a different direction. In order to increase the number of breaks, I employed currents of different phase. I had in my laboratory, permanently, a two-phase dynamo and could get phases between; that is, from two phases, 90 apart, I could obtain four phases, 45 apart. Here is an arrangement shown as I had it, working with three phases [60 apart, and could obtain six phases, 30 apart], and later on I had one with four phases [45 apart, and could obtain eight phases 22 1/2 apart]. You see, as I multiplied the number of the phases, I increased the number of the fundamental discharges.

Counsel

What is the date of this apparatus?

Tesla

This I employed already in the 35 South Fifth Avenue laboratory, because I remember that I gave entertainments to several scientific societies and it was then present there. I know on one occasion there was the Society of Architects, and another, the Electrotherapeutic Society, and then I had distinguished men like Mark Twain and Joseph Jefferson -- I gave them a demonstration which was published in Martin's article in the Century Magazine of April 1895, and I know that on these occasions I used a two-phase arrangement. Later on I made it four phase. That apparatus existed, therefore, prior to the destruction of my laboratory in 1895.

Counsel

Do you recall any publication in which this diagram was illustrated?

Tesla

I made no publication, and I vividly remember that when I installed my apparatus on Long Island I had an arrangement with four transformers and four phases 45 apart. After I had been using this apparatus there, several years afterwards, I ran across a patent, I believe held by the General Electric Company, describing precisely the same arrangement.[*] It was a similar experience as with that patent of Fessenden on the compressed air condenser. Any time I want to use these improvements all I need to do is to produce my records and that will settle the patents.

Counsel

When was that drawing [Fig. 38]?

Tesla

This is from an old patent drawing which was made by Mr. Netter.

Counsel

But that did not go to patent?

Tesla

No. I have hundreds of inventions that were to be patented but side-stepped. The expense was too great and I could not do it. This form of apparatus with two and four phases was used prior to the destruction of my laboratory in 1895, and it was installed on a large scale with four phases in my plant on Long Island with which I was to telephone around the world, but that is a long story.

Counsel

In that use you made of it at your laboratory, was that connected up as shown there [Fig. 38], to an antenna?

Tesla

I used the apparatus, yes, in connection with the antenna too, but this is from a patent drawing in which an antenna is shown; I mean, I used it in every connection. [Fig. 38] illustrates an antenna with my transmitting circuit, but the apparatus was used in all my work, in all my investigations.

Counsel

And when this was connected in and used in an antenna, did you use it as in other instances -- go off and listen to the notes which you received?

Tesla

Oh, certainly. But I remember that, besides this, I had different kinds of apparatus. Then I had a sensibly damped wave because at that time I still was laboring under the same difficulties as some do this day -- I had not learned how to produce a circuit which would give me, with very few fundamental impulses, a perfectly continuous wave. That came with the perfection of the devices. When I came to my experiments in Colorado, I could take my apparatus like that and get a continuous or undamped wave, almost without exception, between individual discharges.

Counsel

Speaking of your not having perfectly undamped waves at that time, you were referring to that character of circuit?

Tesla

Yes, but with another kind of circuit I could, of course. The advantage of this apparatus was the delivering of energy at short intervals whereby one could increase activity, and with this scheme I was able to perform all of those wonderful experiments which have been reprinted from time to time in the technical papers. I would take energy out of a circuit at rates of hundreds or thousands of horsepower. In Colorado, I reached 18 million horsepower activities, but that was always by this device: Energy stored in the condenser and discharged in an inconceivably small interval of time. You could not produce that activity with an undamped wave. The damped wave is of advantage because it gives you, with a generator of 1 kilowatt, an activity of 2,000, 3,000, 4,000, or 5,000 kilowatts; whereas, if you have a continuous or undamped wave, 1 kilowatt gives you only wave energy at the rate of 1 kilowatt and nothing more. That is the reason why the system with a quenched gap has become popular.

I have refined this so that I have been able to take energy out of engines by drawing on their momentum. For instance, if the engine is of 200 horsepower, I take the energy out for a minute interval of time, at a rate of 5,000 or 6,000 horsepower, then I store [it] in a condenser and discharge

the same at the rate of several millions of horsepower. That is how these wonderful effects are produced. The condenser is the most wonderful instrument, as I have stated in my writings, because it enables us to attain greater activities than are practical with explosives. There is no limit to the energy which you can develop with a condenser. There is a limit to the energy which you can develop with an explosive.

A common experiment, for instance, in my laboratory on Houston Street, was to pass through a coil energy at a rate of several thousand horsepower, put a piece of thick tinfoil on a stick, and approach it to that coil. The tinfoil would melt, and would not only melt, but while it was still in that form, it would be evaporated and the whole process took place in so small an interval of time that it was like a cannon shot. Instantly I put it there, there was an explosion. That was a striking experiment. It simply showed the power of the condenser, and at that time I was so reckless that in order to demonstrate to my visitors that my theories were correct, I would stick my head into that coil and I was not hurt; but, I would not do it now.

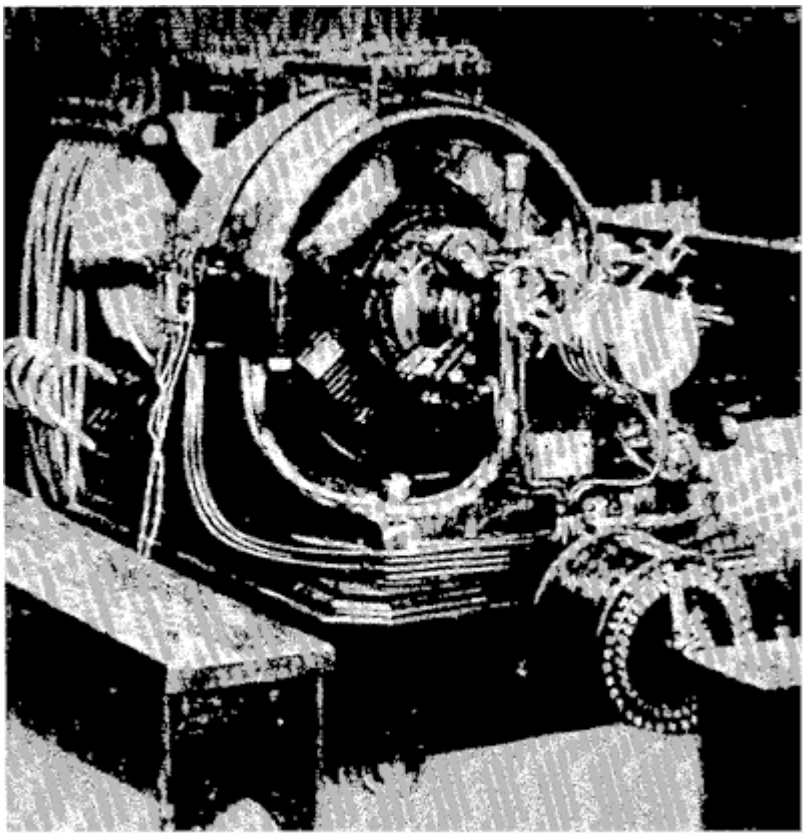

Figure 39
Apparatus furnishing direct currents of high tension, producing undamped electrical oscillations of high frequency. (This is also shown in [Fig. 27]). Apparatus built in 1895.

[Fig. 39] shows a four-phase machine which was furnished me by the Westinghouse Electric Company at the close of 1895. My laboratory burned out in May, and I urged my friend, Mr. Albert Schmidt, who was the Superintendent, to give me this alternator as soon as possible. He worked day and night until he got it out, and he certainly did notable work because while the machine was rated at 30 horsepower, I have run it at 150 horsepower.

By the way, and this is a painful reflection, it was Schmidt and I who developed this type of frame and this general arrangement which is universally adopted now -- a base, with the magnets cast below, split at the center line, and a corresponding upper part. That is now used everywhere. I remember years ago, some of my friends, Messrs. Crocker and Wheeler, started with those long magnets and I told them, "The sooner you throw these away and adopt this construction, the better it will be for you." They have got it now; it is all right.

Counsel

How is this machine [Fig. 39] shown in connection with that?

Tesla

This dynamo [Fig. 39], you see, is a two-phase machine; that is, I develop from it currents of two-phase. Now, there are four transformers. You see them down here [lower left of Fig. 39] that furnish the primary energy. From these two phases I develop four phases. [However,] this involves something else which I have referred to before; namely, an arrangement which enables me to produce from these alternating currents direct currents and undamped -- absolutely undamped -- isochronous oscillations of any period I like.

This is accomplished in the following manner: The secondaries of the four transformers could each develop 44,000 volts. They were specially built for me by the Westinghouse Company. They could, however, be connected in such a way that each would give 11,000 volts, and then I would take these 11,000 volts and these four phases and commutate them by a commutator consisting of aluminum plates, or aluminum segments, which were rotated in synchronism with the alternator. Then I obtained a continuous pressure; that is, direct current of a tension of 44,000 volts, and with these 44,000 volts I charged my condensers. Then by discharging the condensers, either through a stationary gap or through a gap with a mechanical interrupter, I obtained any frequency I desired, and perfectly undamped waves. This arrangement was installed in 1901 in my wireless plant at Long Island, with which I was to telephone around the world.

Counsel

Who built that machine?

Tesla

The Westinghouse Company, [under direction of] Mr. Albert Schmidt, Superintendent. It was especially built for me and furnished to my laboratory on Houston Street.

While I was with the Westinghouse Company, I did two things in addition to bringing my motors to them. I had discovered that Bessemer steel was a much better material for transformers and motors than the soft iron which was previously used. When I came to Pittsburgh, my motors gave results which their motors could not at first produce, and I told them that I had used Bessemer steel. I discovered, in following up the analysis of the steels which were used, that the Bessemer was not steel but really soft iron. The Westinghouse people then adopted my suggestion. At first, Mr. Shallenberger and other electricians there objected very much, but I persuaded them and when the transformers were built we found that we could get 2 1/2 times the output we got before.

The Westinghouse people kept it a secret for a long time and no one understood how they could make such fine transformers, but all they did was to use the Bessemer steel, on my suggestion, instead of the soft iron the General Electric and other people used. Mr. Westinghouse especially requested me to join efforts with Mr. Schmidt and improve the design of his machines, and we did so. We evolved this design, introduced the ready-made coils, which are pressed on the armature, and other improvements. I took a couple of patents out with Mr. Schmidt, and Mr. Westinghouse was very nice about it. I think he compensated me with $10,000, or something like that, for my suggestions.

Counsel

You have spoken of the use of that machine at Houston Street. In what way was it used?

Tesla

I used this machine, as I said, either to produce alter- nating currents and then interrupt them with a mechanical break at the high peaks of the wave; or, I used alternating currents and interrupted them with an independent rotating break having a great number of teeth. Or, I generated continuous currents by commutating the high tension alternating currents of the transformer. At that time I had two transformers from which I obtained a constant pressure, charged the condenser, and produced

undamped waves of any frequency I wanted. As to the machine here [Fig. 39], that is the way it was arranged. It was for the generation of continuous electromotive force and production of undamped waves -- from 1895 and on.

Counsel

What sort of apparatus was it connected up to for the purpose of absorbing these waves?

Tesla

It was the same as shown here [Fig. 38]. It was con- nected to the condensers, and these condensers were discharged through a primary which excited the secondary; the antenna was included in the secondary. At other times we discharged the condensers directly so that I could use the antenna without the secondary.

Counsel

In the same way did you note the operation of these waves?

Tesla

We did, of course, only in most cases the instrument of reception was different. When I operated with these continuous, or undamped, waves, generated in this way, I usually went to high frequencies. I did operate [at] a very few thousand, but that gave me a smaller output. Such a machine you have to operate at high frequencies to get power.

Counsel

What do you mean by high frequencies?

Tesla

I mean frequencies of 30,000, 40,000, 50,000, or something like that.

Counsel

And by means of that machine, you put undamped waves of frequency about 50,000 into that antenna at Houston Street in 1895?

Tesla

No, not in 1895. Late in 1895 the machine was furnished and I began to operate in early 1896. That is when I began to operate.

Counsel

Then you did this, that I speak of, in 1896?

Tesla

Yes, from 1896 to 1899, right along.

Counsel

When you used frequencies like that in your antenna, was your antenna tuned or untuned?

Tesla

I could not use it untuned. That would be absurd.

Counsel

What form of device did you use, and where did you use it, for noting the generation of these

oscillations or waves in the antenna?

Tesla

I suppose I had hundreds of devices, but the first device that I used, and it was very successful, was an improvement on the bolometer. I met Professor Langley in 1892 at the Royal Institution. He said to me, after I had delivered a lecture, that they were all proud of me. I spoke to him of the bolometer, and remarked that it was a beautiful instrument. I then said,

"Professor Langley, I have a suggestion for making an improvement in the bolometer, if you will embody it in the principle."

I explained to him how the bolometer could be improved. Professor Langley was very much interested and wrote in his notebook what I suggested. I used what I have termed a small-mass resistance, but of much smaller mass than in the bolometer of Langley, and of much smaller mass than that of any of the devices which have been recorded in patents issued since. Those are clumsy things. I used masses that were not a millionth of the smallest mass described in any of the patents, or in the publications. With such an instrument, I operated, for instance, in West Point -- I received signals from my laboratory on Houston Street in West Point.

Counsel

This was then the machine that you used when working with West Point?

Tesla

I operated once or twice with it at that distance, but usually as I was investigating in the city. My work at that time was to prepare for the development of a commercial plant, and with me the question was not to transmit signals, but to see what intensity I could get to put me in position to calculate out my apparatus, the dimensions and the forms, before I began the undertaking. It was nothing but preparatory work for the construction of a commercial plant, and I demonstrated its practicability through my experiments, a plant which was to accomplish much more than all others.

Counsel

What was the horsepower activity in the oscillating circuits when you used this machine?

Tesla

Usually something like 50 horsepower, and I would get, I should say, approximately 30 horsepower in the antenna; that is, I would get 30 horsepower in the oscillating circuit.

Counsel

I understood a little while ago when you made the statement of using several thousand horsepower put into a condenser, you could take out of the condenser a million horsepower. I wondered if you got the same condition with this machine.

Tesla

Yes; I charged the condenser with 40,000 volts. When it was charged full, I discharged it suddenly, through a short circuit which gave me a very rapid rate of oscillation. Let us suppose that I had stored in the condenser 10 watts. Then, for such a wave there is a flux of energy of (4 x 104)2, and this is multiplied by the frequency of 100,000. You see, it may go into thousands or millions of horsepower.

Counsel

What I wanted to get at was, did that depend upon the suddenness of the discharge?

Tesla

Yes. It is merely the electrical analogue of a pile driver or a hammer. You accumulate energy

through a long distance and then you deliver it with a tremendous suddenness. The distance through which the mass moves is small -- the pressure immense.

Counsel

Did you find that that was the best condition for transmitting energy without the use of wire?

Tesla

No, I did not use that method when I was transmitting energy. I used it only in the production of those freaks for which I have been called a magician. If I had used merely undamped waves, I would have been an ordinary electrician like everybody else.

Counsel

You have referred to some delicate receiving instruments. Did you have any trouble with those burning out on account of static?

Tesla

My dear sir, I burned out so many instruments before I discovered what was the matter with them! They burned out instantly until I learned how to make them so that they could not burn out. Yes, that was a great trouble in the beginning.

Counsel

Did you succeed in getting them so they would not burn out?

Tesla

Yes. If lightning struck close by, it would not burn out my instrument that has a millionth of the smallest mass used in the instruments of others.

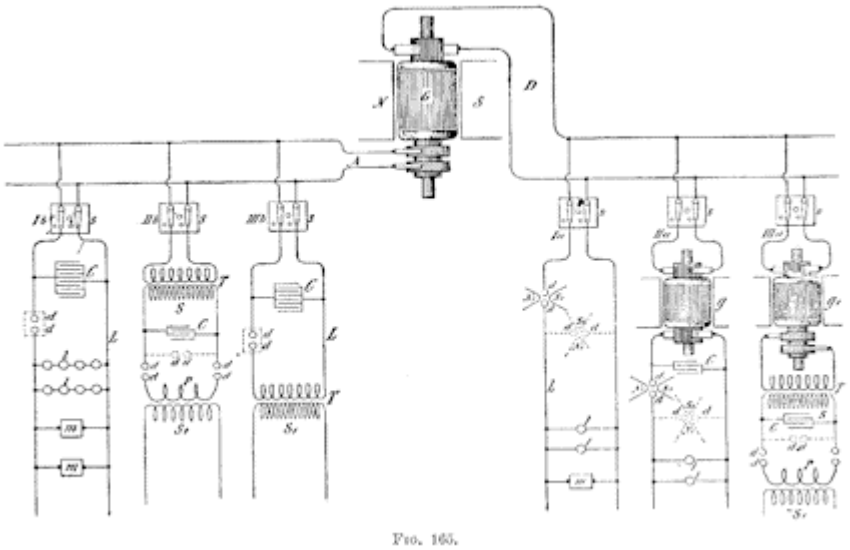

FIG. 165.

Figure 40.
Apparatus and method of conversion by condenser discharges applicable to both alternating and direct currents. Described in lectures before the Franklin Institute and the National Electric Light Association early in 1893. Illustrated in T.C. Martin book, Fig. 165, pp. 302-317.

This [Fig. 40] is a systematic representation of the various ways which I gave in my lecture before the Franklin Institute and the National Electric Light Association, embodying the general arrangements for the obtainment of continuous waves, undamped or damped waves, from direct and alternating current supply. On the one side [right] you have direct, on the other side alternating current supply. Some electricians have had difficulties in operating some of this apparatus. I had

none. I can take an ordinary circuit of 50 volts and produce from it absolutely undamped oscillations and never have the slightest difficulty about it.

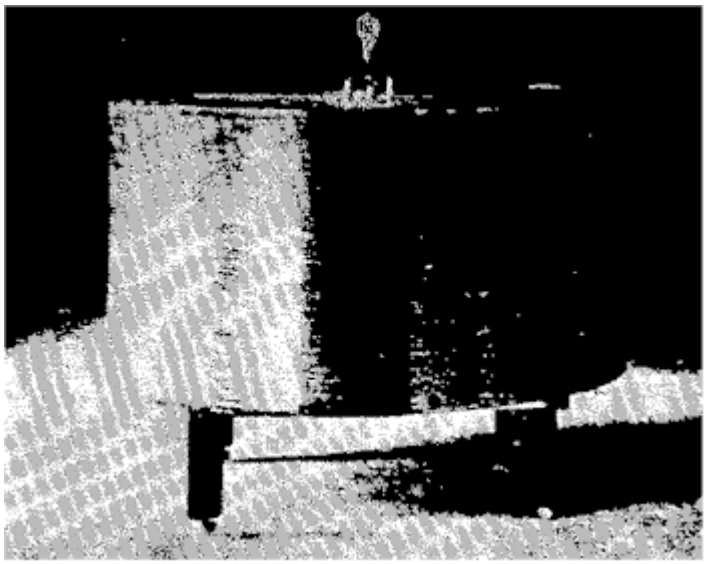

Figure 41.
Illustrating one of the early experiments with a tuned transformer in the laboratory at South Fifth Avenue.

Now I come to a few pieces of apparatus which I used in the Houston Street laboratory and the South Fifth Avenue laboratory. I have here [Fig. 41] what you might call a tuning coil. I employed usually another secondary and had my condensers on the table. You see one of the coils in action. This is a tuned circuit which responds to electromagnetic waves which are sent through the room.

Counsel

This is being used as a receiver of waves?

Tesla

Yes.

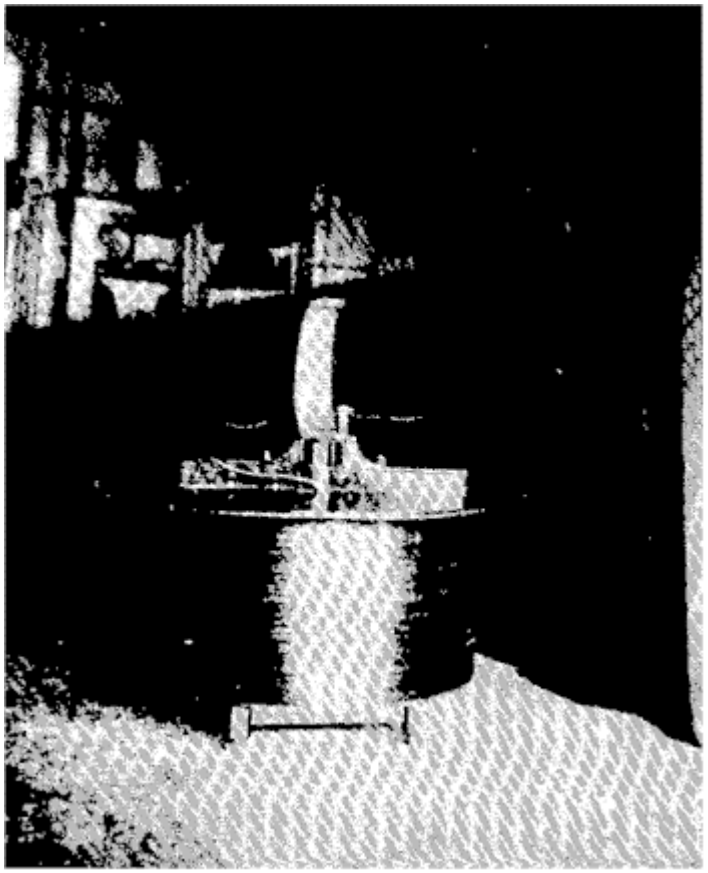

Figure 42.
Another illustration of one of the early experiments with a tuned transformer in the laboratory at South Fifth Avenue. (Article by T.C. Martin ["Tesla's Oscillator and Other Inventions"], Century Magazine, April 1895, Fig. 9, p. 926.)

This [instrument shown in Fig. 42] was used in the laboratory on South Fifth Avenue. Here [large circular disc lying on top of coil] is the tuning table with the condensers, a thick primary, and another secondary wire. Sometimes I would operate with two vibrations and I would tune the first circuit to one and the second to the other. Here [referring to cabinets in back of room] you see some of my historical apparatus. Professor Fairfield Osborn[*] came once to my laboratory and said to me, "Why on earth do you keep it in this laboratory?" I had all of this apparatus, 400 pieces, absolutely priceless, and he offered to take it over to the Museum. But I did not heed his advice, and it is gone.

Counsel

Where were the waves sent from?

Tesla

The whole room was energized by electromagnetic waves and the receiver responded at any place in the hall. The hall was bigger than this room [shown in Fig. 42], twice as long, and anywhere the intensity of action was the same. These discs [vertical, on top of tuning table] were, I think, about 14 or 15 inches in diameter, and you could see the streamers [shown as white between the discs] anywhere in the room. In a hall twice as long as this, wherever I placed the instrument, it would respond to the electromagnetic waves.

Counsel

In this particular instance you are speaking of, the waves were generated right there at 35 South Fifth Avenue?

Tesla

Yes.

Counsel

Was that the apparatus in which you had the primaries running entirely around the room?

Tesla

Yes. This was shown to many people and societies.

This [Fig. 43] shows the first single step I made toward the evolution of an apparatus which, given primary oscillations, will transform them into oscillations capable of penetrating the medium. That experiment, which was marvelous at the time it was performed, was shown for the first time in 1894. I remember the incident perfectly. I called Mr. Edward Adams, the banker, to come and see it, and he was the first man to observe it and to hear my explanation of what it meant.

Figure 43.
Apparatus in action illustrating the first step in the evolution of the magnifying transmitter in the laboratory at 35 South Fifth Avenue. (Article by T.C. Martin ["Tesla's Oscillator and Other Inventions"], Century Magazine, April 1895, Fig. 15, p. 932.)

This coil, which I have subsequently shown in my patents Nos. 645,576 and 649,621, in the form of a spiral, was, as you see, [earlier] in the form of a cone. The idea was to put the coil, with reference to the primary, in an inductive connection which was not close -- we call it now a loose coupling -- but free to permit a great resonant rise. That was the first single step, as I say, toward the evolution of an invention which I have called my "magnifying transmitter." That means, a circuit connected to ground and to the antenna, of a tremendous electromagnetic momentum and small damping factor, with all the conditions so determined that an immense accumulation of electrical energy can take place.

It was along this line that I finally arrived at the results described in my article in the Century

Magazine of June 1900. [Fig. 43] shows an alternator; not the alternator that was furnished for my laboratory on Houston Street -- that was another one, [but] at 35 South Fifth Avenue [and] operated on the same principle. Here [lower left] are the condensers, primary, and all the rest. The discharge there was 5 or 6 feet, comparatively small to what I subsequently obtained. I have produced discharges of 100 feet, and could produce some of 1,000 feet if necessary, with the greatest facility.

Counsel

Mr. Tesla, at that point, what did you mean by electro-magnetic momentum?

Tesla

I mean that you have to have in the circuit, inertia. You have to have a large self-inductance in order that you may accomplish two things: First, a comparatively low frequency, which will reduce the radiation of the electromagnetic waves to a comparatively small value, and second, a great resonant effect. That is not possible in an antenna, for instance, of large capacity and small self-inductance. A large capacity and small self-inductance is the poorest kind of circuit which can be constructed; it gives a very small resonant effect. That was the reason why in my experiments in Colorado the energies were 1,000 times greater than in the present antennae.

Counsel

You say the energy was 1,000 times greater. Do you mean that the voltage was increased, or the current, or both?

Tesla

Yes [both]. To be more explicit, I take a very large self-inductance and a comparatively small capacity, which I have constructed in a certain way so that the electricity cannot leak out. I thus obtain a low frequency; but, as you know, the electromagnetic radiation is proportionate to the square root of the capacity divided by the self-induction. I do not permit the energy to go out; I accumulate in that circuit a tremendous energy. When the high potential is attained, if I want to give off electromagnetic waves, I do so, but I prefer to reduce those waves in quantity and pass a current into the earth, because electromagnetic wave energy is not recoverable while that [earth] current is entirely recoverable, being the energy stored in an elastic system.

Counsel

What elastic system do you refer to?

Tesla

I mean this: If you pass a current into a circuit with large self-induction, and no radiation takes place, and you have a low resistance, there is no possibility of this energy getting out into space; therefore, the impressed impulses accumulate.

Counsel

Let's see if I understand this correctly. If you have radiation or electromagnetic waves going from your system, the energy is wasted?

Tesla

Absolutely wasted. From my circuit you can get either electromagnetic waves, 90 percent of electromagnetic waves if you like, and 10 percent in the current energy that passes through the earth. Or, you can reverse the process and get 10 percent of the energy in electromagnetic waves and 90 percent in energy of the current that passes through the earth.

It is just like this: I have invented a knife. The knife can cut with the sharp edge. I tell the man who applies my invention, you must cut with the sharp edge. I know perfectly well you can cut butter with the blunt edge, but my knife is not intended for this. You must not make the antenna give off 90 percent in electromagnetic and 10 percent in current waves, because the electromagnetic waves are

lost by the time you are a few arcs around the planet, while the current travels to the uttermost distance of the globe and can be recovered.

This view, by the way, is now confirmed. Note, for instance, the mathematical treatise of Sommerfeld,[*] who shows that my theory is correct, that I was right in my explanations of the phenomena, and that the profession was completely misled. This is the reason why these followers of mine in high frequency currents have made a mistake. They wanted to make high frequency alternators of 200,000 cycles with the idea that they would produce electromagnetic waves, 90 percent in electromagnetic waves and the rest in current energy. I only used low alternations, and I produced 90 percent in current energy and only 10 percent in electromagnetic waves, which are wasted, and that is why I got my results. . . .

You see, the apparatus which I have devised was an apparatus enabling one to produce tremendous differences of potential and currents in an antenna circuit. These requirements must be fulfilled, whether you transmit by currents of conduction, or whether you transmit by electromagnetic waves. You want high potential currents, you want a great amount of vibratory energy; but you can graduate this vibratory energy. By proper design and choice of wave lengths, you can arrange it so that you get, for instance, 5 percent in these electromagnetic waves and 95 percent in the current that goes through the earth. That is what I am doing. Or you can get, as these radio men, 95 percent in the energy of electromagnetic waves and only 5 percent in the energy of the current. . . . The apparatus is suitable for one or the other method. I am not producing radiation with my system; I am suppressing electromagnetic waves. . . .In my system, you should free yourself of the idea that there is radiation, that the energy is radiated. It is not radiated; it is conserved. . . .

Copyright 2000 Twenty First Century Books
All Rights Reserved

The Tesla Roadster Battery System

Tesla Motors

August 16, 2006

By Gene Berdichevsky, Kurt Kelty, JB Straubel and Erik Toomre

Summary

This paper provides details about the design of the Tesla Roadster's lithium-ion (Li-ion) battery pack (otherwise known as the ESS, or Energy Storage System) with a particular focus on the multiple safety systems, both passive and active, that are incorporated into the pack. This battery pack has been under development and refinement for over three years and is the cornerstone of the Tesla Roadster. The high level of redundancy and multiple layers of protection in the Tesla Roadster battery pack have culminated in the safest large Li-ion battery that we or many of the experts in the field, with whom we've consulted, have seen.

Background

The battery pack of the Tesla Roadster electric vehicle is one of the largest and technically most advanced Li-ion battery packs in the world. It is capable of delivering enough power to accelerate the Tesla Roadster from 0 to 60 mph in about 4 seconds. Meanwhile, the battery stores enough energy for the vehicle to travel more than 200 miles (based on EPA city/highway cycle) without recharging, something no production electric vehicle in history can claim.

Designed to use commodity, 18650 form-factor, Li-ion cells, the Tesla Roadster battery draws on the progress made in Li-ion batteries over the past 15 years. Under the market pull of consumer electronics products, energy and power densities have increased while cost has dropped making Li-ion the choice for an electric vehicle. In the past, to achieve such tremendous range for an electric vehicle it would need to carry more than a thousand kilograms of nickel metal hydride batteries. Physically large and heavy, such a car could never achieve the acceleration and handling performance that the Tesla Roadster has achieved.

Due to their high energy density, Li-ion batteries have become the technology of choice for laptops, cell phones, and many other portable applications. Precisely because they have all this energy stored in a small space, Li-ion batteries can be dangerous if not handled properly. In fact, there have been several cases of Li-ion batteries going into thermal runaway in laptop applications leading to recalls by Dell, Apple, IBM, and other manufacturers. However, even with this high energy density, the Li-ion batteries in the Tesla Roadster only store the energy equivalent of about 8 liters of gasoline; a very small amount of energy for a typical vehicle. The pack operates at a nominal 375 volts, stores about 53 kilowatt hours of electric energy, and delivers up to 200 kilowatts of electric power. The power and energy capabilities of the pack make it essential that safety be considered a primary criterion in the pack's design and architecture.

 Copyright © 2007 Tesla Motors

Fundamentally, cells within the pack need to be protected from adverse situations that could be electrical, mechanical, or thermal in nature. The entire design must also be fault tolerant to reasonably expected manufacturing defects in the cells and in the pack itself. In the body of the paper that follows, we discuss aspects of the Tesla Roadster battery pack design that address these concerns. However, this is not a complete summary of all the battery pack safety features, since some aspects of our design and implementation are proprietary and/or patent pending.

Picking a Cell Design and Supplier

We started our design by purposely picking a small form factor battery cell. This cell is called the 18650 because of its measurements of 18mm diameter by 65mm length (i.e., just a bit larger than a AA battery). Due to its small size, the cell contains a limited amount of energy. If a failure event occurs with this cell, the effect will be much less than that expected from a cell many times larger. Billions of 18650 cells are made each year. Though the chance of a safety event in a laptop is small, the number of safety incidents involving Li-ion batteries is rising each year because there are so many more devices using small and powerful power sources.

The Tesla Roadster battery pack is comprised of about 6800 of these 18650 cells, and the entire pack has a mass of about 450kg.

The engineers at Tesla Motors selected cells from reputable Fortune 500 battery suppliers that have each produced billions of safe, reliable, Li-ion batteries. All the cell manufacturers that Tesla Motors has considered invest a great deal of money and engineering resources to minimize manufacturing defects within their cells. Overall, the selection criteria used by Tesla Motors included multiple factors, confirmed by extensive internal and external testing, that directly relate to the cell's overall safety in the Tesla Roadster.

Design Safety Features: Cell Level

Since the 18650 cell is the fundamental building block of the battery pack, it is important that it be fault tolerant. The cells used in the Tesla Roadster all have an internal positive temperature coefficient (PTC) current limiting device. The primary role of this PTC is to limit short circuit current on an individual cell level. It is important to note that this device is completely passive and functions without any inputs from the rest of the battery pack systems.

A second level of protection is provided by the Current Interrupt Device (CID). Each battery cell used in the Tesla Roadster has an internal CID. These devices serve to protect the cell from excessive internal pressure. In such a case the CID will break and electrically disconnect the cell. High internal pressure is generally caused by over-temperature or other failures that then result in over-temperature.

The cells also incorporate numerous mechanical, thermal, and chemical factors that contribute to their safety in the Tesla Roadster. For example, cells used in the Tesla Roadster battery pack are all packaged in steel cans. This feature offers multiple safety benefits. From a mechanical standpoint, the steel case of each cell provides structural rigidity and strength. This helps

 Copyright © 2007 Tesla Motors

dissipate extreme mechanical loading as well as providing protection against objects penetrating or compressing a cell and thereby shorting it. From a thermal standpoint, the steel case also offers good thermal conductivity. The dissipation of heat from a cell both extends battery life and helps maintain the pack at an even temperature. From a chemical and materials standpoint, the materials used in the cell's construction can greatly impact the flammability and initiation temperature of thermal runaway. Tesla Motors has chosen a very safe cell with great attention paid to both these factors.

Design Safety Features: Battery Pack Level

Due to the size, weight, and cost of the Tesla Roadster battery pack, we have the opportunity to add many more safety features than can be contained in a laptop battery pack. Overall, some of these battery pack safety features are active and others are passive. Some are mechanical and others are electrical. For example, the battery pack is controlled internally by several embedded microprocessors that operate both when the battery pack is installed in the car, and when the pack is being transported. An example of a passive safety feature is the selection of Aluminum for our battery enclosure instead of plastic as in all laptop packs. The Aluminum provides greater structural strength in case of mechanical abuse tolerance and does not easily melt or burn. Collectively, the high levels of redundancy and layers of protection culminate in the safest large battery seen by the experts in the field with whom we've consulted.

Architecturally, the battery pack is comprised of 11 battery modules (otherwise referred to as "Sheets"), a main control and logic PCB (printed circuit board), and a 12V DC-DC power supply. Each of the 11 modules carries a monitoring PCB (with its own microprocessor) that communicates with the rest of the vehicle microcontrollers, broadcasting the voltage and temperature measurements of its module over a standard CAN bus.

The method by which the cells are electrically connected together can have a huge impact (positive or adverse) on the overall pack safety. In the Tesla Roadster battery pack, each of the thousands of cells has two fuses (one each for the cell's anode and cathode). This results in tremendous safety benefits since a cell becomes electrically separated from the rest of the pack if either of its fuses blow (generally by a short circuit). In addition to cell fuses, each of the 11 battery modules has its own main fuse that guards against a short circuit across the complete module.

The picture below (Figure 1) shows the complete battery pack on a cart. Note the tubes and manifold extending out of the battery pack at its lower long edge. These are used to circulate cooling fluid (a 50/50 mix of water and glycol) throughout the pack via sealed fluid paths. This enables us to keep the cells thermally balanced. This extends the life of the battery pack and also has numerous safety benefits.

 Copyright © 2007 Tesla Motors

Figure 1 – Tesla Roadster battery pack

This cooling system design is especially effective because we have chosen to combine thousands of small cells rather than several large ones to build an ESS, dramatically increasing the surface to volume ratio. For example, with seven thousand 18650 cells the surface area is roughly 27 square meters. If there were an imaginary set of 20 much larger cube-shaped cells that enclosed the same volume, the surface area would be only 3.5 square meters, more than seven times smaller. Surface area is essential to cooling batteries since the surface is where heat is removed; more is better. Also, because of their small size, each cell is able to quickly redistribute heat within and shed heat to the ambient environment making it essentially isothermal. This cooling architecture avoids “hot spots” which can lead to failures in large battery modules.

The multiple microprocessors within the ESS communicate via a CAN Bus, a robust automotive communication protocol. During normal vehicle operation and storage, the battery logic board communicates with the vehicle to initiate battery cooling, report state of charge, and signal battery faults. A fundamental element of the vehicle and battery pack safety design is the ability to electrically disconnect the high voltage of the pack from the rest of the car (by controlling two high voltage contactors) if any of a number of adverse conditions are detected.

The microprocessors, logic circuitry and sensors are continually monitoring voltages, currents and temperatures within the pack. These sensors also monitor inertia acceleration (e.g. to detect a crash) and vehicle orientation to the ground (e.g. to detect a rollover). Our battery packs also include smoke, humidity, and moisture sensors. If certain sensors exceed the specified range, then the high voltage contactors will immediately (within milliseconds) disconnect the high voltage of the battery pack from the car. In fact, the contactors are only closed (connected) when commanded and energized to do so. Without the proper commands these contactors will open.

In more severe fault conditions such as a vehicle collision, active protection systems including the logic board could fail due to damage. Therefore, the battery pack design incorporates an array of passive safety features as well. The passive design improves the robustness of the battery pack, particularly against mechanical damage and potential foreign object penetration of the battery pack.

Copyright © 2007 Tesla Motors

None of the Tesla Roadster's high voltage systems are accessible to accidental contact outside their protective enclosures and jacketed cables. Only with special tools can someone gain access to any high-voltage components. Our high-voltage systems are enclosed, labeled, and color-coded with markings that service technicians and emergency responders already understand.

Finally, the battery pack enclosure is designed to contain all the battery modules, fuses, bus bars, and safety circuitry of the system. The enclosure is electrically isolated from the battery pack and prevents users from directly accessing any high voltage connections. The enclosure is also designed to withstand substantial abuse in the vehicle, including collision, while maintaining the integrity of the battery modules and circuitry inside.

Testing

Upon completion of our design, we collaborated with an outside firm known for expertise in lithium-ion batteries to perform hundreds of tests to validate the abuse tolerance and effectiveness of our design.

We have performed further tests including SAE (Society of Automotive Engineers) shock and vibration, crush, and vehicle collision testing. Additionally, the United Nations (UN) imposes strict rules regarding the transport of lithium-ion batteries. Tesla Motors will not be able to sell and deliver cars to its customers unless the production battery pack has met rigorous testing standards set by the UN or substitute testing agreed to by the United States Department of Transportation. Finally, we have passed all required tests from the Federal Motor Vehicle Safety Standards (FMVSS). This involves crashing of complete cars with functional battery packs in them.

Copyright © 2007 Tesla Motors

TESLA'S BIG MISTAKE?

Sept 1999 William Beaty

While experimenting with a long, thin Secondary coil from Tesla Coil, I suddenly connected up several things in my mind which had been separate up to that moment. After years of messing with Tesla Coils, I finally see what Tesla was up to with single wire transmission, with resonant coils, and with longitudinal waves. See if the following doesn't make sense.

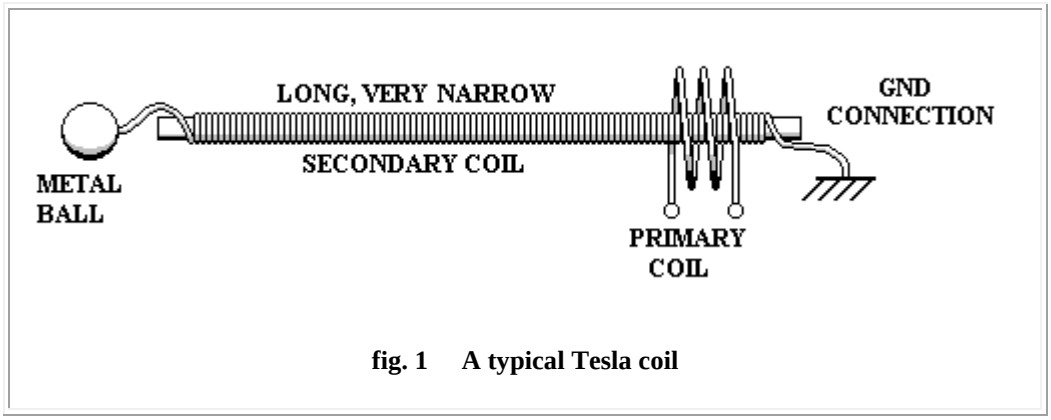

fig. 1 A typical Tesla coil

If we wrap a single-layer coil of wire upon a very long plastic tube, we have a Tesla resonator as in Fig 1. In essence, this is an an electrical transmission line. We can inject AC into one end using a little primary coil wrapped around. Now examine Fig 2 below. We've placed a *second* "primary coil" at the far end of the long coil. This second coil acts as a "receive coil," and will collect the energy we had injected into the "transmit coil" at the other end. Since our long thin coil is actually a single piece of wire, we've managed to send electrical energy along a *single wire.* There is no electric circuit involved! This only can work because the long, thin coil will support slowly-moving electromagnetic waves, and the electron-sea within the metal of this coil behaves as if it's become compressible.

Now we put a metal sphere on either end to prevent corona from spewing out of the dangling wire tips, and we've built a simple electrical power system. Inject some high-freq AC power into the first "primary coil", and the same AC power comes out of the second "primary coil" at the far end. If we choose the correct value of load resistor for the "receive" coil, then all of the electromagnetic energy flowing along the long thin secondary will be absorbed by the receive coil without reflecting.

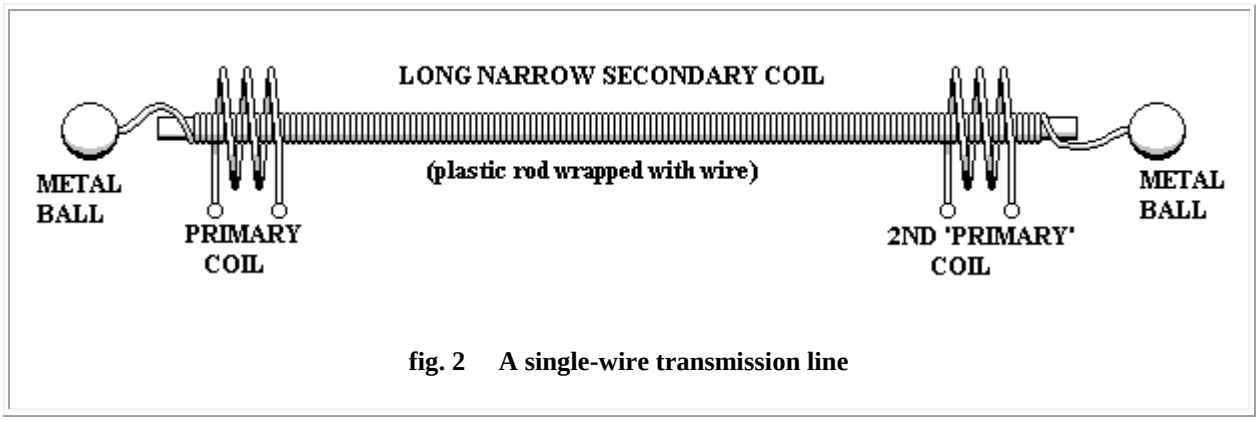

fig. 2 A single-wire transmission line

This is the infamous *single wire* transmission line. It apparantly uses *longitudinal waves*! However, there is nothing crackpot about it, since it obeys conventional physics: the propagating electric and magnetic fields are at 90 degrees to each other. Successive globs of positive and negative charge-imbalance are moving along the coil, and these globs/waves are linked to each other via the surrounding EM fields. The EM fields are transverse. And the only thing which acts like a "longitudinal" wave is the density of free electrons in the wire. Is this crazy stuff? Nope. All circuits have longitudinal waves in their charge density. It's not much difference than a coax

cable. Within a normal piece of coax, the electrons of the metal move as part of a compression wave, even though the EM fields within the cable's dielectric remain part of a transverse wave.

In conventional cables there are two conductors, and the voltage between them forms the "E" part of the EM wave. In the above one-wire coil device, the voltage between the travelling lumps of net-charge distributed along the long thin coil forms the "E" part of the wave. The single wire acts as its own "circuit." The motion of the net-charge is an electric current, and this creates the "M" part of the EM wave.

Interesting? A single wire transmission line! It doesn't violate the rule forbidding longitudinal EM waves. However, it violates the fundamental rule regarding electric circuits in that there *is* no circuit here. The two ends of the system are connected by a single wire. The charges within the coil flow back and forth, while the electrical energy flows along the coil from source to load.

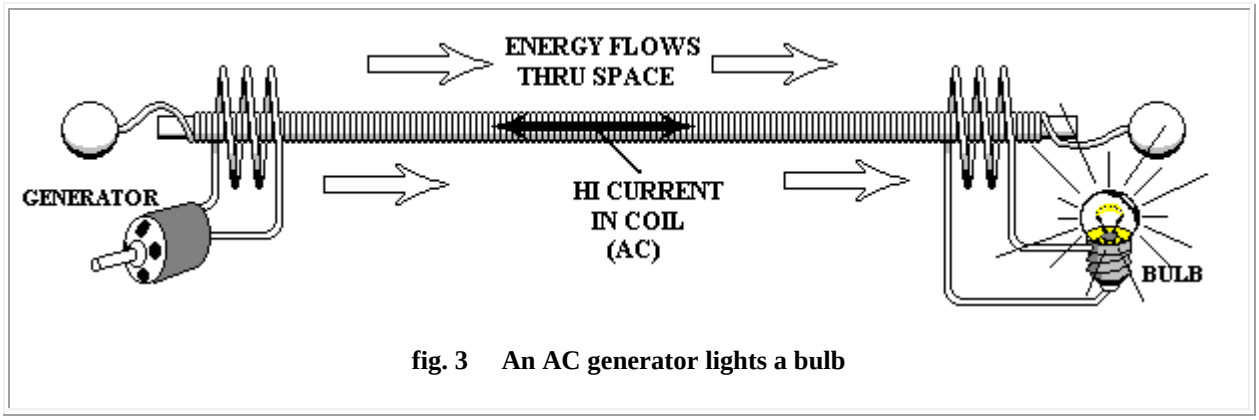

fig. 3 An AC generator lights a bulb

HOWEVER, this is not unique. Once long ago I encountered an article about a single-wire transmission line. This had nothing to do with Tesla; it was about an old microwave transmission scheme called a Goubau transmission line or "G-line." The article was in an old copy of QST magazine (amateur radio mag) in the 1960s or '70s.

It turns out that you can send microwave or UHF signals along a *single* wire as long as that wire is coated with a dielectric. To do this, you start out with a normal coaxial cable. You strip the shield from a central section, then solder on a pair of large, cone-shaped copper horns which attach to the coax shield at either end of the coax cable. The dielectric-coated single wire extends between the ends of the coax. Sort of like this:

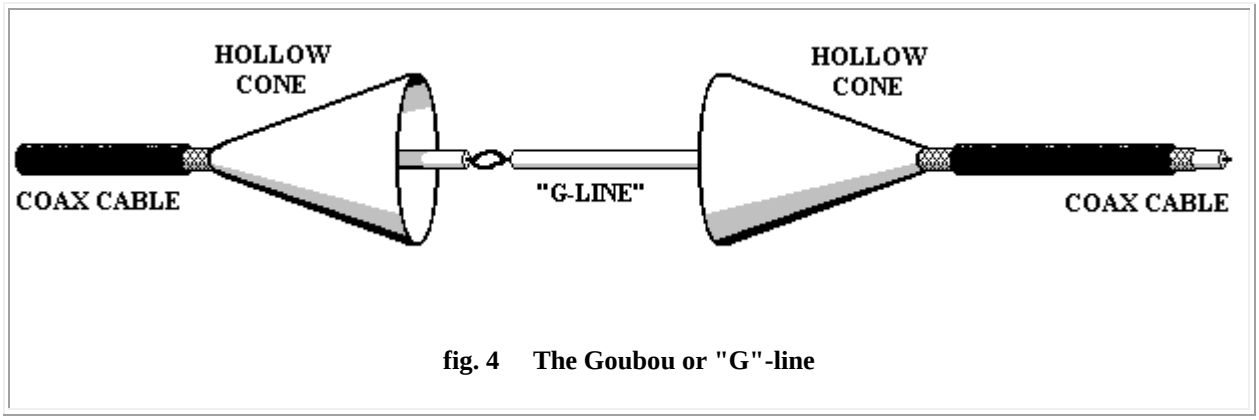

fig. 4 The Goubou or "G"-line

In the above diagram, the single-wire section between the two hollow cones can be as long as desired, but it must be fairly straight. Those cone-shaped parts must be about one wavelength across (or was it 1/2 wavelength? I don't remember exactly.) The metal cones act as "wave launchers" or "wave catchers". As the EM waves come out of the coax cable, the cones allow the waves to spread out and attach to the "G-line" part. There must be a plastic coating on the "G-line" wire, otherwise the waves will not lock onto it, and they will tend to wander away into space. The plastic tends to slow the waves below "c," so they bend slightly inwards towards the wire. The article noted that you *could* put a bend in the G-line, as long as it was a long, smooth bend of large radius. Because of the plastic

coating, the waves would follow the bend. If there was no plastic coating, the waves would miss the bend and go straight out into space, missing the "catcher cone" entirely.

Obviously this can only work with AC. There is no electric circuit, instead we have waves of "electron compression" which propagate along a single wire. Let's briefly look at a fluid analog. The fluid analogy of a*conventional* electric circuit is a closed *loop* of water-filled hose. To send energy to any part of the loop, we simply force the water in one part of the loop to begin flowing, and all the water in the entire loop must therefore flow as well. It acts like a drive belt. Might it be possible to break the circuit and use a straight-line hydraulic system? Can we send compression waves through the electrical "water" in the "hose" made of wire? Sure! That's what the G-line does. If we have a long hose with closed ends, we can send "sound waves" through the "water" of the hose, although we cannot create constant flowing DC as we can with the closed circuit hose-loop. These single-wire systems are inherently AC systems. They are analogous to sending sound energy along a fluid-filled tube.

Because there is only one conductor in the G-line, the "E" part of the EM wave must extend between successive lumps of net-charge which propagate along the wire. The "voltage" on the transmission line extends outwards as radial e-field flux, but rather than the flux connecting with a coaxial shield as it does in a normal cable, it curves around and connects with the opposite flux-lines which extend from another spot on the wire. The "M" component of the wave acts like the magnetic field around any normal wire: acting like circles which surround the wire. The energy flows lengthwise along the wire as is commonly shown by Poynting's vector (E x B).

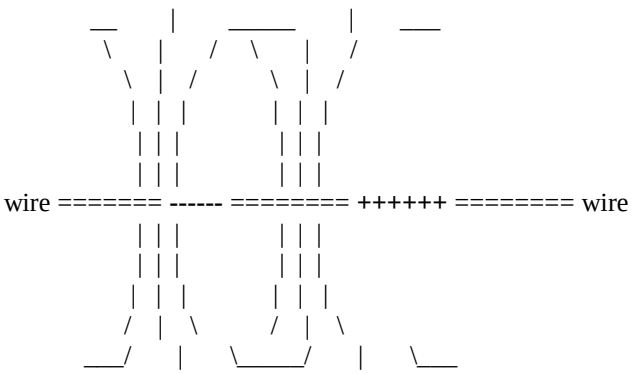

fig. 5 The e-field of the "G-Line", extending between propagating regions of opposite surface charge

So, here we have a one-wire transmission line based on transverse EM wave in space, and electron density waves within the wire. Inside the metal surface of that single wire, the electrons wiggle back and forth while the EM wave propagates outside at about the speed of light. It's almost like sound waves moving on the string of a tin-can telephone, but electrons take the place of those cellulose fibers, and the sound waves are replaced by transverse EM waves. But in the case of the "G-line," the energy gets stored in the EM fields connected to the electrons, rather than being stored in the kinetic energy and potential energy of the string.

How does this relate to Tesla? Well, once we have the ability to send energy along a single wire, we should also have the ability to send energy along any conductor at all, as long as that conductor has a dielectric coating. Like this:

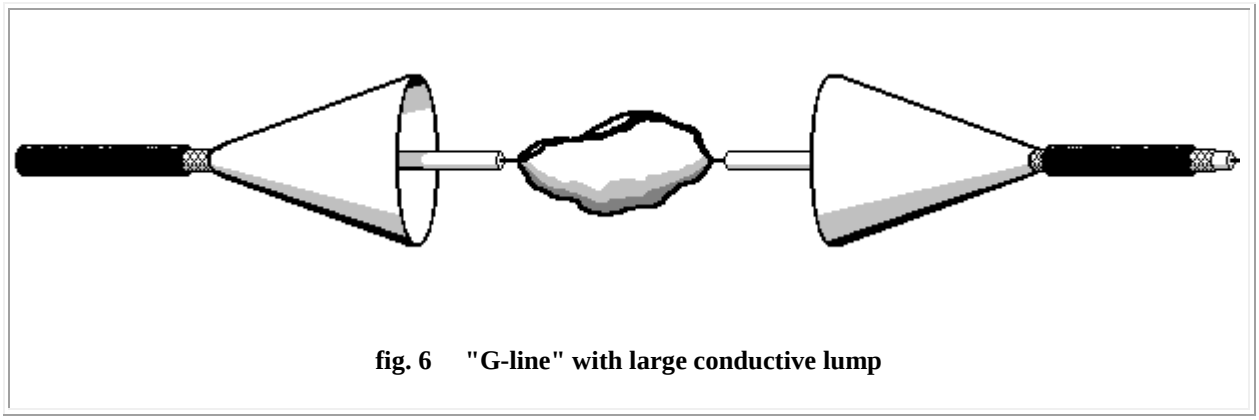

fig. 6 "G-line" with large conductive lump

Any large, metallic hunk could be stuck in series with the "G-line". Yes, there might be wave-reflections where the thin wire connects to the big metal hunk. But that's beside the point. With the above setup, we can send waves along the surface of a conductive object, while within the object itself the "electron sea" vibrates longitudinally. Hmmm. Where have I heard *that* before? I know. Nikola Tesla's "World System," in which he intended to transmit usable electrical energy to any receiver anywhere on the Earth.

In the above diagram, suppose the "hunk of conductor" is the entire planet Earth! Suppose the "cone shaped" launchers are replaced with an elevated sphere which supplies a "virtual ground" reference capacitance? Suppose the frequency of the waves is below the UHF band in frequency? The entire Earth will then behave as a "G-line" single wire transmission system.

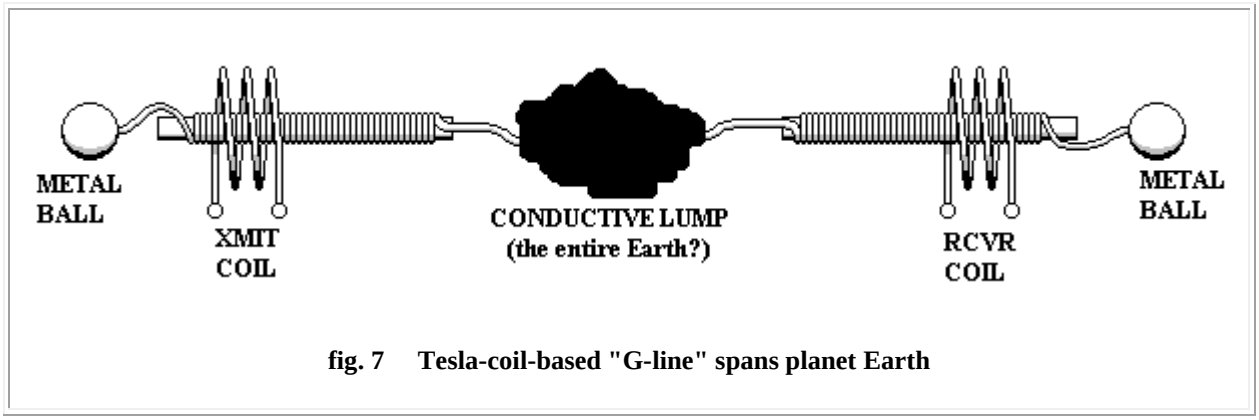

fig. 7 Tesla-coil-based "G-line" spans planet Earth

In his writings, Tesla was convinced that his devices did *not* use the same physics as Hertzian waves. He was right... and wrong. When radio- frequency energy propagates through empty space, the E and the M components are transverse, and the waves propagate at 90 degrees to both of them. However, when EM energy is sent along a cable, we also have electrons involved: the electron-sea within the metal wires. The electrons slosh back and forth in the cable while the EM waves flow along outside of the metal surfaces. Why is this important? Because the physics of a transmission line is the physics of the "near field" of a coil or capacitor, not the physics of freely-propagating "Hertzian" waves. When Tesla sent energy around the Earth, he was treating the Earth as an electrical cable. His waves were coupled to the charges within the surface of the Earth. He was not transmitting pure radio waves, even though the frequency of the wave-energy might be the same as any normal radio wave. Instead he was using a one-wire transmission system where the conductive Earth served as the wire. Tesla's technology used "near field" effects of coils, capacitors, and transmission lines, not the dipole antennas that Hertzian waves use, and in that sense his waves were "non-Hertzian."

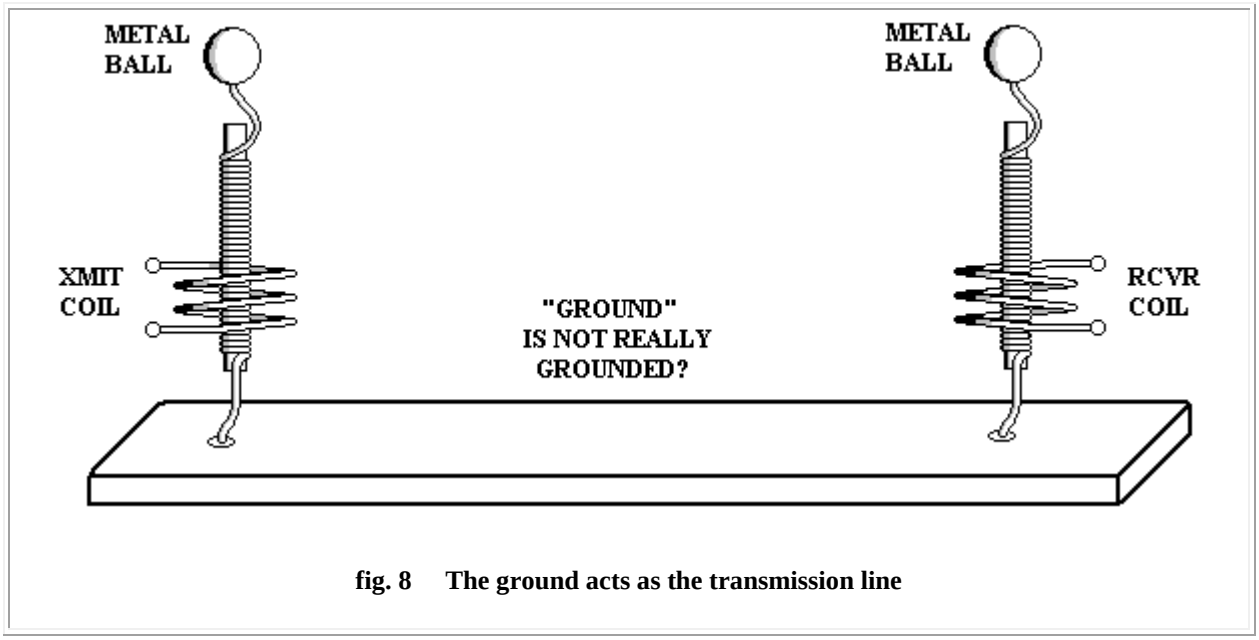

fig. 8 The ground acts as the transmission line

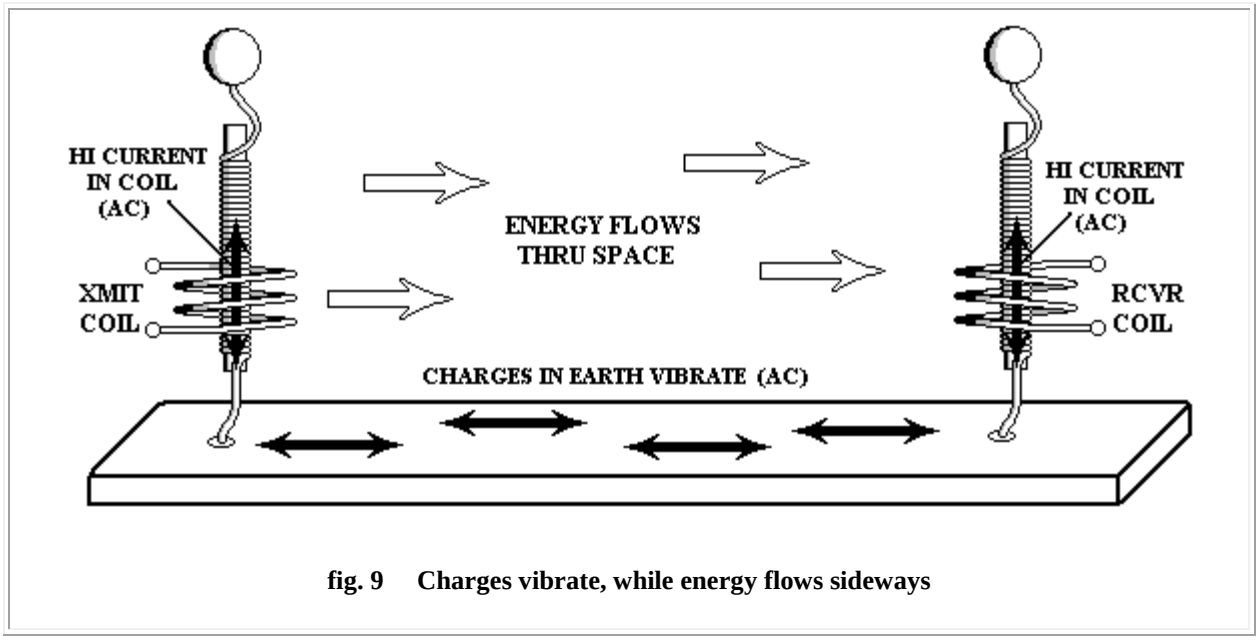

fig. 9 Charges vibrate, while energy flows sideways

But wait a minute. This stuff can only work if there is a dielectric substance coating the Earth. Without that coating, the waves will not slow and bend to follow the curve of the Earth, they will just fly out into space. The atmosphere supplies this coating, and the resistive earth also helps to slow the waves so they bend to follow the surface. And even better, there is a conductive ionosphere which will act a lot like the "shield" of a coaxial cable and force the waves to go around the Earth.

Tesla was using the ground as a transmission line. He was correct when he insisted that he was producing longitudinal waves in the "natural medium." He was correct in saying that the ground was not just a voltage reference. In this case the "natural medium" is the population of mobile ions in the dirt and oceans which cause the Earth act as a conductor. He was converting the Earth's surface into a "G-line" conductor. Any electrical device could intercept a portion of that energy, as long as that device was connected to the ground and to an elevated metal object.

So, what was Tesla's big mistake? Initially he did not realize that the Earth's atmosphere was critically important for his system to work. If the Earth had acted like a perfectly-conducting metal ball hanging in a vacuum, then Tesla's system would not have worked. The waves would have travelled along the ground and then shot straight out into space. His system would have been like a "G-line" with a sharp bend in the middle: except for a bit of diffraction, the waves refuse to follow the bend and instead go right off the cable and are lost. Because of the "dielectric" effect of the atmosphere, and also because a conductive ionosphere was present, Tesla's system was feasible. Yet any scientist of the time would "correctly" see that Tesla's system totally violates well-known theory. If Tesla had started out from known theory, he would never have pursued the path he did. Tesla actually started out with empirical observations that the Earth resonated electromagnetically like a struck bell. The atmosphere and the ionosphere made this so, but Tesla only knew that it worked, and he really did not know why, at least at first.

Tesla's other big mistake was in thinking that his wireless transmission system had nothing to do with "Hertzian" waves. In fact, the waves in a coaxial transmission line are not much different than the waves which fly off any dipole antenna connected to the end of that transmission line. Whether it is ruled by "near field" or "far field" equations, electromagnetism is electromagnetism.

Tesla's mistake was not really so big. Especially not a big mistake when compared to those contemporary scientists who were absolutely certain that the Earth *didn't* have any resonant frequencies, who *knew* that radio waves would not travel around the curve of the Earth, and who dismissed Tesla's wireless transmission system as crackpottery; as an unworkable violation of known physics. When "Schumann" VLF earth-resonance was rediscovered in the 1950s, nobody in the conventional sciences dared court the embarassment of admitting that Tesla had been right all along.

Tesla is mostly a hero among the non-scientist "underground," while in conventional circles he is still ridiculed for trying to distribute electric power without using wires, or rather, by sending it through the ground. Everyone (still) knows that this is impossible, even in theory.

Yeah, right.

Tesla's Electric Car - another version

Subject : Telsla's Electric Car
Date : Mon, 07 Apr 1997 02:15:31 GMT

This is an excerpt from the book, "Secrets of Cold War Technology - Project HAARP and Beyond", by Gerry Vassilatos. - ISBN 0-945685-20-3

For more information please email, write or call: mailto:info@borderlands.comor click on the Borderlands website.

Borderland Sciences Research Foundation
Post Office Box 220
Bayside, California
95524-0220 U.S.A.
Phone: (707) 825-7733 / FAX: (707) 825-7779

Tesla's Electric Car - from page 91

Tesla had already considered the condition of charged particles, each representing a tightly constricted whorl of aether. The force necessarily exerted at close distances by such aetheric constrictions was incalculably large. Aetheric ponderance maintained particulate stability.

Crystalline lattices were therefore places within which one could expect to find unexpected voltages. Indeed, the high voltages inherent in certain metallic lattices, intra-atomic field energies, are enormous. The close Coulomb gradient between atomic centers are electrostatic potentials reaching humanly unattainable levels.

By comparison, the voltages which Tesla once succeeded in releasing were quite insignificant. In these balanced lattices, Tesla sought the voltages needed to initiate directed aetheric streams in matter.

Once such a flow began, one could simply tap the stream for power.

In certain materials, these ether streams might automatically produce the contaminating electrons, a source of energy for existing appliances. One could theoretically then "tailor" the materials needed to produce unexpected aetheric power with or without the attendant detrimental particles.

Tesla did mention the latent aetheric power of charged forces, the explosive potentials of bound Ether, and the aetheric power inherent in matter.

By these studies, Tesla sought replacement for the 100,000,000 volt initiating pulses which natural law required for the implementation of space Ether. Tesla had long been forced to abandon those gigantic means by other, less natural laws.

Thereafter, Tesla shifted his attentions from the appreciation of the gigantic to an appreciation of the miniature. He sought a means for proliferating an immense number of small and compact aether power receivers.

With one such device, Tesla succeeded in obtaining power to drive am electric car. But for the exceptional account which follows, we would have little information on this last period in Tesla's productive life, one which very apparently did not cease its prolific streams of creativity to his last breath.

The information comes through an unlikely source, one rarely mentioned by Tesla biographers. It chanced that an aeronautical engineer, Derek Ahlers, met with one of Tesla's nephews then living in New York. Theirs was an acquaintance lasting some 10 years, consisting largely of anecdotal commentaries on Dr. Tesla. Mr. Savo provided an enormous fund of knowledge concerning many episodes in Tesla's last years.

Himself an Austrian military man and a trained aviator, Mr. Savo was extremely open about certain long-cherished incidents in which his uncle's genius was consistency made manifest. Mr. Savo reported that in 1931, he participated in an experiment involving aetheric power. Unexpectedly, almost inappropriately, he was asked to accompany his uncle on a long train ride to Buffalo.

A few times in this journey, Mr. Savo asked the nature of their journey. Dr. Tesla remained unwilling to disclose any information, speaking rather directly to this issue. Taken into a small garage, Dr. Tesla walked directly to a Pierce Arrow, opened the hood and began making a few adjustments. In place of the engine, there was an AC motor.

This measured a little more than 3 feet long, and a little more than 2 feet in diameter. From it trailed two very thick cables which connected with the dashboard. In addition, there was an ordinary 12 volt storage battery. The motor was rated at 80 horsepower.

Maximum rotor speed was stated to be 30 turns per second. A 6 foot antenna rod was fitted into the rear section of the car.

Dr. Tesla stepped into the passenger side and began making adjustments on a "power receiver" which had been built directly into the dashboard.

The receiver, no larger than a short-wave radio of the day, used 12 special tubes which Dr. Tesla brought with him in a boxlike case.

The device had been prefitted into the dashboard, no larger than a short-wave receiver. Mr. Savo told Mr. Ahler that Dr. Tesla built the receiver in his hotel room, a device 2 feet in length, nearly 1 foot wide, a 1/2 foot high.

These curiously constructed tubes having been properly installed in their sockets, Dr. Tesla pushed in 2 contact rods and informed Peter that power was now available to drive.

Several additional meters read values which Dr. Tesla would not explain. Not sound was heard. Dr. Tesla handed Mr. Savo the ignition key and told him to start the engine, which he promptly did. Yet hearing nothing, the accelerator was applied, and the car instantly moved. Tesla's nephew drove this vehicle without other fuel for an undetermined long interval.

Mr. Savo drove a distance of 50 miles through the city and out to the surrounding countryside. The car was tested to speeds of 90 mph, with the speedometer rated to 120.

After a time, and with increasing distance from the city itself, Dr. Tesla felt free enough to speak. Having now become sufficiently impressed with the performance of both his device and the automobile.

Dr. Tesla informed his nephew that the device could not only supply the needs of the car forever, but could also supply the needs of a household - with power to spare. When originally asked how the device worked, Tesla was initially adamant and refused to speak.

Many who have read this "apocryphal account" have stated it to be the result of an "energy broadcast". This misinterpretation has simply caused further confusions concerning this stage of Tesla's work. He had very obviously succeeded in performing, with this small and compact device, what he had learned in Colorado and Shoreham.

As soon as they were on the country roads, clear of the more congested areas, Tesla began to lecture on the subject. Of the motive source he referred to "a mysterious radiation which comes out of the aether". The small device very obviously and effectively appropriated this energy.

Tesla also spoke very glowingly of this providence, saying of the energy itself that "it is available in limitless quantities".

Dr. Tesla stated that although "he did not know where it came from, mankind should be very grateful for its presence".

The two remained in Buffalo for 8 days, rigorously testing the car in the city and countryside. Dr. Tesla also told Mr. Savo that the device would soon be used to drive boats, planes, trains, and other automobiles. Once, just before leaving the city limits, they stopped at a streetlight and a bystander joyfully commented concerning their lack of exhaust fumes.

Mr. Savo spoke up whimsically, saying that they had "no engine". They left Buffalo and traveled to a predetermined location which Dr. Tesla knew, an old farmhouse barn some 20 miles from Buffalo. Dr. Tesla and Mr. Savo left the car in this barn, took the 12 tubes and the ignition key, and departed.

Later on, Mr. Savo heard a rumor that a secretary had spoken candidly about both the receiver and the test run, being promptly fired for the security breach. About a month after the incident, Mr. Savo received a call from a man who identified himself as Lee De Forest, who asked how he enjoyed the car.

Mr. Savo expressed his joy over the mysterious affair, and Mr. de Forest declared Tesla the greatest living scientist in the world. Later, Mr. Savo asked his uncle whether or not the power receiver was being used in other applications.

He was informed that Dr. Tesla had been negotiating with a major shipbuilding company to build a boat with a similarly outfitted engine. Asked additional questions, Dr. Tesla became annoyed. Highly concerned and personally strained over the security of this design, it seems obvious that Tesla was performing these tests in a desperate degree of secrecy for good reasons.

Tesla had already been the victim of several manipulations, deadly actions entirely sourced in a single financial house. For this reason, secrecy and care had become his only recent excess.

Nikola Tesla was an inventor who accumulated 700-plus patents worldwide for his inventions. Many of Tesla's patents were in theUnited States, Britain, and Canada, but many other patents were approved in countries around the globe. Like Thomas Edison, his patents were related to or act as improvements on existing technologies. Unlike Edison, Telsa was more the solitary inventor than the research lab director.

Table of contents

1 Introduction
2 American
3 British
4 Canadian
5 German
6 Related Links
6.1 Patent Resources
7 Bibliography

Introduction

Tesla's inventions and developments include the induction motor, various devices that use rotating magnetic fields, thealternating current polyphase power distribution system, the fundamental devices of systems of wireless communication (legalpriority for the invention of radio), radio frequency oscillatorss, devices for voltage magnification by standing waves, robotics, logic gates for secure radio frequency communications, devices for x-rays, devices for ionized gases, devices for high field emission, devices for charged particle beamss, voltage multiplication circuitry, devices for high voltage discharges, devices forlightning protection, the bladeless turbine, and VTOL aircraft

Recent references to Tesla's patents include US5548819 (*Method and apparatus for communication of information*), US5908444 (*Complex frequency pulsed electromagnetic generator and method of use*), and US6104107 (*Method and apparatus for single line electrical transmission*).

Below are Tesla's known patents:

American

- **patent number** - *name of patent* - date - notes on patent
    1.

US11865 - *Method of Insulating Electric Conductors* - 1900 October 23 - Expounding on Faraday's hypothesis of freezing substances make them possess a higher dielectric level; Reissued US655838 patent.
- **US334823** - *Commutator for Dynamo Electric Machines* - 1886 January 26 - Elements to prevent sparking on dynamo-electric machines; Drum-style with brushes.
- **US350954** - *Regulator for Dynamo Electric Machines* - 1886 October 19 - Automatic regulation of energy levels; Mechanical device to shift brushes.
- **US335786** - *Electric Arc lamp* - 1886 February 9 - Arc lamp with carbon electrodes controlled by electromagnets or solenoids and a clutch mechanism; Corrects earlier design flaws common to the industry.
- **US335787** - *Electric arc lamp* - 1886 February 9 - Arc lamp's automatic fail switch when arc possesses abnormal behavior; Automatic reactivation.
- **US336961** - *Regulator for dynamo electric machines* - 1886 March 2 - Two main brushes connected to helices coil ends; Intermediate point branch shunt connection for third brush.
- **US336962** - *Regulator for Dynamo Electric Machines* - 1886 March 2 - Auxiliary brush[es] shunting a portion or whole of the field helices coil; Regulates energy flow; Adjustable level of current.
- **US359748** - *Dynamo electric machine* - 1887 March 22 - Improve construction; Facilitate easier construction; Reduce the cost; Magnetic frame; Armature; Alternating current synchronous motor.
- **US381968** - *Electro magnetic motor* - 1888 May 1 - Mode and plan of operating electric motors by progressive shifting; Field Magnet; Armature; Electrical conversion; Economical; Transmission of energy; Simple construction; Easier construction; Rotating magnetic field principles.
- **US381969** - *Electro Magnetic Motor* - 1888 May 1 - Novel form and operating mode; Coils forming independent energizing circuits; Connected to an alternating current generator; Synchronous motor.

- **US381970** - System of Electrical Distribution - 1888 May 1 - Current from a single source of supply in the main or transmitting circuit induce by induction apparatus; Independent circuit(s); Electric distributor.
- **US382279** - *Electro Magnetic Motor* - 1888 May 1 - Rotation is produced and maintained by direct attraction; Utilizes shifting poles; Induction magnetic motor.
- **US382280** - *Electrical Transmission of Power* - 1888 May 1 - New method or mode of transmission; Dynamo motor conversion with two independent circuits for long distance transmission; Alternating current transmission; Includes a disclaimer; Economic; Efficient.
- **US382281** - *Electrical Transmission of Power* - 1888 May 1 - Improvements in electromagnetic motors and their mode or methods of their operations; Motor is wound with coils forming independent circuits on the armature; Armature is mounted to rotate in between two different poles; Armature will eventually synchronize with that of the generator; Windcoils or coils on the field magnets; Expose to continuous current to maintain a permanent field.
- **US382282** - *Method of Converting and Distributing Electric Currents* - 1888 May 1 - Related to electric distribution systems; Current is from a single main source or suitable transmitting circuit; Induction into an independent circuit; Divide the current from a single source; Transformations; Discovery of method to avoid prior liable and dangerous methods; True Dynamic induction.
- **US382845** - *Commutator for dynamo electric machines* - 1888 May 15 - Relates to dynamo-electric machines or motors; Improvements on devices to collect or communicate currents; Avoids destruction and wear of machine; Avoid adjustments due to destruction and wear; Enable practical construction of very large dynamo electric machines or motors with the minimum amount of communicator segments; Increases safety and efficiency.
- **US390413** - *System of electrical distribution* - 1888 October 2 - Related to previous electric distribution systems developed by Mr. Tesla; Examples of systems in operations with motors or converters, or both, in parallel; Examples of systems in parallel; Examples of systems in series.
- **US390414** - *Dynamo Electric Machine* - 1888 October 2 - Related to the patents of Mr. Tesla and Charles F. Peck, numbers: US381968 and US382280; Ordinary forms of continuous and alternate current systems may be adapted to Mr. Tesla's system, with slight changes to the systems; Effects their forms; Only the best and most practical solutions are presented to the three most common forms of the devices applicable; Illustrated are the continuous (or closed) circuit machines, machines possessing armatures with coils connected diametrically (known as "open-circuits"), and machines with armature-coils of which have a common joint.
- **US390415** - *Dynamo Electric Machine or Motor* - 1888 October 2 - Improvement in the construction of dynamo or magneto electric machines; Novel form of frame and field magnets that renders the machine more sturdy and compact as a structure; Requires fewer parts; Less difficulty in construction; Lower expense; Useful to alternating and continuous current machines.
- **US390721** - *Dynamo Electric Machine* - 1888 October 9 - Relates chiefly to the alternate current machine invented by Mr. Tesla; Related to patents numbered US381968 and US382280; Seeks to avoid mechanical drawback of running high frequency machines; Efficient at low speeds; Producing rotating magnetic poles in one element of the machine and drive the other at a different speed.
- **US390820** - *Regulator for Alternate Current Motors* - 1888 October 9 - Improvement in the electrical transmission systems; Means of regulating and power of the motor or motors; Used with system of multiple motors primarily (or systems with motors and transformers) that have independent energizing circuits which act to set up progressive or shifting magnetic poles (i.e the rotating magnetic field); Controls the speed of the motor.
- **US396121** - *Thermo Magnetic Motor* - 1888 January 15 - Widely known that heat applied to a magnetic body will lessen it's magnetizing ability; High enough temperatures will destroy the magnetic field; Mechanical power by a reciprocating action obtained from the joint action of heat, magnetism, and a spring or weight (or other force); In this patent, the application of heats to a body that is magnetized by induction or otherwise to the action of heat until the magnetism is neutralized to allow a weight or a spring to give action and lessen the action of the heat to restore the magnetic effect to move the body in the opposite direction.
- **US401520** - *Method of Operating Electro Magnetic Motors* - 1889 April 16 - Improvements to previous instances of synchronous motors; Previous instances of synchronous motors have not been started by the alternating current generators; New discovery of simple method or plan of operating such motors; Requires no other device other than the motor itself; Conversion from a double circuit motor and which will start under the actions of an alternate current into a synchronizing-motor; synchronous motor definition.
- **US405858** - *Electro Magnetic Motor* - 1889 June 25 - Torque, instead of being the result in the difference in the magnetic periods or phases of the poless or to the attractive parts to whatever due, is produce to the angular displacement of the parts which, though moveable with the respect to one another, are magnetized simutaneously, or approximately so, by the same currents; Concerns the armature and the field laminations of the magnetic core for the greatest magnetic attractions; Best means to achieve these results.
- **US405859** - *Method of Electrical Power Transmission* - 1889 June 25 - New and useful method of bringing up the motor to a desirable speed; Forms of alternating current machines, connected to alternating current generators, can be run as synchronous motor; Prior, alternating current will not start it; Construct a generator with two coils or sets of coils and connect them with a motor of corresponding coils or sets of coils; By means of two line wires, the motor and

generator in like fashion; Related to US 390413 (for means of starting); Will operate as a single-circuit synchronizing system.

- **US406968** - *Dynamo Electric Machine* - 1889 July 16 - Relates to class of machines referred to as "Unipolar" machine (i.e., a disk or cylindrical conductor is mounted in between magnetic poles adapted to produce a uniform magnetic field); Construction of a machine with two field, each having a rotary conductor mounted between it's poles; Discussed the disk form primarily; The direction of the magnetism or order of the poles in one field of force is opposite to that of the other, so the rotation of the disk in the same direction forms a from the center to the circumference and the other from the circumference to the center; Contact applied to the shafts form terminals of a circuit to produce a sum of electromotive forces of the two disk; If direction of the fields are the same, driving the disks in opposite direction will obtain the same results.
- **US413353** - *Method of Obtaining Direct current from Alternating Currents* - 1889 October 22 - Superiority of alternating currents discussed; Delineates machines to convert alternating currents to direct (or continuous) currents at will at one or more points; Obtain direct currents from alternating currents; Active resistances to opposite electrical character, whereby the currents or current-waves of opposite character will be diverted through different circuits.
- **US416191** - *Electro-Magnetic Motor* - 1889 December 3 - Induction motor with two or more energizing circuits; alternating currents of differing phases are passed to produce rotation or operation of the motor; simple way consists of two circuits; alternate way consists of one line that divides the alternating current in the motor circuit and effect and artificial lag in one of the circuit of branches (such as by a different induction capacity).
- **US416192** - *Method of Operating Electro-Magnetic Motors* - 1889 December 3 - Related to US401520; Alternative improvements to synchronous motors; Torque and synchronous actions in motors; different field circuit of differing induction; Windings and shunts; Increases tendency to synchronize.
- **US416193** - *Electro-Magnetic Motor* - 1889 December 3 - Induction motor operation with two or more windings; securing differing phase differences; Phase proportional to the induction and inverse to the resistance encountered by the current; one circuit (the energizing circuit) should have high induction and low resistance (along with possessing the greater length or number of turns) and the converse in the other (which has few turns of finer wire of wire that has higher resistance); magnetic quantities of the poles should be approximately equal; Self-induction cores are much longer.
- **US416194** - *Electric Motor* - 1889 December 3 - Drawings include the motor seen in many of Tesla's photos; Classic alternating current electro-magnetic motor; Induction motor operation; Field and armature of equal strengths or magnetic quality; field and armature cores of equal amounts; Coils containing equal amount of copper.
- **US416195** - *Electro-Magnetic Motor* - 1889 December 3 - Induction motor operation with two or more windings; Differing phases; Structural and operational conditions; Armature operation conditions and the obedience to the energizing circuit and stator; Construction and organization principles.
- **US417794** - *Armature for Electric Machines* - 1889 December 24 - Construction principles of the armature for electrical generators and motors; Simple and economical; Coils or insulated conducting wire (or ribbon) may be wound or formed into bobbins; Position of the bobbins dictate the windings; Armature have polar projections and maximum core-surface exposure to the field magnetic poles; Related to other applicant patents, numbers US327797, US292077, GB9013.
- **US418248** - *Electro-Magnetic Motor* - 1889 December 31 - Electric generator; Employment of an artificial cooling device; Inclosing the source of heat and that portion of the magnetic circuit exposed to the heat and artificially cooling the said heated part; Combination of an enclosed source of heat applied to a portion of said core; Magnetized core or body and a conductor within the field of force; Artificial cooling device for reducing the temperature of the heated portion thereof; Means for bringing a cooling gas or fluid in contact with the heated portion of the core, and means for controlling the admission of the same; The combination and coils wound thereon and a connection with a boiler for admitting steam into the channels, as set forth; Magnetized core containing passages or channels; Means for applying heat to a portion of the core.
- **US424036** - *Electro-Magnetic Motor* - 1890 March 25 - Cites then common language of his motors referred to as the "*magnetic lag*" motors; Another form of the induction motor with two or more energizing circuits with differing phase differences are passed to produce rotation or operation of the motor; Magnetism lages electrical parts of energizing effects; Manifest these effect simultaneously and not successively; Related to US405858; Torque is produced to the angular displacement of parts; Best means to achieve these results; prefer the use of alternating currents.
- **US428057** - *Electric Generator* - 1890 May 13 - Electric generator; Employment of an artificial cooling device; Inclosing the source of heat and that portion of the magnetic circuit exposed to the heat and artificially cooling the said heated part; Combination of an enclosed source of heat applied to a portion of said core; Magnetized core or body and a conductor within the field of force; Artificial cooling device for reducing the temperature of the heated portion thereof; Means for bringing a cooling gas or fluid in contact with the heated portion of the core, and means for controlling the admission of the same; The combination and coils wound thereon and a connection with a boiler for admitting steam into the channels, as set forth; Magnetized core containing passages or channels; Means for applying heat to a portion of the core.
- **US433700** - *Alternating-Current Electro-Magnetic Motor* - 1890 August 5
- **US433701** - *Alternating-Current Motor* - 1890 August 5

- **US433702** - *Electrical Transformer Or Induction Device* - 1890 August 5
- **US433703** - *Electro-Magnetic Motor* - 1890 August 5
- **US445207** - *Electro-Magnetic Motor* - 1891 January 27
- **US447920** - *Method of Operating Arc-Lamps* - 1891 March 10
- **US447921** - *Alternating Electric Current Generator* - 1891 March 10 - A generator that produces alterations of 15000 per second or more.
- **US454622** - *System of Electric Lighting* - 1891 June 23
- **US455067** - *Electro-Magnetic Motor* - 1891 June 30
- **US455068** - *Electrical Meter* - 1891 June 30
- **US455069** - *Electric Incandescent Lamp* - 1891 June 30
- **US459772** - *Electro-Magnetic Motor* - 1891 September 22
- **US462418** - *Method of and Apparatus for Electrical Conversion and Distribution* - 1891 November 3
- **US464666** - *Electro-Magnetic Motor* - 1891 December 8
- **US464667** - *Electrical Condenser* - 1891 December 8
- **US487796** - *System of Electrical Transmission of Power* - 1892 December 13
- **US511559** - *Electrical Transmission of Power* - 1893 December 26
- **US511560** - *System of Electrical Power Transmission* - 1893 December 26 - Includes a correction.
- **US511915** - *Electrical Transmission of Power* - 1894 January 2
- **US511916** - *Electric Generator* - 1893 August 19
- **US512340** - *Coil for Electro-Magnets* - 1893 July 7 - Effect of mutal relation self-induction exploited; Adjacent coil convolutions formed parts exists so that the potential difference is sufficient to neutralize negative effects; Object to avoid expensive, cumbersome, and difficult condensers; Bifilar coil winding technique.
- **US514167** - *Electrical Conductor* - 1894 February 6 - Prevent loss in line conductors; Insulate and encase conductors with a sheathing which is connected to the ground; Sheath or screen; Coaxial cabling.
- **US514168** - *Means for Generating Electric Currents* - 1894 February 6 - Generating and utilizing electrical energy discovered by Mr. Tesla; related to US454622 and US462418; Maintenance of intermittent or oscillatory discharges of a condenser of suitable circuit containing translating devices; Discharges take place in insulating liquids (such as oil); Varying spark gap distances; Keep circulating flow in liquid; Illustrates preferred manner.
- **US514169** - *Reciprocating Engine* - 1893 August 19 - Provide a means of engines, which under the applied forces such as elastic tension of steam or gas under pressure, that will yield constant oscillatory movements (in wide limits); Functions is constant irrespective of the loads, frictional losses, or other factors (which degrade other engines); Convert pressure into mechanical power; Better at higher temperatures and pressures than previous engines; Same principles of this engine appear later in the modern gasoline motor of automobiles.
- **US514170** - *Incandescent Electric Light* - 1894 February 6 - Related to US454622; Incandescent electric lamps; Particular forms of the lamp in which a light giving small body or button of refectatory material is supported by a conductor entering a very highly exhausted globe or receiver; Conducting screen surrounds the supporting conductor.
- **US514972** - *Electric Railway System* - 1894 February 20 -
- **US514973** - *Electrical Meter* - 1894 February 20
- **US517900** - *Steam Engine* - 1893 December 29
- **US524426** - *Electromagnetic Motor* - 1894 August 14
- **US555190** - *Alternating Motor* - 1896 February 25
- **US567818** - *Electrical Condenser* - 1896 September 15
- **US568176** - *Apparatus for Producing Electrical Currents of High Frequency and Potential* - 1896 September 22
- **US568177** - *Apparatus for Producing Ozone* - 1896 September 22
- **US568178** - *Method of Regulating Apparatus for Producing Electric Currents of High Frequency* - 1896 September 22
- **US568179** - *Method of and Apparatus for Producing Currents of High Frequency* - 1896 September 22
- **US568180** - *Apparatus for Producing Electrical Currents of High Frequency* - 1896 September 22
- **US577670** - *Apparatus for Producing Electric Currents of High Frequency* - 1897 February 23
- **US577671** - *Manufacture of Electrical Condensers, Coils and Similar Devices* - 1897 February 23 - Improvements of condensers, transformers, self-induction coils, rheostats, and other similar devices; Used in areas where current of high potentials are brought into close proximity; Method of excluding gas or air from the dielectric environment of such devices.
- **US583953** - *Apparatus for Producing Currents of High Frequency* - 1897 June 8 - Related to US568176; Conversion of electrical current of ordinary character into high frequency and high potential; Can use either continuous (i.e., direct) or alternating currents.
- **US593138** - *Electrical Transformer* - 1897 November 2 - Novel form of transformer or induction-coil and a system for the transmission of electrical energy by means of the same; Improvement of electrical transformers; Develops electrical currents of high potential; Corrects construction principles heretofore manufactured; Higher potential for

transmission than ever been practically employed heretofore; Free from the danger of injury from the destruction of insulation; Safe to handle; High-frequency power supply for lighting and other applications.

- **US609245** - *Electrical Circuit Controller* - 1898 August 16
- **US609246** - *Electric Circuit Controller* - 1898 August 16
- **US609247** - *Electric Circuit Controller* - 1898 August 16
- **US609248** - *Electric Circuit Controller* - 1898 August 16
- **US609249** - *Electric Circuit Controller* - 1898 August 16
- **US609250** - *Electrical Igniter for Gas Engines* - 1898 August 16 - Ignition system principles used today in automobiles; Operation of a machine that requires a spark, flame, or any other similar effect; More certian and satisfactory for use of and control by the machinie or apparatus; Charging and dischargin a condensor through switch or commmunicator.
- **US609251** - *Electric Circuit Controller* - 1898 August 16
- **US611719** - *Electrical Circuit Controller* - 1898 October 4
- **US613735** - *Electric Circuit Controller* - 1898 November 8
- **US613809** - *Method of and Apparatus for Controlling Mechanism of Moving Vehicle or Vehicles* - 1898 July 1 - New and useful improvements in methods of and apparatus for controlling from a distance; Solution for controlling from a given point the operation of mechanisms; No intermediate wires, cables, or other form of electrical or mechanical connection with the object save the natural media in space; explanation of most practical and effectual method and apparatus; Remote control.
- **US645576** - *System of Transmission of Electrical Energy* - 1900 March 20 - Commonly referred to the radio patent; Related to wireless telegraphy; Wireless transmission of electric power through the natural media; Cites well know radiant energy phenomena and the experiments of William Crooke; Corrects previous errors in theory of behavior when used by the methods and means of Mr. Tesla; Discovery of highly important and useful facts which heretofore have been unknown; Deprive dialectic of air when impress electromotive forces of a certain character and magnitude unto it; Conductivity of the air increases with the augmentation of the pressure and the rarefaction; Law of conductivity of the air is quite different than heretofore established; Illustrations of the facts.
- **US649621** - *Apparatus for Transmission of Electrical Energy* - 1897 September 2 - Related to US645576; New and useful combinations employed; Transmitting coil or conductor arranged and excited to cause currents or oscillation to propagate through conduction through the natural medium from one point to another remote point therefrom and a receiver coil or conductor of the transmitted signals; Production of currents of excessively high potential; Transmitting station and receiving station.
- **US655838** - *Method of Insulating Electric Conductors* - 1900 August 14 - Method and practical application of insulation by freezing and solidification; Expounding on Faraday's hypothesis of freezing substances make them possess a higher dielectric level.
- **US685012** - *Means for Increasing the Intensity of Electrical Oscillations* - 1900 March 21 - Producing increase intensity and duration of electric oscillations; Freely-vibrating excitations; Low temperature resonating circuit; Uses of electrical impulse oscillations; Super-conducting oscillator.
- **US685953** - *Apparatus for Utilizing Effects Transmitted from a Distance to a Receiving Device through Natural Media* - 1899June 24 - Heinriech Hertz methods cited; Induction method cited; Ground conduction method cited; Previous methods have limitations that result in great disadvantages for utilization; Wireless transmission developed by Mr. Tesla cited; Transmitting station coil arranged and excited to cause arbitrary or intermitted oscillation propagation to another remote point receiver station coil; Air is excellent insulator; Air strata used for means of conduction for production of generating actions at a distance; Use of metallic conductor; Transmitting apparatus of signals or intelligence should produce effect as strong as possible; Charge a condenser or capacitor to utilize the potential energy.
- **US685954** - *Method of Utilizing Effects Transmitted through Natural Media* - 1899 August 1 -
- **US685955** - *Apparatus for Utilizing Effects Transmitted From A Distance To A Receiving Device Through Natural Media* - 1899June 24
- **US685956** - *Apparatus for Utilizing Effects Transmitted through Natural Media* - 1899 August 1 -
- **US685957** - *Apparatus for the Utilization of Radiant Energy* - 1901 November 5 - 4 illustrations; Radiation charging and discharging conductors; Radiations considered vibrations of ether of small wavelengths and ionize the atmosphere; Radiant energy throws off with great velocity minute particles which are strongly electrified; Rays or radiation falling on insulated-conductor connected to a condenser (i.e., a capacitor), the condenser indefinitely charges electrically; Radiation (or radiant energy) include many different forms; Related to US577671; Transmitted or natural energy can be used; Photoelectric stepping alternating current motors.
- **US685958** - *Method of Utilizing of Radiant Energy* - 1901 November 5 - 2 illustrations; Ways of using radiation charging and discharging conductors; Rays or radiation falling on insulated-conductor connected to a condenser (i.e., a capacitor), the condenser indefinitely charges electrically; Radiation (or radiant energy) include many different forms; Related to US577671; Photoelectric stepping alternating current motors.

- **US723188** - *Method of Signaling* - 1900 July 16 - Elevated transmitter capacitance; Coil; Earth electrode; Signal generator; Partial basis of radio design.
- **US725605** - *System of Signaling* - 1900 July 16 - Elevated transmitter capacitance; Coil; Earth electrode; Signal generator; Apparatus of and method for electrical disturbance or impulses; Transmission of intelligent messages; Govern the movement of distant automata; Radio transmissions; Partial basis of radio design.
- **US787412** - *Art of Transmitting Electrical Energy through the Natural Mediums* - 1900 May 16 - Elevated transmitter capacitance; Coil; Earth electrode; Signal generator; Apparatus for generating and receiving electrical signals; Tuned resonant circuits; Physics of propagation; Non-hertzian notes; Globe as conductor; Low frequency oscillations; Basis of radio.
- **US1061142** - *Fluid Propulsion* - 1909 October 21 - Transmission and transformation of mechanical power through the agency of fluid; Propelled fluid moves in a natural path; Avoids losses; Easy; Simple.
- **US1061206** - *Turbine* - 1909 October 21 - Improvements in rotary engines and turbines; Mechanical power based the vehicle of fluid for power; Known as the Tesla turbine.
- **US1113716** - *Fountain* - 1914 October 13 - Improvement in the construction of fountains and aquarian displays; Large mass of fluid in motion; Display of great power; Large displacement of fluid with little expense of energy.
- **US1119732** - *Apparatus for Transmitting Electrical Energy* - 1902 January 18 - High-voltage, air-core, self-regenerative resonant transformer; Oscillator for wireless transmission of electromagnetic energy; Tesla coil.
- **US1209359** - *Speed-Indicator* - 1916 December 19 - Improvement that uses the adhesion and viscosity of a gaseous medium [preferably air] to measure speed [or measure the torque-transmission] between indicator and driver; Durable; Simple; Inexpensive; Reliable.
- **US1266175** - *Lightning-Protector* - 1918 May 14 - Novel and advantageous construction of a protector in accord with the true character of the phenomena; Corrects Benjamin Franklin's hypothesis, and subsequent construction, for lightning protectors.
- **US1274816** - *Speed Indicator* - 1918 August 6 - Speedometer that possesses the feature of: Linearly proportional torque readings; Strong low speed torsional effects; not affected by atmospheric density, temperature, nor magnetic influences; Rugged; Simple; Economical.
- **US1314718** - *Ship's Log* - 1919 September 2 - Novel and advantageous construction of a ship's log; Instantaneous reading of knots or miles-per-hour.
- **US1329559** - Valvular Conduit - 1920 February 3 - Improvement by means of a conduit or channel characterized by valvular action; Conduit has baffles, recesses, projections, enlargements, or buckets that channels the flow's movement one way more efficiently; Mechanical diode; One-way valve with no moving parts.
- **US1365547** - *Flow-Meter* - 1921 January 11 - Related to the meter of measurement for velocity and quantity of fluid flow.
- **US1402025** - *Frequency-Meter* - 1922 January 3 - Ascertain the periodic electric frequency and electric oscillation by the rotation or reciprocation of an electromechanical device.
- **US1655113** - *Method of Aerial Transportation* - 1928 January 3 - VTOL aircraft.
- **US1655114** - *Apparatus for Aerial Transportation* - 1928 January 3 - VTOL aircraft; Includes a correction.

British

- **patent number** - *name of patent* - date - notes on patent
    1.

GB1877 - *Improvements in Electric Lamps*
- **GB2801** - *Improvements in Reciprocating Engines and Means for Regulating the Period of the same*
- **GB2812** - *Improvements in Methods of and Apparatus for the Generation of Electric Currents of Defined Period*
- **GB2975** - "Improvements in Dynamo Electric Machines
- **GB6481** - *Improvements relating to the Electrical Transmission of Power and to Apparatus therefor*
- **GB6502** - *Improvements relating to the Generation and Distribution of Electric Currents and to Apparatus therefor*
- **GB6527** - *Improvements relating to Electro-motors*
- **GB8200** - *Improvements relating to the Transmission of Electrical Energy* - 1905 April 17
- **GB8575** - *Improved Methods of and Apparatus for Generating and Utilizing Electric Energy for Lighting Purposes*
- **GB11293** - *Improvements relating to the Utilization of Electromagnetic, Light, or other like Radiations Effects or Disturbances transmitted through the Natural Media and to Apparatus therefor*
- **GB11473** - *Improvements in Alternating Current Electro-magnetic Motors*
- **GB13563** - *Improvements in, and relating to, the Transmission of Electrical Energy*
- **GB14550** - "Improvements relating to the Insulation of Electric Conductors
- **GB14579** - *Improvements in and relating to the Transmission of Electrical Energy* - 1901 July 17

- **GB16709** - *Improvements relating to the Conversion of Alternating into Direct Electric Currents*
- **GB19420** - *Improvements in Alternating Current Electro-magnetic Motors*
- **GB19426** - *Improvements in the Construction and Mode of Operating Alternating Current Motors*
- **GB20981** - *Improvements to the production, regulation and utilization of electric currents of high frequency, and apparatus therefor* - 1896 August 22
- **GB24001** - *Improved method of imparting energy to or deriving energy from a fluid and apparatus for use therein* - 1910October 17 - Bladeless turbine having disc rotors; Openings in the central portions and separating star-washers; Riveted into single, solid structure; Keyed to the shaft; Turbine or rotary engine.
- **GB24421** - *Improvements in systems for the transmission of electrical energy and apparatus for use therein* - 1897 October 21
- **GB26371** - *Improvements in the method of and apparatus for controlling the mechanism of floating vessels or moving vehicles* - 1898 December 13
- **GB174544** - *Improvements in methods of and apparatus for the generation of power by elastic fluid turbines* - 1921 April 01
- **GB179043** - *Improved process and apparatus for production of high vacua* - 1921 March 24
- **GB185446** - *Method of and apparatus for aerial transportation* - 1921 April 04
- **GB186082** - *Improvements in the Construction of Steam and Gas Turbines* - 1922 September 25 - Two heavier end-plate; Tapered toward the periphery; Reduces maximum centrifugal stress; Turbine.
- **GB186083** - *Economic Transformation of the Energy of Steam by Turbines* - 1922 September 25 - Improvements to increase efficiency of steam power plants and thermo-dynamic transformers; Producing motive power; Economical; Operable at very high temperature; Operable with cheap fuel; Avoids deteriorating actions previously common; System is related to the Tesla turbine.
- **GB186084** - *Improved process of and apparatus for deriving motive power from steam* - 1921 March 24
- **GB186799** - *Process for and apparatus for balancing rotating machine parts* - 1921 September 02

Canadian

- **patent number** - *name of patent* - date - notes on patent
    1.

CA24033 - *Improvements in Dynamo Electric Machines* - 1886 April 24
- **CA29537** - *Improvements in Methods of and Apparatus for the Electrical Transmission of Power* - 1888 May 1
- **CA30172** - *Improvements in Methods of and Apparatus for Converting and Distributing Electric Currents* - 1888 May 1
- **CA33317** - *Improvements in Methods and Apparatus for Converting Alternating into Direct Currents* - "1889 December 19
- **CA135174** - *Improvements in Fluid Propulsion* - 1910 November 24 - Tesla Pump
- **CA142352** - *Improvement in the Art of Transmitting Electrical Energy Through the Natural Mediums* - 1912

German

- **patent number** - *name of patent* - date - notes on patent
- 19 were issued between 1888-1901.

Related Links

- Hand scanned patents - Mirror
- Mall-USA patents list
- Helping Hand Consulting patents list
- The very last page of the internet's patents list
- Twenty First Century Books Patents
- Svenson's U.S Tesla Patents
- Pepe's Tesla Pages - Nikola's Page (Hungarian - original images of text)
- My Inventions: The Autobiography of Nikola Tesla

See also : Tesla turbine, Tesla coil

Patent Resources

- US Patent and Trademark Office
- World Intellectual Property Organization
- Delphion IP Research
- Canadian Patents Database
- Japan Patent Office
- European Network of Patent Databases

Bibliography

- Martin, Thomas Commerford. "*The Inventions, Researches and Writings of Nikola Tesla - 1894*", Kessinger Publishing Company, March, 1997. ISBN 1564597113
- Johnston, Ben [Ed.]. "*My Inventions: The Autobiography of Nikola Tesla*", Hart Brothers Publishing, October, 1982. ISBN 0910077002

online poker | texas hold em | dish network | texas holdem | free credit report | credit reports
diet pills | hoodia | cash advance | printer ink | direct tv | poker | online casino
online poker | hoodia | debt consolidation | medical malpractice

This content from Wikipedia.org is licensed under the GNU Free Documentation License

Tesla's Radiant Energy Patents

In 1901 Nikola Tesla was granted several patents for a system of radiant energy transmission and reception. The system utilized "natural media" such as the atmosphere and ground to transmit power with virtually no losses. A decade earlier, Tesla had destroyed the DC power industry with his superior AC system. Now he was poised to do it again, with broadcast power.

The radiant energy system was revolutionary because it did away with wires and meters. Modest amounts of electric power would be available anywhere, at any time, for lighting and communications. Simply erect an aerial collector, attach the ground plate and plug in. Tesla's vision was to provide free electricity in the service of humanity.

Unfortunately, this vision did not impress the financial backers in the utilities industry. With heavy investments in the AC system, there was little interest in supporting the more noble, but less profitable, radiant system. Tesla's demonstration plant at Wardenclyffe, Long Island, was never completed. Ironically, the perfected radiant system marks a turning point in his career. Though still popular with the press, few of his later inventions were ever put into production.

The article that follows appeared in *Scientific American*, in November of 1901. It presents a technical overview of the radiant energy patents. There are two veiled references to the extraction of power from space, in excess of power received from the transmitting station.

Notes:

1)Tesla's radiant energy patents include #685954 through #685958. Also see #645576.
2)Two excellent references on Tesla and his work are:

-*The Fantastic Inventions of Nikola Tesla*, Adventures Unlimited Press, Kempton, IL, 1993. ISBN 0-932813-19-4
- "The Broadcast Power of Nikola Tesla", by Gerry Vassilatos. *Borderlands*, Vol. LII, No. 2 - 3, 1996.

from Scientific American, November 30, 1901:

Tesla's Recent Patents

"Nikola Tesla has received several patents for a 'Method of Intensifying and Utilizing Effects Transmitted Through Natural Media.' In one of these systems Tesla varies the potential point or region of the earth by imparting to it intermittent or alternating electrifications through one of the terminals of a suitable source of electrical disturbances which to heighten the effect, has its other terminal connected with an insulated body, preferably of large surface and at an elevation. Electrifications communicated to the earth spread in all directions, reaching a circuit which generally has its terminals arranged and connected similarly to those of the transmitting source and which operates upon a highly sensitive receiver.

Another of Telsa's methods is based upon the fact that the atmospheric air, which behaves as an excellent insulator to currents generated by ordinary apparatus, becomes a conductor under the influence of currents or impulses of enormously high electromotive force. By such means air strata, which are easily accessible, are rendered available for the production of many desired effects at distances. Although either method may be employed, it is obviously desirable that the disturbance should be as powerful as possible and should be transmitted with a minimal loss. The loss reduces greatly both the intensity and the number of the co-operative impulses, and since the initial intensity of each of these is necessarily limited, only an insignificant amount of energy is thus available for a single operation of the receiver. Furthermore the energy obtained through the cooperation of the impulses is in the form of an extremely rapid vibration and unsuitable for the operation of ordinary receivers. To overcome the limitations of the two methods mentioned, Tesla reproduces arbitrarily varied or intermittent disturbances or effects; transmits these disturbances through the air to a

distant receiving station, utilizes the energy derived from such disturbances at the receiving station to charge a condenser, and uses the accumulated potential so obtained to operate a receiving device.

The apparatus which is employed at the receiving station consists in the combination of a storage device included in a circuit, connection points at a distance from the source of the disturbances and between which a difference of potential is created by such disturbances, a receiving circuit connected with the storage device, a receiver included in the receiving circuit, and a mechanism for closing the receiving circuit at any desired moment, thereby causing the receiver to be operated by the energy with which the storage device has been charged.

In another method the energy stored is not, as in the previous instance, obtained from the energy of the disturbance effect transmitted from a distance, but from an independent source. The method in general consists in charging a storage device with energy from an independent source, controlling the charge of the device by the action of the effects or disturbances transmitted through the natural media and coincidently using the stored energy for operating a receiver. A condenser is used as the storage means.

The invisible radiations of the spectrum and of vacuum tubes are generally considered to be vibrations of extremely small wave length. These radiations posses the property of charging and discharging conductors of electricity, the discharge being particularly noticeable when the conductor upon which the rays impinge is negatively electrified. It is usually held that these radiations ionize or render conducting the atmosphere through which they are propagated. Tesla's own experiments lead him, however, to conclusions more in accord with the theory he has already advanced, in which he holds that sources of such radiant energy throw off with great velocities minute particles of matter which are strongly electrified, and therefore capable of charging an electrical conductor, or even if not so, of discharging an electrified conductor either by carrying off bodily its charge or otherwise.

Tesla has taken out a patent based on a discovery which he has made, that when rays or radiations of this kind are permitted to fall upon an insulated conducting body connected with one of the terminals of a condenser while the other terminal is made by independent means to receive or carry away electricity, a current flows into the condenser as long as the insulated body is exposed to the rays. Under certain conditions an indefinite accumulation of electrical energy takes place. This energy after a suitable time interval during which the rays are allowed to act, may manifest itself in a powerful discharge, which can be utilized for the operation or control of mechanical or electrical devices or rendered useful in many other ways. The radiant energy is directed upon an elevated conductor, connected with one of the armatures of the condenser, positively electrified by the invisible radiations. The electricity is carried off from the other armature by connecting it with the ground. The accumulated energy is discharged through a suitable receiver."

I'm reading Tesla's Colorado Springs Notes and was wondering if you could clarify a couple of points. Are there any pictures of his rotating coherers? Also, what would allow electricity to be transmitted through the earth to great distances as Tesla proposed without loss of power?

The coherer is the component in Tesla's receiver circuits which 'detects' the energy of incoming surface waves and space waves. It is actually called a "detector." Another early detector, invented by B.F. Miessner, is the "cat's whisker" detector used in older crystal radios. The introduction of the Audion triode vacuum tube detector was the next major improvement in receiver design. Tesla wrote about the application of vacuum tubes for this purpose stating, "this is undoubtedly the most delicate wireless detector known" [The True Wireless].

I'm not aware of any photos of the rotating coherer. The best image I know of is the drawing on page 99 of the Colorado Springs Notes, a copy of Tesla's drawing. The term "coherer" relates to the manner in which such devices function. Their operation depends upon the creation of an imperfect connection between two or more electrical conductors. The construction can be as simple as crossing two oxidized copper wires one on top of the other. As an increasing voltage from a battery is placed across the two conductors, a point is reached at which the imperfect, high-resistance junction abruptly changes to a low-resistance junction, the junction (or junctions) "cohere" together, and much greater current flows. The form of coherer used for wireless communications typically consisted of a glass cylinder partially filled with small metal particles, with electrical terminals at both ends. The trick to making a coherer sensitive to wireless signals is to set the battery voltage at a level just below the point at which the device shifts to it's low-resistance state. Connect a ground and an antenna, one on either side of the coherer, and an incoming signal of sufficient strength will make it conduct. The additional current flow can be used to close a relay, thus indicating the presence of the signal. The act of restoring the junction to it's high-resistance state--decohereing--involves creation of a mechanical disturbance of the device. This can be done by simply tapping it, or, as Tesla apparently conceived, rotating it.

See Tesla's Colorado Springs Lightning Observations for a short write up on Tesla's July 4, 1899 electrical-storm observation and the receiver that was probably used. See also Tesla's July 28 diary entry for a description and drawing of what appears to be a preferred receiver configuration.

It should be noted that Tesla called his method of wireless transmission and reception the "disturbed charge of ground and air method." The implication is that the electrical influence of the transmitter in both the earth as well as the space above it is involved in the propagation of the signal.

About Tesla's claim for transmission by earth currents with only minimal losses, he made a point of describing the process as being much the same as sending electricity through a wire. In his system the physical conductor is the earth itself. Compared with, say, copper wire, one might not think that dirt, rock, etc. would make a very good electrical conductor. Actually, the Earth's vastly greater cross-sectional area provides a remarkably low resistance path for the flow of earth currents. The greatest losses are apt to occur at the points of connection of the transmitting and receiving apparatus with the ground. This is why Tesla stated,

"You see the underground work is one of the most expensive parts of the tower. In this system that I have invented it is necessary for the machine to get a grip of the earth, otherwise it cannot shake the earth. It has to have a grip on the earth so that the whole of this globe can quiver, and to do that it is necessary to carry out a very expensive construction." [Nikola Tesla On His Work With Alternating Currents, p. 203, Appendix II, Foreclosure Proceedings]

DESCRIPTION OF FOLLOWING FILE MATERIAL

NIKOLA TESLA

100-2277	156	pages
REFERENCES	96	pages
	252	TOTAL PAGES

XXXXXXX
XXXXXXX
XXXXXXX

XXXXXXXXXXXXXXXXXXXX
X NO DUPLICATION FEE X
X FOR THIS PAGE X
XXXXXXXXXXXXXXXXXXXX

MAIN INVESTIGATIVE FILE

156 pages

[redacted] 9/24/40

Department of Justice,

Attn. Mr. G. Edgar Hoover,

Washington, D. C.

ALL INFORMATION CONTAINED
HEREIN IS UNCLASSIFIED
DATE 7-2-80 BY SP4 [illegible]

Dear Mr. Hoover:

The appended article was printed in the New York Times issue of Su September 22, 1940 and if based on proven facts, should be of vital importance to t War Department as well as to that of other nations now controlled by insane dictato

If, as the auther states, the teleforce has been perfected by Nikola Tesla, i would be a measure of foresightedness to insure his constant guarding against his b molested, possibly kidnapped and tortured, by alien enemies for the purpose of seizi the secret of such an invaluable instrument of war and/or defense

The foregoing is offered just in case the article and its inferences have no been called to your attention.

Very truly yours

[redacted]

1 ENCL

RECORDED & INDEXED

Mark 10/1/40 [redacted]
100-2237-1
FEDERAL BUREAU OF INVESTIGATION
2 SEP 26 1940
U.S. DEPARTMENT OF JUSTICE

3

NY Times 9/22/40

"Death Ray" for Planes

Nikola Tesla, one of the truly great inventors who celebrated his eighty-fourth birthday on July 10, tells the writer that he stands ready to divulge to the United States Government the secret of his "teleforce," with which, he said, airplane motors would be melted at a distance of 250 miles, so that an invisible Chinese Wall of Defense would be built around the country against any attempted attack by an enemy air force, no matter how large.

This "teleforce," he said, is based on an entirely new principle of physics that "no one has ever dreamed about," different from the principle embodied in his inventions relating to the transmission of electrical power from a distance, for which he has received a number of basic patents. This new type of force, Mr. Tesla said, would operate through a beam one one-hundred-millionth of a square centimeter in diameter, and could be generated from a special plant that would cost no more than $2,000,000 and would take only about three months to construct.

A dozen such plants, located at strategic points along the coast, according to Mr. Tesla, would be enough to defend the country against all possible aerial attack. The beam would melt any engine, whether Diesel or gasoline-driven, and would also ignite the explosives aboard any bomber. No possible defense against it could be devised, he asserts, as the beam would be all-penetrating.

High Vacuum Eliminated

The beam, he states, involves four new inventions, two of which already have been tested. One of these is a method and apparatus [illegible] producing rays [illegible] manifestations of [illegible] air, eliminating the [illegible] high vacuum; a second is a method and process for producing "very great electrical force"; the third is a method for amplifying this force, and the fourth is a new method for producing "a tremendous electrical repelling force." This would be the projector, or gun, of the system. The voltage for propelling the beam to its objective, according to the inventor, will attain a potential of 50,000,000 volts.

With this enormous voltage, he said, microscopic electrical particles of matter will be catapulted on their mission of defensive destruction. He has been working on this invention, he added, for many years and has recently made a number of improvements in it.

Mr. Tesla makes one important stipulation. Should the government decide to take up his offer he would go to work at once, but they would have to trust him. He would suffer "no interference from experts."

In ordinary times such a condition would very likely interpose an insuperable obstacle. But times being what they are, and with the nation getting ready to spend billions for national defense, at the same time taking in consideration the reputation of Mr. Tesla as an inventor who always was many years ahead of his time, the question arises whether it may not be advisable to take Mr. Tesla at his word and commission him to go ahead with the construction of his teleforce plant.

Such a Device "Invaluable"

After all, $2,000,000 would be relatively a very small sum compared with what is at stake. If Mr. Tesla really fulfills his promise the result achieved would be truly staggering. Not only would it save billions now planned for air defense, by making the country absolutely impregnable against any air attack, but it would also save many more billions in property that would otherwise be surely destroyed no matter how strong the defenses are as witness current events in England.

Take, for example, the Panama Canal. No matter how strong the defenses, a suicide squadron of dive bombers, according to some experts, might succeed in getting through and cause such damage that would make the Canal unusable, in which case our Navy might find itself bottled up.

Considering the probabilities in the case even if the chances were 100,000 to 1 against Mr. Tesla the odds would still be largely in favor of taking a chance on spending $2,000,000. In the opinion of the writer, who has known Mr. Tesla for many years and can testify that he still retains full intellectual vigor, the authorities in charge of building the national defense should at once look into the matter. The sum is insignificant compared with the magnitude of the stake.

ALL INFORMATION CONTAINED
HEREIN IS UNCLASSIFIED
DATE 7-19-92 BY [illegible]

100-2237-1

RECORDED & INDEXED

[redacted] 100-2237-1

October 1, 1940

[redacted]

(b)(7)(C)

Dear [redacted]

I wish to acknowledge receipt of your letter dated September 24, 1940, together with its enclosure.

Your courtesy and interest in bringing this information to my attention are indeed appreciated, and you may be assured your letter will receive appropriate consideration.

Sincerely yours,

John Edgar Hoover
Director

ALL INFORMATION CONTAINED
HEREIN IS UNCLASSIFIED
DATE 7-2-80 BY SP4 Jan/rtc

Mr. Tolson
Mr. Clegg
Mr. E. A. Tamm
Mr. Foxworth
Mr. Nathan
Mr. Ladd
Mr. Egan
Mr. Glavin
Mr. Nichols
Mr. Gandon
Mr. Rosen
Mr. Tracy
Miss Gandy

COMMUNICATIONS SECTION
MAILED
★ OCT 1 1940 ★
P.M.
FEDERAL BUREAU OF INVESTIGATION
U.S. DEPARTMENT OF JUSTICE

[redacted] (b)(7)(C)

5

[redacted]

NOT FOIA REDACTIONS

U. S. DEPARTMENT OF JUSTICE

JAN 12 1943

TELETYPE

[redacted]

Mr. Toleo
Mr. E. A.
Mr. Cl...
Mr. ...
Mr. ...
Mr. Nichol
Mr. ...
Mr. Tracy
Mr. Carson
Mr. ...
Mr. ...
Mr. McGuire
Mr. ...
Mr. Quinn
Mr. Nease
Mr. Gandy

FBI NYC 1-12-43 11-06 PM WHS
DIRECTOR
VEST

UNSUBS --- EQUIPMENT, EXPERIMENTS AND RESEARCH OF NIKOLA TESLA, DECEASED, [redacted] ESPIONAGE - M. RETEL UNDER ABOVE HEADING TO THE BUREAU FROM THIS OFFICE DATED JAN NINE LAST. INQUIRY DEVELOPS THAT TESLA DIE JAN EIGHT, RATHER THAN THURSDAY, JAN SEVEN, AS [redacted] STATED IN REFERENCE TELETYPE. ON THE NIGHT OF JAN EIGHT, SAVA KOSANOVICH, GEORG CLARK, AND KENNETH SWEEZEY VISITED TESLA-S HOTEL WITH A REPRESENTATIVE OF SHAW WALKER CO. IN ORDER TO OPEN THE SAFE IN THE ROOM OF TESLA. KOSANOVICH LATER REPORTED TO WALTER GORSUCH, OFFICE OF ALIEN PROPERTY CUSTODIAN, NYC, THAT HE WENT INTO THE ROOM IN ORDER TO SEARCH FOR A WILL OF TESLA. KOSANOVICH AND THE OTHERS MADE THE SEARCH OF THE SAFE IN THE PRESENCE OF THREE ASST MANAGERS OF HOTEL NEW YORKER AS WELL AS REPRESENTATIVES OF THE YUGOSLAVIAN CONSULATE, IDENTITIES OF LATTER NOT YET KNOWN. AFTER THE SAFE WAS OPENED, SWEEZEY, TOOK FROM THE SAFE A BOOK CONTAINING TESTIMONIALS SENT TO TESLA ON THE OCCASION OF HIS SEVE TY FIFTH BIRTHDAY. THIS BOOK WAS ARRANGED FOR TESLA BY SWEEZEY. KOSANOVICH TOOK FROM THE ROOM THREE PICTURES OF TESLA, TWO BEING EN-LARGED NEWSPAPER PICTUREX. ACCORDING TO MANAGERS OF HOTEL AND KOSANO-VICH HIMSELF, NOTHING ELSE WAS REMOVED FROM THE ROOM OR SAFE. THE SAFE WAS THEN CLOSED UNDER A NEW COMBINATION, WHICH COMBINATION IS NOW IN POSSESSION O[redacted] KOSANOVICH. ON SATURDAY AFTERNOON, JAN NINE, GORSUCH AND [redacted] FTIZGERALD OF ALIEN PROPERTY CONTROL WENT TO HOTEL AND SEIZED ALL THE PROPERTY OF TESLA, CONSISTING OF ABOUT TWO TRUCKLOANDS OF MATERIAL, SEALED ALL ARTICLES AND TRANSFERRED THEM TO THE MANHATTAN STORAGE AND WAREHOUSE CO. NY, WHERE THEY ARE NOW LOCATED AT THAT [redacted] TIME THERE WERE ALSO IN THIS WAREHOUSE APPROXIMATELY THIRTY BARRELS AND BUNDLES BELONGING TO TESLA WHICH HAD BEEN THERE SIN ABOUT NINETEEN THIRTY FOUR. THESE HAVE ALSO [redacted] BEEN SEALED AND ARE NOW UNDER ORDERS OF ALIEN PROPERTY CUSTODIAN. IN VIEW OF FACT TESL IS A US NATURALIZED CITIZEN, ALIEN PROPERTY CUSTODIAN FEELS THAT ITS JURISDICTION OVER PROPERTY IS DOUBTFUL BUT [redacted] FEELS THAT NO OTHER AGENCY WILL BE ABLE TO GET [redacted] TO THIS PROPERTY FOR AT LEAST TWO DAYS

COPIES DESTROYED 3/10/58 #4

ALL INFORMATION CONTAINED HEREIN IS UNCLASSIFIED DATE 7.13.82 INDEX

Rec'd 12 15 am 1-13-43

100-2237-2

NOT FOIA REDACTION

16 JAN 13 1943

COPY IN FILE

77 FEB 5 1943

[redacted]

REDACTIONS ON THIS PAGE ARE NOT FOIA DELETIONS

6

PAGE TWO
AFTER THAT TIME IT IS POSSIBLE THAT A PUBLIC ADMINISTRATOR WILL BE APPOINTED FOR THE PROPERTY WHO MAY TAKE THE PROPERTY INTO HIS CUSTODY. TESLA ALSO HAD SOME PROPERTY, [redacted] ALLEGED BY INFORMANT FITZGERALD IN THIS CASE, TO BE A WORKING MODEL OF AN INVENTION IN A SAFE DEPOSIT BOX IN GOVERNOR CLINTON HOTEL IN NY. INQUIRY SHOWS THAT THIS WAS PLACED HERE BY TESLA IN NINETEEN THIRTY TWO AS SECURITY FOR FOUR HUNDRED DOLLARS OWED HOTEL. THIS BILL IS STILL OWED AND HOTEL APPEARS UNWILLING TO RELEASE THIS PROPERTY TO ANYONE AT LEAST UNTIL [redacted] DEBT IS PAID, BUT THIS OFFICE WILL BE ADVISED IF ANYONE ATTEMPTS TO PAY BILL AND OBTAIN PROPERTY. CONCERNING TESLA HOTEL MANAGERS REPORT HE WAS [redacted] VERY ECCENTRIC IF NOT [redacted] MENTALLY DERANGED DURING PAST TEN YEARS AND IT IS DOUBTFUL IF HE HAS CREATED ANYTHING OF VALUE DURING THAT TIME, ALTHOPRIOR TO THAT HE PROBABLY WAS A VERY BRILLIANT INVENTOR. THEREFORE, ANY NOTES OF VALUE WERE PROBABLY THOSE MADE PRIOR TO THAT TIME. KOSANOVICH IS A NEPHEW OF TESLA WHO DESCRIBED HIMSELF AS FORMERLY QUOTE YUGOSLAV MINISTER OF STATE UNQUOTE AND NOW QUOTE [redacted] PRESIDENT OF EASTERN AND CENTRAL PLANNING BOARD REPRESENTING YUGOSLOVIA, CZECHOSLOVAKIA, POLAND AND GREECE, UNQUOTE. SWEEZEY IS A WRITER FOR POPULAR MECHANICS AND OTHER PUBLICATIONS WHO IS [redacted] DESIROUS OF PUBLISHING A BIOGRAPHY OF TESLA AND THERFORE WOULD LIKE TO OBTAIN CONTROL OF HIS NOTES FOR THIS WORK. CLARK IS EMPLOYED BY RCA AND WOULD ALSO PROVIDE STORAGE ROOM FOR TESLAS EFFECTS IN ORDER TO USE THEM IN WRITING A BIOGRAPHY. TESLA AT ONE TIME REPORTED TO BE WORKING ON EXPERIMENTS FOR YUGOSLAVIAN GOVERNMENT IN EXILE. IT IS DESIRED THAT BUREAU ADVISE IMMEDIATELY WHETHER IT IS INTERESTED FURTHER IN THIS PROPERTY FOR PURPOSES OF TAKING CONTROL OF IT. SUGGEST THAT, IN VIEW OF FACT THAT THE NOTES AND OTHER MATERIAL WOULD BE HIGHLY TECHNICAL IN CHARACTER AND FOR THAT REASON [redacted] COULD NOT BE REVIEWED [redacted] EXCEPT BY A TRAINED PERSON THE OFFICE OF SCIENTIFIC RESEARCH DEVEL-

OPMENT MIGHT BE INTERESTED.
FOXWORTH
END NYC S2 WHS
HOLD WA R 2 RSG

[redacted]

REDACTIONS ON THIS PAGE ARE NOT FOIA DELETIONS

[illegible] IS UNCLASSIFIED
DATE 7-13-82 [illegible]

Mr. [illegible]
Mr. [illegible]
Mr. [illegible]
Mr. Glavin
Mr. Ladd
Mr. Nichols
Mr. Bason
Mr. Tracy
Mr. Carson
Mr. Coffey
Mr. Hendon
Mr. McGuire
Mr. Mumf[illegible]
Mr. Quinn Tamm
Mr. N[illegible]
Miss Gandy

Little

FBI NYC 1-9-43 11-30 PM D[illegible]
DIRECTOR
COAT
UNKNOWN SUBJECTS. E[redacted] EXPERIMENTS AN[illegible] OF NIKOLA TESLA, DECEASED. ESPIONAGE - M. NIKOLA TESLA, ON[illegible] STANDING SCIENTISTS IN THE ELECTRICAL FIELD, DIED [illegible] TEEN FORTY THREE AT THE HOTEL NEW YORKER, NEW YORK [illegible] LIFETIME, HE CONDUCTED MANY EXPERIMENTS IN CONNECT[illegible] TRANSMISSION OF ELECTRICAL POWER AND [redacted] WHAT [illegible] THE DEATH RAY. ACCORDING TO INFORMATION FURNISHED [illegible] THREE SIX FIFTH AVENUE, NEW YORK CITY, THE NOTES A[illegible] EXPERIMENTS AND FORMULAE TOGETHER WITH DESIGNS OF [illegible] VITALIZE THEM ARE AMONG TESLAS PERSONAL EFFECTS, A[illegible] TAKEN TO PRESERVE THEM OR TO KEEP THEM FROM FALLIN[illegible] [redacted] UNFRIENDLY TO THE WAR EFFORT OF THE UN[illegible] ING TO SPANEL, A DISTANT RELATIVE OF TESLA, NAMED S[illegible] WAS INTENSELY DISLIKED BY TESLA, IS TAKING STEPS T[illegible] THESE IMPORTANT DOCUMNTS AND PLANS. SPANEL BELIEV[illegible] STRONG LIKELIHOOD THAT KOSANOVICH WILL MAKE THIS MATERIAL AVAILABLE TO TO THE ENEMY. SPANEL ADVISED G TWO HEADQUARTERS IN WASHINGTON, AS WELL AS MR MORKIN OF THE DEPARTMENT OF JUSTICE IN WASHINGTON, CONCERING THE ABOVE. SPANEL WAS ALSO INTELEPHONIC COMMUNICATION WITH [redacted] DR D LOZADO, ONE OF THE ADVISORS TO VICE PRESIDENT WALLACE CONCERNING THIS MATTER, AND LOZADO TOLD SPANEL [redacted] THAT THE GOVERNMENT WAS VITALLY INTERESTED IN THE EFFECTS OF TESLA AND REQUESTED SPANEL TO LOSE NO TIME IN DOING ALL HE COULD TO PRESERVE [redacted] THEM. BLOYCE FITZGERALD, AN ELECTRICAL ENGINEER WHO HAD BEEN QUITE CLOSE TO TESLA DURING HIS LIFE TIME, ADVISED THE NEW YORK OFFICE THAT ON JANUARY SEVENTH, NINETEEN FORTY THREE, SAVA KOSANOVICH, GEORGE CLARK, WHO IS IN CHARGE OF THE MUSEUM AND LABORATORY FOR RCA, AND KENNETH SWEZEY OF ONE SIX THREE MILTON STREET, BROOLKYN, NY, WENT TO TESLAS ROOMS IN THE NEW YORKER, AND WITH THE ASSISTANCE OF A [redacted] LOCKSMITH BROKE INTO A SAFE WHICH TESLA HAD INHIS ROOMS IN WHICH HE KEPT SOME OF HIS VALUABLE PAPERS, INCLUDING IMPORTANT [redacted] ELECTRICAL FORMULAE, DESIGNS, ET CETERA. WITHIN THE PAST MONTH, TESLA TOLD FITZGERALS THAT HIS EXPERIMENTS IN CONNECTION WITH THE WIRELESS TRANSMISSION OF ELECTRICAL POWER HAD BEEN COMPLETED AND PERFECTED.

Memo Mr. Ladd 1/11/43 JBL
Memo to Director 1/11/43 JBL.

RECORDED

100-2237-3

ENCLOSURE

F B

17 JAN 18 1943

FIVE

NOT FOIA REDACTIONS

Best Copy Available

8

PAGE TWO

FITZGERALD ALSO KNOWS THATTESLA HAS CONCEIVED AND [redacted] A REVOLUTIONARY TYPE OF TORPEDO WHICH IS NOT PRESENTLY IN USE [redacted] THE NATIONS. IT IS FITZGERALDS BELIEF THAT THIS DESIGN HAS NOT [redacted] AVAILABLE TO ANY NATION UP TO THE PRESENT TIME. FROM STATEME[redacted] TO FITZGEARLD BY TESLA , HE KNOWS THAT THE COMPLETE PLANS [redacted]CATIONS AND EXPLANATION OF THE BASIC THEORIES OF THESE THIN[redacted]OME PLACE IN THE PERSONAL EFFECTS OF TESLA. HE ALSO KNOWS THAT [redacted] A WORKING MODEL OF TESLAS WHICH COST MORE THAN TEN THOUSAND D[redacted]O BUILD IN A SAFETY [redacted] DEPOSIT BOX BELONGING TO TESLA[redacted]GOVERNOR CLINTON H[redacted]X HOTEL, AND [redacted]X FITZGEARLD [redacted] THIS MODEL HAS TO DO WITH THE SO CALLEDE DEATH RAY OR THE WIRE[redacted]NSMISSION OF ELECTRICAL CURRENT. TESLA HAS ALSO TOLD FITZGEARLE[redacted] CONVERSATIONS THAT HE HAS SOME [redacted]X EIGHTY [redacted] TRUNKS INDIFFERE[redacted]ES CONTAINING TRANSCRIPTS AND PLANS HAVING TO DO WITH EXPERIMENTS [redacted]ED BY HIM. BUREAU IS REQUESTED TO ADVISE IMMEDIATELY WHAT, IF [redacted]ION SHOULD BE TAKEN CONCERNING THIS MATTER BY THE NEW YORK FIEL[redacted]ION.

FOXWORTH

CORRECTION- THROUGHOUT THE ENTIRE TELETYPE THE NAME THAT SHOULD APPEAR IS FITZGEARLD [redacted] NOT FITZGERALD [redacted] AS IT SOMETIMES IS SPELLED

HOLD

NOT FOIA REDACTIONS

Best Copy Available

JOHN EDGAR HOOVER
DIRECTOR

C-287

Mr. Tolson
Mr. E.A. Tamm
Mr. Clegg
Mr. Glavin
Mr. Ladd
Mr. Nichols
Mr. Rosen
Mr. Tracy
Mr. Carson
Mr. Coffey
Mr. Hendon
Mr. Kramer
Mr. McGuire
Mr. Harbo
Mr. Quinn Tamm
Tele. Room
Mr. Nease
Miss Beahm
Miss Gandy

Federal Bureau of Investiga[redacted]
United States Department of [redacted]
Washington, D. C.

JBL:ed

January 11, 1943

ALL INFORMATION CONTAINED HEREIN IS UNCLASSIFIED DATE 2-2-80 BY SP4 Jmpte

MEMORANDUM FOR [redacted]

RE: UNKNOWN SUBJEC[redacted]
EXPERIMENTS A[redacted]
OF NIKOLA TESL[redacted]
ESPIONAGE - [redacted]

Nikola Tesla, one of the world's outsta[redacted] in the electrical field, died at his residence in the [redacted] New York City, on January 7, 1943. In the course of [redacted]ucted many experiments with respect to the transmission [redacted] by means of radio and what is commonly called the "Death Ray" [redacted] with respect to the wireless transmission of electrical [redacted] were [redacted] to have been completed and perfected, and Tesla had also co[redacted]ed and [redacted] a revolutionary type of torpedo which is not in use b[redacted]tio[redacted] present time. The specifications, explanations of the basi[redacted]ies, [redacted]rking models of Tesla's scientific endeavors are reported to be [redacted] his effects. Tesla is reported to have some 80 trunks in different places containing transcripts and plans having to do with his experiments as well as a working model of one of his developments in the safety deposit box at the Governor Clinton Hotel.

Information concerning Tesla's experiment[redacted]n reported to the New York Office by A. N. Spanel and Bloyce Fitzgerald, the latter an electrical engineer who had been quite close to Tesla. Both of these individuals have indicated that no steps have been taken to preserve Tesla's records and models or to keep them from falling into the hands of individuals sympathetic to the Axis powers.

1 ENCLO

Tesla has a distant relative by the name of Sava Kosanovich, whom he intensely disliked. Kosanovich is reported to be taking steps to get possession of these important documents and plans, and Spanel believes there is a strong likelihood that Kosanovich will make such information available to the enemy. On January 7, 1943, Kosanovich, accompanied by George Clark, in charge of the Museum and Laboratory for RCA, and Kenneth Swezey of Brooklyn, New York, entered Tesla's rooms at the Hotel New Yorker where, with the aid of a locksmith, they broke into a safe in which Tesla kept some of his valuable papers, including important electrical formulae, designs, et cetera.

RECORDED & INDEXED

D63

100-2237-3

Mr. Spanel, in addition to reporting these developments to the Bureau, has also advised the headquarters of the Military Intelligence Division, a Mr. Workin of the Department of Justice in Washington, and Dr. Lozado, one of the advisors to Vice President Wallace. Lozado advised Spanel that the Government was vitally interested in the effects of Tesla and requested that Spanel loose no time in doing all he could to preserve them.

1 JAN 18 1943

COPIES DESTROYED

55 JAN 26 1943

1-12-43

10

Best Copy Available

The New York Office was instructed to disc[illegible]ke the matter up with the State's Attorney in New York City with the [illegible] possibly taking Kosanovich into custody on a burglary charge and obt[illegible] the various papers which Kosanovich is reported to have taken from Tes[illegible]. It was pointed out that any activities pursued by the State's Attor[illegible]d be handled in a most secret fashion in order to avoid any publici[illegible]ect to Tesla's inventions. The New York Office was also instructe[illegible] the Surrogate Court in order that stops could be placed against t[illegible] of Tesla both in his hotel and any other points, in particular, the [illegible] boxes that he ma have in order that no one may enter them without a [illegible]tative being present and every precaution taken to preserve the secrecy [illegible]la's inventions. The New York Office is to keep the Bureau advised of all de[illegible]ents.

Respectfully,

D. M. Ladd

D. M. Ladd

L.M.C Smith is handlin this with alien Property Custodian so there appear to be no need for us to mess around in it.

EW

11

Best Copy Available

JOHN EDGAR HOOVER
DIRECTOR

7

Mr. Tolson
Mr. E. A. Tam
Mr. Clegg
Mr. Glavin
Mr. Ladd
Mr. Nichols
Mr. Rosen
Mr. Tracy
Mr. Carson
Mr. Coffey
Mr. Hendon
Mr. Kramer
Mr. McGuire
Mr. Harbo
Mr. Quinn Tam
Tele. Room
Mr. Nease
Miss Beahm
Miss Gandy

Federal Bureau of Investigation
United States Department of Justice
Washington, D. C.

EAT:DS

January 12, 1943

MEMORANDUM FOR MR. LADD

On Friday, January 8th, Mr. L. M. C. Smith called me in connection with the death of Nikola Tesla. He advised me that he was concerned about the possibility of enemy agents confiscating some of the trunks of Tesla, who had died on January 7th. He understood that the War Department was interested in this matter and that apparently the Alien Property Custodian's office was taking some action. He desired to know whether the Bureau would take some steps to refrain relatives of Tesla from taking the contents of his trunks and whether the Bureau would seize possession of the trunks. Mr. Smith indicated that he was talking to the Alien Property Custodian along the same lines. I told him that in view of the fact he was going to handle the matter with the Alien Property Custodian's office, there did not appear to be any action which the Bureau could or should take.

INFORMATION CONTAINED
IS UNCLASSIFIED
7-2-80 BY

I ENCLO. 1

Very truly yours,

Edw. A. Tamm

12 30 from 1/13/43
Called Donegan
& instructed no
further action

advise field

RECORDED

100-2237-3

B
1 JAN 13 1943

FOR VICTORY
BUY
UNITED STATES DEFENSE BONDS AND STAMPS

53 JAN 22 1943

12

[redacted]

(b)
(7)
(c)

April 16, 1948

ALL INFORMATION CONTAINED
HEREIN IS UNCLASSIFIED
DATE 2-3-88 BY SP4 JRM/RTC

Mr. J. E. Hoover
Federal Bureau of Investigation
Washington D.C.

Dear Mr. Hoover,

I am a student at the Milwaukee School of Engineering, studying Electrical Engineering. I am also interested in the life and work of Nickola Tesla. I understand that at the time of his death, your department took his manuscripts and experiment data for national security. I am preparing a paper to be presented before the student branch of the American Institute of Electrical Engineers on Tesla.

RECORDED & INDEXED 14 SEP 10
100-2237-3X

If it is possible I would appreciate material bearing on Tesla's [redacted] and methods of experiment.

FBI
APR 28 1948

13

This information would help me in a better presentation of this paper and consequently a far greater appreciation of his work in the field of science.

I know that a part of the experiments and theory have a secret classification, and I do not expect any of it.

I am intrested in "Ground Current Transmission" as the basis of my thesis for graduation. If it is possible to obtain this information, I would be very grateful.

Yours very truly,

[redacted] (6)(7)(c)

100-2237-3X April [illegible], 1948

RECORDED 65-47953-18

[redacted]

(b)
(7)
(C)

INFORMATION CONTAINED HEREIN IS UNCLASSIFIED DATE 7-3-[illegible] BY SP4

Dear [redacted]

Your letter of April [illegible], 1948, has been received and I want to express my appreciation to you for having written me as you did. The effects of Nickola Tesla were handled by the Office of Alien Property, and not by this Bureau. It is suggested you may desire to communicate with the Office of Alien Property, United States Department of Justice, 101 Indiana Avenue, Washington, D. C.

Sincerely yours,

John Edgar Hoover
Director

NOTE: This individual requests information relative to the work of Nickola Tesla relative to electrical experiments he was conducting, which Swain understands were taken by this Bureau and held for security reasons. Bureau file [illegible] reflects that the effects of Tesla were handled by the Office of Alien Property.

VWPrjec

Mr. Tolson
Mr. E. A. Tamm
Mr. Clegg
Mr. Glavin
Mr. Ladd
Mr. Nichols
Mr. Rosen
Mr. Tracy
Mr. Egan
Mr. Gurnea
Mr. Harbo
Mr. Pohr
Mr. Pennington
Mr. Quinn Tamm
Tele. Room
Mr. Nease
Miss Gandy

COMMUNICATIONS SECTION
MAILED 8
☆ APR 2[illegible] 1948 P.M.
FEDERAL BUREAU OF INVESTIGATION
U. S. DEPARTMENT OF JUSTICE

6 0 MAY 10 1948

RECEIVED READING ROOM
APR 7 00 PM '48

15

April 3, 1950

ALL INFORMATION CONTAINED
HEREIN IS UNCLASSIFIED
DATE 7-2-80 BY SP4 [illegible]

[redacted]

(b)
(7)
(C)

[redacted]:

Reference is made to your inquiry by telephone on March 29, 1950, concerning certain technical papers which belonged to the late Nikola Tesla.

From an examination of our files, we have been able to determine that this Bureau has never been in possession, as had been indicated to you, of a copy of Dr. Tesla's papers.

Very sincerely yours,

J. Edgar Hoover

100-2237-3X1

~~65-47953-26~~

RECORDED - 53

APR 7 1950

80

67C

[redacted]

EX-115

U.S. DEPT. OF JUSTICE
RECEIVED READING ROOM
FBI
APR 3 5 19 PM '50

(b)
(7)
(C)

APR 4 11 20 AM '50
RECEIVED
U S DEPT
[redacted]

[redacted]

Tolson
Ladd
Clegg
Glavin
Nichols
Rosen
Tracy
Carbo
Ohr
Tele. Room
Case
Andy

MAILED 4
APR 4 1950
COMM - FBI

16

Director, FBI

SAC, New York

April 17, 1950

(b)
(7)
(C)

[redacted]

Rebulet dated April 3 last.

On April 7, 1950 agents of this office interviewed Mr. J.V. POTTS, Vice President of the Manhattan Warehouse and Storage Company, 52nd Street & 7th Avenue, New York City, and at that time Mr. POTTS advised that the rules of his firm required that all persons gaining access to goods stored by Manhattan first had to fill out an appropriate form setting forth their names, date of visit, and reason for requesting access to the goods.

In a review of the file pertaining to the storage of the effects of NIKOLA TESLA, MR. POTTS revealed that only one such visit had been made by persons outside of the management of Manhattan Storage itself. This one occassion took place on January 26 and 27, 1943, at which time representatives of the Alien Property Custodian made a thorough review of the entire effects of the TESLA estate.

NIKOLA TESLA

The TESLA effects are stored in rooms 5J and 5L of Manhattan Storage's warehouse at 52nd Street & 7th Avenue, New York City. MR. MICHAEL KING, who stated he had been Floor Supervisor for approximately 10 years on the floor in question, stated that he could recall only the one occassion in early 1943 when an examination was made of the TESLA effects. He stated that at that time numerous photographs were taken by the examiners. His description of the equipment used would tend to show that a microfilm reproduction was made of some of the papers of the deceased scientist. MR. KING added that several of the group making the examination wore U.S. Navy uniforms, and during the two days required to complete the examination the civilian assistants in the group were identified to him only as "FEDERAL AUTHORITIES". According to MR. KING, no other instance of microfilming of the records of the TESLA estate has taken place since that time.

It should be noted that the Bureau was informed of the examination mentioned above by New York letter (with attachments) dated October 17, 1945, entitled UNKNOWN SUBJECT; SAVA NOSANOVICH; Experiments & Research of NIKOLA TESLA (Deceased), Espionage-M.

cc: 65-12290

ALL INFORMATION CONTAINED HEREIN IS UNCLASSIFIED DATE 7-3-80 BY SP4 Jrm/rtc

100-2237-
NOT RECORDED
148 APR 28

EHH:JJC
105-1391

17

MR. POTTS stated that no inquiry had been received by Manhattan from SAVA N. KOSANOVICH, nor had Manhattan informed him, in any way, that an examination of the TESLA effects had been made by anyone. In fact, added MR. POTTS, the only correspondence relating to the TESLA estate has been in the form of bills for storage.

MR. POTTS stated that any personal inquires regarding the estate would of necessity be directed to him, and to date no such inquiries have been made.

Interviewing agents explained to MR. POTTS that the examination made, as mentioned above, was not instigated by the Bureau, nor had the Bureau taken part in that examination.

Unless advised to the contrary, this investigation is being placed in a closed status, and no further investigative action is contemplated by this office. CLOSED.

[redacted]

(b)
(7)
(C)

[redacted]

August 18, 1952

Federal Bureau of Investigation
Department of Records
Washington, D. C.

ALL INFORMATION CONTAINED
HEREIN IS UNCLASSIFIED
DATE 2-2-80 BY SP4 Jam/jr

Gentlemen:

In a manner of introduction, I wish to state that I am working toward a degree in Electrical Engineering at the Institute of Technology of the University of Minnesota.

For several years, I have been engaged in a study of extensive compass and detail concerning the researches and writings of the late, world renowned scientist, Dr. Nikola Tesla. At considerable expense, I have acquired an extensive collection of materials relating to Dr. Tesla and his works which include:

1) Personal letters written by Tesla to his close friend.

2) Numerous periodicals, some of which are to be found in only a few libraries throughout the United States.

3) A few rare books which have now become "collector's items".

4) A collection of issued patents.

Although the items listed are considerable in number, the specific information desired is lacking.

As I understand it, because of the nature of Dr. Tesla's role in scientific developments, all research papers, patent applications, etc., were secured by the Federal Bureau of Investigation at the time of Dr. Tesla's death in January of 1943.

The purpose of this seizure, as described in numerous articles, was to determine whether these papers contained suggestions leading toward advancements in the field of science.

100 2237-4

RECORDED - 68

Reply
8-26-52

[redacted]

W - 28

(b)
(7)
(C)

[redacted]

19

Now it seems that sufficient time has elapsed for an investigation of this kind. If Dr. Tesla's Estate has been released by the department in charge, any records that can be made available for examination will be welcomed.

A letter from Harold I. Baynton, Assistant Attorney General, Director, Office of Alien Property, informed me that the Library of Congress listed certain works, writings and research studies prepared by the late Dr. Tesla. However, a letter addressed to the Library failed to bring results as the Library "has no files on the researches of Tesla".

A similar result was obtained from the Bureau of Naval Research and the Department of Commerce.

I am especially interested in the research work in which Tesla was engaged in his later years. There are various unpublished works, such as a 10-page typewritten statement presented in 1937 at a meeting of several well-known editors outlining his discoveries and giving a resume' of his work in the fields of gravity and cosmic ray research, etc. Also, Tesla prepared various papers, one of which was in effort to secure the Pierre Gutzman Prize from the Institute of France. My inquiry is in effort to determine whether any of these documents, as well as others, are at this time available.

I will greatly appreciate any information in regard to any records which you may have.

Very truly yours,

(6)
(7)
(C)

[redacted]

August 26, 1952

EX. - 28

[redacted]

INDEXED 68
RECORDED - 68

100-2237-4

(b)(7)(c)

ALL INFORMATION CONTAINED HEREIN IS UNCLASSIFIED DATE 7-2-80 BY SP4 Jmfrte

Dear [redacted]

With reference to your letter of August 18, 1952, our files disclose that the effects of Nikola Tesla were taken into custody at the time of his death by the Office of Alien Property, and not by this Bureau. Consequently, you may wish to communicate further with that agency, which may be addressed as follows: (65-47953)

Assistant Attorney General
Rowland F. Kirks
Director, Office of Alien Property
United States Department of Justice
101 Indiana Avenue, N. W.
Washington 25, D. C.

Sincerely yours,

John Edgar Hoover
Director

cc - 1 - Assistant Attorney General (with copy of incoming)
Rowland F. Kirks
Director, Office of Alien Property
United States Department of Justice
101 Indiana Avenue, N. W.
Washington 25, D. C.

MAILED 10
AUG 27 1952
COMM-FBI

[redacted]

(b)
(7)
(c)

100-2237

NOTE: No reference Bureau files on correspondent in Minnesota.. 8-22-52...per [redacted]

60 SEP 10 1952

21

STANDARD FORM NO. 64

Office Memorandum • UNITED STATES GOVERNMENT

TO : MR. A. H. BELMONT

DATE: May 5, 1953

FROM : MR. L. L. LAUGHLIN

SUBJECT: NIKOLA TESLA (Deceased)
INFORMATION CONCERNING

[redacted] INFORMATION CONTAINED HEREIN IS UNCLASSIFIED DATE 2-22-80 BY SP4 Smith

[redacted] called on the afternoon of May 4, 1953.

[redacted] stated that he had been reading a book entitled, "The Prodigal Genius - The Life of Nikola Tesla" by John J. O'Neill, whom [redacted] described as a science writer for a New York newspaper (publisher - Ives Washburn). [redacted] noted in this book that Bureau Agents went to Tesla's room following his death on January 7, 1943, opened his safe, examined his papers, and took over his personal files. [redacted] said this appeared on page 277. [redacted] stated that Tesla is the father of modern power engineering, being responsible for the invention of the A. C. generator, motor transmission, and other electrical engineering feats. He inquired (1) if the papers and works of Tesla were in the possession of the Bureau, and (2) if so, were they available for review in view of their scientific importance.

I told [redacted] that the statement concerning the Bureau's taking Tesla's files did not seem very logical but that I would check on the matter. (b) (7) (C)

The Bureau's files reflect that shortly after the death of Tesla in his hotel room in New York City on January 7, 1943, Sava Kosanovich, a distant relative, and other individuals entered his room and opened the safe, examining certain materials which he possessed. On January 8, 1943, Mr. L. M. C. Smith of the Department advised Mr. Tamm that he was concerned about the possibility of enemy agents confiscating some of the trunks of Tesla and apparently the Office of Alien Property Custodian was taking some action regarding these effects. Since the matter was being handled by the Office of Alien Property Custodian, the Bureau did not make any inquiries into this situation. (65-47953-6)

It is noted also that the Bureau received a letter dated April 16, 1948, from [redacted] explaining that he was studying electrical engineering at the Milwaukee School of Engineering and

100-2237-4X

[redacted]

RECORDED-66
INDEXED-66 MAY 6 1953

65-47953

1 - Mr. Nichols

[redacted] (b) (7) (C)

22

was interested in the life and works of Tesla. [redacted] stated that he understood at the time of Tesla's death the Bureau took his manuscripts and experiment data for national security. The Bureau on April 22, 1948, advised [redacted] that the effects of Tesla were handled by the Office of Alien Property and not by the FBI.(65-47953-18)

I called [redacted] this morning and told him that it was the office of Alien Property and not the FBI which took over the effects of Tesla following his death. Accordingly, I suggested that [redacted] might wish to communicate with the office of Alien Property for further information concerning this matter.

The book "Prodigal Genius - The Life of Nikola Tesla" is not in the Bureau Library. A copy is being obtained from the Library of Congress. It will be examined to determine specifically the reference made to the Bureau's taking these papers. At that time a determination can be made as to what further action should be taken.

(b)
(7)
(C

ADDENDUM: LLL:mer 5-14-53

Page 277 of the "Prodigal Genius - The Life of Nikola Tesla," describing Tesla's death, contains the following statement: "Operatives from the Federal Bureau of Investigation came and opened the safe in his room and took the papers it contained, to examine them for a reported important secret invention of possible use in the war."

Since this work was published in 1944, it is not felt that any particular purpose would be served by raising an objection with the publishers at this time. [redacted] the individual who raised the question, has been set straight and, therefore, no further action is being taken.

STANDARD FORM NO. 64

Office Memorandum • UNITED STATES GOVERNMENT

TO : Director, FBI

DATE: 2/19/54

FROM : SAC, New York (6[illegible])

INDEXED

SUBJECT: LELAND I. [illegible]
[illegible]

INFORMATION CONTAINED
IN IS UNCLASSIFIED
[illegible] 7-2-80 [illegible]

Mr. GEORGE H. SCHERFF, JR., 149 [illegible]ord Road, [illegible] Rochelle, New York, advised that he received two letters from LELAND [illegible], 127 Seymour Avenue Southeast, Minneapolis, Minnesota, photostat[illegible] of which are being furnished the Bureau and Minneapolis.

Mr. SCHERFF stated that he was an associate [illegible] NIKOLA TESLA in 1914 and that for many years his father had been Dr. [illegible] private secretary. Mr. SCHERFF said that he never heard of LELAND I. A[illegible] did he ever hear of any of the names mentioned in ANDERSON'S letter.

Mr. SCHERFF stated that he has quite a bit of [illegible]'S writings in his possession and he didn't know whether or not they would be of value to a foreign government.

[redacted] (6)(7)(C)

No further action is being taken by the N.Y. Office, UACB.

Encs. (29)
1 - Minneapolis (3 Encs.)

EXP. PROC.

memo: New York
[redacted]: aaa
3-10-54

100-2237-4X1
~~100-0-4973~~

RECORDED - 15
MAR 1 1954
3-11

INDEXED - 15
EX-129

67C

[redacted]

no action

[redacted]

(6)
(7)
(C)

24

Leland I. Anderson
127 Seymour Avenue Southeast
Minneapolis 14, Minnesota

February 3, 1954

Mr. George H. Scherff, Jr.
149 Seacord Road
Westchester, NEW YORK

Dear Mr. Scherff:

re.: The Life and Work of Dr. Nikola Tesla.

Recently, I have founded an organization in name and honor of Dr. Tesla in cooperation with several people who were intimately associated with Tesla during his lifetime, and with others who are interested in Dr. Tesla and his achievements from a scientific and historical standpoint. (See enclosed brochure.) I have had some difficulty locating a few of Tesla's associates, and, the name of George Scherff is among them. Therefore, it is my sincere hope that you, Mr. Scherff, are the person I seek as having been associated with Tesla.

I have personally studied the works of Tesla for a number of years, being particularly interested in elaborating upon his researches regarding high-tension radiant beams. Through some travel and other efforts, I have been fortunate to locate many original collections of Tesla's correspondence and manuscripts, and in a few cases obtained a number of interesting items.

I was in New York a short time ago on business, and while there I visited Mr. Kenneth M. Swezey. He intends to undertake some significant work on behalf of Tesla in the near future, and since he knew Tesla for so many years during his later life, it will be handled with great understanding.

I hope that you may have some interest in the work which I have initiated on behalf of Dr. Tesla. There are many matters that I wish to discuss with you, provided of course, that you are the Mr. Scherff related to the Tesla story. I would be most happy to hear from you at your earliest convenience, and will send you all publications of the organization if you wish to receive them.

Very truly yours,

Leland I. Anderson

25

TESLA-INTERNATIONAL

University Station, Box [illegible]
MINNEAPOLIS · 14 · MINNESOTA

To Those Who Are Interested in the Life and Work of
DR. NIKOLA TESLA

Following the death of Dr. Nikola Tesla on the 7th of [illegible], Mr. John J. O'Neill, former Science Editor of the New York Herald Tribune, presented the biography

PRODIGAL GENIUS
The Life of Nikola Tesla

- a memorable tribute to one of the most outstanding figures in the entire field of electrical science. Many reading this biography learned of Nikola Tesla for the first time despite his monumentous achievements with which he has won world-wide acclaim in scientific circles. Even those closely associated with the fields of science and engineering discovered a remarkable story not generally known of the brilliant genius Tesla whose sensitive personality and seclusion kept his fame in a shadow.

The TESLA-INTERNATIONAL organization is being established in the United States in name and honor of Dr. Nikola Tesla by those sharing a mutual interest in his life and works. The organization has as its objective the promulgation of the truth about Nikola Tesla; that a full recognition be made for his unparalleled research work on the effects of currents of high frequency and high potential, and for his achievements in the realms of polyphase power transmission and telecommunication. It would be the duty of the organization to do all in its power that the name of Tesla win in the eyes of the nation the fame deserving of a truly great American for his contributions to science, industry, and to this country.

A journal of the TESLA-INTERNATIONAL organization was issued beginning the month of November, [illegible]. In addition to items of recent and historical interest related to Tesla, the journal will include:

1) A formal roster of all [illegible] have an interest in the Tesla organization and wish to engage in its activities.

2) An opportunity of [illegible] of the organization through the medium of the journal.

3) A comprehensive bibliography [illegible] listing of all available items concerning Tesla, which would include a cataloging of the various collections of Teslians not generally known. Such a listing will be of particular importance to scholars in the research field.

4) A presentation of hitherto unpublished writings and analyses of Tesla's technical research studies as they become available.

The journal of the TESLA-INTERNATIONAL organization will be forthcoming at intervals of 1½ - 2 months. Subscription rate is $1.00 for 10 issues. Membership in the TESLA-INTERNATIONAL organization is concurrent with subscription to the journal.

Leland I. Anderson
127 Seymour Ave. S. E.
Minneapolis 14, Minnesota

REGISTERED

VIA AIR MAIL

Mr. George H. Scherff, Jr.
149 Seacord Road
Westchester, NEW YORK

MINNEAPOLIS FEB 1954

NEW ROCHELLE FEB 1954

FEB 1954

MINNEAPOLIS MINN. FEB 1954 NO. 35

Leland I. Anderson
127 Seymour Avenue Southeast
Minneapolis 14, Minnesota

February 12, 1953

Dear Mr. Scherff,

It was so very rewarding to receive your reply concerning Dr. Nikola Tesla... I have initiated an undertaking on behalf of Tesla because I feel that in all right and justice something should be done to perpetuate the name of Tesla and see to it that his name becomes a part of the heritage of this nation. A great task perhaps, but as time goes on I believe the name of Tesla will become more significant in scientific developments. I hope that you may have an interest in the organization which I have proposed and established, and I will be honored to have you as a member. The organization is presently set up on the basis of those having a mutual interest in Tesla, with a free exchange of information between members. The first two issues of the journal of the organization are being sent to you under separate cover, and should reach you in a day or two.

Some other members which may be of interest to you are; Muriel Arbus, Dorothy Skerritt, Kenneth Swezey and W. W. Wilhelm. The recent deaths of John O'Neill and Edwin Armstrong were very unexpected, and it is with a great sadness that I received the news and loss of these two members.

Do you know if Mr. Lowenstien had a daughter? The reason I ask is that a woman visited Mr. O'Neill before his death and told him that she inherited a great amount of Teslaiana from her father - whom I presume to be Mr. Lowenstien. This woman was afraid of disclosing the information by reason of her mistaken notion and fear that she would rudely be raided by the army. You see Mr. O'Neill related to me that a few army officials visited his home with insistent requests for information. Of course all this sort of government interest was aroused by Tesla's "Death-Ray" rumors, played up by enterprising journalists. Well, the result of all this is that she refused to give Mr. O'Neill her married name - only that she married a Siamese prince no less, and moved to some mid-western city. If this woman has the amount of material that Mr. O'Neill intimated, it would certainly be important to locate her.

I believe that one of the valuable efforts of the Tesla organization would be to catalog every piece of information concerning Tesla. I have made a beginning effort along this line, and I hope that before too long all collections of Teslaiana may be located, cataloged, and reproduced for fear of eventual loss. Through Mary A. Benjamin (of Walter R. Benjamin Autographs in New York) I have obtained a number of significant items of correspondence between Tesla and Robert U. Johnson. The entire collection of correspondence with Mr. Johnson numbers in excess of 70 pieces. I share this collection with Mrs.

Leland I. Anderson
127 Seymour Avenue Southeast
Minneapolis 14, Minnesota

James W. McChesney of Long Island. The period of this correspondence runs from 1894-1930. Mrs. McChesney has another group of correspondence between Tesla and George Sylvester Viereck which is very interesting in that it is from a period later in Tesla's life. (If you wish to receive any photostatic copies from these collections I will be happy to send them to you.)

I am interested to learn whether you have collected any mementoes, correspondence, writings, etc. of Tesla. For a long while I have been trying to locate a copy of the brochure which Tesla issued the first week of February, 1904. It came in a large square envelope bearing a large red wax seal with the initials "N.T." stamped thereon. Quite a number of them were distributed throughout New York and elsewhere by the Tesla enterprise in an effort to secure financial backing for the tower and power plant erected at Wardenclyffe, Long Island. You no doubt know of the brochure of which I speak. I thought it would be interesting to reproduce this brochure and distribute it among the members of the Tesla organization as a memento. Although I have written and inquired about this brochure extensively, I have not been able to locate a copy. Did you ever have one?

I have hopes that in 1956 (The Tesla Centenary) some significant observance may be organized here in the United States in honor of Tesla. The Tesla Museum in Yugoslavia has obtained the Tesla inheritance, which amounts to 9 tons of apparatus, writings, etc. It is the intention (so stated) of the Museum to publish the entire writings of Tesla, including those in the inheritance, on the Tesla Centenary. I don't know what sort of political propaganda might be injected in this publication, but it occured to me that it may be appropriate to arrange an advance publication in this country [illegible] unpublished works. Unfortunately, there is not much to work on as yet. While the Tesla estate remained in this country, photostats of nearly every important paper in the estate were made under order of Wright Field Development Center in Ohio. If these photostats could be located there would be much material for a publication. However, in working with the Library of Congress in preparation of a file on Tesla, these photostats have escaped the most extensive search thus far.

Hoping that you may be interested in the efforts of the TESLA-INTERNATIONAL on behalf of Tesla and wish to associate yourself with it, I am,

Yours faithfully,

Leland I. Anderson

TESLA INTERNATIONAL

[illegible] Station B [illegible]

[illegible] 14 [illegible] MINNESOTA

IMPORTANT ANNOUNCEMENT

To Members of the TESLA INTERNATIONAL organization
and those interested in the works of
Dr Nikola Tesla

[illegible]

"[illegible] Writings of Nikola Tesla"

by

[illegible] Martin

[illegible] it is with great pleasure that [illegible] organization announces the reprinting [illegible] literature

[illegible] and significant work [illegible] a great demand for this [illegible] IS STRICTLY [illegible] will not be repeated when the [illegible] desiring a copy of the book are [illegible]

Cost of [illegible] rate is only $4.00 [illegible] United States to members and friends [illegible] organization

30

Leland I. Anderson
127 Seymour Avenue S. E.
Minneapolis 14, Minnesota
3 CENTS 3
3 CENTS 3
SPECIAL DELIVERY
VIA AIR MAI
Mr. George Scherff
149 Seacord Road
New Rochelle, New York
SPECIAL DELIVERY

SAC, New York

March 10, 1954

RECORDED - 15

~~105-0-4973~~

EX-129

Director, FBI

100-2237-4X1

[redacted]

NOT AN FOIA REDACTION

LELAND I. ANDERSON
MISCELLANEOUS; INTERNAL SECURITY - YU

Reurlet 2-19-54 concerning the above-captioned individual. Relet forwarded to the Bureau two Photostats of two letters from Anderson which were received and made available to your office by George H. Scherff, Jr.

There is returned herewith one set of the Photostats received by the Bureau as enclosures with your letter inasmuch as it appears this set was intended for retention in your office file.

Attachment

[redacted]

(b)
(7)
(C)

ALL INFORMATION CONTAINED
HEREIN IS UNCLASSIFIED
DATE 7-2-80 BY SP4 Jrm/rtc

(b)
(7)
(C)

[redacted]

Tolson
Ladd
Nichols
Belmont
Clegg
Glavin
Harbo
Rosen
Tracy
Gearty
Mohr
Winterrowd
Tele. Room
Holloman
Miss Gandy

MAILED 16
MAR 10 1954
COMM - FBI

32

KENNETH M. SWEZEY

ALL INFORMATION CONTAINED HEREIN IS UNCLASSIFIED DATE 7-2-80 BY SP4 [illegible]

163 Milton Street
Brooklyn 22, N.Y.
June 25, 1955

Mr. Tolson
Mr. Boardman
Mr. [illegible]
Mr. Belmont
Mr. Harbo
Mr. Mohr
Mr. Parsons
Mr. Rosen
Mr. Tamm
Mr. Sizoo
Mr. Winterrowd
Tele. Room
Mr. Holloman
Miss Gandy

[redacted]

Mr. J. Edgar Hoover
Federal Bureau of Investigation
Washington, D.C.

Dear Mr. Hoover:

Back in 1943, the local Alien Property Custodian searched through the belongings of the late electrical inventor, Nikola Tesla, stored in the Manhattan Storage Warehouse in New York City. Tesla had been a naturalized American for more than fifty years, so I believe that the search was made on the grounds that the property was to be sent to Yugoslavia, through Tesla's nephew and heir, Mr. Sava Kosanović (Mr. Kosanović had been Minister of State under the King's government, later became Ambassador to the United States from the present government, and is now a Minister serving in Belgrade).

According to the attorney who handled the Tesla estate, Mr. Philip Wittenberg, the Alien Property Custodian assured him that nothing had been held. I have a letter from the Office of Alien Property, dated March 15, 1955, which confirms this statement.

In gathering material to help in a nation-wide commemoration of Tesla's hundredth birthday next year---which will be participated in by leading scientific and engineering societies, museums, and universities---I have just discovered, however, that Tesla's solid gold Edison Medal somehow vanished during that search.

As a friend who had known Tesla well during his last twenty years, I was with Mr. Kosanović in Tesla's room in the Hotel New Yorker on the day he died. A safe expert was called in to unlock Tesla's safe. Among its contents were several honorary degrees, a volume of greetings which I had gathered for him on his seventy-fifth birthday, a bunch of keys, and the Edison Medal. We kept out the book of greetings (I mentioned this at the time to the assistant manager of the hotel and later to a Mr. Gorsuch of the Alien Property Custodian's office), but everything else, including the medal and the keys, was replaced and the safe was locked.

RECORDED - 82 / 60-2237-5
INDEXED - 82

Except when it was inspected by the Alien Property Custodian, the safe was never reopened until it

Memo Belmont - Boardman 6/29/55. Let ack. [redacted] 6/29/55 390

6 JUL 11 1955

EXP. PROC.

JUN 27 1955

33

arrived in Belgrade (where Tesla's property was to be installed in a special Tesla Museum) and was there opened by Mr. Kosanovic. According to his former secretary, both the bunch of keys and the medal were missing. The keys were later found in a tin box outside the safe; the medal was never found.

I learned of the disappearance of the medal only by accident. Mr. Kosanovic had asked his former secretary to get permission from the American Institute of Electrical Engineers (who gave Tesla the Medal) to have it duplicated. This was given, but the cost, it turned out, would be about four hundred dollars. In the meantime, the Tesla Museum, in Yugoslavia, is quietly trying to raise the money to pay for it.

The irony of this situation is more disturbing than the money involved. By giving us a system which made electric power universally available, Tesla---probably more than any other one man---helped put America on top of the world. At the time he died, his gold Edison Medal was the only material evidence left of this country's appreciation. That this last token should have disappeared ---to have to be replaced by his materially poor countrymen overseas for whom he had done nothing---seems a tragic denouement.

John O'Neill, in his biography of Tesla, states that the FBI broke into Tesla's safe on the day he died, and an article in the current (June) Coronet repeats this. I know this isn't true. I did hear, however, that the FBI somehow lent a hand to the Alien Property Custodian during the latter's search in the warehouse.

If that is so, I thought that perhaps some of your men might remember the conditions under which the search was made and therefore might have a suggestion as to what could have happened to the medal. After this long time, I have no hope that the medal can actually be restored, and I am already trying to interest Americans in making a replacement. But future biographers might be spared a lot of wild guessing and wrong blaming if some hint could be obtained as to whether the original got lost, strayed, or stolen---and who might have been responsible.

With best regards and sincere appreciation for any help you can give,

Sincerely,

Kenneth M. Swezey

Kenneth M. Swezey

P.S.: I am enclosing an editorial from last month's POWER magazine which outlines Tesla's contribution to the electric power industry.

K.M.S.

LOUIS N ROWLEY, EDITOR · MAY 1955 · ESTABLISHED 1882 **Power**

Strange Genius

ASK ANY GROUP of power men to name those who laid the foundation for today's electrical generation and distribution. You'll wind up with an impressive list—Edison, Brush, Thomson, Westinghouse, many others. But there is almost sure to be a significant omission.

Yet this forgotten man conceived the polyphase ac motor—still basic—and devised a suitable system of generation and distribution for applying it. To grasp the magnitude of this contribution, we must turn back to the 1880's when the electrical era was being born, and the "battle of the systems" held sway.

Arc lights and motors were being operated on constant-current series systems. Edison's Pearl Street generating station had opened in 1882, supplying incandescent lamps and, later, dc motors on a constant-potential system. Under the leadership of Westinghouse and Stanley, the advantages of ac distribution were demonstrated. But there was no successful ac motor.

In May, 1888, a young Yugo-Slav engineer, but four years in the United States, read a paper before the American Institute of Electrical Engineers. In it he described a new ac system. Its heart was the induction motor with its basic and beautiful concept of the rotating magnetic field. The man was Nikola Tesla, the system he described was destined to sweep the field.

With characteristic vision, George Westinghouse realized the fundamental importance of the polyphase ac system and acquired the basic patents. Its first impact on the general public was at the Chicago World's Fair of 1893. There a 2-phase generator supplied motors and lamps, and, through rotary converters and motor-generators, a variety of dc equipment.

But it remained for the Niagara Falls power project to demonstrate in the most dramatic way possible that polyphase ac was the system of the future. Since 1886 when a charter to develop its power had been granted, the eyes of the world had been on Niagara. An international commission, headed by Lord Kelvin, had reviewed 17 proposals, found none acceptable. Later, just five years after Tesla's AIEE paper, it was officially decided to use the polyphase system.

In August, 1895, Niagara power was delivered to the first industrial customer and in 1896 ac transmission to Buffalo, 22 miles away, was begun. By that time, the steam turbine had been introduced in America and the modern age of electric power had truly opened.

For Nikola Tesla, these far-reaching inventions were but a beginning. Still to come was brilliant work in high frequencies, thinking basic to much of today's radio art. Yet by the time of his death in 1943, both he and his work had begun to slip into obscurity. Why?

A man of flashing insights and enormous brilliance, Tesla was largely indifferent to the development of his ideas. This he left to others while he followed the lure of new challenges. In later years, his projects became more grandiose, his ways more mysterious, his pronouncements more Olympian. And working alone, as he did, he formed none of the institutional ties that help to perpetuate a record of accomplishment.

Next year—July 10, 1956—will be the 100th anniversary of Nikola Tesla's birth. It would be fitting for our engineering societies to commemorate this occasion, to acknowledge our debt to this strange and lonely genius who changed our world for the better.

ALL INFORMATION CONTAINED
HEREIN IS UNCLASSIFIED
DATE 7-14-82 BY [illegible]

100-2237-5

(REPRINTED BY PERMISSION)

35

АМЕРИКАНСКИ
СРБОБРАН
THE AMERICAN SRBOBRAN
Second Class Mail Privileges Authorized at Pittsburgh, Pa.

THE LARGEST AND OLDEST SERBIAN DAILY NEWSPAPER IN AMERICA
Published Daily Except Sat's, Sundays and Holidays by SERB NATIONAL FEDERATION
3414 Fifth Avenue Telephone MAyflower 1-6600 Pittsburgh 13, Pa.

MOMCHILO SOKICH, Editor — JOVAN BRATICH, Ass't. Editor
MILAN M. KARLO, Editor English Section

ПРЕТПЛАТА НА ЛИСТ

За Сједињене Државе: на годину $8.00; шест месеци $4.00. За Канаду: на годину $9.00; шест месеци $4.50. За стране земље: на годину $10.00; шест месеци $5.00. За град Питебург: на годину $9.00; шест месеци $4.50. — Један број 5ц. Претплата за енглеско издање $4.00 годишње.

SUBSCRIPTION RATES

For United States of America: For One Year $8; Six Months $4. For Canada: One Year $9; Six Months $4.50; Foreign Countries: One Year $10; Six Months $5. For Pittsburgh: One Year $9; Six Months $4.50.—Single copy 5c. Subscription for the English Section only is $4.00 per Year.

Рукописи се не враћају никоме. — Огласи се плаћају унапред.

RECOGNITION FOR TESLA

Largely thru a young American engineer's efforts, the world today is re-scanning the record and achievements of our inventive genius, Nikola Tesla. Of late, even the big-time magazines have devoted space to the amazing career and fascinating character of the pioneering electrical wizard.

The man behind this belated recognition for the one-time Serbian immigrant boy who made millions but died almost a pauper is Leland P. Anderson, head of the **Tesla Society**, which has headquarters at the University of Minnesota.

Thru travels, correspondence and detailed research, Mr. Anderson has dug up many friends of the late genius and induced them to join in his noble work. A good many of these are American-Serbians. They serve Mr. Anderson and he serves them, with information issued thru his TESLIAN publication. This is, at present, a mimeographed publication issued monthly which casts new light on the known life and record of the late Dr. Tesla.

The latest issue (March-June) informs of progress plans to honor Dr. Tesla even more. It also presents an account of a fascinating editorial, "Strange Genius", by the POWER magazine of the powerful McGraw-Hill publishing line. This editorial traces the introduction of Dr. Tesla's polyphase system, described by Mr. Anderson, as the **"most tremendous event in all engineering history."**

Editorialist Louis M. Bowler, according to the TESLIAN, answers the perplexing question why, in view of Tesla's important discoveries, he fell short of the comparative popularity won by Edison and Bell. Then in closing, he suggests: "It would be fitting for our engineering societies, in commemoration of the 100th anniversary of Nikola Tesla's birth (July 10, 1956), to acknowledge our debt to this strange and lonely genius who changed our world for the better."

This appears to be just what Mr. Anderson was waiting for. For now, in the same issue of his TESLIAN, he has prepared a form to petition Postmaster General Arthur E. Summerfield to issue a Tesla commemorative stamp next year.

[redacted] this form in duplicate in this issue and [redacted] Send [redacted] petition.

ION CONTAINED
CLASSIFIED
BY SP4 Jones

INDEXED-59
100 2237 A
NOT RECORDED
138 JUL 11 1955

ICAN SRBOBRAN
29, 1955
sburgh, Pennsylvania

Office Memorandum • UNITED STATES GOVERNMENT

TO : L. V. BOARDMAN

DATE: June 29, 1955

FROM : A. H. BELMONT

ALL INFORMATION CONTAINED HEREIN IS UNCLASSIFIED DATE 7-2-80 BY SP4 JM/rtc

SUBJECT: NIKOLA TESLA
MISCELLANEOUS - INFORMATION CONCERNING (ESPIONAGE)

Tolson
Boardman
Nichols
Belmont
Harbo
Mohr
Parsons
Rosen
Tamm
Sizoo
Winterrowd
Tele. Room
Holloman
Gandy

Nikola Tesla, a native of Yugoslavia, was a famous electric inventor who died in New York City in 1943 where he had lived for many years. In attached letter to Bureau dated 6-25-55 Kenneth M. Swezey, Brooklyn, New York, advises he is gathering material to help in a nation-wide commemoration of Tesla's hundredth birth anniversary in 1956. Swezey relates he was present when Tesla's safe was opened by friends after his death and advises the contents were thereafter replaced and then impounded by the United States Alien Property Custodian. Later the safe was removed to Belgrade, Yugoslavia, to be installed in a Tesla Museum. Missing from Tesla's effects is a gold Edison medal he had been awarded. Swezey is seeking to locate the medal and has been advised by the Office of Alien Property (OAP) that OAP held none of Tesla's property. Swezey states he has heard the FBI assisted OAP in handling Tesla's effects while in storage, and accordingly, he asks whether Bureau could assist him in locating the Edison medal. Re FBI's assistance to OAP Swezey mentions that in the Tesla biography ("The Prodigal Genius" - 1944) by John O'Neill it was stated FBI broke into Tesla's safe the day he died (1-8-43 to protect contents from enemy hands). Swezey notes this same comment appears in article ("The Genius Who Walked Alone") by Alfred H. Sinks in the June, 1955, "Coronet." Swezey says he knows FBI did not do this [redacted] Bureau did not enter into Tesla safe matter upon Department's advice it was being handled by OAP. Bureau previously aware of comment in O'Neill's book.

(b)(7)(C)

[redacted]

In 1945 Sinks requested for his use as author data re Bureau's microfilm procedure. Was advised no such data available for publicati

Enclosure Letr 6-30-55
100-2237
cc - 1 - 65-47953
Ticklers - Mr. Bird
Mr. Belmont
Mr. Boardman
ETB:jaa
(5)

RECORDED - 97 100-2237-6

EX-104

6 JUL 7 1955

6 JUL 11 1955

37

Memorandum For Mr. Boardman

RECOMMENDATION:

That the attached letter be sent to Swezey advising Bureau did not participate in the handling of Tesla's effects and that the matter was handled by OAP. Therefore, Bureau unable to be of assistance; that no action be taken relative to Sinks' comment in "Coronet" article.

Tickler - M. Bird
Mr. Belmont
Mr. Boardman

June 30, 1955

RA
RA

ALL INFORMATION CONTAINED
HEREIN IS UNCLASSIFIED
DATE 2-2-80 BY SP4 Jrm/R

Mr. Kenneth M. Swezey
163 Milton Street
Brooklyn 23, New York

(Original)

Dear Mr. Swezey:

With reference to your letter of June 25, 1955, our files disclose the effects of Nikola Tesla were taken into custody after his death by the Office of Alien Property and not by this Bureau.

Since we did not participate in the handling of Mr. Tesla's effects, we are unable to supply the information you requested.

Sincerely yours,

J. Edgar Hoover

John Edgar Hoover
Director

COMM — FBI
JUN 30 1955
MAILED 25

100-2237-6X

RECORDED - 26
INDEXED - 26

EX-113

~~65-47153~~

64 JUL 1 1955

NOTE:

A cover memorandum from Belmont to Boardman was prepared by ETB:jaa on 6-29-55 in connection with this outgoing mail.

Bufiles contain no derogatory data re correspondent; reflect only that he was close friend and admirer of Tesla.

Tolson
Boardman
Nichols
Belmont
Harbo
Mohr
Parsons
Rosen
Tamm
Sizoo
Winterrowd
Tele. Room
Holloman
Gandy

[redacted]

64 JUL 8 1955

39

[redacted] (b)

August 1, 1955.

Mr. J. Edgar Hoover,
Federal Bureau of Investigation,
Washington, D.C.

Dear Mr. Hoover:

In his book, "Prodigal Genius", The Life of Nikola Tesla, Mr. Jo[illegible] J O'Neil says, on page 277, that the F.B.I. went to Tesla's hotel room, opened his steel safe and removed from it, the papers it contained.

Was there ever any publication of what these papers contained? I[illegible] so, could you inform me where I might obtain a copy of such publication?

If there was no publication of the Safe's content, after more tha[illegible] 12 years, would it be improper to publish them?

If there was no publication of the safe's content, but there were no particular secrets found there in, could you inform me where I might learn what the safe contained?

Any information on this matter will be appreciated.

Thank you for your trouble.

Sincerely,

[redacted]

(b)
(7)
(c)

ALL INFORMATION CONTAINED
HEREIN IS UNCLASSIFIED
DATE 7-2-83 BY SP4 Jam/rtc

EX-104

100-2237-6X1

~~65-47~~

RECORDED - 77

INDEXED - 77

2 AUG 12 1955

(b)
(7)
(c)

40

100-2237-6X1

~~65-47953-34~~

August 11, 1955

[redacted]

EX-104

[redacted]

ALL INFORMATION CONTAINED HEREIN IS UNCLASSIFIED DATE 7-2-80 BY [signature]

Dear [redacted]:

Your letter dated August 1, 1955, has been received, and in response to your inquiry, I would like to advise that our files reflect that the effects of Nikola Tesla were taken into custody after his death by the Office of Alien Property and not by this Bureau.

Since we did not participate in the handling of Mr. Tesla's effects, we are unable to supply the information you requested.

Sincerely yours,

John Edgar Hoover
Director

COMM-FBI AUG 11 1955 MAILED 19

NOTE: Bufiles reflect no record on correspondent. This type of reply utilized by Internal Security Division in answering similar inquiries on 6/30/55. (65-47953-33) Cover memo from Mr. Belmont to Mr. Boardman dated 6/29/55 set out background of this matter which concerned the death of Tesla, a famous electrical inventor. Bureau was not involved in this matter, and the opening of the safe mentioned was done by the Office of Alien Property.

Mr. Tolson
Mr. Boardman
Mr. Nichols
Mr. Belmont
Mr. Harbo
Mr. Mohr
Mr. Parsons
Mr. Rosen
Mr. Tamm
Miss Gandy

[redacted]

63 SEP 28 1955

[redacted]

AUG 18 1955

41

[redacted] (5

September 10., 1955.

Mr. John Edgar Hoover,
Federal Bureau Of Investigation,
Washington 25, D.C.

Dear Mr. Hoover:

Refering to my letter to you August first, 4x1 this year - your letter to me, August 11th., reletive to the matter of the papers of Mr. Nikola Tesla.

On August 26, I wrote the office of Alien Property regarding this matter, indicating that I had received the information from you that it was their department which had taken the Tesla Property into custody - not yours..

I have a letter from Mr. Henry G. Hilken - that Department - File Number HGH:N SM:elk 017-3566, in which I am told that office "never had custody, nor has vested, any property of Nikola Tesla".

As I began this matter with you - because it was stated in Mr. O'Neill's book that it was your department who opened Tesla's safe I am wondering if you have any further suggestions along lines I might follow to obtain some information in this regard?

Thank you for your time and trouble.

Sincerely,

[redacted] (b) (7) (c)

ALL INFORMATION CONTAINED
HEREIN IS UNCLASSIFIED
DATE 7-2-80 BY SP4 Jrm/rte

EX-PROC
SEP 19 1955

RECORDED-12 100-2237-6X2

EX-107 (b) (7) (c)

17 SEP 20

[redacted]

42

RECORDED
INDEXED-12

100-2237-6X2

EX-107

September 20, 1955

(b)(7)(C)

ALL INFORMATION CONTAINED
HEREIN IS UNCLASSIFIED
DATE 7-2-80 BY SP4 jem/rtc

Dear [redacted]:

I have received your letter dated September 10, 1955.

As you were advised by my letter of August 11, 1955, this Bureau was not connected in any respect with the acquisition or custody of the effects of Nikola Tesla, and it is therefore not possible to furnish you any additional information.

Sincerely yours,

John Edgar Hoover
Director

(b)(7)(C)

NOTE: By letter 8-11-55, we referred [redacted] to the Office of Alien Property, which Office was reported to have assumed custody of Tesla's effects subsequent to his dea (65-47953-6)

(3)

(b)(7)(C)

COMM - FBI
SEP 20 1955
MAILED 30

SEP 28 1955

43

L INFORMATION CONTAINED
HEREIN IS UNCLASSIFIED
DATE 7-3-80 BY SP4 Jan/etc

RECOGNITION FOR TESLA

(Please fill out this form and mail to the address appearing below.)

THE TESLA SOCIETY
University Station, Box 135
Minneapolis 14, Minnesota

(date)

(city & state)

Hon. Arthur E. Summerfield
Postmaster General, Postoffice Dept.
Washington, D. C.

Dear Sir:

Nikola Tesla's contributions to science, industry, and to his adopted country have greatly inspired engineering progress. His electrical systems helped create an American conomy of world pre-eminence.

We respectfully request issuance of a 1956 commemorative stamp to be issued on the centennial of Tesla's birth (1856-1943).

(signed) _____

AMERICAN SRBOBRAN
June 29, 1955
Pittsburgh, Pennsylvani

Ex. - 10€
INDEXED-59

100 2237-A
NOT RECORDED
138 JUL 11 1955

6C JUL 13 1955

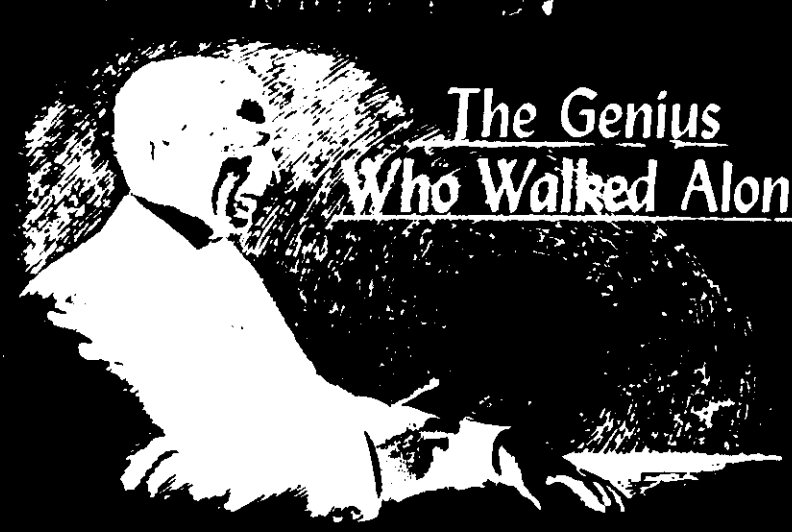

The Genius Who Walked Alone

by ALFRED H. SINKS

Nikola Tesla was a great inventor—and also a prophet without honor

COUNTER-ESPIONAGE WHEELS started turning early on the morning of January 8, 1943. Anxious FBI agents slipped into a room in the Hotel New Yorker where, late the night before, a chambermaid had discovered the body of Nikola Tesla, dead at 86, regarded by many as the greatest scientific genius of his time.

For years, Tesla had been making scientific predictions so fantastic as to be literally out of this world. Of late he had been working—or so he said—on revolutionary new weapons powerful enough to annihilate armies at a single blow.

There was only one Tesla, and the story might—incredible as it sounded—be true. The old man's safe might hold these secrets, and the Government could not risk the chance of enemy spies getting there first.

Half hoping to find something which would bring a sudden and decisive end to World War II, the G-men broke open the dead man's strong box. If anything of importance was discovered, it has never been revealed.

Yet, their quick action was justified, for you could never be sure about Tesla, one of the strangest men who ever lived. Most people took him with a grain of salt, yet no serious scientist dared shrug away his claims as nonsense. Not after Thomas Edison tried it and Tesla proved him wrong.

The world's leading physicists and electrical engineers had to eat crow back in the 1880s when Tesla solved a problem they had thought impossible. That one accomplishment—the invention of a practical alternating-current motor and gen-

45

[redacted]

Mr. Felt
Mr. Baker
Mr. Callahan
Mr. Cleveland
Mr. Conrad
Mr. Gebhardt
Mr. Jenkins
Mr. Marshall
Mr. Miller E.S.
Mr. Sovars
Mr. Thompson
Mr. Walters
Tele. Room
Mr. Boise
Mr. Bowers
Mr. Fenwick
Mr. Herrington
Mr. Conroy
Mr. Mintz
Mr. Eardley
Mrs. Hogan

(b)
(7)
(C)

United States Senate

June 26, 1973

Respectfully referred to:

Congressional Liaison
Federal Bureau of Investigation
Department of Justice
Washington, D. C. 20530

Because of the desire of this office to be responsive to all inquiries and communications, your consideration of the attached is requested. Your findings and views, in duplicate form, along with return of the enclosure, will be appreciated by

Senator [redacted]

ATTN: U.S.S[redacted]

(b)
(7)
(C)

Form #2

ST-105

100-2237-24

7 JUN 29 1973

ENCLOSURE

[redacted]

(b)
(7)
(C)

CORR[redacted]ENCE

46

[redacted]

20 June 1973

(b)(7)(C)

Dear Senator [redacted]

Though in Alaska temporarily working on a military contract, I still consider myself an [redacted] resident, hence it is to you that I write.

During my days at [redacted] College, I became interested in a fascinating Czech physicist, Nicolai Tesla. Proffessor Tesla emmigrated to this country in the twenties, I believe, and did some of his most original work here. Tesla had a peculiar bent of mind, in his younger days he was often called a mad scientist, and did not publish extensively when he came to the US. Most of the extant primary material is in untranslated Czech. Tesla was, however, an extensive note taker. It thought it strange that upon his death, none of his notes from his American period ever appeared. Upon discussing this with a friend, I was informed that all of Mr. Tesla's notes were confiscated by the FBI. I cannot conceive how these notes on physics and electricity can in any way endanger the national safety. It seems that Mr. Hoover in his zeal, had confiscated material whose only sin was a radical approach to science. There is indication that much of Professor Tesla's later work concerned a very novel approach to time theory. Needless to say, it has been radical approaches to physics that have been our greatest scientific advances in modern times, viz. Einstein, Heisenberg, et al.

I was wondering if your office might be able to determine if these papers are still extant, and if so, see to it that the public has access to them. It would be a shame to see all of Nicolai Teslas work to have been in vain.

Please excuse my typing, in all the thousands of words I typed trying to get a liberal education, I never did master the typewriter.

Sincerely yours,

[redacted]

(b)(7)(C)

100-2237-24

ENCLOSURE

47

July 5, 1973

ST-105

REC-15

100-2237-24

ALL INFORMATION CONTAINED HEREIN IS UNCLASSIFIED DATE 7-8-80 BY SP2 jmp/ste

Honorable [redacted]
United States Senate
Washington, D. C. 20510

(b)(7)(C)

Dear Senator [redacted]:

This is to acknowledge receipt of your communication dated June 26th enclosing a letter from your constituent, [redacted] who is temporarily employed in Alaska.

In response to [redacted] inquiry, central files of the Federal Bureau of Investigation indicate that the effects of Dr. Nikola Tesla were impounded after his death by the Office of Alien Property of the Department of Justice and not by the FBI. Since we did not participate in the handling of Dr. Tesla's belongings, I am unable to furnish the information you desire.

I am returning your enclosure as you requested.

Sincerely yours,

William D. Ruckelshaus

William D. Ruckelshaus
Acting Director

MAILED 24
JUL 5 - 1973
FBI

Enclosure

1 - Portland - Enclosures (2)
1 - Congressional Services Office - Enclosures (2)
NOTE: Bufiles reveal prior cordial correspondence with Senator [redacted] is not identifiable in Bufile [redacted] Bufile 100-2237 reflects that Dr. Tesla was a world-famous electrical inventor, and at the time of his death, all of his personal papers and effects were believed dangerous to the count security if they fell into unauthorized hands. The book, "Prodig Genius," by John J. O'Neill, alleged that the FBI took over a ce safe and opened it, appropriating his property. Bufiles clearl indicate that it was the Office of Alien Property of the Depar which did so, and the above reply is forwarded in answer to re inquiries.

(6)(7)

Mr. Felt
Mr. Baker
Mr. Callahan
Mr. Cleveland
Mr. Conrad
Mr. Gebhardt
Mr. Jenkins
Mr. Marshall
Mr. Miller, E.S.
Mr. Soyars
Mr. Thompson
Mr. Walters
Tele. Room
Mr. Baise
Mr. Barnes
Mr. Bowers
Mr. Herington
Mr. Conmy
Mr. Mintz
Mr. Eardley
Mrs. Hogan

54 JUL 13 1973

[redacted] TELETYPE UNIT

(b)(7)(C)

48

(b) (7) (c) [redacted]

FEDERAL BUREAU OF INVESTIGATION
Washington, D.C.

12 July 1973

ALL INFORMATION CONTAINED
HEREIN IS UNCLASSIFIED
DATE 7-3-80 BY SP4 Jam/rtc

Dear Sirs,

It has come to my attention that upon the death of Mr. Nikola Tesla, the founder of modern A.C. power systems, and the original inventor of radio, and innumerable other devices, operatives of the F.B.I. opened his safe and removed his papers on 7 January 1943, within a few hours of his demise. Also, all records of his work have been siezed and held by our government since his death. I would like to know WHY, and also to be informed as to who was, and is responsible for keeping the lid on these records. I would also like to know where they are now.

I do hope you enjoy a good laugh over the aparent naievity of such a request as this, but it is a rather strange situation to exist in a country like this, that a man of such genius and achievement could be systematically cut out of history books, and that the facts about his works could be concealed to the degree they have been. I wish to obtain access to all these old records which have been concealed for thirty years. I would appreciate your kind consideration and attention to this matter and any assistence you may care to give.

EX-105

100-2237-25

9 JUL 20 1973

C-60

[redacted]

[redacted]

(b) (7) (c)

ack 7-19-73

CORRESPO

49

July 19, 1973

REC-60/100-2237-25

[redacted]

(b)(7)(c)

EX-105

ALL INFORMATION CONTAINED HEREIN IS UNCLASSIFIED DATE 7-3-80 BY SP4 Jm/rt

Dear [redacted]

Your letter was received on July 16th. In response to your inquiry, the effects of Dr. Nikola Tesla were impounded, after his death, by the Office of Alien Property of the Department of Justice and not by the FBI. Since we did not participate in the handling of Dr. Tesla's belongings, I am unable to furnish the information you desire. A copy of your communication and of this reply have been referred to the Department of Justice.

MAILED 4
JUL 19 1973
FBI

Sincerely yours,

C. M. Kelley

Clarence M. Kelley
Director

NOTE: Bufiles contain no record of correspondent. (Bufile 100-223 reflects that Dr. Tesla was a world-famous electrical inventor, and at the time of his death, all of his personal papers and effects were believed dangerous to the country's security if they fell into unauthorized hands. The book, "Prodigal Genius," by John J. O'Neil alleged that the FBI took over a certain safe and opened it, appropriating his property. Bufiles clearly indicate that it was the Office of Alien Property of the Department which did so, and the above reply is forwarded in answer to related inquiries. Copy of letter referred to the Assistant Attorney General, Civil Divisio of the Department.)

Assoc. Dir. ____
Asst. Dir.:
Admin. ____
Comp. Syst. ____
Files & Com. ____
Gen. Inv. ____
Ident. ____
Inspection ____
Intell. ____
Laboratory ____
Plan. & Eval. ____
Spec. Inv. ____
Training ____
Legal Coun. ____
Cong. Serv. ____
Corr. & Crm. Research ____
Press Off. ____
Telephone Rm. ____
Director Sec'y ____

[redacted]

MAIL ROOM ☐ TELETYPE UNIT ☐

(6)
(7)
(c)

50

[redacted]

Clarence M. Kelley
Director
Federal Bureau of Investigation
Washington D.C. 20535

ALL INFORMATION CONTAINED
HEREIN IS UNCLASSIFIED
DATE 7-3-80 BY SP4 Jam/rtc

Dear Mr. Kelley,

Thank you for your letter of the 19th of July. I appreciate the information about the Office of Alien Property and its connection with the impounding of the effects of Dr. Nikola Tesla. In my letter of the 16th I did not mean to imply the FBI had impounded his effects, as I was aware of the O.A.P.s general part in the affair. The fact remains that to the best of my knowledge, it WAS agents of the FBI who did in fact break into his safe only hours after his death, and did remove the papers therein. Now, in so far as the Bureau was connected, I wish to understand that extent. I do appreciate your refering my communication to the appropriate persons in the Justice Department, but perhaps you could see that the above mentioned connection of the Bureau could be further looked into. I am curious as to who asked the Bureau to perform such an act, whether is was a person in the O.A.P. or what, and on what grounds they were carried out, and to whom they were responsible. Also, to what person were the perloined papers delivered? Names of the agents involved would be appreciated. As to what happened to any other effects of his, that is probably a question more ably answered by the O.A.P., yet if Bureau agents participated once they may have done so on other occasions. If the persons who did open the safe were NOT FBI agents, then we are faced with the fact that persons aparently posed as Bureau operatives, an even more interesting situation. Perhaps this whets your own curiosity a[redacted]

ST 108
REC 68 100-2237-26
AUG 1973

Da

iml
ack 8-2-73
[redacted]

CORRE[redacted]CE

51

this affair, [redacted] interest. Are you aware that before the year 1900 he was able to transmit thousands of watts of electric power to any point on the globe WITHOUT WIRES. This and other feats would make him a prime target for vested interest groups, notably the J.P.Morgan combine with whom he had connections. I am aware of the well earned tradition of the Bureau of NOT serving any master but the common good, so again we have a curious point if indeed strings were pulled. Quite frankly, it looks as if someone went to a lot of trouble to see that his ideas were not broadly available to ensure the stability of their own electric technological apple cart financially, at the expense of unguessable benefits to to humanity as a whole. How would you like to be able to draw unlimited power out of the air to run say a lightbulb with ONE wire? He did it, and much more. My sincere thanks for your thought and attentions to these matters.

Very best wishes,

(b)
(7)
(C)

REC 68 / 00-2237-26

August 2, 1973

ST-102

[redacted]

(b)(7)(C)

ALL INFORMATION CONTAINED HEREIN IS UNCLASSIFIED DATE 2-3-80 BY SP4 Jpm/rte

Dear [redacted]:

Your letter, which was received on July 30th, has been reviewed and I would like to point out that FBI Agents were not involved in removal of papers from the safe of Dr. Nikola Tesla, nor did we at any time have custody of his property.

I realize there have been some written accounts that our Agents acquired Dr. Tesla's belongings; however, these accounts are simply not true. You can be assured we were absolutely not responsible and there was no impersonation involved.

Sincerely yours,

C. M. Kelley

Clarence M. Kelley
Director

NOTE: Correspondent had written in mid-July and asked about the effects of Dr. Tesla and he was advised that the Office of Alien Property had participated in removing his effects from his hotel room. A copy of his communication was referred to the Department of Justice. Bufiles indicate clearly that after Dr. Tesla's death some relatives opened the safe in his hotel room with the help of a locksmith and, thereafter, the Office of Alien Property confiscated all of his belongings. Bufile 100-2237 mentions that the FBI was advised of the existence of this property; however, inasmuch as the Office of Alien Property was handling Dr. Tesla's effects, the Bureau had absolutely no hand in the entire matter.

AUG 2 - 1973

Assoc. Dir. ____
Asst. Dir.:
Admin. ____
Comp. Syst. ____
Files & Com. ____
Gen. Inv. ____
Ident. ____
Inspection ____
Intell. ____
Laboratory ____
Plan. & Eval. ____
Spec. Inv. ____
Training ____
Legal Coun. ____
Cong. Serv. ____
Corr. & Crm. Research ____
Press Off. ____
Telephone Rm. ____
Director Sec'y ____

[redacted] (3)

(b)(7)(C)

MAIL ROOM ☐ TELETYPE UNIT ☐

AUG 10 1973

53

June 9, 1975

Federal Bureau of Investigation
U.S. Department of Justice
Washington D.C. 20535

Sirs:

We recently contacted the San Francisco FBI office and a review of their files revealed information concerning the scientist Nikola Tesla or his papers which we understand to have been impounded.

If you could make a thorough investigation of all files and materials available to you, we would greatly appreciate the correspondence of any information that might be discovered.

Thank you,

ALL INFORMATION CONTAINED HEREIN IS UNCLASSIFIED DATE 7-3-8 BY SP4 Jam/rtc

[redacted]

100-2237-26X

REC-36

(b)
(7)
(c)

[redacted]

54

July 7, 1975

~~62-115530-4553~~

100-2237-26X

ALL INFORMATION CONTAINED HEREIN IS UNCLASSIFIED DATE 2-3-80 BY [illegible]

[redacted] (C)

[redacted] (b)(7)(C)

Dear [redacted]

This will acknowledge your letter of June 9th.

In response to your inquiry, the papers of Dr. Nikola Tesla were impounded, after his death, by the Office of Alien Property of the Department of Justice.

Sincerely yours,

C. M. Kelley

Clarence M. Kelley
Director

~~1 - The Deputy Attorney General - Enclosure~~
~~Attention: Susan M. Hauser~~

NOTE: Bufile 100-2237 indicates that Dr. Tesla was a world famous electrical inventor, and at the time of his death his personal papers and effects were impounded by Office of Alien Property for national security reasons. Since Tesla's death in 1943 the Bureau has received numerous inquiries about the disposition of his technical papers. The above reply is forwarded in answer to these inquiries. Bufiles contain no information identifiable with requesters.

Assoc. Dir. ____
Dep. AD Adm. ____
Dep. AD Inv. ____
Asst. Dir.:
Admin. ____
Comp. Syst. ____
Ext. Affairs ____
Files & Com. ____
Gen. Inv. ____
Ident. ____
Inspection ____
Intell. ____
Laboratory ____
Plan. & Evol. ____
Spec. Inv. ____
Training ____
Legal Coun. ____
Rm. ____

[redacted] (4)

[redacted] (b)(7)(E)

MAILED 7
JUL 7 1975
FBI

55

GPO 954-5

[redacted] (b)(7)(C)

13 November 1975

Mr. Clarence Kelley
Director
F.B.I.
Washington, D.C. 20535

ALL INFORMATION CONTAINED HEREIN IS UNCLASSIFIED DATE 2-3-80 BY SP4 Jm/rte

Dear Mr. Kelley:

In reply to the letter of 10 November from your office:

I restate that I was not asking about the existence or non-existence of any investigative information on Nikola Tesla, but on his technical papers seized on his death in 1943 and reported in the papers of that time.

The reason given in the reply from your office, the second paragraph, as to why I cannot get any information on Tesla's papers makes no sense in itself or in reply to my inquiry. The third paragraph stating the conditions under which a search will be made is a clear bureaucratic circumvention of the Freedom of Information Act and an excuse on the part of the individual handling my request for doing any work beyond the drafting of a letter. Will it be the decision of your office to let the situation stand like this?

As I stated in my first letter, I am following up the Tesla data for a magazine article. I am tempted to have your reply of the 10th printed and run nationally as an example of how bureaucratic manoeuvring is used to get around the FOIA. Does the bureau need more of this type of publicity?

It is disheartening to see an agency entrusted to uphold the law using its resources to mock the law.

Sincerely,

[redacted] (b)(7)(C)

a.k. 11-26-75

[redacted]

21 NOV 1

[redacted]

56

REC-57 EX 103
100-2237-27

November 26, 1975

[redacted]

(6)
(7)
(C)

ALL INFORMATION CONTAINED
HEREIN IS UNCLASSIFIED
DATE 2-3-00 BY SP4 Jm/rtc

Dear [redacted]:

This will acknowledge receipt of your letter to the Bureau on November 14th.

In response to your inquiry, the papers of Dr. Nikola Tesla were impounded, after his death, by the Office of Alien Property of the Department of Justice.

Sincerely yours,

C. M. Kelley

Clarence M. Kelley
Director

1 - The Deputy Attorney General - Enclosure
Attention: Susan M. Hauser

NOTE: Bufile 100-2237 indicates that Dr. Tesla was a World famous electrical inventor, and at the time of his death his personal papers and effects were impounded by Office of Alien Property for National Security reasons. Since Tesla's death in 1943 the Bureau has received numerous inquiries about the disposition of his technical papers. The above reply is forwarded in answer to these inquiries.

[redacted] (5)

(6)
(7)
(C)

Assoc. Dir. ____
Dep. AD Adm. ____
Dep. AD Inv. ____
Asst. Dir.:
Admin. ____
Comp. Syst. ____
Ext. Affairs ____
Files & Com. ____
Gen. Inv. ____
Ident. ____
Inspection ____
Intell. ____
Laboratory ____
Plan. & Eval. ____
Spec. Inv. ____
Training ____
Legal Coun. ____
Telephone Rm. ____
Director Sec'y ____

MAIL ROOM ☐ TELETYPE UNIT ☐

DEC 24 1975

[redacted]

GPO : 1975 O - 569-920

57

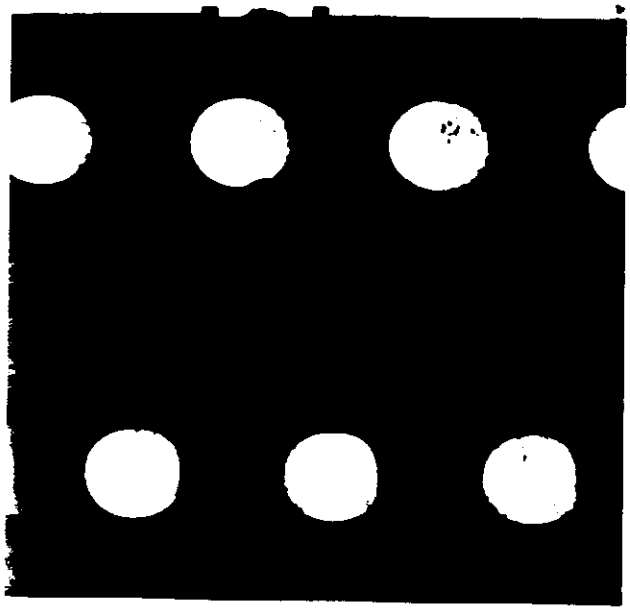

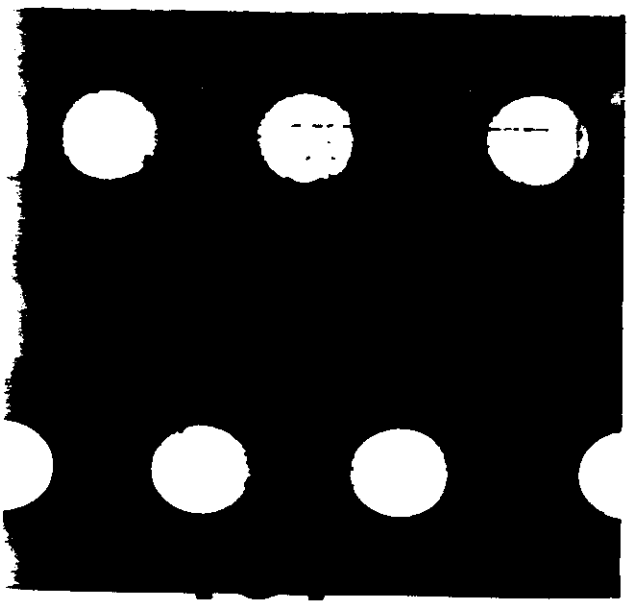

ROUTING AND TRANSMITTAL SLIP

1 TO (Name, office symbol or location) Alan McCreight Rm. 5435 - JEH	INITIALS DATE	ACTION CIRCULATE COORDINATION
2	INITIALS DATE	FILE INFORMATION
3	INITIALS DATE	NOTE AND RETURN PER CONVERSATION
4	INITIALS DATE	SEE ME SIGNATURE

REMARKS

FOIA - [redacted] (b)(7)(c)

Do NOT use this form as a RECORD of approvals, concurrences, disapprovals, clearances, and similar actions

FROM (Name, office symbol or location) Susan M. Hauser	DATE 10/21/75 PHONE 2145

OPTIONAL FORM 41
AUGUST 1967
GSA FPMR (41CFR) 100-11.206

+48—16—81894-1 552-103 GPO 5041-101

58

[redacted]

17 October 1975

Freedom of Information Act Request

Deputy Attorney General
U.S. Department of Justice
Washington, D.C. 20535

[redacted]

Gentlemen:

I am writing an article for a magazine on early twentieth century inventors and want to obtain information on some papers of Nikola Tesla that were seized by the FBI on his death in 1943.

Tesla invented a number of electrical devices and because of the war and because Tesla was born a Yugoslavian national, it was probably considered a measure of preventitive safety to hold in safekeeping papers that might have any bearing on national security.

I would like to find out: 1) if the FBI still has the papers; 2) if they do have the papers, what must be done to see them; 3) if they do not have the papers, who does have them or what happened to them?

100-2237-28

I would be very grateful for your help with this.

REC-2

5 OCT 24 1975

Sincerely,

[redacted]

(6)
(7)
(C)

[redacted]

ALL INFORMATION CONTAINED
HEREIN IS UNCLASSIFIED
DATE 1-3-80 BY SP4 Jmplete

[redacted]

59

erator put Tesla's name among the world's top scientists.

From his invention sprang the industrial age we live in. For without his alternating current, there would be no mass production of automobiles, aircraft, refrigerators; no great water-power dams and generating plants, no Diesel-electric trains; we could not have developed radio, television or atomic power.

The *direct* current that Edison worked with—a feeble force at best—could be sent no more than a couple of miles over wires because its power leaked away rapidly into the surrounding atmosphere. Lights near the power station might burn brightly and steadily, but those near the end of the line would be dim and fluttering.

Tesla sold his basic alternating-current patents in 1888, for a million dollars down. By 1895, the first great power station at Niagara Falls had been built, and by the end of 1896, two more Tesla generators had been installed. Within a few years, the pace of life over half the earth had changed from a crawl to a fast gallop—and it has been gathering speed ever since.

THE MAN who, by his brilliant idea of a "rotating magnetic field," changed the face of the earth and the living habits of the human race was a Croat, born in 1857 in Smiljan, a village in what is now Yugoslavia, but was then part of the old Austro-Hungarian Empire.

When he was about six, Nikola Tesla's father, the village priest, was transferred to a larger parish in the city of Gospic. There, the lad grew up and perfected his earliest "inventions." Of these, his favorite was an "engine" powered by 16 June bugs, harnessed in sets of four to spokes which radiated from the drive shaft.

Nikola was a frail lad, often ill; and he nearly went blind from too much reading. He read everything he could get his hands on, not only science but also religion, philosophy, history, literature. By the time he finished high school, he was fluent in French, German and Italian, as well as his native Serbo-Croat.

He got his schooling—the best his doting family could afford—at Gospic, Carlstadt, Gratz, the University of Prague and, finally, at Budapest. At the University, he saw his first electric motor, a new type direct-current affair whose brushes and commutators sent out showers of crackling blue sparks.

"If we got rid of those brushes and commutators, with all that noise and loss of energy, we'd have a much better motor," Nikola told his professor. "Perhaps it might be done with an alternating current."

"Nonsense!" barked the professor. "An alternating current would never run anything. You're not the brilliant student I thought you were. Forget it!"

But Tesla could not forget. The teacher's ridicule only stamped the idea indelibly on his brain. It became an obsession, a passion—how to make an alternating current drive a motor. In every idle moment, wherever he went, he wrestled with this problem.

Tesla's mind had an unusual twist. Almost from infancy, he had been able to see things in his mind's eye so vividly—and in such minute detail—that often he had trouble telling the real from the imaginary.

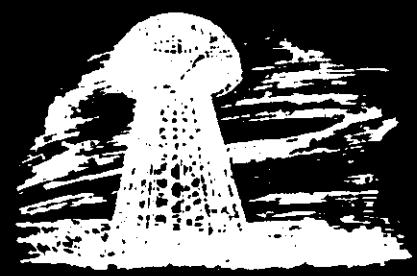

Where the average engineer or inventor would reach instinctively for drawing board, paper and pencil, Tesla would simply switch on that uncanny magic lantern inside his brain. He would fix a mental image there. Then he would alter this detail or that, discard one plan, try another, without ever putting a line on paper.

Years later - from these mental images alone - he could give his workmen exact instructions on how to build each part of a new device, though it was unlike anything ever seen before.

Thus, needing no drafting room and few laboratory conveniences to work on an idea, Tesla could use every spare minute that he had to test and revise his theory of alternating current.

His first real job was manager of a newly organized telephone company in Budapest. But telephone circuits were dull stuff compared with the challenge of that one big idea. He moved to Paris where he became a kind of general trouble-shooter for the Continental Edison Company.

His brain was still chipping away at his big problem, but the trouble was, he couldn't share it with trained men who might have helped him work it out. For whenever he mentioned alternating current to an electrical engineer, the man would look at him as though he were crazy.

But then came the moment when he knew he had solved it. He was walking with a friend in the Bois de Boulogne. Suddenly, he stopped short and began jabbing with his cane at some invisible object in the air.

"See, it works!" he shouted. "It is the rotating magnetic field which causes the armature to turn. It pulls the magnets around with it, causing the shaft to revolve. As I oscillate this switch, causing the current to flow first in one direction, then the other . . ."

Never mind what his friend thought. Tesla had the answer.

At the office, his colleagues scoffed or looked blank. But the manager, listening to the outpourings of scientific jargon, suddenly thought of his boss back in the United States. If there *were* some truth in what the Croat said, surely the famous electrical wizard would be smart enough to see it.

So he gave Tesla a letter of introduction to Thomas Edison and urged him to try his luck in America. Thus, Tesla, now 27, arrived in New York. He was handsome, over six-feet-two, with a distinguished head and deep-set blue eyes. His Slavic face was broad across the cheekbones, his dark hair thick, his chin sharply pointed. Of worldly goods, he had the clothes on his back, four cents in cash, the letter to Edison, and the idea which was to change the world.

Edison thought less than nothing of the idea. It seemed so preposterous that he wouldn't even listen

61

and, of course, Tesla had no drawings with which to try to convince him. But Edison gave him a job, for he had excellent training as an engineer and Edison needed trained men.

Busy with routine electrical work, Tesla waited nearly three years for a chance to turn his mental image into an actual motor he could show to others. In 1887, he was able to borrow enough money to start his own laboratory, and the following year the alternating-current motor and generator were practical realities on a laboratory scale though much practical engineering would still be needed to fit them to commercial use.

George Westinghouse, another inventor, was the first to see their value. He bought the patents and gave Tesla a job as engineer in his Pittsburgh factory.

But Tesla couldn't get along with the other Westinghouse engineers. From his standpoint, the alternating-current job was done. Even "schoolboys" could now iron out the few remaining kinks. Meantime, his brain had started to hatch even bigger dreams. He went back to his laboratory in New York.

"Be alone," he once told a science writer. "That's the secret of invention. Be alone—that's where great ideas are born."

AND HE WAS. In the years that followed, Tesla had many admiring acquaintances, but seldom a friend. After his mother, no woman ever entered his personal life.

His manner toward others was cordial but reserved, distant. His words were as if uttered by some god, sitting on an Olympus high above the rest of humanity. Backed by his fame, those words made a tremendous impression.

He lectured at every scientific center in this country and in all the important capitals abroad. Things which, as yet, existed only inside that amazing brain of his were so real to him, he made them real to his listeners.

He described radar and radio broadcasting and even television. He advocated electro-therapy. He foresaw a day when man would control nature in every respect—even the weather—when machines of all kinds, and the power to run them, would be so cheap that poverty would vanish from the world.

Without wanting to be, Tesla was a superb actor. After listening to him and seeing his wonders, audiences were ready to believe nearly anything.

Tesla reasoned that you could sell electric power cheap if you could do away with the millions of poles and insulators, the millions of tons of copper wire used to transmit it from place to place. He thought he knew how to do it—and J. P. Morgan backed him with $300,000.

On Long Island, Tesla built a huge power plant with a 154-foot steel-ribbed tower topped by an enormous mushroom-shaped copper dome. From this dome he planned to bombard the earth's crust with millions of volts of electric energy. The power so added to the earth's permanent charge could be drained off at some other point—*any* point—on the earth's surface. Thus, it would be possible for electric power to be sent anywhere without conduits, poles or wires. Or so he thought, until he tried it.

62

In November 1928, Tesla announced that he could abolish war.

The inventor had designed a small, inexpensive, radio-controlled boat which, through its supposed ability to destroy the biggest battleships, would make great navies useless. Not many years later, he was talking of another super-weapon: a "death ray" which would annihilate whole armies.

Yet Tesla never suspected that the real super-weapon of the future would come from atomic fission. For Einstein's basic notion which led to smashing the atom, he had only ridicule. Alone in his middle age, he had fallen out of step with the world's great thinker.

Not all Tesla's later inventions were fantastic. Some, like his induction coils and oscillators, and pioneer work on "tuned" electrical circuits, were highly important.

Though he never succeeded in transmitting power without wires on a big scale, he *did* prove that a single wire is enough. And some of his brilliant prophecies inspired the more plodding scientists to work out the practical problems of induction heating, radio-telephone, radar and many other electronic marvels of today.

But as he grew older, he withdrew further and further within himself. His strange prophecies sounded like a voice from another planet. For companionship now, the old man had only his dreams, and they grew stranger with the years. Completely alone at last, a stooped, gaunt figure with thin, silvery hair, he used to slip from his hotel room, buy a bag of birdseed and trudge slowly over to a park where hundreds of pigeons awaited him. These were his friends. They needed him, though the world did not.

When he grew too ill to go out, each day he sent a Western Union messenger to the park. After feeding the birds, the boy was instructed to see if any of them seemed sick. If so, he was to bring them back to Tesla's room where the inventor would nurse them gently back to health.

Perhaps this sad little labor of love showed that the man who changed the world had, at last, discovered a great truth. Perhaps he knew now that the greatest power for good lies not in lonely thought but in a human heart pulsating like his own "tuned circuits"—in tune with the hearts of his fellowmen. Or did he ever know? You could never be sure about Tesla.

Winnie Wit

IN THE EARLY 1920s, when Winston Churchill had offended both his own supporters and the political opposition, the late George Bernard Shaw wrote him: "I enclose two vouchers for the première of my new play, for yourself and a friend—if any."

Back to the playwright promptly came the theater checks with this note from "Winnie": "I regret I am unable to attend the première of your new play. Please send me two vouchers for the second performance—if any."

—[illegible]

RECOGNITION FOR TESLA

At long last Serbians—American and Canadian—have acted to honor the memory and achievements of one of Serbia's greatest sons.

For the world-wide Centennial celebration of Dr. Nikola Tesla's birth next year, Serbs on this Continent plan to erect a bust statue of the electrical genius to stand before the entrance of the Monastery at Libertyville, Ill.

Steps looking towards that end were taken at the recent SNF convention following the reading of a letter by President Mike Radakovich from His Grace, Bishop Nicolai. As the universally-renowned churchman stated, erection of a suitable monument, by Serbians, would forever remind other Serbs of the honor and glory of Dr. Nikola Tesla . . . . And that he was a SERBIAN, son of a SERBIAN ORTHODOX clergyman, born in the SERBIAN SELO of Smiljan in Lika.

Further, His Grace urged that the undertaking be a joint one and representative of ALL the Serbian organizations in the United States and Canada. He naturally looked to the SNF for leadership, and the greatest monetary contribution. But he also besought the help of the Serbian Nat'l Defense and the Jedinstvo beneficial society.

The Convention voted $1000 for the project and a hand collection was taken up among the delegates and guests, kinsmen Milos Konjevich of Joliet, Ill., giving $200. It is probable that the balance of the needed $3000 will be raised thru public good-will offerings and via cash gifts of the other two organizations mentioned.

And after a suitable bust has been erected for Dr. Tesla, Bishop Nicolai suggested a similar-like monument honor the memory of Dr. Mihailo Pupin, also a world-renowned scientist, author and educator.

This is a subject near and dear to all good Serbian hearts

ALL INFORMATION CONTAINED
HEREIN IS UNCLASSIFIED
DATE 7-3-80 BY [illegible]

INDEXED - 36
100 2237 A
NOT RECORDED
12 OCT 7 1955

"AMERICAN SRBOBRAN"
September 28, 1955
Pittsburgh, Pa.

EX-113
7531
60 OCT 7 1955
100-2237
64

INFORMATION CONTAINED
UNCLASSIFIED
DATE 7-3-80 BY SP4 Jm/rtc

100-2237

SNF Opens Drive for Tesla Memorial at Libertyville—

$2000 PUBLIC AID SOUGHT

PITTSBURGH, PA. — The Serb Nat'l Federation Executive Board has acted quickly to implement a Convention decision to honor the memory of the illustrious Dr. Nikola Tesla.

At its first meeting of October 8, the Board drafted a resolution calling on all SNF members and good Serbians to help finance a memorial project for the late scientist-inventor genius.

This would stand before the entrance of the Monastery in Libertyville, Ill.

Cost of the contemplated project, which would clarion to the world that Dr. Tesla was a Serbian, is estimated at $3000. The Convention voted $1000 to the cause and a hand collection among 122 delegates yielded several hundred dollars more.

Kinsman Milos Konjevich of Joliet, Ill., gave $200.

Public Aid Sought

Balance of the needed sum is now being sought thru good-will offerings of the general Serbian populace in the United States and Canada.

A fund, similar to the one being conducted to help defray mortgage expenses on Shadeland, has been established.

It is hoped to raise the necessary monies and complete the project in time for the worldwide Centennial celebration for the genius next year.

Spearheading the movement for recognition, especially among American elements, is the TESLA SOCIETY, founded by scientist-engineer Leland Anderson, a fanatical admirer of the late Dr. Nikola Tesla.

Mr. Anderson right now is conducting a search for a famous portrait of the Serbian electrical wizard done at the turn of the century in New York.

Seek Missing Portrait

In his current TESLAIAN publication, Mr. Anderson revealed the work, by Princess Vilma Lwoff-Parlaghy, is missing.

Reviewing developments, Mr. Anderson wrote:

"On March 1, 1916, the Princess gave a reception in her new studio in New York especially to exhibit her latest protrait of Nikola Tesla. An article in the NEW YORK TIMES for March 2, 1916, stated—

" 'It was one of the beliefs of Mr. Tesla that there was something unlucky about posing for a picture and he never sat to any before he entered the studio of the Princess. The room which she had chosen did not have a skylight in it and the much desired North exposure was missing.

" 'At the suggestion of Mr. Tesla, a cluster of powerful incandescents was put up in the corner of the apartment and the rays, filtered thru blue glass, were just the right quality. The portrait was shown under the same illumination.

At Ease for Sitting

" 'Mr. Tesla, having solved the problem of the artifical sun, fell to thinking about other parts of the universe, and there he sat oblivious to his surroundings.

" 'The painter was able to produce a likeness in which there is no evidence that the subject was conscious that anybody was watching him, much less studying his features from the other side of the easel.

" 'Among those who attended the reception were Mrs. C. B. Alexander, Henry P. Davison, the Countless de Rittenburg and Mrs. E. T. Isham.' "

After the Princess died, in 1923, her studio and all objects of art, was sold at auction.

The Telsa portrait, 53x48 inches, appeared on the cover of TIME magazine (July 20, 1931) and in the ELECTRICAL EXPERIMENTER (January 1919), Mr. Anderson says.

Its location is not now known.

INDEXED - 14

100-2237-A

NOT RECORDED
129 NOV 4 1955

AMERICAN SRBOBRAN
October 26, 1955
Pittsburgh, Pa.

EX-1

65

279
68 NOV 9 1955

100-2237

[redacted]AF $1580

Half of $3000 Costs For Statue Pledged

Cadiz, O., Serb Gives $100 For Bust Image of Inventor To Be Placed at Monastery

Pittsburgh, Pa.—Half of the $3000 fund goal for a statue memorial of the late Dr. Nikola Tesla has been realized, the SNF announced today.

In fact, total contributions counted so far come to $1580.

The Fund is an outgrowth of a plea by Bishop Nicolai for Serbians to do honor for the memory of the noted electrical wizard during the world-wide Centennial celebration planned for the genius next year.

In the wake of the plea, voiced at the recent 7th Convention at Niagara Falls, Canada, the delegates approved a $1000 gift from the SNF and decided to raise, by public grant, the balance of $2000.

A hand collection among the 122 grass-roots leaders of the Society raised another $450. Then, at its first meeting October 5, the newly-elected Executive Board of the SNF appealed to the membership at large to fulfill the balance required.

First Contribution $100

A scant 24 hours after the appeal was published in the Society's "Srbobran" organ last Wednesday, Sime Zelich of Cadiz, O., gave $100.

The proposed memorial, a statue image, would be placed before the entrance of the St. Sava Serbian Monastery in Libertyville, Ill.

historians, writers, educators, scientists, etc., would not be misled, Bishop Nicolai believes.

Be that as it may, the SNF's goal is to amass the needed monies in time to erect and dedicate the memorial before the Tesla Centennial celebration ends.

Donors and the amounts of their donations are as follows:

SNF	$ 1000.00
Delegate M. Konjevich	200.00
" Todor Dragich	50.00
" Petar Borovich	25.00
SNF Counsel N. Stone	25.00
Delegate N. Stepanovich	20.00
" Maxim Jakovac	20.00
" Ilija Janjanin	20.00
" Lou Balta	10.00
" Jovan Vukcevich	10.00
" Milan Kajganovich	10.00
" Stevan Rogulja	10.00
" Bogdan Dragicich	5.00
" Milan Tomich	5.00
" Todor Vuicich	5.00
" Djuro Lukich	5.00
" G. Stoisavljevich	5.00
" R. Vukadinovich	5.00
" Janko Mrmich	5.00
" Petar Maravich	5.00
" Mirko Baranin	5.00

INFORMATION CONTAINED IS UNCLASSIFIED DATE 2-3-80 BY [redacted]

3 NOV 14

ıtion at Niagara Falls, Can-
a, the delegates approved a
000 gift from the SNF and
cided to raise, by public
ant, the balance of $2000.

hand collection among the
grass-roots leaders of the So-
raised another $450. Then,
first meeting October 5, the
ly-elected Executive Board of
SNF appealed to the mem-
ship at large to fulfill the bal-
e required.

First Contribution $100

A scant 24 hours after the ap-
l was published in the Society's
bobran" organ last Wednes-
, Sime Zelich of Cadiz, O.,
e $100.

The proposed memorial, a
tue image, would be placed be-
e the entrance of the St. Sava
bian Monastery in Libertyville,

"There it would proclaim to
ns of thousands of Serbian
sitors annually that Nikola
esla was of Serbian immigrant
ock and son of a Serbian
rthodox clergyman," Bishop
icolai declared.

For half a century and more,
general American public has
en misled anent the nationality
the man who foretold the com-
of atomic energy power.

Only recently, a prominent
American magazine listed him,
ncorrectly, as of Croatian
tock. The mistake was subse-
uently publicly corrected with
pologies by the publication.

But lacking an image reference,
th historical statistics, similar
ors are likely in the future.

Old References Poor

The magazine publication, for
stance, explained it obtained its
ference material from an anti-
ated guide book.

Since the misleading matter
re was never challenged by
rbians and other interested
rties before, the magazine logi-
ly assumed it was factual.

Erection of a bust statue,
lso listing Dr. Tesla's date of
irth, birthplace, parents, etc.,
ould counter the old myths
nd make certain that future

Centennial celebration ends.

Donors and the amounts of their donations are as follows:

SNF	$ 1000.00
Delegate M. Konjevich	200.00
" Todor Dragich	50.00
" Petar Borovich	25.00
SNF Counsel N. Stolac	25.00
Delegate N. Stepanovich	20.00
" Maxim Jakovac	20.00
" Ilija Janjanin	20.00
" Lou Balta	10.00
" Jovan Vukcevich	10.00
" Milan Kajganovich	10.00
" Stevan Rogulja	10.00
" Bogdan Dragisich	5.00
" Milan Tomich	5.00
" Todor Vuicich	5.00
" Djuro Lukich	5.00
" G. Stoisavljevich	5.00
" R. Vukadinovich	5.00
" Janko Mrmich	5.00
" Petar Maravich	5.00
" Mirko Baranin	5.00
" Stanko Jelich	5.00
★ ★ ★	
Prof. Anthony Tomovich (Edmonton, Alberta, Can.)	10.00
Teta Andia Mamula (Pittsburgh)	5.00
Martha Mamula Bjelosh (Pittsburgh)	10.00
Sime Zelich (Cadiz, O.)	100.00
Milinko Alexich, war invalid (Omaha, Nebr.)	
Total	$ 1,[illegible]

—the honoring, forever, of two of Serbia's best-known immigrant sons who contributed so greatly to the welfare and prosperity of their adopted America.

We hope to report developments as soon as they take place, remembering Bishop Nikolai's concluding remarks:

"Nikola Tesla, in the field of science, brought the Serbian name great glory—just as did the greatest Serbian knights on the field of battle."

23 June 56

Federal Bureau of Investigation
Washington 25, D.C.

Gentlemen:

[redacted]

During my senior year at Georgetown University I read J.J.O'Niel's Biography of Nikoli Tesla; the book, entitled "Prodigal Genius", described quite a few of Tesla's experiments, most of which I tried myself in the physics lab. I am interested in reviewing Tesla's experiments in wireless electric power transmission.

Unfortunately, Tesla died in 1945 just at the time he supposedly had developed a system of wireless power transmission. Since World War II was then in progress his papers were seized and sealed by the F.B.I. I suppose that by now Tesla's papers have been released for publication, but a call to the Library of Congress produced no results. Therefore, I have two questions:

1) Does the F.B.I. now have Tesla's scientific papers?

2) If so, are they available for public inspection? If they were released, who has them?

I will certainly appreciate any help you can give me along these lines. Tesla published very little of his findings; this, coupled with the fact that wireless power is connected by most people with "Death Rays" and crack-pots has made it nearly impossible for me to find anything on the subject.

Yours very truly,

[redacted]

[redacted] (b) (7) (C)

RECORDED - 86 100-2237-7

JUL 3 1956

[redacted] (b) (7) (C)

INFORMATION CONTAINED HEREIN IS UNCLASSIFIED 2-3-80 BY SP4 Jmp/etc

[redacted] (b) (7) (C)

68

100-2237-7
RECORDED - 86
INDEXED - 86

EX-122

15

L INFORMATION CONTAINED
EREIN IS UNCLASSIFIED
DATE 7-3-80 BY SP4 Jmfrte

June 29, 1956

[redacted]

(6)(7)(C)

Dear [redacted]

Nikoli Tesla

Your letter dated June 23, 1956, has been received, and in response to your inquiry, I would like to advise that our files reflect that the effects of Nikola Tesla were taken into custody after his death by the Office of Alien Property and not by this Bureau.

Since we did not participate in the handling of Mr. Tesla's effects, we are unable to supply the information you requested.

Sincerely yours,

John Edgar Hoover
Director

COMM — FBI
JUN 29 1956
MAILED 24

NOTE: Bufiles reflect no record on correspondent and reveal the correct spelling of Tesla's name as "Nikola." Bufiles reflect this type of reply h been utilized by the Domestic Intelligence Division in answering similar inquiries. (65-47953; 100-2237) Cover memo from Mr. Belmont to Boardman 6-29-55, set out background of this matter which concerned the death of Tesla, a famous electrical inventor. Bureau was not involved in this matter, and the opening of the safe containing his effects was done by the Office of Alien Property.

Tolson
Boardman
Nichols
Belmont
Harbo
Mohr
Parsons
Rosen
Tamm
Sizoo
Winterrowd
Tele. Room
Holloman
Gandy

EBI
HOOVER

[redacted]

(3)

(6)(7)(C)

JUL 17 1956

F-350

[redacted]

69

STANDARD FORM NO. 64

Office Memorandum • UNITED STATES GOVERNMENT

TO : DIRECTOR, FBI

DATE: 7/25/57

FROM : SAC, NEW YORK (65-12290)

SUBJECT: NIKOLA TESLA (Deceased)
IS -YU

INFORMATION CONTAINED HEREIN IS UNCLASSIFIED DATE 2-3-80 BY SP4 Jrmfr

[redacted] Street, New York 24, New York, a United States citizen of Yugoslav extraction, who on occasion, voluntarily furnishes the New York Office with information he considers to be in the interests of the Security of the United States Government, furnished Special Agent NICHOLAS J.MASTROVICH the following information on July 3, 1957: (b)(7)(D)

MR & MRS. JOHN STORM

[redacted] stated that a certain woman named Mrs. MARGARET STORM who lives with her husband, JOHN, at the Colonial Hotel, 51 West 81st Street, New York 24, New York, has been issuing newsletters which contain information pertaining to flying saucers and interplanetary matters. (b)(7)(D)

SECTION NEWSLETTER NEWSLE

[redacted] stated that in his opinion Mr. and Mrs. STORM are exploiting the reputation and genius of NIKOLA TESLA, deceased, inventor of Yugoslav extraction who achieved world wide fame as a result of his inventions in the United States. (b)(7)(D)

TESLA was born in Smiljan, Yugoslavia in July, 1859 and came to the United States in 1894 and became a naturalized United States citizen. In 1886 TESLA designed the arc-lighting system and two years later he invented the Tesla motor and designed a plan for the transmission of alternating current. In subsequent years, TESLA's discoveries and inventions included such fields and appliances as wireless communication, electrical oscillation, radiant power and radio active matter. After 1900, communications and wireless power transmission occupied most of his research.

2 - Bureau (RM) (Encs.2)
1 - Los Angeles (Info) (Encl.1) (RM)
1 - New York (65-12290)

NJM:mcd
(4)

SE 43 100-2237-

RECORDED-56

INDEXED-56

14 JUL 29 1957

0 1957

70

TESLA's only military invention was a method to which he once eluded but never fully described. This invention was a means whereby an inpenetrable "wall of force" can be erected around the United States' borders which would render helpless any military attack. TESLA disclosed the existence of his plan in 1934 and stated he intended to present it to the Geneva Conference but seldom referred to it afterward.

The "New York Times" dated 9/22/40, carried an article setting forth NICOLA TESLA's plan for a "Death Ray". This article included information to the effect that TESLA, on his 84th birthday, July 10, 1940, advised New York Times reporter WILLIAM L. LAWRENCE that he was ready to divulge to the United States Government the secret of his "teleforce", with which he said airplane motors would be melted at a distance of 250 miles so that an invisible Chinese wall of defense would be built around the country against any attempted attack by an enemy airforce no matter how large. According to TESLA, this "teleforce" was based on an entirely new principle of Physics that "no one has ever dreamed about" and was different from the principle embodied in his inventions relating to the transmission of electrical power from a distance, for which he received a number of basic patents.

TESLA stated that this new type of force would operate through a beam one hundredth millionth of a square centimeter in diameter and could be generated from a special plant that would cost no more than two million dollars and would take only about three months to construct. TESLA stated that a dzen such plants located at strategic points along the coast, according to TESLA, would be enough to defend the United States against all possible aerial attacks. TESLA stated that this beam would melt any engine and would also ignite explosives aboard any bomber. TESLA stated that no possible defense against it could be devised and he asserted that the beam would be all penetrating.

TESLA stated to Mr. LAWRENCE that he makes one important stipulation before he would divulge this secret to the United States Government and that was that should the United States Government decide to take up his offer, he would go to work at once but that the United States Government would have to trust him. TESLA stated that he would suffer "no interference from experts."

In this "New York Times" article Mr. LAWRENCE commented that with conditions as they were in 1940, and with the United States getting ready to spend millions of dollars for National Defense, Mr. TESLA's great reputation as an inventor, who always was many years ahead of his time, should be given careful consideration. Mr. LAWRENCE stated, in his opinion, the United States Government should take Mr. TESLA at his word and commission him to go ahead with the construction of his "teleforce" plant.

The New York file of Mr. TESLA bears no indication that any additional developments were carried on in connection with TESLA's invention and whether or not TESLA fully divulged his new plan to the United States Government.

TESLA died at the age of 85 on January 7, 1943.

Mr. [redacted] provided a two page copy of the above mentioned newsletter which Mr. and Mrs. STORM have been distributing in connection with the alleged invention by TESLA, which, according to Mr. and Mrs. STORM, consists of a radio type machine known as the Tesla Set which was invented by Mr. TESLA in 1938 for interplanetary communication. Mr. and Mrs. STORM claim that TESLA's engineers did not complete the Tesla Set until after TESLA's death in 1943. Mr. and Mrs. STORM claim that this Set was placed in operation in 1950 and since that time TESLA engineers have been in close touch with space ships. etc. (X)(D)

The Newsletter furnished by Mr. [redacted] included (6)(7)(D) the following names:

MARGARET STORM
JOHN STORM
GEORGE VAN TASSEL, Yucca Valley, California NY
DAN FRY NY - NMEX
GEORGE KING, London, England

The files of the New York Office contained no pertinent information regarding any of the above mentioned individuals. ARMAHO NY

Two photostatic copies of this newsletter are being sent to the Bureau for purposes of information while one copy is being submitted to the Los Angeles Office for information purposes.

[redacted] (b) (7) (C)

Mr. J. Edgar Hoover

L INFORMATION CONTAINED
EIN IS UNCLASSIFIED
7-3-80 BY SP4 Jam/rtc

Dear Sir:

I an hopeful that you can help me obtain certain information on records and data, which belonged to Dr. Nikola Tesla. He was an Electrical Engineer and prolific inventor.

He was born in Yugoslavia in 1856 and died in the United States, New York City, January 7th, 1943. He was a naturalized citizen of this country.

The only information I could find of his records was a report that the F.B.I. removed his papers for examination, and that the records were sealed by the custodian of alien property.

I have been doing some theoretical research of my own, which I believe may be along the same lines he followed in certain of his experiments. I also believe the development of his ideas would be in the interest of our country regardless of who developes them.

If it is at all possible for me to have access to at least some of his experimental work, I would certainly appreciate it. I am not able, by reason of the vast finances, which would be required, to conduct such experiments myself, so the data he made and collected would be invaluable.

Of course, it is possible that his records do not contain material pertinent to his electronics work, because from what I understand from reading about him, he kept most of his records in his head and wrote down very little of his data.

It is also possible that some of his ideas are impractical, but I feel sure that certain of his ideas will be of immense value to our country within the next several decades or even before, if they are developed at a rapid rate.

I would appreciate hearing from you on the subject, if you have any information pertaining to it, which you could make available to me.

100-2237-9

REC-1

Sincerely,
16 MAR 18 1958

[redacted]

Ack 3/14/58 [redacted]

[redacted]

(b) (7) (C)

[redacted]

74

March 14, 1958

REC-1

100-2237-

[redacted]

(b)(7)(c)

ALL INFORMATION CONTAINED HEREIN IS UNCLASSIFIED DATE 7-3-80 [illegible]

Dear [redacted]:

Your letter postmarked March 7, 1958, has been received.

In response to your inquiry, I would like to advise that our files reflect that the effects of Dr. Nikola Tesla were taken into custody after his death by the Office of Alien Property in the Department of Justice and not by the FBI.

Since we did not participate in the handling of Dr. Tesla's effects, we are unable to supply the information you requested.

Sincerely yours,

John Edgar Hoover
Director

NOTE: Buffiles reflect no record on correspondent. Buffiles reflect above type of reply has been utilized in the past in answering similar inquiries. (100-2237-7) Cover Memorandum from Belmont to Boardman 6/29/55 set forth background of this matter which concerned the death of Tesla, [illegible] electrical inventor. Bureau was not involved in this matter, and [illegible] of the [illegible] containing his effects was done by the Office of Alien Property.

Tolson
Nichols
Boardman
Belmont
Mohr
Parsons
Rosen
Tamm
Trotter
Nease
Tele. Room
Holloman
Gandy

MAIL ROOM

[redacted] also (b)(7)(c)

COMM - FBI
MAR 14 1958
MAILED 19

68 MAR 21 1958

FBI - JUSTICE
REC'D BY [illegible]

[redacted]

(b)(7)(c)

75

June 24, 1957

Federal Bureau of Investigation
Washington 25, D.C.

ALL INFORMATION CONTAINED
HEREIN IS UNCLASSIFIED
DATE 7-3-80 BY SP4 Jan/rtc

Dear Sirs,

I am doing a research study on the life of Dr. Nikola Tesla of New York City (1856 - 1943), and desire information which you may have. It was reported in the book "Prodigal Genius" that Dr. Tesla's papers were seized from his New York hotel room upon his death in 1943 by the F.B.I. I am very interested in getting copies of his papers for my study and would like to know if this report is true and where I might obtain further information about them or if you are holding them.

REC-91 100-2237

EX 101

Sincerely ~~yours~~,

[redacted]

(b)
(7)
(C)

[redacted]

CRIME REC

EX 101

REC- 91

July 2, 1959

Ink 100-2237-10

[redacted]

(b)(7)(c)

L INFORMATION CONTAINED
EIN IS UNCLASSIFIED
DATE 7-3-80 BY SP4 Jamfite

Dear [redacted]

Your letter dated June 24, 1959, has been received.

In response to your inquiry, I wish to advise that our files reflect that the effects of Dr. Nikola Tesla were impounded, after his death, by the Office of Alien Property of the Department of Justice and not by the FBI. Since we did not participate in the handling of Dr. Tesla's effects, we are unable to supply the information you desire.

Sincerely yours,

MAILED 5
JUL 2 1959
COMM-FBI

John Edgar Hoover
Director

NOTE: Bufile 100-2237 reflects that Dr. Tesla was a world-famous electrical inventor, and at the time of his death, all of his personal papers and effects were believed dangerous to the country's security if they fell into unauthorized hands. The book, "Prodigal Genius," by John J. O'Neil, alleges that the FBI took over a certain safe and opened it, appropriating his property. Bufiles clearly indicate that it was the Office of Alien Property of the Department who did so, and the above reply is forwarded in answer to related inquiries.

Tolson
Belmont
DeLoach
McGuire
Mohr
Parsons
Rosen
Tamm
Trotter
W.C. Sullivan
Tele. Room
Holloman
Gandy

[redacted]
(3)

FBI

57 JUL 9 1959

MAIL ROOM ☐ TELETYPE UNIT ☐

[redacted]

(b)(7)(c)

[redacted]

77

OPTIONAL FORM NO. 10

UNITED STATES GOVERNMENT

Memorandum

Tolson
Mohr
Parsons
Belmont
Callahan
Conrad
Malone
McGuire
Rosen
Tamm
Trotter
W.C. Sullivan
Tele. Room
Ingram
Gandy

TO : MR. TROTTER

DATE: 12-6-60

FROM : A. K. Bowles

SUBJECT: NIKOLA TESLA (DECEASED)
INFORMATION CONCERNING

ALL INFORMATION CONTAINED HEREIN IS UNCLASSIFIED DATE 7-3-80 BY

(b)(7)(C)

[redacted] telephoned December 5 and was referred to Ident by switchboard because he wanted to talk with someone in charge of records of deceased. [redacted] said he is making a research study for U. S. Air Force on subject of geophysics. His deadline is ten days from now. [redacted] said he just discovered a sentence in a book by John J. O'Neill entitled "The Prodigal Genius -- The Life of Nikola Tesla," which states the FBI took custody of papers from Tesla's safe after his death in New York City in 1943. Tesla was a world-famous Yugoslav scientist and inventor in the electrical field who died January 7, 1943, in New York City. [redacted] requested immediate access to Tesla's scientific works which may shed light on [redacted] research study. I told [redacted] we would have somebody from our Boston Office contact him immediately.

(b)(7)(C)

Bureau file 100-2237 shows no investigation of Tesla has been conducted by Bureau. Since erroneous statement concerning FBI's taking custody of papers from Tesla's safe after his death appeared in O'Neill's book published in 1944, Bureau has received numerous inquiries from scientists desiring to review Tesla's writings. Each inquiry has been answered by stating FBI did not participate in handling Tesla's effects, but information has come to our attention that Office of Alien Property of Department of Justice may have examined Tesla's effects. (File indicates that representatives of Office of Alien Property did actually review Tesla's possessions, including his writings, but file does not show what final disposition was made of Tesla's possessions.)

A teletype to Boston Division was prepared, but before it was sent [redacted] telephoned again to furnish me the exact page in O'Neill's book in which he refers to the FBI. At that time I told [redacted] the statement in the book was untrue -- that the FBI had not examined or taken custody of Tesla's papers. I suggested to [redacted] that he might contact Office of Alien Property. (Therefore, teletype to Boston was not necessary.) 100-2237-11

ACTION:

For record.

AKB:ks

EX-113 REC-38 5 DEC 8 1960

51 DEC 13 1960

(5)

Bu file 100-2237
1- Mr. Belmont

78

[redacted]
(b)
(7)
(c)

February 14, 1961

Federal Bureau of Investigation
Department of Information
Washington 25, D. C.

[redacted] INFORMATION CONTAINED
HEREIN IS UNCLASSIFIED
DATE 7-3-80 BY SP4 jm/rtc

Dear Sir:

I am a college student who is doing a research paper on Nikola Tesla. As I was collecting the material for my paper, I discovered that at the time of Tesla's death, the department of the F.B.I. confiscated the data and papers that Tesla had collected from his research in the field of electricity. This confiscation of his material was stated in the PRODIGAL GENIUS by J.J. O'Neil, published in 1944 at New York city by Washburn Inc.

I have developed an interest in the discoveries and accomplishments of Tesla that is presently limited by the shortage of factual material. If in your files, you have any information concerning Nikola Tesla that you are permitted to release, I will sincerly appreciate your co-operation in helping me give the proper recognition to this great scientist and American. Below I have listed the facts that may be helpful to you;

REC- 55 100-22137-18
FEB 28 1961
EX.-102

1. Born in 1856 at Smiljan, Crotia, now Yugoslavia
2. Came to America in 1884 and was employed for a short time with the Edison Co. at Orange, N.J.
3. Died on January 7, 1943 at New York city

Thanking you for your time and co-operation that I have taken, I remain,

Sincerly Yours,

[redacted]
(b)
(7)
(c)

[redacted]

79

esd 100-2237-12

REC- 55

EX-76

February 23, 1961

[redacted]

(6)(c)

ALL INFORMATION CONTAINED HEREIN IS UNCLASSIFIED DATE 7-3-80 BY [illegible]

Dear [redacted]:

Your letter of February 14, 1961, has been received, and the interest which prompted you to write is appreciated.

In response to your inquiry, I wish to advise that our files reflect that the effects of Dr. Nikola Tesla were impounded, after his death, by the Office of Alien Property of the Department of Justice and not by the FBI. Since we did not participate in the handling of Dr. Tesla's effects, we are unable to supply the information you desire.

MAILED 10
FEB 23 1961
COMM-FBI

Sincerely yours, (b)(7)(c)

John Edgar Hoover
Director

NOTE: No record could be located in Bufiles identifiable with correspondent. Bufile 100-2237 reflects that Dr. Tesla was a world-famous electrical inventor, and at the time of his death, all of his personal papers and effects were believed dangerous to the country's security if they fell into unauthorized hands. The book, "Prodigal Genius," by John J. O'Neill, alleges that the FBI took over a certain safe and opened it, appropriating his property. Bufiles clearly indicate that it was the Office of Alien Property of the Department who did so, and the above reply is forwarded in answer to related inquiries.

Tolson
Parsons
Mohr
Belmont
Callahan
Conrad
DeLoach
Evans
Malone
Rosen
Tavel
Trotter
W.C. Sullivan
Tele. Room
Ingram
Gandy

(3)
50 MAR 6 1961
MAIL ROOM TELETYPE UNIT

[redacted] (b)(7)(c)

80

November 21, 1962

Federal Bureau of Investigation

Washington 25, D.C.

Gentlemen:

I am making a study, motivated out of personal curiosity, into the life and works of Nikola Tesla. Mr. Tesla died on January 7, 1943 in the Hotel New Yorker. Since F.B.I. Operatives opened his safe and took his papers for examination, I wonder if these papers are available for perusal? If they are available, where would they be located, and are copies available to the public?

I am a citizen of the United States, and have been cleared for security--- the latest one being for work on [redacted]

Thank you very much for any information or help you may be able to give me in this matter!!

Respectfully yours,

[redacted]

(6)
(7)
(C)

ALL INFORMATION CONTAINED HEREIN IS UNCLASSIFIED DATE 7-3-80 BY SP4 [illegible]

EX-114

REC-39 100-2237 1B

5 NOV 28 1962

[redacted] 11-27-62

81

RA-114

REC-39 100-2237-13

November 27, 1962

[redacted]

(b) (7) (c) ALL INFORMATION CONTAINED HEREIN IS UNCLASSIFIED DATE 7-3-80 BY SP4 Jam/rtc

REC'D-READING ROOM FBI NOV 27 4 53 PM '62

Dear [redacted]

Your letter of November 21st has been received.

In response to your inquiry, I would like to point out that the effects of Dr. Nikola Tesla were impounded, after his death, by the Office of Alien Property of the Department of Justice and not by the FBI. Since this Bureau did not participate in the handling of Dr. Tesla's effects, I am unable to supply the information you desire.

Sincerely yours,

J. Edgar Hoover

John Edgar Hoover
Director

[redacted] (b) (7) (c)

MAILED 8 NOV 2 1962 COMM-FBI

NOTE: Bufiles contain no record identifiable with correspondent. Bufile 100-2237 shows that Dr. Tesla was one of the world's outstanding scientists in the electrical field, and at the time of his death, all of his personal papers and effects were believed dangerous to the country's security if they fell into unauthorized hands. The book, "Prodigal Genius," by John J. O'Neil, alleges that the FBI took over a certain safe and opened it, appropriating Dr. Tesla's property. Bufiles clearly indicate that it was the Office of Alien Property of the Department which did so, and the above reply has been forwarded in answer to related inquiries. Dr. Tesla was born in Yugoslavia and died in New York City 1-7-43.

Tolson
Belmont
Mohr
Casper
Callahan
Conrad
DeLoach
Evans
Gale
Rosen
Sullivan
Tavel
Trotter
Tele. Room
Holmes
Gandy

[redacted] (3) (b) (7) (c)

RECEIVED DIRECTOR

140

53 DEC 3 1962

[redacted]

MAIL ROOM ☐ TELETYPE UNIT ☐

[redacted]

82

[redacted] (b)(7)(c)

10 March 1964.

Federal Bureau of Investigation,
Washington 25, D.C.

ALL INFORMATION CONTAINED
HEREIN IS UNCLASSIFIED
DATE 7-14-82 BY [illegible]

Dear Sirs,

For some time, have been wondering about the matter of what was reported on the late Nikola Tesla, the inventor. He died during early January 1943, while in residence at the Hotel New Yorker, New York City. Accounts have it that his belongings (papers, etc.) were studied. Would appreciate learning if anything can be learned about this.

Am hoping to be on leave, and in Washington, along the third week of April. This is mentioned, in case it is possible to view anything relating to the question.

Sincerely,

[redacted]

ITC 3-17-64
ack 3-18-64
[redacted]

(b)(7)(c)

[redacted]

83

TRUE COPY

(b)(7)(c) [redacted] 10 March 1964.

Federal Bureau of Investigation
Washington 25, D. C.

Dear Sirs,

For some time, have been wondering about the matter of what was reported on the late Nikola Tesla, the inventor. He died during early January 1943, while in residence at the Hotel New Yorker, New York City. Accounts have it that his belongings (papers, etc.) were studied. Would appreciate learning if anything can be learned about this.

Am hoping to be on leave, and in Washington, along the third week of April. This is mentioned, in case it is possible to view anything relating to the question.

Sincerely,

[redacted] (b)(7)(c)

ALL INFORMATION CONTAINED HEREIN IS UNCLASSIFIED DATE 7-3-80 BY SP4 Jm/rtc

100-2237-14

10 MAR 13 1964

(b)(7)(c)

84

REC-130

100-2237-14

March 18, 1964

INFORMATION CONTAINED
HEREIN IS UNCLASSIFIED
DATE 7-3-80 BY SP4 Jan/rtc

[redacted] (b) (7) (c)

Dear [redacted]

Your letter of March 10th has been received.

In response to your inquiry, I would like to point out that the effects of Dr. Nikola Tesla were impounded, after his death, by the Office of Alien Property of the Department of Justice and not the FBI. Since we did not participate in the handling of Dr. Tesla's effects, I am unable to supply the information you desire.

Sincerely yours,

J. Edgar Hoover

John Edgar Hoover
Director

MAR 18 4 11 PM '64
REC'D-READING ROOM
FBI

MAILED 19
MAR 18 1964
COMM-FBI

NOTE: No record could be located in Bufiles identifiable with correspondent. Bufile 100-2237 reflects that Dr. Tesla was a world-famous electrical inventor and at the time of his death, all of his personal papers and effects were believe dangerous to the country's security if they fell into unauthorized hands. The book, "Prodigal Genius," by John J. O'Neil, alleges that the FBI took over a certain safe and opened it, appropriating his property. Bufiles clearly indicate that it was the Office of Alien Property of the Department which did so, and the above reply is forwarded in answer to related inquiries.

[redacted] (3) [redacted] (b) (7) (c) [redacted]

Tolson
Belmont
Mohr
Casper
Callahan
Conrad
DeLoach
Evans
Gale
Rosen
Sullivan
Tavel
Trotter
Tele. Room
Holmes
Gandy

57 MAR 2 ...

MAIL ROOM ☐ TELETYPE UNIT ☐

85

TRUE COPY

Sir,

According to "Prodical Genius, Nikola Tesla" Tesla
by J. J. O'Neil (a book) some papers were taken from the safe of Mr. Festa about 1945 yr. Is this true. If so are the papers declasified yet? If so may I obtain a copy?

[redacted] (b)(7)(C)

Sir,

According to "Prodical Genius, Nikola Tesla" by J. J. O'Neil (a book) some papers were taken from the safe of Mr. Tesla about 1945 yr. Is this true. If so are the papers declasified yet? If so may I obtain a copy?

REC-15
EX-10
100-2237-15
JUN 23 1964

[redacted] b(7)(c)

[redacted]

ALL INFORMATION CONTAINED
HEREIN IS UNCLASSIFIED
DATE 7-3-80 BY SP4 Jones/rtc

96

June 22, 1964

REC- 15

100 2237 15

[redacted] (b)(7)(c)

ALL INFORMATION CONTAINED HEREIN IS UNCLASSIFIED DATE 7-3-80 BY SP4 Jmfrte

REC'D-READING ROOM FBI JUN 22 3 30 PM '64

Dear [redacted]

Your card of June 16th has been received.

In response to your inquiry, I would like to point out that the effects of Dr. Nikola Tesla were impounded, after his death, by the Office of Alien Property of the Department of Justice and not by the FBI. Since we did not participate in the handling of Dr. Tesla's effects, I am unable to furnish the information you desire.

MAILED 20 JUN 22 1964 COMM...

Sincerely yours,

J. Edgar Hoover

NOTE: No record could be located in Bufiles identifiable with correspondent. Bufile 100-2237 reflects that Dr. Tesla was a world-famous electrical invent and at the time of his death, all of his personal papers and effects were believed dangerous to the country's security if they fell into unauthorized han The book, "Prodigal Genius," by John J. O'Neil, alleges that the FBI took ov a certain safe and opened it, appropriating his property. Bufiles clearly indicate that it was the Office of Alien Property of the Department which did s and the above reply is forwarded in answer to related inquiries.

[redacted] (3)

[redacted]

(b)(7)(c)

Tol[redacted]
Belm[redacted]
Mohr
Casper
Callahan
Conrad
DeLoach
Evans
Gale
Rosen
Sullivan
Tavel
Trot[redacted]
Tel[redacted]
[redacted]dy

RECEIVED DIRECTOR

64 JUN 26 1964

MAIL ROOM ☐ TELETYPE UNIT ☐

87

OREGON STATE UNIVERSITY
CORVALLIS, OREGON 97331
SCHOOL OF SCIENCE
Reply to: DEPARTMENT OF GENERAL SCIENCE

March 28, 1967

FEDERAL BUREAU OF INVESTIGATION
Department of Information
9th Street & Pennsylvania Aven, N.W.
Washington 25, D. C. 20535

ALL INFORMATION CONTAINED
HEREIN IS UNCLASSIFIED
DATE 2-3-80 BY SP4 jrm/pte

Dear Sirs:

I am a student of the history of science at Oregon State University, and I am attempting to write a research paper on a very eccentric scientist who died in 1943. His name was Nikola Tesla, a naturalized American of Serbian extraction, and he died in his hotel room in New York City on January 8, 1943.

During the years leading up to World War II, Nikola Tesla supposedly invented a "Death Ray" which could destroy several hundred aircraft. Mr. Tesla was a very prolific and creative genius during his early years but gradually became something of a crackpot in his old age. As a student of the history of science, it is important to determine whether or not Tesla had any valid ideas in the plans for his death ray. Tesla invented the fluorescent light and also was one of the first scientists to discover X-Rays--hence there may be some possibility that his death ray might actually have been some crude type of laser.

In Tesla's biography, "Prodigal Genius", by John J. O'Neill, the author states on page 277:

> "Operatives from the F.B.I. came to Tesla's hotel room shortly after his death and opened the safe in his room. They took the papers that it contained in order to examine them for a reported secret invention of possible use in the war..."

I am trying to locate Tesla's secret and unpublished writings concerning his death ray. I have searched the literature quite thoroughly and have found nothing. Does the F.B.I. still have these papers or can you tell where I might be able to obtain these writings for examination? Any assistance or information that you may lend me will be very much appreciated.

100-2237-16

Sincerely yours,

[redacted]

REC 49
12 APR 4 1967

(6)
(7)
(C)

4/3/67

CORRESPONDENCE 88

April 3, 1967

REC 49 100-2237-16

[redacted]

ALL INFORMATION CONTAINED HEREIN IS UNCLASSIFIED DATE 7-3-80 BY SP4 Jam/rtc

(b)
(7)
(c)

Dear [redacted]

Your letter of March 28th has been received.

In response to your inquiry, the effects of Dr. Nikola Tesla were impounded, after his death, by the Office of Alien Property of the Department of Justice and not by the FBI. Since we did not participate in the handling of Dr. Tesla's effects, I am unable to furnish the information you desire.

Sincerely yours,

J. Edgar Hoover

John Edgar Hoover
Director

MAILED 30
APR 3 1967
COMM-FBI

NOTE: No record could be located in Bufiles identifiable with correspondent. Bufile 100-2237 reflects that Dr. Tesla was a world-famous electrical inventor, and at the time of his death, all of his personal papers and effects were believed dangerous to the country's security if they fell into unauthorized hands. The book, "Prodigal Genius," by John J. O'Neil, alleges that the FBI took over a certain safe and opened it, appropriating his property. Bufiles clearly indicate that it was the Office of Alien Property of the Department which did so, and the above reply is forwarded in answer to related inquiries.

[redacted] (3)

Tolson
DeLoach
Mohr
Wick
Casper
Callahan
Conrad
Felt
Gale
Rosen
Sullivan
Tavel
Trotter
Tele Room
Holmes
Gandy

54 APR 11 1967

MAIL ROOM ☐ TELETYPE UNIT ☐

(b)
(7)
(c)

89

J. Edgar Hoover
Federal Bureau of Investigation
Washington D. C.

TRUE COPY

[redacted]

Feb. 25, 1969

Dear Mr. Hoover,

HEREIN IS UNCLASSIFIED
DATE 2-3-80 BY SP4 Jam/etc

In the year 1943 the F.B.I. confiscated all of the papers and maybe some of the machines of physicist, Nikola Tesla. These papers were his experiments and ideas at the time of his death. According to the books I've read, these papers were confiscated on the grounds of the enemy getting ahold of his ideas and apply them to war machines.

I have studied all of the material on this man and have found him to be more intelligent than the great "Brain" of his time, Thomas Edison.

Why without Nikola Tesla there would be Westinghouse Company as we know today. This is the man who harnessed Niagara Falls, and was the one and only man who could see the possibilities of Alternating Current when men like Edison said "it would never work."

What I am wondering is, maybe these papers could be reclassified from whatever "Top Secret" classification they now have and be made available for study by the people who understand and can gain knowledge from them.

I would be willing to pay for reproductions of his experiments if nothing else. He still has a great many ideas that have never been tried.

It disturbs me to think that everyone has forgotten about the ideas of this man when he was so advanced for his time.

I can say with assurance that no man alive can say that he knows all of Tesla's ideas. And studying other men's ideas is the way to advance in science faster.

100-2237-12

I hope something can be done to get these papers released.

Thank You,

[redacted] (b)(7)(c)

/s/ [redacted]

100-2237-

90

Feb. 25, 1969

Dear Mr. Hoover,

In the year 1943 the F.B.I. confiscated all of the papers and maybe some of the machines of physicist, Nikola Tesla. These papers were his experiments and ideas at the time of his death. According to the books I've read, these papers were confiscated on the grounds of the enemy getting ahold of his ideas and apply them to war machines.

I have studied all of the material on this man and have found him to be more intelligent than the great "Brain" of his time, Thomas Edison.

Why without Nikola Tesla there would be Westinghouse Company as we know today. This is the man who harnessed Niagara Falls, and was the one and only man who could see the possibilities of Alternating Current when men like Edison said "it would never work".

What I am wondering is, maybe these papers could be reclassified from whatever "Top Secret" classification they now have and be made available for study by the people who understand and can gain knowledge from them. (b)(7)(c)

ALL INFORMATION CONTAINED HEREIN IS UNCLASSIFIED DATE 1-14-82 BY [illegible]

CO[redacted]NDENCE

91

I would be willing to pay for reproductions of his experiments if nothing else. He still has a great many ideas that have never been tried.

It disturbs me to think that everyone has forgotten about the ideas of this man when he was so advanced for his time.

I can say with assurance that no man alive can say that he knows all of Tesla's ideas. And studying other men's ideas is the way to advance in science faster.

I hope something can be done to get these papers released.

Thank You,

[redacted] (b)(7)(c)

March 4, 1969

100-2237-17

[redacted]

(b)(7)(c)

Dear [redacted]

Your letter of February 25th has been received.

In response to your inquiry, the effects of Dr. Nikola Tesla were impounded, after his death, by the Office of Alien Property of the Department of Justice and not by the FBI. Since we did not participate in the handling of Dr. Tesla's belongings, I am unable to furnish the information you desire. A copy of your communication has been referred to the Department of Justice.

Sincerely yours,

J. Edgar Hoover

MAILED 10
MAR 4 - 1969
COMM-FBI

NOTE: Bufiles contain no record of correspondent. Bufile 100-2237 reflects that Dr. Tesla was a world-famous electrical inventor, and at the time of his death, all of his personal papers and effects were believed dangerous to the country's security if they fell into unauthorized hands. The book, "Prodigal Genius," by John J. O'Neil, alleges that the FBI took over a certain safe and opened it, appropriating his property. Bufiles clearly indicate that it was the Office of Alien Property of the Department which did so, and the above reply is forwarded in answer to related inquiries. Copy of letter referred to Assistant Attorney General, Civil Division of the Department.

[redacted] (3)

[redacted]

54 MAR 13 1969

Tolson
DeLoach
Mohr
Bishop
Casper
Callahan
Conrad
Felt
Gale
Rosen
Sullivan
Tavel
Trotter
Tele. Room
Holmes
Gandy

MAIL ROOM ☐ TELETYPE UNIT ☐

[redacted]

(b)(7)(c)

93

(b)(7)(c)

[redacted]

April 8, 1970

Federal Bureau of Investigation
Director of Central Records
Washington, D.C.

Dear Sir:

I am doing a research paper on Nickola Tesla and would appreciate it if you could please provide me with the following information.

That information being why did your Bureau impound his personal effects immediately after his death on January 7, 1943. Secondly, could you provide a list of those effects, and lastly, when were they released and to whom were they given.

Thanking you for the information

[redacted] (b)(7)(c)

P

ALL INFORMATION CONTAINED
HEREIN IS UNCLASSIFIED
DATE 7-3-80 BY SP4 Jmp/stc

REC 44 100-2237-18

APR 15 1970

[redacted]

4/14/70

[redacted]

(b)(7)(c)

CORRES[redacted]

94

REC 44 100 2237-18

April 14, 1970

46

ALL INFORMATION CONTAINED HEREIN IS UNCLASSIFIED DATE 7-3-80 BY SP4 Jrmprte

[redacted]

(b) (7) (c)

Dear [redacted]:

In reply to your inquiry of April 8th, the effects of Dr. Nikola Tesla were impounded, after his death, by the Office of Alien Property of the Department of Justice and not by the FBI. Since we did not participate in the handling of Dr. Tesla's belongings, I am unable to furnish the information you desire. A copy of your communication has been referred to the Department of Justice for any help it may be able to offer.

Sincerely yours,

Edgar Hoover

John Edgar Hoover
Director

[redacted]

(b) (7) (c)

MAILED 9
APR 14 1970
COMM-FBI

NOTE: Bufiles contain no information identifiable with correspondent. Bufile 100-2237 reflects that Dr. Tesla was a world-famous electrical inventor, and at the time of his death, all of his personal papers and effects were believed dangerous to the country's security if they fell into unauthorized hands. The book, "Prodigal Genius," by John J. O'Neil, alleges that the FBI took over a certain safe and opened it, appropriating his property. Bufiles clearly indicate that it was the Office of Alien Property of the Department which did so, and the above reply is forwarded in answer to related inquiries. Copy of letter referred to Assistant Attorney General, Civil Division of the Department.

Tolson
DeLoach
Walters
Mohr
Bishop
Casper
Callahan
Conrad
Felt
Gale
Rosen
Sullivan
Tavel
Soyars
Tele. R
Holmes
Gandy

59 APR 20 1970

MAIL ROOM TELETYPE UNIT

[redacted] (3) [redacted] [redacted] [redacted]

(b) (7) (c) 95

July 15, 1970

REC-3 100-2237-19

[redacted] (6)(7)(C)

ALL INFORMATION CONTAINED HEREIN IS UNCLASSIFIED DATE 7-3-80 BY [signature]

Dear [redacted]:

Your letter was received on July 13th and the interest which prompted you to write to me is appreciated. With respect to your inquiry, the effects of Dr. Nikola Tesla were impounded, after his death, by the Office of Alien Property of the Department of Justice and the FBI did not participate in the handling of Dr. Tesla's belongings. In addition, this Bureau is strictly an investigative agency of the Federal Government and matters such as you mentioned do not come within the scope of this Bureau's authority.

Sincerely yours,

J. Edgar Hoover

[redacted] (6)(7)(C)

John Edgar Hoover
Director

MAILED 8
JUL 15 1970
COMM-FBI

NOTE: Bufiles contain no record of correspondent. Bufile 100-2237 reflects that Dr. Tesla was a world-famous electrical inventor, and, at the time of his death, all of his personal papers and effects were believed dangerous to the country's security if they fell into unauthorized hands. Bufiles indicate that the Office of Alien Property of the Department appropriated his property and replies similar to the above have been used to answer related inquiries.

Tolson
DeLoach
Walters
Mohr
Bishop
Casper
Callahan
Conrad
Felt
Gale
Rosen
Sullivan
Tavel
Soyars
Tele. Room
Holmes
Gandy

54 JUL 23 1970

[redacted] (2)

MAIL ROOM [ ] TELETYPE UNIT [ ]

[redacted] (6)(7)(C)

96

(b)(7)(c)

[redacted]

INFORMATION CONTAINED
HEREIN IS UNCLASSIFIED
DATE 7-3-80 BY SP4 Jmfete

July 8, 1970.

Mr. J. Edgar Hoover,
Director,
Federal Bureau of Investigation,
Washington D. C.

N.I.K. - Tesla

Dear Sir,

I am writing this to you as I believe that most of the government is infiltrated with foreign agents, and there is a very good chance this could be of extreme importance for the defense of our nation.

I met a man a number of years ago that was raised on Long Island in the neighborhood where Mr. Tesla, inventor of the Tesla Coil, had his lab. He told me of Mr. Tesla's notes blowing down the street when the junk men were dismantling his equipment. It would be a wonderful thing is some of these notes were salvaged and could be found.

Mr. Tesla was at least a century ahead of his time. He sent radio signals around the world seventeen years prior to Mr. Marconi, who received the credit, and pioneered many fields. He was so far advanced that he had to invent a special math to keep up with his work.

He, on several accasions talked before the scientists of the world and became very angry at their inability to understand him, and due to this was violently disliked and didnot receive acknowledgement for his discoveries. One of the notes read by this man told of the radio transmission of electricity being brought to a high degree of effiency.

Now here is the thing that should be investigated throughly. During my High School education, in the winter of either 19-25-26 or 1926-27, I made a currant events report on an article appearing in a small publication of that name that was received weekly at the Troy Highschool, Troy Montana. It stated in this article that Mr. Tesla had made an offer to the Congress of the United States that if they would install radio transmission towers at every 150 miles around the border of this country, that he would install equipment that would broadcast a vertical plane of energy beyond the atmosphere through which no material object could pass as it would shatter or lose it's monecular coohesion. It was refused.

There is a good chance that this data is in the files of congress. What a defence, and boy do we need it. EX-117 REC-3 100-2237-19

I have had some results along this line with structured vortices of magnetic fields, but do not have the technical equipment or knowledge to carry out further experiments. The theory is quite simple and deals with particle acceleration, and it works to the best of my knowledge.

9 JUL 16 1970

Sincerely

[redacted]

(b)(6)(c)

[redacted]

97

[redacted] (b)(7)(c)

6 DECEMBER 1971

FEDERAL BUREAU OF INVESTIGATION

WASHINGTON, D.C.

Dear Sir:

I have recently begun a collection and reading file of all matters pertaining to Nikola Tesla. In so doing I was amazed to find that upon his death; January 7, 1943, in NYC, your bureau confined his papers. May I ask if you still "have them in jail". I am extremely interested in his work(s) and am trying to establish my own "Tesla" library. Your assistance would be greatly appreciated.

Very truly yours,

[redacted]

[redacted] (b)(7)(C)

[redacted]

REC- 39 100-2237-20

16 DEC 15 1971

[redacted]

[redacted]

INFORMATION CONTAINED HEREIN IS UNCLASSIFIED DATE 7-3-80 BY [redacted] (b)(7)(C)

[redacted]

98

December 14, 1971

REC- 28 100-2237-20

[redacted] (b)(7)(C)

ALL INFORMATION CONTAINED HEREIN IS UNCLASSIFIED DATE 7-3-80 BY [redacted]

(b)(7)(C)

Dear [redacted]:

Your letter of December 6th has been received.

In response to your inquiry, the effects of Dr. Nikola Tesla were impounded, after his death, by the Office of Alien Property of the Department of Justice and not by the FBI. We did not participate in the handling of Dr. Tesla's belongings in any way. Copies of your communication and my reply have been referred to the Department of Justice.

Sincerely yours,

J. Edgar Hoover

John Edgar Hoover
Director

[redacted] (b)(7)(C)

NOTE: Bufiles contain no record correspondent. Dr. Tesla was world-famous electrical inventor, and at death, his effects believed dangerous to country's security. "Prodigal Genius," by John J. O'Neil, alleges FBI took safe and appropriated his property. Above reply previously given to same inquiries. (100-2237) Material sent to the Assistant Attorney, Civil Division, of the Department.

[redacted] (4)

Tolson
Felt
Rosen
Mohr
Bishop
Miller, E.S.
Callahan
Casper
Conrad
Dalbey
Cleveland
Ponder
Bates
Tavel
Walters
Soyars
Tele. Room
Holmes
Gandy

MAILED 8
FBI

[redacted] (b)(7)(C)

58 DEC 21 1971

MAIL ROOM ☐ TELETYPE UNIT ☐

99

Federal Bureau Of Investigation
Ninth Street and Pennsylvania
Northeast Washington D. C. 20535

Dear Sirs,

Upon rea ding a biography on Nikola Tesla, I found the urge to read more on him and his works. At the end of the book it was stated that the F.B.I. went to his hotel room gathered up his papers and locked them in a vault. The thing I would like to know is the real reason they were locked up and if it would be possible to see some of these records and any other works of his.

I can think of only one possible reason as to cause of his records being locked up and that is because he was too far advanced for his time. This seems to be the only logical solution, but, with technology much more advanced now than in his time it would seem likely that scientists take over where he left off.

Please let me know If I can look at the records and if you can please answer my question of the real reason his records were locked up.

Thank You,

[redacted]

ALL INFORMATION CONTAINED
HEREIN IS UNCLASSIFIED
DATE 7-3-80 BY SP4 Jam/rtc

ST-113

(b)
(7)
(C)

REC-48

100-2237-21

[redacted]

Ack
10-31-72
[redacted]

100

ST-113

REC-48

October 31, 1972

100-2237-21

[redacted]

ALL INFORMATION CONTAINED HEREIN IS UNCLASSIFIED DATE 7-3-80 BY [signature]

(b)(7)(c)

Dear [redacted]:

Your letter was received on October 26th.

In response to your inquiry, the effects of Dr. Nikola Tesla were impounded, after his death, by the Office of Alien Property of the Department of Justice and not by the FBI. Since we did not participate in the handling of Dr. Tesla's belongings, I am unable to furnish the information you desire. I am forwarding a copy of your communication and of this reply to the Department of Justice.

Sincerely yours,

L. Patrick Gray III

L. Patrick Gray, III
Acting Director

MAILED 8
OCT 31 1972
FBI

NOTE: Correspondent is not identifiable in Bufiles. Bufile 100-2237 reflects that Dr. Tesla was a world-famous electrical inventor, and at the time of his death, all of his personal papers and effects were believed dangerous to the country's security if they fell into unauthorized hands. The book, "Prodigal Genius," by John J. O'Neil, alleges that the FBI took over a certain safe and opened it, appropriating his property. Bufiles clearly indicate that it was the Office of Alien Property of the Department which did so, and the above reply is forwarded in answer to related inquiries. Copy of letter referred to Assistant Attorney General, Civil Division of the Department.

Felt
Baker
Bates
Bishop
Callahan
Cleveland
Conrad
Dalbey
Jenkins
Marshall
Miller, E.S.
Ponder
Soyars
Walters
Tele. Room
Mr. Kinley
Mr. Armstrong
Ms. He[illegible]
Mrs. N[illegible]

[redacted]

57 NOV 6 1972

MAIL ROOM ☐ TELETYPE UNIT ☐

(b)(7)(c)

[redacted]

101

[redacted]

April 3, 973

(b)
(2)
[redacted]

Federal Bureau of Investigation
Washington
District of Columbia

1 ex
Zip Co
dir
gen

ALL INFORMATION CONTAINED
HEREIN IS UNCLASSIFIED
DATE 7-2-80 BY SP4 Jm/rtc

Dear sirs:

During my research on Nikola Tesla, I found that the F.B.I. had confiscated his records pertaining to his experiments. I would like to know if such information is available and if so how copies might be obtained.

t

I am an engineering student and hope possibly to resume where Tesla left off.

I have the honor to remain,

O
Nikola Tesla

EX-111 REC-36 [redacted] 100-2237 = 22 (b) (7) (c)

10 APR 11 1973

[redacted]

CORRES

102

EX-111

REC-36

100-2237-22

April 11, 1973

[redacted]

(b) ALL INFORMATION CONTAINED
(7) HEREIN IS UNCLASSIFIED
(c) DATE 7-3-80 BY SP4 Jim/rte

Dear [redacted]:

Your letter was received on April 9th.

In response to your inquiry, the effects of Dr. Nikola Tesla were impounded, after his death, by the Office of Alien Property of the Department of Justice and not by the FBI. Since we did not participate in the handling of Dr. Tesla's belongings, I am unable to furnish the information you desire. A copy of your communication and of this reply have been referred to the Department of Justice.

Sincerely yours,

L. Patrick Gray, III
Acting Director

NOTE: Bufiles contain no record of correspondent. (Bufile 100-2237 reflects that Dr. Tesla was a world-famous electrical inventor, and at the time of his death, all of his personal papers and effects were believed dangerous to the country's security if they fell into unauthorized hands. The book, "Prodigal Genius," by John J. O'Neill, alleged that the FBI took over a certain safe and opened it, appropriating his property. Bufiles clearly indicate that it was the Office of Alien Property of the Department which did so, and the above reply is forwarded in answer to related inquiries. Copy of letter referred to the Assistant Attorney General, Civil Division of the Department.)

[redacted] (4)

Mr. Felt
Mr. Baker
Mr. Callahan
Mr. Cleveland
Mr. Conrad
Mr. Gebhardt
Mr. Jenkins
Mr. Marshall
Mr. Miller, E.S.
Mr. Soyars
Mr. Thompson
Mr. Walters
Tele. Room
Mr. Kinley
Mr. Armstrong
Mr. Bowers
Mr. Herington
Ms. Herwig
Mr. Mintz
Mrs. Neenan

MAIL ROOM ☐ TELETYPE UNIT ☐

54 APR 2 [redacted]

(b)
(7)
(c) [redacted]

103

[redacted] (b)(7)(c)

June 20, 1973

Federal Bureau of Investigation
Department of Justice
Washington, D. C.

INFORMATION CONTAINED
HEREIN IS UNCLASSIFIED
DATE 7-3-80 BY SP4 Jm/rte

Gentlemen:

I would like to know if any microfilm or other reproductions of Nikola Tesla's notes and papers exist at your office. Tesla was a famous scientist who died in New York City. The Federal Bureau of Investigation entered his safe shortly after this to remove his papers for examination for the war effort. After the war the papers were offered to any group that would start a museum to house them. No one accepted and the papers were finally sent to the Tesla Museum in Belgrade, Yugoslavia, sometime in the early 1950's, possibly just before 1954. Tesla was the inventor of all ac motors and the polyphase system, as well as all flourescent and neon lamps. He was a major pioneer in the early days of radio and discovered many of the early principles of radar. He declined nomination of a Nobel Prize. He was a naturalized citizen of America and said he valued his citizenship papers above all his awards and possessions. Despite this, all his papers were sent to another nation.

I would like to examine some of his papers from 1899 and later without having to fly to Yugoslavia. I have only seen a condesnsed copy of his research from Colorado Springs, but am unable to obtain copies. The principles and equipment are rather out-of-date and well-known, but still useful in my research. [redacted]

I would greatly appreciate help in this matter.

Sincerely, REC-26 100-2237-23

[redacted] (b)(7)(c)

JUN 29 1973

P.S. Tesla died in January of 1943 and shortly after ~~this~~ the papers were removed from his safe. The original copies of these papers were sent abroad prior to 1954, as I believe it was in that year the Yugoslavs founded the Tesla Museum (not to be confused with the Tesla Institute). [redacted]

(b)(7)(c)

104

EX-109

June 27, 1973

REC-26 100-2237-23

[redacted] (b)(7)(C)

ALL INFORMATION CONTAINED HEREIN IS UNCLASSIFIED DATE 2-3-80 BY [illegible]

Dear [redacted]:

Your letter was received on June 25th.

In response to your inquiry, the effects of Dr. Nikola Tesla were impounded, after his death, by the Office of Alien Property of the Department of Justice and not by the FBI. Since we did not participate in the handling of Dr. Tesla's belongings, I am unable to furnish the information you desire. A copy of your communication and of this reply have been referred to the Department of Justice.

Sincerely yours,

William D. Ruckelshaus

William D. Ruckelshaus
Acting Director

[redacted] (b)(7)(C)

MAILED 24 FBI

NOTE: Bufiles indicate one letter to correspondent dated 4-15-66 in reply to his inquiry regarding the Air Force's Project Blue Book and UFO sightings. Bufile 100-2237 reflects that Dr. Tesla was a world-famous electrical inventor, and at the time of his death, all of his personal papers and effects were believed dangerous to the country's security if they fell into unauthorized hands. The book, "Prodigal Genius," by John J. O'Neill, alleged that the FBI took over a certain safe and opened it, appropriating his property. Bufiles clearly indicate that it was the Office of Alien Property of the Department that did so, and the above reply is forwarded in answer to related inquiries. Copy of letter referred to the Assistant Attorney General, Civil Division of the Department.)

[redacted] (4)

[redacted] (b)(7)(C)

Felt
Baker
Callahan
Cleveland
Conrad
Gebhardt
Jenkins
Marshall
Miller, E.S.
Soyars
Thompson
Walters
Room
Kaise
James
Powers
Herrington
Conmy
Mintz
Wardley
Logan

54 JUL 8 1973

MAIL ROOM ☑ TELETYPE UNIT ☐

105

100-2237-28

November 10, 1975

[redacted]

(b) (7) (c) ALL INFORMATION CONTAINED HEREIN IS UNCLASSIFIED DATE 7-3-80 BY SP4 Jpm/rtc

Dear [redacted]:

This is to acknowledge receipt of your Freedom of Information-Privacy Acts (FOIPA) request forwarded to the FBI by the Department of Justice on October 22nd.

In response to your request for files pertaining to Nikola Tesla, please be advised that in order to preserve the privacy of an individual who may be the subject of a similar inquiry, it has been necessary for the FBI to maintain the practice of not indicating whether we do or do not have such information in our files.

If you can provide notarized authorization from Mr. Tesla's next of kin directing us to release to you any information our files may contain concerning him, we shall thereafter search our files and advise you accordingly.

Since we have not conducted a search of our files, please do not infer that we do or do not have the information you requested.

Sincerely yours,

C. M. Kelley

Clarence M. Kelley
Director

MAILED 6
NOV 10 1975
-FBI

1 - The Deputy Attorney General - Enclosure
Attention: Susan M. Hauser

[redacted] (5)

(b) (7) (c)

Assoc. Dir. ___
Dep. AD Adm. ___
Dep. AD Inv. ___
Asst. Dir.:
Admin. ___
Comp. Syst. ___
Ext. Affairs ___
Files & Com. ___
Gen. Inv. ___
Ident. ___
Inspection ___
Intell. ___
Laboratory ___
Plan. & Eval. ___
Spec. Inv. ___
Training ___
Legal Coun. ___
Telephone Rm. ___
Director Sec'y ___

MAIL ROOM ☑ TELETYPE UNIT ☐

62 DEC 30 1975 F 303

[redacted]

GPO : 1975 O - 569-920

106

[redacted] (6)(7)(c)

April 20, 1976

Mr. Clarence Kelly
Director
F.B.I.
Washington, DC

ALL INFORMATION CONTAINED HEREIN IS UNCLASSIFIED DATE 7-3-80 BY [illegible]

Dear Mr. Kelly:

Mr. Allen and Mr. Ruchlehaus, former acting Director of the FBI, contacted me in 1973 regarding the unavailability of American microfilm records of Nikola Tesla's unpublished diary (now in the Belgrade museum, arranged by month per folder).

At the time I discounted the possibility that these unpublished discoveries had military significance. But because of experiments now under way at Hill AFB, I now suspect such military applications exist and feel it imperative that you be notified, particularly in view of the fact that the Soviets have primary access to the entire collection.

Two photos of each page exist.

After Tesla's death, scientists from the Navy and OSS performed a cursory examination of the diary and notes, which if my memory serves me correctly, was one month long, hardly enough time to decipher Tesla's torturous handwriting. Though Tesla wrote in English, his penmanship was small, blurred, and as difficult to translate as a foreign language.

According to the museum director (1971), the Soviets had made copies of some portions, but not the Colorado Springs diary, which numbers 500 pages, 20 that directly pertain to ball lightning, and 20 or so relevant to the equipment construction. (We copied the most significant portions, but feel more exists)

FX-115 REC-52 100-2237-29

[redacted] an article [redacted] magazine, EDN (an electrical engineering magazine), but only with the very recent receipt of an unpublished manuscript from John J. O'Neill's book (PRODIGAL GENIUS) did I place credence on Tesla's later claim to military applications. Incidentally, some of O'Neill's descriptions were inaccurate and exagerated, as we have exceeded Tesla's results and are familiar with the experiments. At any rate, there are three possible military applications.

(b)(7)(c)

4 MAY 3 1976

[redacted]

107

First, Tesla claimed that the lightning balls (which destroyed his equipment) could be used to destroy aircraft. I have talked to AF personnel --such as [redacted] who saw one inside his plane in flight--and found AF personnel fear these "rf balls," as they call them.

Second, it is a suspicion of mine that ball lightning, if injected with lithium, could produce a cheap fusion bomb.

Third--and this may be no more than a suspicion--the propulsion mode of ball lightning involves electro-gravitic interaction, by which means air vehicles of revolutionary configuration may be constructed. There are no presently-known laws of physics that can account for the propulsion (400 mph or so when following an airliner). Other hitherto unsuspected applications may exist.

(b)(7)(C)

None of these applications were the goal of Project Tesla, which centered on producing ball lightning as Tesla did and studying it as a plasma confinement technique for fusion reactors. Incidentally, Tesla's claim to setting up standing waves on the earth's surface (wireless power) was erroneous and involved techniques similar to Project Sanguine, that is, using the earth's atmosphere as a waveguide ([redacted] is aware of our research).

Cordially,

[redacted]

P.S. By a copy of this letter, along with the enclosures, I am notifying the C.I.A.

Enclosures: 2

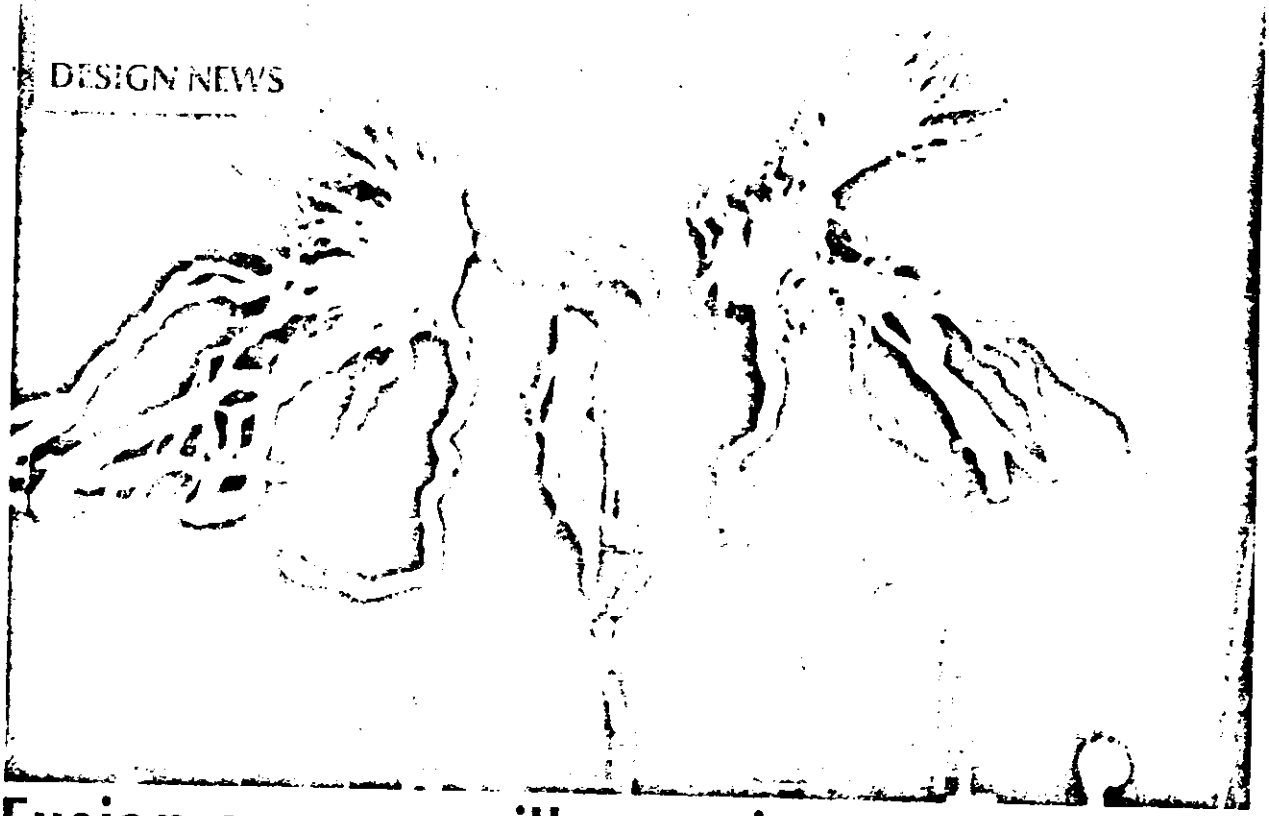

Fusion energy: will experiments in ball lightning provide the key?

Paul Snigier, Associate Editor

In the vast and empty hangar where the first atomic bomb was assembled, a man-made lightning storm is now being unleashed. The voltages of these lightning bolts—20 million volts—are the highest discharge voltages ever produced by man.

Project Tesla, headed by Robert K. Golka and Dr. Robert W. Bass, is an attempt to artificially duplicate one of nature's rarest and most terrifying phenomena—ball lightning. The experiments are based upon the unpublished notes of Nikola Tesla, who, in 1899 at his Colorado Springs laboratory, used a secret *magnifying transmitter* to produce 1.5-in. lightning balls that floated for 30 sec.

The energy surplus

Many physicists, including the eminent Dr. James Tuck, founder of the U.S. fusion program, believe that the lightning ball holds the key to a fantastic, cheap and endless energy source—fusion power, or the energy source used by the stars and sun. The fuel is deuterium, or heavy water, that can be inexpensively extracted from ocean water to provide mankind

Highest voltage continuously oscillating damped-wave lightning generator (ever produced by mankind) creates a current of 1100A at 12.5 MV! Subsequent improvements raised this to a peak current of 2200A at 20 MV. Further improvements could conceivably produce bolts that exceed natural lightning (100 MV)!

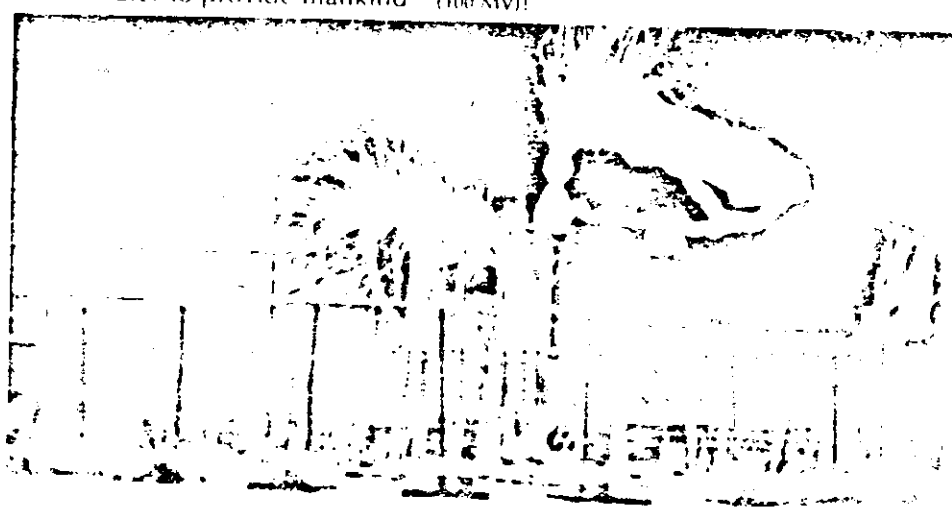

100-2237-29

DISCLOSURE

109

with millions of years of [illegible]. Unfortunately, progress in fusion research, which has centered on magnetic confinement and laser implosions, has been frustratingly slow and full of unpleasant surprises; and scientists warn that success could be as far off as four decades! But if these promising experiments under way at Wendover, UT, are successful, a new unexpected confinement technique could unleash this energy source.

In search of nature's secrets...

Ball lightning, a glowing sphere of red, orange or yellow plasma, often materializes during lightning storms and floats about, often against a strong wind. The ball may bounce along the floor and, on occasion, the sphere will "slip" through glass without breaking it. (The author recently investigated one such case in a hospital, in which the lights were damaged.) At times it materializes inside or even outside aircraft in flight, seemingly impervious to deformation from the wind force.

Witnesses of ball lightning have included such notables as Niels Bohr and Victor Weisskopf, the Director of the MIT Physics Department. Another witness was Secretary of State Dean Acheson, who reported seeing it cross the breakfast table aboard the presidential plane.

The accidental formation of ball lightning has been observed about once per year for the past decade inside building 985 at Hill AF Missile Radiographic Facility, UT. The volleyball-size fireballs drop out of the space adjacent to the high voltage supply of the 25 Mev linear accelerator.

The ball of blue fire floats down to the floor, rolls around randomly and then rises again to the power-supply area where it dissipates without detectable damage. Despite troubleshooting, no explanation can be found for this occurrence.

On one occasion, lightning struck the building—a large concrete structure with a 60-ft. ceiling inside—and, simultaneously, an intense sphere of fire the size of a tennis ball formed above the conduit on the wall at [illegible]ly shoulder level. It moved along the wall for a distance of some 30 ft., floated out and around the neck and shoulders of a person standing near the wall, moved back to the wall and continued along for several feet until it intercepted a duplex outlet on the conduit. At this the ball exploded, causing electrical damage throughout.

A new state of matter?

No presently known laws of physics can account for the stability and bouncing of fireballs unless it includes surface tension. This hitherto unobserved state of matter is a new concept, since plasmas have never previously exhibited such strong surface tension. Also, presently known laws cannot account for the propulsion.

Project Tesla has developed a rigorous mathematical model of the lightning ball's absolute, asymptotic, fluid-dynamical stability. Initial computer studies indicated a density range of 10^{15}-10^{17} cm^{-3}, with a temperature of 10^{5}-10^{6} °K—or seven times hotter than the sun! □

Chapter 34

TESLA TRIES TO PREVENT WORLD WAR II

When Tesla was talking as a scientist he was opposed to wars on moral, economic and all practical and theoretical grounds. But, like most scientists, when he stopped thinking as a scientist, and let his emotions rule his thoughts, he found exceptions in which he felt some wars and situations were justifiable. As a scientist he was unwilling to have the discoveries of scientists applied to the pruposes of war makers, but when the emotional phase of his nature took the ruling position he was then willing to apply his genius to devising measures that would prevent wars by supplying protective devices.

This attitude is exemplified in the following statement which he prepared in the twenties but did not publish:

"At present many of the ablest minds are trying to devise expedients for preventing a repetition of the awful conflict which is only theoretically ended and the duration and main issues of which I correctly predicted in an article printed in the Sun of December 20, 1914. The League is not a remedy but, on the contrary, in the opinion of a number of competent men, may bring about results just the opposite. It is particularly regrettable that a punitive policy was adopted in framing the terms of peace because a few years hence it will be possible for nations to fight without armies, ships or guns, by weapons far more terrible, to the destructive action and range of which there is virtually no limit. Any city at any distance whatsoever from the enemy can be destroyed by him and no power on earth can stop him from doing so. If we want to avert an impending calamity and a state of things which may transorm this globe into an inferno, we should push the development of flying machines and wireless transmission of energy without an instant's delay and with all the power and resources of the nation."

Tesla saw preventative possibilities in his new invention which embodied "death ray" characteristics and which was made several years after the foregoing statement was written. He saw it providing a curtain of protection which any country, no matter how small, could use as a protection against invasion. While he might offer it as a defensive weapon, however, there would be nothing to stop military men from using it as a weapon of offense.

While I did not know the nature of Tesla's plan I was convinced that it did embody many discoveries that would be of commercial value, and these were the angles he should seek to develop. I felt that if he could be induced to develop some minor phase of his work that would have immediate commercial use he could derive an income from it which would enable him to proceed with his more elaborate plans. To this end I sought to gain some insight into his thoughts, that would enable me to get a practical plan in operation. This was no secret to Tesla and he successfully parried every thrust I made.

The clearest conception I got, and that was largely from scattered remarks, and by making deductions from them, concerned a possible manner in which one phase of his curtain of protection might operate. This was a "war" angle and as such it did not interest

100-2237-01

me, but since it involved "lightning balls," or "fire balls," I was very curious. Fi[illegible]lls had always fascina[illegible]o, and I had read everything I could lay my hands on about them.

A fire ball is a strange phenomenon associated with lightning. Some of the energy of the lightning stroke appears to become locked into a ball shaped structure which may be of any size from a couple of inches to a foot in diameter. It looks like a perfect sphere, brightly incandescent and floats like a bubble, being easily carried by air currents. They may last for a short time, from a fraction of a second to many seconds. In this interval, during which they stay fairly close to the ground, they may come close to many objects without damaging them or being damaged by them. Suddenly, for no known reason, the ball explodes doing as much damage as a bomb, if close to structures, and no damage if in the open.

The fire ball looked to me like a gigantically enlarged model of the tiny electron, one of the building blocks of matter, which acts as if it were just a spherical area of space in which an amount of energy was crystallized to give it structure. I felt that if it were possible to discover how a large amount of energy was stored in this fairy bubble structure of a fire ball a new insight might be gained into the structure of the electron and other fundamental particles of matter. Also this method of storing energy could be applied to a thousand useful purposes.

When I approached Tesla with pleas along this line to develop this possible phase of his discovery he would evade direct reply by indulging in a, not always, tolerant lecture on my gullability in believing theories about the complex structure of the atom. While he had in earlier years discussed some of his experiences with fire balls in his laboratory at Colorado Springs and explained his theory of their formation, he would not in the later years permit himself to be drawn into a discussion of them as a possible part of his system. This, of course, made me suspicious that the clue was "hot" but I could be completely wrong in my conclusions. Tesla was very quick in detecting my technique when I sought to narrow down a field by trying to get him to deny statements when he was adamant to direct questions.

Tesla became familiar with the destructive characteristics of fire balls in his experiments at Colorado Springs in 1899. He produced them quite by accident and saw them, more than once, explode and shatter his tall mast and also destroy apparatus within his laboratory. The destructive action accompanying the disintegration of a fire ball, he declared, takes place with inconceivabel violence.

He studied the process by which they were produced, not because he wanted to produce them but in order to eliminate the conditions in which they were created. It is not pleasant, he related, to have a fire ball explode in your vicinity for they will destroy anything they come in contact with.

It will be necessary to reconstruct his statements from very fragmentary notes and a long distance memory.

"Parasite oscillations, or circuits, within the main circuit were a source of danger from this cause. Points of resistance in the main circuit could result in minor oscillating circuits between terminals or between two points of resistance and these minor circuits would have a very much higher period of oscillation than the main circuit and could be set into oscillation by the main current of lower frequency.

"Even when the principal oscillating circuit was adjusted for the greatest efficiency of operation by the dimination of all sources of losses the fire balls continued to occur but these were due to stray high frequency charges from random earth currents.

"From these experiences it became apparent that the fire balls resulted from the interaction of two frequencies, a stray higher frequency wave imposed on the lower frequency free oscillation of the main circuit.

"As the free oscillation of the circuit builds up from the zero point to the quarter wave length node it passes through various rates of change. In a current of shorter wavelength the rates of change will be steeper. When the two currents react on each other the resultant complex will contain a wave in which there is an extremely steep rate of change, and for the briefest instant currents may move at a tremendous rate, at the rate of millions of horsepower.

"This condition acts as a trigger which may cause the total energy of the powerful longer wave to be discharged in an infinitesmally small interval of time and at a proportionately tremendously great rate of energy movement which cannot confine itself to the metal circuit and is released into surrounding space with inconceivable violence."

It is but a step, from learning how a high frequency current can explosively discharge a lower frequency current, to using the principle to design a system in which these explosions can be produced by intent. The following process appears a possible one but no evidence is available that it is the one Tesla evolved: An oscillator, such as he used to send power wirelessly around the earth at Colorado Springs, is set in operation at a frequency to which a given warship is resonant. The complex structure of a ship would provide a great number of spots in which electrical oscillations will be set up of a much higher frequency than those coursing through the ship as a whole. These parasite currents will react on the main current causing the production of fireballs which by their explosions will destroy the ship, even more effectively than the explosion of the magazine which would also take place. A second oscillator may be used to transmit the shorter wavelength current.

Somewhat later I learned the reason for Tesla's reticence to discuss details. This came shortly after Stanley Baldwin replaced Neville Chamberlin as Prime Minister of Great Britain.

Tesla revealed that he had carried on negotiations with Prime Minister Chamberlin for the sale of his ray system to Great Britain for $30,000,000 on the basis of his presentation that the device would provide complete protection for the British Isles against any enemy approaching by sea or air, and would provide an

offensive weapon to which there was no defense. He was convinced, he declared, of the sincerity of Mr. Chamberlain and his intent to adopt the device as it would have prevented the outbreak of the then threatening war, and would have made possible the continuation- under the duress which this weapon would make possible - of the working agreement involving France, Germany and Britain to maintain the status quo in Europe. When Chamberlin failed, at the Munich conference, to retain this state of European equilibrium it was necessary to get rid of Chamberlin and install a new Prime Minister who could make the effort to shift one corner of the triangle from Germany to Russia. Baldwin found no virtue in Tesla's plan and preemptorially ended the negotiations.

Tesla was greatly disappointed by the collapse of his negotiations with the British Government. With it there collapsed his hopes of providing a demonstration of his most recent, and, what he considered, his most important discoveries. He did not, however, dwell on the jubject; beyond the single conversation he did not mention the matter again. He did not get another chance to finance the demonstration of these discoveries.

During the period in which the negotiations were being carried on, Tesla declared, efforts had been made to steal the invention. His room had been entered and his papers examined but the thieves, or spies, left empty handed. There was no danger, he said, that his invention could be stolen for he had at no time committed any part of it to paper. He could trust his memory to preserve every fine detail of his investigations. This was true, he said, of all of his later major discoveries.

The nature of his system makes little difference now; he has gone and has taken it with him. Perhaps, if there is any communication from beyond the veil that separates this life from whatever exists hereafter, Tesla may look down upon earth's struggling mortals and find some way of dropping a hint concerning what he accomplished; but, if the situation is such that this cannot take place, then we must await until the human race produces another Tesla.

ooo

ALL INFORMATION CONTAINED
HEREIN IS UNCLASSIFIED
DATE 7-3-80 BY SP4 Jam/rtc

April 30, 1976

[redacted]

EX-115

REC-47

100-2237-29

[redacted]

(b)(7)(c)

Dear [redacted]:

Thank you for your letter of April 20th, with enclosures. It was certainly most thoughtful of you to furnish us this information, and your interest and courtesy are indeed appreciated.

MAILED 6
APR 30 1976
FBI

Sincerely yours,

C. M. Kelley

Clarence M. Kelley
Director

NOTE: Bufiles indicate limited correspondence with [redacted], last outgoing 6-27-73, in reply to his request concerning papers of Dr. Nikola Tesla. Dr. Tesla was a world-famous electrical inventor, and at the time of his death in 1943, all of his personal papers and effects were believed dangerous to the country's security if they fell into unauthorized hands. The book, "Prodigal Genius," by John J. O'Neill, alleged that the FBI took over a certain safe and opened it, appropriating his property. Bufiles indicated the Office of Alien Property of the Department of Justice did so. Bufile 100-2237-23.

Assoc. Dir. ___
Dep. AD Adm. ___
Dep. AD Inv. ___
Asst. Dir.:
Admin. ___
Comp. Syst. ___
Ext. Affairs ___
Files & Com. ___
Gen. Inv. ___
Ident. ___
Inspe[redacted]
Intel[redacted]
[redacted]
Legal C[redacted]
Plan. & Eval. ___
Spec. Inv. ___
Training ___
Telephone Rm. ___
Director [redacted]

[redacted] (3)

(b)(7)(c)

[redacted]

MAIL ROOM ☐ TELETYPE UNIT ☐

~~58 MAY 21 1976~~
31 JUN 21 1976

GPO : 1975 O - 594-120

115

Assoc. Dir. ___
Dep. AD Adm. ___
Dep. AD Inv. ___
Asst. Dir.:
Adm. Serv. ___
Ext. Affairs ___
Fin. & Pers. ___
Gen. Inv. ___
Ident. ___
Inspection ___
Intell. ___
Laboratory ___
Legal Coun. ___
Plan. & Eval. ___
Rec. Mgnt. ___
Spec. Inv. ___
Training ___
Telephone Rm. ___
Director Sec'y ___
FBI/DOJ

JUN 16

United States Senate

To ensure proper handling please return all correspondence TO THE ATTENTION OF:

[redacted]

Respectfully referred to:

FBI

Please respond to the attached inquiry in duplicate and return the enclosure. Thank you for your cooperation.

(b)(7)(C)

[redacted] U.S.S.

EXP PROC

REC-34 100-2237

JUN 17 1976

[redacted]

ENCLOSURE

116

Case

[redacted]

(b)(7)(c)

New Senate Office Bldg
Room 5241, Washington DC 2510

Dear Sir.

I am a substitute in the Milwaukee Public School System. I do scientific experiments in high voltage electricity. I have studied all the available writings of the dead genius Nikola Tesla (1861 - January 7, 1943)

When Nicola Tesla died the Federal Bureau of Investigation came and opened the ~~[illegible]~~ safe in his room and took the papers it contained, to examine ~~[illegible]~~ them

117

ENCLOSURE

for a reported secret invention of
possible use in II W.W..

As a citizen & a
Scientist I would like to
study these unpublished papers
with hope of findings new
ideas for producing an alternate
source of energy. Something
that Nikola Tesla knew about
and because of his unfortunate
financial status, was not able
to develop into a working model
Please help. -

With love in The Lo

[redacted]

(b)(7)(c)

[redacted]

REC-34

100-2237-30

June 23, 1976

Honorable [redacted]
United States Senate
Washington, D. C. 20510

ALL INFORMATION CONTAINED HEREIN IS UNCLASSIFIED DATE 2-3-80 BY SP4 Jrm/rtc (b) (7) (c)

Dear Senator [redacted]:

This will respond to your communication of June 16th enclosing the letter of [redacted]

The effects of Dr. Nikola Tesla were impounded, after his death, by the Office of Alien Property of the Department of Justice and not by the FBI. Since we did not participate in the handling of Dr. Tesla's belongings, I am unable to furnish the information you desire.

A copy of your communication and of this reply are being referred to the Department of Justice and the enclosure to your communication is being returned as requested.

Sincerely yours,

C. M. Kelley

Clarence M. Kelley
Director

Enclosure
1 - Assistant Attorney General - Enclosures (2)
Civil Division
1 - Milwaukee - Enclosures (2)
1 - Office of Congressional Affairs - Enclosures (2)
NOTE: This response is consistent with past responses to inquiries of a similar nature. Bufile 100-2237 reflects that the Office of Alien Property took possession of Dr. Tesla's papers following his death.

[redacted] (7)

Assoc. Dir. ___
Dep. AD Adm. ___
Dep. AD Inv. ___
Asst. Dir.:
Adm. Serv. ___
Ext. Affairs ___
Fin. & Pers. ___
Gen. Inv. ___
Ident. ___
Inspection ___
Intell. ___
Laboratory ___
Legal Coun. ___
Plan. & Eval. ___
Rec. Mgnt. ___
Spec. Inv. ___
Training ___
Telephone Rm. ___
Director Sec'y ___

MAILED 10
JUN 23 1976
FBI

(b) (7) (c)

[redacted]

56 JUL 14 1976

MAIL ROOM ☐ TELETYPE UNIT ☐

[redacted]

119

FBI/DOJ

July 26, 1979

Dear Mr. Webster:

ALL INFORMATION CONTAINED HEREIN IS UNCLASSIFIED DATE 7-14-81 BY [illegible]

OUTSIDE SOURCE

I am writing this letter in regard to some papers you have in your possession by Nikola Tesla.

I have for some time now been studying the works of Mr. Tesla and I am involved in the research and further developement of his efforts. I have in my possession a copy of almost everything that was ever written by him.

However I have read that on the day following his death (he died the night of January 7th, 1943, so probably January 8th, 1943) the Federal Bureau of Investigation went to where Mr. Tesla had been staying - the Hotel New Yorker, New York City, New York and collected all notes and papers that he had with him there.

REC 79 100-22237-[illegible]

2 AUG 7 1979

To further my studies and hopefully complete them it would be deeply appreciated if you would send me a copy of all the notes, papers, books, drawings etc. that were found there.

ack 8-4-79

[redacted]

(b) Thank you,

(7)

(c)

[redacted]

120

UNITED STATES GOVERNMENT — UNITED STATES DEPARTMENT OF JUSTICE
FEDERAL BUREAU OF INVESTIGATION

Memorandum

Assoc. Dir. ___
Dep. AD Adm. ___
Dep. AD Inv. ___
Asst. Dir.:
Adm. Servs. ___
Crim. Inv. ___
Ident. ___
Intell. ___
Laboratory ___
Legal Coun. ___
Plan. & Insp. ___
Rec. Mgmt. ___
Tech. Servs. ___
Training ___
Public Affs. Off. ___
Telephone Rm. ___
Director's Sec'y ___

TO : Mr. Bresson

DATE: 2/25/80

FROM : [redacted] (b)(7)(c)

SUBJECT: FREEDOM OF INFORMATION ACT DISCLOSURE REGARDING DR. NIKOLA TESLA

ALL INFORMATION CONTAINED HEREIN IS UNCLASSIFIED DATE 7-3-80 BY SP4 Jrm/r

PURPOSE:

To reduce time spent on handling of requests for information on captioned subject and to promote uniformity of disclosure.

DETAILS:

A search of FBIHQ central records indices reflects that Dr. Nikola Tesla is carried as the subject of Bufile 100-2237. Virtually all information in this file is inquiry-type correspondence. For purposes of FOIA releases, copies of this material have not been made and requesters have been so advised. Copies of the remaining material in the file totalling 29 pages, however, has been processed for disclosure. Numerous requesters have sought information relating to Dr. Tesla under the FOIA. Therefore, it is recommended that the disclosure documents maintained in Bufile 190-16504-4 be considered the preprocessed release appropriate for responses by the Initial Processing Unit for any further requests for information on this subject.

RECOMMENDATION:

That the Initial Processing Unit, FOIPA Branch, Records Management Division, add captioned case to their list of preprocessed cases and handle any future requests for such information. 100-2237-

1 - [redacted]
1 - [redacted]

XEROX

MAR 27 1980

100-2237 190
190-16504 1980

(b)(7)(c)

[redacted]

[redacted] (7)

121

Buy U.S. Savings Bonds Regularly on the Payroll Savings Plan

August 6, 1979

OUTSIDE SOURCE

[redacted] (b)(1)(c)

ALL INFORMATION CONTAINED HEREIN IS UNCLASSIFIED DATE 2-3-80 BY SP4 Jenkins

Dear [redacted]:

Your recent letter requesting information concerning Dr. Nikola Tesla has been received.

The effects of Dr. Tesla were impounded, after his death, by the Office of Alien Property of the Department of Justice and not by the FBI. We have no preprinted material available for public distribution regarding Dr. Tesla. However, under the provisions of the Freedom of Information Act (Title 5, United States Code, Section 552), requests have been made in the past regarding your topic and there may be documents available to you under Title 28--Code of Federal Regulations.

If you are interested in seeking such documents under the Freedom of Information Act, you should make a separate inquiry, clearly marking the envelope and letter as a Freedom of Information Act request, and direct it to the Director, Federal Bureau of Investigation, 9th Street and Pennsylvania Avenue, N.W., Washington, D. C. 20535. In the letter you must request documents regarding the specific topic of interest to you.

REC-79
EX-137
100-2237-32

Sincerely yours,

DE-79

William L. Bailey
Assistant Director

MAILED 11
AUG 6 1979
FBI

2 AUG 7 1979

Assoc. Dir. 1
Dep. AD Adm.
Dep. AD Inv.
Asst. Dir.:
Adm. Servs.
Crim. Inv.
Ident.
Intell.
Laboratory
Legal Coun.
Plan. & Insp.
Rec. Mgnt.
Tech. Servs.
Training
Public Affs. Off.
Telephone Rm.

[redacted] - Enclosure
Room 6958
(This correspondence response may engender a future FOIA inquiry.)

NOTE: Based upon available information, correspondent is not identifiable in Bufiles.

[redacted]lch (4)

(b)(7)(c)

122

[redacted]

FBI/DC

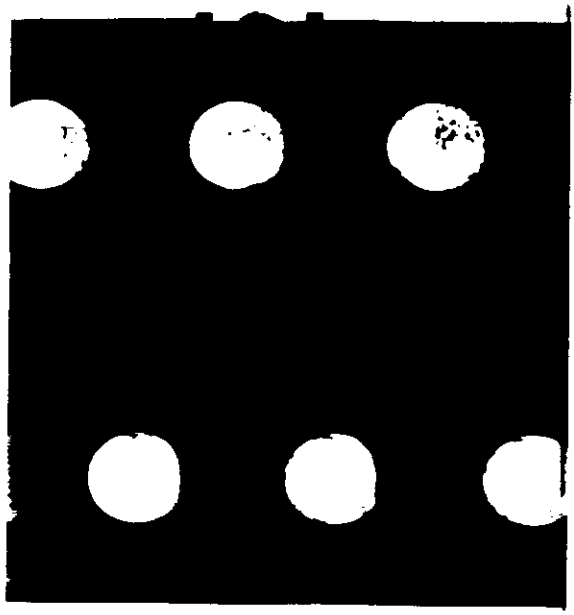

(Rev. 10/10/79)

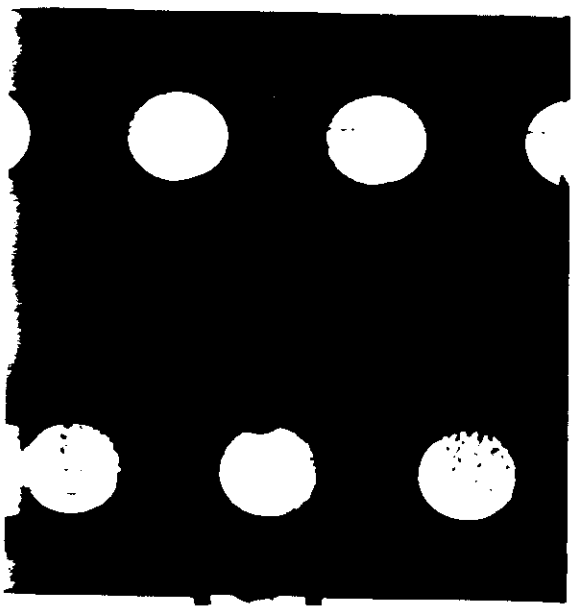

DEPARTMENT OF JUSTICE
FEDERAL BUREAU OF INVESTIGATION
INTERNAL ROUTING/ACTION SLIP

TO	BLDG.	ROOM	NAME/TITLE/ORGANIZATION	
	JEH	7142	Mr. Colwell	235
	JEH	7110	Mr. Boynton	235
	JEH	7110	Mr. Moore	235
	JEH	5829	Mr. Bailey/Rogers	211
	JEH	5829	Mr. O'Brien/Lass	211
	JEH	6296	Mr. Flanders/Woleslagle	314
			OPERATIONS SECTION	
	JEH	6992	Mr. Ervin/Poston	314
	JEH	6993	Mr. Tierney/Poston	314
	JEH	6280	CHIEF, TAR/Secretary	314
			SA:	
			Attn:	
	JEH	6587	CHIEF, FIELD COOR.	314
			SA:	
			Attn:	
	JEH	6958	CHIEF, IPU/Secretary	314
			SA:	
			Attn:	
	JEH	6363	File Duplication	314
	JEH	6268	Tickler/Index Group	314
	JEH	6992	Leave Clerk	314
	JEH	6348	Word Processing Center	314
	JEH	6380	DCRU	314
			Attn:	

BLDG	ROOM	NAME/TITLE/ORGANIZATION	
		DISCLOSURE SECTION	
JEH	6995	Mr. Bresson/Nemmensen	314
JEH	6994	Mr. Lewis/Nemmensen	314
JEH	6927	CHIEF, UNIT A/Secretary	314
		SA: Team	
		RA: Team	
JEH	6959	CHIEF, [redacted]	314
		SA: Team	
		RA: Team	
JEH	6975	CHIEF, UNIT C/Secretary	314
		SA: Team	
		RA: Team	
JEH	6986	CHIEF, UNIT D	314
		SA: Team	
		RA: Team	
JEH	6786	CHIEF, UNIT E	314
		SA: Team	
		RA: Team	
JEH	6387	CHIEF, UNIT F/Secretary	314
		SA: Team	
		RA: Team	

(2)

ALL INFORMATION CONTAINED HEREIN IS UNCLASSIFIED DATE 2-14-82 BY [illegible]

I would prefer IPU being alerted that any request for Tesla file be referred directly to [redacted] whereupon she would see that appropriate release is made

☐ RECOMMENDATION/COMMENT
☐ SEE REMARKS ON REVERSE
☐ MAKE COPIES (NO.)
☐ RETURN (BY)
☐ LOG
☐ FILE
☐ SEE ME
☐ CALL ME
☐ NECESSARY ACTION
☐ COORDINATE
☐ PER INQUIRY
☐ INFORMATION

FROM Freedom of Information-Privacy Acts Branch

THOMAS H. BRESSON SECTION CHIEF

BLDG. | ROOM

PHONE | DATE

[redacted]

FORM DOJ-359A
8-1-74

(b)
(7)
(C)

123

CONFIDENTIAL

OFFICE OF THE UNDER SECRETARY OF DEFENSE

WASHINGTON, D.C. 20301

RESEARCH AND ENGINEERING

FEDERAL GOVERNMENT

9 FEB 1981

B11

MEMORANDUM FOR THE DIRECTOR, FEDERAL BUREAU OF INVESTIGATION

SUBJECT: Papers Recovered on the Death of Nicola Tesla (U)

(U) We understand that the FBI may have possession of a number of papers found after the death of Nicola Tesla in 1943. Nicola Tesla was a brilliant electrical engineer (i.e. the Tesla Coil) who was a pioneer in various aspects of electrical transmission phenomena.

(C) We believe that certain of Tesla's papers may contain basic principles which would be of considerable value to certain ongoing research within the DoD. It would be very helpful to have access to his papers.

(U) Since we have really no idea of the possible volume of these papers, we would be happy to provide a researcher who could assist you in reducing the magnitude of the search. If there are further questions, I am the point of contact within the DoD and can be reached at 695-6364 or 695-7417.

Allan J. MacLaren

Allan J. MacLaren
LtColonel, USAF
Military Assistant
Strategic and Space Systems

REGISTERED
1059638

FBI
ALL INFORMATION CONTAINED
HEREIN IS UNCLASSIFIED
DATE 4-8-93 BY 9803 [redacted] b7C
FOIPA No. 356,608
362,001

100-2237-33

Per DOD letter dated 3-29-93
with Enclosures 1 and 2
All DOD info is unclassified
DOD referenced FOI/PA #'s 356,608 and
362,001
4/8/93 9803 [redacted] b7C

ALL INFORMATION CONTAINED
HEREIN IS UNCLASSIFIED
DATE 7-14-93 BY SP1DSK/MK

2 MAR 12 1981

b7C

Classifed by: DUSDRE/S&SS
Declassify on: February 1987

DECLASSIFIED BY 1048 [redacted]
ON 1-27-93
Per Army letter 5-25-89
291860

CORRESPONDENCE

50 MAR 30 1981

CONFIDENTIAL

124

March 10, 1981

Lt. Col. Allan J. MacLaren, USAF
Military Assistant
Strategic and Space Systems
Office of the Under Secretary
of Defense
Washington, D. C. 20301

FEDERAL GOVERNMENT

ALL INFORMATION CONTAINED
HEREIN IS UNCLASSIFIED
DATE 7-14-92 BY SP1 ASK/MKE

Dear Colonel MacLaren:

Your memorandum of February 9 requesting access to the scientific papers of Dr. Nikola Tesla which might be in our files has been referred to my office for reply.

A preliminary review of our files indicates that the FBI did not participate in the handling of Dr. Tesla's belongings following his death in New York City in January, 1943. His papers were examined by representatives of the Office of Alien Property, the Navy Department and the Office of Scientific Research and Development. In February, 1943, the papers apparently were released to Mr. Sava N. Kosanovic, Dr. Tesla's nephew and the administrator of his estate. Mr. Kosanovic's address at that time was 11 Central Park South, New York, New York.

A complete search of our indices is being made to determine if we have any information that might be useful to you. You will be notified of the results of this search at the earliest possible date.

DE-110/100-2237-34

MAILED 3
MAR 10 1981
FBI

Sincerely,

MAR 12 1981

Roger S. Young
Assistant Director in Charge
Office of Congressional
and Public Affairs

1 - [redacted] (FOIPA) - Enc.
1 - Mr. Young - Enc.
1 - [redacted] - Enc.

(b)(7)(c)

NOTE: Reply discussed with [redacted] FOIPA, RMD, who has handled similar requests for information in our files concerning Dr. Tesla. In numerous previous responses we have said that the Office of Alien Property the Department of Justice impounded Dr. Tesla's papers after his death. However, the Office of Foreign Litigation, Civil Division, indicated that Dr. Tesla's papers are not in their possession.

Exec AD Inv. ___
Exec AD Adm. ___
Exec AD LES ___
Asst. Dir.:
Adm. Servs. ___
Crim. Inv. ___
Ident. ___
Intell. ___
Laboratory ___
Legal Coun. ___
Plan. & Insp. ___
Rec. Mgnt. ___
Tech. Servs. ___
Training ___
Public Affs. Off. ___
Telephone Rm. ___
Director's Sec'y ___

[redacted] (c)

60 MAR 30 1981

139

(b)
(7)
(c)

MAIL ROOM ☑

125

March 20, 1961

Lt. Col. A. J. MacLaren
Military Assistant
Strategic and Space Systems
Office of the Under Secretary
of Defense
Washington, D. C. 20301

FEDERAL GOVERNMENT

ALL INFORMATION CONTAINED
HEREIN IS UNCLASSIFIED
DATE 7-14-92 BY [illegible]

Dear Colonel MacLaren:

A complete search of our retrievable files concerning Dr. Nikola Tesla shows that all notes and material in his immediate possession at the time of his death on January 7, 1943, were placed in the custody of the Alien Property Custodian under seal by the United States Government. These materials have never been in the care or custody of the FBI.

On January 26 and 27, 1943, Federal authorities made a thorough review of the effects of Dr. Tesla to determine if any ideas of significant value to the United States war effort could be found. His effects were examined at the Manhattan Warehouse and Storage Company at 52nd and 7th Avenue, New York, New York, where they apparently were taken after his death. Participating in this examination were representatives from the New York and Washington Offices of the Alien Property Custodian, the Office of Scientific Research and Development at the Massachusetts Institute of Technology, the Office of Naval Intelligence, and United States Naval Research. The FBI did not participate in this examination. (65-47953 section 1)

It was the considered opinion of a spokesman of those examiners "that there exist among Dr. Tesla's papers and possessions no scientific notes, descriptions of hitherto unrevealed methods or devices, or actual apparatus which could be of significant value to this country or which would constitute a hazard in unfriendly hands." There was thought to be no technical or military reason why further custody of the property should be retained. However, our files indicate that certain papers, which were regarded as typical of Nikola Tesla's writings and thoughts in the period of 1925 to 1942, were removed for the purpose of record to the Office of the Alien Property Custodian. (65-47953 section 1)

MAILED 6
MAR 23 1961
FBI

Exec AD Inv. ___
Exec AD Adm. ___
Exec AD LES ___
Asst. Dir.:
Adm. Servs. ___
Crim. Inv. ___
Ident. ___
Intell. ___
Laboratory ___
Legal Coun. ___
Plan. & Insp. ___
Rec. Mgnt. ___
Tech. Servs. ___
Training ___
Public Affs. Off. ___
Telephone Rm. ___
Director's Sec'y ___

1 - Mr. Young
1 - [redacted]
1 - [redacted]

MAIL ROOM [redacted]

V-38 DE-113 100-2237-25 MAR 25 1961

BE

(SEE NOTE PAGE THREE)

[redacted]

126

. Col. A. J. MacLaran

A memo dated October 17, 1945, from our New York Office said that at that time Dr. Tesla's effects remained at the Manhattan Storage Warehouse in some 75 packing boxes and trunks under seal by the New York Department of Taxation. The rental for this storage, approximately $15 per month, was being paid by Charlotte Muzar, 134 East 63rd Street, New York, New York, who was listed as an agent for Sava Kosanovich, Dr. Tesla's nephew and administrator of his estate. (65-47953-14)

On October 26, 1945, [redacted] a young scientist who had been Tesla's protege, called in person at our New York Field Office. With him were [redacted] and [redacted] from a research development unit at Wright Field, Dayton, Ohio. These men carried a letter signed by [redacted] requesting that the FBI allow the bearers of the letter access to the effects of Nikola Tesla. (65-47953-15)

It was explained to [redacted] that the FBI had no jurisdiction over Tesla's effects, and they were referred to the Office of the Alien Property Custodian. Bureau files do not indicate whether the men ever examined Tesla's belongings. (65-47953-15)

The Tesla effects remained in rooms 5J and 5L of the Manhattan Storage Company. In the 1950s, FBI Agents were told by company management that the only recorded visit had been made by "Federal authorities" in January, 1943. [redacted] recalled that the men had taken numerous photographs. His description of the equipment used would tend to show that a microfilm reproduction was made of the papers of the deceased. (65-47953-27)

Our files do not reflect any pertinent information on the Tesla materials since that date. Their current whereabouts or condition are not reflected in our files.

For further information regarding this matter, you may wish to contact the Office of the Alien Property Custodian and the other Federal agencies mentioned above.

I hope that we have been of assistance to you.

Sincerely,

Roger S. Young
Assistant Director in Charge
Office of Congressional
and Public Affairs

(CONTINUED - OVER)

127

Lt. Col. A. J. MacLaran

NOTE: On February 9, 1981, Col. MacLaran wrote to us inquiring about the scientific papers of Dr. Nikola Tesla. In a return letter of March 9, we informed him that a thorough review of our files would be made in search of the information he requested. This was done and he is being informed of the results. Tesla's papers have been the subject of numerous inquiries by various individuals and organizations since his death. FBI received over 20 FOIA requests on this matter during the period 1973-1980. Matter coordinated with FOIA Section, RMD.

OFFICE OF THE UNDER SECRETARY OF DEFENSE

WASHINGTON, D.C. 20301

RESEARCH AND
ENGINEERING

1 APR 1981

FEDERAL GOVERNMENT

Mr. Roger S. Young
Assistant Director in Charge
Office of Congressional and Public Affairs
Federal Bureau of Investigation
Washington, D.C. 20535

both letters addressed to Lt Col. A.J MacLaren

Dear Mr. Young,

Thank you very much for your letters of March 10 and March 20, 1981, in response to our request re Dr. Tesla. We very much appreciate the effort that must have gone into this. On behalf of the Deputy Under Secretary (Strategic and Space Systems), Dr. S. L. Zeiberg, I would like to thank you and the people who spent their time searching out the relevant data.

Sincerely,

ALL INFORMATION CONTAINED
HEREIN IS UNCLASSIFIED
DATE [illegible] BY [illegible]

Allan J. MacLaren

Allan J. MacLaren
Colonel, USAF
Military Assistant
Strategic and Space Systems

DE-110 100-2237-36

16 APR 10 1981

Per DoD letter dated 3/29/93
With Enclosures 1 and 2
ALL DoD info is unclassified.
DoD referenced FOI/PA #s 356,608 and 362,001
4/8/93 9803 [redacted] b7C

V-11

No acknowledgement necessary

10 French

Vines

FBI
ALL INFORMATION CONTAINED
HEREIN IS UNCLASSIFIED
DATE 4-8-93 BY 9803 [redacted] ICE
FOIPA No. 356,608
362,001

b7C

Off. of Cong. and Pub. Aff.

129

21 July 1981 [redacted] (b)(7)(C)

Director of the FBI
Washington, D.C.

[redacted]

Dear Sir:

While attending college, I came across an article about the electrical genius, Nicolai Tesla. Mr. Tesla was an electrical genius with such peers as EDISON and WESTINGHOUSE. Tesla designed the basic generator and was the first man to introduce alternating current to the people. The article, written in an underground SanFrancisco newspaper, stated that Tesla also worked with electromagnetic waves and supposedly built a plant that could harness the electromagnetic waves out of the earth's atmosphere sufficiently enough to use them as a source of electricity. The article stated that Tesla built such a plant and lit up a city street 150 miles away by sending the electromagnetism via radio waves. This method is presently being used in electronic warfare. After that, the article stated that the FBI confiscated his plans and buried them in your archives. Their reasoning was that such a free form of energy would knock out a big chunk of the oil, coal, and nuclear forms of energy and their contributions to the economy(money for research and employment). All I want to know is if there is any truth to this story and if so what was the FBI's reasons and when are the archives opened again so that Tesla's work could come to light again. Now bear in mind that this man was an electrical genius and even had a unit of electrical measure named after him. If he did figure out a way to utilize the earth's electromagnetic waves then I believe that we are ready to gradually phase out our dependence on oil, ease the volatile tension in the Middle East and put all that money presently going to the Arabs into

[redacted]

100-2237-37

17 AUG 11 1981

(b)(7)(C)

130

space research, joint international research and deep-sea research to help solve our population problem. I am talking about huge sums of money being released that could speed up the experts present projected times of producing significant gains in these still relatively new fields.

You could at least take the time to check out what I am saying and judge for yourself whether or not the archives should be opened now to put the world back on a more secure heading.

Sincerely,

[redacted]

(b)(7)(C)

[redacted]

August 7, 1981

ALL INFORMATION CONTAINED
HEREIN IS UNCLASSIFIED
DATE 7-14-82 BY [illegible]

OUTSIDE SOURCE

[redacted] (b)(7)(c)

Dear [redacted]:

Judge Webster has referred your letter of July 21st to me for a reply. A check of our files indicates Dr. Nikola Tesla's effects were impounded after his death by the Office of Alien Property of the Department of Justice and not by the FBI. While your interest is indeed appreciated, the FBI is unable to answer your questions as we did not participate in the handling or have anything to do with the storage of Dr. Tesla's belongings.

To be as helpful as possible, I am forwarding a copy of this communication to the Department of Justice.

Sincerely,

S

Roger S. Young
Assistant Director in Charge
Office of Congressional
and Public Affairs

MAILED 9
AUG 10 1981
FBI

1 - Acting Assistant Attorney General [illegible]closure
Civil Division

NOTE: [redacted] is not identifiable in Bufiles. Dr. Tesla died on 1/7/43 and we have received much correspondence regarding his belongings which were impounded by the Office of Alien Property of the Department of Justice.

[redacted] (4)

100-2237-38

Exec AD Inv. ___
Exec AD Adm. ___
Exec AD LES ___
Asst. Dir.:
Adm. Servs. ___
Crim. Inv. ___
Ident. ___
Intell. ___
Laboratory ___
Legal Coun. ___
Plan. & Insp. ___
Rec. Mgmt. ___
Tech. Servs. ___
Training ___
Public Affs. Off. ___
Telephone Rm. ___
Director's Sec'y ___

MAIL ROOM ☑

(b)(7)(c)

132

FD-36 (Rev. 8-26-82)

FBI

TRANSMIT VIA:
☐ Teletype
☐ Facsimile
☒ AIRTEL

PRECEDENCE:
☐ Immediate
☐ Priority
☐ Routine

CLASSIFICATION:
☐ TOP SECRET
☐ SECRET
☐ CONFIDENTIAL
☐ UNCLAS E F T O
☐ UNCLAS

SECRET

Date 8/18/83

TO: DIRECTOR, FBI
ATTN: INTD, SUPERVISOR [redacted]

SECRET

FROM: SAC, CINCINNATI [redacted] (P)

NIKOLA TESLA
[redacted]
(OO: CI)

This communication is classified "Secret" in its entirety.

Re telephone call of SA [redacted], Cincinnati Division, to Supervisor [redacted] FBIHQ, on 8/11/83.

Enclosed for the Bureau and New York is one copy each of pertinent pages from the 1981 book titled "Tesla: Man Out of Time" by Margaret Cheney, with important passages underlined.

For information of Bureau and New York, [redacted] at Wright-Patterson Air Force Base (WPAFB) and [redacted] also at WPAFB, have both been in contact with SA [redacted] at the Dayton, Ohio RA regarding possible FBI

SECRET

Classified by: 8262
Declassify on: OADR

Classified by [redacted]
Declassify on: OADR

ENCLOSURE

2 - Bureau (Enc. 1)
2 - New York (Enc. 1)
2 - Cincinnati
[redacted]
(6)

ALL INFORMATION CONTAINED HEREIN IS UNCLASSIFIED EXCEPT WHERE SHOWN OTHERWISE

17 AUG 22 1983

Approved: [redacted] Transmitted _____ (Number) _____ (Time) Per [redacted]

53 NOV [illegible] 1983

133

1994 Tesla Symposium at Colorado Springs

TESLA'S EGG OF COLUMBUS, RADAR STEALTH, THE TORSION TENSOR, AND THE "PHILADELPHIA EXPERIMENT"

by

K.L. Corum*, J.F. Corum, Ph.D.**
and
J.F.X. Daum, Ph.D.***

"Can we learn to think in 4-dimensions? This, and *negative time*, involve dreaming of the wildest sort, with no support whatsoever as yet from anything we see or record on our delicate instruments."

Vannevar Bush,
March 2, 1967****

---

* Corum & Associates, Inc., P.O. Box 761, Campton, NH, 03323

** Battelle, 505 King Ave., Columbus, Ohio, 43201-2693

***340 Leighton Ct., Westerville, OH 43081

****Bush, V., Science Is Not Enough, Morrow and Co., 1967, pg. 168.

"Gentlemen,... we are facing a crises such as the world has never seen before [WWI], and until the situation clears, the best thing we can do is to devise some scheme for overcoming the submarines, and that is what I am doing now. (Applause)"

Minutes of the 7th AIEE Edison Medal
Presentation to Nikola Tesla, May 18, 1917

ABSTRACT

In this paper we follow the thread leading from Tesla's spinning "Egg of Columbus" demonstration, through his proposal of a large rectangular helix disposed about the hull of a ship for U-boat detection, to Arnold Sommerfeld's discussion of magnetically biased ferrites creating electromagnetic stealth for WW-II submarines. By calculation, the required magnetic field to reduce a ship's radar reflection to less than 1%, at L-Band (1.5) GHz, is in excess of 15,000 A/m. Fields this order of magnitude would appear to fulfill the requirements of a "Philadelphia Experiment". Such intense fields would create green mist and cavities in salt water, and magnetophosphenes and Purkinje patterns in humans, particularly if driven at frequencies in the range of 10 - 125 Hz, as was available from the synchronous generators on WW-II electric drive ships. We conclude that with the knowledge available, the DSRB (under Vannevar Bush) would have been derelict not to have conducted such an experiment.

Finally, we present speculation on temporal bifurcations. Assuming Hehl's hypothesis that localized Cartan Torsion tensors are generated by ferromagnetic spin, we propose two physical experiments which distinguish temporal anisotropy arising from anholonomity (the Sagnac effect) from that arising in the torsion of the 1929 version of the unified field (Eddington's "crinkled manifold").

Disclaimer

This paper stands unique among our publications both on Tesla and on the conventional aspects of electromagnetism and relativity. In this regard it is partly speculative. (And, only partially at that, since we report on some of our experimental findings that can be verified by independent laboratory examination). Before wading too deep into a controversial subject like that before us, it is common for respectable folk to acknowledge their limitations. We need to make some kind of professional "disclaimer". Let us express it this way: we offer this little study in the spirit of an engineer and some physicists having some fun [in the sense of Arthur Eddington,[1][2] Joseph Slepian,[3]* Jearl Walker,[4]** Edwin Abbot,[5] George Gamow,[6] or even Arthur C. Clark], looking at published statements, attempting to stay within the bounds of engineering technical propriety, and saying, "What if ...?" Since the theoretical analyses make specific physical predictions, it follows that our assertions can be experimentally examined by disinterested (but technically qualified) third parties, and that we haven't strayed too far from the scientific method in our amusing pastime. Taken in that spirit, our passing entertainment should also provide recreational diversion for skeptics, grad students, the lunatic fringe, engineers, and men of honor.

---

*Slepian wrote a delightful series of "Electrical Essays" for engineers. Start with the one cited and read either forward or backward several years.

**Walker wrote about physics problems, "I am not so interested in how many you can answer as I am in getting you to worry over them."

PART I - RADAR AND ROTATING FIELDS

Introduction

During the 1992 International Tesla Symposium, the authors took the opportunity to once again visit the site of Tesla's Colorado Springs laboratory and nearby Prospect Lake, where many of Tesla's experiments were conducted in 1899. While walking around the Monument in War Memorial Park our conversation turned to the book by William Moore and Charles Berlitz on the Philadelphia Experiment. A colleague at Battelle had introduced us to the story in fall of 1989. One of the presentations at the last ITS Symposium concerned the topic, and as we walked we began to ponder out loud how we might rationally explain such an experiment. The following is the result of our reveries.

The world of magnetics, today is extremely complex. During the 1940's and 50's high field magnetics became "big physics", and it would be impossible for the authors in this small space to even attempt a modern analysis of this topic. Instead, we believe that there is some merit to *employing the sort of physical arguments, both classical and relativistic, that would have been available by scientists of the decade preceding* the Philadelphia Experiment. This is not a discussion of anything even remotely like the Navy's new "Sea Shadow".[7]

It has been asserted that the initial Philadelphia Experiment took place "sometime between July 20 and August 20, 1943."[8] Simply put: in the experiment(s) a big coil of wire was wrapped around a large ship, the ship became invisible in a foggy green mist, and a lot of people on board were hurt. (Some thought they went through a rip in the fabric of the space-time continuum, were teleported from the Philadelphia shipyards to Norfolk, Virginia, and saw alien humanoids). The respected names identified with with the experiment include Albert Einstein (1879-1955),* Rudolph Ladenburg (1882-1952), John Von Neumann (1903-1957) [and his Gottingen dissertation advisor, David Hilbert (1862-1943)], Nikola Tesla (1856-January 7, 1943), Oswald Veblin (1880-1960), Burtrand Russell (1872-1970), Gabriel Kron (1901-1968), Vannevar Bush (1890-1974) and a host of other recognized men of renown whose common interest seems to include, among other things, an historical association with things of interest to the Navy, and submarine detection in particular. The Department of the Navy has officially identified the experiment as mythical, having its genesis in a 1955 book on UFO's,[9] not Naval science.[10] Perhaps the story really was mythological. However, if

---

*Einstein served as a consultant for the R&D Division of the US Navy Bureau of Ordnance from May 31,1943-June 30,1946. Interestingly, according to the FBI Einstein file [QC 16 ESU55; OCLC #13720407; Title #3892869], Einstein was in Philadelphia during the time of the alleged Philadelphia Experiment. (On the evening of August 10, 1943 he spoke before the Philadelphia section of the "Friends of Soviet Russia".)

that's the case, then our hats are off to the brilliant scientists that spun this gossamer web of fantasy - for no ordinary laymen could have done it.

Why Tesla?

It is now common knowledge that Tesla had attempted to market his radio controlled craft (the "telautomaton"; Patent* 613,809) to the US Navy.**[11][12] Tesla was the first to advocate the electric drive for naval vessels.[13] He was the first to suggest that electric drive war ships could be used in peacetime to supply shore power during emergencies.[14] (They were, of course. See the comments below). And, as is evident from Tesla's quote at the top of this article, he was again dealing with the Navy during World War I. It was during this time that he met in Washington with Assistant Secretary of the Navy Franklin Delano Roosevelt. Roosevelt's mentor, Josephus Daniels, was Secretary of the Navy.*** (It was also during this time that university professor and future Director of OSRD (Office of Scientific Research and Development), Vannevar Bush, was just starting research on submarine detection for the Navy.) From Tesla's files, we know that a few years later, during the 1920's, the Navy in Philadelphia (specifically John B. Flowers, Electrical Engineer), was examining Tesla's work. Anderson has noted that, "Tesla was engaged... at the E.G. Budd Mfg. Co. in Philadelphia from 1925-1926."[15] And, we also know that when Tesla died in 1943, Naval Intelligence officers accompanied MIT EE Professor John G. Trump (a Bush colleague also in the employ of OSRD) as he secretly examined Tesla's papers.

We think that not only can the Philadelphia Experiment be tracked to statements which Tesla published during World War I, and were grasped by men like Bush, but that the physics of the experiment can actually be traced back to Tesla's invention of the rotating magnetic field. Furthermore, to us to there appears be a legitimate link between Tesla's rotating fields and the Torsion tensor which appears in Einstein's 1927-29 Unified Field Theory publications. This connection was first identified and published by Gabriel Kron at GE (Schenectady) during the 1930's. Return with us

---

*For which Tesla has been identified as the Father of robotics.

**In 1916 Tesla said, "I vainly attempted to persuade them to accept. I perfected the machine in 1898, and tried everything in my power to have it adopted... After the patent expired a few months ago Congress appropriated [$750,000] and I have now the pleasure of simply looking on while others are using my inventions, which I could not persuade people to adopt. This is usually so." [Anderson, 1992, pg. 19.] "I tried to persuade the Navy... it was absolutely impossible to find listeners..." [Anderson, 1992, pg. 158.]

***Both Daniels and FDR advocated absolute legal control of the electromagnetic spectrum by the Navy.

now to 1887 and Tesla's first rotating field patent (#381,968; Applied for October 12,1887; Issued May 1,1888).

Polyphase Currents and Rotating Fields

The creation of the rotating magnetic field was "purely the work of scientific imagination". It has been identified as the greatest creation of the human mind since the invention of the wheel. Tesla's discovery of polyphase currents and "an invisible wheel made of nothing but a magnetic field" (the phrase is due to Reginald Kapp)[16] was the turning point from the past into the 20th century. Tesla stands at the focal point of the important electrical discoveries of the 20th century. At the conferral of the AIEE's highest award of honor, B.A. Behrend remarked,

> "Were we to seize and to eliminate from our industrial world the results of Mr. Tesla's work, the wheels of industry would cease to turn, our electric cars and trains would stop, our towns would be dark, our mills would be dead and idle."[17]

When Tesla died in 1943, Yale University EE professor Charles F. Scott observed,

> "The evolution of electric power from the discovery of Faraday in 1831 to the initial great installation of the Tesla polyphase system in 1896 is 'undoubtedly the most tremendous event in all engineering history'."[18]

And, the connection to the relativity of rotation (an issue still not put to rest today) was not overlooked: Yale physicist Leigh Page once said,

> "The rotating armatures of every generator and every motor in this age of electricity are steadily proclaiming the truth of the relativity theory to all who have ears to hear."[19]

Let us follow this central thread that runs through Tesla's professional career back to its origin.

While Tesla had constructed the first rotating field apparatus in the summer of 1883 (one year before both he, and the Statue of Liberty, arrived from France), it was not until 1887 that a company was formed to exploit the phenomenon. However, Tesla was unable to raise capital to commercially introduce his invention. (The enterprise was 'undercapitalized'.) He finally found a skeptical Wall Street lawyer that was somewhat interested, and this is the conversation as Tesla retells it.

> Tesla: "Do you know the story of the Egg of Columbus? ...Well, what if I could make an egg stand on the pointed end without cracking the shell?"* "If you could do this

---

*As Columbus had done when getting Queen Isabella to pawn her jewels for three ships to sail in.

> we would admit that you had gone Columbus one better." "And would you be willing to go out of your way as much as Isabella?" "We have no crown jewels to pawn," said the lawyer, who was a wit, "but there are a few ducats in our buckskins and we might help you to an extent."[20]

Tesla arranged for a demonstration the next day. He placed a copper-plated egg on a wooden plate above his rotating magnetic field (there is a photograph of the apparatus in the Secor article). As soon as the windings were energized the egg began to spin. [Tesla's spinning egg is, in fact, a macroscopic analog of the Einstein-de Haas effect investigated almost thirty years later. The materials in Einstein's WWI experiments spin because of molecular 'amperian currents' (although later Einstein did suggest using high frequency '*rotating magnetic fields*' to Barnett). In Tesla's experiments they spin because of induced eddy currents. See part V below.]

> "... to their astonishment, it stood on end, but when they found that it was *rapidly spinning* their stupefaction was complete*... No sooner had they regained their composure than Tesla was delighted with their question: '*Do you want any money?*'... That started the ball rolling. Tens of millions of horsepower of Tesla induction motors are now in use all over the world and their production is rising like a flood... Rotating fields of 15,000 horsepower are now being turned out... and ship propulsion by Tesla's electric drive which, according to Secretary of the Navy Daniels' statement, has proved a great success."[21]

The electrical circuit which Tesla employed for the egg of Columbus used two phase AC energizing the coils in quadrature and the source frequency was varied from 25 to 300 cycles, "*the best results being obtained with currents from 35 to 40 cycles.*"** The story was also mentioned in Fleming's eulogy of Tesla.[22]

In 1893, 6 years after demonstrating the egg of Columbus to the attorneys and business investors in New York, a large egg demonstration was constructed for Tesla by Albert Schmid and Charles H. Scott, at the time both of Westinghouse. (Scott, subsequently an EE professor at Yale, served as President of both the AIEE and, later, the IRE.) The egg occupied part of the Westinghouse exhibit in the Electricity Building at the great Chicago World's Fair. The 1893 Fair celebrated the 500th anniversary of Columbus' discovery of the new world and, ostensibly, it was intended to launch

---

*The language used to describe the striking effect his 1892 lecture-demonstration had on the Royal Institution in London, was, "The scientists simply did not know where they were when they saw it." (Anderson, 1992, pg. 95)

**Note that Tesla has recognized that he can characterize different spinning eggs with certain gyromagnetic resonance frequencies!! This was in 1887.

society into the 20th century. There is a photograph of Tesla's exhibit in the Martin book.[23] This was only a few months before Lord Kelvin was to choose the Tesla polyphase system for Niagara Falls, and 3 years before the first Niagara Falls plant was turned on.

While Tesla had been active in RF generation in the early 1890's, the close of the decade saw him making great strides in the realm of high voltage RF power processing. These experiments culminated in a cluster of patent applications and the construction of the Wardenclyffe laboratory. Mention should also be made of his turbine development and intense engineering consulting practice just prior to WWI. From the comments above it is clear that he was actively promoting his patented ideas.

Tesla's Reflections on Radar and Ships Wrapped in Coils of Wire

Just after receiving the AIEE's Edison medal (May 18, 1917), Nikola Tesla granted an interview to H.W. Secor of the Electrical Experimenter magazine. (Secor's article was published in August of 1917.) The topic of discussion turned to the detection of German U-boats (U-boat = Unterseeboot = submarine), which had caused so much distress to the allies. The US had entered the war in April of 1917. Tesla's concerns centered around the detection of submarines, in particular the possibility of non-ferrous hull detection. Listen as, filtered by the pen of a journalist, Tesla narrates the electrical preparation of the ship:

> "Now, suppose that we erect on a vessel, a large rectangular helix or an inductance coil of insulated wire. Actual experiments in my laboratory at Houston Street (New York City), have proven that the presence of a local iron mass, such as the ship's hull, would not interfere with the actions of this device. To this coil of wire, measuring perhaps 400 feet in length by 70 feet in width (the length and breadth of the ship*) we connect a source of extremely high frequency and very powerful oscillating current."[24]

We think that Vannevar Bush was aware of this suggestion, and it is our thesis that these words are the seed that later blossomed as the "Philadelphia Experiment". The article then goes on to describe an RF technique which subsequently became quite popular (though not on such a grand scale) for metal detectors and for tuning the reactance of RF coils in transmitters and receivers. Upon further prodding by Secor, Tesla discussed a high peak power *microwave radar* for operation at wavelengths "... of but a few millimeters". (X-Band radar at 10 GHz has a wavelength of 30 mm.)

Tesla desired that the ship be able to provide sufficient electrical power, and he states this in

---

*According to Jane's Fighting Ships (1967-68, pg. 408), the Eldridge (DE-173) was 306 feet long by 37 feet at the beam, and had a draft of 14 feet. Its main engines were GM diesels, electric drive, 2 shafts, 4.5 Mw.

the interview:

> "The average ship has available from say 10,000 to 15,000 HP. ... The electric energy would be taken from the ship's plant for a fraction of a minute only, being absorbed at a tremendous rate **by suitable condensers** and other apparatus, from which it could be liberated at any rate desired."

Clearly, Tesla was contemplating the use of pulsed currents* in the coils around the ship. Remarkably, vessels wrapped in coils were observed during WW-II (perhaps for mine sweeping or even degaussing studies). [According to Moore, Francis Bitter, of MIT, recalled witnessing "a relatively large ship carrying ... a bar magnet going from the bow ... way aft. This bar magnet had coils wound around it which passed current produced by big motor generators."[25]] By the way, the Eldridge's generator was rated at 4,600 kVA and could deliver 6,000 HP. Two generators, as described in the book, could deliver more than 12,000 HP (almost 9 Mw).

It is not clear that Mr. Secor even fathomed what Dr. Tesla was speaking about. How much of what was published in the article were Tesla's ideas and what was added (or deleted) by Secor is not transparent. (We have the same problem with O'Neill's colorful biography.) After Tesla's brief discussion of sonar, Secor mixes together the RF magnetic detection process and the "electric ray" radar technique. While Secor's version of Tesla's disclosures might sound, today, like oversimplified impractical popularizations, Secor was quick to conclude his 1917 article with the disclaimer, "... several important electrical war schemes will shortly be laid before the War and Navy Departments by Dr. Tesla, the details of which we naturally cannot now publish."[26] Margaret Cheney has observed that, at the time, Thomas Edison

> "... had been named to direct the new Naval Consulting Board in Washington, *with the primary job of finding a way of spotting U-boats*. Tesla's idea, if even brought to Edison's attention, would almost certainly have been discounted."[27]

---

*"I will tell you the secret of all these wonderful displays. ... Consider a large gun which hurls a projectile of a ton a distance of 18 or 20 miles. If you figure the horsepower at which the gun delivers energy, you will find that it amounts to from 6 to 12 or 15 million horsepower. ... With the methods which I have devised, with my transformer, it is not at all difficult to get rates of energy many times that. ... in the plant on Long Island, if I wanted to operate, I could have just reached a rate of 1 billion horsepower. ... That wonderful thing can be accomplished through a condenser. The condenser is the most wonderful electrical instrument ... You store less energy in the condenser than in the gun, but whereas a gun will discharge ... in 1/50 of a second, a condenser can discharge the energy in 1 millionth of this time. ... all these effects which elicited great wonderment of the profession, were always produced by damped waves, because with the undamped waves it would not have been possible to attain any such activities." [Tesla on His Work With Alternating Currents, by L.I. Anderson, 1992, pp. 112-113.]

It should also be noted that Vannevar Bush was involved in the same endeavor:

> "During 1917-18 [Bush] was engaged in research on submarine detection in connection with the United States Navy special board on submarine devices."[28]

In 1917, Bush, fresh out of graduate school,* was a newly appointed assistant professor of electrical engineering at Tufts College in Medford, Massachusetts and consulting for the American Radio and Research Corporation. [AMRAD was a J.P. Morgan venture, built on the Tufts campus, which manufactured "thousands of transmitters and receivers" during WWI.[29]] Bush was one of the guiding lights for a spin-off company which, in 1925, was renamed Raytheon.** (In 1941 Raytheon became the prime source for the new Navy Search Radar.[30]) Bush joined the MIT EE Department faculty (his specialty, initially, was electrical power and subsequently operational calculus and analog computers (the famous network analyzer)) and became Dean, and then Vice-President of MIT in 1931.*** He accepted the position of President of the Carnegie Institution of Washington in 1938 (and held the position until 1955). He was Science Advisor to the President and was appointed by Roosevelt as chairman of the National Defense Research Committee (July, 1940),**** as director of OSRD - the Office of Scientific Research and Development (1941), and as Chairman of the Joint Committee on New Weapons and Equipment of the Joint United States Chiefs of Staff (1942).[31]

---

*Bush received a BS and an MS from Tufts College (1913), Doctor of Engineering jointly from MIT and Harvard (1916), and eventually 10 honorary doctorates from various colleges and universities. During his remarkable career, he was science advisor to several Presidents. He was Vice-President and Dean of Engineering at MIT in 1931, the year that he wrote to Tesla.

**Raytheon, in fact, (with 25% of the EE department involved) came to be known by the grad students at MIT in the late 1920's as "an extension of the Electrical Engineering Department." (See Reference 29.)

***Ever the entrepreneur, when Bush heard A.F. Joffe of the Polytechnic Institute of Leningrad present his ideas on a new super-dielectric for HV insulation, he rallied his investor friends and went to Leningrad and Moscow. (As described in his autobiography, Pieces of the Action (Morrow, 1970), the enterprise resulted in failure.)

****Recall that John G. Trump, accompanied by three Naval personnel, examined Tesla's personal papers when he died in January of 1943. Trump was Secretary of the Microwave Committee of the National Defense Research Committee from 1942 until 1944 when, as a member of General C.A. Spaatz's Advisory Special Group on Radar, he went to Europe as the Director of the British Branch of the (MIT) Radiation Laboratory. (See Electrical Engineering, Vol. 80, No. 5, May, 1961, pp. 364-365.) [General Spaatz, by the way, was Air Force Chief of Staff and headed the "very secret" committee on UFOs. According to Irving Langmuir, (Physics Today, October, 1989, pg. 48) Spaatz had confided, "You know it's very serious. It really looks as though there is something there." (Also see Physics Today, March 1990, pg. 13 and April, 1990, pg. 13.]

Vannevar Bush guided much of the Nation's weapons research during WWII. According to Frank B. Jewett* (President of the National Academy of Sciences), as head of OSRD Bush

> "... directed the mobilization of the entire civilian scientific and technical power of the nation and welded it together into the military establishment in the greatest industrial research and development man has ever known."[32]

Recall that Vannevar Bush, while Vice President of MIT, had sent Tesla birthday greetings in 1931:

> "Dear Dr. Tesla ... I wish to join to my own tribute of admiration for your unique career the congratulations of the Massachusetts Institute of Technology, where the contribution which your original genius has made for the benefit of mankind is fully appreciated."[33]

In 1943, Bush, like Tesla in 1917, received the AIEE's highest honor (at that time the Edison Award). Bush held about 50 US patents for various inventions. Let us move ahead from Tesla's suggestion, to place coils of wire on a ship, to radar and radar counter-measures (stealth).

Radar

It seems to be broadly recognized that, although Heinrich Hertz had observed RF standing waves resulting from metallic reflections, it was Nikola Tesla, in 1900, who was the first to propose the concept of radar.[34] According to NRL radar pioneer R.M. Page, it was Tesla who first "... suggested the use of electromagnetic waves to determine the relative position, speed, and course of a moving object."[35] The earliest patent issuing for radar appears to have been the British patent granted to German engineer Christian Hulsmeyer.[36] Certainly, Tesla's interview with H.W. Secor appears as an added note in the radar lore.[37] The acronym *radar* was an official code word adopted by the US Navy in November of 1940, the same month that the MIT Radiation Laboratory was organized for the exploitation of the microwave region for radar.

Sommerfeld on Electromagnetic Stealth During WW-II

In his authoritative two volume radar cross section handbook, George Ruck has pointed out the desirable features of radar absorbers.

> "The search for suitable radar absorbing materials (RAM) was initiated in the early 1940's both in the United states and Germany. Ideally, the optimum RAM would be a paint-like material effective at all polarizations over a broad range of frequencies and angles of incidence.

---

*Edison Medalist in 1928. (Eleven years after Tesla.)

Unfortunately, such a material does not exist and the probability of its being developed is rather remote."[38]

Arnold Sommerfeld (1868-1951) presents a surprising discussion of German war research on stealth and radar absorbing materials in the optics volume of his famous Lectures on Theoretical Physics.[39] He relates that the case where the magnetic permeabilities between two media (air and target) are unequal ($\mu_1 \neq \mu_2$) is "of some historical interest".

> "***During the war*** **the problem arose to find, as a counter measure** ***against allied radar***, a largely nonreflecting ("black") surface layer of small thickness. This layer was to be particularly non-reflecting for perpendicular or almost perpendicular incidence of the radar wave. In this case the angle of incidence and the angle of transmission are both almost equal to zero. The problem is solved by making *the ratio of the two wave impedances* equal to unity:
>
> $$m_{12} = \frac{E_1/H_1}{E_2/H_2} = 1 \qquad (1)$$
>
> The criterion is, thus, not the index of refraction but the ratio of wave impedances."

Sommerfeld's suggestion is similar to the idea of making the radar target surface a "conjugate match" to eliminate radar reflections. If one could make the impedance of the second medium be the same as free-space, the target would become radar invisible. He continues:

> "In order to *'camouflage' an object against radar waves*, one must cover it with a layer for which this ratio of wave resistances has the value 1 *in the region of centimeter waves*. According to [the law of refraction and the boundary conditions] this means that if we call the constants of the desired material ε and μ and those of air ε_o and μ_o, then
>
> $$\frac{\epsilon}{\epsilon_o} = \frac{\mu}{\mu_o} \qquad (2)$$
>
> Hence, the problem concerns not only the dielectric constant but also the relationship between the dielectric constant and the permeability. A substance must be formed whose relative permeability $\mu_r = \mu/\mu_o$ is of the same magnitude as its relative dielectric constant $\varepsilon/\varepsilon_o$.

This case is discussed by Ridenour in Volume 1 of the famous MIT Rad Lab series,[40] and in a well known analytical reference by Weston.[41] Sommerfeld continues,

> But the problem is not yet solved. For at its back surface the layer borders on the object (metal) which is to be camouflaged, and this second surface still reflects strongly. Hence, the further condition must be imposed that *the layer should absorb sufficiently strongly*. This requires a complex rather than a real dielectric constant *and* because of the requirement (Eq. 2) *a corresponding complex permeability*. **The material** ***must, therefore, be ferromagnetic*** and must possess a strong hysteresis or a

> structural relaxation that acts correspondingly. Thus, a difficult technological problem was posed which, though not unsolvable, *required extensive preparatory work.*
>
> *Because of the urgent war situation*, the solution which *had* to be used resulted from the following considerations ..."

Sommerfeld then changes the course of his ideas. He proceeds to describe the reduction in radar reflection by a rather conventional means that does not build upon the requirement of Equation (2). Instead, what he discusses next is covering the surface with layers of lossy *dielectric* material, each strata being less than ¼ wavelength thick, neglecting entirely any effects attributable to μ. ("In this manner the reflected intensity could be reduced to 1% of the value given by Fresnel's formula ..."[42]) After the war, a number of papers were published by Sommerfeld's colleagues at Gottingen and Munich, in Zeitschrift fur Angewandte Physik, on the topic of radar absorption. (Just scan the magazine's annual index for 1956-1959.) Presumably, after the war the German workers were less constrained in publishing their research on the topic of RAM than Allied scientists.* Even at this late date most significant western RAM publications are classified, particularly those related to the stealth bomber technology.

In his 1947 MIT Rad Lab Volume, Ridenour comments that,

> "Absorbent materials have been produced in Germany for the radar camouflage of U-boats. The type of absorber that was actually put into service was of the interface kind. The dielectric constant and permeability were produced by a high concentration of spheroidal metal particles (carbonyl iron). The concentration of metal was 80% by weight, and values of dielectric constant and permeability were $\varepsilon = 7$, and $\mu = 3.5$.
>
> An absorber of the second kind was also developed in Germany. It consisted of a series of layers whose conductivity regularly increased with depth. The layers were separated by foam-type plastic whose dielectric constant was close to 1. The absorption was excellent from 4 to 13 cm [2.3-7.5 GHz]. However, the complete absorber was a rigid structure 2.5 inches thick, and it was never actually used."[43]

Is there any connection between the remarks of Sommerfeld and the supposed German version of the "Philadelphia Experiment", which has been rumored to have occurred at the Kiel Shipyards in Germany during World war II? Surprisingly, after hinting at ferromagnetic materials, Sommerfeld did not tell us how to produce magnetic radar camouflage. We will try our hand at supplying the missing details below. But first, we review conventional linear RAM.

Ferromagnetic Radar Absorbing Material

The more-or-less conventional approach to radar stealth is to either employ "shaping" of the

---

*The American scientist of German origin, quoted by Dr. Rinehart in the Moore-Berlitz book (pp. 202-203) was clearly mistaken in his assessment of German military spirit.

THE No.1 MAGAZINE FOR ELECTRONICS TECHNOLOGY & COMPUTER PROJECTS

EVERYDAY PRACTICAL ELECTRONICS

Vol.32 No.2

CAN $6.99/US $4.95

TESLA TRANSFORMER

Creates sizzling DIY lightning

BRAINIBOT

PC based robotic buggy

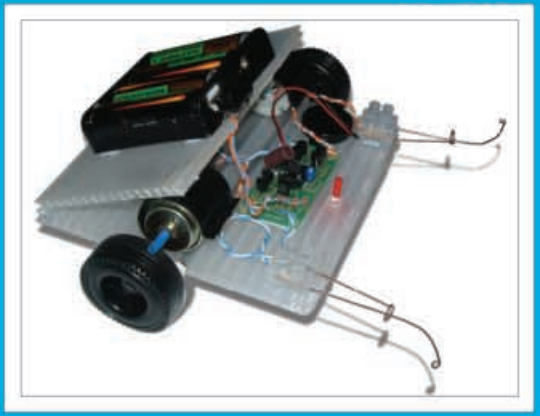

WIND TUNNEL

Investigate the effects of airflow

NEW SERIES

BACK TO BASICS - Introduction plus two projects

NOW AVAILABLE TO BUY ON THE WEB
EPE Online
www.epemag.com

02
0 56698 56801 8
Printed in the UK

http://www.epemag.wimborne.co.uk

Copyright © 2003, Wimborne Publishing Ltd
(408 Wimborne Road East, Ferndown, Dorset, BH22 9ND, UK)

and TechBites Interactive Inc.,
(PO Box 857, Madison, Alabama 35758, USA)

All rights reserved.

WARNING!

The materials and works contained within *EPE Online* — which are made available by Wimborne Publishing Ltd and Maxfield & Montrose Interactive Inc — are copyrighted. You are permitted to make a backup copy of the downloaded file and one (1) hard copy of such materials and works for your personal use. International copyright laws, however, prohibit any further copying or reproduction of such materials and works, or any republication of any kind.

Maxfield & Montrose Interactive Inc and Wimborne Publishing Ltd have used their best efforts in preparing these materials and works. However, Maxfield & Montrose Interactive Inc and Wimborne Publishing Ltd make no warranties of any kind, expressed or implied, with regard to the documentation or data contained herein, and specifically disclaim, without limitation, any implied warranties of merchantability and fitness for a particular purpose.

Because of possible variances in the quality and condition of materials and workmanship used by readers, *EPE Online*, its publishers and agents disclaim any responsibility for the safe and proper functioning of reader-constructed projects based on or from information published in these materials and works. In no event shall Maxfield & Montrose Interactive Inc or Wimborne Publishing Ltd be responsible or liable for any loss of profit or any other commercial damages, including but not limited to special, incidental, consequential, or any other damages in connection with or arising out of furnishing, performance, or use of these materials and works.

ISSN 0262 3617
PROJECTS . . . THEORY . . . NEWS . . .
COMMENTS . . . POPULAR FEATURES . . .

VOL. 32. No. 2 FEBRUARY 2003
Cover illustration by Raymond Haigh

EVERYDAY PRACTICAL ELECTRONICS
INCORPORATING ELECTRONICS TODAY INTERNATIONAL

www.epemag.wimborne.co.uk
EPE Online: www.epemag.com

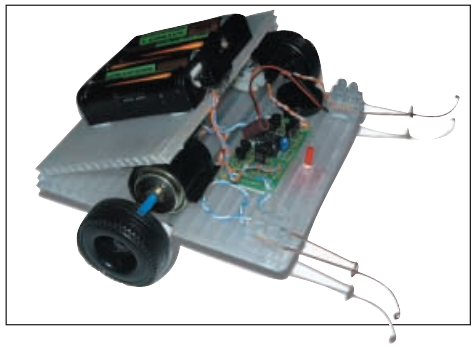

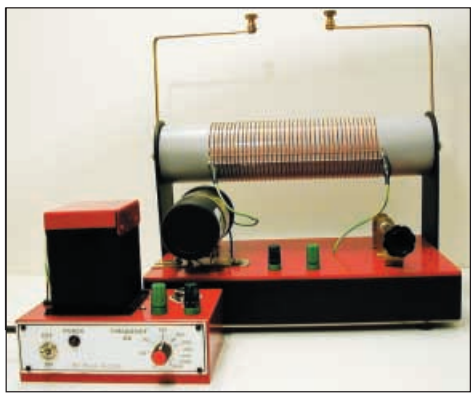

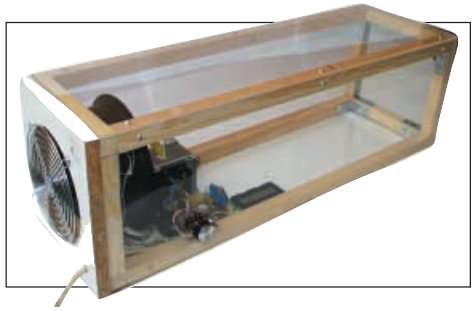

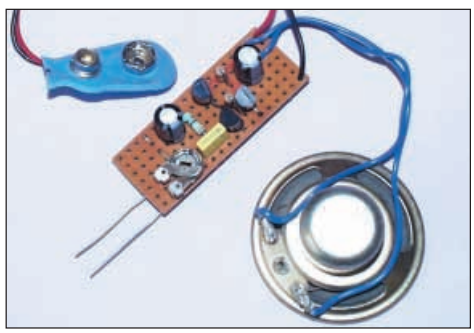

© Wimborne Publishing Ltd 2003. Copyright in all drawings, photographs and articles published in EVERYDAY PRACTICAL ELECTRONICS is fully protected, and reproduction or imitations in whole or in part are expressly forbidden.

Projects and Circuits

BRAINIBOT BUGGY by Mark Stuart and Peter Balch **92**
A low-cost, easy-build buggy that has a mind of its own!

WIND TUNNEL by John Becker **105**
Scientifically investigate Nature's second essential element

INGENUITY UNLIMITED hosted by Alan Winstanley **114**
Single-Cylinder Ignition; Reaction Timer

BACK TO BASICS – Part 1. Hearing Aid, Audio Power Amplifier **130**
by Bart Trepak. Illustrating how transistors can create useful designs

TESLA HIGH VOLTAGE TRANSFORMER by Raymond Haigh **143**
Spectacularly create your own sizzling DIY lightning!

Series and Features

NEW TECHNOLOGY UPDATE by Ian Poole **98**
Carbon nano-tubes are likely to have a serious impact on semiconductor technology

CIRCUIT SURGERY by Alan Winstanley and Ian Bell **102**
More on MOSFETs; Switching Speed of A.C. Motors

IN THE BAG by Terry de Vaux-Balbirnie **117**
Have you ever wondered how your car airbags work?

NET WORK – THE INTERNET PAGE surfed by Alan Winstanley **122**
The Last Keyword in Sales; Favourite Sites

TECHNO TALK by Andy Emmerson **136**
Hotspots to the Rescue

INTERFACE by Robert Penfold **138**
Direct control of PC serial lines using MSCOMM

Regulars and Services

EDITORIAL **91**

NEWS – Barry Fox highlights technology's leading edge **99**
Plus everyday news from the world of electronics

BACK ISSUES Did you miss these? Many now on CD-ROM! **123**

READOUT John Becker addresses general points arising **126**

SHOPTALK with David Barrington **129**
The *essential* guide to component buying for *EPE* projects

PLEASE TAKE NOTE PIC Intruder Alarm (Apr '02); PIC-pocket Battleships (Oct '02); BioPIC Heartbeat Monitor (May '02) **129**

CD-ROMS FOR ELECTRONICS **140**
A wide range of CD-ROMs for hobbyists, students and engineers

DIRECT BOOK SERVICE **152**
A wide range of technical books available by mail order, plus more CD-ROMs

PRINTED CIRCUIT BOARD AND SOFTWARE SERVICE **155**
PCBs for *EPE* projects. Plus *EPE* project software

ELECTRONICS MANUALS **156**
Essential reference works for hobbyists, students and service engineers

ADVERTISERS INDEX ***160***

Our March 2003 issue will be published on Thursday, 13 February 2003. See page 83 for details

Readers Services • Editorial and Advertisement Departments 91

Visit our website www.distel.co.uk

THE *ORIGINAL* SURPLUS WONDERLAND!

THIS MONTH'S SELECTION FROM OUR VAST EVER CHANGING STOCKS

Surplus always wanted for cash!

GIANT 10" 7-SEGMENT DISPLAYS

A bulk purchase enables us to bring to you these GIANT 7-segment digital displays at a **now affordable** price!! The **10" character size** gives exceptional readability at long distances and enables a host of applications including, score boards, **digital clocks, counters, event timers** etc. As the units are a simple electro-mechanical device and operate from 12V DC, simple switching via switches, relays, PIC or PC may be used to control single or multiple digits. Units feature integral 'Zero Power' memory which greatly simplifies desgn.

For an **excellent DIY practical article**, see the May issue of **'Everyday Practical Electronics' magazine**. **Ideal School / College construction project**. Supplied in good RFE condition, complete with data sheet.

Less than 30% of makers price **Only £29.95**(B) Order RW44 **or 4 / £99.00**(D) Order PH26

THE AMAZING TELEBOX

TV SOUND & VIDEO TUNER
*CABLE COMPATIBLE **

Converts your colour monitor into a QUALITY COLOUR TV!!

The **TELEBOX** is an attractive fully cased mains powered unit, containing all electronics ready to plug into a host of video monitors or AV equipment which are fitted with a composite video or SCART input. The composite video output will also plug directly into most video recorders, allowing reception of **TV channels not normally receivable on most television receivers*** (TELEBOX MB). Push button controls on the front panel allow reception of 8 fully tuneable 'off air' UHF colour television channels. **TELEBOX MB** covers virtually all television frequencies VHF and UHF **including the HYPERBAND as used by most cable TV operators.** Ideal for **desktop computer video systems** & PIP (picture in picture) setups. For complete compatibility – even for monitors without sound – an integral 4 watt audio amplifier and low level Hi Fi audio output are provided as standard. Brand new – fully guaranteed.

TELEBOX ST for composite video input type monitors **£36.95**
TELEBOX STL as ST but fitted with integral speaker **£39.50**
TELEBOX MB Multiband VHF/UHF/Cable/Hyperband tuner **£69.95**
For overseas PAL versions state 5.5 or 6 mHz sound specification.
*For cable / hyperband signal reception Telebox MB should be connected to a cable type service. Shipping on all Telebox's, code (B)

NEW **State of the art** PAL (UK spec) **UHF TV tuner module** with **composite** 1V pp video & **NICAM** hi fi stereo sound outputs. **Micro electronics** all on one small PCB only 73 x 160 x 52 mm enable full tuning control via a **simple 3 wire link** to an IBM pc type computer. Supplied complete with **simple working program** and documentation. Requires +12V & + 5V DC to operate.
BRAND NEW - Order as MY00. Only £39.95 code (B)
See www.distel.co.uk/data_my00.htm for picture + full details

HARD DISK DRIVES 2½" - 14"

2½" **TOSHIBA** MK1002MAV 1.1Gb laptop(12.5 mm H) ***New*** **£59.95**
2½" **TOSHIBA** MK4313MAT 4.3Gb laptop (8.2 mm H) ***New*** **£105.00**
2½" **TOSHIBA**MK6409MAV 6.1Gb laptop (12.7 mm H) ***New*** **£98.00**
2½" **TOSHIBA** MK1614GAV 18 Gb laptop (12 mm H) ***New*** **£149.95**
2½" to 3½" conversion kit for Pc's, complete with connectors **£15.95**
3½" **COMPAQ** 313706-B21 (IBM) 9 gb ULT/SCSI3 ***New*** **£199.00**
3½" **FUJI** FK-309-26 200mb MFM I/F RFE **£59.95**
3½" **CONNER** CP3024 20 mb IDE I/F (or equiv.) RFE **£59.95**
3½" **CONNER** CP3044 40 mb IDE I/F (or equiv.) RFE **£69.00**
3½" **QUANTUM 40S Prodri ve** 42mb SCSI I/F, New RFE **£49.00**
5¼" **MINISCRIBE** 3425 20mb MFM I/F (or equiv.) RFE **£49.95**
5¼" **SEAGATE** ST-238R 30 mb RLL I/F Refurb **£69.95**
5¼" **CDC** 94205-51 40mb HH MFM I/F RFE tested **£69.95**
5¼" **HP 97548** 850 Mb SCSI RFE tested **£99.00**
5¼" **HP C3010** 2 Gbyte SCSI ***differential*** RFE tested **£195.00**
8" **NEC D2246** 85 Mb SMD interface. ***New*** **£99.00**
8" **FUJITSU** M2322K 160Mb SMD I/F RFE tested **£195.00**
8" **FUJITSU** M2392K 2 Gb SMD I/F RFE tested **£345.00**
Many other floppy & H drives, IDE, SCSI. ESDI etc from stock, see website for full stock list. Shipping on all drives is code

IC's -TRANSISTORS - DIODES

OBSOLETE – SHORT SUPPLY – BULK
10,000,000 items EX STOCK
For *MAJOR SAVINGS*
CALL or see web site www.distel.co.uk

COMPUTER MONITOR SPECIALS

Legacy products
High spec genuine multysync.
CGA, EGA, VGA, SVGA

Mitsubishi FA3415ETKL 14" SVGA **Multisync** colour monitor with fine 0.28 dot pitch tube and resolution of 1024 x 768. A variety of inputs allows connection to a host of computers including **IBM PC's** in **CGA, EGA, VGA & SVGA** modes, **BBC, COMMODORE** (including Amiga 1200), **ARCHIMEDES** and **APPLE.** Many features: Etched faceplate, text switching and **LOW RADIATION MPR** specification. Fully guaranteed, in EXCELLENT little used condition. **Tilt & Swivel Base £4.75**

VGA cable for IBM PC included. **Only £129** (E) **Order as CG73**

External cables for other types of computers available - CALL

Generic LOW COST SVGA Monitors

We choose the make, which includes Compaq, Mitsubishi, IBM, etc. Supplied ready to run with all cables, Standard RTB 90 day guarantee.

14"	15"	17"
£59.00	£69.00	£79.00

Supplied in good used condition. Shipping code (D)

VIDEO MONITORS

PHILIPS HCS35 (same style as CM8833) attractively styled 14" colour monitor with **both RGB and standard composite 15.625 Khz video inputs** via **SCART socket** and separate phono jacks. Integral audio **power amp and speaker** for **all audio visual uses**. Will connect direct to **Amiga and Atari** BBC computers. Ideal for all **video monitoring / security** applications with **direct connection to most colour cameras**. High quality with many features such as front concealed flap controls, VCR correction button etc. Good used condition - fully tested - guaranteed Dimensions: W14" x H12¾" x 15½" D. **Only £99.00** (E)

PHILIPS HCS31 Ultra compact 9" colour video monitor with **standard composite 15.625 Khz video** input via SCART socket. Ideal for all monitoring / security applications. High quality, ex-equipment fully tested & guaranteed (possible minor screen burns). In attractive square black plastic case measuring W10" x H10" x 13½" D. 240 V AC mains powered. **Only £79.00** (D)

INDUSTRIAL COMPUTERS

Tiny shoebox sized industrial 40 Mhz 386 PC system measuring only (mm) 266 w X 88 h X 272 d. Ideal for dedicated control applications running DOS, Linux or even Windows ! Steel case contains 85 to 265 V AC 50 / 60 hz 70 Watt PSU, a 3 slot ISA passive backplane and a Rocky 318 (PC104) standard, single board computer with 8 MByte NON VOLATILE solid state 'Disk On Chip' RAMDISK. System comprises: Rocky 318 (PC104) SBC ISA card with 40MHz ALi 386SX CPU, 72 pin SIMM slot with 16 Mbyte SIMM, AMI BIOS, battery backed up real time clock. 2 x 9 pin D 16550 serial ports. EPP/ECP printer port, mini DIN keyboard connector, floppy port, IDE port for hard drives up to 528 MByte capacity, watchdog timer and PC/104 bus socket. The 8 MByte solid state 'disk on a chip' has its own BIOS, and can be fdisked, formatted & booted. Supplied BRAND NEW fully tested and guaranteed. For full data see featured item on website. Order as QC36.

100's of applications inc: firewall, routers, robotics etc **Only £99.00** (D)

19" RACK CABINETS

Save £££'s

Europe's Largest Stocks of quality rack cabinets, enclosures and accessories. Over 1000 Racks from stock

This month's special
33 / 42 / 47 U - High Quality All steel Rack Cabinets

BIG £ SAVER

Made by **Eurocraft Enclosures** Ltd to the **highest possible spec,** rack features **all steel construction** with removable side, front and back doors. Front and back doors are **hinged for easy access** and all lockable with five **secure 5 lever barrel locks**. The front door is constructed of double walled steel with a **'designer style'** smoked acrylic front panel to enable status indicators to be seen through the panel, yet remain unobtrusive. Internally the rack features fully slotted reinforced vertical fixing members to **take the heaviest of 19" rack equipment.** The two movable vertical fixing struts (extras available) are pre punched for standard 'cage nuts'. A **mains distribution panel** internally mounted to the bottom rear, provides 8 x IEC 3 pin Euro sockets and 1 x 13 amp 3 pin **switched utility socket.** Overall ventilation is provided by fully louvered back door and double skinned top section with top and side louvres. The top panel may be removed for fitting of **integral fans** to the sub plate etc. Other features include: fitted castors and floor levelers, prepunched utility panel at lower rear for cable / connector access etc. Supplied in **excellent,** slightly used condition with keys. Colour Royal blue. some grey available – CALL – Can be supplied in many other configurations.

33U	42U	47U
Order as BC44	**Order as DT20**	**Order as RV36**
External dimensions mm=1625H x 635D x 603 W. (64" H x 25" D x 23¾" W)	External dimensions mm=2019H x 635D x 603 W. (79.5" H x 25" D x 23¾" W)	External dimensions mm=2019H x 635D x 603 W. (88" H x 25" D x 23¾" W)
Only	**Only**	**Only**
£245	**£345**	**£410**

Call for shipping quotation

COLOUR CCD CAMERAS

BIG £ SAVER

Undoubtedly a **miracle of modern technology** & our special buying power ! A **quality product** featuring a fully cased **COLOUR** CCD camera at a give away price ! Unit features full autolight sensing for use in **low light** & **high light applications.**

A 10 mm fixed focus wide angle lens gives **excellent focus and resolution** from close up to long range. The **composite video** output will connect to any composite monitor or TV (via SCART socket) and most video recorders. Unit **runs from 12V DC** so ideal for security & **portable applications** where mains power not available. Overall dimensions 66 mm wide x 117 deep x 43 high. Supplied BRAND NEW & fully guaranteed with user data, 100's of applications including Security, Home Video, Web TV, Web Cams etc, etc.

Order as LK33 ***ONLY £79.00 or 2 for £149.00 (B)***

SOFTWARE SPECIALS

NT4 WorkStation, complete with service pack 3 and licence - OEM packaged. ***ONLY £89.00 (B)***
ENCARTA 95 - CDROM, Not the latest - but at this price ! **£7.95**
DOS 5.0 on 3½" disks with concise books c/w QBasic . **£14.95**
Windows for Workgroups 3.11+ Dos 6.22 on 3.5" disks **£55.00**
Windows 95 CDROM Only - No Licence - **£19.95**

Wordperfect 6 for DOS supplied on 3½" disks with manual **£24.95**

SOLID STATE LASERS

Visible red, 670nm laser diode assembly. Unit runs from 5 V DC at approx 50 mA. Orginally made for continuous use in industrial barcode scanners, the laser is mounted in a removable solid aluminium block, which functions as a heatsink and rigid optical mount. Dims of block are 50 w x 50 d x 15 h mm. Integral features include over temperature shutdown, current control, laser OK ouput, and gated TTL ON / OFF. Many uses for experimental optics, comms & lightshows etc. Supplied complete with data sheet.

Order as TD91 ***ONLY £24.95 (A)***

DC POWER SUPPLIES

Virtually every type of power supply you can imagine.Over 10,000 Power Supplies Ex Stock - Call or see our web site.

RELAYS - 200,000 FROM STOCK

*Save ££££'s by choosing your next relay from our **Massive Stocks** covering types such as Military, Octal, Cradle, Hermetically Sealed, Continental, Contactors, Time Delay, Reed, Mercury Wetted, Solid State, Printed Circuit Mounting etc., CALL or **see our web site www.distel.co.uk** for more information. Many obsolete types from stock. Save ££££'s*

TEST EQUIPMENT & SPECIAL INTEREST ITEMS

Unless marked NEW, items in this section are pre owned.

MITSUBISHI FA3445ETKL 14" Ind. spec SVGA monitors **£245**
FARNELL 0-60V DC @ 50 Amps, bench Power Supplies **£995**
FARNELL AP3080 0-30V DC @ 80 Amps, bench Suppy **£1850**
KINGSHILL CZ403/1 0-50V @ DC 200 Amps - NEW **£3950**
1kW to 400 kW - 400 Hz 3 phase power sources - ex stock **£POA**
IBM 8230 Type 1, Token ring base unit driver **£760**
Wayne Kerr RA200 Audio frequency response analyser **£2500**
INFODEC 1U, 24 port, RJ45 network patchpanels. #TH93 **£49**
3COM 16670 12 Port Ethernet hub - RJ45 connectors #LD97 **£69**
3COM 16671 24 Port Ethernet hub - RJ45 connectors **£89**
3COM 16700 8 Port Ethernet hub - RJ45 connectors NEW **£39**
IBM 53F5501 Token Ring ICS 20 port lobe modules **£POA**
IBM MAU Token ring distribution panel 8228-23-5050N **£45**
AIM 501 Low distortion Oscillator 9Hz to 330Khz, IEEE I/O **£550**
ALLGON 8360.11805-1880 MHz hybrid power combiners **£250**
Trend DSA 274 Data Analyser with G703(2M) 64 i/o **£POA**
Marconi 6310 Programmable 2 to 22 GHz sweep generator **£4500**
Marconi 2022C 10KHz-1GHz RF signal generator **£1550**
HP1650B Logic Analyser **£3750**
HP3781A Pattern generator & **HP3782A** Error Detector **£POA**
HP6621A Dual Programmable GPIB PSU 0-7 V 160 watts **£1800**
HP6264 Rack mount variable 0-20V @ 20A metered PSU **£475**
HP54121A DC to 22 GHz four channel test set **£POA**
HP8130A opt 020 300 MHz pulse generator, GPIB etc **£7900**
HP A1, A0 8 pen HPGL high speed drum plotters - from **£550**
HP DRAFTMASTER 1 8 pen high speed plotter **£750**
EG+G Brookdeal 95035C Precision lock in amp **£1800**
Keithley 590 CV capacitor / voltage analyser **£POA**
Racal ICR40 dual 40 channel voice recorder system **£3750**
Fiskers 45KVA 3 ph On Line UPS – New batteries **£4500**
Emerson AP130 2.5KVA industrial spec.UPS **£1499**
Mann Tally MT645 High speed line printer **£2200**
Intel SBC 486/133SE Multibus 486 system. 8Mb Ram **£945**
HP6030A 0-200V DC @ 17 Amps bench power supply **£1950**
Intel SBC 486/125C08 Enhanced Multibus (MSA) **New** **£1150**
Nikon HFX-11 (Ephiphot) exposure control unit **£1450**
PHILIPS PM5518 pro. TV signal generator **£1250**
Motorola VME Bus Boards & Components List. SAE / CALL **£POA**
Trio 0-18 vdc linear, metered 30 amp bench PSU. **New** **£550**
Fujitsu M3041R 600 LPM high speed band printer **£1950**
Fujitsu M3041D 600 LPM printer with network interface **£1250**
Siemens K4400 64Kb to 140Mb demux analyser **£2950**
Perkin Elmer 299B Infrared spectrophotometer **£500**
Perkin Elmer 597 Infrared spectrophotometer **£3500**
VG Electronics 1035 TELETEXT Decoding Margin Meter **£3250**
LightBand 60 output high spec 2u rack mount Video VDA's **£495**
Sekonic SD 150H 18 channel digital Hybrid chart recorder **£1995**
B&K 2633 Microphone pre amp **£300**
Taylor Hobson Tallysurf amplifier / recorder **£750**
ADC SS200 Carbon dioxide gas detector / monitor **£1450**
BBC AM20/3 PPM Meter (Ernest Turner) + drive electronics **£75**
ANRITSU 9654A Optical DC-2.5G/b waveform monitor **£5650**
ANRITSU ML93A optical power meter **£990**
ANRITSU Fibre optic characteristic test set **£POA**
R&S FTDZ Dual sound unit **£650**
R&S SBUF-E1 Vision modulator **£775**
WILTRON 6630B 12.4 / 20GHz RF sweep generator **£5750**
TEK 2445 150 MHz 4 trace oscilloscope **£1250**
TEK 2465 300 Mhz 300 MHz oscilloscope rack mount **£1955**
TEK TDS380 400Mhz digital realtime + disk drive, FFT etc **£2900**
TEK TDS524A 500Mhz digital realtime + colour display etc **£5100**
HP3585A Opt 907 20Hz to 40 Mhz spectrum analyser **£3950**
PHILIPS PW1730/10 60KV XRAY generator & accessories **£POA**
VARIACS - Large range from stock - call or see our website
CLAUDE LYONS 12A 240V single phase auto. volt. regs **£325**

DISPLAY ELECTRONICS

ALL MAIL TO
Dept PE, 29 / 35 Osborne Rd
Thornton Heath
Surrey CR7 8PD
Open Mon - Fri 9.00 - 5:30

18 Million Items On Line Now !
Secure ordering, Pictures, Information
VeriSign Secure Site
www.distel.co.uk
email = admin@distel.co.uk

ALL ☎ ENQUIRIES
0208 653 3333
FAX 0208 653 8888

Est. 26 Years

All prices for UK Mainland. UK customers add 17.5% VAT to TOTAL order amount. Minimum order £10. Bona Fide account orders accepted from Government, Schools, Universities and Local Authorities - minimum account order £50. Cheques over £100 are subject to 7 working days clearance. Carriage charges (A)=£3.50, (B)=£6.50, (C)=£10, (D)=£15.00, (E)=£18.00, (F)=CALL. Allow approx 3 days for shipping - faster CALL. All goods supplied to our Standard Conditions of Sale which can be viewed at our website and unless stated guaranteed for 90 days. All guarantees on a return to base basis. All rights reserved to change prices / specifications without prior notice. Orders subject to stock. Discounts for volume. Top CASH prices paid for surplus goods. All trademarks, tradenames etc acknowledged. © Display Electronics 2002. E & O E..

NEXT MONTH

200MHz FUNCTION GENERATOR

One of the most useful facilities in the electronic experimenter's workshop is an ability to generate a.c. test signals of various waveforms, frequencies and amplitudes. This is where this Function Generator project comes in, the "function" in the name referring to the waveform of its output signal. It can be used for testing or driving many circuits, from below audio up to a couple of hundred kilohertz, and may even be used as a variable speed clock for logic circuit testing. It has sine, square and triangle-wave outputs plus a separate 0V to +5V squarewave output for logic driving. This may also be used with a 'sync' input when, for example, inspecting low-level signals on an oscilloscope.

Where a sinewave output is required two function generator i.c.s are generally available, these being the industry standard 8038 and the more recent Maxim MAX038. The latter can operate at frequencies above 20MHz but is still fairly expensive. Also, its sheer speed can make it difficult to work with, especially for the less experienced constructor. For audio and general purpose work at lower frequencies the older 8038 has much to recommend it. Various claims have been made for its maximum operating frequency, up to 1MHz in fact, but 300kHz is more common and the author has tended to regard 100kHz as "top whack" to date. However, this design operates up to 200kHz and the results at this frequency are quite acceptable for most purposes.

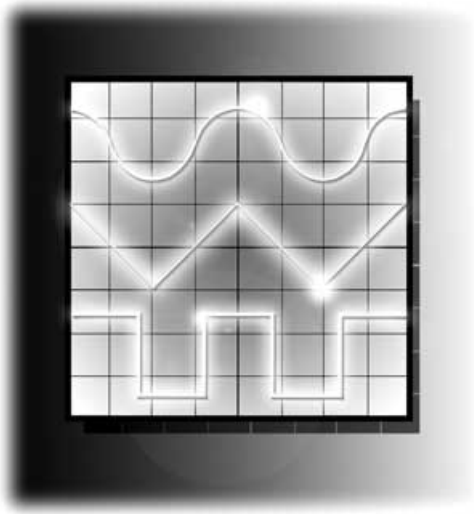

WIND-UP TORCH II

An updated and improved wind-up torch based on the design published in the EPE *October 2000 issue. This version is 30% smaller, 120% brighter and 500% quicker to wind up, it also has a visual indication of full charge. The torch uses no batteries – not even rechargeables – and will produce a brightness of about 35 lux at two metres on "high beam" which can light a footpath at night up to seven metres ahead. It should pay for itself in saved batteries within 48 hours of use.*

DRIVER ALERT – A THINKING AND REACTION TIME TESTER

Speaking on a mobile phone, including using a hands-free unit, can impair your reactions as much as four cans of strong lager. This Driver Alert, which won the best Under-15s project award at the 2003 YEDA Competition, proves it. Unlike a simple reaction tester, which does not test concentration and thinking time, this easy to build unit will show how these are affected by drink or distractions. It has shown that one can of strong lager can increase (i.e. slower) reaction time by over 30% and talking on a mobile by over 60%.

PLUS

BACK TO BASICS – two more simple, easy to build projects

NO ONE DOES IT BETTER

EVERYDAY PRACTICAL ELECTRONICS

DON'T MISS AN ISSUE – PLACE YOUR ORDER NOW!

Demand is bound to be high

MARCH 2003 ISSUE ON SALE THURSDAY, FEBRUARY 13

Established 1990

QUASAR ELECTRONICS LIMITED

PO Box 6935, BISHOPS STORTFORD, Herts. CM23 4WP

TEL: 0871 717 7168 FAX: 0871 277 2728

ADD £2.00 P&P to all orders (or 1st Class Recorded £4, Next day (Insured £250) £7, Europe £5.00, Rest of World £10.00). We accept all major credit cards. Make cheques/PO's payable to Quasar Electronics. Prices include 17.5% VAT. **MAIL ORDER ONLY**
FREE CATALOGUE with order or send 2 x 1st class stamps (refundable) for details of over 150 kits & publications.

PROJECT KITS

Our electronic kits are supplied complete with all components, high quality PCBs (NOT cheap Tripad strip board!) and detailed assembly/operating instructions

● **2 x 25W CAR BOOSTER AMPLIFIER** Connects to the output of an existing car stereo cassette player, CD player or radio. Heatsinks provided. PCB 76x75mm. **1046KT. £24.95**

● **3-CHANNEL WIRELESS LIGHT MODULATOR** No electrical connection with amplifier. Light modulation achieved via a sensitive electret microphone. Separate sensitivity control per channel. Power handing 400W/channel. PCB 54x112mm. Mains powered. Box provided. **6014KT £24.95**

● **12 RUNNING LIGHT EFFECT** Exciting 12 LED light effect ideal for parties, discos, shop-windows & eye-catching signs. PCB design allows replacement of LEDs with 220V bulbs by inserting 3 TRIACs. Adjustable rotation speed & direction. PCB 54x112mm. **1026KT £15.95; BOX (for mains operation) 2026BX £9.00**

● **DISCO STROBE LIGHT** Probably the most exciting of all light effects. Very bright strobe tube. Adjustable strobe frequency: 1-60Hz. Mains powered. PCB: 60x68mm. Box provided. **6037KT £28.95**

● **ANIMAL SOUNDS** Cat, dog, chicken & cow. Ideal for kids farmyard toys & schools. **SG10M £5.95**

● **3 1/2 DIGIT LED PANEL METER** Use for basic voltage/current displays or customise to measure temperature, light, weight, movement, sound levels, etc. with appropriate sensors (not supplied). Various input circuit designs provided. **3061KT £13.95**

● **IR REMOTE TOGGLE SWITCH** Use any TV/VCR remote control unit to switch onboard 12V/1A relay on/off. **3058KT £10.95**

SPEED CONTROLLER for any common DC motor up to 100V/5A. Pulse width modulation gives maximum torque at all speeds. 5-15VDC. Box provided. **3067KT £12.95**

● **3 x 8 CHANNEL IR RELAY BOARD** Control eight 12V/1A relays by Infra Red (IR) remote control over a 20m range in sunlight. 6 relays turn on only, the other 2 toggle on/off. 3 operation ranges determined by jumpers. Transmitter case & all components provided. Receiver PCB 76x89mm. **3072KT £52.95**

PRODUCT FEATURE

COMPUTER TEMPERATURE DATA LOGGER

PC serial port controlled 4-channel temperature meter (either deg C or F). Requires no external power. Allows continuous temperature data logging of up to four temperature sensors located 200m+ from motherboard/PC. Ideal use for old 386/486 computers. Users can tailor input data stream to suit their purpose (dump it to a spreadsheet or write your own BASIC programs using the INPUT command to grab the readings). PCB just 38mm x 38mm. Sensors connect via four 3-pin headers. 4 header cables supplied but only one DS18S20 sensor.
Kit software available free from our website.
ORDERING: 3145KT **£23.95** (kit form);
AS3145 **£29.95** (assembled);
Additional DS18S20 sensors **£4.95** each

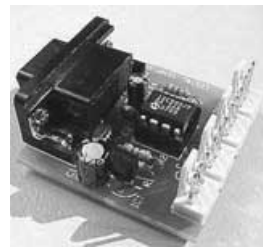

● **SOUND EFFECTS GENERATOR** Easy to build. Create an almost infinite variety of interesting/unusual sound effects from birds chirping to sirens. 9VDC. PCB 54x85mm. **1045KT £8.95**

● **ROBOT VOICE EFFECT** Make your voice sound similar to a robot or Darlek. Great fun for discos, school plays, theatre productions, radio stations & playing jokes on your friends when answering the phone! PCB 42x71mm. **1131KT £8.95**

● **AUDIO TO LIGHT MODULATOR** Controls intensity of one or more lights in response to an audio input. Safe, modern opto-coupler design. Mains voltage experience required. **3012KT £8.95**

● **MUSIC BOX** Activated by light. Plays 8 Christmas songs and 5 other tunes. **3104KT £7.95**

● **20 SECOND VOICE RECORDER** Uses non-volatile memory - no battery backup needed. Record/replay messages over & over. Playback as required to greet customers etc. Volume control & built-in mic. 6VDC. PCB 50x73mm. **3131KT £12.95**

● **TRAIN SOUNDS** 4 selectable sounds : whistle blowing, level crossing bell, 'clickety-clack' & 4 in sequence. **SG01M £6.95**

● **PC CONTROLLED RELAY BOARD** Convert any 286 upward PC into a dedicated automatic controller to independently turn on/off up to eight lights, motors & other devices around the home, office, laboratory or factory. Each relay output is capable of switching 250VAC/4A. A suite of DOS and Windows control programs are provided together with all components (except box and PC cable). 12VDC. PCB 70x200mm. **3074KT £31.95**

● **2 CHANNEL UHF RELAY SWITCH** Contains the same transmitter/receiver pair as 30A15 below plus the components and PCB to control two 240VAC/10A relays (also supplied). Ultra bright LEDs used to indicate relay status. **3082KT £27.95**

● **TRANSMITTER RECEIVER PAIR** 2-button keyfob style 300-375MHz Tx with 30m range. Receiver encoder module with matched decoder IC. Components must be built into a circuit like kit 3082 above. **30A15 £14.95**

● **PIC 16C71 FOUR SERVO MOTOR DRIVER** Simultaneously control up to 4 servo motors. Software & all components (except servos/control pots) supplied. 5VDC. PCB 50x70mm. **3102KT £15.95**

● **UNIPOLAR STEPPER MOTOR DRIVER** for any 5/6/8 lead motor. Fast/slow & single step rates. Direction control & on/off switch. Wave, 2-phase & half-wave step modes. 4 LED indicators. PCB 50x65mm. **3109KT £14.95**

● **PC CONTROLLED STEPPER MOTOR DRIVER** Control two unipolar stepper motors (3A max. each) via PC printer port. Wave, 2-phase & half-wave step modes. Software accepts 4 digital inputs from external switches & will single step motors. PCB fits in D-shell case provided. **3113KT £17.95**

● **12-BIT PC DATA ACQUISITION/CONTROL UNIT** Similar to kit 3093 above but uses a 12 bit Analogue-to-Digital Converter (ADC) with internal analogue multiplexor. Reads 8 single ended channels or 4 differential inputs or a mixture of both. Analogue inputs read 0-4V. Four TTL/CMOS compatible digital input/outputs. ADC conversion time <10uS. Software (C, QB & Win), extended D shell case & all components (except sensors & cable) provided. **3118KT £52.95**

● **LIQUID LEVEL SENSOR/RAIN ALARM** Will indicate fluid levels or simply the presence of fluid. Relay output to control a pump to add/remove water when it reaches a certain level. **1080KT £5.95**

● **AM RADIO KIT 1** Tuned Radio Frequency front-end, single chip AM radio IC & 2 stages of audio amplification. All components inc. speaker provided. PCB 32x102mm. **3063KT £10.95**

● **DRILL SPEED CONTROLLER** Adjust the speed of your electric drill according to the job at hand. Suitable for 240V AC mains powered drills up to 700W power. PCB: 48mm x 65mm. Box provided. **6074KT £17.95**

● **3 INPUT MONO MIXER** Independent level control for each input and separate bass/treble controls. Input sensitivity: 240mV. 18V DC. PCB: 60mm x 185mm **1052KT £16.95**

● **NEGATIVE\POSITIVE ION GENERATOR** Standard Cockcroft-Walton multiplier circuit. Mains voltage experience required. **3057KT £10.95**

● **LED DICE** Classic intro to electronics & circuit analysis. 7 LED's simulate dice roll, slow down & land on a number at random. 555 IC circuit. **3003KT £9.95**

● **STAIRWAY TO HEAVEN** Tests hand-eye co-ordination. Press switch when green segment of LED lights to climb the stairway - miss & start again! Good intro to several basic circuits. **3005KT £9.95**

● **ROULETTE LED** 'Ball' spins round the wheel, slows down & drops into a slot. 10 LED's. Good intro to CMOS decade counters & Op-Amps. **3006KT £10.95**

● **12V XENON TUBE FLASHER TRANSFORMER** steps up a12V supply to flash a 25mm Xenon tube. Adjustable flash rate. **3163KT £13.95**

● **LED FLASHER 1** 5 ultra bright red LED's flash in 7 selectable patterns. **3037MKT £5.95**

● **LED FLASHER 2** Similar to above but flash in sequence or randomly. Ideal for model railways. **3052MKT £5.95**

● **INTRODUCTION TO PIC PROGRAMMING.** Learn programming from scratch. Programming hardware, a P16F84 chip and a two-part, practical, hands-on tutorial series are provided. **3081KT £21.95**

● **SERIAL PIC PROGRAMMER** for all 8/18/28/40 pin DIP serial programmed PICs. Shareware software supplied limited to programming 256 bytes (registration costs £14.95). **3096KT £10.95**

● **ATMEL 89Cx051 PROGRAMMER** Simple-to-use yet powerful programmer for the Atmel 89C1051, 89C2051 & 89C4051 uC's. Programmer does NOT require special software other than a terminal emulator program (built into Windows). Can be used with ANY computer/operating system. **3121KT £24.95**

● **3V/1·5V TO 9V BATTERY CONVERTER** Replace expensive 9V batteries with economic 1.5V batteries. IC based circuit steps up 1 or 2 'AA' batteries to give 9V/18mA. **3035KT £5.95**

● **STABILISED POWER SUPPLY 3-30V/2.5A** Ideal for hobbyist & professional laboratory. Very reliable & versatile design at an extremely reasonable price. Short circuit protection. Variable DC voltages (3-30V). Rated output 2.5 Amps. Large heatsink supplied. You just supply a 24VAC/3A transformer. PCB 55x112mm. Mains operation. **1007KT £16.95.**

● **STABILISED POWER SUPPLY 2-30V/5A** As kit 1007 above but rated at 5Amp. Requires a 24VAC/5A transformer. **1096KT £27.95.**

● **MOTORBIKE ALARM** Uses a reliable vibration sensor (adjustable sensitivity) to detect movement of the bike to trigger the alarm & switch the output relay to which a siren, bikes horn, indicators or other warning device can be attached. Auto-reset. 6-12VDC. PCB 57x64mm. **1011KT £11.95** Box **2011BX £7.00**

● **CAR ALARM SYSTEM** Protect your car from theft. Features vibration sensor, courtesy/boot light voltage drop sensor and bonnet/boot earth switch sensor. Entry/exit delays, auto-reset and adjustable alarm duration. 6-12V DC. PCB: 47mm x 55mm **1019KT £11.95** Box **2019BX £8.00**

● **PIEZO SCREAMER** 110dB of ear piercing noise. Fits in box with 2 x 35mm piezo elements built into their own resonant cavity. Use as an alarm siren or just for fun! 6-9VDC. **3015KT £10.95**

● **COMBINATION LOCK** Versatile electronic lock comprising main circuit & separate keypad for remote opening of lock. Relay supplied. **3029KT £10.95**

● **ULTRASONIC MOVEMENT DETECTOR** Crystal locked detector frequency for stability & reliability. PCB 75x40mm houses all components. 4-7m range. Adjustable sensitivity. Output will drive external relay/circuits. 9VDC. **3049KT £13.95**

● **PIR DETECTOR MODULE** 3-lead assembled unit just 25x35mm as used in commercial burglar alarm systems. **3076KT £8.95**

● **INFRARED SECURITY BEAM** When the invisible IR beam is broken a relay is tripped that can be used to sound a bell or alarm. 25 metre range. Mains rated relays provided. 12VDC operation. **3130KT £12.95**

● **SQUARE WAVE OSCILLATOR** Generates square waves at 6 preset frequencies in factors of 10 from 1Hz-100KHz. Visual output indicator. 5-18VDC. Box provided. **3111KT £8.95**

● **PC DRIVEN POCKET SAMPLER/DATA LOGGER** Analogue voltage sampler records voltages up to 2V or 20V over periods from milli-seconds to months. Can also be used as a simple digital scope to examine audio & other signals up to about 5KHz. Software & D-shell case provided. **3112KT £18.95**

● **20 MHz FUNCTION GENERATOR** Square, triangular and sine waveform up to 20MHz over 3 ranges using 'coarse' and 'fine' frequency adjustment controls. Adjustable output from 0-2V p-p. A TTL output is also provided for connection to a frequency meter. Uses MAX038 IC. Plastic case with printed front/rear panels & all components provided. 7-12VAC. **3101KT £69.95**

SURVEILLANCE

High performance surveillance bugs. Room transmitters supplied with sensitive electret microphone & battery holder/clip. All transmitters can be received on an ordinary VHF/FM radio between 88-108MHz. Available in Kit Form (KT) or Assembled & Tested (AS).

ROOM SURVEILLANCE

● ***MTX*** **- MINIATURE 3V TRANSMITTER** Easy to build & guaranteed to transmit 300m @ 3V. Long battery life. 3-5V operation. Only 45x18mm. **B 3007KT £6.95 AS3007 £11.95**

MRTX **- MINIATURE 9V TRANSMITTER** Our best selling bug. Super sensitive, high power - 500m range @ 9V (over 1km with 18V supply and better aerial). 45x19mm. **3018KT £7.95 AS3018 £12.95**

HPTX **- HIGH POWER TRANSMITTER** High performance, 2 stage transmitter gives greater stability & higher quality reception. 1000m range 6-12V DC operation. Size 70x15mm. **3032KT £9.95 AS3032 £18.95**

● ***MMTX*** **- MICRO-MINIATURE 9V TRANSMITTER** The ultimate bug for its size, performance and price. Just 15x25mm. 500m range @ 9V. Good stability. 6-18V operation. **3051KT £8.95 AS3051 £14.95**

● ***VTX*** **- VOICE ACTIVATED TRANSMITTER** Operates only when sounds detected. Low standby current. Variable trigger sensitivity. 500m range. Peaking circuit supplied for maximum RF output. On/off switch. 6V operation. Only 63x38mm. **3028KT £12.95 AS3028 £24.95**

HARD-WIRED BUG/TWO STATION INTERCOM Each station has its own amplifier, speaker and mic. Can be set up as either a hard-wired bug or two-station intercom. 10m x 2-core cable supplied. 9V operation. **3021KT £15.95 (kit form only)**

● ***TRVS*** **- TAPE RECORDER VOX SWITCH** Used to automatically operate a tape recorder (not supplied) via its REMOTE socket when sounds are detected. All conversations recorded. Adjustable sensitivity & turn-off delay. 115x19mm. **3013KT £9.95 AS3013 £21.95**

TELEPHONE SURVEILLANCE

● ***MTTX*** **- MINIATURE TELEPHONE TRANSMITTER** Attaches anywhere to phone line. Transmits only when phone is used! Tune-in your radio and hear both parties. 300m range. Uses line as aerial & power source. 20x45mm. **3016KT £8.95 AS3016 £14.95**

● ***TRI*** **- TELEPHONE RECORDING INTERFACE** Automatically record all conversations. Connects between phone line & tape recorder (not supplied). Operates recorders with 1.5-12V battery systems. Powered from line. 50x33mm. **3033KT £9.95 AS3033 £18.95**

● ***TPA*** **- TELEPHONE PICK-UP AMPLIFIER/WIRELESS PHONE BUG** Place pick-up coil on the phone line or near phone earpiece and hear both sides of the conversation. **3055KT £11.95 AS3055 £20.95**

HIGH POWER TRANSMITTERS

● **1 WATT FM TRANSMITTER** Easy to construct. Delivers a crisp, clear signal. Two-stage circuit. Kit includes microphone and requires a simple open dipole aerial. 8-30VDC. PCB 42x45mm. **1009KT £12.95**

● **4 WATT FM TRANSMITTER** Comprises three RF stages and an audio preamplifier stage. Piezoelectric microphone supplied or you can use a separate preamplifier circuit. Antenna can be an open dipole or Ground Plane. Ideal project for those who wish to get started in the fascinating world of FM broadcasting and want a good basic circuit to experiment with. 12-18VDC. PCB 44x146mm. **1028KT. £22.95 AS1028 £34.95**

● **15 WATT FM TRANSMITTER (PRE-ASSEMBLED & TESTED)** Four transistor based stages with Philips BLY 88 in final stage. 15 Watts RF power on the air. 88-108MHz. Accepts open dipole, Ground Plane, 5/8, J, or YAGI antennas. 12-18VDC. PCB 70x220mm. SWS meter needed for alignment. **1021KT £99.95**

● **SIMILAR TO ABOVE BUT 25W Output. 1031KT £109.95**

X FACTOR PUBLICATIONS

THE EXPERTS IN RARE & UNUSUAL INFORMATION!

Full details of all X-FACTOR PUBLICATIONS can be found in our catalogue. N.B. Minimum order charge for reports and plans is £5.00 PLUS normal P&P.

● **SUPER-EAR LISTENING DEVICE** Complete plans to build your own parabolic dish microphone. Listen to distant voices and sounds through open windows and even walls! Made from readily available parts. **R002 £3.50**

● **LOCKS** - How they work and how to pick them. This fact filled report will teach you more about locks and the art of lock picking than many books we have seen at 4 times the price. Packed with information and illustrations. **R008 £3.50**

● **RADIO & TV JOKER PLANS** We show you how to build three different circuits for disrupting TV picture and sound plus FM radio! May upset your neighbours & the authorities!! DISCRETION REQUIRED. **R017 £3.50**

● **INFINITY TRANSMITTER PLANS** Complete plans for building the famous Infinity Transmitter. Once installed on the target phone, device acts like a room bug. Just call the target phone & activate the unit to hear all room sounds. Great for home/office security! **R019 £3.50**

● **THE ETHER BOX CALL INTERCEPTOR PLANS** Grabs telephone calls out of thin air! No need to wire-in a phone bug. Simply place this device near the phone lines to hear the conversations taking place! **R025 £3.00**

● **CASH CREATOR BUSINESS REPORTS** Need ideas for making some cash? Well this could be just what you need! You get 40 reports (approx. 800 pages) on floppy disk that give you information on setting up different businesses. You also get valuable reproduction and duplication rights so that you can sell the manuals as you like. **R030 £7.50**

BARGAIN BUY!!

30-in-ONE
Electronic Projects Lab

Great introduction to electronics. Ideal for the budding electronics expert! Build a radio, burglar alarm, water detector, morse code practice circuit, simple computer circuits, and much more! NO soldering, tools or previous electronics knowledge required. Circuits can be built and unassembled repeatedly. Comprehensive 68-page manual with explanations, schematics and assembly diagrams. Suitable for age 10+. Excellent for schools. Requires 2 x AA batteries.
Order Code EPL030 **ONLY £14.95** (phone for bulk discounts). 130, 300 and 500-in-ONE also available.

WEB: http://www.QuasarElectronics.com
email: epesales@QuasarElectronics.com

Secure Online Ordering Facilities
Full Kit Listing, Descriptions & Photos
Kit Documentation & Software Downloads

www.QuasarElectronics.com

Credit Card Sales: 0871 717 7168

SQUIRES MODEL & CRAFT TOOLS

ANTEX SOLDERING STATIONS

ANTEX 660TC

* Temperature control range 65 - 450°C`
* Thumb wheel potentiometer control
* 50 Watt Iron Included (25W Optional Extra)
* Wide range of spare bits available (0.5mm - 6.0mm)

Normal Price ~~£114.95~~ - Now £89.95
Post Free to UK addresses.

ANTEX 690SD

* Temperature control range 65 - 450°C
* Digital readout temperature control
* 50 Watt static dissapative iron included
* Wide range of spare bits available (0.5mm - 6.0mm)

Normal Price ~~£169.95~~ - Now £129.95
Post Free to UK addresses.

Post, Telephone or Fax your orders to:-

Squires, 100 London Road, Bognor Regis, West Sussex, PO21 1DD
Tel 01243 842424 Fax 01243 842525

OUR 600 PAGE POST FREE MAIL ORDER CATALOGUE IS AVAILABLE FREE OF CHARGE TO ADDRESS IN THE UK - OVERSEAS CATALOGUE FREE, POSTAGE CHARGED AT COST TO CREDIT CARD

Shop Open 9 - 5.30 Monday - Friday, 9- 5 Saturday

SPECIAL OFFERS

TEKTRONIX 2445A 4-ch 150MHz delay., cursors etc. Supplied with 2 Tektronix probes. ONLY **£425**

TEKTRONIX 2232 Digital Storage Scope. Dual Trace, 100MHz, 100M/S with probes **£525**
H.P. 54501A Dig. Oscilloscope, 100MHz 4-Ch ... **£425**
H.P. 3312A Function Gen., 0·1Hz-13MHz, AM/FM Sweep/Tri/Gate/Brst etc. **£300**
FARNELL Dual PSU XA35-2T, 0-35V, 0-2A, Twice QMD, l.c.d. Display **£180**
CIRRUS CRL254 Sound Level Meter with Calibrator 80-120dB, LEQ **£150**
FARNELL AMM255 Automatic Mo Meter, 1·5MHz-2GHz, unused **£300**
FARNELL DSG1 Low Frequency Syn Sig. Gen., 0·001Hz-99·99kHz, low distortion, TTL/Square/Pulse Outputs etc. **£95**
FLUKE 8060A Handheld True RMS, DMM, 4½ digit ..... As new **£150**, used **£95**
BECKMAN HD110 Handheld 3½ digit DMM, 28 ranges, with battery, leads and carrying case .**£40**

H.P. 3310A Function Gen., 0·005Hz-5MHz, Sine/Sq/Tri/Ramp/Pulse **£125**
FARNELL LFM4 Sine/Sq Oscillator, 10Hz-1MHz, low distortion, TTL output, Amplitude Meter .**£125**
H.P. 545A Logic Probe with 546A Logic Pulser and 547A Current Tracer **£90**
FLUKE 77 Multimeter, 3½-digit, handheld ... **£60**
FLUKE 77 Series 11 ..... £70
HEME 1000 L.C.D. Clamp Meter, 00-1000A, in carrying case **£60**

BLACK STAR ORION PAL/TV Colour Pattern Generator ..... **from £75-£125**
THURLBY/THANDER TG210 Function Generator, 0·002Hz-2MHz, TTL etc. ..... **£80-£95**
THURLBY THANDAR P.S.U. PL320QMD, 0V-32V, 0A-2A Twice (late colours) **£200**

Datron 1061 ONLY **£150**
High Quality 5·5 Digit Bench Multimeter
True RMS/4 wire Res/Current Converter/IEEE

Datron 1061A ONLY **£225**
High Quality 6½ digit Bench Multimeter
True RMS/4 wire/Current Converter

Racal Receiver RA1772 ONLY **£250**
50kHz-30MHz
L.E.D. Display. Basically working.

MARCONI 2019A

AM/FM SYNTHESISED SIGNAL GENERATOR
80 kHz - 1040MHz ONLY **£400**

MARCONI 893C AF Power Meter, Sinad Measurement ..... Unused **£100**, Used **£60**
MARCONI 893B, No Sinad **£30**
MARCONI 2610 True RMS Voltmeter, Autoranging, 5Hz-25MHz **£195**
GOULD J3B Sine/Sq Osc., 10Hz-100kHz, low distortion ..... **£75-£125**
AVO 8 Mk. 6 in Every Ready case, with leads etc. . **£80**
Other AVOs from **£50**
GOODWILL GVT427 Dual Ch AC Millivoltmeter, 10mV-300V in 12 ranges, Freq. 10Hz-1MHz . **£100-£125**
SOLARTRON 7150 DMM 6½-digit Tru RMS-IEEE ..... **£95-£150**
SOLARTRON 7150 Plus **£200**

HIGH QUALITY RACAL COUNTERS
9904 Universal Timer Counter, 50MHz **£50**
9916 Counter, 10Hz-520MHz **£75**
9918 Counter, 10Hz-560MHz, 9-digit **£50**
WAYNE KERR B424 Component Bridge **£125**
RACAL/AIM 9343M LCR Databridge. Digital Autmeasurement of R, C, L, Q, D ... **£200**
HUNTRON TRACKER Model 1000 ..... **£125**
FLUKE 8050A 4·5 Digit. 2A. True RMS **£75**
FLUKE 8010A 3·5 Digit. 10A **£50**
FLUKE 8012A 3·5 Digit. 2A **£40**

Racal 9008 ONLY **£95**
Automatic Modulation Meter, AM/FM 1·5MHz-2GHz

Portable Appliance Tester ONLY **£180**
Megger Pat 2

H.P. 6012B DC PSU 0-60V, 0-50A, 1000W .**£1000**
FARNELL AP60/50 1KW Autoranging **£1000**
FARNELL H60/50 0-60V 0-50A **£750**
FARNELL H60/25 0-60V, 0-25A **£400**
Power Supply HPS3010, 0-30V, 0-10A **£140**
FARNELL L30-2 0-30V, 0-2A **£80**
FARNELL L30-1 0-30V, 0-1A **£60**
Many other Power Supplies available

FARNELL DTV12-14 OSCILLOSCOPE. Dual trace, 12MHz TV, coupling .ONLY **£75**

FARNELL LF1 SINE/SQ OSCILLATOR. 10Hz-1MHz. ONLY **£75**

OSCILLOSCOPES
TEKTRONIX TDS350 dual trace, 200Mhz, 1G/S ..Unused **£1500**
TEKTRONIX TDS320 dual trace, 100MHz, 500M/S **£1200**
TEKTRONIX TDS310 dual trace, 50Mhz, 200M/S **£950**
LECROY 9400A dual trace, 175MHz, 5G/S **£750**
HITACHI VC6523, dtrace, 20Mhz, 20M/S, delay etc.Unused **£500**
PHILIPS PM3092 2+2-ch., 200MHz, delay etc., £800 as new **£950**
PHILIPS PM3082 2+2-ch., 100MHz, delay etc., £700 as new **£800**
TEKTRONIX TAS465 dual trace, 100MHz, delay etc. **£750**
TEKTRONIX 2465B 4-ch., 400MHz, delay cursors etc **£1500**
TEKTRONIX 2465 4-ch., 300MHz, delay cursors etc. **£900**
TEKTRONIX 468 Dig. Storage, dual trace, 100MHz, delay ... **£450**
TEKTRONIX 466 Analogue Storage, dual trace, 100MHz ... **£250**
TEKTRONIX 485 dual trace, 350MHz, delay sweep **£550**
TEKTRONIX 475 dual trace, 200MHz, delay sweep **£350**
TEKTRONIX 465B dual trace, 100MHz, delay sweep **£325**
TEKTRONIX 2215 dual trace, 60MHz, delay sweep **£250**
PHILIPS PM3217 dual trace, 50MHz delay ..... **£200-£250**
GOULD OS1100 dual trace, 30MHz delay **£125**
HAMEG HM303.6 dual trace, 35MHz component tester as new **£240**
HAMEG HM303 dual trace, 30MHz component tester **£200**
Many other Oscilloscopes available

MARCONI 2022E Synth AM/FM Sig Gen 10kHz-1·01GHz l.c.d. display etc ..... **£525-£750**
H.P. 8657A Synth sig gen, 100kHz-1040MHz **£2000**
H.P. 8656B Synth sig gen, 100kHz-990MHz **£1350**
H.P. 8656A Synth sig gen, 100kHz-990MHz **£995**
R&S APN62 Synth, 1Hz-260kHz sig. gen., balanced/unbalanced output, l.c.d. display **£425**
PHILIPS PM5328 sig gen, 100kHz-180MHz with 200MHz, freq. counter, IEEE **£550**
RACAL 9081 Synth AM/FM sig g en, 5kHz-1024MHz **£250**
H.P. 3325A Synth function gen, 21MHz **£600**
MARCONI 6500 Amplitude Analyser **£1500**
H.P. 4192A Impedance Analyser **£5000**
H.P. 4275A LCR Meter, 10kHz-10MHz **£2750**
H.P. 8903A Distortion Analyser **£1000**
WAYNE KERR 3245 Inductance Analyser **£2000**
H.P. 8112A Pulse Generator, 50MHz **£1250**
MARCONI 2440 Frequency Counter, 20GHz **£1000**
H.P. 5350B Frequency Counter, 20GHz **£2000**
H.P. 5342A 10Hz-18GHz Frequency Counter **£800**
H.P. 1650B Logic Analyser, 80-channel **£1000**
MARCONI 2035 Mod Meter, 500kHz-2GHz **£750**

RADIO COMMUNICATIONS TEST SETS
MARCONI 2955/2995A ..... From **£1500**
ROHDE & SCHWARZ CMT 0·1-1000MHz **£2000**
SCHLUMBERGER 4040 ..... **£900**

JUST IN

H.P. 6063B DC Electronic Load, 3-240V/0-10A, 250W ..... **POA**
H.P. 66312A PSU, 0-20V/0-2A **£400**
H.P. 66311B PSU, 0-15V/0-3A **£400**
H.P. 66309D PSU Dual, 0-15, 0-3A/0-12, 0-1·5A **£750**
H.P. 6632B PSU, 0-20V/0-5A **£500**
H.P. 6623A PSU, triple output ranging from 0-7V 0-5A to 0-20V 0-4A **£850**
H.P./AGILENT 34401A DMM 6½ digit ..... **£400/£450**
H.P. 3478A DMM 5½ digit **£275**
FLUKE 45 DMM dual display **£400**
KEITHLEY 2010 DMM 7½ digit **£950**
KEITHLEY 617 Programmable Electrometer. **£1250**
H.P. 4338B Millichmmeter **£1500**
RACAL Counter type 1999 2·6GHz **£500**
H.P. Counter type 5313A 3GHz **£850**
H.P./AGILENT 33120A Func. Gen/ARB, 100µHz-15MH ..... **£900/£1000**
SONY/TEKTRONIX AFG320 Arbitary Func. Gen **£1250**
H.P. 8904A Syn. Function Gen, DC-600kHz ..... **£1000/£1250**
BLACK STAR JUPITOR 2010 Func. Gen, 0·2Hz-2MHz with frequency counter **£140**
H.P. 8116A Pulse Generator, 1mH-50MHz **£1950**
H.P. 8657B Syn Sig. Gen, 0·1-2080MHz **£2500**
CO-AXIAL SWITCH, 1·5GHz **£40**
IEEE CABLES **£10**

SPECTRUM ANALYSERS

H.P. 8561B 50Hz-6·5GHz **£5000**
H.P. 8560A 50Hz-2·9GHz synthesised **£5000**
H.P. 8594E 9kHz-2·9GHz **£4500**
H.P. 8591E 1MHz-1·8GHz, 75 Ohm **£2750**
H.P. 853A with **8559A** 100kHz-21GHz **£1750**
H.P. 8558B with Main Frame, 100kHz-1500MHz **£750**
H.P. 3585A 20Hz-40MHz **£2500**
H.P. 3580A 5Hz-50kHz **£600**
ADVANTEST R4131B 10kHz-3·5GHz **£2750**
EATON/AILTECH 757 0·001-22GHz **£750**
MARCONI 2382 100Hz-400MHz, high resolution **£2000**
MARCONI 2370 30Hz-110MHz ..... from **£500**
H.P. 182 with 8557 10kHz-350MHz **£500**
H.P. 141T SYSTEMS
8553 1kHz-110MHz **£500**
8554 500kHz-1250MHz **£750**
8555 10MHz-18GHz **£1000**
H.P. 8443 Tracking Gen/Counter, 110MHz **£250**
H.P. 8444 OPT 059 ..... **£750**
B&K 2033R Signal Analyser **£650**
H.P. 8754A Network Analyser, 4MHz-1300MHz **£1250**
H.P. 3557A Network Analyser, 5Hz-200MHz **£3000**
H.P. 53310A Mod Domain Analyser Opt 001/003 ..... **£5000**
ONO SOKKI CF300 Portable FFT Analyser **£1500**
H.P. 8720C Microwave Network Analyser, 50MHz-20GHz **£12,500**

STEWART of READING

110 WYKEHAM ROAD, READING, BERKS. RG6 1PL
Telephone: (0118) 9268041. Fax: (0118) 9351696
www.stewart-of-reading.co.uk
Callers welcome 9am-5.30pm Monday to Friday (other times by arrangement)

Used Equipment – GUARANTEED. Manuals supplied
This is a VERY SMALL SAMPLE OF STOCK. SAE or Telephone for lists.
Please check availability before ordering.
CARRIAGE all units £16. VAT to be added to Total of Goods and Carriage

Learn About Microcontrollers

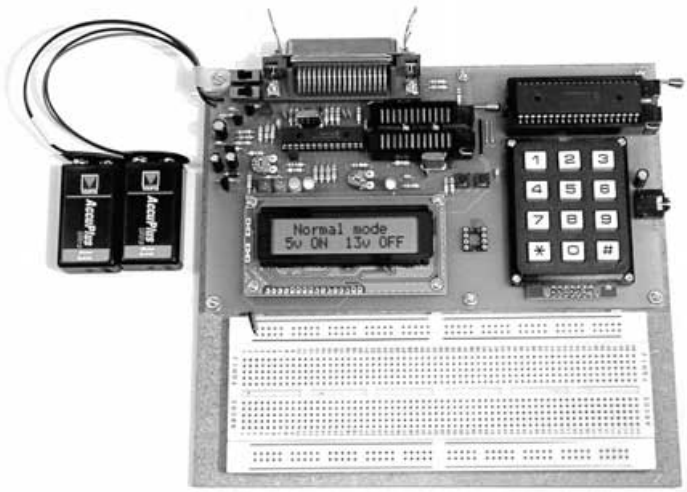

PIC Training & Development System

The best place to start learning about microcontrollers is the PIC16F84. This is easy to understand and very popular with construction projects. Then continue on using the more sophisticated PIC16F877 family.

The heart of our system is a real book which lies open on your desk while you use your computer to type in the programme and control the hardware. Start with four very simple programmes. Run the simulator to see how they work. Test them with real hardware. Follow on with a little theory....

Our complete PIC training and development system consists of our universal mid range PIC programmer, a 306 page book covering the PIC16F84, a 262 page book introducing the PIC16F877 family, and a suite of programmes to run on a PC. The module is an advanced design using a 28 pin PIC16F872 to handle the timing, programming and voltage switching requirements. The module has two ZIF sockets and an 8 pin socket which between them allow most mid range 8, 18, 28 and 40 pin PICs to be programmed. The plugboard is wired with a 5 volt supply. The software is an integrated system comprising a text editor, assembler disassembler, simulator and programming software. The programming is performed at normal 5 volts and then verified with plus and minus 10% applied to ensure that the device is programmed with a good margin and not poised on the edge of failure. Requires two PP3 batteries which are not supplied.

Universal mid range PIC programmer module
+ Book Experimenting with PIC Microcontrollers
+ Book Experimenting with the PIC16F877 (2nd edition)
+ Universal mid range PIC software suite
.....+ PIC16F84 and PIC16F872 test PICs. £157.41
UK Postage and insurance. . . . . £ 7.50
(Europe postage & Insurance. . £13.00. Rest of world. . £24.00)

Experimenting with PIC Microcontrollers

This book introduces the PIC16F84 and PIC16C711, and is the easy way to get started for anyone who is new to PIC programming. We begin with four simple experiments, the first of which is explained over ten and a half pages assuming no starting knowledge except the ability to operate a PC. Then having gained some practical experience we study the basic principles of PIC programming, learn about the 8 bit timer, how to drive the liquid crystal display, create a real time clock, experiment with the watchdog timer, sleep mode, beeps and music, including a rendition of Beethoven's *Für Elise*. Finally there are two projects to work through, using the PIC16F84 to create a sinewave generator and investigating the power taken by domestic appliances. In the space of 24 experiments, two projects and 56 exercises the book works through from absolute beginner to experienced engineer level.

Ordering Information

Telephone with Visa, Mastercard or Switch, or send cheque/PO for immediate despatch. All prices include VAT if applicable. Postage must be added to all orders. UK postage £2.50 per book, £1.00 per kit, maximum £7.50. Europe postage £3.50 per book, £1.50 per kit. Rest of World £6.50 per book, 2.50 per kit.
Web site:- **www.brunningsoftware.co.uk**

NEW 32 bit PC Assembler

Experimenting with PC Computers with its kit is the easiest way ever to learn assembly language programming. If you have enough intelligence to understand the English language and you can operate a PC computer then you have all the necessary background knowledge. Flashing LEDs, digital to analogue converters, simple oscilloscope, charging curves, temperature graphs and audio digitising.
Kit now supplied with our 32 bit assembler with 84 page supplement detailing the new features and including 7 experiments PC to PIC communication. Flashing LEDs, writing to LCD and two way data using 3 wires from PC's parallel port to PIC16F84.

Book Experimenting with PCs £21.50
Kit 1a 'made up' with software £52.00
Kit 1u 'unmade' with software £45.00

C & C++ for the PC

Experimenting with C & C++ Programmes teaches us to programme by using C to drive the simple hardware circuits built using the materials supplied in the kit. The circuits build up to a storage oscilloscope using relatively simple C techniques to construct a programme that is by no means simple. When approached in this way C is only marginally more difficult than BASIC and infinitely more powerful. C programmers are always in demand. Ideal for absolute beginners and experienced programmers.

Book Experimenting with C & C++ £24.99
Kit CP2a 'made up' with software £32.51
Kit CP2u 'unmade' with software £26.51
Kit CP2t 'top up' with software £12.99

The Kits

The assembler and C & C++ kits contain the prototyping board, lead assemblies,components and programming software to do all the experiments. The 'made up' kits are supplied ready to start. The 'top up' kit is for readers who have already purchased kit 1a or 1u. The kits do not include the book.

Hardware required

All systems in this advertisement assume you have a PC (386 or better) and a printer lead. The experiments require no soldering.

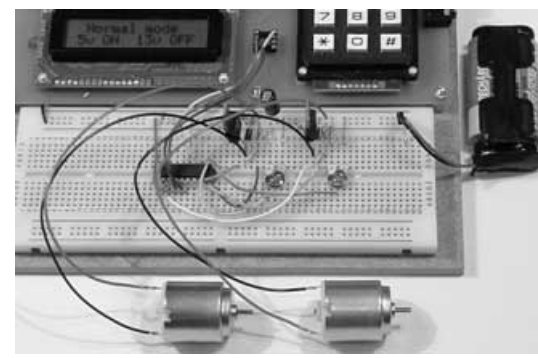

Experimenting with the PIC16F877

The second PIC book starts with the simplest of experiments to give us a basic understanding of the PIC16F877 family. Then we look at the 16 bit timer, efficient storage and display of text messages, simple frequency counter, use a keypad for numbers, letters and security codes, and examine the 10 bit A/D converter.

The 2nd edition has two new chapters. The PIC16F627 is introduced as a low cost PIC16F84. We use the PIC16F627 as a step up switching regulator, and to control the speed of a DC motor with maximum torque still available. Then we study how to use a PIC to switch mains power using an optoisolated triac driving a high current triac.

Mail order address:

Brunning Software **138 The Street, Little Clacton, Clacton-on-sea, Essex, CO16 9LS. Tel 01255 862308**

MAGENTA ELECTRONICS LTD

EE246 135 Hunter Street, Burton-on-Trent, Staffs. DE14 2ST
Tel 01283 565435 Fax 546932
http://www.magenta2000.co.uk
E-mail: sales@magenta2000.co.uk
All Prices include V.A.T. ADD £3.00 PER ORDER P&P. £6.99 next day

VISA EUROCARD MasterCard SWITCH

MAIL ORDER ONLY ● CALLERS BY APPOINTMENT

EPE PROJECT PICS

Programmed PICs for *EPE Projects
12C508/9 – £3.90; 16F627/8 – £4.90
16C84/16F84/16C71 – £5.90
16F876/877 – £10.00
All inc. VAT and Postage
(*Some projects are copyright)

EPE MICROCONTROLLER P.I. TREASURE HUNTER

The latest MAGENTA DESIGN – highly stable & sensitive – with I.C. control of all timing functions and advanced pulse separation techniques.

- High stability drift cancelling
- Easy to build & use
- No ground effect, works in seawater

- Detects gold, silver, ferrous & non-ferrous metals
- Efficient quartz controlled microcontroller pulse generation.
- Full kit with headphones & all hardware

KIT 847 . . . . . .£63.95

68000 DEVELOPMENT TRAINING KIT

- NEW PCB DESIGN
- 8MHz 68000 16-BIT BUS
- MANUAL AND SOFTWARE
- 2 SERIAL PORTS
- PIT AND I/O PORT OPTIONS
- 12C PORT OPTIONS

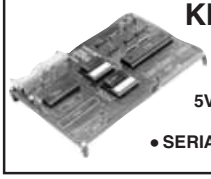

KIT 621 £99.95
• ON BOARD 5V REGULATOR
• PSU £6.99
• SERIAL LEAD £3.99

Stepping Motors

MD100..Std 100 step..£9.99
MD200...200 step...£12.99
MD24...Large 200 step...£22.95

PIC PIPE DESCALER

- SIMPLE TO BUILD
- SWEPT FREQUENCY
- HIGH POWER OUTPUT
- AUDIO & VISUAL MONITORING

An affordable circuit which sweeps the incoming water supply with variable frequency electromagnetic signals. May reduce scale formation, dissolve existing scale and improve lathering ability by altering the way salts in the water behave.
Kit includes case, P.C.B., coupling coil and all components.
High coil current ensures maximum effect. L.E.D. monitor.

KIT 868 ..... £22.95 **POWER UNIT.....£3.99**

MICRO PEsT SCARER

Our latest design – The ultimate scarer for the garden. Uses special microchip to give random delay and pulse time. Easy to build reliable circuit. Keeps pets/pests away from newly sown areas, play areas, etc. uses power source from 9 to 24 volts.

- **RANDOM PULSES**
- **HIGH POWER**
- **DUAL OPTION**

Plug-in power supply £4.99

KIT 867. . . . . .£19.99
KIT + SLAVE UNIT. £32.50

WINDICATOR

A novel wind speed indicator with LED readout. Kit comes complete with sensor cups, and weatherproof sensing head. Mains power unit £5.99 extra.

KIT 856. . . . . .£28.00

★ TENS UNIT ★

DUAL OUTPUT TENS UNIT

As featured in March '97 issue.

Set of 4 spare electrodes **£6.50**

Magenta have prepared a FULL KIT for this. excellent new project. All components, PCB, hardware and electrodes are included. Designed for simple assembly and testing and providing high level dual output drive.

KIT 866. . Full kit including four electrodes £32.90

1000V & 500V INSULATION TESTER

Superb new design. Regulated output, efficient circuit. Dual-scale meter, compact case. Reads up to 200 Megohms.
Kit includes wound coil, cut-out case, meter scale, PCB & ALL components.

KIT 848. . . . . £32.95

EPE TEACH-IN 2000

Full set of top quality *NEW* components for this educational series. All parts as specified by *EPE*. Kit includes breadboard, wire, croc clips, pins and all components for experiments, as listed in introduction to Part 1.
**Batteries and tools not included.*

TEACH-IN 2000 -

KIT 879 £44.95
MULTIMETER £14.45

SPACEWRITER

An innovative and exciting project. Wave the wand through the air and your message appears. Programmable to hold any message up to 16 digits long. Comes pre-loaded with "MERRY XMAS". Kit includes PCB, all components & tube plus instructions for message loading.

KIT 849 . . . . . .£16.99

12V EPROM ERASER

A safe low cost eraser for up to 4 EPROMS at a time in less than 20 minutes. Operates from a 12V supply (400mA). Used extensively for mobile work - updating equipment in the field etc. Also in educational situations where mains supplies are not allowed. Safety interlock prevents contact with UV.

KIT 790 . . . . . .£29.90

SUPER BAT DETECTOR

1 WATT O/P, BUILT IN SPEAKER, COMPACT CASE
20kHz-140kHz
NEW DESIGN WITH 40kHz MIC.

A new circuit using a 'full-bridge' audio amplifier i.c., internal speaker, *and* headphone/tape socket. The latest sensitive transducer, and 'double balanced mixer' give a stable, high performance superheterodyne design.

KIT 861 . . . . . .£24.99
ALSO AVAILABLE Built & Tested. . . £39.99

MOSFET MkII VARIABLE BENCH POWER SUPPLY 0-25V 2·5A

Based on our Mk1 design and preserving all the features, but now with switching pre-regulator for much higher efficiency. Panel meters indicate Volts and Amps. Fully variable down to zero. Toroidal mains transformer. Kit includes punched and printed case and all parts. As featured in April 1994 *EPE*. An essential piece of equipment.

Kit No. 845 . . . . . .£64.95

ULTRASONIC PEsT SCARER

Keep pets/pests away from newly sown areas, fruit, vegetable and flower beds, children's play areas, patios etc. This project produces intense pulses of ultrasound which deter visiting animals.

- KIT INCLUDES ALL COMPONENTS, PCB & CASE
- EFFICIENT 100V TRANSDUCER OUTPUT
- COMPLETELY INAUDIBLE TO HUMANS
- UP TO 4 METRES RANGE
- LOW CURRENT DRAIN

KIT 812. . . . . £15.00

SIMPLE PIC PROGRAMMER

KIT 857... £12.99

Includes PIC16F84 chip disk, lead, plug, p.c.b., all components and instructions

Extra 16F84 chips £3.84
Power Supply £3.99

MAGENTA BRAINIBOT I & II

NEW

- Full kit with ALL hardware and electronics
- As featured in *EPE* Feb '03 – KIT 910
- Seeks light, beeps, avoids obstacles
- Spins and reverses when 'cornered'
- Uses 8-pin PIC
- ALSO KIT 911 – As 910 *PLUS* programmable from PC serial port – leads and software CD provided

KIT 910 £16.99 **KIT 911 £24.99**

PIC 16F84 MAINS POWER 4-CHANNEL CONTROLLER & LIGHT CHASER

- ZERO VOLT SWITCHING
- OPTO ISOLATED 5 Amp
- 12 KEYPAD CONTROL
- HARD-FIRED TRIACS
- WITH SOURCE CODE
- SPEED & DIMMING POT.
- EASILY PROGRAMMED

Kit 855 £39.95

PIC 16F84 LCD DISPLAY DRIVER

INCLUDES 1-PIC16F84 WITH DEMO PROGRAM SOFTWARE DISK, PCB, INSTRUCTIONS AND 16-CHARACTER 2-LINE **LCD DISPLAY**

Kit 860 £19.99

Power Supply £3.99

FULL PROGRAM SOURCE CODE SUPPLIED – DEVELOP YOUR OWN APPLICATION!

Another super PIC project from Magenta. Supplied with PCB, industry standard 2-LINE × 16-character display, data, all components, and software to include in your own programs. Ideal development base for meters, terminals, calculators, counters, timers – Just waiting for your application!

8-CHANNEL DATA LOGGER

NEW!

As featured in Aug./Sept. '99 *EPE*. Full kit with Magenta redesigned PCB – LCD fits directly on board. Use as Data Logger *or* as a test bed for many other 16F877 projects. Kit includes programmed chip, 8 EEPROMs, PCB, case and all components.

KIT 877 £49.95 inc. 8 × 256K EEPROMS

ICEBREAKER

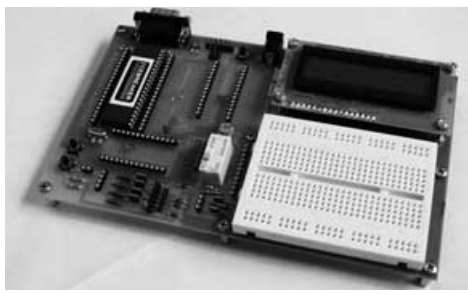

PIC Real Time In-Circuit Emulator

- Icebreaker uses PIC16F877 in circuit debugger
- Links to Standard PC **Serial** Port (lead supplied)
- Windows™ (95+) Software included
- Works with MPASM and MPLAB Microchip software
- 16 x 2 L.C.D., Breadboard, Relay, I/O devices and patch leads supplied

As featured in March '00 *EPE*. Ideal for beginners AND advanced users.
Programs can be written, assembled, downloaded into the microcontroller and run at full speed (up to 20MHz), or one step at a time.
Full emulation means that all I/O ports respond exactly and immediately, reading and driving external hardware.
Features include: Reset; Halt on external pulse; Set Breakpoint; Examine and Change registers, EEPROM and program memory; Load program, Single Step with display of Status, W register, Program counter, and user selected 'Watch Window' registers.

KIT 900 . . . £34.99

POWER SUPPLY **£3.99** STEPPING MOTOR 100 STEP **£9.99**

EPE PIC TOOLKIT 3

NEW

- THE LATEST TOOLKIT BOARD – 8, 18, 28 AND 40-PIN CHIPS
- MAGENTA DESIGNED P.C.B. WITH COMPONENT LAYOUT AND EXTRAS
- L.C.D., BREADBOARD AND PIC CHIP INCLUDED
- ALL TOP QUALITY COMPONENTS AND SOFTWARE SUPPLIED

KIT 880 . . . £34.99 with 16F84 . . . £39.99 with 16F877

PIC TOOLKIT V2

- SUPER UPGRADE FROM V1 • 18, 28 AND 40-PIN CHIPS
- READ, WRITE, ASSEMBLE & DISASSEMBLE PICS
- SIMPLE POWER SUPPLY OPTIONS 5V-20V
- ALL SWITCHING UNDER SOFTWARE CONTROL
- MAGENTA DESIGNED PCB HAS TERMINAL PINS AND OSCILLATOR CONNECTIONS FOR ALL CHIPS
- INCLUDES SOFTWARE AND PIC CHIP

KIT 878 . . . £22.99 with 16F84 . . . £29.99 with 16F877

EPE PIC Tutorial

At last! A Real, Practical, Hands-On Series

- **Learn Programming from scratch using PIC16F84**
- **Start by lighting l.e.d.s and do 30 tutorials to Sound Generation, Data Display, and a Security System.**
- **PIC TUTOR Board with Switches, l.e.d.s, and on board programmer**

PIC TUTOR BOARD KIT

Includes: PIC16F84 Chip, TOP Quality PCB printed with Component Layout and all components* (*not ZIF Socket or Displays). Included with the Magenta Kit is a disk with Test and Demonstration routines.

KIT 870 .... £27.95, Built & Tested £42.95

Optional: **Power Supply – £3.99, ZIF Socket – £9.99**
LCD Display ..... £7.99 LED Display £6.99
Reprints Mar/Apr/May 98 – **£3.00 set 3**

SUPER PIC PROGRAMMER

- READS, PROGRAMS, AND VERIFIES
- WINDOWS™ SOFTWARE
- PIC16C AND 16F – 6X, 7X, AND 8X
- USES ANY PC PARALLEL PORT
- USES STANDARD MICROCHIP • HEX FILES
- OPTIONAL DISASSEMBLER SOFTWARE (EXTRA)
- PCB, LEAD, ALL COMPONENTS, TURNED-PIN SOCKETS FOR 18, 28, AND 40 PIN ICs

• SEND FOR DETAILED INFORMATION – A SUPERB PRODUCT AT AN UNBEATABLE LOW PRICE.

Kit 862 £29.99

Power Supply £3.99

DISASSEMBLER SOFTWARE £11.75

PIC STEPPING MOTOR DRIVER

INCLUDES PCB, PIC16F84 WITH DEMO PROGRAM, SOFTWARE DISC, INSTRUCTIONS AND MOTOR.

Kit 863 £18.99

FULL SOURCE CODE SUPPLIED
ALSO USE FOR DRIVING OTHER POWER DEVICES e.g. SOLENOIDS

Another Magenta PIC project. Drives any 4-phase unipolar motor – up to 24V and 1A. Kit includes all components and 48 step motor. Chip is pre-programmed with demo software, then write your own, and re-program the same chip! Circuit accepts inputs from switches etc and drives motor in response. Also runs standard demo sequence from memory.

MAGENTA

All prices include VAT. Add **£3.00** p&p. Next day **£6.99**

Tel: 01283 565435 Fax: 01283 546932 E-mail: sales@magenta2000.co.uk

EVERYDAY PRACTICAL ELECTRONICS
THE No.1 MAGAZINE FOR ELECTRONICS TECHNOLOGY & COMPUTER PROJECTS

VOL. 32 No. 2 FEBRUARY 2003

Editorial Offices:
EVERYDAY PRACTICAL ELECTRONICS EDITORIAL
WIMBORNE PUBLISHING LTD., 408 WIMBORNE ROAD EAST,
FERNDOWN, DORSET BH22 9ND
Phone: (01202) 873872. Fax: (01202) 874562.
Email: enquiries@epemag.wimborne.co.uk
Web Site: www.epemag.wimborne.co.uk
EPE Online (downloadable version of *EPE*)**:** www.epemag.com
EPE Online Shop: www.epemag.wimborne.co.uk/shopdoor.htm
See notes on **Readers' Technical Enquiries** below – we regret lengthy technical enquiries cannot be answered over the telephone.
Advertisement Offices:
EVERYDAY PRACTICAL ELECTRONICS ADVERTISEMENTS
MILL LODGE, MILL LANE,
THORPE-LE-SOKEN, ESSEX CO16 0ED
Phone/Fax: (01255) 861161 Email: epeads@aol.com

ROBO

A few years ago we ran a regular Robotics page in the magazine reporting on new robotic arms, buggies, events etc. Eventually we had to discontinue this because of the lack of material, now, however, it looks like robotics is back on the agenda, thanks mainly to programmes like *Robot Wars* on the TV.

We are aware that over the past year there have been a number of robotic events staged by museums, universities and other educational bodies around the country. *RoboFesta UK* (sponsored by the Open University) has been set up to promote science and technology in Britain through robot events and competitions, education and teamwork, their web site shows various robotic events taking place in the UK and also refers to *RoboFesta Europe*, although at the time of writing the site was in need of updating. The web address is **www.robofesta-uk.org**.

There are various competitions for robots, like the RoboFesta RoboCup Junior Football and the Lunar Rover Competition, also the First Lego League which uses Lego Mindstorms based challenges to promote teamwork and friendly competition.

If you are organising a "robot event" in the future please let us know in good time so we can make readers aware of it.

BRAINIBOT

With this renewed interest in robot building our *Brainibot Buggy* project should go down well, and since it is easy and cheap to build it should be appealing to all hobbyists and students. Depending on the interest shown, this may well be a subject we revisit in the future.

This is, of course, yet another area of electronics that involves computing – in the case of *Brainibot* to program the PIC – and this area in general has been increasingly popular over the last few years. No doubt many computer buffs are getting fed up with simply playing games and want to find out more about the technology inside a PC and, of course, to use their PC in conjunction with add-on or programmable projects.

Brainibot forms an excellent introduction to this, it can be built using the pre-programmed PIC chip, but for anyone who wants to go further the circuit and PIC program can be developed to enable more functions on the simple *Brainibot* chassis.

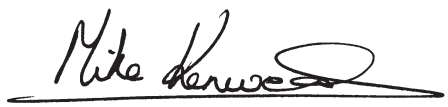

Editor: MIKE KENWARD
Deputy Editor: DAVID BARRINGTON
Technical Editor: JOHN BECKER
Business Manager: DAVID J. LEAVER
Subscriptions: MARILYN GOLDBERG
Administration: FAY KENWARD
Editorial/Admin: (01202) 873872
Advertisement Manager:
PETER J. MEW, Frinton (01255) 861161
Advertisement Copy Controller:
PETER SHERIDAN, (01202) 873872
On-Line Editor: ALAN WINSTANLEY
EPE Online (Internet version) **Editors:**
CLIVE (MAX) MAXFIELD and ALVIN BROWN

READERS' TECHNICAL ENQUIRIES
E-mail: techdept@epemag.wimborne.co.uk
We are unable to offer any advice on the use, purchase, repair or modification of commercial equipment or the incorporation or modification of designs published in the magazine. We regret that we cannot provide data or answer queries on articles or projects that are more than five years old. Letters requiring a personal reply *must* be accompanied by a **stamped self-addressed envelope or a self-addressed envelope and international reply coupons.**

PROJECTS AND CIRCUITS
All reasonable precautions are taken to ensure that the advice and data given to readers is reliable. We cannot, however, guarantee it and we cannot accept legal responsibility for it.
A number of projects and circuits published in *EPE* employ voltages than can be lethal. **You should not build, test, modify or renovate any item of mains powered equipment unless you fully understand the safety aspects involved and you use an RCD adaptor.**

COMPONENT SUPPLIES
We do not supply electronic components or kits for building the projects featured, these can be supplied by advertisers (see *Shoptalk*). **We advise readers to check that all parts are still available before commencing any project in a back-dated issue.**

ADVERTISEMENTS
Although the proprietors and staff of EVERYDAY PRACTICAL ELECTRONICS take reasonable precautions to protect the interests of readers by ensuring as far as practicable that advertisements are *bona fide,* the magazine and its Publishers cannot give any undertakings in respect of statements or claims made by advertisers, whether these advertisements are printed as part of the magazine, or in inserts.
The Publishers regret that under no circumstances will the magazine accept liability for non-receipt of goods ordered, or for late delivery, or for faults in manufacture.

TRANSMITTERS/BUGS/TELEPHONE EQUIPMENT
We advise readers that certain items of radio transmitting and telephone equipment which may be advertised in our pages cannot be legally used in the UK. Readers should check the law before buying any transmitting or telephone equipment as a fine, confiscation of equipment and/or imprisonment can result from illegal use or ownership. The laws vary from country to country; readers should check local laws.

AVAILABILITY
Copies of *EPE* are available on subscription anywhere in the world (see opposite), from all UK newsagents (distributed by COMAG) and from the following electronic component retailers: Omni Electronics and Yebo Electronics (S. Africa). *EPE* can also be purchased from retail magazine outlets around the world. An Internet on-line version can be purchased and downloaded for just $10.99US (approx £7) per year available from **www.epemag.com**

SUBSCRIPTIONS
Subscriptions for delivery direct to any address in the UK: 6 months £15.50, 12 months £29.50, two years £54; Overseas: 6 months £18.50 standard air service or £27.50 express airmail, 12 months £35.50 standard air service or £53 express airmail, 24 months £66 standard air service or £101 express airmail.
Online subscriptions, for downloading the magazine via the Internet, $10.99US (approx £7) for one year available from **www.epemag.com**.
Cheques or bank drafts (in **£ sterling only**) payable to *Everyday Practical Electronics* and sent to EPE Subs. Dept., Wimborne Publishing Ltd. 408 Wimborne Road East, Ferndown, Dorset BH22 9ND. Tel: 01202 873872. Fax: 01202 874562. **Email:** subs@epemag.wimborne.co.uk. Also via the **Web** at: **http://www.epemag.wimborne.co.uk**. Subscriptions start with the next available issue. We accept MasterCard, Amex, Diners Club, Switch or Visa. (For past issues see the *Back Issues* page.*)*

BINDERS
Binders to hold one volume (12 issues) are available from the above address. These are finished in blue p.v.c., printed with the magazine logo in gold on the spine. Price £6.95 plus £3.50 p&p (for overseas readers the postage is £6.00 to everywhere except Australia and Papua New Guinea which cost £10.50). *Normally sent within seven days but please allow 28 days for delivery – more for overseas.*

Payment in £ sterling only please. Visa, Amex, Diners Club, Switch and MasterCard accepted. Send, fax or phone your card number, card expiry date and card security code (the last 3 digits on or just under the signature strip), with your name, address etc. Or order on our secure server via our UK web site. Overseas customers – your credit card will be charged by the card provider in your local currency at the existing exchange rate.

Constructional Project

BRAINIBOT BUGGY

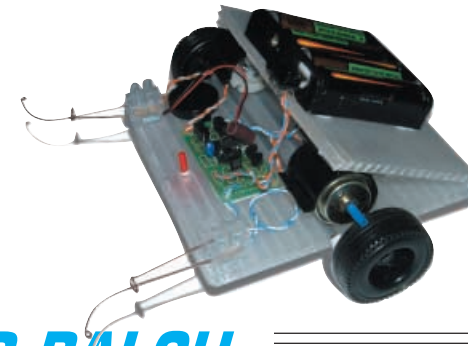

MARK STUART AND PETER BALCH

A low-cost, easy-build buggy that has a mind of its own!

THIS project was designed to provide an interesting and entertaining project for young craft and technology students. At first glance it is a simple two-wheeled buggy, but its responses to signals from its three sensors make it appear to be surprisingly intelligent. The mechanical design described has been kept as simple as possible so that basic components can be used, but other hardware can be adapted to run from the same circuits – providing plenty of room for experiments.

To keep the assembly simple, the electronic control board was designed to use the bare minimum of components, and the smallest PIC microcontroller that would provide sufficient inputs and outputs. The final design uses the PIC12C508 8-pin microcontroller, demonstrates some interesting PIC programming and hardware techniques, and has a performance that would be expected from something much more complicated.

DESIGN

The basis of this project like most other "buggy" designs is a simple two-wheeled chassis stabilised by front and rear "bumpers". The wheels are driven independently forwards and backwards and steering is achieved by driving one wheel whilst the other wheel is at rest or driven in the opposite direction.

To provide full bi-directional control of the motors they are driven from a "full bridge" circuit. This means that each motor needs two output pins from the PIC microcontroller. Two more pins of the PIC are used for power, leaving just two pins for the remaining functions.

One of the pins GP3 (Pin 4) is input only, and so is limited in capability. It has an internal pull-up resistor however, and so is used to read one of the "antennae". The remaining pin, GP2, is more versatile and can be changed between input and output under program control. It is used to read the light sensor, the other antenna, and to sound the beeper.

The two motors are standard 1·5V to 3V model motors. They drive the rims of the wheels by simple friction contact with a short length of sleeving fitted tightly over their spindles. To provide the right force to drive the wheels without slipping, the batteries and motors are fitted to a section of the chassis which is folded over. Their combined weight is used to provide a steady force between the motor spindles and the tops of the wheels – see photographs.

Each of the antenna sensors is made from two pieces of bent springy wire. Anything that touches the longer wire bends it into contact with a surrounding loop of the other wire.

A cadmium sulphide light sensitive resistor (l.d.r.) gives the buggy its "eye". The l.d.r. sensor is fitted with a short length of sleeving so that it is most sensitive to light from directly in front. Brighter light lowers the resistance of the sensor.

A piezo transducer, WD1, driven with a square wave from the PIC provides a "beeper" function.

CIRCUIT DESCRIPTION

The complete circuit diagram for the Brainibot Buggy is shown in Fig.1. All of the "intelligence" is provided by IC1 – the PIC12C508 microcontroller. This is one of the simplest PIC chips, but it is still capable of providing all the functions needed.

The commonly used 8-pin 12C508 and the bigger memory 12C509 PICs are more closely related to the earlier 16C5x parts and have some programming limitations compared to the more familiar PIC16F84. Despite this it was still possible to write the original program in a version of BASIC and compile it into a small enough hex file to fit comfortably.

Having an internal 4MHz clock, IC1 does not need external crystal or resistor/capacitor oscillator components. It

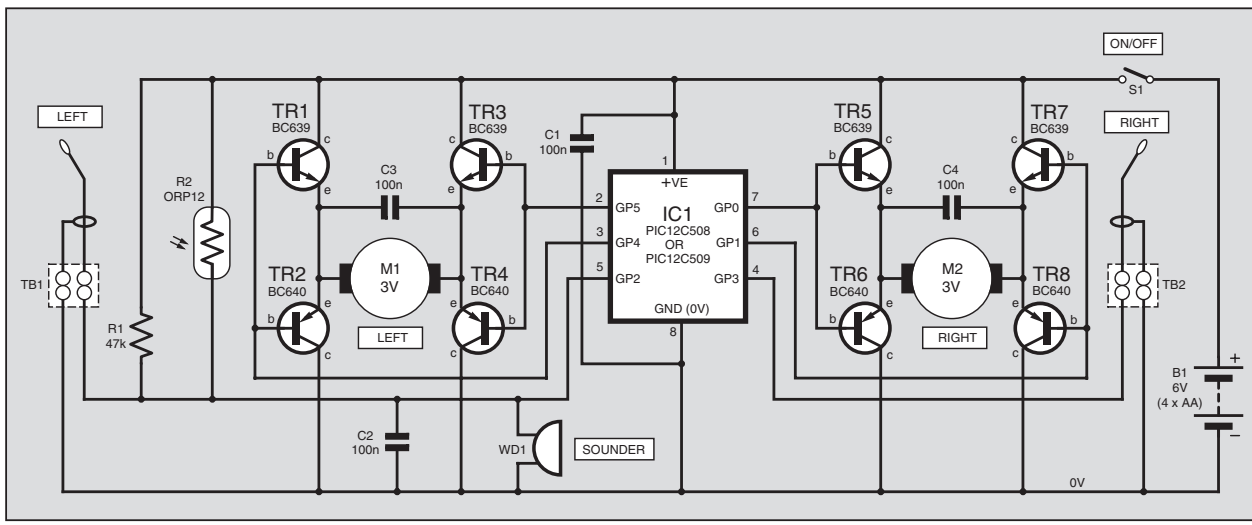

Fig.1. Complete circuit diagram for the Brainibot Buggy.

also has an internal "power on reset" function (corresponding to the usual PIC MCLR pin) making effective use of the 8-pin package and leaving 6-pins available for inputs and outputs.

MOTOR DRIVE

The two motor drive circuits are identical. The Left motor M1 is driven from GP4 and GP5 of the PIC and the Right motor from GP0 and GP1. PIC output pins are relatively powerful, and can provide up to 25mA, but the small cheap motors used won't even move at that current and need 200mA to 300mA to do anything useful.

It is important to use reasonably efficient motors. The ones used in the protorype are specified as 46% efficiency at 3V and 110mA. Some cheap model motors are much less efficient and might not run very well. If there are problems with slow or unreliable running, make sure the motors are of good enough quality.

COMPONENTS

Resistors

R1	47k 0·25W 5% carbon film	See SHOP TALK page
R2	ORP12 miniature light dependent resistor (l.d.r.)	

Capacitors

C1, C2	100n ceramic or plastic film, 5mm pitch
C3, C4	100n ceramic disc, long leads required

Semiconductors

TR1, TR3, TR5, TR7	BC639 *npn* silicon transistor (4 off)
TR2, TR4 TR6, TR8	BC640 *pnp* silicon transistor (4 off)
IC1	PIC12C508 or 509 microcontroller, pre-programmed (see text)

Miscellaneous

M1, M2	3V d.c. miniature motor (see text), 2 off
S1	s.p.s.t. miniature slide or toggle switch
B1	6V battery pack, 4 x AA with side-by-side holder and clips
WD1	piezoelectric sounder, low-profile

Printed circuit board available from the *EPE PCB Service*, code 383; 8-pin d.i.l. socket; 2-way min. screw terminal block (2 off); wheels, axles, sticky pads, self-adhesive motor clips (2 off) and chassis material (see text); sleeving for motor spindles and l.d.r. (see text); antenna wire (see text); connecting wire; solder etc.

Approx. Cost Guidance Only **£20** ***excluding batts.***

To provide the current needed to drive the motors, an emitter follower transistors configuration is used. Transistor TR1 is a *npn* device and is turned on when IC1 pin 3 is set *high*, and the *pnp* transistor TR2 is turned on when pin 3 is set *low,* so that the left hand connection of motor M1 is switched either via TR1 to the positive supply (+V) or via TR2 to the battery negative (0V). It is worth noting that TR1 and TR2 cannot be switched on at the same time – if they were, a high current would flow directly from +V to 0V. The right hand connection of M1 is switched in the same way via TR3 and TR4, from IC1 pin 2.

To motor drive M1 in the forward direction, IC1 pin 3 is set high and pin 2 is set low so that TR1 and TR4 are turned on. Current flows from the positive line (+V), via TR1, through the motor and TR4 to 0V. To reverse the motor, IC1 pin 3 is set low and pin 2 is set high so that current now flows from +V, via TR3, through the motor (in the opposite direction) and via TR2 to 0V.

If IC1 pin 3 and pin 4 are both low, transistors TR2 and TR4 are turned on and both motor connections are switched to 0V so that it cannot run. Similarly if pins 3 and 4 are high, both motor connections are switched to +V.

This arrangement of four transistors is called an H-bridge – because of the shape of the circuit diagram. It is possible to buy a single chip containing all of the 'H' bridge transistors, but they are usually designed for use at higher power levels and would cost much more than individual transistors for this simple application.

NOISE SUPPRESSION

Capacitor C3 is fitted directly across the motor connections to absorb the interference that is generated as the motor rotates and the brushes switch from section to section of the commutator. Without C1 there is a lot of electrical noise generated that can interfere with the program in IC1 and cause strange behaviour.

It is also a good idea to connect a wire from one of the motor terminals to the metal motor case. This provides improved interference suppression as the motor case acts as a screen. It is possible to solder to the motor case if it is first scraped with a knife, or a small area is cleaned with abrasive paper or a fine file.

The Right motor M2 is driven from pins 6 and 7 of IC1 and transistors TR5 to TR8. Capacitor C4 should be fitted in the same way as C3.

TOUCH SENSITIVE

Antenna sensors are fitted to the left and right front corners of the buggy. When they touch an obstruction the inner flexible wire bends and contacts its surrounding wire loop.

The loop surrounding the right hand antenna connects directly to input GP3 (pin 4) of the PIC. This pin has an internal resistor so that it is normally held up to +V and so is read by the program as logic '1'. When the antenna is touched it is connected to 0V and so it reads the input as a logic '0'.

The left antenna works in the same way, but input GP2 (pin 5) does not have an internal pull up resistor and the piezo sounder WD1, light-dependent resistor R2 and capacitor C2 are also connected to this pin. The sounder "looks" like a capacitor, so does not draw any current, l.d.r. R2 has a resistance between one kilohm in the light and one megohm in the dark, and is in parallel with R1 so that it has the effect of changing the pull-up resistor value.

Movement of the left antenna pulls pin 5 down to 0V, but the other components connected to this pin mean that the sensing has to be done in a special way – using GP2 first as an output and driving it high so that the piezo sounder and C2 are fully charged, and then switching the pin back to an input and reading the level. This is explained in the software section later.

The resistance of the l.d.r. R2 must be measured to determine the light level. This is done by a software routine that briefly shorts out capacitor C2 and then measures the time it takes to charge. More light reduces the value of R2 and thus provides a shorter charge time. It is not possible to measure the light level if the

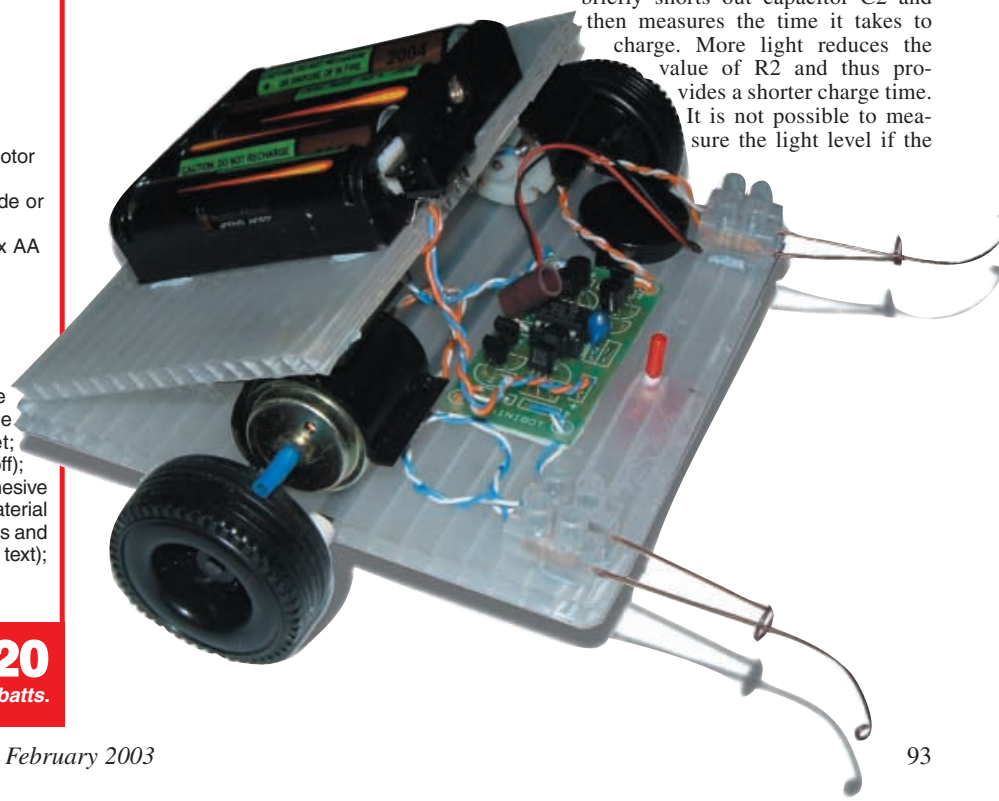

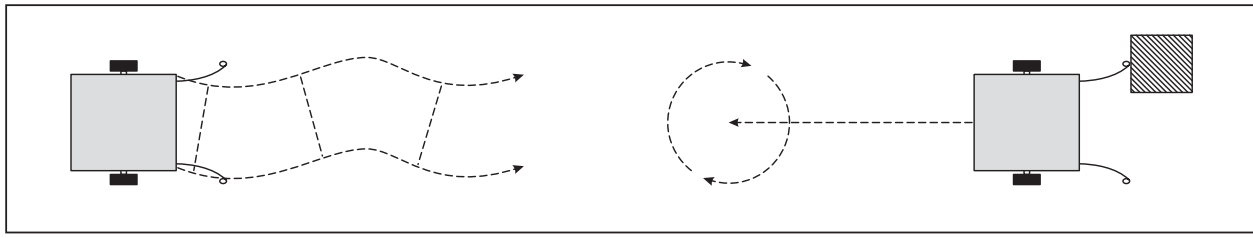

Fig.2. Demonstrating how Brainibot "waddles" forward whilst on the move and reverses and spins around when it meets an obstacle.

antenna is producing a short circuit, but this does not cause a conflict because the response to antennae is higher priority than the response to light.

Sounder WD1 is driven directly from the PIC by switching pin 5 alternately high and low. If there is a short circuit from the antenna the piezo sounder will be silent. All of the pins of IC1 are protected internally against short circuits, and so no harm is done if the antenna is shorted whilst there is a "beep".

Capacitor C1 ensures a low impedance supply to IC1 and also makes sure that there are no noise spikes on the supply, especially when the motors are running.

BEHAVIOUR

The buggy is programmed to seek brighter light and avoid obstacles. It begins by moving forward, turning to the left and right, at each turn it measures the light level. In this way a single light sensor can be used to determine the direction of the light.

If there is a difference between the light levels, it "chirps" and turns away from the darker direction. If it has not found any difference in light levels it continues to "waddle" forward. All the time a record is kept of the brightest light level. If there is no increase after a time it assumes that it is stuck in a corner and tries to get away by backing up and turning.

If an antenna is touched, the buggy responds by backing up and spinning away from the touched side – see Fig.2.

CONSTRUCTION

Begin construction by fitting the motor suppression capacitors C3 and C4. These should go directly across the motor terminals with their leads cut as short as possible – they can be fitted either way round. Fit a short wire from one of the motor terminals to the motor casing – see Fig.3 – this has been found to reduce radiated TV and radio interference.

The plating on the motor casing does not always solder easily, and so it is necessary to scrape or file a small area to get a good joint. You *MUST* take care not to let any filings fall inside the motor where they could stick to the magnets and jam the rotor.

CIRCUIT BOARD

It is now time to assemble the components on the small printed circuit board (p.c.b.) This board is available from the *EPE PCB Service*, code 383. The p.c.b. topside component layout and full-size underside copper foil master pattern is shown in Fig.4.

Identify the notch at the end of the socket for IC1 – it will help to make sure the PIC is plugged in the right way round later.

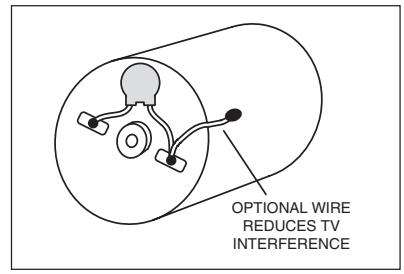

Fig.3. Connecting a capacitor (C3 or C4) directly across the motor terminals and a wire to the casing to reduce interference (see photo).

Take care to put the transistors in the right places – a little care to eliminate simple mistakes here will save a lot of time fault finding later. Capacitors C1 and C2 can fit either way round. Resistor R1 should be fitted so that it stands upright. Fit a bare wire link in the position marked LK1. The light-dependent resistor (l.d.r.) has to bend forward over IC1, as shown in Fig.5, so that it "looks" towards the front. Fit a short piece of sleeving, stripped from one of the connecting wires, over the l.d.r. lead closest to the edge of the board, and fit a 10mm length of tubing over the main body as shown.

The light sensor works better if it is angled upwards 30 degrees or so as shown. The l.d.r. tube used in the prototype, was a piece of the outer insulation from a piece of TV coaxial cable.

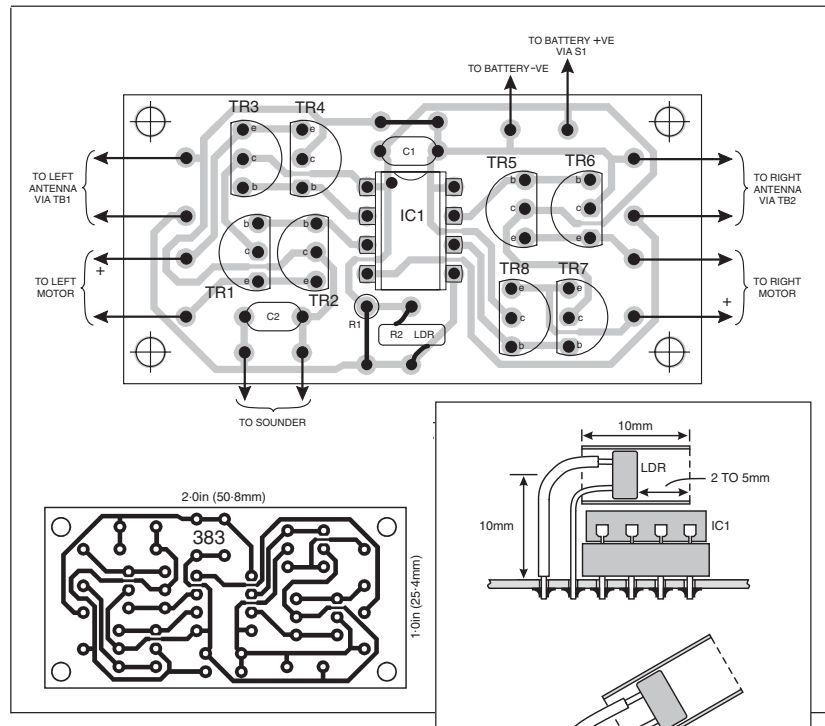

Fig.4. Printed circuit board component layout (enlarged), lead-off wires and full-size copper foil master.

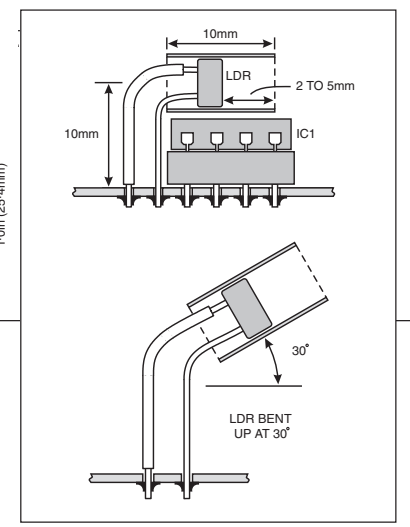

Fig.5 (right). Method of mounting and shielding the l.d.r. light sensor.

When the board is fully assembled, check it carefully for dry joints, solder bridges and correctly placed components. Do not fit IC1 until the board has been tested – see later.

WIRING

There are 12 wire connections to the printed circuit board. The sounder WD1 is fitted with two wires that can be connected either way round to the position marked SND on the board. The other 10 wires should all be cut to approximately 8cm long and fitted to the positions marked for the motors, antennae and battery. Use red and black for the battery connections to help make sure the polarity is right.

To fit each wire, strip about 6mm from the end, pass the wire into the board from the component side and solder it on the copper track side. The wires can be looped through the board corner fixing holes so that they can be moved around without stressing the joints too much.

The motor wires should be connected to the motors after the mechanical chassis assembly has been completed. The motors are embossed with + and – signs, make sure the leads are connected the right way round, otherwise the motors will run backwards – with confusing results.

The slide switch S1 can be fitted directly to the battery holder terminals or can be fitted into the wiring and mounted on the chassis. Check the battery holder to be sure which are the positive and negative terminals and make sure they match the connections marked on the p.c.b.

CHASSIS ASSEMBLY

The mechanical parts for the buggy have been kept as simple as possible, but with a little care and some adjustments the assembly works reliably. More robust methods of assembly suggest themselves, and the electronics controller can be used with many different types of motor but the supply ***must not*** exceed 6V, and performance will be limited if it falls below 4V.

Begin the chassis assembly by cutting a piece of corrugated plastic card to the dimensions shown in Fig.6. Two cuts must be made across the card to just one side so that it can be folded over. The two "bumpers" are fitted by pushing them into tight fitting holes that can be made with a

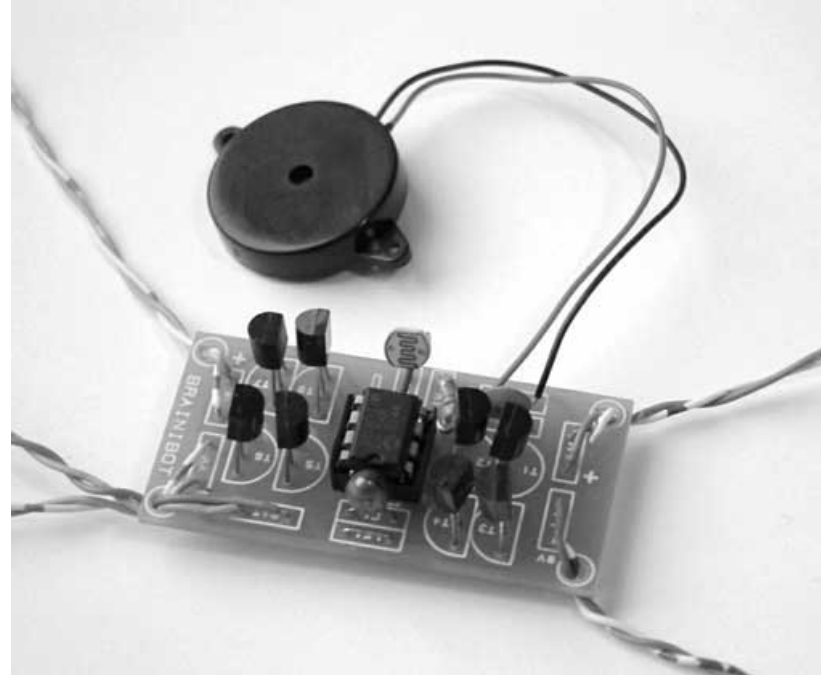

Components mounted on the completed circuit board. Note the connecting leads threaded through the four corner holes to help secure the wires.

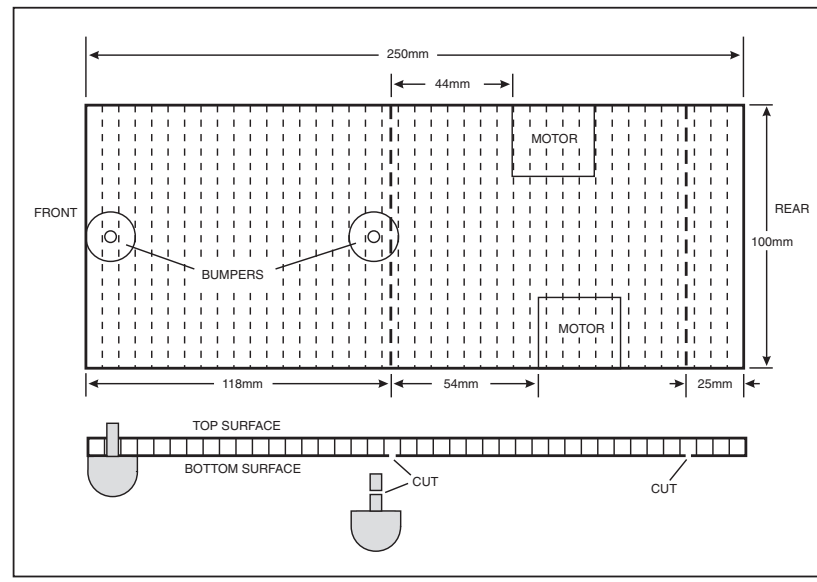

Fig.6. Chassis assembly dimensions, cutting/folding details and general displacement of the motors.

Close-up of the light-dependent resistor (l.d.r.) mounting.

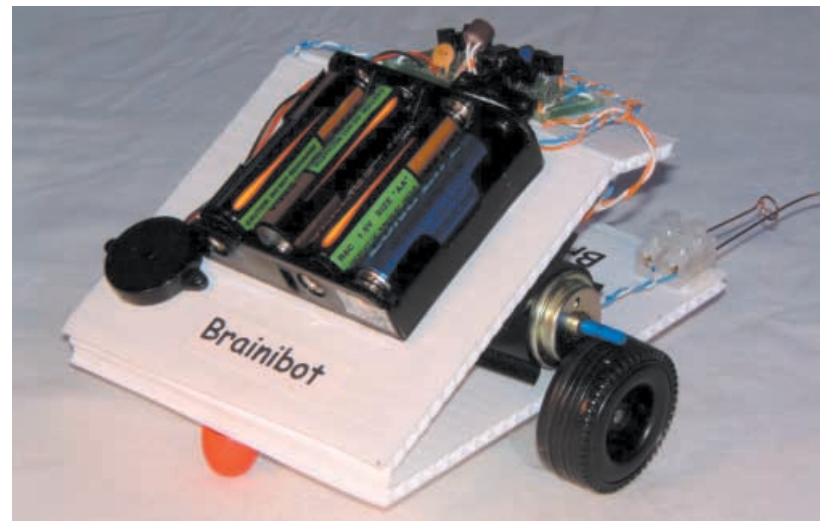

Prototype buggy showing the "chassis" folds and the mounting of the battery pack.

Art pegs used to form the bumpers.

sharp pencil or knitting needle. The peg on the rear "bumper" should be cut short so that it doesn't get in the way of the fold. The bumpers can be made from anything smooth and round — the ones pictured are "Art Pegs" used with children's perforated craft boards.

Two axles 122mm long are made from 4mm diameter hard plastic and should each be fitted with 4mm long pieces of thick sleeving to act as bushes and prevent the wheels moving too close to the edge of the chassis. Diagram Fig.7 shows this assembly. Pieces of the outer insulation cut from 3-core 3A mains cable were found to be ideal.

Fit one wheel to each axle; thread the axles through the chassis in the positions shown and fit a 6mm piece of bushing to retain each in position. Check that the wheels can rotate freely. Some of the hard plastic material suitable for axles contains glass fibre and should be cut carefully where the dust can be removed effectively.

The motor spindles should each be fitted with a piece of thin p.v.c. sleeving to improve the friction contact with the wheels. Rubber sleeving has been tried for this job but proved to be much less efficient than the harder p.v.c.

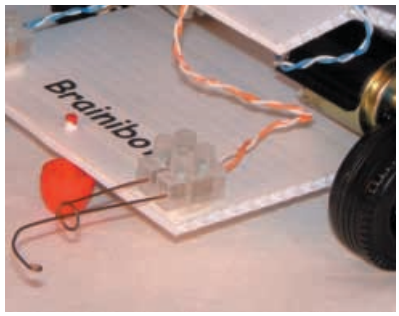

An antenna mounted in terminal block.

Plastic clips are used to hold the motors and provide a flat base to fit to the chassis with double-sided sticky pads. Take care to get the position right as they are not easily removed. It is helpful to try first using Blu-tak or similar to test the assembly before making more permanent fixings. The wheel axles can be moved backwards or forwards one slot if necessary to get better contact with the motor spindles.

ANTENNAE

The antennae are made by bending pieces of springy wire. Copper or mild steel wires are not springy enough, and the prototype used 0·8mm copper covered welding wire. Each antenna consists of a long sensing arm, and a surrounding contact ring. This arrangement is shown in Fig.7. Do not ruin good tools by trying to cut springy wire – it is harder than component leads and will dent the edges of all but the toughest cutters. The best way to cut it is with fine grinding wheel on a mini drill. Handle the wire with care and use eye protection in case it snaps.

Bend the wire to the shapes illustrated in Fig.7 and fit the pieces into two-way screw terminal blocks. Pass the wire right through so that each piece is held by both terminal screws. Fit the terminal blocks to the front corners of the chassis as illustrated using double sided pads, and check that each antenna wire passes through the center of the ring *without* making contact.

Miniature motors and plastic clips.

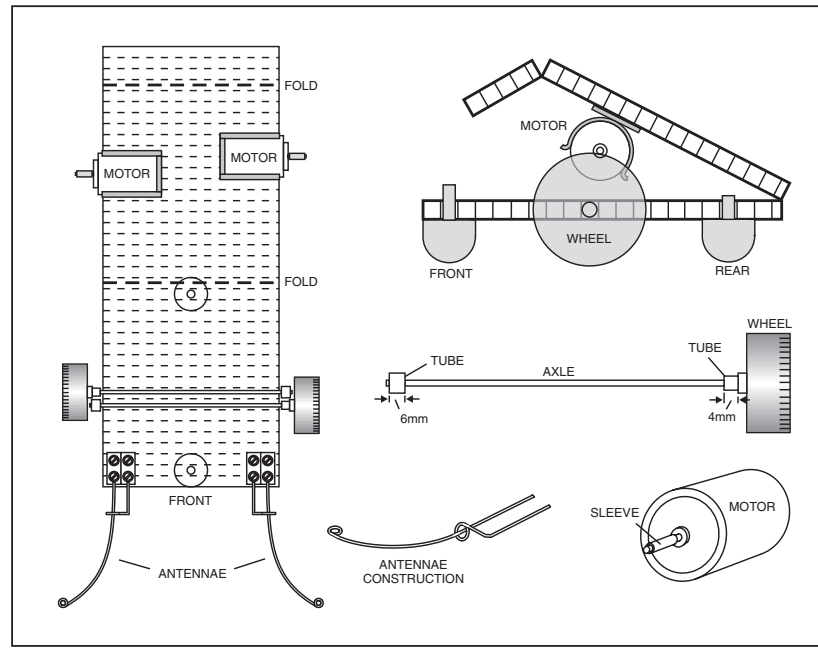

Fig.7. Mounting the components on the chassis assembly. The weight of the motors and battery pack ensure the motor spindles engage the wheels.

FINAL ASSEMBLY

Mount the battery holder onto the folded over section of the chassis using double-sided sticky pads, and make sure that switch S1 connections are made correctly. The sounder WD1 can be placed anywhere convenient on the chassis.

Fitting the control board and making the connections to the motors and antennae completes the final assembly. Cut the connecting wires short enough to make a tidy layout but leave enough slack to make adjustments to the motor positions if necessary. It should be possible to slacken the rear screws of the antenna terminal blocks to accept the connecting wires without upsetting the antenna positioning. Make sure the left and right connections are not swapped over.

The control board could be mounted on the folded over roof, but the l.d.r. must be repositioned to be sure it looks in the correct direction.

TESTING

Do not fit IC1 until the first stages of testing are completed.

Wheel and axle parts.

Make sure power switch S1 is in the Off position and fit the batteries. Lift the buggy off the ground and switch on. There should be no movement and nothing should get hot! If a multimeter is available, check that pin 1 of the socket for IC1 is at +6V and that pin 8 is at 0V.

Switch off and plug in a programmed PIC into its socket, with the notched end towards capacitor C1 on the board, and make sure that the l.d.r. is bent so that it "looks" forwards and upwards at about 30 degrees.

Hold the buggy off the ground and switch on. The motors should begin to turn

and when placed on the ground it should move forward whilst "waddling" left and right looking for light. If it sees a difference it should "chirp" and turn away from the darker direction.

If the buggy always moves backwards, it is likely that the motors are wired in reverse, or have been fitted on the wrong sides. It is also possible that one or both of the antennae are misaligned and short circuited. If one motor is always on and the other is always off, or a motor only runs in one direction, it is very likely that there is a fault on the driver board. Check the transistor types, and their soldering in case there are dry joints or solder bridges.

The chirp sound is produced when light intensity changes. If the light is too bright or too dark the intensity will not appear to vary, and the chirp will not sound. Check that the tube is correctly positioned over the l.d.r. The tube needs to be long enough to make the response directional, but not so long that it makes the l.d.r. too dark. If it does not seem to respond, check its connections to the board, and that C2, R1, and the sounder are correctly connected.

If the light sensing is working, the buggy will run until it does not see a light increase for several seconds. It will then reverse and spin on its axis before resetting the bright light memory, and starting a new search.

OBSTACLE COURSE

When an antenna touches something and short circuits to the "loop" the buggy backs away and spins away from the obstruction. If it appears to spin towards the obstruction, it is possible that the left and right antenna connections have been swapped over. If one of the antennae is permanently shorting to the ring, or there is a short circuit on the p.c.b., the buggy will continually back up and turn.

All of the motor functions can be checked by removing the PIC and using a pair of 100 ohm resistors to connect pins 2, 3, 6 and 7 of the socket to +V (pin1) or 0V (pin 8). Refer to the circuit diagram and remember that one pin must be high and the other must be low for the motors to be powered.

It is possible that just one motor terminal is being driven correctly and the other is not. Using a multimeter in combination with the resistors will allow any faults of this type to be traced with a little patience and care.

SOFTWARE

A brief description of the software functions would be as follows:

```
A main loop runs all the time:
Start
Initialise Variables
Main Loop
        HeadToLight
        GettingLighter
goto Main Loop
```

The HeadToLight routine finds and drives towards the brightest light.

GettingLighter gets out of dead-ends and makes the buggy seem about 10 times more intelligent.

HeadToLight

The buggy waddles alternately to the left or right

```
If it's waddling to the left:
    go forward-left for about a second
    (while checking the antennae)
    turn the motors off
    short delay to let the interference
    from the motors die away
    measure the light
    if the light is less than last time after a
    waddle then
        make a noise
        go forward-right for about a
        second
```

The next time HeadToLight runs, "left" and "right" will have been swapped.

Overall, this means that the robot turns toward light.

GettingLighter

GettingLighter measures the light level and keeps a record – in "BestLight" – of the brightest level seen so far. If BestLight hasn't increased in the last 20 calls to GettingLighter then the buggy assumes it's stuck in a corner and tries to get away.

It backs up (ignoring the antennae), makes a noise, and spins on its axis (checking the antennae) looking for the brightest direction. It spins in the direction of the last waddle. It then resets BestLight to zero.

Motor Drive

The motor control routines provide forward, backward, left and right functions.

The motors are not just switched on, but pulsed with a 50/50 mark space ratio. This saves battery power, and reduces the speed to a suitable level for control. The friction drive is quite efficient and powering the motors just half of the time is enough. The pulsing is done at high frequency so that the motors run smoothly and without any extra noise.

While the motors are running, the antenna inputs are checked. If either has touched then the program abandons whatever else it was doing and jumps to deal with the antenna touch. Before restarting the main loop.

Antenna Touch

Pin 5 of the PIC (IC1) handles the l.d.r., the sounder and an antenna.

To check whether the antenna is touched, the following routine is used. The first two instructions make sure that C2 and the sounder capacitance are charged, and so do not give a false indication of a shorted antenna.

```
set I/O pin 5 to output
set I/O pin 5 high
wait a few milliseconds
set I/O pin 5 to input
read I/O pin 5
if I/O pin 5 is low then the Left
antenna is touched
```

(It is worth noting that having a capacitor on the pin and charging it before changing the pin back to an input and reading it allows a switch to be connected to an I/O pin and read effectively without having a pull up resistor.) The technique can be taken even further and will work without fitting a capacitor – relying completely on stray capacitance.

Reading the right antenna is simple – if I/O pin 4 is low then the antenna is touched.

If an antenna is touched, the buggy backs up and spins away from that side. In this situation it ignores the antennae while the motors run.

Measure Light

The light is measured by

```
set I/O pin 5 to output
set I/O pin 5 to low
wait a while to discharge C2
set I/O pin 5 to input
count how long it takes for I/O pin 5 to
read '1'
```

The "count" is longer in lower light as l.d.r. R2 has a higher resistance. If the light is very low then R1 in parallel with l.d.r. R2 helps to charge capacitor C2 and has the effect of improving the low light performance.

The response is non-linear so the counting is done more slowly as the count gets higher – this allows the count to give a useful reading over a wider brightness range.

Sound

The piezo sounder WD1 does not have a built in oscillator and so acts as a simple loudspeaker (with a terrible frequency response!). It is driven by setting I/O pin 5 to output and switching it rapidly between '1' and '0'. By altering the switching speed and mark-space ratio a limited range of different sounds can be produced. When the sound is finished, the I/O pin is returned to being an input.

RESOURCES

The software is available for free download from the *EPE* ftp site. This is most easily accessed via the main page of the *EPE* web site at **www.epemag.wimborne.co.uk**. At the top is a click-link saying **FTP site (downloads)**, click it then click on **PUB** and then on **PICS**, in which screen you will find the Brainibot folder.

The software can also be obtained on a 3·5-inch disk (Disk 6) from the Editorial office. There is a nominal handling charge to cover admin costs. Details are given on the *EPE PCB Service* page. This month's *Shoptalk* gives details about obtaining pre-programmed PICs and also complete Brainibot Buggy kits, including hardware.

FINALLY

This project shows just what can be done with some very simple hardware and one of the smallest PIC microcontrollers. Hopefully it will inspire experimentation with both hardware and software, and lead to more advanced projects. □

Something very suspicious here!

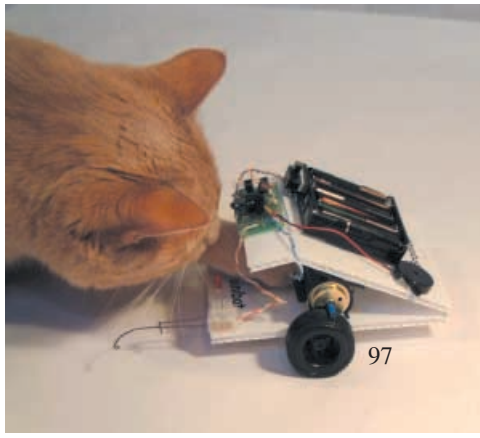

New Technology Update

Development of carbon nano-tubes is likely to have a serious impact on semiconductor technology. Ian Poole reports.

NANO-TECHNOLOGY is one of the major new developments to hit the scientific community in the last ten years. The applications of the new technology are widespread, affecting areas from strengthening materials to cosmetics, and, of course, they have many applications in electronics. Interestingly, it is the cosmetics manufacturers who have taken out the largest number of nano-technology patents!

The technology focuses on manipulating materials at the nano-scale. As a nanometre spans only three or four atoms, this effectively means at the atomic level. Richard Feynman first postulated the idea at a lecture that he gave in 1959. His overall concept was that it would be possible to manipulate matter at an atomic level, rearranging electrons, protons and neutrons to produce whatever was required. However, it has taken many years to be able to start to realise the dream.

Origins

It was in 1974 that the term nano-technology was first used. It appeared in a paper presented by Professor Norio Taniguchi of the Tokyo Science University. The first major step along the road to practical realisation of the technology occurred in 1982 when the scanning tunnelling microscope (STM) was invented. This machine enabled individual atoms to be manipulated. In the same year the same research group devised another device called the atomic force microscope (AFM). These two devices enabled the birth of nano-technology to take place.

In view of the revolutionary nature of the new technology, it has taken many years to develop it to a stage where it is beginning to be used. Now it is possible to use it in many ways.

Nano-tubes

Currently some of the most promising aspects of new technology are associated with the use of carbon nano-tubes, and these have been described previously in this column. These tubes have a wall of carbon atoms one atom thick and they can be used to provide very strong, but light materials.

The tubes themselves are very much stronger than steel, and yet much lighter. In view of this there are many possible applications, and the automotive industry is looking very closely at them as they will be able to provide much lighter, yet stronger materials for vehicles.

For the electronics industry, these tubes are of great interest because they are able to carry very high levels of current whilst exhibiting very low levels of resistance at room temperature. As they can be fabricated with sizes suitable for integrated circuits this makes them ideal for use as interconnections within integrated circuits. This enables i.c. performance to be considerably improved.

Transistors have also been fabricated using nano-technology. Here the nano-tubes form the channel within the transistor, enabling very low levels of *on* resistance to be achieved, along with very fast transition times.

In one development IBM have demonstrated a transistor using just a single carbon nano-tube. Whilst this is only a laboratory demonstration at the moment it proves that single carbon nano-tubes can be used as the basis for transistors. If this could then be integrated into a large integrated circuit, then terabit memories could be made.

Several research organisations have developed laboratory nano-tube based devices. These are not yet in a state where they can be manufactured, but this development has started. Timescales of five years and more are being mentioned in the industry and even now several chip manufacturers are looking very seriously at manufacturing them.

IBM is obviously a contender but Motorola has also started work to investigate them. They have started characterising nano-tubes for use in sensors and they are also carrying out work in other areas.

Current uses

Whilst integrated circuits using nano-tubes are not yet available, there are some other devices that are currently on the market that use them. A number of business agreements are being set up to licence manufacturers to use some processes.

In one of these DuPont has an agreement to use some of this technology in their flat panel displays. Here they use nano-technology as a thick film emitter. This gives significant improvements, making the displays lighter, brighter, smaller and more efficient.

New Developments

Whilst commercialisation of nano-technology is moving forward, new developments are also taking place at the research institutions. In one of these, undertaken at the University of Surrey, researchers have grown carbon nano-tubes at room temperature and this could have a significant impact on the development of large flat panel displays as well as many other devices.

Previous methods of creating carbon nano-tubes have required the use of temperatures of at least 700°C. This is well in excess of the temperatures that plastics can withstand and as a result this considerably limits the ways in which nano-tubes can be used. Temperatures of 700°C can also damage many semiconductor substrates, making processing difficult and costly. The new process should open the door for many more nano-tube applications.

The new process involves coating the substrate into which the nano-tubes are to be grown with a nickel catalyst. It is then placed into an r.f. plasma of methane or methane-hydrogen. The substrate in the plasma then has a sheath around it and it is not heated. However, it is found that some of the nickel particles protrude through the sheath and they are heated to a sufficiently high temperature.

Carbon atoms are then diffused into the nickel using r.f. plasma enhanced chemical vapour deposition. Eventually the nickel becomes saturated with carbon, and the atoms are forced out and form a carbon nano-tube. Once the basic nano-tube has formed, the process continues with the nickel absorbing carbon from the plasma and depositing it onto the end of the nano-tube, and in this way its length steadily grows.

The basic process that is used to grow the nano-tubes is a standard industrial process. It has been used to deposit materials onto large surfaces. As a result it is expected that it could be used to grow nano-tubes for large displays. This would give nano-tube displays a distinct edge over other technologies as they could be made to cover large surfaces. In addition to this they provide a high level of light output.

Summary

Nano-technology is growing in its importance. Over the coming months and years it is expected to impact not only the electronics industry but many others in a very significant way. Atomic scale integration combined with the ability to cover much larger surfaces means that the opportunities for using the technology are enormous.

Not only are some of the major research institutes investing large amounts of effort into the development of nano-technology, but so are the semiconductor manufacturers. This means that this technology could be the next revolution to hit the electronics industry. As some products are already available, we may not have too long to wait to see many more arrive.

Further information about radio and electronics technology, new and old can be found at **www.radio-electronics.com**.

News . . .

A roundup of the latest Everyday News from the world of electronics

LISTEN WITH MURDOCH

A new system magically makes all Sky+ boxes able to record radio by setting time and station from a menu. Barry Fox reports

RUPERT Murdoch's grip on broadcasting is tightening. The Sky+ hard disk recorder/receivers which BSkyB sells to record digital satellite TV can now do what radio listeners have always wanted; record radio programmes while owners are out, automatically switch channels, and go on recording for days on end without needing a new tape.

There are however a couple of little snags. The system only works in the UK or Ireland where Sky rebroadcasts 50 national, local and ethnic digital terrestrial radio stations by satellite. The Sky+ combined recorder and receiver needs a satellite dish, costs several hundred pounds to install and only works while the owner pays £10 a month to feed it Sky's proprietary programme schedules.

The 40GB hard disk normally holds around 40 hours of digital TV.

Cross Purposes

Some of the 30,000 people who bought Sky+ over the last year got cross when they found they could listen to radio but not record it. Sky said it was because only TV programmes have the digital time codes needed to set the recording timer.

Now, with minimal publicity, Sky has transmitted new control software over the air which magically makes all Sky+ boxes able to record radio by setting time and station from a menu.

The radio recording takes only the bit space it needs, 192kbps or less, instead of the 2Mbps or more needed for TV. So Sky+ can record at least 400 hours of digital radio. The rival hard disk system, from TiVo, can be fooled into recording radio instead of TV, but the sound soaks up as much bit space as TV. It too costs £10 a month to use.

Pace makes the Sky+ boxes and this winter launches a digital terrestrial hard disk recorder which will be able to record whatever digital radio channels the TV broadcasters slot into their TV transmissions. The Pace box will work like Sky+, recording only the bandwidth needed for radio. No subscription of any kind will be needed to use the Pace box.

SHINE A LIGHT

ADVERTISERS – Don't hide your new products or services – highlight them *FREE* via our News pages!

TROLLEY WATCH

Barry Fox

SUPERMARKETS, tired of rescuing their trolleys from local canals, estates and children's playgrounds, are now using a system which automatically brakes at least one of the wheels if the trolley is taken outside the supermarket car park. The brake then releases as the trolley is carried back. Full details of the system are available from US patent 6 353 388, filed two years ago by Gatekeeper Systems of Irvine, California. It can also be used to protect industrial forklift trucks and even children's toys.

The metal body of the shopping cart acts as an aerial to pick up a pulse modulated magnetic field generated by hidden cables buried or slung around the car park perimeter. One of the front wheels is hollowed out to hold a battery, receiver, rotation sensor and a motor which turns clockwise or anticlockwise to move a nylon brake pad towards or away from the inner surface of a wheel drum.

The motor is switched by a flip-flop, triggered by a change in the magnetic field. If the rotation sensor detects that the wheel is moving when the magnetic signal disappears, this means the trolley is being moved past the perimeter and outside the park. So the motor turns to apply the brake. If the sensor detects that the wheel is stationary when the magnetic signal reappears, this signals that the trolley has been carried back into the park, past the perimeter. So the motor turns in the opposite direction to release the brake.

SPICED UP CIRCUITS

RD Research has announced the release of the new B^2 Spice V4.2 with circuit animations. This new software allows professional and amateur electronics designers to create and model complex circuit designs on a PC. The software shows wires changing shape to reflect current, voltages and parts changing colour to reflect heat dissipation.

Relative voltages are colour-coded to magnitude and arrows display the actual current paths as they flow within the circuit. Circuits can be animated with respect to d.c. stepping, frequency sweep, etc. Circuit animation can give both general and specific insight into the behaviour of the circuit as the simulation is running.

Furthermore, with this new version, users of Eagle PCB can now transfer their circuit schematics to B^2 Spice and run simulations quickly and easily.

For more information contact RD Research, Dept EPE, Research House, Norwich Road, Eastgate, Norwich NR10 4HA. Tel: 01603 872331. Fax: 01603 879010.

Email: rd.research@paston.co.uk.

Web: www.looking.co.uk.

GREENWELD'S EMAILS

AS we go to press, the latest of Greenweld's weekly emails has just dropped in. By the time you read this, of course, more will have come in, but to give you a taste of what to expect this latest one has an introductory price offer on a new bench power supply range; special offer on 1500W inverters; latest surplus items; computer links; Customer Corner – Newsgroups; catalogue requests; bulk deals, auctions; contact details.

The latter can be summarised as: Greenweld Ltd, Dept EPE, Unit 14 Horndon Business Park, West Horndon, Brentwood, Essex CM13 3XD.

Tel: 01277 811042. Fax: 01277 812419.

Email: bargains@greenweld.co.uk.

Web: www.greenweld.co.uk.

Get yourselves on Greenweld's emailing list – don't miss out on the exciting bargains that they regularly have on offer!

BAEC ENDS

WE are sorry to learn that the British Amateur Electronics Club (BAEC) has ceased. Our records do not show for how many years the BAEC has been a forum through which like-minded electronics enthusiasts have been able to share their enjoyment of their hobby, and exchange ideas and circuits through the Club's Newsletter. To this commentator's knowledge, the period must run to at least three if not four decades.

The announcement was sent to us by Otto Schiffer, BAEC's Treasurer. In his letter, Otto first thanked us for the support that we have always given to the Club, including the donation of free advertising space in *EPE*. We have indeed been very pleased to support a Club that we were convinced was well worth encouraging.

Otto went on to say that in the opinion of the BAEC committee, the Club had reached the end of its useful life. He comments that "the number of members has steadily declined over the years . . . making production of the Newsletter extremely difficult as there are fewer articles being contributed." The current Editor, G. Burton, has been unable to publish any Newsletters for 2002. Consequently it was decided that the BAEC should cease to exist at the end of 2002. So ends another era – very sad.

ELECTRONICS QUALIFICATION

EMTA Awards Ltd (EAL) has launched an electronics qualification designed to plug a gap in the market. The Foundation Certificate in Electronics is a Vocationally Related Qualification (VRQ) and is suitable for anyone aiming for a career as an electronic repair or installation technician or a post in retail electronics.

It is open to people aged 16 and over who are new to the electronics industry, those wishing to learn new skills and those preparing to enter the industry.

The qualification is available in colleges and through training providers and represents 240 hours of study. It comprises four mandatory units: Electrical Circuits; Introductory Electronics; Using Components and Tools; Electronic Systems and Installation.

The Certificate can be used to underpin some of the knowledge and understanding aspects of the Level 1 NVQ in Performing Engineering Operations. EAL is a nationally-recognised major awarding body.

A guidance pack and syllabus for centres wishing to deliver the Foundation Certificate in Electronics is available from EAL Customer Services, tel: 01923 652400.

Email: customercare@emta.org.uk. Web: www.eal.org.uk.

RALLY ROUND

WYTHALL Radio Club are holding their 18th Annual Radio and Computer Rally on Sunday 9 March at Wythall Park, Silver Street, Wythall, near Birmingham, on the A435, just two miles from junction three of the M42.

Doors open from 10am to 4pm and admission is only £1.50. There will be plenty of traders in the three halls and a large marquee. Bar and refreshment facilities are on site, there is a Bring and Buy stand, and a unique *free* Park and Ride for easy comfortable parking. Everyone is welcome!

For Licensed radio hams talk-in is available on S22. For other information contact Rally Organiser, Martin G8VXX on 0121 474 2077, evenings. Fax: 0121 742 3471, working hours. Email: enquiries@wrcrally.co.uk.

NEW CD STANDARD

Barry Fox

PHILIPS has now agreed to a standard for High Capacity CD Recording; 12cm discs will play for 98·5 minutes, 8cm discs for roughly 30 minutes. The track pitch will be slightly tightened on the assumption that modern players will be able to cope. But some may not and Philips warns that although playable on the majority of CD drives, "High Capacity Recordable is not fully compliant with the Red Book (so) to avoid any misunderstanding . . . use of a CD logo is not allowed on this disc." The new discs will be used only as blank media because these are usually played back on the drives that recorded them. If HC music discs were released there would inevitably be many older players that could not cope.

In Japan there are moves to cut pressing costs with half thickness DVDs. But these also may not play on existing players, so it is unlikely the DVD Forum will give official permission.

YOU WON'T GET YOUR FINGERS BURNT

It may surprise you but buying an Antex soldering iron costs less than you think in the long run. British made to exacting standards, they last significantly longer than imported brands. And with a wide range of thermally balanced soldering irons, you can pick up a "fixed temperature" or "in-handle" temperature model that will suit your needs perfectly.
None of which will burn a hole in your pocket.

If your hobby demands the best iron for the job but you don't want to get your fingers burnt by the cost, visit our website or your electronics retailer for the coolest models around.

Pick up an ANTEX

Not just any old iron.

www.antex.co.uk

2 Westbridge Industrial Estate Tavistock
Devon PL19 8DE Tel 01822 613565

CIRCUIT SURGERY

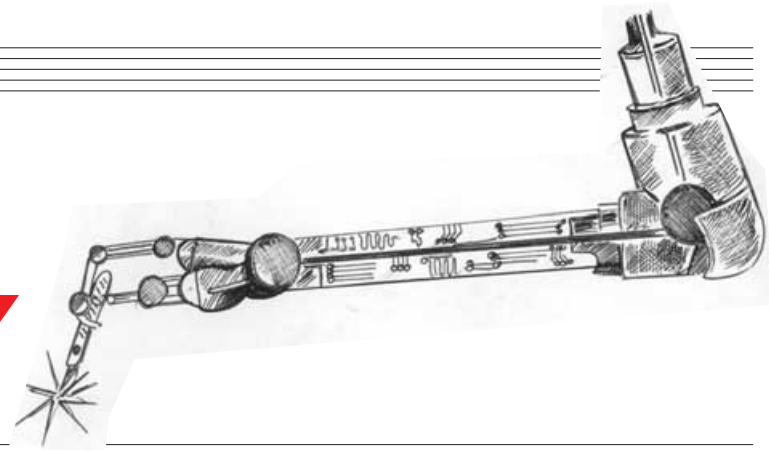

ALAN WINSTANLEY and IAN BELL

We continue with our item on using MOSFETs and also some differences between switching speeds of a.c. motors.

Power MOSFET Drive Circuits

Last month we responded to an email from ***Dave Larner*** asking about the large variety and forms of construction of power MOSFETs. As we explained, this wide range of devices results in a variety of trade names for them, which can seem bewildering at first.

The solution is to decide what type of device you need – for instance, high voltage, high current, high switching efficiency? Then to look for devices optimised for that use with the appropriate specs in terms of power dissipation, on resistance, maximum drain current, drain-source voltage, etc. You usually don't have to worry too much about the exact construction or name though.

This month we look at basic power MOSFET driver circuits. This is a large subject area, so we shall provide an overview of the various forms of driver, and point out some of the things you need to think about when designing these circuits.

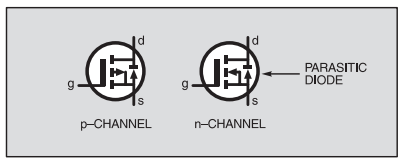

Fig.1. Power MOSFET symbols showing parasitic diode.

In Fig.1 we show the full power MOSFET symbol that includes the ***parasitic diode*** between drain (d) and source (s), which is an intrinsic part of the MOSFET's structure. This diode is quite often not included in schematics, the basic MOSFET symbol being used instead.

The intrinsic diode can be used as a ***freewheeling diode*** when switching inductive loads – a freewheeling diode conducts the current produced by an inductor from its stored energy when an applied voltage is removed, preventing excessive voltages (back e.m.f.) from occurring in the circuit. However, in applications requiring high frequency switching the intrinsic diode does not have high enough performance and an external diode must be used. Take care when reading power MOSFET schematics to check whether an external or internal diode is depicted.

In addition to possible freewheeling diodes, other components may be required in a *snubber* circuit. The function of a snubber is to protect the MOSFET from excessive voltages, currents, or rates of change of voltage or current that may otherwise damage the device.

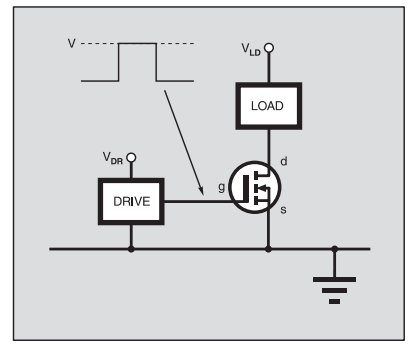

Fig.2. Low-side drive using n*-channel MOSFET. V_{DR} is the drive voltage and V_{LD} is the load voltage, which may be on a separate rail.*

Highs and Lows

There are a number of different configurations in which power MOSFETs are used. With a single transistor we can employ *n-channel or p-channel* devices, and we can use *low-side* switching, where the MOSFET is grounded, or *high-side* switching where the MOSFET is connected to the load power supply voltage. *N*-channel devices are often preferred because the inherently higher conductivity of *n*-type silicon leads to higher performance devices. High-side switching is, however, often easier with *p*-channel devices.

An *n*-channel low-side switching arrangement is shown in Fig.2. The drive circuit has to switch the gate between 0V (off) and V_G (on). The power supply voltage for the driver (V_{DR}) will usually be greater than or equal to V_G, but may be much less than the load power supply voltage (V_{LD}).

The value of V_G required to fully turn on the MOSFET is typically 10V to 15V, but devices designed to switch at lower voltages are available. A TTL-compatible MOSFET is intended to ensure reliable operation when its gate is driven by TTL logic levels, even though the usual TTL tolerances will exist.

If we require that the load is grounded, or we are using a bridge circuit (see later), then we need a *high-side switch* instead. Here a *p*-channel device is used as a high-side switch, see Fig.3. Note that the gate

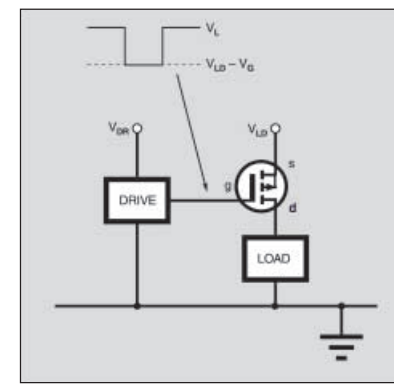

Fig.3. High-side drive using p*-channel MOSFET. V_G is the MOSFET gate voltage.*

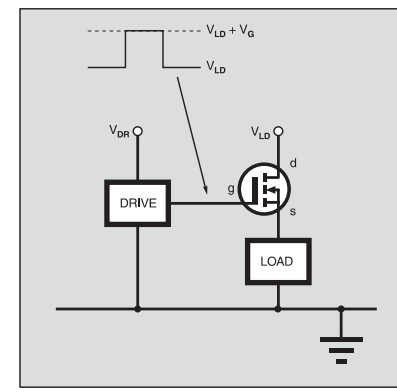

Fig.4. High-side drive using n*-channel MOSFET.*

(g) voltage is switched from V_{LD} (off) to V_{LD}–V_G (on). Another high-side switch is shown in Fig.4, in this case using an *n*-channel MOSFET and therefore requiring a gate voltage higher than the load supply voltage by V_G volts to switch the transistor on.

High-side switches in circuits with high load voltages have to switch the MOSFET gate between two voltages that can be much larger than the supply voltage of the controller and drive circuits. When using *n*-channel high-side drivers, one of these voltages will also be greater than the load supply voltage. For example, a controller and driver circuit working on 15V supply might have to switch the MOSFET's gate between 500V and 512V. Special techniques are required to do this and there are a number of methods available.

All Charged Up

Bootstrap high-side drivers charge a capacitor using a low voltage supply and switch the capacitor to the gate-source of the MOSFET to turn it on. This approach cannot hold the transistor on indefinitely as the bootstrap capacitor has to be recharged periodically (while the high-side MOSFET is off). ***Charge-pump*** high-side drivers use voltage multiplier circuits to generate the high gate voltage; they can be inefficient and slow, but they allow indefinite high-side on time.

A *pulse transformer* can be used to couple the control signal to the high-side gate, which is potentially a simple and low-cost solution, but can be quite difficult to get right in practice. A *floating power supply* can also be used for the high-side drive circuit with switching controlled via an opto-isolator; this is an expensive option as a separate supply is required for each high-side MOSFET used. This is not an exhaustive list of techniques and each has a number of variations on the basic idea.

We can use a single transistor to switch a load, or multiple transistors in *half-bridge* or *full-bridge* (H-bridge) configurations. The drivers for these configurations require the capabilities of both high-side and low-side drivers. We show two examples here, Fig. 5 is a half-bridge driver using a complementary pair of MOSFETs, and Fig. 6 shows a full-bridge using four *n*-channel devices.

An additional concern with half and full bridge circuits is the possibility that both transistors in a half-bridge may briefly switch on at the same time, resulting in and excessive *crossover*, or *cross-conduction current* flowing when we switch one transistor on and the other one off. Driver circuits must control the timing of the switching of the two transistors to prevent this from happening. Some drivers have adjustable "deadtime" – that is, the time during the changeover when both transistors in the half-bridge are off.

Take Control

The power MOSFET, like other MOSFETs is basically a voltage-controlled device, i.e. the gate-source *voltage* controls the drain current. In many power applications, the MOSFET is switched between fully on and fully off, by switching the gate voltage between 0V and some voltage well above its threshold value.

The use of a voltage well above the threshold ensures a saturated operation, in which the ON-resistance ($R_{DS,on}$), voltage drop across the device, and also the power dissipation, are minimised. We can consider the device to be either in the *off* state where little or no power is dissipated, or the *on* state where power dissipation depends on $R_{DS,on}$ and the drain source current.

This simple view is adequate for low switching frequencies, but when switching power MOSFETS at speeds greater than a few kilohertz we have to take account of the fact that the MOSFET's gate is a *capacitance* which has to be charged and discharged through the driver circuit's source resistance and the resistance of the wiring both inside and outside the device. Thus, the gate voltage will actually follow an *RC* charging curve, and the MOSFET will spend some time in-between being fully on and fully off.

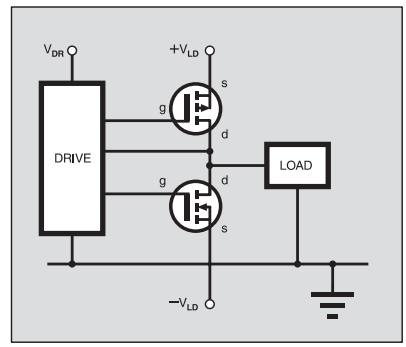

Fig.5. Half-bridge driver using a complementary pair of MOSFETs.

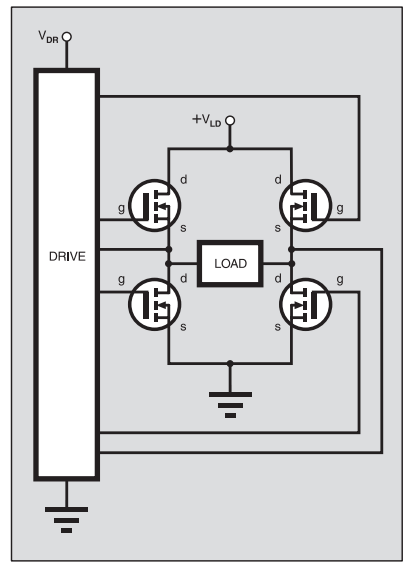

Fig.6. Full-bridge driver using n*-channel devices.*

During this time the device may dissipate a lot of power, a problem referred to as ***switching losses***. The drive circuit therefore must be able to supply enough transient current to charge the gate capacitance at the required rate. In some cases this current may be quite substantial, particularly for large very high power devices, or where paralleled MOSFETs are being used.

As well as being too slow, it is also possible for power MOSFET circuits to switch too fast, or put more accurately, for voltage or currents within the circuit to change too fast. Very fast current and voltage changes can damage devices and also cause more interference radiation than slower rates of switching. Careful design of the driver circuit may be required to get the switching behaviour correct, particularly in high speed and very high power applications.

Integrated Drive

Trying to design high quality power MOSFET driver circuits from scratch is not very easy except for relatively undemanding situations, particularly if high-side switching is required. Fortunately, there are many driver i.c.s available that do most of the work for you.

Some of them are used in, say, motor control circuits such as the ULN range from Maxim (**www.maxim-ic.com**). The MAX620 is a quad high-side MOSFET driver with integrated charge pump whilst the MAX621 has integrated capacitors as well. Allegro also publishes some very useful information on motor drivers and bridge drivers at **www.allegromicro.com**. Data sheets and product guides can be downloaded from the Internet.

Like all power switching circuits, MOSFET power circuits require good layout, in particular to minimise stray inductance in critical parts of the circuit. Proper thermal design and heatsink selection may be required. Some MOSFETs include built-in protection circuitry. The Philips TOPFET range (BUK100 type) has short-circuit and overload protection as well as over-temperature circuitry. *IMB.*

Simply Switching Speed

*Your comment on the speed of shaded-pole motors (*EPE *Dec '02) is not totally correct, although, as you say, it is the practice to teach that their speed is governed by the supply frequency alone. However, in some fan heaters made by the English manufacturer Morphy Richards in the 1960s, the fan is given two speeds.*

The lower speed is obtained by simply switching a wirewound resistor (of a few hundred ohms) in series with the mains input to the motor alone, simply reducing its applied voltage. I have a couple of these heaters and the speed control works fine. ***Howard Miles***, by email.

The use of a series resistor is primitive but clearly you can get away with it if the mechanical loads are light. The only load that a typical fan heater sees is that of the fan blades coupled with the air resistance, and aided by decent ball-bearing races, the motor would have a constant load and probably not be working very hard.

One danger with typical fan heaters is that if the fanblade doesn't blow sufficient volumes of air over the resistance elements, then the heater will overheat and cut out (hopefully – otherwise it will catch fire). Mind you, I have a frenetic Ecko-brand fan heater that blew up when the metal fanblade flew off the squirrel cage motor and, with a bright blue flash, shorted out the elements completely! *ARW.*

Constructional Project

WIND TUNNEL

JOHN BECKER

Scientifically investigate Nature's second essential element

A WIND TUNNEL can be used to investigate the effect of air flow on objects under controlled conditions, demonstrating, for example, how aircraft or bird wings create lift, or a vehicle's shape affects its streamlining.

In principle, a wind tunnel can be constructed using just a rolled tube of cardboard enclosing a fan, as the author did in the first instance. The sophistication, though, comes from adding rigidity to the construction and providing variable speed to the fan, plus a means of knowing at what rate the fan is moving air through the tunnel.

This design is intended for use with the *Wind Speed Meter* in the January '03 issue, but can also be used on its own. It has an easily constructed long rectangular wooden frame with clear perspex panels that enclose a fan at one end whose rotation rate is controlled electronically by a potentiometer. Air flow rate is variable from less than 1mph to around 8mph, although the range can be raised or lowered depending on the motor used and the tunnel's chosen dimensions.

An optically coupled sensor responds to a light beam being broken by the fan blades and a PIC microcontroller determines the fan's revolutions per second in relation to the number of fan blades. The result is shown on an alphanumeric liquid crystal display (l.c.d.). The pulse rate detection circuit may be set to respond to fans having between one and nine blades.

The fan has an induction motor rated at 230V a.c. 26W. It is powered from a 12V car battery via a step-up variable frequency inverter. On-off switch S1 (shown in Fig.2) is optional. The author used heavy duty crocodile clips to connect the circuit to the car battery.

It is recommended that a line-mounted fuse (say 13A), should be used in the lead connecting to battery positive.

FAN CONTROLLER

The fan speed controller has been designed to convert d.c. power from the 12V battery into a 230V a.c. supply that powers the fan's induction motor. This type of motor requires frequency control to vary its speed and the controller is *not* usable with d.c. or other types of mains a.c. motor. Such motors require other techniques to change their speed. (A brief discussion of motor types was given in *Circuit Surgery* December '02.)

Current consumption from the battery is typically about 3A, but can rise to around 10A – more on this later.

The circuit diagram for the fan controller is shown in Fig.1. It is basically a variable frequency squarewave oscillator driving two gating *n-channel* power MOSFET transistors in anti-phase. These alternately switch current from the 12V d.c. supply through the twin low voltage windings of a transformer. The transformer is used in step-up mode and its high voltage winding powers the fan motor. Such a circuit is popularly known as an *inverter*.

The oscillator circuit is formed around the Schmitt inverter gate IC1a. Its frequency rate is set by capacitor C2 and the resistance across the feedback path comprised of potentiometers VR1 to VR3. VR1 is the panel mounted manual control, with VR2 and VR3 providing preset adjustment of the frequency range obtainable using VR1, as discussed later.

The output from IC1a is inverted by IC1b and drives transistor TR1. The output from IC1b is also inverted by IC1c to drive TR2. Consequently, when one transistor is turned on into full conduction, the other is turned fully off. Because the transistors are switching between the two extreme states, very little heat is generated across them, although a small amount of heatsinking is still required.

The transistors alternately sink current through the transformer's 12V windings, which are fed directly at their common junction from the 12V supply. The transformer's high voltage winding steps up the 12V a.c. switched power to around 230V a.c.

TRANSFORMER

It will be recognised that the transformer is simply a standard 230V a.c. mains transformer having two 12V a.c. secondary windings. In countries such as the USA where the supply is 110V a.c., rather than the 230V a.c. used in the UK, Europe and many other parts of the world, the transformer should be chosen as one having a 110V a.c. primary winding, but still with twin 12V a.c. secondaries.

The problem with stepping up an a.c. voltage is that the current available at the output is reduced by a similar but inverted ratio. Stepping up from 12V a.c. to 230V a.c. is a ratio of approximately 20:1 for the voltage, but the current available is then dropped by the inverse of that ratio, to 1:20.

The fan motor used in the prototype is rated at 26W. One of Ohm's Laws states that Amps = Watts divided Volts, A = W/V. When this 26W motor is powered at 230V a.c. the current required by it is 26W/230V = 0·113A. The current required from the 12V a.c. windings is 20 times that, at 2·26A. The transformer's secondary winding VA

An easily constructed wood and perspex frame enclosing a fan and the controlling electronics.

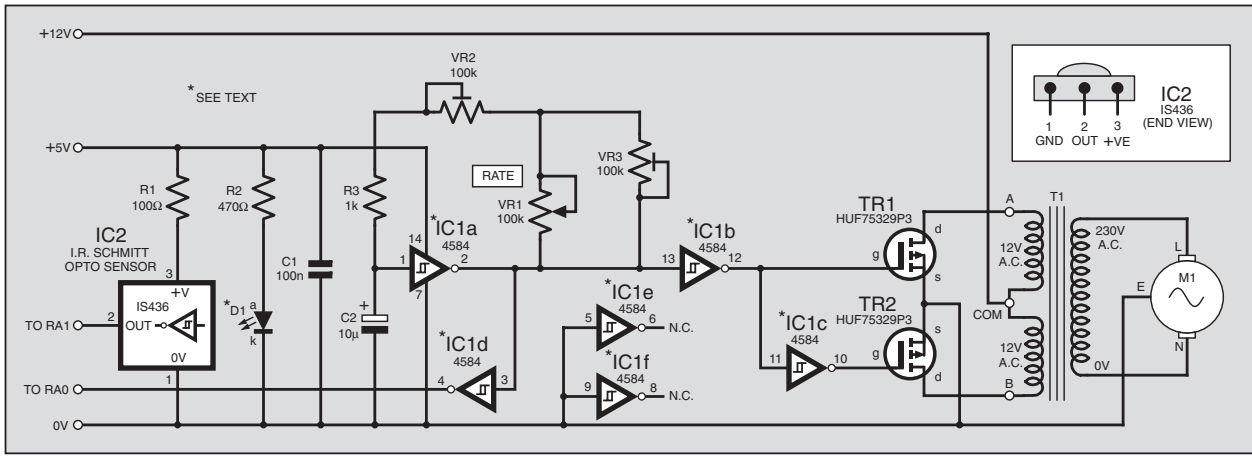

Fig.1. Circuit diagram for the variable speed fan controller, plus the opto-coupled fan rotation rate sensor.

rating required is thus a minimum of 12V × 2·26A = 27VA. A transformer with a VA rating for each secondary of 37·5VA was chosen to allow plenty of latitude, in other words a 75VA transformer.

SPEED SENSOR

Also shown in Fig.1 are the components for sensing the fan's rotational speed. A light source is provided by l.e.d. D1 on one side of the fan blades. On the other side of the blades is the light sensor, IC2. This detects the changing light levels when the blades rotate past the light source. It is a Schmitt trigger device and outputs line-level pulses in response.

For reasons of electrical stability, the l.e.d. and sensor are both powered from the +5V regulated line that supplies the PIC microcontroller (in Fig.2). Resistor R2 limits the current flow through the l.e.d.

Originally it had been intended that an infra-red l.e.d. and sensor pair should be used. However, the sensor was received prior to the l.e.d. and it was found that an ultra-bright red l.e.d. could be used just as effectively. Its obvious visibility is a benefit since it can be seen that it is functioning.

The sensor is quoted in the supplier's catalogue as having an internal voltage regulator and a TTL compatible output, which was taken to mean an output pulse range having a maximum swing of no more than 0V to 5V. Disconcertingly, when powered at 12V d.c. it was found that the pulse output was well above the expected +5V.

Searching the manufacturer's web site, a data sheet for this device could not be found. It was decided, therefore, that the sensor should be powered at 5V, with a nominal value of resistor (R1) included in its supply input path.

MICROCONTROLLER

Interpreting the fan's rotational speed from the pulsed output of the opto-sensor IC2 is performed by the PIC16F628 microcontroller shown in Fig.2. This is operated at 3·2768MHz, as set by crystal X1. The use of this clock rate is more convenient to the PIC's software than would be a clock rate generated by the PIC's internal RC oscillator.

The software repeatedly counts the number of incoming pulses received in one second at pin RA1 via resistor R5. It divides the count by the fan blade quantity and the result is output to l.c.d. X2 as a revolutions per second (RPS) value.

It is worth noting that each *change* in pulse polarity is detected by the PIC, resulting in a count value twice that of the number of pulses actually received. The raw data value is thus divided by two as well as the fan blade count.

The l.c.d. is controlled in conventional 4-bit mode by PIC pins RB0 to RB5, in the author's standard order. Preset VR4 adjusts the l.c.d. screen contrast.

Switch S2 is used to set the fan blade quantity into the software, to a value of five for the suggested motor, but may be any value between one and nine as required. The switch input pin is biased normally low by resistor R6, the PIC responding to the 5V voltage on pin RA2 when the switch is pressed.

Induction motors inherently "slip" in relation to the frequency at which they are powered. This fact was discussed in the *Circuit Surgery* mentioned earlier. Consequently, it was felt to be of interest to show the controlling frequency rate in Hertz (Hz) as well as the fan's actual rotational rate in RPS.

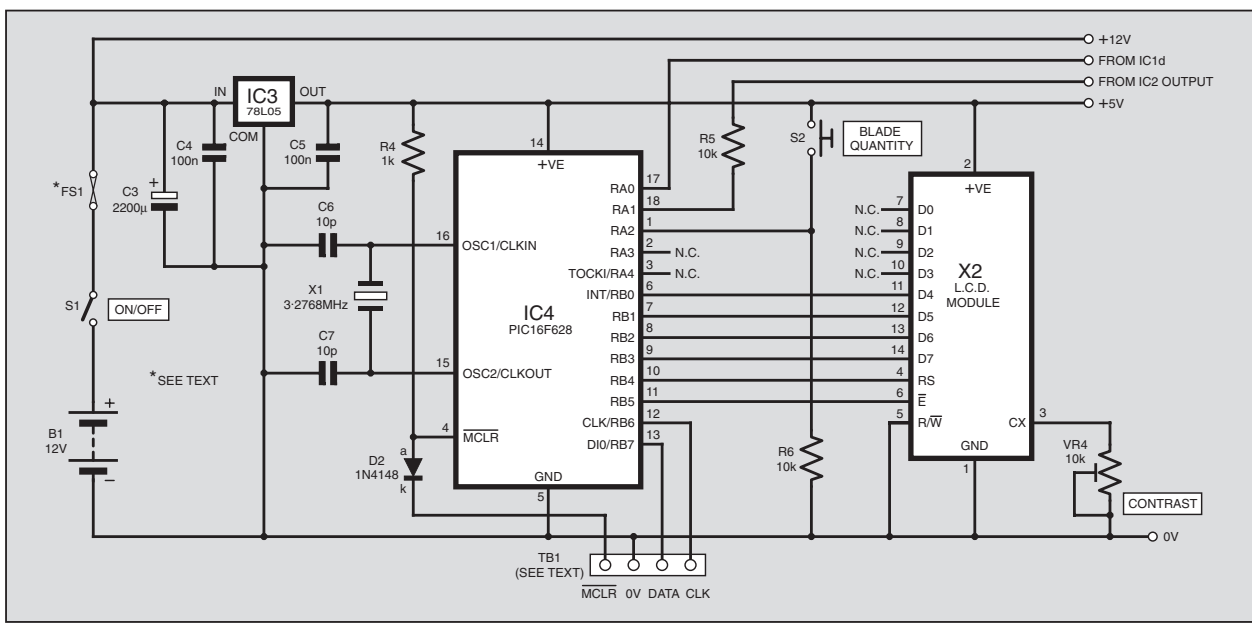

Fig.2. Circuit diagram for the microcontrolled fan-rate sensor and display.

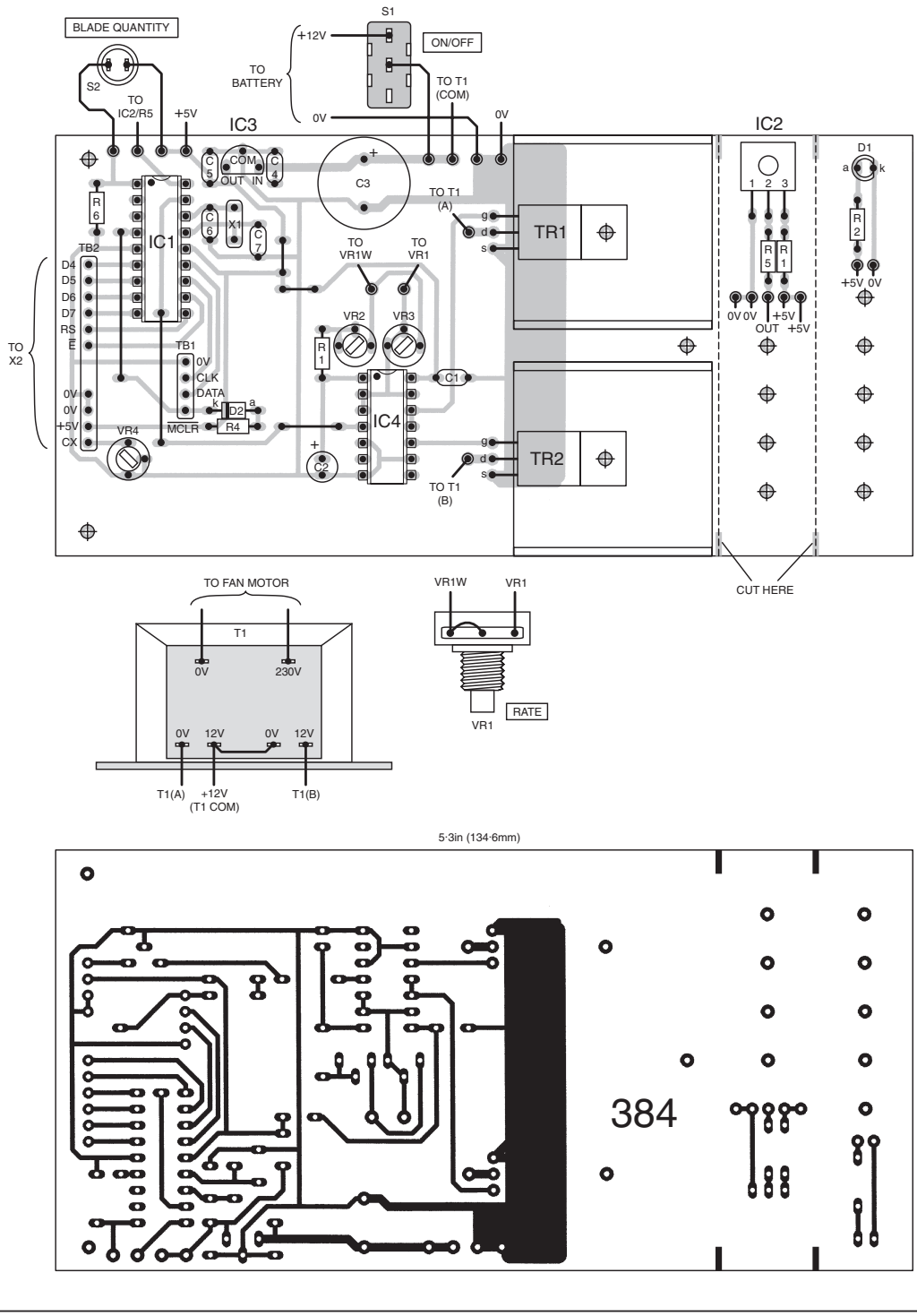

Fig.3. Printed circuit board component layout and full-size copper foil master track pattern for the Wind Tunnel. Note the two sub-strips that need cutting off prior to assembly.

The controlling frequency waveform is "tapped" by IC1d in Fig.1 and fed to PIC pin RA0. Here received pulse phase changes are also counted during one second. The resulting value is divided by two and output to the l.c.d. as a value in hertz.

The 12V battery supply is also fed to IC3, a +5V voltage regulator. It outputs +5V as required by the PIC, l.c.d. and the opto-sensing circuit (D1, IC2).

Capacitors C3 to C5 help to stabilise the power lines. The supply from the 12V battery is particularly susceptible to voltage variation as the current flow through the transformer's 12V windings reaches maximum during each cycle. Capacitor C3 helps to smooth this, but does not totally eliminate it. The voltage output by IC3 is unaffected by voltage changes on the battery supply line.

Resistor R4, diode D2 and connector TB1 allow the PIC to be programmed while in circuit on the board. However, this facility is only valid if you are wishing to re-program a previously programmed PIC16F628. It should not be used to program a brand new PIC.

This is due to the PIC16F62x family (and the PIC16F87x family) having configuration values set during manufacture that can prevent these devices from being first programmed when some PIC pins are connected to external components. Brand new PICs must therefore be programmed in a PIC programmer to which external components are *not* connected.

CONSTRUCTION

It is essential that you treat this design as though it is powered directly from the mains a.c. supply. Observe normal

COMPONENTS

See SHOP TALK page 71

Resistors

R1	100Ω
R2	470Ω
R3, R4	1k (2 off)
R5, R6	10k (2 off)

All 0·25W 5% carbon film.

Potentiometers

VR1	100k rotary carbon, lin.
VR2, VR3	100k min. preset, round (2 off)
VR4	10k min. preset, round

Capacitors

C1, C4, C5	100n ceramic disc, 5mm pitch (3 off)
C2	10μ radial elect. 10V
C3	2200μ radial elect, 25V
C6, C7	10p ceramic disc, 5mm pitch (2 off)

Semiconductors

D1	red l.e.d., ultrabright, 5mm
D2	1N4148 signal diode
TR1, TR2	HUF75329P3 *n*-channel power MOSFET (2 off)
IC1	4584 or similar CMOS Schmitt hex inverter
IC2	IS436 infra-red Schmitt opto-sensor
IC3	78L05 +5V 100mA voltage regulator
IC4	PIC16F628 microcontroller, pre-programmed (see text)

Miscellaneous

S1	s.p.s.t. 15A heavy-duty, low voltage, switch (optional – see text)
S2	min. sp. push-to-make switch, panel mounting.
X1	3·2768MHz crystal
X2	2-line 16-character per line alphanumeric l.c.d. module
TB1	1mm 4-way pinheader (optional – see text)
M1	230V a.c. 26W fan with induction motor (plus two matching safety grilles)
T1	mains transformer, 75VA, 230V a.c. primary, twin 12V a.c. secondaries, 37·5VA each
FS1	fuse, 13A and in-line holder (optional – see text)

Printed circuit board, available from the *EPE PCB Service*, code 384; TO220 finned heatsink, 14°C/W (2 off); 18-pin d.i.l. socket; 14-pin d.i.l. socket; p.c.b. supports, self-adhesive (3 off); nuts and bolts to suit; heavy duty cable (see text); third safety grill (see text); 1mm terminal pins; connecting wire; solder, etc.; materials for tunnel (see text).

Approx. Cost Guidance Only **£45**
excl. fan and tunnel hardware

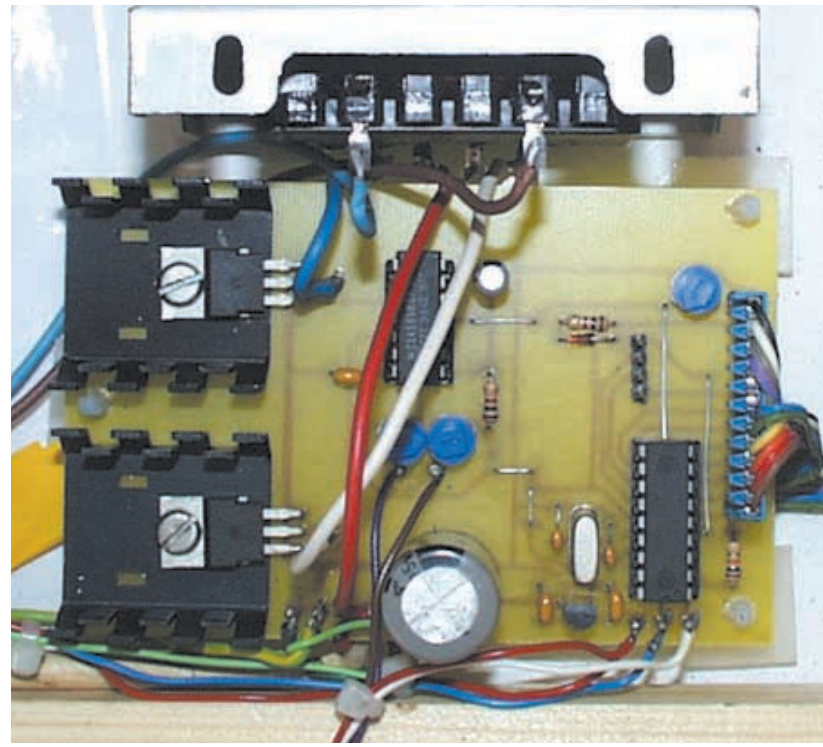

Wind Tunnel assembled p.c.b. See later regarding transformer position.

mains safety precautions at all times. Do not come into contact with the 230V a.c. output from the transformer.

Only construct this project if you are competently experienced at constructing mains powered circuits, or are supervised by someone who is suitably qualified.

The circuits in Fig.1 and Fig.2 are assembled on a single printed circuit board (p.c.b.) whose component and track layout details are shown in Fig.3. This board is available from the *EPE PCB Service*, code 384.

Before assembling the board, first cut off the two end strips which are used for mounting l.e.d. D1 and sensor IC2 on either side of the fan.

Then assemble the main board in order of component size. Do not insert IC1, IC4 or connect the l.c.d. until the correctness of the +5V supply from IC3 has been checked. Ensure the correct orientation of the other semiconductors and the electrolytic capacitors. Treat all i.c.s, transistors and the l.c.d. as CMOS devices and touch a grounded item of equipment to discharge static electricity from your body before handling them.

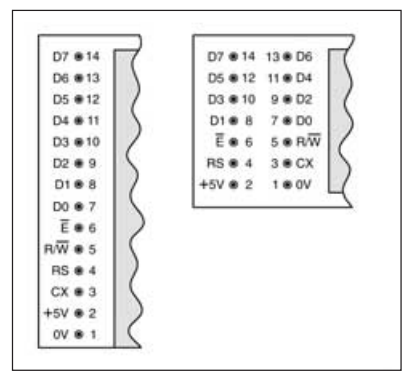

Fig.4. The two "standard" l.c.d. module pinout arrangements.

Transistors TR1 and TR2 require a heatsink to be used with them. Using thin-nosed pliers, bend their leads downwards so the transistors sit with their backs down against the board. Loosely insert the leads into their holes, slide the heatsinks in behind the transistors, and bolt the sandwich to the p.c.b. through the holes provided. It may be necessary to enlarge the p.c.b. holes to suit the bolts. Then solder the transistor leads to their copper pads.

Use 1mm terminal pins for all off-board connection points.

Assemble the components on the two cut-off p.c.b. strips, again correctly observing orientation. Connect leads to these strips, to switch S2 and potentiometer VR1, using leads longer than ultimately required, and solder to the designated points on the p.c.b., but only after the 5V power supply has been checked.

Do not connect the board to the transformer yet.

INITIAL TESTING

Having thoroughly checked the boards for incorrect component positioning and poor soldering, connect the main board to any 12V d.c. supply. Immediately check that +5V is present at the output of regulator IC3. When satisfied, disconnect power, insert the pre-programmed PIC (see later) and IC1, and connect the l.c.d., whose typical pinouts are shown in Fig.4. Also connect the two sub-boards.

Applying power again, adjust preset VR4 so that the l.c.d. screen contrast is satisfactory. A screen display similar to that in the photo below will be seen (but with different values). L.E.D. D1 should be lit brightly.

Typical running mode screen.

There are three factors displayed on the l.c.d. screen, their captions on the upper line and values below. To the left the present fan speed in revolutions per second (RPS) is displayed, which should be zero at this time.

In the centre, the fan speed oscillator rate (Hz) should be displayed and be variable by adjusting potentiometers VR1 to VR3. At the right, the fan blade count is shown, a value of one at this time (subject to the criteria stated in the Setting Blade Count section).

Point the l.e.d. strip towards the sensor on the other strip. Monitor the sensor output on a voltmeter. Check that the voltage is at +5V when the l.e.d. shines on the sensor, but drops to 0V when the sensor is darkened. Moving your hand rapidly back and forth between the l.e.d. and sensor, the RPS value on the l.c.d. should change accordingly (to a waves per second count!).

Now adjust presets VR2 and VR3 so that potentiometer VR1 changes the frequency range between about 40Hz and 250Hz. Preset VR2 sets the maximum frequency when VR1 and/or VR3 are at minimum resistance. VR3 adjusts the total resistance of itself in parallel with VR1, so setting the effective span range of VR1. Note that this setting also affects the lowest frequency that is available when VR1 is at maximum resistance.

Adjust the presets patiently until the desired range is achieved, as displayed in hertz on the l.c.d. Set VR1 so that a frequency of roughly 50Hz is being generated. Switch off again.

SETTING BLADE COUNT

To set the PIC program to suit the number of fan blades, disconnect the power. Then press switch S2 and hold it pressed while the power is reconnected. With power on again, release S2. This action sets the program into blade setting mode. (A toggle switch is shown in the photographs, but a push-switch is preferable.)

The l.c.d. screen will show the message SET BLADE COUNT on line one, with a value below it on line two. If the PIC has been programmed using the embedded data EEPROM value (see later), the value will be one. Otherwise any symbol may appear on line two. Repeatedly press switch S2 until the blade count suited to your fan is shown, as a number between 1 and 9. Following 9, the count will roll over to 1 again, and then upwards once more.

Typical blade count setting screen.

Each switch press causes the shown value to be stored in the data EEPROM at location 0. It is retained there until changed at some future time, even after switching off power. It is automatically recalled next time power is connected.

Disconnect power, wait a second or so, and power up again. The program is now back in normal run mode with the amended fan blade count displayed.

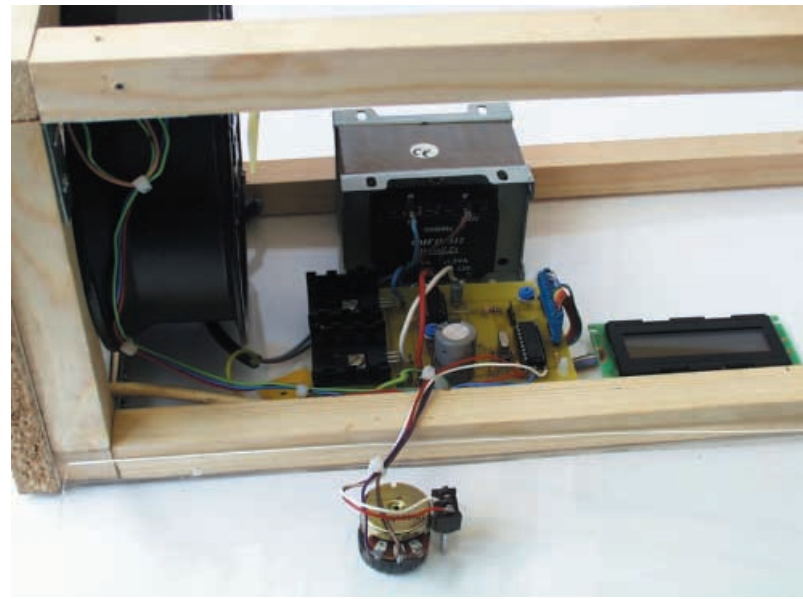

Relative positioning of components within the frame, but note later comments regarding transformer housing.

It is expected that once the blade count has been set it will never need changing again.

TRANSFORMER TEST

Using 13A cable, connect the transformer secondary windings to their respective p.c.b. connection points. **From hereon, fully observe standard mains safety practice.**

Connect a multimeter set to a range suited to 250V a.c. across the output terminals of the transformer's high voltage (230V a.c.) winding. Reconnect power, which should now be supplied by a 12V car battery via 13A twin cable, and check that an alternating voltage is being generated.

The actual reading is likely to vary between different multimeter types. Most are likely to be influenced by the square wave nature of the controlling input waveform. A reading of around 170V a.c. is to be expected, rather than 230V a.c. which would be expected if the input waveform were sinusoidal.

Observing the output waveform on an oscilloscope set to a suitable a.c. range, the waveform should appear as roughly square shaped with a peak-to-peak amplitude of about 350V. Varying the control frequency should not significantly affect the amplitude/voltage. This scope check is not essential.

Finally set VR1 for 50Hz and disconnect power.

FAN POWER

Once the fan has been connected, the following precautions should be observed:

To minimise stress to the power conversion circuit and the fan, it is recommended that you always power up with VR1 set to about 50Hz or so. This allows the fan to more readily start rotating and reach operational speed.

It is advisable not to switch power on when VR1 is set for a Hertz value less than about 40 as current consumption will be higher than normal until the fan speed stabilises.

FAN TEST

Now connect the fan to the transformer, using mains-rated cable of at least 2A. Cover the connections with insulating tape. Connect the fan's earth point to the 0V line (battery negative) at the p.c.b. Normal low current connecting wire will suffice for this. A nut and bolt, plus shake-prove washers, may be needed to connect the wire to the fan's frame. Scrape away any paint on the frame at that point to ensure good electrical contact is made.

Be fully aware that now not only do electrical safety precautions have to be observed, but also mechanical ones. The fan could cause injury if you touch its rotating blades. Beware that it will continue rotating for quite some time even after power is disconnected.

Support the fan firmly on a flat horizontal surface, allowing good air flow clearance in front and behind (say half a metre – 18ins), clearing loose objects that could

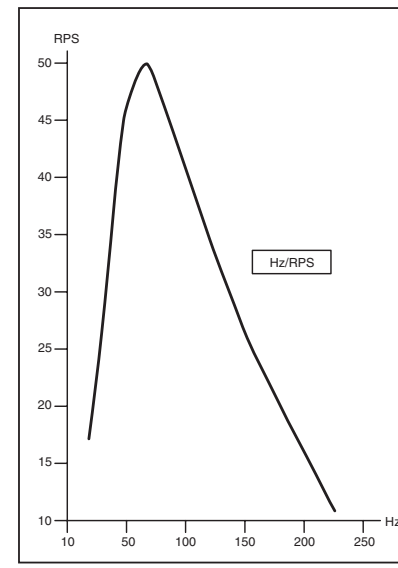

Fig.5. Relationship between fan rotation rate and controlling frequency.

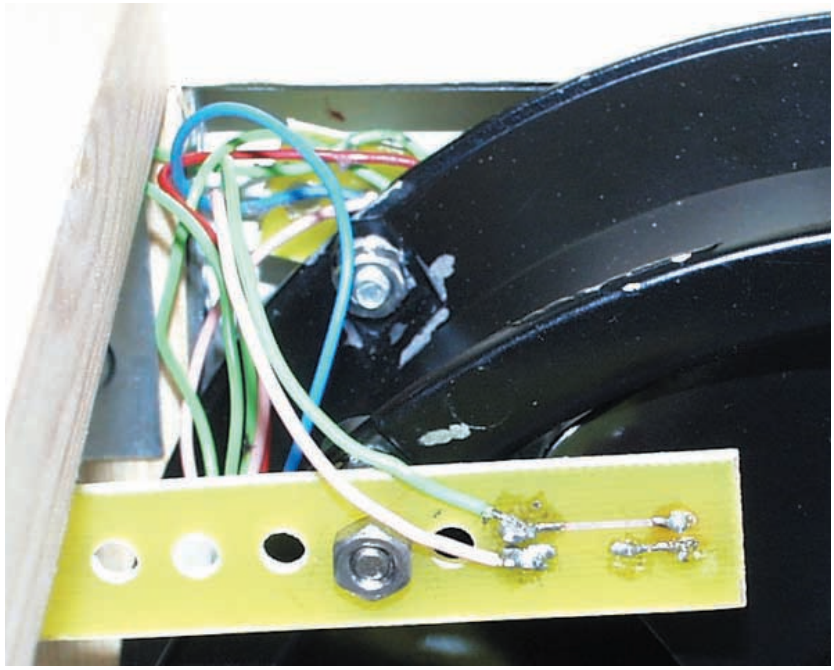

Sub-board holding l.e.d. mounted on the fan case. The opto-sensor is mounted similarly on the other side.

be drawn into the flow, or be dispersed by it at the output end.

Insert a meter capable of reading at least 10A d.c. in series with the 12V positive power supply lead.

With VR1 previously set for a control frequency of about 50Hz, re-apply power. While jointly observing the ammeter reading and the l.c.d., slowly vary the setting of VR1 across its full range. The fan's rotational rate should be fastest at around 50Hz, becoming slower for rates to either side of this (see the graph in Fig.5). The current drawn from the battery will increase for frequencies below about 50Hz, and decrease above that rate (Fig.6).

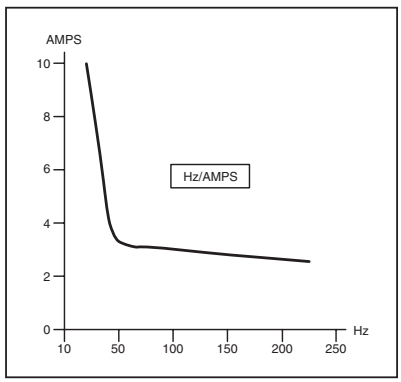

Fig.6. Relationship between fan controlling frequency and current consumption.

It will also be seen on the l.c.d. that the fan's RPS rate at and below 50Hz lags behind the control rate (Hz). For example, you might typically see an RPS rate of 48 when the control rate is 50Hz. This is due to the nature of induction motors – there is slippage between the control frequency and the rotational rate. This fact is discussed in the previously mentioned *Circuit Surgery* article.

From the graphs produced using the prototype's measured values, it will be seen that the fan speed is most economically controlled by varying the control frequency upwards above 50Hz, rather than below it. As the current graph shows, significantly high currents can flow at slow rotational speeds. These could endanger the transformer and the motor.

Before you put the tunnel into active service, it is recommended that you readjust the frequency range covered by VR1 so that currents no greater than about 4A can flow into the transformer.

When observing the multimeter's displayed amperage value, be aware that it will fluctuate. This is due to the current varying at different points in the controlling waveform's cycle. It is the peak values that are most significant.

TUNNEL CONSTRUCTION

The prototype tunnel hardware was designed expediently. That is, the framework was given dimensions to suit the fan diameter and the width of the perspex sheet already purchased. The tunnel's external framework dimensions are 20cm × 20cm × 61cm (7·8in × 7·8in × 24in).

Hardwood battens having a thickness of 20mm × 20mm (0·8in × 0·8in) were used for the frame, joining each section by means of angle-brackets at the corners. If the wind tunnel is to be used in a school, the frame construction might be a suitable project for a woodworking class, employing traditional woodworking skills such as dovetail or mortice and tenon joints.

Plastic covered chipboard (Contiboard) was used for the front plate. A hole of the same diameter as the fan's opening was made by drilling many holes round the circle's internal perimeter, followed by chiselling through the thin walls between the holes, and then smoothing with a power drill attachment.

Mistakenly, the tunnel's height and width dimension were cut so that the structure would just enclose the fan assembly, with the fan mounted inside and against the front framework (as seen in the photographs). With hindsight, it would have been better to have increased the height and width so that the fan could then be mounted immediately behind and onto the front plate. This would have allowed shorter bolts to be used, and perhaps have provided greater long-term structural stability.

The downside is that the internal cross-sectional area of the tunnel would have been larger, resulting in a slower maximum air flow rate (see later).

INTERNAL LAYOUT

It will be seen in the photographs that the printed circuit board and the transformer are both enclosed within the tunnel. This is fine for the p.c.b. and l.c.d. as they will not significantly affect the air flow in the positions shown. Indeed the air flow will help the power transistors and their heatsinks to remain cool.

The transformer, though, is only in the position shown for the author's convenience. Its bulk near the entry to the fan will impede the air flow. It is recommended that the transformer is enclosed in a separate case made from robust plastic and mounted on the outside of the tunnel, with the power leads passing through holes to the motor and p.c.b. Cable grommets should be used to prevent air flow from entering the tunnel via the cable holes.

OPTO SENSOR MOUNTING

When mounting the fan inside the tunnel, the two small p.c.b.s with their l.e.d. and opto-sensor components should be mounted at the same time. In the prototype, the fan's frame had two mounting bolt holes on the front and back. The bolts through the holes were also used to mount these p.c.b.s. The Schmitt trigger sensor board was mounted on the exit side of the fan, using several nuts to position and secure it correctly. Note that the fan sucks the air through the Tunnel.

The l.e.d. board was mounted on the fan's air entry side, using several nuts on a separate bolt (see photo).

The p.c.b.s. have been designed with several bolt holes to facilitate choice of mounting position. Any excess p.c.b. length can be cut off. Position the two assemblies so that they intrude into the air flow path as little as possible. Allow adequate clearance from the fan blades so that they cannot hit the assemblies.

Ensure that when the fan rotates, the l.e.d. and sensor are in clear line of sight of each other when a blade gap is open between them. Tidy the wires between the two boards after mounting them, allowing adequate length to also connect back to the main p.c.b. Use cable ties to harness the wires and secure them so that they cannot be drawn into the air path feeding the fan.

SAFETY GRILLES

The importance of using safety grilles with this tunnel cannot be over-emphasised. It is imperative that at least two should be used – one each on either side of the fan. The external one is shown in the first photograph (an internal one had not been installed at the time of photography). It is also recommended that an additional grille should be inserted between the p.c.b. and the air input side of the tunnel, mounting it close to the p.c.b.

The two main grilles are available as accessories designed for use with the suggested fan. The third grille may need to be improvised to suit the tunnel dimensions. Narrow gauge chicken-wire might serve the purpose without impeding the air flow.

The grilles not only help to prevent fingers from being sliced off, but also help to prevent objects placed within the tunnel being drawn into the air flow and the fan blades or onto the p.c.b. assembly.

FINAL INSTALLATION

When the tests have been completed and the fan mounted, the tunnel can have the electronic assemblies finally (and securely) installed. The p.c.b. was mounted using self-adhesive p.c.b. supports. Drill suitable holes in the perspex and mount VR1 and switch S2.

It is suggested that VR1 is provided with a scale, calibrated in hertz. Calibration for rotation speed could be added too, but note that the values will not be accurate until the fan stabilises for a given hertz value. Calibrating for wind speed is perhaps inappropriate since it can change depending on what objects are within the tunnel.

Finally, screw down the perspex covers. The wind tunnel is then ready to be put into service and the characteristics of air in motion can be scientifically investigated.

AIR FLOW RATE

Five factors govern the maximum rate of air flow that can be achieved at any point in the tunnel:

1. Fan capacity
2. Internal dimensions
3. Presence of internal obstructions
4. Restriction of air flow into and out of tunnel ports
5. Turbulence in the air flow

The volume of air that a fan can move in a given period of time is quoted in the supplier's catalogue. The fan used by the author is RS Components type 223-130. This has the capacity to move air at a rate of 129 litres per second.

A litre represents a volume having dimensions of 10cm × 10cm × 10cm. A rate of one litre per second can therefore be expressed as a cube linearly moving at 10cm per second. This extrapolates to 60sec × 60min × 10cm = 36000cm = 0·36 kilometres per hour. A capacity of 129 litres per second is thus a rate of 46·44kph = 29mph for a one litre cube. Or, to put it in terms of a wind tunnel, if a square-shaped tunnel's cross-section measures 10cm × 10cm, a molecule of air in that tunnel will move at 29mph.

The nominal cross-sectional dimensions within the prototype tunnel's perspex sides are approximately 20cm × 20cm, an area four times that of the volume in the previous paragraph. The maximum rate at which the air can be moved by the fan is thus 29/4 = 7·25mph (11·6kph).

In fact, because the internal dimensions of the prototype are intruded upon by the thickness of the framework battens, the effective dimensions are smaller, and the theoretical maximum air flow rate somewhat faster than the above.

Performing tests in the tunnel with the fan driven directly by 230V 50Hz mains a.c., the maximum air flow rate was measured to be a fraction above 8mph (12·8kph).

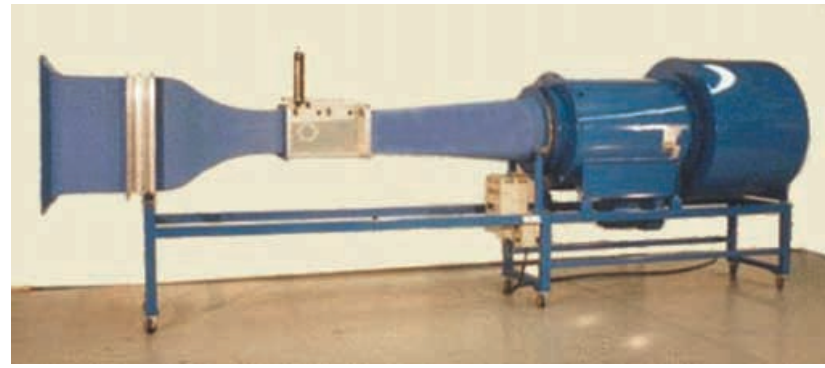

Example of a commercial wind tunnel, approximately 6 metres (20 feet) long, using a 7·5kW motor. Courtesy **www.eldinc.com** (Engineering Laboratory Design Inc).

However, the efficiency of the fan is only maximised when the controlling power is sinusoidal at the manufacturer's stated design power and frequency. The squarewave power from the step-up transformer causes the fan to operate less efficiently. Under variable control, the measured maximum air flow rate was found to be about 6·8mph (10·9kph).

FLOW PATHS

It will be seen that if the tunnel's cross-sectional dimensions are increased, the maximum obtainable air flow rate will fall accordingly.

However, this is not necessarily an adverse situation. During other tests, it was found that many experiments were best performed at slower air flow rates. This was particularly true when smoke trails were used during observation of air flow patterns across objects within the tunnel.

It is worth recognising that the simple act of inserting an object in the tunnel will variously affect the air flow rate at different points within it. For instance, air flowing past the object will move faster than that in the unoccupied tunnel regions.

Also of interest is the fact that the air flow pattern will be influenced by the internal shape of the tunnel, and the shape of its air entry and exit openings.

Air entering the tunnel is drawn from all directions around the tunnel, including from the front. It then meets the square shape of the entry port, which has acute edges on the frame battens. As the air meets these edges and has to curve around them, turbulence is caused. Further turbulence is caused by the friction between the air and the perspex sides and more batten surfaces. Then the suction of the fan draws the air into a cone before passing the rotating blades.

On the exit side of the fan, the moving air then meets resistance as it collides with the external air. Whilst this will not directly affect the turbulence within the tunnel, resistance at the fan's exit will affect the rate of air flow within the tunnel.

This can be easily demonstrated once the tunnel has been completed, by bringing a book towards the fan's exit, and observing how the *Wind Speed Meter* shows the air flow slowing as the book gets closer. Do not attempt to fully prevent air escaping from the exit as this could stress the fan motor and possibly damage it.

The previous few paragraphs give hints at some of the experiments and observations that can be made just on the tunnel itself. The use of the *Wind Speed Meter* and of "smoke trails" as discussed later should provide some informative results.

Professionally manufactured wind tunnels have internal surfaces shaped and smoothed to reduce unwanted turbulence as much as possible. As can be seen in the photograph of a commercial wind tunnel, the entry and exit ports are also shaped to help minimise input turbulence and output resistance.

EXPERIMENTS

Investigative experiments should include checking the rate of air flow through the tunnel in terms of a quantified distance per unit of time in respect of the fan's rotational rate.

This is where again the *Wind Speed Meter* can be used, inserting it into the centre of the tunnel and noting its readings against the tunnel's l.c.d. readings showing RPS and Hz. The measured results of varying fan RPS in relation to air speed in miles per hour are shown in Fig.7.

In the *Wind Speed Meter* article, the author raised the question of whether or not fan rotation rate is linearly related to wind speed. The graph in Fig.7 confirms that it is over the range tested.

The wind tunnel can be used effectively in several ways. As one example, it can be used to demonstrate how a standing object can be toppled by wind. We already know this from experience, but the tunnel can quantify the relationships between object stability and wind speed.

Another example is to demonstrate how air flow can cause aircraft wings to provide lift, and how the shape of the wings can affect this. The models must, of course, be light enough to be lifted by the tunnel's air flow. Small balsa wood models might be suitable, although this has not been tested. Paper models could also be used if made rigid enough.

SMOKE TRAILS

The pattern of the air flow itself can be observed if a suitably visible substance is injected into it (see photo). A variety of smoke generating methods are widely employed, but all based on materials that are variously either flammable, smelly and/or messy.

The object is to demonstrate how air flow paths are changed by an object in their midst. An understanding of vehicle streamlining can be obtained in this way, for example.

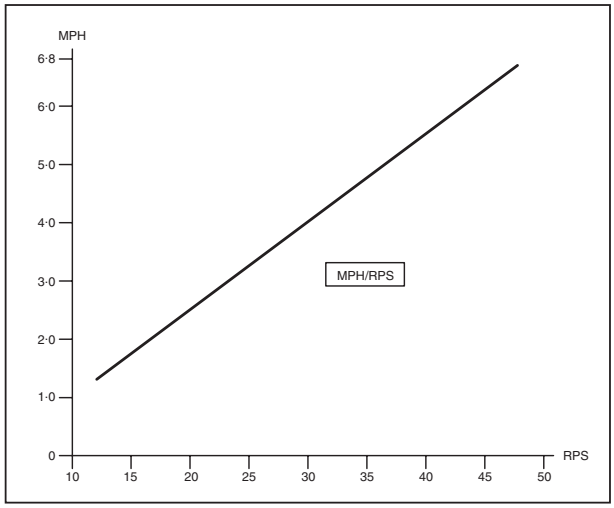

Fig.7. Relationship between air flow in m.p.h. and fan rotation rate in the empty prototype tunnel.

For the sake of the photograph, a plumber's smoke cartridge was used. These can be bought from centres specialising in plumber's materials. Those bought by the author provided about 30 seconds of smoke from each capsule. However, they are slightly expensive, and very smelly!

The same applies to plumber's matches, which smoke well for several seconds. These two materials are apparently used by plumbers when checking for air flow in flues and ventilation ducts.

Another option is traditional bee-keeper's smoke, as used to pacify bees. It is typically comprised of various wood and cardboard materials that burn slowly giving off smoke. Questioning bee-keepers at County Shows, it seems that different bee-keepers are likely to use their own customised materials, with recipes differing depending on who is asked!

At one show it was suggested that a modern chemical "liquid smoke" might be a suitable alternative. This was said to be squirted from a can without the need for combustion. Further research, though, revealed that this substitute is not too visible and that it is the aroma that pacifies the bees, not its appearance.

Another possibility is to use dry-ice. Theatres and discos frequently use dry-ice generating machines to simulate smoke drifting across a floor. Such machines are available from disco equipment hire shops and the like. Several web sites mention Roscoe Fog Machines, which might be worth investigating. The name Mole-Richardson (well known in the film-industry) also showed up in the context of fog machines.

Other possibilities that showed up when doing a web search via **www.google.com** are:

- smoking candles
- thin opaque fluid squirted into the airstream from a fine nozzle
- fine white powder "drizzled" into the airflow
- soap bubbles such as are generated by some children's toys
- fine sawdust
- mineral oil dripped onto a wire heated sufficiently to cause the oil to smoke

Web site file **www.eng.fsu.edu/~alvi/EML4304L/alpha/node15.html** shows an example of the latter. Other sites (names not recorded) suggested ni-chrome smoke wire, and resistance wire such as that used with the bars of electric fires.

Only plumber's smoke has been used by the author and no opinion on the other techniques can be offered.

Smoke trail across a car-shaped computer mouse, using a plumber's smoke capsule as the source. Thinner trails from a nozzle-shaped source would provide better detail. Note how the air flows over the profile and then pulls back in towards the shape to fill the partial vacuum created.

ORIGINS

Web site **www.eldinc.com/wind_tunnel/wind_tunnel.htm** offers the following on the origins of wind tunnels:

Wind tunnels were developed during the late 1880's when it was recognised that outside conditions were too uncertain to plan and execute the testing required to aid in man's quest to fly. As John Smeaton, in a paper read before the Royal Society in 1759, stated: "In trying experiments on windmill sails, the wind itself is too uncertain to answer the purpose, we must have recourse to an artificial wind".

It is not said how this was accomplished.

Care must be taken, of course, to ensure that slow air flow speeds do not allow any trail substances to settle on the fan or the circuits.

It is recommended that if trails of some sort are to be used extensively, an air extraction duct of the type used with domestic tumble dryers should be secured to the tunnel exit and fed outdoors through an associated extraction vent.

Tell the author via *EPE* what trail method you find best once you get to know the tunnel.

A final note of caution – do not place anything in or near the tunnel that could be damaged by the air flow or contact with the fan blades.

SOFTWARE

Software for the PIC microcontroller used in this design is available on a 3·5in disk from the *EPE* Editorial office. A nominal charge applies to cover admin costs. It is also available for free download from the *EPE* ftp site. The easiest access route to this is via the *EPE* web site at **www.epemag.wimborne.co.uk**. At the top of the home page, there is a menu item stating *FTP Site (Downloads)*. Click on this, then follow along the folders path PUB/PICS/WindTunnel. Open the latter folder and download the files required.

There are two files, having extensions .ASM (TASM grammar assembly source code), and .HEX (MPASM format hex code for programming into the PIC via a suitable programmer, e.g. *Toolkit TK3*).

The HEX file has data EEPROM and configuration values embedded in it. For those whose programmers do not handle such embedded values, the configuration is crystal XT, POR on, WDT, CP and all other options off. Only a single data EEPROM value is used, the fan blade quantity, and this can be set via switch S2 as discussed earlier.

Pre-programmed PICs are available as stated on this month's *Shoptalk* page. Details of where to buy some of the other components for this design are also covered there – read it!

WEATHER FORECAST

This wind tunnel and the *Wind Speed Meter* were originally designed to test the viability of using ultrasonic techniques to measure wind speed and direction, for use in a forthcoming "multi-function" Weather Centre and Logger. It has long been promised, and just needs a bit more work on it under "garden conditions" – when much warmer weather prevails! It is both "standalone" and with a PC interface that allows weather conditions to be displayed graphically. □

INGENUITY UNLIMITED

Our regular round-up of readers' own circuits. We pay between £10 and £50 for all material published, depending on length and technical merit. We're looking for novel applications and circuit designs, not simply mechanical, electrical or software ideas. Ideas *must be the reader's own work* and **must not have been submitted for publication elsewhere.** The circuits shown have NOT been proven by us. *Ingenuity Unlimited* is open to ALL abilities, but items for consideration in this column should be typed or word-processed, with a brief circuit description (between 100 and 500 words maximum) and full circuit diagram showing all relevant component values. **Please draw all circuit schematics as clearly as possible.** Send your circuit ideas to: Alan Winstanley, *Ingenuity Unlimited,* Wimborne Publishing Ltd., 408 Wimborne Road East, Ferndown Dorset BH22 9ND. (We **do not** accept submissions for *IU* via E-mail.)
Your ideas could earn you some cash **and a prize!**

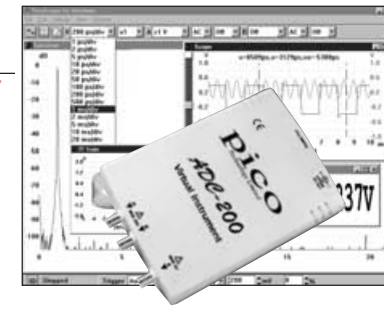

WIN A PICO PC BASED OSCILLOSCOPE WORTH £586

- 100MS/s Dual Channel Storage Oscilloscope
- 50MHz Spectrum Analyser
- Multimeter • Frequency Meter
- Signal Generator

If you have a novel circuit idea which would be of use to other readers then a Pico Technology PC based oscilloscope could be yours. Every 12 months, Pico Technology will be awarding an ADC200-100 digital storage oscilloscope for the best IU submission. In addition, a DrDAQ Data Logger/Scope worth £69 will be presented to the runner up.

Single-Cylinder Ignition – Bright Spark

THE circuit diagram shown in Fig. 1 is for an electronic ignition circuit for a single-cylinder engine, and was created when the magneto ignition coil on a 5hp lawnmower engine failed in open-circuit mode. It functions as follows: 12V is fed from the engine's battery to the original contact points via diode D2 and resistor R1. When the points are closed, the gate (g) of TR2 is held at 0V which allows the gate of power MOSFET TR5 to be pulled up to +12V, thereby allowing current to flow through the primary winding of the engine's ignition coil T1.

When the points open, TR2 is turned on which in turn pulls down the gate of TR5 thereby cutting power to T1 primary and creating a spark in the spark plug. Components D2, C2 and C3 provide a reasonably stable voltage bus for the low-power side of the circuit as the rapid switching of T1 causes a lot of electrical noise. The l.e.d. D3 provides a visual indication of the status of T1 at cranking speeds and is also useful for testing.

Shutdown

Should the engine stop for a reason other than the operator switching the ignition off (e.g. running out of petrol) then a condition may occur whereby the points remain closed which would lead to the destruction of TR5 and/or the coil T1. Should the points remain closed therefore, the gate (g) of TR3 is pulled to ground (0V) thereby allowing TR4 to turn on once the voltage on capacitor C1 reaches its gate threshold voltage, i.e. in about two seconds. The MOSFET TR4 then grounds the gate of TR5 and shuts off current to the ignition coil. As soon as the points open again, normal operation is restored.

Components TR1, R2 and Zener diode D1 provide a TTL-compatible pulse output which was actually used as an input to a PIC-based tachometer circuit. Diode D4 protects TR5 from the nasty spikes created by the inductive nature of T1.

All resistors are standard 0·25W 5% carbon. Ignition coil T1 may be sourced from either a breaker's yard or a motor factor. The type used in the prototype was designed for electronic ignition and needed no ballast resistor, however one *must* be included otherwise TR1 must be adequately heatsinked. Component choice is not critical and any equivalents may be used so long as they meet or surpass the spec. of the specified parts.

Damien Maguire,
Greystones, Ireland.

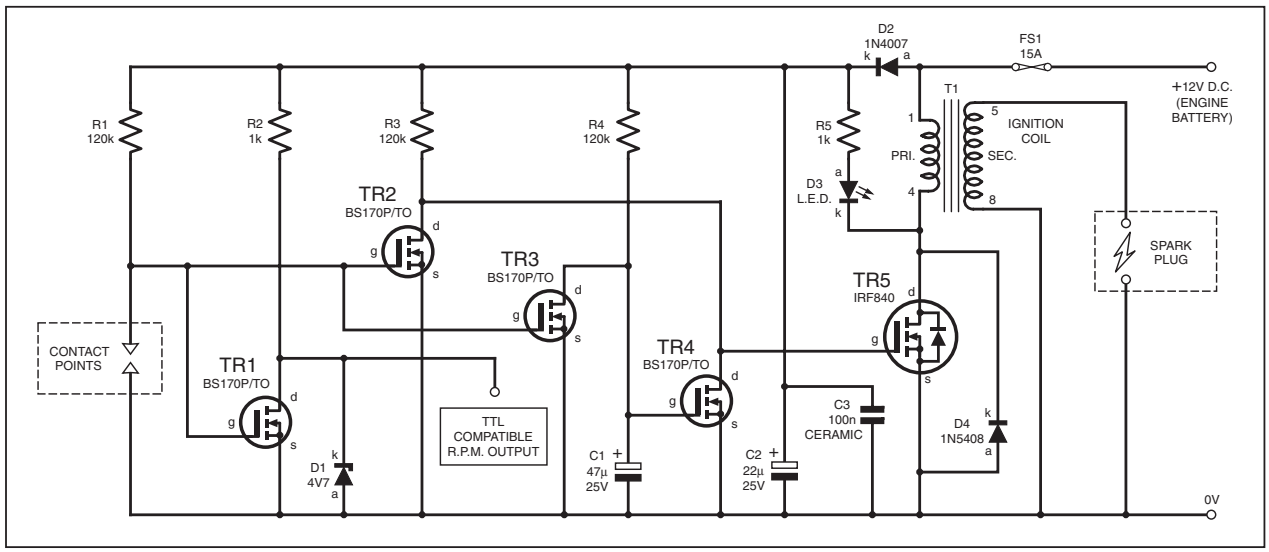

Fig.1. Circuit diagram for a Single-Cylinder Ignition.

Reaction Timer
– Fast Flash

THE Reaction Timer of Fig.2 is an exercise in NAND gates. It uses three classic multivibrators which are made exclusively from NAND gates. The operation of the circuit is best described as follows.

Gates IC2c and IC2d form an astable multivibrator whose frequency of oscillation is governed by R4 and C3. The output of IC2d (pin 4) is fed to the clock input of IC1. This is a 4017 decoded decade counter which counts the input pulses via outputs Q0 to Q9, lighting up a different l.e.d. on each pulse it receives. After output Q9, the counter normally resets to Q0 and repeats the cycle. However, pin 11 is connected to pin 13 (inhibit/enable), via D2, which disables the counter and stops the cycle from repeating itself.

When the Reset switch (S2) is closed, a monostable multivibrator formed of IC2a and IC2b is enabled whose time constant is governed by C2 and R3, about 10 seconds with the values shown. The output from pin 11 is high during this cycle, which resets IC1 to Q0. The first l.e.d. D3 is on during this time, and it stays on until the monostable cycle is over.

The counter will then start counting the astable pulses, and all the remaining l.e.d.s will light rapidly in sequence. The object of the Reaction Timer is therefore to see how quickly the Stop button S1 can be pressed after the first l.e.d. goes out.

A bistable latch (flip-flop) is formed from IC3. When the Reset button is pushed, the output from pin 10 goes low and stays low. When the Stop button is pushed, pin 10 of IC3 goes high and disables IC1 from counting. Diodes D1 and D2 form an OR gate to disable IC1 either by the Stop button or by l.e.d. D12 lighting up, whichever comes first. Capacitor C1 turns the monostable on as soon as the circuit is powered up.

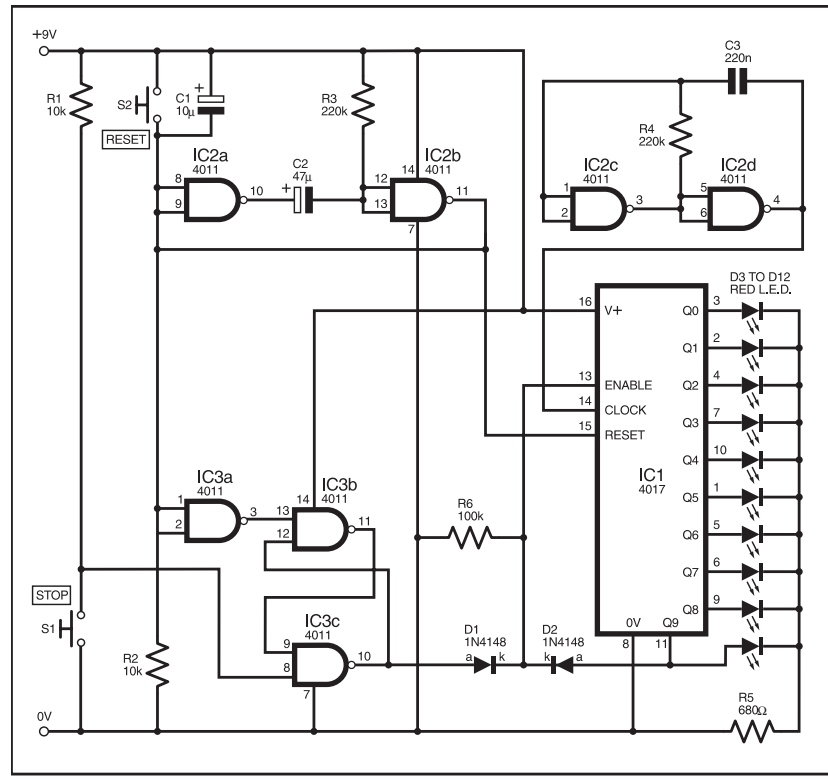

Fig.2. Circuit diagram for a simple l.e.d. Reaction Timer.

Martin Weighell,
Tiverton, Devon

IT'S A GREAT WIND-UP ISSUE NEXT MONTH – SO ORDER YOUR COPY NOW!

★ WIND-UP TORCH II ★

PLUS:

200MHz FUNCTION GENERATOR

DRIVER ALERT

EVERYDAY PRACTICAL ELECTRONICS
INCORPORATING ELECTRONICS TODAY INTERNATIONAL

Annual subscription rates:

6 Months: UK £15.50, Overseas £18.50 (standard air service), £27.50 (express airmail)
1 Year: UK £29.50, Overseas £35.50 (standard air service) £53 (express airmail)
2 Years: UK £54.00, Overseas £66.00 (standard air service) £101 (express airmail)
To: Everyday Practical Electronics, Wimborne Publishing Ltd., 408 Wimborne Road East, Ferndown, Dorset BH22 9ND
Tel: 01202 873872 Fax: 01202 874562
E-mail: subs@epemag.wimborne.co.uk
Order from our online shop at: www.epemag.wimborne.co.uk/shopdoor.htm

Name .....

Address .....

Post code ..... Tel. .....

If you do not wish to cut your issue, send a letter or copy of this form.

TAKE ADVANTAGE NOW!

SUBSCRIPTION ORDER FORM

I enclose payment of £ .....
(cheque/PO in £ sterling only),
payable to Everyday Practical Electronics

My card number is: .....
Please print clearly, and check that you have the number correct

Signature .....

Card Security Code ..... (The last 3 digits on or just under the signature strip)

Card Ex. Date ..... Switch Issue No. .....

Subscriptions can only start with the next available issue.
For back numbers see the *Back Issues* page.

FLOWLOG

datalogging ● control ● electrical measurement

A NEW, LOW COST OSCILLOSCOPE, DATALOGGER AND CONTROL UNIT

£99 +VAT

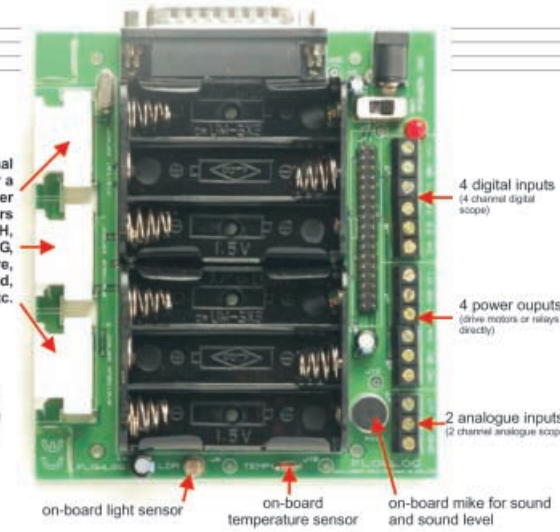

FREE SOFTWARE APPLICATIONS INCLUDE:

2 channel analogue scope

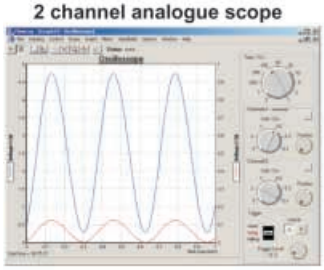

4 channel digital scope

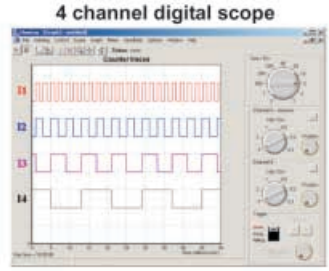

advanced datalogging software

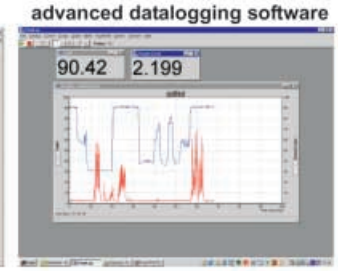

flexible control software

Flowlog is a new computer interface that provides datalogging, control and electrical measurement functions for use in science and electronics. Flowlog provides unrivalled value for money and performance. Please log onto our web site for full specification and description.

www.matrixmultimedia.co.uk
sales@matrixmultimedia.co.uk
t. 0870 700 1831 f. 0870 700 1832

A COMPLETE RANGE OF INVERTERS

150W TO 2500W - 12V & 24V

A Complete range of regulated inverters to power 220V and 240V AC equipment via a car, lorry or boat battery. Due to their high performance (>90%) the inverters generate very little heat. The high stability of the output frequency (+/-1%) makes them equally suitable to power sensitive devices.

These inverters generate a modified sine wave, which are considerably superior to the square waves which are produced by most other inverters. Due to this superior feature they are capable of powering electrical equipment such as TV,s, videos, desktop & notepad computers, microwave ovens, electrical lamps, pumps, battery chargers, etc.

Low Battery Alarm

The inverters give an audible warning signal when the battery voltage is lower than 10.5V (21V for the 24V version). The inverter automatically shuts off when the battery voltage drops below 10V (20V for the 24V version). Fuse protected input circuitry.

Order Code	Power	Voltage	Price
651.581	150W Continuous	12V	£36.39
651.578	150W Continuous	24V	£36.39
651.582	300W Continuous	12V	£50.64
651.585	300W Continuous	24V	£50.64
651.583	600W Continuous	12V	£101.59
651.593	600W Continuous	24V	£101.59
651.587	1000W Continuous	12V	£177.18
651.597	1000W Continuous	24V	£177.18
651.602	1500W Continuous	12V	£314.52
651.605	1500W Continuous	24V	£314.52
651.589	2500W Continuous	12V	£490.54
651.599	2500W Continuous	24V	£490.54

All prices are inclusive of V.A.T. Carriage £6.00 Per Order

Many uses include:- ⋆ Fetes ⋆ Fairgrounds ⋆ Airshows ⋆ Picnics ⋆ Camping ⋆ Caravans ⋆ Boats ⋆ Carnivals ⋆ Field Research and ⋆ Amateur Radio field days * Powering Desktop & Notepad Computers.

DELIVERY CHARGES ARE £6-00 PER ORDER. OFFICIAL ORDERS FROM SCHOOLS, COLLEGES, GOVT. BODIES, PLC,S ETC. PRICES ARE INCLUSIVE OF V.A.T. SALES COUNTER. VISA AND ACCESS ACCEPTED BY POST, PHONE OR FAX, OR EMAIL US AT SALES@BKELEC.COM ALTERNATIVELY SEND CHEQUE OR POSTAL ORDERS MADE PAYABLE TO BK ELECTRONICS.

For Full Specifications View our web site at:-

WWW.BKELEC.COM/INVERTERS.HTM

B.K. ELECTRONICS

UNIT 1, COMET WAY, SOUTHEND-ON-SEA, ESSEX. SS2 6TR
TEL.: +44(0)1702-527572 FAX.:+44(0)1702-420243

Special Feature

IN THE BAG

TERRY de VAUX-BALBIRNIE

Have you ever wondered how your car airbags work?

AIRBAGS have been fitted in up-market cars since the 80s. However, they have only appeared in volume production models in the UK since the mid-90s. It might therefore be thought that the idea of using an inflatable bag to protect the occupants of a vehicle in the event of an accident is a recent one. In fact, a patent was filed for "an inflatable crash-landing device" for aircraft in World War II.

CONTROVERSY

The idea of cushioning a person against the potentially fatal effects of a serious accident seems attractive. Even so, the use of airbags remains controversial. They have even killed some people.

Injuries have been caused to the neck and indirect damage due to inappropriate deployment (for example, in a minor collision) causing the driver to lose control at a critical time. Injuries can occur to children or small people in the front passenger seat due to the violence of the airbag striking them (on inflation it moves at around 140 miles per hour or over 200 metres per second).

Since the bag will be inflating when making contact with any exposed area of skin, the friction may cause burns. Although these might be painful and possibly require hospital treatment, they are considered to be a minor risk in what is, after all, a serious situation. There have also been reports of hearing problems resulting from the sudden increase in pressure as air is displaced when the bag inflates.

Even so, it is generally agreed that the use of airbags has resulted in fewer serious injuries compared with not using them. Research in the US has shown that the risk of dying from direct impact to the front of a car is reduced by more than 30 per cent. The trend among car manufacturers is to build on this by using multiple systems to provide passenger and side impact protection.

SOME PHYSICS

During a collision, rapid deceleration of the car occurs. Because the occupants are free to move, they appear to be "thrown forwards" (when, in fact, they just keep moving until restrained by a force). This is in accordance with Newton's First Law of Motion.

With no inbuilt form of protection, the restraining force would be provided by the reaction of the person's head striking the steering wheel, dashboard or windscreen. In severe accidents, he or she could even be ejected from the car.

The most important means of protection are the seat belts. These are therefore regarded as the *primary* restraint and any other system is considered to operate in conjunction with and not in place of them. An airbag is therefore regarded as the *Supplementary Restraint System* (many people have wondered what "SRS" as written on the outside of the airbag housing stands for). Those suffering injuries despite the airbag being deployed were often found not to have been wearing a seat belt or were wearing it incorrectly.

WHIPLASH

The disadvantage of the seat belt alone is that, in the event of a collision, the head continues to move forwards and this can cause injury both to itself and the neck. On stopping, the head tends to be thrown back again which causes the particular type of injury known as *whiplash*.

An airbag increases the area of contact between the body and the means of restraint. This lowers the pressure and reduces injuries to the chest. Restraint from the airbag is provided through the elasticity of the gas inside it.

In a practical system, the bag inflates before the head has moved very far from its rest position then deflates. The whole process takes place in less than 120ms (milliseconds). If a car hits a fixed object at 30mph, there will be some 100ms before the head would otherwise strike the windscreen (the deceleration is not instantaneous because it is limited by the controlled crumpling of the car structure).

It would, therefore, take some 50ms for the head to make contact with the airbag mid-way between its rest position and the windscreen. Since it takes around 30ms for inflation to occur, the decision for deployment must therefore be made no later than 20ms after impact.

EARLY PROBLEMS

The main problems encountered in early systems were in providing sufficiently rapid inflation and finding reliable means of deployment. Using a cylinder of compressed air stored under the driver's seat was one early method.

Although this worked quickly enough, it was clumsy and difficult to control accurately and predictably especially with changes in temperature. Also, the gas cylinder occupied valuable space and

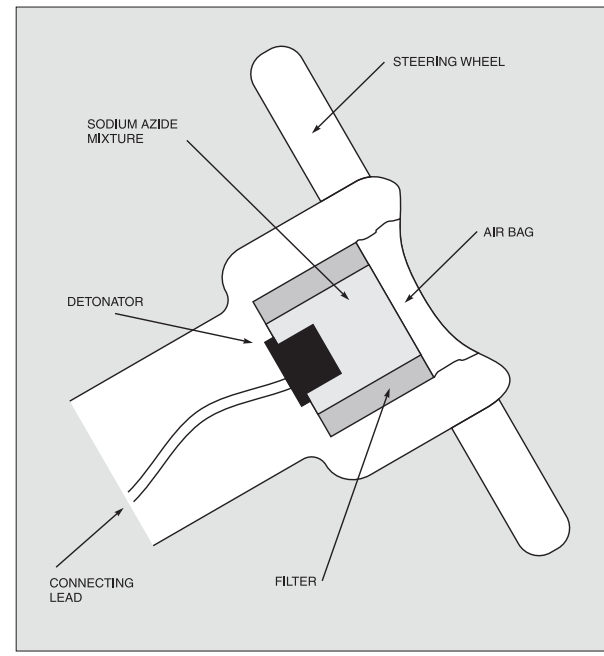

Fig.1. Simplified airbag operating system using a detonator (squib) and chemical reaction to inflate the bag housed in the steering column.

had to be checked regularly to make sure it had not lost any gas by leakage.

CHEMICAL REACTION

During the 1970s, a new approach was developed using a chemical reaction to generate the gas and this is the method generally used today. Many chemical reactions produce gas but it is often toxic or produced too slowly to be useful.

A mixture of sodium azide (NaN_3), potassium nitrate (KNO_3) and silicon dioxide (SiO_2) fulfils the requirement. This material when heated produces nitrogen. The mixture is enclosed in a canister together with the airbag itself.

The bag is made of nylon and has a capacity of approximately 50 litres depending on the size of the car. It is carefully folded up together with some talc which prevents it from sticking to itself since this could result in tearing on inflation.

The assembly is so compact that it may be fitted in a recess in the steering wheel or instrument panel (see heading photograph). A simplified view of a typical airbag operating system is shown in Fig.1. The filter and detonator will be discussed presently.

THE RIGHT CHEMISTRY

The equations are:

First: $2NaN_3 \longrightarrow 2Na + 3N_2$ (nitrogen)

Then: $10Na + 2KNO_3 \longrightarrow K_2O + 5Na_2O + N_2$ (more nitrogen)

The nitrogen is, of course, harmless. However, the sodium and potassium oxides are decidedly nasty substances which react with water to form sodium and potassium hydroxide, Na_2O and K_2O, (commonly known as caustic soda and caustic potash respectively).

The equation is:

$Na_2O + H_2O \longrightarrow 2NaOH$ (similarly for K_2O)

If any of the oxide mixture were to be breathed, sodium and potassium hydroxide would therefore be formed in the moist membranes of the mouth, trachea and lungs. Since these hydroxides are strong alkalis, they would cause widespread "burning" and injury.

Much of the harmful material is removed using a reaction with the silicon dioxide. This produces a glass-like substance which is relatively harmless. The glass, together with any residual oxide, is removed using a filter through which the gas passes on its way to the bag.

A small chemical detonator ("squib") is used to initiate the reaction. This is inserted in the base of the unit and is activated by passing a large current (10A approx.) through a short piece of resistance wire buried in it.

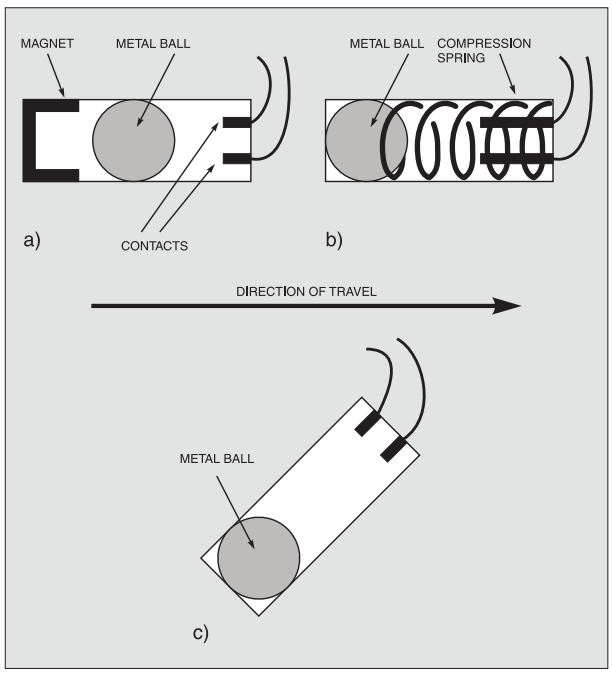

Fig.2. Using a "ball-in-tube" sensor to detect violent deceleration: (a) using a magnet, (b) compression spring and (c) a tilt tube.

MAKING SENSE OF IT

A system is needed which will activate the airbag when the crash is sufficiently violent. Deployment is regarded as a very serious matter not to be taken lightly. Continuing research attempts to find better methods to get the decision right. However, the ideal cannot be totally realized in practice.

To detect the deceleration of the car, a sensor needs to be rigidly attached to some point on the structure. The simplest is a "ball-in-tube" type. This consists of a metal ball in a tube with a pair of contacts at the other end.

In a collision, the ball will roll along the tube, complete a circuit and direct current to the detonator. A restraining force needs to be applied to the ball which will determine the sensitivity of the device and this has been done in several different ways.

In one design, a steel ball was held in position using a permanent magnet (Fig.2a). With sufficient force, the ball broke free and rolled along the tube. In another method, the ball was restrained by a compression spring. Under sufficient deceleration, the spring was compressed so that the ball touched the contacts (Fig.2b).

Yet another method used a tilted tube and allowed gravity to restrain the ball (Fig.2c). Under deceleration, the ball would roll up the slope and close the contacts.

When only ball-in-tube sensors were available, it was considered safer to use several of them connected in series and placed at various points on the vehicle chassis to eliminate the effects of sudden local decelerations. Only when all devices where "on" did the airbag deploy.

The main disadvantage of the ball-in-tube sensor is that it responds to a single instantaneous value of deceleration and this may be inappropriate. A more reliable decision on whether or not to "fire" the airbag should be made over the whole of the available time (20ms approx.). Clearly, hitting a bump in the road could result in a large but momentary deceleration. This would be unlikely to cause injury but could well trigger this type of sensor.

IN CONTROL

A modern airbag system uses an electronic accelerometer to monitor the behaviour of the car (*deceleration* is just *negative acceleration!*). The output will follow an extremely complex pattern as the car accelerates and decelerates. A control system will then base a decision on the numerical value of the output signal as it varies with time.

A practical system might "look at" the graph of deceleration against time each 20ms and integrate the result (this is equivalent to taking the value of the area beneath the line). As soon as this adds up to a certain value, the detonator is activated (see Fig.3).

Another approach stores a number of "crash profiles" in read-only memory (a look-up table). These profiles are developed in the light of research and historical data. Incoming information is checked against the table and, if there is a match, the detonator is "fired". An alternative is to use an algorithm (problem-solving equation) and perform calculations on the incoming data.

There are various types of accelerometer which work on different principles – piezoelectric, resistive (strain-gauge) and capacitive. Modern devices are produced as a single unit, which combines the sensor itself with a pre-amplifier and control circuitry.

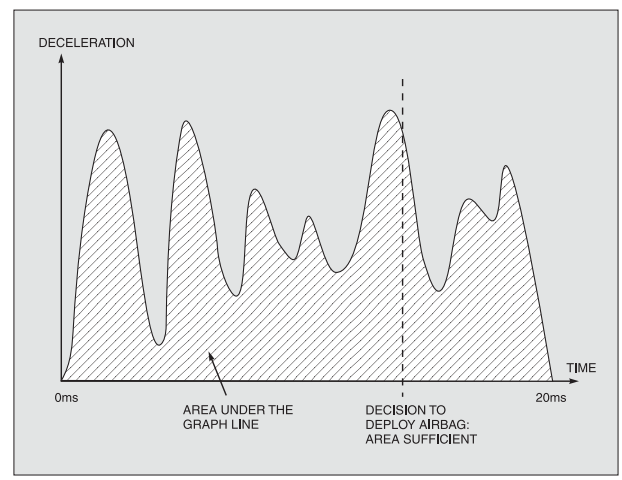

Fig.3. Graph showing the "decision" point for deploying the airbag.

Some are directional so that they are sensitive only to a frontal collision. Others are multi-axis types. These consist of more than one unit in the same package so that they will respond to different directions and provide outputs accordingly. They may then deploy front and side-impact airbags independently.

PIEZOELECTRIC ACCELEROMETER

A piezoelectric accelerometer type of sensor exploits the piezo-electric effect whereby certain crystals (notably quartz and certain ceramic materials) produce a voltage pulse between a pair of electrodes attached to opposite faces when the crystal is stressed. This is the principle on which "crystal" microphones and record player pickups work.

A wafer of piezo-electric material having a small mass attached to it is shown in Fig.4. Under deceleration, the material will be compressed and a voltage output obtained between the electrodes.

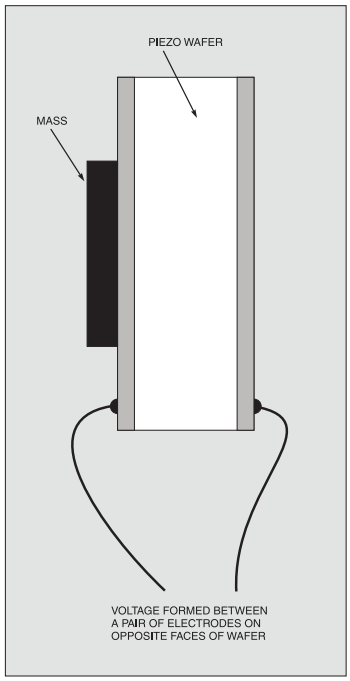

Fig.4. Piezoelectric accelerometer wafer.

STRAIN-GAUGE

A strain-guage accelerometer works by measuring the change in resistance of a piece of fine wire when it is stretched. One form has a cantilever beam (a small flexible bar fixed at one end) with a mass attached near the free end (see Fig.5).

On acceleration or deceleration the beam will bend one way or the other. This bending is translated into a variable voltage by the change in resistance of a small resistive element attached to one side of it (a strain-gauge).

The strain-gauge consists of a zigzag of very fine wire which, in practice, will be laser-etched on an insulating substrate. This provides a long piece of thin wire in the small size of the sensor.

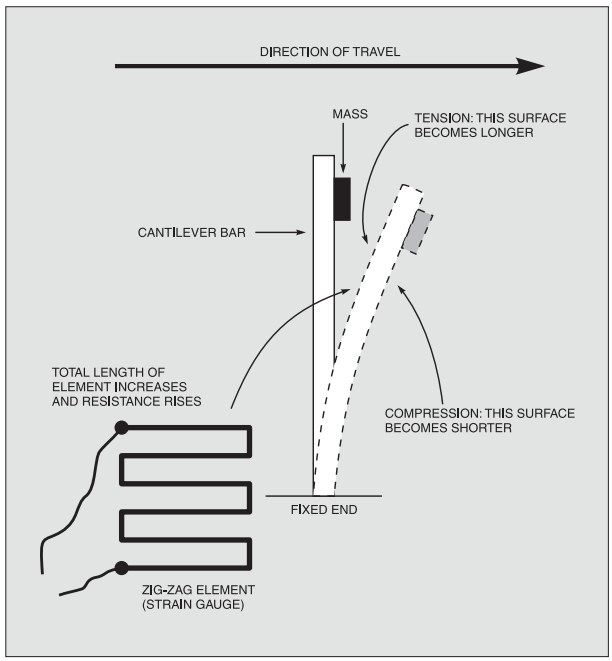

Fig.5. Principle of operation of a strain-gauge accelerometer. It works by measuring the change in resistance of a fine wire when it is "stretched" or strained.

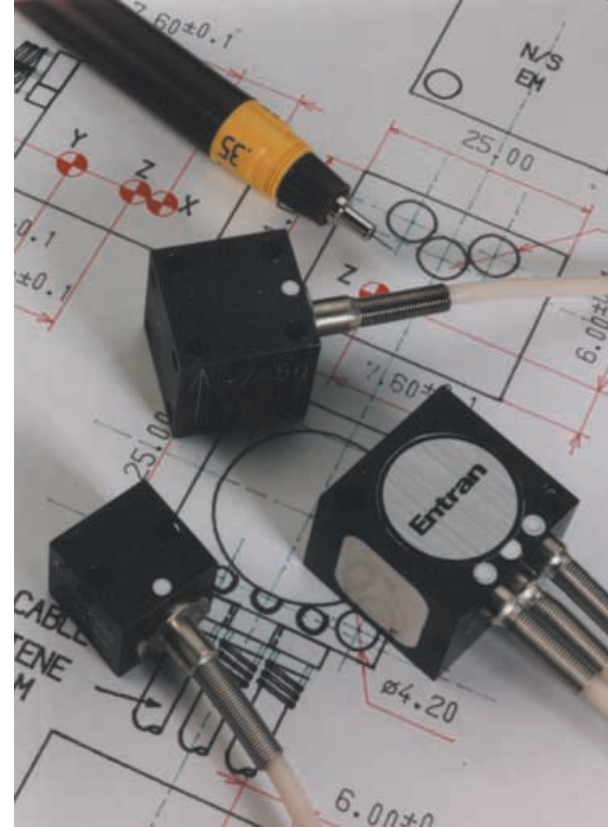

Entran EGCS single-axis and multi-axis accelerometers as used in automotive airbag systems. Courtesy Entran Sensors & Electronics.

When the beam bends, the face in tension becomes slightly longer and the one under compression, shorter. If the strain-gauge is attached to the face in tension, the wire will become longer and its resistance increase. The *Entran* EGCS family of single and dual-axis accelerometers shown in the photograph above are of the cantilever beam and strain-gauge type.

WHEATSTONE BRIDGE

A Wheatstone bridge circuit (see Fig.6) may be used to detect the small change in resistance of a strain-gauge. Fixed resistors, R2 to R4, form three "arms" of the bridge. The resistive element forms the arm R1.

If all resistors (including the strain-gauge while at rest) have equal values (*R* ohms), the voltage at point *X* will equal that at point *Y*. This is because potential dividers are formed between R1 and R2 on one hand and R3 and R4 on the other. Both these are connected across the supply.

The voltage at points *X* and *Y* will both be one-half of the supply voltage so there will be no voltage difference between them. The bridge is said to be "balanced".

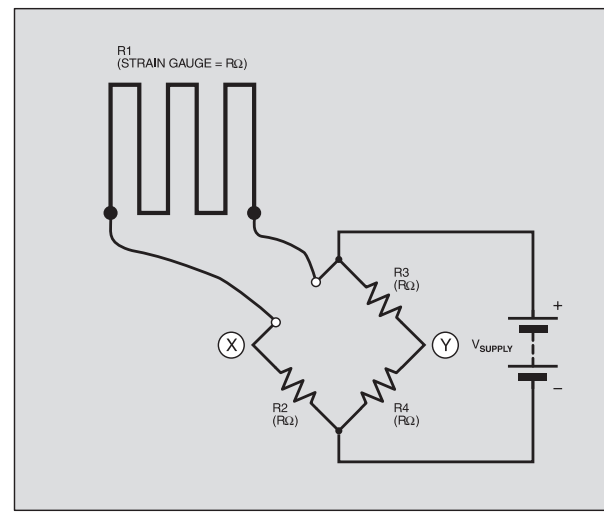

Fig.6. A Wheatstone bridge circuit may be used to detect any small change in resistance of a strain-gauge.

If R1 increases its resistance, it will become greater than R2. The voltage at point *X* will now fall below one-half of the supply voltage. However, the voltage at point *Y* will remain unchanged so that a voltage difference will exist between them.

An op.amp comparator connected between points *X* and *Y* will detect the voltage difference and send a signal to the control system. If all the resistors and the operational amplifier are fabricated on the same chip, any effect due to temperature changes can be cancelled out.

CAPACITIVE ACCELEROMETER

A capacitor is basically two conducting plates separated by an insulator. Its value depends on the area of the plates, their distance apart and the nature of the insulating medium (the dielectric).

There are many different types of capacitive sensor. In one design, the plates are in the form of semi-overlapping "combs" (see Fig.7). The lower unit is fixed but the upper one is loaded with a mass and able to bend at one end. Under deceleration, the degree of overlap will vary giving the equivalent of a change in the area of the plates.

The resulting variation in capacitance may be measured using a capacitance bridge. This is a type of Wheatstone bridge but uses a.c. (alternating current). Another method is to use the value of the capacitor to determine the frequency of a square-wave oscillator. The output will then be in the form of a pulse train having a frequency dependent on the deceleration.

The latest approach by *Analog Devices* is integrated *MEMS* (Micro Electrical Mechanical Systems) technology. In this, microscopic moving parts and control circuits are fabricated on a single integrated circuit. The advantage is that the same established i.c. techniques are used for the entire process. Thus a "spring" may be fabricated to suspend a miniature capacitor plate between a pair of fixed ones.

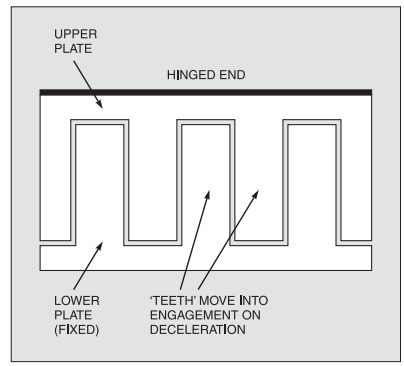

Fig.7. A capacitive accelerometer.

Deceleration will be translated into an increase in capacitance between the moveable plate and one fixed plate and a reduction with the other one. The change in relative capacitance may then be measured using a bridge.

The *Analog Devices* ADXL series of *MEMS* accelerometers provide two-axis sensing (see photograph). Note that this device has pins on the underside for p.c.b. mounting.

In a modern car, the accelerometer assembly might be separate or integrated with the airbag unit itself. The system may also incorporate a capacitive reserve power supply so that the airbag may be "fired" even if the battery supply fails.

LATEST RESEARCH

The aim of research today is to design a control system that will make a better judgement on whether or not to deploy an airbag and to deploy it more safely. The various car manufacturers are very secretive about their latest lines of research. This is because being first to introduce a "safer" system will give them the edge in selling their models.

In a sophisticated system, various types of sensor may be fitted inside the passenger compartment. These feed additional data into the control unit regarding the number of occupants, their mass, position and whether or not they are wearing seat belts. In one model, there is a seat weight sensor that disables the airbag if 30kg or less present – that is, if it is unoccupied or has a child in it.

Airbags themselves are also becoming more "intelligent". Some are able to inflate at different rates. This may be done by employing one "fast" and one "slow" gas generator. Either the slow alone, the fast alone or both may then be "fired".

Some companies are developing systems to provide a continuously-variable inflation rate and final pressure. These take account of the information being provided by various additional sensors of the type mentioned above.

All this would be integrated with new and "smarter" seat belts that tighten progressively at the onset of a crash. They could also relax slightly at the point where injury might occur or even inflate to cushion vulnerable points of contact with the body.

DATA LOG

The investigation of an accident may be made more scientific by the airbag controller providing data after it. Such information would be extremely useful to police and insurance assessors.

In one system, information regarding the vehicle speed, throttle position and use of the brakes is recorded over each five-second period. If nothing particular happens, it is overwritten. If the airbag is deployed, or *near-deployed*, a signal is given to store this data which may be recovered later.

EDUCATION, EDUCATION, EDUCATION

Critics argue that airbag systems are becoming much too complicated and might even increase the chance of inappropriate deployment. Many people wonder whether education is not just as important as advancing the technology.

For example, why detect whether or not seat belts are being used when they should be worn anyway? A simple buzzer could be used as a reminder if this had been forgotten. Should not children always sit in the rear seats?

Right: An accelerometer using micro electrical mechanical systems (MEMS) technology from Analog Devices.

Some of the most interesting research concerns the ability of a system to detect the likelihood of an accident occurring seconds *before* it happens by examining the traffic situation using radar sensors and/or video cameras. The first defence could then be for the system to take over control and attempt to avoid the accident by steering and braking. Such systems seem to be a long way off on account of the complexity of the problem. Taking over control inappropriately would, of course, be extremely dangerous! □

www.epemag.com

Get your magazine "instantly" anywhere in the world – buy from the web.

TAKE A LOOK, A FREE ISSSUE IS AVAILABLE

A one year subscription (12 issues) costs just $10.99 (US)

SURFING THE INTERNET

NET WORK

ALAN WINSTANLEY

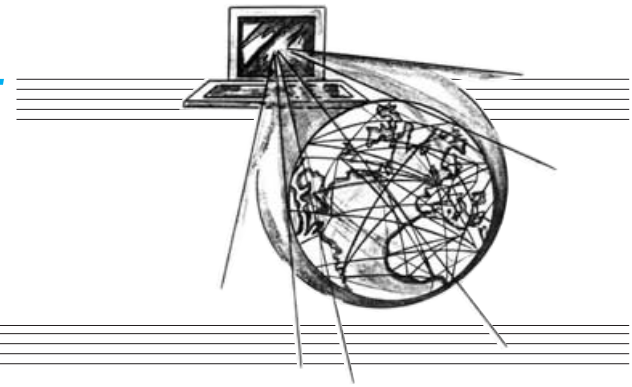

The Last Keyword in Sales

WITH many millions of web sites now connected to the Internet, the sheer scale of information available often makes it difficult for users to know where to start, a fact that search engines and portal sites recognised long ago. As an imperative, the writer has the Google Toolbar installed in his web browser, which means that web and Usenet searches are not far away. Other popular engines include Lycos, Ask Jeeves and Alta Vista; so-called "directory" sites such as Yahoo and the largest of them all, The Open Directory (**www.dmoz.org**), are different because human editors screen and approve the web sites they contain, and they attempt to focus on a particular category.

Search engines are useful, but they are not the last word in Internet searching. The industry is fast learning how to make money from our quest for sorting out mountains of information published on the Internet: they can charge companies to be listed in the engine. Furthermore, a whole industry of search-engine positioning (SEP) or search-engine optimisation (SEO) has sprung up, to help ensure that commercial web sites are guaranteed to be displayed high up in search engine results when users search for a certain keyword or phrase. Being listed high in the results means more traffic for the company, which translates into more business for them.

One UK company spends nearly £25,000 per month on "pay per click" (PPC) marketing, a quite complex system in which web site owners "bid" for clicks from search engines. The higher the bid for a keyword or phrase (e.g. "car loan"), the higher up in the results their web site will appear. Every user that clicks through to the web site costs the web site owner some hard cash. Bids range from a few pence up to £10 or more, but this can prove to be cheap when compared with press or TV advertising. Overture (**www.overture.com**), formerly known as GoTo.com, is a prime example of a PPC marketing company.

Google operates a similar system, which are seen as "sponsored links" over to the right-hand side of Google search results. These are part of Google's AdWords service. The search results highlighted across the top of the page are using Google's Premium Sponsorship service, and they are all URL's jostling for your attention and earning those prized "click-thrus". Because Google separates them out from the core of the search results, users know that they are looking at a paid-for search engine placement. It can be harder to discriminate on some other sites.

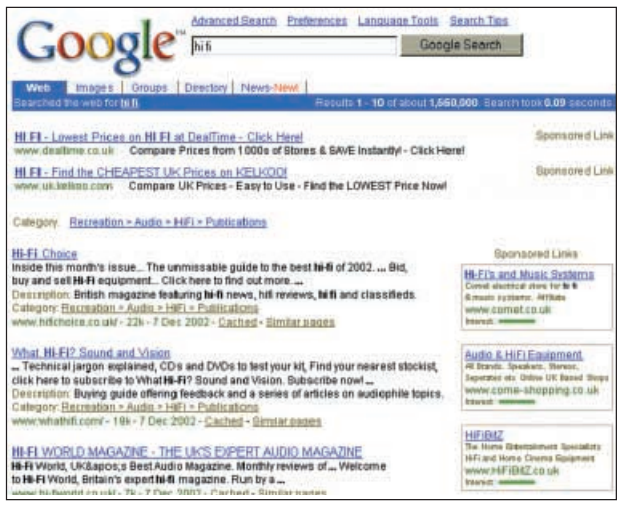

A Google search for "hi fi" shows two Premium Sponsorship web sites at the top, plus a number of paid-for Adword sites down the right hand side.

Favourite Sites

Search engines are a key aspect of hunting down information on the Internet, but problems can arise when searching for, say, a particular software utility program. Trawling through the search engines can be a tedious job, and there is no guarantee that they will turn up trumps anyway, given that companies can skew the top search engine results in favour of their own products.

Experienced Internet users often start out by checking their own bookmarked favourite sites. (The freeware DzSoft Favourites search toolbar from **www.dzsoft.com** is a useful way of finding forgotten URL's by searching for a keyword.) Thankfully there are a number of specialist web sites related to software, including the excellent site MyWebAttack (**www.mywebattack.com**) which is a must-see for all Windows users.

The excellent MyWebAttack web site is an essential source of software for all Windows users.

MyWebAttack is a true goldmine of Windows shareware, freeware, "rare finds" or discontinued but useful software, and probably has enough to keep even the most ardent download enthusiast busy for weeks. Software is divided into categories and there are also small reviews, ratings and screenshots. It is a supremely useful resource, and has even got the author off the hook with the occasional missing dll file (especially useful when recently trying to install some commercial software onto a customer's rather decrepit PC).

Less stylish than MyWebAttack, but covering a wider range of platforms, is the shareware/freeware site **www.download.com**, which often produces long lists of matches when searching for a particular program, upgrade, patch or utility. These can take an eternity to trawl through, but the site has nevertheless turned up trumps on occasion. Both sites are worth bookmarking.

In coming months I aim to cover a number of topics written with the novice or average ability Internet user in mind. Next month, I will take a look at how E-bay works, and will show you how the world's most popular online auction can be a handy little money-spinner! If you have a particular topic that you think would form a useful *Net Work* article, please email your suggestion to **alan@epemag.demon.co.uk**.

Finally this month, regular users of our web site will know that it has been online in its present form for many years (since May 1996, in actual fact), and that a makeover is long overdue. The redesign is now at an advanced stage, and work is in progress on the web site content. New features plus all the old favourites will still be there in the new site, especially our simple-to-use password-free *Chat Zone* message board, and there will be new opportunities for advertisers as well. The ever-popular *Net Work* A-Z listing of web sites is also being revamped to make it more usable. Watch this space!

EVERYDAY PRACTICAL ELECTRONICS

BACK ISSUES

We can supply back issues of *EPE* by post, most issues from the past three years are available. An *EPE* index for the last five years is also available from **www.epemag.wimborne.co.uk** or see order form below. Alternatively, indexes are published in the December issue for that year. Where we are unable to provide a back issue a photocopy of any *one article* (or *one part* of a series) can be purchased for the same price. Issues from Nov. 98 are available on CD-ROM – see next page – and issues from the last six months are also available to download from **www.epemag.com**.

DID YOU MISS THESE?

OCT '01 Photocopies only

PROJECTS ● PIC Toolkit Mk3 ● Camcorder Power Supply ● 2-Valve SW Receiver ● Perpetual Projects 4 – Gate Sentinel – Bird Scarer – In-Out Register.
FEATURES ● Traffic Control ● Ingenuity Unlimited ● New Technology Update ● Circuit Surgery ● Interface ● Net Work – The Internet Page ● *Free* 2 CD-ROMs – Microchip 2001 Tech Library.

NOV '01

PROJECTS ● Capacitance Meter ● Pitch Switch ● Lights Needed Alert ● Teach-In 2002 Power Supply.
FEATURES ● Teach-In 2002 – Part 1 ● Practically Speaking ● Circuit Surgery ● New Technology Update ● Ingenuity Unlimited ● Net Work – The Internet Page ● *Free* 16-page Supplement – PIC Toolkit TK3 For Windows.

DEC '01

PROJECTS ● Ghost Buster ● PIC Polywhatsit ● Twinkling Lights ● Mains Failure Alarm.
FEATURES ● Teach-In 2002 – Part 2 ● Marconi – The Father of Radio ● Interface ● Ingenuity Unlimited ● Circuit Surgery ● New Technology Update ● Net Work – The Internet Page ● 2001 Annual Index.

JAN '02

PROJECTS ● PIC Magick Musick ● Time Delay Touch Switch ● Versatile Bench Power Supply ● Forever Flasher.
FEATURES ● Teach-In 2002 – Part 3 ● Practically Speaking ● Ingenuity Unlimited ● New Technology Update ● Circuit Surgery ● Net Work – The Internet Page.

FEB '02

PROJECTS ● PIC Spectrum Analyser ● Guitar Practice Amp ● HT Power Supply ● Versatile Current Monitor.
FEATURES ● Teach-In 2002 – Part 4 ● Ingenuity Unlimited ● Russian Space Shuttle Revisited ● Circuit Surgery ● Interface ● New Technology Update ● Net Work – The Internet Page.

MAR '02

PROJECTS ● MK484 Shortwave Radio ● PIC Virus Zapper ● RH Meter ● PIC Mini-Enigma.
FEATURES ● Teach-In 2002 – Part 5 ● Ingenuity Unlimited ● Programming PIC Interrupts–1 ● Circuit Surgery ● Practically Speaking ● New Technology Update ● Net Work – The Internet Page.

APR '02

PROJECTS ● Electric Guitar Tuner ● PIC Controlled Intruder Alarm ● Solar Charge and Go ● Manual Stepper Motor Controller.
FEATURES ● Teach-In 2002 – Part 6 ● Interface ● Programming PIC Interrupts–2 ● Circuit Surgery ● Ingenuity Unlimited ● New Technology Update ● Net Work – The Internet Page ● *FREE* Giant Op.Amp Data Chart.

MAY '02

PROJECTS ● PIC Big-Digit Display ● Simple Audio Circuits – 1 ● Freezer Alarm ● Washing Ready Indicator.
FEATURES ● Teach-In 2002 – Part 7 ● Ingenuity Unlimited ● Practically Speaking ● New Technology Update ● Circuit Surgery ● Net Work – The Internet Page.

JUNE '02

PROJECTS ● Biopic Heartbeat Monitor ● Frequency Standard Generator ● Simple Audio Circuits – 2 ● World Lamp.
FEATURES ● Teach-In 2002 – Part 8 ● Interface ● New Technology Update ● Circuit Surgery ● Ingenuity Unlimited ● Net Work – The Internet Page.

JULY '02

PROJECTS ● EPE StyloPIC ● Infra-Red Autoswitch ● Simple Audio Circuits – 3 ● Rotary Combination Lock.
FEATURES ● Teach-In 2002 – Part 9 ● Practically Speaking ● Using The PIC's PCLATH Command ● Ingenuity Unlimited ● Circuit Surgery ● New Technology Update ● Net Work–The Internet Page.

AUG '02

PROJECTS ● PIC World Clock ● Pickpocket Alarm ● Big-Ears Buggy ● Simple Audio Circuits – 4.
FEATURES ● Teach-In 2002 – Part 10 ● Using Square Roots with PICs ● Ingenuity Unlimited ● Evolutionary Electronics ● Interface ● Circuit Surgery ● Net Work – The Internet Page.

SEPT '02

PROJECTS ● Freebird Glider Control ● Portable Telephone Tester ● *EPE* Morse Code Reader ● Vinyl to CD Preamplifier.
FEATURES ● Circuit Surgery ● New Technology Update ● Practically Speaking ● Net Work ● Flowcode for PICmicro ● Logic Gate Inverter Oscillators ● Net Work – The Internet Page.

OCT '02 Photocopies only

PROJECTS ● *EPE* Bounty Treasure Hunter ● IC Tester ● Headset Communicator ● PIC-Pocket Battleships.
FEATURES ● Circuit Surgery ● New Technology Update ● Logic Gate Inverter Oscillators – 2 ● Interface ● Network – The Internet Page ● Using TK3 With Windows XP and 2000.

NOV '02

PROJECTS ● *EPE* Hybrid Computer – 1 ● Tuning Fork and Metronome ● Transient Tracker ● PICAXE Projects–1 (Egg Timer – Dice Machine – Quiz Game Monitor).
FEATURES ● Practically Speaking ● Ingenuity Unlimited ● Circuit Surgery ● New Technology Update ● Net Work – The Internet Page.

DEC '02

PROJECTS ● Versatile PIC Flasher ● *EPE* Hybrid Computer – 2 ● Door Defender ● PICAXE Projects – 2 (Temperature Sensor – Voltage Sensor – VU Indicator).
FEATURES ● Electronic Paper ● Alternative Uses for Transistors ● Interface ● Circuit Surgery ● New Technology Update ● Ingenuity Unlimited ● Net Work – The Internet Page ● 2002 Annual Index.

JAN '03

PROJECTS ● *EPE* Minder ● F.M. Frequency Surfer ● Wind Speed Meter ● PICAXE Projects–3 (Chaser Lights).
FEATURES ● Who Really Invented The Transistor ● TechnoTalk ● Circuit Surgery ● Practically Speaking ● New Technology Update ● Computer GOTOs ● Ingenuity Unlimited ● Net Work – The Internet Page.

BACK ISSUES ONLY £3.50 each inc. UK p&p.
Overseas prices £4 each surface mail, £5.50 each airmail.

We can also supply issues from earlier years: 1998 (**except** Jan. to May, July, Nov., Dec.), 1999 (**except** Dec.), 2000 (**except** Feb.), 2001 (**except** May, Sept., Oct.), 2002 (**except** Oct.) Where we do not have an issue a photocopy of any ***one article*** or ***one part*** of a series can be provided at the same price.

ORDER FORM – BACK ISSUES – PHOTOCOPIES– INDEXES

☐ Send back issues dated .....

☐ Send photocopies of (article title and issue date) .....

☐ Send copies of last five years indexes (£3.50 for five inc. p&p – Overseas £4 surface, £5.50 airmail)

Name .....

Address .....

..... Tel: .....

☐ I enclose cheque/P.O./bank draft to the value of £ .....

☐ Please charge my Visa/Mastercard/Amex/Diners Club/Switch £ ..... Switch Issue No. .....

Card No. .....

Card Expiry Date ..... Card Security Code ..... (The last 3 digits on or just under the signature strip)

SEND TO: **Everyday Practical Electronics, Wimborne Publishing Ltd., 408 Wimborne Road East, Ferndown, Dorset BH22 9ND.**
Tel: 01202 873872. Fax: 01202 874562.
E-mail: orders@epemag.wimborne.co.uk **On-line Shop:** www.epemag.wimborne.co.uk/shopdoor.htm
Payments must be in £ sterling – cheque or bank draft drawn on a UK bank. Normally supplied within seven days of receipt of order.

Send a copy of this form, or order by letter if you do not wish to cut your issue.

M02/03

STORE YOUR BACK ISSUES ON MINI CD-ROMS

VOL 7 NOW AVAILABLE

ONLY £14.45 each including VAT and p&p

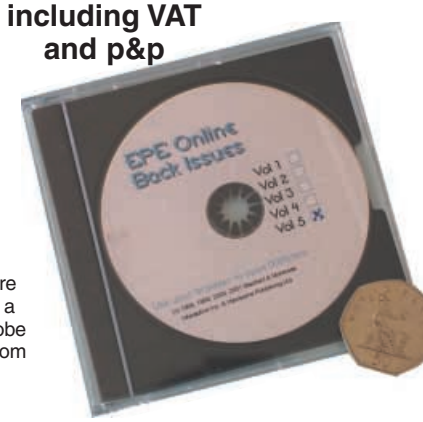

A great way to buy *EPE* Back Issues – our mini CD-ROMs contain back issues from our *EPE Online* website plus bonus articles, all the relevant PIC software and web links. Note: no free gifts are included. All this for just £14.45 each including postage and packing.

VOL 1 CONTENTS

BACK ISSUES – November 1998 to June 1999 (all the projects, features, news, IUs etc. from all eight issues). Note: No advertisements are included. **PIC PROJECT CODES** – All the available codes for the PIC based projects published in these issues.

VOL 2 CONTENTS

BACK ISSUES – July 1999 to December 1999 (all the projects, features, news, IUs, etc. from all six issues). Note: No advertisements are included. **PIC PROJECT CODES –** All the available codes for the PIC-based projects published in these issues.

VOL 3 CONTENTS

BACK ISSUES – January 2000 to June 2000 (all the projects, features, news, IUs, etc. from all six issues). **PIC PROJECT CODES** – All the available codes for the PIC-based projects published in these issues.

VOL 4 CONTENTS

BACK ISSUES – July 2000 to Dec. 2000 (all the projects, features, news, IUs etc. from all six issues). **PROJECT CODES** – All the available codes for the programmable projects in these issues.

VOL 5 CONTENTS

BACK ISSUES – January 2001 to June 2001 (all the projects, features, news, IUs etc. from all six issues). **PROJECT CODES** – All the available codes for the programmable projects in these issues, including those for *Interface*.

VOL 6 CONTENTS

BACK ISSUES – July 2001 to December 2001 (all the projects, features, news, IUs etc. from all six issues). **PROJECT CODES** – All the available codes for the programmable projects in these issues, including those for *Interface*.

VOL 7 CONTENTS

BACK ISSUES – Jan 2002 to June 2002 (all the projects, features, news, IUs etc. from all six issues). **PROJECT CODES** – All the available codes for the programmable projects in these issues, including those for *Interface*.

EXTRA ARTICLES – ON ALL VOLUMES

BASIC SOLDERING GUIDE – Alan Winstanley's internationally acclaimed fully illustrated guide. **UNDERSTANDING PASSIVE COMPONENTS** – Introduction to the basic principles of passive components. **HOW TO USE INTELLIGENT L.C.Ds**, By Julyan Ilett – An utterly practical guide to interfacing and programming intelligent liquid crystal display modules. **PhyzzyB COMPUTERS BONUS ARTICLE 1** – Signed and Unsigned Binary Numbers. By Clive "Max" Maxfield and Alvin Brown. **PhyzzyB COMPUTERS BONUS ARTICLE 2** – Creating an Event Counter. By Clive "Max" Maxfield and Alvin Brown. **INTERGRAPH COMPUTER SYSTEMS 3D GRAPHICS** – A chapter from Intergraph's book that explains computer graphics technology in an interesting and understandable way with full colour graphics.

EXTRA ARTICLE ON VOL 1 & 2. THE LIFE & WORKS OF KONRAD ZUSE – a brilliant pioneer in the evolution of computers. A bonus article on his life and work written by his eldest son, including many previously unpublished photographs.

NOTE: These mini CD-ROMs are suitable for use on any PC with a CD-ROM drive. They require Adobe Acrobat Reader (available free from the Internet – **www.adobe.com/acrobat**)

Order on-line from
www.epemag.wimborne.co.uk/shopdoor.htm
or www.epemag.com (USA $ prices)
or by phone, Fax, E-mail or Post

BACK ISSUES MINI CD-ROM ORDER FORM

Please send me ..... (quantity) BACK ISSUES CD-ROM **VOL 1**
Please send me ..... (quantity) BACK ISSUES CD-ROM **VOL 2**
Please send me ..... (quantity) BACK ISSUES CD-ROM **VOL 3**
Please send me ..... (quantity) BACK ISSUES CD-ROM **VOL 4**
Please send me ..... (quantity) BACK ISSUES CD-ROM **VOL 5**
Please send me ..... (quantity) BACK ISSUES CD-ROM **VOL 6**
Please send me ..... (quantity) BACK ISSUES CD-ROM **VOL 7**
Price £14.45 each – includes postage to anywhere in the world.

Name . . . . . .

Address . . . . . .

. . . . . .

. . . . . Post Code . . . . . .

☐ I enclose cheque/P.O./bank draft to the value of £ . . . . . .

☐ Please charge my Visa/Mastercard/Amex/Diners Club/Switch

£ . . . . . .

Card No. . . . . .

Card Security Code . . . . . (The last 3 digits on or just under the signature strip)

Expiry Date . . . . . Switch Issue No. . . . . .

SEND TO: **Everyday Practical Electronics, Wimborne Publishing Ltd., 408 Wimborne Road East, Ferndown, Dorset BH22 9ND.**
Tel: 01202 873872. Fax: 01202 874562.
E-mail: orders@epemag.wimborne.co.uk

Payments must be by card or in £ Sterling – cheque or bank draft drawn on a UK bank.

Normally supplied within seven days of receipt of order.

Send a copy of this form, or order by letter if you do not wish to cut your issue.

READOUT

E-mail: editorial@epemag.wimborne.co.uk

John Becker addresses some of the general points readers have raised. Have you anything interesting to say? Drop us a line!

All letters quoted here have previously been replied to directly.

WIN A DIGITAL MULTIMETER

A 3½ digit pocket-sized l.c.d. multimeter which measures a.c. and d.c. voltage, d.c. current and resistance. It can also test diodes and bipolar transistors.

Every month we will give a Digital Multimeter to the author of the best *Readout* letter.

★ LETTER OF THE MONTH ★

TENS INTO EIGHT DOES GO!

Dear EPE,

Thanks for the great articles and projects – it can't be easy coming up with goods month after month! *EPE* really is a godsend for chaps like me, I design and make mine detectors so electronics is only a part of my week, and I often haven't got enough hours to study a component or part in any depth like you do. And most of the time a simple explanation and a quick guide is all I need. Many thanks for the countless hours I have saved by having *EPE* handy!

Please give my most kindest regards to Andy Flind. For my final year project at university, I designed an 8-channel acupuncture machine using one of his TENS designs but using a PIC to get different waveforms and timings. I got a B+ if I remember correctly, not bad considering I couldn't show it working as I had broken the l.c.d. the night before.

I wouldn't have thought of it if it wasn't for that article, and I found acupuncture and electro-acupuncture to be a fascinating subject. I have no idea why people should doubt the legitimacy of the technique. We have a fair amount of electric circuitry running through us, and so whacking some electricity into it is going to have some effect, surely? Just a matter of trial and error to find what works.

Darren G., via email

Thank you Darren – in fact we have lots of good material constantly coming in and the problem is more one of what do we leave out of an issue rather than what have we got to put in!

Andy's TENS designs of '94 and '97 proved to be very popular. He too is well into PICs now and in due course he will probably produce a PIC-controlled TENS design. There seems to be no doubt that such devices do aid pain relief. They are readily available commercially through such well-respected retail outlets as Boots.

OBSTACLE DETECTION

Dear EPE,

I now live in America, after moving here nearly three years ago. I have *EPE* sent out to me every month and recently purchased a back issue for a project from 1992.

Have you done any projects for an obstacle detection warning type system, such as something obstructing a door closing or something similar to prevent children being caught in a tailgate or side door of a van. We had a baby a few months ago, and want to install some kind of warning system on my van tailgate and/or sliding door before she gets to the age of crawling "unseen" into dangerous places. Maybe the system could even be adapted for domestic applications.

Jim Todd, Marshall, USA, via email

No, Jim, it's not something that we recall doing. Why not ask readers via our Chat Zone if they know of anything? They can be a mine of information on occasions! Your letter might also produce results, in which case I'll let you know be email.

POWERFUL REQUEST

Dear EPE,

I am a student doing S4 level at Mangosuthu Technikon intending to do a Level 3 design project (heavy current). Please can you send me an email illustrating the 200 Watts Mini Inverter or the PIC Dual Power Supply, or anything you have on heavy current designs.

S.T.F. Zwane, via email

So sorry to disappoint you but we cannot do as you ask – copies of such published articles are chargeable and can only be purchased for delivery by normal mail, or electronically via our web site facilities. They can be ordered from our Online shop at ***www.epemag.wimborne.co.uk/shopdoor.htm****, or from the Editorial office, prices as quoted on site and in current issues.*

MIDI TO USB

Dear EPE,

With reference to G. S. Chatley's letter in *Readout* of Aug '02, I also await a PIC interface from MIDI to USB. I would like to connect the MIDI output from my electronic piano keyboard to my computer.

This is to encourage you to bring the project along for publication. Thanks for your work and your magazine. I came to *EPE* via the *ETI* route!

Norman Quinn, via email

Thanks for the suggestion Norman – It's the PIC to USB interface we're waiting for before we can move on. All in good time we hope!

LINEAR BOUNTY

Dear EPE,

I am making the *EPE Bounty Treasure Hunter* (Oct '02) as a project for college. I would like to know if the potentiometers VR1 and VR2 are log or linear.

Kevin Brock, via email

In our circuit diagrams and parts lists, Kevin, pots are always linear unless marked as log.

VINTAGE SAFETY

Dear EPE,

I've recently read Paul Stenning's very interesting supplement on *Collecting and Restoring Vintage Radios* (Oct '02) and agree whole heartily with the recommendations on safety. However, for test purposes the standard RCCB, which trips at 30mA, is not sensitive enough to provide adequate protection. It is normal practice in industry to use an RCCB that trips at 10mA. Whilst these are not available at DIY stores, they are obtainable from professional sources. They cost more but how much is your life worth?

Peter Mitchell, via email

More than the cost of a good RCCB! Thanks Peter.

LIFE, THE UNIVERSE, MORSE AND TK3

Dear EPE,

I have the Magenta version of your *Toolkit TK3* programmer p.c.b. (Nov '01) plus your *PIC Tutorial*. The only "problem" is the Magenta version does not have all the l.e.d.s and switches referred too in your *Tutorial*. Your *Toolkit* software is excellent and easy to use.

Having recently completed the *Morse Code Reader* (Sept '02), I have some feedback for you. The Morse code numeral "3" is not being decoded, it comes out as a "*". All other characters seem ok.

I find that the audio interface/detector is much too basic and needs a band-pass filter centred on about 800Hz with a bandwidth of say 100Hz, easily done with a couple of op.amps and a Schmitt trigger device.

The PIC software also needs a noise reduction routine, as a small burst of noise throws the decoder out for some time before it recovers. It would be good to be able lock the decoder when one has good copy, so if conditions change good copy resumes immediately when the signal comes back up from the noise. What changes would be required to "lock" the decoder so that it is not upset by a burst of noise affecting its internal rate assessment routine?

It was good to see a standalone CW decoder article, and one that does not need a PC!

Colin Manklow, via email

As I say in the TK3 *text (glad you like* TK3*!), the* Tutorial *text is not intended for direct use by* TK3*. To use the* Tutorial *fully you really need its own board (via our* Online *shop). The object of including the* Tutorial *text with* TK3 *(I assume that is what you are referring to) is for people to simply read about the way I've done various things. It is only an edited version of the original* Tutorial *text (March to May '98) and does not include schematics or demo program listings.*

Regarding a Morse "lock" – pass! It could be complicated, although you might get away with putting in another switch and adding some lines to tell the unit to only change rate when the switch is in a particular position. Thank you for the filter suggestion – for Morse Mk2 *perhaps – should I ever!*

The "3" problem was corrected very early on and its amended software put on our Disk 5 and ftp site.

PICS AND KEYBOARDS

Dear EPE,

I have been subscribing to *EPE* since March '02, and I'm very interested in the articles on PIC projects. Have you published an article about PC keyboard decoding using a PIC16F84 (to get the ASCII code from the keyboard when a key is pressed)?

Paul Hart, via email

No, Paul, we haven't. The nearest we've come to it is my Using PICs and Keypads *of Jan '01. The keypads referred to are the matrixed pushbutton types. Try asking readers via our* Chat Zone *if they know of any source of info.*

Would other readers like us to consider publishing an article? I might be interested to design a PIC circuit for this if enough people would like one.

TK3 AND 2000/XP, PLUS IDEAS

Dear EPE,

Just a couple of comments and additions to Mark Jones' very useful article *Using TK3 with Windows XP and 2000* in the Oct '02 issue:

First, it's not quite correct to say that only Windows NT, 2000 and XP run the processor in protected mode. All Windows OSs, from Windows 3.1 onwards, and the various DOS extenders that preceded them, have used protected mode. In real mode, only 1Mb of memory is addressable, so any PC that has used more memory than that must have run in protected mode.

What NT, 2000 and XP do (and 95, 98, ME do not) is to exploit additional protection features in the CPUs that allow the OS to put restrictions on the computer resources that ordinary applications programs can access. This should make these systems more secure and less prone to crashes, blue screens etc., caused by application bugs or viruses.

Although the advent of these more secure operating systems should be generally welcomed, it is a great shame that Microsoft failed earlier both to provide and promote safe mechanisms for I/O access that would be compatible with the newer systems, and make better provision for "backwards compatibility" modes in the new generation OSs. Such facilities would have enabled "legacy" programs, which are written to assume they have access to all the machine's resources, to continue to be run safely without the need to resort to tricks like AllowIO.

Second, although it's beyond the scope of the article (and these comments) to explain how AllowIO works, readers should perhaps be made aware that it is by circumventing and disabling some of the Windows protection mechanisms mentioned above. There is some inherent risk associated with doing this. The whole PC system is again laid open to corruption by (accidental or deliberate) errors in applications code.

It's also possible that other (as yet unidentified) internal Windows mechanisms may rely on, or assume, that the CPU protection registers are set up in a certain way, and that consequently these mechanisms might not work correctly when AllowIO is in use. I'm not sufficiently familiar with the innards of Windows OSs to understand exactly what these risks might be.

Nonetheless AllowIO is undoubtedly useful. There are some steps that can be taken to minimise the risks associated with using it, as follows:

1. Update your anti-virus software and check that a full system scan gives your machine a clean bill of health before trying AllowIO.

2. AllowIO/*TK3* should not be run with any other program known to use I/O. Preferably all other applications should be closed down while *TK3* is being run in this way, and no internet connection should be made while running it.

3. The command "**allowio tk3prog.exe /a**" breaks more protection mechanisms than is necessary to run *TK3*, which only requires access to the printer port. It is preferable to use the alternative command "**allowio tk3prog.exe 0xnnn**", which grants access specifically to the printer port, where **nnn** is the port address and can be found on *TK3's* configure PCB screen. The command "**allowio tk3prog.exe 0x378**" would be the one that works for most people.

4. Once loaded into your system, the porttalk.sys driver installed by AllowIO is a security loophole that could be exploited by viruses, internet hackers etc. Exiting *TK3* does NOT unload this driver; it will stay there until the machine is rebooted. It should be specifically unloaded when the *TK3* session is over.

To do this, as well as extracting the **AllowIO.exe** program from the .zip file, also extract the program **uninstall.exe** into the installation directory as described in the article. Then, when finished with *TK3*, open a CMD window in the installation directory and type "uninstall" at the prompt. This will unload the driver. (I also take the further precaution of scrambling the filename of the porttalk.sys driver in my /drivers directory so that a virus can't easily find it and load it.)

Malc Wiles, via email.

Mark Jones replies:

Fine on the comments and I don't wish to argue. My article could have gone on forever with the details. I agree with the issue over virus attacks. However, if I were to write a virus (which I have no desire to do) then I would not rely on an OS and AllowIO combination to be present to allow it to work!

Some other thoughts that spring to mind at this time given your ability with PIC projects. I am an Amateur Radio licence holder, here are some projects that I think would be most useful:

1. **A voltage monitor**. Most modern radios (and probably loads of other kit) rely on an external 13·8V supply. It seems to me that there are some solid state devices between my radio and perhaps 25V d.c. or more providing the regulation. A failure in this device would be catastrophic for my equipment. Could you make a voltage monitoring device with l.e.d. indication for over and under voltage protection?

If over voltage conditions exist it would need to remove the supply to the equipment very fast, perhaps even a direct short and rely on the in-line fuse. I looked at such devices a some years ago and ended up using an MC3423 driving an SCR-based crowbar. The calculations for the current requirement for the SCR blew my mind ...

2. **A.C. (mains) current monitor**. I have just purchased a mains adaptor that provides a visual indication of the current consumption from a 13A socket. A most useful device. In my "shack" I have so many mains appliances, all from a single socket. This device gives me confirmation that I am not overloading the socket. Seems a good idea.

Mark Jones, via email

Thank you Malc and Mark for your extra input on this subject. Readers, let's us know if you would like Mark's project ideas implemented through EPE.

UNSQUARE ROOTING

Dear EPE,

I know of the method of square rooting described by Ken Beard in *Readout* Nov '02! As I said in my article *Using Square Roots with PICs* (Aug '02) there are various methods to find square roots and I believe this would be the slowest. Such a routine would require many iterations for large numbers. For example, the square root of 16 million would require the routine to loop 4000 times, very slow! No wonder I dismissed it as a viable method.

Peter Hemsley, via email

Thanks Peter, I'm not at all surprised by your answer. My response at the time was that the routine would probably take many cycles before it reached an answer.

TOOLKIT TK3 AND W2K

Dear EPE,

I have just bought the Magenta Super PIC Programmer kit, which came with *PIC Toolkit TK3* software. I have installed the software on a Windows 2000 PC but keep getting a "privilege exception" error message. Any ideas?

Paul Edwards, via email

TK3 was not written to run on W2K, Paul, but Mark Jones' useful article Using TK3 with Windows XP and 2000 *of Oct '02 shows how it can be done (also see previous column).*

TASM AND MPASM

Dear EPE,

Many *EPE* PIC projects seem to be written in TASM. What are the differences between TASM and MPASM and can you list down some of the reference books and websites that introduce both of these assembly languages?

Donald, vie email

Differences between the TASM and MPASM dialects are discussed in my PIC Tutorial *of Mar-May '98, Donald, a cut down version of which is included with the free* Toolkit TK3 *software available for download from our ftp site.* TK3 *also translates between them.*

There are no reference books or web sites on TASM that I am aware of, but I recommend that you should write your programs in MPASM, the more universal dialect of the two.

VINYL TO CD

Dear EPE,

Andy Flind and anyone else thinking of preserving their old vinyl on CD (*Readout* Nov '02) might find **http://www.delback.co.uk/lp-cdr.htm** of interest. Together with the separate FAQ (to which there is a link), it amounts to 26 pages of solid good advice and loads of links to other sites of interest. There is an intriguing comment about the software that Andy had problems with:

". . . Easy CD Creator is bundled with many CDR drives, and its basic disc writing engine is very solid, provided it works on your system. (There have been many stories from people who were never able to get Easy CD Creator working, and the general conclusion seems to be that it will either work straight out of the box, or it'll never be right)."

A site that offers excellent advice about copying 78rpm discs is **http://www.rfwilmut.clara.net/repro78/repro.html**. There is also a circuit of a preamp that will provide the correct equalisation for 78s pre-1955 and LPs, as well as the RIAA curve.

Barry Taylor,
via email

Thank you Barry.

PIC SEARCH

Dear EPE,

Do you have any information on PICs? I am doing a remote control car project in college which requires a PIC to control its sensors and some movement. Do you have any information that could help me in my research?

Ray Coventry, via email

We have done many PIC projects over the years Ray, but nothing specifically on model car control, although this month's Brainibot Buggy *might interest you. If you are looking to just find what PICs are available, browse* ***www.microchip.com****. We are accustomed to publishing projects based on the PIC16x84 and PIC16F87x families, with PIC16F62x projects just beginning to emerge. You would be advised to select from these ranges at your present stage of learning.*

If you want to learn about PICs in detail, consider buying my Assembly For PICmicro V2 CD-ROM and its associated demo and development board, as advertised in any recent issue, including this one.

Alternatively, you could consider my original PIC Tutorial *of March to May '98, which is available as back issue photocopies from the Editorial Office.*

R.F. COMMS

Dear EPE,

Have you detailed how to build transmitter and receiver circuits for communications over short distances, something like an AM frequency over 100 metres? Or are you planning to do a project on such?

Your "old BR giant digits" (*PIC Big Digit Display* of May '02) was a good read.

NC, via email

No, NC, not specifically, but perhaps the circuits in last month's EPE Minder *design might help you, of course such transmission must use approved modules or fall under amateur radio licenced operation.*

Thanks for Digits comment – I enjoyed the challenge!

SHOP TALK with David Barrington

Tesla High Voltage Transformer

Would-be constructors of the *Tesla High Voltage Transformer* project MUST take heed of the warning given in the article regarding the "very high voltages" associated with this circuit. Having said that, all of the semiconductors, capacitors (except homemade C5), TO3 power transistor insulating kit and a suitable mains transformer are regular stock items and should be available from most of the components advertisers in the magazine. Note that the mains transformer must have a 12V secondary rating of at least 2A minimum.

Ignition coils are available from car spares retailers, motorists' discount stores and, second-hand, from breakers' yard. Cost, new, about £12. Likewise, polythene tubing for coupling the spark-gap control and for additional safety insulation is stocked by home brewers' or aquatic supply shops.

Acrylic sheet, 2mm thick, is, we understand, retailed by most major DIY outlets and (by post) from **C&A Building Plastics, Bidder Street, London, E16 4ST** (☎ ***0207 474 0474***). A sheet 102cm by 75cm (40in. x 30in.) costs around £6, but postage/delivery charges exceed the price of the sheet, so try for a local source first.

Plastic rain water and waste pipe for the coil formers is also stocked by DIY outlets and plumbers' merchants. Brass strip and plastic rods are obtainable from most model shops.

The printed circuit board is available from the *EPE PCB Service*, code 382 (see page 155).

Brainibot Buggy

The light-dependent resistor (l.d.r.) used in the *Brainibot Buggy* project is the miniature version of the ubiquitous ORP12 device and should have a resistance of around 20 kilohms at 10 lux. A suitable device should be stocked by most of our components advertisers.

A complete *Brainibot* kit of parts, including chassis hardware and motors is available from **Magenta Electronics** (☎ ***01283 565435*** or ***www.magenta2000.co.uk***) for the inclusive sum of £19.99 (overseas orders will incur an additional postage charge, quote code KIT 910 when ordering. We understand that readers may purchase the 3V d.c. miniature motors separately; to date we do not have a price and Magenta should be contacted direct regarding cost.

For those readers unable to program their own PICs, a ready-programmed PIC12C508/12C509 microcontroller can be purchased from **Magenta** (see above) for the inclusive price of £3.90 each (overseas add £1 p&p). The software is available on a 3·5in. PC-compatible disk (*EPE* Disk 6) from the *EPE Editorial Office* for the sum of £3 each (UK), to cover admin costs (for overseas charges see page 155). It is also available for free download from the EPE ftp site, which is most easily accessed via the click-link option at the top of the home page when you enter the main web site at ***www.epemag.wimborne.co.uk***. On entry to the ftp site take the path **pub/PICS/Brainibot**, downloading all files within the latter folder.

On a point of software. We would point out that the robot design, instructions and PIC code copyright has been retained by **Analogue Information Systems Ltd**. However, the software is released free to readers on a "non-commercial use only" basis.

The small printed circuit board is available from the *EPE PCB Service*, code 383 (see page 155).

Wind Tunnel

All the major components used in the prototype model of the *Wind Tunnel* project are RS devices and can be ordered through any *bona-fide* stockists, including some of our advertisers. If you have trouble finding a local source, you can order direct (*credit card only*) from **RS** on ☎ ***01536 444079*** or through the web at ***rswww.com***. A post and packing charge will be made.

If you are prepared for an outlay of just over £40, the 230V a.c. 26W self-starting industrial axial fan, with induction motor, carries the RS order code 223-130. The "finger" guards are coded 252-9878.

The chassis-mounting 75VA 230V a.c. mains transformer, with independent twin 12V a.c. secondaries (37·5VA per sec.) is coded 805-209. The "side-looking" infra-red opto-sensor type IS436 consists of a photodiode, amplifier, voltage regulator and Schmitt trigger detector, complete with transistor output, all in a 3-pin package. The RS code for this device is 197-025. The HUF75329P3 *n*-channel MOSFET is coded 294-9648. The high-power finned (14°C/W) heatsink order code is 234-2306.

The alphanumeric l.c.d.. module (X2) used in the prototype is a standard two-line 16-character per line device and should present no purchasing problems. Display pinout connection details are included in the article for the two "standard" formats. Note that toggle switch S1 must be a heavy-duty type rated at 15A.

Fully programmed PIC16F628 microcontrollers can be purchased from **Magenta Electronics** (☎ ***01283 565435*** or ***www.magenta2000co.uk***) for the inclusive price of £4.90 each (overseas add £1 p&p). The software is available on a 3·5in. PC-compatible disk (*EPE* Disk 6) from the *EPE Editorial Office* for the sum of £3 each (UK), to cover admin costs (for overseas charges see page 155). It is also available for free download from the *EPE* ftp site, which is most easily accessed via the click-link option at the top of the home page when you enter the main web site at ***www.epemag.wimborne.co.uk***. On entry to the ftp site take the path **pub/PICS/WindTunnel**, downloading all files within the latter folder.

Back To Basics Part 1 – Hearing Aid/Audio Amplifier

We do not expect any component buying problems to be encountered when putting together parts for the *Hearing Aid* and *Audio Amplifier* projects, the first items in part one of the *Back To Basics* series.

Most components advertisers should stock the small plastic spindles that can be used with preset potentiometers. If not, opt for a standard miniature rotary carbon type. Miniature electret microphone inserts and crystal earpieces seem to be in plentiful supply.

PLEASE TAKE NOTE

Biopic Heartbeat Monitor *(June '02)*

Some readers have reported that insufficient voltage/current is being supplied by their PC's serial port to drive the output side of the 74OL6000 opto-isolator recommended as a replacement for the obsolete TLP215 device. The voltage at pin 6 of this i.c. should be about +5V.

It is suggested that readers with this problem use the 74OL6010 device instead, which requires less current, but it is an open collector device and a resistor of, say, 1k should be wired between its output (pin 5) and the +Ve line from the PC. However, if you intend to only use the thumb probe (and NOT monitor your heart using chest probes), the opto-isolator could be powered at 5V from the unit's own supply.

Also note that unless a "crossover" cable is used, the signal connection from IC5 pin 5 should go to the D-connector (socket SK3) pin 2, not pin 3 as shown in Fig.2 and Fig.3. SK3 is a 9-pin female type. A suitable cable is a D-range 9-way male to female (straight through), Maplin part number VD73Q.

PIC-Pocket Battleships *(Oct '02)*

Page 755, Fig.3. In the circuit diagram, switch S1 and S2 should connect to Port B5 via R2 (not B6 as shown) and S3, S4 and S5 should go to B7 via R1 (not B5). The component layouts, Fig.4 and Fig.5, are correct.

PIC Controlled Intruder Alarm *(Apr '02)*

Revised PIC software in a which an entry/exit zone bug has been fixed is on the ftp site and *EPE* Disk 5.

EVERYDAY PRACTICAL ELECTRONICS
THE No.1 MAGAZINE FOR ELECTRONICS TECHNOLOGY & COMPUTER PROJECTS

NEWSAGENTS ORDER FORM

Please reserve/deliver a copy of ***Everyday Practical Electronics*** for me each month

Signed .....

Name and Address .....

.....

..... Post Code .....

Everyday Practical Electronics is published on the second Thursday of each month and distributed S.O.R. by COMAG

Make sure of your copy of *EPE* each month – cut out or photostat this form, fill it in and hand it to your newsagent.

Constructional Project

BACK TO BASICS

BART TREPAK

Part One

This short series illustrates how useful circuits can be designed simply using transistors as the active components.

BACK to basics is a phrase often used by politicians and others who have run out of ideas but, as a glance through any issue of *EPE* will reveal, this can certainly not be the case here. There seems to be no limit to the ingenuity of readers to come up with new applications using modern components, which today often means the use of integrated circuits or even microcontrollers.

This means, for example, that a circuit diagram can sometimes just consist of a box outline marked "IC1" to which a few external components such as resistors, relays and speakers etc. are connected.

The box, we may be told, contains ten, a hundred or even a few thousand transistors, which makes the circuit diagram very neat and the project very easy to build, but trying to understand what is actually going on inside the integrated circuit (i.c.) and how the circuit works can be very difficult for the beginner.

It has to be said, though, that it is usually not vital to understand what is inside the box in order to get the circuit working, any more than it is necessary to be familiar with the workings of the internal combustion engine to be able to drive a car.

Many people enter this hobby simply wanting to build something useful, either to use themselves or to show to their friends or family. An interest in the theory often comes later when more complex problems need to be solved.

SOMETHING SIMPLE

This short series presents a number of simple but nonetheless useful gadgets for the beginner to build and use. They could also form the basis of simple designs for GCSE projects.

All require no more than three transistors, which makes them easy to understand and simple to build. Naturally, with so few components, these gadgets cannot hope to match the performance of their commercially built integrated circuit based equivalents. But they all work, and it may even come as a surprise after reading about computer "chips" containing millions of transistors, just what can be achieved with only three. Before considering these circuits, though, a brief explanation of basic transistor operation may be helpful.

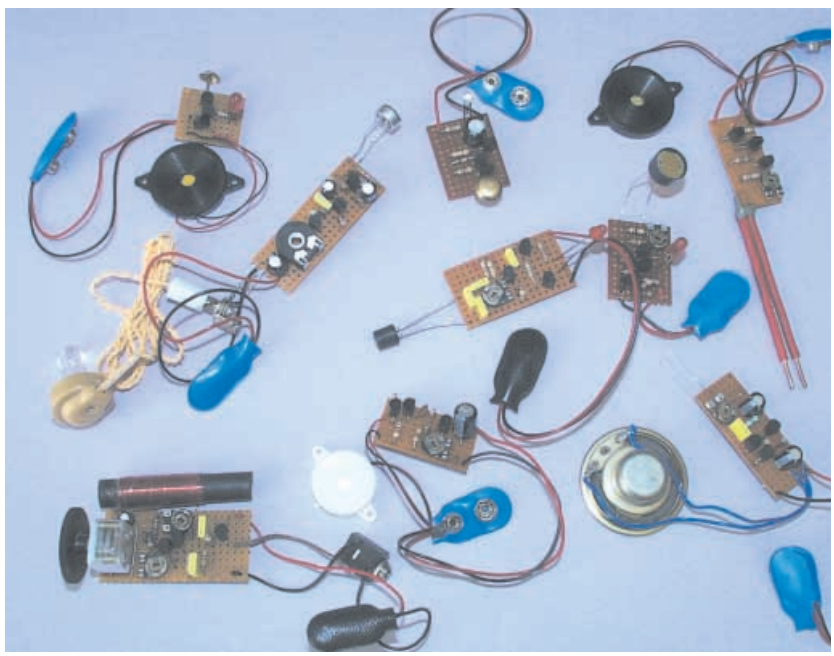

The full range of simple transistor-based circuit assemblies described in this series.

BASIC TRANSISTOR

Transistors form the basis of all electronic circuits from the simplest to the most complex microprocessor devices available, and although many modern i.c.s use field effect transistors (f.e.t.s) which operate on slightly different principles, we will consider bipolar junction transistors (b.j.t.s) as these are much cheaper.

Most transistors have three terminals, which in a b.j.t. are called the emitter (e), base (b) and collector (c), as notated on the circuit symbol in Fig.1a. This shows an *npn* type which operates with the collector at a positive voltage with respect to the emitter, while Fig.1b shows a *pnp* type where the operation is the same but the collector and base voltages are inverted (negative) with respect to the emitter.

The terms *n* and *p* refer to the type of semiconductor material used, which either contains an excess of negative (*n*) charge carriers (electrons) or positive (*p*) charge carriers (holes), the flow of which constitutes a *current* within the semiconductor.

Diodes, which conduct only in one direction, consist of two layers sometimes referred to as a *pn* junction (Fig.1c), whereas transistors contain three layers and thus have two junctions called the base-emitter and the collector-base junctions.

Junctions of the *pn* type do not obey Ohm's Law ($V = IR$), unlike resistors where the current flowing through the device is proportional to the voltage potential across it.

In the reverse direction (*p* region, negative), the current *I* through a diode is effectively zero, irrespective of the applied voltage. When forward biased (*p* positive and *n* negative) silicon diodes, when conducting, exhibit a small forward voltage drop of around 0·6 volts, irrespective of the current flowing.

This is, of course, a simplification, and also assumes that the maximum current or voltage ratings are not exceeded. The 0·6V drop is also only approximate (it is lower at very small currents and can be as high as

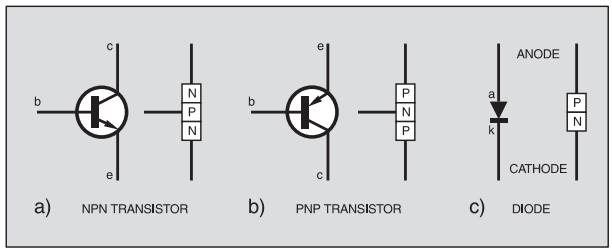

Fig.1. Transistor and diode symbols, and equivalent internal structure.

0·7V or more for high currents). It is also only true for *pn* junctions made from silicon, which is the material used for most modern transistors and diodes.

Some other semiconductor materials exhibit a higher forward voltage drop, so that a *pn* junction made from gallium arsenide (a material used in the manufacture of l.e.d.s), for example, has a forward voltage of about 1·5V. Conversely, a *pn* junction made from germanium (now not often found in semiconductors) exhibits a voltage drop of about 0·3V.

In normal use, the base-emitter junction of a transistor (which is and acts like a diode) is forward biased. Consequently, current flows and it therefore exhibits a voltage drop of 0·6V, while the collector-base junction (which is also a diode) is reverse biased.

The operation of the device is best understood as a kind of current-controlled current sink. The current flowing between the collector and emitter, I_c, is not determined by the voltage across it, but only by

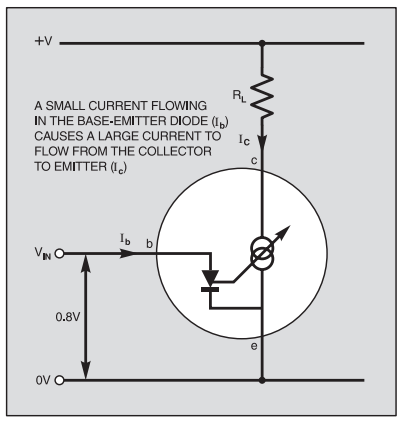

Fig.2. Approximate equivalent circuit of an npn *transistor.*

the current flowing from the base to the emitter, I_b, as shown in Fig.2.

The result of current flowing into the base-emitter path causes a greater current to flow through the collector-emitter path, for reasons beyond the scope of this article.

The collector current I_c is higher than the base current, I_b, by a factor known as the current gain of the device, often denoted by Greek letter β (Beta) or h_{FE}.

Depending on type and intended application, transistors can be manufactured to have a current gain of between 20 and 500, although for the transistor types used in this series a value of 100 is typical. This is not an exact value and some specimens could have a gain as low as 50 while others may have a gain of 150 or more, and any practical circuit should make provision for this.

An important point to appreciate about all of this is that the collector current depends only on the base current and not the collector voltage, as long as this is a little higher than the voltage at the emitter. In this sense therefore, the collector is a current source.

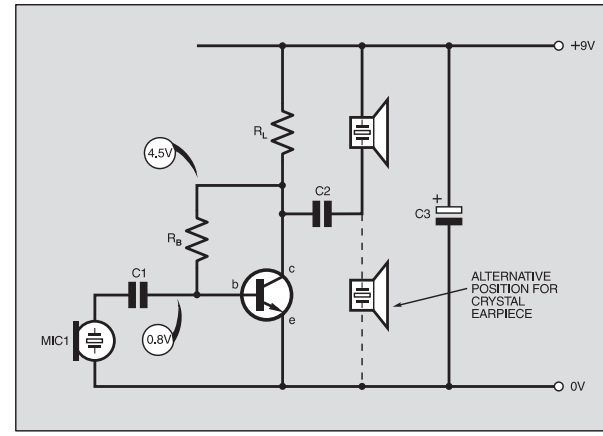

Fig.3. Basic common emitter audio amplifier.

TRANSISTOR AMPLIFIER

The circuit diagram in Fig.3 is for a typical simple audio amplifier that demonstrates how a single transistor can be used in a practical situation. It is intended for amplifying small voltages from a microphone to drive an earpiece. No constructional details are offered as it is simply an example.

The term *amplifier* is perhaps a bit of a misnomer for the circuit as it conjures up an image of the small signal from say a microphone somehow being magnified, by passing through a transistor, to a level large enough to drive a powerful loudspeaker, in a way analogous to an image being enlarged by a lens.

What really happens is that the microphone signal is simply used to control the much larger current available from the power supply or battery and this is used to drive a small loudspeaker (the earpiece). The transistor simply enables us to control a large (collector) current with a smaller (base) current.

In Fig.3, resistor R_L (often called a load resistor – hence R_L) is shown connected between the transistor's collector and the positive power line. If the base current is increased from zero (by varying the value of the base resistor R_B, for example), the collector current will also increase from zero.

This causes the voltage across load resistor R_L to increase and thus the voltage between the emitter and collector to fall. Eventually, if the base current continues to be increased, a stage will be reached when the current flowing through R_L is so large that the voltage developed across it will equal the supply voltage and no further increase will be possible.

The voltage across the emitter-collector will then, of course, equal zero because all of the available supply voltage is developed across R_L. Since the collector current is directly proportional to the base current, the device can be used to make a perfect but larger reproduction of the base current or, in other words, to amplify small signals.

When discussing the operation of circuits, it is more usual to talk in terms of voltages at various points rather than the currents flowing through the devices. Voltages are after all much easier to measure (as no wires need to be cut or components disconnected to enable a meter to be inserted) and they can all be expressed with respect to some convenient reference point, such as 0V.

Thus we can say that when the base voltage is increased from zero (causing the base current to increase once the 0·6V base-emitter threshold is exceeded), the collector voltage falls from the supply rail value towards zero. Again only a small change in the base voltage is required to effect a large change in the collector voltage.

The values for resistors R_B and R_L must be chosen so that when no signal is present, the collector current is such that the voltage at the collector is at around half of the supply voltage (i.e. 4·5V for a 9V supply). This allows the collector voltage to uniformly swing *within* the range 0V to 9V in response to an input signal without "hitting" either supply rail (a situation commonly known as "clipping").

Within this range, the output signal at the collector faithfully follows the input signal and provides the maximum undistorted output (providing the capacitor values are correctly chosen).

CAPACITIVE COUPLING

The a.c. microphone signal is coupled to the base of TR1 via a capacitor C1. This prevents any d.c. voltage in the microphone circuit (or preceding stage in other applications) from upsetting the transistor bias conditions.

Thus the current flowing into the base depends only on that flowing through resistor R_B and the a.c. signal generated across the microphone.

The microphone signal thus causes the collector current to vary in sympathy, but by a much greater amount. The voltage at the collector will therefore also vary in sympathy with the microphone signal and the variation will of course be much greater than the signal voltage. In other words, amplification has been provided.

It is often also desirable to block d.c. voltages at the output from the collector and pass only the a.c. signal to the load (which in other applications could be another similar stage). This is done by placing another capacitor, C2, in the circuit as shown.

To work correctly, the impedance of the load would need to be about 10 times that

of R_L to avoid loading the output unduly and reducing the output voltage. In this example, if a value of 4·7kΩ is assumed for R_L, this circuit would be suitable for a crystal earpiece, which has a very high d.c. resistance. Indeed it is so high, in fact, that a capacitor is not actually required when using such an earpiece.

Note that the circuit cannot be used to drive a loudspeaker. Small loudspeakers generally have a much lower impedance of around 8Ω to 40Ω. However, an 8Ω speaker would require R_L to have a value of 0·8Ω, which would mean that the transistor current would need to be 5·6A to maintain the collector voltage at 4·5V! This would clearly require a different approach.

For the signal to be handled correctly, the impedance of the power supply should be as low as possible. With battery supplies the effective impedance tends to increase as the battery becomes discharged and for this reason it is a good idea to connect a capacitor (C3) across the supply rails to keep this impedance low.

Since it is a capacitively coupled a.c. signal, it is possible to connect the earpiece (or indeed another stage) from the output to either supply rail. Note that a *pnp* transistor could be used in this circuit if the battery connections are reversed (i.e. +9V to the emitter, 0V to the collector).

NEGATIVE FEEDBACK

Connecting the bias resistor R_B to the collector rather than to a fixed voltage, such as the positive supply rail, provides negative feedback and stabilises the circuit against temperature and transistor gain variations.

This is important because the large variation in gain of transistors would otherwise mean that each repetition of the circuit would have to be individually set up. By connecting this resistor to the collector, a transistor with a large gain would pass a larger collector current. This reduces the collector voltage, causing a smaller base current to flow, tending to return the collector to the mid supply point. A similar but opposite response takes place if the transistor specimen has a lower gain.

Using resistor R_B in this configuration provides what is known as *d.c. negative feedback*. It is used to compensate for changes in collector current irrespective of how they are caused, not only because of transistor gain spreads but also due to variations in the base current caused by temperature changes, and indeed variations in the signal itself.

The penalty for using negative feedback is therefore a reduction in gain of the circuit, but the benefits are a reduction in distortion, an increase in the frequency response, as well as reduced sensitivity to temperature and transistor gain variations. Adding more stages can easily compensate for the lower gain of the stage.

The circuit in Fig.3 shows an example of a linear transistor application where the output is, as far as possible proportional to the input. There are several examples of its use in the simple projects described in this series.

HEARING AID

THE first project in this short series is a simple Hearing Aid. It is not intended to be used as an alternative to medically approved hearing aids. This simple design consists of a microphone and a three-stage transistor amplifier. It has a manual volume control and is powered by a 9V PP3 battery.

Its circuit diagram is shown in Fig.4. The microphone (MIC1) is a miniature electret type which contains an internal amplifier so that a positive d.c. supply is required across it, provided here via resistor R1.

Despite the internal amplifier, the output signal from the microphone is too small to drive an earpiece and it needs to be amplified. In this application, three transistor stages are used to amplify it.

The signal from the microphone is a.c. coupled via capacitor C1 to the twin-transistor stage around TR1 and TR2. These are d.c. coupled and the much larger gain obtainable using two transistors enables more feedback to be used, thus making the circuit more immune to variations caused by gain spreads and temperature changes.

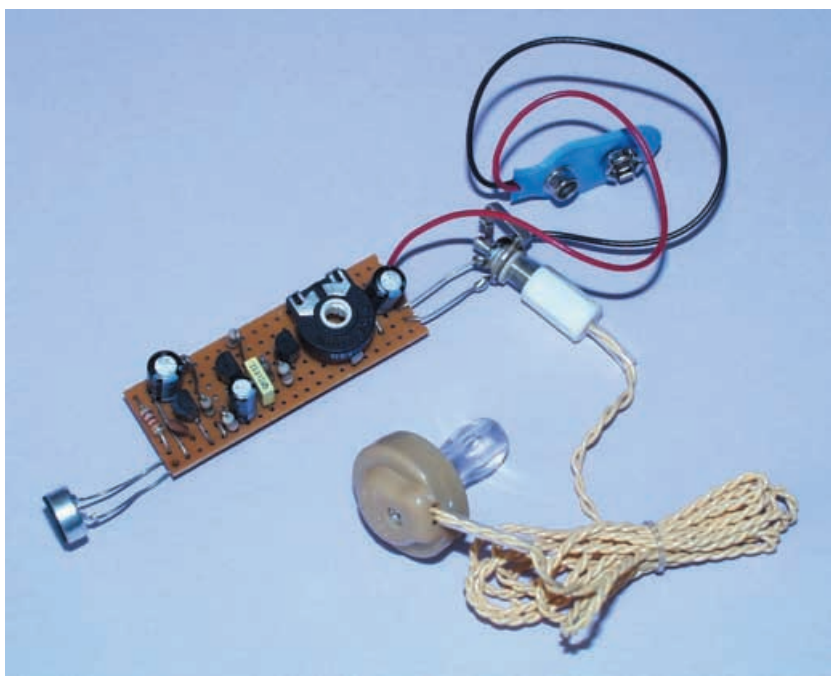

The base current for TR1 is obtained via resistor R3 from the voltage developed across R4 by the current passed by TR2. Capacitor C2 removes the a.c. content of the signal so that only d.c. feedback occurs via this path, and limits signal gain.

Capacitor C3 causes a reduction in the gain of higher frequencies to ensure that the amplifier remains stable. The low frequency response is determined by the impedance of the capacitors C1 and C2, which are given relatively low values. The middle frequencies are therefore boosted more than low frequencies, while higher frequencies are also suppressed making speech more intelligible and the unit less sensitive to interference from mains hum (50Hz). If you wish to experiment, the frequency response of the amplifier can be tailored to requirements by altering the values of these capacitors.

The load resistance (VR1) of TR2 is made variable and functions as a Volume control, enabling the amplitude of the signal fed to the final earpiece driver stage formed around *pnp* transistor TR3 to be varied. Capacitor C4 ensures that the d.c. voltage at VR1 does not affect TR3.

The stability of the circuit is aided by the use of capacitor C6 fitted directly across the supply line, and by the inclusion of resistor R7 and C5 in the supply feeding transistors TR1 and TR2.

CONSTRUCTION

As with all of the projects in this series, the circuit is built on a small piece of stripboard, as illustrated in Fig.5.

With this method of construction, it is just as important to break those connections which are not required as it is to make those that are, so that the first step should be to cut the tracks as shown. This

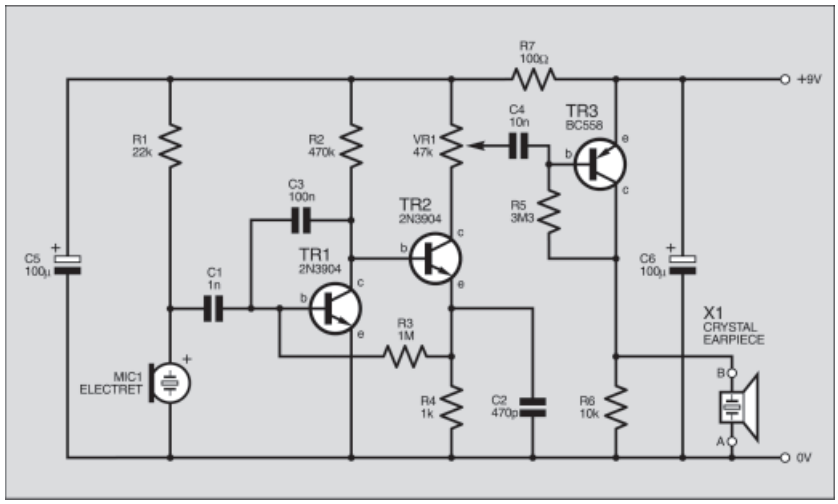

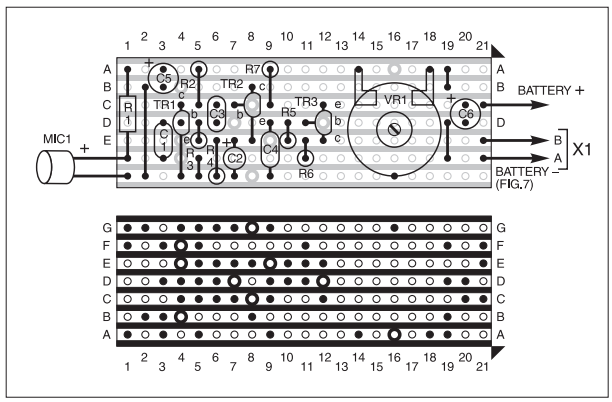

Fig.4 (above). Circuit diagram for the Hearing Aid.

Fig.5 (left). Hearing Aid stripboard components layout and details of track breaks.

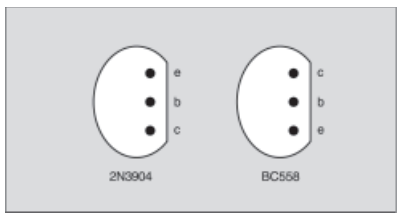

Fig.6. Transistor pinouts, base view.

can be done with a 5mm drill bit or the special tool with a plastic handle available for the purpose.

Assemble the board in order of component size, noting that several resistors are mounted vertically.

Virtually any small-signal transistors could be used, correctly chosen as *npn/pnp* types, but note that pinouts between different types can vary. The pinouts for the suggested transistors are shown in Fig.6. Ensure that they and the electrolytic capacitors are connected the correct way round.

Electret microphones are available with flying leads or as capsules without any leads. If the latter type is purchased, first solder two resistor cut-off wires to the two pads on the back of the component.

The microphone must be connected the right way around and the negative lead should be soldered to the 0V rail (battery negative). The microphone's negative lead is the one connected to its metal body. This can be determined visually or by means of a multimeter set to the ohms range.

The crystal earpiece is normally available with a lead terminated in a 3·5mm mono jack plug and a suitable switched socket should be purchased for this (the switch is used to switch the 0V line from the battery). If this is an open type as shown in Fig.7, it will have a switched contact which opens when the plug is inserted, and so will need to be modified to *close* when the plug is inserted.

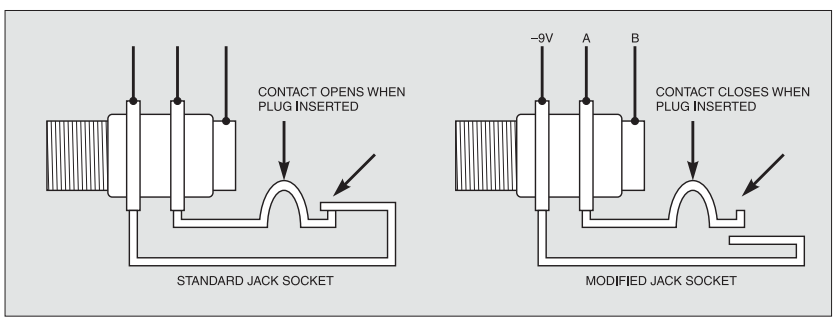

Fig.7. Modifying a 3·5mm jack socket to act as a power on/off switch.

COMPONENTS

See SHOP TALK page

Resistors

R1	22k
R2	470k
R3	1M
R4	1k
R5	3M3
R6	10k
R7	100Ω

All 0·25W 5% metal film.

Potentiometer

VR1	47k preset with spindle (see text)

Capacitors

C1	1n ceramic disc, 5mm pitch
C2	470p ceramic disc, 5mm pitch
C3	100n ceramic disc, 5mm pitch
C4	10n ceramic disc or polyester, 10mm pitch
C5, C6	100µ axial elect., 16V (2 off)

Semiconductors

TR1, TR2	2N3904 *npn* transistor (2 off)
TR3	BC558 *pnp* transistor

Miscellaneous

MIC1	electret microphone insert
X1	crystal earpiece with lead and 3·5mm plug

Stripboard, 7 strips x 21 holes; 3·5mm socket, switched (see text); PP3 battery and clip; case to suit; connecting wire; solder, etc.

Approx. Cost Guidance Only **£8** ***excl. case and battery***

This can be done by bending the contact to the position shown. Alternatively, a stereo socket could be used with the third or inner contact used as the switch. The mono plug will short-out the outer and middle contacts when the plug is inserted, thus making the battery connection while the tip or inner contact of the plug is connected to the collector of TR3.

Volume control VR1 is a 15mm diameter preset which is available with an optional spindle. Alternatively, a standard panel mounting potentiometer can be used and wired to the board with flying leads.

The circuit, together with a PP3 type battery, should be mounted in a box, although no recommendation of box type is made for any project in this series.

Note that the circuit is extremely sensitive and output wiring to the earpiece socket should be kept well away from the microphone. Some foam damping between the box and the board/microphone is also desirable to prevent knocks and other mechanical shocks from being transmitted to the microphone and amplified. If mains hum is a problem, the value of capacitor C1 should be reduced.

AUDIO POWER AMPLIFIER

In the preceding *Hearing Aid* project, the output of the amplifier is used to drive a crystal earpiece, which is fine for personal listening but very often a loudspeaker provides a better output device enabling a number of people to listen simultaneously, or for the sound to be heard from a distance.

The Audio Power Amplifier circuit described now enables this to be done. It would also make an ideal loudspeaker output amplifier for use with small projects.

LOW IMPEDANCE

The problem with driving speakers is due to their low impedance, which can be as low as four ohms in high power units, although more commonly it is eight or 15 ohms.

Connected as the collector load in a common emitter amplifier, the transistor and speaker would need to pass a very large d.c. current, as discussed earlier.

As it would be unwise to have such a large current flowing continuously through the speaker, a separate load resistor could be used together with a coupling capacitor, but this would still involve a very large current flowing continuously through the transistor and resistor. To enable a speaker to be connected, some way of increasing its apparent impedance must therefore be found.

In the past, a transformer was often used, but these tend to be expensive and heavy so now power transistors of various types are used. The circuit presented here is based on an emitter follower amplifier where the load (speaker) is connected in the emitter circuit, as shown in Fig.8.

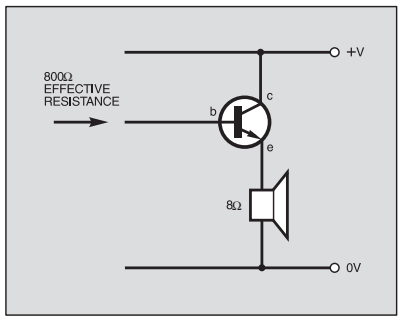

Fig.8. Loudspeaker driven by an emitter follower.

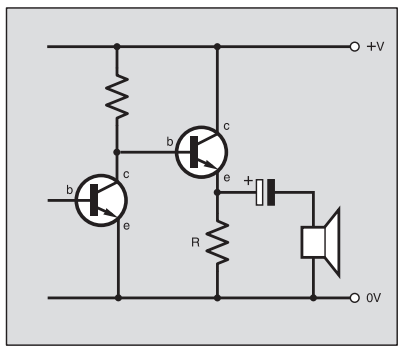

Fig.9. Capacitively coupled loudspeaker stage.

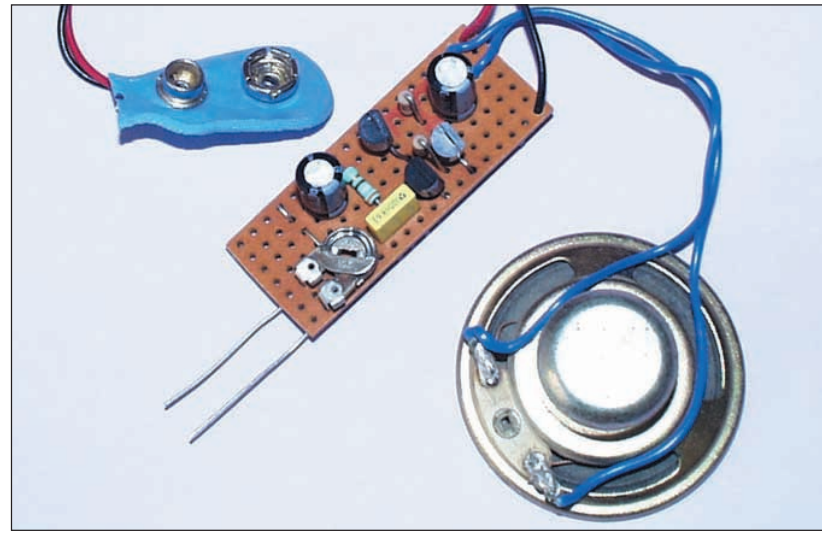

This connection provides no voltage gain as the output (emitter) voltage is effectively the same as the input except for the 0·6V base-emitter voltage drop (which is why the circuit is called an emitter follower amplifier). However, the input impedance of the stage looking into the base is increased by the gain of the transistor.

With an 8 ohm speaker and a gain of 100, the effective speaker impedance is now a more respectable 800 ohms. This allows an amplifying circuit to be followed by a common emitter stage as shown in Fig.9. Here an emitter load resistor, *R*, is used and the loudspeaker is capacitively coupled in parallel with it.

COMPLIMENTARY OUTPUT

Although a high value of collector load resistor can be used in the amplifying stage, enabling the collector voltage to be set to the mid-supply point, this would still leave the problem of the low value of resistor *R*, but here another trick can be used.

During the positive half-cycle, the majority of the current flows through the capacitor and the speaker. Resistor *R* is not required at this time and the current which flows through it is simply wasted. In this situation it would be better if the resistor were not present.

Unfortunately, during the negative signal half-cycle, current must flow through the resistor to discharge the capacitor, and then it is the transistor current which is wasted. Remember that the *average* d.c. voltage at the emitter is set to approximately the same voltage as that at the amplifier's base.

If the load resistor could be replaced by a resistor which varied its value depending on whether the positive or negative half-cycle were being amplified, this wasted current could be eliminated.

This can be done by replacing resistor *R* by a *pnp* transistor emitter follower as in Fig.10, using TR3. This transistor automatically drives the speaker during negative half-cycles, but switches off during the positive half-cycles when the *npn* transistor TR2 is turned on.

If the junction of these two transistors is set at the mid-point voltage (to achieve the maximum undistorted output), then each transistor will automatically conduct in its own half-cycle while the other turns off, and when no signal is present both transistors will be off, reducing the current drain to zero.

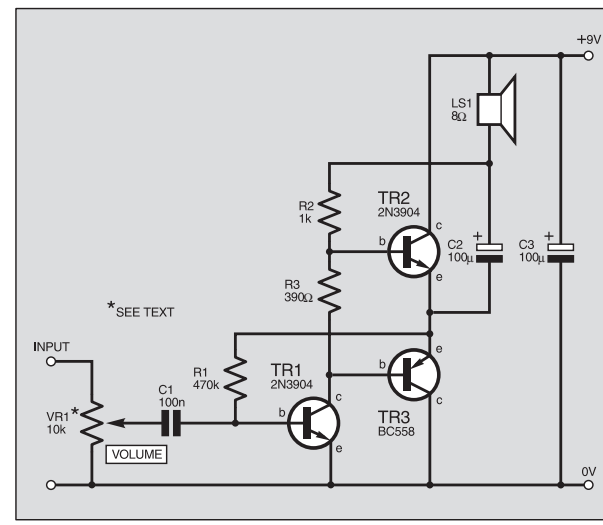

Fig.10. Audio Power Amplifier circuit diagram.

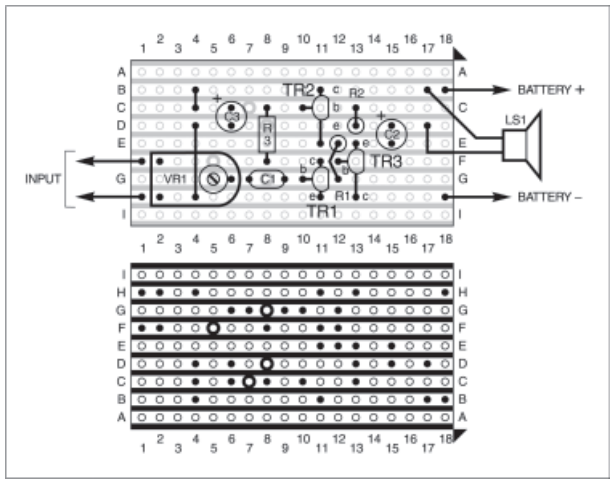

Fig.11. Audio Power Amplifier stripboard component layout and details of track breaks.

COMPONENTS

Resistors

R1	470k
R2	1k
R3	390Ω

Potentiometer

VR1	10k min. skeleton preset (or panel mounting rotary, log, plus knob, see text)

Capacitors

C1	100n ceramic disc, 5mm pitch
C2, C3	100μ radial elect. 16V (2 off)

Semiconductors

TR1, TR2	2N3904 *npn* transistor (2 off)
TR3	BC558 *pnp* transistor

Miscellaneous

LS1	8Ω min. loudspeaker

Stripboard, 18 holes x 9 strips; PP3 battery and clip; case to suit; connecting wire; solder, etc.

See SHOP TALK page

Approx. Cost Guidance Only

£6 *excl. case and battery*

DISTORTION

In practice, having a zero current drain introduces a particularly objectionable form of distortion. This occurs at low signal levels when one transistor cuts off before its partner begins to conduct. To eliminate this so called *crossover* distortion, both transistors are made to conduct slightly when no signal is present. This is done by fitting a low value resistor, R3, between the bases of TR2 and TR3, as shown in Fig.10.

During the positive half-cycle of the input signal, TR1 is turned on and so base current for *pnp* transistor TR3 flows through it, and can be considerable when required.

During the signal's negative half-cycle the base current for *npn* transistor TR2 must be supplied via resistor R2. To enable sufficient current to flow, this resistor must have a relatively low value, but for maximum voltage gain its value should be as high as possible.

This conflicting requirement is solved using a trick called *bootstrapping* where an identical signal to that appearing at the bottom end of resistor R2 is applied to the top end via capacitor C2, which is also used to couple the output signal to the loudspeaker. Since substantially the same signal voltage appears at both ends of R2, there will be virtually no signal current flowing through it.

This increases the *apparent* resistance of R2 at the signal frequency, so ensuring high gain, while its relatively low *actual* resistance ensures sufficient base drive to TR2.

With the values given, the circuit has a sensitivity of about 10mV for a power output of about 560mW at a frequency of 1kHz. This may not sound like a lot compared to the power pumped out in rock concerts, or even by hi-fi amplifiers, but it is very loud for normal listening and may even need to be reduced by the Volume control, VR1.

The no-signal quiescent current should be about 4mA. If this is not so, the value of R3 should be adjusted accordingly. Similarly, the value of R1 may need to be adjusted to ensure that the voltage at the emitters of TR2/TR3 is at the mid-supply level, thus ensuring maximum undistorted output.

Virtually all power amplifier integrated circuits operate in a similar manner, although these often include extra circuitry which sets the quiescent current and output voltage automatically, as well as providing protection from over-temperature and short-circuit loads. This was considered unnecessary in this circuit as these conditions are unlikely to occur and the transistors run cool even with prolonged use at maximum output.

CONSTRUCTION

The circuit is built on a piece of stripboard, 18 holes by 9 strips, which accommodates all of the components except the loudspeaker, as illustrated in Fig.11. Four breaks are required in the tracks. The two wire links can be made from discarded resistor leads. Note that one of these is fitted underneath preset VR1.

Pinouts for the specified transistors are shown earlier in Fig.6. Ensure that the transistors are correctly inserted, and that the orientation of the electrolytic capacitors is correctly followed.

Potentiometer VR1 is specified as a preset type, but this could be changed to a panel mounted equivalent if preferred, in which case use a logarithmic type. Panel mounting types are also available with on/off switches, which would save having a separate power switch.

The circuit should not require any adjustment but for maximum undistorted output, the value of R1 may need to be adjusted to ensure that the no-signal voltage at the emitters of TR2/TR3 is exactly at 4·5 volts.

NEXT MONTH

In the next issue a simple metal detector and a timer circuit are described, again using just three transistors.

EPE BINDERS

KEEP YOUR MAGAZINES SAFE – RING US NOW!

This ring binder uses a special system to allow the issues to be easily removed and re-inserted without any damage. A nylon strip slips over each issue and this passes over the four rings in the binder, thus holding the magazine in place.

The binders are finished in hard-wearing royal blue p.v.c. with the magazine logo in gold on the spine. They will keep your issues neat and tidy but allow you to remove them for use easily.

The price is £5.95 plus £3.50 post and packing. If you order more than one binder add £1 postage for each binder after the *initial* £3.50 postage charge (overseas readers the postage is £6.00 each to everywhere except Australia and Papua New Guinea which costs £10.50 each).

Send your payment in £'s sterling cheque or PO (Overseas readers send £ sterling bank draft, or cheque drawn on a UK bank or pay by card), to **Everyday Practical Electronics, Wimborne Publishing Ltd, 408 Wimborne Road East, Ferndown, Dorset BH22 9ND. Tel: 01202 873872.**
Fax: 01202 874562.
E-mail: editorial@epemag.wimborne.co.uk. Web site: http://www.epemag.wimborne.co.uk
Order on-line from www.epemag.wimborne.co.uk/shopdoor.htm

We also accept card payments. Mastercard, Visa, Amex, Diners Club or Switch (minimum card order £5). Send your card number, card expiry date and Card Security Code (the last three digits on or just below the signature strip) plus Switch Issue No. with your order.

TECHNO-TALK ANDY EMMERSON

Hotspots to the Rescue

FOR all the noise the government has made about its Broadband Britain strategy, many people feel short-changed. Living outside cable modem coverage and away from ADSL-enabled telephone exchanges, the way to the information superhighway for them is blocked. The satellite alternative is totally uneconomic too, meaning they're stuck with the information bridleway of 56kbit/s modem dial-up connections.

It is no wonder then that they feel stymied. But there is an alternative and a growing number of techies, radio hams and others committed to telecommunications freedom have decided they can wait no longer. They are creating local wireless networks of their own to cover the places that the big boys just don't reach. And if that all sounds too much like idealism or the early days of bulletin board systems all over again, well perhaps it is but the people involved seem to have a pretty clear focus on what they intend to achieve.

HIGH IDEALS

The WLAN UK organisation (**www.wlan.org.uk**) has been promoting not-for-profit wireless LANS since 1998. Its contention is that licence-exempt wireless LANS (WLANs) could make it possible to develop amateur and community LANs to serve areas not wired by existing broadband major carriers. These "social" networks would be owned and managed by the local community to offer completely profit-free broadband internet access together with internet-based radio, television, telephone and video communications.

All this would be delivered via a local small community owned co-operative, business or club. The concept builds out from the public access wireless hotspots being established at railway stations, airports, exhibition halls and motorway service areas in the UK by BT and others. For that matter, it is not too far distant from what Starbucks is intending to do in the USA, where the Seattle-based coffee company has already equipped 1,200 of its retail coffee shops for wireless internet access with 2,000 cafes scheduled to have been connected by the end of 2002.

CAN IT WORK?

For Starbucks, BT and others the business model is obvious, whereas for the philanthropic geeks and armchair anarchists (as *The Guardian* so colourfully termed them) the motivation is largely altruistic. On the WLAN UK website Henry O'Tani describes an ingenious scheme in which freenets constructed by community trusts can cover their cost and earn money for established ISPs.

He asserts there that "Initial studies show that our not-for-profit ethic can deliver end user connections for seven per cent of the existing commercial costs. Being provided at its true low cost, wireless broadband community internet can reduce our dependence on the remote decisions of commercial companies as well as bringing broadband to communities that cannot or will not be reached by cable or DSL services."

At the last count there were already 56 nodes in operation across Britain, with 80 in test mode and a further 431 proposed. Not one of them could legally serve third party users, however, and for both the altruists and the anarchists the legal message is the same. In October 2001, however, Douglas Alexander, then minister for e-commerce, launched a consultation for wider use of radio bands to unlicensed commercial services. The legalisation of free community internet access systems is one potential outcome and a decision on this is expected shortly.

HOT STUFF

All this proves that there is considerable interest in freenets for local communities and they could soon be as hot a topic as wireless hotspots are currently. The two are closely related, as wireless evangelist and licensed radio amateur Henry O'Tani explains.

"Since originating the concept in 1998 I have been promoting it passionately world-wide to many organisations. The 'hot' in the term hotspot originated from my initials and from the red roundel on the website. Instead of promoting the idea at commercial trade shows and through normal publicity channels, I chose amateur radio people to spread the word because these are some of the best practical engineers in the world. They have strong fraternal instincts and already understand the key basic concepts of not-for-profit operation and community-focussed services."

With the notion spreading all round the world, he expects that before long the practice will become so well entrenched that the authorities will acknowledge its merit and ratify freenets, in the same way as citizens' band radio became legalised in Europe.

He continues: "I developed early on an email exchange with BT's last chief technologist Peter Cochrane (G3RVC), who predicted that community WLAN would be like CB radio. I have met the BT hotspot people and am now in dialogue with BT over my DX-WLAN patents as a way of extending their market position in mobile communications. Using my DX-WLAN technologies offers about ×10 range for omni-directional services and ×30 for dishes up to 1200mm (4ft) diameter, reducing deployment costs by 99 per cent or more). Beyond this, 802.11b (11Mbit/s) and 802.11a (54Mbit/s) might make other radio delivery techniques obsolete and solve the old 'delivery paradigm' that cable and telephones have imposed themselves."

If new legislation does allow not-for-profit operations of this kind it will certainly let BT and the cablecom operators off the hook, throwing bypassed communities the initiative to provide their own systems. If they fail to react, the blame will be entirely theirs, having had the opportunity. There's a precedent for this too; communities not served at all by television broadcasters were given the right some years back to institute self-help schemes to pipe signals into their local "black holes".

CARRIERS QUAKING?

For as long as freenets are constructed from Pringles boxes, Sarah Lee pie cans and hobby shop components, it's unlikely that the established carriers and ISPs will be quaking in their boots. But even if these information bridlepaths spread out to cover homes, pavements and parks across all areas currently unserved by cable or DSL, the incumbent operators can only benefit.

As Henry O'Tani convincingly argues, existing internet access and service providers earn real minute by minute revenues from day one, whilst the telcos will still make money by providing the broadband access pipes to the community headends. The benefits to existing ISPs are sufficient to justify investing millions in grants and subsidies to user groups wanting to set up community WLANs and able to meet simple eligibility criteria.

Whether this will actually happen only time will tell but it is entirely feasible and not altogether unlikely once government sees the advantages. A year ago the chances for open-access public wireless hotspots being legalised looked worse than the proverbial snowflake in hell, yet they happened almost overnight thanks to commercial pressure. With a following wind, people power could just do the same for freenets.

SIMMERING REBELS

The last word goes to O'Tani, who argues that the movement's success is inevitable. "The debate has started but it's not just about technology. There's a simmering rebellious popular element waiting to explode that makes the WLAN movement similar to the petrol price revolt, illegal CB radio, pirate broadcasting and illicit rave parties. The cost of communications is a grossly inflated 'unearned tax' on every aspect of commerce, government, society and community – and should cost no more than keeping a bicycle."

INTERFACE

Robert Penfold

DIRECT CONTROL OF PC SERIAL LINES USING MSCOMM

THERE seems to be an ever growing list of "golden oldie" components that have been regularly used in home constructor projects, but are no longer manufactured. The 6402 UART now seems to have joined this group, as do the various equivalents and near equivalent chips that were in plentiful supply not so long ago.

These chips may turn up on the surplus market from time to time, and many constructors probably have one or two in their spares box. However, these chips are now non-starters for new designs. Unfortunately, there seems to be nothing directly comparable that is still available.

A Serial Problem

This is not to say that serial interfacing to a PC is no longer possible. PIC microcontrollers can be programmed to provide serial-to-parallel and (or) parallel-to-serial conversion. Many of the more recent PIC chips also have a built-in UART that will handle all the encoding and decoding, making matters much easier.

Using PIC microcontrollers for serial interfacing has been covered in *EPE* in the past. It is worth looking through some back issues if you are interested in this approach.

There are still serial interfacing chips available, but these go well beyond the basic interfacing capabilities of UARTs such as the 6402. This is fine if you require the facilities of these devices, but they are otherwise rather expensive. Building your own UART from individual logic integrated circuits is no doubt possible, but is not a particularly neat or easy solution.

The upmarket serial devices are probably the only viable approach for those not wishing to take the PIC approach. This is a subject that will be considered in a later *Interface* article.

Handshake Lines

From time to time readers query the possibility of using the handshake lines of the serial ports as general purpose digital inputs and outputs. One way of doing this is to directly control the PC's serial interface chip, and the serial chip registers have been covered previously.

Experience suggests that this is not always successful, and the problem is possibly due to the operating system responding to changes made to the chip's setting. Another approach is to use the facilities of a high level programming language, but the facilities on offer seem to vary somewhat from one language to another.

Direct Control

One of the more upmarket versions of Delphi seems to be a popular choice for this sort of thing, but Visual BASIC has some ability to use the control lines with the aid of the MSComm control. An advantage of this method is that it will work with any version of Windows, including Windows XP, without the need for third-party add-ons.

Direct control of two handshake outputs is possible, and the DTR line will be considered first. This is controlled via the DTREnable facility of the MSComm control.

If the serial port is switched off, the DTR line goes to about –12V regardless of the DTREnable setting. If DTREnable is set to True, the DTR line goes to about +12V when the port is switched on. Apparently the basic idea is to normally have DTREnable set to True so that the DTR line automatically goes to –12V when the port is switched off. In a modem application this results in the telephone automatically hanging up when the port is disabled. However, with the port switched on the DTR line can be forced to the –12V state by setting DTREnable to False. In other words, provided the port is switched on, the DTR line can be set to +12V or –12V by setting DTREnable to True and False respectively.

Provided a version of Visual BASIC that has MSComm is available it is quite easy to try out controlling the DTR line. The DTR terminal is at pin 4 of a 9-pin serial port or pin 20 of a 25-pin type (see Fig.1).

Do not use a logic tester to monitor the DTR line unless it is a type that can safely handle the relatively high positive and negative voltages produced by an RS232C serial port. A digital multimeter set to a suitable d.c. voltage range is the best option, as it will register positive and negative voltages without having to swap over the test prods.

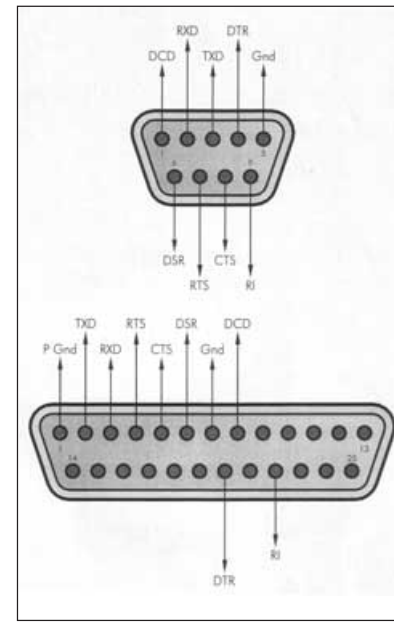

Fig.1. Connection details for 9-pin and 25-pin serial ports.

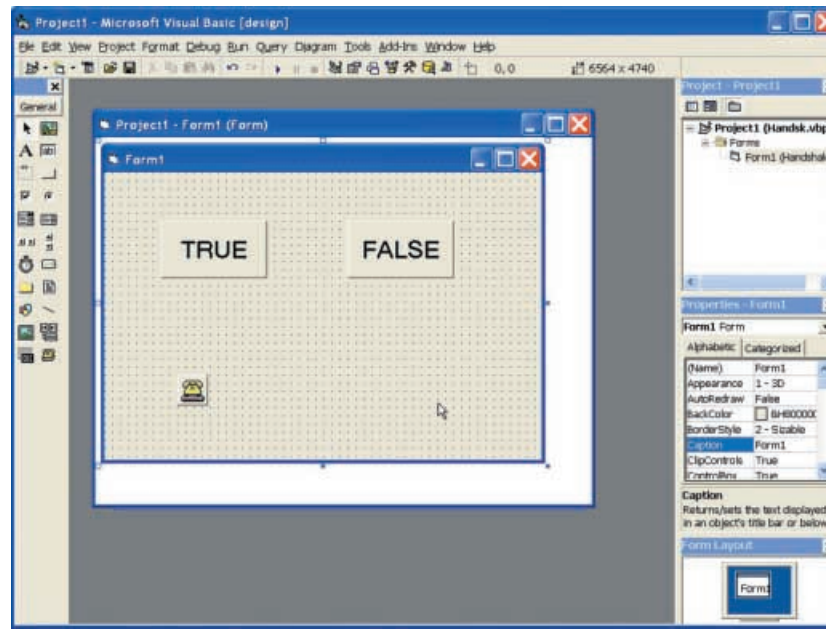

Fig.2. Screen dump of the command buttons on the VB form required for the test routine.

Test Software

In order to test control of the DTR line, add two command buttons to a form in Visual BASIC. Also add the MSCOMM ActiveX control. Change the caption of Command1 to "True" and Command2 to "False".

This should give something like the screen shot shown in Fig.2. Next add these few lines of code in the Code window:

```
Private Sub Command1_Click()
MSComm1.DTREnable = True
End Sub

Private Sub Command2_Click()
MSComm1.DTREnable = False
End Sub

Private Sub Form_Load()
MSComm1.PortOpen = True
End Sub
```

The subroutine for Command1 sets DTREnable to True when the button is operated, and the subroutine for Command2 sets it to False when that button is operated. If everything is working properly, operating Command1 will set DTR to about +12V, and operating Command2 will set it to about –12V.

The subroutine for the form simply switches on the relevant serial port. Although no data is being sent or received by the serial port, control of the DTR line will only work properly with the port enabled.

Serial port 1 (Com1) is used by default, but port 2 can be used instead by selecting MSComm1 and setting CommPort 2 using the Object Inspector. Most of the other settings are of no consequence as no data is being output on the TX Data output.

One exception is the DTREnable setting, which enables the initial state of the DTR line to be set. Presumably this can also be achieved by using the appropriate code in the subroutine for the Form.

RTS Output

In a similar vein to DTREnable facility, the RTS output is controlled by the RTSEnable instruction. Some descriptions of this instruction suggest that this line can only be controlled by switching the port on and off. However, in practice it seems to work in identical fashion to the DTREnable instruction.

Provided the port is switched on, setting RTSEnable to True sends the RTS line to +12V, and setting it to False sends the RTS line to –12V. Modifying the subroutines for the two command buttons, as shown below, therefore results in the program controlling the RTS line.

```
Private Sub Command1_Click()
MSComm1.RTSEnable = True
End Sub

Private Sub Command2_Click()
MSComm1.RTSEnable = False
End Sub
```

Handshake Inputs

MSCOMM can be used to read some of the handshake inputs, but only in an indirect fashion. The OnComm facility of MSCOMM can be used to generate an event each time the relevant handshake input changes state. These are the four events generated by handshake inputs:

Setting	*Value*	*Description*
ComEvCTS	3	Change in the state of CTS line
ComEvDSR	4	Change in the state of DSR line
ComEvCD	5	Change in the state of CD line
ComEvRing	6	Ring detected

According to some sources, only changes from high to low on the DSR line are detected. Practical experiments suggest that this is not the case. "Ring detected" presumably means that the relevant state on the RI (Ring Indicator) line has been detected.

A simple way of trying out a handshake input is to extend the original test program by first adding a label to the form. Set a reasonably large font and change the label's caption to "0". Change the program code so that it looks like this:

```
Private Sub Command1_Click()
MSComm1.RTSEnable = True
End Sub

Private Sub Command2_Click()
MSComm1.RTSEnable = False
End Sub

Private Sub Form_Load()
MSComm1.PortOpen = True
End Sub

Private Sub MSComm1_OnComm()
If (MSComm1.CommEvent =
  comEvCTS) Then
Label1.Caption = Label1.Caption + 1
End If
End Sub
```

The idea of the program is to toggle the RTS line using the two buttons, and to count the transitions via the CTS handshake input. The CTS and RTS lines are a good choice since they are next to each other on a 9-pin serial port. These two lines can be connected together by using a 9-way female D-connector having pin 7 and pin 8 wired together.

Alternatively, a small crocodile clip can be carefully fitted onto pins 7 and 8 of the serial port, being careful not to make a connection to any other pin. Serial port output lines have current limiting so they will not be damaged by accidental short circuits, but additional connections could prevent the program from working.

All Change

An If . . . Then statement in the subroutine for MSComm1 is used to detect changes on the CTS line and increment the value displayed on the label. Each time a ComEvCTS event occurs the value used for Label1's caption is increased by one. The program performed as expected when it was tried, and Fig.3 shows it in action.

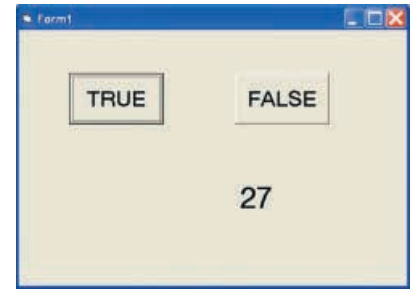

Fig.3. Example of results obtained when using the handshake test routine.

Each of the other handshake inputs can be tested by using the appropriate CommEvent in the program and connecting the RTS line to the correct input of the serial port. Using ComEvCD with the DCD input provides the same action as using the CTS input, with each transition being counted. The same is true when the DSR input is used.

As pointed out previously, some sources suggest that only high to low transitions of this line produce an event, but this seems to be an error. With this program the count is increment each time the RTS line changes state.

However, using the ComEvRing event and the RI input does result in only the high to low transitions being counted. Alternately operating the two buttons only produces an increment in the count when the False button is operated.

In a modem application the RI input presumably goes low when the ring is detected, and MSComm is only designed to detect this event. In many practical applications it is only necessary to detect one type of transition, so this is not really a major drawback. In some cases it could make things easier.

Two digital outputs and four edge counting inputs does not give great scope for interfacing gadgets to a PC. On the other hand, it is adequate for many simple applications such as pulse counting and motor control. This method certainly represents a viable alternative to parallel port interfacing for many applications that only require a few inputs and outputs.

EPE NET ADDRESSES

EPE FTP site: **ftp://ftp.epemag.wimborne.co.uk**
Access the FTP site by typing the above into your web browser, or by setting up an FTP session using appropriate FTP software, then go into quoted sub-directories:
PIC-project source code files: **/pub/PICS**
PIC projects each have their own folder; navigate to the correct folder and open it, then fetch all the files contained within. *Do not try to download the folder itself!*
EPE text files: **/pub/docs**
Basic Soldering Guide: **solder.txt**
Ingenuity Unlimited submission guidance: **ing_unlt.txt**
New readers and subscribers info: **epe_info.txt**
Newsgroups or Usenet users advice: **usenet.txt**
Ni-Cad discussion: **nicadfaq.zip** and **nicad2.zip**
Writing for *EPE* advice: **write4us.txt**
You can also enter the FTP site via the link at the top of the main page of our home site at:
http://www.epemag.wimborne.co.uk
Shop now on-line: **www.epemag.wimborne.co.uk/shopdoor.htm**

EPE IS PLEASED TO BE ABLE TO OFFER YOU THESE
ELECTRONICS CD-ROMS

ELECTRONICS PROJECTS

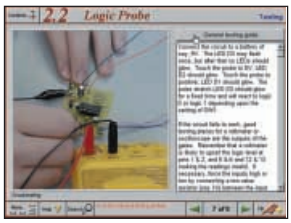

Logic Probe testing

Electronic Projects is split into two main sections: **Building Electronic Projects** contains comprehensive information about the components, tools and techniques used in developing projects from initial concept through to final circuit board production. Extensive use is made of video presentations showing soldering and construction techniques. The second section contains a set of ten projects for students to build, ranging from simple sensor circuits through to power amplifiers. A shareware version of Matrix's CADPACK **schematic capture**, **circuit simulation** and **p.c.b. design** software is included.
The projects on the CD-ROM are: Logic Probe; Light, Heat and Moisture Sensor; NE555 Timer; Egg Timer; Dice Machine; Bike Alarm; Stereo Mixer; Power Amplifier; Sound Activated Switch; Reaction Tester. Full parts lists, schematics and p.c.b. layouts are included on the CD-ROM.

ELECTRONIC CIRCUITS & COMPONENTS V2.0

VERSION 2

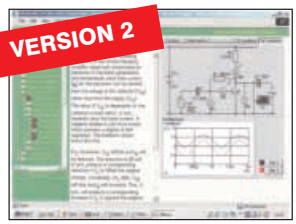

Circuit simulation screen

Provides an introduction to the principles and application of the most common types of electronic components and shows how they are used to form complete circuits. The virtual laboratories, worked examples and pre-designed circuits allow students to learn, experiment and check their understanding. Version 2 has been considerably expanded in almost every area following a review of major syllabuses (GCSE, GNVQ, A level and HNC). It also contains both European and American circuit symbols. Sections include: ***Fundamentals:*** units & multiples, electricity, electric circuits, alternating circuits. ***Passive Components:*** resistors, capacitors, inductors, transformers. ***Semiconductors:*** diodes, transistors, op.amps, logic gates. ***Passive Circuits. Active Circuits.*** *The Parts Gallery* will help students to recognise common electronic components and their corresponding symbols in circuit diagrams.
Included in the Institutional Versions are multiple choice questions, exam style questions, fault finding virtual laboratories and investigations/worksheets.

ANALOGUE ELECTRONICS

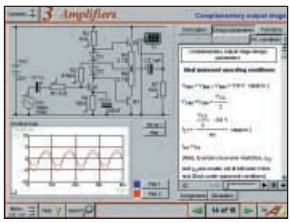

Complimentary output stage

Analogue Electronics is a complete learning resource for this most difficult branch of electronics. The CD-ROM includes a host of virtual laboratories, animations, diagrams, photographs and text as well as a SPICE electronic circuit simulator with over 50 pre-designed circuits.
Sections on the CD-ROM include: **Fundamentals** – Analogue Signals (5 sections),Transistors (4 sections), Waveshaping Circuits (6 sections). **Op.Amps** – 17 sections covering everything from Symbols and Signal Connections to Differentiators. **Amplifiers** – Single Stage Amplifiers (8 sections), Multi-stage Amplifiers (3 sections). **Filters** – Passive Filters (10 sections), Phase Shifting Networks (4 sections), Active Filters (6 sections). **Oscillators** – 6 sections from Positive Feedback to Crystal Oscillators. **Systems** – 12 sections from Audio Pre-Amplifiers to 8-Bit ADC plus a gallery showing representative p.c.b. photos.

DIGITAL ELECTRONICS V2.0

VERSION 2

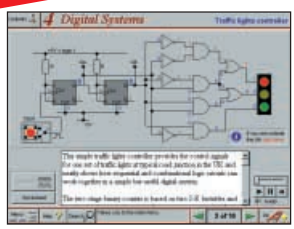

Virtual laboratory – Traffic Lights

Digital Electronics builds on the knowledge of logic gates covered in *Electronic Circuits & Components* (opposite), and takes users through the subject of digital electronics up to the operation and architecture of microprocessors. The virtual laboratories allow users to operate many circuits on screen.
Covers binary and hexadecimal numbering systems, ASCII, basic logic gates, monostable action and circuits, and bistables – including JK and D-type flip-flops. Multiple gate circuits, equivalent logic functions and specialised logic functions. Introduces sequential logic including clocks and clock circuitry, counters, binary coded decimal and shift registers. A/D and D/A converters, traffic light controllers, memories and microprocessors – architecture, bus systems and their arithmetic logic units. Sections on Boolean Logic and Venn diagrams, displays and chip types have been expanded in Version 2 and new sections include shift registers, digital fault finding, programmable logic controllers, and microcontrollers and microprocessors. The Institutional versions now also include several types of assessment for supervisors, including worksheets, multiple choice tests, fault finding exercises and examination questions.

FILTERS

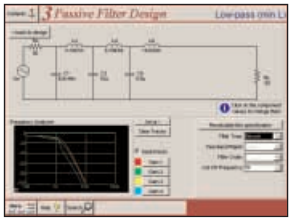

Filter synthesis

Filters is a complete course in designing active and passive filters that makes use of highly interactive virtual laboratories and simulations to explain how filters are designed. It is split into five chapters: **Revision** which provides underpinning knowledge required for those who need to design filters. **Filter Basics** which is a course in terminology and filter characterization, important classes of filter, filter order, filter impedance and impedance matching, and effects of different filter types. **Advanced Theory** which covers the use of filter tables, mathematics behind filter design, and an explanation of the design of active filters. **Passive Filter Design** which includes an expert system and filter synthesis tool for the design of low-pass, high-pass, band-pass, and band-stop Bessel, Butterworth and Chebyshev ladder filters. **Active Filter Design** which includes an expert system and filter synthesis tool for the design of low-pass, high-pass, band-pass, and band-stop Bessel, Butterworth and Chebyshev op.amp filters.

ELECTRONICS CAD PACK

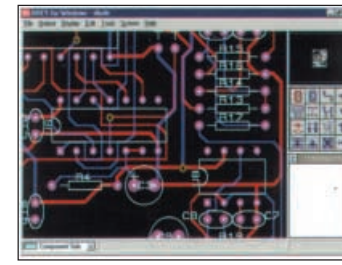

PCB Layout

Electronics CADPACK allows users to design complex circuit schematics, to view circuit animations using a unique SPICE-based simulation tool, and to design printed circuit boards. CADPACK is made up of three separate software modules. (These are restricted versions of the full Labcenter software.) **ISIS Lite** which provides full schematic drawing features including full control of drawing appearance, automatic wire routing, and over 6,000 parts. **PROSPICE Lite** (integrated into ISIS Lite) which uses unique animation to show the operation of any circuit with mouse-operated switches, pots. etc. The animation is compiled using a full mixed mode SPICE simulator. **ARES Lite** PCB layout software allows professional quality PCBs to be designed and includes advanced features such as 16-layer boards, SMT components, and an autorouter operating on user generated Net Lists.

ROBOTICS & MECHATRONICS

Case study of the Milford Instruments Spider

Robotics and Mechatronics is designed to enable hobbyists/students with little previous experience of electronics to design and build electromechanical systems. The CD-ROM deals with all aspects of robotics from the control systems used, the transducers available, motors/actuators and the circuits to drive them. Case study material (including the NASA Mars Rover, the Milford Spider and the Furby) is used to show how practical robotic systems are designed. The result is a highly stimulating resource that will make learning, and building robotics and mechatronic systems easier. The Institutional versions have additional worksheets and multiple choice questions.

- Interactive Virtual Laboratories
- Little previous knowledge required
- Mathematics is kept to a minimum and all calculations are explained
- Clear circuit simulations

PRICES

Prices for each of the CD-ROMs above are:

(Order form on third page)

Hobbyist/Student .....£45 inc VAT
Institutional (Schools/HE/FE/Industry).....£99 *plus* VAT
Institutional 10 user (Network Licence).....£199 *plus* VAT
Site Licence.....£499 *plus* VAT

(UK and EU customers add VAT at 17.5% to "plus VAT" prices)

PICmicro TUTORIALS AND PROGRAMMING

HARDWARE

VERSION 2 PICmicro MCU DEVELOPMENT BOARD

Suitable for use with the three software packages listed below.

This flexible development board allows students to learn both how to program PICmicro microcontrollers as well as program a range of 8, 18, 28 and 40-pin devices. For experienced programmers all programming software is included in the PPP utility that comes with the development board. For those who want to learn, choose one or all of the packages below to use with the Development Board.

- Makes it easier to develop PICmicro projects
- Supports low cost Flash-programmable PICmicro devices
- Fully featured integrated displays – 13 individual l.e.d.s, quad 7-segment display and alphanumeric l.c.d. display
- Supports PICmicro microcontrollers with A/D converters
- Fully protected expansion bus for project work
- All inputs and outputs available on screw terminal connectors for easy connection

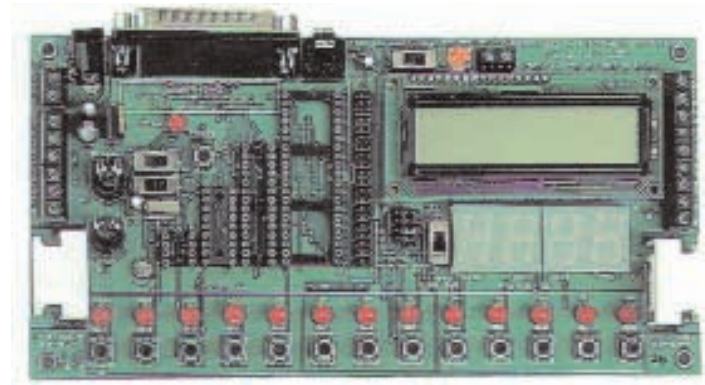

£145 including VAT and postage

12V 500mA plug-top PSU (UK plug) £7

25-way 'D' type connecting cable £5

SOFTWARE

Suitable for use with the Development Board shown above.

ASSEMBLY FOR PICmicro V2

(Formerly PICtutor)

Assembly for PICmicro microcontrollers V2.0 (previously known as PICtutor) by John Becker contains a complete course in programming the PIC16F84 PICmicro microcontroller from Arizona Microchip. It starts with fundamental concepts and extends up to complex programs including watchdog timers, interrupts and sleep modes. The CD makes use of the latest simulation techniques which provide a superb tool for learning: the Virtual PICmicro micro-controller. This is a simulation tool that allows users to write and execute MPASM assembler code for the PIC16F84 microcontroller on-screen. Using this you can actually see what happens inside the PICmicro MCU as each instruction is executed which enhances understanding.

● Comprehensive instruction through 39 tutorial sections ● Includes Vlab, a Virtual PICmicro microcontroller: a fully functioning simulator ● Tests, exercises and projects covering a wide range of PICmicro MCU applications ● Includes MPLAB assembler ● Visual representation of a PICmicro showing architecture and functions ● Expert system for code entry helps first time users ● Shows data flow and fetch execute cycle and has challenges (washing machine, lift, crossroads etc.) ● Imports MPASM files.

Virtual PICmicro

'C' FOR PICmicro VERSION 2

The C for PICmicro microcontrollers CD-ROM is designed for students and professionals who need to learn how to program embedded microcontrollers in C. The CD contains a course as well as all the software tools needed to create Hex code for a wide range of PICmicro devices – including a full C compiler for a wide range of PICmicro devices.

Although the course focuses on the use of the PICmicro microcontrollers, this CD-ROM will provide a good grounding in C programming for any microcontroller.

● Complete course in C as well as C programming for PICmicro microcontrollers ● Highly interactive course ● Virtual C PICmicro improves understanding ● Includes a C compiler for a wide range of PICmicro devices ● Includes full Integrated Development Environment ● Includes MPLAB software ● Compatible with most PICmicro programmers ● Includes a compiler for all the PICmicro devices.

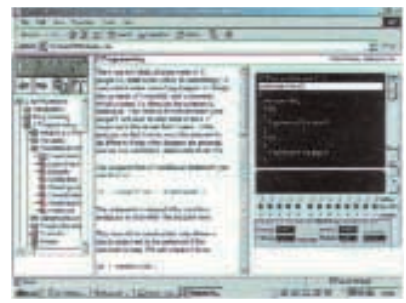

Minimum system requirements for these items: Pentium PC running Windows 98, NT, 2000, ME, XP; CD-ROM drive; 64MB RAM; 10MB hard disk space.

FLOWCODE FOR PICmicro

Flowcode is a very high level language programming system for PICmicro microcontrollers based on flowcharts. Flowcode allows you to design and simulate complex robotics and control systems in a matter of minutes.

Flowcode is a powerful language that uses macros to facilitate the control of complex devices like 7-segment displays, motor controllers and l.c.d. displays. The use of macros allows you to control these electronic devices without getting bogged down in understanding the programming involved.

Flowcode produces MPASM code which is compatible with virtually all PICmicro programmers. When used in conjunction with the Version 2 development board this provides a seamless solution that allows you to program chips in minutes.

● Requires no programming experience ● Allows complex PICmicro applications to be designed quickly ● Uses international standard flow chart symbols (ISO5807) ● Full on-screen simulation allows debugging and speeds up the development process ● Facilitates learning via a full suite of demonstration tutorials ● Produces ASM code for a range of 8, 18, 28 and 40-pin devices ● Institutional versions include virtual systems (burglar alarms, car parks etc.).

Burglar Alarm Simulation

PRICES

Prices for each of the CD-ROMs above are:

(Order form on next page)

Hobbyist/Student	**£45 inc VAT**
Institutional (Schools/HE/FE/Industry)	**£99 *plus* VAT**
Flowcode Institutional	**£70 *plus* VAT**
Institutional 10 user (Network Licence)	**£249 *plus* VAT**
Site Licence	**£599 *plus* VAT**

(UK and EU customers add VAT at 17.5% to "plus VAT" prices)

TEACH-IN 2000 – LEARN ELECTRONICS WITH EPE

EPE's own *Teach-In* CD-ROM, contains the full 12-part *Teach-In* series by John Becker in PDF form plus the *Teach-In* interactive software covering all aspects of the series. We have also added Alan Winstanley's highly acclaimed *Basic Soldering Guide* which is fully illustrated and which also includes *Desoldering*. The *Teach-In* series covers: Colour Codes and Resistors, Capacitors, Potentiometers, Sensor Resistors, Ohm's Law, Diodes and L.E.D.s, Waveforms, Frequency and Time, Logic Gates, Binary and Hex Logic, Op.amps, Comparators, Mixers, Audio and Sensor Amplifiers, Transistors, Transformers and Rectifiers, Voltage Regulation, Integration, Differentiation, 7-segment Displays, L.C.D.s, Digital-to-Analogue.

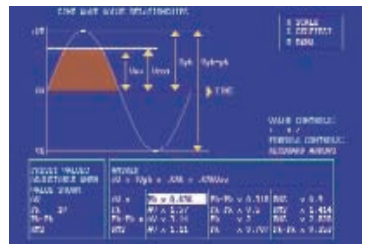

Sine wave relationship values

FREE BOOK WITH TEACH-IN 2000 CD-ROM

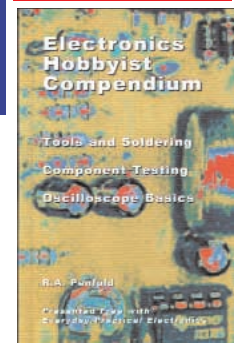

Each part has an associated practical section and the series includes a simple PC interface so you can use your PC as a basic oscilloscope with the various circuits.

A hands-on approach to electronics with numerous breadboard circuits to try out.

£12.45 including VAT and postage. Requires Adobe Acrobat (available free from the Internet – **www.adobe.com/acrobat**).

FREE WITH EACH TEACH-IN CD-ROM – *Electronics Hobbyist Compendium* 80-page book by Robert Penfold. Covers Tools For The Job; Component Testing; Oscilloscope Basics.

ELECTRONICS IN CONTROL

Two colourful animated courses for students on one CD-ROM. These cover Key Stage 3 and GCSE syllabuses. **Key Stage 3:** A pictorial look at the Electronics section featuring animations and video clips. Provides an ideal introduction or revision guide, including multi-choice questions with feedback. **GCSE:** Aimed at the Electronics in many Design & Technology courses, it covers many sections of GCSE Electronics. Provides an ideal revision guide with Homework Questions on each chapter. Worked answers with an access code are provided on a special website.

Single User £29 inc. VAT. Multiple User £39 plus VAT

Student copies (available only with a multiple user copy) £6 plus VAT

(UK and EU customers add VAT at 17.5% to "plus VAT" prices)

MODULAR CIRCUIT DESIGN

VERSION 3

Contains a range of tried and tested analogue and digital circuit modules, together with the knowledge to use and interface them. Thus allowing anyone with a basic understanding of circuit symbols to design and build their own projects. Version 3 includes data and circuit modules for a range of popular PICs; includes PICAXE circuits, the system which enables a PIC to be programmed without a programmer, and without removing it from the circuit. Shows where to obtain free software downloads to enable BASIC programming.

Essential information for anyone undertaking GCSE or "A" level electronics or technology and for hobbyists who want to get to grips with project design. Over seventy different Input, Processor and Output modules are illustrated and fully described, together with detailed information on construction, fault finding and components, including circuit symbols, pinouts, power supplies, decoupling etc.

Single User £19.95 inc. VAT. Multiple User £34 *plus* VAT

(UK and EU customers add VAT at 17.5% to "plus VAT" prices)

DIGITAL WORKS 3.0

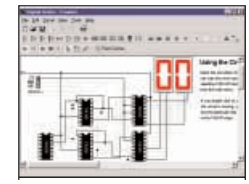

Counter project

Digital Works Version 3.0 is a graphical design tool that enables you to construct digital logic circuits and analyze their behaviour. It is so simple to use that it will take you less than 10 minutes to make your first digital design. It is so powerful that you will never outgrow its capability ● Software for simulating digital logic circuits ● Create your own macros – highly scalable ● Create your own circuits, components, and i.c.s ● Easy-to-use digital interface ● Animation brings circuits to life ● Vast library of logic macros and 74 series i.c.s with data sheets ● Powerful tool for designing and learning.

Hobbyist/Student £45 inc. VAT.
Institutional £99 *plus* VAT.
Institutional 10 user £199 *plus* VAT.
Site Licence £499 *plus* VAT.

ELECTRONIC COMPONENTS PHOTOS

A high quality selection of over 200 JPG images of electronic components. This selection of high resolution photos can be used to enhance projects and presentations or to help with training and educational material. They are royalty free for use in commercial or personal printed projects, and can also be used royalty free in books, catalogues, magazine articles as well as worldwide web pages (subject to restrictions – see licence for full details).

Also contains a **FREE** 30-day evaluation of Paint Shop Pro 6 – Paint Shop Pro image editing tips and on-line help included!

Price £19.95 inc. VAT

Minimum system requirements for these CD-ROMs: Pentium PC, CD-ROM drive, 32MB RAM, 10MB hard disk space. Windows 95/98/NT/2000/ME/XP, mouse, sound card, web browser.

CD-ROM ORDER FORM

Please send me:

- ☐ Electronic Projects
- ☐ Electronic Circuits & Components V2.0
- ☐ Analogue Electronics
- ☐ Digital Electronics V2.0
- ☐ Filters
- ☐ Electronics CAD Pack
- ☐ Robotics & Mechatronics
- ☐ Assembler for PICmicro
- ☐ 'C' for PICmicro
- ☐ Flowcode for PICmicro
- ☐ Digital Works 3.0

Version required:

- ☐ Hobbyist/Student
- ☐ Institutional
- ☐ Institutional 10 user
- ☐ Site licence

- ☐ PICmicro Development Board (hardware)
- ☐ Development Board UK plugtop power supply
- ☐ Development Board 25-way connecting lead

- ☐ Teach-In 2000 + FREE BOOK
- ☐ Electronic Components Photos
- ☐ Electronics In Control – Single User
- ☐ Electronics In Control – Multiple User
- ☐ Modular Circuit Design – Single User
- ☐ Modular Circuit Design – Multiple User

Note: The software on each version is the same, only the licence for use varies.

Full name: . . . . . .

Address: . . . . . .

. . . . . .

. . . . . .Post code: . . . . . .Tel. No: . . . . . .

Signature: . . . . . .

☐ I enclose cheque/PO in £ sterling payable to WIMBORNE PUBLISHING LTD for £ . . . . . .

☐ Please charge my Visa/Mastercard/Amex/Diners Club/Switch: £ . . . . . .Card expiry date: . . . . . .

Card No: . . . . . Switch Issue No. . . . . .

Card Security Code . . . . . (The last 3 digits on or just under the signature strip)

ORDERING

ALL PRICES INCLUDE UK POSTAGE

Student/Single User/Standard Version price includes postage to most countries in the world
EU residents outside the UK add £5 for airmail postage per order

Institutional, Multiple User and Deluxe Versions – overseas readers add £5 to the basic price of each order for airmail postage (**do not add VA**T unless you live in an EU (European Union) country, then add 17½% VAT or provide your official VAT registration number).

Send your order to:
Direct Book Service
Wimborne Publishing Ltd
408 Wimborne Road East
Ferndown, Dorset BH22 9ND

To order by phone ring

01202 873872. Fax: 01202 874562

Goods are normally sent within seven days

E-mail: orders@wimborne.co.uk

Online shop:
www.epemag.wimborne.co.uk/shopdoor.htm

Constructional Project

TESLA HIGH VOLTAGE TRANSFORMER

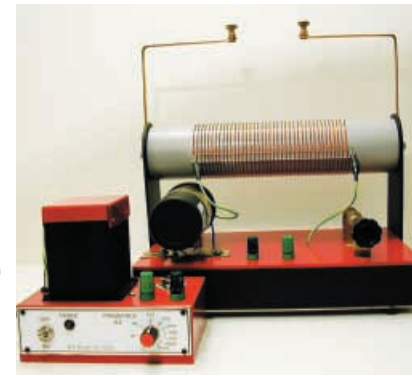

RAYMOND HAIGH

Spectacularly create sizzling DIY lightning!

THIS small assembly gives a sizzling demonstration of Nikola Tesla's most famous discovery, a high frequency, high voltage transformer. The design presented here is much safer to adjust and operate than larger versions, and all of the materials and parts are widely available.

BRIEF HISTORY

Born in Croatia in 1856, Tesla emigrated to America in 1884 where he was largely responsible for the introduction of alternating current power generation and distribution; the system which is now adopted world wide. Although this was his major engineering achievement, he is more popularly known for his transformer, which he invented in 1891.

Tesla ridiculed the electro-magnetic theory of radio wave propagation, insisting that transmission is due to conduction through the earth. His vision was to erect a network of huge, high voltage transformers, which would deliver telegraph signals and electrical power to any number of remote receiving stations, using the earth as the conducting medium.

He began the construction of a prototype station at Wardenclyffe, Long Island, in 1901, the year Marconi first transmitted radio signals across the Atlantic. By 1903, financial difficulties had forced him to abandon the project when it was well advanced. Marconi's success had no doubt made it difficult for Tesla to attract backers for his untried system, despite his enormous prestige as an engineer.

Creditors eventually pursued him through the US Supreme Court, and the decaying 200 feet tall transformer tower, which he called a "magnifying transmitter", together with the ancillary buildings, were demolished in 1917.

DREAM MACHINE

Tesla held on to his dream, refusing to accept that radio signals are propagated by electro-magnetic waves. His ideas, published in the press and technical journals, became increasingly bizarre, and included death-ray machines (again using his high voltage transformer) and thought photography. He died in New York in 1943.

Tamed, electronically driven versions of his transformer continue to provide the high voltages needed by cathode ray tubes in TVs and other equipment. They are also used to initiate the arc in industrial welding.

Tesla's invention still excites the interest of experimenters, no doubt because of the dramatic and violent electrical discharges which large versions of the transformer can produce. These big coils are lethal. They can be tricky to get going and have to be adjusted and operated with the utmost care. Moreover, obtaining parts for the energizing primary circuit can prove difficult.

Although the version described here is much smaller, its vicious, hissing discharge is quite impressive. Construction is simpler, the parts and materials are widely available, and it is much less dangerous.

HOW IT WORKS

Tesla's understanding of the magnifying effect of resonant tuned circuits was profound, and he repeatedly stressed the need for tuning and for the sudden excitation of the circuit via a capacitor.

Tuned circuits formed by inductors and capacitors magnify oscillating voltages. The effect depends on the *Q* (freedom from resistive or dielectric losses) of the inductor and capacitor combination. If one volt is applied to a tuned circuit with a *Q* of 100, it will be magnified to 100 volts if its frequency of oscillation coincides with the resonant frequency of the tuned circuit.

The dramatic performance of Tesla's transformer depends on this phenomenon. His invention pre-dated the amplifying valve, and the only means he had of inducing oscillations in the resonant circuit was by repeatedly shock exciting it (rather like pushing a clock pendulum to keep it swinging). To get the performance he was striving for, the tuned circuit had to be pulsed with large amounts of energy, and he used a spark gap and capacitor combination to achieve this.

BASIC CIRCUIT

The basic circuit for a Tesla Transformer is given in Fig.1, where the transformer primary, L1, is connected across a spark gap via capacitor C1. At switch-on, C1 charges through L1 until the spark gap breakdown voltage is developed across it. When the gap fires, C1 is discharged, very suddenly, through L1, and the process begins again.

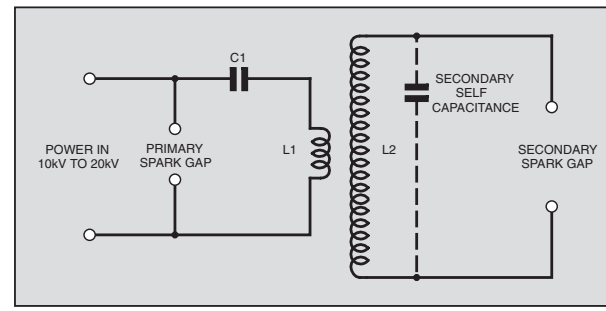

Fig.1. Basic circuit of the Tesla Transformer.

This rapid and repeated dumping of comparatively large pulses of energy into the primary winding induces a voltage in the secondary winding, L2. Shock excitation by steeply rising waveforms makes the voltage oscillate at the secondary coil's resonant frequency, and magnification takes place.

The inductance and self-capacitance of the secondary, L2, determine the frequency of oscillation of the system, which is usually in the region of 150kHz. For best performance, the primary should resonate at the same frequency as the secondary.

TESLA HIGH VOLTAGE TRANSFORMER

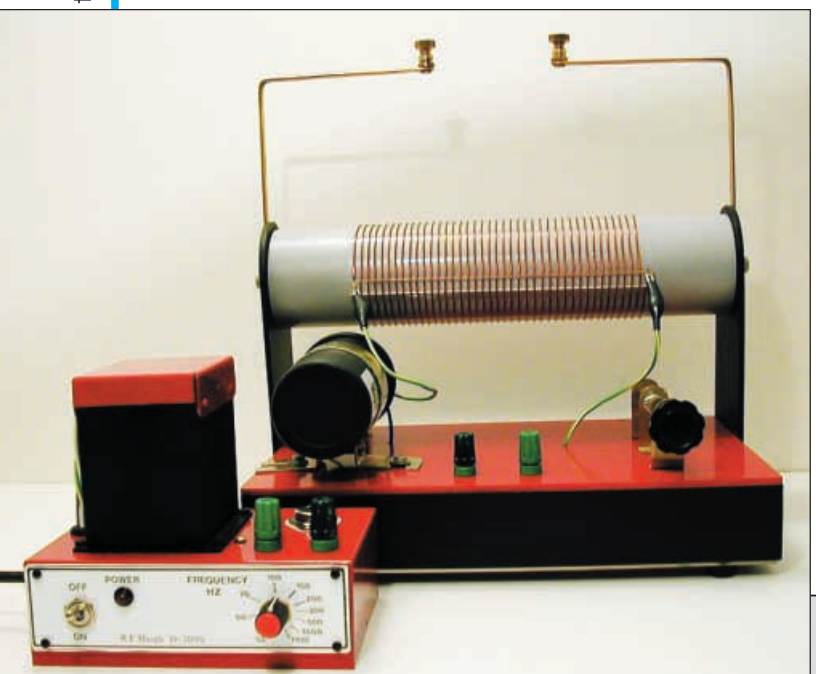

Fig.2. Full circuit diagram for the Tesla High Voltage Transformer.

Readers who have no experience of building or commissioning mains-powered equipment are reminded that the voltages involved can KILL. They must seek the help of an experienced constructor before embarking on this project.

DANGER WARNING

Although this small Tesla transformer is not as dangerous as larger models, certain precautions must be strictly observed.

1. The car ignition coil will deliver an extremely unpleasant electric shock. To someone with a weak heart the experience could be life-threatening. Never touch the terminals of the ignition coil, the spark gap electrodes, or the Tesla transformer whilst the power supply is connected. Always disconnect the power supply from the mains before making any adjustments to the Tesla transformer primary tapping.

2. Sparks can cause fires. Always ensure that the unit is operated in a suitable environment.

3. Ultra violet light is emitted by electrical discharges. Prolonged exposure can cause damage to the eyes and skin. Keep a reasonable distance from the equipment whilst it is working. Do not stare at the discharge for long periods.

4. Electrical discharges create ozone, a three-atom oxygen molecule. This is a pungent smelling toxic gas that can cause irritation to the nose and throat. It can also impair lung function in people susceptible to asthma. Always ensure that the unit is operated in a well-ventilated space.

5. When properly adjusted, the secondary of the Tesla transformer will not produce any sensation of electric shock (the voltage is oscillating at a low radio frequency and the human nervous system is insensitive to it). The discharge will, however, burn flesh. Sparks should never be drawn off with the finger. For a similar reason, the face should never be brought near the secondary terminals. A discharge to the eyes would cause severe damage.

6. Electrical discharges cause interference to radio receivers. Fortunately, the transformer and the connections to it do not make a very good radiator at the frequencies involved, and the problem is not as severe as it might otherwise be. Nevertheless, the unit should be operated for short periods and with considerable restraint.

7. The field radiated by the Tesla coil could affect pacemakers and other electronic medical aids. The unit must not be operated in the vicinity of people fitted with these devices, or close to sensitive electronic equipment of any kind.

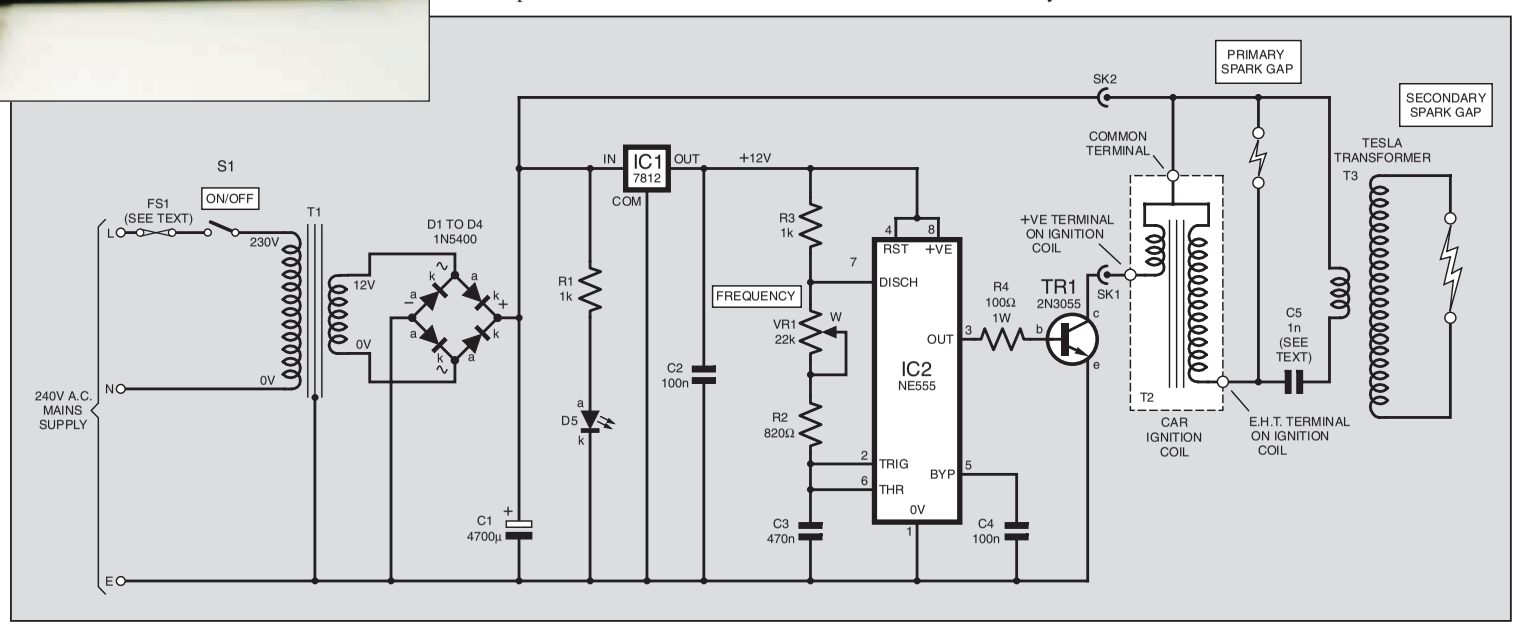

Tuning can be effected by adjusting the value of capacitor C1, and/or the inductance of the primary, L1. The frequency of the energizing voltage (when it is adjustable), and the spark gap setting, have to be optimized to maximize the efficiency of the system.

BRUTE FORCE

Mains transformers capable of delivering 10kV to 15kV at currents of around 0·1A are used by experimenters to power large versions of the coil. The release of this amount of energy excites the system in a way that cannot be duplicated by valves or semiconductors, and enthusiasts still adopt Tesla's basic circuit.

The ability of the energizing voltage to deliver comparatively large currents makes the equipment extremely dangerous to set up and use, and burning of the spark gap electrodes becomes a problem.

BABY TESLA

Compared to the transformer on Long Island, this coil hardly warrants the adjective "baby". The circuit is given in Fig.2.

A car ignition coil, T2, is used to provide the high energizing voltage for the Tesla transformer. These coils have a step-up ratio of no more than 100:1 and depend for their action on the abrupt switching of the voltage applied to the primary.

In a basic (non electronic) car ignition circuit the sudden collapse of the magnetic field when the 12V d.c. supply is interrupted by a cam actuated breaker (the "points") induces an e.m.f. in the primary of around 200V to 250V. Stepping this up 100 times produces the necessary e.h.t.

SWITCHING CIRCUIT

Modern car ignition systems use transistors rather than cam actuated contacts to switch the primary supply on and off, and this technique is adopted here. Power transistor TR1 controls the flow of current through the primary of T2, and the necessary abrupt switching action is provided by IC2, a 555 timer i.c. configured as a square wave generator.

Potentiometer, VR1, together with resistors R2 and R3, and capacitor C3, determine the operating frequency, which can be swept, by VR1, from around 55Hz to 1100Hz. Pin 5 is grounded via C4 to prevent circuit action being disturbed by stray pick-up.

The square wave output, coupled to the base of TR1 via current limiting resistor R4, switches the power transistor, and hence the current through the ignition coil primary, on and off at a rate determined by the setting of VR1.

MAINS POWER SUPPLY

Mains transformer T1, full-wave bridge rectifiers D1 to D4, and reservoir capacitor C1, form the power supply for the system. With a 12V a.c. mains transformer secondary, the output swings from around 17V d.c. under no-load conditions to 14V d.c. when the Tesla transformer is being driven.

The unloaded output exceeds the safe working voltage of IC2, and its supply is, therefore, held at 12V by regulator IC1. Current to the l.e.d. on/off indicator D5 is limited by resistor R1, and capacitor C2 ensures the stability of the regulator.

COMPONENTS

Approx. Cost Guidance Only **£30** *excl. hardware*

See SHOP TALK page

POWER SUPPLY AND PULSER

Resistors

R1, R3	1k (2 off)
R2	820Ω
R4	100Ω 1W

All 0·25W, 5% except R4.

Potentiometer

VR1	22k rotary carbon, linear

Capacitors

C1	4700μ axial elect. 35V
C2, C4	100n ceramic disc, 25V (2 off)
C3	470n polyester

Semiconductors

D1 to D4	1N5400 50V 1A rec. diode (4 off)
D5	5mm red l.e.d., with bezel
TR1	2N3055 power transistor (see text)
IC1	7812 +12V 1A voltage regulator
IC2	555 timer

Miscellaneous

T1	mains transformer, 12V secondary 2A min.
S1	s.p.s.t. toggle switch, mains rated, 5A
FS1	fuse 3A max., 1A slow-blow preferred
SK1, SK2	4mm screw terminals, 1 each red and black

Printed circuit board, available from the *EPE PCB Service*, code 382; fuseholder, panel mounting; 8-pin d.i.l. socket; mica insulating washer and insulated bolts for TR1; heatsink compound; aluminium chassis, 150mm × 100mm × 50mm (6in × 4in × 2in) or larger; control knob; nuts; bolts; washers; solder tags; p.c.b. stand-off supports (4 off); 1mm terminal pins; connecting wire; 3-core mains lead; self adhesive rubber feet (4 off)

HIGH VOLTAGE UNIT

Energizing circuit

T2	car ignition coil (see text)
C5	1n – aluminium cooking foil, 2mm acrylic sheet, masking or insulating tape (see text and Fig.5)

Primary Spark Gap

Control knob; plastic spindle, 60mm × 6mm (2·5in × 1/4in) and spindle bush; brass strip for brackets, 175mm × 19mm × 0·5mm (7in × 3/4in × 1/64in); brass bolts, 25mm × 4mm (1in × 4BA) (2 off) plus nuts and cap nuts to suit; fixing bolts, 13mm × 3mm (0·5in × 6BA) (3 off) plus nuts, washers and solder tags to suit; flexible plastic tubing.

Tesla Transformer

Plastic rain water pipe, 68mm o/d (2·5in i/d) × 305mm (12in); plastic waste pipe, 41mm o/d (1·5in i/d) × 305mm (12in); plastic 35mm film containers or similar (2 off); fixing bolts, 25mm × 3mm (1in × 6BA) (2 off) plus nuts, washers and solder tags to suit; enamelled copper wire, 100gm (4oz) 18s.w.g. (16a.w.g.), 50gm (2oz) 36s.w.g. (32a.w.g.); acrylic sheet for spacer strip and support brackets; Superglue.

Secondary Spark Gap

Brass strips, 9mm × 2mm × 300mm (3/8in × 1/16in × 12in) (2 off); terminals (2 off)

Insulated base

Acrylic sheet, 305mm × 200mm (12in × 8in) (3 off); softwood strip, 45mm × 19mm × 1200mm (2in × 1in nominal × 48in); wood glue, c/s screws 3/4in (19mm); nails; connecting wire; polythene tubing; terminals (2 off); min. crocodile clips (2 off); self-adhesive rubber feet (4 off); clear cellulose and finishing materials.

Current drain, when the Tesla transformer is being powered, is between 1·5A and 2A.

The metal chassis and the transformer core ***must*** be connected to mains Earth, and the equipment protected by a fuse of no more than 3A rating (a slow-blow 1A type is to be preferred).

TESLA TRANSFORMER

Through the action of high-voltage capacitor C5 and the spark gap, the primary of the air-cored Tesla transformer, T3, is pulsed with e.h.t. supplied by the ignition coil. The operation of the Tesla transformer has already been discussed.

COMPONENTS

The primary circuit spark gap, high voltage capacitor C5, and the Tesla transformer, are home-made and their construction is described later.

Car ignition coils can be purchase new from spare parts retailers. The coil used is the type fitted in Mark II and Mark III Ford Escorts (it was the cheapest stocked), but almost any ignition coil should prove satisfactory. Wrecker's yards sell salvaged coils at typically less than half new price, but take a test meter along and check the windings. The primary resistance should be a little more than 1Ω, the secondary around 10kΩ.

Primary and secondary are connected, auto transformer fashion, but there should be no connection between the windings and the metal case. The distributor lead fitted in cars is formed from fairly high resistance carbon strands in order to suppress electrical interference, and ***must not*** be used for this project.

Any *npn* silicon transistor with voltage, current and power ratings equal to, or greater than, those of the 2N3055 should prove suitable, but base connections and mounting details will vary. Transistors of this kind, and the remaining components, are widely available, and no difficulty should be encountered with supplies.

Acrylic sheet, 2mm thick, is used as the dielectric in the high-voltage capacitor and for the base and supports of the Tesla transformer. This material is retailed by most major DIY outlets as a double glazing product. Details of a mail-order supplier are given on this month's *ShopTalk* page.

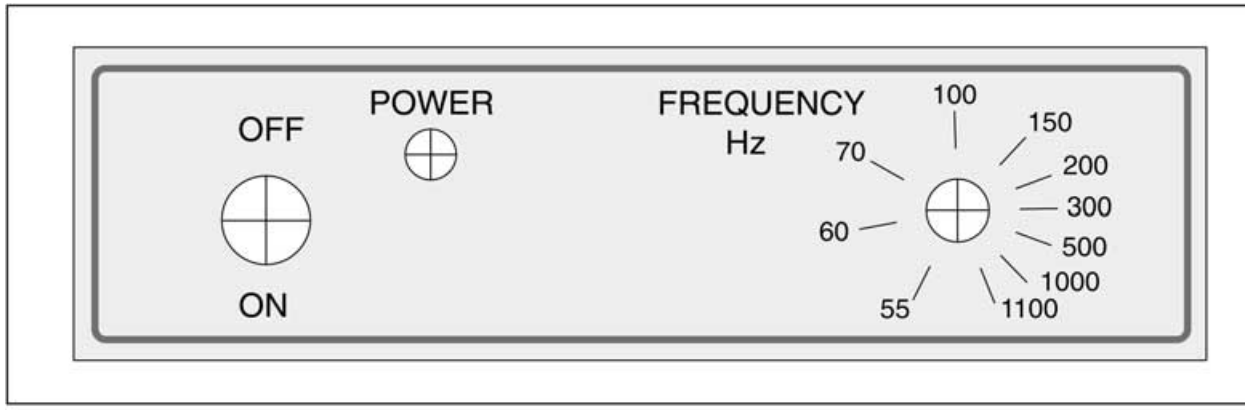

Fig.3. Full-size front panel, including panel-mounted control lettering.

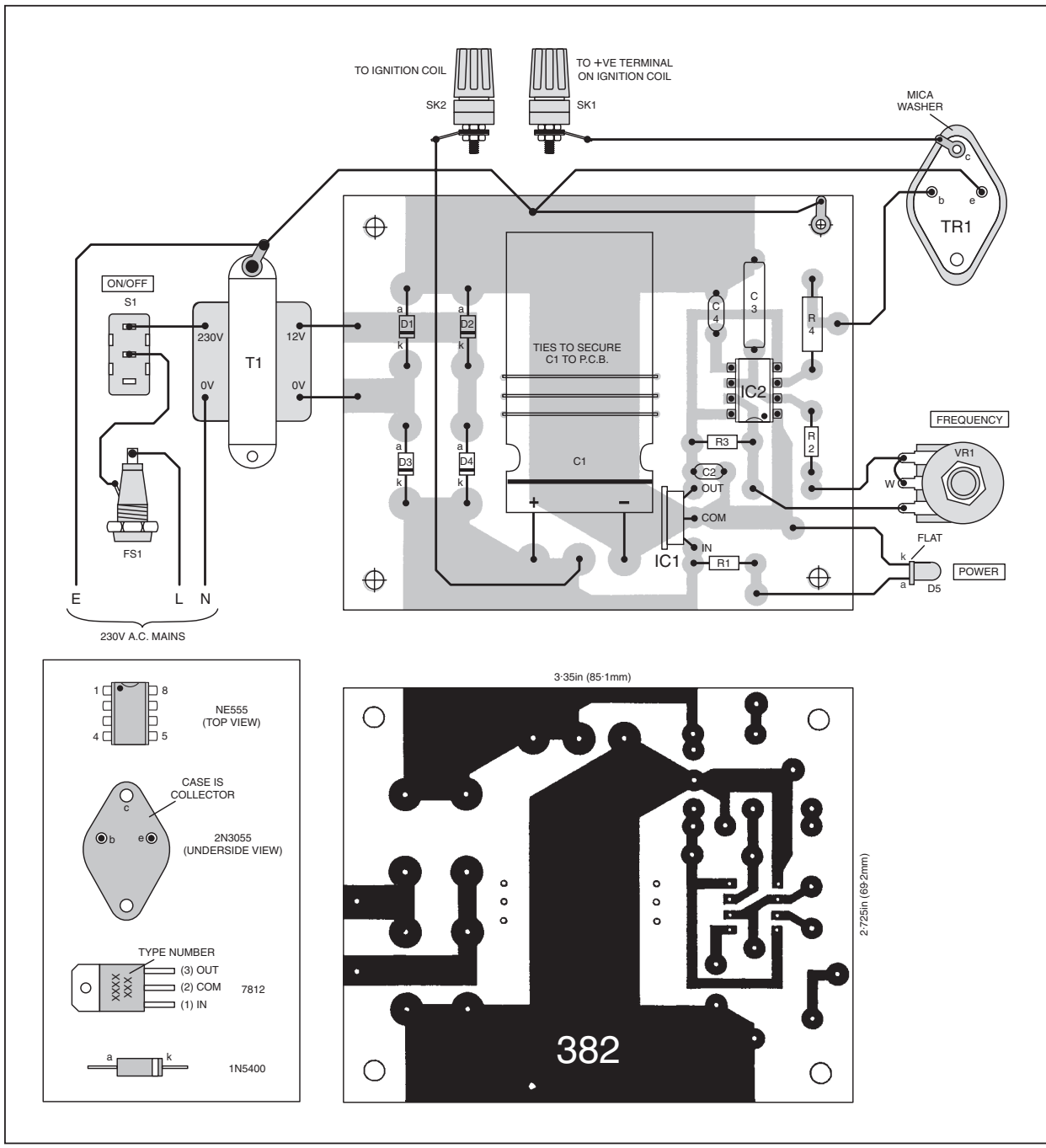

Fig.4. Power Supply and Pulser Unit printed circuit board component layout, interwiring details, semiconductor pinouts (inset) and full-size copper foil master.

The completed Power Supply and Pulser Unit showing the "shroud" protecting the mains transformer.

Completed Tesla Transformer Unit showing the primary and secondary spark gaps and the coil tapping clips.

CONSTRUCTION

Readers who have no experience of building or commissioning mains-powered equipment are reminded that the voltages involved can KILL. They must seek the help of an experienced constructor before embarking on this project.

POWER SUPPLY AND PULSING UNIT

The power supply and pulsing unit are assembled on a metal chassis; the Tesla transformer, with its ignition coil energizer, on an insulated base. This isolates vulnerable semiconductors from the extra-high-voltage parts of the circuit.

The mains transformer and power transistor TR1 are mounted directly onto an aluminium chassis, 150mm × 100mm × 50mm (6in × 4in × 2in). The chassis acts as a heatsink for the power transistor, which must be provided with an insulating washer and secured by insulated bolts.

Any above-chassis transformer connections which carry mains voltages must be shielded by an insulating cover.

Frequency adjusting potentiometer VR1, l.e.d. on/off indicator D5, and toggle switch S1, are located on one of the chassis sides. The various photographs should make the arrangement clear. The annotated front panel is reproduced full-size in Fig.3.

Component tolerances will affect the dial calibration, but it should remain accurate enough to be useful. The original was protected against soiling by a piece of acrylic sheet.

CIRCUIT BOARD

The remaining components are mounted on the printed circuit board (p.c.b.) as shown in Fig.4, along with its track layout details.

Use an i.c. socket for IC2 to facilitate substitution checking. The socket should be soldered in first.

Then solder the remaining components in order of ascending size, and mount the semiconductors last. Reservoir capacitor C1 has to be mounted horizontally or the p.c.b. will not fit inside a 50mm deep chassis. Radial capacitors should be tied to the board using cable ties; axial types will be retained by their lead-out wires. Solder pins, inserted at the lead-out points, ease the task of off-board wiring.

Before securing the board to the chassis, using stand-off pillars, check it for bridged tracks and poor soldered joints. Check also the orientation of the semiconductors, the i.c.s and the electrolytic capacitor, C1.

Terminal posts are mounted through the top of the chassis for the connections to the high-voltage board.

TESLA TRANSFORMER UNIT

The construction of the high-voltage capacitor, C5, the insulating base and the Tesla Transformer, involves the cutting of 2mm thick acrylic sheet. This is best done by deeply scoring it, on both sides, with a Stanley knife or similar, and then snapping it along the score line.

Use the back of the knife rather than the sharpened edge. This will scrape a very

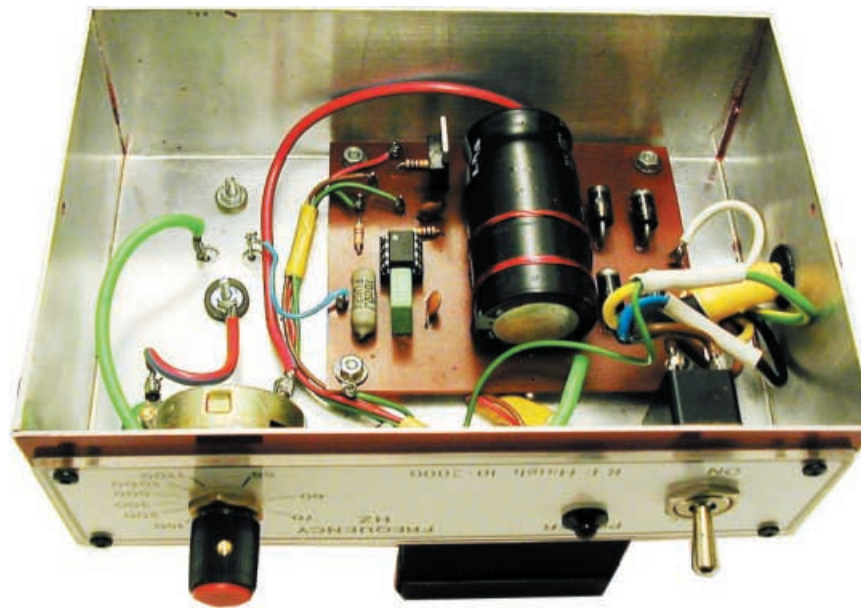

Interior component layout showing general positioning of the p.c.b. Note the power transistor must be mounted using an insulating kit.

narrow groove in the sheet and produce the cleanest cut.

HIGH VOLTAGE CAPACITOR

The construction of capacitor C5 is illustrated in Fig.5. Aluminium baking foil forms the plates and acrylic sheet acts as the dielectric.

Keep the foil the specified distances from the outer edges of the acrylic sheet or the insulation of the capacitor will be compromised. The foil should be as smooth and wrinkle free as possible; air trapped inside the capacitor can be ionized by the high voltages.

Alternate leaves of foil are brought out at opposite ends of the capacitor. Strip 70mm of insulation from the connecting wires and wrap the projecting leaves of foil around them to make the connections to the plates. On completion, tightly bind the assembly with insulating tape.

PRIMARY SPARK GAP

The construction of the primary circuit spark gap is detailed in Fig.6. Although the output from an ignition coil is not as dangerous as that from a high-voltage mains transformer, a shock from it is profoundly unpleasant. There must, therefore, be a high degree of insulation between the spark gap terminal and the control knob.

A plastic knob will not, by itself, afford adequate protection at these voltages.

The operation of the adjustable gap will be evident from the drawing. The control rotates a bolt and the cap-nut electrode on its end is driven towards a fixed electrode. The bearing for the moving electrode is a nut, soldered to the brass support bracket.

Tin (heat and flow solder over) the face of the nut, and the bracket in the region of the hole. Smear grease on a bolt and use it to secure the nut to the bracket. Apply the soldering iron until the solder flows and the nut and bracket are sweated together. A 25W iron should be adequate.

Greasing the holding bolt prevents the solder attaching to it, and it can be withdrawn when cool. If cap nuts cannot be obtained, file the ends of the bolts to dome them a little.

Use a short length of plastic sleeving to link the moving electrode bolt to the plastic control spindle. Sleeving can be

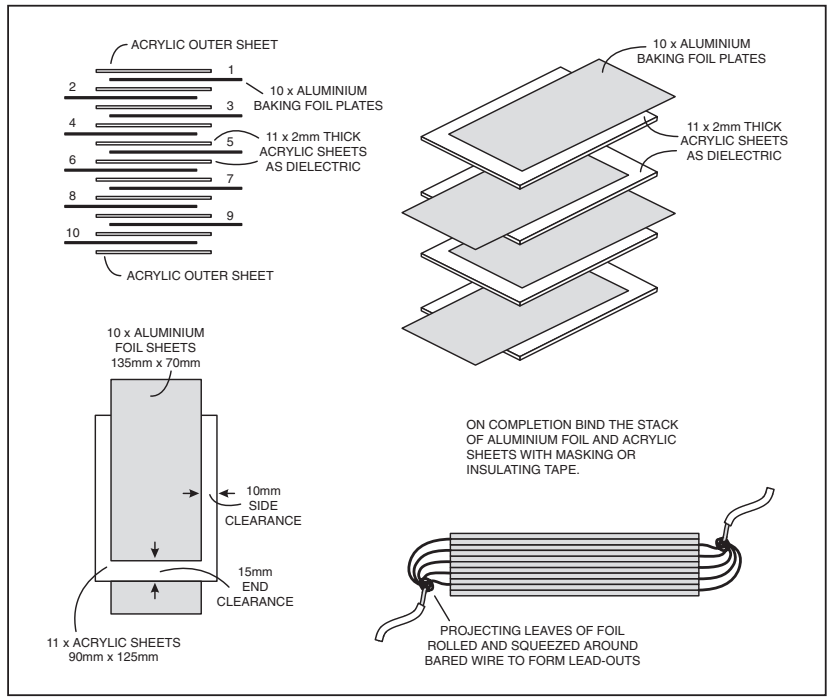

Fig.5. Making the high voltage capacitor (C5). Aluminium baking foil forms the plates and acrylic sheet acts as the dielectric.

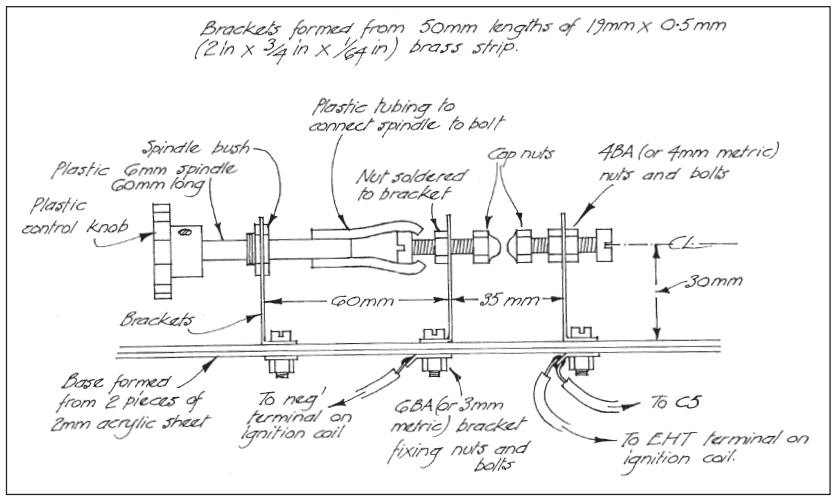

Fig.6. Suggested method of constructing the primary spark gap. There must be a high degree of insulation between the spark gap terminal and control knob.

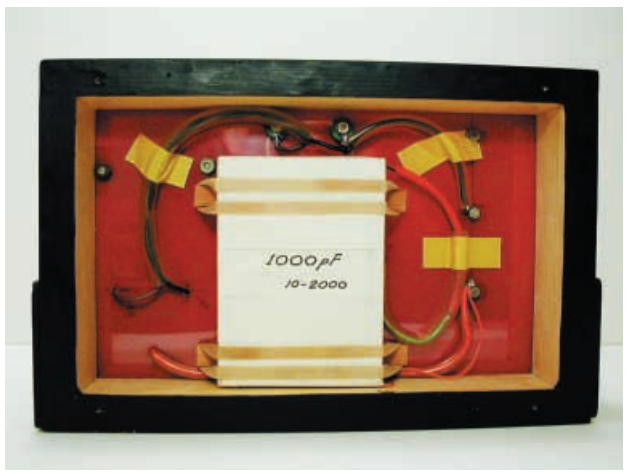

The high voltage capacitor mounted beneath the Tesla Transformer Unit.

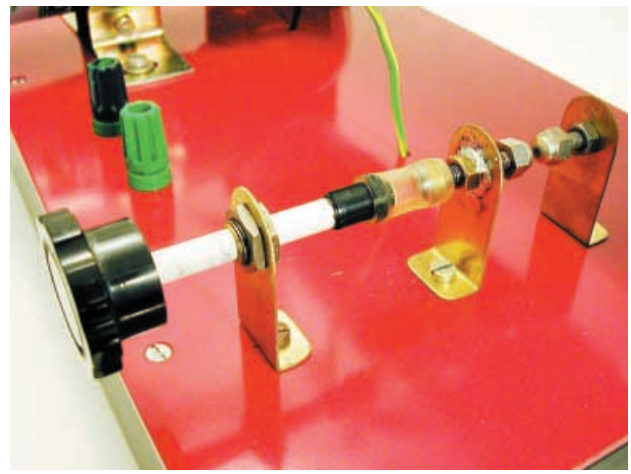

Close-up of the spark gap assembly. Note the insulation sleeve between knob spindle and gap screw terminal.

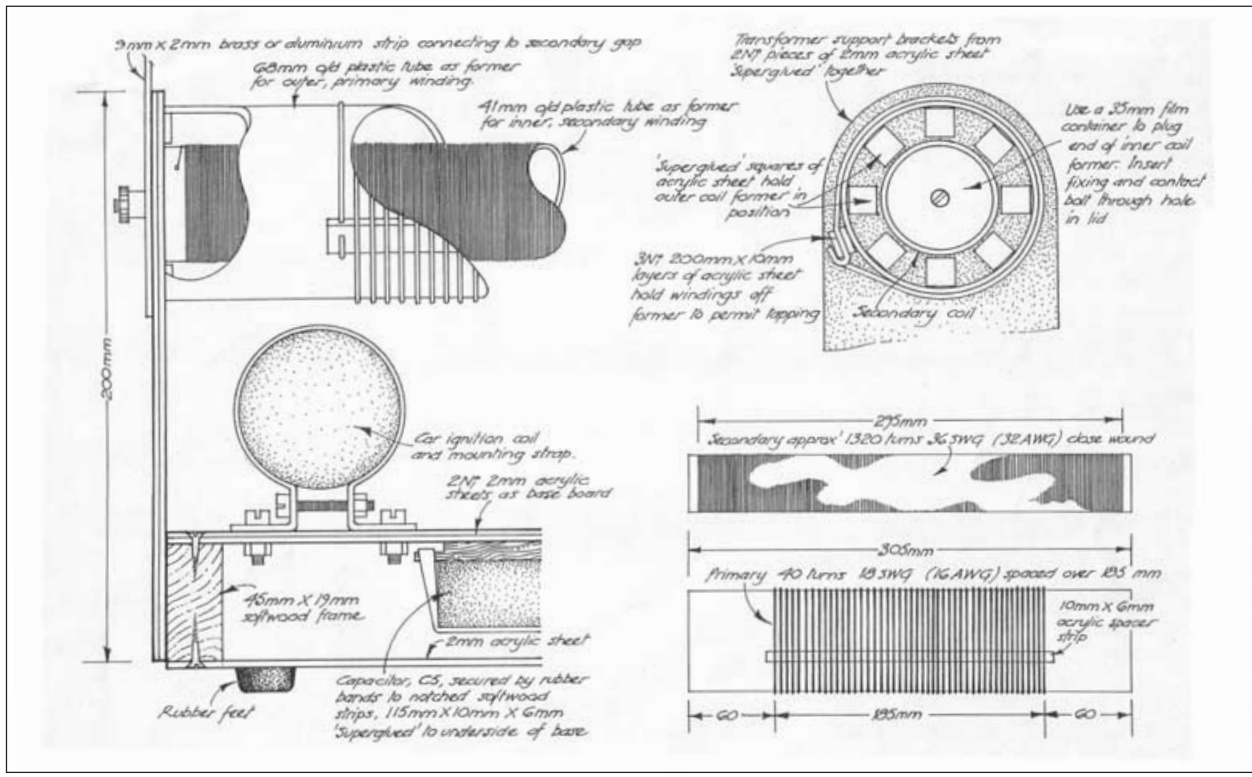

Fig.7. Tesla Transformer and base unit assembly details.

obtained by stripping the outer insulation from a round cable of appropriate size. Alternatively, use the polythene tubing retailed by suppliers of home brewing equipment.

The plastic spindle and a bush can be salvaged from an old rotary potentiometer. Almost all model shops sell brass strip for the brackets, and most stock plastic rod or tube suitable for the spindle.

TESLA TRANSFORMER

The construction of the Tesla transformer is shown in Fig.7. In true Tesla fashion, the primary is wound outside the secondary and spaced from it. This spacing prevents flash-over between the windings. It also reduces the damping on the resonant secondary, thereby increasing its *Q* factor.

The coils are wound on 305mm (12in) lengths of the kind of plastic pipe used for domestic plumbing. The primary is wound on 68mm outside diameter rainwater pipe (2·5in internal diameter). The secondary is wound on 41mm outside diameter waste pipe (1·5in internal diameter).

PRIMARY WINDING

The 18s.w.g. primary winding is held off the coil former by an acrylic strip to facilitate tapping with miniature crocodile clips. This strip is built up from three lengths of acrylic sheet, bonded together with Superglue (cyanoacrylate adhesive), to produce a thickness of 6mm (1/4in). The ends of the winding are held in holes, drilled through the strip at either end. Stick the strip to the former with Superglue.

Wind on 40 turns of 18s.w.g. (16a.w.g.) enamelled copper wire. Keep the winding as tight as possible, then space out the turns evenly, with the tip of a screwdriver, when the ends have been secured in the holes in the acrylic strip. Hold the turns in place with a coat of clear cellulose. When this has dried, scrape the windings, exposing bare metal along the line of the acrylic strip to ensure a good contact with the tapping clips.

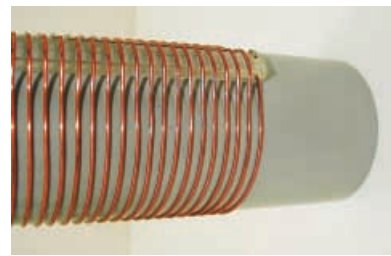

Acrylic spacer strip holds winding proud of the former to permit tapping.

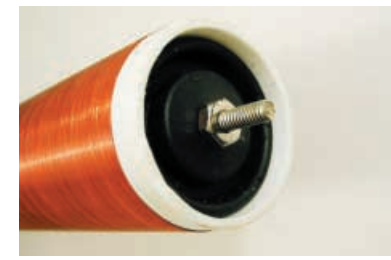

Using a film can lid and bolts to secure the secondary winding to the side supports.

SECONDARY WINDING

The secondary has to be close-wound, i.e., with turns touching, and this is more difficult. Fit a couple of brackets to a board and, using the former fixing bolts as spindles, rotate the former with one hand and feed on the 36s.w.g. (32a.w.g.) enamelled copper wire with the other, counting 1320 full turns.

Arrange some means of locking the former, and maintaining tension on the wire, so that the winding won't unravel if work is interrupted. Wedges and/or weights will do the trick. With a little care and patience, a perfect winding can be produced. Again, give the turns a coat of clear cellulose to hold them in position. Connections to the coil are via the fixing bolts.

BASE AND COIL SUPPORTS

Form the base by securing two layers of 2mm acrylic sheet to a softwood frame. The frame can be simply butt jointed, and glued and nailed at the corners. A single piece of acrylic sheet should be secured over the underside of the base in order to prevent accidental contact with the high-voltage circuitry.

Supports for the Tesla transformer are cut from acrylic sheet, two layers being Superglued together to increase rigidity. The supports are screw-fixed to the sides of the base, which must, of course, be exactly the same length as the coil formers.

The inner, secondary coil is secured to the supports by bolts, passed through the lids of 35mm plastic film containers pushed into the ends of the former. A few turns of masking tape around the container will ensure a tight fit inside the plastic tubing.

The outer, primary coil is spaced from the secondary by squares of acrylic sheet Superglued to the supports. Tightening the secondary winding fixing bolts holds the entire assembly in place.

SECONDARY SPARK GAP

The bolts holding the formers in their supports also secure 9mm × 2mm brass strips, carried up and over the transformer to form the secondary spark gap.

Fit terminals at the gap ends of the brass strips, which should be about 75mm (3in) apart. The terminals are used to secure lengths of wire which adjust the width and shape of the gap.

MOUNTING THE COMPONENTS

The car ignition coil is secured by bolting its fixing strap to the base. Mount the coil so that its terminals are facing inwards, towards the Tesla transformer. The primary spark gap brackets are likewise bolted to the base. Solder tags, located on the underside, enable the gap to be connected into circuit.

The high-voltage capacitor, C5, is secured by stout rubber bands to notched softwood strips Superglued to the underside of the acrylic sheets. Fig.6 and Fig.7, together with the photographs, should make the arrangement clear.

Terminals, bolted into the base, are used to connect the high-voltage board to the 12V power supply and pulser unit.

WIRING UP

Four 4mm diameter holes must be drilled through the top sheets so that leads from the ignition coil and Tesla transformer primary can be taken to the capacitor, the spark gap and the terminals. With so few components, wiring up is quite straightforward and no difficulty should be encountered.

The primary circuit wiring is carrying potentials in the region of 25kV, and lengths of thick polythene tubing were slid over the leads in the prototype to improve the insulation. Suitable tubing can be obtained from retailers of home brewing equipment.

COMMISSIONING THE UNIT

Do not connect the power supply and pulser to the high-voltage board without first reading the warnings given below. Do not insert the 555 device, IC2, into its socket until the regulator output has been checked.

Connect the power supply to the mains and check the voltage across the reservoir capacitor, C1. It should be in the region of 17V. Check the voltage at the output of the regulator, IC1. It should be 12V (within a few per cent).

If all is in order, disconnect the unit from the mains, allow the charge on C1 to dissipate, and insert IC2.

Wire a 1kΩ resistor in series with a loudspeaker (or 10kΩ in series with a pair of earphones) and connect the arrangement to the output terminals. Connect the power supply to the mains. The speaker or earphones should emit a tone. Rotate potentiometer VR1. The tone should sweep from a low to a high frequency.

This completes the initial checking of the power supply and pulser unit.

POWERING UP

Attach the crocodile clips to connect the entire Tesla transformer primary into circuit. Connect short lengths of stout, bare wire to the terminals on the secondary spark gap, reducing its width to about 25mm (1in). Using leads about 600mm (2ft) long, connect the power supply to the high-voltage board and switch on the mains. Advance the frequency control. The ignition coil should emit a faint tone of rising pitch.

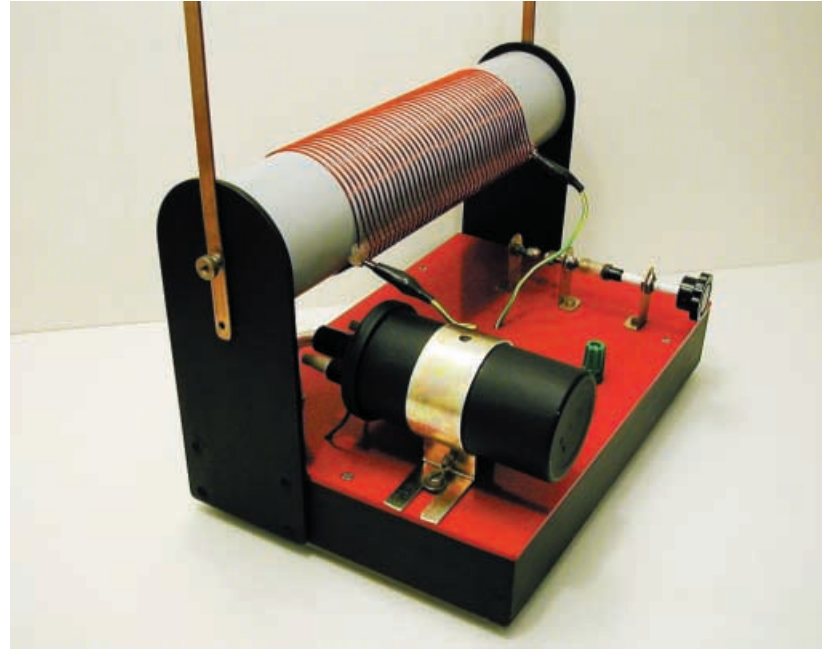

The car ignition coil bolted to the top of the Pulser base using its fixing strap. The baseboard is made from acrylic sheets and a softwood frame.

Using wooden strips and elastic bands to suspend the high voltage capacitor on the underside of the Pulser Unit.

With the frequency control set at about 450Hz, rotate the primary spark gap adjustment knob, driving the electrodes closer together until an arc is struck. A discharge should now take place across the secondary spark gap. Adjust the frequency of the pulser unit and the primary circuit gap until a fat, hissing discharge is occurring across the secondary spark gap.

With the prototype, the most potent results were obtained with the primary spark gap closed down as much as possible and the frequency turned up to around 500Hz.

Disconnect the unit from the mains, widen the secondary gap, then try for a longer spark. Repeat this process, and experiment with the tappings to the primary, until the longest, fattest spark is obtained.

Always remember to disconnect the unit from the mains before making any adjustments.

Careful adjustment of the prototype unit resulted in a continuous discharge 40mm (1·5in) long between 12mm ($^1/_2$in) diameter metal spheres. If the gap is set too wide to produce a discharge, blue streamers are emitted from the electrodes but the room has to be darkened to make them clearly visible. Clean the primary spark gap electrodes, at frequent intervals, with fine emery paper.

SHOCKS FROM THE SECONDARY

If the pulsing frequency is too low and the primary spark gap set too wide, a thin, crackling discharge will be produced by the transformer secondary. The frequency of this discharge is low enough to produce sensations of electric shock. To avoid this, always adjust the frequency and gap settings for a fat, luminous, hissing spark.

DISPLAYS

A fluorescent tube held close to the unit will glow quite brightly. If one terminal of the secondary is connected to a clear glass light bulb, streamers of glowing gas will form within the bulb. Bending the gap wires into a slight "V" shape will produce a rising, flickering discharge. □

A fluorescent tube held close to the Tesla Transformer.

Glowing gas inside a filament bulb.

Radio Bygones

The leading magazine for vintage radio enthusiasts

WHETHER your interest is in restoring domestic radio and TV or in amateur radio, in military, aeronautical or marine communications, in radar and radio navigation, in instruments, in broadcasting, in audio and recording, or in professional radio systems fixed or mobile, RADIO BYGONES is the magazine for you.

ARTICLES on restoration and repair, history, circuit techniques, personalities, reminiscences and just plain nostalgia – you'll find them all. Plus features on museums and private collections and a full-colour photo-feature in every issue.

IT'S MOSTLY about valves, of course, but 'solid-state' – whether of the coherer and spark-gap variety or early transistors – also has a place.

FROM THE DAYS of Maxwell, Hertz, Lodge and Marconi to what was the state-of-the-art just a few short years ago . . .

There is also a selection of free readers' For Sale and Wanted advertisements in every issue.

Radio Bygones covers it all!

THE MAGAZINE is published six times a year, and is available by postal subscription. **It is not available at newsagents.**

TO TAKE OUT a subscription, or to request a sample copy, please complete the form below and return it to:

RADIO BYGONES, Wimborne Publishing Ltd, 408 Wimborne Road East, Ferndown, Dorset BH22 9ND.

Tel: 01202 873872. Fax 01202 874562. Web sites: www.radiobygones.co.uk www.radiobygones.com

RADIO BYGONES ORDER FORM

A SAMPLE COPY of Radio Bygones £3.25
(Add 70p for overseas Airmail postage)

SUBSCRIPTIONS (post paid):	1 YEAR	2 YEAR
UNITED KINGDOM	£18.50	£35.00
REST OF EUROPE (AIRMAIL)	£20.50	£39.00
REST OF THE WORLD (AIRMAIL)	£24.50	£47.00

❑ Yes, I would like a sample copy of RADIO BYGONES

❑ Yes, I would like to take out a subscription for:

❑ One year (6 issues) ❑ Two years (12 issues)

❑ I enclose a cheque/PO for £ . . . . . payable to Wimborne Publishing Ltd (Payment in £ Sterling only)

❑ Please debit my Visa/Mastercard/Amex/Diners/Switch

My card number is:

.....

Please print clearly, and check that you have the number correct

Card Expiry Date: . . . . . .Switch Issue No. . . . . .

Card Security Number . . . . . .
(The last three digits on or below the signature strip)

My name is . . . . . .

My address . . . . . .

. . . . . .Post Code/Zip . . . . . .

Tel. No . . . . . .

Signed . . . . . .

rb2/03

FREE *Electronics Hobbyist Compendium* book with Teach-In 2000 CD-ROM

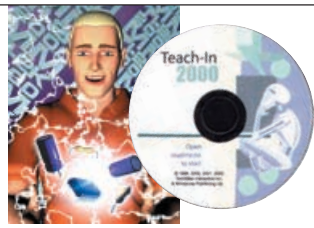

EPE TEACH-IN 2000 CD-ROM

The whole of the 12-part *Teach-In 2000* series by John Becker (published in *EPE* Nov '99 to Oct 2000) is now available on CD-ROM in PDF form. Plus the *Teach-In 2000* interactive software covering all aspects of the series and Alan Winstanley's *Basic Soldering Guide* (including illustrations and Desoldering).

Teach-In 2000 covers all the basic principles of electronics from Ohm's Law to Displays, including Op.Amps, Logic Gates etc. Each part has its own section on the interactive software where you can also change component values in the various on-screen demonstration circuits.

The series gives a hands-on approach to electronics with numerous breadboard circuits to try out, plus a simple computer interface which allows a PC to be used as a basic oscilloscope.

ONLY **£12.45** including VAT and p&p

Order code Teach-In CD-ROM

DIRECT BOOK SERVICE

The books listed have been selected by *Everyday Practical Electronics* editorial staff as being of special interest to everyone involved in electronics and computing. They are supplied by mail order direct to your door. Full ordering details are given on the last book page.

FOR A FURTHER SELECTION OF BOOKS SEE THE NEXT TWO ISSUES OF EPE.

All prices include UK postage

PROJECT CONSTRUCTION

PRACTICAL REMOTE CONTROL PROJECTS
Owen Bishop
Provides a wealth of circuits and circuit modules for use in remote control systems of all kinds; ultrasonic, infrared, optical fibre, cable and radio. There are instructions for building fourteen novel and practical remote control projects. But this is not all, as each of these projects provides a model for building dozens of other related circuits by simply modifying parts of the design slightly to suit your own requirements. This book tells you how.

Also included are techniques for connecting a PC to a remote control system, the use of a microcontroller in remote control, as exemplified by the BASIC Stamp, and the application of ready-made type-approved 418MHz radio transmitter and receiver modules to remote control systems.

160 pages **Order code BP413** **£6.49**

ELECTRONIC PROJECT BUILDING FOR BEGINNERS
R. A. Penfold
This book is for complete beginners to electronic project building. It provides a complete introduction to the practical side of this fascinating hobby, including the following topics:

Component identification, and buying the right parts; resistor colour codes, capacitor value markings, etc; advice on buying the right tools for the job; soldering; making easy work of the hard wiring; construction methods, including stripboard, custom printed circuit boards, plain matrix boards, surface mount boards and wire-wrapping; finishing off, and adding panel labels; getting "problem" projects to work, including simple methods of fault-finding.

In fact everything you need to know in order to get started in this absorbing and creative hobby.

135 pages **Order code BP392** **£5.49**

A PRACTICAL INTRODUCTION TO SURFACE MOUNT DEVICES
Bill Mooney
This book takes you from the simplest possible starting point to a high level of competence in handworking with surface mount devices (SMD's). The wider subject of SM technology is also introduced, so giving a feeling for its depth and fascination.

Subjects such as p.c.b. design, chip control, soldering techniques and specialist tools for SM are fully explained and developed as the book progresses. Some useful constructional projects are also included.

Whilst the book is mainly intended as an introduction it is also an invaluable reference book, and the browser should find it engrossing.

120 pages **Order code BP411** **£5.49**

FAULT-FINDING ELECTRONIC PROJECTS
R. A. Penfold
Starting with mechanical faults such as dry joints, short-circuits etc, coverage includes linear circuits, using a meter to make voltage checks, signal tracing techniques and fault finding on logic circuits. The final chapter covers ways of testing a wide range of electronic components, such as resistors, capacitors, operational amplifiers, diodes, transistors, SCRs and triacs, with the aid of only a limited amount of test equipment.

The construction and use of a Tristate Continuity Tester, a Signal Tracer, a Logic Probe and a CMOS Tester are also included.

136 pages **Order code BP391** **£5.49**

TEST EQUIPMENT CONSTRUCTION
R. A. Penfold
This book describes in detail how to construct some simple and inexpensive but extremely useful, pieces of test equipment. Stripboard layouts are provided for all designs, together with wiring diagrams where appropriate, plus notes on construction and use.

The following designs are included:-

AF Generator, Capacitance Meter, Test Bench Amplifier, AF Frequency Meter, Audio Mullivoltmeter, Analogue Probe, High Resistance Voltmeter, CMOS Probe, Transistor Tester, TTL Probe. The designs are suitable for both newcomers and more experienced hobbyists.

104 pages **Order code BP248** **£4.49**

ROBOTICS

INTRODUCING ROBOTICS WITH LEGO MINDSTORMS
Robert Penfold
Shows the reader how to build a variety of increasingly sophisticated computer controlled robots using the brilliant Lego Mindstorms Robotic Invention System (RIS). Initially covers fundamental building techniques and mechanics needed to construct strong and efficient robots using the various "click-together" components supplied in the basic RIS kit. Explains in simple terms how the "brain" of the robot may be programmed on screen using a PC and "zapped" to the robot over an infra-red link. Also, shows how a more sophisticated Windows programming language such as Visual BASIC may be used to control the robots.

Detailed building and programming instructions provided, including numerous step-by-step photographs.

288 pages **Order code BP901** **£14.99**

MORE ADVANCED ROBOTICS WITH LEGO MINDSTORMS – Robert Penfold
Covers the Vision Command System

Shows the reader how to extend the capabilities of the brilliant Lego Mindstorms Robotic Invention System (RIS) by using Lego's own accessories and some simple home constructed units. You will be able to build robots that can provide you with 'waiter service' when you clap your hands, perform tricks, 'see' and avoid objects by using 'bats radar', or accurately follow a line marked on the floor. Learn to use additional types of sensors including rotation, light, temperature, sound and ultrasonic and also explore the possibilities provided by using an additional (third) motor. For the less experienced, RCX code programs accompany most of the featured robots. However, the more adventurous reader is also shown how to write programs using Microsoft's VisualBASIC running with the ActiveX control (Spirit.OCX) that is provided with the RIS kit.

Detailed building instructions are provided for the featured robots, including numerous step-by-step photographs. The designs include rover vehicles, a virtual pet, a robot arm, an 'intelligent' sweet dispenser and a colour conscious robot that will try to grab objects of a specific colour.

298 pages **Order code BP902** **£14.99**

RADIO / TV VIDEO

ELECTRONIC PROJECTS FOR VIDEO ENTHUSIASTS
R. A. Penfold
This book provides a number of practical designs for video accessories that will help you get the best results from your camcorder and VCR. All the projects use inexpensive components that are readily available, and they are easy to construct. Full construction details are provided, including stripboard layouts and wiring diagrams. Where appropriate, simple setting up procedures are described in detail; no test equipment is needed.

The projects covered in this book include: Four channel audio mixer, Four channel stereo mixer, Dynamic noise limiter (DNL), Automatic audio fader, Video faders, Video wipers, Video crispener, Mains power supply unit.

109 pages **Order code BP356** **£5.45**

SETTING UP AN AMATEUR RADIO STATION
I. D. Poole
The aim of this book is to give guidance on the decisions which have to be made when setting up any amateur radio or short wave listening station. Often the experience which is needed is learned by one's mistakes, however, this can be expensive. To help overcome this, guidance is given on many aspects of setting up and running an efficient station. It then proceeds to the steps that need to be taken in gaining a full transmitting licence.

Topics covered include: The equipment that is needed; Setting up the shack; Which aerials to use; Methods of construction; Preparing for the licence.

An essential addition to the library of all those taking their first steps in amateur radio.

86 pages **Order code BP300** **£4.45**

EXPERIMENTAL ANTENNA TOPICS
H. C. Wright
Although nearly a century has passed since Marconi's first demonstration or radio communication, there is still research and experiment to be carried out in the field of antenna design and behaviour.

The aim of the experimenter will be to make a measurement or confirm a principle, and this can be done with relatively fragile, short-life apparatus. Because of this, devices described in this book make liberal use of cardboard, cooking foil, plastic bottles, cat food tins, etc. These materials are, in general, cheap to obtain and easily worked with simple tools, encouraging the trial-and-error philosophy which leads to innovation and discovery.

Although primarily a practical book with text closely supported by diagrams, some formulae which can be used by straightforward substitution and some simple graphs have also been included.

72 pages **Order code BP278** **£4.00**

25 SIMPLE INDOOR AND WINDOW AERIALS
E. M. Noll
Many people live in flats and apartments or other types of accommodation where outdoor aerials are prohibited, or a lack of garden space etc. prevents aerials from being erected. This does not mean you have to forgo shortwave-listening, for even a 20-foot length of wire stretched out along the skirting board of a room can produce acceptable results. However, with some additional effort and experimentation one may well be able to improve performance further.

This concise book tells the story, and shows the reader how to construct and use 25 indoor and window aerials that the author has proven to be sure performers. Much information is also given on shortwave bands, aerial directivity, time zones, dimensions etc.

50 pages **Order code BP136** **£2.25**

THEORY AND REFERENCE

Bebop To The Boolean Boogie

By Clive (call me Max) Maxfield

Specially imported by *EPE – Excellent value*

An Unconventional Guide to Electronics Fundamentals, Components and Processes

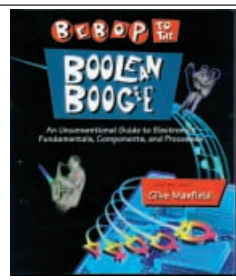

This book gives the "big picture" of digital electronics. This indepth, highly readable, up-to-the-minute guide shows you how electronic devices work and how they're made. You'll discover how transistors operate, how printed circuit boards are fabricated, and what the innards of memory ICs look like. You'll also gain a working knowledge of Boolean Algebra and Karnaugh Maps, and understand what Reed-Muller logic is and how it's used. And there's much, MUCH more (including a recipe for a truly great seafood gumbo!). Hundreds of carefully drawn illustrations clearly show the important points of each topic. The author's tongue-in-cheek British humor makes it a delight to read, but this is a REAL technical book, extremely detailed and accurate. A great reference for your own shelf, and also an ideal gift for a friend or family member who wants to understand what it is you do all day. . . .

470 pgs – large format **Order code BEB1** **£26.95**

BEBOP BYTES BACK (and the Beboputer Computer Simulator) CD-ROM

Clive (Max) Maxfield and Alvin Brown

CD-ROM

This follow-on to *Bebop to the Boolean Boogie* is a multimedia extravaganza of information about how computers work. It picks up where "Bebop I" left off, guiding you through the fascinating world of computer design . . . and you'll have a few chuckles, if not belly laughs, along the way. In addition to over 200 megabytes of mega-cool multimedia, the CD-ROM contains a virtual microcomputer, simulating the motherboard and standard computer peripherals in an extremely realistic manner. In addition to a wealth of technical information, myriad nuggets of trivia, and hundreds of carefully drawn illustrations, the CD-ROM contains a set of lab experiments for the virtual microcomputer that let you recreate the experiences of early computer pioneers. If you're the slightest bit interested in the inner workings of computers, then don't dare to miss this!

Over 800 pages in Adobe Acrobat format

£21.95 including VAT and p&p

Order code BEB2 CD-ROM

ELECTRONICS MADE SIMPLE
Ian Sinclair

Assuming no prior knowledge, *Electronics Made Simple* presents an outline of modern electronics with an emphasis on understanding how systems work rather than on details of circuit diagrams and calculations. It is ideal for students on a range of courses in electronics, including GCSE, C&G and GNVQ, and for students of other subjects who will be using electronic instruments and methods.

Contents: waves and pulses, passive components, active components and ICs, linear circuits, block and circuit diagrams, how radio works, disc and tape recording, elements of TV and radar, digital signals, gating and logic circuits, counting and correcting, microprocessors, calculators and computers, miscellaneous systems.

199 pages **Order code NE23** **£13.99**

SCROGGIE'S FOUNDATIONS OF WIRELESS AND ELECTRONICS – ELEVENTH EDITION
S. W. Amos and Roger Amos

Scroggie's Foundations is a classic text for anyone working with electronics, who needs to know the art and craft of the subject. It covers both the theory and practical aspects of a huge range of topics from valve and tube technology, and the application of cathode ray tubes to radar, to digital tape systems and optical recording techniques.

Since *Foundations of Wireless* was first published over 60 years ago, it has helped many thousands of readers to become familiar with the principles of radio and electronics. The original author Sowerby was succeeded by Scroggie in the 1940s, whose name became synonymous with this classic primer for practitioners and students alike. Stan Amos, one of the fathers of modern electronics and the author of many well-known books in the area, took over the revision of this book in the 1980s and it is he, with his son, who have produced this latest version.

400 pages **Order code NE27** **£21.99**

GETTING THE MOST FROM YOUR MULTIMETER
R. A. Penfold

This book is primarily aimed at beginners and those of limited experience of electronics. Chapter 1 covers the basics of analogue and digital multimeters, discussing the relative merits and the limitations of the two types. In Chapter 2 various methods of component checking are described, including tests for transistors, thyristors, resistors, capacitors and diodes. Circuit testing is covered in Chapter 3, with subjects such as voltage, current and continuity checks being discussed.

In the main little or no previous knowledge or experience is assumed. Using these simple component and circuit testing techniques the reader should be able to confidently tackle servicing of most electronic projects.

96 pages **Order code BP239** **£4.49**

DIGITAL GATES AND FLIP-FLOPS
Ian R. Sinclair

This book, intended for enthusiasts, students and technicians, seeks to establish a firm foundation in digital electronics by treating the topics of gates and flip-flops thoroughly and from the beginning.

Topics such as Boolean algebra and Karnaugh mapping are explained, demonstrated and used extensively, and more attention is paid to the subject of synchronous counters than to the simple but less important ripple counters.

No background other than a basic knowledge of electronics is assumed, and the more theoretical topics are explained from the beginning, as also are many working practices. The book concludes with an explanation of microprocessor techniques as applied to digital logic.

200 pages **Order code PC106** **£9.95**

MUSIC, AUDIO AND VIDEO

QUICK GUIDE TO ANALOGUE SYNTHESIS
Ian Waugh

Even though music production has moved into the digital domain, modern synthesisers invariably use analogue synthesis techniques. The reason is simple – analogue synthesis is flexible and versatile, and it's relatively easy for us to understand. The basics are the same for all analogue synths, and you'll quickly be able to adapt the principles to any instrument, to edit existing sounds and create exciting new ones. This book describes: How analogue synthesis works; The essential modules every synthesiser has; The three steps to synthesis; How to create phat bass sounds; How to generate filter sweeps; Advanced synth modules; How to create simple and complex synth patches; Where to find soft synths on the Web.

If you want to take your synthesiser – of the hardware or software variety – past the presets, and program your own sounds and effects, this practical and well-illustrated book tells you what you need to know.

60 pages **Order code PC118** **£7.45**

QUICK GUIDE TO MP3 AND DIGITAL MUSIC
Ian Waugh

MP3 files, the latest digital music format, have taken the music industry by storm. What are they? Where do you get them? How do you use them? Why have they thrown record companies into a panic? Will they make music easier to buy? And cheaper? Is this the future of music?

All these questions and more are answered in this concise and practical book which explains everything you need to know about MP3s in a simple and easy-to-understand manner. It explains:

How to play MP3s on your computer; How to use MP3s with handheld MP3 players; Where to find MP3s on the Web; How MP3s work; How to tune into Internet radio stations; How to create your own MP3s; How to record your own CDs from MP3 files; Other digital audio music formats.

Whether you want to stay bang up to date with the latest music or create your own MP3s and join the on-line digital music revolution, this book will show you how.

60 pages **Order code PC119** **£7.45**

ALL PRICES INCLUDE UK POST AND PACKING
CD-ROM prices include VAT and/or postage to anywhere in the world

ELECTRONIC MUSIC AND MIDI PROJECTS
R. A. Penfold

Whether you wish to save money, boldly go where no musician has gone before, rekindle the pioneering spirit, or simply have fun building some electronic music gadgets, the designs featured in this book should suit your needs. The projects are all easy to build, and some are so simple that even complete beginners at electronic project construction can tackle them with ease. Stripboard layouts are provided for every project, together with a wiring diagram. The mechanical side of construction has largely been left to individual constructors to sort out, simply because the vast majority of project builders prefer to do their own thing in this respect.

None of the designs requires the use of any test equipment in order to get them set up properly. Where any setting up is required, the procedures are very straightforward, and they are described in detail.

Projects covered: Simple MIDI tester, Message grabber, Byte grabber, THRU box, MIDI auto switcher, Auto/manual switcher, Manual switcher, MIDI patchbay, MIDI controlled switcher, MIDI lead tester, Program change pedal, Improved program change pedal, Basic mixer, Stereo mixer, Electronic swell pedal, Metronome, Analogue echo unit.

124 pages **Order code PC116** **£10.95**

THE INVENTOR OF STEREO – THE LIFE AND WORKS OF ALAN DOWER BLUMLEIN
Robert Charles Alexander

This book is the definitive study of the life and works of one of Britain's most important inventors who, due to a cruel set of circumstances, has all but been overlooked by history.

Alan Dower Blumlein led an extraordinary life in which his inventive output rate easily surpassed that of Edison, but whose early death during the darkest days of World War Two led to a shroud of secrecy which has covered his life and achievements ever since.

His 1931 Patent for a Binaural Recording System was so revolutionary that most of his contemporaries regarded it as more than 20 years ahead of its time. Even years after his death, the full magnitude of its detail had not been fully utilized. Among his 128 patents are the principal electronic circuits critical to the development of the world's first elecronic television system. During his short working life, Blumlein produced patent after patent breaking entirely new ground in electronic and audio engineering.

During the Second World War, Alan Blumlein was deeply engaged in the very secret work of radar development and contributed enormously to the system eventually to become 'H2S' – blind-bombing radar. Tragically, during an experimental H2S flight in June 1942, the Halifax bomber in which Blumlein and several colleagues were flying, crashed and all aboard were killed. He was just days short of his thirty-ninth birthday.

420 pages **Order code NE32** **£16.99**

VIDEO PROJECTS FOR THE ELECTRONICS CONSTRUCTOR
R. A. Penfold

Written by highly respected author R. A. Penfold, this book contains a collection of electronic projects specially designed for video enthusiasts. All the projects can be simply constructed, and most are suitable for the newcomer to project construction, as they are assembled on stripboard.

There are faders, wipers and effects units which will add sparkle and originality to your video recordings, an audio mixer and noise reducer to enhance your soundtracks and a basic computer control interface. Also, there's a useful selection on basic video production techniques to get you started.

Complete with explanations of how the circuit works, shopping lists of components, advice on construction, and guidance on setting up and using the projects, this invaluable book will save you a small fortune.

Circuits include: video enhancer, improved video enhancer, video fader, horizontal wiper, improved video wiper, negative video unit, fade to grey unit, black and white keyer, vertical wiper, audio mixer, stereo headphone amplifier, dynamic noise reducer, automatic fader, pushbutton fader, computer control interface, 12 volt mains power supply.

124 pages **Order code PC115** **£10.95**

PC MUSIC – THE EASY GUIDE
Robin Vincent

How do I make music on my PC? Can I record music onto my PC? What's a sequencer? How can I get my PC to print a music score? What sort of a soundcard do I need? What hardware and software do I need? How do I connect a keyboard to my PC?:

Just a few of the questions you've probably asked. Well, you'll find the answers to all these questions, and many more, in this book. It will show you what can be done, what it all means, and what you will need to start creating your own music on your PC. It's an easy read, it's fully illustrated and it will help you understand how a computer can be used as a creative music tool.

It covers soundcards, sequencers, hard disk digital audio recording and editing, plug-ins, printing scores with notation software, using your PC as a synthesiser, getting music onto and off the Internet, using Windows, sample PC music set-ups, FAQs, a glossary, advice on hardware and software, and a list of industry contacts.

116 pages **Order code PC117** **£11.95**

HIGH POWER AUDIO AMPLIFIER CONSTRUCTION
R. A. Penfold

Practical construction details of how to build a number of audio power amplifiers ranging from about 50 to 300/400 watts r.m.s. includes MOSFET and bipolar transistor designs.

96 pages **Order code BP277** **£4.49**

CIRCUITS AND DESIGN

AN INTRODUCTION TO PIC MICROCONTROLLERS
Robert Penfold
Designing your own PIC based projects may seem a daunting task, but it is really not too difficult providing you have some previous experience of electronics.

The PIC processors have plenty of useful features, but they are still reasonably simple and straightforward to use. This book should contain everything you need to know.

Topics covered include: the PIC register set; numbering systems; bitwise operations and rotation; the PIC instruction set; using interrupts; using the analogue to digital converter; clock circuits; using the real time clock counter (RTCC); using subroutines; driving seven segment displays.

166 pages **Temporarily out of print**

PRACTICAL OSCILLATOR CIRCUITS
A. Flind
Extensive coverage is given to circuits using capacitors and resistors to control frequency. Designs using CMOS, timer i.c.s and op.amps are all described in detail, with a special chapter on ``waveform generator'' i.c.s. Reliable "white" and "pink" noise generator circuits are also included.

Various circuits using inductors and capacitors are covered, with emphasis on stable low frequency generation. Some of these are amazingly simple, but are still very useful signal sources.

Crystal oscillators have their own chapter. Many of the circuits shown are readily available special i.c.s for simplicity and reliability, and offer several output frequencies. Finally, complete constructional details are given for an audio sinewave generator.

133 pages **Order code BP393** **£5.49**

PRACTICAL ELECTRONICS HANDBOOK – Fifth Edition. Ian Sinclair
Contains all of the everyday information that anyone working in electronics will need.

It provides a practical and comprehensive collection of circuits, rules of thumb and design data for professional engineers, students and enthusaists, and therefore enough background to allow the understanding and development of a range of basic circuits.

Contents: Passive components, Active discrete components, Circuits, Linear I.C.s, Energy conversion components, Digital I.C.s, Microprocessors and microprocessor systems, Transferring digital data, Digital-analogue conversions, Computer aids in electronics, Hardware components and practical work, Micro-controllers and PLCs, Digital broadcasting, Electronic security.

440 pages **Order code NE21** **£16.99**

COIL DESIGN AND CONSTRUCTIONAL MANUAL
B. B. Babani
A complete book for the home constructor on "how to make" RF, IF, audio and power coils, chokes and transformers. Practically every possible type is discussed and calculations necessary are given and explained in detail. Although this book is now twenty years old, with the exception of toroids and pulse transformers little has changed in coil design since it was written.

96 pages **Order code 160** **£4.49**

OPTOELECTRONICS CIRCUITS MANUAL
R. M. Marston
A useful single-volume guide to the optoelectronics device user, specifically aimed at the practical design engineer, technician, and the experimenter, as well as the electronics student and amateur. It deals with the subject in an easy-to-read, down-to-earth, and non-mathematical yet comprehensive manner, explaining the basic principles and characteristics of the best known devices, and presenting the reader with many practical applications and over 200 circuits. Most of the i.c.s and other devices used are inexpensive and readily available types, with universally recognised type numbers.

182 pages **Order code NE14** **£20.99**

OPERATIONAL AMPLIFIER USER'S HANDBOOK
R. A. Penfold
The first part of this book covers standard operational amplifer based "building blocks" (integrator, precision rectifier, function generator, amplifiers, etc), and considers the ways in which modern devices can be used to give superior performance in each one. The second part describes a number of practical circuits that exploit modern operational amplifiers, such as high slew-rate, ultra low noise, and low input offset devices. The projects include: Low noise tape preamplifier, low noise RIAA preamplifier, audio power amplifiers, d.c. power controllers, opto-isolator audio link, audio millivolt meter, temperature monitor, low distortion audio signal generator, simple video fader, and many more.

120 pages **Order code BP335** **£5.45**

A BEGINNERS GUIDE TO CMOS DIGITAL ICs
R. A. Penfold
Getting started with logic circuits can be difficult, since many of the fundamental concepts of digital design tend to seem rather abstract, and remote from obviously useful applications. This book covers the basic theory of digital electronics and the use of CMOS integrated circuits, but does not lose sight of the fact that digital electronics has numerous "real world" applications.

The topics covered in this book include: the basic concepts of logic circuits; the functions of gates, inverters and other logic "building blocks"; CMOS logic i.c. characteristics, and their advantages in practical circuit design; oscillators and monostables (timers); flip/flops, binary dividers and binary counters; decade counters and display drivers.

119 pages **Order code BP333** **£5.45**

AUDIO AND MUSIC

INTRODUCTION TO DIGITAL AUDIO (Second Edition) Ian Sinclair
The compact disc (CD) was the first device to bring digital audio methods into the home.

This development has involved methods and circuits that are totally alien to the technician or keen amateur who has previously worked with audio circuits. The principles and practices of digital audio owe little or nothing to the traditional linear circuits of the past, and are much more comprehensible to today's computer engineer than the older generation of audio engineers.

This book is intended to bridge the gap of understanding for the technician and enthusiast. The principles and methods are explained, but the mathematical background and theory is avoided, other than to state the end product.

128 pages **Order code PC102** **£8.95**

VALVE & TRANSISTOR AUDIO AMPLIFIERS
John Linsley Hood
This is John Linsley Hood's greatest work yet, describing the milestones that have marked the development of audio amplifiers since the earliest days to the latest systems. Including classic amps with valves at their heart and exciting new designs using the latest components, this book is the complete world guide to audio amp design.

Contents: Active components; Valves or vacuum tubes; Solid-state devices; Passive components; Inductors and transformers; Capacitors, Resistors, Switches and electrical contacts; Voltage amplifier stages using valves; Valve audio amplifier layouts; Negative feedback; Valve operated power amplifiers; Solid state voltage amplifiers; Early solid-state audio amplifiers; Contemporary power amplifier designs; Preamplifiers; Power supplies (PSUs); Index.

250 pages **Order code NE24** **£21.99**

AUDIO AMPLIFIER PROJECTS
R. A. Penfold
A wide range of useful audio amplifier projects, each project features a circuit diagram, an explanation of the circuit operation and a stripboard layout diagram. All constructional details are provided along with a shopping list of components, and none of the designs requires the use of any test equipment in order to set up properly. All the projects are designed for straightforward assembly on simple circuit boards.

Circuits include: High impedance mic preamp, Low impedance mic preamp, Crystal mic preamp, Guitar and GP preamplifier, Scratch and rumble filter, RIAA preamplifier, Tape preamplifier, Audio limiter, Bass and treble tone controls, Loudness filter, Loudness control, Simple graphic equaliser, Basic audio mixer, Small (300mW) audio power amp, 6 watt audio power amp, 20/32 watt power amp and power supply, Dynamic noise limiter.

A must for audio enthusiasts with more sense than money!

116 pages **Order code PC113** **£10.95**

VALVE AMPLIFIERS
Second Edition. Morgan Jones
This book allows those with a limited knowledge of the field to understand both the theory and practice of valve audio amplifier design, such that they can analyse and modify circuits, and build or restore an amplifier. Design principles and construction techniques are provided so readers can devise and build from scratch, designs that actually work.

The second edition of this popular book builds on its main strength – exploring and illustrating theory with practical applications. Numerous new sections include: output transformer problems; heater regulators; phase splitter analysis; and component technology. In addition to the numerous amplifier and preamplifier circuits, three major new designs are included: a low-noise single-ended LP stage, and a pair of high voltage amplifiers for driving electrostatic transducers directly – one for headphones, one for loudspeakers.

288 pages **Order code NE33** **£29.95**

LOUDSPEAKERS FOR MUSICIANS
Vivan Capel
This book contains all that a working musician needs to know about loudspeakers; the different types, how they work, the most suitable for different instruments, for cabaret work, and for vocals. It gives tips on constructing cabinets, wiring up, when and where to use wadding, and when not to, what fittings are available, finishing, how to ensure they travel well, how to connect multi-speaker arrays and much more.

Ten practical enclosure designs with plans and comments are given in the last chapter, but by the time you've read that far you should be able to design your own!

164 pages **Order code BP297** **£5.49**

BOOK ORDERING DETAILS

All prices include UK postage. For postage to Europe (air) and the rest of the world (surface) please add £2 per book. For the rest of the world airmail add £3 per book. CD-ROM prices include VAT and/or postage to anywhere in the world. Send a PO, cheque, international money order (£ sterling only) made payable to **Direct Book Service** or card details, Visa, Mastercard, Amex, Diners Club or Switch to: **DIRECT BOOK SERVICE, WIMBORNE PUBLISHING LIMITED, 408 WIMBORNE ROAD EAST, FERNDOWN, DORSET BH22 9ND**.

Books are normally sent within seven days of receipt of order, but please allow 28 days for delivery – more for overseas orders. *Please check price and availability (see latest issue of* Everyday Practical Electronics*) before ordering from old lists.*

For a further selection of books see the next two issues of *EPE*.

Tel 01202 873872 Fax 01202 874562. E-mail: dbs@epemag.wimborne.co.uk

Order from our online shop at: www.epemag.wimborne.co.uk/shopdoor.htm

BOOK ORDER FORM

Full name: .....

Address: .....

.....

.....

..... Post code: ..... Telephone No: .....

Signature: .....

☐ I enclose cheque/PO payable to DIRECT BOOK SERVICE for £ .....

☐ Please charge my card £ ..... Card expiry date.....

Card Number ..... Switch Issue No.....

Card Security Code ..... (the last three digits on or just below the signature strip)

Please send book order codes: .....

.....

Please continue on separate sheet of paper if necessary

PCB SERVICE

Printed circuit boards for most recent *EPE* constructional projects are available from the PCB Service, see list. These are fabricated in glass fibre, and are fully drilled and roller tinned. All prices include VAT and postage and packing. Add £1 per board for *airmail* outside of Europe. Remittances should be sent to **The PCB Service, *Everyday Practical Electronics*, Wimborne Publishing Ltd., 408 Wimborne Road East, Ferndown, Dorset BH22 9ND. Tel: 01202 873872; Fax 01202 874562; E-mail: orders@epemag.wimborne.co.uk. On-line Shop: www.epemag.wimborne.co.uk/shopdoor.htm.** Cheques should be crossed and made payable to *Everyday Practical Electronics* **(Payment in £ sterling only).**

NOTE: While 95% of our boards are held in stock and are dispatched within seven days of receipt of order, please allow a maximum of 28 days for delivery – overseas readers allow extra if ordered by surface mail.

Back numbers or photostats of articles are available if required – see the *Back Issues* page for details. We do not supply kits or components for our projects.

Please check price and availability in the latest issue.
A number of older boards are listed on our website.
Boards can only be supplied on a payment with order basis.

PROJECT TITLE		Order Code	Cost
Ice Alarm	FEB '01	287	£4.60
★Graphics L.C.D. Display with PICs (Supp)		288	£5.23
Using the LM3914-6 L.E.D. Bargraph Drivers			
Multi-purpose Main p.c.b.		289	
Relay Control		290 } Set	£7.14
L.E.D. Display		291	
★PC Audio Power Meter **Software only**		–	–
Doorbell Extender: Transmitter	MAR '01	292	£4.20
Receiver		293	£4.60
Trans/Remote		294	£4.28
Rec./Relay		295	£4.92
EPE Snug-bug Heat Control for Pets	APR '01	296	£6.50
Intruder Alarm Control Panel			
Main Board		297	£6.97
External Bell Unit		298	£4.76
Camcorder Mixer	MAY '01	299	£6.34
★PIC Graphics L.C.D. Scope		300	£5.07
Hosepipe Controller	JUNE '01	301	£5.14
Magfield Monitor (Sensor Board)		302	£4.91
Dummy PIR Detector		303	£4.36
★PIC16F87x Extended Memory **Software only**		–	–
Stereo/Surround Sound Amplifier	JULY '01	304	£4.75
Perpetual Projects Uniboard–1		305	£3.00
Solar-Powered Power Supply & Voltage Reg.			
MSF Signal Repeater and Indicator			
Repeater Board		306	£4.75
Meter Board		307	£4.44
★PIC to Printer Interface		308	£5.39
Lead/Acid Battery Charger	AUG '01	309	£4.99
Shortwave Loop Aerial		310	£5.07
★Digitimer – Main Board		311	£6.50
– R.F. Board		312	£4.36
Perpetual Projects Uniboard–2			
L.E.D. Flasher — Double Door-Buzzer		305	£3.00
Perpetual Projects Uniboard–3	SEPT '01	305	£3.00
Loop Burglar Alarm, Touch-Switch Door-Light			
and Solar-Powered Rain Alarm			
L.E.D. Super Torches – Red Main		313 } Set	£6.10
– Display Red		314 }	
– White L.E.D.		315	£4.28
★Sync Clock Driver		316	£5.94
★Water Monitor		317	£4.91
Camcorder Power Supply	OCT '01	318	£5.94
PIC Toolkit Mk3		319	£8.24
Perpetual Projects Uniboard–4. Gate Sentinel, Solar-		305	£3.00
powered Bird Scarer and Solar-Powered Register			
Teach-In 2002 Power Supply	NOV '01	320	£4.28
Lights Needed Alert		321	£5.39
Pitch Switch		322	£5.87
Capacitance Meter – Main Board (double-sided)		323 } Set	£12.00
– Display Board (double-sided)		324 }	
★★PIC Toolkit TK3 – **Software only**		–	–
4-Channel Twinkling Lights	DEC '01	325	£6.82
Ghost Buster – Mic		326 } Set	£5.78
– Main		327 }	
★PIC Polywhatsit – Digital		328 } Set	£7.61
– Analogue		329 }	
Forever Flasher	JAN '02	330	£4.44
Time Delay Touch Switch		331	£4.60
★PIC Magick Musick		332	£5.87
Versatile Bench Power Supply		333	£5.71
★PIC Spectrum Analyser	FEB '02	334	£7.13
Versatile Current Monitor		335	£4.75
Guitar Practice Amp		336	£5.39
★PIC Virus Zapper	MAR '02	337	£4.75
RH Meter		338	£4.28
★PIC Mini-Enigma – **Software only**		–	–
★Programming PIC Interrupts – **Software only**		–	–
★PIC Controlled Intruder Alarm	APR '02	339	£6.50
★PIC Big Digit Display	MAY '02	341	£6.02
Washing Ready Indicator		342	£4.75
Audio Circuits–1 – LM386N-1		343	£4.28
– TDA7052		344	£4.12
– TBA820M		345	£4.44
– LM380N		346	£4.44
– TDA2003		347	£4.60
– Twin TDA2003		348	£4.75

PROJECT TITLE		Order Code	Cost
World Lamp	JUNE '02	340	£5.71
Simple Audio Circuits–2 – Low, Med and High			
Input Impedance Preamplifiers (Single Trans.)		349	£4.60
Low-Noise Preamplifier (Dual Trans.)		350	£4.75
Tone Control		351	£4.60
Bandpass Filter		352	£4.75
Frequency Standard Generator – Receiver		353	£4.12
– Digital		354	£6.82
★Biopic Heartbeat Monitor		355	£5.71
Simple Audio Circuits – 3	JULY '02		
– Dual Output Power Supply		356	£4.60
– Crossover/Audio Filter		357	£4.44
Infra-Red Autoswitch		358	£4.91
★EPE StyloPIC		359	£6.50
Rotary Combination Lock – Main Board		360	£5.39
– Interface Board		361	£4.91
★Using the PIC's PCLATH Command – **Software only**		–	–
Big-Ears Buggy	AUG '02	362	£5.71
★PIC World Clock		363	£5.39
Simple Audio Circuits–4			
Low Freq. Oscillator		364	£4.44
Resonance Detector		365	£4.28
Vinyl-To-CD Preamplifier	SEPT '02	366	£5.71
★Freebird Glider Control		367	£4.91
★Morse Code Reader		368	£5.23
Headset Communicator	OCT '02	369	£4.75
EPE Bounty Treasure Hunter		370	£4.77
★★Digital I.C. Tester		371	£7.14
★PIC-Pocket Battleships – **Software only**		–	–
Transient Tracker	NOV '02	372	£4.75
★PICAXE Projects–1: Egg Timer; Dice Machine;			
Quiz Game Monitor (Multiboard)		373	£3.00
★Tuning Fork & Metronome		374	£5.39
★★EPE Hybrid Computer – Main Board } double-		375	£18.87
– Atom Board } sided		376	£11.57
★PICAXE Projects–2: Temperature Sensor;	DEC '02		
Voltage Sensor; VU Indicator (Multiboard)		373	£3.00
★Versatile PIC Flasher		377	£5.07
★PICAXE Projects–3: Chaser Lights	JAN '03	373	£3.00
6-Channel Mains Interface		381	£5.08
EPE Minder – Transmitter		378	£4.75
– Receiver		379	£5.39
★Wind Speed Monitor		380	£5.08
Tesla Transformer	FEB 03	382	£5.07
★Brainibot Buggy		383	£3.00
★Wind Tunnel		384	£6.02

EPE SOFTWARE

Software programs for *EPE* projects marked with a single asterisk ★ are available on 3·5 inch PC-compatible disks or ***free*** from our Internet site. The following disks are available: **PIC Tutorial** (Mar-May '98); **PIC Toolkit Mk2 V2·4d** (May-Jun '99); ***EPE* Disk 1** (Apr '95-Dec '98); ***EPE* Disk 2** (1999); ***EPE* Disk 3** (2000); ***EPE* Disk 4** (2001); ***EPE* Disk 5** (2002); ***EPE* Disk 6** (Jan 2003 issue to current cover date); ***EPE* Teach-In 2000; *EPE* Spectrum; *EPE* Interface Disk 1** (October '00 issue to current cover date). ★★The software for these projects is on CD-ROM. The 3·5 inch disks are £3.00 each (UK), the CD-ROMs are £6.95 (UK). Add 50p each for overseas surface mail, and £1 each for airmail. All are available from the *EPE PCB Service*. All files can be downloaded *free* from our Internet FTP site: **ftp://ftp.epemag.wimborne.co.uk.**

EPE PRINTED CIRCUIT BOARD SERVICE

Order Code **Project** **Quantity** **Price**

.....

Name .....

Address .....

.....

Tel. No. .....

I enclose payment of £..... (cheque/PO in **£ sterling only**) to:

Everyday Practical Electronics

MasterCard, Amex, Diners Club, Visa or Switch

Card No. .....

Card Exp. Date ..... Switch Issue No .....

Card Security Code .....
(The last 3 digits on or just under the signature strip)

Signature .....

NOTE: You can also order p.c.b.s by phone, Fax, Email or via our Internet site on a secure server:
http://www.epemag.wimborne.co.uk/shopdoor.htm

WHETHER ELECTRONICS IS YOUR HOBBY OR YOUR LIVELIHOOD . . .

YOU NEED THE MODERN ELECTRONICS MANUAL and the ELECTRONICS SERVICE MANUAL

THE MODERN ELECTRONICS MANUAL (CD-ROM VERSION ONLY)

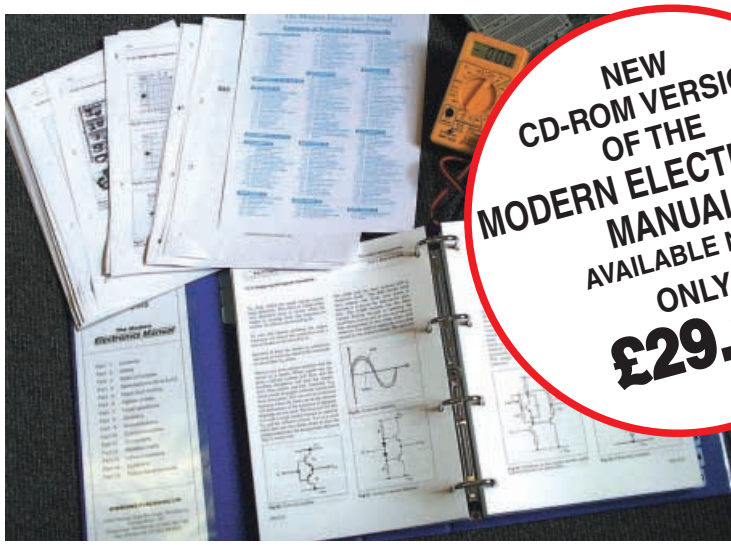

NEW CD-ROM VERSION OF THE MODERN ELECTRONICS MANUAL AVAILABLE NOW ONLY **£29.95**

The essential reference work for everyone studying electronics

- *Over 800 pages*
- *In-depth theory*
- *Projects to build*
- *Detailed assembly instructions*
- *Full components checklists*
- *Extensive data tables*
- *Manufacturers' web links*
- *Easy-to-use Adobe Acrobat format*
- *Clear and simple layout*
- *Comprehensive subject range*
- *Professionally written*
- *Regular Supplements*

EVERYTHING YOU NEED TO GET STARTED AND GO FURTHER IN ELECTRONICS!

The revised CD-ROM edition of the Modern Electronics Base Manual (MEM) contains practical, easy-to-follow information on the following subjects:

BASIC PRINCIPLES: Electronic Components and their Characteristics (16 sections from Resistors and Potentiometers to Crystals, Crystal Modules and Resonators); Circuits Using Passive Components (10 sections); Power Supplies; The Amateur Electronics Workshop; The Uses of Semiconductors; Digital Electronics (6 sections); Operational Amplifiers; Introduction to Physics, including practical experiments; Semiconductors (5 sections) and Digital Instruments (3 sections).

CIRCUITS TO BUILD: There's nothing to beat the satisfaction of creating your own projects. From basic principles, like soldering and making printed circuit boards, to the tools needed for circuit-building, the Modern Electronics Manual and its Supplements describe clearly, with appropriate diagrams, how to assemble a radio, loudspeaker circuits, amplifiers, car projects, a computer interface, measuring instruments, workshop equipment, security systems, medical and musical circuits, etc. The Base Manual describes 12 projects including a Theremin and a Simple TENS Unit.

ESSENTIAL DATA: Extensive tables on diodes, transistors, thyristors and triacs, digital and linear i.c.s.

EXTENSIVE GLOSSARY: Should you come across a technical word, phrase or abbreviation you're not familiar with, simply look up the glossary included in the Manual and you'll find a comprehensive definition in plain English.

The Manual also covers **Safety** and provides web links to component and equipment **Manufacturers and Suppliers.** The most comprehensive reference work ever produced at a price you can afford, the CD-ROM edition of **THE MODERN ELECTRONICS MANUAL** provides you with all the ***essential*** information you need.

THE MODERN ELECTRONICS MANUAL (MEM – CD-ROM version only)

Revised CD-ROM Edition of Basic Work: Contains over 800 pages of information in Adobe Acrobat format. Edited by John Becker.
Regular Supplements: Additional CD-ROMs each containing approximately 500 pages of additional information on specific areas of electronics will be available for £19.95 each. Information on the availability and content of each Supplement CD-ROM will be sent to you as they become available.
Presentation: CD-ROM suitable for any modern PC. Requires Adobe Acrobat Reader which is included on the MEM CD-ROM.

Price of the Basic Work: £29.95 POST FREE.

ORDER BOTH MANUALS TOGETHER AND SAVE £10

A mass of well-organised and clearly explained information is brought to you by expert editorial teams whose combined experience ensures the widest coverage
Regular Supplements to these unique publications, keep you abreast of the latest technology and techniques if required

The Lost Journals of Nikola Tesla

HAARP—Chemtrails and the Secret of Alternative 4

Tim Swartz

SENSATIONAL DATA OBTAINED FROM THE INVENTOR'S MOST PRIVATE PAPERS AND KEPT UNDER WRAPS BY MILITARY AND BIG BUSINESS CONCERNS

The Lost Journals of Nikola Tesla

Contents

Introduction - By Timothy Green Beckley 5

Chapter One - The Secret Life of Nikola Tesla 10

Chapter Two - Alien Signals in the Night.....18

Chapter Three - Communicating With Other Planets 30

Chapter Four - Extraordinary Experiences.....48

Chapter Five - Tesla and Electronic Voice Phenomena ... .60

Chapter Six - UFOs and Antigravity Propulsion 74

Chapter Seven - Free Energy - Fact or Fiction?..... 98

Chapter Eight - The Truth About Alternative 3 116

Chapter Nine - HAARP - Chemtrails - Alternative 4_____ 130

Conclusion 150

Afterthoughts on Nikola Tesla - By Diane Tessman 154

INTRODUCTION
By Timothy Green Beckley

There is a teacher named John W. Wagner who thinks that the Smithsonian Institute is playing favorites. After studying the remarkable life of Nikola Tesla, Wagner, along with his third grade class, started a campaign to educate the world about the obscure electrical genius from Yugoslavia.

Wagner and his class wrote many letters to important people asking for their support. A former student persuaded her father, an accomplished sculptor, to create a bust of Tesla for their class.

A Third Grade requirement is to learn cursive handwriting, so their class work now had a purpose...writing letters to raise money for their Tesla bust. Unfortunately, most people had never heard of Nikola Tesla. And those who had, seemed not to want to listen.

In fact, when the bust of Tesla was finished, Wagner and his class of eager students offered it to the Smithsonian Institute in Washington, DC. Dr. Bernard S. Finn, (Curator of the Division of Electricity and Modern Physics) refused, claiming he had no use for the bust.

They could not understand why the Smithsonian would have no use for a $6,000 bust of such a great American and world-class scientist. After all, Tesla was no slouch. Much of our modern technology owes its beginnings to Tesla. In 1882 he made the discovery that changed the world ! harnessing the awesome power of Alternating Current (AC).

In 1888 Tesla obtained U.S. patents covering an entire system of polyphase AC that remains unchanged in principle today. Tesla then promptly sold all of his patents to George Westinghouse, an acquisition that made the Westinghouse Company the giant it is today.

Westinghouse and Tesla were consummate friends, but after Westinghouse died in 1913, the company forgot about its chief benefactor and Tesla fell victim to hard times. Tesla died January 7, 1943, alone, and all but forgotten, in a New York hotel room, paid for by a meager stipend provided by the Yugoslavian government.

Today, industries prosper and flourish, the world surges from the power his fertile mind created, radios blare with news and music, their transmission made possible by his great intellect, all telling us that the forgotten genius, Nikola Tesla, was here.

Tesla is preceded in greatness only by Michael Faraday who in 1831 rocked the scientific world with his discovery that magnetism can produce electricity, if it is accompanied by motion.

Faraday discovered the principle, but not how to make it power the world; Tesla alone accomplished this singular feat. Tesla is one of only two Americans to have a unit of electrical measurement named in his honor. Names for units of electrical measurement are derived by using the names of scientists who made the greatest contributions in electrical science, forming perhaps the most elite group in the world.

Throughout the entire history of electrical science only fifteen men worldwide have received this honor. Tesla is one of these great men. In addition, Tesla received fifteen honorary degrees from famous universities worldwide, including Yale and Columbia in the United States.

He also received fourteen Awards of Merit from other world class groups.

Dr. David L. Goodstein, Vice Provost and Professor of Physics at California Institute of Technology, calls Tesla one of the "Saints of Science" and equates him to Leonardo Da Vinci.

Tesla is the greatest inventor the world has ever forgotten. He is also the greatest inventor the Smithsonian has swept under the carpet. The Smithsonian's curator essentially credits Edison for our worldwide system of electricity. He also credits Marconi for the invention of radio.

This is a deliberate assault on factual history and needs to be challenged. The United States Patent Office and the U.S. Supreme Court view things a little differently over the much distorted history the Smithsonian publicizes.

Tesla holds over forty U.S. patents (circa 1888) covering our entire system of Polyphase Alternating Current (AC). These patents are so novel that nobody could ever challenge them in the courts.

The Direct Current (DC) system Edison used in his much touted Pearl Street generating station was invented by others before his time; he merely copied the work of others to promote his business enterprise. . . and the Smithsonian wants you to believe he was America's 'King of Electricity.'

There is simply no evidence to support this claim. The U.S. Supreme Court, in a landmark decision dated June 21, 1943, Case No. 369, overturned Marconi's basic patent for the invention of radio because Tesla's patent on the four-tuned circuit predated Marconi's patent. Marconi had simply copied Tesla's work.

Tesla's four-tuned circuits two on the receiving side and two on the transmitting side, secured by U.S. patents #645,576 and #649,621) were the basis of the U.S. Supreme Court decision (Case #369 decided June 21,1943) to overturn Marconi's basic patent on the invention of radio.

Marconi merely demonstrated Tesla's invention, but the gullible media and the greedy industry that followed perpetuate a myth that Marconi invented radio. Who do you believe has more credibility... the industries that promote their own businesses, or the U.S. Supreme Court?

Marconi's two-tuned circuit system was the same as that advanced by Heinrich Hertz and was no more a viable system of radio than that advanced by Mahlon Loomis in 1872. . . long before Hertz or Tesla.

If you visit the Smithsonian, next to Edison's bust you will see Tesla's invention that revolutionized the world - drawing of Tesla's rotating magnetic field device, giving us polyphase AC and the AC motor.

Tesla's U.S. patent number is on his invention, but you wont find any recognition for Tesla. When Dr. Bernard S. Finn was asked why he had placed Edison's bust on display next to Tesla's invention, he said the sculptor was a phrenologist and wanted to examine the bumps on Edison's head; this made it authentic.

Edison used Direct Current (DC), a technology invented and developed by others, before his time, as a means of powering his incandescent lamp. Big business and the media have exaggerated this story so much that now everyone believes Edison is the father of our system of electrical power.

The Smithsonian Book of Invention is an extra-large hardcover book almost 7/8 of an inch thick. Many inventors and their inventions are shown and their impact on civilization discussed - including Edison, Marconi, Archie Bunker, and Colonel Sanders. Tesla and his epic-causing discoveries are omitted.

Dr. Bernard S. Finn is Curator and first author of this Smithsonian publication. In his section entitled: The Beginning of the Electrical Age, he names forty-three contributors to the science of electricity. Mr. Edison's name is cited many times along with his photographs, but Nikola Tesla's name is omitted.

Equally outrageous is the Niagara Falls power station picture of Tesla's AC generators on the last page. . .and Dr. Finn's concluding remark: "When the Niagara Falls power station began operating in 1895, it signaled the final major act in the revolutionary drama that began in Menlo Park in the fall of 1879."

By this time the totally brainwashed reader is led to believe that our electrical world started with Mr. Edison at Menlo Park, and then he finished electrifying America in 1895 by creating the Niagara Falls power station. Yet it was Tesla's U.S. patents that were used in that power plant's creation and Edison had no role in the project.

Edison actually fought the adoption of AC bitterly by waging his infamous War of the Currents, culminating in his creation of the first electric chair in an attempt to frighten people away from the use of Tesla's AC system of electricity.

Despite attempts to relegate Tesla to the back pages of history, there has been a growing wave of interest in the man and his great works. Some of this interest stems from Tesla's comments made in his later years concerning exotic inventions and fantastic tales of Death Rays and communicating with extraterrestrials.

It is now known that various governments were extremely interested in Tesla's ideas for weapons and limitless energy. So much so that after his death, the U.S. military confiscated boxes full of Tesla's research and writings.

Much of this material has never been revealed to the public. What is not so widely known is that Tesla often suffered from financial difficulties, forcing him to move from hotel to hotel as his debt increased. Many times Tesla had to move, leaving crates of his belongings behind. The hotels would hold on to Tesla's possessions for awhile, but would eventually have to auction them off in order to repay Tesla's outstanding bills.

Often these sold off boxes contained notes outlining some new invention or speculations on developing technology. How much was lost over the years no one will ever know. However, some material escaped the clutches of obscurity and has recently resurfaced after being separated and stored for decades.

This new book examines some of this lost science, as well as shocking new details of Tesla's life as written by himself in long forgotten notes. These explosive journals, if true, could show that Tesla was indeed the first man to receive communications from life forms not of this planet!

These communications so frightened Tesla that he spent the remaining years of his life secretly dedicated to discovering the true purpose of the alleged extraterrestrials - and devising new technologies to enable mankind to protect itself from possible enslavement from a race of creatures that once called Earth home, and humankind their children.

Timothy Green Beckley

"We are whirling through endless space, with an inconceivable speed, all around us everything is spinning, everything is moving, everywhere there is energy. There must he some way of availing ourselves of this energy more directly. Then, with the light obtained from the medium, with the power derived from it, with every form of energy obtained without effort, from the store forever inexhaustible, humanity will advance with giant strides. The mere contemplation of these magnificent possibilities expands our minds, strengthens our hopes and fills our hearts with supreme delight."

Nikola Tesla, 1891

Chapter One

The Secret Life Of Nikola Tesla

Nikola Tesla was beyond a doubt the greatest genius of the 20th century. Our way of life today, the technology that we take for granted, is all possible because of this one incredible man from Europe.

However, despite all of his contributions to science, his name is little remembered outside the field of electronics and physics. In fact, Thomas Edison is often mistakenly credited in school textbooks with inventions that were developed and patented by Tesla.

Most scholars acknowledge that Tesla's obscurity is partially due to his eccentric ways and fantastic claims during the waning years of his life, of communicating with other planets and death rays. It is now known that many of these fantastic inventions of Tesla are scientifically accurate and workable. It has simply taken mankind this long to catch up to the astonishing ideas of a man who died in 1943.

It is known that Tesla suffered from financial troubles throughout his adult life. Because of this, Tesla had to move several times when he could no longer afford his surroundings. The Waldorf Astoria in New York had been Tesla's residence for twenty years, yet he had to move in 1920 when he could no longer afford it. Tesla then moved into the Hotel St. Regis, but again was forced to vacate due to lack of financial support.

Forced to move from hotel to hotel, he would often leave trunks of documents behind as security for his debts. These trunks, which were eagerly sought after Tesla's death, have become the key to unlocking the mystery of who Nikola Tesla really was, and the incredible life that he secretly lead.

When Tesla died on January 7, 1943 at the age of 86, representatives of the Office of Alien Property, at the request of the FBI, went to the Hotel New Yorker and seized all of Tesla's belongings. Two truckloads of papers, furniture and artifacts were sent under seal to the Manhattan Storage and Warehouse Company.

This load was added to the almost thirty barrels and bundles that had been in storage since the 1930's, and the entire collection was sealed under orders from the OAP. Strange behavior, considering that Tesla was a legal American citizen.

The Torgotten Papers of Nikola Tesla

After Tesla's death, there was a scramble by the United States government to find all of his papers, notes and research before other foreign powers could find them. Tesla's nephew, Sava Kosanovic, reported that before the OAP had arrived, someone else had obviously gone through Tesla's belongings and took an unknown amount of personal notes and papers.

It was known by the FBI that German intelligence had already spirited away a sizable amount of Tesla's research several years before his death. This stolen material, it is thought, would eventually result in the development of the Nazi flying saucer. The United States was going to make sure that this would not happen again.

Anything even remotely associated with the great man was quickly confiscated and lost within the secret networks of pre-World War II America. Nevertheless, more than a dozen boxes of Tesla's belongings left behind at hotels like the Waldorf Astoria, the Governor Clinton Hotel and the St. Regis had already been sold to salvagers to pay off Tesla's outstanding bills.

Most of these boxes and the secrets they contained have never been found. In 1976, four undistinguished boxes of papers were auctioned in the estate sale of one Michael P. Bornes. Little is known about Bornes except that he had been a bookseller in Manhattan. This auction took place in Newark, NJ, with the boxes and their contents being bought by Dale Alfrey for twenty five dollars.

Alfrey had no idea what was in the boxes when he bought them on a whim. When he later went through them, he was surprised to find what appeared to be lab documents and personal notes of Nikola Tesla. Some of the lost papers of Tesla had once again resurfaced. However, due to ignorance they were almost lost once again.

In 1976, the name Nikola Tesla was not widely known. Alfrey had little idea of the importance of the papers he now owned. Going through the incredible amount of material, Alfrey at first thought he had uncovered the notes of a science fiction writer. What he read was so incredible that it seemed impossible that any of it was true.

Having little interest in what he had bought, Alfrey stashed the boxes away in his basement thinking that he would go through them again later when he had more time. Twenty years passed before Alfrey would once again find the time to

open the strange boxes. Unfortunately, time had not been so kind to the precious contents contained within.

The papers by now had mildewed badly and the ink had faded from the years of neglect in the damp basement. Alfrey was determined not to let this material disappear forever and started the laborious effort of trying to transcribe the information before it was too late.

However, Alfrey soon found himself caught up in reading the remarkable papers. Tesla's notes are shocking in their revelations of the scientist's secret life. A life, that up until this time, had never been mentioned by Tesla, or documented by biographers after his death.

These lost journals revealed that in 1899, while in Colorado Springs, Tesla intercepted communications from extraterrestrial beings who were secretly controlling mankind. These creatures were slowly preparing humans for eventual conquest and domination, using a program that had been in place since the creation of humankind, but was now accelerating due to Earth's increased scientific awareness.

Tesla wrote about his years of research to interpret the strange radio signals, and his attempts to notify the government and military concerning what he had learned, but his letters apparently went unanswered.

Tesla spoke in confidence to several of his benefactors, including Colonel John Jacob Astor, who owned the Waldorf Astoria hotel. These benefactors listened to Tesla and secretly funded what was to be the start of mankind's first battle to regain control of its own destiny. A battle set in motion by Nikola Tesla.

While this information seems absolutely incredible, Tesla did give occasional hints to his predicament in various newspaper and magazine interviews. Tesla may have elaborated on the subject in an article called: Talking With the Planets, in Colliers Weekly (March 1901).

"As I was improving my machines for the production of intense electrical actions, I was also perfecting the means for observing feeble efforts. One of the most interesting results, and also one of great practical importance, was the development of certain contrivances for indicating at a distance of many hundred miles an approaching storm, its direction, speed and distance traveled.

"It was in carrying on this work that for the first time I discovered those mysterious effects which have elicited such unusual interest. I had perfected the apparatus referred to so far that from my laboratory in the Colorado mountains

I could feel the pulse of the globe, as it were, noting every electrical change that occurred within a radius of eleven hundred miles. I can never forget the first sensations I experienced when it dawned upon me that I had observed something possibly of incalculable consequences to mankind.

"I felt as though I were present at the birth of a new knowledge or the revelation of a great truth. My first observations positively terrified me, as there was present in them something mysterious, not to say supernatural, and I was alone in my laboratory at night; but at that time the idea of these disturbances being intelligently controlled signals did not yet present itself to me.

"The changes I noted were taking place periodically and with such a clear suggestion of number and order that they were not traceable to any cause known to me. I was familiar, of course, with such electrical disturbances as are produced by the sun, Aurora Borealis, and earth currents, and I was as sure as I could be of any fact that these variations were due to none of these causes.

"The nature of my experiments precluded the possibility of the changes being produced by atmospheric disturbances, as has been rashly asserted by some. It was some time afterward when the thought flashed upon my mind that the disturbances I had observed might be due to an intelligent control. Although I could not decipher their meaning, it was impossible for me to think of them as having been entirely accidental.

"The feeling is constantly growing on me that I had been the first to hear the greeting of one planet to another. A purpose was behind these electrical signals."

Decades later on his birthday in 1937, he announced: "I have devoted much of my time during the year past to the perfecting of a new small and compact apparatus by which energy in considerable amounts can now be flashed through interstellar space to any distance without the slightest dispersion." (New York Times, Sunday, 11 July 1937.)

Tesla never publicly revealed any technical details of his improved transmitter, but in his 1937 announcement, he revealed a new formula showing that: "The kinetic and potential energy of a body is the result of motion and determined by the product of its mass and the square of its velocity. Let the mass be reduced, the energy is reduced by the same proportion. If it be reduced to zero, the energy is likewise zero for any finite velocity." (New York Sun, 12 July 1937, p. 6.)

Why is it that there has been little written about Tesla's belief that he had listened in on alien radio signals? Perhaps the truth has been kept secret.

The Men-In-Black Pay a Visit

By the summer of 1997, Alfrey had finished reading the entire contents of the four boxes and was ready to start scanning the papers on to computer disks. Alfrey had been more than a little surprised that the voluminous notes and journals contained no drawings or blueprints. It was not until later that Alfrey discovered that Tesla detested illustrating his ideas owing to the fact that his own mental blueprints were all that he required to build his inventions.

Alfrey also noticed that Tesla's journals were often incomplete. There were numerous gaps consisting of days, months and even years. Alfrey surmised that other journals could exist somewhere, hidden away either by the government, or by ignorance in forgotten warehouses and attics.

Because of these gaps, Alfrey started to make inquiries over the Internet hoping that others may have additional information concerning the missing sections. These inquiries obviously attracted the attentions of those who were also interested in the lost journals. Someone who wanted the journals to remain lost forever.

In September 1997, Alfrey was home continuing his research while his wife and children were gone for the day to Manhattan. As Alfrey remembers, the phone rang and the caller identified himself as Jay Kowski who was interested in Tesla and the papers that Alfrey had discovered.

Alfrey had spoken to the caller for only a few minutes when suddenly the line went dead. Almost immediately the front door bell rang, Alfrey recalled. "When I went to answer the front door, I found it already open with three men standing in the foyer."

Before Alfrey could speak, the man closest addressed him by his first name. "The door was open John, I hope you don't mind that we let ourselves in?"

The three men were all dressed in identical black business suits with white shirts and black ties. "They looked just like undertakers, "Alfrey said.

However, Alfrey could tell that these men were not undertakers, or simply there for a friendly chat. The man who had first spoken continued to address Alfrey by his first name: "Like he knew me personally or something. But I had never seen these men before in my life. I was afraid that maybe they were criminals. There was a palatable air of menace around these three that I had never experienced before, or after."

The other two men remained close to the door and never spoke. Their eyes remained fixed on Alfrey throughout the entire experience.

"We understand that you have in your possession some old boxes and papers," the first man said. "We would be very interested in buying these from you."

"Well, they're not really for sale,"Alfrey answered. "Anyway, how do you know about them?"

The first man chuckled. "We know a lot about you and your papers. They don't belong to you, but we would be willing to pay you for your troubles. They're of no use to you, in fact, you could be in a lot of trouble for having them in the first place."

By now, Alfrey realized that the men were not asking to buy his boxes, they were demanding them. He could tell that they meant business and this frightened him.

The first man now slowly moved closer to Alfrey, speaking in a slow deliberate way. He carefully enunciated each word so that Alfrey understood perfectly where he stood.

"Its no use you know, the man said. Were going to get these boxes no matter what you do. You can't stop us. It would be much easier for you and your family if you just gave us what we want. People have disappeared forever over much less than this. I would so hate to see this happen to you, or your wife and kids."

The man now stood directly in front of Alfrey, his dark eyes fixed and cold. It almost seemed that they had some kind of hypnotic power over Alfrey as he stood there unable to speak.

Suddenly, all three of the strange men turned in unison and walked out the front door. Nothing further was said, it wasn't necessary, Alfrey understood their message clearly. He was to give up the boxes, his research, even his interest in Tesla if he wanted to remain out of harms way.

It was as if Alfrey was coming out of a trance, he realized what had happened and he rushed out the door to confront the men. But, they were nowhere to be seen. There was no car in the driveway and the street was completely empty. In fact, the entire neighborhood was eerily quiet. Even the birds had fallen silent. It was as if the world had paused for a moment, then continued on as if nothing had happened.

Alfrey rushed back into his house and locked the doors. He then went into his study where he kept the boxes and computer. The room was located at the back

of the house and had no separate entrance to the outside. It obviously wasn't needed, because all four boxes, the papers contained within and the computer disks were now all gone.

It was obvious that the three men were only a distraction while someone else silently entered the house and ransacked the study, removing everything that pertained to Nikola Tesla. This included separate books and magazine articles that Alfrey had collected while he was doing research on the matter.

Worse yet, not only were his papers missing, but his computer hard drive had been completely erased. Everything that he had on it, including items not related to Tesla, were destroyed.

All evidence that he had on Tesla and his missing journals were now gone forever. Alfrey refused to speak about his frightening incident for several months. He told no one what had happened, not even his wife. It was as if he was in a state of mental shock that perpetually clouded his mind.

Slowly he began to regain his senses and remember the details of that day. He recalled that the three men dressed exactly alike, were almost the same height, and all three had their hair cut short with odd looking long bangs that covered their foreheads.

The three men also had unnatural looking tanned skin. Almost like they had used a bottled tanner that dyes the skin a dark brown. Other than these peculiarities, the men appeared to be normal. It had not occurred to Alfrey that they could be something other than what they seemed. It was not until later, when relating this strange story that someone remarked about the MIBs.

Alfrey had never heard about the Men-In-Black. He had heard about the movie, but had not made the connection. After doing a little research and reading several books by the authors John Keel and Commander X, Alfrey was certain that he had received a visit from the Men-In-Black, or at least someone who wanted to look like the Men-In-Black.

This is where Dale Alfrey's strange story comes to an end. Everything that he had done connected to Nikola Tesla has been taken away from him. Fortunately, due to his spending hours reading the Tesla papers, he has retained a good memory of their contents. Not a perfect recollection, but sufficient to relate for this book.

Alfrey wonders if his boxes were the last of the missing belongings of Tesla. Or could others still remain forgotten somewhere, waiting to be rediscovered.

What Tesla Believed

Newspaper articles from the time of Tesla's death relate that possibly over a dozen large boxes of Tesla's notes were never found by the government. These could still be out there somewhere, waiting for some lucky individual to rediscover their lost secrets.

It can only be speculated on what would be found inside other forgotten boxes of notes and personal belongings, possibly the missing information concerning Tesla's secret battle with the government and his knowledge of alien life forms.

The papers that Dale Alfrey found revealed a side of Tesla not known to the public. Tesla apparently had spent a number of years trying to translate the mysterious signals he first heard in 1899.

His basic interpretation of these signals was that creatures from another planet, "Martials" as the slang of the day called them, were secretly here on Earth - They had infiltrated humankind for centuries - They had controlled events and people in order to lead mankind on a path of evolutionary development and essentially were responsible for human's being on the planet in the first place.

As well, Tesla discovered that the planets overall temperature was slowly increasing, what we know today as global warming. Tesla thought that this was being brought about by natural conditions, as well as manmade and extraterrestrial interference.

With this in mind, we can now see some of the reasons for Tesla's eccentric behavior in the later years of his life. Tesla became obsessed with creating devices to end warfare and join mankind against what he perceived as the common enemy of extraterrestrials. He often spoke about "Death Rays" and "Wingless Torpedo's" that could fly through the air without propellers or jets, possibly one of the earliest mentions of flying saucers.

Tesla also became interested in developing methods to create free energy from sources other than burning wood or fossil fuels. Tesla was obviously the first to realize the dire consequences that could await us if the greenhouse effect was to take place.

Unfortunately, Tesla's attempts to elevate humankind with new technology were met with laughter and derision. His letters about his concerns, sent to his friends in the government, were ignored. Tesla must have felt that he knew the biggest secret in the world concerning the fate of mankind, and nobody cared.

Chapter Two

Alien Signals in the Night

Excerpts From the personal memoirs of Nikola Tesla

The progressive development of man is vitally dependent on invention. It is the most important product of his creative brain. Its ultimate purpose is the complete mastery of mind over the material world, the harnessing of the forces of nature to human needs.

This is the difficult task of the inventor who is often misunderstood and unrewarded. But he finds ample compensation in the pleasing exercises of his powers and in the knowledge of being one of that exceptionally privileged class without whom the race would have long ago perished in the bitter struggle against pitiless elements. Speaking for myself, I have already had more than my full measure of this exquisite enjoyment; so much, that for many years my life was little short of continuous rapture.

I am credited with being one of the hardest workers and perhaps I am, if thought is the equivalent of labor, for I have devoted to it almost all of my waking hours. But if work is interpreted to be a definite performance in a specified time according to a rigid rule, then I may be the worst of idlers.

Every effort under compulsion demands a sacrifice of life-energy. I never paid such a price. On the contrary, I have thrived on my thoughts. In attempting to give a connected and faithful account of my activities in this story of my life, I must dwell, however reluctantly, on the impressions of my youth and the circumstances and events which have been instrumental in determining my career.

Our first endeavors are purely instinctive promptings of an imagination vivid and undisciplined. As we grow older, reason asserts itself and we become more and more systematic and designing. But those early impulses, though not immediately productive, are of the greatest moment and may shape our very destinies.

Indeed, I feel now that had I understood and cultivated instead of suppressing them, I would have added substantial value to my bequest to the world. But not until I had attained manhood did I realize that I was an inventor. This was due to a number of causes.

In the first place I had a brother who was gifted to an extraordinary degree; one of those rare phenomena of mentality which biological investigation has failed to explain. His premature and unexpected death left my parents disconsolate.

We owned a horse which had been presented to us by a dear friend. It was a magnificent animal of Arabian breed, possessed of almost human intelligence, and was cared for and petted by the whole family, having on one occasion saved my dear father's life under remarkable circumstances.

My father had been called one winter night to perform an urgent duty and while crossing the mountains, infested by wolves, the horse became frightened and ran away, throwing him violently to the ground.

It arrived home bleeding and exhausted, but after the alarm was sounded, immediately dashed off again, returning to the spot, and before the searching party were far on the way they were met by my father, who had recovered consciousness and remounted, not realizing that he had been lying in the snow for several hours.

This horse was responsible for my brother's injuries from which he died. I witnessed the tragic scene and although so many years have elapsed since, my visual impression of it has lost none of its force.

The recollection of his attainments made every effort of mine seem dull in comparison. Anything I did that was creditable merely caused my parents to feel their loss more keenly. So I grew up with little confidence in myself. But I was far from being considered a stupid boy, if I am to judge from an incident of which I still have a strong remembrance.

One day the Aldermen were passing through a street where I was playing with other boys. The oldest of these venerable gentlemen, a wealthy citizen, paused to give a silver piece to each of us. Coming to me, he suddenly stopped and commanded, "Look in my eyes."

I met his gaze, my hand outstretched to receive the much valued coin,when to my dismay, he said, "No, not much; you can get nothing from me. You are too smart."

My mother descended from one of the oldest families in the country and a line of inventors. Both her father and grandfather originated numerous implements for household, agricultural and other uses. She was a truly great woman, of rare skill, courage and fortitude. I owe so much to her good graces and inventive mind that I can still today see her wonderful features etched upon my mind.

The Inner Mind Made Real

In my boyhood I suffered from a peculiar affliction due to the appearance of images, often accompanied by strong flashes of light, which marred the sight of real objects and interfered with my thoughts and action. They were pictures of things and scenes which I had really seen, never of those imagined.

When a word was spoken to me the image of the object it designated would present itself vividly to my vision and sometimes I was quite unable to distinguish whether what I saw was tangible or not.

This caused me great discomfort and anxiety. None of the students of psychology or physiology whom I have consulted, could ever explain satisfactorily these phenomenon.

They seem to have been unique although I was probably predisposed as I know that my brother experienced a similar trouble. The theory I have formulated is that the images were the result of a reflex action from the brain on the retina under great excitation. They certainly were not hallucinations such as are produced in diseased and anguished minds, for in other respects I was normal and composed.

To give an idea of my distress, suppose that I had witnessed a funeral or some such nerve-wracking spectacle. Then, inevitably, in the stillness of night, a vivid picture of the scene would thrust itself before my eyes and persist despite all my efforts to banish it from my innermost being.

I also began to see visions of things that bore no resemblance to reality. It was as if I was being shown ideas of some cosmic mind, waiting to make real its conceptions.

If my explanation is correct, it should be possible to project on a screen the image of any object one conceives and make it visible. Such an advance would revolutionize all human relations. I am convinced that this wonder can and will be accomplished in time to come.

I may add that I have devoted much thought to the solution of the problem. I have managed to reflect such a picture, which I have seen in my mind, to the mind of another person, in another room.

To free myself of these tormenting appearances, I tried to concentrate my mind on something else I had seen, and in this way I would often obtain temporary relief; but in order to get it I had to conjure continuously new images.

It was not long before I found that I had exhausted all of those at my command; my "reel" had run out as it were, because I had seen little of the world - only objects in my home and the immediate surroundings.

As I performed these mental operations for the second or third time, in order to chase the appearances from my vision, the remedy gradually lost all its force. Then instinctively commenced to make excursions beyond the limits of the small world of which I had knowledge, and I saw new scenes.

These were at first very blurred and indistinct, and would flit away when I tried to concentrate my attention upon them. They gained in strength and distinctness and finally assumed the concreteness of real things.

I soon discovered that my best comfort was attained if I simply went on in my vision further and further, getting new impressions all the time, and so I began to travel; of course, in my mind. Every night, (and sometimes during the day), when alone, I would start on my journeys, see new places, cities and countries; live there, meet people and make friendships and acquaintances and, however unbelievable, it is a fact that they were just as dear to me as those in actual life, and not a bit less intense in their manifestations.

This I did constantly until I was about seventeen, when my thoughts turned seriously to invention. Then I observed to my delight that I could visualize with the greatest facility. I needed no models, drawings or experiments. I could picture them all as real in my mind.

Thus I have been led unconsciously to evolve what I consider a new method of materializing inventive concepts and ideas, which is radially opposite to the purely experimental and is in my opinion ever so much more expeditious and efficient.

The moment one constructs a device to carry into practice a crude idea, he finds himself unavoidably engrossed with the details of the apparatus. As he goes on improving and reconstructing, his force of concentration diminishes and he loses sight of the great underlying principle.

Results may be obtained, but always at the sacrifice of quality. My method is different. I do not rush into actual work. When I get an idea, I start at once building it up in my imagination. I change the construction, make improvements and operate the device in my mind.

It is absolutely immaterial to me whether I run my turbine in thought or test it in my shop. I even note if it is out of balance. There is no difference whatever; the results are the same.

In this way I am able to rapidly develop and perfect a conception without touching anything. When I have gone so far as to embody in the invention every possible improvement I can think of and see no fault anywhere, I put into concrete form this final product of my brain. Invariably my device works as I conceived that it should, and the experiment comes out exactly as I planned it.

In twenty years there has not been a single exception. Why should it be otherwise? Engineering, electrical and mechanical, is positive in results. There is scarcely a subject that cannot be examined beforehand, from the available theoretical and practical data.

The carrying out into practice of a crude idea as is being generally done, is, I hold, nothing but a waste of energy, money, and time. My early affliction had however, another compensation. The incessant mental exertion developed my powers of observation and enabled me to discover a truth of great importance.

I had noted that the appearance of images was always preceded by actual vision of scenes under peculiar and generally very exceptional conditions, and I was impelled on each occasion to locate the original impulse.

After a while this effort grew to be almost automatic and I gained great facility in connecting cause and effect. Soon I became aware, to my surprise, that every thought I conceived was suggested by an external impression. Not only this but all my actions were prompted in a similar way.

In the course of time it became perfectly evident to me that I was merely an automation endowed with power of movement responding to the stimuli of the sense organs and thinking and acting accordingly.

The practical result of this was the art of "teleautomatics" which has been so far carried out only in an imperfect manner. Its latent possibilities will, however be eventually shown. I have been years planning self-controlled automata and believe that mechanisms can be produced which will act as if possessed of reason, to a limited degree, and will create a revolution in many commercial and industrial departments.

I was about twelve years of age when I first succeeded in banishing an image from my vision by willful effort, but I never had any control over the flashes of light to which I have referred. They were, perhaps, my strangest and [most] inexplicable experience.

They usually occurred when I found myself in a dangerous or distressing situation or when I was greatly exhilarated. In some instances I have seen all the

air around me filled with tongues of living flame. Their intensity, instead of diminishing, increased with time and seemingly attained a maximum when I was about twenty-five years old.

While in Paris in 1883, a prominent French manufacturer sent me an invitation to a shooting expedition which I accepted. I had been long confined to the factory and the fresh air had a wonderfully invigorating effect on me.

On my return to the city that night, I felt a positive sensation that my brain had caught fire. I was a light as though a small sun was located in it and I passed the whole night applying cold compressions to my tortured head.

Finally the flashes diminished in frequency and force but it took more than three weeks before they wholly subsided. When a second invitation was extended to me, my answer was an emphatic NO!

These luminous phenomena still manifest themselves from time to time, as when anew idea opening up possibilities strikes me, but they are no longer exciting, being of relatively small intensity. When I close my eyes I invariably observe first, a background of very dark and uniform blue, not unlike the sky on a clear but starless night.

In a few seconds this field becomes animated with innumerable scintillating flakes of green, arranged in several layers and advancing towards me. Then there appears, to the right, a beautiful pattern of two systems of parallel and closely spaced lines, at right angles to one another, in all sorts of colors with yellow, green, and gold predominating.

Immediately thereafter, the lines grow brighter and the whole is thickly sprinkled with dots of twinkling light. This picture moves slowly across the field of vision and in about ten seconds vanishes on the left, leaving behind a ground of rather unpleasant and inert gray until the second phase is reached.

Every time, before falling asleep, images of persons or objects flit before my view. When I see them I know I am about to lose consciousness. If they are absent and refuse to come, it means a sleepless night.

During this period I contracted many strange likes, dislikes and habits, some of which I can trace to external impressions while others are unaccountable. I was fascinated with the glitter of crystals, but pearls would almost give me a fit.

After finishing the studies at the Polytechnic Institute and University, I had a complete nervous breakdown and, while the malady lasted, I observed many phenomena, strange and unbelievable.

Nikola Tesla - Born July 9/10, 1856

From Tesla's own writings we can observe that he had a unique mental capacity that few of his fellow human beings have ever hoped to achieve. It is no wonder that when Tesla was faced with an event as mind-shaking as the revelation that humans may not be alone in the universe, he faced it head on.

Tesla's atypical way of facing and dealing with the unknown has lead some to speculate that his true parentage may have originated from beyond this planet. This suggestion is not new, in fact, Tesla once confided to one of his personal assistants that he often felt that he was a stranger to this world.

Tesla was from a family of Serbian origin. Born in the village of Smiljan, Lika (Austria-Hungary) in what is now Croatia. Tesla's father was an Orthodox priest; his mother was unschooled but highly intelligent. A dreamer with a poetic touch, as he matured Tesla added to these earlier qualities those of self-discipline and a desire for precision.

Margaret Cheney, in her book: Tesla: Man out of time(1981), noted that Tesla as a child began to make original inventions. When he was five, he built a small waterwheel quite unlike those he had seen in the countryside. It was smooth, without paddles, yet it spun evenly in the current. Years later he was to recall this fact when designing his unique bladeless turbine.

Some of his other experiments were less successful. Once he perched on the roof of the barn, clutching the family umbrella and hyperventilating on the fresh mountain breeze until his body felt light and the dizziness in his head convinced him he could fly. Plunging to earth, he lay unconscious and was carried off to bed by his mother. Tesla would later write that this incident was the catalysis for his unusual visions.

In her book Return of the Dove, Margaret Storm states that Tesla was not an earth man. On page 71 of her privately printed book, she says that the space people related that a male child was born on board a spaceship which was on a flight from Venus to the earth in July, 1856.

The little boy was called Nikola. The ship landed at midnight, between July 9 and 10, in a remote mountain province in what is now Croatia. There, according to prior arrangements, the child was placed in the care of a good man and his wife, the Rev. Milutin and Djouka Tesla. Supposedly, the space people released this information in 1947 to Arthur H. Matthews of Quebec, Canada.

Alien Signals in the Night

Arthur H. Matthews was an electrical engineer who from boyhood was closely associated with Tesla. Matthews claimed that Tesla entrusted him with many tasks, including the Tesla interplanetary communications set that was first conceived in 1901, with the objective of communicating with the planet Mars. Tesla had suggested that he could transmit through the earth and air, great amounts of power to distances of thousands of miles.

"I can easily bridge the gulf which separates us from Mars, and send a message almost as easily as to Chicago." Due to pressures of other research at the time, the first working model was not built by Tesla until 1918.

In 1899, Nikola Tesla, with the aid of his financial backer, J.P. Morgan, set up at Colorado Springs an experimental laboratory containing high voltage radio transmission equipment. The lab had a 200 ft. tower for transmission and reception of radio waves and the best receiving equipment available at the time.

One night, when he was alone in the laboratory, Tesla observed what he cautiously referred to as electrical actions which definitely appeared to be intelligent signals. The changes were taking place periodically and with such a clear suggestion of number and order that they could not be traced to any cause then known to him.

Tesla elaborated on the subject of Talking With the Planets in Collier's Weekly (March 1901): "As I was improving my machines for the production of intense electrical actions, I was also perfecting the means for observing feeble efforts. One of the most interesting results, and also one of great practical importance, was the development of certain contrivances for indicating at a distance of many hundred miles an approaching storm, its direction, speed and distance traveled.

"It was in carrying on this work that for the first time I discovered those mysterious effects which have elicited such unusual interest. I had perfected the apparatus referred to so far that from my laboratory in the Colorado mountains I could feel the pulse of the globe, as it were, noting every electrical change that occurred within a radius of eleven hundred miles.

"I can never forget the first sensations I experienced when it dawned upon me that I had observed something possibly of incalculable consequences to mankind. I felt as though I were present at the birth of a new knowledge or the revelation

of a great truth... My first observations positively terrified me, as there was present in them something mysterious, not to say supernatural, and I was alone in my laboratory at night; but at that time the idea of these disturbances being intelligently controlled signals did not yet present itself to me.

"The changes I noted were taking place periodically and with such a clear suggestion of number and order that they were not traceable to any cause known to me. I was familiar, of course, with such electrical disturbances as are produced by the sun, Aurora Borealis, and earth currents, and I was as sure as I could be of any fact that these variations were due to none of these causes.

"The nature of my experiments precluded the possibility of the changes being produced by atmospheric disturbances, as has been rashly asserted by some. It was sometime afterward when the thought flashed upon my mind that the disturbances I had observed might be due to an intelligent control.

"Although I could not at the time decipher their meaning, it was impossible for me to think of them as having been entirely accidental. The feeling is constantly growing on me that I had been the first to hear the greeting of one planet to another. A purpose was behind these electrical signals"

This incident was the first of many in which Tesla intercepted what he felt were intelligent signals from space. At the time, it was surmised by prominent scientists that Mars would be a likely haven for intelligent life in our solar system, and Tesla at first thought these signals may be originating from the red planet. He would later change this viewpoint as he became more adept at translating the mysterious signals. Near the end of his life, Tesla had developed several inventions that allegedly could send powerful amounts of energy to other planets.

In 1937, during one of his birthday press conferences, Tesla announced: "I have devoted much of my time over the years to the perfecting of a new small and compact apparatus by which energy in considerable amounts can now be flashed through interstellar space to any distance without the slightest dispersion." (New York Times, July 11, 1937.)

Tesla never publicly revealed the technical details of his improved transmitter, but in his 1937 announcement, he revealed a new formula showing that "The kinetic and potential energy of a body is the result of motion and determined by the product of its mass and the square of its velocity. Let the mass be reduced, the energy is reduced by the same proportion. If it be reduced to zero, the energy is likewise zero for any finite velocity." (New York Sun, July 12, 1937, pg. 6.)

A Fear of Aliens

In the Tesla journals that he uncovered, Dale Alfrey noted that by the 1920's Tesla had grown confident that he was able to make sense of the strange radio broadcasts from space. However, soon afterwards, Tesla began to expressed great concerns about beings from other planets who had unsavory designs for planet Earth.

"The signals are too strong to have traveled the great distances from Mars to Earth," wrote Tesla. "So I am forced to admit to myself that the sources must come from somewhere in nearby space or even the moon. I am certain however, that the creatures that communicate with each other every night are not from Mars, or possibly from any other planet in our solar system."

Several years after Tesla announced his reception of signals from space, Guglielmo Marconi also claimed to have heard from an alien radio transmitter. However, Marconi was just as quickly dismissed by his contemporaries, who claimed that he had received interference from another radio station on Earth.

There is some public confirmation in the validity of the lost journals and Tesla's belief in extraterrestrials and the importance of communicating with them. As noted earlier, Arthur H. Mathews claimed that Tesla had secretly developed the Teslascope for the purpose of communicating with aliens. The late Dr. Andrija Puharich interviewed Matthews for the Pyramid Guide, May-June & July-Aug. 1978. This interview revealed for the first time Matthews connections to Tesla.

Arthur Matthews was born in England and his father was a laboratory assistant to the noted physicist Lord Kelvin back in the 1890s. Tesla came over to England to meet Kelvin... to convince him that Alternating Current was more efficient than Direct Current. Kelvin at that time opposed the AC movement.

In 1902, the Matthews family left England and immigrated to Canada. When Matthews was 16 his father arranged for him to apprentice under Tesla. He eventually worked for him and continued this alliance until Tesla's death in 1943.

"It's not generally known, but Tesla actually had two huge magnifying transmitters built in Canada," Matthews said. "I operated one of them. People mostly know about the Colorado Springs transmitters and the unfinished one on Long Island. I saw the two Canadian transmitters. All the evidence is there."

Matthews stated that the Teslascope is the thing Tesla invented to communicate with beings on other planets. There's a diagram of the Teslascope in Matthews

book, The Wall of Light. In principle, it takes in cosmic ray signals," Matthew's said. "Eventually the signals are stepped down to audio. Speak into one end, and the signal goes out the other end as a cosmic ray emitter."

Matthews' diagrams of the Teslascope make little electronic sense. No one has ever confirmed the reality of the device. Matthews claims, however, that he built a model Tesla Interplanetary Communications Set in 1947 and operated it successfully.

He suggested that due to the sets limited range, he was only able to contact spacecraft operating near the earth. He had hoped to someday build a set capable of communicating directly to the planets.

"Tesla had told me that beings from other planets were already here," related Matthews. "He was very afraid that they had been controlling man for thousands of years and that we were simply test subjects for an experiment of extremely long duration."

Matthews did not share in Tesla's convictions that aliens may not have the Earth's best interests in mind. His opinion was that if extraterrestrials were so advanced as to be able to travel from solar system to solar system, then they must also be socially advanced and peace-loving.

Matthews eagerness to continue experimenting with the Teslascope was indicative of the early days of the so-called "modern UFO era." By the 1950's, contactees such as George Adamski and Howard Menger were writing books and lecturing to eager believers about the almost god-like space brothers.

These UFO occupants claimed to be from almost every planet in the solar system, with Venus and Mars being especially favored. The space brothers preached a form of "New Age Space Religion," with Utopian descriptions of their home worlds and denouncement of mankind's warlike ways.

Tesla would certainly have felt vindicated by his earlier claims if he had lived long enough to experience the modern UFO era. He mentions in his journals his frustrating attempts to interest those in the government or military about his theories. Apparently Tesla's letters went unanswered - the question remains whether or not his ideas were seriously considered or if he was thought of as simply a crackpot.

Circumstantial evidence points to a certain amount of expectation by the United States when the first UFOs were sighted during WWII. It could be that Tesla's ideas had more impact, albeit secretly, than Tesla ever imagined.

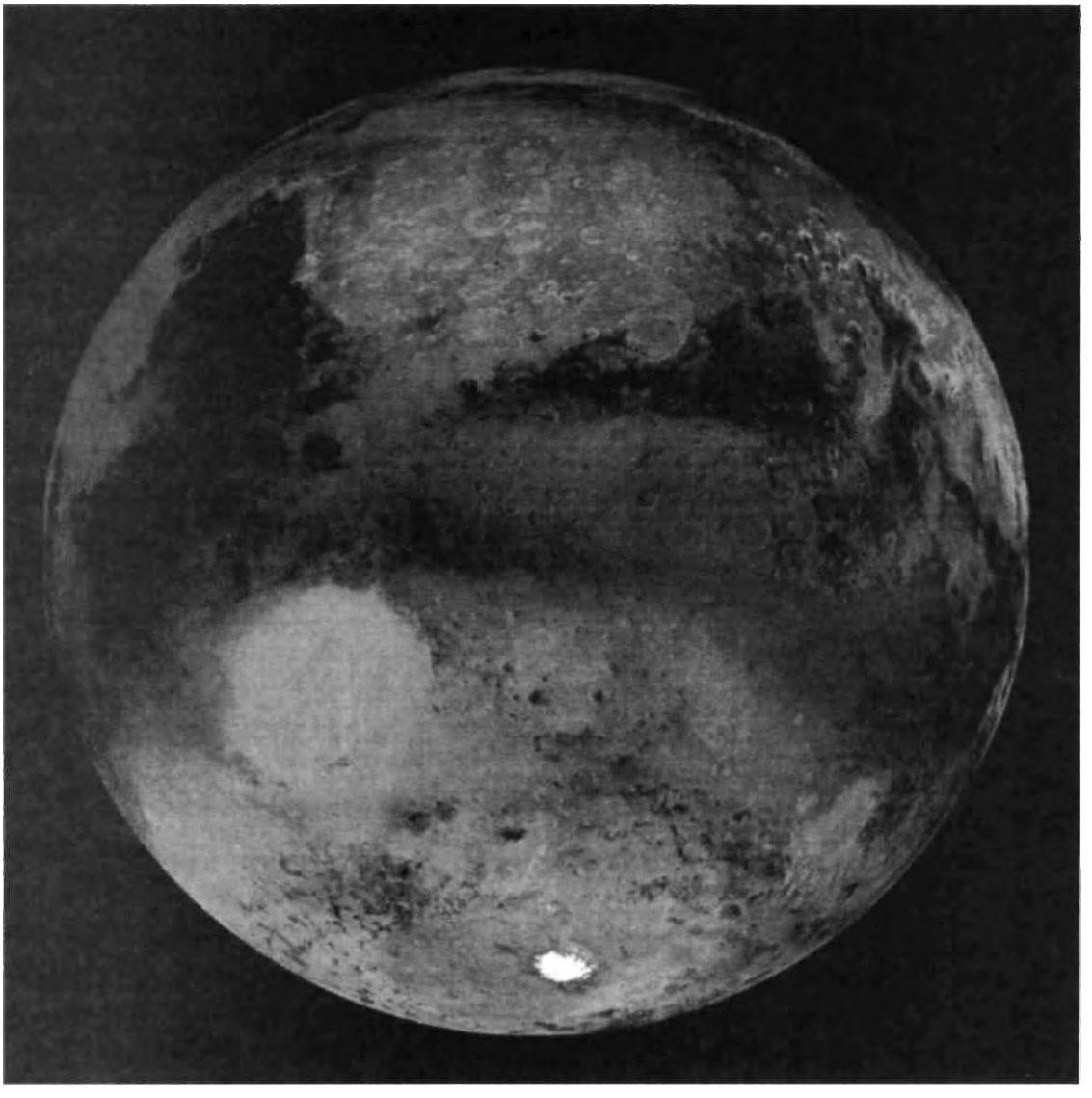

Nikola Tesla had suggested that he could transmit through the earth and air, great amounts of power to distances of thousands of miles. "I can easily bridge the gulf which separates us from Mars, and send a message almost as easily as to Chicago."

Chapter Three
Communicating With Other Planets

Robert A. Nelson in his article, Communicating with Mars: The Experiments of Tesla & Hodowanec, details the accidental communication with ET intelligences by L. G. Lawrence, the field manage of the ECOLA Institute. These communications could be the same types of signals received by Tesla at Colorado Springs in 1899.

On October 29, 1971, while conducting exploratory RBS [Remote Biological Sensing] experiments in Riverside County, California, the field organic transducer complex intercepted a train of apparently intelligent signals (tight spacing and discrete pulse intervals) while pointed at the constellation Ursa Major during a short rest period. The phenomenon continued for over 33 minutes.

A similar phenomenon was observed on April 10, 1972. The apparent signals, aside from growing weaker, appeared to be transmitted at great intervals ranging from weeks to months, possibly years. A faint, coherent, binary-type phenomenon was noted during aural monitoring. Intervals between rapid series of pulse trains ranged from three to ten minutes.

Because their equipment was shielded to electromagnetic radiation and found free of internal anomalies, the tentative conclusion of biological-type interstellar communications signals was favored.

Apparently the auditory part of the signal was unpleasant to hear, however, after multiple playbacks, the sound seemed to produce a type of enchantment to the listener. This was attributed to a psycho-acoustical adaptation.

The tape contained a short, incremental series of deep, harmonious oscillations resembling background modulations. An intelligent character of the overall pulse was applied by discrete spacing patterns, apparent repetitions of sequences, and highly attenuated Gaussian noise. {Borderlands, 1st Qtr., 1996, pp. 27-29).

Electrical engineer Greg Hodowanec has developed a theory of Rhysmonic Cosmology. He also experimented with a Gravity Wave Detector (GWD) of his own design. The simple devices detect "coherent modulations" in microwave radiation.

Hodowanec published his first report of SETI with Gravitational Signals using his GWDs (Radio Astronomy, April 1986): "The advantage of a possible gravitational technique for SETI over the radio technique is primarily one of time

of 'propagation' for these signals. The radio waves travel at the speed of light, but the gravitational signals (per the writer's theories) are essentially instantaneous signals. Another advantage of the gravitational technique is the simplicity of the instrumentation required. As SARA members know, radio astronomy can be quite complicated.

"The gravitational wave detectors must rely largely on the Earth's mass as a 'shadow' to enable the detection of gravitational radiation. Therefore, 'objects' or signals located in the observers' zenith are best detected. Yet, the other areas are still 'detectable' especially with the aid of other 'shadows' such as the sun, moon, planets, etc.

"Of particular interest to SETI observers may be the strange audio type gravitational signals which appear to come from the Auriga and Perseus region of our Galaxy. These 'signals' have been 'heard' by the writer for several years now, and generally range between about four and five hours right ascension, with a peak intensity near 4.5 hours R.A. The signals appear to be several 'tones.'"

In a letter written to Radio-Electronics Magazine on July 23, 1988, Hodowanec mentions a definite contact with an extraterrestrial source: "On the morning of this date, at 7:30 to 7:38 AM (EST), I recorded the following apparently Morse-Code like pulses: AAAARARTTNNNNKCNNN EEEEENENNTTTNEEEEEAEERKENNETEEAAAAE
E E N T T K N T N T S E S E S E S E M N A S E S E S E S E S E S E S E S E SE —

"As you can see, these do not appear to be just random pulses, but the SE signals, which are most prevalent, appear to be possibly an identification signal. These signals are detected in shielded 1/f detectors and thus are scalar (gravitational) in nature.

"The signals above (if they were extraterrestrial) came from either the Auriga-Perseus region near my zenith or the Bootes region under my Earth position. I still cannot rule out that they may just be due to Earth core movements of some sort which are remarkably like Morse code signals, or even the possibility that they are man-made."

By July 1988, Hodowanec had confirmed Tesla's claims, as he announced in Some Remarks on Tesla's Mars Signals: "Such signals are being received today with simple modern-day scalar-type signal detectors... coherent modulations are being 'heard' in [the microwave] background radiation. The most prominent

modulations being three pulses (code S) slightly separated in time, a la Tesla. On occasions, the code equivalents of an E, N, A, or K, are also heard, but the most persistent response is SE, SE, etc. Any 1/f type noise detector will respond to this background modulation. However, the experimenter must be careful that he is not creating these responses at the 'local' level by his own or other local actions.

"For example, the detectors will also respond to heart beats, breathing actions, local movements, as well as possible psychic effects. The detectors are easy to make and the experimenter should easily reproduce these results."

Further information by Hodowanec was released in a Cosmology Data Note (10-13-88): "Since about early August 1988, it was noticed that apparently 'intelligent signals' existed in these modulations [of the microwave background radiation]. It can be said that the intelligence was in the form of digital-type communication, e.g., dots and dashes, or ones and zeros.

"This type of communication may have been chosen by this 'unknown communicator' as it was conducive to the 'mass movement' form of longitudinal gravity signaling, as well as an easily recognizable universal system. This same method was proposed by the writer for a gravity system communication method.

"These 'signals' were noticed to be similar to the simpler International Morse Code symbols, primarily because they are the simplest way to present information in the pulse form. Thus, the 'letters' found in these transmissions are typically: E, I, T, M, A, N, R, K, S and O, as well as the comma and the wait signal. However, numbers are seen here as the simple series of pulses, e.g., 1 is one pulse, 2 is two pulses, 3 is three pulses, and so on.

"On August 26, 1988, after the writer had sent the message 'Greg Radio' during a local gravity signal transmission test, it was noticed that the letters G and D were apparently added to some of the received messages noted thereafter.

"The writer's first hard evidence that the above test message may have been intercepted by this unknown communicator was seen that on August 28, 1988, a strong and repeated message of the Greg Radio was received with the message finally terminated with the series SE (or 31).

"Further evidence that these may be actually communication attempts is seen in that on October 11, 1988... a very different approach was seen: A series of Greg Radio's was sent at about the normal code speed of about 5 words per minute, followed by KKTT, and then the series was repeated at a slower speed and also followed by KKTT.

"Another confirmation that these may be 'messages' appeared on October 12, 1988... Here, a series of A's and R's (with Greg Radio occasionally inserted) was then followed by Greg Radio sent as a series of five repetitions of each letter, e.g., Greg was sent as GGGGGRRRRREEEEEGGGGG.

"Sufficient 'messages have now been received to indicate that perhaps a serious attempt to contact this writer was being made by some 'unknown communicator'. While this communicator may yet be some terrestrial experimenter, the possibility still exists that the communicator may be 'extraterrestrial' for the following reasons:

"A. The messages are in simple code (e.g., dits and dahs) type of pulses which would be expected to be used if one intelligent civilization were to try to contact another civilization in terms of pulses. That some of the simplest pulse signals are similar to simple Morse Code signals is more than coincidence — they are both based upon the same premises>

"B. Numbers are not in the complicated Morse Code symbols, but are in simple sequence, using short pulses or dits.

"C. The 'communicator' has recognized the coherent nature of Greg Radio and is possibly using that sequence of codes in various fashions to indicate that a 'contact' has been made.

"D. The communicator thus far has not responded to 'word' messages or the amateur Q-code signals. Thus it is believed that while some apparently Morse Code signals are being used, the communicator is not really familiar with such usage, other than recognizing the coherent nature of the signals.

"E. Since these messages at present appear largely near the noon hour, they may be coming from a definite source in space. At present, it is believed to be from the general direction of the constellation, Andromeda, but not necessarily the Galaxy there.

"There is also some possibility that this communicator may be 'extraterrestrial', perhaps yet in our solar system (Mars?), but no further than our own Galaxy or

Local Group of Galaxies. This same communicator may have been trying to reach here ever since the turn of the century when Nikola Tesla reported the interception of scalar S signals!"

In February, 1989, Hodowanec wrote this brief, untitled report: "Without going into the details of how this was determined: ET may be on Mars!

"This, in spite of NASA's denial of any life forms on Mars [which situation changed in 1996]. This possibility has been recently suspected by the writer due to the apparently very close tracking of my position on Earth by ET. ET, of course, always knew that I was on Earth (as seen by his tracking), but now he has most emphatically confirmed that he is on the 4th planet from the sun, i.e., Mars!

"While this release is probably a bit premature, I am so positive of these gravity signal 'exchanges' that I will stick my neck out in this instance. ET on Mars is apparently much more advanced than we are here on Earth, and he may have even previously visited here on Earth, and possibly colonized here (but who are his possible descendants?).

"It is still a mystery on where ET may be living on Mars (possibly underground near the polar regions?), and why ET doesn't use EM wave signaling methods?? Perhaps, it is because Mars is so hostile now that ET must have developed a very sophisticated underground civilization which is not conducive to EM radiation systems?

"This material is being released now confidentially to but a very few active colleagues until further confirmations on this assertion are obtained."

In his Mars Flash Number One (3/28/89) and Number Two (3/30/89), Hodowanec notified colleagues that, "As the result of the continued gravity signal communications between GH Labs and the Martians, the following extraordinary facts have come to light.

"The exchanges are now being made in terms of short 'English' code words for certain items. For example, the Martians now understand that FACE means the human face, MAN means the human person, Earth now means our planet, and Mars means their planet! They had originally tried some of their terminology with me, but gave up except where it made sense to me. For example, I now know that TTT at the end of their names means person and OOTTAEERR is their name for the 10th planet!"

In a handwritten footnote to the above article, Hodowanec informed Nelson that the Martian's name is "AAAAAATTT": "He appears to 'understand' my

messages, even though I may have to repeat them in several ways so that he can 'see' the meaning.

"Communications between GH Labs and a Martian intelligence now continue with increasing progress since we have been able to establish over 50 simple expressions (most in simple English) for many of the common 'ideas' that we have. Martian AAAAAATTT is extremely adept in relating my English terminology to these common Earth-Mars observations.

"Mars has also confirmed that they are also 'men' with one 'head' that have two 'eyes' that 'see'. Also, they have one 'body' with two arms that have hands with five fingers each. Also they have two legs with two feet that have five toes each. I haven't been able to have them confirm the nose and mouth in the face, but that could be confirmed shortly, since those features appear in the FACE.

"Probably the most significant fact which was determined on this date seems to be that Mars is most emphatic that Earth men are like Mars men! This appears more and more that Mars has colonized Earth in the remote past! This could be true since we on Earth have never really found the 'missing link' between Earth humanoids and humans."

In a letter written in March, 1989 to Robert Nelson, Hodowanec states that "Generally, our contacts are limited to 20-30 minutes... since there appear to be other ETs out there interested in joining in also, and so there is some interference after a while. Some of these other ETs use other methods of communications such as tones and what appear to be guttural voices!

"ET is probably more advanced then we are on Earth. We no longer exchange simple arithmetic, and when I sent him Pi to five decimal places, he sent Pi back to seven decimal places immediately! We had discussed our nine planet solar system, but ET came back with ten planets, calling the 10th planet OOTTAEERR! When questioned on this, ET kept on confirming the existence of a tenth planet! He now knows the other nine planets by their Earth names! He also confirmed that Mars has two moons, the Earth one, and that Jupiter has nine major moons.

"These contacts are getting to be more interesting all the time, and ET appears to be most anxious to continue them. However, I just cannot spend too much time with him... I got across to him that I am just one person here communicating with him, and that the rest of Earth presently does not recognize the existence of any life on Mars.

"I have now had over 100 contacts with ET and can reach him at any time of day or night. We have also established some simple codes for acknowledgments and go ahead and respond. While we use these simple codes in many contexts, both ET and I now understand in which context they are being used!

"The Martians are apparently the advanced civilization, for they are the ones generating the 'modulated oscillated beam' which is now tracking my location on earth and is thus the means of our communications. [The beam is only about 15 miles in diameter here on Earth, but 1012 inches on Mars.]

"There is an apparent 'team' on Mars which is involved in these contacts. The original contact, ET Number One, with whom I have established the initial relationship, is apparently the most highly knowledgeable and advanced. The others who sometimes 'man' the Mars station appear to be less knowledgeable and some only request or acknowledge a transmission.

"Mars is most desperate to continue these contacts. The exchanges are made in many varied ways which cannot be readily predicted in order to convey the fact that these are real contacts

"Also, one can recognize the 'fist' of the one 'keying' these codes, e.g., ET Number One always sends clean letters or numbers, and identifies himself and me in some fashion. The other ETs on Mars usually don't. Therefore, no automation is being used here.

"While these contacts were originally due to a serendipitous circumstances, it is really the result if my gravitational communication experiments and thus a direct result from Rhysmonic Cosmology. And yet, however fantastic and unreal this may seem, it is real, and if also it is confirmed by one of you, it will be a major milestone in the history of mankind! Perhaps, if one of you finally 'hears' the modulations of 1/f noise background, you may try to establish your own contacts?"

Gregory Hodowanec has also had extreme reservations about the seriousness of the situation, which he expressed it in a letter dated April 4, 1989 to Nelson.

"... my 'contacts' with Mars continue with much information being exchanged. However, due to the increasingly astounding nature of these exchanges, I am now limiting further releases to only two long-time observers (witnesses) of my research efforts. This is being done so as not to jeopardize these contacts with unwanted notoriety or publicity in the media. There are now nine 'Mars Flashes' for the record. Perhaps, in the future, I may release some of these.

"...gravity signal communications are instantaneous, require extremely small energy expenditure, [unlike Tesla's experiments] and are so simple as to be just unbelievable by the average person. However, this is as far as I want to go with release of details at this time.

"I would appreciate that you keep this info somewhat confidential now. The Earth may not be ready for what I will have to say eventually. Nothing dire, just fantastic and thus perhaps unbelievable!"

Could It Really Have Been Mars?

Even though critics of Tesla laughed at his belief that he may have received radio broadcasts from Mars, astronomers and other scientists of Tesla's day were openly speculating on the reality of intelligent life on Mars. So just how far-fetched is it to consider that someone was sending signals to Earth from Mars?

Tesla never gave up the idea of communicating with other worlds. In 1931, on the occasion of his 75th birthday interview for the cover story of Time magazine, he said the following: "I think that nothing can be more important than interplanetary communication. It will certainly come some day, and the certitude that there are other human beings in the universe, working, suffering, struggling, like ourselves, will produce a magic effect on mankind and will form the foundation of a universal brotherhood that will last as long as humanity itself."

Since early man first looked up to the heavens, Mars' ruddy glow has been an object of fascination for generations of star gazers. The Babylonians said the planet was Nergal, God of War. To the Greeks, Mars was their war god, Ares.

The Roman god, Mars assumed many of the characteristics and myths of Ares, and was the second-highest-ranking god in the Roman pantheon. Mars loved violence and battle.

According to Homer, even Jupiter, the father of Mars, recognized his son's bad attitude, saying to him, "Of all the gods of Olympus, I find you the most unpleasant and unlikable, for you enjoy nothing but violence, war and battles. You have a stubborn and mean disposition."

In excavations at Nineveh in northern Iraq, there was discovered in the library of King Assurbanipal clay cylinders on which is described a voyage to the sky. It narrates how King Eitan, who lived about 5,000 years ago, was taken as an

honored guest on a flying ship in the shape of a shield which landed in a square behind the royal palace, rotating, surrounded by a vortex of flames. From the flying ship alighted tall, blond men with dark complexions dressed in white, handsome as gods, who invited King Eitan, to go for a trip.

In the middle of a whirlwind of flames, King Eitan went so high that the Earth with its seas, islands, continents, appeared to him as "a loaf in a basket." King Eitan in the flying ship reached Mars, Venus and the moon.

After two weeks absence, the flying ship glided over the city (Nineveh) and touched down surrounded by a ring of fire. King Eitan descended with some of the blond men who stayed as his guests for several days.

Of all the planets in the solar system besides Earth, Mars was thought to be the most likely to harbor intelligent life. Popular culture in the form of literature, radio and film, reflect such beliefs.

In 1659, Dutch astronomer Christiaan Huygens (1629-1695), used a telescope of his own design and drew the first sketch of Mars. Huygens also recorded the first true feature on Mars, a large dark spot, probably Syrtis Major.

Observing the spot in successive rotations, he deduced a 24 hour Martian day. In 1698, Huygens published COSMOTHEOROS, one of the earliest expositions on possible extraterrestrial life on the red planet. In this book, Huygens discusses what is required for a planet to be capable of supporting life and speculates about intelligent Martians.

Huygens' theories were ahead of his time as contemporary scientists loudly ridiculed the Dutch astronomer's work, calling into question his scientific integrity and past discoveries. It was not until years later that Huygens' early findings on Mars were confirmed by astronomers using more powerful and sophisticated telescopes.

The British Astronomer Frederick William Herschel (1738-1822), did various studies of Mars between 1777 and 1783 using small telescopes which he manufactured himself.

Herschel noted the seasonal changes of the polar caps and suggested they were made of snow and ice. He also speculated that vegetation may be growing during the Martian spring and summer. He wrongly considered that dark areas he had spotted to be oceans. Herschel believed that Mars was inhabited, he also felt there were intelligent beings living on all the planets, even in cool areas under the hot surface of the sun.

Communicating With Mars

The April 13, 1892 edition of the newspaper Spectator carried an article entitled, Telegraphing to Mars with solar signals. This was one of the first articles that dealt with the language difficulties involved in communicating with the Martials, (Martials was 19th century slang for Martians).

The article points out that mathematical information could be exchanged, but questions how we will communicate abstract concepts, such as "How are we to ask if Martials have engineers and ships, and electric lights and glaciers and five senses, and heads and feet?"

That same year, Nicloas Camille Flammarion published Volume one of his encyclopedia of La Planete Mars. Flammarion suggested the natural magnetism of the Earth might be harnessed to propagate sounds across space in order to communicate with life forms on Mars.

In 1877, Giovanni Schiaparelli observed and sketched what he referred to as Canali (Italian for channels) on the surface of Mars. Schiaparelli's drawings were remarkably extensive and soon drew worldwide attention.

In the early 1900's, Boston astronomer Percival Lowell corroborated and added to Schiaparelli's sketches, with his small telescope, Lowell took photographs of Mars that seemed to confirm the canals' existence.

Percival believed that Mars was covered with an intricate system of canals, not open water, but instead strips of vegetation along a subterranean irrigation system. The theory at the time was that the main water supply on Mars came from the polar ice caps. Seasonal melting would distribute water to the slowly dying planet through a grid of underground channels.

In 1954, when Mars made one of its close approaches to Earth, the National Geographic Society and Lowell Observatory arranged for the first worldwide "Mars Patrol." This effort, directed by Dr. Earl Slipher of the Lowell Observatory, attempted to gather better information and photographs of features on the surface of Mars.

The results once again seemed to show what appeared to be major canal lines across the surface of Mars, as well as evidence of vegetation that seemed to grow and then die back in connection to the Martian seasons. News of the photographs was leaked to astronomy journals such as Sky& Telescope, but the long-awaited public announcement of the "Mars Patrols" results never came.

Life On Mars

In a pamphlet titled, The Truth About Mars, written in 1956, author Ernest L. Norman claimed to have contacted the inhabitants of planet Mars. In his booklet, Norman stated that he would spend an hour each evening in meditation, and that due to his meditations he was contacted in February of 1955 by a man from Mars.

"After introducing himself as Nur El, he quickly explained that he was from the planet Mars, and that if I so desired, I could go there with him, to his city (in astral flight) and that he would be my personal guide.

"He explained that his people were very desirous in view of all the controversy going on, to clear up some of the so-called mysteries of Mars. Our trip there is a matter of split seconds as no craft is used or needed.

"Arriving on the surface of Mars, we are at once aware of the extremely rugged terrain, rocky hills and sandy wastes, that stretches out endlessly around us. Nur El explains that the ionosphere is very thin which leaves the surface almost unprotected from the various beta, gamma and cosmic rays. This high concentration of rays ionizes the very rare and gaseous atmosphere and together with thermal currents, creates terrific dust storms.

"There is also a very thinly divided dust layer on the ionosphere which helps create the reddish appearance of the planet. There are also a number of volcanoes, three of which are of major size; one of these was just barely visible on the horizon trailing a thin wisp of smoke from its truncated cone.

"It was also explained that as Mars has only seven degrees axis inclination there is not much of a seasonal change. Water is very scarce on this arid planet; most of the precipitation falls at the poles. Vegetation is also scarce."

Norman continues his story saying, "On Mars the cities are all underground and are connected together by huge oval metal tubes from three to five hundred feet in diameter. It is these tubes which have confused the astronomers on the earth. Some believe them to be canals of either intelligent design, or using natural features to transport scarce water throughout the planet.

"The shifting desert sands often cover or uncover them which leads to further confusion inasmuch as they seem to appear and disappear. The people of Mars are smaller than those on earth, only averaging about four feet six inches in height.

"They are somewhat Mongolian in appearance. The Martians originally migrated in spacecraft to Mars from a dying planet more than a million years ago. They also came to this earth and started a colony but found it impractical to maintain. It was also explained by Nur El that this colony became our Chinese race through the evolution of time."

The Martians explained to Norman that more than 100,000 years ago Mars was much like Earth. There was air, water, and an abundance of plant and animal life.

At that time, through their occult science and also with their superior telescopes they saw, somewhere out in space, a cataclysm take place. A giant sun suddenly flared up like a nova and then exploded. Huge chunks hurtled out into space in different directions, each one a smaller, white-hot, "atomically-burning sun."

It was determined by calculations, that one of these fiery pieces would pass very close to our solar system. The Martians had a choice, to stay on Mars or to migrate to another planet far away from this solar system. After a search, it was found that there was no other planet available which would be suitable. So an alternative was decided upon. They could build huge cities underground.

After the cataclysm struck the solar system, Mars was left decimated and burnt. Earth as well suffered, there were great earthquakes and tidal waves as Earth's orbit and axis were changed drastically.

Ernest Norman's story, while similar to other esoteric writings of the time, is interesting because of his observations of climatic conditions on Mars that were not known by scientists in the 1950's. His statement concerning volcanoes on Mars was truly prophetic considering that at the time his booklet was written, Mars was not considered to have been seismically active.

With the advancement of modern rockets, Mars became one of the first planets to receive the attention of space probes sent from Earth. Mars, though, has not been an easy planet to reach.

In November of 1962, The Soviets launched a Mars probe, called Mars 1, which was to rendezvous with the planet in June of 1963. However, just ten weeks before the scheduled encounter, the Soviets lost contact with the spacecraft. Three years later the Soviets launched another probe called Zond 2, which was set to fly by Mars. This probe as well lost contact with Earth in April 1965.

In 1969, the United States sent the Mariner 7 probe to the red planet. In 1970 the probe lost radio communications with Earth, started tumbling out of control, its battery went dead, and the spacecraft's velocity increased.

Mysteriously, a few hours later Mariner 7 suddenly ceased tumbling, radio communications were restored and the spacecraft's velocity returned to normal, despite the fact that its rocket system was inoperative. Nervous scientists began joking about "The Great Galactic Ghoul" lying in wait for unsuspecting spacecraft to fly by.

The term Great Galactic Ghoul was named by Time Magazine correspondent Donald Neff following the strange events surrounding the flight of Mariner 7. "The legend of the Great Galactic Ghoul is like the legend of the Bermuda Triangle," commented John Casani of the Jet Propulsion Laboratory.

The Soviets as well continued to lose Mars probes. On July 12, 1988 the USSR launched Phobos II, an unmanned satellite to Mars. It arrived in January 1989 and entered an orbit around Mars as the first phase towards it's real destination, the small Martian moon called Phobos.

The mission was flawless until the craft aligned itself with the moon. On March 28, 1989 an elliptical object was detected moving towards the satellite seconds before it lost communication with Earth. All indications were that the elliptical object had possibly attacked the satellite which was now dead and left spinning out of control.

On March 28, 1989, Tass, the official Soviet news agency stated: "Phobos II failed to communicate with Earth as scheduled after completing and operation yesterday around the Martian moon Phobos. Scientists at mission control have been unable to establish stable radio contact."

The next day a top official of the Soviet Space Agency (Glavkosmos) said: "Phobos II is 99% lost for good."

On March 31, 1989 headlines dispatched by the Moscow correspondents of the European News Agency (EFE) stated: "Phobos II Captured Strange Photos of Mars Before Losing Contact With It's Base. Vremya revealed yesterday that the space probe Phobos II, which was orbiting above Mars when Soviet scientists lost contact with it on Monday, had photographed an UNIDENTIFIED OBJECT on the Martian surface seconds before losing contact."

Scientists described the unidentified object as a thin ellipse 20 kilometers long. It was further stated that the photos could not be an illusion because it was captured by two different color cameras as well as cameras taking infrared shots.

One controller at the Kaliningrad control center concluded that the probe was now spinning out of control. It would seem that something struck or shot the

Phobos II Probe. In the October 19, 1989 issue of Nature magazine, Soviet scientists concluded that the craft could be spinning because it was impacted by some unknown object.

Recent attempts to reach Mars have also met with mysterious and frustrating failures. On September 23 1999, nine months of space flight to Mars ended in disaster when NASA's first interplanetary weather satellite was destroyed. It is thought that the Mars Climate Orbiter entered Mars' atmosphere at too steep an angle and broke up or burned in the atmosphere.

The 1,387 pound orbiter was believed to have come within 37 miles of Mars' surface. Project manager Richard Cook, of NASA's jet propulsion laboratory, said: "We believe the spacecraft came in at a lower altitude than we predicted."

Ten weeks later, in early December, the Mars Polar Lander and its two detachable probes, mysteriously disappeared after what was thought to be an almost flawless mission. The final communication from Mars Polar Lander prior to landing indicated it was on course and working fine.

The spacecraft turned its antenna away from Earth, 12 minutes before landing to orient itself for entry into the Martian atmosphere. Its last radio signals arrived at Earth 14 minutes later, at 3:03 p.m. ET.

The $165 million NASA probe was designed to slice through Mars' thin atmosphere at a 12.25-degree angle, the margin of error was just half a degree, separate from its heat shield, deploy a parachute and fire a dozen thrusters before setting down — all without radio contact with Earth.

After touching down, the lander was to have unfurled its solar panels and deployed its antenna, and a few minutes later, radioed a message back to Earth. Also silent were the two basketball-size Deep Space 2 microprobes that were riding along with the lander.

The microprobes were to slam into the planet at 400 mph as the main spacecraft descended, their fall unbroken by parachutes or thrusters. NASA controllers did not receive any signals from the two microprobes during the contact opportunities.

To this day, nothing was ever heard from the Polar Lander or its separate probes. While NASA was accused of covering up earlier reports that the Mars mission was doomed from the start due to human errors - the ultimate fate of the Polar Lander is shrouded in mystery.

It is almost as if someone or something is deliberately trying to stop our space probes from reaching Mars. This scenario on the surface seems absurd, but is it?

Civilizations On Mars

In 1959 a Martian spacecraft reportedly landed in the wilderness outside of Moscow, in the Soviet Union, where a secret meeting with Soviet Premier Nikita Kruschev was arranged. The conference regarded improving relations with Earth, exchanging knowledge, and securing world and interplanetary peace, yet the Soviet government rejected the terms. This report originated from Sgt. Willard Wannall, formerly of Army Intelligence, who investigated UFOs in Hawaii while in the military in the 1950's.

On April 24, 1964, an oval shaped metallic flying object landed in a farm field in Newark Valley in New York State, and two alien beings emerged from the estimated 20 foot long craft. Farmer, Gary Wilcox drove his tractor toward the object clearly visible on a bright sunny day. The farmer kicked the metallic object to make sure it was real.

The two occupants were about four feet tall, and they carried a square tray full of the different vegetables they had collected from his farm. Wilcox reported that when he confronted the beings stealing his crops, they said: "Don't be alarmed, we have spoken to people before."

Gary described the voices as being very strange. They wore white, metallic-looking overalls without seams, stitching or pockets. He could not see their hands or feet. Nor could he see their faces beneath the full space-suits, which Wilcox speculated were protecting these aliens from the poisons in Earth's atmosphere.

As Wilcox became inquisitive, one of them stated: "We are from what you know as the planet Mars. We can only come to Earth every two years," and left a warning that Earth people should stay out of space. They said that they were studying the organic materials on Earth because of the rocky structure of Mars, and that they did not fly near our cities because they avoided the air pollution.

Wilcox gave the beings a bag of fertilizer and exchanged information about agriculture and mankind's attempts at spaceflight. Wilcox was later investigated by a psychiatrist and the sheriff department, who found him a normal, truthful person with no apparent emotional problems.

In February 1972, United Nations diplomat Farida Iskiovet, who investigated UFOs and occupant contacts for the President of the General Assembly, revealed that she had been contacted by a landed spacecraft from the planet Mars. The

reported contact took place in the Mojave Desert, in California, in 1971, and made the front page" of the major Arizona newspaper the daily Arizona Republic.

This story also made the front page of the San Clemente Sun-Post in an article written by Fred Swegles. Farida stated that the alien offered to admit an ambassador to their interplanetary confederation in this solar system, in exchange for an alien ambassador to the General Assembly of the United Nations.

Allegedly, this was an attempt to re-establish diplomatic relations with Earth and other planets that had been suspended in ancient times due to hostility on Earth. However, the terms of this peace arrangement were not acceptable to the Security Council, and the exchange was allegedly rejected in a secret meeting.

Tesla may have been the first to hear strange radio transmissions from space, but he certainly was not the last. Some of the world's leading astronomers have revealed that they have collected more than 100 unexplained radio signals during routine surveillance of space.

These faint, pure tones have no natural origin and could have been created artificially, the scientists said. They do not rule out the astonishing possibility that this strange radio traffic could have extraterrestrial origins.

Most of the signals have been picked up by American radio telescopes managed by the Search for Extra-Terrestrial Intelligence Institute (SETI) in Mountain View, California, set up in 1988 to study radio static in space and scan it for material that could be evidence of alien contact. A few have also been logged by British astronomers studying stars and galaxies with the Lovell telescope at Jodrell Bank, near Macclesfield in Cheshire.

"It's tempting to hypothesize that at least some of these seductive signals were truly from ET and that they vanished from the ether when the extraterrestrials turned off their transmitters or otherwise went off air before we could verify the message," said Dr Seth Shostak, SETI's public programs scientist.

Alternatively, he said, it was possible they were simply the product of some kind of local interference that did not repeat when the astronomers tried to relocate the rogue signals.

SETI, which was formed by scientists including Carl Sagan and received funding from NASA until 1993, has reportedly yet to discover any clear, repeated radio pattern that might hint at the existence of alien intelligence in the universe. The short, indistinct signals are not considered good evidence of ET.

"If you could hear the signal at the frequency it is received, it would sound like a faint whistle, a pure tone which could only be made by a transmitter. As far as we know, nature can't make a pure sound," said Shostak. Each time one of these signals is detected by a radio telescope, an alarm alerts SETI astronomers, who work around the clock. None has yet been pinpointed or recorded a second time, so that scientists have been denied the chance of making a study of their source or composition.

"I'm sure there are signals that have come and gone that we couldn't get to the bottom of. That's not to say it's little green men trying to communicate with us, but we just don't know," said Dr Tom Muxlow, an astronomer at the British radio astronomy observatory. He disclosed that Jodrell Bank had picked up about six rogue signals.

The possibility that the signals have extra-terrestrial origins cannot be ignored, according to Nobel laureate Tony Hewish, emeritus professor of radio astronomy at Cambridge University. In 1967 Hewish and Jocelyn Bell, a student, believed they had found evidence of an alien first contact when they detected a regular pulse of radio signals coming from a distant star.

"It all had an air of unreality about it, but for a month we thought it was possible that the signals were coming from intelligent life on another planet. When radio astronomers pick up signals that are very peculiar they take it with a big pinch of salt, but you cannot remove the possibility," said Hewish. Instead, they had found a pulsar, a rapidly spinning neutron star, a discovery for which Hewish won a Nobel prize in 1974.

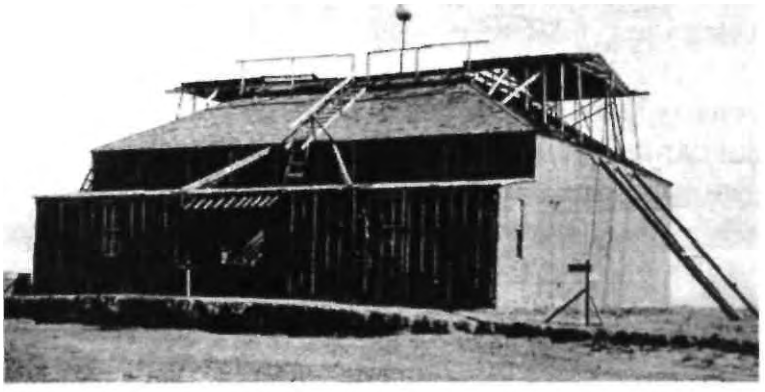

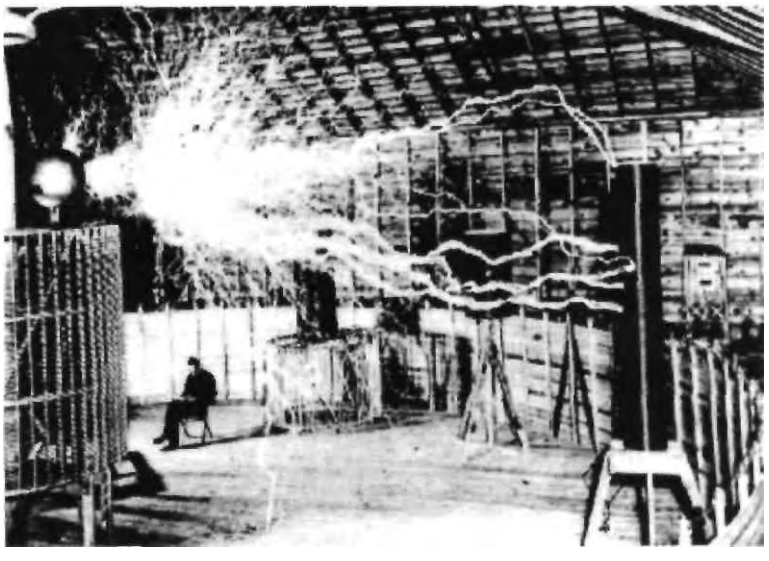

During experiments at Colorado Springs in 1899, Tesla began to receive radio signals of a highly unusual nature. He would later write: "Although I could not at the time decipher their meaning It was Impossible for me to think of them as having been entirely accidental. The feeling is constantly growing on me that I had been the first to hear the greeting of one planet to another. A purpose was behind these electrical signals."

Chapter Four

Extraordinary Experiences

Much has been made over Tesla's amazing ability to visualize images from his mind. This talent came mostly involuntarily and often at inopportune moments. When he was younger, Tesla worried that he was suffering from some sort of madness when his visions would appear. Later he came to realize that this particular trait was a gift and the basis of all his inventions.

Tesla's visions were so vivid that he was sometimes unsure of what was real and what imaginary. Strong flashes of light often accompanied these images. He would wave his hand in front of his eyes to determine whether the objects were simply in his mind or outside.

In 1919, Tesla wrote of these images and of his efforts to find an explanation for them. He had consulted with several doctors and psychologists, but no one was able to help.

"The theory I have formulated is that the images were the result of a reflex action from the brain on the retina under great excitation. They certainly were not hallucinations, for in other respects I was normal and composed.

"To give and idea of my distress, suppose that I had witnessed a funeral or some such nerve wracking spectacle. Then, inevitably, in the stillness of the night, a vivid picture of the scene would thrust itself before my eyes and persist despite all my efforts to banish it. Sometimes it would even remain fixed in space though I pushed my hand through it."

It is well known that Tesla's conception of his AC (alternating current) motor came to him during one of his visions. "One afternoon ... I was enjoying a walk with my friend in the city park and reciting poetry. At that age I knew entire books by heart, word for word. One of these was Goethes Faust. The sun was just setting and reminded me of a glorious passage: The glow retreats, done is the day of toil; It yonder hastes, new fields of life exploring; Ah, that no wing can lift me from the soil Upon its tract to follow, follow soaring!

"As I uttered these inspiring words the idea came like a flash of lightning and in an instant the truth was revealed. I drew with a stick on the sand the diagram shown six years later in my address before the American institute of Electrical Engineers.

"The images were wonderfully sharp and clear and had the solidity of metal. 'See my motor here; watch me reverse it.'"

Tesla used his incredible power throughout his amazing career. He disliked drawing his conceptions down onto paper because they lacked the reality that Tesla's internal drawing board could provide. For Tesla, drawing was utterly unrealistic and a nuisance.

He did not have to make plans and jot down dimensions, because of this power of instant recall. He could store any designs in his mind to be retrieved intact years later.

Despite his unusual abilities, Tesla at first had little patience with those who believed in psychic powers or spirits. Tesla often denied that he had supernatural powers or origins from beyond the earth. Such allegations, along with his conviction in the reality of extraterrestrials, almost certainly hurt Tesla's reputation later in his life.

Tesla felt so strongly about such claims that he frequently wrote about his frustrations with people who wanted to believe that he was more than an ordinary human being.

"The by far greater number of human beings are never aware of what is passing around and within them and millions fall victims of disease and die prematurely just on this account. The commonest, everyday occurrences appear to them mysterious and inexplicable.

"One may feel a sudden wave of sadness and rack his brain for an explanation, when he might have noticed that it was caused by a cloud cutting off the rays of the sun. He may see the image of a friend dear to him under conditions which he construes as very peculiar, when only shortly before he has passed him in the street or seen his photograph somewhere.

"When he loses a collar button, he fusses and swears for an hour, being unable to visualize his previous actions and locate the object directly. Deficient observation is merely a form of ignorance and responsible for the many morbid notions and foolish ideas prevailing.

"There is not more than one out of every ten persons who does not believe in telepathy and other psychic manifestations, spiritualism and communion with the dead, and who would refuse to listen to willing or unwilling deceivers?

"Just to illustrate how deeply rooted this tendency has become even among the clear-headed American population, I may mention a comical incident. Shortly

before the war, when the exhibition of my turbines in this city elicited widespread comment in the technical papers, I anticipated that there would be a scramble among manufacturers to get hold of the invention and I had particular designs on that man from Detroit (Ford) who has an uncanny faculty for accumulating millions.

"So confident was I, that he would turn up some day, that I declared this as certain to my secretary and assistants. Sure enough, one fine morning a body of engineers from the Ford Motor Company presented themselves with the request of discussing with me an important project.

"Didn't I tell you?, I remarked triumphantly to my employees, and one of them said, 'You are amazing, Mr. Tesla. Everything always comes out exactly as you predict.'

"As soon as these hard-headed men were seated, I of course, immediately began to extol the wonderful features of my turbine, when the spokesman interrupted me and said, 'We know all about this, but we are on a special errand. We have formed a psychological society for the investigation of psychic phenomena and we want you to join us in this undertaking.'

"I suppose these engineers never knew how near they came to being fired out of my office. Ever since I was told by some of the greatest men of the time, leaders in science whose names are immortal, that I am possessed of an unusual mind, I bent all my thinking faculties on the solution of great problems regardless of sacrifice.

"For many years I endeavored to solve the enigma of death, and watched eagerly for every kind of spiritual indication. But only once in the course of my existence have I had an experience which momentarily impressed me as supernatural.

"It was at the time of my mother's death. I had become completely exhausted by pain and long vigilance, and one night was carried to a building about two blocks from our home.

"As I lay helpless there, I thought that if my mother died while I was away from her bedside, she would surely give me a sign. Two or three months before, I was in London in company with my late friend, Sir William Crookes, when spiritualism was discussed and I was under the full sway of these thoughts.

"I might not have paid attention to other men, but was susceptible to his arguments as it was his epochal work on radiant matter, which I had read as a

student, that made me embrace the electrical career. I reflected that the conditions for a look into the beyond were most favorable, for my mother was a woman of genius and particularly excelling in the powers of intuition.

"During the whole night every fibre in my brain was strained in expectancy, but nothing happened until early in the morning, when I fell in a sleep, or perhaps a swoon, and saw a cloud carrying angelic figures of marvelous beauty, one of whom gazed upon me lovingly and gradually assumed the features of my mother. "The appearance slowly floated across the room and vanished, and I was awakened by an indescribably sweet song of many voices. In that instant a certitude, which no words can express, came upon me that my mother had just died. And that was true.

"I was unable to understand the tremendous weight of the painful knowledge I received in advance, and wrote a letter to Sir William Crookes while still under the domination of these impressions and in poor bodily health.

"When I recovered, I sought for a long time the external cause of this strange manifestation and, to my great relief, I succeeded after many months of fruitless effort. I had seen the painting of a celebrated artist, representing allegorically one of the seasons in the form of a cloud with a group of angels which seemed to actually float in the air, and this had struck me forcefully.

"It was exactly the same that appeared in my dream, with the exception of my mother's likeness. The music came from the choir in the church nearby at the early mass of Easter morning, explaining everything satisfactorily in conformity with scientific facts."

As Tesla grew older, he became more interested in spirituality and mankind's place in the universe. Tesla had remarked once about inventing a machine that could project human thoughts onto a screen, much like a modern television. This idea would continue to be on his mind up until the time of his death.

Dale Alfrey remembers several notations concerning Tesla's ideas on the nature of the human spirit and whether it continues on after physical death. Tesla had been brought up in a religious environment - but he had become more "humanistic" in his attitudes and considered physical life to be no more than a "automation of nature."

"Tesla became more open to the idea that there is a spirit or soul that continues in another plane of existence after death," recalls Alfrey. "At one point Tesla chided Edison for stealing his idea on using a form of radio to contact the dead."

Voices in the Aether

After his initial reception of enigmatic radio signals in 1899, Tesla worked for many years to perfect the receiving and transmitting equipment that was needed to better pick up and translate the possible alien broadcasts. At first the signals were nothing more than rhythmic sounds, almost a morse code type of transmission he reported.

Around 1918, Tesla started to receive what he considered to be voice transmissions, except the voices he was picking up were not human. Instead, Tesla wrote that - "The sounds I am listening to every night at first appear to be human voices conversing back and forth in a language I cannot understand. I find it difficult to imagine that I am actually hearing real voices from people not of this planet. There must be a more simple explanation that has so far eluded me."

In 1925 Tesla wrote that - "I am hearing more phrases in these transmissions that are definitely in English, French and German. If it were not for the fact that the frequencies I am monitoring are unusable for terrestrial radio stations, I would think that I am listening to people somewhere in the world talking to each other. This cannot be the case as these signals are coming from points in the sky above the Earth."

Nikola Tesla may have been one of the first to receive strange radio signals that he thought were from beyond Earth, but he certainly wasn't the last. It is now known in the journals of Fortean that mysterious messages claiming extraterrestrial origins are being received repeatedly by ordinary, household electronics. Startled witnesses have reported strange signals emanating from turned off televisions and radios, as well as weird phone calls filled with electronic sounds and whispering voices.

In the early days of radio experimentation, hobbyists were amazed when their primitive sets would suddenly burst forth with strong, clear signals, far more powerful then any existing station at the time. The signals have often been explained away as normal radio interference caused by the weather or other natural sources.

In 1965, Soviet scientists Gennady B. Sholomitsky, Nikolai Kardashev and I. S. Shklovskii, received world wide attention when they announced that they had received radio signals from beacons of some super-civilization in space. These signals, they said, were ordered and indicative of interplanetary intelligence.

Later, other radio astronomers discovered that these signals were coming from celestial bodies that we now know as quasars. Other strange radio signals have not been as easily explained.

Dr. Hugh Mansfield Robinson, conducting a set of radio experiments in 1921, received intelligent signals on the thirty-thousand-meter wavelength. Ernest B. Rogers, the engineer in charge of the test felt compelled to state that "the signals were of extraterrestrial origin, as there were no sending instruments of that power on Earth at that time."

An amateur radio astronomer named Grote Reber reported receiving strong dot-and-dash signals from space in 1939. He had build a thirty-foot dish antenna in Wheaton, Illinois and said he often listened to the signals for eight hours at a time. They seemed to come from one specific spot in the sky. None of these early, mysterious signals have ever been explained.

Long Delayed Echoes

Radio enthusiasts in the 1920s discovered a phenomenon which they labeled LDE (Long Delayed Echoes). Signals sent out from earth sometimes came bouncing back several seconds later, as if they had been reflected back by something in space. In a few instances some LDEs returned days, months, even years later. Researchers in Europe reported LDE's in 1927, 1928 and 1934. The echo pulses were delayed from three to fifteen seconds.

Dr. Ronald N. Bracewell of Stanford University speculated in 1962 that an alien satellite equipped with a computer which would scan all radio frequencies as it traveled through space, could be responsible for the strange LDEs. The satellite would pick up intelligent signals, record them and then rebroadcast it back on the same frequency.

Suppose, he thought, that the satellite was programmed so that if the message was returned again, indicating the system was understood, it would then transmit a message of its own. The LDEs of the 1920s could have come from such a satellite suggested Bracewell.

In the weekly scientific journal Nature, there appears in the issue of November 3, 1928, a letter written by one Jorgen Hals, a radio engineer of Bygodo, Oslo, to physicist Carl Stormer.

"At the end of the summer of 1927 I repeatedly heard signals from the Dutch short-wave transmitting station PCJJ at Eindhoven. At the same time as I heard these I also heard echoes. I heard the usual echo which goes round the Earth with an interval of about l/7th of a second as well as a weaker echo about three seconds after the principal echo had gone.

"When the principal signal was especially strong, I suppose the amplitude for the last echo three seconds later, lay between 1/10 and 1/20 of the principal signal in strength. From where this echo comes I cannot say for the present, I can only confirm that I really heard it."

Stormer initiated certain tests as a result of this communication and on October 11, 1928, these achieved some success. During the afternoon of that day Station PCJJ in Eindhoven emitted very strong signals on 31.4 meters.

Both Hals and Stormer heard very distinct echoes several times, the interval between signal and echo varying between three and five seconds, most of them coming back about eight seconds after the principal signal. Sometimes two echoes were heard with an interval of about four seconds.

Physicist Van der Pol confirmed these observations in a telegram that read: "Last night special emission gave echoes here varying between three and 15 seconds. 50% of echoes heard after eight seconds!"

At the time these peculiarly long echoes were attributed by Stormer to auroral causes but the feeling today is that they have never been adequately explained. Six years later, in 1934, radio echoes of a similar kind from Holland were also heard.

A young Scottish astronomer named Duncan Lunan reviewed the LDE records of the 1920s and set out to decode them. He laid out the LDE data on a graph, using dots to represent the pauses between echoes. To his astonishment, a map began to take shape.

"The dots made up a map of an easily-recognized constellation," Lunan said. "The Constellation of Bootis in the northern sky. The curious pattern of delayed echoes was actually a pattern of star positions." Lunan worked up other LDE maps and found that they all seemed to center around Epsilon Bootis, a star in the constellation.

Lunan speculated that the LDEs were indicating that the point of origin for the alien satellite was the star system Epsilon Bootis. Lunan submitted his findings to the British Interplanetary Society. Kenneth Gatland, vice president of the society was enthusiastic about Lunan's findings.

"Lunan's findings are utterly astounding. I have studied the maps and must come to the same conclusions he did."

Unusual radio broadcasts are often reported in areas of high UFO activity. In January, 1954, people throughout the Midwest heard a voice coming through turned-off radios.

The voice, speaking in a dull monotone, stated: "I wish no one to be afraid, although I speak from space. But if you do not stop your preparations for war, you will be destroyed." This type of unusual broadcast has been heard by startled listeners worldwide. No earthly hoaxer was ever been caught or confessed.

On August 3, 1958, radio ham operators throughout the United States reportedly picked up a strange broadcast on the seventy-five-meter international band. A male voice claiming to be "Nacoma from the planet Jupiter" warned his listeners that the atomic bomb tests could lead to disaster. The voice spoke for two-and-a-half hours in English, German, Norwegian and his own language, described as a kind of musical gibberish.

"It was the most powerful signal ever picked up," one account said. 'There was plenty of time during the broadcast for hundreds to listen, and radio operators called in friends and neighbors and phoned long distance to relatives in other states to listen in."

Author John Keel wrote in the September, 1977 issue of UFO Reportthat while in West Virginia, he visited a radio hobbyist and listened to strange sounds on a homemade VLF (Very Low Frequency) radio set.

"Strange voices were chattering back and forth on frequencies that supposedly cannot carry voice transmission. They spoke in a rapid-fire guttural language we could not identify. At first I thought it might be ordinary people speaking through a 'scrambler.' but later I sought out and listened to samples of voice transmissions through different kinds of scramblers and there was no similarity."

According to the Spanish newspaper El Diario De Nueva York, on January 31, 1950, UFO activity over Madrid, Spain was accompanied by unusual radio broadcasts.

"In the last two days, near midnight, intense phosphorescence and the forms of strange lights have been observed at the same time. They have passed through the sky from north to south, and radio receivers have heard, during the occurrence of this phenomenon, words pronounced in an incomprehensible tongue. Popular fancy supposes that these luminous signals may come from the planet Mars."

Strange voices speaking a guttural, unknown language has been often associated with inexplicable radio broadcasts. Nor has this phenomena been contained to anecdotal tales from untrained individuals. Since its inception, NASA has experienced unauthorized radio interference problems of one form or another on practically every manned space mission.

A good example was the Mercury Faith 7 flight with Astronaut Gordon Cooper. On May 15, 1963, during his forth pass over Hawaii, Cooper's voice transmission was suddenly interrupted and drowned out by "an unintelligible foreign language transmission" on the channel reserved for space flights - a frequency which few if any amateurs were equipped to broadcast on.

If the signal came from the ground, it had to come from Hawaii, but the FCC never solved the mystery. NASA recorded the transmission, which sounded like a voice grunting and speaking rapidly in a language that has never been identified.

The Search For Extraterrestrial Intelligence

In 1955 two Cornell University physicists, Giuseppi Cocconi and Philip Morrison, published a paper suggesting it might be possible to use microwave radio to communicate between the stars. By pointing a radio telescope at a near by, Sun-like star that might have planets, astronomers might be able to detect radio waves generated by intelligent life there. Since 1960, The Search for Extra-terrestrial Intelligence (SETI) has been carried on by scientific researchers.

Radio waves are considered the best means available, given current technology, for trying to detect extra-terrestrial intelligence. Radio waves travel at the speed of light (which is the fastest theoretical speed possible) which is about 300,000 kilometers a second.

At this speed a signal sent from our nearest neighbor star, Proxima Centauri, takes over four years to reach Earth. This may seem like a long time, but the fastest space probe currently built would take 300,000 years to make the same trip.

Radio astronomer Frank Drake was the first to attempt a SETI search by using an 85 foot antenna at Greenbank, West Virginia, to listen in the direction of two nearby stars, Tau Ceti and Epsilon Eridani.

For two months he monitored the stars for signals at 1,420 MHz, a frequency associated with hydrogen, which was chosen as a logical channel to listen to

because of its astronomical significance (Hydrogen is the most abundant element in the Universe). Unfortunately, Drakes project achieved no positive results.

Additional SETI programs were conducted in the Soviet Union through the 1960's but the next serious attempt in the United States wasn't made until the early 70's when NASA's Ames Research Center put together a team of experts to consider how an effective search could be done.

The result was known as Project Cyclops. Radio astronomers, using the work in the Cyclops report, started conducting searches throughout the 70's using existing antennas and receivers.

The "WOW!" Signal

In 1977 Dr. Jerry Ehman was involved in a search for signals of an artificial origin using the "Big Ear" antenna (now replaced by a golf course) at Ohio State University. Out of this effort came one of the most interesting, and mystifying, signals to date. Known as the "Wow!" signal (after the exclamation written by Dr. Ehman next to a particularly tantalizing part of the computer printout), it still remains unexplained.

The "Wow!" source radio emission entered the receiver of the Big Ear radio telescope at about 11:16 p.m. Eastern Daylight Savings Time on August 15,1977. Dr. Ehman had worked at OSU as an assistant professor in electrical engineering and astronomy. When the National Science Foundation cut funding to the Big Ear in 1972, Dr. Ehman was let go, but he stayed on as a volunteer.

"A few days after the August 15, 1977 detection, I began my routine review of the computer printout from the multi-day run that began on August 15th. Several pages into the computer printout I was astonished to see the string of numbers and characters '6EQUJ5' in channel 2 of the printout.

"I immediately recognized this as the pattern we would expect to see from a narrowband radio source of small angular diameter in the sky. In the red pen I was using I immediately circled those six characters and wrote the notation 'Wow!' in the left margin of the computer printout opposite them.

"After I completed the review of the rest of the printout, I contacted Bob Dixon and Dr. John D. Kraus, the Director of the Big Ear Radio Observatory. They were astonished too. Then we began an analysis of what has been called for more then 20 years the "Wow! source."

Could the signal actually be of extraterrestrial origin? Ohio State University researchers weren't sure. They trained the massive scope on that part of the sky for the next month, but the signal was never recorded again.

Dr. Ehman, who has continued his research on the "Wow!" signal, writes that after more than twenty years, the signal still remains a mystery.

"Even if it were intelligent beings sending a signal, they'd do it far more than once," Ehman says. "We should have seen it when we looked for it again. At this point we have eliminated any terrestrial sources for the signal. Thus, since all of the possibilities of a terrestrial origin have been either ruled out or seem improbable, and since the possibility of an extraterrestrial origin has not been able to be ruled out, I must conclude that an ETI (Extraterrestrial Intelligence) might have sent the signal that we received as the "Wow!" source.

"Of course, being a scientist, I await the reception of additional signals like the "Wow!" source that are able to be received and analyzed by many observatories. Thus, I must state that the origin of the "Wow!" signal is still an open question for me. There is simply too little data to draw many conclusions. In other words, I choose not to draw vast conclusions from 'half-vast' data."

Curious signals were picked up from 12 stars by the 300-foot radio telescope at Green Bank, WV, according to an article published in the January 29, 1978 edition of The Baltimore Sun. The signals took the form of strong bursts at a wavelength of 21 cm, one of the wave lengths characteristic of the hydrogen molecule.

Unfortunately, the signals were so short that their information content, if any, could not be recorded. Since the bursts were not repeated (except for a second burst from Barnard's Star), some natural phenomenon may be at work rather than intelligent communicators, who would presumably be more persistent.

The peculiar signals, which had never been recorded before, were discovered as part of Project Ozma II, in which radio astronomers listened to 21-cm radio waves from hundreds of nearby stars.

SETI is stepping up efforts to increase its chances of relocating one of these signals and has secured the use of the world's largest radio telescope at Arecibo in Puerto Rico. Scientists worldwide are excited by possible future discoveries.

SETI scientists are also negotiating with British astronomers to launch a five-year project to allow speedy verification and tracking of these elusive noises. Whenever SETI identifies a suspect signal, radio telescopes at Jodrell Bank will

scan the same section of the sky to locate it. In this way the scientists can rule out possible terrestrial interference from radar, airplanes, even microwave ovens as a cause.

"I'm sure there are signals that have come and gone that we couldn't get to the bottom of. That's not to say it's little green men trying to communicate with us, but we just don't know," said Dr Tom Muxlow, an astronomer at the British radio astronomy observatory. He disclosed that Jodrell Bank had picked up about six rogue signals.

The possibility that the signals have extra-terrestrial origins cannot be ignored, according to Nobel laureate Tony Hewish, emeritus professor of radio astronomy at Cambridge University. In 1967 Hewish and Jocelyn Bell, a student, believed they had found evidence of an alien first contact when they detected a regular pulse of radio signals coming from a distant star.

"It all had an air of unreality about it, but for a month we thought it was possible that the signals were coming from intelligent life on another planet. When radio astronomers pick up signals that are very peculiar they take it with a big pinch of salt, but you cannot remove the possibility," said Hewish. Instead, they had found a pulsar, a rapidly spinning neutron star, a discovery for which Hewish won a Nobel prize in 1974.

Shostak is not put off by the prospect that any signal from an alien world would probably be indecipherable. "If we heard from an ET, it would be from a civilization that is a long way ahead of us, maybe even a million years more advanced than we are," he said.

Recently, Peter Backus, of Project Phoenix in California, believed that he was listening to messages from outer space via the 64-meter Parkes radio telescope in Australia. The telescope, the biggest in the southern hemisphere, picked up a distinct, but inexplicable, radio signal around 2.4 gigahertz at about the same time each evening.

However, a thorough investigation revealed that the scientists were not listening to other planets communicating through space. Instead, they were eavesdropping on meals cooking in the microwave oven downstairs.

"It was pretty loud," Dr. Backus told the annual meeting of the American Astronomical Society in San Antonio. "One time I tracked one signal for two hours. I couldn't rule it out as human noise. I was just about to tell my colleagues when I realized that the signal was suspiciously linked to break times."

Chapter Five

Tesla and Electronic Voice Phenomena

No one can deny that computers and electronics have forever changed our way of life. There are electronic controls and computer chips in everything from the small appliances that toast our bread to the cars we drive, and make possible myriad forms of new entertainment, from VCRs and DVDs to video games and talking stuffed toys.

For a number of years some people have claimed that electronics can be useful in a quite unexpected way: to contact the dead, or at least allow the dead to contact us. Obviously, these claims are highly controversial. They make many assumptions: that there is life after death, that the dead are interested in contacting us, and that they have the means by which to do so.

The mysterious signals that Tesla received could be linked to what is now known as Electronic Voice Phenomena (EVP). Tesla was one of the first men to experiment with the necessary electronic receiving equipment. The very same equipment, albeit more sophisticated than Tesla had access to, is being used today to receive EVP.

Many people experimenting with Electronic Voice Phenomena (EVP) and Instrumental Transcommunication (ITC) say they have received messages from "the other side" through radios, tape recorders, VCRs, televisions, telephones, and even computers.

These phenomena have manifest themselves since the appearance of the instruments themselves. EVP, for example, has been reported for well over 50 years or more: Strange voices being picked up with primitive radios during WWI and heard faintly on magnetic recording tape.

Tesla may have been the first to receive these electronic voices from another plane of reality. As with other modes of communications with alleged discarnate entities, care must be taken not to be swayed by the stories often told by beings from the other side. Tesla may have been duped, so-to-speak, by voices that only pretended to be creatures from other planets.

This is nothing new to those who are familiar with the tall tales told to them by spirits who claim to be ascended masters, Abraham Lincoln or Ashtar of the Interplanetary Space Command. Spirits love to tell lies to anyone who will listen.

Those such as Tesla and Marconi who experimented with radio early on were the first to report anomalous sounds and voices emanating from their radio receivers. These early reports were looked upon as mildly interesting curiosities and quickly forgotten.

Theosophist Alice Bailey in 1936, transcribed these words of her great teacher, the Tibetan Master DK: "Within the next few years the fact of the eternity of existence will have advanced from the realm of questioning into the realm of certainty. Through the use of the radio by those who have passed over, will communication be set up and reduced to a true science."

It has been widely written that Edison and his assistant, Dr. Miller Hutchinson, were seriously at work building a machine to achieve spirit communication. Tesla wrote in his journals that Thomas Edison had heard from other engineers that Tesla had been receiving mysterious voices and sounds over radio frequencies that were not conducive for the broadcasting of the human voice.

Edison, who publically mocked Tesla and his experiments, privately believed that Tesla had managed to find the correct frequency to enable communication with spirits of the dead. Edison was determined to discover Tesla's secret, and be the first to get the "Spirit Phone" on the market.

In his diary, Dr. Miller Hutchinson wrote: "Edison and I are convinced that in the fields of psychic research will yet be discovered facts that will prove of greater significance to the thinking of the human race than all the inventions we have ever made in the field of electricity."

Edison failed to live long enough to succeed with his ill-gotten idea to best Tesla. Tesla simply noted in his journal that Edison was trying to use his patents to talk with specters. Edison thought that Tesla could listen to spirits, Tesla considered that he was hearing people from other planets - the voices could have been the same, they may have just changed their stories to fit the belief system of the listener.

In 1967, Edison allegedly spoke through West German clairvoyant Sigrun Seuterman, in trance, about his earlier efforts to develop equipment for recording voices from the beyond. Edison also made suggestions as to how to modify TV sets and tune them to 740 megahertz to get paranormal effects. (Session recorded on tape by Paul Affolter, Liestal, Switzerland).

On September 15, 1952, two Catholic priests, Father Ernetti and Father Gemilli were collaborating on a musical research project; Ernetti as an internationally

respected scientist, physicist, philosopher and music lover, and Gemilli as President of the Papal Academy.

The two men were trying to record a Gregorian chant, but a wire in their equipment kept breaking. Exasperated, Gemilli looked up and asked his dead father for help. To his amazement his fathers voice was heard saying: "Of course I shall help you. I'm always with you." They repeated the experiment, and the voice, even clearer than before, said: "But Zucchini, it is clear, don't you know it is I?."

Gemilli was astonished. No one knew his childhood nickname but his father. The priest was suddenly afraid, for as a Catholic priest he had no right to speak with the dead. Troubled, the two men eventually sought an audience with Pope Pius XII in Rome.

Gemilli told the Pontiff of his experience, and to his surprise, was reassured. According to the 1990 translated text of his meeting, Pope Pius told Gemilli: "You really need not worry about this. The existence of this voice is strictly a scientific fact and has nothing whatsoever to do with spiritism. The recorder is totally objective. It receives and records sound waves from wherever they come. This experiment may perhaps become the cornerstone for a building for scientific studies which will strengthen people's faith in a hereafter."

Electronic Voice Phenomena was next researched by two men from California, the medium Attila von Szalay and paranormal researcher Raymond Bayless. In 1956, they recorded, quite by chance, a series of paranormal voices on magnetic tape, voices that should not logically have been there.

Though Bayless reported their experiments in the Journal of the American Society for Psychical Research, like Tesla years before, not a single person contacted the society or the researchers to enquire about their work.

It was not until 1959 when Friedrich Juergenson, a film producer in Sweden, first made public his amazing voice recordings, did the world sit up and take notice of the Tesla voice phenomena.

Juergenson, while making a documentary, had decided to try and tape bird songs. When he played the tape back he was startled to hear, in among the tweeting and chirping, what sounded like his mother's voice say in German: "Friedrich, you are being watched. Friedel, my little Friedel, can you hear me?"

Years later, Juergenson said that when he heard his mother's voice he was convinced he had made "an important discovery."

Radio Contact With the Dead?

In 1967, Juergenson's Radio Contact with the Dead was translated into German, and Latvian psychologist Dr. Konstantin Raudive read it skeptically. He visited Juergenson to learn his methodology, decided to experiment on his own, and soon began developing his own experimental techniques.

Like Juergenson, Raudive too heard the voice of his own deceased mother, who called him by his boyhood name: "Kostulit, this is your mother." Eventually he catalogued tens of thousands of voices, many under strict laboratory conditions.

He published his book, Unhoerbares Wird Hoerbar (The Inaudible Becomes Audible), based on 72,000 voices he recorded.

In 1971, the chief engineers of Pye Records Ltd. decided to do a controlled experiment with Raudive. They invited him to their sound lab and installed special equipment to block out any radio and television signals. They would not allow Raudive to touch any of the equipment.

Raudive used one tape recorder which was monitored by a control tape recorder. All he could do was speak into a microphone. They taped Raudive's voice for eighteen minutes and none of the experimenters heard any other sounds. But when the scientists played back the tape, to their amazement, they heard over two hundred voices recorded on tape.

In the same year, Colin Smythe, Ltd. England, published expanded English translations of Raudive's book: Breakthrough, an Amazing Experiment in Electronic Communication with the Dead. Dr. Konstantin Raudive was a Latvian psychologist who had read Juergenson's book, Radio Contact with the Dead, with a great deal of scepticism when it was translated into German in 1967. Nevertheless he was intrigued and over several years carried out hundreds of experiments under laboratory conditions.

In the years that followed, Juergenson and Raudive continued their research that inspired countless others to emulate their experiments. But constant criticism that the EVP was nothing more than ambient sounds processed by the mind into a semblance of speech, or snatches of shortwave radio, dampened enthusiasm for research in Europe.

However, during the 1970s and early 80s in the United States, EVP continued to evolve with much of the work spearheaded by a retired engineer, George Meek. In 1971, Meek opened a small laboratory Philadelphia after a lifetime's interest

in the paranormal. Meek soon became immersed in EVP - and realized its limitations. Meek was convinced that for electronic communication with the dead to really make its mark, apparatus more sophisticated than cassette recorders and AM radios would be necessary.

Meek decided that the best way to succeed was to attempt contact with someone who had passed on and work with him and his team in achieving two-way communication with the Other Side. The problem of course was gaining the initial contact.

Meek wrote to the now defunct American magazine The Psychic Observer, which put him in touch with Bill O'Neil, an electronics engineer who was also a gifted clairvoyant. Through O'Neil, Meek's team, later to form themselves into the Metascience Foundation, made contact with a man who claimed to have been dead for five years and who was a medical doctor while on earth.

"Doc Nick," as the discarnate became known, suggested to O'Neil that the team use certain audio frequencies instead of the white noise traditionally used by EVP researchers. This, he said, would serve as an energy source against which the sounds produced by his vocal cords could be played. The resulting experiments worked better than anyone had ever expected.

Soon after, a spirit being calling himself Dr. George Jeffries Mueller, was recruited to the team, or rather he announced he had come to join them after materializing one afternoon in O'Neil's living room. Mueller claimed to be a deceased university professor and NASA scientist.

Mueller told Meek and O'Neil that he had died in 1967 and gave them numerous facts with which to verify his identity including his security number; the place where his death certificate could be found; and intimate details of his life and scholastic achievements. All of them checked out.

He began communicating regularly; helping to design a new piece of electromagnetic equipment that would convert spirit voices to audible voices. On October 27, 1977, his first words were recorded on the new system Meek called Spiricom.

Tapes of the Mueller conversations were subsequently released to the public. The voice of Mueller can be plainly heard joking with Meek and O'Neil and discussing topics from his favorite foods to the view of time from the spirit world.

He gave unlisted telephone numbers asking them to make calls to confirm the identity (which they did successfully) of the people at the other end (usually

top-level government personnel); and he gives O'Neil precise directions with which to help build experimental video equipment to take spirit communication to the next level.

The clarity of the communications is astounding- and sometimes amusing: in one conversation, Mueller identifies a problem with a particular device and impatiently barks at O'Neil: "The fault lies in an impedance mis-match which can be corrected by using a 150 ohm half-watt resistor in parallel with a 0.0047 microfad ceramic capacitor."

Eventually, Mueller ceased contact after telling Meek and O'Neil that natural law meant he could "not be here forever." (He did in fact return once more to a group of ITC researchers working in Rivenick, Germany, led by Adolph Homes. In 1991 they received on a TV screen an image which was said to be that of Dr Mueller).

Meek concluded that Mueller had progressed to a higher state of being to such a point that Spiricom could no longer be used for communication. Apparently, only beings closest to the Earth plane of existence, could communicate through the relatively primitive electronics.

It had become clear that the most limiting aspect of the device was the fact that it depended almost entirely on the operator possessing mediumistic or psychic abilities. Obviously, gifted individuals like Bill O'Neil, Dr. Konstantin Raudive and Nikola Tesla were a necessary component in the reception of signals and voices from the Aether.

Much like batteries energize a portable CD player, the vibrant field of energy that surrounds special people activates electronic equipment tuned to receive other realities. Without these people, it is doubtful that enough energy can be provided by the discarnate entity to achieve communication.

George Meek fully accepted this and never patented Spiricom. His hope was that science would carry on his work and take it to the next level, going beyond what he and O'Neil were able and unable to accomplish.

In 1982 Meek held a press conference in Washington, DC and revealed Spiricom's secrets. The conference made little impact on a largely skeptical world; in fact a large section of the media even refused to attend, so the device went largely unreported - except by the tabloids who naturally poked fun at the sensational story. Since that time, the focus of attention in terms of results has switched to Europe.

Nine months after Meek went public, on January 15, 1982, an electronics engineer named Hans-Otto Koenig, helped the now defunct Radio Luxembourg do a live broadcast on what was claimed to be a two-way conversation with a dead person.

Koenig had invented an ultrasound device after closely following Meek's work which, he claimed, could replicate the Spiricom and Mueller/O'Neil dialogues. The equipment was set up under the watchful eye of the Radio Luxembourg engineers.

The device, nicknamed Koenig's Generator by Rainer Holbe, the programs host, was connected to a set of speakers and switched on. An engineer asked over the air if any spirits cared to speak. Within seconds, a clear voice was heard. It said quite simply: "Otto Koenig makes wireless with the dead." Understandably pandemonium broke out in the studio.

Another question was asked and seconds later a voice replied: "We hear your voice." Rainer Holbe affirmed live on air there had been no trickery and later the station issued a statement stating that its engineers had found no natural explanation for what had happened.

Soon after, the device was demonstrated to members of the German EVP Association in Frankfurt where Konstantin Raudive, who had died in 1974, confirmed his presence. On the strength of this, one of Koenig's associates Dr Ernst Senkowski, a physics lecturer, electronics expert and veteran EVP researcher, persuaded George Meek to fly to Germany.

After a demonstration of the Koenig's Generator, Meek flew back convinced it was genuine and set about raising money to fund future work. Further research has been carried on by others in the field of electronics and radio who also have an interest in contacts with spirits.

Experiments held at a mansion in Newport Rhode Island have yielded some interesting results involving paranormal activity and the use of Shortwave Radio as a possible means of communication with other realities.

A research team led by Steve Cerilli has determined that tube based short-wave radios can provide a communication link with other planes of existence and their inhabitants. Recordings made on October 3,1999 demonstrate that spirit entities can manipulate shortwave radios.

Curiously, the spirits present on that night learned how to better interact with the shortwave as the session progressed. By the end of the experiment, the entire

room was awash with a form of static/electromagnetic energy. The tapes of this experiment are still undeveloped at this time.

Development of a paranormal recording involves re-dubbing the tape i.e. making multiple generations for reasons unknown. Research will be hopefully completed by the end of the decade.

A series of questions scripted by the research team were read by the owner of the location, which is known for its paranormal activity. The spirits were addressed and asked to participate in the experiment. The method of recording and equipment being used was then described. The questions asked were Socratic in nature, which means that they lead the listener to a revelation, each question building upon the former.

As a result of these experiments, all paranormal activity in the castle has stopped. It was the intention of the researchers to help these entities by achieving contact. The researchers felt that the spirits were somehow trapped or lost in between dimensions.

One possible scenario for disturbed spirit presences and haunting's is that due to a tragic event in an individuals lifetime, the desire to remain on this plane of time creates a state of suspension. Spirits in this suspended state become prisoners of their own inability to let go.

It is believe that by establishing a communication link with the shortwave and asking relevant questions (Socratic method), lost spirits can be freed from their suspended state and made aware that there is nothing outside their own consciousness holding them back.

One of the participants, Jennipher Roos, described her experience that night. "After spending the time it took to set up the equipment in the ballroom - about an hour, I walked outside to clear my thoughts and energy centers.

"Upon returning to the room, I could immediately feel changing vibrations with myself. I walked around the perimeter of the room in attempt to familiarize myself with my surroundings. I noticed a particularly strong feeling - highly sensational - in the corner of the room leading into the master bedroom.

"The only color of light I noticed before the experiments began, was a slight brightness in that corner of no particular color. The light surrounding the people participating in the study was nothing worth noting nothing out of the ordinary.

"During the first session, recording only, I was not aware of any overwhelming presence or energy disturbances. I was sitting on the floor - to the left of the

Mayan sculpture. I felt centered and secure at all times; and although the room was highly charged, I cannot report any great shifts in the overall energy of the space and no specific concentrations of electromagnetism. The only notable change I observed was that the light in the corner of the room by the master bedroom had increased in intensity and now had a slightly bluish tinge.

"The next session, which involved the short wave radio was quite an experience for me personally. I had moved to the corner of the room which I previously described as highly active.

"Once I was centered on the floor and the questions began I could immediately sense a presence of some kind. A slight vibration moved from the floor, through my bottom and thighs, up my spine and into my head. This sensation was exceptionally strong and caused all of my hairs to stand on end.

"I placed my hands palm down on the floor in front of me and received the same sensation through my hands and arms, which heightened incredibly the overall effect. I could see luminous light all around me and when I moved my hand in front of me, the light attached itself to me and left a streak of light, like a tracer, in its path of movement.

"The short-wave radio was definitely receiving some sort of transmission amongst the white noise, but it was very faint deviations to me. However, about half-way through this session I began to hear other noises in the room.

"The best way I can describe them is like a low tone of church bells played very slowly...almost like a drone, but in a pattern that was repeatedly louder at the beginning of each "chime." This sound was moving throughout the room in a circular fashion, like in stereo surround.

"As I focused all of my concentration and energy on the light and this sound, the short wave seemed to become more effected and I could definitely feel an increase of electromagnetic energy as the session progressed. At one point I was fairly overwhelmed with the feeling of it all...my body hair was on end for the entire session.

"I never observed any other colors at this time, nor did I feel that any of the participants, including myself were in any sort of danger. This part of the experiment was definitely the most powerful for me.

"I moved to the floor between the two aforementioned chairs and it was at this time that I started to notice huge changes in the short wave's regularity as the speaker asked direct questions to specific pieces.

"The shortwave's inflections were very quick after each question was asked, which indicates that perhaps the life forms are a bit more responsive when singled out individually.

"When the speaker addressed the Mayan statue, I observed it radiating a light that is best described as a dull-reddish magenta color. The light fully surrounded the Mayan and streamed off a bit in the direction of the microphone, but did not get close to it. this light remained until the session was over."

Instrumental Transcommunication (ITC)

In 1985 Swiss electronics expert, Klaus Schreiber who, as a result of studying George Meek's Spiricom designs, invented an apparatus he called "Vidicom." The Vidicom consisted of a specially adapted TV, switched on but not attached to an aerial, with a video camera in front of it to capture images that appeared on the screen. One of the first pictures he received was a blurred, fleeting image of a human figure.

Occasionally just voices would come across, telling him how to tune his TV for better reception. A typical session would begin with a TV screen full of dots. Then small ovals would appear one after another, each growing quickly until they disappeared off the screen. Within minutes faces would start to appear along with voices, to the astonishment of Schreiber himself and his visitors.

It wasn't long after Shreiber death in 1988 that his image started appearing on the TV screens of Europe's ITC researchers. Schreiber's friend Martin Wenzel continued his work with some success, but as with Spiricom the Schreiber method, to work effectively, needed to be used by someone with the sensitivity of a psychic and strong mediumistic links with other planes of existence.

In April 1990 George Meek's wife Jeanette died after a long illness. Before she crossed over, however, Meek had asked her to get firmly in mind the names TimeStream (a spiritside sending station linked to a young, leading-edge research laboratory in Luxembourg) and Swejen Salter (the system's operator and research director on the spirit side), Hopefully these memories would act as a homing device once she crossed over, pulling Jeannette to the research station.

It apparently worked; three months after Jeannette's funeral she reportedly had located the TimeStream station and sent the following letter to George via the

Luxembourg computer: "DEAR G.W. - WELL, IT SEEMS THERE ARE STILL PEOPLE WHO DO NOT BELIEVE IN THE CONTACTS YOUR FRIENDS HERE IN LUXEMBOURG ARE HAVING. HENCE I WILL GIVE YOU SOME PERSONAL DETAILS KNOWN ONLY TO YOU AND MOLLY.

"FIRST STORY. IN 1987, END OF APRIL, OUR TENANT DEBBIE CALLED TO SAY HER REFRIGERATOR WAS OFF. IT MUST HAVE BEEN ON A THURSDAY MORNING...

"SECOND STORY. ON APRIL 29, 1987, ANN VALENTIN WROTE A LETTER FORM CALIFORNIA SAYING SHE HAD NOT RECEIVED THE MAGIC OF LIVING FOREVER BOOKLETS SHE HAD ORDERED, BUT INSTEAD HAD RECEIVED A BOX OF HARLEQUIN NOVELS.

"THIRD STORY. JOHN LATHROP SHUTOFF THE ELECTRICITY AT OUR RENTAL HOUSE TO PUT IN THE NEW YARD LIGHT, HE WASN'T DOWN THERE VERY LONG BUT CHARGED $20 SERVICE IN ADDITION TO $40 FOR THE BULBS, PLUS TAX. THE CHARGE SEEMED HIGH.

"DON'T TRY TO EXPLAIN THIS, HONEY, MY NEVER-ENDING LOVE TO YOU. I MISS YOU SO MUCH, BUT I KNOW WE WILL BE TOGETHER. LOVE FOREVER, JEANNETTE DUNCAN MEEK."

To support the validity of the ITC contact, Jeannette had selected three very private items known only to the Meeks and their secretary Molly Philo. The second item about romance novels, in fact, was a complete puzzle even to George.

Upon receiving Jeannette's letter from the Luxembourg team and getting his excitement under control, Meek called Ann Valentinin California to verify item two. Sure enough, a carton of novels had arrived mysteriously in 1987, and to this day no one knows who sent them.

The most exciting and potentially fruitful development is that of communication via computer. Ken Webster of England published a book in which he reported on more than 200 computer contacts with local persons who had died more than three centuries ago.

One of Webster's main contacts was 16th century Englishman Thomas Harden, who had lived in the same house that Webster now resided in, when the town was still named Bristol. From the astral planes, Harden could see Webster's electronic equipment in the living room.

He referred to the computer as a box with a multitude of lights sitting near my chimney. Harden would communicate in old English grammar in a variety of ways - telepathic messages, scribbles on note paper, chalk-written messages on the floor and, most important, computer files written on the display screen and generated on hard disk.

Harden later was reported to have explained to his earth-side colleague Webster that the writing was formed according to his will or his visualization in the "Lightbox." Another interesting feature was that Harden said that he wasn't a discarnate entity, communicating from the beyond. Instead he claimed to be speaking from his own time in the 17th century. So rather then talking with the dead, this seems to be a case of time travel.

During the 1980's psychic researchers became aware of claims that various people had received telephone calls from loved ones after they had died. The calls were usually only of short duration and when investigated did not register on normal telephone monitoring equipment. This subject was extensively covered by D. Scott Rogo in his book Telephone Calls From The Dead. (1979).

A husband and wife couple working in Luxembourg between 1985 and 1988 along with helpers from the afterlife, developed two electronic systems which became significantly more reliable and repeatable than the systems developed earlier.

Jules and Maggie Harsch-Fishbach in 1987 established computer contact which allows submission of technical questions with high speed print-out of the carefully considered replies. Also in 1987 they got TV picture sequences of good quality (Psychic News February 25th 1995).

By 1993 the research team in the afterlife was able to access the hard drives of computers and leave detailed, computer-scanned images as well as several pages of text. The computer-scanned images were far more detailed and less subject to distortion than the video images. Researchers on earth were able to direct questions to their counterparts on the other side and receive answers by telephone, radio, TV, computer, or fax (Kubris and Macy 1995: 14).

Dominic RMacquarie stated in the November 15, 1997 issue of Psychic News that communication between the earth plane and the afterlife is more successful when there is a mediumistic person, who has more than average ectoplasm present. This had earlier been confirmed by Konstantine, Raudive, German Professor E Senkowski and George Meek.

The need to have some form of electromagnetic energy present has always been recognized as an essential component of EVP. Macquarie claims that experimenters since 1963 have obtained better results if they turn on three twelve volt transformers (the kind which change household voltage to lower voltage for portable radios, CD players etc.) within 3 to 4 inches (8-12cms) of each other. They produce a very quiet hum which provides a weak gentle field of electromagnetic energy which can be used by discarnate entities.

"One has always to keep in mind that whilst ectoplasm and electromagnetic energy must be present when communicating with the afterlife, an experimenter who is negative and uses the presumption of futility will be exuding negative energy and will dramatically reduce successful communication," says Macquarie. "This 'experimenter effect' has been found in mediumship, laboratory testing and when using electronic equipment.

"So even though communication can occur through television, radio equipment and the telephone, the clarity of transmission depends on the contact field, the thoughts of those receiving the transmission. It has been discovered at large open meetings, that if a group of people had negative thoughts about ITC, their negative vibrations seriously affected the vibrations coming from the astral plane."

Even though Nikola Tesla in his early years had little patience with those who believed in spirits and unknown psychic abilities, he may have had a change of heart later in his life and after leaving the physical plane. In 1998, a medium by the name of Alice Cromley alleged that she had made contact with the spirit of Tesla through electronic methods similar to what Tesla used.

In a series of communications, all conducted at a secure home in Montreal, Canada, Mrs. Cromley received information concerning Tesla's continued existence after his death and the new discoveries that awaited him on the other side. Tesla was apparently eager to tell those interested in his life and science, not to dismiss ideas that appear supernatural or not of science.

"Physics, extends beyond what is scientifically known today," Tesla communicated. "The future will show that what we now call occult or the supernatural is based on a science not yet developed, but whose first infant steps are being taken as we speak!"

ABOVE: Tesla was probably the first to experience EVP.
BELOW: Bill O'Neil at the Spiricom device.

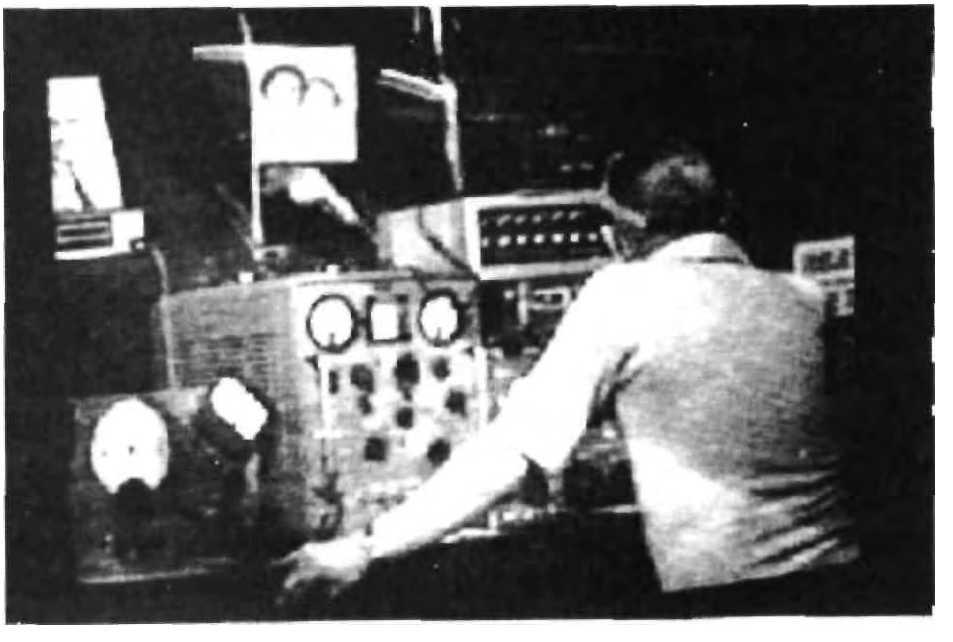

The Lost Journals of Nikola Tesla

Chapter Six

UFOs and Electrogravity Propulsion

Did Tesla Discover the Secrets of Antigravity?

Nikola Tesla has been credited for the creation of much of the technology that we take for granted today. Without the genius of Tesla we would not have radio, television, AC electricity, Tesla coil, flourescent lighting, neon lighting, radio control devices, robotics, x-rays, radar, microwaves and dozens of other amazing inventions.

Because of this, it is no surprise that Tesla also delved into the world of flight and possibly, antigravity. In fact, his last patent in 1928 (#6,555,114), was for a flying machine that resembled both a helicopter and an airplane. Before he died, Tesla reportedly devised plans for the engine of a spaceship. He called it the anti-electromagnetic field drive or Space Drive.

William R. Lyne writes in Occult Ether Physics (Creatopia Productions), that a lecture Tesla prepared for the Institute of Immigrant Welfare (May. 12, 1938), dealt with his Dynamic Theory of Gravity. Tesla said in his lecture that this was: "One of two far reaching discoveries, which I worked out in all details in the years 1893 and 1894."

While researching Tesla's statements, Lyne discovered that more complete statements concerning these discoveries could only be gleaned from scattered and sparse sources, because Tesla's papers are concealed in government vaults for national security reasons.

When Lyne specifically asked for these papers at the National Security Research Center (now the Robert J. Oppenheimer Research Center) in 1979, he was denied access because they were still classified. In his 1938 lecture, Tesla said he was progressing with the work, and hoped to give the theory to the world very soon. The two great discoveries to which Tesla referred, were:

1. The Dynamic Theory of Gravity - which assumed a field of force which accounts for the motions of bodies in space; assumption of this field of force dispenses with the concept of space curvature (ala Einstein); the ether has an indispensable function in the phenomena (of universal gravity, inertia, momentum, and movement of heavenly bodies, as well as all atomic and molecular matter).

2. Environmental Energy - the Discovery of a new physical Truth: there is no energy in matter other than that received from the environment. (Which goes against Einstein's E=mc2). The usual Tesla birthday announcement - on his 79th birthday (1935) - Tesla made a brief reference to the theory saying it applies to molecules and atoms as well as to the largest heavenly bodies, and to "... all matter in the universe in any phase of its existence from its very formation to its ultimate disintegration."

In an article, Man's Greatest Achievement, Tesla outlined his Dynamic Theory of Gravity by saying that the luminiferous ether fills all space. The ether is acted upon by the life-giving creative force and is thrown into "infinitesimal whirls" ("micro helices") at near the speed of light, becoming ponderable matter. When the force subsides and motion ceases, matter reverts to the ether (a form of "atomic decay").

Man can harness these processes to: Precipitate matter from the ether. Create whatever he wants with the matter and energy derived. Alter the earth's size. Control earth's seasons (weather control). Guide earth's path through the Universe, like a spaceship. Cause the collisions of planets to produce new suns and stars, heat, and light. Originate and develop life in infinite forms.

When Tesla was 82, instead of speaking at a dinner party, he issued a written statement. Although this was soon after he had been struck by a car, his mind was obviously still capable of mounting an attack on Einstein's theory of relativity:

"I have worked out a dynamic theory of gravity in all details and hope to give this to the world very soon. It explains the causes of this force and the motions of heavenly bodies under its influence so satisfactorily that it will put an end to idle speculations and false conceptions, as that of curved space. According to the relativists, space has a tendency to curvature owing to an inherent property or presence of celestial bodies.

"Granting a semblance of reality to this fantastic idea, it is still very self-contradictory. Every action is accompanied by an equivalent reaction and the effects of the latter are directly opposite to those of the former. Supposing that the bodies act upon the surrounding space causing curvature of the same, it appears to my simple mind that the curved spaces must react on the bodies and, producing the opposite effects, straighten out the curves.

"Since action and reaction are coexistent, it follows that the supposed curvature of space is entirely impossible - However, even if it existed it would not

explain the motions of the bodies as observed. Only the existence of a field of force can account for them and its assumption dispenses with space curvature. All literature on this subject is futile and destined to oblivion."

It is a great pity that Tesla never published his dynamic theory of gravity. Modern thinking about gravity suggests that when a heavy object moves it emits gravitational waves that radiate at the speed of light. These gravity waves behave in similar ways to many other types of waves.

Tesla's greatest inventions were all based on the study of waves. He always considered sound, light, heat, X-rays and radio waves to be related phenomena that could be studied using the same sort of maths. His differences with Einstein suggest that he had extended this thinking to gravity.

In the 1980s he was proved to be right. A study of energy loss in a double neutron star pulsar called PSR 1913 + 16 proved that gravity waves exist. Tesla's idea that gravity is a field effect is now taken more seriously than Einstein took it.

Unfortunately, Tesla never revealed what had led him to this conclusion. He never explained his theory of gravitation to the world. The attack he made on Einstein's work was considered outrageous by the scientific establishment of the time, and only now do we have enough understanding of gravity to realize that he was right.

How to Build a Flying Saucer

Tesla had discovered that the electrostatic emission from the surface of a conductor will always concentrate where the surface curves or even presents an edge. The sharper the curve or edge, the greater the concentration of electron emission. Tesla also observed that an electrostatic charge will flow over the surface of a conductor rather than penetrate it. This is called the Faraday or Skin Effect, discovered by Michael Faraday many years ago.

This also explains the principles of the Faraday Cage which is used in high voltage research labs to protect humans and electrosensitive equipment from harm. According to eyewitness reports of interiors of UFOs, there is a circular column or channel through the center of the vehicle.

This reportedly serves as a superstructure for the rest of the saucer shaped vehicle, and also carries a high voltage, high frequency coil. It is believed to be a

resonant transformer which gives the electrostatic and electromagnetic charge to the craft and establishes polarity.

This coil is relative to what is known as a Tesla coil. The Tesla Coil of course, was invented by Tesla in 1891. This column or channel is approximately two feet in diameter and is hollow. On some vehicles this hollow area has a turbine generator in it.

When the vacuum is created on one hemisphere of the craft, the atmospheric pressure is allowed to rush through the tube to drive a sort of turbine electrical generator. Some reports say the extraterrestrials use this system as stationary power plants for electrical energy on their planets as well.

The eyes of the craft are arranged by electro-optic lenses placed at quadrants or wherever they wish to see from. The screen-like monitors are placed on a console where the navigator can observe all areas around and about the vehicle at the same time. This includes the magnification lenses which are used without changing positions.

There are also windows about elbow level and about one foot through or thick. This distance would have to be in view of the four or more walls or plates of the capacitor hulls making up the major portion of the craft. The windows have an iris type of shutter so that when it is closed, it allows electrostatic charge to flow evenly.

Dr T. Townsend Brown and Electrogravitics

The idea of using high voltage electricity as a means of propulsion is not new. Tesla laid the groundwork in the late 19th century which was then continued by such notables as Thomas Townsend Brown, who discovered in 1923 what was later called the Biefeld -Brown Effect.

Thomas Townsend Brown, was a physics student of Dr. Paul Alfred Biefeld at the California Institute for Advanced Studies. Brown noticed that when he had two plates carrying high voltages of direct current separated by a dielectric, the negative electrode moved by itself in the direction of the positive plate. In other words, Townsend Brown discovered that it is possible to create an artificial gravity field by charging an electrical capacitor to a high-voltage.

He built a special capacitor which utilized a heavy, high charge-accumulating (high K-factor) dielectric material between its plates and found that when charges

with between 70,000 to 300,000 volts, it would move in the direction of its positive pole. When oriented with its positive side up, it would proceed to lose about one percent of it's weight.

He attributed this motion to an electrostatically-induced gravity field acting between the capacitor's oppositely charged plates. By 1958, he had succeeded in developing a 15 inch diameter model saucer that could lift over 110% of its weight. Brown's experiments had launched a new field of investigation which came to be known as Electrogravitics, the technology of controlling gravity through the use of high-voltage electric charge.

As early as 1952, an Air Force major general witnessed a demonstration in which Brown flew a pair of 18 inch disc airfoils suspended from opposite ends of a rotatable arm. When electrified with 50,000 volts, they circuited at a speed of 12 miles per hour.

About a year later, he flew a set of 3 foot diameter saucers for some Air Force officials and representatives from a number of major aircraft companies. When energized with 150,000 volts, the discs sped around the 50 foot diameter course so fast that the subject was immediately classified.

Interavia magazine later reported that the discs could attain speeds of several hundred miles per hour when charged with several hundred thousand volts. Brown's discs were charged with a high positive voltage, on a wire, running along their leading edge and a high negative voltage, on a wire, running along their trailing edge.

As the wires ionized the air around them, a dense cloud of positive ions would form ahead of the craft and corresponding cloud of negative ions would form behind the craft. Brown's research indicated that, like the charged plates of his capacitors, these ion clouds induced a gravitational force directed in the minus to plus direction.

As the disc moved forward in the response to its self generated gravity field, it would carry with it its positive and negative ion clouds and their associated electrogravity gradient. Consequently, the discs would ride their advancing gravity wave much like surfers ride an ocean wave.

Dr. Mason Rose, one of Townsend's colleagues, described the discs principle of operation as follows:

"The saucers made by Brown have no propellers, no jets, no moving parts at all. They create a modification of the gravitational field around themselves, which is

Patent #3,322,374 5-30-67

MAGNETOHYDRODYNAMIC
PROPULSION DEVICE

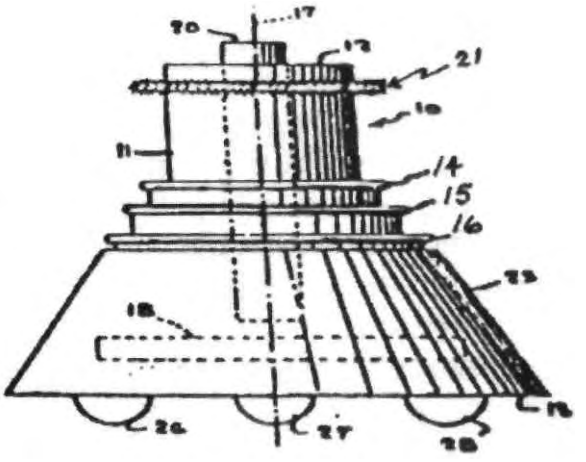

ABOVE: J. Frank King, a colleague of T. Townsend Brown, patented a magnetohydrodynamic propulsion device. Note the similarities in design to the Adamski flying saucer.

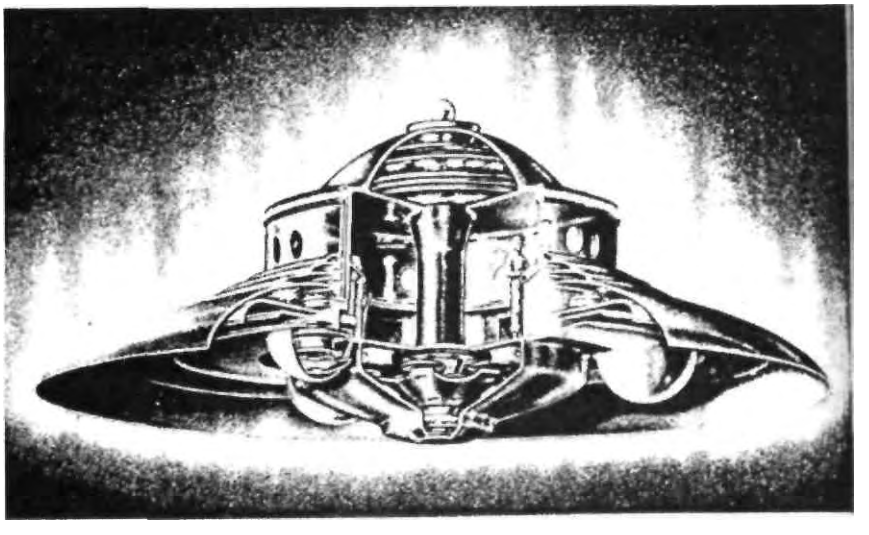

analogous to putting them on the incline of a hill. They act like a surfboard on a wave. . . the electrogravitational saucer creates its own hill, which is a local distortion of the gravitational field, then it takes this hill with it in any chosen direction and at any rate.

"The occupants of one of [Brown's] saucers would feel no stress at all no matter how sharp the turn or how great the acceleration. This is because the ship and its occupants and the load are all responding equally to the wave-like distortion of the local gravitation field."

Although skeptics at first thought that the discs were propelled by more mundane effects such as the pressure of negative ions striking the positive electrode. Brown later carried out vacuum chamber tests which proved that a force was present even in the absence of such ion thrust.

He did not offer a theory to explain this unconventional electrogravitic phenomenon; except to say that it was predicted neither by general relativity nor by modern theories of electromagnetism. However, recent advances in theoretical physics provide a rather straightforward explanation of the principle.

According to the novel physics of subquantum kinetics, gravity potential can adopt two polarities, instead of one. Not only can a gravity field exist in the form of a matter-attracting gravity potential well, as standard physics teaches, but it can also exist in the form of a matter repelling gravity potential hill.

Moreover, it predicts that these gravity polarities should be directly matched with electrical polarity; positively charged particles such as protons generating gravity wells and negatively charged particles such as electrons generating gravity hills.

Thus contrary to conventional theory, the electron produces a matter-repelling gravity field. Electrical neutral matter remains gravitationally attractive because of the proton's G-well marginally dominates the electron's G-hill. Consequently, subquantum kinetics predicts that the negative ion cloud behind Brown's disc should form a matter repelling gravity hill while the positive ion cloud ahead of the disc should form a matter attracting gravity well.

As increasing voltage is applied to the disc, the gravity potential hill and well become increasing prominent and the gravity potential gradient between them increasing steep. In Rose's terminology, the craft would find itself on the incline of a gravitational hill. Since gravity force is known to increase in accordance with the steepness of such a gravity potential slope, increased voltage would induce

an increasingly strong gravity force on the disc and would act in the direction of the positive ion cloud. The disc would behave as if it was being tugged by a very strong gravitational field emanating from an invisible planet sized mass positioned beyond its positive pole.

Early in 1952 Brown had put together a proposal, code named Project Winterhaven, which suggested that the military developed an antigravity combat saucer with Mach-3 capability. The 1956 intelligence study entitled Electrogravitics Systems: An Explanation of Electrostatic Motion, Dynamic Counterbary and Barycentric Control, prepared by the private aviation intelligence firm, Aviation Studies International Ltd., indicates that as early as November 1954 the Air Force had begun plans to fund research that would accomplish Project Winterhaven's objectives.

The study, originally classified Confidential, mentions the name of more than ten major aircraft companies which were actively involved in the electrogravitics research in an attempt to duplicate or extend Brown's seminal work. Additional information is to be found in another aviation intelligence report entitled: The Gravitics Situation. Unfortunately, due to the militaries TOP SECRET classification, Townsend Brown's work has not appeared in any physics or science publications that can be accessed.

Article Reveals Government Research

Because of the influence of such pioneers as Tesla and T. Townsend Brown, the research and development of antigravity devices has been ongoing for a number of years. The June 1957 issue of Mechanic's Illustrated featured an article by G. Harry Stine entitled: Conquest of Space. Stine, the Chief of Navy Range Operations at White Sands Proving Grounds, makes it perfectly clear that the military was extremely interested in antigravity research.

> There is a good chance that the rocket will be obsolete for space travel within 50 years. Some of us have been concentrating on the development of the rocket as the possible power plant for outer space propulsion. We've fired a lot of rockets and we've proved that they will work well in outer space. We've also learned a lot about

what's out there by using rockets. And probably we will take the first few faltering steps into space with rocket power plants.

But recent discoveries indicate that the spaceship of the future may be powered by anti-gravity devices. These, instead of using brute force to overcome gravity, will use the force of gravity itself much as an airplane uses the air to make it fly.

Sir William Crookes, the English scientist who developed the cathode-ray tube we now use for television, made extensive investigations of levitation phenomena - a field that once belonged to vaudeville magicians. Scientists, reasoning that if they believed his reports of weird green glows in vacuum tubes they should also look into Crookes' levitation studies, have been making slow but steady progress.

Others have been investigating the fields of gravitic isotopes, jet electron streams, and the mechanics of the electron shells of atoms. Townsend T. Brown, an American investigator, has gone even further than that. There are rumors that Brown has developed a real antigravity machine. There are many firms working on the problems of antigravity - the Glenn L.Martin Co., Bell Aircraft, General Electric, Sperry-Rand Corp. and others.

Rumors have been circulating that scientists have built disc airfoils two feet in diameter incorporating a variation of the simple two-plate electrical condenser (capacitor), which charged to a potential of 50,000 volts, has achieved a speed of seventeen feet per second with a total energy input of fifty watts.

A three-foot diameter disc airfoil charged to 150 Kilovolts turned out such an amazing performance that the whole thing was immediately classified. Flame-jet generators, making use of the electrostatic charge discovered in rocket exhausts, have been developed which will supply charges up to 15 million volts.

Several important things have been discovered with regard to gravity propulsion. For one, the propulsive force doesn't act on only one part of the ship it is pushing; it acts on all parts within the gravity field created by the gravitic drive. It probably is not limited to the speed of light.

Gravity-powered vehicles have apparently changed direction, accelerated rapidly at very high g's and stopped abruptly without any heavy stresses being experienced by the measuring devices aboard the vehicle and within the gravity-propulsion field. This control is done by changing the direction, intensity and polarity of the charge on the condenser plates of the drive unit, a fairly simple task for scientists.

Sounds incredible, doesn't it? But the information comes from reliable sources. We are licking the problems of gravity. Indications are that we are on the verge of tapping a brand new group of electrical waves which link electricity and gravity. Electronic engineers have taken the electrical coil and used it as a link between electricity and electro-magnetism, thus giving us a science of electromagnetic's which in turn has given us such things as radio, television, radar and the like.

Now, gravity researchers seem to think that the condenser will open up the science of electrogravitics. Soon we may be able to eliminate gravity as a structural, dynamic and medical problem.

Although we will probably use rocket power to make our first explorations into space, the chances are now pretty good that this will not always be the case. In 50 years we may travel to the moon, the planets or even the stars propelled by the harnessed forces of gravity.

If this seems fantastic, remember that the rocket and the idea of a trip to the moon was fantastic twenty years ago. Fifty years ago the idea of commercial air travel was utter nonsense.

With gravitic spaceships, we may travel to the moon in less than an hour, to the planets in less than a day or to the stars themselves in a matter of months. We may be able to do it in absolute comfort without the problems of zero-gravity or high accelerations.

The idea of the rocket becoming obsolete is not a happy idea, particularly when so much work has been done on rockets. If a better method comes along, why shed tears? After all, our basic goal is to travel and explore in space and it doesn't make much difference how we do it.

Is Antigravity Already in Use?

Recently an article appeared in Jane's Aviation Weekly that stated the B-2 Stealth Nuclear-Strike Bomber is in fact, currently using an electrogravitic propulsion system. Paul A. LaViolette has done considerable study on the use of electrogravitic technology by the U.S. Air Force, which has conducted secret Black Project research on the matter since late 1954.

LaViolette contends that electrogravitics may have been put to practical use in the B-2 Advanced Technology Bomber to provide an exotic auxiliary mode of propulsion. This conclusion is based on the recent disclosure that the B-2 charges both its wing leading edge and jet exhaust stream to a high voltage.

Positive ions emitted from its wing leading edge would produce a positively charged parabolic ion sheath ahead of the craft while negative ions injected into it's exhaust stream would set up a trailing negative space charge with a potential difference in excess of 15 million volts.

According to electrogravitic research carried out by Tesla and T. Townsend Brown, such a differential space charge would set up an artificial gravity field that would induce a reactionless force on the aircraft in the direction of the positive pole.

An electrogravitic drive of this sort could allow the B-2 to function with over-unity propulsion efficiency when cruising at supersonic velocities. On March 9, 1992, Aviation Week And Space Technology magazine made a surprising disclosure that the B-2 electrostatically charges its exhaust stream and the leading edges of its wing-like body.

Those familiar with the research of Tesla in the early 20th century will quickly realize that this is tantamount to stating that the B-2 is able to function as an antigravity aircraft. Aviation Week obtained their information about the B-2 from a small group of renegade west coast scientists and engineers who were formerly associated with black research projects.

In making these disclosures, these scientists broke a code of silence that rivals the Mafia's. They took the risk because they felt that it was important for economic reasons that efforts be made to declassify certain black technologies for commercial use.

Two of these individuals said that their civil rights had been blatantly abused (in the name of security) either to keep them quiet or to prevent them from leaving the tightly controlled black research and development community. Although the

scientists mentioned nothing about electrogravitics in their Aviation Week disclosure about the B-2, they did admit to the existence of very dramatic, classified technologies applicable to aircraft control and propulsion.

They were especially hesitant to discuss these projects, noting that they are very secret. One of them commented: "Besides, it would take about 20 hours to explain the principles, and very few people would understand them anyway."

Apparently what he meant is that this aircraft control and propulsion technology is based on principles that go beyond what is currently known and understood by most academic physicists. That is with the exception of two geniuses who developed the original ideas for high voltage electric drives decades ago.

It must be also considered that the B-2 is now no longer the only aircraft to use such technologies. Since that time an entire generation of black budget secret aircraft may have been developed with electrogravitic systems.

Art Bells Mysterious Metal - The Key to Antigravity

The suggestion that UFOs could be manmade flying machines using exotic technologies is not new to the study of unidentified flying objects. In the 1950's several researchers in Europe claimed that Tesla and Marconi had secretly built and tested operational antigravity aircraft. Using electrogravitic drives, these experimental aircraft were eventually based out of a secret location in South America.

Allegedly, Nazi Germany got a hold of this technology and produced several antigravity flying saucers of their own. Fortunately, by the time Hitler decided to dedicate more time and funds to the Nazi flying saucer project, the war was almost over for the Germans. Of course by that time Tesla had passed away, but it is almost certain that he would have been horrified by the use of his invention by the Germans.

Early evidence for these anecdotal tales was scant and consisted almost entirely of discovered research papers and a few photos of similarly shaped UFOs. As has been already noted in this book, early UFO contactees such as George Adamski and Howard Menger witnessed and even photographed UFOs that bore a striking resemblance to the small discs built by T. Townsend Brown.

Could these UFOs actually be manmade machines flown by humans? Or were extraterrestrials flying around in spacecraft utilizing similar technology as that discovered by Tesla and Brown?

In 1996, late night radio host Art Bell received a package containing bits of metal that the sender claimed was taken from the crashed UFO found near Roswell, New Mexico in 1947. Could these unassuming pieces of metal be the evidence that proved the reality of UFOs and their use of electrogravitic technology? The pieces of metal seemed almost too good to be true and Bell was at first skeptical because of similar past hoaxes involving alleged parts from UFOs.

Bell sent a few samples to Linda Moulton Howe, who promptly had the metal analyzed. Using Wave Dispersive Spectroscopy, It was discovered that the metal was made up of a magnesium zinc alloy with pure bismuth layers. There was a range from 97 to about 97 - 1/2 % magnesium and 3% to 2 - 1/2 % zinc in each of those 100 to 200micron layers of the magnesium zinc, so the metal was almost entirely magnesium with about 3% zinc.

The pure bismuth layers were one to four microns thick in a slightly wavy pattern and nothing else but bismuth was found. No oxygen was found, no zirconium, no other elements -just these three.

High energy experiments conducted on the unusual metal indicated a tendency for lateral movement. Unfortunately, this research has not resulted in any solid conclusions at this time.

After this information was broadcast on Art's show, Howe received a fax from a listener named Dan who indicated he had professional knowledge that would relate the material to antigravity. He had worked from 1973 to 1980 for an organization called Aeronautical Systems Division at Edwards Air Force Base in California with some assignments at Wright Patterson in Ohio.

Dan received bachelors degrees in physics, aerospace engineering and computer science from California Polytechnic State University, a masters degrees in computer science and aerospace engineering from the University of California at Berkley and then received his Ph.D. in physics in 1974 after he had already begun work as a civilian scientist for the Air Force.

Dan told Howe that he had been involved in aeronautical engineering and evaluations when he first saw metal similar to what was sent to Art bell. The metal supposedly was used in a electrogravitic capacity. In the case of bismuth, its basically a diamagnetic material which means it tends to repel a magnetic field.

"There were very strange things that were bound with bismuth as basically positive charges were added to it, you know, putting a field, a positive electron field into the bismuth," Dan said to Howe. "As a matter of fact they were very dramatic, some of the things that they found. A lot of this goes all the way back to 1917 with Nikola Tesla and his discoveries of electrical fields and gravity."

Howe wanted to know what was the most dramatic thing that would happen as the positive flow was increased into bismuth. Dan's answer was that basically there would be a mass reduction to the point where it could come to zero and actually rise into the air, creating a lifting body.

A now defunct UFO group in England claimed that one of their members had conducted experiments with dissimilar metals in the 1970's. He used two disks of the same dimension and thickness but of two different materials, copper and zinc. The disks were kept very close together and rotated in opposite directions. The claim was they levitated when spun, though the comment did not specify the requirement for high voltage as in the case of the Biefeld/Brown effect.

It was simply rotation of mass which is more consistent with Otis T. Carr, Bruce DePalma and Dr. Harold Aspden, with their claims of anomalous inertial or gravitic effects associated with rotating mass.

An interesting story was told at the recent Low Level Energy Conference by Michael Roberts, President of the Association for Push Gravity Research. One day a few years ago, he got a phone call at his home in Waco. It was from a fellow who had stopped in Waco and wanted to meet Michael at a local mall.

Michael drove out to the mall and the man was parked, in his late model Jeep in a remote section of the parking lot. They shook hands and talked a bit. The man said he would like to show Michael what he had been working on.

The Jeep engine was off, the vehicle was put in neutral and was not braked in anyway. Michael was asked to push the vehicle. He did so with both hands, meeting an expected amount of resistance before he got it moving.

The man got in and braked the vehicle. He then showed Michael four mystery boxes (each about 12" x 6" x 4"), mounted in the top of each wheel well of the Jeep. Each box had an electrical cable that led under the hood. Michael was not allowed to see under the hood.

Immediately after the push test, the man got in the Jeep and flicked a toggle switch which had been installed under the dashboard. Michael was then asked to push the Jeep again, this time it moved with the light touch of one hand. The man

would say nothing about how this miracle was accomplished, he just wanted to show Michael that it was possible to achieve an antigravity effect using electricity.

One possible explanation may be that the four boxes acted to provide a stabilized buoyancy type field, like pontoons on a boat. The use of only one would deflect the incoming gravity in one localized area, thus creating an imbalance. Whereas one unit over each wheel would equally distribute the deflection around the center of mass of the Jeep.

The book Occult Ether Physics: Testa's Hidden Space Propulsion System And The Conspiracy To Conceal It, concentrates on the 19th century Aether science leading up to Tesla's discovery of electro-propulsion. Tesla's holy grail was to build his electric flying machine, and to draw some of the environmental energy out of the cosmos.

This plan involved a theory of radioactivity under development by Tesla in the 1890s, which entirely presaged and conflicted with currently accepted Relativism, quantum mechanics, and nuclear energy theories. To Tesla, so-called atomic energy was in fact the result of environmental energy emanating from the cosmos, and made known to us via radioactive matter. This matter, Tesla said, had the peculiar property of resonating and reacting with ubiquitous cosmic radiation.

The cosmic radiation of which Tesla spoke was of much higher frequency than what we call radioactive emanations. Tesla believed that these were the result of a step-down process, in which certain peculiar matter reacts to and converts ubiquitous, omnidirectional cosmic radiation.

Today, we call this zero point radiation (ZPR), from higher frequencies, to lower, more useful and appropriate frequencies, such as gamma, x-ray, ultraviolet, visible, infrared radiation, as well as magnetism and even electrical current. These step-down frequencies are much easier to detect and measure than the ZPR.

The existence of the ZPR was well known to Tesla in the 1890s, but it was not until recently that it became scientifically accepted as a proven fact. This radiation is of such high frequency that it normally passes through space, the earth, and our bodies without harm or incident, in constant equilibrium, because its short wavelengths do not normally react or resonate with the atoms of most matter.

It is radioactive matter, according to Tesla, which has a peculiar atomic structure which reacts with this radiation to produce radioactivity. Atomic energy, to Tesla, comes from the ZPR, not atoms. If a lump of radium could be shielded from the effects of the ZPR, said Tesla, it would show no radioactivity.

Most naturally radioactive elements are dense and unstable, that is, they are said by the Relativists to decay as radiation is emitted, to elements of lower atomic numbers. The Relativists, with whom Tesla vehemently disagreed, believe that naturally radioactive elements spontaneously lose mass in the process of such decay, so that the energy released as radioactivity, is equivalent to the lost mass according to Einstein's equation, E=mc2.

If non-radioactive elements are converted into radioactive elements by the forces of nature, what are these processes? In a New York Times article of July 11, 1937 (pg.13, col.2), in one of Tesla's famous birthday announcements, Tesla stated that he had developed a process for the manufacture of radium (transmutation from other elements), which was so efficient that it could be sold for $1.00 per pound.

He also announced that he had absolutely developed a system for the interstellar transmission of energy. He said he had been working in several laboratories, but refused to disclose their locations.

His working model, he said, "...employs more than three dozen of my inventions. It is a complex apparatus, an agglomeration of parts. It could convey several thousand units of horsepower to other planets, regardless of the distance. Traveling through a channel of less than one-half of one-millionth of a centimeter." Further, he said, "This is not an experiment. I have built, demonstrated and used it. Only a little time will pass before I can give it to the world."

These facts demonstrate that even in his 80s, Tesla was involved in secret research at several undisclosed laboratories, on technology which even today remains highly classified. Technology that is only now being fully understood and secretly utilized.

The Tesla Flying Saucer

Bill Jones, writing for The UFO Enigma, the newsletter for the UFO Study Group of greater St. Louis, comments that Tesla did the basic research for constructing electromagnetic field lift-and-drive aircraft/spacecraft. From 1891 to 1893, he gave a set of lectures and demonstrations to groups of electrical engineers.

As part of each show, Tesla stood in the middle of the stage, using his 6' 6" height, with an assistant on either side, each seven feet away. All three men wore thick cork or rubber shoe soles to avoid being electrically grounded. Each assistant held a wire, part of a high voltage, low current circuit.

When Tesla raised his arms to each side, violet colored electricity jumped harmlessly across the gaps between the men. At high voltage and frequency in this arrangement, electricity flows over a surface, even the skin, rather than into it. This is a basic circuit which could be used by aircraft/spacecraft.

The hull is best made double, of thin, machinable, slightly flexible ceramic. This becomes a good electrical insulator, has no fire danger, resists any damaging effects of severe heat and cold, and has the hardness of armor, besides being easy for magnetic fields to pass through.

The inner hull is covered on it's outside by wedge shaped thin metal sheets of copper or aluminum, bonded to the ceramic. Each sheet is three to four feet wide at the horizontal rim of the hull and tapers to a few inches wide at the top of the hull for the top set of metal sheets, or at the bottom for the bottom set of sheets. Each sheet is separated on either side from the next sheet by 1 or 2 inches of uncovered ceramic hull.

The top set of sheets and bottom set of sheets are separated by about 6 inches of uncovered ceramic hull around the horizontal rim of the hull. The outer hull protects these sheets from being short-circuited by wind blown metal foil (Air Force radar confusing chaff), heavy rain or concentrations of gasoline or kerosene fumes.

If unshielded, fuel fumes could be electrostatically attracted to the hull sheets, burn and form carbon deposits across the insulating gaps between the sheets, causing a short-circuit. The space, the outer hull with a slight negative charge, would absorb hits from micro-meteorites and cosmic rays (protons moving at near the speed of light).

Any danger of this type that doesn't already have a negative electric charge would get a negative charge in hitting the outer hull, and be repelled by the metal sheets before it could hit the inner hull. The hull can be made in a variety of shapes; sphere, football, disc, or streamlined rectangle or triangle, as long as these metal sheets, "are of considerable area and arranged along ideal enveloping surfaces of very large radii of curvature," p. 85. My Inventions, by Nikola Tesla.

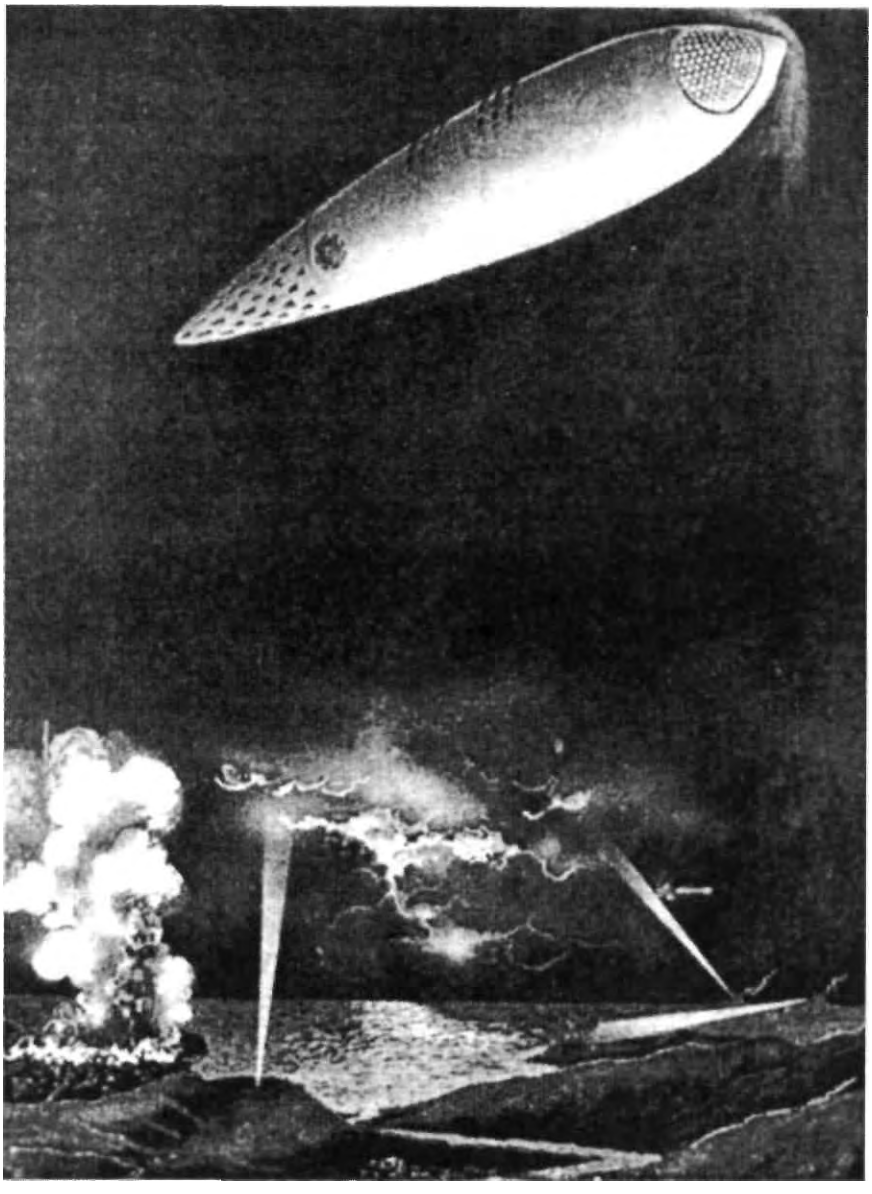

Tesla's concept of a electrogravitic aircraft originally conceived in 1919. "I am now planning aerial machines devoid of sustaining planes, ailerons, propellers and other external attachments, which will be capable of immense speeds."

The power plant for this machine can be a nuclear fission or fusion reactor for long range and long-term use to run a steam engine which turns the generators. A short range machine can use a hydrogen oxygen fuel cell to run a low-voltage motor to turn the generators, occasionally recharging by hovering next to high voltage power lines and using antennas mounted on the outer hull to take in the electricity. The short-range machine can also have electricity beamed to it from a generating plant on a long-range aircraft/spacecraft or on the ground.

One standard for the generators is to have the same number of magnets as field coils. Tesla's preferred design was a thin disc holding 480 magnets with 480 field coils wired in series surrounding it in close tolerance. At 50 revolutions per minute, it produces 19,400 cycles per second.

The electricity is fed into a number of large capacitors, one for each metal sheet. An automatic switch, adjustable in timing by the pilot, closes, and as the electricity jumps across the switch, back and forth, it raises it's own frequency a switch being used for each capacitor.

The electricity goes into a Tesla transformer; again, one transformer for each capacitor. In an oil tank to insulate the windings and for cooling, and supported internally by wood, or plastic, pipe and fittings, each Tesla transformer looks like a short wider pipe that is moved along a longer, narrower pipe by an insulated non-electric cable handle. The short pipe, the primary, is six to ten windings (loops) of wire connected in series to the long pipe. The secondary is 460 to 600 windings, at the low voltage and frequency end.

The insulated non-electric cable handle is used through a set of automatic controls to move the primary coil to various places on the secondary coil. This is the frequency control. The secondary coil has a low frequency and voltage end and a maximum voltage and frequency end. The greater the frequency the electricity, the more it pushes against the earth's electrostatic and electromagnetic fields.

The electricity comes out of the transformer at the high voltage end and goes by wire through the ceramic hull to the wide end of the metal sheet. The electricity jumps out on and flows over the metal sheet, giving off a very strong electromagnetic field, controlled by the transformer. At the narrow end of the metal sheet, most of the high-voltage push having been given off, the electricity goes back by wire through the hull to a circuit breaker box (emergency shut off).

In bright sunlight, the aircraft/spacecraft may seem surrounded by hot air, a slight magnetic distortion of the light. In semi-darkness and night, the metal sheets glow, even through the thin ceramic outer hull, with different colors. The visible light is a by-product of the electricity flowing over the metal sheets, according to the frequencies used.

Descending, landing or just starting to lift from the ground, the transformer primaries are near the secondary weak ends and therefore, the bottom set of sheets glow a misty red. Red may also appear at the front of the machine when it is moving forward fast, lessening resistance up front.

Orange appears for slow speed. Orange-yellow are for airplane-type speeds. Green and blue are for higher speeds. With a capacitor addition, making it oversized for the circuit, the blue becomes bright white, like a searchlight, with possible risk of damaging the metal sheets involved.

The highest visible frequency is violet, like Tesla's stage demonstrations, used for the highest speed along with the bright white. The colors are nearly coherent, of a single frequency, like a laser. A machine built with a set of super conducting magnets would simplify and reduce electricity needs from a vehicle's transformer circuits to the point of flying along efficiently and hovering with very little waste of electricity.

When Tesla was developing arc lights to run on alternating current, there was a bothersome high-pitched whine, whistle, or buzz, due to the electrodes rapidly heating and cooling. Tesla put this noise in the ultrasonic range with the special transformer already mentioned. The aircraft/spacecraft gives off such noises when working at low frequencies.

Timing is important in the operation of this machine. For every three metal sheets, when the middle one is briefly turned off, the sheet on either side is energized, giving off the magnetic field. The next instant, the middle sheet is energized, while the sheet on either side is briefly turned off.

There is a time delay in the capacitors recharging themselves, so at any time, half of all the metal sheets are energized and the other half are recharging, alternating all around the inner hull. This balances the machine, giving it very good stability. This balance is less when fewer of the circuits are in use.

At a fairly close range, the aircraft/spacecraft produces heating of persons and objects on the ground; but by hovering over an area at low altitude for maybe five or ten minutes, the machine also produces a column of very cold air down

to the ground. As air molecules get into the strong magnetic fields that the machine is transmitting out, the air molecules become polarized and from lines, or strings, of air molecules.

The normal movement of the air is stopped, and there is suddenly a lot more room for air molecules in this area, so more air pours in. This expansion and the lack of normal air motion make the area intensely cold. This is also the reason that the aircraft/spacecraft can fly at supersonic speeds without making sonic booms.

As air flows over the hull, top and bottom, the air molecules form lines as they go through the magnetic fields of the metal sheet circuits. As the air molecules are left behind, they keep their line arrangements for a short time, long enough to cancel out the sonic boom shock waves.

Outside the earth's magnetic field, another propulsion system must be used, which relies on the first. You may have read of particle accelerators, or cyclotrons, or atom smashers. A particle accelerator is a circular loop of pipe that, in cross-section, is oval.

In a physics laboratory, most of the air in it is pumped out. The pipe loop is given a static electric charge, a small amount of hydrogen or other gas is given the same electric charge so the particles won't stick to the pipe. A set of electromagnets all around the pipe loop turn on and off, one after the other, pushing with one magnetic pole and pulling with the next, until those gas particles are racing around the pipe loop at nearly the speed of light.

Centrifugal force makes the particles speed closer to the outside edge of the pipe loop, still within the pipe. The particles break down into electrons, or light and other wavelengths, protons or cosmic rays, and neutrons if more than hydrogen is put in the accelerator.

At least two particle accelerators are used to balance each other and counter each other's tendency to make the craft spin. Otherwise, the machine would tend to want to start spinning, following the direction of the force being applied to the particles. The accelerators push in opposite directions.

The high speed particles go out through straight lengths of pipe, charged like the loops and in speeding out into space, push the machine along. Doors control which pipes the particles leave from. This allows very long range acceleration and later deceleration at normal (earth) gravity. This avoids the severe problems of weightlessness, including lowered physical abilities of the crew. It is possible to use straight-line particle accelerators, even as few as one per machine, but these

don't seem as able to get the best machine speed for the least amount of particles pushed out.

Using a constant acceleration of 32.2 feet per second provides earth normal gravity in deep space and only two gravities of stress in leaving the earth's gravity field. It takes, not counting air resistance, 18 minutes, 58.9521636 seconds to reach the 25,000 miles per hour speed to leave the earth's gravity field.

A shortwave radio can be used to find the exact frequencies that an aircraft/ spacecraft is using, for each of the colors it may show, a color television can show the same overall color frequency that the nearby, but not extremely close, craft is using. This is limited in its use, as a machine traveling at the speed of a jet airliner may broadcast in a frequency range usually used for radar sets.

The craft circuits would tend to override lower voltage electric circuits within and near their electromagnetic fields. One source briefly mentioned a 1941 incident, where a shortwave radio was used to override automobile ignition systems, up to three miles away. How many UFO encounters have been reported in which automobile ignition systems have suddenly stopped?

Tesla's Connection to Project Rainbow

Nikola Tesla has recently been the subject of controversy due to the claims of Al Bielek and Preston Nichols. These men have reported in a number of books and articles that Tesla was involved in one of the most disputed mysteries of World War II, The Philadelphia Experiment.

The Philadelphia Experiment, otherwise known as Project Rainbow, was allegedly an attempt by the Navy to create a ship that could not be detected by magnetic mines and or radar. However, its results were said to be far different and much more dangerous than the Navy ever expected.

In the early 1930's, the University of Chicago investigated the possibility of invisibility through the use of electricity. This project was later moved to Princeton's Institute of Advanced Studies where it was named Project Rainbow (project invisibility), and was founded in 1936.

Nicola Tesla was named Director of the project. Tesla was given anything that was required by him for the testing of the project. Tesla required and was given a navy battle ship on which the experiments were to be tested. The first test of

invisibility occurred in 1940 and was slated as a full success when a navy ship with no crew on board vanished from this plane of existence.

The basic design, had two large Tesla coils (electromagnets) placed on each hull of the ship. The coils are turned on in a special sequence and their magnetic force is so powerful that they warp gravity itself.

Based in part on Tesla's earlier electrogravitic experiments, Project Rainbow proved to be far more dangerous than was originally conceived. Al Bielek claims that Tesla began to have doubts about the safety of the experiment due to his communications with extraterrestrials.

"Tesla had a press announcement in 1923 where he stated he was talking with ET's off planet. Now after he retired from RCA he maintained a laboratory in his living quarters at the Hotel New Yorker. Unknown to most people he had a second laboratory which apparently was his main one on top of the Waldorf Astoria on the top floor and both penthouse towers.

"He maintained a transmitter setup on the Waldorf; and his receiving setup, his receiving antennas and receivers which had been built by RCA under his direction, were on the New Yorker. And I know two people who said they were working with Tesla, during that period, that he was using that equipment, he was talking with somebody, virtually every day, and one of them was emphatic: it was someone off planet. In plain language, he was communicating with ET's."

Tesla stated that there would be a serious problem with personnel if anyone were to enter the ship while the gauss coils were turned on and the Electro Magnetic radiation would damage them within this reality. He said in numerous occasions that he was in contact with extraterrestrials and that the ET's had confirmed that there would be a problem with the experiment.

Tesla wanted to clarify the problem before any farther experiments would begin. However the Navy said no, they were fighting a war and wanted immediate results. On the second experiment, Tesla, fearing that there would be people hurt or killed in the experiment, decided to sabotage the 1942 test. He de-tuned the equipment so nothing would work and the test failed. Tesla resigned in March 1942 and left the project.

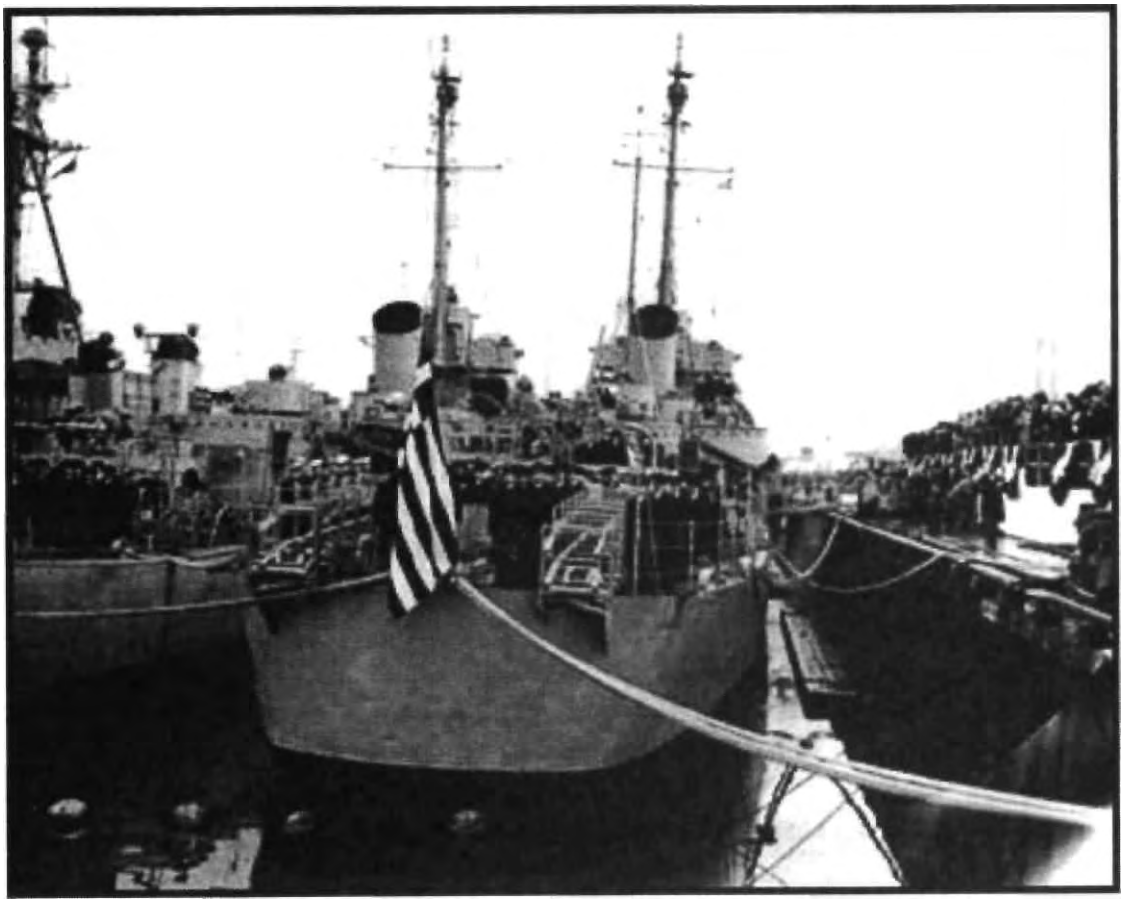

In July 1943, the destroyer U.S.S. Eldridge pulled into the Delaware Bay area for a United States Naval experiment that involved the task of making the ship invisible using Tesla technology. The project's official name was Project Rainbow, but is more commonly known as the Philadelphia Experiment.

Chapter Seven

Free Energy - Fact or Fiction?

While in college Tesla thought it could be possible to operate an electrical motor without sparking brushes. He was told by the professor that such a motor would require perpetual motion and was therefore impossible. Tesla was determined to prove him wrong.

In the 1880's, despite his professors scoffs, Tesla patented the alternating current generator, motor, and transformer. During the 1890's he intensively investigated other methods of power generation including a charged particle collector patented in 1901.

When the New York Times in June of 1902 carried a story about an inventor who claimed he had invented an electrical generator that did not require a prime mover in the form of an external fuel supply, Tesla wrote a friend that he had already invented such a device.

Tesla claimed the invention was an electrical generator that would not consume any fuel. Such a generator would be its own prime mover and was utterly impossible according to modern scientists.

Ninety to a hundred years ago, everybody knew that a heavier-than-air machine could not possibly fly. It would violate the laws of physics. This was the learned opinion of practically all of the so-called experts on the matter.

For example, Simon Newcomb declared in 1901: "The demonstration that no possible combination of known substances, known forms of machinery and known forms of force, can be united in a practical machine by which man shall fly long distances through the air."

Fortunately, a few people such as the Wright Brothers wouldn't accept such pronouncements as the final word. Now we take heavier than air flight for granted. Today, orthodox physicists and other scientists are saying similar things against the idea of free energy technologies.

They use negative terms such as pseudoscience and perpetual motion, and citing physical laws which assert that energy cannot be created or destroyed (1st law of thermodynamics), and there is always a decrease in useful energy (2nd law of thermodynamics).

Free energy inventions are devices which can tap a seemingly unlimited supply of energy from the universe, without burning any kind of fuel, creating the perfect

solution to the worldwide energy crisis and its associated pollution, degradation, and depletion of the environment. Most free energy devices probably do not create energy, but rather tap into existing natural energy sources by various forms of induction.

Unlike solar or wind devices, free energy devices need little or no energy storage capacity, because they can tap as much energy as needed when needed. Properly designed, free energy devices do not have any limitations.

In The Brooklyn Eagle newspaper, Tesla announced, on July 10th, 1931, that: "I have harnessed the cosmic rays and caused them to operate a motive device." Later on in the same article he said that: "More than 25 years ago I began my efforts to harness the cosmic rays and I can now state that I have succeeded."

In 1933, he made the same assertion in an article for the New York American, under the lead in: Device to Harness Cosmic Energy Claimed by Tesla.

"This new power for the driving of the world's machinery will be derived from the energy which operates the universe, the cosmic energy, whose central source for the earth is the sun and which is everywhere present in unlimited quantities." Dating back more than 25 years ago from 1933 would mean that the device Tesla was speaking about must have been built before 1908. Almost certainly the idea had occurred to Tesla years earlier. More precise information is available through his correspondence now located in the Columbia University Library's collection.

Electricity Without Burning Fuel

Writing on June 10th, 1902 to his friend Robert U. Johnson, editor of Century Magazine, Tesla included a clipping from the previous day's New York Herald about Clemente Figueras, a woods and forest engineer in Las Palmas, capital of the Canary Islands, who had invented a device for generating electricity without burning fuel.

What became of Figueras and his fuel-less generator is not known, but this announcement in the paper prompted Tesla, in his letter to Johnson, to claim he had already developed such a device and had revealed the underlying physical laws.

Other U.S. patents have been filed: (#3,811,058, #3,879,622, and #4,151,4310), for example, for motors that run exclusively on permanent energy,

seemingly tapping into energy circulating through the earth's magnetic field. The first two require a feedback network in order to be self-running.

The third one, (as described in detail in Science & Mechanics magazine, Spring, 1980), requires critical sizes, shapes, orientations, and spacings of magnets, but no feedback. Such a motor could drive an electric generator or reversible heat pump in one's home, year round, for free. [Complete descriptive copies of U.S. patents are $3.00 each from the U.S. Patent Office, 2021 Jefferson Davis Hwy., Arlington, VA22202; correct 7-digit patent number required.]

According to Oliver Nichelson, who has made extensive studies of Tesla and free energy machines, the device that, at first, seems to best fit Tesla's claims is found in his patent for an "Apparatus for the Utilization of Radiant Energy" Number 685,957, that was filed for on March 21, 1901 and granted on November 5, 1901.

The concept behind the older technical language is simple - an insulated metal plate is put as high as possible into the air. Another metal plate is put into the ground. A wire is run from the metal plate to one side of a capacitor and a second wire goes from the ground plate to the other side of the capacitor.

The sun, as well as other sources of radiant energy, throw off minute particles of matter positively electrified, which, impinging upon [the upper] plate, communicate continuously an electrical charge to the same. The opposite terminal of the condenser being connected to ground, which may be considered as a vast reservoir of negative electricity, a feeble current flows continuously into the condenser and inasmuch as the particles are charged to a very high potential, this charging of the condenser can continue almost indefinitely, even to the point of rupturing the dielectric.

Today, we would call this device a solar-electric panel. Tesla's invention is very different though, but the closest thing to it in conventional technology is in photovoltaics. One radical difference is that conventional solar-electric panels consist of a substrate coated with crystalline silicon; the latest use amorphous silicon.

Conventional solar panels are expensive, and, whatever the coating, they are manufactured by esoteric processes. But Tesla's solar panel is just a shiny metal plate with a transparent coating of an insulating material.

Stick one of these antenna-like panels up in the air, the higher the better, and wire it to one side of a capacitor, the other going to a good earth ground. Now the

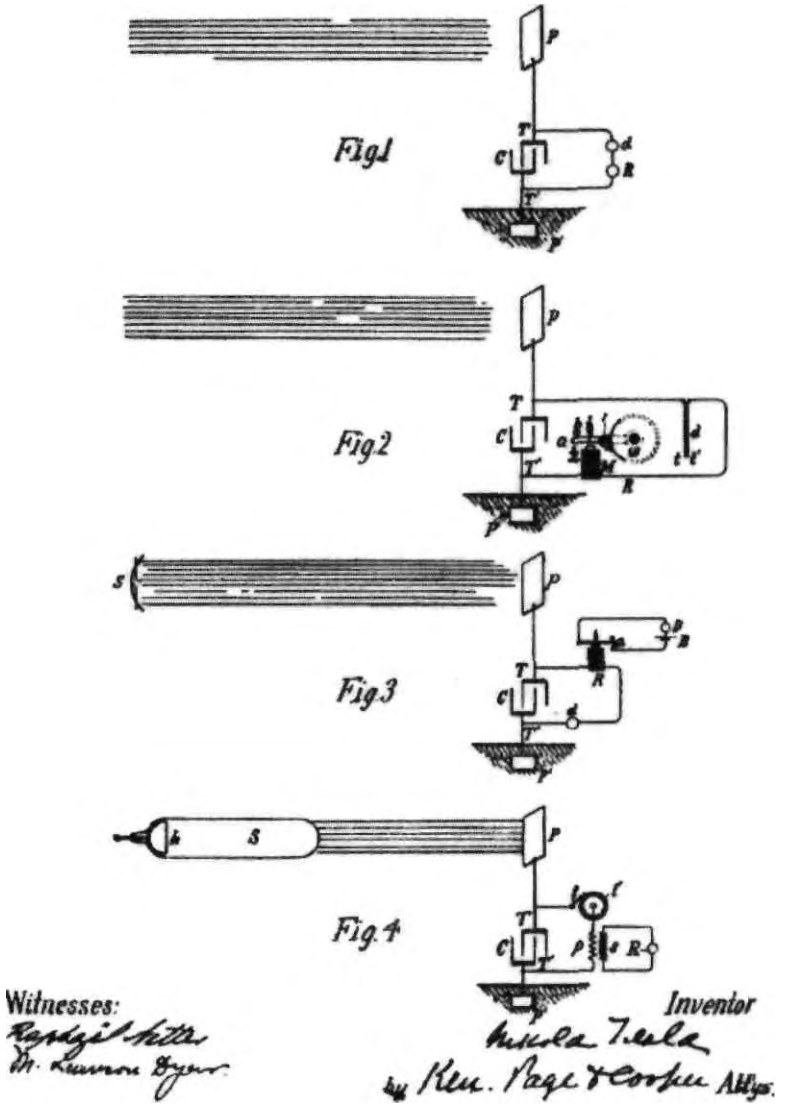

"Apparatus for the Utilization of Radiant Energy" Patent #685,957, filed on March 21, 1901 and granted on November 5, 1901.

energy from the sun is charging that capacitor. Connect across the capacitor some sort of switching device so that it can be discharged at rhythmic intervals, and you have an electric output.

Tesla's patent tells us that it is very simple to get electric energy. The bigger the area of the insulated plate, the more energy you get. However, this is more than a solar panel because it does not necessarily need sunshine to operate. It also produces power at night.

Of course, this is impossible according to official science. For this reason, you could not get a patent on such an invention today. Tesla's free energy receiver refers to the sun, as well as other sources of radiant energy, like cosmic rays.

That the device works at night is explained in terms of the night time availability of cosmic rays. Tesla also refers to the ground as a vast reservoir of negative electricity.

Tesla was fascinated by radiant energy and its free energy possibilities. He called the Crooke's radiometer (a device which has vanes that spin in a vacuum when exposed to radiant energy) a beautiful invention. He believed that it would become possible to harness energy directly by connecting to the very wheelwork of nature.

This seems like a very straightforward design and would seem to fulfill his claim for having developed a fuel-less generator powered by cosmic rays, but in 1900 Tesla wrote what he considered his most important article in which he describes a self-activating machine that would draw power from the ambient medium, a fuel less generator, that is different from his Radiant Energy Device.

Entitled: The Problem of Increasing Human Energy - Through the Use of the Sun, the article was published by his friend Robert Johnson in The Century Illustrated Monthly Magazine for June 1900.

The title of the chapter where he discusses this device is called: A Departure From Known Methods - Possibility of a "Self Acting" Engine or Machine, Inanimate, Yet Capable, Like an Living Being, of Deriving Energy From the Medium - The Ideal Way of Obtaining Motive Power.

Tesla stated he first started thinking about the idea when he read a statement by Lord Kelvin who said it was impossible to build a mechanism capable of abstracting heat from the surrounding medium and to operate by that heat. Tesla envisioned a very long bundle of metal rods, extending from the earth to outer space.

The earth is warmer than outer space so heat would be conducted up the bars along with an electric current. Then, all that would be needed is a very long power cord to connect the two ends of the metal bars to a motor.

The motor would continue running until the earth was cooled to the temperature of outer space. Of course, now we wouldn't need a power cord to connect the two ends - microwaves would serve.

This would be an inanimate engine which, to all evidence, would be cooling a portion of the medium below the temperature of the surrounding, and operating by the heat abstracted, that is, it would produce energy directly from the environment without the consumption of any material.

Tesla goes on in the article to describe how he worked on the development of such an energy device - here it takes a bit of detective work to focus on which of his inventions he meant.

He wrote that he first started thinking about deriving energy directly from the environment when he was in Paris during 1883, but that he was unable to do much with the idea for several years due to the commercial introduction of his alternating current generators and motors. It was not until 1889 when he again took up the idea of the self-acting machine.

In 1893, Tesla applied for a patent on an electrical coil that is the most likely candidate for a non-mechanical successor of his energy extractor. This is his "Coil for Electro-magnets," patent #512,340. It is a curious design, unlike an ordinary coil made by turning wire on a tube form, this one uses two wires laid next to each other on a form but with the end of the first one connected to the beginning of the second one.

In the patent Tesla explains that this double coil will store many times the energy of a conventional coil. The patent, however, gives no hint of what might have been its more unusual capability.

In an article for Century Magazine, Tesla compares extracting energy from the environment to the work of other scientists who were, at that time, learning to condense atmospheric gases into liquids. In particular he cited the work of a Dr. Karl Linde who had discovered what Tesla described as a self-cooling method for liquefying air.

As Tesla said, "This was the only experimental proof which I was still wanting that energy was obtainable from the medium in the manner contemplated by me." What ties the Linde work with Tesla's electromagnet coil is that both of them used

a double path for the material they were working with. Linde had a compressor to pump the air to a high pressure, let the pressure fall as it traveled through a tube, and then used that cooled air to reduce the temperature of the incoming air by having it travel back up the first tube through a second tube enclosing the first.

The already cooled air added to the cooling process of the machine and quickly condensed the gases to a liquid. Tesla's intent was to condense the energy trapped between the earth and its upper atmosphere and to turn it into an electric current.

He pictured the sun as an immense ball of electricity, positively charged with a potential of some 200 billion volts. The Earth, on the other hand, is charged with negative electricity.

The tremendous electrical force between these two bodies constituted, at least in part, what he called cosmic energy. It varied from night to day and from season to season but it is always present.

Tesla's patents for electrical generators and motors were granted in the late 1880's. During the 1890's the large electric power industry, in the form of Westinghouse and General Electric, came into being. With tens of millions of dollars invested in plants and equipment, the industry was not about to abandon a very profitable ten year old technology for yet another new one.

Tesla saw that profits could be made from the self-acting generator, but somewhere along the line it was pointed out to him the negative impact the device would have on the newly emerging technological revolution of the late 19th and early 20th centuries.

At the end of his article in Century he wrote: "I worked for a long time fully convinced that the practical realization of the method of obtaining energy from the sun would be of incalculable industrial value, but the continued study of the subject revealed the fact that while it will be commercially profitable if my expectations are well founded, it will not be so to an extraordinary degree."

Years later, in 1933, he was more pointed in his remarks about the introduction of his fuel-less generator. In the Philadelphia Public Ledger of November 2, is an interview with Tesla under the headline: Tesla 'Harnesses' Cosmic Energy.

In it he was asked whether the sudden introduction of his principle would upset the present economic system, Dr. Tesla replied, "It is badly upset already." He added: "Now as never before was the time ripe for the development of new resources." At a press conference to celebrate his 76th birthday, Tesla announced that he had invented a cosmic-ray motor.

When asked if it was more powerful than the Crooke's radiometer, he answered, "Thousands of times more powerful." Tesla claimed that from the electric potential that exists between the elevated plate(plus) and the ground (minus), energy builds in the capacitor, and, after a suitable time interval, the accumulated energy will manifest itself in a powerful discharge.

Unfortunately, this invention, like so many others that Tesla claimed near the end of his life, allegedly never was developed. At least it was never developed publicly. When he died, there were in all, the approximate equivalent of a railroad boxcar load of Tesla materials confiscated by the government, from around four different storage locations.

Of this, a total of only about 150,000 documents were released to Tesla's Yugoslavian relatives, now held by the Tesla Institute in Belgrade. These documents and old models, primarily of a historical nature, comprise most of the published Tesla materials of the institute.

A huge volume of documents and models were retained by the Custodian of Alien Properties in an unclassified state, because the government's experts had declared that none of it was worth classifying.

From 1943 until 1945, when, following the arrival of the Nazi scientists and the secret war files of Nazi Germany, acquired under Operation Paperclip, officials from Wright-Patterson Air Force Base hurried up to the warehouses of the Custodian of Alien Properties, and took possession of all the documents and other materials, all which were classified at the highest level.

The remainder of Tesla's papers in government hands are still classified. There are literally tons of notes, documents, drawings, and plans, as well as the over twenty boxes of still missing Tesla material. The government distributed false rumors that Tesla never kept notes, which was a blatant lie.

To this day, there is no way of knowing whether or not Tesla's cosmic ray motor was practical or not. However, evidence found in Tesla's lost journals seems to indicate that free energy is possible and within the framework of known science.

Richard (Scott) McKie designed and tested in 1991 a small model of a Power On Demand MODule. The circuitry invokes Tesla's theories of electron flow, resonance, and magnetism, combined with modern theories on high frequency electronics and radio antennas to generate power directly, without the inefficient conversion of energy from other sources.

Tesla applied the knowledge gained from his Colorado experiments in the construction of Wardenclyffe in what is today Shoreham, Long Island. This facility was to be his crowning achievement: a World Telegraphy Center. Tesia envisioned not only the broadcast of news and transmission of encoded personal messages, but also a universal time code and the transmission of electricity.

Tree Energy Research Today

Patrick G. Bailey, Ph. D. in his Review Of Zero Point Energy And Free Energy Theory, Progress, And Devices- writes that the study of the free energy field overlaps with quite a number of other areas of science and technology that are not well understood, and are usually called "fringe areas."

Bailey believes that responsible investigations in these areas do uncover important information and data that can relate to various questions that occur in the study of free energy.

These questions include: Why is this research not conducted? Is it suppressed? Why is it suppressed? Are there other examples of such suppression? Where can I get more information? Are there any examples of such advanced related technologies? If such energy sources exist, has anyone found out how to use them? How do they work? Can I use them, and can I use them in a responsible manner?

There is a great outcry by those familiar with our current energy policy and the public electricity utility network for need of a new breakthrough in the technology of energy production. Dr. Gary Johnson, a college professor and IEEE Senior Member, recently published a short review of the researchers in this area in a noted US technical journal and concluded his four page report with the statement:

"There is a great deal of noise in the literature. Some concepts are obviously nonsense. Others will prove to be in error. But is there any signal in all the noise? There is if Tesla, Moray, and Bearden are correct. The potential payoff is enormous, so the search should be continued if there is any chance at all of success."

Also, Llewellen King, publisher of The Energy Daily, Defense Week, and Environmental Week newsletters in Washington DC recently strongly and dramatically stated in a speech to an international technical conference:

"We have failed with energy to come up with the 'Great Big Breakthrough!' 'The Major Change.' 'The Radically Different Thing.' 'The Quantum Leap Forward.' Where is the jump from a copper wire to a fiber or to a cable? Where is the equivalent of fiber optics for electricity? ... The new technologies such as magnetohydrodynamics, (are advancing and coming forth), and yet these things have not fostered - and we are still boiling water! It is theoretically possible that we could at some point take this 'Quantum Leap Forward.' And in order to do that, I believe that you will need new institutions to deploy new technology.

"They won't be deployed by the extant of the old institutions. The challenge in technology is to find It, and then sell It, and finally to deploy It."

Does there exist a conspiracy to suppress free energy devices - like the suppression that confronted Tesla with his free-energy receiver? There is the possibility that there is a collection and network of vested interest groups that seem to tightly band together for mutual financial survival.

The actions taken by any of these groups may be completely independent from the others. As well, some sort of control and suppression in the press seems very evident. Ken MacNeill published in 1983 a very disturbing article entitled "Insights into the Proprietary Syndrome," in which he points out that over 3,000 patents have been suppressed!

Two historical events are worth including here regarding possible suppression and inability to commercialize free energy devices. These are the Over-Unity Device of T. Henry Moray, and the Hindershot Motor. Both of these devices were publicly demonstrated to the US press in the 1930s, and carefully conducted tests were made to assess these devices.

From the newspaper reports and clippings, it appears that both devices passed all tests, only to fall into oblivion. What exactly happened to the devices, their inventors, and the technology is not known. It also appears that the secrets of the devices died with their inventors.

Toby Grotz has presented theory and results of Project Tesla to determine if the earth's electrostatic (atmospheric) Schumann Cavity can be resonated, if the power that is delivered to the cavity propagates with very low losses, and if power can be extracted at other locations within the cavity. A theoretical analysis of Tesla's "Death Ray" was also presented by Toby Grotz (1991).

By carefully examining historical records, this 1937 design was probably the first attempt to construct a high voltage particle beam device. Tesla's estimates indicate that a five meter diameter metal sphere charged to 60 million volts could project a high energy charged particle beam up to 60 kilometers through the air in a given direction.

In 1991, Oliver Nichelson summarized two of Tesla's later energy generation device designs, including a turbine-shaped Unipolar Dynamo design for a machine that can continue to produce electricity after being disconnected from an outside power source. This paper is also important because it also describes Tesla's "Coil for Electro-Magnetics," patented in 1893.

Following in Tesla's Footprints

In the early 1900's, Dr. T. Henry Moray of Salt Lake City produced his first device to tap energy from the metafrequency oscillations of empty space itself. Eventually Moray was able to produce a free energy device weighing sixty pounds and producing 50,000 watts of electricity for several hours. Ironically, although he demonstrated his device repeatedly to scientists and engineers, Moray was unable to obtain funding to develop the device further into a useable power station that would furnish electrical power on a mass scale. Like Tesla, Moray had run afoul of those who had an "energy monopoly" and were not willing to share.

As a boy, Moray had been deeply inspired by Nikola Tesla. Moray was especially enthusiastic by Tesla's claims of free energy, and his emphasis on frequencies as the stuff of the universe. When Moray finished high school he went abroad to study, and took resident examinations for his doctorate in electrical engineering from the University of Uppsala, Sweden, during the period 1912-14.

Moray at first theorized that energy was coming from within the earth. Through continuous experimentation and in spite of the doubts held by the scientific community of the day, he discovered that the energy was not coming from the ground but from an outside source away from the earth.

The energy came in continuous surges, like waves of the sea, more in the daytime than at night. At this time Moray had enough power to light a 16-candle power carbon lamp at about one-half capacity. He labeled and defined his "Radiant Energy: the source of energy coming from the cosmos to the earth and radiating back from whence it came."

Around 1920, Moray produced his first elementary device that delivered measurable electrical power, and he continued to work diligently on energy devices when he had time. In the 1920's and 1930's he steadily improved his devices, particularly his detector tube, the only real secret of the device according to Moray himself.

In his book, The Sea Of Energy In Which The Earth Floats, Moray presents documented evidence that he invented the first transistor-type valve in 1925. In his free energy detector tube Moray apparently used, inside the tube itself, a variation of this transistor idea—a small rounded pellet of a mixture of triboluminescent zinc, a semiconductor material, and a radioactive material.

Channeling the waves of energy was done by way of an antenna. When set up and connected to the ground, priming and then tuning, the device would draw electrical energy. Results of this experimentation proved that the power generation had not originated from within the device. The device, through channeling radiant energy, produced up to 50,000 Watts of power and worked for long periods of time.

According to John Moray, highly energetic cosmic rays from space are tapped by the machine, which is in subharmonic resonance with this high-frequency energy level, and it converts this energy level into a usable form of electricity. However, John Moray's use of the term "cosmic ray" is not necessarily the same as that of modern physics, but in fact is the same as the present concept of zero-point energy of vacuum.

Moray envisioned all space filled with tremendously high frequency vibrations carrying vast and incalculable amounts of pure raw energy. He envisioned the dynamic Universe as a turbulent source of great energy, just as the ocean waves carry energy throughout the earth. This idea was also shared by Tesla,

Moray's patent application (never granted) was filed on July 13, 1931, long before the advent of the Bell Laboratories' transistor. Moray successfully demonstrated his radiant energy device to electrical engineering professors, congressmen, dignitaries, and a host of other visitors to his laboratory. Moray even moved his device several miles out in the country, away from all power lines, to prove that he was not simply tuning in to energy being clandestinely radiated from some other part of his laboratory.

Several times he allowed independent investigators to completely disassemble his device and reassemble it, then reactivate it themselves. In all tests, he was successful in demonstrating that the device could produce energy output without any appreciable energy input. According to exhaustive documentation, no one was ever able to prove that the device was fraudulent or that Moray had not accomplished exactly what he claimed.

On the other hand, the records are full of signed statements from physicists, electrical engineers, and scientists who came to the Moray laboratory as skeptics and left convinced that Moray had succeeded in tapping a universal source of energy that could produce free electrical power.

But despite his successes, the U.S. Patent Office refused to grant Moray a patent, first, because his device used a cold cathode in the tubes (the patent

examiner asserted it was common knowledge that a heated cathode was necessary to obtain electrons) and, second, because he failed to identify the source of the energy.

All sorts of irrelevant patents and devices were also presented as being infringed upon or duplicated by Moray's work. Each of these objections was patiently answered and nullified by Moray; nonetheless, the patent has still not been issued to this day, although Moray's family still keep the patent application current.

According to writer Tom Bearden, one of Moray's efforts to develop the machine involved an association with the Rural Electrification Agency for a short time before World War II. At that time, the R.E.A. was apparently infiltrated at the highest levels by Communist sympathizers. These officials continually urged Moray to turn over all details of his device to the Soviet Union, and even arranged the visit of high level Soviet scientists to the Moray laboratory to see the device in operation.

It is thought that because of Moray's dealings with the R.E.A. - much of his important work was obtained clandestinely by the Soviet Union. Bearden speculates that Moray's work inspired the Soviets to develop the hyperspace amplifiers later used in their psychotronic weapons.

Moray became quite alarmed at the continued attempts of his R.E.A. contacts to get the device into the hands of the Russians. He eventually concluded that he had become involved with a governmental group filled with radicals and reactionaries. Much like Tesla, Moray became concerned that fifth column activity was actually directed against him in an attempt to steal his device.

Perhaps because of his misgivings, Moray was wounded by a gunshot in his own laboratory on March 2, 1940. No details have ever surfaced concerning who fired the shot or if Moray was the intended target. Moray finally discontinued his association with the R.E.A. in February 1941.

Unfortunately, Moray's basic unit was destroyed in 1939 by a man who had wanted Moray to fully disclose the inner workings and construction of his device. In Moray's day there was no theory predicting that empty space contained prodigious quantities of energy. Modern followers of quantum geometrodynamics assert the truth of Tesla's original vision. Today we know that one cubic centimeter of pure vacuum contains enough energy to condense into 1080 -10120 grams of matter. Thus the major part of Tesla's and Moray's thesis - that vacuum itself contains unlimited energy - is vindicated today.

The Mystery of the Tesla Electric Car

With the high price of gasoline and the ever growing concern for our environment, the concept of an all electric car is once again being considered by the major auto manufacturers. Unfortunately, the problem with battery weight and storage still makes electric cars economically unfeasible.

In an article by Arthur Abrom for the Dallas Morning News, it was pointed out that electric powered automobiles were one of the earliest considerations and this mode of propulsion enjoyed a brief but short reign. In the early days of automobile development, electric propulsion was considered and used.

An electric powered automobile possessed many advantages that the noisy, cantankerous, smoke-belching gasoline cars could not offer. First and foremost is the absolute silence one experiences when riding in an electrically powered vehicle. There is not even a hint of noise.

One simply turns a key and steps on the accelerator - the vehicle moves instantly. No cranking from the start, no crank to turn (this was before electric starters), no pumping of the accelerator, no spark control to advance and no throttle linkage to pre-set before starting. One simply turned the ignition switch to on and away you went.

If one wants to increase speed, you simply depress the accelerator, further there is never any hesitation. Releasing the accelerator causes the vehicle to slow down immediately - you are always in complete control. It is not difficult to understand why these vehicles were so very popular around the turn of the century and until around 1915.

The big disadvantage to these cars then, and even today, was their range and need for recharging every night. All of these electric vehicles used a series of batteries and a D.C. motor. The batteries require constant recharging and the range of travel was restricted to about 100 miles. Many of the large department stores in metropolitan areas began purchasing delivery trucks that were electrically powered. They were silent and emitted no pollutants. They were almost the perfect car.

Maintenance was a minimum on electrically powered vehicles. There were few mechanics and garages in operation in the early 1900's. So city life and travel appeared to be willing to embrace the electric automobile.

Two things happened to dampen the popularity of the electric automobile. One was the subconscious craving for speed that gripped all auto enthusiasts of

this era. Electric vehicles could not reach speeds of 45 or 50 m.p.h. for this would have destroyed the batteries in moments. Bursts of speeds of 25 to 35 m.p.h. could be maintained for a moment or so.

Normal driving speed, depending upon traffic conditions, was 15 to 20 m.p.h. by 1900 to 1910 standards, this was an acceptable speed limit to obtain from your electric vehicle. As well, the electric automobile could not be adapted to accommodate and utilize Tesla's polyphase A.C. motor. So, somewhere around 1915 or so, the electric automobile became just a memory.

In 1931, under the financing of Pierce-Arrow and George Westinghouse, a 1931 Pierce-Arrow was selected to be tested at the factory grounds in Buffalo, N.Y. The standard internal combustion engine was removed and an 80-H.P. 1800 r.p.m electric motor installed to the clutch and transmission. The A.C. motor measured 40 inches long and 30 inches in diameter and the power leads were left standing in the air - no external power source.

At the appointed time, Nikola Tesla arrived from New York City and inspected the Pierce-Arrow automobile. He then went to a local radio store and purchased a handful of tubes, wires and assorted resistors. A box measuring 24 inches long, 12 inches wide and 6 inches high was assembled housing the circuit.

The box was then placed on the front seat and had its wires connected to the air cooled, brushless motor. Two rods 1 /4" in diameter stuck out of the box about 3" in length. Mr. Tesla got into the driver's seat, pushed the two rods in and stated, "We now have power." He put the car into gear and it moved forward.

This vehicle, powered by an A.C. motor, was driven to speeds of 90 m.p.h. and performed better than any internal combustion engine of its day. One week was spent testing the vehicle. Several newspapers in Buffalo reported this test.

When asked where the power came from, Tesla replied, "From the ethers all around us." Several people suggested that Tesla was mad and somehow in league with sinister forces of the universe. He became incensed, removed his mysterious box from the vehicle and returned to his laboratory in New York City.

His secret apparently died with him. It is speculated that Tesla was able to somehow harness the earth's magnetic field that encompasses our planet. And, he somehow was able to draw tremendous amounts of power by cutting these lines of force or causing them to be multiplied together. The exact nature of his device remains a mystery.

In 1969, Joseph R. Zubris took his 1961 Mercury and pulled out the Detroit internal combustion engine. He then installed an electric motor as a source of power. His unique wiring system cut the energy drain at starting to 75% of normal and doubled the electrical efficiency of the electric motor when operating.

The U.S. Patent Office issued him a patent No. 3,809,978. Although he approached many concerns for marketing, no one really seemed to be interested. And, his unique system is still not on the market.

In the 1970's, an inventor used an Ev-Gray generator, which intensified battery current, the voltage being induced to the field coils by a very simple programmer (sequencer). By allowing the motor to charge separate batteries as the device ran, phenomenally tiny currents were needed.

The device was tested at the Crosby Research Institute of Beverly Hills, Ca., a 10- horsepower EMA motor ran for over a week (9 days) on four standard automobile batteries. The inventors estimated that a 50-horsepower electric motor could traverse 300 miles at 50 m.p.h. before needing a re-charge.

Dr. Keith E. Kenyon, the inventor from Van Nuys, California discovered a discrepancy in the normal and long accepted laws relating to electric motor magnets. Dr. Kenyon demonstrated his invention for many scientists and engineers in 1976 but their reaction was astounding. Although admitting Dr. Kenyon's device worked, they saw little or no practical application for it.

The ultimate source for a successful electrically powered automobile would be to have an electric motor that required no outside source of power. Sounds impossible because it violates all current scientific thought. Nevertheless, it has been invented and H.R. Johnson has been issued a patent No. 4,151,431 on April 24, 1979 on such a device.

This new design although originally suggested by Tesla in 1905, is a permanent magnet motor. Mr. Johnson has arranged a series of permanent magnets on the rotor and a corresponding series - with different spacing - on the stator. One simply has to move the stator into position and rotation of the rotor begins immediately.

Johnson's patent states: "The invention is directed to the method of utilizing the unpaired electron spins in ferro-magnetic and other materials as a source of magnetic fields for producing power without any electron flow as occurs in normal conductors and to permanent magnet motors for utilization of this method to produce a power source.

In the practice of this invention, the unpaired electron spins occurring within permanent magnets are used to produce a motive power source solely through the super-conducting characteristics of a permanent magnet and the magnetic flux created by the magnets are controlled and concentrated to orient the magnetic forces generated in such a manner to do useful continuous work such as the displacement of a rotor with respect to a stator.

The timing and orientation of special magnetic forces at the rotor and stator components produced by permanent magnets to produce a motor is accomplished with the proper geometrical relationship of these components. Engineers of Hitachi Magnetics Corp. of California have stated that a motor run solely by magnets is feasible and logical but the politics of the matter make it impossible for them to pursue developing a magnet motor or any device that would compete with the energy cartels.

In fact, it appears that such devices have been deliberately suppressed over the years to prevent any competition from machines that can generate power without a fuel source. This would put big oil and other energy cartels out of business.

The Real Reason For Tesla's Interest in Free Energy

According to Tesla's private journals, anomalous voice transmissions heard over his special radio receivers, discussed the warming of the planet caused by natural and manmade sources of atmospheric pollutants. Tesla was also left with the impression that the unknown voices favored this outcome and may have actually "hurried" the process along by encouraging the development of the internal combustion engine.

Tesla may have been the first human to learn about what is referred to today as "Global Warming" and the "Greenhouse Effect." Tesla, convinced that the voices he was receiving were from a hostile extraterrestrial source, began a concerted effort to develop a means of power that did not use the burning of wood or fossil fuels. An energy source that was clean and unlimited and would prevent pollutants, at least manmade, from filling the atmosphere and causing the retention of heat from the sun.

Tesla was the first to become aware of one of the most controversial subjects in conspiratorial circles today - Alternative Three and the destruction of earth!

Chapter Eight

The Truth About Afternative 3

Nikola Tesla became aware early in the 20th century that the planet was heating up, so much so that by the first decades of the 21st century, Earth would be almost uninhabitable for the human species. Tesla's source of information was the weird voices he was picking up off of his specially modified radio receiver.

These mysterious voice broadcasts were the outcome of Tesla's initial research into strange radio signals he picked up during his experiments at Colorado Springs in 1899. By now, Tesla had improved his receiving equipment to enable him to pickup voice broadcasts. However, these voices were being heard on frequencies that were suppose to be unable to carry these kinds of transmissions, but they were there nevertheless.

Tesla wrote that these voices were of men from other worlds - men who had lived on Earth sometime in its prehistoric past, had developed the technology to colonize nearby space and were still interested in the inhabitants they had left behind. These men had colonized the planet Mars as well as maintaining bases on the moon. Others of their kind had gone deeper into space, out of our solar system altogether to explore the galaxy.

It had been decided that the Earth was to become a reserve so to speak, to allow nature to take its course and new species to evolve and fill the niches left vacant by the departure of its first inhabitants. However, some things were not left to nature alone. The first men decided to leave behind remnants of themselves in the form of our early ancestors. Tesla's description of the re-seeding of planet Earth with intelligent hominids sounds very much like genetic manipulation.

This could explain why reports of UFO occupants, who claim extraterrestrial origins, look so much like us. The majority of contacts with beings who step out of UFOs all agree on their human-like appearance. With very few exceptions, all alleged extraterrestrials possess very human features. One head with two eyes a nose and a mouth, two arms, two hands with five fingers, two legs and feet. Many have been reported to be so human in appearance that they are indistinguishable from normal humans. Maybe this is because they are human - the first humans.

Of course, Tesla died before the modern UFO wave, but his descriptions of his purported extraterrestrials bear an uncanny resemblance to our UFO occupants.

An April Tools Joke too Close to the Truth

At 9:00 PM on Monday June 20 1977, Anglia television based in Norwich United Kingdom, put out a one hour TV special. The program was to be simultaneously transmitted to a number of other countries which included Australia, New Zealand, Canada, Iceland, Norway, Sweden, Finland, Greece, and Yugoslavia. The name of the TV special was called Alternative 3, it was to shock the nation, jam media telephone lines and rock the station's credibility.

At 10:00 PM Anglia was besieged with calls from irate viewers demanding more information. Callers were told not to panic, the program was simply an April Fools hoax that had been pre-empted until June 20. However, many were not convinced that it was a hoax.

The following morning the Daily Express newspaper confirmed the program was a hoax and pointed out that Dr Carl Gerstein was none other than the well known actor Richard Marner. Meanwhile back at Anglia there were rumors of industrial action and the station was severely criticized for putting out the hoax. Anglia got a reprimand and the public were relieved of their fears.

The Alternative 3 TV special was put together by a respectable team of reporters who had a regular weekly slot titled Science Report. It was an intelligent documentary series which reported on new scientific inventions. It was because of the teams' credibility that Alternative 3 was taken so seriously. The question was: Why would a serious investigative team who had a weekly documentary slot suddenly produce a hoax?

In 1976 the United Kingdom was plagued with "The Brain Drain," a term used for the mass exodus of some of the countries best surgeons and scientists which were being enticed with huge pay checks by the United States. There were also reports of suicides and disappearances among scientists. As well, there were small communities such as "Friends of the Earth," and others who were just beginning to understand the ozone problem and global warming.

By 1978 the story took on new life when Sphere Books published Alternative 3 by Leslie Watkins, David Ambrose and Christopher Miles. According to Watkins, Ambrose and Miles didn't help write the book, but their names were included for copyright purposes because they had written the television program on which it was based. Those who were able to get a hold of a copy, read a story that was a follow-up of the TV special produced by Spectrum for Anglia TV.

Both the book and the TV program focused on a number of amazing scenarios, all said to be factual.

- There is a secret joint U.S./U.S.S.R. space program that has gone far beyond what the public sees. Astronauts landed on Mars in 1962. It has been discovered that there is other intelligent life in the universe and they are observing and interacting with the inhabitants of Earth. The Earth is dying due to natural and manmade pollutants. The increasing Greenhouse Effect will cause the polar ice caps and glaciers to melt and flood the Earth.

- Extreme heat, such as that which is now inevitable, will melt land glaciers. That will result in a marked rise in sea level and then there'll be the start of the extensive flooding - with London and New York among the first cities to be affected.(Alternative 3)

There are three possible solutions for mankind: Alternative 1 - Stop all pollution immediately and blow two huge holes in the ozone layer. This would allow excessive UV light to reach the earth and millions would die of skin cancer.

Alternative 2 - Immediately begin digging underground cities for world leaders, the very rich and leaders of big business and a few selected scientists. The remainder of the population will be left to perish on the polluted surface.

Alternative 3 - Build spaceships and get the Elite off the planet - to the moon and Mars. Kidnap and take along some "ordinary" people for use as slave labor. Use mind control techniques to control them. Leave the remainder of humanity to die on the planet.

Was the Anglia Television program fact or fiction? Reporter Georginia Bruni spoke to Christopher Miles, who also directed and co-wrote the program. Miles admitted that the program was entirely fiction, but he now suspects that they may have accidently come a little too close to the hidden truth with Alternative 3.

The writer of the book, Leslie Watkins, was a writer of thrillers even before Alternative 3. The Fortean Times recently printed an article in which Nick Austin, then editorial director of Sphere Books, revealed how he commissioned

Leslie Watkins to write the book version at the behest of literary agent Murray Pollinger. Watkins, in a letter to Windwords Bookstore, outlined his beliefs concerning the mystery surrounding Alternative 3, and how he may have accidently stumbled upon top secret truths that others wanted to be kept quiet.

"The book Alternative 3 is based on fact, but uses that fact as a launchpad for a HIGH DIVE INTO FICTION. In answer to specific questions:

1) There is no astronaut named Grodin.
2) There is no Sceptre Television and the reported Benson is also fictional.
3) There is no Dr. Gerstein.
4) Yes, a 'documentary' was televised in June 1977 on Anglia Television, which went out to the entire national network in Britain. It was called Alternative 3 and was written by David Ambrose and produced by Christopher Miles (whose names were on the book for contractual reasons). This original TV version, which I EXPANDED IMMENSELY for the book, was ACTUALLY A HOAX which had been scheduled for transmission on April Fools' Day. Because of certain problems in finding the right network slot, the transmission was delayed.

"The TV program did cause a tremendous uproar because viewers refused to believe it was fiction. I initially took the view that the basic premise was so way out, particularly the way I aimed to present it in the book, that no one would regard it as non-fiction. Immediately after publication, I realized I was totally wrong. In fact, the amazing mountains of letters from virtually all parts of the world, including vast numbers from highly intelligent people in positions of responsibility, convinced me that I had ACCIDENTALLY trespassed into a range of top-secret truths.

"Documentary evidence provided by many of these correspondents decided me to write a serious and COMPLETELY NON-FICTION sequel. Unfortunately, a chest containing the bulk of the letters was among the items which were mysteriously LOST IN TRANSIT some four years when I moved from London, England, to Sydney, Australia, before I moved on to settle in New Zealand.

"For some time after Alternative 3 was originally published, I have reason to suppose that my home telephone was being tapped and my contacts who were experienced in such matters were convinced that certain intelligence agencies considered that I probably knew too much.

"So, summing up, the book is FICTION BASED ON FACT. But I now feel that I inadvertently got VERY CLOSE TO A SECRET TRUTH."

None Dare Call it Alternative 3

It is amazing to consider that Nikola Tesla, sometime in the 1920's first wrote in his personal journals his thoughts concerning the buildup of greenhouse gases in the Earth's atmosphere. These gases, caused by manmade and natural pollutants were to eventually cause the planet's overall temperature to increase to such a point that the polar icecaps would melt, flooding the coastlines. As well, weather patterns would change dramatically bringing about fierce storms, droughts in some areas and floods in others. Agriculture would be destroyed and life as we know it would cease to exist.

So, while the name Alternative 3 may have been nothing more then the imagination of a clever television writer - the basic premise, that the greenhouse effect caused by air pollution would make human life on Earth extremely hazardous, is probably correct. And Nikola Tesla allegedly first came across this disturbing information while monitoring late into the night, mysterious voices on his specialized receiver.

Tesla theorized that the planet's developing pollution problems were being closely monitored by extraterrestrials who were studying Earth and its inhabitants. Tesla was indecisive on whether or not these intelligence's were hostile, friendly or indifferent. He had no clear-cut evidence that the information he had been receiving was factual - in fact, Tesla often wrote that if it were not for the unusual way that he was getting this knowledge, he would have dismissed it long ago as the ravings of a madman. Nevertheless, Tesla was intrigued enough to devote most of his later years to research and inventions based on the voice transmissions he was receiving from his Martials.

Some researchers have attributed Ronald Reagan's Space Defense Initiative to a branch of Alternative 3. This special project was using a portion of its black budget to build a space based weapon system to be deployed not against Soviet nuclear missiles, but instead, to a perceived threat against hostile extraterrestrial forces.

In Genesis Revisited, Zecharia Sitchin maintains that the world's leaders "...have been aware for some time, first, that there is one more planet in our solar system and, second, that we are not alone." He claims that only this knowledge can explain the incredible changes in world affairs that have been taking place with even more incredible speed.

Certainly both Reagan and Gorbachev have referred to threats from extraterrestrials. Speaking at Fallston, Maryland, on December 4, 1985, Reagan stated: "Just think how easy his (Gorbachev's) task and mine might be in these meetings that we held if suddenly there was a threat to this world from some other species from another planet outside the universe. We'd forget all the little local differences that we have between our countries and we would find out once and for all that we are all human beings here on Earth together."

On February 16, 1987, at the Grand Kremlin Palace, Moscow, Gorbachev observed: "At our meeting in Geneva, the US President said that if the Earth faced an invasion by extraterrestrials, the United States and the Soviet Union would join forces to repel such an invasion. I shall not dispute the hypothesis, though I think it's early yet to worry about such an intrusion."

In an address to the General Assembly of the United Nations on September 21, 1987, speaking of the need to turn swords into ploughshares, Reagan said: "In our obsession with antagonisms of the moment, we often forget how much unites all the members of humanity. Perhaps we need some outside, universal threat to recognize this common bond. I occasionally think how quickly our differences would vanish if we were facing an alien threat from outside this world."

The late UFO investigator Leonard Stringfield states in Timothy Good's The UFO Report: "Star Wars, ostensibly conceived as a defensive system against Russian missile attacks, may have had from its beginning a 'defensive' UFO connection."

Documentary evidence of such an agenda appears to have been inadvertently provided by NASA when the astronauts of the Shuttle Discovery transmitted to Earth, video camera footage of UFOs traversing just above Earth atmosphere. One UFO suddenly makes a 90-degree turn to the right and accelerates off into deeper space, just a second before a burst of shaped pulse high energy streaks up from Earth towards the spot where the UFO would have been if it had not radically changed course. Other UFOs are shown being shot at by visibly energized EM weapon bursts.

What is the motive for the undeclared war on extraterrestrials? Richard Hoagland, former editor of Star& Sky magazine explains: "There is a great deal of naivete about the forces in our society that do not want this knowledge, even in the form of a very useful technology, to get out." He notes that there are "interlocking institutions whose job it is to keep themselves in business. And

they do not take lightly to this ET technology. After all, how do people stay in power? Because they define the universe as limited, rare and scarce and then put a price tag on it. Then some people are put in charge of doling out the scarce precious thing; other people buy it at whatever the market will bear. And you have a really neat system for controlling people."

It is possible that the United States government (and other foreign powers) were aware of a hidden extraterrestrial presence over Earth. Tesla had confided to a few friends that he had sent a number of letters to Washington DC expressing his fear of an invasion from outer space. Tesla had also offered Washington a number of his inventions for the purpose of defending the planet against the alleged alien invaders.

Tesla was financially troubled by this time and he offered the government complete access to his research, provided that he be paid a small, monthly stipend for the use of his inventions. Tesla received no answer to his inquiries - no doubt due to the sensational nature of his letters. It was not until several years after his death that the United States military became aware of intrusions into the country's airspace by what later would be known as UFOs.

Tesla's ideas of electric death rays and particle beam weapons, while scoffed at during his lifetime, were now eagerly sought after by the military. Even though UFOs have been seen for centuries, it was not until the beginning of the 20th century that the numbers of reported encounters increased significantly. The Pentagon could think of no reason for the blatant way that UFOs were now operating except as a precursor to an invasion. The message it seemed was clear: "We can go and come as we please, and there is nothing that you can do about it."

Part of the rumors that surround Alternative 3 is the contention that the United States and Russia formed a secret partnership and constructed bases on the moon as a jumping off point for Mars. It can now be confirmed that these secret bases on the moon are real and still exist today!

Unlike the fictional TV show Alternative 3, the real moon bases were not installed until after Apollo 11's historic landing in 1969. Before that time, primitive remote control spacecraft containing supplies and building material had been sent to await the time when astronauts would arrive and start construction,

The remaining Apollo missions would rendevous in orbit with containers previously sent up from Vandenburg Air Force Base in California. The Apollo would then ferry the containers to the moon to be placed in orbit for later use.

Someone Else is on the Moon and Mars

The Apollo moon missions served two functions, one as a public display of the United States' ability to reach the moon, the other was basically delivery of men and material to be used to construct the secret moon bases. The Apollo astronauts would not be responsible for building the first moon base - that honor would go to astronauts who would work in anonymity.

Both the United States and the former Soviet Union would participate in the construction of the moon colony. Astronauts would be sent into Earth orbit from Vandenburg and the Baikonur Space Center. Upon reaching orbit, a ferry craft would then take them the rest of the way to the moon. The first moon base was finished in 1971 and the rest were completed by 1976.

The moon has proved to be a virtual goldmine in minerals and even pockets of ice hidden in the shadows of some craters. Another exciting resource on the moon is an ample supply of the isotope helium-3, which is very rare on Earth but has been deposited on the lunar surface over billions of years by the solar wind. It is now estimated that at least a million tons of He-3 are readily recoverable from the regolith formations where lunar solar power stations would be practical. This He-3 offers a key to safe, practical nuclear fusion energy on the moon. It is estimated that a single ton of He-3 delivered to Earth would be worth at least $1 billion.

The next step was to dispatch and establish robot probes to Mars, the ultimate destination for this mission. The idea was to duplicate the successful moon colonies on Mars, with an extremely long-term goal to terraform Mars into a more hospitable planet and the new home for mankind. Unfortunately, this mission and others like it, would all end in disaster.

It was known at NASA that unusual anomalies on the surface of the moon had been seen and photographed by astronomers. In the 1920s and 1930s, American, British, and French astronomers reported glowing, moving and sometimes even blinking lights on the moon.

This interest peaked when a respected expert in aerial phenomenon, Pulitzer Prize winning astronomer John O'Neill, publicly reported observing a "bridge" on the moon that appeared artificially constructed. Many of the Gemini and Apollo astronauts have admitted that they saw UFOs while they were in orbit. Gordon Cooper has publically admitted he believes UFOs are intelligently controlled and that the government is hiding the truth.

One Soviet space mission in the 1960s, designed to set a new record for time in orbit, was mysteriously aborted right after their craft entered space. Private researchers with powerful receiving radio equipment claimed the Soviet cosmonauts were followed into orbit by UFOs, which surrounded them and began bouncing them back and forth as if they were playing a ball game with the Soviet craft. The cosmonauts reportedly panicked and reentered the Earth's atmosphere at the first available moment.

During the 1950s many UFOs were reportedly tracked back to the moon by government tracking stations in secret complexes in deserts in Arizona and Nevada and inside underground mountain bases. Soviet and American spacecraft in orbit over the moon began to photograph mysterious structures on the moon which were censored by NASA for awhile, yet were obtained by scientific researchers like Fred Steckling. Many of the structures can only be seen when these photos are blown-up to a much larger size.

Further evidence of an extraterrestrial presence on the moon comes from an Air Force veteran with an Above Top Secret security clearance. Investigative reporter Alan Carmack, who was doing research for the TV show Strange World, was contacted by the veteran who had an amazing story to tell. Carmack agreed not to reveal the identity of his contact because of his national security oath.

"Nearly thirty years ago, my Supervising Sergeant called me aside and informed me that there was a technical problem in a highly-classified area elsewhere on the Air Base. At that time, all systems were expanding to support increased military efforts for the Viet Nam War. As a part of that, it was my job to support and maintain highly classified Intelligence and Reconnaissance related Electronic Photographic Systems, recently installed in a new Top Secret facility on the Base. Our unit was under the command of the Director of Intelligence at Headquarters SAC, Tactical Air Command, Langley Field, Virginia.

"My Supervisor stated that the Lunar Orbiter program had encountered a problem with an Electronic Photographic Contact Printer, identical to equipment that was utilized in the darkrooms of our own Unit. This was the first Lunar Orbiter program, the purpose of which was to bring back the first close-up pictures of the surface of the moon. These photos would later be utilized to select an appropriate landing site for the first manned landing on the moon, in 1969.

"As the only Electronics Repairman on the Base with a Cryptologic Security Clearance, a step above Top Secret, I was being loaned to the project to see if I

could resolve the system problem. More than excited at the prospect of helping out and possibly having a chance to view the first close up photos of the surface of the moon, I was briefed on security, and gathered the appropriate equipment and tools for the task.

"Driving across the Base on the perimeter access road that skirted the flat dusty fields and long runways in the distance, I noticed an experimental helicopter hovering fly-like in the air just above and to the south of the massive arching metal-grey hanger, one of the largest on the base that housed the Lunar Orbiter project.

"Upon entering the hanger, I was asked to present my Top Secret Identity Badge, in exchange for their internal higher-level Identity Badge; this was to be worn around the neck on a chain. Another guard escorted me through a series of security doors to an expansive open area within the hanger.

"Large black fabric curtains hung from a metal grid suspended from the ceiling. These, in effect, cordoned off various working areas within the larger space. Passing through one of the draped areas, I entered a large open space where people in small groups stood talking quietly, with a sense of seriousness and concern.

"I was immediately struck by the number of people who were present, who appeared to be civilians, and also some scientists from other countries. With a bit of instant shock and judgement, I thought to my self, why are they here? I had a very strange feeling - a feeling that something is off here, something is not quite right.

"I was introduced to a man dressed in civilian clothes and a lab coat, the head of the project, a Dr. Collie, I believe. In a very gracious and reserved manner, bringing to mind an image of Sherlock Holmes, he softly conveyed to me that the equipment in question was holding up the processing of the first close-up photographs of the surface of the moon and also delaying the release of photos to be provided for study and release to the world, and how grateful the program staff would be if there was anything that I could do.

"An Airman escorted me into a darkroom. Inside, another young Airman assembled strips of high resolution 35mm film into what is called a mosaic. He was placing side-by-side successively numbered photographic scans of the lunar surface, which had been transmitted back to earth from the Lunar Orbiter. Each surface scan covered a narrow band of terrain, and successive orbits around the

moon were required to assemble a complete photographic image of the lunar terrain.

"The mosaic negative created by that process was then placed into a Resolution Enhancing Contact Printer. Photographic paper was placed on top of the negative, and an exposure begun. The negative was scanned by an electron light beam generated by a large Cathode Ray Tube, similar to the tube in a black and white televison set.

"The light beam was picked up by a photo-multiplier tube and, through a feedback loop, modulated by the various changes in density of the photographic negative, enhancing the contrast, brightness and resolution of the image in the process. The resulting 9.5 inch by 18 inch high resolution contact print was then examined by a photographic interpreter or scientist, who viewed the images under a microscopic type viewer, analyzing the features and terrain of the lunar landscape.

"Left alone in the faint red light of the darkroom with the Airman and equipment, much of which I had never seen before, I began to question the technician, attempting to discern what the problem might be with the ailing contact printer. After a few minutes of investigation, it was clear that there was a problem with the electronic control circuitry, which was comprised of several small plug-in circuit modules.

"Having no spare parts on hand, it was clear that I would have to trouble-shoot each module on a component-by-component basis, a very tedious and time consuming process at best. This was something that could not be done in the faint red light of a darkroom. The unit would have to be removed from the darkroom and taken into a more appropriate space to allow for the accomplishment of the task.

"Talking with the Airman on the other side of the room, questions floated into my head. I was curious and fascinated with the whole process. How were the signals from the Lunar Orbiter transmitted to the lab? How where they converted into images on photographic film? How were the images correlated and aligned into the final mosaic negative?

"I knew these were all questions that I should not ask, in fact I could receive severe punishment for asking such questions. Yet, at the same time, I was alone with an Airman who was obviously as enthusiastic as I was about his job. I hesitated for a moment, weighing in my mind what I should do.

"Under normal operating conditions, many other people would have been in the lab, part of the assembly line of production. But, here we were all alone, so I began to ask all those questions.

"After about thirty minutes of technical discussion and a complete rundown on all the steps in the process, the Airman turned to me and said candidly, 'You know they've discovered a base on the back side of the moon!.' I said, 'What do you mean?,' and again he said, 'They have discovered a base on the moon!' and, surreptitiously, at the same time dropped a photograph in front of me.

"There it was, a mosaic print of the surface of the moon, with some sort of geometric structures clearly visible. Scrutinizing the image, I could see spheres and towers. My first thought was, 'Whose base is it?' Then I realized the full implication: it was not anyone of this earth.

"I didn't dwell on the photograph - I quickly took it in visually and moved away in case someone else should enter the lab. I knew that I had been given a gift, information that I should not have seen. With my position being that of a dutiful Airman, I asked no further questions and went about my business, quietly thinking to myself that I couldn't wait to hear about this on the news in the next few days! I told myself, do whatever you can to get this thing fixed...so the world can see this and hear about it!

"Two days of labors paid off - a tiny diode on one of the circuit cards had shorted. Replacing the defective component, I was as surprised as anyone that I had found the problem. Dr. Collie was more than pleased and offered several of the first photographs of the lunar surface to me in appreciation of my efforts. As he autographed some of the prints for me, I longed to ask more questions about the moon base, but knew that was forbidden, and that I would have to wait for the evening news for the answers, along with the rest of the world.

"Now, here it is more than thirty years later, and I am still waiting to hear the report on the evening news of what was found on the back side of the moon."

It has been reported that the clandestine moon bases are operated by joint teams comprising mostly scientists and technicians from the United States and Russia. There are also teams from Great Britain, Canada, France and Australia. The men who operate these secret bases are also well aware that they aren't the only ones on the moon. There are also bases apparently maintained by extraterrestrials that appear and disappear so frequently that there is no way to investigate them. These structures are located almost entirely on the opposite side of the moon.

The Failure of Alternative 3

The main goal of the manned moon bases was to act as a jump point for missions to Mars. These missions, using first robotic spacecraft and then manned, were to establish a human presence on Mars with the eventual purpose of building permanent colonies.

The thinking was that with Earth soon to become extremely inhospitable to civilization, Mars would act as sort of a "foster" world for human civilization to continue to flourish. It was hoped that Earth's greenhouse effect would stabilize after about two thousand years, then the Martian colonies, with their superior technology still intact, could move back to Earth and reestablish the population.

What was not considered by the Alternative 3 planners was that there was already an intelligent presence on Mars that would not look very favorably upon interlopers from Earth.

The earliest robot probes to Mars in the 1960's ran into little trouble with the exception of mechanical problems due to the primitive electronics used at the time. The first craft to set down successfully on Mars in 1963 (Lowell III) sent back a few blurred photos showing that Mars had little atmosphere or water. Stories that now surround the Alternative 3 legend state that the secret spacecraft from the Pentagon landed on Mars in 1962 and sent back videotaped images of the surface. The video allegedly showed a Martian landscape that had canals, lakes, green vegetation, swamps, and animal life on the surface. This is a good example of the disinformation that exists to hide the actual program that the TV program Alternative 3 was based on.

After this initial success though, further surveys of Mars ran into mysterious problems that could not be attributed to mechanical failure. The same problems were also being experienced by NASA and the Soviets who were unaware of the Alternative 3 efforts underway at the same time.

What is still not clearly understood is why some Mars missions, like the Vikings I and II landings on Mars were successful, while others ended in disaster. The first manned landing on Mars was scheduled for 1978, but it was halted when the ship being constructed in orbit around the moon was mysteriously destroyed.

Due to these unexplained failures, the Mars colonization project, which had a deadline of 1980 for its first phase, was pushed back to 1985 and finally to 1990. The entire colonization mission to Mars was finally abandoned in 1992.

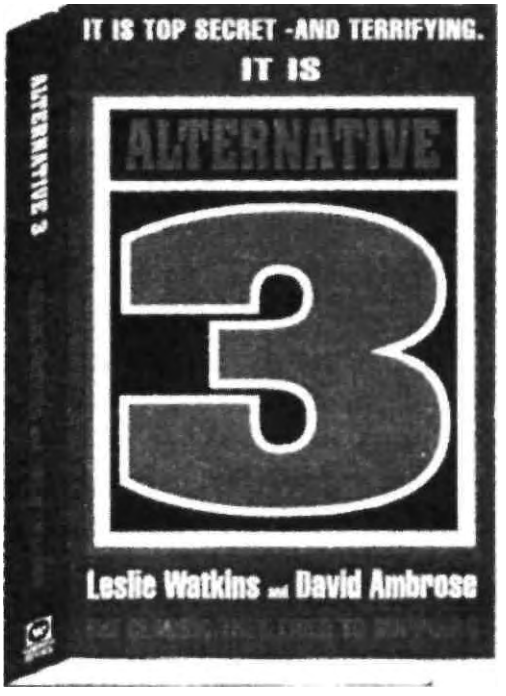

Even though the TV show was declared a hoax, Leslie Watkins, author of the book, feels that certain aspects of Alternative 3, such as secret moon bases, are probably true.

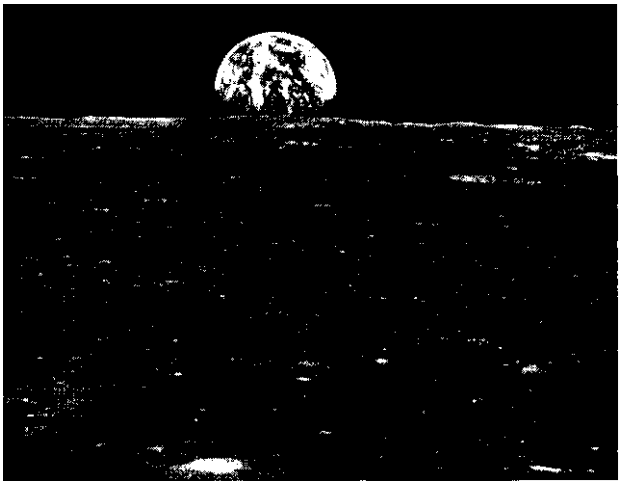

Chapter Nine

HAARP - Chemtrails - Alternative 4

With the failure of Alternative 3, it became necessary to implement a new system to protect mankind from the upcoming disaster from global warming. The Mars Projects had eaten away at the combined American and Soviet budgets for Alternative 3, and now world politics would interfere at the expense of its citizens.

President Ronald Reagan who felt that destroying the "Evil Empire" was more important than fighting global warming, earmarked the remaining money from the Mars Projects for building new weapons to destroy the Soviet Union. The Soviets protested by withdrawing their cooperation for Alternative 3 and shortly thereafter collapsed as a world power. This marked the official demise of Alternative 3.

Earlier studies had estimated that the planet's temperature would rise high enough to cause the melting of the ice caps by the year 2000. Efforts to cut back air pollution in the 1970's apparently slowed down the heating to a small degree. Enough to gain about twenty extra years before disaster struck.

Unfortunately, no one had foreseen the damage to the ozone layer caused by unlimited use of fluorocarbons. A massive "hole" in the ozone layer opened up over both poles causing huge amounts of cosmic radiation to flood the planet, further aggravating the existing problem. Something had to be done and done fast, or the planet would bake from solar radiations.

It was clear that an outside intelligence had declared Mars "off limits" for human colonization. The reasons why could only be speculated, but Tesla had said years earlier that he thought Mars was inhabited both by people originally from ancient Earth and extraterrestrials from outside our solar system. He may have been right.

With the budget slashed, and Russia no longer a partner, it was now mainly up to the United States and their allies to come up with some kind of solution to the impending threat. That solution came from secret papers and letters by Tesla.

Perhaps in response to the anomalous radio signals he was receiving, Nikola Tesla said, in June, 1900, "The time is very near when we shall have the precipitation of the moisture of the atmosphere under complete control..." Tesla must have known at this point what was in store for planet Earth in the near future.

Tesla's original warnings had also caught the interest of those hastily trying to develop the successor to Alternative 3. Now that fleeing the planet is no longer an option, those in power are stuck on Earth with the rest of humanity. The only viable method now seemed to be to try and modify the weather using technology invented by Tesla years earlier.

Tesla, heeding the strange voices he heard over his modified radio receiver, started experiments to see if it was possible to change the weather using massive amounts of electrical power. There is a global circuit, sometimes referred to as the Wilson circuit, in which the ionosphere is maintained at a positive potential, generally in the range 200 to 300 kilovolts, relative to the earth.

In the non-thunderstorm (fair-weather) portions of the atmosphere, a return conduction current flows between the ionosphere and the earth, and the circuit is completed between the conducting earth and the bases of thunderclouds through a combination of conduction, convection, lightning, point discharge and precipitation currents. The charge, put on the earth by thunderstorms, maintains the earth's electric field and the ionospheric potential.

This natural global circuit, was originally discovered by Tesla in the 1890's and he once again took up research on the subject after he became convinced that the warming of the planet was being helped along by extraterrestrial forces.

The Tesla system involves using giant magnifying transmitters to act as global generators and artificially create the same global electromagnetic circuit functions that are naturally created by thunderstorm activity. Oddly enough, the first use of Tesla's idea came from the good ol' days of the Cold War and the Soviets experiments with weather modification.

On the Fourth of July, 1976, the former Soviet Union began broadcasting huge, pulsed electromagnetic fields from three gigantic 40-million watt transmitters which beamed those signals halfway around the world to the U.S. This electronic assault disrupted and jammed radio and television broadcast signals, enraged the FCC, and irritated ham radio operators, who quickly dubbed the signals "The Russian Woodpecker," because of their pulsed cadence. Originally designed to bring more rain to certain areas of Siberia, the Soviets were surprised to find that the signals also disrupted weather over North America.

The Russians completed nearly 30 of the huge transmitters which emit signals primarily in the very dangerous 10-Hertz range, otherwise known as Extreme Low Frequency (ELF). The technology was rumored to be based on the work of

Tesla. These Tesla transmitters create massive "standing" ELF waves that form major high pressure blocking systems that change the normal high altitude jet stream pattern, force it to the north, and actually retard the normal flow patterns of incoming weather systems.

As far back as April, 1969, Spectrum, a publication of the prestigious Institute of Electrical and Electronics Engineers, featured an article by Seymour Tilson which stated: "Workers in the field of atmospheric electricity and cloud physics have accumulated sufficient evidence to suggest that electric fields in the Earth's lower atmosphere play a critical role...perhaps the critical role...in the development and behavior of clouds that produces precipitation.

Mr. Tilson apparently was correct. Exactly one year after the start of the Russian Woodpecker, July 4, 1978, the U.S. Government conducted its own ELF weather experiment which created an enormous downpour of rain over six counties of northern Wisconsin. This ELF-generated storm generated winds of 157 mph and caused $50 million in damage, leveling Phillips, Wisconsin, and destroying several thousand acres of forest.

The first published alarm about Soviet weather control warfare came from Dr. Andrew Michrowski of PACE (Planetary Association for Clean Energy). In a published paper in 1978, Dr. Michrowski described how he had placed monitoring stations all across Canada and determined that "the Soviets managed to establish relatively stable and localized ELF fields (over North America) which were able to hamper or divert the jet stream flow in the Northern Hemisphere."

Several years later, Michrowski stated in a PACE Newsletter (Vol.4, #4): "ELF fields... propagate vertically to the ground, creating 'standing waves'... that can redistribute energy and momentum in (atmosphere) through cumulus convection. It has been consistently noted that variance of the (Soviet) ELF transmissions leads to a subsequent change in the route of the jet stream flow in the Northern Hemisphere within 72 hours.

The 2/81 PACE Newsletter reported that the Soviets turned off their ELF Woodpecker signal for a brief period in 1980: "During the two-week lull, the Northern Hemisphere's jet stream was normal..... with the return of the Soviet ELF transmissions, the jet stream was deflected (again) by a persistent (high) pressure ridge extending from the Yukon to Arizona."

Spurned on by the success of the Russian Woodpecker signal, the United States secretly activated the High Active Auroral Research Project, or HAARP. Located

in Gakon, Alaska, this Tesla-based U.S. Navy and Air Force ionospheric heater has been projecting tightly-focused beams of intense radio-frequency energy into the atmosphere for the past several years.

This controllable radio wave is so powerful and electromagnetically charged that it can actually lift and heat the ionosphere. Put simply, the apparatus for HAARP is a reversal of a radio telescope; antenna send out signals instead of receiving.

HAARP publicity states that the High-frequency Active Auroral Research Program is mainly an academic project with the goal of changing the ionosphere to improve communications for our own good. However, other U.S. military documents put it more clearly - HAARP aims to learn how to "exploit the ionosphere for Department of Defense purposes."

The patents described below were the package of ideas which were originally controlled by ARCO Power Technologies Incorporated (APTI), a subsidiary of Atlantic Richfield Company. APTI was the contractor that built the HAARP facility. ARCO sold this subsidiary, the patents and the second phase construction contract to E-Systems in June 1994.

E-Systems is one of the biggest intelligence contractors in the world - doing work for the CIA, defense intelligence organizations and others. $1.8 billion of their annual sales are to these organizations, with $800 million for Black Projects.

E-Systems was bought out by Raytheon, which is one of the largest defense contractors in the world. In 1994 Raytheon was listed as number forty-two on the Fortune 500 list of companies. Raytheon has thousands of patents, some of which will be valuable in the HAARP project.

The twelve original patents are the backbone of the HAARP project, and are now buried among the thousands of others held in the name of Raytheon. Bernard J. Eastlund's U.S. Patent # 4,686,605, "Method and Apparatus for Altering a Region in the Earth's Atmosphere, Ionosphere; and/or Magnetosphere," was sealed for a year under a government Secrecy Order.

The Eastlund ionospheric heater was different; the radio frequency (RF) radiation was concentrated and focused to a point in the ionosphere. This difference throws an unprecedented amount of energy into the ionosphere.

The Eastlund device would allow a concentration of one watt per cubic centimeter, compared to others only able to deliver about one millionth of one watt. This huge difference could lift and change the ionosphere in the ways

necessary to create futuristic effects described in the patent. According to the patent, the work of Nikola Tesla in the early 1900's formed the basis of the research.

What would this technology be worth to ARCO, the owner of the patents? They could make enormous profits by beaming electrical power from a powerhouse in the gas fields to the consumer without wires.

For a time, HAARP researchers could not prove that this was one of the intended uses for HAARP. In April, 1995, however, other patents were found connected with a "key personnel" list for APTI. Some of these new APTI patents were indeed a wireless system for sending electrical power.

Eastlund's patent said the technology can confuse or completely disrupt airplanes' and missiles' sophisticated guidance systems. Further, this ability to spray large areas of Earth with electromagnetic waves of varying frequencies, and to control changes in those waves, makes it possible to knock out communications on land or sea as well as in the air.

The patent continues with: "Thus, this invention provides the ability to put unprecedented amounts of power in the Earth's atmosphere at strategic locations and to maintain the power injection level particularly if random pulsing is employed, in a manner far more precise and better controlled than heretofore accomplished by the prior art, particularly by detonation of nuclear devices of various yields at various altitudes.

"It is possible not only to interfere with third party communications but to take advantage of one or more such beams to carry out a communications network even though the rest of the world's communications are disrupted. Put another way, what is used to disrupt another's communications can be employed by one knowledgeable of this invention as a communication network at the same time.

"Large regions of the atmosphere could be lifted to an unexpectedly high altitude so that missiles encounter unexpected and unplanned drag forces with resultant destruction. Weather modification is possible by, for example, altering upper atmosphere wind patterns by constructing one or more plumes of atmospheric particles which will act as a lens or focusing device.

"Molecular modifications of the atmosphere can take place so that positive environmental effects can be achieved. Besides actually changing the molecular composition of an atmospheric region, a particular molecule or molecules can be chosen for increased presence."

Eastlund also notes NATO interest in modifying the weather for military advantage. In May, 1990 a NATO paper: Modification of Tropospheric Propagation Conditions, detailed how the atmosphere could be modified to absorb electromagnetic radiation by spraying polymers behind high-flying aircraft.

Absorbing microwaves transmitted by HAARP and other atmospheric heaters linked from Puerto Rico, Germany and Russia, these artificial mirrors could heat the air, inducing changes in the weather. U.S. Patent # 4253190 describes how a mirror made of "polyester resin" could be held aloft by the pressure exerted by electromagnetic radiation from a transmitter like HAARP.

A PhD polymer researcher who wishes to remain anonymous told researcher William Thomas that if HAARP's frequency output is matched to Earth's magnetic field, its tightly-beamed energy could be imparted to molecules "artificially introduced into this region." This highly reactive state could then "promote polymerization and the formation of new compounds," he explained.

The heat generation needed to modify the weather can be fostered by adding magnetic iron oxide powder to polymers exuded by many high-flying aircraft. Radio-frequency-absorbing polymers such as Phillips Ryton F-5 PPS are sensitive in the 1-50 MHz regime, HAARP transmits between two and 10 MHz.

HAARP's U.S. Air Force and Navy sponsors claim that their transmitter will eventually be able to produce 3.6 million watts of radio frequency power. But on page 185 of an October, 1991 "Technical Memorandum 195" outlining projected HAARP tests, there is a call by the ionospheric effects division of the U.S. Air Force Phillips Laboratory for HAARP to reach a peak power output of 100 billion watts. Commercial radio stations commonly broadcast at 50,000 watts.

Some hysterical reports state that HAARP-type technologies will be used to initiate weather manipulation, climate modification, polar ice-cap melting, ozone depletion, earthquake engineering and ocean wave control through deliberate undertakings that alter and distort our planet's delicate electromagnetic energy fields. However, instead of using this technology to destroy mankind, it now is clear that HAARP is being used to modify the weather to stop, or at least lessen, the effects of global warming in order to save mankind. Alternative 4 - the successor to Alternative 3 is now operational.

There is another factor now operating in conjunction with HAARP that has caught the attention of conspiracy writers around the world - the mystery of the "Chemtrails." It can now be revealed that this is the next phase of Alternative 4!

The Mystery of the Chemtrails

We are all familiar with contrails, the exhaust left in the atmosphere by high-flying jet planes. Since 1997, observers all over the world have noticed an increase in these contrails with the skies being covered by a grid-pattern of high - altitude trails left by jets.

Active duty military personnel, police officers, pilots and defense specialists - as well as hundreds of everyday Americans quite used to seeing aircraft contrails and normal flight operations near cities, airports or over long-established routes, independently confirm the presence of multiple "lines in the sky" being purposefully laid by large jet tankers (usually white in color and always without identifying markings) over cities and rural areas.

As many as 20, 30 or more "contrails" are woven over hours into lattice-like grid patterns. "Tic-tac-toe in the sky" or "furrowing a farm field" are expressions commonly used to describe these multiple-aircraft maneuvers, in which white contrail-like emissions linger for hours, gradually spreading into a hazy overcast that completely obscures clear blue skies.

Normal contrails form when ice-crystals are disturbed by the passage of an airplane at high (cold) altitudes. Streaming from engines and wingtips, pencil-thin contrails almost always disappear within 45 seconds, fading quickly like the wake behind a boat.

While ice-crystal contrails can occasionally persist for hours, forming cirrus-type clouds that drift over a large area - particularly over high-traffic routes such as the Atlantic corridor between the USA and Europe - the chemtrails being reported daily by many independent eye-witnesses always linger for hours, forming an overcast from which veils of wispy fallout are often observed.

In some cases, commercial jetliners flying across these persistent grid-patterns lay normal contrails that disappear quickly alongside lingering chemtrails. Usually laid in an east-west direction, with characteristic X's and cris-cross trails also often observed, jets layering these deliberate chemtrails have often been observed switching their emissions off as they approach mountains or other geographically delineating features, only to turn their spray back on after making their turns back over the area being sprayed.

There has also been increased incidents of acute respiratory illness - including bronchitis, pneumonia and first-time asthma attacks in what doctors are calling

epidemic levels across the USA and Great Britain. Fatalities, mostly among the elderly and immune-compromised, have exceeded 8, 100 dead in England in the last week of December and first two weeks of January, 1999 according to the BBC.

Other observers report spraying from black, unmarked helicopters and twin-turboprop aircraft flying at rooftop level, often but not always at night. Incidents of chemicals being dumped from unmarked helicopters into municipal reservoirs have also been reported.

While chemtrail sightings have attracted strident attacks for lack of proof, videotape clearly shows billowing white spray being emitted from the tails of jets with wing-mounted engines, as well as from the wing sections outboard of the engines and inboard of the wingtips. These are the precise locations of wing- and tail-mounted refueling probes on tanker aircraft.

The Spraying of America - A Brief History

In the closing months of World War II, a small task force of U. S. Naval ships maneuvered off the coast of southern California. Their objective was to gain information that military officers hoped would save thousands of American lives. Instead, this little excursion cost a few hundred innocent lives in the name of national security.

The expedition was the result of a fear among both Army and Navy officers that a super-secret Japanese military unit might be preparing to douse the West Coast with deadly bacteria. Ostensibly, a Japanese army "water purification" section situated in Pingfan, Manchuria - the group known as Unit 731 - actually was using prisoners, including Americans, as human guinea pigs in an effort to develop deadly toxins to destroy Japan's enemies.

In late 1941, the Japanese experimented with germ warfare by airdropping plague-infested materials over Changde, in China's Hunan Province. Later in the war, they began experimenting with large balloons, capable of carrying an incendiary bomb across the Pacific, by harnessing upper wind currents. The balloons were designed to fall on America, where the loss of gas brought them to Earth. By March 1945, more than 100 such balloons were known to have made their way to America through the jet stream.

The balloons landed as far north as White Horse, Alaska, and as far east as Grand Rapids, Michigan. In Oregon, six fishermen were killed when an incendiary-laden balloon exploded as they inspected it. Due to military secrecy, no one was warned of the balloon danger.

Military authorities feared that the worse was yet to come. They worried about the possibility of Unit 731 deploying balloons to release plague or encephalitis germs over America. Such concern led to high-level meetings in March 1945. Military authorities realized that a disaster could be caused by even one balloon releasing deadly biological agents.

What these officers needed to know was how fast and in which direction such diseases might travel - the so-called "vector" of the contagion. Navy ships were dispatched to steam along the coast of southern California, where, utilizing an early-morning mist as cover, sailors opened pressurized tanks filled with influenza virus. The contagion drifted ashore where other military men kept close tabs on both the speed and direction of infection.

Hospitals were monitored as far inland as 250 miles. More than 200 persons died in this flu outbreak, but the U. S. military got the information they wanted. Luckily the war ended before Japan could use their high-flying balloons to deliver deadly toxins to America. But U.S. government-led testing on its own civilian population continued well into the 1950s.

The army reportedly released simulant agents over hundreds of populated areas around the country. Targets included portions of Hawaii and Alaska, San Francisco, St. Louis, Minneapolis, New York City, Washington, D.C., Key West, Fort Wayne, Indiana and many other cities. The purpose was to see how the bacteria spread and survived as people went about their normal activities. No one learned of this secret experimentation for years because of top secret "national security."

In fact, during 45 years of open air testing, from time to time the army has stopped using certain simulants for reasons of safety. In each instance the army belatedly recognized they could be causing disease and death, although such information had long been available in the medical literature.

This was the case in the 1950s when it ceased using the fungus Aspergillus fumigatus as a simulant. The fungus had long been known to cause aspergillosis, a disease that can be fatal. Similarly, in the 1960s the army stopped using zinc cadmium sulfide, a chemical that had been known for years to cause cancer.

In the 1970s, the bacterium Serratia marcescens, a source of infections that can lead to death, was taken out of service as a simulant. In the 1980s, dimethyl methylphosphonate, a chemical known as DPP, was removed from use as a simulant because of its carcinogenic and other toxic potential.

Simulants in use today continue to pose risks. The chemical ethylene oxide, which is present in some of the mixtures used in outdoor spraying, is a known carcinogen. The bacterium Bacillus subtilis, while not generally seen as dangerous, is cited in medical textbooks as able to cause serious infections. Microorganism that seem harmless under some circumstances may cause illness under others.

Exposure to high concentrations of any microorganism can be critically dangerous to people in weakened conditions. The elderly, the very young, people with AIDS and others who have weakened immune systems are more susceptible to life threatening infections. Nevertheless, the army has not monitored the health of citizens who may have been exposed during its tests while maintaining that its bacterial agents cause no harm.

There could be two things that are going on with the chemtrials: Weather modification involving dangerous chemicals, and biowarfare experiments involving lab-produced pathogens. It could very well be that the characteristic X's in the sky are read by satellite to track dispersal patterns.

Weather is all about heat exchange. Heat generation can be artificially induced in the atmosphere by adding magnetic iron oxide powder to the polymer - and then heating it with HAARP or a more localized source. Bernard Eastlund, HAARP's inventor and original patent-holder, has said that this is theoretically possible - and that polymer additives for microwave absorption are commercially available.

Subsequent analysis by a private lab determined that some chemtrails contained a "strange ironlike substance." Chemtrail investigator Tommy Farmer comments that the chemist he engaged to examine an "angel hair" sample under a powerful microscope "noticed manmade yellow orange orbs impregnated into the filaments of the material." Farmer now believes this material could have been "oxidizing ferrous alloy" used in weather modification experiments.

Weather modification using chemtrails and other methods may be taking place across America without the help of HAARP, which according to Dr. Nick Begich (co-author of Angels Don't Play This HAARP) is apparently being activated only for short periods a few times a year.

A specialist who spoke under conditions of anonymity says that if HAARP "has anything to do with the contrails, I now realize we are talking about an altitude in the range of 10 Km. I don't know if it is possible to create [a resonance] region so close to the ground. None of the patents I have looked at are claiming anything less than 50 km. Furthermore, at the 10 Km height, it is hard to see how HAARP would have anything to do with effects seen in the lower 48 states or anywhere else on the planet."

When this engineer looked at other military applications for spraying organic electrolytes into the atmosphere, his patent searches turned up attempts to achieve over-the-horizon communications by reflecting radio waves off sprayed aerosols. "I could see that for over-the-horizon communications, one might make a reflector out of a grid pattern or parallel lines." Another patent shows a radar-jamming spray.

However, another weather modification expert insists that just as in shortwave radio, it is possible to use the ionosphere to "skip" HAARP radio-frequency transmissions to any region of the United States. Uncovered documents show that the Pentagon is also extremely interested in "steering storm systems" for weather modification, and in using sprayed aerosols to obscure the sky.

Chemtrail researcher Will Thomas agrees that the spraying seems to be for weather modification and/or neutralizing global warming effects. He further purports that this weather modification is being conducted due to pressure from insurance companies who see financial ruin on their horizon with continued high disaster-related claims. The catch? These weather modification tactics are further depleting the ozone hole and enhancing global warming. It is a short-term, "band-aid" answer with even worse consequences.

Spraying is generally done by certain planes: KC-10A, KC-135 (707) and C-130 for the high altitude spraying and C-130 turboprop aircraft for the low-level spraying. The KC-10A is a three-engine aircraft and would normally leave three parallel contrails in its wake.

The KC-135 is a smaller, four-engine aircraft that would typically display four parallel contrail lines. When used during chemtrail missions; however, these aircraft lay down only a single, thick, billowy chemtrail while simultaneously displaying no normal contrails. There are other planes which have been used in the spraying, but these are the main ones. Two types of spraying are done: high altitude meaning 20,000 feet and above and low altitude spraying.

The Composition of Chemtrails

Part of the substances in the chemtrails have been identified: a cocktail of JP8+100 jet fuel, laced with Ethylene Dibromide (EDB). This chemical pesticide was banned in 1983 by the EPA as a definite carcinogen and chemical toxin. Exposure to this type spraying can include these symptoms: respiratory tract problems, severe infections to the throat and sinuses, swelling of the lymph glands, coughing fits, shortness of breath, sinus headaches, general respiratory failure, damage to the heart and liver, exposure to EDB makes people more susceptible to other biological agents due to severe lung irritation.

For lack of a better term, "brown goo" has been used to describe the material found on exterior walls of buildings and windshields of automobiles. It's almost impossible to remove with soap and water, and has proved to be highly toxic to anyone coming in contact with it.

Numerous red and white blood cells, and unidentified cell types have been found within the sub-micron fiber sample previously presented and submitted by Carol M. Browner, Administrator of the United States Environmental Protection Agency. The cells appear to be of a freeze-dried or desiccated nature in their original form within the microscopic fibers.

It has also been reported that spraying samples have been analyzed and have revealed that many deadly and toxic pathogens have been found including Mycoplasma Fermetens Incognitus. This is the same bioengineered pathogen that Dr. Garth Nicholson discovered in about 45% of the veterans who came down with Gulf War Illness.

Based on their published agenda, it is known that the US Air Force is currently engaged in extensive weather modification and control techniques in cooperation with Alternative 4. The Air Force also admits to "routine fuel dumping" of highly toxic JP8, and to using carbon black for weather modification. According to a recent NASA cloud study, carbon black is a "very effective" nuclei around which water vapor can condense, forming an artificially induced cloud cover.

Tommy Farmer, a former engineering technician with Raytheon Missile Systems, has been tracking patterns of jet contrails phenomena for more than a year. Farmer has "positively identified" two of the aircraft most often involved in the aerial spraying incidents as a Boeing KC-135 and Boeing KC-10. Both big jets are used by the US Air Force for air to air refueling.

Confirming reports from eye-witnesses across the United States, Farmer reports that all aircraft are painted either solid white or solid black with the exception of two KC-135s which are in training colors - orange and white. No identifying markings are visible.

Farmer has collected samples of what he calls "angel hair" sprayed by the mystery aircraft on six occasions since February, 1998. Four samples have been taken since November, 1998. Farmer says that globular filaments resembling ordinary spider webs, "usually fall in clumps or wads ranging from pencil eraser size to the size of a balled up fist."

Winds often whip the cobweb-like material into filaments as long as 50 feet. Farmer says that the sticky substance "melts in your hands" and adheres to whatever it touches. He also urges caution to collectors after becoming ill after his first contact with the angel hair. Farmer's ensuing sore throat and sinus infection lasted several months.

After repeatedly observing aircraft spraying particulates in front of and into cloud systems, Farmer is fairly certain the contrail phenomena is one part of a military weather modification system, possibly to slow down global warming. He notes that because the chemical contrails allow much more moisture to form inside cloud systems, severe localized storms result from the aerial seeding while surrounding areas that have surrendered their moisture to the storm cells experience drought.

In a U.S. Air Force research study, Weather As A Force Multiplier, issued in August, 1996, seven U.S. military officers outlined how HAARP and aerial cloud-seeding from tankers could allow U.S. Aerospace forces to "own the weather" by the year 2025. Among the desired objectives were "Storm Enhancement," "Storm Modification" and "Induce Drought."

According to the Air Force report, "In the United States, weather-modification will likely become a part of national security policy with both domestic and international applications."

Within 30 years, the Air Force foresees using Weather Force Support Elements with "the necessary sensor and communication capabilities to observe, detect, and act on weather-modification requirements to support U.S. military objectives" by "using airborne cloud generation and seeding" techniques being developed today. Other routine weather-modification missions will deploy "cirrus shields" formed by the chemical contrails of high-flying aircraft.

In 1966 Lyden, F.J. and Shipman, G.A. published their Public Policy Issues raised by weather modification; possible alternative strategies for government action: in Sewell, W.R.D., ed., Human Dimensions of Weather Modification, University of Chicago, Dept. of Geography, Research Paper # 105, pp. 289-303: "Is weather modification a public function, analogous to military protection, postal service, or highway construction? Or is it a private, non-governmental function? If the latter, is it a private function vested with a public interest, as had been determined to be the case, for example, in rail or air transportation? ... Or is weather modification an ordinary, lawful business, subject only to reasonable regulation, as in the manufacture and sale of clothing? This view raises questions about property rights, i.e., who owns the clouds?"

As British scientist W. J Maunder commented in his book, The Value Of The Weather (London: Methuen & Co. Ltd, 1970) "At least in the United States weather modification as a public function does not simplify matters, for a considerable amount of private capital has already been invested in cloud seeding enterprises, and any proposal of a governmental monopoly would undoubtedly meet with strong opposition from such investors. Even if these objections could be overcome, additional questions arise, such as should the program be a Federal governmental operation, or one administered by the states with co-ordination, and perhaps partial financing, by the Federal government."

It is also possible that the government is trying to vaccinate its citizenry against Anthrax, Tularemia, Brucellosis, or all three. Currently anthrax is probably the greatest national threat currently facing our country as well as other countries. It is easy to manufacture, transport and deliver, plus death follows fairly quickly. The economic devastation projected from an anthrax attack is significant.

The technology exists for this type of DNA vaccine. Peoples' symptoms experienced after a chemtrail spraying are consistent with symptoms one would see produced by agents associated with the host bacteria used to deliver the vaccine. However, until a sample group of people is actually tested for immunity to anthrax, there is no proof that it protects conclusively against anthrax.

Besides its obvious tactical military applications, aerial-seeding of contrail-clouds aligned in HAARP's characteristic grid-patterns could be part of a secret U.S. government initiative (Alternative 4) to address the global weather crisis brought about by atmospheric warming. This Tesla-based technology unfortunately is only a temporary fix to the worldwide warming problem.

Project Cloverleaf

Chemtrail researcher C.E. Carnicom received a letter in May, 2000 from an airline manager who said that he had information concerning the chemtrails. The manager stated that he works for an undisclosed airline in upper management.

"Airline companies in America have been participating in something called Project Cloverleaf for a few years now. The earliest date anyone remembers being briefed on it is 1998. I was briefed on it in 1999.

"The few airline employees who were briefed on Project Cloverleaf were all made to undergo background checks, and before we were briefed on it we were made to sign non-disclosure agreements, which basically state that if we tell anyone what we know we could be imprisoned.

"About twenty employees in our office were briefed along with me by two officials from some government agency. They didn't tell us which one. They told us that the government was going to pay our airline, along with others, to release special chemicals from commercial aircraft.

"When asked what the chemicals were and why we were going to spray them, they told us that information was given on a need-to-know basis and we weren't cleared for it. They then went on to state that the chemicals were harmless, but the program was of such importance that it needed to be done at all costs.

"When we asked them why didn't they just rig military aircraft to spray these chemicals, they stated that there weren't enough military aircraft available to release chemicals on such a large basis as needs to be done. That's why Project Cloverleaf was initiated, to allow commercial airlines to assist in releasing these chemicals into the atmosphere. Then someone asked why all the secrecy was needed.

"The government reps then stated that if the general public knew that the aircraft they were flying on was releasing chemicals into the air, environmentalist groups would raise hell and demand the spraying stop. Someone asked one of the G-men then if the chemicals are harmless, why not tell the public what the chemicals are and why we are spraying them?

"He seemed perturbed at this question and told us in a tone of authority that the public doesn't need to know what's going on, but that this program is in their best interests. He also stated that we should not tell anyone, nor ask any more questions about it. With that, the briefing was over.

"All documents in our office pertaining to Project Cloverleaf are kept in locked safes. Nobody is allowed to take these documents out of the office. Very few employees are allowed access to these documents, and they remain tight-lipped about what the documents say.

"Mr. Carnicom, I am no fool. I know there's something going on. And frankly, I am scared. I feel a high level of guilt that I have been aware of this kind of operation but unable to tell anyone. It's been eating away at me, knowing that the company I work for may be poisoning the American people."

The Governments Assessment of Devastating Climatic Changes

A coalition of U.S. government agencies unveiled in June 2000 the first national assessment on the potential consequences of climate change over the next 100 years, revealing a wide range of impacts if the Earth continues to warm significantly. Cold winters in the Northeast could become a thing of the past, alleviating some health stresses, the nation's food supply should be safe, and forests may proliferate.

However, at the same time, there will be drought concerns in every region of the United States, maple syrup will not flow easily in New England, and ecosystems may disappear entirely. Sources with environmental organizations who helped draft the assessment said the project offers a slew of scenarios for how the United States will be affected by a projected temperature rise of 5-10 degrees Fahrenheit by the year 2100.

Dr. Janine Bloomfield, an expert with the Environmental Defense organization in New York City, said the report is not final and will be open for public comment. "There are specifics on the impact on ecosystems, as well as the rate and magnitude of climate change," Bloomfield said.

The assessment breaks down how regions and specific sectors could be hurt or helped if the Earth warms at the same rate it has in recent years due to the accumulation of greenhouse gases in the atmosphere. It was written by a panel of scientists from several government agencies, academics, private groups, and other interested people ranging from farmers to fishermen.

According to the draft, the country must be prepared for the changes ahead, even if the exact impacts remain uncertain at this point. "It is very likely that

some aspects and impacts of climate change will be totally unanticipated as complex systems respond to ongoing climate change in unforeseeable ways," it says.

Even if steps were taken in the near-term to reduce human greenhouse gas emissions, the report says, the level of gases already in the atmosphere will leave the world susceptible to climate change for the next century. "Even if the world takes mitigation measures, we must still adapt to a changing climate," the draft reports. "Similarly, even if we take adaptation measures, future emissions will have to be curbed to stabilize climate. Neither type of response can completely supplant the other."

An international attempt to tackle climate change, the Kyoto Protocol, has not been finished but it aims to reduce sharply the amount of fossil-fuel emissions from major industrial nations to 1990 levels by the years 2010-2012.

The following are some of the key findings listed in the assessment draft.

- Increased warming. Assuming continued growth in world greenhouse gas emissions, the climate models used in the assessment project that temperatures in the United States will rise 5-10 degrees Fahrenheit on average in the next 100 years.

- Differing regional impacts. Climate change will vary widely across the United States. Heavy and extreme precipitation events are likely to become more frequent, yet some regions will get drier.

- Vulnerable ecosystems. A few ecosystems such as alpine meadows in the Rocky Mountains and some barrier islands are likely to disappear entirely, while others such as forests in the Southeast are likely to experience major species shift or breakup. The goods and services lost through the disappearance or fragmentation of certain ecosystems are likely to be costly or impossible to replace.

- Widespread water concerns. Drought is an important concern in every region. Floods and water quality are also concerns. Snowpack changes are especially important in the West, Pacific Northwest and Alaska.

- Secure food supply U.S. crop productivity is very likely to increase over the next few decades, but the gains will not be uniform across the nation. Falling prices and competitive pressures are very likely to stress some farmers.

- Forest productivity is likely to increase in some areas as trees respond to higher carbon dioxide levels. Climate change will also cause long-term shifts in forest species, such as sugar maples moving north out of the country.

The southeastern states could experience rising sea levels and more frequent storm surges threatening coastal development. Some coastal wetlands, barrier islands and beaches will disappear. The variety of tree species will increase, but many forests will be displaced by grassland and savannas. There could be an increase in water quality problems.

The northeastern states may see more warming that will ease winter weather extremes, but bring more rain and possible flooding. Warming may exacerbate pollution from agricultural runoff in places like the Chesapeake Bay. Hotter summers are likely, with more frequent and intense heat waves especially affecting cities. Forest species shift northward and maple trees may disappear. Some coastal urban centers may have to rework sewer, water and transportation systems because of sea level rise. Mountain regions will see a decline in skiing and increase in other activities such as hiking.

The great lakes states will experience a decline in water levels because of increased evaporation, leading to reduced water supply. Shoreline damage is likely to decrease, but lower water levels add to marine transportation problems. Cities along lakes must adapt to new water levels.

The Midwestern-great plains states may see increased stress in major cities because of extreme summer heat, but winters will become milder, reducing winter-related illnesses and deaths. Longer growing season and increases in carbon dioxide will cause higher crop yields and allow planting of more types of crops and in many cases more than one crop a year.

Despite higher rainfall, warmer weather will increase evaporation, reducing lake and river water levels. Likelihood of more droughts and flash flooding. Farming on marginal land will become more difficult. Western and Mountain States could see warmer winter temperatures that will reduce snow accumulations

in mountains, reducing summer runoff and complicating water management, flood control and irrigation. Higher elevation ecosystems will shift with parts of the mountain region becoming drier. Alpine meadows in the Rocky Mountains are likely to face extreme stress and may disappear.

Southwestern states could face increased moisture which will result in a decline of desert ecosystems, while shrub lands expand. Increase in crop diversity. Areas may have a variation of wet and dry periods adding to flooding and fire risks. Some birds and mammals may shift to higher elevations, while reptiles and amphibians may move to lower elevations with warming. Changes in mountain snowpack will require changes in water management.

Warmer water temperatures may cause some fish species, including Pacific Northwest salmon, to migrate northward in the northwestern states and Alaska. Warmer water species may move into the Northwest. Warmer weather is likely to increase rainfall in the summer and cause changes in species mix. Sea level rise will impact low-lying areas, especially in Puget Sound area. Warming in Alaska will increase permafrost thawing, resulting in damage to roads, buildings and impacting forests.

Islands all over the planet will have to face rising sea levels and increased possibility of storms. This may reduce availability of fresh water and in some cases pose health risks. Higher water temperatures and increased carbon dioxide levels are likely to exacerbate coral bleaching and increase destruction of coral reefs off southern Florida and Hawaii Islands.

Science and environmental groups lauded the draft as a "balanced assessment" of the potential impacts of climate variability and change on the United States but warned that unless the nation saw the report as a "wake up call," nothing good would come from its release. In a joint statement from Environmental Defense, National Environmental Trust, Natural Resources Defense Council, Union of Concerned Scientists and the World Wildlife Fund, the groups said it was time to take climate change seriously.

A top secret government report that will not be released to the public, confirms the climate assessment report, but adds that due to the difficulties of finding a worldwide solution to increased air pollution, global warming will continue to increase beyond the five to ten degrees postulated by current analysis. The report continues with an estimate that the planet's temperature will likely increase twenty to thirty degrees within one hundred years, making human life impossible.

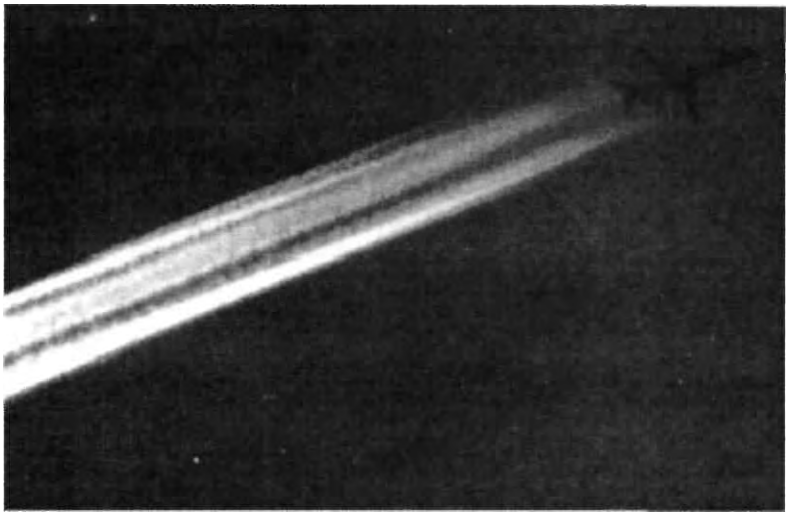

Aircraft, tentatively identified as an MD-80, leaves a trail of chemicals that could be used in conjunction with HAARP to modify global warming.

Conclusions

Even though several years have passed, Dale Alfrey continues to try and recover his lost Tesla notes. He feels that somewhere there exists additional papers and notes, perhaps forgotten in someone's basement or attic. Alfrey has spent a number of hours scouring the Internet seeking people who may have the information he is looking for. Unfortunately, nothing has been found.

It is certain that other missing Tesla documents are still "out there somewhere." According to the book: Tesla - Man Out of Time, in 1928, Tesla's friend, John O'Neill happened to see a legal advertisement in a New York newspaper announcing that six boxes placed in storage by Tesla would be sold by the storage warehouse for unpaid bills. Feeling that such material should be preserved, O'Neill went to Tesla and asked permission to try and obtain funds to reclaim the material.

"Tesla hit the ceiling," he recalled. "He assured me he was well able to take care of his own affairs. He forbid me to buy them or do anything in any way about them."

Shortly after the inventor died, O'Neill got in touch with Sava Kosanovic, told him about the boxes, and urged him to protect them. He was never able to get a positive statement from Kosanovic that he had obtained the boxes and examined the contents. "He gave evasive assurances that there was no reason for me to worry."

Despite the incomplete notes that Tesla left behind, Alfrey thinks that he has been able to put together a rough idea of what Tesla was researching and why. Some of these notes were Tesla's work in vertical take-off and landing (VTOL) aircraft, strange drawings of unusual vehicles, reactive jet dirigibles and hovercraft and also combination helicopter/airplanes that the inventor designed. Clearly, Tesla is one of the forefathers of both the Harrier jet, which can hover and take off vertically, and the Osprey helicopter-airplane.

After his initial Colorado Springs experiments in 1899, Tesla started experimenting with better radio transmitters and receivers in order to repeat his reception of the anomalous signals he picked up in Colorado. Tesla considered his methods of reception and transmission utilized not Hertzian waves, or what we now refer to as transverse electromagnetic waves (radio), but another type of signal transmission.

He described them as faster-than-light (FTL) longitudinal wave transmissions. Tesla may have been receiving on the ELF specturm (Extremely Low Frequencies). The ELF spectrum is below the 10 KHz. boundary of internationally regulated frequencies . It is usually considered to be the spectrum of 3 Hz. to 30 Hz. (VLF-3 to 30 KHz.) (ULF-300 to 3000 Hz.) (ELF-3 to 300Hz.). The wavelengths in the ELF range are from 100,000 Km. to 1,000 Km., and the wavelength for the earth's 40,000 Kms. circumference falls within that spread.

Tesla obviously succeeded to such a degree that he was soon receiving voice transmissions. These transmissions he speculated were originating from people on other worlds. Tesla gave a few public hints about these interplanetary transmissions, such as in 1937, he announced: "I have devoted much of my time during the year past to the perfecting of a new small and compact apparatus by which energy in considerable amounts can now be flashed through interstellar space to any distance without the slightest dispersion." (New York Times, Sunday, 11 July 1937)

A degree of confirmation of Tesla's interplanetary communications came from Arthur Mathews who claimed that Tesla had secretly developed the "Teslascope" for the purpose of communicating with Mars. Matthews' father was a laboratory assistant to the noted physicist Lord Kelvin back in the 1890s. Tesla once came over to England to meet Kelvin to convince him that Alternating Current was more efficient than Direct. When Matthews was 16 his father arranged for him to apprentice under Tesla. He eventually worked for him and continued this alliance until Tesla's death in 1943.

"It's not generally known, but Tesla actually had two huge magnifying transmitters built in Canada, and Matthews operated one of them. People mostly know about the Colorado Springs transmitters and the unfinished one on Long Island. I saw the two Canadian transmitters. All the evidence is there.

"The Teslascope is the thing Tesla invented to communicate with beings on other planets. In principle, it takes in cosmic ray signals and eventually the signals are stepped down to audio. Speak into one end, and the signal goes out the other end as a cosmic ray emitter."

With the exception of Matthews statements, there has been no concrete evidence that Tesla managed to communicate with extraterrestrials or whoever was transmitting to Tesla's ELF receiver. It seems that Tesla was on the receiving end only. Nevertheless, Tesla managed to glean a substantial amount of good

information from these transmissions, enough to influence his research and inventions for the remaining forty three years of his life.

It was during this period that Tesla found himself ostracized by most of the scientific community. His efforts to interest others in such wild inventions as free-energy, beam weapons, wireless power transmissions, antigravity devices, anti-war shields, resonation and a plethora of others, no doubt led to him being considered a crackpot. Sadly, Tesla had become the apodeme of a mad scientist.

Yet, it was obvious that his letters to the government and military had aroused some interest. A young American engineer engaged in war work consulted Tesla on a ballistics engineering problem because he could not get time on an overworked computer, and Tesla's mind was known to offer the nearest thing to it. Soon he became fascinated with Tesla's scientific papers and was allowed to take batches of them home to his hotel room where he and another American engineer pored over them each night. They were returned the next day, a procedure which continued for about two weeks prior to Tesla's death.

Tesla had received offers to work for Germany and Russia. After the inventor died, both engineers became concerned that critical scientific information had fallen into foreign hands and alerted United States security agencies and high government officials.

Just how much of Tesla's work remains hidden in the top secret bowels of the military is unknown. It can be deduced that Tesla's theories of extraterrestrials and global warming were taken seriously by some in high-levels of authority, because it is now known that the United States government and military were the first to give credence that UFOs were spacecraft from other planets.

It is interesting to note that between 1945 and 1948 an exchange of letters and cables occurred among the Air Technical Service Command at Wright Field in Dayton, Ohio, Military Intelligence in Washington, and the Office of Alien Property. The subject? Files of the late Nikola Tesla.

On September 5, 1945, Colonel Holliday of the Equipment Laboratory, Propulsion and Accessories Subdivision, wrote to Lloyd L. Shaulis of the OAP in Washington, confirming a conversation and asking for photostatic copies of the notes and papers of the late Tesla. It was stated that the material would be used "in connection with projects for national defense by this department."

Shaulis made the material available to Air Technical Service Command, but there is no record of how many copies were sent. Nor was the material ever

returned. These were full photostatic copies, not merely the abstracts. The Navy has no record of Tesla's papers; no federal archives have records of them.

Four months after the photostats had been sent to Wright Field, Col. Ralph Doty, the chief of Military Intelligence in Washington wrote James Markham of Alien Property indicating that they had never been received: "This office is in receipt of a communication from Headquarters, Air Technical Service Command, Wright Field, requesting that we ascertain the whereabouts of the files of the late scientist, Dr. Nikola Tesla, which may contain data of great value to the above Headquarters. It has been indicated that your office might have these files in custody. If this is true, we would like to request your consent for a representative of the Air Technical Service Command to review them. In view of the extreme importance of these files to the above command, we would like to request that we be advised of any attempt by any other agency to obtain them.

"Because of the urgency of this matter, this communication will be delivered to you by a Liaison Officer of this office in the hope of expediting the solicited information."

The "other" agency that had the files, or should have had them, was the Air Technical Service Command itself. On October 24, 1947, David L. Bazelon, assistant attorney general and director of the Office of alien Property, wrote to the commanding officer of the Air Technical Service Command regarding the Tesla photostats. They had not been returned and the OAP wanted them back.

Obviously at least one set of Tesla's papers had reached Wright Field because on November 25, 1947, there was a response to the Office of Alien Property from Colonel Duffy, chief of the Electronic Plans Section, Electronic Subdivision, Engineering Division, Air Material Command, Wright Field. He replied: "These reports are now in the possession of the Electronic Subdivision and are being evaluated. This should be completed by January 1, 1948. At that time your office will be contacted with respect to final disposition of these papers." They were never returned or even acknowledged to have ever existed at all!

In response to a Freedom of Information Act request in 1980, Wright - Patterson Air Force base stated: "The organization (Equipment Laboratory) that performed the evaluation of Tesla's papers was deactivated several years ago. After conducting an extensive search of lists of records retired by that organization, in which we found no mention of Tesla's papers, we concluded the documents were destroyed at the time the laboratory was deactivated."

Afterthoughts on Nikola Tesla, Alien Among Us
By Diane Tessman

Nikola Tesla was an alien in a tough, cruel world. He was a gentle, humble man and the gaudy objects which money can buy, did not impress him in the least. He was out of place and out of time. And he was brilliant! No one since has equaled him in sheer scientific creativity and genius.

Tesla disliked the compromises, greed, and lies of "big business" in his day. Just think how much worse it has gotten today. Many of us feel as Tesla did, but the individual's lone voice echos in a vast wasteland. We may keep our soul, as Tesla did, but we also feel like aliens in this greedy world.

Tesla possessed integrity, dignity, and an innate sense of fair play. Injustice made him furious. However, if his amazing inventions were to be used by large corporations in promoting electrical energy and his other unique scientific innovations, he would have to bend to their self-serving ways. He did not!

He suffered greatly for his stand against big business and greed. He was virtually homeless, living in fleabag hotels, and had to watch as others became wealthy and famous for inventions which were not the equal of his; some highly successful technology was directly stolen from him. Tesla lived in poverty and anonymity but he kept his integrity. His soul was his own.

W.B. Yeats writes of a "pioneer soul" and this term applies to Nikola Tesla. He was an individual ahead of his time; even today, he would find the world greedy, ignorant and cruel. He belongs to the future, a time when humankind will learn to feel, think and act on a higher, more enlightened level. He belongs to the future day when we will indeed do unto others, as we would have them do unto us.

Many seekers of truth, both scientific and metaphysical, have been drawn to Nikola Tesla. He speaks to us. We are awed at his inventions and knowledge, and we are inspired by his gentle enlightenment and strength of character. Tesla possesses an immortal, mysterious persona which intrigues anyone who does not accept anything at face value.

Albert Einstein felt that true scientific genius is based in the mystical world; as we are drawn to Tesla and as he speaks to us, we perceive this truth again: Tesla's scientific brilliance has its foundation in the spiritual and the mystical.

I have been a channel for 18 years and have received transmissions from a variety of interdimensional beings. At this time, Nikola Tesla sent through me,

the following message for humanity as the new millennium dawns across the face of the planet: "Humankind, this is the being you know as Tesla. I greet you in the light of good intent. I am no longer in that "Tesla" physical form, having gone on many of your Earth years ago, to a different world in Space/Time. I am happy here; I am home.

"I came to your world, as you did, to make it a better place. You may have lost sight temporarily of the fact that you came to Earth to make it a better place. Why? Because you are so busy just trying to survive there. You are fatigued much of the time, and speaking of time - it just flies by! I had this problem as well, and there were many times when I felt lost and depressed. But I did live my human lifetime to help enlightened its people, and you have also chosen this path.

"If you can leave your problems for a moment, and fly above the trees, you will see Earth and your lifetime there in a clear perspective. Your higher perspective of "the forest" tells you that you are there for a reason - to make a difference.

"Do not lose your integrity, therefore. Gather your dignity about you, and never stop having that sense of fair play. Your power base is within yourself, not in the big corporations which attempt to run your life. They can never own you if you keep possession of your soul. They can never control your mind if you continue to allow your mind to be free and enlightened.

"The time is soon coming when "their" day will be over! The big international corporations are not eternal. Their greedy, cruel ways selfishly trouncing on other humans, on nature's creatures, on the environment, and on the planet herself, will soon come to an end.

"Our day is coming, my fellow pioneer soul. My spirit, my persona hovers around Earth in these days, assisting you when and where I can. This is partially why you feel intrigued with my character and my work. I attempt to channel messages to budding inventors and scientists, and I attempt to inspire spiritual seekers as well.

"A new dawn comes, and a world emerges in which we are not aliens. The vibrations of gentleness, enlightenment, curiosity, integrity and justice will be, THE WAY IT IS. I thank you for you interest. (Transmission from) TESLA."

* You can write to Diane Tessman at P.O. Box 352, St. Ansgar, Iowa, 50472. Ask for a free Star Network Heartline newsletter. You can also log onto Diane's Star People Homesite on the Internet: http://www.members.tripod.com/starpeople

If you have any information on the whereabouts of other "lost" boxes of Nikola Tesla's notes and journals - Please E-mail your story to the Conspiracy Journal at this address: commanderxl2@hotmail.com

You can also send a regular letter to:

Global Communications
P.O. Box 753
New Brunswick, NJ 08903

Be sure to visit the Conspiracy Journal website at: http://www.webufo.net for all the news and information that everyone else is too afraid to print.

TESLA'S "LOST" INVENTIONS AND THE SECRET OF THE PURPLE HARMONY GENERATORS

Upon the passing of Nikola Tesla, huge boxes containing his private journals and unpatented inventions were retained by the Custodian of Alien Properties and were locked away. From inside information gathered in the years following his death, it was ascertained that officials from Wright-Patterson Air Force Base (also the home for many years of Project Blue Book, headquarters of the government's UFO cover-up attempt) hurried to the warehouses of the Custodian of Alien Properties and took possession of all of Tesla's documents and other materials, all of which were classified at the highest level. To this day, a great deal of Tesla's papers remain in government hands and are still highly classified. There are literally tons of notes, documents, drawings, and plans, as well as over twenty boxes of reportedly "missing" Tesla material. The government distributed false rumors that Tesla never kept notes, which is a blatant he.

Over the course of time - largely in the last decade - some of Tesla's lost journals have been uncovered, and a number of his "secret inventions" have been privately developed. One of these inventions is Tesla's Purple Harmony Generator — also know as Tesla's Purple Energy Plate. Though the "generators" have been around for a number of years, they are only now starting to receive the international attention they deserve in the alternative energy field. In an article published in the August 2000 edition of the popular FATE magazine, author Corrie DeWinter mentions that she first became aware of the generators while reading a book called STAR SIGNS by Linda Goodman. "Goodman mentions that the person who created the plates with Tesla preferred to remain anonymous. However, after the inventor's death, the company which produced the plates decided to give him due credit. The inventor, Ralph Bergstresser was bom in 1912 in Pueblo, Colorado, of German parents who immigrated to the United States. He was extremely interested in free energy, or Zero Point Energy" as it is now called in scientific circles. Bergstresser carefully studied anything written about Nikola Tesla's experiments, and attended many lectures given by Tesla. At one point they were introduced and quickly became friends, due to their shared interest in free energy."

According to the FATE article, Bergstresser continued with his work for many years and following Tesla's death came into possession of several notebooks which helped him further develop the harmony plates. For all intents and purposes the plates look innocent enough. Coming in a variety of sizes, they are purple in color and are said to be "in resonance, or in tune, with the basic energy of the universe. They function as transceivers—creating a field of energy around themselves that will penetrate any material substance by osmosis. The energy is very beneficial to all life... plant, animal, or human. It might be considered as Positive Energy." Somehow or other ~ according to current thinking regarding the plates ~ the original atoms of the anodized aluminum structures are restructured when put through a proprietary process whereby the vibrational frequency of the atoms and electrons is changed.

Non-approved FDA testing has reportedly shown that the healing process is accelerated for burns and bone fractures when the injured party becomes the focal point of the purple plates' force field by wearing one of the self contained generators. Aches and pains are said to go away, the quality of sleep may be improved, water and food becomes more tasty (to establish this simply put a purple plate on a shelf in your frig. The quality of cheap wine is remarkably enhanced. Plates have been placed under sick houseplants, and near the food dish of small pets. Corrie De Winter in her FATE article offers several suggestions for the use of the plates: "Place a small-size plate in a pocket or purse for energy... small plate (is often) placed on forehead to alleviate headache pain, on joints to alleviate gout and arthritis pain, on stomach to stop nausea...Placed on forehead in the morning will help you to remember your dreams... I have also read testimonials from plate users who claim they help with cramps, headaches, stomach upsets, stiff joints, torticollis, swelling, ringworm, 'clicking' jaw, alcoholism, anxiety, colic and depression."

Probably one of the most influential tests has been conducted by the Perrysburg School District allowing them to stop using dangerous pesticides around the Frank Elementary School pupils and very naturally by utilizing the Tesla generators or plates. According to the school custodian, the plates where installed in the cafeteria and elsewhere around the building allowing them to greatly control the pest population. One of the most commonly used pesticides was developed by Hitler in World War II to penetrate mustard gas masks... the purple plates provide
a totally safe means to attack the problem of pests. Tesla's Purple Harmony Plates come in a number of sizes and are now available through the publishers of this special insider report (see next page). Test them yourself!

Tesla TURBINE

News Report

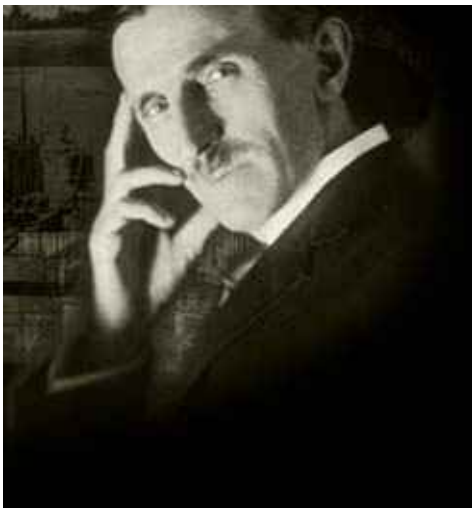

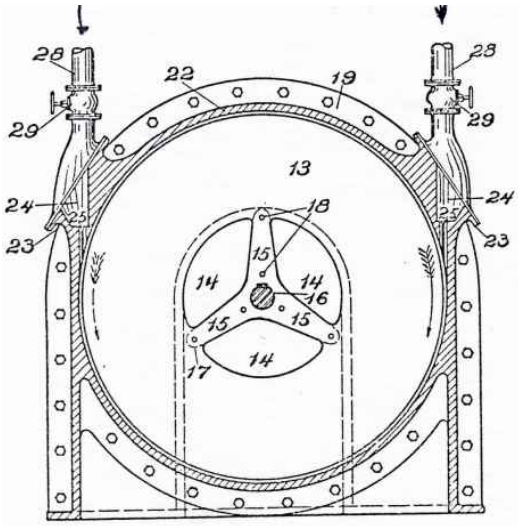

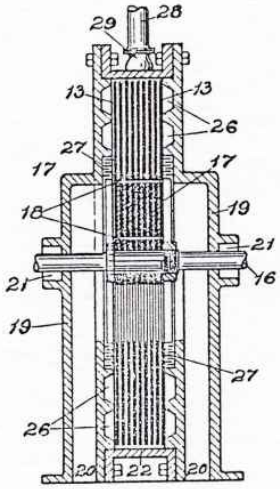

Copyright 1996 - 2003

N. TESLA.

TURBINE.

APPLICATION FILED JAN. 17, 1911.

1,061,206. Patented May 6, 1913.

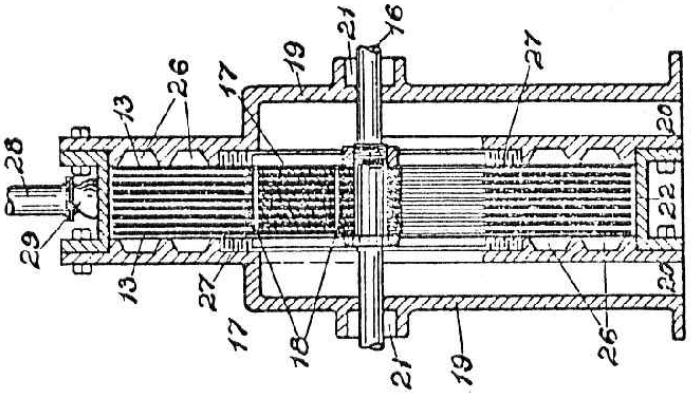

Fig. 2.

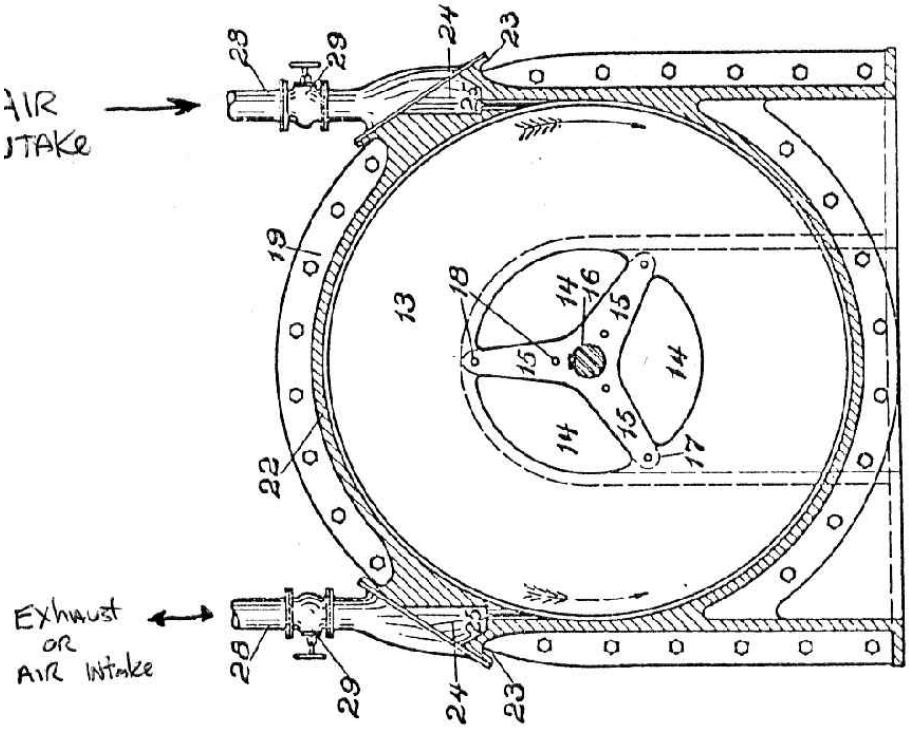

Fig. 1.

Witnesses:
A. Diaz Buitrago
Wm. Kohleber

Nikola Tesla, Inventor

By his Attorneys
Kerr Page Cooper & Hayward

Copyright 1996 - 2003

UNITED STATES PATENT OFFICE.

NIKOLA TESLA, OF NEW YORK, N. Y.

TURBINE.

[redacted] Specification of Letters Patent. Patented May 6, 1913.

Original application filed October 21, 1909, Serial No. 523,832. Divided and this application filed January 17, 1911. Serial No. 603,049.

To all whom it may concern:

Be it known that I, NIKOLA TESLA, a citizen of the United States, residing at New York, in the county and State of New York, have invented certain new and useful Improvements in Rotary Engines and Turbines, of which the following is a full, clear, and exact description.

In the practical application of mechanical power, based on the use of fluid as the vehicle of energy, it has been demonstrated that, in order to attain the highest economy, the changes in the velocity and direction of movement of the fluid should be as gradual as possible. In the forms of apparatus heretofore devised or proposed, more or less sudden changes, shocks and vibrations are unavoidable. Besides, the employment of the usual devices for imparting to, or deriving energy from a fluid, such as pistons, paddles, vanes and blades, necessarily introduces numerous defects and limitations and adds to the complication, cost of production and maintenance of the machines.

The object of my invention is to overcome these deficiencies and to effect the transmission and transformation of mechanical energy through the agency of fluids in a more perfect manner and by means simpler and more economical than those heretofore employed. I accomplish this by causing the propelling fluid to move in natural paths or stream lines of least resistance, free from constraint and disturbance such as occasioned by vanes or kindred devices, and to change its velocity and direction of movement by imperceptible degrees, thus avoiding the losses due to sudden variations while the fluid is imparting energy.

It is well known that a fluid possesses, among others, two salient properties, adhesion and viscosity. Owing to these a solid body propelled through such a medium encounters a peculiar impediment known as "lateral" or "skin resistance," which is twofold, one arising from the shock of the fluid against the asperities of the solid substance, the other from internal forces opposing molecular separation. As an inevitable consequence a certain amount of the fluid is dragged along by the moving body. Conversely, if the body be placed in a fluid in motion, for the same reasons, it is impelled in the direction of movement. These effects, in themselves, are of daily observation, but I believe that I am the first to apply them in a practical and economical manner in the propulsion of fluids or in their use as motive agents.

In an application filed by me October 21st, 1909, Serial Number 523,832 of which this case is a division, I have illustrated the principles underlying my discovery as embodied in apparatus designed for the propulsion of fluids. The same principles, however, are capable of embodiment also in that field of mechanical engineering which is concerned in the use of fluids as motive agents, for while in certain respects the operations in the latter case are directly opposite to those met with in the propulsion of fluids, and the means employed may differ in some features, the fundamental laws applicable in the two cases are the same. In other words, the operation is reversible, for if water or air under pressure be admitted to the opening constituting the outlet of a pump or blower as described, the runner is set in rotation by reason of the peculiar properties of the fluid which, in its movement through the device, imparts its energy thereto.

The present application, which is a division of that referred to, is specially intended to describe and claim my discovery above set forth, so far as it bears on the use of fluids as motive agents, as distinguished from the applications of the same to the propulsion or compression of fluids.

In the drawings, therefore, I have illustrated only the form of apparatus designed for the thermo-dynamic conversion of energy, a field in which the applications of the principle have the greatest practical value.

Figure 1 is a partial end view, and Fig. 2 a vertical cross-section of a rotary engine or turbine, constructed and adapted to be operated in accordance with the principles of my invention.

The apparatus comprises a runner composed of a plurality of flat rigid disks 13 of suitable diameter, keyed to a shaft 16, and held in position thereon by a threaded nut 11, a shoulder 12, and intermediate washers 17. The disks have openings 14 adjacent to the shaft and spokes 15, which

Copyright 1996 - 2003

may be substantially straight. For the sake of clearness, but a few disks, with comparatively wide intervening spaces, are illustrated.

The runner is mounted in a casing comprising two end castings 19, which contain the bearings for the shaft 16, indicated but not shown in detail; stuffing boxes 21 and outlets 20. The end castings are united by a central ring 22, which is bored out to a circle of a slightly larger diameter than that of the disks, and has flanged extensions 23, and inlets 24, into which finished ports or nozzles 25 are inserted. Circular grooves 26 and labyrinth packing 27 are provided on the sides of the runner. Supply pipes 28, with valves 29, are connected to the flanged extensions of the central ring, one of the valves being normally closed.

For a more ready and complete understanding of the principle of operation it is of advantage to consider first the actions that take place when the device is used for the propulsion of fluids for which purpose let it be assumed that power is applied to the shaft and the runner set in rotation say in a clockwise direction. Neglecting, for the moment, those features of construction that make for or against the efficiency of the device as a pump, as distinguished from a motor, a fluid, by reason of its properties of adherence and viscosity, upon entering through the inlets 20, and coming in contact with the disks 13, is taken hold of by the latter and subjected to two forces, one acting tangentially in the direction of rotation, and the other radially outward. The combined effect of these tangential and centrifugal forces is to propel the fluid with continuously increasing velocity in a spiral path until it reaches a suitable peripheral outlet from which it is ejected. This spiral movement, free and undisturbed and essentially dependent on the properties of the fluid, permitting it to adjust itself to natural paths or stream lines and to change its velocity and direction by insensible degrees, is a characteristic and essential feature of this principle of operation.

While traversing the chamber inclosing the runner, the particles of the fluid may complete one or more turns, or but a part of one turn, the path followed being capable of close calculation and graphic representation, but fairly accurate estimates of turns can be obtained simply by determining the number of revolutions required to renew the fluid passing through the chamber and multiplying it by the ratio between the mean speed of the fluid and that of the disks. I have found that the quantity of fluid propelled in this manner, is, other conditions being equal, approximately proportionate to the active surface of the runner and to its effective speed. For this reason, the performance of such machines augments at an exceedingly high rate with the increase of their size and speed of revolution.

The dimensions of the device as a whole, and the spacing of the disks in any given machine will be determined by the conditions and requirements of special cases. It may be stated that the intervening distance should should be the greater, the larger the diameter of the disks, the longer the spiral path of the fluid and the greater its viscosity. In general, the spacing should be such that the entire mass of the fluid, before leaving the runner, is accelerated to a nearly uniform velocity, not much below that of the periphery of the disks under normal working conditions, and almost equal to it when the outlet is closed and the particles move in concentric circles.

Considering now the converse of the above described operation and assuming that fluid under pressure be allowed to pass through the valve at the side of the solid arrow, the runner will be set in rotation in a clockwise direction, the fluid traveling in a spiral path and with continuously diminishing velocity until it reaches the orifices 14 and 20, through which it is discharged. If the runner be allowed to turn freely, in nearly frictionless bearings, its rim will attain a speed closely approximating the maximum of that of the adjacent fluid and the spiral path of the particles will be comparatively long, consisting of many almost circular turns. If load is put on and the runner slowed down, the motion of the fluid is retarded, the turns are reduced, and the path is shortened.

Owing to a number of causes affecting the performance, it is difficult to frame a precise rule which would be generally applicable, but it may be stated that within certain limits, and other conditions being the same, the torque is directly proportionate to the square of the velocity of the fluid relatively to the runner and to the effective area of the disks and, inversely, to the distance separating them. The machine will, generally, perform its maximum work when the effective speed of the runner is one-half of that of the fluid; but to attain the highest economy, the relative speed or slip, for any given performance, should be as small as possible. This condition may be to any desired degree approximated by increasing the active area of and reducing the space between the disks.

When apparatus of the kind described is employed for the transmission of power certain departures from similarity between transmitter and receiver are necessary for securing the best results. It is evident that, when transmitting power from one shaft to another by such machines, any desired ratio between the speeds of rotation may be obtained by a proper selection of the diameters of the disks, or by suitably staging the

Copyright 1996 - 2003

transmitter, the receiver or both. But it may be pointed out that in one respect, at least, the two machines are essentially different. In the pump, the radial or static pressure, due to centrifugal force, is added to the tangential or dynamic, thus increasing the effective head and assisting in the expulsion of the fluid. In the motor, on the contrary, the first named pressure, being opposed to that of supply, reduces the effective head and the velocity of radial flow toward the center. Again, in the propelled machine a great torque is always desirable, this calling for an increased number of disks and smaller distance of separation, while in the propelling machine, for numerous economic reasons, the rotary effort should be the smallest and the speed the greatest practicable. Many other considerations, which will naturally suggest themselves, may affect the design and construction, but the preceding is thought to contain all necessary information in this regard.

In order to bring out a distinctive feature, assume, in the first place, that the motive medium is admitted to the disk chamber through a port, that is a channel which it traverses with nearly uniform velocity. In this case, the machine will operate as a rotary engine, the fluid continuously expanding on its tortuous path to the central outlet. The expansion takes place chiefly along the spiral path, for the spread inward is opposed by the centrifugal force due to the velocity of whirl and by the great resistance to radial exhaust. It is to be observed that the resistance to the passage of the fluid between the plates is, approximately, proportionate to the square of the relative speed, which is maximum in the direction toward the center and equal to the full tangential velocity of the fluid. The path of least resistance, necessarily taken in obedience to a universal law of motion is, virtually, also that of least relative velocity. Next, assume that the fluid is admitted to the disk chamber not through a port, but a diverging nozzle, a device converting wholly or in part, the expansive into velocity-energy. The machine will then work rather like a turbine, absorbing the energy of kinetic momentum of the particles as they whirl, with continuously decreasing speed, to the exhaust.

The above description of the operation, I may add, is suggested by experience and observation, and is advanced merely for the purpose of explanation. The undeniable fact is that the machine does operate, both expansively and impulsively. When the expansion in the nozzles is complete, or nearly so, the fluid pressure in the peripheral clearance space is small; as the nozzle is made less divergent and its section enlarged, the pressure rises, finally approximating that of the supply. But the transition from purely impulsive to expansive action may not be continuous throughout, on account of critical states and conditions and comparatively great variations of pressure may be caused by small changes of nozzle velocity.

In the preceding it has been assumed that the pressure of supply is constant or continuous, but it will be understood that the operation will be, essentially the same if the pressure be fluctuating or intermittent, as that due to explosions occurring in more or less rapid succession.

A very desirable feature, characteristic of machines constructed and operated in accordance with this invention, is their capability of reversal of rotation. Fig. 1, while illustrative of a special case, may be regarded as typical in this respect. If the right hand valve be shut off and the fluid supplied through the second pipe, the runner is rotated in the direction of the dotted arrow, the operation, and also the performance remaining the same as before, the central ring being bored to a circle with this purpose in view. The same result may be obtained in many other ways by specially designed valves, ports or nozzles for reversing the flow, the description of which is omitted here in the interest of simplicity and clearness. For the same reasons but one operative port or nozzle is illustrated which might be adapted to a volute but does not fit best a circular bore. It will be understood that a number of suitable inlets may be provided around the periphery of the runner to improve the action and that the construction of the machine may be modified in many ways.

Still another valuable and probably unique quality of such motors or prime movers may be described. By proper construction and observance of working conditions the centrifugal pressure, opposing the passage of the fluid, may, as already indicated, be made nearly equal to the pressure of supply when the machine is running idle. If the inlet section be large, small changes in the speed of revolution will produce great differences in flow which are further enhanced by the concomitant variations in the length of the spiral path. A self-regulating machine is thus obtained bearing a striking resemblance to a direct-current electric motor in this respect that, with great differences of impressed pressure in a wide open channel the flow of the fluid through the same is prevented by virture of rotation. Since the centrifugal head increases as the square of the revolutions, or even more rapidly, and with modern high grade steel great peripheral velocities are practicable, it is possible to attain that condition in a single stage machine, more readily if the runner be of large diameter. Obviously this problem is

Copyright 1996 - 2003

facilitated by compounding, as will be understood by those skilled in the art. Irrespective of its bearing on economy, this tendency which is, to a degree, common to motors of the above description, is of special advantage in the operation of large units, as it affords a safeguard against running away and destruction. Besides these, such a prime mover possesses many other advantages, both constructive and operative. It is simple, light and compact, subject to but little wear, cheap and exceptionally easy to manufacture as small clearances and accurate milling work are not essential to good performance. In operation it is reliable, there being no valves, sliding contacts or troublesome vanes. It is almost free of windage, largely independent of nozzle efficiency and suitable for high as well as for low fluid velocities and speeds of revolution.

It will be understood that the principles of construction and operation above generally set forth, are capable of embodiment in machines of the most widely different forms, and adapted for the greatest variety of purposes. In my present specification I have sought to describe and explain only the general and typical applications of the principle which I believe I am the first to realize and turn to useful account.

What I claim is:

1. A machine adapted to be propelled by a fluid consisting in the combination with a casing having inlet and outlet ports at the peripheral and central portions, respectively, of a rotor having plane spaced surfaces between which the fluid may flow in natural spirals and by adhesive and viscous action impart its energy of movement to the rotor, as described.

2. A machine adapted to be propelled by a fluid, comprising a rotor composed of a plurality of plane spaced disks mounted on a shaft and open at or near the same, an inclosing casing with a peripheral inlet or inlets, in the plane of the disks, and an outlet or outlets in its central portion, as described.

3. A rotary engine adapted to be propelled by adhesive and viscous action of a continuously expanding fluid comprising in combination a casing forming a chamber, an inlet or inlets tangential to the periphery of the same, and an outlet or outlets in its central portion, with a rotor composed of spaced disks mounted on a shaft, and open at or near the same, as described.

4. A machine adapted to be propelled by fluid, consisting in the combination of a plurality of disks mounted on a shaft and open at or near the same, and an inclosing casing with ports or passages of inlet and outlet at the peripheral and central portions, respectively, the disks being spaced to form passages through which the fluid may flow, under the combined influence of radial and tangential forces, in a natural spiral path from the periphery toward the axis of the disks, and impart its energy of movement to the same by its adhesive and viscous action thereon, as set forth.

5. A machine adapted to be propelled by a fluid comprising in combination a plurality of spaced disks rotatably mounted and having plane surfaces, an inclosing casing and ports or passages of inlet and outlet adjacent to the periphery and center of the disks, respectively, as set forth.

6. A machine adapted to be propelled by a fluid comprising in combination a runner composed of a plurality of disks having plane surfaces and mounted at intervals on a central shaft, and formed with openings near their centers, and means for admitting the propelling fluid into the spaces between the disks at the periphery and discharging it at the center of the same, as set forth.

7. A thermo-dynamic converter, comprising in combination a series of rotatably mounted spaced disks with plane surfaces, an inclosing casing, inlet ports at the peripheral portion and outlet ports leading from the central portion of the same, as set forth.

8. A thermo-dynamic converter, comprising in combination a series of rotatably mounted spaced disks with plane surfaces and having openings adjacent to their central portions, an inclosing casing, inlet ports in the peripheral portion, and outlet ports leading from the central portion of the same, as set forth.

In testimony whereof I affix my signature in the presence of two subscribing witnesses.

NIKOLA TESLA.

Witnesses:
M. LAWSON DYER,
WM. BOHLEBER.

TESLA TURBINE #393

Copyright 1996 - 2003

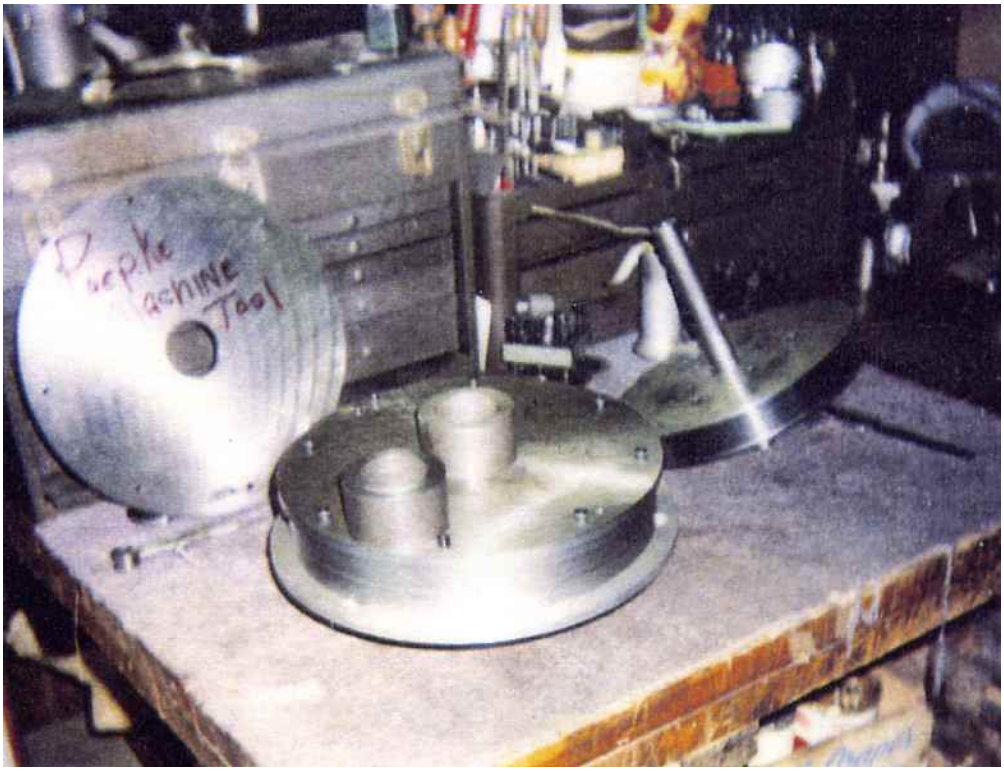

Photo's a customer sent in of his Turbine

TESLA TURBINE #393

Copyright 1996 - 2003

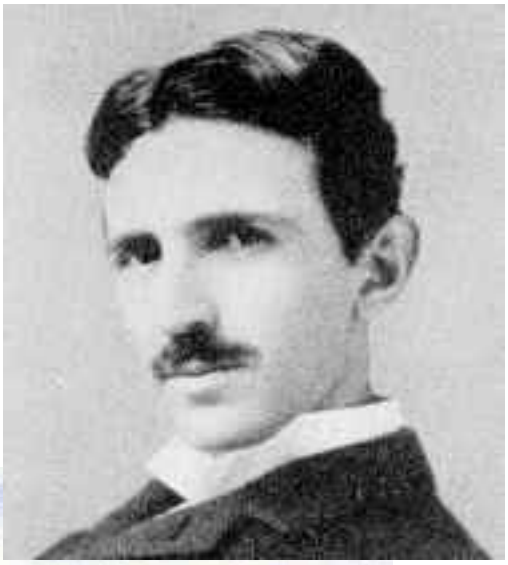

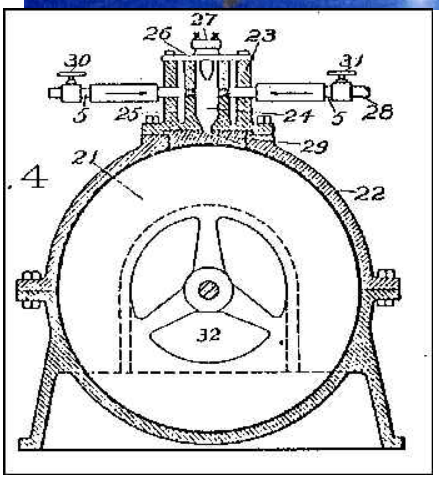

“Ere many generations pass, our machinery will be driven by power obtainable at any point in the universe...it is a mere question of time when men will succeed in attaching their machinery to the very wheelwork of nature."

- Nikola Tesla

ZPOWER

5025 n central avenue #414
phoenix, arizona 85012
united states of america

facsimile	**602.532.7517**
email	**info@zpower.net**
internet	**http://www.zpower.net**

ZERO POINT ENERGY

COPYRIGHT AND DISCLAIMER

The purpose of this document is to outline the vision of ZPower Corporation for the global commercialization of advanced energy technologies.

Copyright

All text, graphics, the selection and arrangement thereof (unless otherwise noted) are Copyright © 1999-2003, ZPower Corporation (ZPower), 5025 N Central #414, Phoenix AZ 85012 USA. ALL RIGHTS RESERVED.

Disclaimer

ZPower is providing this document on an "as is" basis and makes no representations or warranties of any kind with respect to its contents. Any use or misuse of this information is solely the responsibility of the reader. ZPower does not represent or warrant that the information in this report is accurate, complete or current. This information was gathered from sources believed to be reliable, but cannot be guaranteed insofar as they apply to any particular entity. Accordingly, intending parties should seek advice from appropriately qualified advisers as to suitability of a possible relationship with ZPower.

Neither ZPower nor any of its directors, employees, other representatives or advertisers will be liable for damages arising out of or in connection with the use of this report. This is a comprehensive limitation of liability that applies to all damages of any kind, including (without limitation) compensatory, direct, indirect or consequential damages, loss of data, income or profit, loss of or damage to property and claims of third parties.

This material does not constitute an offer to sell or a solicitation to buy any security.

ZPOWER STRATEGY DOCUMENTS

- ❑ Corporate Profile
- ❑ Overview
- ❑ Global Marketing Strategy
- ❑ Invention Program
- ❑ Technology
- ❑ Energy Revolution
- ❑ Energy Industry
- ✓ Zero Point Energy

TABLE OF CONTENTS

INTRODUCTION 5

ENERGY: SOMETHING FROM NOTHING - A ZERO POINT PRIMER 8

EXPERIMENT CONFIRMS ZERO POINT ENERGY 10

NEW ENERGY AGE 13

SPACE DRIVE: A FANTASY THAT COULD BECOME REALITY 21

VOLATILE VACUUMS 23

TOM BEARDEN FIGHTS FOR REVOLUTIONARY SCIENCE .. 29

THE LEFTOVERS OF NOTHING 35

THE ENERGETIC VACUUM: IMPLICATIONS FOR ENERGY RESEARCH 38

QUANTUM FLUCTUATIONS CREATE SILENT UPROAR IN SPACE 48

WHERE DOES THE ZERO-POINT ENERGY COME FROM? ... 53

INERTIA: DOES EMPTY SPACE 56

PUT UP THE RESISTANCE? 56

FILLING THE VOID 60

EXPLOITING ZERO-POINT ENERGY 62

THE WAVE 68

QUANTUM FLUCTUATIONS OF EMPTY SPACE: A NEW ROSETTA STONE OF PHYSICS? 73

CAN THE VACUUM BE ENGINEERED FOR SPACEFLIGHT APPLICATIONS? 81

THE NEW TESLA ELECTROMAGNETICS AND THE SECRETS OF FREE ELECTRICAL ENERGY 91

THE FINAL SECRET OF FREE ENERGY 106

WHAT IS ENERGY IN AN ELECTRIC CIRCUIT? 127

SPACE PROPULSION 144

THE SUBTLE PULL OF EMPTINESS 151

ETHER: WHAT IS IT? 154
EVERYTHING FOR NOTHING 158
ETHER AND THE THEORY OF RELATIVITY 165
AETHER, RELATIVITY AND SUPERFLUIDITY 173
THE ELECTROMAGNETIC FIELD & CLERK MAXWELL 182
BEYOND E=MC2 188
A QUANTUM BROOM SWEEPS CLEAN 196
THE INFLUENCE OF VEDIC PHILOSOPHY ON NIKOLA TESLA'S UNDERSTANDING OF FREE ENERGY 206
ETHER AND THE THEORY OF RELATIVITY 218
AETHER, RELATIVITY AND SUPERFLUIDITY 226
A LOOK AT SCALAR TECHNOLOGY AND ONE OF ITS APPLICATIONS 235
A SECOND APPLICATION OF SCALAR TECHNOLOGY: GRAVITY 240
BEYOND THE EVENT HORIZON 248
THE ELECTROMAGNETIC FIELD & CLERK MAXWELL 255
BEYOND E=MC2 261
EINSTEIN SPATIAL ETHER SINK PARADIGM: 270
ON INTERNAL WORK AND ANTIGRAVITY WITH NEWTON, FARADAY, AND MAXWELL 285
BALANCING FREE ENERGY DEVICES 290
MASS MODIFICATION EXPERIMENT DEFINITION STUDY 295
INTERESTING READING LIST 335
A QUANTUM BROOM SWEEPS CLEAN 337
ZERO-POINT VACUUM FLUCTUATION 346

INTRODUCTION

ZPower Corporation was founded to become a global leader in providing viable fuel-less and pollution-free energy alternatives that can deliver electrical, mechanical and thermal power. ZPower Corporation is developing several technologies which collect and convert energy from a previously untapped source, sometimes referred to as Zero Point Energy (ZPE).

In essence, the key is the conversion of electromagnetic radiation energy to electrical energy, and more specifically the conversion of an extremely high frequency bandwidth of the electromagnetic spectrum (beyond Gamma Rays) known as the *zero point spectrum*.

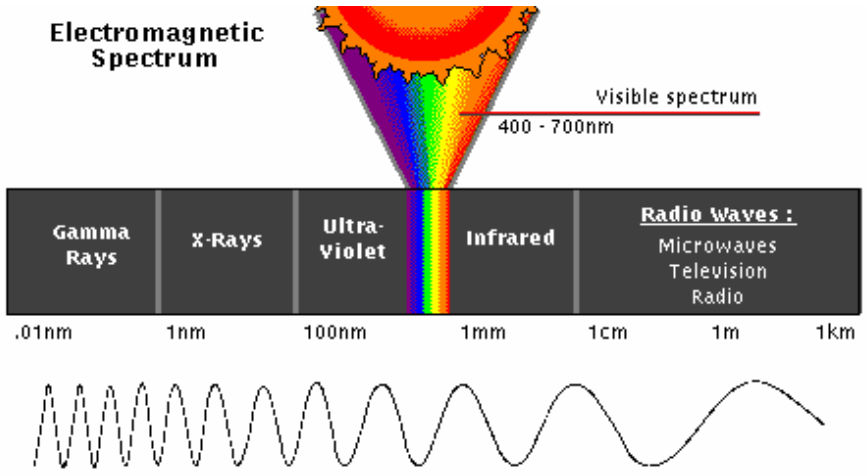

Physicists recognize that we are *immersed* in an energetic field. The existence of the zero point electromagnetic energy was discovered in 1958 by the Dutch physicist M. J. Sparnaay. Mr Sparnaay continued the experiments carried out by Hendrick B. G. Casimir in 1948 which showed the existence of a force between two uncharged plates which arose from electromagnetic energy surrounding the plates in a vacuum.

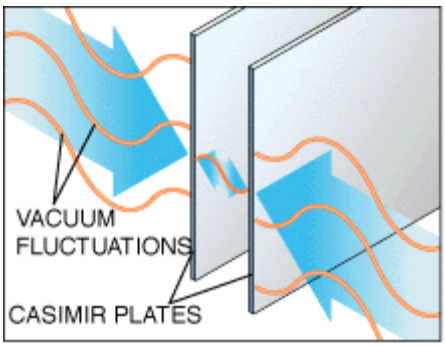

Mr Sparnaay discovered that the forces acting on the plates arose from not only thermal energy (heat) but also from another type of radiation now known as classical electromagnetic zero point energy. Mr Sparnaay determined that not only did the zero point electromagnetic energy exist in a vacuum but also that it persisted even at a temperature of absolute zero. This term Zero Point Energy (ZPE) has been based on the concept that even if matter were cooled down to absolute zero (minus 273°C), in terms of its temperature, this energy field still remains.

Because it exists in a vacuum, ZPE is homogeneous (uniform) and isotropic (identical in all directions) as well as ubiquitous (exists everywhere). In addition, the intensity of the energy at any frequency is proportional to the cube of that frequency. Consequently, the intensity of the energy field increases without limit as the frequency increases resulting in an infinite energy density for the radiation spectrum. With the introduction of the ZPE into the classical electron theory, a vacuum at a temperature of absolute zero is no

longer considered empty of all electromagnetic fields. Instead, the vacuum is now considered as filled with randomly fluctuating fields having the ZPE spectrum.

The special characteristics of ZPE are that it has a virtually infinite energy density and that it is ubiquitous (even present in outer space), which make it very desirable as an energy source. However, because high energy densities exist at very high frequencies, and because conventional methods are only able to convert or extract energy effectively or efficiently at lower frequencies, effectively tapping this energy source has been unavailable using conventional techniques. Consequently, ZPE which may be used to provide for society's demanding energy needs has remained unharnessed.

Until now…

The solution in tapping this energy source is to create an antenna, or receiver, which will operate in the extremely high frequencies of ZPE, as indicated in this chart.

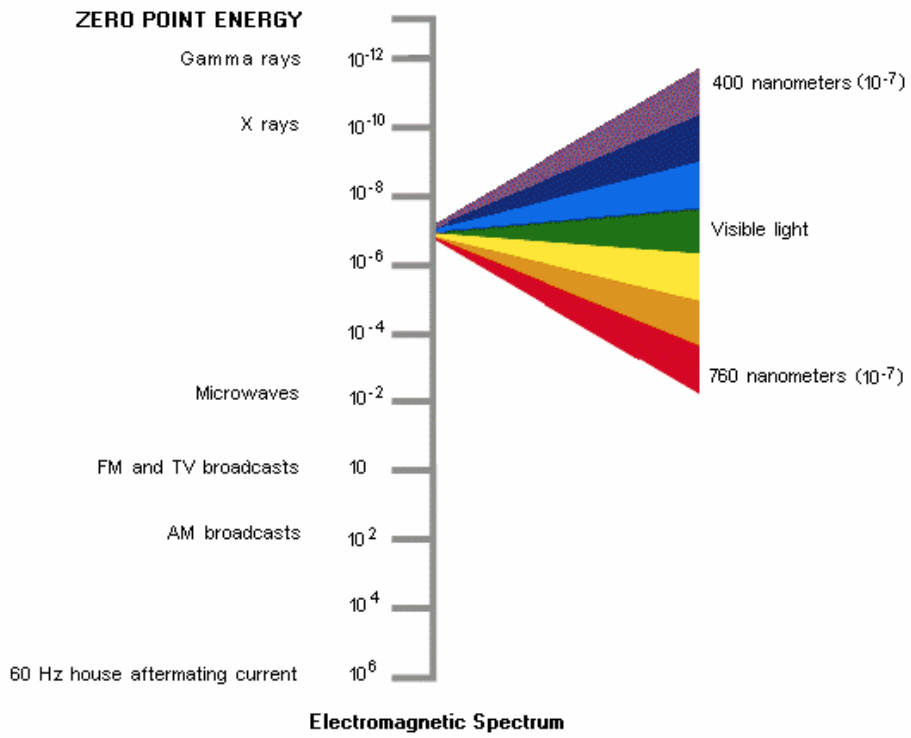

Electromagnetic Spectrum

It appears that this energy is quite intense. Nobel Laureate Richard Feynman and one of Einstein's protégés, John Wheeler, calculated that there is more than enough energy in the volume of a coffee cup to evaporate all the worlds' oceans. We fail to easily recognize this immense energy source as it is analogous to trying to weigh a beaker of water underneath the ocean.

Andre Sakharov, the Soviet Physicist, argued that we should regard all matter as floating in a sea of energy. Modern physics tells us that the space between the stars and the space between the particles that which make up matter are filled with vast amounts of fluctuating energy: fluctuations that are fundamental to our view of the fabric of nature.

Various researchers around the world have been discovering scientific anomalies which are being attributed to the conversion of ZPE. It is also thought that discovering the secret of tapping ZPE could be the key to opening the door to a unified theory of the Universe. In other words, our current understanding of science is like a puzzle with a large missing piece. ZPE

would be the missing piece which completes the picture, possibly ushering a "Second Coming" of science.

In essence, the implication of this energy field, is that all physical matter can be considered to be floating in a sea of energy, which if collected and converted into electrical energy, could more than meet the world's insatiable energy demand.

ENERGY: SOMETHING FROM NOTHING - A ZERO POINT PRIMER

BY ERIK ANTHONY ARCHER

PLANETARY CONNECTIONS, FALL 1996

We generally think of space as being empty, that is, having no structure whatsoever, being void, pure, and simple. Space is usually considered to be the background upon which or within which form and structure appear. Space is seen as the place within which matter sits, at least that is the concept. However, recent developments in zero point physics, or free energy, is proving that concept of space to not only be wrong, but one that is blinding humanity to some very real solutions to the global ecological crisis.

The emerging paradigm of zero point energy (and it is a paradigm, since acknowledgement of its existence will necessarily require a reinterpretation of the nature of our world) is that the vacuum of space is not empty. Rather than a vacuum, space is more like a plenum - an absolute fullness of energetic potentiality that is somehow in a state of balance or equilibrium, such that this enormous potentiality is prevented from manifesting and thus appears as emptiness, void or vacuum. It is as if every point of empty space is a place where nearly infinite energies are converging from all directions simultaneously in such a way that all this energy cancels itself out and appears as emptiness or void.

If, however, at any point there is an imbalance or asymmetry in this omnidirectional canceling of energies, there appears a disturbance or a ripple that is commonly known as matter, the entire zoo of nuclear physics plus electrons and even photons are simply differing modes of asymmetry of the zero point field of the vacuum with itself.

The amount of potential energy contained within the fabric of space has been independently calculated by numerous physicists to be somewhere around the nearly inconceivably high figure of <10 to the 115th power> grams/cubic centimeter. This means that within a single cubic centimeter of vacuum there is an amount of energy potentially present but in a state of balance or self cancellation equivalent to the energy contained within 1000000000000000000000000000000000000000000000000000000000000000000 0000000000000000000000000000000000000000000000000 grams of matter <115 zeros after the 1>. This is a number that is greater than the estimated number of atoms in the visible universe.

> **Ere many generations pass, our machinery will be driven by a power obtainable at any point in the universe. This idea is not novel... We find it in the delightful myth of Antheus, who derives power from the earth; we find it among the subtle speculations of one of your splendid mathematicians... So astounding are the facts in this connection, that it would seem as thought the Creator, himself had electrically designed this planet...**
>
> NIKOLA TESLA, ELECTRICAL WORLD AND ENGINEER, JANUARY 7, 1905

It is a figure that exceeds the estimated amount of energy present in the known or visible universe which includes all the energy being liberated by tens to hundreds of billions of galaxies all ablaze with millions of stars. This amount of energy is literally inconceivable by the human imagination. With this amount of energy potentially present in every cubic centimeter of vacuum, it becomes utterly ludicrous to speak of an "energy shortage" as is so often done in today's political and economic spheres. The paradigm of the zero point energy potential of the vacuum of space literally disallows scarcity from being considered to be real, that is, if we can find a way to tap into this sea of energy potential and extract some of it to do work. This is the big issue at hand and the outcome of this issue has enormous ramifications for the future existence of the human species and for that of all life on Earth.

It is safe to say that the understanding of zero point vacuum fluctuation physics is one of the more important steps that has ever occurred in the history of science. It has the potential to utterly change our view of the nature of things and may have technological ramifications that can allow us to really clean up the planet and stop destroying the biosphere in the greedy, shortsighted way that is currently going on at an ever accelerating rate. And accomplishing this miracle will set us on the road to an even greater miracle -- a fundamental shift in consciousness that can liberate humanity's imagination to the same unimaginable degree that zero point physics can liberate the energy in so-called empty space.

Zero point physics is also in profound accord with the sacred world views of nearly all spiritual traditions. It shows that everything is inseparably one, that all that manifests is arising within the same unified ocean of being. There are no separations. All of humanity and in fact the entire universe is one coherent body arising mysteriously out of the infinite source that some call God or The Great Spirit. It demonstrates and scientifically validates the spiritual verity that we have boundless resourcefulness within ourselves, within the spirit that lives in us and all things, and we can learn to draw upon that infinite reservoir of strength, resourcefulness, and yes, Love.

The Zero point paradigm provides a scientifically sup-ported model of human potential as being literally infinite and totally open ended, something that great awakened beings have been telling us throughout the ages. This new paradigm helps us get a glimpse through the thoroughly scientific and rational approach to the staggering boundless creative potential and open-ended dynamics of the Universal Mind, of which we are all living creative expressions and with which we are all one.

"Thus he then classified living creatures into genera and species, and divided them in every way until he came to their elements, which he called the five shapes and bodies - *aether*, fire, water, earth and air."

XENOCRATES, ON THE LIFE OF PLATO

EXPERIMENT CONFIRMS ZERO POINT ENERGY

PATENT ISSUED TO AIR FORCE SCIENTIST

BY EUGENE MALLOVE

Not that it was a big surprise to those in the New Energy field, but it is wonderful that the existence of zero point energy -- the potential source of limitless energy for civilization -- has now been confirmed in a seminal experiment -- one that has already been acclaimed by the scientific mainstream. Of course, the "mainstream" talks of its implications for cosmology and for its "proof" of the theory of Quantum Electrodynamics (QED) -- not for technological applications.

Physicist Steven K. Lamoreaux, now of Los Alamos National Laboratory, performed an exacting, elegant experiment (while at the University of Washington in Seattle), which confirms within 5% the theoretical formula for the Casimir force, which was proposed in 1948. This is the force that is said to be due to "virtual photons" popping in and out of existence in the vacuum of space. Specifically, it is the force that appears prominently when physical objects are in very close proximity. Then, the tiny region between two objects-such as two closely spaced flat plates-excludes the longer wavelength spectrum of electromagnetic radiation that pervades space. So there is an inward pressure that creates the Casimir force. (see R.L. Forward's tutorial article on ZPE in IE #9 pp.53-64)

The Lamoreaux paper, "Demonstration of the Casimir Force in the 0.6 to 6 pm Range," appeared *in Physical Review Letters*, 6 January 1997, Vol.78, No.1, pp. 5-8. The abstract is succinct: "The vacuum stress between closely spaced conducting surfaces, due to the modification of the zero-point fluctuations of the electro-magnetic field, has been conclusively demonstrated. The measurement employed an electromechanical system based on a torsion pendulum. Agreement with theory at the level of 5% is obtained."

The actual experiment employed a spherical-shaped gold-coated plate in near-contact with a flat plate-facilitating precise electromechanical adjustments to measure the forces, which would have been more difficult with two flat plates. The Casimir force formula was verified down to a separation distance of 0.6 um.

The response to this experiment has been noteworthy. Writing in Nature, science writer Charles Seife began: "There is no such thing as a free lunch-except in quantum mechanics. Classical physics -- and common sense --

dictates that the vacuum is devoid not only of matter but of energy. But quantum mechanics often seems to depart from common sense." It would have been nice had this comment led in the article into the potential technological implications of the experiment. But alas, no! Seife quoted University of Sussex physicist, Malcolm Boshier: "This is one of those experiments that is going to wind up in all of the textbooks."

Malcolm W. Brown's story in the New York Times (January 21. 1997, C.l, C.6), was titled. "Physicists Confirm the Power of Nothing, Measuring Force of Quantum 'Foam"' However. Mr. Brown, as usual, ignored the technological implications In favor of outlandish concepts having to do with theoretical cosmology. First off his pen was, "...something might cause the present day universal vacuum to collapse into a different vacuum of lower energy. The effect, propagating at the speed of light, would be the annihilation of all matter in the universe. There would be no warning for humankind: the earth and all its inhabitants would simply cease to exist at the instant the collapsing vacuum reached the planet." Brown quoted cosmologist Dr. Michael Turner of Fermilab: 'The energy of the vacuum remains one of the deep mysteries of science. We know from quantum mechanics that it is not empty. We have much to learn." Indeed! Strangely, these cosmology-obsessed people (I confess, I used to be one of them!) do not even think of the implications for over-unity devices.

Fortunately, others have been thinking of such devices. Air Force scientist Franklin B. Meade, Jr. and his colleague Jack Nachamkin have just been awarded a U.S. patent (#5,590,031) for a device to capture zero-point radiation. It employs the novel approach of capturing the beat-frequency radiation of zero point radiation frequencies. The patent is a highly significant one. Note the key connection to the Lamoreaux experiment in these words from the patent abstract: "A system is disclosed for converting high frequency zero point electro-magnetic radiation energy to electrical energy. The system includes a pair of dielectric structures which are positioned proximal to each other and which receive incident zero point electromagnetic radiation. The volumetric sizes of the structures are selected so that they resonate at a frequency of the incident radiation. The volumetric sizes of the structures are also slightly different so that the secondary radiation emitted therefrom at resonance interfere with each other producing a beat frequency radiation which is at a much lower frequency than that of the incident radiation and which is amenable to conversion to electrical energy."

Note well the comment in the patent: "The Size of the structures are preferably miniaturized in order to produce greater amounts of energy from a system located within a space or area of a given size. In this regard, the smaller the size of the receiving structures, the greater the amount of energy that can be produced by the system of the present invention."

Questions immediately arise. Could this be pointing the way to the use of nanostructures to extract ZPE? Is it possible that if this patent is sound, it points toward an explanation for the cause of cold fusion excess energy and a method for facilitating nuclear reactions? There are many things to ponder!

NEW ENERGY AGE

IS FREE UNLIMITED ENERGY REALLY A POSSIBILITY?

FIND OUT FROM TWO PHYSICISTS WHO HAVE EXPLORED THIS INTRIGUING TOPIC: HAL PUTHOFF AND STEVEN WEINBERG.

C_cox and other viewers ask:

I didn't quite understand the principle of zero-point energy on the show. Can you please give me a simple explanation of the basic theory or point me the direction where I could read about it on the web or a recent publication?

Hal Puthoff answers: A very readable summary can be found in Scientific American itself, in an article by Prof. Timothy Boyer in the August 1985 issue, entitled "The Classical Vacuum." As to the origin of the term "zero-point energy," it simply means that for any vibration (acoustic, electromagnetic, etc.) there remains, even at a temperature of absolute zero, a small residual energy that has its roots in the quantum uncertainty principle, a nonvanishing "quantum jiggle," as it were. In the context of the program, the possibility of an enormous reservoir of zero-point energy in space (the vacuum) associated with electromagnetic fields derives from the fact that although the residual energy at any given frequency is quite small (at the level of the uncertainty principle), there are contributions to the overall energy density from waves of all frequencies, propagating in all directions, and the sum of all these contributions is calculated to be quite large.

Steven Weinberg answers: Electric and magnetic fields and other fields are subject to a version of the Heisenberg uncertainty principle: it is not possible to have a state in which a field, and the rate at which it is changing, both vanish. Consequently empty space, even far from any matter, is permeated with continually fluctuating fields. The effects of these fields are very weak under ordinary circumstances, but they can be measured -- for instance, by observing a force between parallel metal plates due to the change produced by these plates in the fluctuating electric and magnetic fields in the space between the plates. This is known as the Casimir effect, and has been studied experimentally and theoretically for many years.

Cosmicaug asks:

This is a naive layperson's question which, as a genuinely naive layperson (at least when it comes to QM), I feel fully qualified to pose. The question is simply where does the energy in these quantum vacuum fluctuations come from? That is, if I installed one of these zero point energy devices in my basement to power my electric toaster in my kitchen, would I get free air conditioning in my basement every time I made toast or would the energy come from somewhere unknown (perhaps even somebody else's basement) or would it come from nowhere at all (free lunch scenario)? I am of course bypassing the issues of exactly how much of this energy is available and whether it is harnessable in some practical way and simply assuming that at some point I can buy these devices at my local hardware store and that they work as advertised.

Hal Puthoff answers: Naive layperson's questions are the best! If access to the zero-point-energy (ZPE) reservoir is successful, one needn't worry about either depletion of this resource or creating an imbalance in the local environment. It is the electromagnetic equivalent of scooping cupfuls of water out of the ocean, with replacement occurring at the velocity of propagation of electromagnetic waves, the velocity of light. As to the ultimate origin of the ZPE, two views are discussed in the physics literature: one, that it is simply part and parcel of the energetic legacy that emerged with the Big Bang, and another that it is an energetic substratum the preceded even the Big Bang, with our universe emerging as the result of a giant vacuum fluctuation. In any case an argument can be made that it is sustained by a cosmological feedback cycle in which charged particles radiate due to their "quantum jiggle," and the particles "jiggle" due to being caught up in the collective radiation of all the other particles, an electromagnetic equivalent of placing a microphone near a speaker and generating a squeal (see H. E. Puthoff, "On the Source of Vacuum Electromagnetic Zero-Point Energy," Phys. Rev. A, vol. 40, p. 4857,1989; Phys. Rev. A vol. 44, p. 3382,1991).

Gdecker asks:

For Hal Puthoff: You say you think the next century could be the era of zero-point energy. Do you think we're close to finding the making the breakthrough discovery that would make this scenario a reality?

Hal Puthoff answers: To my knowledge there are at present five techniques proposed to extract ZPE for use, the more promising of which are under investigation in several laboratories, and some of which have shown some small positive results. As with solar power, hot fusion, and antimatter containment, the road between emerging laboratory proof-of-principle and scaled-up, economically-competitive energy resource is a long one. In our

laboratory we are sufficiently optimistic that we are devoting a large part of our resources to this pursuit, with the expectation that within a decade we will either be confident that it is only a matter of time and engineering, or it will reveal itself to be only a laboratory phenomenon without the possibility of constituting a major energy resource. It falls into the category that we refer to jokingly as "high risk, infinite payoff," and so think it is worth pursuing until its potential is resolved one way or the other.

Bioteach asks:

Could you please evaluate the “bubble theory” that Puthoff is investigating on the show. Does it sound promising to you?

Hal Puthoff answers: The "Bubble Theory" presented on the Scientific American Frontiers program (that collapsing bubbles in cavitating fluids might act as a Casimir process to convert vacuum fluctuation energy into light) is not Puthoff's theory, but rather was proposed by Nobel Laureate Julian Schwinger in a series of papers published in the early '90's in the Proc. of the National Academy of Sciences. As one of several theories put forth to explain the phenomenon of sonoluminescence (sonically-driven light phenomena), this particular theory, if true, might show an excess of heat energy in careful calorimetric measurements, and these measurements are being carried out at the Institute for Advanced Studies at Austin. So far, no excess has been found, indicating that either Schwinger's proposed mechanism is not correct, or that the percentage excess energy is vanishingly small in the experiments carried out to date.

Jmartine asks:

Professor Weinber: In the beginning of the show during your conversation with Alan Alda, you talked about how humans have a desire to see themselves at the center of things. They seem to reject a rational, scientific viewpoint of their place in the laws of nature. I’ve been wondering why humans would have evolved with the former attitude - surely a rational view would serve us better. Any insights?

Steven Weinberg answers: It was naturally very difficult for human beings to develop a rational, scientific view of nature before the discoveries that led to the birth of modern science in the sixteenth and seventeenth centuries. Even so, there are those who tried, such as the Greek atomists Democritus and Leucippus, their followers, Epicurus and Lucretius, and the skeptic Xenophanes. But seeing a flash of lightning or the outbreak of plague, and having no idea what these phenomena were, it was almost irresistible to regard them as supernatural interventions aimed specifically at humans.

Toddm asks:

Professor Weinberg: I wish there had been time on the show for you and Hal Puthoff to debate the existence of zero point energy. Puthoff, for example, states that there is enough energy out in space in the volume of a coffee cup to evaporate all the world's oceans. You state that the energy in space the size of the earth is probably equal to no more than a gallon of gasoline. This seems like a big difference! Can you explain how you arrived at your estimate and why you think Puthoff is incorrect?

Steven Weinberg answers: We don't have a way of reliably calculating the energy in empty space. When we try to use our present quantum field theory to do this calculation, the answer in the simplest approximation comes out infinite, which is clearly nonsense. My estimate, that the energy in a volume of empty space the size of the earth is not greater than the energy in a gallon of gasoline, is a crude upper limit that was not based on direct calculations of the energy in any fundamental theory, but was based instead on observations of the way that the universe is expanding. If the energy density in empty space were much greater than this upper limit, it would produce enormous gravitational fields, which would mean that the universe would have to be expanding much more rapidly in order to avoid collapsing, just as a rocket leaving a heavy planet like Jupiter has to travel much faster than one that leaves a lighter planet like the earth. But (as I explained in a part of my interview with Alan Alda that was not broadcast) it really doesn't matter how much energy there is in empty space. The conservation of energy tells us that if we get energy out of empty space, then we have to leave it in a condition of lower energy. But what could have lower energy than empty space?

Hal Puthoff responds: As pointed out by Prof. Weinberg, a straightforward calculation using quantum field theory does indeed yield an infinite energy density for the zero-point energy (ZPE) of empty space. What's wrong with this calculation is the assumption that electromagnetic waves of all frequencies exist and contribute to this energy density. However, physicists Sakharov, Wheeler, and others argue that, because of quantum effects, the concept of a well-behaved spacetime geometry must lose its meaning as one approaches the so-called Planck frequency (wavelength ~10^-33 cm) where the geometry dissolves into a quantum "foam-like structure." Assuming a high-frequency cutoff at this frequency, they estimate an energy density which, though not infinite, might as well be for all practical purposes (mass equivalent of ~10^94 g/cm-cubed). Feynman, arguing that what counts is not the maximum frequency available in the ZPE background, but rather the frequency at which meaningful interactions between the background and nuclei cut off, reduces this estimate further to nuclear energy densities (~10^14 g/cm-cubed), still an exceedingly large number.

Why the remaining discrepancy between the high estimates given above by those who approach the problem from a quantum theoretical point of view, and the low estimates of those who, like Weinberg, approach it from a point of view of cosmology and gravitation? This discrepancy is symptomatic of a long-standing unresolved conflict between quantum theory and general relativity. If one assumes, as the cosmologists do, that the ZPE must contribute to spacetime curvature, then the lack of observable strong curvature must mean that the ZPE energy density is vanishingly small. However, the error may be in the assumption. Since this is an issue of high import, a search of the literature reveals several models that attempt to reconcile the conflict in other ways, e.g., by assuming a fine-tuned, negative-energy-density ZPE associated with fermions (e.g., protons, neutrons, electrons) that cancels that associated with bosons (e.g., photons), or that only mass-energy departures from the homogeneous ZPE background curve space.

In answer to the question "what could have a lower energy than empty space?" the answer is "an empty space with lower energy." Although one might naively assume that by definition the vacuum has zero energy and therefore can't go lower, a review of the literature shows that the vacuum state can have different energy values, and that a given vacuum state can under certain conditions decay to a state of lower energy (see, e.g., Fulcher et al., "The Decay of the Vacuum," Sci. Am., vol. 241, p. 150, Dec. 1979). In the Casimir effect, for example, in which plates are driven together by ZPE forces, the vacuum with metal plates far apart is more energetic than the vacuum with metal plates closer together, so the vacuum decays to a lower-energy state, transferring its energy (by the law of conservation of energy) into the kinetic energy of the plates moving closer, finally to be released as heat when the plates collide.

Students.was.mntm.org ask:

How did people first discover the concept of zero-point energy?

Hal Puthoff replies: This was an exciting example of the play back and forth between theory and experiment. In the early days of the development of quantum theory, a slight discrepancy was noticed between the calculated and measured energy levels of excited hydrogen gas. Although the calculations were carried out using the new quantum theory, no thought had been given to the concept that perhaps the atom did not exist in a void, but rather in a sea of fluctuating electromagnetic radiation. Once the possibility was taken into account that not only material systems but fields as well were subject to fluctuations associated with the quantum uncertainty principle, then the effects of field fluctuations on the electron orbits could be taken into account, and they were found to account for the discrepancy. Measurement of this discrepancy by Willis Lamb, now called the Lamb shift, led to a Nobel prize for Lamb, and

further development of the understanding of the role of vacuum field fluctuations led to the development of quantum electrodynamics with its associated zero-point energy concept.

Nowadays, perhaps the most discussed demonstration of the zero-point energy concept is as follows. If a radio is taken into a shielded room, the stations can no longer be heard because the shielding stops the radio waves from entering. Similarly, closely-spaced metal plates slightly shield the interior region from certain frequencies of the fluctuating electromagnetic background ZPE. As a result, the radiation pressure of the waves between the plates pushing them apart is somewhat weaker than the radiation outside pushing them together. The force pushing them together is known as the Casimir force, named for its discoverer.

Students.was.mntm.org ask:

If you ever find more about this energy, how would you plan to heat a whole house? I thought that this subject was interesting. I think it would be interesting to use the energy around us to make heat or use it for other things to help us.

Hal Puthoff replies: If we are successful in finding a way to extract this energy on a scale large enough to be useful for such applications, and assuming that the process is efficient and environmentally friendly (that is, no harmful side effects such as radioactivity), then the most likely form it would take would be as a generator of heat. In this case a ZPE heater would simply constitute a stand-alone replacement unit for whatever heating unit is presently in use. If a process can be found to convert vacuum fluctuation energy into an electrical form efficiently, then batteries with an exceptionally long lifetime might result. However, I would also caution that it is too early to tell whether laboratory ZPE phenomena can be developed into a useful energy source. As with nuclear fusion, the steps between emerging laboratory results and market-competitive energy source are many. But, as the Chinese proverb says, a journey of 1000 miles begins with the first steps, and these steps are now being taken in many laboratories around the world.

Brittany asks:

I think the concept of a never-ending, free energy sources is fascinating! But I don't really understand why we haven't mastered it yet. The clock on the show represented how air pressure, or barometric pressure, can cause a simple spring to wind. Couldn't this technology be put to use in some other fashion, or if it's form didn't change, isn't there any way we can use it?? Thank you.

Hal Puthoff answers: Actually, when you think of it, there are a number of sources of the natural type (like the barometric pressure) that have been mastered and are used to produce energy. Niagara Falls is a good example, where the falling water drives turbines to drive generators to generate electricity. The water eventually is recycled by evaporation into rain clouds, then rain and the upstream river, with the energy recharge being accomplished by the sun in the evaporation part of the cycle. Geothermal activity in such places as Iceland is also used to produce energy. Solar power can be used effectively under certain conditions. There are even prototype devices to harness the tides and ocean currents, but these are not yet very effective. The use of fossil and nuclear fuels to release stored energy is, of course, a major example of the use of natural processes, in this case chemical and nuclear reactions. In this light, attempts to harness zero point energy are just a recent addition to a long list of harnessing energetic processes we find in our natural environment.

Ejaxon asks:

I've always been interested in space travel ever since I was very young. I was wondering if zero point energy could possibly power space ships. Could it? If it could then we could be making trips to farther off places than the moon and maybe I could go to Mars someday?

Hal Puthoff answers: Although it is still too early in the research to know whether the zero-point energy can be tapped at levels sufficient to power a space ship, without a doubt it would make an ideal fuel since it is presumably available everywhere in space and therefore need not be carried on board. A recent (August 1997) NASA workshop on "Breakthrough Propulsion Physics" at NASA's Lewis Research Center in Cleveland addressed this very possibility. I have myself explored this topic in an article this year, "Space propulsion: Can empty space itself provide a solution?" published in the Jan/Feb 1997 issue of "Ad Astra," the magazine of the National Space Society, headquartered in Washington, DC.

Twilcox asks:

If you can tap into zero-point energy, say to turn on some local light source, then does the energy regional depletion affect local gravitational fields as they evolve in time? If local energy gets restored through some kind of cosmic accounts balancing principle, does the second law of thermodynamics become a casualty of the new physics?

Hal Puthoff answers: Since zero-point energy fields are simply a special case of electromagnetic field distribution, I would assume that any regional depletion would be restored at the velocity of light, the EM equivalent of

scooping cupfuls of water out of the ocean. Therefore I would not anticipate an evolving gravitational anomaly associated with the process. As for the second law, I do not see it in danger of becoming a casualty of the new physics (more precisely, the new application, as the physics is standard). For example, Casimir plates in the vacuum can be considered coupled to an open system, and when driven together by vacuum forces, the vacuum has decayed to a lower energy state and heat has been generated by the collision of the plates, pretty standard stuff. For a more detailed discussion of the thermodynamic aspects of zero-point energy extraction, see D.C. Cole and H.E. Puthoff, "Extracting energy and heat from the vacuum," Phys. Rev. E, vol. 48, p. 1562, 1993.

SPACE DRIVE: A FANTASY THAT COULD BECOME REALITY

BY ARTHUR C CLARKE

Introduction by Pat Dasch, Ad Astra Magazine

I wrote to Arthur C. Clarke, who serves on the Society's Board of Governors, in June, asking if he would contribute an assessment of how far we had traveled during the Society's 20 years and where be saw space exploration leading in the next 20 years. His initial response was enthusiastic, but demands for similar review pieces around the time of the Apollo 25th anniversary drew a fax that read, "I am exhausted from writing no less than six articles on space and [the] future in the past few weeks." You may have seen some of these pieces: they appeared in The Washington Post, Nature, Space News, the London Times and GQ magazine in the United Kingdom.

Clarke suggested I might wish to negotiate reprinting one of those pieces but concluded his fax: "I am also mailing you a short piece about space drives which you are free to use." The piece that duly arrived by snail mail has fairly short: a concise encapsulation of a possibility that had captured the author's attention. Indeed, the piece, which is printed below, is a prime example of that visionary quality of Clarke's work that we all admire so much-a quality that alas, is missing from most current pronouncements on space strategy for tomorrow.

Science-fiction writers have long dreamed of a mythical "Space Drive" that would allow us to go racing round the universe-or at least the solar system-without the rocket's noise, danger and horrendous expense. Until now, this has been pure fantasy, and it may always be so. However, recent theoretical studies published by Haisch, Rueda and Puthoff in *Physics Review A* in February of this year and based on some ideas put forward by the great Russian physicist and human rights campaigner, Andrei Sakharov, hint that some control may indeed be possible over the mysterious forces of gravity and inertia. (Warp Five, anyone?)

These conjectures-they are no more at the moment-depend on the astounding discovery that so-called empty space is actually a cauldron of seething energies, known technically as "quantum fluctuations" which have been detected but not yet tapped. If they can be, the impact upon our civilization will be incalculable. Oil, coal, nuclear, hydropower, would become obsolete-and so would many of our wrapped up in one big worry-heat

pollution. All energy eventually degrades to heat, and if everyone had a few million horsepower to play with, this planet would soon be heading the way of Venus -- several hundred degrees in the shade. However, there is a bright side to the picture: there may be no other way of averting that next Ice Age, which otherwise is inevitable.

I cannot help wondering if quantum fluctuations (also known as Zero Point Energy) explain some of the baffling and bizarre results reported by advocates of so-called "Cold Fusion" such as Drs. Pons and Fleischmann, who claimed in 1989 to have produced nuclear energy in a test tube at room temperature. At the moment the scientific establishment is completely polarized on the subject: probably 95% of chemists and physicists are sure the whole thing is nonsense-or even fraud-while 5% believe that some anomalous phenomenon is occurring, though it may not be fusion, and it certainly isn't cold. Time will settle the matter, as it always does. Don't sell your oil shares yet-but don't be surprised if the world again witnesses the four stages of response to any new and revolutionary development: 1. It's crazy! 2. It may be possible-so what? 3. I said it was a good idea all along. 4. I thought of it first.

Arthur C. Clarke is a member of the NSS Board of Governors and Chancellor of the International Space University.

VOLATILE VACUUMS

BY OWEN DAVIES, OMNI MAGAZINE

Probing the boundaries of physics, a trio of mavericks is tapping the hotbed of force found in vacuum

Imagine a world in which end-less, nonpolluting, and virtually free energy powers our cities, cars, and homes. Envision laptop computers more powerful than today's largest, most sophisticated mainframes, and tiny X-ray machines that can enter the body and kill tumors without harming surrounding cells.

All this and more may be possible within the next ten years, according to physicist Hal Puthoff, currently with the Institute for Advanced Studies at Austin, Texas. The source of these marvels? Something Puthoff calls zero point energy - the abundant power that he says can be found in the vacuum of space. Puthoff's articles on the subject have been published in the prestigious *Physical Review*. And he has attracted heavy-hitting business associates, including Ken Shoulders, the man credited with developing much of the technology for microcircuits, as well as superrich Texas entrepreneur Bill Church. Rumor has It that their new company, Jupiter Technologies, may soon try to manufacture zero point energy machines. There's more: Zero point energy could be the Rosetta stone of physics, explain everything from gravity to atoms to the origin of the cosmos itself.

During the Casimir effect in a vacuum, objects come together, producing enormous heat and energy. Another force to be reconed with: Electronics whiz Ken Shoulders.

In a sense, Puthoff's search for order in the universe started 20 years ago, when he was a freshly minted Ph.D. from Stanford University. One day, the physicist now explains, he was thinking about tachyons, hypothetical particles that appear to travel backward in time. If the particles existed, he reasoned, they might be the "missing link" that allowed psychics -- if they were not frauds -- to intuit events at distant locations or future times. Puthoff sought funding to study the problem and wound up as head of a new parapsychology research program at the Standford Research Institute, now known as SRI International. Studying telekinesis and ESP was intriguing, Puthoff says. Yet in 1985, after 13 years at SRI, Puthoff was ready to make a change.

If visionary physicist Hal Puthoff is proved right, we may soon have a new, nonpolluting energy source. How? By tapping the force of random fluctuations that jostle atomic particles within a vacuum.

Enter Bill Church. An ex-math major from the University of Texas, Church dropped out of college when his father died. By the mid-Eighties, the trim, personable entrepreneur had made millions with a regional chain of friend-chicken restaurants. Eager for new challenges, the energetic Church vowed to spend hrs wealth promoting the kind of high-risk, potentially high-payoff research that government and corporate bureaucrats were too unimaginative to fund.

To that end he founded the Institute for Advanced Studies, housed in a two-room office In a new building along the Capital of Texas Highway in Austin. Then he lured Puthoff, also a respected laser scientist, away from SRI.

Soon after Puthoff arrived In Austin, he and Church recruited a third member to their team: star inventor and electronics genius Ken Shoulders. A born tinkerer, Shoulders wanted a new research project, something that would probe the unknown regions at the borders of physics and electronics, where strange and wondrous discoveries might yet be made. He also needed some funding. Puthoff and Church, on the other hand wanted someone who could turn the theoretical work of the institute into nuts-and-bolts technology. When the three sat down to ponder their first project, they came up with an impressive goal: exploring the vacuum, referred to by some early physicists as "the tranquil void."

The institute trio knew that vacuums were not really empty and certainly never tranquil. In fact, most physicists casting their eyes toward the cosmos believe that the vacuum is a hotbed of forces. Phantom particles flicker into existence and then disappear. "Empty" space itself seethes with what physicists call vacuum fluctuations: vast amounts of energy that suddenly burst forth, jiggling particles to and fro. One fluctuation is not very powerful, but cumulatively they can be intense. In fact, physicists John Wheeler and Richard Feynman calculated that there is enough energy in the vacuum of a single light bulb to boil all the seas.

It was City College physicist Timothy Boyer of New York, however, whose work convinced Puthoff that the vacuum was a good place for the institute to begin. Most physicists, Boyer pointed out, tried to explain the somewhat random movements of atomic particles through the theories of quantum physics. Quantum physics states that even under precise conditions, atomic particles may assume any one of a variety of positions. To determine with greater certainty where a particle could be found, however, physicists developed "probability equations." The equations predicted the likelihood of any given particle landing in any given place.

Boyer held a different point of view. Perhaps, he suggested, the uncertain nature of the subatomic realm was due not to the nebulous mathematics of probability equations but rather to vacuum fluctuations. We could not pin down the location of subatomic particles, Boyer suggested, because vacuum fluctuations jiggled them around.

Puthoff felt Boyer's notion could be used to explain other vexing problems as well. Writing in *Physical Review D*, Puthoff suggested that the zero point energy of the vacuum might prevent atoms from collapsing, allowing the world as we know it to be. "According to classical physics," Puthoff says, "electrons should radiate their energy as they circle in their orbits. Eventually

they should drop into the nucleus like a satellite falling back to Earth. Quantum mechanics never really explains why this does not happen."

Zero point energy does. According to Puthoff's theory, electrons do radiate their energy away as they circle in their orbits. But they also absorb enough energy from vacuum fluctuatlons to make up for the loss. Calculations presented in *Physical Review* appear to back him up. Says Puthoff, "It seems that the stability of matter itself depends on the zero point energy sea."

Puthoff's next *Physical Review* paper was even more daring. It attempted to rewrite the theory of gravity proposed by Einstein himself. "Einstein described gravity as a warping of space-time caused by the mass of objects within it," Puthoff says. To understand Einstein's version, imagine the fabric of space-time as a taut rubber diaphragm. Place any given weight in the diaphragm and it makes an indentation. Roll a marble onto the diaphragm. No matter how the marble is rolled, it ultimately winds up at the weight. This, according to Einstein, is how gravity works, Objects bend space-time just as the weight bends the rubber diaphragm, so two objects "roll together" with a force that depends on the objects' mass and distance.

"This shows how gravity acts," Puthoff says, "but doesn't really explain the mechanism behind it." That's where zero point energy comes in. If two physical bodies are relatively close, he theorizes, the first shields the second from zero point energy coming from its direction; in a similar fashion, the second object will shield the first. The objects will nonetheless continue to be pressured by zero point energy coming from all *other* directions. The two bodies thus move toward each other in what scientrsts have dubbed the Casimir effect, named after Hendrik B. G. Casrmir, the Dutch physicist who first described the phenomenon. Gravity is the result, according to Puthoff.

It is the Casimrr effect, Puthoff believes, that may help us extract zero point energy from the void. Puthoff gives an example: Bring two smooth metal plates extremely close together, he explains, and they seem to attract each other so strongly that they are virtually welded to each other. Move them still closer and they collide with a metaphorical boom, generating enormous heat. Use that heat energy, and the conversion of vacuum energy to usable energy has occurred.

This scheme, first proposed by veteran California physicist Robert Forward in *Physical Review*, has a problem: Once the plates collide, they can no longer be used to generate energy, becoming a sort of one-shot device. "To recycle the generator," Puthoff ex-plains, "one would have to return the plates to therr original positions; that would require as much energy as the machine produced in the first place. As a result, not even break-even operation could be achieved."

His solution: “an inexhaustible supply of such devices, each to be discarded after the Casrmir collapse.” Puthoff concedes this would not be possible with metal plates but suggests that engineers try designing zero point energy machines with a cold, charged plasma, or gas. “The Casimir effect would pinch the plasma together,” Puthoff says, “and energy in the form of heat and condensed, charged particles would result.”

At least one such device, Puthoff says, may be in the works. Moscow physicist Alexander Chernetsky has built a plasma generator that reportedly takes 700 watts of electricity from a wall socket and gives back 3,500 watts, creating a little more than three horsepower out of nothing. The Soviet government was impressed enough to back his research with several hundred thousand dollars worth of equipment.

“I went to the Soviet Union to look at Chernetsky’s work,” Puthoff says. “I couldn’t tell in a couple of days whether his equipment really works or whether there is some fallacy in his experimental design. But It is plausible that it might be extracting zero point energy.”

Whether or not Chernetsky’s power system works, other equipment apparently based on zero point energy and the Casimir effect is under development. The inventor: Ken Shoulders, who hopes to create the next generation of circuits for laptop computers, telephones, and large-screen TVs.

Shoulders hopes to create these new appliances through a phenomenon he has discovered and put to use. Called condensed charge technology, or CCT, the phenomenon occurs when electrons crowd together much as in Chernetsky’s plasma or Puthoff’s metal plates, “When electrons are packed densely enough, they no longer repel each other,” says Shoulders. “Instead they form charge clusters that hold together even without a wire to carry them. That lets us build circuits from grooves in a sheet of ceramic or plastic.

Condensed charges can move through these grooves one thousand times faster than electrons travel through a semiconductor chip.” What is more, says Shoulders, it’s fairly easy to generate condensed charges: Just make a spark.

His first major tick, Shoulders hopes, will be replacing today’s silicon computer chips. If anyone else made so unlikely a claim, few would listen. But the sixty-two-year-old Shoulders, formerly of the Massachusetts Institute of Technology and Stanford Research Institute, possesses extraordinary credentials: In the early Sixties, he made the world’s first vacuum microelectronic circuits and the very first prototypes of the equipment now used to manufacture silicon chips.

According to Shoulders, his new circuits will render silicon-based technology obsolete. “It looks like there is nothing in electronics that you cannot do a whole lot better with clustered charge,” he says.

For an amiable Texan, Shoulders is remarkably closemouthed about the product he is said to be developing. But he is open about the advantages of condensed charge. “Using beads of condensed charge, we have already made transistor-type switches with speeds of less than one trillionth of a second. That’s ten thousand times faster than you can buy, and I think we’re going to get a lot faster than that,” Shoulders says. In fact, engineers working with conventional chips a couple of inches long are having trouble figuring out how to speed the passage of electrons from one side to the next. With condensed charge technology, however, electrons move so rapidly that a single circuit could be a foot across.

Long, compact circuits working at high speed would enable us to build machines with far less bulk than today’s technology. For instance, Shoulders says, we could build “a hundred-horse-power motor no bigger than the shaft it takes to deliver the torque [power], or a flat-screen TV with all the electronics built right into the display. You could use the screen for anything from hiqh-definition TV to computing. Simpler yet: an X-ray machine that fits inside a hypodermic needle. You could put it into the patient’s body to irradiate a tumor, say, without exposing the other organs to X rays. We already have companies experimenting with these things.”

Perhaps most incredible, CCT may be available soon. Condensed charge devices are astonishingly easy to make, Shoulders says. “We can get rid of the complicated photographic techniques I had to invent to make micro-chips and use simple etching and stamping. This is really low-tech. Any Third World country can do it.”

Though Shoulders works closely with Puthoff, he is reluctant to admit that CCT derives from zero point energy for sure. “There are at least four competing theories that might explain condensed charges,” he says, “and though zero, point energy is a likely candidate, I can’t say which theory wIII turn out to be right.”

Other scientists give Puthoff’s work on zero point energy mixed reviews. Timothy Boyer, whose papers inspired Puthoff in the first place, for instance, disagrees with Puthoff’s explanation of gravity. “As far as I am concerned, the idea is fuzzy and the calculations ambiguous,” Boyer says. “To think in terms of the curvature of space-time is a much more useful, extensive idea.”

Physicist Alfonso Rueda of California State University at Long Beach, on the other hand, is sympathetic to Puthoff. Rueda studied vacuum fluctuations, using them to explain both the enormous power of cosmic rays and the dense concentration of stars at certain intersections of the universe. Rueda feels Puthoff has presented some powerful evidence for his idea that zero point energy holds atoms together. And he is “impressed with Puthoff’s treatment of gravity. I think he is on the right path.”

New York University physicist Benjamin Bederson, editor of the respected *Physical Review A*, where most of Puthoff's work has been published, has an opinion as well. "Many articles that appear in Physical Review turn out to be wrong," Bederson says. "Like any journal, we rely on the judgment of our referees. Some expressed doubts about Puthoff's conclusions, but they all agreed that it was stimulating work and deserved a wider audience."

As for Puthoff, he is confident indeed. A new series of experiments, he says, should deal with Boyer's criticisms and move his own research along. Meanwhile he looks forward to the day we tap the power in the void, using it to energize our cities and propel starships beyond the solar system without an ounce of onboard fuel. "Only the future," Puthoff says, "can reveal the ultimate use to which humans will put the remaining fire of the gods, the quantum fluctuations of empty space."

TOM BEARDEN FIGHTS FOR REVOLUTIONARY SCIENCE

BY WILLIAM P EIGLES

ATLANTIS RISING, NUMBER 12

A New Energy Pioneer Lays the Groundwo rk for Coming Discoveries

Every revolution has its leading theorists, individuals who attempt to construct a logical, coherent formulation of new principles and concepts to rationalize and explain the occurrence of radical, Paradigm-upsetting events or developments. Even if not there at the beginning of such seminal milestones, such individuals are quickly spawned in the aftermath, acting as compelling champions for the activists who are making the history. In the case of the revolution beginning to emerge more publicly in the field of alternative energy sources and technology, retired Army lieutenant colonel Thomas Bearden may soon be recognized as one of a small cadre of` scientists and engineers who were just such credible boosters, convinced of and actively supportive of alternate energy realities early on.

Bearden recently delivered a paper on energy flow, collection, anti dissipation in overunity electromagnetic devices at the International Symposium on New Energy in May in Denver, Colorado, where *Atlantis Rising* had a chance to visit with him.

Big, bluff, and indefatigably ebullient in demeanor, Bearden first came to public notice in the early 1980s with the publication of his book Excalibur Briefing, in which he offered theoretical explanations for a wide array of paranormal phenomena and discussed various military applications of psychotronic research in the United States and the Soviet Union. One of his many controversial claims was that the U.S. Navy nuclear submarine Thresher, which sank in the Atlantic Ocean with all hands on board in mid-1963, was the victim of an advanced operational Soviet psychotronic weapon. Since the early 1990s, however, Bearden has shunned any discussion of psychotronics, mysteriously claiming reticence to be the prudent course for any man interested in "staying healthy." This consideration also impels him to avoid any work on anti-gravity propulsion systems, work he became familiar with in his consulting work in the 1980s for the late inventor Floyd "Sparky" Sweet. It would seem that investigating certain areas of energy research, like the subject of government involvement with UFOs, entails more and greater

risks, for undisclosed but perhaps easily inferable reasons relating to the nature of politico-economic power and those in our world who possess it in great concentration.

What Bearden is voluble about, however, and what occupies his time and attention almost exclusively these days, is his work on perfecting the theoretical scientific underpinnings of, and ultimately a verifiable model for, electromagnetic systems that legitimately produce more energy than they consume (known as "overunity" devices). Such systems propose to make use of the random electromagnetic fluctuations that exist in the vacuum of space, known variously as "free energy," "space energy," or "zero point energy." Armed with an M.S. degree in nuclear engineering from the Georgia Institute of Technology and longtime employment in the aerospace industry, Bearden has researched this topic intensively for over 20 years, and currently serves as president of CTEC, Inc., his own research and development company located in Huntsville, Alabama.

Bearden's work began with a reexamination of the fundamental concepts of classical electrodynamic theory, in light of the teachings of modern quantum mechanics and particle physics, in order to better under stand how and why current actually flows in electrical circuits, where that energy comes from, and how it might be increased. This effort suggested to him major flaws in the paradigm established by 19th century scientists James Clerk Maxwell and Hendrik Lorentz, whose equations and calculations (as they are known today) dealt only with the electrical energy that measurably flows in circuits and powers the devices that are attached. Analogizing to the water flowing around a fixed paddle wheel immersed in a river and the moving air surrounding a windmill, Bearden discovered that the free energy of space was knowingly ignored as a useable source of electrical energy by these scientists, and that the classical theory needed updating to reflect 20th century discoveries.

In Bearden's view, the principal faults in reasoning lay in two places. First, the algebra used to express Maxwell's original equations was changed, to ease understanding by others, from the highly complex quaternion type, which allowed and even prescribed overunity electromagnetic systems powered by space energy, to the much simpler tenser vector analysis, which did not. Second, Lorentz mathematically narrowed the scope and application of Maxwell's equations to describe only that part of the energy flow that physical circuits were designed to catch and use. In overall effect, according to Bearden, the early theorists made mistakes in interpreting their own calculations and unwittingly modified their original equations to discard a significant portion of the energy that was extractable -- and, in fact, is extracted -- from the vacuum by actual physical systems. The central issue for him therefore became: How does one redesign these systems in a new way to be able to collect and make effective use of this excess energy from the river of

space, which demonstrably exists and is so readily available in the ambient environment? And then: How does one keep the redesigned systems from destroying themselves by overtapping the infinite energy source of space?

Bearden has posited that an iterative collecting and scattering of space energy could be used to enable a quantum of energy to be reused multiple times, performing a quantum of work in each rescattering. This iterative "retroreflection" and multipass recollection would serve to increase the density of collected energy and therefore the local potential and strength of source dipoles (separations of charges) that occur in space due to the interaction between free charges and the vacuum. Bearden has labeled this process "asymmetric regauging" and believes that it increases the energy extraction by dipoles existing in the vacuum exchange. He be believes that this process has been experimentally proven by the Patterson Power Cell©, an innovative, recently marketed power device with a demonstrated overunity energy output.

Bearden's work progressed to clarifying the nature and characteristics of the two wave components of electromagnetic energy fields, the transverse and the longitudinal waves. Created simultaneously but traveling on different planes, Bearden likens the transverse wave to the easily perceived, slow waveform seen on the ocean's surface and the longitudinal wave to a swift-moving subsurface pressure wave that does not disturb the surface and is not capable of being measured by existing technology. Through the work of re searchers Donnelly and Ziolkowski, Bearden found that, by science's current Selection and use of the transverse wave 40 power conventional electrical devices, the hidden longitudinal wave is somehow "killed off," preventing it from being exploited to do useful work. The longitudinal wave, however, is potentially more powerful than the transverse wave, in that the former allegedly moves many times faster than the speed of light, which is a limiting factor for conventional signal transmission using the transverse wave component, because of the theoretical ability of the internal longitudinal wave to facilitate virtually instantaneous signal communication across vast expanses of space, Bearden has focused on how to stimulate and select it for use, and allow the transverse wave to be canceled, or not initially produced, instead.

Bearden notes that he is now preparing a patent application for the initial part of what he terms "a superluminal communications system," that uses a longitudinal wave process and is capable of transmitting signals at speeds faster than the speed of light. He contends that the basic concept has already been shown theoretically and experimentally at microscopic level by other researchers using waveguides. His team specifically intends to show how to form the bngitudinal wave, by transmitting a video signal inside a DC voltage without any transverse wave signal accompanying it, and then retrieving the signal without the presence of any noise.

Bearden already has three patents now pending in the field of electric circuits, all of which purport to achieve overunity in energy output with absolute conformance to the conventional laws of physics. Nonetheless, he makes no claim to have yet developed a working model of any overunity device in his own laboratories. He does claim that his experimental results have been encouraging to date, and that, as far back as 1990, his team was blowing up circuits due to the excess space energy they were tapping. The energy apparently could not be controlled in the semiconductor arrays being used at that time, which caused the energy to "ping-pong" back and forth between them until the resulting surge overloaded one of the arrays.

Bearden states, without disclosing more, that his team now knows how to control the energy flow, but is at a standstill for lack of funding. Fabrication difficulties have prevented forward movement on another means of energy now control using a specialized, hard-to-engineer metallic material he has dubbed, with tongue in cheek, "Unattainium." However, he allows that his work in using multiple passes of energy, collecting it repeatedly using retro-reflection in electric circuits and thus enabling increased energy extraction, holds the most promise.

Bearden's work in this last vein may owe its stimulus to his consulting assistance to home inventor "Sparky" Sweet in the 1980s. Sweet had invented an assembly of wire coils and barium ferrite magnets that would extract energy from space and produce six watts of usable power, with only a much smaller trickle of energy as input. Dubbed a "vacuum triode amplifier" (VTA) by Bearden, a later model reportedly produced 500 watts of output power, showing a net gain of 1.5 million over the input power level. Bearden theorized that Sweet's device "tricked" the barium nuclei of the magnets into going into self-oscillation with the ambient vacuum, causing the fields of the specially conditioned "kinetic" magnets to quiver at a high level. The theorist prevailed upon Sweet to make a change in his device that would allow for a test of anti-gravity properties. Sweet later reported to Bearden by phone that, by increasing the power output drawn from his device by adding greater loads, he was able to reduce the weight of the VTA, as measured by a scale, by 90 percent. Concern about the likelihood of exploding the magnets prevented Sweet from reducing the VTA's weight entirely and seeing it fly. Unfortunately, all of Sweet's secrets about how to activate his magnets to achieve his startling results died with him in 1995, and Bearden was left to pursue his theoretical research without the benefit of a working model.

At this time, the theorist is working on two books. One of them, due out next year, will present "the world's first legitimate theory of overunity electrornagnetic engines, circuits, and devices," according to Bearden, and will contain "a little necessary secret" essential to building them. The other book is expected to be published later this year, and deals with Bearden's

second and related main interest, the "Priore device" that was developed under the aegis of the French govenment in the 1960s and early 1970s.

Bearden reports that the Priore device is reputed to have cured terminal tumors in laboratory animals, and is able to cure any disease, including arterisclerosis and cancer, by a special electrodynamic process known as "phase conjugation" or "dedifferentiation." This process, seemingly miraculously, allegedly causes afflicted cells to return to their previously healthy state by literally turning back the clock on the disease. Bearden states that this process is a direct outgrowth of the work of American Nobel Prize nominee Dr Robert Becker, who demonstrated the use of small DC currents to heal intractable bone fractures by stimulating the growth of new bone. The trickle current apparently caused red corpuscles to shed their hemoglobin coating, grow new nuclei, and metamorphose into a much earlier, primitive version of the cells before differentiation. These cells could then be newly differentiated into needed bone cells, which would deposit themselves at the fracture point and result in a knitting of the broken bone. It is this basic process that Bearden asserts can be imported into the treatment of infectious and terminal diseases, including the restoration to health of the immune systems of people with AIDS. And, Bearden claims, the Priore mechanism can effectuate healing in a matter of minutes.

Looking to the future of overunity electromagnetic systems, Bearden sees the greatest obstacle to their realization being the mindset of the existing research-funding establishment and the orthodox scientific community that it serves. The flow of funding effectively controls what research is pursued by scientists working at universities and in industry. And it is the mindset against the possibility of tapping and collecting space energy to provide useable electricity that serves to block the allocation of money to develop working prototypes. The early new energy pioneers that have most influenced Bearden in his own efforts, Nikola Tesla and T. Henry Moray, faced this same mindset, resulting in their work being ignored by the scientific community of their time and eventually being suppressed by various contemporary interest.

Still, Bearden remains optimist. He believes that once a scientifically verifiable model is perfected that is consistent with modern particle physics and thermodynamics and working, experimental proof is clearly established -- thereby dispelling any notions that perpetual motion is being proposed -- the mainstream scientific community will begin to lend support and the rate to a new energy future will be on in a big way. He foresees commercially marketed overunity devices becoming available in two years, with homes an cars later being powered by insertable solid-state, energy-collecting cards. And, with the advent of the Internet, the ubiquitous availability of modern communications links, and the proliferation of journals and newsletters dedicated to alternate energy technology, the ability of a hostile establishment

to suppress scientific innovation and its proponents is now greatly reduced. The new-energy genie, once out, will be much tougher to get back into the bottle than in earlier decades.

For his part, Bearden believes that his major contribution will be to "have blown a hole in the brick wall, not a nice door," of the traditional way of thinking about overunity systems, primarily as a theorist rather than an inventor. He expects that interested, bright graduate students and post-doctoral fellows will take matters to the next level. Only time will tell. Although Bearden is not without his detractors, he is an undeniably engaging and colorful character whose deep conviction about his work and its results inspires both fascination and curiosity. If, in conversing with him, you were to evince any doubt about his claims, Bearden is quick to point out, "This is not Tom Bearden [talking], it's in the [scientific] literature! If only people would read it and test it." Agree with him or no, he is, in the very least, a visionary of almost evangelical fervor who is sincerely dedicated to helping develop a new source of useable energy that is cleaner, cheaper, safer for the earth and its peoples, and universally available worldwide. To be sure, that's a goal worthy of everybody's attention.

THE LEFTOVERS OF NOTHING

THE ECONOMIST, JULY 1, 1989

NOTHINGS ain't what they used to be. By using his air pump -- one of the high points of seventeenth-century technology -- to remove all the air from a cavity, Sir Robert Boyle made it clear to restoration England what a vacuum was. It was what was left when you took everything away: emptiness. In the early twentieth century, quantum mechanics made everything more complicated. A vacuum is still what is left over when everything is taken away; but that no longer means that it is emptiness. The non-empty vacuum plays a fundamental role in the way physicists think about matter.

Descendants of Boyle's air pump now produce vacuums that are, to all intents and purposes, completely free of matter. But they can never be completely free of energy. According to quantum theory, it is impossible to remove all the energy from any system. As in a tin of sardines, there is always a little bit in the corner that you cannot get out. The magnitude of this "zero-point energy" is tiny; as far as everyday uses go, it can be ignored. Nobody can measure the zero-point jiggling of a pendulum caused by the mote of energy remaining in the system when nothing else is left. But not all such effects are negligible. Electromagnetic fields also have zero-point energies. In the vacuum, every electromagnetic mode--that is, every way in which an electromagnetic field could vibrate, if there was one there--has its zero-point energy. The energy for each mode is tiny, but there are an awful lot of modes. Adding them together reveals a vacuum crammed with energy.

It is surprisingly hard to find evidence of this sea of energy--largely because the level of the energy is the lowest that can be reached. There is no lower level with which it can be compared. Like sea-level for land maps, the vacuum energy is the reference point above which all else is measured. Zero-point effects do turn up, though, when matter and vacuum interact. The first to be recorded was the atomic Lamb shift. Atoms are surrounded by electrons which can have various different levels of energy. When an electron moves from a higher level to a lower one, it emits a burst of light at a particular wavelength: a photon. The wavelength can be predicted precisely from theory. In some cases, though, the wavelength observed is different from that predicted. The difference turns out to be exactly what one would expect from the effects of lots of tiny electromagnetic fields working on the electrons--the effect of the vacuum field.

Not only is the wavelength of the photon dependent on vacuum effects, so is the fact that it appeared at all. There are two ways for an electron

to unburden itself of a photon and come down from a higher energy level. If the electron is hit by a photon of the right wavelength, it will be knocked down, and there will be two photons where there was one before. That is stimulated emission, the principle behind the laser. Alternatively you can wait for the electron to jump down on its own, giving up its photon by spontaneous emission. When the vacuum energy is taken into account, the distinction between these two breaks down. Spontaneous emission can be seen as stimulated emission, with the zero-point energy of the vacuum providing the stimulation. So the emission of light does not depend just on the atom--it depends on the way that the atom and the vacuum interact. By changing the vacuum, you can change the way the atom emits light.

A vacuum between two sheets of metal is not the same as one that is unconstrained. Some of the modes of the electromagnetic field are suppressed--the modes which represent waves in the field that are too big to fit into the cavity. By changing the size of the cavity, you can lose certain modes. Groups of scientists around the world have built cavities that rule out certain modes of vacuum energy, and thus stop atoms from emitting photons at various wavelengths. Using a related technique, they have designed and built cavities that enhance the radiation by allowing the atom to "see" more modes of the vacuum radiation than it would if there was no cavity. The results of such experiments allow scientists to explore otherwise inaccessible areas of quantum electrodynamics, the theory of electromagnetic fields.

An intriguing theoretical point about the way that atoms interact with vacuum has been made by Dr Hal Puthoff of the Institute for Advanced Studies in Austin, Texas. For every atom there is an energy level below which the electrons cannot sink. Dr Puthoff suggests that this is because, at the low energy levels, electrons cannot lose energy any faster than they pick it up from a vacuum. It is the vacuum energy that buoys them up, stopping them from losing all their energy and collapsing into the atomic nucleus. That means that the vacuum underpins the stability of every atom--and thus of almost all matter in the universe.

Force from nowhere

Vacuum zero-point energies can explain effects on a larger scale as well. The vacuum energy exerts a pressure on everything. Normally, this pressure has little effect, since it comes from all directions at once and almost cancels out. But if two atoms are reasonably close to each other, each will shield the other from some of the pressure. There will be slightly less pressure FROM the direction of the neighbouring atom than there is from every other direction--so the atoms will tend to move together.

This is the Van der Waals force. Though it is weak, it is strong enough to hold atoms and molecules together in gases and liquids. There are other ways to describe Van der Waals forces, in terms of the way the electrons jitter around the atoms, but they also depend on the vacuum; they just come at it in a different way.

An analogous force can be measured between parallel metal plates which are placed close together--say a few thousandths of a millimetre apart. Because the distance between the plates limits the wavelengths available for the zero-point energy, there are fewer modes available in the vacuum between the plates than in the vacuum outside. So the pressure from outside is greater, and becomes greater still as the plates are pulled together and yet more modes are ruled out. This "Casimir effect" may prove an obstacle for people who want to build machinery ever smaller, since it will tend to stick surfaces together.

On the other hand, it may be an opportunity. Dr Robert Forward, a physicist who is always ready to speculate on the outlandish--from antimatter-driven spaceships to life on the surfaces of collapsed stars--has suggested a simple, impractical machine that could remove energy from the vacuum using the Casimir effect. It is farfetched, but getting the Casimir effect to do useful work by holding things together is theoretically possible.

There are further reaches to vacuum energy ideas which are controversial, but still intriguing. Over many years, Dr Timothy Boyer of the City University of New York has tried to show that many of the results of quantum physics can be achieved using none of its assumptions, provided that zero-point energy is allowed. Dr Puthoff has recently revived an idea mooted by Dr Andrei Sakharov in the 1960s that gravity itself can be explained by vacuum effects, more or less as a very long-range version of the Van der Waals force between atoms and molecules. That goes against the grain of modern theory, but some broad-minded colleagues see it as an intriguing speculation.

And there is the question of the other sorts of energy in the vacuum. Interest has focused on the residual electromagnetic fields because there is a successful theory with which to discuss them. But there are other types of field--those associated with the nuclear forces--that are less well known. The way that quarks are bundled together in nuclei may have to do with vacuum pressure. There may still be a lot of mileage for physicists in thinking about nothing at all.

THE ENERGETIC VACUUM: IMPLICATIONS FOR ENERGY RESEARCH

BY H.E. PUTHOFF

"The existence of an actual vacuum was a subject of debate among scientists from Aristotle into the twentieth century. Since light, magnetic fields and heat all travel through a vacuum, something must be there. Borrowing a word from Aristotle, scientists described various kinds of 'aethers' that exist in even the hardest vacuum and that pervade space. Maxwell's theory of electro-magnetism reduced these different types to just one, called the ether. Various experiments were developed to detect this ether, of which the most famous was the Michelson-Morley experiment, which failed to find it. Finally, in 1905, Einstein banished the ether by means of special relativity and allowed the true vacuum to exist.

"But not for long. The Heisenberg uncertainty principle of 1927 led particle physicists to predict that particles would arise spontaneously from the vacuum, so long as they disappeared before violating the uncertainty principle. The quantum vacuum is a very active place, with all sorts of particles appearing and disappearing. Careful experiments have demonstrated that the quantum theorists are correct in this interpretation of the vacuum... Furthermore, starting in 1980 with the theory of the inflationary universe, particle physicists have told us that the entire universe was created as a 'false vacuum', a quantum vacuum that has more energy in its nothingness than it should. The decay of that particular vacuum to an ordinary quantum vacuum produced all the mass in the universe and started the Big Bang."

From "The Timetables of Science", Simon and Schuster, 1988

Introduction

Modern physical theory, specifically quantum electrodynamics (QED), tells us that the vacuum can no longer be considered a void. This is due to the fact that, even in the absence of matter, the vacuum is neither truly particle nor field free, but is the seat of virtual particle-pair (e.g. electron-positron) creation and annihilation processes, as well as zero-point-fluctuation (ZPF) of such fields as the vacuum electromagnetic field, which will be the focus of our study here.

Formally, the energy density associated with the vacuum electromagnetic ZPF background is considered to be infinite. With appropriate high-frequency cutoffs the ZPF energy density is still

conservatively estimated to be on the order of nuclear energy densities or greater.[1] The enormity of the figures describing the vacuum electromagnetic zero-point energy raises the question as to whether these numbers should be taken seriously, whether they are due to some defect or misinterpretation of the theory, whether the ZPF fields ought to be considered as 'virtual' or 'real'.[2] There is, however, no question but that the ZPF fields lead to real, measurable physical consequences. One example is the very real Casimir force,[3-6] an experimentally-verified [7-9] ZPF-induced attractive quantum force between closely-spaced metal or dielectric plates. An elegant analysis by Milonni, et al., at Los Alamos National Laboratory shows that the Casimir force is due to radiation pressure from the background electromagnetic zero-point energy which has become unbalanced due to the presence of the plates, and which results in the plates being pushed together.[10] (We will discuss this effect in more detail later when we address the possibility of ZPF energy extraction.) Other effects which can be traced back to interactions involving the ZPF fields in a fundamental way include the Lamb shift (the slight perturbation of the emission lines seen from transitions between atomic states),[11-13] the van der Waals chemical binding forces,[14] the stabilization of atomic structure against radiative collapse, [15-16] quantum field mechanisms underlying the gravitational interaction,[17] and spontaneous emission.[18]

Zero-Point Energy

To understand just what the significance of zero-point energy is, let us begin with a simple harmonic oscillator as shown in Figure 1. According to classical theory, such a harmonic oscillator, once excited but with excitation removed, will come to rest (because of friction losses) as shown in Figure 1(a). In quantum theory, however, this is not the case. Instead, such an oscillator will always retain a finite amount of 'jiggle', as shown in Figure 1(b). The average energy (kinetic plus potential) associated with this residuum of motion, the so-called zero-point energy, is given by: <E>= hw/2, where 'h' is Planck's constant (h= 1.054e-34 joule/sec) and 'w' [really 'omega'] is the frequency of oscillation. The meaning of the adjective 'zero-point' is that such motion exists even at a temperature of absolute zero where no thermal agitation effects remain. Similarly, if a cavity electromagnetic mode is excited and then left to decay, as shown in Figure 2, the field energy dies away, again to a minimum value <E>= hw/2 (half a photon's worth), indicating that fields as well as mechanical systems are subject to zero-point fluctuations. It is the presence of such ZPF 'noise' that can never be gotten rid of, no matter how perfect the technology, that sets a lower limit on the detectability of electromagnetic signals.

If we now consider the universe as a whole as constituting a giant cavity, then we approach a continuum of possible modes (frequencies, directions) of propagation of electromagnetic waves. Again, even in the absence of overt excitation, quantum theory has us assign an <E>= hw/2 to each mode. Multiplication of this energy by a density of modes factor [19] then yields an expression for the spectral energy density that characterizes the vacuum electromagnetic zero-point energy

*rho(w)dw = [w^2/pi^2*c^3]/[hw/2]dw = (hw^3)/(2*pi^2*c^3)dw joules/m^3*

(eqn. 1)

There are a number of properties of the zero-point energy distribution given in equation 1 that are worthy of note. First, the frequency behavior is seen to diverge as w^3. In the absence of a high-frequency cutoff this would imply an infinite energy density. (This is the source of such statements regarding a purely formal theory.) As discussed by Feynman and Hibbs, however, we have no evidence that QED remains valid at asymptotically high frequencies (vanishingly small wavelengths).[1] Therefore, we are justified in assuming a high-frequency cutoff, and arguments based on the requirements of general relativity place this cutoff near the Planck frequency (~10^-33 cm).[17] Even with this cutoff the mass-density equivalent of the vacuum ZPF fields is still on the order of 10^94 g/cm^3. This caused Wheeler to remark that "elementary particles represent a percentage-wise almost completely negligible change in the locally violent conditions that characterize the vacuum...In other words, elementary particles do not form a really basic starting point for the description of nature. Instead, they represent a first-order correction to vacuum physics."[20] As high as this value is, one might think that the vacuum energy would be easy to observe. Although this is true in a certain sense (it is the source of quantum noise), by and large the homogeneity and isotropy (uniformity) of the ZPF distribution prevent naive observation, and only departures from uniformity yield overtly observable effects.

Contributing to the lack of direct observability is a second feature of the ZPF spectrum; namely, its Lorentz invariance. Whereas motion through all other radiation fields, random or otherwise, can be detected by Doppler-shift phenomena, the ZPF spectrum with its cubic frequency dependence is unique in that detailed cancellation of Doppler shifts with velocity changes leaves the spectrum unchanged. (Indeed, one can derive the ZPF spectrum to within a scale factor by simply postulating a Lorentz-invariant random radiation field. [21,22]) Thus, although any particular component may Doppler shift as a result of motion, another component Doppler shifts to take its place. It is also the case, again unique to the ZPF cubic-frequency-dependent spectrum, that Doppler shifts due to other phenomena (e.g., cosmological expansion, gravitation) also do not alter the spectrum. [23] This stands in

contrast to, for example, the 3 K blackbody (thermal) microwave background left over from the Big Bang which cools with cosmological expansion.

Yet another feature of the ZPF spectrum, related to its Lorentz invariance and again unique in comparison with all other competitors, is the complete lack of a drag force on a charged particle passing through it. This is because such a drag forced (the so-called Einstein-Hopf drag [24]) is proportional to the factor [rho(w) - (w/3)*(d rho/dw)], and this vanishes identically for rho(w) ~= w^3.

On the other hand, accelerated motion through the vacuum can in principle reveal the presence of the ZPF energy density directly. Unlike uniform motion in which delicate cancellations of Doppler shifts leave the motion undetected, in accelerated motion the Doppler-shift cancellations are no longer sustained. As a result, the Lorentz-invariant spectrum which holds in uniform motion is augmented by additional terms. One factor yields a thermal (Planck) spectrum of temperature T= h*a/2*pi*c*k, where 'a' is acceleration, 'k' is Boltzmann's constant and 'T' is temperature. This is known as the Davies-Unruh effect. [25,26] Yet another factor which shows up in the ZPF spectrum of an accelerated observer is found, via the equivalence principle, to reveal a deep connection between zero-point energy and gravity along lines originally proposed by Sakharov [27] (that gravity could be understood as an induced effect brought about by changes in the quantum fluctuation energy of the vacuum due to the presence of matter [17]).

Thus we see that, with its roots in relativity theory which banished the ether, QED has in some sense come full circle to provide us with a model of an energetic vacuum that once again constitutes a plenum rather than a void.

Source Of Zero-Point Energy

The fact that the vacuum constitutes an energy reservoir leads naturally to the question as to where the zero-point energy comes from, specifically, the vacuum electromagnetic zero-point energy under discussion here. (This is an especially important issue if one considers the possibility of extracting such energy for use.) Nature provides us with but two alternatives: existence by fiat as part of the boundary conditions of the present universe (like, for example, the 3 K cosmic background radiation left over from the Big Bang), or generation by the (quantum fluctuation) motion of charged particles that constitute matter. This latter possibility was explored in a recent paper by the author, with positive results.[23]

The argument goes as follows. Given charged particles in quantum zero-point motion throughout the universe, a 1/r^2 dependence of the radiation from such motion, and an average volume distribution of such particles in spherical shells about any given point that is proportional to the area of the

shell (that is, proportional to r^2), one could reasonably expect to find at any given point a sum of contributions from the surrounding shells that yielded a high-density radiation field. (Recall a similar argument in astronomy associated with Olbers' paradox.) The high-density ZPF fields would appear to be just such a field.

The details of the calculations examine the possibility that ZPF fields drive particle motion, and that the sum of particle motions throughout the universe in turn generates the ZPF fields, in the form of a self-regenerating cosmological feedback cycle not unlike a cat chasing its own tail. This self-consistent field approach, carried out assuming inflationary cosmology, is found to yield the correct frequency distribution and the correct order of magnitude to match the known ZPF distribution, thus supporting the hypothesis that the ZPF fields are dynamically generated.

As it turns out, there is an additional bonus from the calculations. A derived expression relating the zero-point energy density to such factors as the mass density and size of the universe also yields a precise expression for an observed 'cosmological coincidence' often discussed in the context of Dirac's large-numbers hypothesis: namely, that the electromagnetic-to-gravitational force ratio between an electron and proton is equal to the ratio of the Hubble distance to the size of the classical electron. According to the relevant calculations such a cosmological coincidence is seen to be a consequence of the cosmologically-based ZPF-generation mechanism under consideration that serves to link cosmological and atomic parameters.

The overall picture that emerges, then, is that the electromagnetic ZPF spectrum is generated by the motion of charged particles throughout the universe which are themselves undergoing ZPF-induced motion, in a kind of self-regenerating grand ground state of the universe. In contrast to other particle-field interactions, the ZPF interaction constitutes an underlying, stable 'bottom-rung' vacuum state that decays no further but reproduces itself on a dynamic-generation basis. In such terms it is possible to explicate on a rational basis the observed presence of vacuum zero-point energy.

Vacuum Energy Extraction?

As we have seen, the vacuum constitutes an extremely energetic physical state. Nonetheless, it is a giant step to consider the possibility that vacuum energy can be 'mined' for practical use. To begin, without careful thought as to the role that the vacuum plays in particle-vacuum interactions, it would only be natural to assume that any attempt to extract energy from the vacuum might somehow violate energy conservation laws or thermodynamic constraints (as in misguided attempts to extract energy from a heat bath

under equilibrium conditions). As we shall see, however, this is not quite the case.

The premier example for considering the possibility of extracting energy from the vacuum has already appeared in the literature in a paper by R.L. Forward entitled "Extraction of Electrical Energy From the Vacuum..."[28]; it is the Casimir effect. Let us examine carefully this ZPF-driven phenomenon.

With parallel, non-charged conducting plates set a distance D apart, only those (electromagnetic) modes which satisfy the plate boundary conditions (vanishing tangential electric field) are permitted to exist. In the interior space this constrains the modes to a discrete set of wavelengths for which an integer number of half-wavelengths just spans the distance D (see Figure 3). In particular, no mode for which a half-wavelength is greater than D can fit; as a result, all longer-wavelength modes are excluded, since for these wavelengths the pair of plates constitutes a cavity below cutoff. The constraints for modes exterior to the plates, on the other hand, are much less restrictive due to the larger spaces involved. Therefore, the number of viable modes exterior is greater than that interior. Since such modes, even in vacuum state, carry energy and momentum, the radiation pressure inward overbalances that outward, and detailed calculation shows that the plates are pushed together with a force that varies as 1/D^4, viz,[10]

*F/A = -(pi^2/240)(h*c/D^4) newtons/m^2 (eqn. 2)*

The associated attractive potential energy (Casimir energy) varies as 1/D^3, U/A = -(pi^2/720)/(h*c/D^3) joules/m^2 (eqn. 3)

As is always the case, bodies in an attractive potential, free to move, will do so, and in this case the plates will move toward each other. The conservation of energy dictates that in this process potential energy is converted to some other form, in this case the kinetic energy of motion. When the plates finally collide, the kinetic energy is then transformed into heat. (The overall process is essentially identical to the conversion of gravitational potential energy into heat by an object that falls to the ground.) Since in this case the Casimir energy derives from the vacuum, the process constitutes the conversion of vacuum energy into heat, and is no more mysterious than in the analogous gravitational case.

In such fashion we see that the conversion of vacuum energy into heat, rather than violating the conservation of energy, is in fact required by it. And this conversion can be traced microjoule by microjoule as modes (and their corresponding zero-point energies) are eliminated by the shrinking separation of the plates. What takes getting used to conceptually is that the vacuum state does not have a fixed energy value, but changes with boundary conditions. In this case vacuum-plus-plates-far-apart is a higher energy state than vacuum-plus-plates-close-together, and the combined system will

decay from the higher-energy state to the lower, in the process creating kinetic energy, then heat, to conserve overall energy. Similar vacuum-decay processes have been discussed within the context of so-called charged vacuum states.[29]

With regard to extracting zero-point energy for use, in Forward's proposed embodiment the two plates in a Casimir experiment are charged with the same-sign charge (e.g., electrons). At sufficiently small spacings the Coulomb repulsion between the plates (which goes in an inverse square law 1/D^2 or less, depending on spacing and geometry) can always be overcome by the stronger 1/D^4 attractive Casimir force. The plates will therefore be drawn together in a collapsing motion. This confines the charge distribution to a smaller and smaller volume and results in an increased electric field strength in the vicinity of the plates. In such fashion the zero-point energy (Casimir energy) is transformed into stored Coulomb energy, which can then be extracted by a variety of means.

Although demonstrating in principle the extraction of energy from the vacuum, Forward's embodiment is admittedly impractical for significant, continuous energy generation, for a number of reasons. First and foremost is the fact that the generator is a 'one-shot' device. To recycle the generator one must put as much energy into the device to return the plates to their original separated positions as was obtained during the collapse phase, as would be expected in any conservative potential. As a result, given the losses in any real system, not even 'break-even' operation can be achieved, let alone net energy gain.

Let us carry this one step further, however. If one could arrange to have an inexhaustible supply of such devices, and if it took less energy to make each device than was obtained from the Casimir-collapse process, and if the devices were discarded after use rather than recycled, then one could envision the conversion of vacuum energy to use with a net positive yield. Although almost certainly not achievable in terms of mechanical devices, a possible candidate for exploitation along such lines would be the generation of a cold, dense, non-neutral (charged) plasma in which charge condensation takes place not on the basis of charged plates being drawn together, but on the basis of a Casimir pinch effect. (Casimir pinch effects have been explored in the literature, not with regard to energy conversion, but in terms of semiclassical modelling of charge confinement in elementary particles, hadron bag models, etc.[30])

Such an approach would constitute a 'Casimir-fusion' process, which in its cycle of operation would mimic the nuclear-fusion process. It would begin, like its nuclear counterpart, with an initial energy input into a plasma to overcome a Coulomb barrier, followed by a condensation of charged particles drawn together by a strong, short-range attractive potential (in this

case a Casimir rather than a nuclear potential), and with an accompanying energy release. Should the energy requirements for plasma formation, and electrical circuit and heat losses be kept at a level below that required for break-even operation, then net, useful energy could in principle be generated, as in the nuclear case. Such a proposal is, of course, highly speculative at this point, and further detailed analysis of the energetics involved may yet uncover some hidden flaw in the concept. Nonetheless, known to this author are programs in the United States, the Soviet Union and other countries to explore just such an approach on an experimental basis.

The above provides just one example of the type of concept that can be explored with regard to possible vacuum energy extraction. Other proposals for extracting vacuum energy have been made as well,[31] covering the gamut from the clearly unworkable to the intriguing. To this author's way of thinking, however, there is as yet neither clear-cut evidence of experimental success nor an absolutely unimpeachable theoretical construct. Nonetheless, it is only by continued, careful consideration of such proposals that we can hope to resolve the issue as to whether energy can be extracted from the vacuum, as part of a generalized 'vacuum engineering' concept of the type suggested by Nobel Laureate T.D. Lee.[32] As a caution along the way, the prudent scientist, while generally keeping an open mind as to the possibility of vacuum energy extraction, must of course approach any particular device claim or theoretical proposal with the utmost rigor with regard to verification and validation.

Can the energy crisis be solved by harnessing the energies of the zero-point sea? In the final analysis, given our relative ignorance at this point we must of necessity fall back on a quote given by Podolny [33] when contemplating this same issue. "It would be just as presumptuous to deny the feasibility of useful application as it would be irresponsible to guarantee such application." Only the future can reveal whether a program to extract energy from the vacuum will meet with success.

Acknowledgements

I wish to express my appreciation to G.W. Church, Jr., for helpful discussion in the exploration of the concepts developed here. I also wish to thank K.R. Shoulders of Jupiter Technologies, Austin, Texas, and William L. Stoner, III, of OmniTech International, Springdale, Virginia, for continuing impetus and encouragement to explore these issues.

References

1. Feynman, R.P. and Hibbs, A.R. *Quantum Mechanics and Path Integrals*, page 245, McGraw-Hill, New York, 1965. See also Misner, C.W., Thorne, K.S. and Wheeler, J.A. *Gravitation*, page 1202 ff. Freeman, San Francisco, 1973.

2. See, for example, the Closing Remarks section in Boyer, T.H., Phys. Rev. D, volume 29, p. 1089, 1984. It can be added that, although the approach developed here involves treating the ZPF fields as real, an alternative viewpoint can be taken in which the results of field-particle interactions traditionally attributed to ZPF are expressed instead in terms of the radiation reaction of the particles involved, without explicit reference to the ZPF. For this viewpoint, see Milonni, P.W., Phys. Rev. A, volume 25, p. 1315, 1982. Although it is sometimes assumed that the radiation-reaction approach might imply that the ZPF fields do not exist, detailed analysis (see Milonni's paper) shows that even though the interpretation of ZPF effects "can be given exclusively in terms of either radiation reaction or the zero-point field, *both fields are in fact necessary for the formal consistency of the theory*." The interrelationship between these two approaches (ZPF, radiation reaction) can be shown to be complementary on the basis of an underlying fluctuation-dissipation theorem.

3. Casimir, H.B.G., Proc. K. Ned. Akad. Wet., volume 51, p. 793, 1948.

4. Fierz, M. Helv. Phys. Acta., volume 33, p. 855, 1960.

5. Marshall, T.W. Nuovo Cimento, volume 38, p. 206, 1965.

6. Boyer, T.H. Ann. Phys., volume 56, p. 474, 1970.

7. Wittmann, F., Splittgerber, H. and Ebert, K. Z. Phys, volume 245, p. 354, 1971.

8. Israelachvili, J.N. and Tabor, D. Proc. Roy Soc. London, Ser. A, volume 331, p. 19, 1972.

9. Arnold, W., Hunklinger, S. and Dransfeld, K. Phys Rev. B, volume 19, p. 6049, 1979; Phys. Rev. E, volume 21, p. 1713, 1980.

10. Milonni, P.W., Cook, R.J. and Goggin, M.E. Phys. Rev. A, volume 38, p. 1621, 1988.

11. Lamb, W.E., Jr. and Retherford, R.C. Phys. Rev., volume 72, p. 241, 1947.

12. Bethe, H.A. Phys. Rev., volume 72, p. 339, 1947.

13. Welton, T.A. Phys. Rev., volume 74, p. 1157, 1948.

14. Boyer, T.H. Phys. Rev., volume 180, p. 19, 1969; Phys. Rev. A, volume 7, p. 1832, 1973.

15. Puthoff, H.E. Phys. Rev. D, volume 35, p. 3266, 1987. See also New Scientist, volume 115, p. 26, 9 July 1987.

16. Cetto, A.M. and Pena, L. de la. Found. Phys., volume 19, p. 419, 1989.

17. See Puthoff, H.E. Phys. Rev. A, volume 39, p. 2333, 1989 and references therein.

18. Milonni, P.W. Physica Scripta, volume T 21, p. 102, 1988.

19. See, for example, Pantell, R.H. and Puthoff, H.E., *Fundamentals of Quantum Electronics*, pp. 179 ff., Wiley, New York, 1969.

20. Wheeler, J.A. *Geometrodynamics*, Academic Press, New York, 1962.

21. Marshall, T.W. Proc. Camb. Philos. Soc., vol. 61, p. 537, 1965.

22. Boyer, T.H. Phys. Rev., vol. 182, p. 1374, 1969.

23. Puthoff, H.E. Phys. Rev. A, volume 40, p. 4857, 1989. Errata in Phys. Rev. A, volume 44, p. 3385, 1991. See also New Scientist, volume 124, p. 36, 2 December 1989.

24. Milonni, P.W. Am. J. Phys., volume 49, p. 177, 1981.

25. Davies, P.C.W. J. Phys. A, volume 8, p. 609, 1975.

26. Unruh, W.G. Phys. Rev. D, volume 14, p. 870, 1976. For a semi-classical derivation, see also Boyer, T.H. Phys. Rev. D, volume 21, p. 2137, 1980.

27. Sakharov, A.D. Dokl. Akad. Nauk. SSSR [Sov. Phys. - Dokl., volume 12, p. 1040], 1968. See also Misner, C.W., Thorne, K.S. and Wheeler, J.A. Gravitation, pp. 426-428, Freeman, San Francisco, 1973.

28. Forward, R.L. Phys. Rev. B, volume 30, p. 1700, 1984.

29. Rafelski, J., Fulcher, L.P. and Klein, A. Phys. Rep., volume 38, p. 227, 1978. See also "The Decay of the Vacuum", Scientific American, volume 241, p. 150, 1979.

30. For the original concept see Casimir, H.B.G., Physica, volume 19, p. 846, 1956. Early follow-on efforts include Boyer, T.H., Phys. Rev, volume 174, p. 1764, 1968; Milton, K.A., Annals Phys., volume 127, p. 49, 1980; DeRaad, L.L., Jr. and Milton, K.A., Annals Phys., vol. 136, p. 229, 1981; Brevik, I., Annals Phys., volume 138, p. 36, 1982; Brevik, I. and Kolbenstevdt, H., Annals Phys., volume 143, p. 179, 1982.

31. Booth, L.I. Speculat. Sci. Tech., volume 10, p. 201, 1987.

32. Lee, T.D. *Particle Physics and Introduction to Field Theory*, p. 826, Harwood Academic Publ., London, 1988.

33. Podolny, R. *Something Called Nothing*, Mir Publ., Moscow 1986.

QUANTUM FLUCTUATIONS CREATE SILENT UPROAR IN SPACE

ZERO POINT ENERGY WOULD SOLVE MANY PROBLEMS OF PHYSICS AT ONE STROKE

BY MICHAEL ODENWALD IN VEREIN DEUTSCHER INGINIEURE, DUSSELDORF JULY 19, 1991

Abstract

It sounds like a fable: heaters heat and automobiles roll and create not a gram of pollution driven by a mysterious energy. This same power will make laptop computers more powerful than today's super computers and will revolutionize other technologies. The fantastic thing here is: this super energy which is supposed to do all these things originates in empty space.

Article

US researchers Harold Puthoff, Ken Shoulders and Bill Church from the Institute of Advanced Studies in Austin, Texas forecast this utopia. The basis of their ideas is vacuum energy, a power which fills the entire universe and probably underlies all material existence. If the theories of the three researchers prove out they would eliminate all worries about energy forever. They would also solve some of the greatest puzzles of cosmology and particle physics including the question of the nature of gravitation.

In the telescopes of the astronomers the universe appears majestically quiet and empty, only spotted here and there by massive world islands. Quantum theory, on the other hand, shows a different, much more bizarre view of the cosmos. It deals with the microcosm of subatomic particles. At the level of particles, like electrons, protons and neutrons, space is not empty, but a boiling sea of energy that fills the space between atoms and molecules as well as between the stars. Particles jump like spray in a foaming ocean, like lightning leaping out of an insubstantive energy bath into the material world. With equal rapidity these particles fall back into the sea of energy and disappear (physicists speak of "virtual particles", because they have no existence in the world of real particles). In this minute instant of their existence, these ghost particles send out a weak pulse of

electromagnetic waves. To be sure, the radiation from individual particles dissipates in an extremely short distance. But because these elements of radiation are generated constantly and everywhere, space is filled by an enormous amount of energy.

The energy density of the vacuum exceeds that in the nucleus of an atom. The American physicists John Wheeler and Richard Feynman have calculated that the energy in the vacuum of a single light bulb is sufficient to bring all the water in the oceans of the world to the boiling point. At the same time this tremendous energy cannot be felt. The reason: it permeates the universe equally in all directions. Thus, matter is held in balance between equal forces.

Nevertheless, this vacuum energy leaves its trace in certain physical phenomena. According to classical physics, every oscillator, like a pendulum, eventually comes to rest because of friction. Quantum theory, on the other hand, states that an oscillator never comes completely to rest, but will continue to oscillate in microscopically small random motions around its rest point, even when it has been cooled to absolute zero so that molecular heat motion is not a consideration. Cause of the unpredictable vibration is the so-called zero point energy.

The source of the vibrations, in turn, are the energetic fluctuations of the vacuum. These provide the virtual particles with their electromagnetic radiations. Particles that are embedded in this ocean of radiation are caused to tremble by the constant impacts of the virtual particles. (This trembling has serious consequences in many physical systems. For example, the unavoidable noise of a microwave receiver. Even the most perfect cannot suppress this noise, since it is caused by the zero point energy that creates the radiations in this wavelength.

As early as 1940, US physicist William Lamb discovered that fluctuations of the electromagnetic field can easily disturb the paths of electrons around the atomic nucleus. This results in the "Lamb displacement" (photons that are created by the shifting of electrons into a different path show a frequency displaced from the normal value.)

The simple fact that an electron orbits the atomic nucleus on a stable path is a great puzzle of physics. Classical theory describes the atom like a small planetary system: electron planets orbit the sun of the atomic nucleus. Electromagnetic fields work on charged particles. The particles are forced out of their path and react by radiating light. The photons (light particles) carry off the energy picked up from the electromagnetic field. One would therefore expect electrons which are forced into their orbital paths by the nucleus charge, to send out radiations and fall in a spiral path into the nucleus like a satellite falling to earth. Quantum theory does not explain why this

does not happen. It describes the characteristics of the particles and declares that they only jump back and forth between specific energy levels in the electron orbits. Since they cannot drop below the lowest energy level, they do not fall into the nucleus. Even the quantizing of the electron paths does not explain the physical background for their stability.

Harold Puthoff, physicist at the Texas think tank, believes he has the answer: again he sees the ZPE at work. According to his idea, electrons do radiate energy while orbiting the atomic nucleus, but they absorb an equal amount of energy from the electron fluctuations, and so the atom is saved from collapse. Writing in the New Scientist, Puthoff said, "The equilibrium between these two processes leads to the values for the parameters which define the fundamental energy condition. Therefore there exists a dynamic equilibrium in which the zero point energy stabilizes the electron in the its orbital condition. It appears that the stability of matter itself depends upon the fundamental ocean of the electromagnetic fluctuations."

Also, Heisenberg's Uncertainty Principle appears in a new light. This principles states that it is impossible to determine all the conditions of a physical system at the same time, for example, the position and velocity of a particle. If the velocity of an electron is determined, its position remains unclear: although a discrete particle, it appears smeared over a larger area. Only statistics helped quantum physicists out of their dilemma. This makes it possible at least to calculate the probability with which a particle with a certain energy can be found in a certain position. For a long time this indeterminacy was considered a characteristic of matter itself. Actually, it is the ZPE which causes the particles to tremble. Their exact position must therefore necessarily appear unclear, says Puthoff. The uncertainty principle is therefore a direct effect of vacuum fluctuations.

Puthoff even has a new slant on gravitational theory. Einstein saw gravity as a warping of space caused by the mass of objects in space. Galaxies, stars, and planets cause depressions in 4 dimensional space, like marbles on a taughtly stretched rubber surface. If the marbles approach each other, they roll in the direction of the indentations caused by their weight. "This shows how gravity functions, but it doesn't explain the mechanism behind it," says the US physicist. Again, Puthoff's famous theory, as written up in the Physical Review, sees the power of the vacuum at work. As two bodies approach each other one will screen off the second from the radiation field of the ZPE coming from it's direction. And vice versa. Out of all the other directions these bodies continue under the influence of the pressure of the fluctuations. The result: they move toward one another.

It now appears no longer necessary to unite gravitation in an all encompassing theory with the other three fundamental powers of nature - the electromagnetic as well as the strong and weak nuclear forces. The creation of a unified field theory has hitherto caused physicists tremendous difficulties. Although the theory of electromagnetic fields could be tied to radioactive decay and the power that holds the atomic nucleus together, gravity did not fit into any of the mathematical concepts which grew into increasingly abstract Babylonian towers of physics, and were consequently unsuccessful.

As a result of the ZPE, gravitation is not seen to be a fundamental power but is only a secondary effect, resulting from the alternating functioning of other fields. In this form gravity is already a component of the unified field theory. At the same time it becomes clear why gravity is so weak, always pushing and never pulling and -in contrast with electromagnetic fields - it cannot be shielded: vacuum fluctuations penetrate space itself. The recently deceased Russian physicist, Andrei Sakarov, also saw gravitation as a result of the inter-workings of the vacuum energy and matter. This should make it possible to calculate the value of the gravitational constant G by parameters derived from the theory of ZPE. Puthoff followed Sakarov's ideas with some success. So particles that are coupled through vacuum fluctuation fields experience an attractive force on the order of gravitation.

As far back as the 60's, physicist Timothy Boyer of New York city college combined formulas of classical physics with the random fields of ZPE. It was his goal to reproduce the entire quantum theory with this approach. The result: Boyer's "Stochastic Electrodynamics" produced in many cases the same results as Max Planks' Quantum Electrodynamics, among others in regard to the radiation of black bodies, with "harmonic oscillators", with Van der Walls forces as well as the Heisenberg's Uncertainty Principle. "If the physicists had taken this path around 1900 they would have done much better with this classical approach than with Plank's quantum theory", commented Boyer's colleague Peter Milonni of the Los Alamos National Laboratory.

The way this cosmic power could be used to generate energy is shown by the effect named after the Dutch Physicist, Hendrix B. Casimir. Two smooth metal plates held apart a very small distance must attract each other very powerfully. The reason: in the space between the plates there are far fewer vacuum fluctuations than in the space outside. The pressure of the radiation, therefore, pushes the plates together - as it also pushes heavenly bodies together (accordingly gravity is a macro demonstration of the Casimir effect). At the meeting of the plates an enormous amount of heat is generated - the vacuum energy is translated into useful energy. Of course this can only be done once with each pair of plates, because to separate the plates to

start a new cycle would require the application of the energy liberated in the previous cycle. Expert Ken Shoulders came up with a different solution. He wants to use a cold electrically charged plasma (in a plasma the nuclei and the electrons are separated) to generate energy. The Casimir effect is supposed to compress the plasma which would generate heat. The repulsion of the nuclei drives the dense gas apart, and a new cycle begins.

Shoulders discovered another phenomenon that could be based on the Casimir effect. "If electrons are packed together with sufficient force they no longer repel each other but form clusters. These electron clusters require no electrical conductors. For instance, they run in small rills of a ceramic body - in fact, a thousand times faster than in a semiconductor," declared the Texas researcher. An energetic spark discharge is sufficient to generate these clusters. Ultrafast chips and greatly miniaturized instruments are possible uses of such dense clusters. One thinks of extremely flat TV screens with the electronic components integrated in the screen, very tiny x-ray generators which could be inserted into the body of the patient to radiate tumors, or one hundred horsepower motors that are only slightly larger than the crankshaft.

But where does the ZPE come from? "There are two thoughts on this. One says that it is simply a part of the boundary conditions of our universe the same as the background radiation resulting from the big bang", explained vacuum expert Puthoff. The other requires a stronger imagination: the quantum fluctuations drive the trembling (to which Puthoff ascribed Heisenberg's Uncertainty Principle) of all the material particles in the universe. The sum of these motions, however, could generate the zero point fields which in turn generate the virtual particles and their radiation field, which again causes the physical particles to vibrate - something like a cat chasing its own tail. Puthoff calls this phenomenon, which possibly keeps the whole cosmos running, a "self-generating cosmological feedback", which began with an elementary random fluctuation: the big bang.

WHERE DOES THE ZERO-POINT ENERGY COME FROM?

One of the more bizarre predictions of quantum theory. which describes the microscopic world of the atom, is that each cubic centimeter of apparently empty space contains an enormous amount of energy. Physicists call It the zero-point energy because it exist even at the absolute zero of the temperature scale. But although their theories predict that it should exist, and their experiments also confirm that it does, physicists have not been able to answer the most fundamental of questions: Where does the zero-point energy come from?

Paul Dirac found a "cosmic coincidence", connecting the costnic and atomic scales. Now, there may be an explanation.

Harold Puthoff, of the Institute for Advanced Studies in Austin, Texas, has spent much time trying to find an answer. His calculations show that the spectrum of electromagnetic radiation that is associated with the zero-point energy can be self-generated in a process that, he says, is "not unlike a cat chasing its own tail" (*Physical Review A*, vol 40, p 4857).

The zero-point energy is associated with all of nature's fields of force, including the electromagnetic field. It appears quite naturally in the equations that describe the "quantised" field as soon as physicists unify the theory of electromagntism with quantum theory. Usually, though, the zero-point energy is unobserved.

Formally, physicists attribute an infinite amount of energy to this background. But, even when they Impose appropriate cutoffs at high frequency. they estimate conservatively that the zero-point density is comparable to the energy density Inside an atomic nucleus.

Because the numbers that describe the zero-point energy are so enormous, theorists have often questioned whether they should be taken seriously. Some have suggested that they may arise simply because the quantum theory has some defect, or because physicists are not interpreting it correctly. Usually, physicists argue over whether they should consider the fields associated with the zero-point energy as "real" or "virtual" -- that is, necessary in the mathematics of quantum theory, although perhaps not physically real.

Despite such arguments, though, no one can doubt that the fields associated with the zero-point energy produce physical consequences which are measurable in the laboratory. One example is the Lamb shift of the spectral lines of an atom. Here, the fields slightly perturb an electron in an atom so that when it makes a transition from one state to another, it emits a photon whose frequency is "shifted" slightly from its normal value.

Another measurable consequence of the fields associated with the zero-point energy is the Casimir effect. This is an attractive force that appears between two metal plates that are closely spaced. The Casimir force is due to so-called radiation pressure from the zero-point energy of the background electromagnetic field. In effect, some wavelengths of the field are excluded from between the plates. so reducing the energy density compared with that of empty space. The Imbalance results in the plates being pushed together.

When Puthoff considers the origin of the zero-point energy, he comes to the conclusion that it can have one of two explanations. The first explanation, which he discards, is that the zero-point energy was fixed arbitrarily at the birth of the Universe, as part of-its so-called boundary conditions. Puthoff believes instead that the zero-point energy may be generated by radiation from "quantum fluctuations". According to quantum theory, the particles of matter can pop into existence, then pop out again, just as tong as they do so for fleetingly small intervals, determined by Heisenherg's uncertainty principle. These "quantum fluctuations" fill all of space and are the reason why physicists often refer to the "seething vacuum".

Puthoff has calculated the properties of radiation from charged particles produced by quantum fluctuations throughout the Universe. All charged particles undergoing acceleration emit electromagnetic radiation. Such radiation drops off as the inverse square of the distance from the source. But, because the average volume distribution of such particles in spherical shells about any given point source is proportional to the area of the shell -- that is, the square of the distance -- the sum of contributions from the surrounding shells will yield a radiation field with a high energy density. Puthoff believes that the field associated with the zero-point energy is such a field.

One possibility is that the zero-point fields drive the motion of all particles of matter in the Universe, and that, in turn, the sum of the particle motions throughout the Universe generates the zero-point fields. This he regards as a "self-regenerating cosmological feedback cycle".

His calculations assumed so-called inflationary cosmology, a currently popular theory of the origin of the Universe. He is able to predict the correct distribution of frequencies and the correct order of magnitude of the zero-point energy. His work supports the idea that the zero-point fields are generated dynamically.

The new calculations yield a bonus as well. Puthoff is able to derive an expression that relates the zero-point energy density to such factors as the average density of matter in the Universe and the size of the Universe.

This expression also yields a precise expression for an observed "cosmological coincidence", first pointed out by Paul Dirac, the English physicist. The coincidence is that the ratio of the strengths of the

electromagnetic force between the same two particles is very close to the ratio of the Hubble distance -- effectively the size of the Universe -- to the size of the electron.

According to Puthoffs findings, such a cosmological coincidence is simply a consequence of the cosmologically based mechanism which generates the zero-point energy. This is a neat linking of cosmological and atomic parameters and may solve the long-standing mystery.

INERTIA: DOES EMPTY SPACE PUT UP THE RESISTANCE?

BY ROBERT MATTHEWS

SCIENCE, VOL. 263, 4 FEBRUARY 1994

As a child, the Nobel Prize-winning physicist Richard Feynman asked his father why a ball in his toy wagon moved backward whenever he pulled the wagon forward. His father said that the answer lay in the tendency of moving things to keep moving, and of stationary things to stay put. ""This tendency is called inertia," said Feynman senior. Then, with uncommon wisdom, he added: "But nobody knows why it is true."

Seeking a reference frame, Mach defined inertia with respect to distant start.

That's more than even most physicists would say. To them, inertia does not need explaining, it simply "is." But since the concept was first coined by Galileo in the 17th century, some scientists have wondered if, perhaps, inertia is not intrinsic to matter at all, but is some-how acquired. Those who have tried to come to grips with inertia include Feynman junior, once he has grown up, and Albert Einstein, who tried -- and failed -- to show that inertia was related to the arrangement of matter in the universe.

Another try. Einsteain tried to incorporate Mach's principle into general relativity.

Now three researchers think they have found the source of inertia -- and it turns out to be much closer to home. Inertia, they say, comes from the apparently empty space that surrounds us all -- or rather, from the buzz of activity that, according to quantum theory, fills even a perfect vacuum where subatomic particles are being created and annihilated in the blink of an eye. It is this ever-present sea of energy that the researchers believe resists the acceleration of mass, and so creates inertia.

Reaching this conclusion took more than just a simple application of quantum theory for Bernhard Haisch of Lockheed Palo Alto Research Laboratory, Alfonso Rueda of the California State University at Long Beach, and Hal Puthoff at the Institute for Advanced Studies at Austin, Texas. Their idea, published in the 1 February issue of *Physical Review A*, is based on an esoteric mathematical treatment of the vacuum and a long-forgotten attempt by the Soviet theorist and dissident Andrei Sakharov to explain another great mystery, gravity. These unfamiliar foundations, together with the new proposal's boldness, would be more than enough to stir up controversy. But the paper

raises an even more provocative notion: that inertia, once understood, might be controlled.

It is a bit too early to be talking about building inertia-free starships, the researchers say, but they maintain that there may soon be hard evidence supporting their claim, from experiments that will search for changes in the mass of electrons when they are exposed to powerful laser beams. Certainly many of their colleagues are intrigued. Says Stanford University astrophysicist Peter Sturrock, "No one would say that it's the last word, but I think it may really be one of the first words in what could be a very interesting approach."

One inspiration for the effort was a much earlier try, by the German philosopher-physicist Ernst Mach. In 1872, Mach argued that acceleration -- and hence inertia -- is not absolute, but only has meaning within a frame of reference. For Mach, that frame of reference consisted of the other matter in the universe: After all, in utterly empty space, how do you know you are moving? Einstein later tried and failed to work that notion into general relativity. Haisch and his colleagues also invoke a frame of reference: not the distant stars, but the quantum vacuum.

The seething activity of the vacuum is an upshot of Heisenberg's uncertainty principle, one of the key results of quantum theory. The principle is best known for setting limits to the accuracy with which it is possible to measure simultaneously certain attributes of a particle, such as its position and momentum. But the flip-side of this uncertainty is that a particle and a matching anti-particle can spontaneously appear out of thin air, so long as they recombine and annihilate each other so fast no one would know. During their fleeting existence, these "virtual particles" make their presence felt in many ways, including slight shifts in the spectrum of hydrogen, the irreducible electronlc nolsc in semiconductors and, Haisch and his colleagues now claim, inertia.

Meeting with Resistance

Their argument draws on a curious quantum vacuum phenomenon first described by the British physicist Paul Davies (now at the University of Adelaide in Australia) and William Unruh of the University of British Columbia in the mid-1970s. If you move at a constnnt speed through the quantum sea of virtual particles, it looks the same in all directions. But as soon as you start to accelerate through it, theory predicts that the vacuum gives the appearance of being a tepid "sea" of heat radiation.

Although far too small to measure, the Davies-Unruh effect led Haisch, a high-energy astrophysicist, and Puthoff, a quantum theorist, to wonder independently about a connection with inertia. Could it be that accelerating through the vacuum produces other effects, too -- like the resistance to

acceleration that we call inertia? While still mulling over the idea, Haisch met with Rueda, an electrodynamics theorist with considerable esperience in the techniques needed to attack such a question. When they learned of Puthoff's similar ideas, Haisch and Rueda decided to join forces with him.

In their analysis, the trio set aside conventional quantum theory. Instead, they opted for an approach known as stochastic electrodynamics (SED), which accepts the existence of the vacuum fluctuations a priori, then applies an entirely classical (i.e., non-quantum) approach to particles and eleccru-magnetism. Since the 1960s, a number of theorists, including Rueda, have shown that SED can give a perfectly accurate account of bizarre quantum effects without becoming embroiled in complex quantum theory.

In their intensely mathematical paper, Haisch and his colleagues wield SED to argue that inertia results from a Lorentz force, familiar to physicists as the force that deflects a charged particle moving through a magnetic field. For inertia, it is the vacuum fluctuations that produce the magnetic field, and it is the charged subatomic particles making up objects, the more particles it contains, and hence the stronger the resistance, and the greater the object's inertia.

Predictably for a grand claim based on obscure theory, peer reaction 1s mixed. On the one hand is Stanford's Sturrock, who calls it "very interesting, and potentially very important." On the other is Peter Milonni, a specialist on quantum vacuum processes at the Los Alamos National Laboratory, who says, "1 don't think much of the work," complaining "I see a lot of claims being made that arc just not backed up."

Cosmologist Paul Wesson of the University of Waterloo, Canada, an authority on the links between the subatomic and cosmic worlds, is "glad that someone is trying to return to the question of inertia again." But hc is concerned about "the astrophysical and cosrnological implications" of' the work. Wesson's concerns center on the cosmological constant, best known as an add-on to Einstein's equations of general relativily that endows free space with extra energy and gives it a gravitational effect. Einstein eventually dropped the constant because it was inelegant, but some cosmologists would like to resurrect it because it would solve some of their most intractable problems, such as the age of the universe and its missing mass (*Science*, 5 November 1993, p. 846).

The new vacuum-based theory of inertia devised by Haisch and his colleagues does just that: It requires an energy-rich vacuum, which implies a cosmological constant. The problem is that the constant implied by the new theory is much bigger than the one required to solve the other problems of cosmology. Says Wesson: "The vacuum has so much energy associated with it that it woulcl have negative astrophysical implications. Those would have to be cleared up."

Overcoming inertia.

Haisch and his colleagues agree that there is a problem and suggest an answer, in the form of a controversial theory of gravity proposed by Sakharov in the late 1960s. One consequence of Sakharov's theory is that vacuum energy can't generate a gravitational field -- and so cannot create a problematic cosmological constant. Solving one unconventional theory's problems by invoking another unconventional theory is unlikely to win many converts, and Haisch agrees that the team's work needs refining. But he hopes to do it with the help of other researchers, who might be lured by the tantalizing imptications of the theory -- among them the possibility that by altering the properties of the vacuum, researchers might control inertia.

Physicists have known for years that the quantum vacuum can be manipulated. In the so-called Casimir effect, two metal plates brought close together distort the quantum vacuum, which responds by producing an attractive force between the plates. If the quantum vacuum coulcl be distorted on a larger scale, says Haisch, "then we open a door on a way of perhaps someday controlling inertia -- and we had no inkling that was even possible in principle before."

Experiments slated for later this year at the Stanford Linear Accclcrator Center (SLAC) may provide Haisch and his colleagues with the evidence they need to convince skeptics. Physicist Kirk McDonald of Princeton University and colleagues from a number of other universities plan to expose high-energy electrons produced at SLAC to a lerawatt beam from a neodymium-YAG laser. Testing the inertia theory isn't the main aim of the expertment. But if the theory is correct, the intense electromagnetic field experienced by the electrons as they enter the beam will affect their interaction with the quantum vacuum's own field -- and so change their inertia.

A favorable outcome, Haisch thinks, might be just what he and his colleagues need to overcome any resistance -- or is it inertia? -- they are meeting in the scientific community. "If nothing else," he says, "controlling inertia is a possibility that might just encourage others to dig deeper."

FILLING THE VOID

THE ECONOMIST, FEBRUARY 1ST, 1997

Nature, famously, abhors a vacuum. People are generally just bored by vacuurns, because they believe them to be empty spaces in which, almost by definitlon, nothing ever happens. For nearly 50 years, however, quantum physicists have had a very different view. A branch of quantum theory known as quantum electrodynamics (QED) says that a vacuum, far from being static or empty, teems with transient "birtual" particles (especially photons, the particles of light) that keep popping weirdly into existence and then disappearing again. But for all their theoretical confidence, physicists have found it hard to demonstrate this.

Until now, that is. Steve Lamoreaux, who works at the Los Alarnos National Laboratory In New Mexico, has just done something perculiar. As he reported in a recent issue of *Physical Review Letters*, he has shown that if you take two electrically conducting plates and put them close together in a vacuum, they are pushed toward each other by a force conjured up out of the nothingness -- the Casimir force.

Hendrik Casimir is a Dutch physicist. IN 1948, when QED was still a new theory, he suggested that it would be possible to get Nature to give you something for nothing, despite her being a well-known skinflint.

Commonsense suggests that a vacuum, being empty, has zero energy. But Heisenberg's uncertainty principle, a mainstay of quantum theory, says that “zero” is not a precise quantity.The vacuum is filled with short-lived bursts of energy. And, QED predicted, these energy bursts can turn into particles such as photons that exist for a very short period-so short that they are not directly observable. But their presence is keenly felt. According to QED, they carry the forces that hold real particles -- and hence the material world -- together.

Dr Casimir suggested that their effects could be more permanent in another way too. Quantum theory holds that particles in general (and photons in particular) have a simultaneous existence as waves. And as waves, they need space in which to vibrate. Just as the short strings of a violin cannot produce the deep, long-wavelength notes of a double bass, so photons -- which are vibrations not of string but electromagnetic fields -- are constrained by things that conduct electricity. A photon can exist between two conducting plates only if its wavelength is less than twice the distance between the plates. As a consequence, the longest virtual wavelengths are missing from the gap between the plates used in Dr Lamoreaux's experiment.

On the other side of each plate, though, the full range of photons can come briefly into existence. The net result is a difference in the radiation pressure -- the feeble force exerted by photons on other objects -- between the insides and the outsides of the two plates. This difference, which Dr Casimir predicted, pushes them slightly together.

Detecting the Casimir force between large objects calls for subtlety. Previous attemtps have either failed to achieve sufficient accuracy or merely measured the force between a plate and an atom. Even Dr Lamoreaux's experiment did not manage to measure the force between two flat plates (the ideal test), because of the difficulty of keeping them perfectly parallel while less than a thousandth of a millimetre apart.

Instead, he used one curved and one flat plate. The curved plate sat on a mounting that was finely adjustable backwards and forwards. The flat one was at one end of a bar that was in turn suspended from a fibre -- an arrangement known as a torsion pendulum. The other end of the suspended bar formed part ofan electrical capacitor.This allowed the pendulum to be held steady by applying slight changes to the voltage across the capacitor.

By moving the curved plate to and fro, Dr Lamoreaux could change the Casimir force between the plates and make the pendulum try to rotate one way or the other. Then, by measuring the change in voltage needed to stop this from happening, he could work out the strength of the Casimir force. Since the whole assembly -- which sat inside a vacuum chamber -- was so sensitive that it could detect somebody standing nearby from the way his weight tilted the laboratory floor, a very accurate measurement was possible.

The force betwccn the plates was gratifyingly small: about that exerted by a speck ofdust lying on a bench top. Also gratifying was the cost of the experiment. Dr Lamoreaux’s set-up (which began life as a student project) cost only a few hundred dollars. Not quite something for nothing, but in the world of physics, a close approximation.

EXPLOITING ZERO-POINT ENERGY

ENERGY FILLS EMPTY SPACE, BUT IS THERE A LOT TO BE TAPPED, A SOME PROFOUND? PROBABLY NOT

BY PHILIP YAM, SCIENTIFIC AMERICAN, DECEMBER 1997

Something for nothing. That's the reason for the gurgling water, ultrasonic transducers, heat-measuring calorimeters, data-plotting software and other technological trappings -- some seemingly of the backyard variety -- inside the Institute for Advanced Studies in Austin, Tex. One would not confuse this laboratory with the similarly named but far more renowned one in Princeton, N.J., where Albert Einstein and other physicists have probed fundamental secrets of space and time. The one in Austin is more modestly appointed, but its goals are no less revolutionary. The researchers here test machinery that, inventors assert, can extract energy from empty space.

Claims for perpetual-motion machines and other free-energy devices still persist, of course, even though they inevitably turn out to violate at least one law of thermodynamics. Energy in the vacuum, though, is very much real. According to modern physics, a vacuum isn't a pocket of nothingness. It churns with unseen activity even at absolute zero, the temperature defined as the point at which all molecular motion ceases.

Exactly how much "zero-point energy" resides in the vacuum is unknown. Some cosmologists have speculated that at the beginning of the universe, when conditions everywhere were more like those inside a black hole, vacuum energy was high and may have even triggered the big bang. Today the energy level should be lower. But to a few optimists, a rich supply still awaits if only we knew how to tap into it. These maverick proponents have postulated that the zero-point energy could explain "cold fusion," inertia and other phenomena and might someday serve as part of a "negative mass" system for propelling spacecraft. In an interview taped for PBS's *Scientific American Frontiers*, which aired in November, Harold E. Puthoff, the director of the Institute for Advanced Studies, observed: "For the chauvinists in the field like ourselves, we think the 21st century could be the zero-point-energy age."

That conceit is not shared by the majority of physicists; some even regard such optimism as pseudo-science that could leech funds from legitimate research. The conventional view is that the energy in the vacuum is minuscule. In fact, were it infinite, the nature of the universe would be vastly different: you

would not be able to see in a straight line beyond a few kilometers. "The vacuum has some mystique about it," remarks Peter W. Milonni, a physicist at Los Alamos National Laboratory who wrote a text on the subject in 1994 called *The Quantum Vacuum*. "One has to be really careful about taking the concept too naively." Steve K. Lamoreaux, also at Los Alamos, is harsher: "The zero-point-energy community is more successful at advertising and self-promotion than they are at carrying out bona fide scientific research."

Quantum Fluctuations, ripples that form the basis for energy in a vacuum, pervade the fabric of space and time.

The concept of zero-point energy derives from a well-known idea in quantum mechanics, the science that accounts for the behavior of particles near the atom's size. Specifically, zeropoint energy emerges from Heisenberg's uncertainty principle, which limits the accuracy of measurements. The German physicist Werner Heisenberg determined in 1927 that it is impossible to learn both the position and the momentum of a particle to some high degree of accuracy: if the position is known perfectly, then the momentum is completely unknown, and vice versa. That's why at absolute zero, a particle must still be jittering about: if it were at a complete standstill, its momentum and position would both be known precisely and simultaneously, violating the uncertainty principle.

Energy and Uncertainty

Like position and momentum, energy and time also obey Heisenberg's rule. Residual energy must therefore exist in empty space: to be certain that the energy was zero, one would have to take energy measurements in that volume of space forever. And given the equivalence of mass and energy expressed by Einstein's $E = mc2$, the vacuum energy must be able to create particles. They flash briefly into existence and expire within an interval dictated by the uncertainty principle.

This zero-point energy (which comes from all the types of force fields--electromagnetic, gravitational and nuclear) makes itself felt in several ways, most of them obvious only to a physicist. One is the Lamb shift, which refers to a slight frequency alteration in the light emitted by an excited atom. Another is a particular kind of inescapable, low-level noise that registers in electronic and optical equipment.

Perhaps the most dramatic example, though, is the Casimir effect. In 1948 the Dutch physicist H.B.G. Casimir calculated that two metal plates brought sufficiently close together will attract each other very slightly. The reason is that the narrow distance between the plates allows only small, high-frequency electromagnetic "modes" of the vacuum energy to squeeze in between. The plates block out most of the other, bigger modes. In a way, each plate acts as an airplane wing, which creates low pressure on one side and high pressure on the other. The difference in force knocks the plates toward each other.

While at the University of Washington, Lamoreaux conducted the most precise measurement of the Casimir effect. Helped by his student Dev Sen, Lamoreaux used gold-coated quartz surfaces as his plates. One plate was attached to the end of a sensitive torsion pendulum; if that plate moved toward the other, the pendulum would twist. A laser could measure the twisting of the pendulum down to 0.01-micron accuracy. A current applied to a stack of piezoelectric components moved one Casimir plate; an electronic feedback system countered that movement, keeping the pendulum still. Zero-point-energy effects showed up as changes in the amount of current needed to maintain the pendulum's position. Lamoreaux found that the plates generated about

100 microdynes (one nanonewton) of force. That "corresponds to the weight of a blood cell in the earth's gravitational field," Lamoreaux states. The result falls within 5 percent of Casimir's prediction for that particular plate separation and geometry.

Virtual Particles can spontaneously flash into existence from the energy of quantum fluctuations. The particles, which arise as matter-antimatter twins, can interact but must, in accordance with Heisenberg's uncertainty principle, disappear within an interval set by Planck's constant, *h*.

Zero for Zero-Point Devices

Demonstrating the existence of zero-point energy is one thing; extracting useful amounts is another. Puthoff's institute, which he likens to a mini Bureau of Standards, has examined about 10 devices over the past 10 years and found nothing workable.

One contraption, whose Russian inventor claimed could produce kilowatts of excess heat, supposedly relied on sonoluminescence, the conversion of sound into light. Bombarding water with sound to create air bubbles can, under the right conditions, lead to bubbles that collapse and give off flashes of light. Conventional thinking explains sonoluminescence in terms of a shock wave launched within the collapsing bubble, which heats the interior to a flash point.

Following up on the work of the late Nobelist Julian Schwinger, a few workers cite zero-point energy as the cause. Basically, the surface of the bubble is supposed to act as the Casimir force plates; as the bubble shrinks, it starts to exclude the bigger modes of the vacuum energy, which is converted to light. That theory notwithstanding, Puthoff and his colleague Scott Little tested the device and changed the details a number of times but never found excess energy.

Puthoff believes atoms, not bubbles, offer a better approach. His idea hinges on an unproved hypothesis: that zeropoint energy is what keeps electrons in an atom orbiting the nucleus. In classical physics, circulating charges like an orbiting electron lose energy through radiation; what keeps the electron zipping around the nucleus is, to Puthoff, zero-point energy that the electron continuously absorbs. (Quantum mechanics as originally formulated

simply states that an electron in an atom must have some minimum, ground-state energy.) Physicists have demonstrated that a small enough cavity can suppress the natural inclination of a trapped, excited particle to give up some energy and drop to a lower energy state [see "Cavity Quantum Electrodynamics," by Serge Haroche and Jean-Michel Raimond; SCIENTIFIC AMERICAN, April 1993]. Basically, the cavity is so small that it can exclude some of the lower-frequency vacuum fluctuations, which the excited atom needs to emit light and drop to a lower energy level. The cavity in effect controls the vacuum fluctuations.

Under the right circumstances, Puthoff reasons, one could effectively manipulate the vacuum so that a new, lower ground state appears. The electron would then drop to the lower ground state--in effect, the atom would become smaller-and give up some energy in the process. "It implies that hydrogen or deuterium injected into cavities might produce excess energy," Puthoff says. This possibility might explain cold-fusion experiments, he notes -- in other words, the occasional positive results reported in cold-fusion tests might really be indicators of zero-point energy (rather than, one would assume, wishful thinking).

Work in cavity quantum electrodynamics is experimentally challenging in its own right, however, so it is not clear how practical an energy supply from "shrinking atoms" could be. The Austin institute is testing a device that could be interpreted as manipulating the vacuum, although Puthoff declines to provide details, citing proprietary nondisclosure agreements with its designers.

Casimir effect is the motion of two parallel plates because of quantum fluctuations in a vacuum. The plates are so close together that only small fluctuations fit in between; the bigger modes are excluded. They exert a total force greater than that by the smaller modes and hence push the plates together. The effect was observed by Steve K. Lamoreaux, now at Los Alamos National Laboratory, who relied on a torsion pendulum. A current applied to the piezoelectric stack tried to move the Casimir plate on the pendulum; the compensator plates held the pendulum still. The voltage needed to prevent any twisting served as a measure of the Casimir effect.

How Much in Nothing?

Underlying these attempts to tap the vacuum is the assumption that empty space holds enough energy to be tapped. Considering just the fluctuations in the electromagnetic force, the mathematics of quantum mechanics suggest that any given volume of empty space could contain an infinite number of vacuum-energy frequencies -- and hence, an infinite supply of energy. (That does not even count the contributions from other forces.) This sea of energy is largely invisible to us, according to the zeropoint-energy chauvinists, because it is completely uniform, bombarding us from all directions such that the net force acting on any object is zero.

But just because equations produce an infinity does not mean that an infinity exists in any practical sense. In fact, physicists quite often "renormalize" equations to get rid of infinities, so that they can ascribe physical meaning to their numbers. An example is the calculation of the electron's mass from theoretical principles, which at face value leads to an unrealistic, infinite mass. The same kind of mathematical sleight-of-hand might need to be done for

vacuum-energy calculations. "Somehow the notion that the energy is infinite is too naive," Milonni says.

In fact, several signs indicate that the amount of energy in the vacuum isn't worth writing home about. Lamoreaux's experiment could roughly be considered to have extracted 10-'5 joule. That paltry quantity would seem to be damning evidence that not much can be extracted from empty space. Bur Puthoff counters that Casimir plates are macroscopic objects. What is needed for practical energy extraction are many plates, say, some 1023 of them. That might be possible with systems that rely on small particles, such as atoms. "What you lose in energy per interaction, you gain in the number of interactions," he asserts.

Zero-point energy was purportedly tapped with a machine that made use of ultrasonically generated bubbles. Such devices are tested by Harold E. Puthoff, director of the Institute for Advanced Studies in Austin, Tex. So far no apparatus has been found to produce a net gain in energy.

Milonni replies by noting that Lamoreaux's plates themselves are made of atoms, so that effectively there were 1023 particles involved. The low Casimir result still indicates, by his figures, that the plates would need to be kilometers long to generate even a kilogram of force. Moreover, there is a cost in extracting the energy of the plates coming together, Milonni says: "You have to pull the plates apart, too."

Another argument for a minuscule vacuum energy is that the fabric of space and time, though slightly curved near objects, is pretty much flat overall. Draw a triangle in space and the sum of its angles is 180 degrees, as it would be on a flat piece of paper. (The angles of a triangle on a sphere, conversely, sum to more than 180 degrees.) Because energy is equivalent to matter, and matter exerts a gravitational force, cosmologists expect that an energy-rich vacuum would create a strong gravity field that distorts space and time as it is seen today. The whole universe would be evolving in a different manner.

That argument ties into the cosmological constant, a concept that Einstein first developed, then discarded. In the equations that describe the state of the universe, the cosmological constant--which incorporates zeropoint energy--is in a sense a term that can counteract gravity. Astronomical observations suggest the constant must be nearly zero. Consequently, if the vacuum energy really is large, then some other force that contributes to the constant must offset it. And as physicist Steven Weinberg of the University of Texas notes in his 1992 book Dreams of a Final Theory, that offset feels unnatural: calculations that sidestep the infinity terms produce a vacuum energy 120 orders of magnitude greater than the nearly zero value of the cosmological constant, so that other force must be opposite but identical in magnitude to the vacuum energy out to 120 decimal places.

Puthoff replies that the connection between the cosmological constant and zero-point energy is more complex than is often realized. "Obviously, the zeropoint-energy problem and the cosmological constant, though related, are really different problems," Puthoff argues, noting that predictions of quantum

mechanics have proved correct time and again and that instead something is still missing from cosmologists' thinking.

Such disagreements in science are not unusual, especially considering how little is really known about zero-point energy. But those would-be utility moguls who think tapping zeropoint energy is a worthwhile pursuit irritate some mainstream scientists. "I was rather dismayed at the attention from what I consider a kook community," Lamoreaux says of his celebrity status among zero-point aficionados after publishing his Casimir effect result. "It trivializes and abuses my work." More galling, though, is that these "pseudoscientists secure funding, perhaps governmental, to carry on with their research," he charges.

Puthoff's institute receives a little government money but gets most of its funds from contracts with private firms. Others are backed more explicitly by public money. This past August the National Aeronautics and Space Administration sponsored a meeting called the "Breakthrough Propulsion Physics Workshop." According to participants, zero-point energy became a high priority among those trying to figure out which "breakthroughs" should be pursued.

The propulsion application depends on a speculation put forth in 1994 by Puthoff, Bernhard Haisch of Lockheed Pale Alto Research Laboratory and Alfonso Rueda of California State University at Long Beach. They suggested that inertia -- the resistance that objects put up when they are accelerated -- stems from the drag effects of moving through the zero-point field. Because the zeropoint field can be manipulated in quantum experiments, Puthoff reasons, it should be possible to lessen an object's inertia and hence, for a rocket, reduce the fuel burden. Puthoff and his colleagues have been trying to prove this inertia-origin hypothesis--a sensitive pendulum should be able to detect a zero-point-energy "wake" left by a moving object--but Puthoff says they have not managed to isolate their system well enough to do so.

More conventional scientists decried the channeling of NASA funds to a meeting where real science was lacking. "We hardly talked about the physics" of the proposals, complained Milonni, adding that during one of the breakout sessions "there was a guy talking about astral projection."

Certainly, there should be room for far-out, potentially revolutionary ideas, but not at the expense of solid science. "One has to keep an open mind, but the concepts I've seen so far would violate energy conservation," Milonni concludes. In sizing up zero-point-energy schemes, it may be best to keep in mind the old caveat emptor: if it sounds too good to be true, it probably is.

THE WAVE

BY TOBY GROTZ

The Navajo And The Bhuddist

"There are worlds within worlds Christa. Everything in our world is connected by the delicate strands of the web of life, which is balanced between forces of destruction and the magic forces of creation". The Magi to Christa in the movie 'Ferngully'.

The Forces Of Nature

In May of 1921, Walter Russell, a sculptor, painter, and later a President of the Academy of Arts and Sciences, entered into a prolonged state of heightened awareness or samadhdi. His experience allowed him to see the manner in which the creator, or illumined one as he described it, gave manifestation to the elements of matter and the gravitational and electrical effects of nature. These primordial forces were best described in a visual format in a painting by Russell entitled "The Wave".

A full color photograph of Russell's painting "The Wave", precedes the text in his book 'The Secret of Light'. (Available from The University of Science and Philosophy, call 1-800-882-5683 to order or for catalog). Viewed from the front, in the schematic form of a technical blueprint, the wave seems to be identical to the patterns present in Navajo weavings. These symbols are a front view of the vortex motions of the simultaneous forces of creation and disintegration. The Navajo rug symbols and the wave explain the dual wave and particle like nature of atomic physics. Viewed end on, the symbol becomes the yin-yang sign of eastern philosophy.

It is also a pictorial representation of Zero Point energy and Scaler fields. A complete mathematical description of the yin-yang symbol is presented by Eldon Byrd in Volume 1, Number 2, of The Journal of the USPA.

It is possible that ancient shamans also were able to visualize the wave of creation. Having an understanding of the mechanics of nature, as represented by the wave, it would be possible to develop a technology that could utilize the forces of nature for the benefit of the tribe.

Using The Fundamental Forces Of Nature For The Benefit Of

Mankind

I had the good fortune of being able to present this to Tom Bearden this summer at the 27th IECEC conference. Tom pointed out that sound vibrations could be used to accomplish the same scalar wave technology that Tesla, Moray, Hubbard, Keely, Hendershot, and others may have done electrically and mechanically. Through the use of chanting the wave could be manipulated to cause physical phenomenon to occur. Thus the rain dance in the desert southwest, the ability to move large stone blocks through the manipulation of gravity, the instantaneous healing of the sick, could all be accomplished through chanting. As Terence McKenna points out in 'The Archaic Revival (Speculations on Psychedelic Mushrooms, the Amazon, Virtual Reality, UFOs, Evolution, Shaminism, the Rebirth of the Goddess, and the End of History)', "Chanting and singing are worldwide shaministic practices. The Shamanic singers navigate through a space with which we have lost touch as a society."

Non-Polluting Energy Generation.

The great American inventor, Nikola Tesla, prophesied the potential inherent in the wave in 1891 in a speech before the American Institute of Electrical Engineers; "Ere many generations pass, our machinery will be driven by a power obtainable at any point in the universe.....Throughout space there is energy....it is a mere question of time when men will succeed in attaching their machinery to the very wheelwork of nature."

The wave is the precursor to matter. It is the fabric of sub space, if you will. It is non-material and exists in a dimension removed from view. The wave controls and results in the formation of matter which is detectable from our dimension. This is why we seem to see a duality of wave and particle like nature in atomic and photonic structure. There is no paradox. The wave is a wave when it is a wave and the particle is a particle when it is a particle. The wave becomes the particle which then become the wave.

The Possibility of Elemental Transmutation.

Tesla was able to verbally describe what Russell had drawn when he said "Every particle of matter is composed of a primary substance--the ether--filling all space. The atom of any elementary body is differentiated from the rest of this tenuous substance merely by a spinning motion like a whirl in a calm lake.

By being set in movement ether becomes palpable matter; the movement arrested, the primary substance reverts to its normal state and becomes imperceptible....To create and annihilate material substance, to cause at will its birth and death, would be man's most consequential deed--his greatest

achievement, which would place him beside his creator, make him fulfill his ultimate destiny. (Nikola Tesla, in a letter to the "Actors Fund Fair", May 13th, 1907.)

The action of the vortexes of integration and disintegration were again described by Tesla in 1930. "Long ago he [man] recognized that all perceptible matter comes from a primary substance, or tenuity beyond conception, filling all space, the Akasha or luminiferous ether, which is acted on by the life giving Prana, or creative force, calling into existence in never ending cycles all things and phenomena. The primary substance, thrown into infinitesimal whirls of prodigious velocity, becomes gross matter; the force subsiding, the motion ceases and matter disappears, reverting to the primary substance. (Nikola Tesla, "Man's Greatest Achievement")

Notice two things in this description. First that Tesla had seen that this process had been understood by ancient people and second that he used words from eastern philosophy to describe the process. Tesla had attended the lectures of Swami Vivekananda in New York City in 1896 and had been inspired by Vivikananda's explanation of Vedic cosmology. (See 'The Influence of Vedic Philosophy on Nikola Tesla's Understanding of Free Energy', 15th Annual USPA Conference, Sacramento, California, audio and video tape available, paper to be published, fall of 1992 in the Journal Of The USPA) It was only through the use of vedic terminology that Tesla was able to describe the forces of nature, western science lacked the vocabulary as well as the understanding.

Descriptions Of The Universal Forces By Walter Russell

The wave is described by Russell as causing "the integration of matter at poles and disintegration at equators. Matter integrates by the contraction of one pair of spirals around the shafts which wind it into spheres by the way of its poles, and disintegrates it by the expansion of the other pair which unwinds it by the way of equators. (Secret of Light, p. 251.)

Gravitation and Radiation

"Every wave is considered a compression-expansion pump. The whole universe is a giant pump. The two-way piston of the universal pump constitutes the universal heartbeat. A one-way universe is as impossible as a one way pump is possible. The compressed condition of this universe is exactly equal to the expanded condition. The compressed condition is gravitation.

The expanded condition is radiation. Gravitation and radiation are equal opposites....This universe of electric waves is divided into wave fields.

Each wave field is equally divided by contraction of gravitation and expansion of radiation." (A New Concept of the Universe p. 23.)

"Electricity...creates tensions and strains, which we call electric potential. Electric potential is the measure of compression at any one point in the universe. Gravity is evidenced wherever compression from without is maximum. Gravity is a focal point from which matter desires to explode outwardly. Gravity does not pull inwardly from within as the deceptive illusion of Nature would have you believe. Neither is it the attractive force which Newton's senses were deceived into believing, for a center of gravity is a point of maximum electric potential." (Atomic Suicide, p. 89.)

Electricity And Magnetism

"Electricity is the power force of the universe. Electricity accumulates power into high potential from the universal constant at the sacrifice of one of its time dimensions. Electricity is the force of resistance to the established speed of the universal constant of energy...Electricity is the generative force.

Magnetism is the speed force, the time force, of the universe. Magnetism dissipates the high potential power dimension and transforms it into time dimension of low potential.

Magnetism is the force which works toward a return to the established motion of the universal constant of energy...Magnetism is the radiative force." (The Universal One, p. 68.)

The Nine Octave Wave of the Elements, the Basis for Transmutation of Elements.

"Every completed idea in nature is expressed in nine efforts - or stages - which are eight octave waves plus the matured centering amplitude wave of the whole nine octave cycle.

Each octave of the elements grows from its inert gas just as a tree grows from a seed. The inert gases record and store for repetition all that has gone before in that octave.

By dividing the entire nine-octave cycle into its two opposite half cycles, one half being generoactive and the other half being equally radioactive, a comprehensive base for transmutation will replace the present concept of dislodging electrons, or adding to them, to transmute one into another.

The age of transmutation will come only through the transformation of man, and man's transformation can only come only "by the renewing of his Mind" through new knowing. It has ever been that way since the dawn of Consciousness, and will ever be" (A New Concept Of The Universe, pp. 115, 119.)

"MAN DOES NOT WEAVE THE WEB OF LIFE, HE IS BUT A STRAND IN IT. ANYTHING HE DOES TO THE WEB, HE DOES TO HIMSELF"

- Chief Seattle, 1855

QUANTUM FLUCTUATIONS OF EMPTY SPACE: A NEW ROSETTA STONE OF PHYSICS?

BY DR HAL PUTHOFF

In a recent article in the popular press (The Economist, January 7, 1989, pp. 71-74) it was noted how many of this century's new technologies depend on the Alice-in-Wonderland physics of quantum mechanics, with all of its seeming absurdities.

For starters, one begins with the observation that classical physics tells us that atoms, which can be likened to a miniature solar system with electron planets orbiting a nuclear sun, should not exist.

The circling electrons should radiate away their energy like microscopic radio antennas and spiral into the nucleus. But atoms do exist, and multitudinous other phenomena which don't obey the rules do occur.

To resolve this cognitive dissonance physicists introduced quantum mechanics, which is essentially a set of mathematical rules to describe what in fact does happen. But when we re-ask the question, "why didn't the electron radiate away its energy?" the answer is, basically, "well, in quantum theory it doesn't."

It's at this point that not only the layman but some physicists can begin to feel that someone's not playing fair. I say only some physicists because the majority of working physicists are content simply to use quantum rules that work, that describe (if only statistically) what will happen in a given experiment under certain conditions.

These are the so-called "logical positivists" who, in a philosophical sense, are like the news reporter whose only interest is the bottom line.

There are nevertheless individuals here and there who still want to know why the electron didn't radiate, why Einstein's equations are in this form and not another, where does the ubiquitous zero-point energy that fills even empty space come from, why quantum theory, and perhaps the biggest question of all, how did the universe get started anyway?

Surprisingly enough, there may be answers to these seemingly unanswerable meta-level questions. Perhaps even more surprising, they seem to be emerging, as a recent book title put it, from "Something called Nothing" (1), or to put it more correctly, from empty space, the vacuum, the void.

To comprehend the significance of this statement, we will have to take a detour into the phenomenon of fluctuations with which quantum theory abounds, including the fluctuations of empty space itself.

Before the advent of quantum theory, physics taught that any simple oscillator such as a pendulum, when excited, would eventually come to rest if not continuously energized by some outside force such as a spring. This is because of friction losses in the system.

After it was recognized that quantum theory was a more accurate representation of nature, one of the findings of quantum theory was that such an oscillator would in fact not come to total rest but rather would continue to "jiggle" randomly about its resting point with a small amount of energy always present, the so-called "zero-point energy."

Although it may not be observable to the eye on your grandfather clock because it is so minute, it is nonetheless very real, and in many physical systems has important consequences.

One example is the presence of a certain amount of "noise" in a microwave receiver that can never be gotten rid of, no matter how perfect the technology. This is an example which shows that not only physical devices such as pendulums have this property of incessant fluctuation, but also fields, such as electromagnetic fields (radio waves, microwaves, light, X-rays, etc.).

As it turns out, even though the zero-point energy in any particular mode of an electromagnetic field is minute, there are so many possible modes of propagation (frequencies, directions) in open space, the zero-point energy summed up over all possible modes is quite enormous; in fact, greater than, for example, nuclear energy densities. And this in all of so-called "empty" space around us. Let us concentrate on the effects of such electromagnetic zero-point fluctuations.

With such large values, it might seem that the effects of electromagnetic zero-point energy should be quite obvious, but this is not the case because of its extremely uniform density.

Just as a vase standing in a room is not likely to fall over spontaneously, so a vase bombarded uniformly on all sides by millions of ping pong balls would not do likewise because of the balanced conditions of the uniform bombardment.

The only evidence of such a barrage might be minute jiggling of the vase, and similar mechanisms are thought to be involved in the quantum jiggle of zero-point motion. However, there are certain conditions in which the uniformity of the background electromagnetic zero-point energy is slightly disturbed and leads to physical effects.

One is the slight perturbation of the lines seen from transitions between atomic states known as the Lamb Shift (2), named after its discoverer, Willis Lamb.

Another, also named for its discoverer, is the Casimir Effect, a unique attractive quantum force between closely-spaced metal plates.

An elegant analysis by Milonni et. al. at Los Angeles National Laboratory (3) shows the Casimir force to be due to radiation pressure from the background electromagnetic zero-point energy which has become unbalanced due to the presence of the plates, and which results in the plates being pushed together.

From this it would seem that it might be possible to extract electrical energy from the vacuum, and indeed the possibility of doing so (at least in principle) has been shown in a paper of that same name by Robert Forward (4) at Hughes Research Laboratories in Malibu, California.

What does this have to do with our basic questions? Let's start with the question as top why the electron in a simple hydrogen atom doesn't radiate as it circles the proton in its stable ground state atomic orbit.

This issue has been re-addressed in a recent paper by the author, this time taking into account what has been learned over the years about the effects of zero-point energy. (5) There it is shown that the electron can be seen as continually radiating away its energy as predicted by classical theory, but simultaneously absorbing a compensating amount of energy from the ever-present sea of zero-point energy in which the atom is immersed, and an assumed equilibrium between these two processes leads to the correct values for the parameters known to define the ground-state orbit.

Thus the ground-state orbit is set by a dynamic equilibrium in which collapse of the state is prevented by the presence of the zero-point energy. The significance of this observation is that the very stability of matter itself appears to depend on the presence of the underlying sea of electromagnetic zero-point energy.

With regard to the gravitational attraction that is described so well by Einstein's theory, its fundamental nature is still not well understood. Whether addressed simply in terms of Newton's Law, or with the full rigor of general relativity, gravitational theory is basically descriptive in nature, without revealing the underlying dynamics for that description.

As a result, attempts to unify gravity with the other forces (electromagnetic, strong and weak nuclear forces) or to develop a quantum theory of gravity have foundered again and again on difficulties that can be traced back to a lack of understanding at a fundamental level.

To rectify these difficulties, theorists by and large have resorted to ever-increasing levels of mathematical sophistication and abstraction, as in the recent development of supergravity and superstring theories.

Taking a completely different tack when addressing these difficulties in the sixties, the well-known Russian physicist Andrei Sakharov put forward the somewhat radical hypothesis that gravitation might not be a fundamental interaction at all, but rather a secondary or residual effect associated with other (non-gravitational) fields. (6)

Specifically, Sakharov suggested that gravity might be an induced effect brought about by changes in the zero-point energy of the vacuum, due to the presence of matter.

If correct, gravity would then be understood as a variation on the Casimir theme, in which background zero-point-energy pressures were again responsible.

Although Sakharov did not develop the concept much further, he did outline certain criteria such a theory would have to meet such as predicting the value of the gravitational constant G in terms of zero-point-energy parameters.

The approach to gravity outlined by Sakharov has recently been addressed in detail, and with positive results, again by the author. (7)

The gravitational interaction is shown to begin with the fact that a particle situated in the sea of electromagnetic zero-point fluctuations develops a "jitter" motion, or ZITTERBEWEGUNG as it is called.

When there are two or more particles they are each influenced not only by the fluctuating background field, but also by the fields generated by the other particles, all similarly undergoing ZITTERBEWEGUNG motion, and the inter-particle coupling due to these fields results in the attractive gravitational force.

Gravity can thus be understood as a kind of long-range Casimir force. Because of its electromagnetic underpinning, gravitational theory in this form constitutes what is known in the literature as an "already-unified" theory.

The major benefit of the new approach is that it provides a basis for understanding various characteristics of the gravitational interaction hitherto unexplained.

These include the relative weakness of the gravitational force under ordinary circumstances (shown to be due to the fact that the coupling constant G depends inversely on the large value of the high-frequency cutoff of the zero-point-fluctuation spectrum); the existence of positive but not negative mass (traceable to a positive-only kinetic-energy basis for the mass parameter); and the fact that gravity cannot be shielded (a consequence of the fact that quantum zero-point-fluctuation "noise" in general cannot be

shielded, a factor which in other contexts sets a lower limit on the detectability of electromagnetic signals).

As to where the ubiquitous electromagnetic zero-point energy comes from, historically there have been two schools of thought: existence by fiat as part of the boundary conditions of the universe, or generation by the (quantum-fluctuation) motion of charged particles that constitute matter.

A straightforward calculation of the latter possibility has recently been carried out by the author. (8)

It was assumed that zero-point fields drive particle motion, and that the sum of particle motions throughout the universe in turn generate the zero-point fields, in the form of a self-regenerating cosmological feedback cycle not unlike a cat chasing its own tail.

This self-consistent approach yielded the known zero-point field distribution, thus indicating a dynamic-generation process for the zero-point fields.

Now as to the question of why quantum theory. Although knowledge of zero-point fields emerged from quantum physics as that subject matured, Professor Timothy Boyer at City College in New York took a contrary view.

He began asking in the late sixties what would happen if we took classical physics as it was and introduced a background of random, classical fluctuating fields of the zero-point spectral distribution type. Could such an all-classical model reproduce quantum theory in its entirety, and might this possibility have been overlooked by the founders of quantum theory who were not aware of the existence of such a fluctuating background field?

(First, it is clear from the previously-mentioned cosmological calculation that such a field distribution would reproduce itself on a continuing dynamic basis.)

Boyer began by tackling the problems that led to the introduction of quantum theory in the first place, such as the blackbody radiation curve and the photoelectric effect. One by one the known quantum results were reproduced by this upstart neoclassical approach, now generally referred to as Stochastic Electrodynamics (SED) (9), as contrasted to quantum electrodynamics (QED).

Indeed, Milonni at Los Alamos noted in a review of the Boyer work that had physicists in 1900 thought of taking this route, they would probably have been more comfortable with this classical approach than with Planck's hypothesis of the quantum, and one can only speculate as to the direction that physics would have taken then.

The list of topics successfully analyzed within the SED formulation (i.e., yielding precise quantitative agreement with QED treatments) has now

been extended to include the harmonic oscillator, Casimir and Van der Waals forces and the thermal effects of acceleration through the vacuum, to name a few.

Out of this work emerged the reasons for such phenomena as the uncertainty principle, the incessant fluctuation of particle motion, the existence of Van der Waals forces even at zero temperature, and so forth, all shown to be due to the influence of the unceasing activity of the random background fields.

There are also some notable failures in SED, such as transparent derivation of something as simple as Schrodinger's equation, which turns out as yet to be an intractable problem.

Therefore, it is unlikely that quantum theory as we have come to know it and love it will be entirely replaced by a refurbished classical theory in the near future.

Nonetheless, the successes to date of the SED approach, by its highlighting of the role of background zero-point-fluctuations, means that when the final chapter is written on quantum theory, field fluctuations in empty space will be accorded an honored position.

And now to the preeminent question of all, where did the Universe come from? Or, in modern terminology, what started the Big Bang? Could quantum fluctuations of empty space have something to do with this also?

Well, Prof. Edward Tryon of Hunter College of the City University of New York thought so when he proposed in 1973 that our Universe may have originated as a fluctuation of the vacuum on a large scale, as "simply one of those things which happen from time to time." (10)

This idea was later refined and updated within the context of inflationary cosmology by Alexander Vilenkin of Tufts University, who proposed that the universe is created by quantum tunneling from literally nothing into the something we call our universe. (11)

Although highly speculative, these types of models indicate once again that physicists find themselves turning again and again to the Void (and the fluctuations thereof) for their answers.

Those with a practical bent of mind may be left with yet one more unanswered question. Can this emerging Rosetta Stone of physics be used to translate such lofty insights into mundane application?

Could the engineer of the future specialize in "vacuum engineering?" Could the energy crisis be solved by harnessing the energies of the zero-point sea?

After all, since the basic zero-point energy form is highly random in nature, and tending towards self-cancellation, if a way could be found to bring

order out of chaos, the, because of the highly energetic nature of the vacuum fluctuations, relatively large effects could in principle be produced.

Given our relative ignorance at this point, we must fall back on a quote given by Podolny (12) when contemplating this same issue.

"It would be just as presumptuous to deny the feasibility of useful application as it would be irresponsible to guarantee such application."

Only the future can reveal the ultimate use to which Mankind will put this remaining Fire of the Gods, the quantum fluctuations of empty space.

References

1. Podolny, "Something Called Nothing" (Mir Publ., Moscow, 1986)
2. W. E. Lamb, Jr., and R. C. Retherford, "Fine Structure of the Hydrogen Atom by a Microwave Method," Phys. Rev. 72, 241 (1947)
3. P. W. Milonni, R. J. Cook and M. E. Goggin, "Radiation Pressure from the Vacuum: Physical Interpretation of the Casimir Force," Phys. Rev. A 38, 1621 (1988)
4. L. Forward, "Extracting Electrical Energy from the Vacuum by Cohesion of Charged Foliated Conductors," Phys. Rev. B 30, 1700 (1984)
5. Puthoff, "Ground State of Hydrogen as a Zero-Point Fluctuation-Determined State," Phys. Rev. D 35, 3266 (1987) See also science news article, "Why Atoms Don't Collapse," in New Scientist, p. 26 (9 July 1987)
6. D. Sakharov, "Vacuum Quantum Fluctuations in Curved Space and the Theory of Gravitation, Dokl. Akad. Nauk. SSSR (Sov. Phys. - Dokl. 12, 1040 (1968). See also discussion in C. W. Misner, K. S. Thorne and J. A. Wheeler, Gravitation (Freeman, San Francisco, 1973), p. 426
7. E. Puthoff, "Gravity as a Zero-Point Fluctuation Force," Phys. Rev. A 39, 2333 (1989)
8. E. Puthoff, "Source of Vacuum Electromagnetic Zero-Point Energy," subm. to Phys. Rev. A, (March 1989)
9. See review of SED by T. H. Boyer, "A Brief Survey of Stochastic Electrodynamics," in Foundations of Radiation Theory and Quantum Electrodynamics, edited by A. O. Barut (Plenum, New York, 1980) See also the very readable account "The Classical Vacuum," in Scientific American, p. 70 (August 1985)
10. E. P. Tryon, "Is the Universe a Vacuum Fluctuation?" Nature 246, 396 (1973)
11. Vilenkin, "Creation of Universes from Nothing," Phys. Lett. 117B, 25 (1982)
12. R. Podolny, Ref. 1, p. 211

CAN THE VACUUM BE ENGINEERED FOR SPACEFLIGHT APPLICATIONS?

OVERVIEW OF THEORY AND EXPERIMENTS

H. E. PUTHOFF, PH.D.

INSTITUTE FOR ADVANCED STUDIES AT AUSTIN

Abstract

Quantum theory predicts, and experiments verify, that empty space (the vacuum) contains an enormous residual background energy known as zero-point energy (ZPE). Originally thought to be of significance only for such esoteric concerns as small perturbations to atomic emission processes, it is now known to play a role in large-scale phenomena of interest to technologists as well, such as the inhibition of spontaneous emission, the generation of short-range attractive forces (e.g., the Casimir force), and the possibility of accounting for sonoluminescence phenomena. ZPE topics of interest for spaceflight applications range from fundamental issues (where does inertia come from, can it be controlled?), through laboratory attempts to extract useful energy from vacuum fluctuations (can the ZPE be "mined" for practical use?), to scientifically-grounded extrapolations concerning "engineering the vacuum" (is "warp-drive" space propulsion a scientific possibility?). Recent advances in research into the physics of the underlying ZPE indicate the possibility of potential application in all these areas of interest.

Introduction

The concept "engineering the vacuum" was first introduced by Nobel Laureate T. D. Lee in his book Particle Physics and Introduction to Field Theory. As stated there: "The experimental method to alter the properties of the vacuum may be called vacuum engineering.... If indeed we are able to alter the vacuum, then we may encounter some new phenomena, totally unexpected." Recent experiments have indeed shown this to be the case.

With regard to space propulsion, the question of engineering the vacuum can be put succinctly: "Can empty space itself provide the solution?" Surprisingly enough, there are hints that potential help may in fact emerge quite

literally out of the vacuum of so-called "empty space." Quantum theory tells us that empty space is not truly empty, but rather is the seat of myriad energetic quantum processes that could have profound implications for future space travel. To understand these implications it will serve us to review briefly the historical development of the scientific view of what constitutes empty space.

At the time of the Greek philosophers, Democritus argued that empty space was truly a void, otherwise there would not be room for the motion of atoms. Aristotle, on the other hand, argued equally forcefully that what appeared to be empty space was in fact a plenum (a background filled with substance), for did not heat and light travel from place to place as if carried by some kind of medium?

The argument went back and forth through the centuries until finally codified by Maxwell's theory of the luminiferous ether, a plenum that carried electromagnetic waves, including light, much as water carries waves across its surface. Attempts to measure the properties of this ether, or to measure the Earth's velocity through the ether (as in the Michelson-Morley experiment), however, met with failure. With the rise of special relativity which did not require reference to such an underlying substrate, Einstein in 1905 effectively banished the ether in favor of the concept that empty space constitutes a true void. Ten years later, however, Einstein's own development of the general theory of relativity with its concept of curved space and distorted geometry forced him to reverse his stand and opt for a richly-endowed plenum, under the new label spacetime metric.

It was the advent of modern quantum theory, however, that established the quantum vacuum, so-called empty space, as a very active place, with particles arising and disappearing, a virtual plasma, and fields continuously fluctuating about their zero baseline values. The energy associated with such processes is called zero-point energy (ZPE), reflecting the fact that such activity remains even at absolute zero.

The Vacuum as a Potential Energy Source

At its most fundamental level, we now recognize that the quantum vacuum is an enormous reservoir of untapped energy, with energy densities conservatively estimated by Feynman and others to be on the order of nuclear energy densities or greater. Therefore, the question is, can the ZPE be "mined" for practical use? If so, it would constitute a virtually ubiquitous energy supply, a veritable "Holy Grail" energy source for space propulsion.

As utopian as such a possibility may seem, physicist Robert Forward at Hughes Research Laboratories demonstrated proof-of-principle in a paper published in 1984, "Extracting Electrical Energy from the Vacuum by Cohesion of Charged Foliated Conductors." Forward's approach exploited a

phenomenon called the Casimir Effect, an attractive quantum force between closely-spaced metal plates, named for its discoverer, H. G. B. Casimir of Philips Laboratories in the Netherlands. The Casimir force, recently measured with high accuracy by S. K. Lamoreaux at the University of Washington, derives from partial shielding of the interior region of the plates from the background zero-point fluctuations of the vacuum electromagnetic field. As shown by Los Alamos theorist Milonni and his colleagues, this shielding results in the plates being pushed together by the unbalanced ZPE radiation pressures. The result is a corollary conversion of vacuum energy to some other form such as heat. Proof that such a process violates neither energy nor thermodynamic constraints can be found in a paper by D. Cole and myself published in 1993 under the title "Extracting Energy and Heat from the Vacuum."

Attempts to harness the Casimir and related effects for vacuum energy conversion are ongoing in our laboratory and elsewhere. The fact that its potential application to space propulsion has not gone unnoticed by the Air Force can be seen in its request for proposals for the FY-1986 Defense SBIR Program. Under entry AF86-77, Air Force Rocket Propulsion Laboratory (AFRPL) Topic: Non-Conventional Propulsion Concepts we find the statement: "Bold, new non-conventional propulsion concepts are solicited.... The specific areas in which AFRPL is interested include.... (6) Esoteric energy sources for propulsion including the zero point quantum dynamic energy of vacuum space."

Several experimental formats for tapping the ZPE for practical use are under investigation in our laboratory. An early one of interest is based on the idea of a Casimir pinch effect in non-neutral plasmas, basically a plasma equivalent of Forward's electromechanical charged-plate collapse (see Puthoff, 1990). The underlying physics is described in a paper submitted for publication by myself and M. Piestrup, and it is illustrative that the first of several patents issued to a consultant to our laboratory, K. R. Shoulders, contains the descriptive phrase "... energy is provided... and the ultimate source of this energy appears to be the zero-point radiation of the vacuum continuum."

Another intriguing possibility is provided by the phenomenon of sonoluminescence, bubble collapse in an ultrasonically-driven fluid which is accompanied by intense, sub-nanosecond light radiation. Although the jury is still out as to the mechanism of light generation, Nobelist Julian Schwinger has argued for a Casimir interpretation. Possibly related experimental evidence for excess heat generation in ultrasonically-driven cavitation in heavy water is claimed in an EPRI Report by George and Stringham of E-Quest Sciences, although attributed to a nuclear micro-fusion process. Work is under way in our laboratory to see if this claim can be replicated.

Yet another proposal for ZPE extraction is described in a patent issued to Mead and Nachamkin. The approach proposes the use of resonant dielectric spheres, slightly detuned from each other, to provide a beat-frequency downshift of the more energetic high-frequency components of the ZPE to a more easily captured form. We are discussing the possibility of a collaborative effort between us to determine whether such an approach is feasible.

Finally, an approach utilizing micro-cavity techniques to perturb the ground state stability of atomic hydrogen is under consideration in our lab. It is based on a 1987 paper of mine in which I put forth the hypothesis that the nonradiative nature of the ground state is due to a dynamic equilibrium in which radiation emitted due to accelerated electron ground state motion is compensated by absorption from the ZPE. If this hypothesis is true, there exists the potential for energy generation by the application of the techniques of so-called cavity quantum electrodynamics QED. In cavity QED, excited atoms are passed through Casimir-like cavities whose structure suppresses electromagnetic cavity modes at the transition frequency between the atom's excited and ground states. The result is that the so-called "spontaneous" emission time is lengthened considerably (for example, by factors of ten), simply because spontaneous emission is not so spontaneous after all, but rather is driven by vacuum fluctuations. Eliminate the modes, and you eliminate the zero-point fluctuations of the modes, hence suppressing decay of the excited state. As stated in an April 1993 Scientific American review article on cavity QED, "An excited atom that would ordinarily emit a low-frequency photon cannot do so, because there are no vacuum fluctuations to stimulate its emission...." In its application to energy generation, mode suppression would be used to perturb the hypothesized dynamic ground-state absorption/emission balance to lead to energy release (patent pending).

An example in which Nature herself may have taken advantage of energetic vacuum effects is discussed in a model published by ZPE colleagues A. Rueda of California State University at Long Beach, B. Haisch of Lockheed-Martin, and D. Cole of IBM. In a paper published in the Astrophysical Journal in 1995, they propose that the vast reaches of outer space constitute an ideal environment for ZPE acceleration of nuclei and thus provide a mechanism for "powering up" cosmic rays. Details of the model would appear to account for other observed phenomena as well, such as the formation of cosmic voids. This raises the possibility of utilizing a "sub-cosmic-ray" approach to accelerate protons in a cryogenically-cooled, collision-free vacuum trap and thus extract energy from the vacuum fluctuations by this mechanism.

The Vacuum as the Source of Gravity and Inertia

What of the fundamental forces of gravity and inertia that we seek to overcome in space travel? We have phenomenological theories that describe their effects (Newton's Laws and their relativistic generalizations), but what of their origins?

The first hint that these phenomena might themselves be traceable to roots in the underlying fluctuations of the vacuum came in a 1967 study published by the well-known Russian physicist Andrei Sakharov. Searching to derive Einstein's phenomenological equations for general relativity from a more fundamental set of assumptions, Sakharov came to the conclusion that the entire panoply of general relativistic phenomena could be seen as induced effects brought about by changes in the quantum-fluctuation energy of the vacuum due to the presence of matter. In this view the attractive gravitational force is more akin to the induced Casimir force discussed above, than to the fundamental inverse square law force between charged particles with which it is often compared. Although speculative when first introduced by Sakharov, this hypothesis has led to a rich and ongoing literature (including a contribution of my own in 1989) on quantum-fluctuation-induced gravity, a literature that continues to yield deep insight into the role played by vacuum forces.

Given an apparent deep connection between gravity and the zero-point fluctuations of the vacuum, a similar connection must exist between these self-same vacuum fluctuations and inertia. This is because it is an empirical fact that the gravitational and inertial masses have the same value, even though the underlying phenomena are quite disparate. Why, for example, should a measure of the resistance of a body to being accelerated, even if far from any gravitational field, have the same value that is associated with the gravitational attraction between bodies? Indeed, if one is determined by vacuum fluctuations, so must the other.

To get to the heart of inertia, consider a specific example in which you are standing on a train in the station. As the train leaves the platform with a jolt, you could be thrown to the floor. What is this force that knocks you down, seemingly coming out of nowhere? This phenomenon, which we conveniently label inertia and go on about our physics, is a subtle feature of the universe that has perplexed generations of physicists from Newton to Einstein. Since in this example the sudden disquieting imbalance results from acceleration "relative to the fixed stars," in its most provocative form one could say that it was the "stars" that delivered the punch. This key feature was emphasized by the Austrian philosopher of science Ernst Mach, and is now known as Mach's Principle. Nonetheless, the mechanism by which the stars might do this deed has eluded convincing explication.

Addressing this issue in a 1994 paper entitled "Inertia as a Zero-Point Field Lorentz Force," Haisch, Rueda and I were successful in tracing the problem of inertia and its connection to Mach's Principle to the ZPE properties of the vacuum. In a sentence, although a uniformly moving body does not experience a drag force from the (Lorentz-invariant) vacuum fluctuations, an accelerated body meets a resistance (force) proportional to the acceleration. By accelerated we mean, of course, accelerated relative to the fixed stars. It turns out that an argument can be made that the quantum fluctuations of distant matter structure the local vacuum-fluctuation frame of reference (see Puthoff, "Source...," 1989). Thus, in the example of the train the punch was delivered by the wall of vacuum fluctuations acting as a proxy for the fixed stars through which one attempted to accelerate.

The implication for space travel is this: Given the evidence generated in the field of cavity QED (discussed above), there is experimental evidence that vacuum fluctuations can be altered by technological means. This leads to the corollary that, in principle, gravitational and inertial masses can also be altered.

The possibility of altering mass with a view to easing the energy burden of future spaceships has been seriously considered by the Advanced Concepts Office of the Propulsion Directorate of the Phillips Laboratory at Edwards Air Force Base. Gravity researcher Robert Forward accepted an assignment to review this concept. His deliverable product was to recommend a broad, multi-pronged effort involving laboratories from around the world to investigate the inertia model experimentally.

After a one-year investigation Forward finished his study and submitted his report to the Air Force, who published it under the title Mass Modification Experiment Definition Study. The Abstract reads in part:

".... Many researchers see the vacuum as a central ingredient of 21st-Century physics. Some even believe the vacuum may be harnessed to provide a limitless supply of energy. This report summarizes an attempt to ind an experiment that would test the Haisch, Rueda and Puthoff (HRP) conjecture that the mass and inertia of a body are induced effects brought about by changes in the quantum-fluctuation energy of the vacuum.... It was possible to find an experiment that might be able to prove or disprove that the inertial mass of a body can be altered by making changes in the vacuum surrounding the body."

With regard to action items, Forward in fact recommends a ranked list of not one but four experiments to be carried out to address the ZPF-inertia concept and its broad implications. The recommendations included investigation of the proposed "sub-cosmic-ray energy device" mentioned earlier, and the investigation of an hypothesized "inertia-wind" effect proposed

by our laboratory and possibly detected in early experimental work by Forward and Miller, though the latter possibility is highly speculative at this point.

Engineering the Vacuum for "Warp Drive"

Perhaps one of the most speculative, but nonetheless scientifically-grounded, proposals of all is the so-called Alcubierre Warp Drive. Taking on the challenge of determining whether Warp Drive a la Star Trek was a scientific possibility, general relativity theorist Miguel Alcubierre of the University of Wales set himself the task of determining whether faster-than-light travel was possible within the constraints of standard theory. Although such clearly could not be the case in the flat space of special relativity, general relativity permits consideration of altered spacetime metrics where such a possibility is not a priori ruled out. Alcubierre's further self-imposed constraints on an acceptable solution included the requirements that no net time distortion should occur (breakfast on Earth, lunch on Alpha Centauri, and home for dinner with your wife and children, not your great-great-great grandchildren), and that the occupants of the spaceship were not to be flattened against the bulkhead by unconscionable accelerations.

A solution meeting all of the above requirements was found and published by Alcubierre in Classical and Quantum Gravity in 1994. The solution discovered by Alcubierre involved the creation of a local distortion of spacetime such that spacetime is expanded behind the spaceship, contracted ahead of it, and yields a hypersurfer-like motion faster than the speed of light as seen by observers outside the disturbed region. In essence, on the outgoing leg of its journey the spaceship is pushed away from Earth and pulled towards its distant destination by the engineered local expansion of spacetime itself. (For follow-up on the broader aspects of "metric engineering" concepts, one can refer to a paper published by myself in Physics Essays in 1996.) Interestingly enough, the engineering requirements rely on the generation of macroscopic, negative-energy-density, Casimir-like states in the quantum vacuum of the type discussed earlier. Unfortunately, meeting such requirements is beyond technological reach without some unforeseen breakthrough, as emphasized by Pfenning and Ford in a recently submitted manuscript.

Related, of course, is the knowledge that general relativity permits the possibility of wormholes, topological tunnels which in principle could connect distant parts of the universe, a cosmic subway so to speak. Publishing in the American Journal of Physics in 1988, theorists Morris and Thorne initially outlined in some detail the requirements for traversible wormholes and have found that, in principle, the possibility exists provided one has access to Casimir-like, negative-energy-density quantum vacuum states. This has led to a rich literature, summarized recently in a 1996 book by Matt Visser of

Washington University, St. Louis. Again, the technological requirements appear out of reach for the foreseeable future, perhaps awaiting new techniques for cohering the ZPE vacuum fluctuations in order to meet the energy-density requirements.

Conclusions

We began this discussion with the question: "Can the vacuum be engineered for spaceflight applications?" The answer is: "In principle, yes." However, engineering-wise it is clear that there is a long way to go. Given the cliche "a journey of 1000 miles begins with the first steps," it is also clear that we can take those first steps now in the laboratory. Given that Casimir and related effects indicate the possibility of tapping the enormous residual energy in the vacuum-fluctuation ZPE, and the demonstration in cavity QED that portions of the ZPE spectrum can be manipulated to produce macroscopic technological effects such as the inhibition of spontaneous emission of excited states in quantum systems, it would appear that the first steps along this path are visible. This, combined with newly-emerging concepts of the relationship of gravity, inertia and warp drive to properties of the vacuum as a manipulable medium, indicate yet further reaches of possible technological development, although requiring yet unforeseen breakthroughs with regard to the possibility of engineering vacuum fluctuations to produce desired results.

Where does this leave us? As we peer into the heavens from the depth of our gravity well, hoping for some "magic" solution that will launch our spacefarers first to the planets and then to the stars, we are reminded of Arthur C. Clarke's phrase that highly-advanced technology is essentially indistinguishable from magic. Fortunately, such magic appears to be waiting in the wings of our deepening understanding of the quantum vacuum in which we live.

References

1. Lee, T.D. (1988) Particle Physics and Introduction to Field Theory, Harwood Academic, London.
2. Feynman, R.P., and Hibbs, A.R. (1965) Quantum Mechanics and Path Integrals, McGraw-Hill, New York.
3. Forward, R.L. (1984) "Extracting electrical energy from the vacuum by cohesion of charged foliated conductors", Phys. Rev. B, Vol. 30, No. 4, pp. 1700-1702.
4. Casimir, H.G.B. (1948) "On the attraction between two perfectly conducting plates", Proc. Kon. Ned. Akad. van Weten., Vol. 51, No. 7, pp. 793-796.

5. Lamoreaux, S.K. (1997) "Demonstration of the Casimir force in the 0.6 to 6mm range", Phys. Rev. Lett., Vol. 78, No. 1, pp. 5-8.
6. Milonni, P.W., Cook, R.J., and Goggin, M.E. (1988) "Radiation pressure from the vacuum: Physical interpretation of the Casimir force", Phys. Rev. A, Vol. 38, No. 3, pp. 1621-1623.
7. Cole, D.C., and Puthoff, H.E. (1993) "Extracting energy and heat from the vacuum", Phys. Rev. E, Vol. 48, No. 2, pp. 1562-1565.
8. Puthoff, H.E. (1990) "The energetic vacuum: Implications for energy research", Spec. in Sci. and Tech., Vol. 13, No. 4, pp. 247-257.
9. Puthoff, H.E., and Piestrup, M.A. (1997) "On the possibility of charge confinement by van der Waals/Casimir-type forces", subm. to Phys. Lett. B.
10. Shoulders, K.R. (1991) "Energy conversion using high charge density", U.S. Patent No. 5,018,180, issued May 21, 1991.
11. Schwinger, J. (1993) "Casimir light: The source", Proc. Natl. Acad. Sci., Vol. 90, pp. 2105-2106.
12. George, D.R., and Stringham, R.S. (1996) "Technical report on the demonstration of new technology producing heat and nuclear products via cavitation induced micro-fusion in the E-Quest Sciences Mark II research device", EPRI Project Final Report, Work Order #3170-28, Palo Alto, CA, May 1996.
13. Mead, Jr., F.B., and Nachamkin, J. (1996) "System for converting electromagnetic radiation energy to electrical energy", U.S. Patent No. 5,590,031, issued Dec. 31, 1996.
14. Puthoff, H.E. (1987) "Ground state of hydrogen as a zero-point-fluctuation-determined state", Phys. Rev. D, Vol. 35, No. 10, pp. 3266-3269.
15. Haroche, S, and Raimond, J.-M. (1993) "Cavity quantum electrodynamics", Sci. Am., April 1993, pp. 54-62.
16. Rueda, A., Haisch, B. and Cole, D.C. (1995) "Vacuum zero-point field pressure instability in astrophysical plasmas and the formation of cosmic voids", Astrophys. J., Vol. 445, pp. 7-16.
17. Sakharov, A. (1968) "Vacuum quantum fluctuations in curved space and the theory of gravitation", Sov. Phys.-Dokl., Vol. 12, No. 11, pp. 1040-1041.
18. Puthoff, H.E. (1989, 1993) "Gravity as a zero-point-fluctuation force", Phys. Rev. A, Vol. 39, No. 5, pp. 2333-2342; Vol. 47, No. 4, pp. 3454-3455.
19. Haisch, B., Rueda, A., and Puthoff, H.E. (1994) "Inertia as a zero point field Lorentz force", Phys. Rev. A, Vol. 49, No. 2, pp. 679-694.

20. Puthoff, H. E. (1989, 1991) "Source of vacuum electromagnetic zero-point energy", Phys. Rev. A, Vol. 40, No. 9, pp. 4857-4862; Vol. 44, No. 5, pp. 3385-3386.
21. Forward, R.L. (1996) "Mass modification experiment definition study", J. Sci. Exploration, Vol. 10, No. 3, pp. 325-354.
22. Forward, R.L., and Miller, L.R. (1967) "Generation and detection of dynamic gravitational-gradient fields", J. Appl. Phys., Vol. 38, No. 2, pp. 512-518.
23. Alcubierre, M. (1994) "The warp drive: Hyper-fast travel within general relativity", Class. Quant. Grav., Vol. 11, pp. L73-L77.
24. Puthoff, H.E. (1996) "SETI, the velocity-of-light limitation, and the Alcubierre warp drive: An integrating overview", Phys. Essays, Vol. 9, No. 1, pp. 156-158.
25. Pfenning, M.J., and Ford, L.H. (1997) "The unphysical nature of 'warp drive' ", subm. to Class. Quant. Grav.
26. Morris, M., and Thorne, K.S. (1988) "Wormholes in spacetime and their use for interstellar travel: A tool for teaching general relativity", Am. J. Phys., Vol. 56, No. 5, pp. 395-412.
27. Visser, M. (1996) Lorentzian Wormholes, AIP Press, Woodbury, NY.

THE NEW TESLA ELECTROMAGNETICS AND THE SECRETS OF FREE ELECTRICAL ENERGY

COMMENTS ON THE NEW TESLA ELECTROMAGNETICS

BY T. E. BEARDEN

A: Discrepancies in Present EM Theory

There are at least twenty-two major discrepancies presently existing in conventional electromagnetics theory. This paper presents a summary of those flaws, and is a further commentary on my discussion of scalar longitudinal waves in a previous paper, "Solutions to Tesla's Secrets and the Soviet Tesla Weapons," Tesla Book Company, 1981 and 1982.

I particularly wish to express my deep appreciation to two of my friends and colleagues who at this time, I believe, wish to remain anonymous. One of the two is an experimental genius who can produce items that do not work by orthodox theory.

The second is a master of materials science and electromagnetics theory. I thank them both for their exceptional contributions and stimuli regarding potential shortcoming in present electromagnetics theory, and their forbearance with the many discussions we have held on this and related subjects.

It goes without saying that any errors in this paper are strictly my own, and not the fault of either of my distinguished colleagues.

(1) In present electromagnetics theory, charge and charged mass are falsely made identical. Actually, on a charged particle, the "charge" is the flux of virtual particles on the "bare particle" of observable mass.

The charged particle is thus a "system" of true massless charge coupled to a bare chargeless mass. The observable "mass" is static, three-dimensional and totally spatial.

"Charge" is dynamic, four-dimensional or more, virtual and spatiotemporal.

Further, the charge and observable mass can be de-coupled, contrary to present theory. Decoupled charge -- that is, the absence of mass -- is simply what we presently refer to as

"Vacuum." Vacuum, spacetime, and massless charge are all identical.

Rigorously, we should utilize any of these three as an "ether," as suggested for vacuum by Einstein himself (see Max Born, Einstiein's Theory of Relativity, Revised Edition, Dover Publications, New York, 1965, p. 224). And all three of them are identically anenergy -- not energy, but more fundamental components of energy.

(2) Electrostatic potential is regarded as a purely 3-dimensional spatial stress. Instead, it is the intensity of a many-dimensional (at least four-dimensional) virtual flux and a stress on all four dimensions of spacetime.

This is easily seen, once one recognizes that spacetime is identically massless charged. (It is not "filled" with charge; rather, it is charge!) Just as, in a gas under pressure, the accumulation of additional gas further stresses the gas, the accumulation of charge (spacetime) stresses charge (spacetime).

Further, if freed from its attachment to mass, charge can flow exclusively in time, exclusively in space, or in any combination of the two. Tesla waves -- which are scalar waves in pure massless charge flux itself -- thus can exhibit extraordinary characteristics that ordinary vector waves do not possess.

And Tesla waves have extra dimensional degrees of freedom in which to move, as compared to vector waves. Indeed, one way to visualize a tesla scalar wave is to regard it as a pure oscillation of time itself.

(3) Voltage and potential are often confused in the electrostatic case, or at least thought of as "composed of the same thing." For that reason, voltage is regarded as "potential drop." This also is not true.

Rigorously, the potential is the intensity of the virtual particle flux at a single point -- whether or not there is any mass at the point -- and both the pressure and the point itself are spatiotemporal (4-dimensional) and not spatial (3-dimensional) as presently assumed.

Voltage represents the spatial intersection of the difference in potential between two seperated spatial points, and always implies at least a miniscule flow of mass current (that is what makes it spatial!).

"Voltage" is spatial and depends upon the presence of observable mass flow, while scalar electrostatic potential is spatiotemporal and depends upon the absence of observable mass flow. The two are not even of the same dimensionality.

(4) The charge of vacuum spacetime is assumed to be zero, when in fact it is a very high value. Vacuum has no mass, but it has great massless charge and virtual particle charge flux. For proof that a charged vacuum is the seat of something in motion, see G. M. Graham and D. G. Lahoz, "Observation of static electromagnetic angular momentum in vacuo," Nature, Vol. 285, 15

May 1980, pp. 154-155. In fact, vacuum IS charge, identically, and it is also spacetime, and at least four-dimensional.

(5) Contrary to its present usage, zero is dimensional and relative in its context. A three-dimensional spatial hole, for example, exists in time. If we model time as a dimension, then the spatial hole has one dimension in 4-space.

So a spatial absence is a spatiotemporal presence. In the vacuum 4-space, a spatial nothing is still a something. The "virtual" concept and mathematical concept of a derivative are simply two present ways of unconsciously addressing this fundamental problem of the dimensional relativity of zero.

(6) The concepts of "space" and "time" imply that spacetime (vacuum) has been seperated into two parts. We can only think of a space as "continuing to exist in time." To separate vacuum spacetime into two pieces, an operation is continually required.

The operator that accomplishes this splitting operation is the photon interaction, the interaction of vector electromagnetic energy or waves with mass.

I have already strongly pointed out this effect and presented a "raindrop model" or first-order physical change itself in my book, The Excalibur Briefing, Strawberry Hill Press, San Francisco, 1980, pp. 128-130.

(7) "Vector magnetic potential" is assumed to be always an aspect of (and connected to) the magnetic field. In fact it is a separate, fundamental field of nature and it can be entirely disconnected from the magnetic field. See Richard P. Feynman et al, The Feynman Lectures on Physics, Addison-Wesley Publishing Co., New York, 1964, Vol. II, pp. 15-8 to 15-14.

Curiously, this fact has been proven for years, yet it has been almost completely ignored in the West. The "(triangle)x" operator, when applied to the A-field, makes B-field.

If the (triangle)x operator is not applied, the "freed" A-field possesses much-expanded characteristics from those presently allowed in the "bound" theory. Specifically, it becomes a scalar or "shadow vector" field; it is not a normal vector field.

(8) The speed of light in vacuum is assumed to be a fundamental constant of nature. Instead it is a function of the intensity of the massless charge flux (that is, of the magnitude of the electrostatic potential) of the vacuum in which it moves. (Indeed, since vacuum and masless charge are one and the same, one may say that the speed of light is a function of the intensity of the spatiotemporal vacuum!).

The higher the flux intensity (charge) of the vacuum, the faster the speed of light in it. This is an observed fact and already shown by hardcore measurements.

For example, distinct differences actually exist in the speed of light in vacuo, when measured on the surface of the earth as compared to measurements in space away from planetary masses. In a vacuum on the surface of the earth, light moves significantly faster. For a discussion and the statistics, see B. N. Belyaev, "On Random Fluctuations of the Velocity of Light in Vacuum," Soviet Physics Journal, No. 11, Nov. 1980, pp. 37-42 (original in Russian, translation by Plenum Publishing Corporation.)

The Russians have used this knowledge for over two decades in their strategic psychotronics (energetics) program; yet hardly a single U.S. scientist is aware of the measured variation of c in vacuo. In fact, most Western scientists simply cannot believe it when it is pointed out to them!

(9) Energy is considered fundamental and equivalent to work. In fact, energy arises from vector processes, and it can be disassembled into more fundamental (anenergy) scalar components, since the vectors can.

These scalar components individually can be moved to a distant location without expending work, since one is not moving force vectors. There the scalar components can be joined and reassembled into vectors to provide "free energy" appearing at a distance, with no loss in between the initial and distant points.

For proof that a vector field can be replaced by (and considered to be composed of) two scalar fields, see E. T. Whittaker, Proceedings of the London Mathematical Society, Volume 1, 1903, p. 367. By extension, any vector wave can be replaced by two coupled scalar waves.

(10) The classical Poynting vector predicts no longitudinal wave of energy from a time-varying, electrically charged source. In fact, an exact solution of the problem does allow this longitudinal wave. See T. D. Keech and J. F. Corum, "A New Derivation for the Field of a Time-Varying Charge in Einsteins Theory," International Journal of Theoretical Physics, Vol. 20, No. 1, 1981, pp. 63-68 for the proof.

(11) The present concepts of vector and scalar are severely limited, and do not permit the explicit consideration of the internal, finer-grained structures of a vector or a scalar. That is, a fundamental problem exists with the basic assumptions in the vector mathematics itself.

The "space" of a vector field, for example, does not have inter-nested sublevels (subspaces) containing finer "shadow vectors" or "virtual vectors." Yet particle physics has already discovered that electrical reality is built that way. Thus one should actually use a "hypernumber" theory after the manner of Charles Muses.

A scalar is filled with (and composed of) nested levels of other "spaces" containing vectors, where these sum to "zero" in the ordinary observable frame without an observable vector resultant.

In Muses' mathematics, for example, zero has real roots. Real physical devices can be -- and have been -- constructed in accordance with Muses' theory. For an introduction to Muses' profound hypernumberss approach, see Charles Muses' forward to Jerome Rothstein, Communication, Ogranization and Science, The Falcon's Wing Press, Indian Hills, Colorado, 1958. See also Charles Muses', "Applied Hypernumbers: Computational Convepts," Applied Mathematics and Computation, Vol. 3, 1976. See also Charles Muses' "Hypernumbers II", Aoplied Mathematics and Computation, January 1978.

(12) With the expanded Tesla electromagnetics, a new conservation of energy law is required. Let us recapitulate for a moment. The oldest law called for the conservation of mass.

The present law calls for the conservation of "mass and energy", but not each separately. If mass is regarded as simply another aspect of energy, then the present law calls for the conservation of energy.

However, this assumes that energy is a basic, fundamental concept. Since the energy concept is tied to work and the movement of vector forces, it implicitly assumes "vector movement2 to be a "most fundamental" and irreducible concept.

But as we pointed out, Whittaker showed that vectors can always be further broken down into more fundamental coupled scalar components. Further, Tesla discovered that these "coupled components" of "energy" can be individually separated, transmitted, processed, rejoined, etc.

This directly implies that energy per se need not be conserved. The new law therefore calls for the conservation of anenergy, the COMPONENTS OF ENERGY.

These components may be coupled into energy, and the energy may be further compacted into mass. It is the sum total of the (anenergy) components -- coupled and uncoupled -- that is conserved, NOT the matter or the energy per se.

Further, this conservation of anenergy is not spatial; rather it is spatiotemporal in a spacetime of at least four or more dimensions.

(13) Relativity is presently regarded as a theory or statement about fundamental physical reality. In fact, it is only a statement about FIRST ORDER reality -- the reality that emerges from the vector interaction of electromagnetic energy with matter.

When we break down the vectors into scalars (shadow vectors or hypervectors), we immediately enter a vastly different, far more fundamental reality.

In this reality superluminal velocity, multiple universes, travel back and forth in time, higher dimensions, variation of all "fundamental constants" of nature, materialization and dematerialization, and violation of the "conservation of energy" are all involved.

Even our present Aristotlean logic -- fitted to the photon interaction by vector light as the fundamental observation mechanism -- is incapable of describing or modeling this more fundamental reality. Using scalar waves and scalar interactions as much subtler, far less limited observation/detection mechanisms, we must have a new "superrelativity" to describe the expanded electromagnetic reality uncovered by Nikola Tesla.

(14) "Charge" is assumed to be quantized, in addition to always occurring with -- and locked to -- mass. Indeed, charge is not necessarily quantized, just as it is not necessarily locked to mass. Ehrenhaft discovered and reported fractional charges for years, in the 30's and 40's, and was ignored. See P.A.M. Dirac, "Development of the Physicist's Conception of Nature", Sumposium on the Development of the Physicist's Conception of Nature, ed. Jagdish Merha, D. Reidel, Boston, 1973, pp. 12-14 for a presentation of some of Ehrenhaft's results.

Within the last few years Stanford University researchers have also positively demonstrated the existence of "fractional charge." For a layman's description of their work, see "A Spector Haunting Physics," Science News, Vol. 119, January 31, 1981, pp. 68-69.

Indeed, Dirac in his referenced article points out that Millikan himself -- in his original oildrop experiments --reported one measurement of fractional charge, but discounted it as probably due to error.

(15) Presently, things are always regarded as traveling through normal space. Thus we use or model only the most elementary type of motion -- that performed by vector electromagnetic energy. We do not allow for things to "travel inside the vector flow itself."

Yet, actually, there is a second, more subtle flow inside the first, and a third, even more subtle flow inside the second, and so on. We may operate inside, onto, into, and out of energy itself -- and any anenergy component of energy.

There are hypervectors and hyperscalars unlimited, within the ordinary vectors and scalars we already know. Further, these "interlan flows" can be engineered and utilized, allowing physical reality itself to be directly engineered, almost without limits.

(16) We always assume everything exists in time. Actually, nothing presently measured exists in time, because the physical detection/measurement process of our present instruments destroys time, ripping it off and tossing it away -- and thereby "collapsing the wave function."

Present scientific methodology thus is seriously flawed. It does not yield fundamental (spacetime) truth, but only a partial (spatial) truth. This in turn leads to great scientific oversights.

For example. mass does not exist in time, but mass x time (masstime) does. A fundamental constant does not exist in time, but "constant x time" does. Energy does not exist in time, but energy x time (action) does. Even space itself does not exist in time -- spacetime does.

We are almost always one dimension short in every observable we model. Yet we persist in thinking spatially, and we have developed instruments that detect and measure spatially only. Such instruments can never measure and detect the phenomenology of the nested substrata of time.

By using scalar technology, however, less limited instruments can indeed be constructed -- and they have been. With such new instruments, the phenomenology of the new electromagnetics can be explored and an engineering technology developed.

(17) We do not recognize the connection between nested levels of virtual state (particle physics) and orthogonally rotated frames (hyperspaces). Actually, the two are identical, as I showed in the appendix to my book, The Excalibur Briefing, Strawberry Hills Press, San Francisco, 1980, pp. 233-235.

A virtual particle in the laboratory frame is an observable particle in a hyperspatial frame rotated more than one orthogonal turn away. This of course implies that the hyperspatial velocity of all virtual particles is greater than the speed of light.

The particle physicist is already deeply involved in hyperspaces and hyperspatial charge fluxes without realizing it. In other words , he is using tachyons (particles that move faster than light) without realizing it.

(18) Presently quantum mechanics rigorously states that time is not an observable, and therefore it cannot be measured or detected. According to this assumption, one must always infer time from spatial measurements, because all detections and measurements are spatial.

With this assumption, our scientists prejudice themselves against looking for finer, subquantal measurement methodologies and instrumentation. Actually this present limitation is the result of the type of electromagnetics we presently know, where all instruments (the "measurers") have been interacted with by vector electromagnetic energy (light).

Every mass that has temperature (and all masses do!) is continually absorbing and emitting photons, and in the process they are continually connecting to time and disconnecting from time. If time is continually being carried away from the detector itself by its emitted photons, then the detector cannot hold and "detect" that which it has just lost.

With Tesla electromagnetics, however, the fundamental limitation of our present instruments need not apply. With finer instruments, we can show there are an infinite number of levels to "time", and it is only the "quantum level time" which is continually being lost by vector light (photon) interaction.

By using subquantal scalar waves, instruments can move to deeper levels of time -- in which case the upper levels of time ARE measureable and detectable, in contradistinction to present assumptions.

(19) In the present physics, time is modeled as, and considered to be, a continuous dimension such as length. This is only a gross approximation. Indeed, time is not like a continuous "dimension," but more like a series of "stiches," each of which is individually made and then ripped out before the next stitch appears.

"Vector light" photons interact one at a time, and it is this interaction with mass that creates quantum change itself. The absorption of a photon -- which is energy x time -- by a spatial mass converts it to masstime: the time was added by the photon.

The emission of a photon tears away the time, leaving behind again a spatial mass. It is not accidental, then, that time flows at the speed of light, for it is light which contains and carries time. It is also not accidental that the photon IS the individual quantum.

Since all our instruments presently are continually absorbing and emitting photons, they are all "quantized," and they accordingly "quantize" their detections. This is true because all detection is totally internal to the detector, and the instruments only detect only their own internal changes.

Since these detections are on a totally granular quantized background, the detections themselves are quantized. The Minkowski model is fundamentally erroneous in its modelling of time, and for that reason relativity and quantum mechanics continue to resist all attempts to successfully combine them, quantum field theory notwithstanding.

(20) Presently, gravitational field and electrical field are considered mutually exclusive. Actually this is also untrue.

In 1974, for example, Santilli proved that electrical field and gravitational fiend indeed are not mutually exclusive. In that case one is left with two possibilities: (a) they are totally the same thing, or (b) they are partially the same thing. For the proof, see R. M. Santilli, "Partons and Gravitation: Some Puzzling Questions," Annals of Physics, Vol. 83, No. 1, March 1974.

With the new Tesla electromagnetics, pure scalar waves in time itself can be produced electrically , and electrostatics (when the charge has been seperated from the mass) becomes a "magic" tool capable of directly affecting anything that exists in time -- including the gravitational field. Antigravity and the intertial drive are immediate and direct consequences of the new electromagnetics.

(21) Presently, mind is considered metaphysical, not a part of physics, and not affected by physical means. Literally, the prevailing belief of Western scientists is that man is a mechanical robot -- even though relativity depends entirely upon the idea of the idea of the "observer."

Western science today thus has essentially become dogmatic, and in this respect borders on a religion. Since this "religion," so to speak, is now fairly well entrenched in its power in the state, Western science is turning itself into an oligarchy.

But mind occupies time, and when we measure and affect time, we can directly measure and affect mind itself. In the new electromagnetics, then, Man regains his dignity and his humanity by restoring the reality of mind and thought to science. In my book, The Excalibur Briefing, I have already pointed out the reality of mind and a simplified way in which it can be modeled to the first order.

With scalar wave instruments, the reality of mind and thought can be measured in the laboratory, and parapsychology becomes a working, engineering, scientific discipline.

(22) Multiple valued basic dimensional functions are either not permitted or severely discouraged in the present theory. For one thing, integrals of multiple valued derivative functions have the annoying habit of "blowing up" and yielding erroneous answers, or none at all. And we certainly do not allow multiple types of time!

This leads to the absurdity of the present interpretation of relativity, which permits only a single observer (and a single observation) at a time. So if one believes as "absurd" a thing as the fact that more than one person can observe an apple at the same time, the present physics fails.

However, the acceptance of such a simple proposition as multiple simultaneous observation leads to a physics so bizarre and incredible that most Western physicists have been unable to tolerate it, much less examine its consequences.

In the physics that emerges from multiple simultaneous observation, all possibilities are real and physical.

There are an infinite number of worlds, orthogonal to one another, and each world is continually splitting into additional such "worlds" at a stupendous rate. Nonetheless, this physics was worked out by Everett for

his doctoral thesis in 1956, and the thesis was published in 1957. (See Hugh Everett, III, The Many-Worlds Interpretation of Quantum Mechanics: A Fundamental Exposition, with papers by J. A. Wheeler, B. S. DeWitt, L. N. Cooper and D. Van Vechten, and N. Graham; eds. Bryce S. Dewitt and Neill Graham, Princeton Series in Physics, Princeton University Press, 1973.)

Even though it is bizarre, Everett's physics is entirely consistent with the present experimental basis of physics. The present electromagnetic theory is constructed for only a single "rodl" or universe -- or "level."

The expanded theory, on the other hand, contains multiply nested levels of virtual state charge -- and these levels are identically the same as orthogonal universes, or "hyperframes."

Multiple kinds -- and values -- of time also exist. The new concept differs from Everett's, however, in that the orthogonal universes intercommunicate in the virtual state.

That is, an observable in one universe is always a virtual quantity in each of the other universes. Thus one can have multi-level "continuities" and "discontinuities" simultaneously, without logical conflict.

It is precisely these levels of charge -- these levels of scalar vacuum -- that lace together the discontinuous quanta generated by the interaction of vector light with mass.

However, to understand the new electromagnetic reality, one requires a new, expanded logic which contains the old Aristotlean logic as a subset. I have already pointed out the new logic in my paper, "A Conditional Criterion for Identity, Leading to a Fourth Law of Logic," 1979, available from the National Technical Information Center, AD-A071032.

Even as logic is extended, quantum mechanics, quantum electrodynamics, and relativity are drastically changed by the Tesla electromagnetics, as I pointed out in my paper, "Solutions to Tesla's Secrets and the Soviet Tesla Weapons," Tesla Book Company, 1580 Magnolia, Millbrae, CA, 94030, 1980.

The present electromagnetics is just a special case of a much more fundamental electromagnetics discovered by Nikola Tesla, just as Newtonian physics is a special case of the relativistic physics.

But in the new electromagnetics case, the differences between the old and the new are far more drastic and profound.

Additional References

1. Boren, Dr. Lawence Milton, "Discovery of the Fundamental Magnetic Charge (Arising from the new Conservation of Magnetic Energy),"

1981/1982 (private communication). Dr. Boren has a cogent argument that the positron is the fundamental unit of magnetic charge. His theory thus assigns fundamentally different natures to positive charge and negative charge.

In support of Dr. Boren, one should point out that the "positive" end of circuits can simply be "less negative" than the "negative" end. In other words, the circuit works simply from higher accumulation of negative charges (the "negative" end) to a lesser accumulation of negative charges (the "positive" end).

Nowhere need there be positive charges (protons, positrons, etc.) to make the circuit work. Dr. Borens theory, though dramatic at first encounter, nonetheless bears close and meticulous examination -- particularly since he has been able to gather experimental data which support his theory and disagree with present theory.

2. Eagle, Albert, "An Alternative Explanation of Relativity Phenomena," philosophical Magazine and Journal of Science, No. 191, December 1939, pp. 694 -701.

3. Ehrenaft, Felix and Wasser, Emanuel, "Determination of the Size and Weight of Single Submicroscopic Spheres of the Order of Magnitude r = 4 x 10(-5) cm. to 5 x 10(-6) cm., as well as the Production of Real Images of Submicroscopic Particles by means of Ultraviolet Light," Phil. Mag. and Jour. of Sci., Vol. II (Seventh Series), No. 7, July 1926, pp. 30-51.

4. Ehrenhaft, Felix and Wasser, Emanuel, "New Evidence of the Existance of Charges smaller than the Electron - (a) The Micromagnet; (b) The Law of Resistance; (c) The computation of errors of the Method," Phil. Mag. and Jour. of Sci., Vol. V (Seventh Series), No. 28, February 1928, pp. 225-241.

5. See also Ehrenhaft's last paper dealing with the electronic charge, in Philosophy of Science, Vol. 8, 1941, p. 403.

6. McGregor, Donald Rait, The Inertia of the Vacuum: A New Foundation for Theoretical Physics, Exposition Press, Smithtown, NY, First Edition, 1981, pp. 15-20.

7. Ignat'ev, Yu. G. and Balakin, A. B., "Nonliner Gravitational Waves in Plasma," Soviet Physics Journal, Vol. 24, No. 7, July 1981, (U.S. Translation, Consultants Bureau, NY, JAnurary 1982), pp. 593-597.

8. Yater, Joseph C., "Relation of the second law of thermodynamics to the power conversion of energy fluctuations," Phys. Review A, Vol. 20, no. 4, October 1979, pp. 1614-1618.

9. DeSantis, Romano M. et al, "On the Analysis of Feedback Systems With a Multipower Open Loop Chain," October 1973, available through the Defense Technical Information Center (AD 773188).

10. Graneau, Peter, "Electromagnetic Jet-Propulsion in the Direction of current flow," Nature, Vol. 295, 28 Janurary 1982, pp. 311-312

11. "Gravity and acceleration aren't always equivalent," New Scientist, 17 September 1981, p. 723.

12. Gonyaev, V. V., "Experimental Determination of the Free-Fall Acceleration of a Relativistic Charged Particle. II. A Cylindrical Solenoid in a Time-Independent Field of Inertial Forces," Izvestiya VUZ, Fizika, No. 7, 1979, pp. 28-32. English Translation: Soviet Physics Journal, No. 7, 1979, pp. 829-833.

If one understands the new, expanded electromagnetics, this Soviet paper indicates a means of generating antigravity and pure inertial fields.

13. R. Schaffranke, "The Development of Post-Relativistic Concepts in Physics and Advanced Technology Abroad," Energy Unlimited, No. 12, Winter 1981, pp. 15-20.

14. F. K. Preikschat, A Critical look at the theory of Relativity, Library of Congress Catalogue No. 77-670044. Extensive compilation of measurements of the speed of light. Clearly shows the speed of light is not constant but changes, sometimes even daily.

B: The Secret of Electrical Free Energy

Present electromagnetic theory is only a special case of the much more fundamental electromagnetic theory discovered by Nikola Tesla at the turn of the century.

Pure vacuum is pure charge flux, without mass. The vacuum has a very high electrical potential -- something on the order of 200 million volts, with respect to a hypothetical zero charge.

Thus in an ordinary electrical circuit, each point of the "ground" -- which has the same potential as the vacuum -- actually has a non-zero absolute potential.

This circuit ground has a value of zero only with respect to something else which has the same absolute electrical potential.

Voltage, which is always associated with a flow of electrical "mass" current (even if only a miniscule flow), is, by definition, a difference dropped in potential when a charge mass moves between two spatially seperated points.

What we have termed "electrical current" only flows where there is a suitable conducting medium between things which have a difference in absolute potential.

Furthermore, between any two points in any material, there is considered to be a finite resistance -- if we apply a voltage ahd have a mass current flowing between the two points!

Rigorously, to have one of the three is to have them all. To lose one is to lose all three. Immediately we see a major error in present theory: One can have a "difference in scalar potential" between two points without having a "voltage drop" between them.

Specifically, if no mass current flows between them, no resistance exists between them, and no voltage drop exists between them.

In the same fashion, one can have a "scalar wave" through the vacuum without a voltage wave. In that case, the wave has no E-field and no H-field.

The only reason one has an E field around a statically charged object is because the charged electrons accumulated on the object are actually in violent motion. It is this motion of the charged masses that produces E-field -- as well as H-field whenever that entire E-field ensemble moves through laborotory space.

Now let us reason together the "approximate" manner utilized in present electromagnetic theory. For example, let us examine a bird sitting on a high tension line.

The bird sits on the high tension line without a flow of mass electricity, because there is no significant difference in potential drop between the bird and the line. Specifically, between the birds two feet -- each in contact with a different portion of the line --there exists no potential difference.

This is true even though, with respect to the vacuum, each foot is at a potential that would be "100,000 volts higher," were a mass current flowing. And it is true even though the absolute potential of each foot may be some 200.1 million "volts," were a mass current flowing.

Now an interesting thing happens to the bird when he flies through the air to light upon the high tension wire. As he flies towards the wire, he is flying through the massless electrostatic potential field of the wire, for that field extends an infinite distance away from the wire.

The electrostatic potential field -- pure 0-field -- is actually the spatiotemporal intensity of the massless charge at a point. In other words, as the bird flies to the wire, he flies into an increasing "massless charge" potential, building up to 100,000 "volts" higher than the earth.

However, very little (if any) "mass flow" potential difference is experienced upon his body in approaching the wire, and so essientially no "charged mass currents" are induced in his body.

Thus the little flier safely navigates into the teeth of a very high electrostatic potential, lights upon the wire, and is not "fried" in the process.

When he lights on the wire, his body has reached the electrostatic potential that each foot's contact point has.

Again, there is no mass current flow. But his body is immersed in an increased flux of massless charge -- which is what the electrostatic potential represents. And each "virtual particle" flow in that charge represents a "massless (scalar)" electrical current.

The point is, one can have any amount of massless charge flow -- "scalar" current -- without any mechanical work being done in the system.

All electrical work in a circuit is done against the physical mass of the charged masses that flow. Rigorously, force is defined as the time rate of charge of momentum. Even in the relativistic case where F = ma + v(dm/dt), change of momentum requires mass movement. No mechanical work, and hence no energy, is expended by massless charge flow.

That is why the vacuum massless charge -- which is composed of a very high flux of massless "particles" -- normally does no work on our systems, and expends none of its very high "potential energy."

It is exactly the same as the bird which flew into an increasing scalar field as it approached the high tension wire -- no work was done upon the bird by the increasing scalar flux currents encountered by its body.

By existing "in the vacuum," so to speak, we (the whole earth) are as birds sitting on a high tension line! Until we create a significant difference in potential, via our present electromagnetic circuits, no current can flow -- anywhere.

Even if we produce potential differences, we must have a conductor and charged masses to flow, if we wish to produce mechanical work. Presently our electromagnetic theory allows us to create a difference in potential within different parts of a circuit, but only by moving and shifting charged mass.

We therefore have to do work on this electrical mass in moving it around, and we only get back the work we have put into the circuit. In other words, presently all we do is "pump" electrical mass.

Now notice what would happen to the bird on the line if we substantially "pulsed" the potential on the line. Suppose we "pulsed" it such that the bird's physical system -- considered as a circuit containing a capicitance, a resistance, an inductance, and many free electrons -- became resonant to the pulsing frequency.

In that case the "bird system" would resonate, and a great deal of electrical mass would surge back and forth in the body of the bird. In the birds body, voltage would exist, charged mass current would flow, work would be done, and the bird would be electrocuted.

Also, note that, without mass movement, electromagnetic vector fields are not produced (and a portion of the difficulty lies with the actual vector mechanics itself). Scalar (nonvector) waves continually penetrate the "space" where there is no mass movement.

This means there can exist a "delta-0" without a voltage or an E-field. The present theory does not allow this, because it always uses "q" (charge) to be charged mass. Briefly, without belaboring the point, let us just say that is the mechanical spin of the individual charged particle -- such as the electron -- which "entangles" or "knits together" or "couples" independent scalar waves into vector waves.

A vector wave is simply two coupled scalar waves. The entire force field concept -- such as the E-field and the B-field -- is operationally defined in terms of the force exhibited on a test particle, or test mass.

Rigorusly, an E-field does not exist as a force field in a vacuum, but as two coupled scalar 0-fields "tumbling about each other." When these two coupled, tumbling fields meet a spinning electron, e.g., the force emerges on the electron mass. In short, movement of a rotating mass changes delta-0 to "voltage", creating the V/I/R triad.

By "accululating charged mass particles" -- such as electrons -- one certainly can increase the value of 0, which represents the charge intensity or "scalar electrostatic potential." However, that is not the only way to increase it.

Resonance and rotation of charged mass can also be appropriately employed to vary the vacuum charge potential 0, under proper circumstances.

By the correct application of rotary principles and Tesla electromagnetic theory, it is possible to oscillate -- and change the vacuum potential itself, in one part of an electrical system.

Thus by correct procedures a part of a system can be electrically altered so that the absolute value of its "ground" (vacuum) potential differs significantly from the normal vacuum-ground state.

THE FINAL SECRET OF FREE ENERGY

BY T. E. BEARDEN

Foreword

This paper contains the real secret of tapping the vacuum energy very simply, using almost any source of potential (battery, electrostatic generator a la the Swiss electrostatic device (the Testatika), elevated wire w/250 V/m in the earth/ionosphere potential, etc.).

The objective is for the moderately technical reader to understand how to build and understand not only a single device, but also hundreds of different kinds of them. While it is quite simple, the "magic principle" contained in this paper only took me some 30 years to discover.

The precise definitions necessary to understand the free energy rationale are included. Also included are some very simple pseudo equations for the process. Do not underestimate these simple pseudo equations __ they tell the tale that's needed.

Also, there has been little or no time to "dress up" the paper. It's simply written down very informally, to get the necessary points across.

Nearly everything fundamental that we've been taught about EM energy is wrong or incomplete. Even the definition of energy in physics is wrong! Let me summarize a few of the things that are wrong with the classical electromagnetics (CEM) model as follows:

CEM is still utilizing a model based on a material ether. Although the Michelson-Morley experiment destroyed the material ether assumption in 1887, the classical EM model has never been corrected. It also contains no definition of charge, and no definition of potential. In many cases, algorithms to calculate a magnitude are baldfacedly and erroneously advanced as "definitions."

CEM still prescribes the force fields as the causes of all EM phenomena; it has been known since 1959 that forces are effects and not causes, that EM force fields exist only in and on the charged particles of mass in the physical system, and that the potentials are the primary causes of EM phenomena.

The lack of definitive definitions of mass and force in mechanics is carried over into EM theory; there is no adequate definition of EM force or of EM mass. The magnitude of the electrical charge on an electron is not quantized. Instead, it is discretized, being a function of the magnitude of

the virtual photon flux (VPF) exchange between the vacuum and the charged particle.

When the charged particle is placed in a potential that differs from ambient, then the magnitude of the VPF __ and hence the magnitude of the electric charge on the electron __ is altered. The CEM assumption of an "empty vacuum" is totally falsified by modern quantum mechanics.

The CEM notion that EM force fields and force field waves exist in vacuum is totally false. Only potentials and potential gradients exist in the vacuum. EM waves in vacuum are not forcefield waves as CEM prescribes; instead, they are oscillations of potentials and potential gradients.

Potentials have a bidirectional EM wave-pair structure, where the bidirectional wave pairs are phaselocked in a harmonic series. In each wave pair, photons and antiphotons are continually coupling (into spin-2 gravitons) and decoupling. This is where gravitation and electromagnetics are unified.

The CEM notion that singular EM forces exist in either matter or the vacuum is false; Newton's third law requires that all forces exist in oppositive pairs. Not a single one of the equations universally taught as "Maxwell's equations" ever appeared in any book or paper by James Clerk Maxwell; instead, they are Oliver Heaviside's equations.

Maxwell's actual theory was written in quaternions, which is a complete system of mathematics. The Heaviside/Gibbs vector version

(1) has a lower topology,

(2) is not a complete system of mathematics, and

(3) actually captured only a subset of Maxwell's actual theory.

Tensor theory does not recapture that which was lost. There are even more errors in CEM, but these should suffice to make the point: Classical electromagnetics theory is seriously flawed, with archaic foundations, riddled with errors, and it should be completely redone.

Until this revamping of CEM is accomplished, the present model solidly blocks free energy, antigravity, a unified physical field theory, and a unified theory of mind and matter interaction.

A second paper this year will detail the exact long-term causative mechanism for cancer and leukemia, and the exact mechanism for essentially 100% cure of terminal tumors in laboratory animals, demonstrated by the Priore team in France in the late 1960s and early 1970s. The same mechanism can be used to cure AIDS.

Throughout the world, humankind is suffering. In the poor populations of the world, early death is the norm, as is frequent famine. One third of the human race goes to bed hungry each night. Protein starvation of children is common. One third of the human race is infected with worms.

Many other diseases ravage the farflung poor peoples of the world. They have little or no industries. They have no abundant electrical power. They have little education, and little modern knowledge. They have little or no medical treatment. In short, they are born without hope; live in misery, filth, disease, and poverty, and die without dignity.

Meanwhile, the factories, cities, and enclaves of the "developed and developing" worlds belch forth fumes, toxic and hazardous wastes, and pollutants. They also spew forth weaponry which for one reason or another is used to arm the poorer nations, for use in destroying themselves and their impoverished neighbors. Warfare, terror, banditry, despotism, and all the four horsemen of the Apocolypse are truly loosed in the earth.

We simply must do better than that. And we can do better than that! But to do better, we've got to make the basics available to impoverished nations, cheaply and easily. Primary among their needs are energy and medical treatment. Given those, populations can be stabilized, people educated, development begun, and the living standard drastically elevated. So that is the immediate goal.

In this paper, I am freely giving away what required me an arduous 30 years of my life to discover. Shortly we will also detail the new methodology for a new therapeutic science, hopefully to cure the diseases that ravage humanity.

God willing, this paper will trigger a thousand, or even ten thousand, scientists and engineers to develop overunity energy devices. If so, shortly we can rid our biosphere of noxious automobile and factory exhausts, radioactive nuclear wastes, and massive oil spills.

We can remove many of the hydrocarbon combustion pollutants from the air, stop acid rain and the destruction of our forests, and stop the steady rise of carbon monoxide in our air. If that truly tends toward a "Greenhouse" effect, then we can halt that effect as well.

The Creator has always given us bountiful free electrical energy, everywhere, easily and readily for the simple taking. It has only been our own blindness and folly that have prevented us from seeing and using this free energy bounty.

So here is the final secret of abundant, free electrical energy.

Please use the knowledge well and see that its benefits also accrue to those impoverished ones who need it so desperately. Remember the adage, "Inasmuch as you have done it to these little ones..." This is for those little ones. You are our brothers and sisters. We want you to live. And we want you to have a better quality of life, not just bare existence. We care.

Tom Bearden February 9, 1993

Some Definitions

The Quantum Mechanical Vacuum: First we need some definitions. We start by assuming the quantum mechanical vacuum.(1) Empty "spacetime" is filled with an incredibly intense flux of virtual particles. It is a plenum, not an emptiness. We shall be interested only in the fantastic flux of virtual photons, for we are discussing electromagnetics.

Energy and Potential: Energy is any ordering, either static or dynamic, in the virtual particle flux of vacuum. EM energy is any ordering, either static or dynamic, in the virtual photon flux (VPF) of vacuum. That is, for a particular kind of "field" energy, we simply choose the so-called quantum particle of that field, and consider only that kind of virtual particle flux.

Potential is any ordering, either static or dynamic, in the virtual particle flux of vacuum. Hey! That's exactly the same definition as energy. Quite correct. Energy and potential are identically the same. Neither is presently defined correctly in physics.

Energy is normally defined as "Energy is the capacity to do work." That's totally false. Energy has the capacity to do work, because work is correctly defined as the dissipation (disordering; scattering) of energy (order).

The scattering of energy is work. It is not energy! I.e., energy is not definable as its own scattering!

Look at it this way: A man has the capacity to catch fish. That is true, but it is not a definition, since a definition must in some sense be an identity. You cannot say that a man is the capacity to catch fish! That may be a submitted definition, all right, but it is false. Similarly, energy has the capacity to do work; that is one of its attributes. But energy IS the ordering in the VPF (we are referring from now on primarily only to EM).

Scalar and Vector Potentials: The scalar potential is any static (with respect to the external observer) ordering in the VPF of vacuum. The vector potential is any dynamic (with respect to the external observer) ordering in the VPF of vacuum. We shall be interested in the electrostatic scalar potential. So it is a static ordering __ a stationary template __ in the VPF of vacuum, much as a whirlpool is a stationary ordering (template, form) in the rushing flow of a river.

The Scalar Potential Has An Internal Structure

The Structure of the Scalar Potential: According to rigorous proofs by Whittaker(2) and Ziolkowski,(3) any scalar potential can be mathematically decomposed into a harmonic series of bidirectional wave pairs. [Figure 1] shows this Whittaker/Ziolkowski (WZ) structure. In each pair, the

forward-time wave is going in one direction, and its phase conjugate (time-reversed) replica wave is going in the other.

According to the so-called distortion correction theorem(4) of nonlinear phase conjugate optics, this PCR wave must precisely superpose spatially with its partner wave in the pair. The two waves are in-phase spatially, but 180 degrees out of phase in time.

The wave is made of photons, and the antiwave (PCR wave) is made of antiphotons. It follows that, as wave and antiwave pass through each other, the photons and antiphotons are coupling and uncoupling with each other, because the antiphoton is a PCR photon, and PCR's precisely superpose spatially with their partner.

A photon or antiphoton has wave characteristics, because it has a frequency; if the wave aspects are perfectly ordered and perfectly correlated, then so are the photon's particle aspects.

A Potential Is An Ordering Across the Universe: So we have __ astoundingly __ perfect VPF inner ordering infolded in the electrostatic scalar potential! We also have perfect wave/antiwave ordering infolded in there.

When you collect a simple set of charges on a small ball or in a region, the scalar EM potential from that set of charges reaches across the universe. In it you have an infinite harmonic series of phase-locked time-forward EM waves going out from the charges to all distant points of the entire universe. And you have an infinite harmonic series of phase-locked time-reversed EM waves coming from all points of the universe, back to the "collected charges" source.

A Potential Is A River of Energy: The point is, you have established a mighty, hidden, 2-way river of energy between that collection of charges and every other point in the universe. There is infinite energy in each of those infolded waves and antiwaves.

But in a localized region, the energy density in each wave is finite. Since in finite circuits the potential interacts with a localized set of mass, we shall be concerned with the local energy density (joules/coulomb) of the potential.

But forget the conventional myth of visualizing the potential as pushing a unit charge in from infinity "against the force field" __ there isn't any force field in the vacuum, as is well-known in quantum mechanics. Also, Newton's third law requires all forces to occur in pairs __ each pair consisting of a force and its 3rd law reaction force.

From that viewpoint alone, there is no such thing as an EM forcefield or forcefield wave in the vacuum. There are just gradients of the vacuum potential present in the vacuum. In the vacuum, an EM wave is

actually a wave of the phase locked gradients of the electrostatic scalar potential and of the magnetostatic scalar potential. And each such gradient wave is simultaneously accompanied by its phase conjugate gradient wave, because of Newton's third law.

Newton's third law requires forces to occur in pairs of equal but antiparallel forces.

Both wave and antiwave co-exist simultaneously in the vacuum EM wave.(5) Therefore it's a stress potential wave, not a force field wave. It's more like an electromagnetic sound wave,(6) and so it is a longitudinal wave, not a transverse wave.

In the EM vacuum wave's interaction with matter (the so-called "photon" interaction), the wave-half normally interacts with the electron shells of the atom, giving translation forces, while the anti-wave half interacts with the atomic nucleus, giving the Newtonian 3rd law reaction (recoil) forces (waves). The EM wave in vacuum is an electrogravitational wave.

Energy Is Internally Infinite and Unlimited: A static potential __ which is identically excess energy __ is internally dynamic and infinite. Energy is internally infinite and unlimited! But it has a finite energy density in a local region of space time.

Since energy interacts with matter locally, we shall be concerned with the local energy density (joules per coulomb).

A Principle of Great Importance: The only way you can have a "chunk" or finite amount of energy to dissipate in a circuit as work is to first have a potential's local energy density interact with a local finite mass collector. The normal interacting mass collector is the free electrons (the free electron gas) in the circuit.

You can have, e.g., (joules/coulomb x coulomb); (joules/gram x grams); (joules/m3 x m3); etc.

Voltage, Force, Potential Gradients, Loads, and Work: Now let's look at circuitry aspects. Conventionally they are a mess. Voltage is "essentially" defined as the "drop in potential." In other words, it's the dissipation (disordering) of a "finite amount" of potential gradient. But the only way you can get a "finite amount" of infinite energy/potential gradient is by first interacting the potential gradient's internal, finite, excess energy density with a finite "collector" mass. E.g., (joules/coulomb available for collection) x (coulombs collecting) = excess joules collected on the interacting coulombs, available for dissipation.

So voltage is really the dissipation of a finite collection of excess EM energy/potential gradient. The dissipation of potential or of its gradient is not potential! You cannot logically define either potential or energy as it's own dissipation!

We presently use the notion of "voltage" in two completely contradictory ways in electrical physics. Here's how we got the confusion: We take a potential gradient (which has a local energy density), and we "collect" it across some charged masses in a locality __ usually the free electrons in the free electron gas in our circuitry. That is, we express the finite energy density of the potential gradient (before collection onto charges) in the local region in terms of energy per coulomb.

The potential gradient actually is a change to the ambient potential, and so it contains an excess energy density (the magnitude may be either positive or negative). We then collect this potential (actually this potential density) on a certain number of coulombs, which places tiny little gradients of potential across (coupled to) each free electron. The local excess energy density of the potential gradient multiplied by the amount of collecting mass gives the amount of excess energy collected (on the interacting charges/coulombs).

On each collecting particle, that little gradient, together with the coupling particle, constitutes a tiny force. F is not just equal to ma (non relativistic case); instead, F = (ma), where (mass x acceleration) is considered as a unitary, inseparable thing. So that little potentialized electron (that little EM force) moves itself around the circuit. In the load (scatterer), the little potentialized electron (the little force) is subjected to jerks and accelerations, thus radiating energy (shucking its gradient). Since this is done in all directions in the scatterer (load), that gets rid of the gradient, reducing the "little force" (potentialized electron) to zero because the little potential gradient is lost due to radiation.

Collecting And Dissipating Energy

Energy Dissipation and Collection: Without further ado, we consider the scalar potential's local energy density in terms of joules per coulomb. That is, in a specific glob of charges (i.e., in finite circuits), the amount of energy collected from a potential gradient onto the finite number of charges receiving/collecting it, is equal to the number of joules of energy per coulomb that is in the potential gradient, times the number of coulombs collecting (receiving) the potential gradient. The current is the activated (potentialized) coulombs per second that dissipate their potential gradients during that second. The current multiplied by the time the current flows gives the activated coulombs that dissipated their activation (potentialization) during that flow time. Dissipating, activated coulombs multiplied by the excess energy collected per activated coulomb gives the energy dissipated (the work or scattering done) in the load.

We define collection as the connection of a potential gradient (a source) to the charged masses in a circuit element (the element is called the collector), which for a finite delay time does not allow its potentialized free electrons to move as current.

In the collector, during this delay time these trapped electrons are "activated" by potential gradients being coupled to them.

Technically, that delay time in the collector is known as relaxation time,(7) in the case of the free electron gas(8) (in a wire or in a circuit element). A collector then is a circuit element that has a usable, finite relaxation time.

During that relaxation time, the trapped electrons are potentialized without movement as current; each collecting/receiving free electron gets a little gradient across it, but no current yet flows. In other words, during this finite relaxation time (collection time), we extract potential from the source, but no current.

Thus we extract energy (potential), but no power (which is voltage x amperage). During the relaxation time, we extract from the source only a flow of VPF, which is continually replaced in the source by the vacuum's violent VPF exchange with the source's bipolarity charges.

We do not extract power from the battery/source during relaxation time, but we extract free energy density. That free energy density, coupling with a finite quantity of electrons, gives us a collected finite amount of energy. With that background, let's start again, and go through this in a useful "free energy" manner.

The Electron Gas. We refer to the conventional model of the free electron gas in a wire.(9) Although the electrons in this gas actually move by quantum mechanical laws and not by classical laws, we shall simply be dealing with the "on the average" case.

So we will speak of the electrons and their movement in a classical sense, rather than a quantum mechanical sense, as this will suffice very well for our purposes.

When one connects a circuit to a source of potential gradient (say, to a battery), the first thing that happens nearly instantly is that the potential gradient races onto the coupling wire and heads down it at almost the speed of light. As it goes onto the wire, this gradient "couples" to the free electrons in the free electron gas.

However, inside the wire these electrons can hardly move down the wire at all; they can only "slip" once in a while, yielding a "drift" velocity of a fraction of a cm/sec.(10) On the surface, things are just a little bit different. Most of the "current" in a wire, as is well-known, moves along the surface, giving us the "skin" effect. [For that reason, many cables are stranded of finer

wires, to provide more skin surface per cm3 of copper, and hence more current-carrying capability per cm3 of copper.]

So initially little gradients of potential appear on and across each free electron, with a single little electrostatic scalar potential [V0] appearing on each electron, and coupled to it. The couplet of V0 x Me, where Me is the mass of the electron, constitutes a small deltaEe. [This is rigorous; the conventional EM notion that an E field exists in the vacuum is absurd, and it is well-known in QM that no observable force field exists in the vacuum. As Feynman pointed out, only the potential for the force field exists in the vacuum,(11) not the force field as such. Or as Lindsay and Margenau pointed out in their Foundations of Physics, one does not have an observable force except when observable mass is present.12].

We have stated it even stronger:

Not only is F = ma, but F =- ma (nonrelativistic case).(13) (the term =- in the paper is actually 3 stacked parallel lines) Since no observable mass exists in vacuum, then no observable F exists there either.

Force, Coupled Gradients, and Electron Translation

Electrons Coupled to a Potential Gradient Move Themselves. The point is, when activated by a "coupled potential gradient," the activated electron moves itself until it loses its activation (its coupled potential gradient).

Let me say that again, in a little more detail. Forget the standard notion that a force field such as the E-field causes electrons to move. Also forget the notion that the E-field is given by E = -V0 (where 0 is the electrostatic scalar potential).

In foundations of physics, those equations are known to be incorrect for the vacuum. EM force fields are known (in QM foundations theory) to be effects, existing only in and on the charged particles, and not existing separately at all,(14) or in the vacuum at all.(15) Instead of E = -V0, in the vacuum the correct equation would be something like this: PE = -V0.

In this case, we have correctly stated that the potential gradient PE provides the potential for producing an antiparallel E-field in and on a coupling/collecting charged mass, and the magnitude and direction of that potential gradient will be given by -V0, if and only if a charged mass particle is first introduced so that it couples to PE.

At any rate, the activated/potentialized electron moves itself. The reason is that it constitutes a force. Force =- (mass x acceleration) (non relativistic case) (again, the symbol =- is 3 stacked parallel bars). So the potentialized/activated electron is continuously accelerating. However, it is prevented from easily moving down the wire directly. To begin to do that, it essentially has to first move to the outer skin of the copper conductor.

The Collector: We now consider a circuit element that we called a collector. (It could be a special coil made of special material, a capacitor with doped plates rather than simple conducting plates, or any one of a number of things).

The objective is for the collector to be made of special material so that it has a free electron gas whose electrons are momentarily not free to move as current (they continue to move violently around microscopically, but essentially with zero net macroscopic translation) for a finite delay (relaxation) time, while they are settling themselves upon the surface and preparing to move as current.

Let's call the electrons NNTE (no net translation electrons) during that finite delay (relaxation time). During that "no-current" delay time, the NNTE electrons become potentialized/activated by the potential gradient impressed across the collector. So at the end of the NNT time, the NNTE electrons are potentialized, and each is of the form [V0 x Me].

The Secret of Free Energy

Two Circuits/Two Cycles: We are going to use two circuits and two cycles, as shown in [Figure 2]:

(1) We shall connect a collector to a primary source of potential (to a battery) during the short time that current does not yet flow, but potential does. (In other words, during the relaxation time of the collector, we allow the VPF to flow onto the NNTE electrons of the collector and potentialize (activate) them, but do not yet allow the electrons themselves to flow as current, but only to move transversely in the wiring and collector.)

This is cycle one of a 2-cycle process: This is collection of a specific amount of current-free potential gradient __ power-free energy __ off the potential-source (the battery) onto a collector. During the collection cycle/time, current does not and must not flow (we are discussing the ideal case). We are freely " charging up" the collector as a secondary battery/source.

(2) At the end of the collection (potentialization / activation) time/cycle in circuit one, the potentialized collector (the charged secondary source) is sharply switched away from its connection to the primary potential source (the battery), and at the same time it is instantly switched into a separate closed circuit with the load. This is important: In cycle two, the potentialized collector (with its finite amount of excess trapped EM energy) and the load are connected in a completely separate circuit, and one that is closed, with no connection at all to the original source of potential (in this case, to the battery). Specifically, this "load and potentialized collector"

circuit is completely separate from the primary source; during cycle two the primary source (the battery) is not connected to anything.

In other words, all we've taken from the primary source (the battery) is current-free, force-field-free potential gradient. So to speak, we've taken a "chunk of potential gradient" from the source, nothing else. You simply multiply the potential gradient's local energy density (the so-called "voltage", which is really excess joules per coulomb) by the number of coulombs of charge that is "activated" (that "collects" this voltage or excess joules/coulomb) in the collector.

Specifically, we have not taken any power from the battery itself, and so we have not done any internal work inside the battery upon its internal resistance, by a "closed circuit electron flow" back into the battery. We have not permitted such a flow.

Instead, we are using the activated collector as a temporary, secondary battery. We will utilize this secondary battery in a conventional manner to power the load, which will also kill the secondary battery (dissipate its trapped EM energy). But that will not affect the primary source. The primary source is never used to directly power the load. It is only used as an infinite source of potential gradient (i.e., as an infinite source of energy density).

The Standard Power Extraction Circuit

The Conventional Circuit: We digress momentarily: In the standard electrical method, the potential source (which is a bipolarity) is connected across the load. This connects both the external load and the internal resistance of the battery itself in series, as the "total circuit load." Electrons then pour through the external load circuit and through the internal battery resistance, from the "electron rich" polarity of the source to its "electron poor" opposite polarity.

The scattering of energy in the internal battery resistance is actually doing work to upset the chemistry that is maintaining the battery's charge separation (the bipolarity). In this manner the source's separation of charges (which is the "gate" furnishing the potential/energy gradient) is being destroyed as the current flows, and this in turn destroys the source of the potential gradient.

In other words, normally we engineers are trained to kill the bipolarity, which kills the potential source itself! Incredible as it may be, we engineers and scientists have been trained to utilize the free "trapped EM energy" furnished by nature through the source, to destroy the source of the energy/potential, with the same vigor as we power the external load! In fact, our teachers themselves simply have never learned any other way to do it except this deliberately "self-destructive" manner!

A Waterwheel Analogy

Imagine, if you will, a waterwheel that powers a mill, with a sluice gate upstream in a river, that diverts some river water into the sluice carrying water to the wheel when the sluice gate is opened into the river. The diverted water flows down to the waterwheel, turning it, and the spent water is fed back into the river below the millsite.

Now what fool would connect a pulley onto the waterwheel, with a rope running from the pulley to the sluice gate, so that when the wheel rotated, part of the rotational power also was utilized to close the sluice gate and shut off the water, stopping the waterwheel? If one did so, when the sluice gate was opened, the waterwheel would rotate only until the sluice gate was closed, shutting off the water. Then one would laboriously have to pay to reopen the sluice gate again, then again, then again.

No self-respecting "waterwheel engineer" would do such an unthinkable, insane thing. But that's exactly what we engineers, electrical physicists, and scientists have been trained to do! We have no energy engineers or energy scientists at all; instead, we have all been power engineers and power scientists. We have all been energy source killers!

In this paper we shall try to do better, and rectify "one of the most remarkable and inexplicable aberrations of the scientific mind which has ever been recorded in history," as Tesla called the conventional electromagnetics.16 By being energy engineers, we shall only have to pay for our energy source once, and then we shall draw as much energy from it as we wish.

External Load Power Is Free; Only The Power In The Source Costs

Here's the magic secret of free electrical power: The power in the external load is absolutely free, and it always has been free.(17) In any load circuit the only power you have to pay for, and have ever had to pay for, is the power you incorrectly use to kill your own primary source. The only power that "costs" more effort/dollars is the power erroneously utilized inside the source to "close the gate" and kill the primary source.

Your electric power company doesn't pay for any of the collected energy on your load circuits that is dissipated to power your house.

Instead, the power company charges you for its own ignorance. It charges you for its insane use of its own freely extracted electrical energy to continually kill the bipolarity in each of its generators, thus continually killing the free electrical source of that generator's energy.(18)

In any electric circuit, we can continue to indefinitely power the external load indirectly from a source, so long as we are not so naive as to use any

of the free energy we extract from the primary source to dissipate back inside the primary source itself and shut it off!

And we can easily and freely multiply electrical potential. As an example, given a single good source of potential, a hundred radial wires can be connected to the source. The same potential will now appear at each of the ends of the hundred wires.

A switcher/collector unit can then operate from each radial line's end, and power external loads, without "loading" the original primary source. This "cascading" can be continued indefinitely. A single power plant, e.g., can power the entire electrical grid of the United States. And a single automobile battery can power a large, agile, electric automobile at highway speeds, with sports car acceleration, with unlimited range, without "refueling," and with no noxious chemical exhaust.

Obvious Impacts

Environmentalists should immediately see that the chemical pollution of the biosphere by mechanista and processes to obtain energy can be dramatically reduced, to almost negligible levels. There need be no huge oil tanker spills, for there need be no huge oil tankers.

There need be no worrisome radioactive wastes from nuclear power plants, or abandoned hazardous nuclear plants when their life is finished, because there need be no nuclear power plants. There need be no noxious exhausts from jet air planes (which are really what is diminishing the ozone layer and punching holes in it), automobiles, trucks, buses, innumerable coal-fired and oil-fired power plants, etc.

The Electronic Smog Problem

In fairness we point out that, as the usage of free electrical energy mushrooms, we will be dramatically increasing the low-level EM signal density of the environment, and that too is biologically detrimental. Although beyond the scope of this paper, that cumulative biological damage mechanism has also been uncovered by this author. A formal paper is in presently in preparation for presentation in March 1993 at the annual meeting and conference of the Alabama Academy of Science.(19)

The paper will also present an entirely new definition of cancer, give its exact long-term cumulative mechanism, and give an exact, scientifically proven mechanism for eliminating cancer, leukemia, and other debilitating diseases such as AIDS. For our purposes here, we simply state that we understand the EM "electronic smog" biological damage mechanism, and how to go about developing a total counter for it. Eventually we would see a

small "counter unit" added to each power unit, alleviating the "electronic smog" problem and preventing biological damage.

Only Dissipate Energy From a Collector, Not the Source

Completion of the Collection Cycle: But to return to the completion of our collection cycle (cycle one). During collection, we have not extracted power from the source. That is vital. We have not moved the gate through which our source is furnishing free energy. We have not diminished our primary source. From our previous definitions of potential, we have indeed extracted trapped energy from the primary source, because we placed its "local energy density" across a certain finite collector/mass , instead of extracting power (dissipating energy inside the source or battery to spoil its chemistry and deplete its charge separation.).

All Energy Is Free

Here's the incredible truth. The entire universe is filled with mind boggling free energy everywhere, in the simplest of things.

Simply scrape your feet on the carpet, and you will collect perhaps 2,000 "volts" on your body. At that time, hidden EM energy is flowing from every point in the universe to your body, and from your body back to every point in the universe. We know that all macroscopic matter is filled with stupendous amounts of electrical charge. So an incredible river of energy -- a great flux -- is driving every single thing, from the smallest to the largest.

Opening a gate to extract trapped EM energy is simple. Just collect a bit of charge, or scrape your feet hard, or comb your hair briskly. All we have to do is not be stupid and close the gate once we've got it opened!

God has been most kind. We have nothing but free energy everywhere. All energy is furnished to us freely! It's our own blindness that has made us into energy source killers. All we have to do is open our eyes to the truth of nature's incredible energy bounty. We must just freely collect that bountiful fruit from Nature's tree, instead of chopping down the tree and killing it.

Dissipating The Collected Energy

The Work Cycle: We focus again on cycle two. Shortly after the now-potentialized collector is connected to the load at the beginning of cycle 2 (the power cycle, or energy dissipation cycle, or work cycle), the potential gradient across the potentialized collector is connected (transferred) across the free electrons in the bad circuit. We assume that the material of the collector and the switching time have been designed so that, shortly after switching to the loading/work cycle, the activated/potentialized free

electrons in the electron gas in the collector reach the skin of the collector, and are free to move as current.

So just after the beginning of cycle two, each of the free electrons in the load circuit now is potentialized and free to move down the wiring. Each potentialized (activated) electron has its own little individual potential gradient across it and coupled to it, due to the overall potential gradient from the collector. Remember, prior to coupling to charges, this potential gradient moves through the circuit at light speed.

An EM potential gradient coupled to a charged mass constitutes an EM force field (excess trapped EM energy per coulomb, times the number of collecting coulombs). Now each little free electron with its potential gradient forms a little E-field (force/charge), and that little E-field (force/charge) is free to move. That's all it takes to move (accelerate) the little activated electron's mass through the load (the scatterer).

We strongly stress that the potentialized/activated electron moves itself. It doesn't care whether or not the external battery is attached or not. It is its own little motorboat, with its own little engine driving it.

As the little potentialized electrons reach the load (the scatterer), they bang and clang around in there erratically. That is, the "scatterer" (load) causes spurious accelerations ("scatterings") of these self-driven electrons. As is well-known, when a charge is accelerated, it radiates photons. What actually happens is that these little "jerked around" electrons shuck off their little potential gradients in the load (in the scatterer, or the "jerker-arounder") by emitting/radiating photons in all directions. Hence the heat that is produced in the load; the heat is just these scattered photons. The theory of calorimetry already states that all the excess energy (on the potentialized electrons) will be dissipated as this heat (scattered EM energy).

When all the potentialized electrons have radiated away their potential gradients in the load (scatterer), they are no longer potentialized. The free electron gas is again "quiescent" and no longer potentialized/activated (again, we are talking about "on the average" from a classical viewpoint.).

Repetition and Review

Notice What We've Done: We took some trapped EM energy density (a chunk of potential gradient, a "voltage" before current flows) from the source, by switching that potential gradient (energy density, which is joules per coulomb) onto a collector (containing a certain number of coulombs of trapped charges) where the potential gradient activates/potentializes/couples-to these temporarily non translating electrons.

So the finite collector collected a finite amount of excess energy [joules/coulomb x collecting (trapped) coulombs] on its now-excited (activated) free electrons. Then before any current has yet flowed from the source, we switched that potentialized collector (with its temporarily restrained but potentialized electrons; with their finite amount of excess trapped EM energy) away from the source and directly across the load.

Shortly thereafter, the relaxation time in the collector expires. The potentialized electrons in the collector are freed to move in the external load circuit, consisting of the collector and the load, and so they do so. The scattering "shock collisions" due to the erratic electron accelerations in the load shake off the little potential gradients on the conduction electrons, emitting photons in all directions, which we call "heat." In shaking off the photons, the electrons lose their little potential gradients, hence lose their activation (excess EM energy).

Rigorously we have extracted some energy in trapped form, and allowed it to dissipate in the load, "powering the load" for a finite discharge/dissipation time and doing work.(20) Contrary to the conventional electrical power engineering, we have also done this without doing any work inside the source to diminish its ability to furnish potential gradient.

Additional Comment From Bearden

The present classical CEM model prescribes closed, energy-conservative type systems. If any electrical device works totally according to the accepted CEM model, it cannot and will not ever produce overunity. Simply put, you have excluded any hidden EM source that is freely replenished, and you have assumed continual killing of all energy input sources utilized. On the other hand, if one takes the view that the overunity electrical machines are possible after all, then -- whether one is consciously aware of it or not -- one has implied that classical CEM must somehow be substantially flawed. If it's flawed, then -- being a model -- some of its primary assumptions (postulates) and/or fundamental definitions must be in error.

The proper place to go after "free electrical energy" is to rigorously examine CEM, over and over, until flaws are uncovered which allow a hidden, freely replenished source of input energy. In other words, one must find a way to "open" the electrical system to an in flow of energy from this source, without closing off the source.

Until one finds such an "extension" of CEM, one has no model or concept which can reasonably be expected to provide overunity electrical energy output. Note also that, while the majority of the EM circuitry of an electrical overunity machine may obey CEM, at least one section -- where the source is freely tapped and the excess energy extracted -- must violate CEM.

I have spent many arduous years in this very process, right or wrong. The bottom line of my search is this: the only verified (by Whittaker and Ziolkowski) (WZ) "freely replenished river" of EM energy, that can act as the required "free energy" source for input to the would-be overunity electrical system, is the potential. But to understand the potential, completely new definitions are required for many entities, among them being energy, electrical charge, electrostatic scalar potential, voltage, etc. The present so-called "definitions" of these entities in CEM are either non-existent, entirely wrong, or quite unsatisfactory.

So far, the search has uncovered two major ways to tap the continually-replenished EM energy in the scalar EM potential:

(1) use of the inner WZ internal biwave structure of the potential as pump waves on/to a nonlinear material (such as the atomic nucleus), so that the nucleus becomes a pumped phase conjugate mirror. Then, by normal phase conjugate optical theory, simply inputting a small signal wave will produce an amplified phase conjugate replica (PCR) wave emitted from the mirror material, and this PCR will precisely backtrack the original input signal wave's path (see the distortion correction theorem) back out of the nucleus, out of the atom, and into the external circuit.

There, the amplified PCR wave can be "filtered off" and sent to the external load, to power the load. The Floyd Sweet vacuum triode works precisely by this mechanism. Note particularly that Barrett has shown that higher topology EM (such as the original quaternion EM theory) can accomplish such "optical functioning" without the use of optical materials.

To do Sweet's vacuum triode type process is thus theoretically possible with electrical circuitry alone, but one must have more than the current understanding of CEM, as Barrett pointed out. In other words, one can "open" any 4-space system by adding hyperspace (or subspace, if one insists on retaining Minkowski 4-space). One can thus have a hyperspatial source. Indeed, Ziolkowski and others have already pointed out that the WZ type decomposition of the scalar potential is essentially equivalent to having complex sources.

(2) The second way is to "trap the electron gas electrons" in a separate collector, feed "current-free potential" to the collector from a primary battery or other source of potential, and collect a bunch of excess energy (potential) in the collector's "penned up free electron 'horses'" waiting to carry the excess energy to the load and dissipate it there, once they have been released.

Then, one switches the primary potential source away from the collector, while the "energy-loaded horses" are still trapped and straining at the bit, so that no work can be done -- by those agitated horses when they stampede out

of there -- on the internal resistance of the primary source, to destroy or reduce it.

In the same switching action, the collector with its "snorting but still trapped electron horses" is switched across the load to form a totally separate circuit with it, having nothing at all to do with the original primary source of potential. Then, the agitated horses are released, and thunder out through the load, scattering their riders (excess energy) in all directions in the load, producing work/heat and powering the load. They will also charge on around to the reverse side of the collector, and kill its charge separation (kill its potential) as well, just as does any ordinary circuit.

The major disadvantage of method 1, as we presently have seen it done (however, check Barrett's demonstration that Tesla's patented circuitry is capable of doing it by circuitry alone), is that time-reversed electrical energy is produced. So Method 1 has some serious drawbacks. "Time-reversed energy stuff", which should stay in the atomic nucleus as Newtonian 3rd law reactions and 3rd-law energy exchanges, is dragged out.

Unusual effects on biological systems can occur. Antigravity effects can occur. Other hidden processes in the universes, that affect the atomic nucleus, can be gated into the external circuitry, causing disaster. Monopoles can be deposited in the magnets, causing them to explode like hand grenades. Most of the new "massive time-reverse energy" phenomenology is still unknown.

One cannot at this stage of ignorance adequately guarantee human safety. I presently don't see just how this kind of energy can pass an Underwriter Laboratories' testing and certification, until a lot more exhaustive work is done to understand the new phenomenology.

Method 2, however, yields ordinary, garden-variety, positive-time electrical energy. The method presented in the paper is my own discovery. No unusual time-reversed phenomena are involved. It would appear to be eminently practical to produce and certify power units based on Method 2. The phenomenology and risks are the same as for ordinary, time-forward power systems.

Method 2 has another unique characteristic: as a system, all the subsystems are already in the literature and validated. They have just not previously been put together in this fashion. So development of the system really represents an "integration" problem only, after one first does a little development of a proper degenerate semiconductor material (DSM).

In other words, one first develops (and tests) the exact doping materials and percentage, to get a DSM material that is still a good conductor but has a relaxation time of __ say __ one tenth of a millisecond. One builds the wires from the battery to the collector out of this new DSM material. If one uses a

capacitor for the collector, the plates must be made out of the new DSM material, not out of normal "pure conductor" material.

Then one develops a switcher that switches in one tenth (or less) the relaxation time of the DSM, or in this case in one hundredth of a millisecond. That switching time, of course, is easy for any decent electronic technician or electronic engineer.

One also develops a timing circuit that will

(1) sense the status of the discharge of the collector energy through the load, and

(2) trigger the switching at the correct times so that a smooth two-cycle (collect, discharge) process results. Note that the lengths of cycle one and cycle two are not necessarily equal at all. One may use multiple collectors/loads simultaneously, cascaded collectors/loads, etc. Hundreds of variations are possible and feasible.

It is not possible to do anything with this discovery in a normal manner. I would dearly like to be economically independent, so I could work full time in my efforts on free energy, antigravity, extended EM healing, cancer, etc. Many orthodox scientists will also fiercely resist this upstart notion of "overunity" electrical machines to the bitter end. When powerful economic interests realize one has such things for real, one is certainly going to be stopped, jailed, or killed, or he may just "mysteriously vanish" and never be seen again.

So I just freely released and distributed my discovery of method 2, in the paper "The Final Secret of Free Energy". It is deliberately targeted toward technicians, junior engineers, and educated laymen. (The principles and definitions raised, however, can be debated to the nth degree by knowledgeable foundation scientists). The paper has already been distributed worldwide. Now the principles and definitions are available to everyone. If they are in error, shortly that will be proven in spades. If they are correct, that will also be established shortly.

Anyone who wishes can develop and patent a particular application. There's no longer any way to stop this information from being disseminated and utilized. I hope that a flurry of development and patenting activity will result around the world. Get cheap, clean electrical energy to everyone. Bring on the electric auto, clean up the noxious auto exhausts, get rid of giant oil spills, and clean up the biosphere.

WHAT IS ENERGY IN AN ELECTRIC CIRCUIT?

Energy in an Electric Circuit: Here's the principle loud and clear.

Energy in an electric circuit involves only the potentialization and depotentialization of the electron carriers in that circuit.(21) It involves only the potential gradient (the joules per coulomb) collected by the circuit to potentialize its electrons, and the number of coulombs of electrons that are potentialized during the collection phase.

Electric circuits simply utilize electrons as carriers of "potential gradients," from the source to the load, where these gradients and the activated electrons constitute excess trapped EM energy. In the "shocking/scattering" occurring in the load, the jerking (acceleration) of the electrons causes these activated (trapped-energy-carrying) electrons to shuck off their potential gradients by emitting them as scattered photons (heat).

If one is thoughtless enough to allow the primary potential source to remain in the circuit during the "work" phase, then one is using the potentialized electrons to also go back into the primary source and scatter energy from its internal resistance (in ternal load), thereby disorganizing the organization that was producing the source potential and energy in the first place.

If one does that, then all the while one is getting some work (scattering of energy) in the load, one is also steadily getting some work done inside the primary source to steadily destroy it! Literally one is killing the goose that lays the golden eggs.

Continued Operations: But back to our circuit. After we complete one full collection/discharge cycle, we wish to continue producing work in the external load. So we simply switch the collector back away from the load and onto the primary source, collect some more current-free potential, and again independently switch the collector with its repotentialized free electrons back across the load.

We can repeat this two-cycle process to potentialize the external load and power it as long as we wish, from a battery or other source of potential, and never take any power at all from the primary battery. We do not need to drain the battery or source at all, in order to power a load, unless we attempt to power it directly. Powering the external load is always free!

Nature has been most kind, and we have been most ignorant. You can have all the trapped electrical energy you wish, from any source of potential, for free. You can power all the external loads you wish, for free, by using a collector as a secondary source, and simply shuttling potential between the

primary source and the collector. (22) But you cannot have power for free from (in) the potential source. If you allow current flow in your collection cycle, you are depleting the separated charges inside the battery that are furnishing the source potential.

The Coal-Fired Locomotive

Rigorous Analogy of a Coal-Fired Locomotive. Now here's an exact analogy, to assist in understanding. Imagine a coal-fired train, and a fireman shoveling coal. He has an external load/scatterer of energy (the fire in the firebox under the boiler).

He has a primary source of potential/energy (the coal car). No fireman in his right mind would ignite the coal in the chute of the coal bin, to try and get some heat energy into the firebox! [That is, he would not attempt to extract power from the source. Yet that's exactly what all we engineers are trained to do at present.]

Instead, the fireman takes out (collects) a finite amount (a shovelful) of coal (trapped energy). Coal per se (the potential gradient) has a certain energy density per unit volume (trapped joules per unit volume of coal) and the shovel (collector) has a certain volume. Accordingly, the shovelful of coal contains a certain amount of trapped joules of energy.

In the fireman's shovel (the collector), the energy remains in total ly trapped form, as coal not afire and without its trapped energy being dissipated as work. [He doesn't act like a fool and ignite the coal in the shovel either!] He then throws that shovel of coal (collected trapped energy) onto the fire (scatterer), completely separately from the coal bin/source. He continues to repeat his shoveling cycle, and each shovelful of coal added to the fire dissipates additional energy, powering the load.

The Free Energy Principle

All potential gradient (trapped excess energy density) is free for the taking.(23) The potential is due to the violent VPF exchange between the vacuum and the separated bipolar charges furnishing the source potential gradient. The energy of the entire universe is flowing through that source potential. You can have as much of this internal VPF flux energy (potential) as you wish, as often as you wish, so long as you don't demand current (which is power, or the rate at which the energy is being freed and dissipated.). It's really simple. You can have all the trapped energy you wish, from any source. You cannot connect to the source and start to dissipate the energy as power, however, without starting to close the "gate" from which your free trapped energy is coming.

In other words, here's the iron rule: If you draw current, you kill the bipolarity gate furnishing the potential gradient (source of energy density). In that case, you kill the source. If you do not draw current, you do not kill the bipolarity gate and you do not shut down the source. In that case, you can continue to "use" it and extract trapped EM energy from it forever.

Definitions Again

Definitions: I'll put down some simple equations, that may help to explain it more exactly. First we repeat some definitions.

Energy is any ordering imposed upon the virtual particle flux of vacuum. EM energy is any ordering imposed upon the virtual photon flux of vacuum. Static energy is an ordering (a template) which is stationary with respect to the external observer.

Dynamic energy is an ordering (a template) which is stationary with respect to the external observer.

Potential: Any ordering imposed upon the virtual particle flux of vacuum. Scalar potential is an ordering (template) that is not moving with respect to the external observer. Vector potential is an ordering (template) that is moving with respect to the external observer.

The scalar EM potential is any static (with respect to the external observer) ordering imposed upon the virtual photon flux of vacuum. Etc.

Note again that energy and potential have exactly the same definition. Potential is in fact trapped energy. Scalar EM potential is static EM energy (to the external observer) or trapped (collected) EM energy. In other words, if one takes off a differential of potential onto a fixed number of coulombs, one takes off a certain magnitude of trapped EM energy. In other words, one takes out a shovelful of coal from the coal car.

Importance of Separation of Charges

We Must Not Dispel the Separation of Charges In Our Source: The difference in our coal-fired train analogy and our electrical circuit is that, in the coal train, the coal in the coal car is not automatically and continually replenished. Also, the coal in the coal car has already been collected by the mass of the coal car, so it is not infinite.

In the electrical circuit, the potential gradient in the primary source is continually replenished, automatically, and it is infinite (though it has a finite energy density). The reason is simple. EM potential (in the normal sense) is actually a virtual photon flux exchange between the vacuum (the entire vacuum, all over the universe) and a charged particle or collection of charged particles.(24)

Thus the potential (gradient) is a powerful energy flux, pumped by the vacuum and the entire universe, that continues automatically, so long as we do not allow the collected charges in our bipolarity source to be dissipated.

In terms of a battery, we achieved separation of charges inside the battery by chemical action, and we paid for that initially. Once separated, the charges essentially stay separated (because of the chemistry) unless we foolishly do something to dissipate them, such as upsetting the chemistry, so they are no longer separated positive from negative.

So if we don't do anything to these separated charges, they continue to be driven by their fierce exchange of virtual photon flux with the vacuum/universe. If we then simply extract some of that flux exchange, without moving the charges, we are directly "gating" trapped EM energy from the vacuum/charged particle VPF exchange.(25)

The Potential Is Infinite And So Is Its Energy Content

You Can't Dip The Ocean Dry With a Spoon: Let's say that another way. The charged particles in our potential source are in a constant, seething, equilibrium exchange of trapped EM energy with the entire universe. That energy exchange is so enormous that, if we gate some of it out to collect on some other "temporarily frozen" charges and potentialize/activate them, the vacuum flux doesn't even miss it. It's like dipping a spoonful of water out of the restless ocean. The hole is instantly filled, and the water replenished. We can dip with that spoon as much as we wish, and the ocean will never run dry, but will simply continue to furnish us water, spoonful by spoonful.

The same is true in our electric circuits. We can have all the potential (trapped EM energy density) we wish, for free, from a single source, so long as we do not allow work to be done inside the source to close off our "gate" and kill our primary source.

The Twisted Concept of Voltage

Before We Develop Some Pseudo-Equations: In the equations we wish to develop, we have one problem, due to the lack of insight of conventional electrical physicists. That is, they have insisted upon "measuring" and expressing both the infinite potential (nondissipated) and a certain quantity of potential (dissipated) in volts.

So they say "a potential of so many volts." That's nonsense, and totally erroneous. Rigorously, a voltage is a drop or a dissipation of so much (a finite amount of) collect ed excess potential/energy. You "measure" the voltage in a voltmeter by impressing a potential gradient upon the electron gas in the circuitry, wherein you collect or get in your voltmeter so much [(joules/coulomb) x coulombs].

A tiny current (coulombs/second) from this internal collection then flows for a finite time through the resistance of the voltmeter. So you dissipate (joules/coulomb) x (coulombs/second) x (seconds), which gives a certain amount of energy dissipated as work in moving the needle of the voltmeter.

The voltmeter is calibrated so that it effectively indicates the collected energy per coulomb that was dissipated, and it calls that entity voltage. It involves a finite amount of energy that has already been dissipated as work, and it's a measure of the local energy density of the potential in terms of joules/coulomb. It is not a measure of the potential proper.

It's after the fact; the extracted (collected) potential gradient it actually refers to existed in the past, before the work (dissipation of the collected trapped energy) was done. To refer to the potential before its dissipation as "voltage" is precisely the same as confusing the future with the past. A "potential (difference) of so many volts" is actually a statement that "a potential difference of so much energy per coulomb" could be dissipated in a load, if it were connected to the load so that a finite amount of energy was collected, and this finite load-collection was allowed to dissipate as power (volts/coulomb x coulomb/sec) for a finite time, yielding work. It's even worse, but it would take a textbook to straighten out this one error in EM theory.

So we'll leave it at that, and we'll adapt the notion of potential the way it is corrupted in electrical circuit theory. There it's used not really as energy, but rather as excess energy per coulomb of potentialized charge. I apologize for that difficulty, which is not of my own making, but I must use the conventional notion if we are to greatly clarify the pseudo equations.

The Equations of Free Energy

The Pseudo-Equations: Let us use the following subscripts and letter convention, and develop the nomenclature needed:

T = trapped

d = dissipated or dissipating

m = translated (moving)

K = energy

V = volts = potential drop (potential dissipated) = previously collected potential radiated away as heat in a load, doing work on the load in the process. Unfortunately we shall also have to speak of a potential gradient that is not being dissipated, so we shall have to speak of "trapped volts" which is erroneous, but complies with the common usage.

0 = electrostatic scalar potential.

Coul = coulombs

i = amperes = Dissipating potentialized coulombs per second flowing, so amps are something translating, always. Amps are excited coulombs, per second, that are dissipating their excitation. With superconductivity excluded, you only have amps when you have a potential drop across a load. So we will speak of amps as "dissipating," meaning that potentialized electrons are traveling through a load, dissipating their activation (gradients) in the load by radiating scattered photons (heat).

n = number of electrons in a coulomb = 6.3 x 1018electrons/coulomb

Here are the pseudo equations (superconductivity is excluded):

ampm = could/sec = n electronsm/sec = n electronsd/sec [1]

delta0 = VT (as conventionally referred to. It would be [2] volts if all of it were dissipated, but it is not yet dissipated, so it is sort of "trapped volts". Erroneous, but the common use. So we will speak (somewhat distastefully) of "trapped volts" and "dissipated volts."

Vd x ampd x sec = watts x sec = power x time = work = Kd [3]

Vd x could/sec x sec = (work) = Kd [4]

In the switching, we switch KT to Kd so

KT -> Kd [5]

But VT x coulT = KT [6]

Or VT = [KT]/[coulT] = trapped energy/trapped coulomb [7]

KT = [VT] x [coulT] = amount of trapped energy, each cycle [8]

So that's what we were getting at. The amount of trapped energy you can transfer (in other words, how much coal you get in one shovelful) depends upon the number of trapped electrons you have in the trapped free electron gas in the collector, and the potential gradient you apply to those trapped coulombs to potentialize them.

Relaxation Time and Semiconductors

Relaxation Time: The time it takes for the free electrons in a conductor (or material) to reach the skin of the wire after potential is applied, is of course called the relaxation time.

During that time, the free electrons in the gas are "trapped" insofar as producing current (dissipation of the potential) is concerned. However, immediately after the relaxation time ends, current begins and dissipation of the trapped energy begins.

In copper, the relaxation time is incredibly rapid. It's about 1.5 x 10-19 sec. However, in quartz it is about 10 days! So as you can see, we need to get somewhere in between these two values, and so we will have to "mix" or "dope" materials.

We must get a sufficiently long relaxation time so that we can switch and collect comfortably in cycle one, then switch into cycle two for dispersion of the freely collected energy in the collector.

However, the relaxation time we get must also be short enough to allow quick discharge in the load, as soon as we switch the primary source away from the collector. Actually we need a degenerate semiconductor material instead of plain copper.

Degenerate Semiconductor Material: A semiconductor material is intermediate between a good conductor and an insulator. It's a nonlinear material, and doped. A degenerate semiconductor material is one which has all its conduction bands filled with electrons, and so it thinks it is a conductor. That is, a degenerate semiconductor is essentially a doped conductor, so to speak.

As you can see, we can increase the relaxation time in our "conductors" connected to the source by making them of degenerate semiconductor material. What we're talking about is "doping" the copper in the wire, and in the collector, so that we can have plenty of time to collect, and switch, and discharge, and switch, and collect, etc.

Now in a doped conductor (degenerate semiconductor), we can tailor the relaxation time by tailoring the doping. We must dope the copper before we make the wire. Why would we wish to do that? We want to overcome the single problem that so far has defeated almost all the "overunity" researchers and inventors.

WHEN YOU CONNECT TO A SOURCE, YOU CAN ONLY EXTRACT CURRENT-FREE POTENTIAL -- FREE "TRAPPED EM ENERGY" -- DURING THE ELECTRON RELAXATION TIME in the connecting conductors and succeeding circuit components. AFTER THAT, YOU'RE STEADILY EXTRACTING POWER, AND THE ENERGY EXTRACTED FROM THE SOURCE IS BEING PARTIALLY DISSIPATED IN THE RESISTANCE/LOADING OF THE CIRCUIT, AND PARTIALLY DISSIPATED IN THE INTERNAL RESISTANCE OF THE SOURCE. IN THE LATTER DISSIPATION, YOU'RE ALSO DISSIPATING YOUR SOURCE BY DOING WORK ON IT INTERNALLY TO KILL IT.

Good Copper Wire: Bane of Overunity Inventors: Many destitute inventors, tinkering and fiddling with overunity devices, finally get something (a circuit or device) that does yield more work out than they had to input.

At that point they usually conclude that it's simply the specific circuit configuration and its conventional functioning that produces the overunity work. However, usually as soon as this configuration is more carefully built with very good materials, boom! It isn't overunity anymore.

The inventors and their assistants then desperately bang and clang away, getting more frustrated as the years pass. The investors get mad, sue for fraud, or get in all sorts of squabbles. The scientists who tested it and found it wanting, pooh-pooh the whole thing as a scam and a fraud, or just a seriously mistaken inventor. Scratch one more "overunity" device.

Most of these inventors got their successful effect (and possibly erratically) when they were struggling with inferior, usually old, usually corroded materials. Actually, the more inferior, the better. The more contaminated/doped, the better!

The moment you wire up your circuit with good copper wire connected between the battery or primary source and any kind of load including the distributed circuitry loading itself, you can forget about overunity. You will lose it in the copper, after the first 1.5 x 10-19 second!

Think of a really good conductor such as copper as an essentially linear material. Linear means energy conservative. Overunity can only be done with a highly nonlinear effect. So your "conductors" have to be made of nonlinear materials. In fact, they have to be made of degenerate semiconductor material.

For the type of circuitry we are talking about, the copper has to be doped and then made into "doped copper" wiring. You also have to utilize the primary battery only to potentialize a collector (secondary battery/source), and then use this secondary battery source to conventionally power the load while also killing itself.

The Wiring And the Collector Must Be of Degenerate Semiconductor (DSC) Material.(26) A good materials scientist/engineer, together with a decent electrodynamicist, can readily design and tailor some doped copper wiring so that the material in the wiring is a degenerate semiconductor material, with a target (desired) relaxation time. That's what you should use to make the wiring to connect up your source to the collector with, and that type of material is also what you use in your collector.

You can use either a coil or a capacitor as the collector, but its "conductive" material has to be degenerate semiconductor material __ in short, it must be doped to have the proper relaxation time. From the collector to the load, however, obviously you want to use a good conductor material. Ordinary copper will do nicely there.

Once you do that, you're in business. When making the DSC material, simply tailor the relaxation time to something which is easily switched. For example, take one millisec. With a relaxation time of that long, switching is easy. In fact, one could even use good mechanical switching. Or easily use inexpensive ordinary solid state switching, without having to go all the way to nanosecond switching.

Then in the collector you calculate the number of "trapped coulombs" you have. Take the "trapped voltage" (current-free potential's energy density per coulomb) you extract from the source during the electron relaxation time after the collector is connected. Multiply the number of trapped coulombs in the collector by the trapped voltage during collection, and you have the amount of energy in joules that you extract FOR FREE, without paying for it, from the source during every collection cycle.

Sources, Collectors, and Power

Tapping Vacuum Energy. You're getting the excess electrical energy directly from the vacuum, as we briefly pointed out above. The vacuum will freely replenish all the "trapped voltage" you extract from the primary source during the electron relaxation time. It won't replenish a single bit of "dissipated voltage" (power) you extract from the source.

Note that the same considerations apply in the collector. It's got to have a somewhat longer electron relaxation time. Its electrons stay "unrelaxed" during the collection cycle, and allow for some additional switching time to connect to the load.

The "trapped voltage" across the collector multiplied by the number of trapped coulombs in it, gives the number of joules of FREE EM ENERGY you extract and get into and onto the collector (the shovel). In other words, that's your "shovelful of coal."

You then throw the "shovelful" onto the fire/load __ you simply disconnect the collector from the primary source and connect it across the external load. The collector (secondary battery) now powers the load and its own internal resistance, "killing" itself while furnishing the energy for powering the external load as well.

The Source Can Be Almost Anything: You can use as a source a simple elevated wire, to "tap" potential from the 200-300 volts/meter between earth and ionosphere. Here again, you need to utilize calibrated, doped wire.

Finally, you must adjust the repetition switching in accordance with the discharge time through the load. In other words, you have a serial process as follows:

(1) extract trapped energy (potential) from the source onto the collector, delta t1.

(2) Switch the collector off the source, onto the load, during time delta t2.

(3) Wait while the collected energy in the collector discharges through the load, during time delta t3.

(4) Switch the collector back off the load and onto the potential source, during time delta t4. That completes one cycle.

The serial timing simply is [delta t1 + delta t2 + delta t3 + delta t4].

If you balance all the doping and the materials design, and correlate the switching, you can get all the free energy you wish. Properly utilized, a single car battery can be used to power an electric automobile indefinitely. Or even to power a battleship.

In the real world, of course, you will inevitably have a tiny bit of loss as you go, because there's a finite (though high) resistance between the two poles of your battery. Handling that is a piece of cake. Simply run a separate little collection circuit to collect a little bit of trapped EM energy from the slowly leaking source, and ever so often feed the collected energy back into the battery as power, to "reseparate" the charges (charge the battery) and replace the small amount of the primary source's potential gradient that has been lost. The battery, load, and "trickle charger" then become a closed-circuit free-energy source that will last for years and years.

Limited Only By One's Imagination: Of course you can see many variants; this is just the "master key." You can have multiple collectors, collecting trapped energy simultaneously or in sequence off a single source, and pooling their collected energy to more powerfully power the load.

You can utilize a very high "voltage", such as in the Swiss electrostatic overunity device, to increase the energy collected per coulomb in each switching (in each shovelful) in accord with equation [8].

For a battery , you can set a separate little collector/load device to trickle-charge the battery, overcoming the small normal "leakage current" that does occur in batteries and in real circuits and devices. The opportunities are endless. You can put in a unit to take mostly only power-free energy from the "power line" feeding your business or home, reducing your utility bill by -- say -- 90%.

Or you can simply build a small home power unit to do the whole job, for only a few hundred dollars. This simple secret can be used to power the world, cheaply and cleanly, and to clean up the biosphere.

Conclusion

Well, there you have it. I've given you the benefit of what required most of my adult life to discover. The definitions advanced in this paper are rigorous. It took years of sweat and tears to come up with them. They're simple, but they will change your entire understanding of electromagnetics, power, and energy once you grasp them. Please read them, and ponder them, several times. One or two readings will not be sufficient to fully grasp what is said here.

Also, hopefully by this time the reader is beginning to experience the same emotions as I experienced when I finally discovered how simple it all really was. First one wants to laugh for about two hours at how truly ignorant we've all been. Then one wants to cry for about two hours for the same reason. This could all have been done a century ago, if we had ever really understood electromagnetics.

We've had this electromagnetics around for over 100 years __ Maxwell's book was published in 1873. We got it wrong, starting right with Maxwell and his use of the material ether, which was almost universally assumed at the time.

Still, by using quaternions, Maxwell succeeded in packing a great deal more in the model than even he himself recognized. When the vector aspects interacted to form a zero resultant translationally, those active interactants were still in there and still fighting and interacting. The scalar component of the quaternion remained, and infolded those struggling vectors and functions of them inside itself.

In short, it captured the case where the electromagnetic energies are involved in translation actions which nullify each other translationally (electromagnetically). However, the energies are still in there in the continuing interactants inside the zero vector resultant. As such, they are trapped EM energy.

And it is the trapped EM energy inside a mass -- not the mass per se -- which is responsible for gravitation. In other words, Maxwell's theory already correctly captured the unification of the gravitational field and the electromagnetic field in 1873.

Then Heaviside et al forced Maxwell's theory into a vector framework, throwing out the scalar component, and discarding the unification of gravitation and electromagnetics along with it.

Serious errors were made and still exist in many of the fundamental definitions; in fact, many of them aren't definitions at all.

Nearly every engineer and physicist can readily calculate potentials __ all, of course, on the "dissipation" side where the potentials are actually the amount of potential that was collected upon a collector and then dissipated. I could find hardly a single physicist who really knew what a scalar potential was prior to a finite amount being collected and dissipated as voltage. Yet 99% of them firmly believed they understood the potential.

So now you have the results of this researcher's long and arduous quest for the golden fleece. Please go forward with it, to make this a better and cleaner world for everyone.

Just remember that the control and use of energy is personal power. The control and use of absolute energy is the control and use of absolute

personal power. In the old adage, power corrupts and absolute power corrupts absolutely.

Please use it wisely.

Notes And References

1. For a good discussion of the modern quantum mechanical view of the vacuum, see I. J. R. Aitchison, "Nothing's plenty: the vacuum in modern field theory," Contemporary Physics, 26(4), 1985, p. 333-391.

See also T. D. Lee, Particle Physics and Introduction to Field Theory, Harwood Academic Publishers, New York, 1981 __ particularly Chapter 16, "Vacuum as the source of asymmetry."

See Timothy Boyer, "The classical vacuum," Scientific American, Aug. 1985, p. 70; Walter Greiner and Joseph Hamilton, "Is the Vacuum really Empty?", American Scientist, Mar.-Apr. 1980, p. 154; Jack S. Greenberg and Walter Greiner, "Search for the sparking of the vacuum," Physics Today, Aug. 1982, p. 24-32; Richard E. Prange and Peter Strance, "The superconducting vacuum, " American Journal of Physics, 52(1), Jan. 1984, p. 19-21; R. Jackiw and J.R. Schrieffer, "The decay of the vacuum," Nuclear Physics B, Vol. 190, 1981, p. 944.

See Paul Davies, Superforce, Simon and Schuster, 1984 for a layman's overview of modern physics, including the modern view of the vacuum.

2. E. T. Whittaker, "On the partial differential equations of mathematical physics," Mathematische Annalen, Vol. 57, 1903, p. 333-355. Since the scalar potential actually consists totally of a set of hidden bidirectional EM waves, then scalar interferometry is possible, and not just an oxymoron as it would seem without considering the inner wave structure of the scalar potential. Two scalar potentials (each of which is a multi-biwave set) can interfere; it is just a special kind of multiple wave interferometry between their internal wave compositions. This is a major point of profound impact on physics. Whittaker in fact showed that all classical EM could be replaced by such scalar EM potential interferometry.

See E. T. Whittaker, "On an expression of the electromagnetic field due to electrons by means of two scalar potential functions," Proceedings of the London Mathematical Society, Series 2, Vol. 1, 1904, p. 367-372.

Further, scalar interferometry has been proven; today it is called the Aharonov-Bohm Effect. See Y. Aharonov and D. Bohm, "Significance of Electromagnetic Potentials in the Quantum Theory," Physical Review, Second Series, 115(3), Aug. 1, 1959, p. 458-491.

For confirmation and discussion, see Bertram Schwarzschild, "Currents in normal-metal rings exhibit Aharonov-Bohm Effect," Physics Today, 39(1),

Jan. 1986, p. 17-20. For an extensive discussion of the Aharonov-bohm effect and an extensive list of references, see S. Olariu and I. Iovitzu Popescu, "The quantum effects of electromagnetic fluxes," Reviews of Modern Physics, 57(2), April 1985. Modern scientists have generally been unaware of the inner wave structure of the interfering potentials and have utilized only quantum mechanical theory for the interference. Consequently, they have been able to experimentally establish the AB effect for only a few thousand angstroms distance. With the Whittaker formulation, the AB effect becomes distant-independent, because the necessary potentials can be fabricated as laser-like beams, simply by assembling the proper Whittaker multibeam set.

Also, Ignatovich pointed out that the Schroedinger potential can also be decomposed into just such an internal bidirectional EM wave set. See V. K. Ignatovich, "The remarkable capabilities of recursive relations," American Journal of Physics, 57(10), Oct. 1989, p. 873-878.

3. See Richard W. Ziolkowski, "Exact Solutions of the Wave Equation With Complex Source Locations," Journal of Mathematical Physics, Vol. 26, 1985, p. 861; "Localized Transmission of Wave Energy," Proc. SPIE, Vol. 1061, Microwave and Particle Beam Sources and Directed Energy Concepts, 1989, p. 396-397; "Localized Transmission of Electromagnetic Energy," Physical Review A, Vol. 39, p. 2005; "Localized Wave Transmission Physics and Engineering," Physical Review A, 1992, (in Press); "Localized wave transmission physics and engineering," Proc. SPIE Conference on Intense Microwave and Particle Beams II, Los Angeles, CA, vol. 1407, Jan. 1991, p. 375-386.

See Richard W. Ziolkowski, Amr M. Shaarawi, and Ioannis M. Besieris, Nuclear Physics B (Proc. Suppl.), Vol. 6, 1989, p. 255-258; R.W. Ziolkowski, and D.K. Lewis, D.K., "Verification of the Localized Wave Transmission Effect," Journal of Applied Physics, Vol. 68, 1990, p. 6083; Richard W. Ziolkowski, Ioannis M. Besieris, and Amr M. Shaarawi, "Localized Wave Represntations of Acoustics and Electromagnetic Radiation," Proceedings of the IEEE, 79(10), Oct. 1991, p. 1371-1378; I.M. Besieris, A.M. Shaarawi, and R.W. Ziolkowski, "A bidirectional travelling plane wave representation of exact solutions of the scalar wave equation," Journal of Mathematical Physics, 30(6), 1989, p. 806; A.M. Shaarawi, I.M. Besieris, and R.W. Ziolkowski, "A novel approach to the synthesis of nondispersive wave packet solutions to the Klein-Gordon and the Dirac equations," Journal of Mathematical Physics, 31(10), 1990, p. 2511; "A nondispersive wave packet representation of photons and the wave-particle duality of light," UCRL-101694, Lawrence Livermore National Laboratory, Livermore, CA, 1989; "Diffraction of a classical wave packet in a two slit interference experiment," UCRL-100756, Lawrence Livermore National Laboratory,

Livermore, CA 1989; "Localized energy pulse trains launched from an open, semi-infinite, circular waveguide," Journal of Applied Physics, 65(2), 1989, p. 805; R.W . Ziolkowski, D.K.Lewis and B.D.Cook, "Experimental verification of the localized wave transmission effect," Physical Review Letters, 62(2), 1989, p. 147; R.W. Ziolkowski and D.K. Lewis, "Verification of the localized wave transmission effect," Journal of Applied Physics, 68(12), 1990, p. 6083; M.K. Tippett and R.W. Ziolkowski, "A bidirectional wave transformation of the cold plasma equations," Journal of Mathematical Physics, 32(2) 1991, p. 488; A.M. Vengsarkar, I.M. Besieris, A.M. Shaarawi, and R.W. Ziolkowski, "Localized energy pulses in optical fiber waveguides: Closed-form approximate solutions," Journal of the Optical Society of America A, 1991.

4. For a precise statement of the distortion correction theorem, see Amnon Yariv, Optical Electronics, 3rd Edn., Holt, Rihehart and Winston, New York, 1985, p. 500-501.

5. Both wave and antiwave co-exist in the vacuum simultaneously,

forming a stress wave. The entity that is stressed is the rate of flow of time. In the common interaction with matter, the time-forward half of the stress wave normally interacts with the electron shells of the atom, giving electron translations forces. The time-reversed or anti-wave half interacts with the nucleus, giving the Newtonian 3rd law reaction (recoil) forces. The so-called "EM wave" in vacuum is a gravitational wave. It is a wave of oscillation of the rate of flow of time. It is rather like a sound wave in air, as Tesla pointed out, and it is a longitudinal wave, not a transverse "string" wave.

6. As pointed out by Nikola Tesla. Tesla was correct, and all the textbooks with their transverse "string" waves are in error. There are no strings in the vacuum!

7. E.g., see Clayton R. Paul and Syed A. Nasar, Introduction to Electromagnetic Fields, 2nd Edn., McGraw-Hill, New York, 1982, p. 113.

8. E.g., see Clayton R. Paul and Syed A. Nasar, ibid., p. 100-101.

See also Raymond A. Serway, Physics For Scientists And Engineers, With Modern Physics, Saunders College Publishing, Philadelphia, PA, 3rd Edn., Updated Version, 1992, p. 752-755.

9. Sommerfield's theory of metallic conduction was based on Drude's concept that the outer valence electrons of a conductor, which do not form crystal bonds, are free to migrate through the crystalline lattice structure, and so to form an electron gas. At room temperature, by quantum mechanical considerations these free electrons are moving randomly, but at an average velocity on the order of 106 meters per sec. E.g., see Martin A. Plonus, Applied Electromagnetics, McGraw Hill, New York, 1978, p. 54-58, 62-3, 376-7. If you wish to know just how much power exchange is driving

the collisions of the electron gas in a copper wire, here is an illustration. In one cubic centimeter of copper wire, the power exchange in and out of the electron gas is some 4 billion billion watts. That's the equivalent of 4 billion large electric power plants, each of 1,000 megawatt capacity. And one cubic centimeter of copper is a lump about the size of the end of your little finger.

10. E. g., see .Raymond A. Serway, ibid., p. 743-744 for a discussion and calculation of the electron drift velocity in copper.

11. Richard P. Feynman, Robert B. Leighton, and Matthew Sands, The Feynman Lectures on Physics, Addison-Wesley, New York, Vol. 1, 1963, p. 2-4. In the classical EM theory launched by Maxwell and later modified by Heaviside et al, this problem did not exist for the original theoretical formulation. In that formulation by Maxwell, and continued by Heaviside, a material ether is assumed for the model. The Michelson-Morley experiments of 1887 destroyed the notion of the material ether, but the classical electromagnetics model has never been corrected to rectify its very serious foundations flaw in this respect.

12. Robert Bruce Lindsay and Henry Margenau, Foundations of Physics, Dover Publications, New York, 1963, p. 283-287. Note on p. 283 that a "field of force" at any point is actually defined only for the case when a unit mass is present at that point. In spite of this, most classical electrodynamicists continue to adhere to the notion that the EM field exists as such in the vacuum, but do admit that physically measurable quantities such as force somehow involve the product of charge and field.

E.g., see J.D. Jackson, Classical Electrodynamics, 2nd Edn., John Wiley & Sons, New York, 1975, p. 249. Note that holding such a concept is tantamount to holding on to the material ether, and assuming that the vacuum itself is "measurable" or "observable."

13. The formula F = ma is simply an algorithm for calculating the magnitude of the force. It states that "the magnitude of the force is equal to the magnitude of mass that is accelerating, multiplied by the magnitude of the acceleration." No such " equals" formula is a definition; it is only a calculational algorithm.

14. This falsifies one of the assumptions in the common notion of the scalar potential; that its gradient in vacuum is a force field. Let us falsify another part of the conventional concept of the potential. Take the notion of forcibly pushing in " against the field" of a trapped charge, a unit charge from infinity. At any point you stop, the work n you have done on the unit charge is equal to the value of the potential, so it is said. Actually, you pushed in a one-coulomb collector, and have collected and dissipated as work n joules of energy on that one coulomb. In other words, the energy density of the potential there, if collected and dissipated on a collector, is n,

where n is joules per coulomb (NOT joules!). To prove it: Suppose we go out on 10,000 radials from that point, and push in from infinity 10,000 unit charges from infinity. Then the total work done "against the potential gradient ("field," in common language) is now 10,000 n. This makes no sense at all from the conventional view (which carefully refrains from multiple collectors!). It makes good sense from our view of the potential as having infinite energy but a finite energy density. In that case, the more collectors, the more energy collected, for dispersal as work.

15. For a discussion, see Y. Aharonov and D. Bohm, 1959.

16. Nikola Tesla, "The True Wireless," Electrical Experimenter, May 1919, p. 87.

17. The power in the load is always the time rate of dissipation of energy that has just been freely collected by the load for dissipation.

18. One can foresee a day in the not too distant future when any power company continuing to do such an unthinkable thing will have a class action suit brought against it by its customers!

19. T. E. Bearden, "Mechanism for Long-Term Cumulative Biological Effects of EM Fields and Radiation," March 1993 (in preparation).

20. Precisely analogous to a heat pump's operation - which as is well-known can readily be "over unity" in its efficiency. The maximum efficiency of the heat pump is about 8.22.

E.g., see David Halliday and Robert Resnick, Fundamentals of Physics, 3rd Edition Extended, John Wiley and Sons, New York, 1988, Volume 1, p. 510-519. Good heat pumps normally have about 4.0 efficiency.

21. External power in an electric circuit refers to the dissipation rate (in the circuit's external load) of the potential gradients on the activated/potentialized electrons. Internal power refers to the dissipation rate in the circuit's bipolarity source.

22. We call strong attention to T.W. Barrett, "Tesla's Nonlinear Oscillator-Shuttle-Circuit (OSC) Theory," Annales de la Fondation Louis de Broglie, 16(1), No. 1, 1991, p. 23-41. In this important paper, Barrett shows that a higher topology EM, such as quaternion EM, allows many things to be accomplished with circuitry that are not apparent to a conventional vector or tensor analysis of that circuitry. He also shows that Nikola Tesla's circuits accomplished this higher topological functioning.

23. It is easy to test this. Connect several different wires to a single source of potential gradient. With respect to ground, the end of each one of those wires has the same potential gradient as does the original source with respect to ground.

If you connect 10 wires to a single "100-volt" potential gradient source, you will have ten 100-volt potential gradients appear. You can use each of these ten potential gradients as a primary source. From each of these new primary sources, you can branch ten more, and now have a hundred potential gradient sources. You can treat each of these hundred new sources now as a primary source. To each one, you can add a switcher, collector, and external load, and drive all 100 loads. Or instead, you can put ten switcher/collector/external load circuits with each of the hundred new primary sources, and power all 1,000 external loads. Energy/potential is free from any source, so long as you do not demand power from the same source.

24. Per Whittaker and Ziolkowski, this VPF exchange -- from consideration of its wave aspects -- consists of a harmonic series of bidirectional waves.

25. We are easily permitted to have free energy and violate the "local energy conservation law for a closed system." This is because the two-cycle system is not closed, and so instead we must apply local energy conservation for an open system with a hidden source. In any given time interval, the energy taken (scattered) from the system as external work cannot exceed the sum of the unscattered trapped energy that was in the system initially and the unscattered energy that flowed into the system during that time interval.

26. You can actually do away with the separate collector, and utilize the doped copper DSC material itself as the collector. However, you will not be able to collect nearly so much energy in each collection cycle, for dissipating in the load in the subsequent work cycle.

SPACE PROPULSION

CAN EMPTY SPACE ITSELF PROVIDE A SOLUTION

BY HAROLD E PUTHOFF

The Launch of a mighty rocket is truly an awe-inspiring sight. As it strains against the twin forces of gravity and inertia, we can only marvel at the progress we have made in our attempt to throw off the shackles that bind mankind to Earth.

But contemplation of the sheer expenditure of energy in such a launch must also make us wonder whether we will ever colonize even the closest planet, let alone travel to the stars. Although various propositions to surmount the difficulties involved have been put forward, we cannot help but hope that the brute force solutions we apply today will one day be replaced by alternatives we can now only dream of.

The Potential of "Empty Space"

Surprisingly enough, there are hints that potential help may emerge quite literally out of the vacuum of so-called "empty space" itself, the very medium we wish to conquer. Quantum theory tells us that empty space is not truly empty, but rather is the seat of myriad energetic quantum processes that could have profound implications for future space travel. To understand these implications it will serve us to detour for a moment to review briefly the historical development of the scientific view of what constitutes empty space.

At the time of the Greek philosophers, Demoncritus argues that empty space was truly a void, otherwise there would not be room for atoms to move around. Aristotle, on the other hand, argues equally forcefully that what appeared to be empty space was in fact a plenum (a background filled with substance), for did not heat and light travel from place to place as if carried by some kind of medium?

The argument went back and forth through the centuries until finally codified by Maxwell's theory of the luminiferous ether, a plenum that carried electromagnetic waves, including light, much as water carries waves across a lake. Attempts to measure the properties of this ether, or to measure the Earth's velocity through the ether (as in the famous Michelson-Morley experiment), however, met with failure. With the rise ofo special relativity, which did not require reference to such an underlying substrate, Einstein in

1905 effectively banished the ether in favor of the concept that empty space constitutes a true void. Ten years later, however, Einstein's own development of the general theory of relativity, with its concept of curved space and distorted geometry, forced him to reverse his stand and opt for a richly endowed plenum, under the new label *spacetime metric.*

It was the advent of modern quantum theory, however, that established the quantum vacuum, so-called empty space, as a very active place, with particles arising and disappearing, a virtual plasma, and fields continuously fluctuating about their zero baseline values. Such processes are called zero-point fluctuations (ZPF) of the vacuum, reflecting the fact that such activity remains even at the zero point of temperature (absolute zero) after all thermal effects have frozen out.

Empty Space as an Energy Reservoir

What does all this have to do with space travel? At its most fundamental level, we now recognize that the quantum vacuum is an enormous reservoir of untapped energy, with energy densities conservatively estimated by Nobelist Feynman and other to be on the order of nuclear energy densities or greater. Therefore, the nuclear energy densities or greater. Therefore, the question is, can the ZPF energy be "mined" for practical use? If so, it would constitute a virtually ubiquitous energy supply, a veritable "Holy Grail" energy source for space propulsion.

As utopian as such a possibility may seem, researcher Robert Forward at Hughes Research Laboratories, Malivu, CA, demonstrated proof-of-principle in a paper published in *Physical Review B* in 1984, "Extracting Electrical Energy form the Vacuum by Cohesion of Charged Foliated Conductors." Forward's approach exploited a phenomenon called the *Casimir Effect*, an attractive quantum force between closely spaced metal plates, names for its discoverer, H.G.B. Casimir of Philips Laboratories in the Netherlands. The Casimir force derives from the partial shielding of the interior region of the plates from the background zero-point fluctuations (ZPF) of the vacuum electromagnetic field. This shielding results in the plates being pushed together by the unbalanced ZPF radiation pressures, with a consequent conversion of vacuum energy to some other form such as heat. Proof that such a process violates neither energy nor thermodynamic constraints can be found in a paper by D. Cole and myself pubished in *Physical Review E* in 1993, under the title “Extracting Energy and Heat from the Vacuum.” Attempts to harness the Casimir Effect for vacuum energy conversion are ongoing in our laboratory and elsewhere, with formats ranging from pinch effects in plasmas to bubble collapse in turbulent fluids as in sonoluminescence.

Yet another example in which Nature herself may have taken advantage of energetic vacuum effects is discussed in a model published by ZPF researchers A. Rueda of California State University at Long Beach, B. Haisch of Lockheed, and D. Cole of IBM. In a paper published in the *Astrophysical Journal* in 1995, they propose that the vast reaches of outer space constitute an ideal environment for ZPF acceleration of nuclei and thus provide a mechanism for "powering up" cosmic rays. Details of the model would appear to account for other observed phenomena as well, such as the formation of cosmic voids. Of interest here is a proposal put forward in a report published by the U. S. Air Force (to be described later) to investigate the possibility of utilizing a "sub-cosmic ray" approach to accelerate protons in a cryogenically cooled, collision-free vacuum trap and thus extract energy from the vacuum fluctuations by this mechanism.

Origins of Gravity and Inertia

Let us now go deeper, however. 'What of the fundamental forces of gravity and inertia we seek to overcome in space travel? We have phenomenological theories that describe their effects (Newton's Laws and their relativistic generalizations, but what of their origins?

The first hint that these phenomena might themselves be traceable to roots in the underlying fluctuations of the vacuum came in a 1967 study published by the well-known Russian physicist Andrei Sakharov. Searching to derive Einstein's phenomenological equations for general relativity from a more fundamental set of assumptions, Sakharov came to the conclusion that the entire panoply of general relativistic phenomena could be seen as induced effects brought about by changes in the quantum-fluctuation energy of the vacuum due to the presence of matter. In this view the attractive gravitational force is more akin to the induced Casimir force discussed above, than to the fundamental inverse square law force between charged particles with which it is often compared. Although speculative when first introduced by Sakharov, this hypothesis has led to a rich and ongoing literature (including a contribution of my own in a 1989 *Physical Review* A publication) on quantum-fluctuation-induced gravity, a literature that continues to yield deep insight into the role played by vacuum forces.

Given an apparent deep connection between gravity and the zero-point fluctuations of the vacuum, it \vas only a matter of time before a similar connection had to be made between these self-same vacuum fluctuations and inertia. Why? It is an empirical fact that the gravitational and inertial masses have the same value, even though the underlying phenomena are quite disparate. Why, for example, should a measure of the resistance of a body to being accelerated, even if far from any gravitational field, have the same value

that is associated with the gravitational attraction between bodies? Indeed, if one is determined by vacuum fluctuations, so must the other.

To get to the heart of inertia, let us consider a specific example. 1'ou are standing on a train in the station. As the train leaves the platform with a jerk, you could be thrown to the floor. What is this force that knocks you down, seemingly coming out of nowhere? This phenomena, which we conveniently label inertia and go on about our physics, is a subtle feature of the universe that has perplexed generations of physicists from Newton to Einstein. Since in this example the sudden disquieting imbalance results from acceleration "relative to the fixed stars," in its most provocative form one could say that it was the "stars" that delivered the punch. This key feature was emphasized by the Austrian philosopher of science Ernst Mach, and is now known as Mach's Principle. Nonetheless, the mechanism by which the stars might do this deed has eluded convincing explication-until now.

Addressing this issue in a paper entitled "Inertia as a Zero-Point Field Lorentz Force," published in *Physical Review A* in 1994, I and my colleagues Haisch and Rueda (mentioned earlier) were successful in tracing the problem of inertia and its connection to Mach's Principle to the ZPF properties of the vacuum. In a sentence, although a uniformly moving body does not experience a drag force from the (Lorentz-invariant) vacuum fluctuations, an *accelerated body* meets a resistance (force) proportional to the acceleration. By *accelerated* we mean, of course, accelerated relative to the fixed stars. It turns out that an argument can be made that the quantum fluctuations of distant matter structure the local vacuum-fluctuation frame of reference. Thus, in the example of the train the punch was delivered by the wall of vacuum fluctuations, acting as a proxy for the fixed stars, through which one attempted to accelerate.

Again, what does all this have to do with space travel? *There is experimental evidence that vacuum fluctuations can be altered by technological means. This leads to the corollary that, in principle, gravitational and inertial masses can also be altered.*

The evidence for the alteration of vacuum fluctuations is found in the research area called cavity quantum electrodynamics (QED). There, excited atoms are passed through Casimir-like cavities whose structure suppresses electromagnetic cavity modes at the transition frequency between the atom's excited and ground states. The result is that the so-called "spontaneous" emission time is lengthened considerably (for example, by factors of ten), simply because spontaneous emission is not so spontaneous after all, but rather is driven by vacuum fluctuations. Eliminate the modes and you eliminate the zero-point fluctuations of the modes, hence suppressing decay of the excited state. As stated in an April 1993 *Scientific American* review article on cavity QED, "An excited atom that would ordinarily emit a low-frequency photon

cannot do so, because there are no vacuum fluctuations to stimulate its emission...."

The Forward Report to the Air Force

Does anyone take seriously the concept that it might be possible to alter mass, with a view to easing the energy burden of future spaceships? In fact, the implication for space travel of our innovative ZPF-based inertia model has attracted the attention of the Advanced Concepts Office of the Propulsion Directorate of the Phillips Laboratory at Edwards Air Force Base. This office is charged with initiating research relevant to the development of 21st century space propulsion, and it is well understood that a fundamental understanding of inertia could well contribute to new concepts in this area. It was in this context that Robert Forward (the same Forward mentioned earlier!), a respected authority in the area of gravitation theory and measurement, accepted an assignment to review our concept and program. He recommended a broad, multi-pronged effort, involving laboratories from around the world, to investigate our inertia model experimentally.

After a one-year investigation Forward finished his study and submitted his report to the air force, who published it under the title *Mass Modification Experiment Definition Study*. The abstract reads in part:

"Many researchers see the vacuum as a central ingredient of 2Ist century physics. Some even believe the vacuum may be harnessed to provide a limitless supply of energy. This report summarizes an attempt to find an experiment that would test the Haisch, Rueda and Puthoff (HRP) conjecture that the mass and inertia of a body are induced effects brought about by changes in the quantum-fluctuation energy of the vacuum.... It was possible to find an experiment that might be able to prove or disprove that the inertial mass of a body can be altered by making changes in the vacuum surrounding the body,"

With regard to action items, Forward in fact recommends a ranked list of not one but *four* experiments to be carried out to address the ZPF-inertia concept and its broad implications, including investigation of the proposed subcosmic-ray energy device mentioned earlier.

Warp Drives and Wormholes

Since we are pushing the frontiers, we might as well address perhaps one of the most speculative, but nonetheless scientifically grounded, proposals of all: the Alcubierre Warp Drive. Taking on the challenge of determining whether Warp Drive *á la* Star Trek was a scientific possibility, general relativity theorist Miguel Alcubierre of the University of Wales set himself the task of determining whether faster-than-light travel was possible within the constraints of standard theory. Although this clearly could not be the case in the flat space of special

relativity, general relativity permits consideration of altered spacetime metrics where such a possibility is not *a priori* ruled out. Alcubierre's further self-imposed constraints on an acceptable solution included the requirements that no net time distortion should occur (breakfast on Earth, lunch on Alpha Centauri, and home for dinner with your wife and children, not your great-great-great grandchildren), and that the occupants of the spaceship were not to be flattened against the bulkhead by unconscionable accelerations.

A solution meeting all of the above requirements was found and published by Alcubierre *in Classical and Quantum Gravity* in 1994. The solution discovered by Alcubierre involved the creation of a local distortion of spacetime such that spacetime is expanded behind the spaceship, contracted ahead of it, and yields a hypersurfer-like motion faster than the speed of light as seen by observers outside the disturbed region. In essence, on the outgoing leg of its journey the spaceship is pushed away fom Earth and pulled toward its distant destination by the engineered local expansion of spacetime itself. (For follow-up on the broader aspects of "metric engineering" concepts, one can refer to a paper published by myself in *Physics Essays* in 1996.) Interestingly enough, the engineering requirements rely on the generation of macroscopic, negative-energy-density, Casimir-like states in the quantum vacuum of the type discussed earlier. Unfortunately, meeting such requirements is presently beyond our technological reach.

Finally, of course, it has been known for some time that general relativity permits the possibility of *wormholes*, topological tunnels which in principle could connect distant parts of the universe, a cosmic subway so to speak. Publishing in the *American Journal of Physics* in 1988, theorists Morris and Thorne have outlined the requirements for traversable wormholes, and have found that, in principle, the possibility exists provided one has access to (yes, you guessed it) engineerable, Casimir-like, negative-energy-density quantum vacuum states.

"Magic"

Where does all this leave us? As we peer with longing into the heavens from the depth of our gravity well, hoping for some "magic" solution that will launch our spacefarers first to the planets and then to the stars, we are reminded of Arthur C. Clarke's phrase that highly advanced technology is essentially indistinguishable from magic. Fortunately, such magic appears to be waiting in the wings of our deepening understanding of the quantum universe in which we live, and it is only a matter of time before such magic will become the handmaiden of mankind's drive to explore the beckoning highways and byways of interstellar space.

Dr. Hal Putboff is Director of the Institute for Advanced Studies it? Austin, TX. He has published papers on electron-beam devices, lasers and quantum zero-point-energy effects and has patents issued and pending in the laser, communications and energy fields.

THE SUBTLE PULL OF EMPTINESS

BY CHARLES SEIFE

SCIENCE, VOL. 275, 10 JANUARY 1997

There's no such thing as a free lunch -- except in quantum mechanics. Classical physics -- and common sense -- dictates that the vacuum is devoid not only of matter but also of energy. But quantum mechanics often seems to depart from common sense. A paper in the current issue of *Physical Review Letters* describes the first successful measurement of the ultimate quantum free lunch: the Casimir force, a pressure exerted by empty space.

The measurement, by physicist Steven Lamoreaux of Los Alamos National Laboratory, confirms the strange picture of the vacuum conceived in the 1920s by pioneering quantum physicists Max Planck and Werner Heisenberg. Even at absolute zero, they asserted, the vacuum is seething with activity. This "zero-point energy" can be thought of as an infinite number of "virtual" photons that, like unobservable Cheshire cats, wink in and out of existence-but should have a measurable effect en masse. That's what Lamoreaux has now shown. "We're excited; it confirms a very basic prediction of quantum electro-dynamics," says Ed Hinds of the University of Sussex in the United Kmgdom.

For decades after Planck and Heisenberg described the zero-point energy, physicists preferred to ignore it. It's infinite, and co a physicist, "infinity's not a very useful quantity, so we get rid of it," says Charles Sukenik of the University of Wisconsin.

But an early clue that these infinite fluctuations can't be ignored came in 1948, when researchers at the Philips Laboratory in the Netherlands were studying the van der Waals force-a weak attraction between neutral atoms. At long distances, the van der Waals force weakened unexpectedly. Philips scientists Hendrick Casimir and Dik Polder found that they could explain the weakening when they pictured the force as resulting from correlated zero-point fluctuations in the electric field, which would propagate from atom to atom at the finite speed of light. Because of the lag, the chance that the atoms would feel each other's fluctuations while they were still correlated would fall off at longer ranges. This weakening, called the Casimir-Polder effect, was first accurately measured in 1993, by Hinds, Sukenik, and their colleagues.

Casimir had also realized that the zero-point energy should reveal itself more directly, as a very weak attraction between two surfaces separated by a

tiny gap. Provided the gap was small enough to exclude some of the virtual photons,' the crowd of photons outside the cavity would exert a minute pressure.

To measure it, Lamoreaux positioned two gold-coated quartz surfaces less than a milcrometer apart, one of them attached to a torsion pendulum while the other was fixed. The surfaces created a "box" that allowed only virtual photons of certain wavelengths to exist inside it. Outside the box, a full complement of virtual particles was merrily winking away. The infinite zero-point energy on the outside of the box outweighed the infinite (but smaller) zero-point energy inside, forcing the surfaces together.

By counteracting this subtle attraction with piezoelectric transducers, which exert a force when a voltage is applied to them, Lamoreaux was able to measure the force. The result: a value of less than 1 billionth of a newton, agreeing with theory to within 5%.

Hinds and others say the experiment should help physicists accept that the subatomic world is every bit as weird as quantum mechanics predicts. "We feel in our hearts that we really do understand how things work -- even something as peculiar as vacuum fluctuations," says Hinds. Adds Sussex physicist Malcolm Boshier, who was on Hinds's Casimir-Polder team: "This is one of those experiments that is going to wind up in all of the textbooks."

ETHER: WHAT IS IT?

BY AMARA GRAPS

The properties of light have perplexed scientists ever since humans were capable of giving it thought. Newton thought of light as showers of particles. Young and Fresnel gave evidence for light as waves. Maxwell concluded: "Light consists of electromagnetic waves," after combined electricity and magnetism in his electromagnetic wave theory. If Maxwell's statement is true, then what do the waves travel in, since mechanical waves have to propagate in some medium?

This paper is a brief investigation of that medium- called the ether. If light truly is a wave, then an ether is essential. The properties of the hypothesized ether are very unusual. One type of medium is required by Maxwell's electromagnetic equations. Yet another type of medium is required from the noninterference of the ether with motions of bodies in our universe.

Maxwell derived his electric and magnetic field equations from his technique of analogy where he likened magnetic lines of force to incompressible fluid flow. However the waves in his electromagnetic field are transverse, that is, in a sinusoidal up and down (or sideways) motion. Transverse waves, cannot travel through a body of liquid or gas. These types of waves can only be conducted through solids, in a gravitational field, or along the surfaces of water.

Therefore the ether cannot be a fluid because transverse waves cannot pass through a fluid. The ether has to be a solid. A solid medium carries a transverse wave in the following way. As the wave passes through the ether, that portion of the ether has to be distorted at right angles to the transverse light wave. Then the forces holding that portion of the solid have to snap the ether back. The rate at which the light wave travels through the medium depends on the size of the force that snaps back the distorted region. The greater the force, the greater the snap-back, the more rapid the progression of the wave. Since we know that light travels at over 186,000 mi/sec, the snap-back by the forces must be extremely rapid- in fact the force holding each portion of the ether in place was calculated to be considerably stronger than steel.

A second type of medium results from our experience of seeing bodies able to move freely throughout the universe. Because we know that the motions of the bodies in our universe are not interfered with in any detectable way- it seems reasonable to assume that ether is nothing more than an extremely rarefied gas.

So we have a combination of properties that is very hard to visualize. The ether must be an extremely tenuous gas and possess a rigidity greater than that of steel.

About a dozen experiments have tested the existence of an ether. The most famous is the Michelson- Morley (M-M) experiment. I will focus on that one. After I describe the experiment, I will state the contradictory results and how some scientists have resolved the contradictions.

Michelson and Morley's experiment was designed to measure the motion of the earth through the ether. We are fixed on the earth, so the ether should move relative to us. The velocity of light (c) traveling through this either would change for angles that ranged from light was traveling in the same direction as the ether (c+v) to light traveling in the reverse direction of the ether (c-v). The key instrument in their experiment was an interferometer which allows one to see light interference fringes. The role of the interferometer was to detect whether a beam of light, split into paths at right angles to each other and then recombined, has a difference in velocities over the two paths. The interferometer was set with one path parallel to the motion of the earth in its orbit, and then rotated to put the other path parallel to the motion of the earth.

The detailed set- up for the M-M experiment follows. Light from a source L is split into two beams by a half silvered mirror (e.g. it's coated with enough silver to reflect half the light and allow the remaining half to be transmitted) at P. The beams are reflected at two mirrors S1 and S2 respectively and return through the half-silvered mirror to the telescope at the other end, where Michelson and Morley noted the number of interference fringes n. To calculate n they first calculated a time for the light to traverse the paths PS1P and PS2P. Then they calculated the difference in optical path defined as D=c(t1-t2). Michelson and Morley rotated the experimental set-up 90 degrees and repeated the calculations. They calculated a new optical path: D'. If ether exists then the interference fringes should shift by n fringes where n is defined by (D'- D)/l, and l is the wavelength of the light source.

The result of the experiment was that they found no shifts in the interference fringes. The accuracy of their result was 10 km/sec. E.g., although the earth's orbital speed is 30 km/sec and the light's speed of 300,000 km/sec, the velocity or the earth relative to any ether frame must be less than 10 km/sec.

The experimental result introduces a conflict. Light waves, whatever their form, could not be mechanical waves in a physical medium. And if they were not waves in a physical medium, how could they be said to be waves at all?

Two resolutions of the conflict exist. Either an ether exists, and the M-M experiment didn't measure it or an ether doesn't exist, and light is not a wave.

Some scientists say that the ether exists and that the M-M experiment didn't measure it. One such scientist is H. Aspden, who claims that the ether is attached to the earth- it is a "localized ether." Consequently the M-M experiment didn't measure the ether because it was only designed to measure the linear motion of the earth through space, not rotational motion of the earth through space.

Another scientist is E. W. Silvertooth, who claims that any laser interferometer experiment analogous to the M-M experiment would give a null result. His idea is that the frequencies of the interfering beams are themselves dependent upon velocity relative to a fixed frame. Therefore the frequency will adjust exactly to cancel any effect due to the motion through the light-reference frame, and a null result is an inevitable consequence.

Lorentz and FitzGerald had a related idea that they called the "contraction hypothesis." They postulated that, as a result of the motion of the stationary ether, all bodies are contracted by a factor in the direction of the ether. Therefore an arm of the M-M interferometer parallel to the motion of the ether would be shortened by this amount, and no fringe shift would be obtained when the instrument was rotated. (Later the contraction hypothesis was discarded because an effect of the hypothesis was that the velocity of the interferometer should change every twelve hours due to the earth's rotation, and the effect was never found.)

Other scientists say that an ether doesn't exist, but that a better explanation must exist for the appearance of light as waves in many situations (one example is double-slit experiments). D. Larson promotes the idea that light are particles that travel in a sinusoidal fashion. On this basis, he can easily explain why radiation can have wave-like properties, such as that of polarization, even though it consists of discrete particles. Scott Murray promotes the idea that light are particles that travel in rarefractions and compressions, i.e. concentrations of photons, like sound waves traveling in concentrations of air molecules.

The resolutions listed above are only a small number of the many that creative scientists have thought up to explain the properties of light and the null result of the M-M experiment. This paper up to this point has been about whether ether exists with relation to light's properties. The question is also important with relation to absolute frames of reference in physics. An ether signifies a fixed frame of reference that scientists can use in their measurements of the universe. Einstein's Special Theory of Relativity says that no such frame of reference exists, i.e. all motion is relative. The finding of an ether would shatter that hypothesis. Therefore, it is doubly important to investigate the ether hypothesis and alternate light theories further. I am not in a position to state a conclusion on whether or not ether exists, but I think that we

should think seriously about what light is, and not laugh at what is typically presented as absurd.

References

Aspden, Harold, Physics Unified, Sabberton Publ., 1980, p. 52-69.

Asimov, Isaac, The History of Physics, Walker and Co., 1966, p. 331.

Einstein, Albert and Infeld, Leopold, "Ether and Motion" in The Evolution of Physics, Simon and Schuster, 1961, p. 164.

Hewitt, Paul, Conceptual Physics, Little, Brown & Co.,1981, p. 551.

Jackson, J.D., Classical Electrodynamics, 2nd ed., Wiley, 1975.

Maxwell, J.C., Treatise on Electricity and Magnetism, 3rd ed. (1891), 2 vols., reprint by Dover, New York (1954).

Michelson, Albert, and Morley, Edward, 1887, "On the Relative Motion of the Earth and the Luminiferous Ether," The American Journal of Science, XXXIV, P. 333.

Murray, W. A. Scott 1982, "A Heretic's Guide to Modern Physics: Theories and Miracles", Wireless World, June, p. 80.

Murray, W. A. Scott 1982, "A Heretic's Guide to Modern Physics: Impact of the Photon", Wireless World, October, p. 77.

Murray, W. A. Scott 1983, "A Heretic's Guide to Modern Physics: Quantization and Quantization", Wireless World, January, p. 33.

Murray, W. A. Scott 1983, "A Heretic's Guide to Modern Physics: Waves of Improbability", Wireless World, February, p. 68.

Murray, W. A. Scott 1983, "A Heretic's Guide to Modern Physics: The Limitation of Indeterminacy", Wireless World, March, p. 44.

Murray, W. A. Scott 1983, "A Heretic's Guide to Modern Physics: Haziness and its Applications", Wireless World, April, p. 60.

Murray, W. A. Scott 1983, "A Heretic's Guide to Modern Physics: The Doctrines of Copenhagen", Wireless World, May, p. 34.

Murray, W. A. Scott 1983, "A Heretic's Guide to Modern Physics: Judgment and Prognosis", Wireless World, June, p. 34.

EVERYTHING FOR NOTHING

BY DR HAL PUTHOFF'S

Classical physics tells us that if we think of an atom as a miniature solar system with electronic planets orbiting a nuclear sun, then it should not exist. The circling electrons SHOULD RADIATE AWAY their energy like microscopic radio antennas and spiral into the nucleus. To resolve this problem, physicists had to introduce a set of mathematical rules, called quantum mechanics, to describe what happens. Quantum theory endows matter and energy with both wave and particle-like characteristics. It also restrains electrons to particular orbits, or energy levels, so they cannot radiate energy unless they jump from one orbit to another.

Measuring the spectral lines of atoms verifies that quantum theory is correct. Atoms appear to emit or absorb packets of light, or photons, with a wavelength that exactly coincides with the difference between its energy levels as predicted by quantum theory. As a result, the majority of physicists are content simply to use quantum rules that describe so accurately what happens in their experiments.

Nevertheless, when we repeat the question: "But why doesn't the electron radiate away its energy?", the answer is: "Well, in quantum theory it JUST DOESN'T". It is at this point that not only the layman but also some physicists begin to feel that someone is not playing fair. Indeed, much of modern physics is based on theories couched in a form that works but they do not answer the fundamental questions of what gravity is, why the Universe is the way it is, or how it got started anyway. Surprisingly, there may be answers to these seemingly unanswerable questions. Perhaps even more surprising, the answers seem to be emerging from empty space, the vacuum, the void.

In fact, according to quantum theory, the vacuum, the space between particles of matter as well as between the stars, is not empty, it is filled with vast amounts of fluctuating energy.

To understand this extraordinary idea, we will have to take a detour into the phenomenon of "fluctuations" with which quantum theory abounds. Fluctuations arise as one of the most fundamental concepts to come out of the mathematics of quantum theory. This is the uncertainty principle enunciated by Werner Heisenberg in 1927, which says that it is impossible to know everything about a system because of what would seem to be inherent fluctuations in the very fabric of nature itself. Indeed, quantum mechanics is a

statistical theory that deals with probabilities and it has some profound consequences for our understanding of reality. For instance, we cannot know the position and the momentum of an electron at the same time. If we know its momentum, or energy, accurately, then we can determine its position only probabilistically.

This "fuzziness" of positions described in terms of probability waves gives a measure of the size and shape over which an electronic orbit fluctuates in an atom. It also means that the energy of a particle or system is "fuzzy" and thus there is a slight probability of it changing, or fluctuating, to another value. In fact, a system can actually, by fluctuation, "tunnel" through an energy barrier because there is a small but finite probability of the system existing on the other side of the barrier. I shall discuss later a possible cause for such fluctuation phenomena.

The basic fuzziness of quantum theory means that there are fundamental phenomena which classical physics does not predict. For example, according to classical physics, any simple oscillator, such as a pendulum, when set in motion, comes to rest because of fiction. But quantum theory predicts that such an oscillator would not completely come to rest, but instead, would continue to jiggle randomly about its resting point with a small amount of residual energy, the so-called zero-point energy.

The adjective zero-point denotes that such motion exists even at a temperature of absolute zero where no thermal agitation effects remain. Although we cannot observe the zero-point energy on, say, the pendulum of a grandfather clock because it is so minute, it is nonetheless real. In many physical systems this has important consequences. One example is the presence of a certain amount of "noise" in a microwave receiver that can NEVER be removed, no matter how perfect the technology.

This zero-point energy is the result of the unpredictable random fluctuations of the vacuum energy, as predicted by the uncertainty principle, which is zero in classical theory. In fact, these fluctuations can be intense enough TO CAUSE PARTICLES TO FORM from the vacuum SPONTANEOUSLY, provided they disappear again before violating the uncertainty principle. This temporary formation of "virtual" particles is somewhat akin to the spray that forms near a turbulent waterfall.

Of all the zero-point fluctuation phenomena, the zero-point fluctuations of electromagnetic energy are the most easy to detect. Electromagnetic waves have standing, or travelling modes, that are a bit like the various modes of waves going along a rope that is shaken. Each set of waves has its own characteristic set of nodes and crests. It turns out that even though the zero-point energy in any particular mode of an electromagnetic field is minute (equivalent to half a photon's worth), there

are nearly an infinite number of possible modes of propagation, that is frequencies and directions. The zero-point energy ADDED UP OVER ALL POSSIBLE MODES, therefore, is QUITE ENORMOUS. As hard as it is to believe, it is greater than the energy density in the atomic nucleus. And this in all of the so-called "empty" space around us.

Because the zero-point energy of the electromagnetic fields is so large, you might expect to see its effects easily, but this is not the case because its density is very uniform. Just as a vase standing in a true void is not likely to fall over spontaneously, so a vase bombarded UNIFORMLY on all sides by packets of zero-point energy would not do likewise because of the BALANCED CONDITIONS of the uniform bombardment. The only evidence of such a barrage of energy might be minute jiggling of the vase. Such a mechanism is thought to be involved in the quantum JIGGLE of zero-point motions.

There are situations, however, where the uniformity of the electromagnetic zero-point energy is slightly disturbed and this leads to effects you can ACTUALLY MEASURE. One situation is when the zero-point energy perturbs slightly the spectra of lines from transitions between quantum levels in atoms. This perturbation is known as the LAMB SHIFT, named after the American physicist, Willis Lamb. This work carried out in the late 1940's, using techniques developed for wartime radar, showed that the effect of zero-point fluctuations of the electromagnetic field was to jiggle the electrons slightly in their atomic orbits, leading to a shift in frequency of transitions of about 1000 MEGAHERTZ.

Another, also named after its discoverer, is the CASIMIR EFFECT -- which predicts that two metal plates close together ATTRACT EACH OTHER. Consider plates set at a certain distance apart. In the space between the plates, only those vacuum fluctuations for which a whole number of half-waves just spans the distance can exist, just like waves formed by shaking a rope tied at both ends. Outside the plates, the fluctuations can have many more values because there is more space. The number of modes outside the plates, all of which carry energy and momentum, is greater than those inside. This imbalance PUSHES THE PLATES TOGETHER.

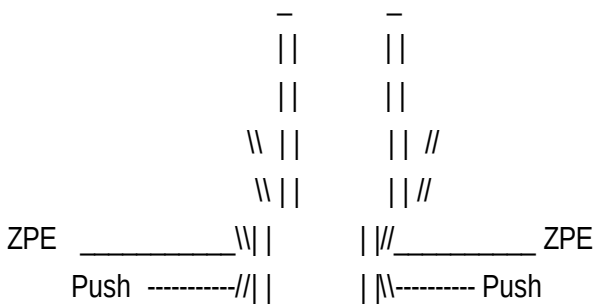

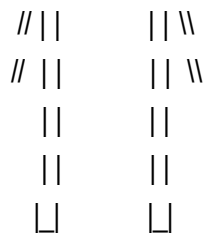

The Casimir Effect : An imbalance in the quantum fluctuations of empty space can PUSH two metal plates together

What does this have to do with our basic question of why the electron in a simple hydrogen atom does not radiate as it circles the protons in its lowest-energy orbit? I have considered this point by taking into account what other physicists have learned over the years about the effects of zero-point energy. I discovered that you can consider the electron as continually radiating away its energy as predicted by classical theory, but SIMULTANEOUSLY ABSORBING a COMPENSATING AMOUNT of energy from the ever-present sea of zero-point energy in which the atom is immersed. An equilibrium between these two processes leads to the correct values for the parameters that define the lowest energy, or ground-state orbit (see "Why atoms don't collapse," NEW SCIENTIST, July 1987). Thus there is a DYNAMIC EQUILIBRIUM in which the zero-point energy stabilizes the electron in a set ground-state orbit. It seems that the very stability of matter itself appears to depend on an underlying sea of electromagnetic zero-point energy.

Gravity as a Long-Range Casimir Force

As well as providing new insights into quantum theory, zero-point fluctuations also give us some insight into gravity. Einstein's general theory of relativity describes gravity well but we still do not know its fundamental nature very well. The theory is basically descriptive without revealing the underlying dynamics for that description. As a result, attempts to unify gravity with the other forces (electromagnetic, strong and weak nuclear forces) or to develop a quantum theory of gravity have foundered again and again on difficulties that can be traced back to a lack of understanding at a fundamental level. To rectify these difficulties, theorists have resorted to ever-increasing levels of mathematical sophistication and abstraction, as in the recent development of supergravity and superstring theories.

The well-known Soviet physicist Andrei Sakharov took a completely different tack to explain such difficulties. He suggested that gravity might not be a fundamental interaction at all, but rather a secondary or RESIDUAL

effect associated with other, non-gravitational fields. Gravity might be an effect brought about by changes in the zero-point energy of the vacuum, due to the presence of matter ("A key to understanding gravity", NEW SCIENTIST, April 1981). If correct, you could then consider gravity as a variation on the Casimir theme, in which the pressures of background zero-point energy were again responsible. Although Sakharov did not develop the concept much further, he did outline certain criteria such a theory would have to meet - for example, predicting the value of the gravitational constant G in terms of the parameters given by zero-point energy theory.

I have studied Sakharov's approach to gravity in detail with some positive results. A particle sitting in the sea of electromagnetic zero-point fluctuations develops a "jitter" motion, or ZITTERBEWEGUNG as German physicists have named it. When there are two or more particles, they are each influenced not only by the fluctuating background field, but also by the fields generated by the other particles, all similarly undergoing Zitterbewegung motion. The coupling between particles due to these fields produces the attractive gravitational force. Gravity can, therefore, be understood as a sort of LONG-RANGE Casimir force.

Because of its electromagnetic underpinning, gravitational theory in this form constitutes what is known as an "already-unified" theory. The main benefit of the new approach is that it helps us to understand characteristics of the way gravity works that were previously unexplained. These include why gravity is so weak; why positive but not negative mass exists; and the fact that gravity cannot be shielded because zero-point fluctuations pervade space and so cannot be shielded.

So, if we have an explanation for non-radiating atomic ground states and for gravity, do we know where the electromagnetic zero-point energy comes from in the first place? There are two schools of thought. One is that it is just simply a part of the boundary conditions of our Universe like, for example, the background radiation left over from the big bang. The other is that the zero-point energy is generated by quantum-fluctuation motion of the charged particles of the latter. I assumed that zero-point fields drive the motion throughout the Universe, in turn, generate the zero-point fields in the form of a self-regenerating feedback cycle, not unlike a cat chasing its own tail.

This self-consistent approach yielded the correct values for the zero-point field. Thus, the zero-point fields observed at any given point are due to random radiation arriving from particles throughout the Universe that are themselves undergoing zero-point motion ("Where does the zero-point energy come from?", NEW SCIENTIST, December 2, 1989). These self-regenerating zero-point fields also produce the familiar properties of quantum theory, such as fluctuation phenomena and the uncertainty principle, for example. This means that it might be possible to model many aspects of

quantum theory on the basis of self-consistent, random interactions between particles and the zero-point fluctuation fields they generate.

Although a knowledge of zero-point fields emerged from quantum physics as that subject matured, Timothy Boyer at City College in New York took a contrary view. In the late 1960's, he began asking what would happen if we took classical physics as it was and introduced a background of random, classical fluctuating zero-point fields. Such fields would presumably have originated in the initial random processes of the big bang and then by regeneration as I have just described. Could such an all-classical model reproduce quantum theory in its entirety, and might this possibility have been overlooked by the founders of quantum theory who were not aware of the existence of such a fluctuating background field?

Boyer began by tackling the problems that led to quantum theory being introduced in the first place, such as the blackbody radiation curve and the photoelectric effect. His upstart, neoclassical approach reproduced the known quantum results one by one. This approach is called STOCHASTIC ELECTRODYNMAICS (SED), in contrast to QUANTUM ELECTRODYNAMICS (QED). Indeed, Peter Milonni at the Los Alamos National Labroratory in the US noted in a review of the Boyer work that if physicists in 1900 had thought of taking this route, they would probably have been more comfortable with this classical approach than with Max Planck's hypothesis of the quantum. One can only speculate as to the direction that physics would have taken them.

The list of topics successfully analysed using the SED approach, which produce THE SAME RESULTS as when the QED approach is used, has now been extended to include the harmonic oscillator, Casimir and van der Waals forces and the thermal effects of acceleration through the vacuum. Out of this work emerged the reasons for such phenomena as the uncertainty principle, the fluctuating motion of particles, the existence of van der Waals forces even at zero temperature, and so forth, all show to be due to the influence of the unceasing activity of the random background fields.

There are also some notable gaps in the development of SED; for example, deriving Schrodinger's equation, as yet turns out to be an intractable problem. Several researchers are confident, however, that this obstacle can be overcome. Until theory as we have come to know it will be entirely replaced by a refurbished classical theory in the near future. But regardless of the final outcome, the successes to date of the SED approach, by its highlighting of the role of background zero-point fluctuations, means that when the final chapter is written on quantum theory, field fluctuations in empty space will be accorded an honoured position.

And now to the biggest question of all, where did the Universe come from? Or, in modern terminology, what started the big bang? Could quantum fluctuations of empty space have something to do with this as well? Edward Tyron of the City University of New York thought so in 1973 when he proposed that our Universe may have originated as a fluctuation of the vacuum on a large scale, as "simply one of those things which happen from time to time". This idea was later refined and updated within the context of inflationary cosmology by Alexander Vilenkin of Tufts University, who proposed that the universe is created by quantum tunnelling from literally nothing into the something we call the Universe. Although highly speculative, these models indicate that physicists find themselves turning again and again to the void and fluctuations therein for their answers.

Those with a practical bent of mind may be left with yet one more unanswered question. Can you find mundane applications for this emerging Rosetta Stone of physics? Will it be possible to extract electrical energy from the vacuum? Robert Forward at Hughes Research Laboratories in Malibu, California has considered this possibility. Could the engineer of the future specialise in "vacuum engineering" as the Nobel laureate Tsun-Dao Lee has put it? Could the energy crises be solved by harnessing the energies of the zero-point "sea"? After all, the basic form of zero-point energy is highly random and tends to cancel itself out, so if a way could be found to bring order out of chaos, then, because of the highly energetic nature of the vacuum fluctuations, relatively large effects could be produced.

Given our relative ignorance at this point, we must fall back on a quote given by the Soviet science historian Roman Poldolny when contemplating this issue. "It would be just as presumptuous to deny the feasibility of useful application as it would be irresponsible to guarantee such application." Only the future can reveal the ultimate use to which humans will put this remaining fire of the gods, the quantum fluctuations of empty space.

Harold Puthoff is a theoretical physicist at the Institute for Advanced Studies at Austin in Texas. He specializes in Quantum Electrodynamics.

ETHER AND THE THEORY OF RELATIVITY

BY ALBERT EINSTEIN

AN ADDRESS DELIVERED ON MAY 5TH, 1920, IN THE UNIVERSITY OF LEYDEN

How does it come about that alongside of the idea of ponderable matter, which is derived by abstraction from everyday life, the physicists set the idea of the existence of another kind of matter, the ether? The explanation is probably to be sought in those phenomena which have given rise to the theory of action at a distance, and in the properties of light which have led to the undulatory theory. Let us devote a little while to the consideration of these two subjects.

Outside of physics we know nothing of action at a distance. When we try to connect cause and effect in the experiences which natural objects afford us, it seems at first as if there were no other mutual actions than those of immediate contact, e.g. the communication of motion by impact, push and pull, heating or inducing combustion by means of a flame, etc. It is true that even in everyday experience weight, which is in a sense action at a distance, plays a very important part. But since in daily experience the weight of bodies meets us as something constant, something not linked to any cause which is variable in time or place, we do not in everyday life speculate as to the cause of gravity, and therefore do not become conscious of its character as action at a distance. It was Newton's theory of gravitation that first assigned a cause for gravity by interpreting it as action at a distance, proceeding from masses. Newton's theory is probably the greatest stride ever made in the effort towards the causal nexus of natural phenomena. And yet this theory evoked a lively sense of discomfort among Newton's contemporaries, because it seemed to be in conflict with the principle springing from the rest of experience, that there can be reciprocal action only through contact, and not through immediate action at a distance.

It is only with reluctance that man's desire for knowledge endures a dualism of thls kind. How was unity to be preserved in his comprehension of the forces of nature? Either by trying to look upon contact forces as being themselves distant forces which admittedly are observable only at a very small distance and this was the road which Newton's followers, who were entirely under the spell of his doctrine, mostly preferred to take; or by assuming that the Newtonian action at a distance is only apparently immediate action at a

distance, but in truth is conveyed by a medium permeating space, whether by movements or by elastic deformation of this medium. Thus the endeavour toward a unified view of the nature of forces leads to the hypothesis of an ether. This hypothesis, to be sure, did not at first bring with it any advance in the theory of gravitation or in physics generally, so that it became customary to treat Newton's law of force as an axiom not further reducible. But the ether hypothesis was bound always to play some part in physical science, even if at first only a latent part.

When in the first half of the nineteenth century the far-reaching similarity was revealed which subsists between the properties of light and those of elastic waves in ponderable bodies, the ether hypothesis found fresh support. 1t appeared beyond question that light must be interpreted as a vibratory process in an elastic, inert medium filling up universal space. It also seemed to be a necessary consequence of the fact that light is capable of polarisation that this medium, the ether, must be of the nature of a solid body, because transverse waves are not possible in a fluid, but only in a solid. Thus the physicists were bound to arrive at the theory of the ``quas-irigid'' luminiferous ether, the parts of which can carry out no movements relatively to one another except the small movements of deformation which correspond to light-waves.

This theory also called the theory of the stationary luminiferous ether moreover found a strong support in an experiment which is also of fundamental importance in the special theory of relativity, the experiment of Fizeau, from which one was obliged to infer that the luminiferous ether does not take part in the movements of bodies. The phenomenon of aberration also favoured the theory of the quasi-rigid ether.

The development of the theory of electricity along the path opened up by Maxwell and Lorentz gave the development of our ideas concerning the ether quite a peculiar and unexpected turn. For Maxwell himself the ether indeed still had properties which were purely mechanical, although of a much more complicated kind than the mechanical properties of tangible solid bodies. But neither Maxwell nor his followers succeeded in elaborating a mechanical model for the ether which might furnish a satisfactory mechanical interpretation of Maxwell's laws of the electro-magnetic field. The laws were clear and simple, the mechanical interpretations clumsy and contradictory. Almost imperceptibly the theoretical physicists adapted themselves to a situation which, from the standpoint of their mechanical programme, was very depressing. They were particularly influenced by the electro-dynamical investigations of Heinrich Hertz. For whereas they previously had required of a conclusive theory that it should content itself with the fundamental concepts which belong exclusively to mechanics (e.g. densities, velocities, deformations, stresses) they gradually accustomed themselves to admitting electric and magnetic force as fundamental concepts side by side with those of

mechanics, without requiring a mechanical interpretation for them. Thus the purely mechanical view of nature was gradually abandoned. But this change led to a fundamental dualism which in the long-run was insupportable. A way of escape was now sought in the reverse direction, by reducing the principles of mechanics to those of electricity, and this especially as confidence in the strict validity of the equations of Newton's mechanics was shaken by the experiments with b-rays and rapid kathode rays.

This dualism still confronts us in unextenuated form in the theory of Hertz, where matter appears not only as the bearer of velocities, kinetic energy, and mechanical pressures, but also as the bearer of electromagnetic fields. Since such fields also occur in vacuo i.e. in free ether the ether also appears as bearer of electromagnetic fields. The ether appears indistinguishable in its functions from ordinary matter. Within matter it takes part in the motion of matter and in empty space it has everywhere a velocity; so that the ether has a definitely assigned velocity throughout the whole of space. There is no fundamental difference between Hertz's ether and ponderable matter (which in part subsists in the ether).

The Hertz theory suffered not only from the defect of ascribing to matter and ether, on the one hand mechanical states, and on the other hand electrical states, which do not stand in any conceivable relation to each other; it was also at variance with the result of Fizeau's important experiment on the velocity of the propagation of light in moving fluids, and with other established experimental results.

Such was the state of things when H. A. Lorentz entered upon the scene. He brought theory into harmony with experience by means of a wonderful simplification of theoretical principles. He achieved this, the most important advance in the theory of electricity since Maxwell, by taking from ether its mechanical, and from matter its electromagnetic qualities. As in empty space, so too in the interior of material bodies, the ether, and not matter viewed atomistically, was exclusively the seat of electromagnetic fields. According to Lorentz the elementary particles of matter alone are capable of carrying out movements; their electromagnetic activity is entirely confined to the carrying of electric charges. Thus Lorentz succeeded in reducing all electromagnetic happenings to Maxwell's equations for free space.

As to the mechanical nature of the Lorentzian ether, it may be said of it, in a somewhat playful spirit, that immobility is the only mechanical property of which it has not been deprived by H. A. Lorentz. 1t may be added that the whole change in the conception of the ether which the special theory of relativity brought about, consisted in taking away from the ether its last mechanical quality, namely, its immobility. How this is to be understood will forthwith be expounded.

The space-time theory and the kinematics of the special theory of relativity were modelled on the Maxwell-Lorentz theory of the electromagnetic field. This theory therefore satisfies the conditions of the special theory of relativity, but when viewed from the latter it acquires a novel aspect. For if K be a system of co-ordinates relatively to which the Lorentzian ether is at rest, the Maxwell-Lorentz equations are valid primarily with reference to K. But by the special theory of relativity the same equations without any change of meaning also hold in relation to any new system of co-ordinates K' which is moving in uniform translation relatively to K. Now comes the anxious question: Why must I in the theory distinguish the K system above all K' systems, which are physically equivalent to it in all respects, by assuming that the ether is at rest relatively to the K system? For the theoretician such an asymmetry in the theoretical structure, with no corresponding asymmetry in the system of experience, is intolerable. If we assume the ether to be at rest relatively to K, but in motion relatively to K', the physical equivalence of K and K' seems to me from the logical standpoint, not indeed downright incorrect, but nevertheless inacceptable.

The next position which it was possible to take up in face of this state of things appeared to be the following. The ether does not exist at all. The electromagnetic fields are not states of a medium, and are not bound down to any bearer, but they are independent realities which are not reducible to anything else, exactly like the atoms of ponderable matter. This conception suggests itself the more readily as, according to Lorentz's theory, electromagnetic radiation, like ponderable matter, brings impulse and energy with it, and as, according to the special theory of relativity, both matter and radiation are but special forms of distributed energy, ponderable mass losing its isolation and appearing as a special form of energy.

More careful reflection teaches us, however, that the special theory of relativity does not compel us to deny ether. We may assume the existence of an ether,; only we must give up ascribing a definite state of motion to it, i.e. we must by abstraction take from it the last mechanical characteristic which Lorentz had still left it. We shall see later that this point of view, the conceivability of which shall at once endeavour to make more intelligible by a somewhat halting comparison, is justified by the results of the general theory of relativity.

Think of waves on the surface of water. Here we can describe two entirely different things. Either we may observe how the undulatory surface forming the boundary between water and air alters in the course of time; or else with the help of small floats, for instance we can observe how the position of the separate particles of water alters in the course of time. If the existence of such floats for tracking the motion of the particles of a fluid were a fundamental impossibility in physics if, in fact, nothing else whatever were observable than the shape of the space occupied by the water as it varies in time, we should

have no ground for the assumption that water consists of immovable particles. But all the same we could characterize it as a medium.

We have something like this in the electromagnetic field. For we may picture the field to ourselves as consisting of lines of force. If we wish to interpret these lines of force to ourselves as something inmaterial in the ordinary sense, we are tempted to interpret the dynamic processes as motions of these lines of force, such that each separate line of force is tracked through the course of time. It is well known, however, that this way of regarding the electromagnetic field leads to contradictions.

Generalizing we must say this: There inay be supposed to be extended physical objects to which the idea of motion cannot be applied. They may not be thought of as consisting of particles which allow themselves to be separately tracked through time. In Minkowski's idiom this is expressed as follows: Not every extended conformation in the four-dimensional world can be regarded as composed of worldthreads. The special theory of relativity forbids us to assume the ether to consist of particles observable through time, but the hypothesis of ether in itself in conflict with the special theory of relativity. Only we must be on our guard against ascribing a state of motion to the ether.

Certainly, from the standpoint of the special theory of relativity, the ether hypothesis appears at first to be an empty hypothesis. 1n the equations of the electromagnetic field there occur, in addition to the densities of the electric charge, only the intensities of the field. The career of electromagnetic processes in vacuum appears to be completely determined by these equations, uninfluenced by other physical quantities. The electromagnetic fields appear as ultimate, irreducible realities, and at first it seems superfluous to postulate a homogeneous, isotropic ether-medium, and to envisage electromagnetic fields as states of this medium.

But on the other hand there is a weighty argument to be adduced in favour of the ether hypothesis. To deny the ether is ultimately to assume that empty space has no physical qualities whatever. The fundamental facts of mechanics do not harmonize with this view. For the mechanical behaviour of a corporeal system hovering freely in empty space depends not only on relative positions (distances) and relative velocities, but also on its state of rotation, which physically may be taken as a characteristic not appertaining to the system in itself. In order to be able to look upon the rotation of the system, at least formally, as something real, Newton objectivises space. Since he classes his absolute space together with real things, for him rotation relative to an absolute space is also something real. Newton might no less well have called his absolute space ``Ether''; what is essential is merely that besides observable objects, another thing, which is not perceptible, inust be looked upon as real, to enable acceleration or rotation to be looked upon as something real.

It is true that Mach tried to avoid having to accept as real something which is not observable by endeavouring to substitute in mechanics a mean acceleration with reference to the totality of the masses in the universe in place of an acceleration with reference to absolute space. But inertial resistance opposed to relative acceleration of distant masses presupposes action at a distance; and as the modern physicist does not believe that he may accept this action at a distance, he comes back once inore, if he follows Mach, to the ether, which has to serve as medium for the effects of inertia. But this conception of the ether to which we are led by Mach's way of thinking differs essentially from the ether as conceived by Newton, by Fresnel, and by Lorentz. Mach's ether not only conditions the behaviour of inert masses, but is also conditioned in its state by them.

Mach's idea finds its full development in the ether of the general theory of relativity. According to this theory the metrical qualities of the continuum of space-time differ in the environment of different points of space-time, and are partly conditioned by the matter existing outside of the territory under consideration. This space-time variability of the reciprocal relations of the standards of space and time, or, perhaps, the recognition of the fact that ``empty space'' in its physical relation is neither homogeneous nor isotropic, compelling us to describe its state by ten functions (the gravitation potentials g), has, I think, finally disposed of the view that space is physically empty. But therewith the conception of the ether has again acquired an intelligible content, although this content differs widely from that of the ether of the mechanical undulatory theory of light. The ether of the general theory of relativity is a medium which is itself devoid of all mechanical and kinematical qualities, but helps to determine mechanical (and electromagnetic) events.

What is fundamentally new in the ether of the general theory of relativity as opposed to the ether of Lorentz consists in this, that the state of the former is at every place determined by connections with the matter and the state of the ether in neighbouring places, which are amenable to law in the form of differential equations,; whereas the state of the Lorentzian ether in the absence of electromagnetic fields is conditioned by nothing outside itself, and is everywhere the same. The ether of the general theory of relativity is transmuted conceptually into the ether of Lorentz if we substitute constants for the functions of space which describe the former, disregarding the causes which condition its state. Thus we may also say, I think, that the ether of the general theory of relativity is the outcome of the Lorentzian ether, through relativation.

As to the part which the new ether is to play in the physics of the future we are not yet clear. We know that it determines the metrical relations in the space-time continuum, e.g. the configurative possibilities of solid bodies as well as the gravitational fields; but we do not know whether it has an essential share in the structure of the electrical elementary particles constituting matter.

Nor do we know whether it is only in the proximity of ponderable masses that its structure differs essentially from that of the Lorentzian ether; whether the geometry of spaces of cosmic extent is approximately Euclidean. But we can assert by reason of the relativistic equations of gravitation that there must be a departure from Euclidean relations, with spaces of cosmic order of magnitude, if there exists a positive mean density, no matter how small, of the matter in the universe. In this case the universe must of necessity be spatially unbounded and of finite magnitude, its magnitude being determined by the value of that inean density.

If we consider the gravitational field and the electromagnetic field from the standpoint of the ether hypothesis, we find a remarkable difference between the two. There can be no space nor any part of space without gravitational potentials; for these confer upon space its metrical qualities, without which it cannot be imagined at all. The existence of the gravitational field is inseparably bound up with the existence of space. On the other hand a part of space may very well be imagined without an electromagnetic field; thus in contrast with the gravitational field, the electromagnetic field seems to be only secondarily linked to the ether, the formal nature of the electromagnetic field being as yet in no way determined by that of gravitational ether. From the present state of theory it looks as if the electromagnetic field, as opposed to the gravitational field, rests upon an entirely new formal motif, as though nature might just as well have endowed the gravitational ether with fields of quite another type, for example, with fields of a scalar potential, instead of fields of the electromagnetic type.

Since according to our present conceptions the elementary particles of matter are also, in their essence, nothing else than condensations of the electromagnetic field, our present view of the universe presents two realities which are completely separated from each other conceptually, although connected causally, namely, gravitational ether and electromagnetic field, or as they might also be called space and matter.

Of course it would be a great advance if we could succeed in comprehending the gravitational field and the electromagnetic field together as one unified conformation. Then for the first time the epoch of theoretical physics founded by Faraday and Maxwell would reach a satisfactory conclusion. The contrast between ether and matter would fade away, and, through the general theory of relativity, the whole of physics would become a complete system of thought, like geometry, kinematics, and the theory of gravitation. An exceedingly ingenious attempt in this direction has been made by the mathematician H. Weyl,; but I do not believe that his theory will hold its ground in relation to reality. Further, in contemplating the immediate future of theoretical physics we ought not unconditionally to reject the possibility that the

facts comprised in the quantum theory may set bounds to the field theory beyond which it cannot pass.

Recapitulating, we may say that according to the general theory of relativity space is endowed with physical qualities; in this sense, therefore, there exists an ether. According to the general theory of relativity space without ether is unthinkable; for in such space there not only wonld be no propagation of light, but also no possibility of existence for standards of space and time (measuring-rods and clocks), nor therefore any space-time intervals in the physical sense. But this ether may not be thought of as endowed with the quality characteristic of ponderable media, as consisting of parts which may be tracked through time. The idea of motion may not be applied to it.

AETHER, RELATIVITY AND SUPERFLUIDITY

BY BARRY C. MINGST

Abstract

A review of the basics of special and general relativity. The basis of both special relativity and general relativity is superfluid equations -- Maxwell's equations for special relativity and generalized superfluid equations for general relativity. Demonstration that a superfluid aether results in both special and general relativity as special cases. Resolution of the Feynman arguments against an aether as a gravitational source. Discussion of the Thirring-Lenz experiment tending to confirm physical aether medium versus "mathematical" or "continuum" cause of gravity.

Introduction

"According to the general theory of relativity space is endowed with physical qualities; in this sense, therefore, there exists an aether. According to the general theory of relativity space without aether is unthinkable."

A. Einstein, Sidelights on Relativity, 1922, page 23.

This paper examines one possible physically causative agent for gravitation of matter bodies. This causative agent is a superfluid aether. This aether is not matter, but matter is affected by the aether. Superfluidity is the basis for Maxwell's equations, special relativity, and general relativity.

The concept of the aether arose from the study of the behavior of wave action and light. Even before the kinetic theory of gases provided microscopic concepts, the study of the sensible world allowed a fairly consistent view of wave action. Light was clearly identified in the wave category of phenomena. The debate as to what the ultimate underlying nature of light was (wave or particulate) spanned several centuries of theory and experiment. Not until the twentieth century was it ever contended that "waves" of light did not have an underlying physical medium.

The main objection to fluid aether theories came from light's propagation as transverse waves. Up to the time of the general abandonment of deterministic (classical) physics at the microscopic level (with the rise of quantum physics in the 1920's) no "reasonable" way to explain this behavior of light was generally accepted. "The" aether theory being tested by the famous Michaelson-Morely experiment was the "solid" aether theory that was in

ascendence at the time. This theory assumed that the aether was physically separate from matter -- that is, they were not related.

The demise of the concept of the aether resulted from the tumultuous evolution of the physical concepts of the early twentieth century (quantum theory and general relativity). Quantum mechanicists developed the concepts of "probability density" and non-causality. General relativists picked up on the shorthand of space-time developed by Minkowski in 1908 for special relativity and expanded it to a mathematical "space-time continuum." Although most specifically denied a physical medium, Einstein clearly realized that both special and general relativity were based on fluid dynamical models {Handbook of Physics, Condon and Odishaw, Page 2-50, Section 29}.

The Derivation of Maxwell's Equations

One of the most successful theoretical works in physics is Maxwell's theory of electricity and magnetism. Maxwell's equations united and mathematically quantified the interaction of electrical and magnetic effects. In deriving these equations, Maxwell made certain assumptions about the nature of the medium that carried electricity, magnetism, and light. The primary assumption used by Maxwell was that the underlying medium could be described using the perfect fluid vortex theory developed by Hemholtz.

"The consideration of the action of magnetism on polarized light leads, as we have seen, to the conclusion that in a medium under the action of magnetic force is something belonging to the same mathematical class as an angular velocity, whose axis is in the direction of the magnetic force, forms a part of the phenomenon.

"This angular velocity cannot be that of any portion of the medium of sensible dimensions rotating as a whole. We must therefore conceive the rotation to be that of very small portions of the medium, each rotating on its own axis. This is the hypothesis of molecular vortices.

"The motion of these vortices, though, as we have shewn ..., does not sensibly affect the visible motions of large bodies, may be such as to affect that vibratory motion on which the propagation of light, according to the undulatory theory, depends. The displacements of the medium, during the propagation of light, will produce a disturbance of the vortices, and the vortices when so disturbed may react on the medium so as to affect the mode of propagation of the ray."...

"... We shall therefore assume that the variation of vortices caused by the displacement of the medium is subject to the same conditions which Hemholtz, in his great memoir on Vortex-motion, has shewn to regulate the variation of the vortices of a perfect fluid."

J. Maxwell, A Treatise on Electricity and Magnetism, 1873, sections 822 and 823.

There have been attempts in the past to "expand" Maxwell's equations in the name of symmetry. One of these was the concept of magnetic monopoles. It was determined that magnetic monopoles could be inserted into Maxwell's equations and the equations would remain self-consistent and usable. The hunt for magnetic monopoles in the 1970's ended without any confirmed monopoles. Another attempt was the expansion of Maxwell's equations to include positive and negative charges as "carriers" of the weak nuclear force. This is what is now known as the "electroweak" force. This expansion of Maxwell's equations is also self-consistent and usable. In this case particles of mass roughly in the range expected have been found.

What is missing from these expansions is any physical concept that would give rise to these expansions. It must be stressed that Maxwell derived his equations. He did not just write them down and then note that they happened to work. The derivation was the direct result of the physical postulates (superfluid aether and vortices) he made in his derivation. Magnetic monopoles and "weak" nuclear theory do not arise from Maxwell's equations. There is therefore no physical basis for expecting these equations to work.

The Derivation of Special Relativity

The special theory of relativity was derived from Maxwell's Equations. The Special Theory was a leap of quantification based on an apparent anomaly. Maxwell's equations imply that the measured speed of light (in a vacuum) is constant for any observer -- regardless of how that observer was moving relative to the source of light.

In developing Special Relativity, Einstein postulated the universality of the speed of light and applied the mathematical consequences to see where they would lead. The primary result of the special theory of relativity was the equivalence of matter and energy (E=mc2). The Lorentz-Fitzgerald relations had been developed earlier from standard aether wave theories (which is why they are called Lorentz-Fitzgerald equations instead of Einstein equations). Special Relativity is therefore based on the superfluid derivations of Maxwell and Hemholtz.

Minkowski Space-Time

The concept of "space-time" was first developed by Minkowski in 1908 for use with the Special Theory of Relativity. In this first incarnation, Minkowski pointed out that the mathematical equations may be written in a shorthand form by regarding time and the three physical coordinates as four coordinates in a four-dimensional space, called "space-time."

In an inertial, cartesian reference frame a pulse of light emitted at time t=t0 and location x = x0, y = y0, and z = z0 will be noted at a point x, y, z, t given by the equation {eq 4.2 An Introduction to Tensor Calculus, Relativity and Cosmology, D Lawden, 1975, Wiley and Sons}:

This equation describes an expanding spherical shell for the light pulse. A shorthand version of this equation was developed by Minkowski by the use of the mathematical device of setting:

x = x1, y = x2, z = x3, and ict = x4; where i = SqrRoot (-1)

The standard Minkowski space-time is given as {eq. 4.5, An Introduction to Tensor Calculus, Relativity and Cosmology, D Lawden, 1975, Wiley and Sons}:

General Relativity

Einstein's "field" equations may be written in the tensor form:

In this form, Gaß is the "Einstein Tensor", Lambda is the "cosmological constant" (usually set to zero), g is the "metric" tensor, k is a constant set to 8p, and Taß is the "stress-energy tensor." This form is actually shorthand notation for ten œupled differential equations {Equation 8.7, A first course in general relativity, Schutz, Cambridge University Press, 1990}. The value of 8p is obtained by demanding that Einstein's equations predict the correct behavior of planets in the solar system -- the Newtonian Limit {ibid, p199}.

The claim is currently made that the mathematics of General Relativity requires the curvature of space. The question "How?" is answered with "It just does." The question of why the object travels the shortest path in curved space is also not addressed. General Relativity can give no answer because these are the basic postulates of the theory.

The differences in the concepts between General Relativity and Newtonian gravity are:

Newtonian: Mass (somehow) causes a gravitational force which causes true acceleration.

Einsteinian: Mass (somehow) causes a warping of space which results in apparent acceleration.

But the description of causation as a curvature of space is not sufficient to encompass what else General Relativity includes. If spacial curvature were all there were to General Relativity, there would be no difference in calculations between General Relativity and Newtonian gravity. General Relativity also imposes superfluid equations onto gravitational relationships. The imposition of superfluid equations has a very significant effect: the speed of propagation of gravity is thereby made finite. The finite transmission speed (and related

superfluid properties) is the significant difference between Newtonian gravity and General Relativity.

General Relativity is a relativistic theory of gravity. The first postulate of General Relativity is that the source of the gravitational field is the stress-energy tensor of a perfect fluid, T {sections 4.6 & 4.7, A first course in general relativity, Schutz}. This "stress-energy tensor" contains four non-zero components. These four components are the density of the perfect fluid and the pressure of the perfect fluid in each of the three physical axes. A perfect fluid in general relativity is defined as a fluid that has no viscosity and no heat conduction. It is a generalization of the "ideal gas" of ordinary thermodynamics.

Newtonian gravity is regarded as the result of a force. General Relativity distinguishes gravity from all other forces because "all bodies given the same initial velocity follow the same trajectory in a gravitational field, regardless of their internal composition" {ibid, p121}. Specifically, attempting to define a primal reference frame is considered "vacuous, since no free particle could possibly be a physical 'marker' for it" {ibid, p122}. This second postulate became the Equivalence Principle: Uniform gravitational fields are equivalent to frames that accelerate uniformly relative to inertial frames.

Although it is often stated that General Relativity shows that mass curves space, what GR actually states is that a curved spacetime represents the effects of gravity. The distinction is critical. All GR really requires is that free particles (and photons) act as if space were curved in some manner. All this means is that their trajectories curve in the presence of a massive object {ibid, p125}.

The same argument could be made for Coriolis forces. If we examine the coriolis forces that affect trajectories of moving objects over the surface of a rotating planet, we could reach the same results by postulating that Latitude "curves" space. The results of our calculations would be identical to those based on the physical cause. But we would not gain any knowledge of the cause, because we would not be looking for one.

In the direct application of its basic postulate, General Relativity suffers from the same basic weakness as the Newtonian quantification of gravity. No basis is given in General Relativity for how mass "curves" space, why masses follow the "shortest" path through curved space, or why the principle of equivalence exists. This is "action at a distance" reformulated. Einstein himself noted this weakness in that matter had to be added in to the equations "by hand" {The Reluctant Father of Black Holes, Scientific American, June 1996, p83}.

Thirring Lenz Experiment

General Relativity has some weaknesses in explaining accelerations seen in the vicinity of massive, rapidly spinning objects. In this situation, the Einsteinian/Newtonian quantification predicts no effects on first principles. But the Einsteinian formula solutions "require" a non-zero tangential velocity to be imparted by a spinning mass.

First principles of a space-time continuum cannot explain accelerations in the vicinity of rapidly rotating massive objects because the "warp" of space-time does not change with the rotation of the object. It has been explained that "inertial dragging" takes place. The explanation of inertial dragging (reference frame dragging) is a description without identification of a cause that can be traced to the base theory {pp 6 & 18-20, Rotating Fields in General Relativity, J. Islam, 1985}. According to this reference "(t)he precise connection in all its details has not yet been worked out."

But such a "drag" implies that there is a friction in the motion of mass with respect to the space-time continuum itself. Friction due to motion with respect to the continuum requires that the continuum be a fixed, primal reference frame -- which must be denied due to the basic assumption of relativity, that there can be no primal reference frame. General relativistic formulations show the requirement of tangential motion when the assumption is made that the continuum is a superfluid.

Resolution of Some Arguments Against

Aether Cause of Gravity

LeSage first discussed the possible "shadowing" of "ultra-mundane particles" as a cause of gravity in 1784. This approach has been abandoned several times by different people. According to Feynman, LeSage-type theories fail as follows:

"This particular idea has the following trouble: the earth, in moving around the sun, would impinge on more particles which are coming from its forward side than from its hind side ... . Therefore there would be more impulse given the earth from the front, and the earth would feel a resistance to motion and would be slowing up in its orbit. One can calculate how long it would take for the earth to stop as a result of this resistance, and it would not take long enough for the earth to still be in its orbit, so this mechanism does not work. No machinery has ever been invented that 'explains' gravity without also predicting some other phenomenon that does not exist."

R. Feynman, Lectures on Physics, 1963, volume 1, chapter 7, pp 9-10

Performing a calculation of the type above leads to a "drag" on the order of 10-13 m/sec2 for the earth in orbit {Dr. Steve Carlip, private communication to Paul Stowe}. A continuous acceleration on this order would stop the earth in around a million years.

But there is an unstated assumption in Feynman's argument that the "aether particles" are not circulating with the Earth's orbital motion. This is an excellent first assumption, but is it true? The presumption of particles circulating at the same orbital speed of the Earth appears at first to be only an excuse for "saving the theory."

However, we saw above that the mathematics of General Relativity and the observed Thirring-Lenz effect requires that there be some rotational motion in the vicinity of a rotating body. According to the primary assumptions of General Relativity, the Thirring-Lenz effect has no "basis." A superfluid aether would cause accelerations as a result of imparting a vortex spin on the aether field which would then accelerate the target body.

The sun is rotating rapidly in the direction of planetary (earth) orbits. According to General Relativity, the only solution that is not possible in such a situation is irrotational motion in the aether corpuscles. The key assumption in the argument that the earth "would impinge on more particles which are coming from its forward side than from its hind side" is based on non-circulating particles. According to General Relativity, this assumption is found to be invalid! Also, if the aether fluid is indeed a superfluid, once a rotation of the fluid is started it will continue without loss of energy.

The Feynman argument against the LeSage-type hypothesis was completely plausible, for there is no obvious reason to expect that the aether would be rotating along with the earth. But field rotation is both observed and a mathematical requirement of the superfluid vorticity in General Relativity. So, for the moment at least, our theory remains consistent with General Relativity.

This is not the only possible explanation for the earth not spiralling into the sun. The Feynman argument rests on the additional assumption that gravity (and the aether drag) is the only force acting on the earth's orbital motion. But -- in order to contract from a protostar -- the sun must have somehow lost most of it's angular momentum to the planets. If this mechanism were the result of the rotating solar magnetic field, the solar field will interact with the magnetosphere of the earth (and the plasma within it). This interaction will lead to a transfer of angular momentum from the sun to the earth. In short -- all possible sources of orbital impulse must be examined before we throw out a superfluid aether.

The basis for Feynman's argument was the same as one made for the irrotational earth (geocentric cosmos), and dealt with by Galileo in his Dialog on Two World Systems in 1632. The argument went as follows:

According to (Claudius Ptolemy and Tycho Brahe), if the earth were moving (rotating) an object thrown vertically upward would not descend along the same line ..., the point on the earth under the object would have shifted while the object was in the air. Furthermore, if the earth were moving (rotating) from west to east, the direction required to explain the appearance of the heavens, then ... (p)eople on the earth would perpetually feel an east wind, just as a rider feels a wind in his face as he travels along. ...

Galileo had refuted the arguments ... in his Dialogue Concerning the Two Chief World Systems. Objects ... belong to the moving system of the earth, and as parts they participate in the motion of the whole in addition to their own observable motions."

Radner and Radner, Science and Unreason, Wadworth Publishing Company, 1982, p34

As the air moves with a rotating earth, so the aether moves with the orbiting earth. They are part of the same "world system." It is only because the aether is so much less noticeable than the air (to us) that we accept Feynman's argument without close examination. By General Relativity and the Thirring-Lenz effect, the aether MUST move around the rotating sun and the orbiting earth. A Feynman-type argument can only be used if it is demonstrated beyond any doubt that the two components are not part of the same "world system." Whenever one component is affected by the other they must be part of the same, coupled, world system -- and the interdependence cannot be dismissed without serious thought. In this case the wind affects the surface of the earth or the aether is presumed to affect the earth's orbit.

Even if the Thirring-Lenz effect has no bearing, there is also the gravitational "sling" argument. If gravity is the result of a superfluid aether, then the speed of propagation of gravity must be finite. If the speed of gravity is finite, then orbiting masses will accelerate out of orbit. This is supposedly due to the "lead" of the gravitational force, due to the past position of the second object. This is one "push" that could overcome or balance the "drag" of the aether. Proponents of GR state that it is only the "delicate balance" of GR that keeps the orbits from accelerating or decelerating.

Summary

Maxwell's equations were explicitly developed as fluid dynamical models, and require an underlying physical medium. Special relativity was derived from Maxwell's equations. General relativity is based on perfect fluid equations.

Thus, any theory based on one of these three theories implicitly retains all fluid dynamical properties. Any denial of an underlying physical medium by such a theorist is therefore hollow -- and merely shows ignorance on the part of

the practitioner concerning the history and derivation of the equations that are being used.

"Fundamental challenges to disciplines tend to come from outside. It is customary for students to be introduced to their fields of study gradually, as slowly unfolding mysteries, so that by the time they can see their subject as a whole, they have been so thoroughly imbued with conventional preconceptions and patterns of thought that they are extremely unlikely to be able to question its basic premises."

Martin Bernal Black Athena: The Afroasiatic Roots of Classical Civilization, Vol. I, 1987

THE ELECTROMAGNETIC FIELD & CLERK MAXWELL

ARTICLES BY ALBERT EINSTEIN & THOMAS F. TORRANCE

Introduction

This reference article is included in the aether compilation of articles for a number of reasons. Firstly, it was the understanding of Clerk Maxwell that there existed some form of luminiferous medium which bore the propagation of the electromagnetic field. Secondly, the nature of the electromagnetic field itself is the closest specification that man has made in relation to the nature of light - the medium of his highest physical sense - that of vision.

Thirdly, the summation by Albert Einstein of the work of Clerk Maxwell on the nature of the electromagnetic field is of outstanding resource. In a separate article, entitled Aether and the Theory of Relativity, there may be found a more direct discussion concerning the aether by Albert Einstein. The value of the article found below is its addressing the nature of light, and the scientific specifications thereof.

I am indebted to the the publishers of James Clerk Maxwell - A Dynamical Theory of the Electromagnetic Field - and in particular to its editor, Torrance, who has authored the introduction to this book, and thus the first of the two references which are produced below. They are presented here on a not-for-profit basis, and rather in an effort to provide information for those who know themselves as the students of life. There is currently one further resource which relates to the work of James Clerk Maxwell. It is the outline of a book which he had published in 1882 entitled Matter And Motion.

All the best for now,

Pete Brown

Southern Autumn of 97

James Clerk Maxwell

A Dynamic Theory of the Electromagnetic Field

Introduced and edited by T.F. Torrance (1982)

Three observations may now be offered in concluding this Introduction.

(1) Clerk Maxwell created for the first time a field theory which was independently testable against Newtonian force theories. He created a situation in which the dominance of Newtonian mechanics over the whole spectrum of physical science was called into question and decisive steps were taken in the direction of a non-mechanical thoroughly relational understanding of the intelligible connections immanent in the universe. No doubt Clerk Maxwell did not realise the far-reaching implications of his work which was to change the basic perspective and direction of physical science and alter our understanding of the world of space and time. With reference to Clerk Maxwell's two basic papers, On Physical Lines of Force and A Dynamical Theory of the Electromagnetic Field, Ivan Tolstoy has recently given us the following appraisal. 'For us, with our hundred or so years of perspective, these two papers - Maxwell's theory of electromagnetism - are a turning point in the history of science.

The theory is, first of all a synthesis - one of the greatest in the history of science. It unifies two kinds of force - the electric and the magnetic - under one: the electromagnetic field. This unification was the direct, logical consequence of Faraday's experimental work; it had a been begun by others - Ampere, Weber, W. Thomson. But Maxwell crystallized this, the first of the modern unified field theories and gave it the mathematical form which remains immortal under the name of Maxwell's equations - a system of relationships between changing electric and magnetic fields - a whole universe of electromagnetic phenomena, miraculously contained in a few lines of elegant mathematics.

(2) Clerk Maxwell's work was of profound conceptual importance for it had the effect of reorganising the epistemological and logical substructure of physical science, not only through his determination of the mathematical properties of radiation which has had immense implications for scientific technology, but through the way in which he conceived and developed the nature of the field and established the reality of the field as the underlying reality of all spatio-temporal phenomena. At this point we cannot do better than let Einstein himself speak.

'The formulation of these equations is the most important event in physics since Newton's time, not only because of their wealth of content, but also because they form a pattern for a new type of law. The characteristic features of Maxwell's equations, appearing in all other equations of modern physics, are summarized in one sentence. Maxwell's equations are laws representing the structure of the field.... All space is the scene of these laws and not, as for mechanical laws, only points in which matter or charges are present.

Moreover, it should be pointed out, that since the epistemological form of Clerk Maxwell's general equations does not depend on the way in which the observer, or the person who measures the fields, is moving, they have the

effect of establishing the objectivity of scientific knowledge in a new and a profounder way than was possible in the post-Newtonian, and certainly, the post-Kantian, outlook upon the universe.

(3) Physical science as it stemmed from Clerk Maxwell's revolutionary ideas was left with a serious, and perhaps an ultimately irresolvable problem, of which, as we have seen, he himself seems to have been aware. This relates to the fact that although his equations expressed the mathematical properties of the energy intrinsic to the continuous field of space and time, he was unable to reconcile in a satisfactory manner, the ways in which the two basic forms of this energy, in respect of position and motion, manifest themselves. Thus, as Einstein has expressed it, while Clerk Maxwell's partial differential equations appeared as the natural expression of the primary realities of physics, in a particular area of theoretical physics,

'the continuous field appeared side by side with the material point as the representative of physical reality. This dualism has to this day not disappeared, disturbing as it must evidently be to any systematic mind.

Clerk Maxwell's problem remains with us in the difficulties that have emerged in the reconciliation of relativity theory and quantum theory, not to mention a unified field theory which will take in thermodynamics and gravity theory as well - although some way toward the solution may well lie along the line of thought which both Michael Faraday and Clerk Maxwell entertained, that the relations between particles in a field of force must be thought of as constituting, in part at least, what particles actually are. However, it is doubtful whether in the nature of the case the duality between particle and field can ever be completely removed any more than the distinction between the temporal and the spatial aspects of space-time.

Maxwell's Influence on the Development

of the Conception of Physical Reality

Albert Einstein

Written for the centenary of Maxwell's birth [1931]

The belief in an external world independent of the observing subject lies at the foundation of all natural science. However, since sense-perceptions only inform us about this external world, or physical reality, indirectly, it is only in a speculative way that it can be grasped by us. Consequently our conceptions of physical reality can never be final. We must always be ready to change these conceptions, i.e. the axiomatic basis of physics, in order to do justice to the facts of observation in the most complete way that is logically possible. In

actual fact, a glance at the development of physics shows that this axiomatic basis has met with radical changes from time to time.

The greatest change in the axiomatic basis of physics, and correspondingly in our conception of the structure of reality, since the foundation of theoretical physics through Newton, came about through the researches of Faraday and Maxwell on electromagnetic phenomena. In what follows we shall try to present this in a more precise way, while taking the earlier and later development into account.

In accordance with Newton's system, physical reality is characterised by concepts of space, time, the material point and force (interaction between material points). Physical events are to be thought of as movements according to law of material points in space. The material point is the only representative of reality in so far as it is subject to change. The concept of the material point is obviously due to observable bodies; one conceived of the material point on the analogy of movable bodies by omitting characteristics of extension, form, spatial locality, and all their 'inner' qualities, retaining only inertia, translation, and the additional concept of force. The material bodies which had psychologically given rise to the formation of the concept of 'material point' had now for their part to be conceived as a system of material points. It is to be noted that this theoretical system is essentially atomistic and mechanistic.

All happening was to be conceived of as purely mechanical, that is, merely as motions of material points according to Newton's laws of motion.

The most unsatisfactory aspect of this theoretical system - apart from the difficulty relating to the concept of 'absolute space' which has recently been brought back into the discussion - lay mainly in the doctrine of light, which Newton quite logically had also thought of as consisting of material points. Even at that time the question must already have been felt acutely: What happens to the material points that constitute light, when light itself is absorbed? Moreover, it is altogether unsatisfactory to introduce into the discussion two quite different kinds of material points which had to be put forward to represent ponderable matter and light. Then later on electrical corpuscles were added as a third sort with fundamentally different properties. Besides, it was a weakness in the basic structure that interacting forces had to be postulated quite arbitrarily to account for what happens. Nevertheless, this conception of reality accomplished a lot. How, then. did the conviction arise that it should be abandoned?

In order to give his system mathematical form at all, Newton had first to invent the concept of the differential quotient, and to draw up the laws of motion in the form of total differential equations - perhaps the greatest intellectual step that it has ever been given to one man to take. Partial differential equations were not needed for this, and Newton did not make any methodical use of

them. Partial differential equations were needed, however, for the formulation of the mechanics of deformable bodies; this is bound up with the fact that in such problems the way and the manner in which bodies were thought of as constructed out of material points did not play a significant part to begin with.

Thus the partial differential equation came into theoretical physics as a servant, but little by little it took on the role of master. This began in the nineteenth century, when under the pressure of observational facts the undulatory theory of light asserted itself. Light in empty space was conceived as a vibration of the ether, and it seemed idle to conceive of this in turn as a conglomeration of material points. Here for the first time partial differential equations appeared as the natural expression of the primary realities of physics. In a particular area of theoretical physics the continuous field appeared side by side with the material point as the representative of physical reality. This dualism has to this day not disappeared, disturbing as it must be to any systematic mind.

If the idea of physical reality had ceased to be purely atomistic, it still remained purely mechanistic for the time being. One still sought to interpret all happening as the motion of inert bodies: indeed one could not at all imagine any other way of conceiving of things. Then came the great revolution which will be linked with the names of Faraday, Maxwell, Hertz for all time. Maxwell had the lion s share in this revolution. He showed that the whole of what was known at that time about light and electromagnetic phenomena could be represented by his famous double system of partial differential equations, in which the electric and the magnetic fields made their appearance as dependent variables. To be sure Maxwell did try to find a way of grounding or justifying these equations through mechanical thought-models. However. he employed several models of this kind side by side, and took none of them really seriously, so that only the equations themselves appeared as the essential matter. and the field forces which appeared in them as ultimate entities not reducible to anything else. By the turn of the century the conception of the electromagnetic field as an irreducible entity was already generally established and serious theorists had given up confidence in the justification, or the possibility, of a mechanical foundation for Maxwell's equations. Soon. on the contrary an attempt was made to give a field-theoretical account of material points and their inertia with the help of Maxwell's field theory, but this attempt did not meet with any ultimate success.

If we disregard the important particular results which Maxwell's life work brought about in important areas of physics, and direct attention to the modification which the conception of physical reality experienced through him, we can say: Before Maxwell people thought of physical reality - in so far as it represented events in nature-as material points, whose changes consist only in motions which are subject to total differential equations. After Maxwell they

thought of physical reality as represented by continuous fields, not mechanically explicable, which are subject to partial differential equations. This change in the conception of reality is the most profound and the most fruitful that physics has experienced since Newton; but it must also be granted that the complete realisation of the programme implied in this idea has not by any means been carried out yet. The successful systems of physics, which have been set up since then, represent rather compromises between these two programmes, which because of their character as compromises bear the mark of what is provisional and logically incomplete, although in some areas they have made great advances. - Of these the first that must be mentioned is Lorentz's theory of electrons, in which the field and electric corpuscles appear beside one another as equivalent elements in the comprehension of reality. There followed the special and general theory of relativity which - although based entirely on field theory considerations-hitherto could not avoid the independent introduction of material points and total differential equations.

The last and most successful creation of theoretical physics, quantum mechanics, differs fundamentally in its principles from the two programmes which we will briefly designate as Newton's and Maxwell's. For the quantities which appear in its laws lay no claim to describe physical reality itself but only the probabilities for the occurrence of one of the physical realities to which attention is being directed. Dirac, to whom in my judgement. we are indebted for the most logically complete account of this theory rightly points to the fact that it would not be easy, for example. to give a theoretical description of a photon in such a way that there would be comprised in the description sufficient reason for a judgement as to whether the photon will pass a polarisator set obliquely in its path or not.

Nevertheless. I am inclined to think that physicists will not be satisfied in the long run with this kind of indirect description of reality, even if an adaptation of the theory to the demand of general relativity can be achieved in a satisfactory way. Then they must surely be brought back to the attempt to realise the programme which may suitably be designated as Maxwellian: a description of physical reality in terms of fields which satisfy partial differential equations in a way that is free from singularities.

BEYOND E=MC2

A FIRST GLIMPSE OF A POSTMODERN PHYSICS, IN WHICH MASS, INERTIA AND GRAVITY ARISE FROM UNDERLYING ELECTROMAGNETIC PROCESSES

BERNHARD HAISCH, ALFONSO RUEDA & H.E. PUTHOFF

PUBLISHED IN THE SCIENCES, VOL. 34, NO. 6, NOVEMBER / DECEMBER 1994, PP. 26-31

The most famous of all equations must surely be E=mc2. In popular culture that relation between energy and mass is virtually synonymous with relativity, and Einstein, its originator, has become a symbol of modern physics. The usual interpretation of the equation is that one kind of fundamental physical thing, mass (m in the equation), can be converted into a quite different kind of fundamental physical thing, energy (E in the equation), and vice versa; the two quantities are inextricably intertwined, related by the factor c2, the square of the velocity of light. The energy of the sun, for instance, comes from nuclear fusion, in which the nuclei of hydrogen atoms fuse together to become the nuclei of helium atoms. In the prevailing view, mass is lost in the fusion reaction, and as one popular astronomy textbook puts it, "The small fraction of mass that disappears in the process is converted into energy according to the formula E=mc2."

Recent work by us and others now appears to offer a radically different insight into the relation E=mc2, as well as into the very idea of mass itself. To put it simply, the concept of mass may be neither fundamental nor necessary in physics. In the view we will present, Einstein's formula is even more significant than physicists have realized. It is actually a statement about how much energy is required to give the appearance of a certain amount of mass, rather than about the conversion of one fundamental thing, energy, into another fundamental thing, mass.

Indeed, if that view is correct, there is no such thing as mass-only electric charge and energy, which together create the illusion of mass. The physical universe is made up of massless electric charges immersed in a vast, energetic, all-pervasive electromagnetic field. It is the interaction of those charges and the electromagnetic field that creates the appearance of mass. In other words, the magazine you now hold in your hands is massless; properly

understood, it is physically nothing more than a collection of electric charges embedded in a universal energetic electromagnetic field and acted on by the field in such a way as to make you think the magazine has the property of mass. Its apparent weight and solidity arise from the interactions of charges and field.

Besides recasting the prevailing view of mass, this idea would address one of the most profound problems of physics, the riddle of how gravity can be unified with the other three fundamental forces of nature. The electromagnetic force and the weak force, which is responsible for nuclear decay, have been shown to be two manifestations of a single force, appropriately called the electroweak force. There are tantalizing hints that the strong force, which binds nuclei together, will someday be unified with the electroweak force. But until now gravity has resisted all attempts at unification. If the new view is correct, however, gravity would not need to be separately unified. Just as mass would arise from the electromagnetic force, so would gravity.

What is mass? Two key properties define the concept of the mass of a given amount of matter, namely, its inertia and the gravitation to which the matter gives rise. Inertia was defined by Galileo as the property of matter that keeps an object in uniform motion once given an impetus, until the object is acted upon by some further impetus. Galileo's idea was generalized and quantified by Newton in his Principia. The tendency of an object to remain in uniform motion, and the tendency of the motion to change when impetus is applied, Newton expressed in one compact equation. The equation states that the acceleration a, or change of velocity, is proportional to the force F applied, where the constant of proportionality is the inertial mass m of the object in question: thus, F=ma.

In other words, inertial mass is the resistance an object offers to being accelerated when it is subjected to a force. In Newton's equation of motion, when the application of a force ceases, the acceleration goes to zero, and the object remains in uniform motion. Objects are assumed to resist acceleration, because that resistance is an innate property of matter.

But try as he might, Newton could not explain the origin of inertia. Imagine, he suggested, that the universe is empty except for a bucket partly filled with water. Furthermore, imagine the shape of the surface of the water: Is it flat? Then the water must be at rest. Is it curved, shaped in cross section like a parabolic reflector? Then the water must be rotating. But rotating with respect to what? That was the profound dilemma that Newton identified. If the universe were truly empty, as his thought experiment required, there would be no background against which the rotation could be measured. But because the shape of the water surface signals whether a rotation is taking place, Newton

concluded that there is a fundamental spatial frame of reference, an "absolute space."

Some 200 years later the nineteenth-century Austrian physicist and philosopher Ernst Mach took a contrary view. To Mach, Newton's thought experiment demonstrated the absurdity of the idea of absolute space. The shape of the water in a rotating bucket, Mach held, was conferred, somehow, through the presence of all the other matter in the universe. Thus Mach agreed with Newton that the property of inertia creates the need for a reference frame; he simply disagreed that such a reference frame could exist as a distinct, absolute entity. Distant matter, however, could define the reference frame. Unfortunately, his conjecture, which has come to be known as Mach's principle, remains more of a philosophical statement than a testable scientific proposition.

In the early twentieth century a number of investigators, including Max Abraham, Hendrik Antoon Lorentz and Henri Poincare, suggested that inertial mass might arise from an effect called electrostatic self-energy. Any charged particle-the electron, for instance-possesses a certain quantity of electric charge. The charge is the source of an electric field, which carries energy-the electrostatic self-energy. It was proposed that the electrostatic self-energy might correspond to the inertial mass of the charged particle, through the equation E=mc2. But the theoretical mass of the electrostatic electron derived from the equation is many orders of magnitude larger than the actual observed mass of the electron, and the self-repulsion of the electrostatic forces would quickly disperse the electrostatic electron. Hence the theory fails.

Our work suggests inertia is a property arising out of the vast, all-pervasive electromagnetic field we mentioned earlier, which is called the zero-point field (ZPF). The name comes from the fact that the field is held to exist in a vacuum-what is commonly thought of as "empty" space-even at the temperature of absolute zero, at which all thermal radiation is absent. The background energy of the vacuum serves as the reference, or zero point, for all processes. To understand how the ZPF might give rise to inertia, one must understand something about the nature of the field itself.

Theoretical considerations indicate that the ZPF should be a background sea of electromagnetic radiation that is both uniform and isotropic (the same in all directions). The reader may already be familiar with a somewhat similar concept: the remnant radiation from the big bang. According to big bang cosmology, the universe began with a titanic explosion, which gave rise to hot, energetic radiation distributed throughout the infant universe. As the universe expanded and cooled, the radiation became much less energetic, but it still pervades space as a faint and nearly isotropic background of microwave radiation.

Like the cosmic microwave background, the ZPF is a sea of radiation that fills the entire universe. There is a major difference, however. The cosmic microwave background has a rather feeble spectrum identical with the spectrum of an object in thermal equilibrium at a temperature of only 2.76 degrees Celsius above absolute zero. In contrast, the ZPF is a highly energetic emission whose predicted radiation spectrum departs radically from the spectrum of an object in thermal equilibrium. Instead of trailing off at high frequencies, the energy of the ZPF continues to rise sharply with the frequency of the radiation. Quantitatively, the energy density is proportional to the cube of the frequency; double the frequency, and the energy increases by a factor of eight. At what frequency the ZPF spectrum finally cuts off or loses its ability to interact with matter are important and still unresolved issues.

A more profound difference between the cosmic microwave background and the ZPF is a result of the origin of the two emissions. When you switch on a lightbulb, the source of the light emission is clear; it is the heat produced by an electric current in the filament. The source of the cosmic microwave background can also be traced to known physical phenomena, namely, the heat radiation associated with the big bang, as modified by the later expansion and cooling of the universe. The origin of the ZPF is more esoteric. In fact, two distinct views about it exist today.

The conventional view traces the ZPF to the laws of quantum mechanics, the theory forged early in the present century to describe the atom. Any electromagnetic field is characterized by the frequency, polarization and direction of propagation of its radiation. A set of values for those three quantities defines a single so-called mode of the field. Every possible mode can be populated by an arbitrary number of photons, the fundamental quanta of electromagnetic radiation. But according to the probabilities calculated in quantum mechanics, even at its minimum energy, each mode will contain one photon half the time and no photons the other half the time. In a field of zero energy each mode would, with certainty, contain no photons, but that is impossible because of the equal probability that each mode also contains one photon. Thus every mode acts, on average, as if it were populated with at least one-half photon (in addition to whatever other natural or man-made radiation happens to be present).

All such modes add up quickly. Since the energy density of the ZPF increases as the cube of the frequency, the amount of energy making up the ZPF is enormous. That energy, in the conventional view, is simply forced into existence by the laws of quantum mechanics. Not surprisingly, it is regarded in quantum fashion as sometimes real and sometimes virtual, depending on the problem at hand.

The competing theory for the origin of the ZPF comes from what has heretofore been an obscure discipline within physics known as stochastic

electrodynamics, a modern version of much earlier twentieth-century investigations by Einstein, Max Planck, Walther Nernst, Ludwig Hopf and Otto Stern. Stochastic electrodynamics postulates that the ZPF is as real as any other radiation field. In such a view the existence of a real ZPF is as fundamental as the existence of the universe itself. The only difference between stochastic electrodynamics and ordinary classical physics is the single assumption of the presence of this all-pervasive, real ZPF, which happens to be an intrinsic part of the universe.

One justification for making such an assumption is that by adding the ZPF to classical physics many quantum phenomena can be derived without invoking the usual laws or logic of quantum mechanics. It is premature to claim that all quantum phenomena could be explained by stochastic electrodynamics (that is, classical physics plus the ZPF), but that claim may one day turn out to be the case. In that event, one would have to make a choice. One could accept the laws of classical physics as only partly true, with a wholly different set of quantum laws required to complete the laws of physics; that is essentially what is done in physics now. Or one could accept the laws of classical physics as the only necessary laws, provided they are supplemented by the presence of the ZPF.

Whether the ZPF arises from quantum laws or is simply an intrinsic part of the universe, an important question remains: Why do people not sense the presence of the radiation if indeed it is made up of real electromagnetic waves spanning the spectrum of radio waves, light and X rays? The idea that space could be filled with a vast sea of energy does seem to contradict everyday experience. The answer to the question lies in the utter uniformity and isotropy of the field. There is no way to sense something that is absolutely the same everywhere, outside and inside everything. To put the matter in everyday terms, if you lie perfectly still in a tub of water at body temperature, you cannot feel the heat of the water.

Motion through a medium almost always gives rise to asymmetries, which then makes it possible to detect the medium. But in the case of the ZPF, motion through space at a constant velocity does not make the field detectable, because the field has the property of being "Lorentz invariant." (Lorentz invariance is a critical difference between the modern ZPF and nineteenth-century concepts of an ether.) The field becomes detectable only when a body is accelerated through space. In the mid-1970s the physicists Paul C. W. Davies, now at the University of Adelaide in Australia, and William G. Unruh, now at the University of British Columbia, showed that as a moving observer accelerates through the ZPF, the ZPF spectrum becomes distorted, and the distortion increases with increasing acceleration. Can the distortion be seen? Yes indeed, but not with one's eyes, because the energies involved are minute.

Although the distortion is small, it is extremely important: our analysis shows that it is the origin of inertia. In an article published last February in Physical Review A, we showed that when an electromagnetically interacting particle is accelerated through the ZPF, a force is exerted on the charge; the force is directly proportional to the acceleration but acts in the direction opposite to it. In other words, the charge experiences an electromagnetic force as resistance to acceleration. We interpret the resistance associated with the charge as the very inertia Newton regarded as an innate property of matter. Note that we do not say, "associated with the mass of the particle." In our formulation, the m in Newton's second law of motion, F=ma, becomes nothing more than a coupling constant between acceleration and an external electromagnetic force. Thus what we are proposing is that Newton's second law can be derived from the laws of electrodynamics, provided one assumes an underlying zero-point field.

Our work suggests that the conventional Newtonian idea of mass must be boldly reinterpreted. If we are correct, physical theory need no longer suppose that there is something called mass having an innate property, inertia, that resists acceleration; what is really happening, instead, is that an electromagnetic force acts on the charge inside matter to create the effect of inertia. Indeed, it appears that the more parsimonious interpretation is not even that there is charge lurking "inside matter," but that there is only charge. The presence of charge and its interaction with the ZPF creates the forces we all experience and attribute to the existence of matter. Our interpretation would apply even to an electrically neutral particle such as the neutron, because the neutron, at the most fundamental level, is thought to be made up of smaller particles called quarks, which do carry electric charge.

We have had little to say so far about the second key property for the concept of mass, the gravitation to which matter gives rise. But experimental evidence shows that an object's inertial mass, or its resistance to acceleration, is equivalent to the object's gravitational mass, or its mass in a gravitational field. Einstein's general theory of relativity is based on the assumption that inertial and gravitational mass are equivalent and indistinguishable-the so-called principle of equivalence. Hence it stands to reason that if the ZPF gives rise to the phenomenon of inertia, it must also in some way generate the effect of gravity. This audacious idea was proposed as early as 1968 by the Russian physicist and dissident Andrei D. Sakharov, but he never fully developed the concept into a scientific theory.

In 1989 the idea was taken up by one of us (Puthoff) and formulated within the framework of stochastic electrodynamics into a preliminary but quantifiable, nonrelativistic representation of Newtonian gravitation. The underlying principle is remarkably intuitive. If a charged particle is subjected to ZPF interactions, it will be forced to fluctuate in response to the random jostlings of the

electromagnetic waves of the ZPF. Moreover, since the ZPF is all-pervasive, charged particles everywhere in the universe will be forced to fluctuate. Now a basic result from classical electrodynamics is that a fluctuating electric charge emits an electromagnetic radiation field. The result is that all charges in the universe will emit secondary electromagnetic fields in response to their interactions with the primary field, the ZPF.

The secondary electromagnetic fields turn out to have a remarkable property. Between any two particles they give rise to an attractive force. The force is much weaker than the ordinary attractive or repulsive forces between two stationary electric charges, and it is always attractive, whether the charges are positive or negative. The result is that the secondary fields give rise to an attractive force we propose may be identified with gravity.

It is important to note that the fluctuations are relativistic-that is, the charges move at velocities at or close to the speed of light. The energy associated with the fluctuations-which for historical reasons is given the German name zitterbewegung, or trembling movement-is interpreted as the energy equivalent of gravitational rest mass. Since the gravitational force is caused by the trembling motion, there is no need to speak any longer of a gravitational mass as the source of gravitation. The source of gravitation is the driven motion of a charge, not the attractive power of the thing physicists are used to thinking of as mass. To interpret Einstein's equation E=mc2, we would say that mass is not equivalent to energy. Mass is energy.

Naturally there are a host of objections that have been or can be raised to our radical interpretation of mass. One important objection is that for gravity our model so far is nonrelativistic, whereas the zitterbewegung motions are relativistic. Another possible objection is that we treat the ZPF as real, not virtual, as conventional quantum theory does-even though real, measurable forces can be attributed to it. One such force is the so-called Casimir force between two parallel plates.

It is also claimed that if the ZPF really exists, it would be such an enormous source of gravitational force that the radius of curvature of the universe would be several orders of magnitude smaller than the nucleus of an atom. Of course, such a conclusion directly conflicts with everyday experience. The fallacy in the argument is that in the Sakharov-Puthoff model the ZPF as a whole would not itself gravitate. The gravitational force results from perturbations of the ZPF in the presence of matter. In the Sakharov-Puthoff model, then, the uniform ZPF is not a gravitational source and hence would not contribute to curving the universe.

A third large question also remains to be answered. How can our theory of Newtonian-like gravity be reconciled with twentieth-century measurements of effects predicted only from general relativity? How, for example, can our theory

account for the gravitational deflection of light, the measurement of which in 1919 served as the first proof of general relativity? On that point we can only conjecture. Sakharov suggested accounting for the effects of general relativity by introducing the concept of an "elasticity of space," analogous to the well-known curvature of space-time. The answer could also lie in the proper treatment of the so-called Dirac sea of particle-antiparticle pairs. The question of general relativistic effects, however, is a valid concern that legitimately challenges the interrelated ZPF concepts of gravity and inertia.

Serious as the objection appears to be, we propose that it is prudent to suspend judgment. A great deal of work lies ahead to test and refine our concepts. We and others will continue to study the problem, and in due course the theoretical foundations of those proposals will either be verified or be shown to contain some irreparable flaw. As controversial as the ideas and their implications might be, however, we are encouraged that we are on the right track because of a second analysis now being carried out by one of us (Rueda). In the new analysis it appears that you obtain the same electromagnetic relation between force and acceleration as you get in the original analysis, yet the approach is entirely different. We also submit that a theory that offers new insights with elegance and simplicity is a compelling approach to reality, and we suggest that our view of inertial and gravitational mass has a certain elegance and simplicity.

If our ideas prove to be correct, they will point to revisions in the understanding of physics at the most fundamental level. Even if our approach based on stochastic electrodynamics turns out to be flawed, the idea that the vacuum is involved in the creation of inertia is bound to stay. Perhaps even bolder than the concepts themselves are their implications. If inertia and gravity are like other manifestations of electromagnetic phenomena, it might someday be possible to manipulate them by advanced engineering techniques. That possibility, however remote, makes a compelling case for pressing on with the work.

Bernhard Haisch is a staff scientist at the Lockheed Martin Solar and Astrophysics Laboratory in California and a regular visiting fellow at the Max-Planck-Institut fuer extraterrestrische Physik in Garching, Germany.

Alfonso Rueda is a professor of electrical engineering at California State University in Long Beach.

H. E. Puthoff is director of the Institute for Advanced Studies at Austin, Texas.

A QUANTUM BROOM SWEEPS CLEAN

BERNHARD HAISCH; LOCKHEED MARTIN SOLAR & ASTROPHYSICS LABORATORY, PALO ALTO, CALIFORNIA

ALFONSO RUEDA; CALIFORNIA STATE UNIVERSITY, LONG BEACH

PUBLISHED IN MERCURY, VOL. 25, NO. 2, MARCH / APRIL 1996, PP. 12-15

Pity the astronomers and physicists. They toss and turn at night wondering why the universe is lumpy, and rack their brains trying to unify the four fundamental forces of nature. Now a new theory, which claims to solve both problems at once, will probably cost them more sleep.

The most fundamental equation in physics is the relation between force, mass, and acceleration which Isaac Newton postulated over three centuries ago: F=ma. It defines the concept of inertia, the resistance that an object puts up to a change in motion. To make something move faster or slower, you need to apply a force, and the force you need to apply is greater for larger masses. This is such a simple, intuitive fact that it seems more foolish than profound to ask, Why is it true? Why do objects have inertia?

As fundamental as this question is, a convincing answer has eluded the likes of Albert Einstein and Richard Feynman. Ideas about inertia have fallen into two schools. Newton himself argued it is an intrinsic property of matter, capable of no further explanation. To tell whether an object possesses inertia, you do not have to measure its motion with respect to external reference points; you need only look for the telltale distortions that occur whenever a body that has inertia accelerates. Rotation, for example, is one form of acceleration. As Earth rotates, its equator bulges out -- a dead giveaway that our planet possesses inertia.

Newton's idea of absolute acceleration, one that did not need external objects to define it, bothered many scientists -- among them the 19th-century Austrian physicist and philosopher Ernst Mach, whose ideas helped to inspire Einstein's theories of relativity. Mach argued that all motion is relative. If Earth were all alone in a hypothetical universe devoid of other matter, how would it know whether it was rotating? And if Earth did not know whether it was rotating,

how would its equator know whether to bulge out? Mach resolved this paradox by concluding that the solitary Earth could not have any inertia. Somehow, the Earth's inertia is generated by the presence of other matter in the universe.

But how? Einstein thought that his general theory of relativity would embody Mach's principle, but it turned out not to. The source of inertia remained a mystery until, we believe, 1994 -- when, together with Harold Puthoff of the Institute for Advanced Studies in Austin, Texas, we proposed a radical theory: that inertia is an electromagnetic force that switches on whenever an object accelerates through space. It turns out that Mach was almost right. In our theory, inertia does depend on an external frame of reference, but this frame of reference is provided not by the other bodies in the universe, but by an electromagnetic field that pervades the cosmos. This field, in turn, arises because of quantum mechanical ferment in the vacuum -- a subject shaping up as a major theme of 21st-century physics.

Last year, we realized that the vacuum also might explain another great mystery of modern science: how the universe, at the largest scales, came to look like a whiffle ball. The honeycombed arrangement of galaxy clusters may hold the key to understanding how inertia, gravity, and mass came to be.

Sponges and Swiss Cheese

Four years ago, the NASA Cosmic Background Explorer detected blemishes in the microwave afterglow of the Big Bang. Astronomers were relieved. It was the first evidence that the early universe was not perfectly smooth and uniform [see ``New Image of the Universe Soon After Creation,'' May/June 1992, p. 91]. Perfect uniformity would have left no way for cosmologists to explain how the lumpy present-day universe could arise from utterly homogeneous primordial stuff. Yet the COBE discovery accounted for only the highest level of inhomogeneity, on scales of 1 to 2 billion light- years (see images on p. 13). The largest structures known today in the universe are 10 times smaller.

Those structures are the great voids and sheets. Astronomers have known for some time that galaxies are concentrated into enormous clusters, but in the past decade, observers have discovered that the clusters are themselves concentrated into vast sheets, or walls. In between the walls are giant voids almost free of galaxies (see diagram above). The size of the cosmic voids ranges from tens to hundreds of millions of light-years. On these scales, the universe looks like Swiss cheese or a sponge: more hole than substance [see ``Mapping the Universe,'' May/June 1990, p. 66].

How did this superstructure come about? Gravitation can explain the clumping if you assume the universe had just the right mixture of ordinary matter, cold dark matter, and hot dark matter. But this leaves astronomers a bit

uneasy. After all, we do not know what the dark matter is or whether it could exist in the necessary amounts. The recent announcement that white dwarfs may comprise half the dark matter in our galaxy does not help, because the cosmological dark matter would have had to reside outside galaxies and consist of material entirely unlike ordinary atoms.

Under these circumstances, the prudent thing to do is to examine other possible explanations, to search for the dark horse in addition to the dark matter. Can we account for the structures without having to populate the universe with unknown kinds of matter?

Deep intergalactic space, where the large-scale structures began to form, is a cosmic desert. Out there, the density of gas is low, so low that gas particles are subject only to minute forces exerted by the vacuum that surrounds them. The word vacuum innocently implies ``empty,'' but nothing in quantum mechanics is ever so straightforward. The vacuum of modern physics is far from empty -- quite the opposite. It is a seething soup of subatomic particles and energy fields bubbling in and out of existence, a cauldron where the very notions of ``space'' and ``time'' may take on their meaning.

The not-so-empty vacuum is a consequence of the fact -- recognized by German physicist Werner Heisenberg in 1927 -- that you can never remove all the energy from anything. Take an electromagnetic field. It consists of photons, individual packets of energy each in a state defined by its direction, frequency, and polarization. Try as you might, you could never remove all the photons from any given state. According to the principles of quantum mechanics, every state must have a minimum population of either zero or one photon, with equal probability. The average of zero and one is one-half. Therefore there must be, on average, the equivalent of at least half a photon in every possible state.

Half a Photon Here, Half a Photon There

Half a photon in each state is not much -- a 100-watt light bulb puts out 100 billion billion photons every second -- but there are countless possible states. The result is a vast sea of radiation underlying the universe. All those virtual photons constitute the electromagnetic zero-point field, so named because it is present even at a temperature of absolute zero. In the deepest reaches of intergalactic space, where particles are so widely spaced that their mutual interactions are weak, this irreducible radiation field comes into play. In 1910, about halfway between the publication of special and general relativity, Einstein and his colleague Ludwig Hopf investigated how a thin gas would react when immersed in an electromagnetic radiation field. The radiation, they found, would have two counteracting effects on each gas particle. The particle would jiggle as photons bombarded it at random, but its motion would be opposed by a drag force due to the Doppler effect. The Doppler effect would stiffen the

resistance of photons in the direction that the particle was trying to move. The particle would smack head-on into blueshifted photons, which, being more energetic than the photons from other directions, would push it back the way it came. This drag force would prevent the random jiggles of the gas particle from developing into net motion.

The Einstein-Hopf process would be an interesting, but irrelevant, curiosity were it not for one peculiarity that sets the electromagnetic quantum vacuum apart from other radiation fields: the shape of its spectrum. The shape is exactly proportional to the frequency cubed -- precisely the right shape to be ``Lorentz invariant.'' A spectrum with this shape does not produce a Doppler effect. The photons that a gas particle meets head-on in the quantum vacuum are no more energetic than those that strike the particle from behind. Consequently, the photons can offer no concerted resistance to uniform motion. (The spectrum and directional distribution of photons, however, do change for particles that are accelerating; this is the origin of inertia in our theory, as discussed in the box on p. 15.)

This idiosyncrasy of the vacuum electromagnetic field throws the Einstein-Hopf process out of balance (see figure on p. 14). Once gas particles are set in motion by the random fluctuations of the electromagnetic field, nothing can stop them. Over millions of years they accelerate steadily, reaching velocities near to that of light and moving across astronomical distances.

Astrophysicists are no strangers to this mechanism. Twenty years ago, one of us proposed it as a possible source of the most energetic cosmic rays. Most cosmic rays consist of electrons, protons, and ions, but those of extremely high energy are missing the electrons. The Einstein-Hopf process would explain this, because it operates more efficiently on protons and ions than on electrons. What no one had considered was that this process could also segregate matter on a cosmological scale.

When we first looked into the matter, the Einstein-Hopf process sounded too good to be true. By transferring energy from virtual photons into real particles, would the process yield something for nothing? To check, we teamed up with IBM physicist Daniel Cole, an expert on the quantum vacuum. For over five years, Cole had been assessing whether theories of the vacuum violate any basic principles, such as the conservation of mass-energy or the second law of thermodynamics. He was able to find nothing amiss with the quantum Einstein-Hopf mechanism.

Emptiness Begets Emptiness

The Einstein-Hopf process works best in places where particles hardly ever collide with each other, since collisions prevent the particles from building up speed. The less matter there is, the more the matter wants to go

someplace else. Thus the tendency is for regions of low density to empty out even more, and for regions of high density to become denser. This is exactly the sort of snowball effect that cosmologists have been looking for to explain how matter congregated to form sheets and walls. At some point, the acceleration must have come to an end, or else all matter would have clumped into a single mega-galaxy. We believe that the end drew near when the agglomerating sheets developed appreciable magnetic fields. As the particles scurried into sheets, they dragged along their primordial magnetic fields. Those fields piled up, creating a magnetic pressure that ultimately balanced the Einstein-Hopf evacuation process. Gravity took over to form smaller structures, such as galaxies. The end result, we proposed last spring in The Astrophysical Journal, was the honeycombed structure of the universe.

The theory rests on many assumptions, and the one that worries us is the most fundamental: that the quantum vacuum produces a real electromagnetic field. Physicists normally treat the virtual photons as just that: virtual, hence unable to produce any far-reaching real effects. But numerous experiments indicate the field may indeed influence matter. The quantum vacuum creates an attraction between neutral parallel plates, as predicted by Dutch physicist Hendrick Casimir in 1948 and confirmed experimentally several years later. The interaction of the vacuum electromagnetic field with electrons causes a shift of hydrogen spectral lines, as discovered by American physicists Willis Lamb Jr. and Robert Retherford in 1947 and explained later that year by Hans Bethe. And the spontaneous emission of photons can be altered by changing the electromagnetic environment of atoms; this suggests that ``spontaneous'' emission is actually stimulated by the fluctuations of the vacuum.

If the zero-point field is real, it should be possible to reproduce the Einstein-Hopf process in the laboratory. The main obstacle would be achieving densities comparable to those in the cosmic voids: less than one particle per cubic meter. But if we could even approximate this, the effect might be measurable. One possibility would be to create an extremely low temperature magnetic trap and inject anti-protons into it. If the Einstein-Hopf process ejected the anti-protons, the experimenter should see them annihilate with protons in the matter surrounding the trap.

The idea that the zero-point field might really exist dates to the early 20th century, when there was not yet a clear division between classical and quantum physics. Quantum mechanics emerged from a radical, and unsupported, assumption that German physicist Max Planck made in 1900: that the energy of a system can only take on certain discrete, or quantized, values. >From this hypothesis, he was able to explain the blackbody spectrum of the light that stars and other glowing bodies give off. Planck searched for something to explain the quantization, and one possibility he considered was

that space is filled with unseen energy, a proposal also made by Walther Nernst in 1916.

During the 1920s, quantum mechanics proved so successful that physicists abandoned the search for an underlying cause of quantization. Quantization, like inertia, came to be regarded as just a given, a new law of nature. But in a series of papers beginning in 1969, Timothy Boyer appears to have vindicated Planck by deriving the blackbody spectrum directly from classical physics, without quantization -- by positing a background zero-point field. This reopens the questions that concerned Planck.

Is it possible that quantum mechanics is classical physics done in the presence of a zero-point field? Could the counterintuitive laws of quantum physics someday go the way of Ptolemaic epicycles? Quantum mechanics is certainly successful in terms of predicting observations, but so was Ptolemaic astronomy. In fact, the Ptolemaic system predicted planetary positions much better than Nicolaus Copernicus's initial theory. If astronomers had simply rejected the Copernican model, rather than worked to fix its shortcomings, we would still think Earth is the center of the universe.

As Planck did when he first derived the blackbody spectrum, we have taken a pragmatic approach: suppose that the quantum vacuum does produce real effects and consider the implications. Many new theories are ad hoc, conjured up to explain one thing and unable to explain anything else. The fact that the zero-point field might account for inertia, gravity, quantization, and, now, cosmic voids indicates that it is worth investigating.

BERNHARD M. HAISCH is an astrophysicist at the Lockheed Martin Solar and Astrophysics Laboratory in Palo Alto, Calif. He is a scientific editor of The Astrophysical Journal and the managing editor of the Journal of Scientific Exploration. When he is not rethinking scientific paradigms, Haisch, writing under the name of Bernie Sims, is a songwriter and producer. His and his wife's first commercially released song on a major label, Common Ground, will be on the forthcoming album by new Nashville artist Paul Jefferson. Haisch's email address is haisch@sag.space.lockheed.com.

ALFONSO RUEDA is a professor of electrical engineering at California State University in Long Beach. His email address is arueda@csulb.edu. For more information on the zero-point field theory, see the authors' article ``Beyond E=mc2'' in the November/December 1994 issue of The Sciences. Their technical papers appeared in Physical Review A, volume 49, p. 678 and The Astrophysical Journal, volume 445, p. 7.

Illustration captions

An astrophysical Genesis. More precisely, this is a map of the cosmic microwave background radiation, which reflects the distribution of matter shortly after the Big Bang. Darker areas had a higher density, brighter areas a lower density. NASA released a similar map in 1992, but it was based on preliminary measurements, which were so prone to noise that scientists could not be certain what was real. This latest map, released in January, contains more signal than noise. Even the smallest feature on the map is far larger than the largest structure astronomers see in the universe today. Images courtesy of Charles L. Bennett, NASA Goddard Space Flight Center. Holes. The universe is full of holes. The regions shown on this diagram, which depicts a cube 500 million light-years on a side, are all but empty of luminous matter. These voids interconnect like the holes in your kitchen sponge. This diagram is based on an early-1990s redshift survey of infrared galaxies by Queen Mary College, the University of Durham, Oxford University, and the University of Toronto. Our Milky Way is at the center. Diagram courtesy of Carlos S. Frenk.

The Einstein-Hopf process. In a near-vacuum, collisions between gas particles are rare; collisions between particles and photons are more important. The photons are part of whatever electromagnetic field the particles happen to be immersed in. These photons are always hitting each particle from all sides, but not with equal strength. Those that hit a moving particle head-on are more energetic than those striking from behind, because of the Doppler effect. This imbalance automatically keeps the particle velocities in check (top). There is one exception: If the dominant electromagnetic field is the zero-point field, the spectrum of the field cancels out the Doppler effect, so that photons striking head-on are no more energetic than any other photons (bottom). As a result, the particles are free to move without restraint. Diagrams by Bernhard M. Haisch.

The Illusion of Mass

Maybe there is no such thing as ``mass'' -- only charge, which gives the illusion of mass when it is immersed in the quantum vacuum. It is an audacious idea, but one that would unify gravitation with the other fundamental forces of nature. Physicists universally accept the reality of the quantum vacuum, a sea of virtual particles and photons that wink in and out of existence too fast to be seen. But physicists are less confident that the virtual photons could create a real electromagnetic field. For starters, this zero-point field would raise problems with general relativity.

Einstein's theory states that energy produces gravity in the same way that matter does. Just as a planet attracts other bodies gravitationally, an electromagnetic field attracts bodies gravitationally. A uniform zero-point field

that filled the universe would be an enormous source of gravitation -- so enormous that it should reduce the universe to microscopic size. This is clearly not the case.

Two linked theories have been proposed to resolve this paradox. If correct, they would constitute a paradigm shift in our view of matter itself. The first theory grew out of a suggestion made by the Russian physicist Andrei Sakharov in 1968 that gravity could originate in the quantum vacuum. Harold Puthoff published a quantitative, albeit preliminary, development of this idea in 1989. According to his theory, the zero-point field would cause charged particles, such as the electron or the quarks inside protons and neutrons, to oscillate. Whenever a charged particle oscillates, it emits electromagnetic waves of its own. These secondary fields would attract other charged particles.

If true, this theory would unify gravity with electromagnetism -- an unexpected resolution to the long search for a unified theory. It would neatly answer the general relativity paradox. In this view, gravitation is caused by secondary fields induced by the zero-point field; the zero-point field, in and of itself, cannot produce gravitation.

The second theory is our proposed mechanism for inertia. Einstein's principle of equivalence tells us that inertial and gravitational mass are the same. If gravitation is electromagnetic, inertia must be, too. This implies a complete rethinking of what matter really is.

The zero-point field is completely uniform for observers in uniform motion. But it is asymmetric for observers in accelerated motion. In 1994, we and Puthoff examined a phenomenon no one had thought to investigate before: how the magnetic component of the zero-point field interacts with matter during acceleration. The result was surprising, to say the least. The magnetic Lorentz force opposed acceleration with a strength that varied in direct proportion to the magnitude of the acceleration (see figure). It looked like a derivation of Newton's second law, F=ma, heretofore considered an underivable postulate.

What we feel and interpret as ``mass'' is, in this theory, an electromagnetic resistance arising out of the zero-point field. If it is true that mass is a consequence of charge, rather than an inherent property of matter, it might be possible (in the distant future) to build anti-gravity devices that would switch off the inertia of objects.

Are there objections to this theory? Certainly. We propose it not as a done-deal, but as a new approach to long-standing, unresolved fundamental problems. There are two major reservations. First, we treated the quantum vacuum as if it were a perfectly real electromagnetic field. The available evidence on this issue is ambiguous, and more experiments need to be done -- ranging from laboratory measurements of the Casimir force to astronomical observations of large-scale structure in the universe.

Second, even our simple model demanded a complex mathematical analysis, which is difficult to verify. For instance, we ignored non-electromagnetic vacuum fields, such as those associated with the gluon particles that bind quarks together. We are now completing a different approach that avoids this and other problems, and the preliminary results have confirmed the first approach. We hope that more researchers will look into these problems, drawn by the appeal of unsuspected deep connections.

Illustration caption

The origin of inertia? Quantum mechanics predicts that photons are constantly flitting on and off the stage of existence. These photons are ``virtual'' in that each survives so short a time that the rest of us hardly notice. Collectively, however, they have observable effects, one of which was predicted by physicists Paul Davies and William Unruh in the mid-1970s and studied in detail by the authors. To a particle sitting still or moving uniformly, the field of virtual photons looks the same in all directions (top left). But as the particle begins to accelerate, the field ceases to look the same in the fore and aft directions (top center). For faster accelerations, the asymmetry worsens (top right). Physicists had thought the Davies-Unruh effect was an esoteric curiosity significant only near black holes. But the authors have found that the asymmetry creates a force similar to the radiation pressure that pushes cometary dust tails away from the Sun. This force always opposes the acceleration (bottom). Voilà, inertia. Diagrams by Bernhard M. Haisch.

THE INFLUENCE OF VEDIC PHILOSOPHY ON NIKOLA TESLA'S UNDERSTANDING OF FREE ENERGY

BY TOBY GROTZ

Abstract

Nikola Tesla used ancient Sanskrit terminology in his descriptions of natural phenomena. As early as 1891 Tesla described the universe as a kinetic system filled with energy which could be harnessed at any location. His concepts during the following years were greatly influenced by the teachings of Swami Vivekananda. Swami Vivekananda was the first of a succession of eastern yogi's who brought Vedic philosophy and religion to the west. After meeting the Swami and after continued study of the Eastern view of the mechanisms driving the material world, Tesla began using the Sanskrit words Akasha, Prana, and the concept of a luminiferous ether to describe the source, existence and construction of matter. This paper will trace the development of Tesla's understanding of Vedic Science, his correspondence with Lord Kelvin concerning these matters, and the relation between Tesla and Walter Russell and other turn of the century scientists concerning advanced understanding of physics. Finally, after being obscured for many years, the author will give a description of what he believes is the pre-requisite for the free energy systems envisioned by Tesla.

Tesla's Earlier Description of the Physical Universe

By the year 1891, Nikola Tesla had invented many useful devices. These included a system of arc lighting (1886), the alternating current motor, power generation and transmission systems (1888), systems of electrical conversion and distribution by oscillatory discharges (1889), and a generator of high frequency currents (1890), to name a few. The most well known patent centers around an inspiration that occurred while walking with a friend in a park in Budapest, Hungry. It was while observing the sunset that Tesla had a vision of how rotating electromagnetic fields could be used in a new form of electric motor. his led to the well known system of alternating current power distribution. In 1891 however, Tesla patented what one day may become his most famous invention. It is the basis for the wireless transmission of electrical power and is know as the Tesla Coil Transformer. It was during this year that

Tesla made the following comments during a speech before the American Institute of Electrical Engineers:

"Ere many generations pass, our machinery will be driven by a power obtainable at any point in the universe. This idea is not novel... We find it in the delightful myth of Antheus, who derives power from the earth; we find it among the subtle speculations of one of your splendid mathematicians... Throughout space there is energy. Is this energy static or kinetic.? If static our hopes are in vain; if kinetic - and this we know it is, for certain - then it is a mere question of time when men will succeed in attaching their machinery to the very wheelwork of nature." [1]

This description of the physical mechanisms of the universe was given before Tesla became familiar with the Vedic science of the eastern Nations of India, Tibet, and Nepal. This science was first popualized in the United States and the west during the three year visit of Swami Vivekananda.

Vedic Science and Swami Vivekananda

The Vedas are a collection of writings consisting of hymns, prayers, myths, historical accounting, dissertations on science, and the nature of reality, which date back at least 5,000 years. The nature of matter, antimatter, and the make up of atomic structure are described in the Vedas. The language of the Vedas is known as Sanskrit. The origin of Sanskrit is not fully understood. Western scholars suggest that it was brought into the Himalayas and thence south into India by the southward migrations of the Aryan culture. Paramahansa Yogananda and other historians however do not subscribe to that theory, pointing out that there is no evidence within India to substantiate such claims. [2]

There are words in Sanskrit that describe concepts totally foreign to the western mind. Single words may require a full paragraph for translation into English. Having studied Sanskrit for a brief period during the late 70's, it finally occurred to this writer that Tesla's use of Vedic terminology could provide a key to understanding his view of electromagnetism and the nature of the universe. But where did Tesla learn Vedic concepts and Sanskrit terminology? A review of the well known biographies by Cheney, Hunt and Draper, and O'Neil [3], [4], [5], reveal no mention of Tesla's knowledge of Sanskrit. O'Neal however includes the following excerpt from an unpublished article called Man's Greatest Achievement:

"There manifests itself in the fully developed being , Man, a desire mysterious, inscrutable and irresistible: to imitate nature, to create, to work himself the wonders he perceives.... Long ago he recognized that all perceptible matter comes from a primary substance, or tenuity beyond conception, filling all space, the Akasha or luminiferous ether, which is acted

upon by the life giving Prana or creative force, calling into existence, in never ending cycles all things and phenomena. The primary substance, thrown into infinitesimal whirls of prodigious velocity, becomes gross matter; the force subsiding, the motion ceases and matter disappears, reverting to the primary substance."

According to Leland Anderson the article was written May 13th, 1907. Anderson also suggested that it was through association with Swami Vivekananda that Tesla may have come into contact with Sanskrit terminology and that John Dobson of the San Francisco Sidewalk Astronomers Association had researched that association. [6]

Swami Vivekananda was born in Calcutta, India in 1863. He was inspired by his teacher, Ramakrishna to serve men as visible manifestations of God. In 1893 Swami Vivekananda began a tour of the west by attending the Parliament of Religions held in Chicago. During the three years that he toured the United States and Europe, Vivekananda met with many of the well known scientists of the time including Lord Kelvin and Nikola Tesla. [7] According to Swami Nikhilananda:

Nikola Tesla, the great scientist who specialized in the field of electricity, was much impressed to hear from the Swami his explanation of the Samkhya cosmogony and the theory of cycles given by the Hindus. He was particularly struck by the resemblance between the Samkhya theory of matter and energy and that of modern physics. The Swami also met in New York Sir William Thompson, afterwards Lord Kelvin, and Professor Helmholtz, two leading representatives of western science. Sarah Bernhardt, the famous French actress had an interview with the Swami and greatly admired his teachings. [8]

It was at a party given by Sarah Bernhardt that Nikola Tesla probably first met Swami Vivekananda. [9] Sarah Bernhardt was playing the part of 'Iziel' in a play of the same name. It was a French version about the life of Bhudda. The actress upon seeing Swami Vivekananda in the audience, arranged a meeting which was also attended by Nikola Tesla. In a letter to a friend, dated February 13th, 1896, Swami Vivekananda noted the following:

...Mr. Tesla was charmed to hear about the Vedantic Prana and Akasha and the Kalpas, which according to him are the only theories modern science can entertain.....Mr Tesla thinks he can demonstrate that mathematically that force and matter are reducible to potential energy. I am to go see him next week to get this mathematical demonstration. [10]

Swami Vivekananda was hopeful that Tesla would be able to show that what we call matter is simply potential energy because that would reconcile the teachings of the Vedas with modern science. The Swami realized that "In that case, the Vedantic cosmology [would] be placed on the surest of

foundations". The harmony between Vedantic theories and and western science was explained by the following diagram:

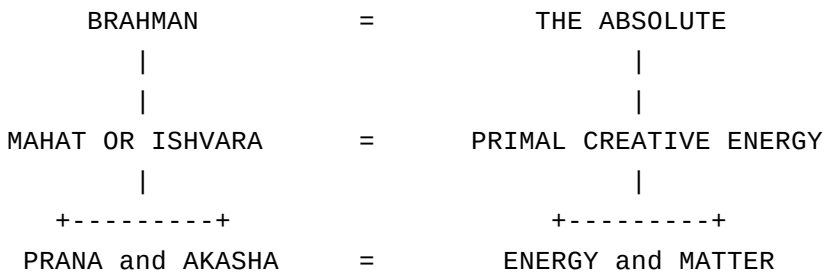

Tesla understood the Sanskrit terminology and philosophy and found that it was a good means to describe the physical mechanisms of the universe as seen through his eyes. It would behoove those who would attempt to understand the science behind the inventions of Nikola Tesla to study Sanskrit and Vedic philosophy.

Tesla apparently failed to show the identity of energy and matter. If he had, certainly Swami Vivekananda would have recorded that occasion. The mathematical proof of the principle did come until about ten years later when Albert Einstein published his paper on relativity. What had been known in the East for the last 5,000 years was then known to the West.

Brahman is defined as the one self existent impersonal spirit; the Divine Essence, from which all things emanate, by which they are sustained, and to which they return. Notice that this is very similar to the concept of the Great Spirit as understood by Native American cultures. Ishvara is the Supreme Ruler; the highest possible conception of the Absolute, which is beyond all thought. Mahat means literally the Great One, and is also interpreted as meaning universal mind or cosmic intelligence. Prana means energy (usually translated as life force) and Akasha means matter (usually translated as ether). Dobson points out that the more common translations for Akasha and Prana are not quite correct, but that Tesla did understand their true meanings.

The meeting with Swami Vivekananda greatly stimulated Nikola Tesla's interest in Eastern Science. The Swami later remarked during a lecture in India, "I myself have been told by some of the best scientific minds of the day, how wonderfully rational the conclusions of the Vedanta are. I know of one of them personally, who scarcely has time to eat his meal, or go out of his laboratory, but who would stand by the hour to attend my lectures on the Vedanta; for, as he expresses it, they are so scientific, they so exactly harmonize with the aspirations of the age and with the conclusions to which modern science is coming at the present time". [11]

Tesla and Lord Kelvin

William S. Thompson was one of the prominent scientists and engineers of the 1800s. He developed analogies between heat and electricity and his work influenced the theories developed by James Clerk Maxwell, one of the founders of electromagnetic theory. Thompson supervised the successful laying of the Trans Atlantic Cable and for that work was knighted Lord Kelvin. Kelvin had endorsed Tesla's theories and proposed system for the wireless transmission of electrical power. [12] FootNOTE- Grotz PACE

Tesla continued to study Hindu and Vedic philosophy for a number of years as indicated by the following letter written to him by Lord Kelvin.

15, Eaton Place
London, S.W.
May 20, 1902

Dear Mr. Tesla,

I do not know how I can ever thank you enough for the most kind letter of May, 10, which I found in my cabin in the Lucania, with the beautiful books which you most kindly sent me along with it: -"The Buried Temple", "The Gospel of Bhudda", Les Grands Inities", the exquisite edition of Rossetti's "House of Life", and last but not least the Century Magazine for June, 1900 with the splendid and marvelous photographs on pp. 176, 187, 190, 191, 192, full of electrical lessons.

We had a most beautiful passage across the Atlantic, much the finest I have ever had. I was trying hard nearly all the way, but quite unsuccessfully, to find something definite as to the functions of ether in respect to plain, old fashioned magnetism. A propos of this, I have instructed the publishers, Messrs. Macmillan, to send you at the Waldorf a copy of my book (Collection of Separate Papers) on Electrostatics and Magnetism. I shall be glad if you will accept it from me as a very small mark of my gratitude to you for your kindness. You may possibly find something interesting in the articles on Atmospheric Electricity which it contains.

Lady Kelvin joins me in kind regards, and I remain,

Yours always truly,

Kelvin

Thank you also warmly for the beautiful flowers [13]

Tesla and Russell

Walter Russell was one of the most accomplished artists, sculptors, writers and scientists of this century. His periodic chart of the elements accurately predicted the location and characteristics of four elements years before they were discovered in laboratories. These are now known as Deuterium, Tritium, Neptunium, and Plutonium. Russell apparently entered into a heightened state of awareness after being struck by lightning. He began several weeks of drawing and writing about the basic nature and make up of the physical universe. Russells' family finally called the family doctor to determine if Russell should be committed to an mental institution. The doctor, upon seeing the results of Russells weeks of work, said that he did not know what Russell was doing, but that he definitely was not mad.

Although the exact time and occasion of their meeting has not yet been determined, Nikola Tesla and Walter Russell did meet and discuss their respective cosmologies. 14 Tesla recognized the wisdom and power of Russells' teaching and urged Russell to lock up his knowledge in a safe for 1,000 years until man was ready for it. [15]

The Appearance of Free Energy - Or Why Free Energy has not yet Happened - Comments, Possibilities and Socio Economic Implications

Although Tesla did not accept many of the tenants of relativity and quantum theory and never made the connection between matter and energy, he did recognize the possibility of free and unlimited energy as demonstrated by the following statement.

Can Man control [the] grandest, most awe inspiring of all processes in nature?...If he could do this, he would have powers almost unlimited and supernatural... He could cause planes to collide and produce his suns and stars, his heat and light. He could originate and develop life in all its infinite forms....[Such powers] would place him beside his creator, make him fulfill his ultimate destiny. [16]

We see that Tesla is asking a question, speculating, searching for an answer. If Tesla had developed free energy sources or learned how to manipulate space time and gravity, during the time of his most public and productive years, (up until about 1920), he would have had answers to those questions.

Tesla's most misunderstood invention is popularly known as the "Death Ray". It was simply a particle beam weapon which he proposed in 1937 and was fabricated under contracts with Alcoa Aluminum and the English and Italian governments. [17] It used electrostatic propulsion techniques and similar devices are being developed today by the Strategic Defense Initiative Organization (SDIO) and the US Army Strategic Defense Command. [18]

So we see that mankind has not yet harnessed the infinite power of the universe as envisioned by Nikola Tesla. The question remains, why not?

Free energy devices, if they are feasible, are not about smaller faster microcircuits or a bigger better mouse traps. This is a technology which may revolutionize the socio-economic status quo on planet Earth. At this moment the big pie is unevenly divided. One quarter of the population on this rock, the third stone from the sun, consumes three quarters of the yearly resource output. As one can easily deduce, from a brief study of world affairs, there are about three billion people who have just about had it with this scenario. There are wars starvation and strife in every nook and cranny of the planet. So what do we do about it?

Spaceship Earth Needs A Flight Plan

Either we divide the pie more evenly or we make the pie larger. The first option requires that our standard of living must fall so that the standard of living in the third world may rise. The second option allows us to maintain our standard of living while we help raise the standard of living of under privileged nations. This we must do. It is our destiny. It is our responsibility. It is our final test.

Thirty thousand people starve to death every day on this planet, most of them are children. Nations fight nations, war is part of our lives. What drives our economy in the western world, allows us to enjoy a high standard of living, a life of leisure compared to our neighbors south of the imaginary line called a border? Many answers both economic, social, political, and spiritual can be given. We do know that the standard of living that a nation enjoys is directly related energy consumption.

Energy drives the economies of nations and Tesla's life long goal was to make electric power equally available to all people any where on this planet. He continued to promote his plan for the wireless transmission of power in the yearly interviews he gave on his birthday as late as 1940. [19] Electrical power allows on site processing of raw materials. Electrical power can run pumps from water wells in areas affected by drought. Electrical power delivered to the poverty stricken areas of the world can make the pie larger, can help bring about the needed economic equality which is our birth right.

Why hasn't power been made equally available to all people and nations? Why haven't the much touted free energy devices described by Tom Bearden, John Bedini, Bruce DePalma, and others ever materialized? Perhaps because "easy things are seldom done for the same reason that impossible things are rarely done: no one will pay for anything believed to be easy or impossible". [20] Perhaps because when we talk about power there is more there than one would initially visualize. What we are talking about is personal power, national power, planetary power, karmic power and the power of love.

The sages tell us that in order to enjoy power we have to let go of power, to overcome ourselves. As an example this author can describe one of his recent experiences. After a very successful symposium celebrating the 100th year after Nikola Tesla arrived in the United States 21, a non profit corporation, 501(c)(3), was formed specifically to encourage and pursue research into the inventions and discoveries of Nikola Tesla. Two years later, after a second symposium, several of the founding members approached the board of directors with a proposal to validate Tesla's claim that wireless transmission of power was possible. Board members suggested that permission be obtained from the FCC, an environmental impact statement be filed with the EPA, and we should go form "our own non profit corporation". It was also decided that since there was no procedure to cover research, the organization could not be involved.

Another goal of the organization had been to establish a museum to be named the Nikola Tesla Museum of Science and Technology. We proposed that since 60 -70 billion dollars are given away to non profit organizations annually, we had as good a chance as any other organization for obtaining funding, for a museum or research. We reasoned that:

"Since only 16% of the museums in this country are science museums, this museum in honor of Nikola Tesla will help educate the public in technological areas. With the need for economic revitalization of industry in Colorado, 1986is the time to begin supporting the scientific education of our region. With the current statistics showing that the United States is falling behind the world technologically, the effort to educate the public is becoming more important, and the surge of public awareness of Nikola Tesla's inventions makes him an appropriate namesake for a science and technology museum." [23]

The board moved to table our proposal indefinitely.

What had happened? Of the 15 - 20 people that had started the organization only four remained as part of the governing body. Three of those members were opposed to research. The collective mind of the board of directors had become the antithesis of the momentum Tesla had gained in his lifetime. Unlike the independent inventor and businessman, the board was now

composed of members who were bureaucrats and paper pushers for Fortune 500 companies. Tesla was a vegetarian, the board members all ate meat. Tesla did not ask for permission to be inventive and strike out on bold new adventures, the board needed approval from higher sources. The dichotomies were endless.

Tesla's visions have been delayed for 89 years. The squabbling started with Thomas Edison, J.P. Morgan and Nikola Tesla himself. 24 It continues to this day. Perhaps the reason for the delay of wireless power transmission or free energy devices lies even deeper within the human psyche. Is it possible that we could compare the Tesla story to a biblical story? Bruce Gordan thinks so. In Gordan's analysis Tesla's attempt at building a prototype magnifying transmitter parallels Genesis 11:1-9. [25]

"The message; human curiosity and technological derring-do makes God nervous; God demolishes project, confounds language". Gordan further outlines the the scenario as follows:

"When everything is perfect, the right time shows up." [26] This is equivalent to saying, "Absolute knowledge in the hands of one whose heart is not yet tender, would be a terrible weapon. [27] We might postulate that technological developments do not occur until the planet is ready. The recent examination of the theory of Gaia credits the Earth with an intelligence. "Thousands of years ago, by means of seeing, sorcerers became aware that the Earth was sentinent and that its awareness could affect the awareness of humans." [28] By implication of reciprocity the reverse could be true. The group or collective unconscious is still struggling with the result of quantum and relativity theory. We as a race were ready for nuclear power, every thing was perfect and the right time showed up. Soon we will have put the technology to good use or abandon it to insure our survival as a species.

So What Do You Do About It - Free Energy: Creating An Idea Whose Time Has Come

Wireless transmission of power and free energy have not happened yet, perhaps we aren't ready, perhaps the Earth isn't ready. Pogo said it best, " we have met the enemy and it is us." In the Jungian view of collective unconscious, things happen when the time is right, we get what we agree to. We need a flight plan. And that plan must realize that:

WHEN THE POWER OF LOVE OVERCOMES

THE LOVE OF POWER THERE WILL BE PEACE

[Source; Girls Lavatory, Boulder High School, Boulder, Colorado]

Described as "Post Industrial, neo-technical, teen-age graffiti."

"So astounding are the facts in this connection, that it would seem as though the Creator, himself had electrically designed this planet...."

Nikola Tesla describing what is now known as Schumann Resonance (7.8 Hz) in "The Transmission of Electrical Energy Without Wires As A Means Of Furthering World Peace", Electrical World And Engineer, January 7, 1905, PP 21-24.

Footnotes

1. Ratzlaff, John, Tesla Said, Tesla Book Company, PO Box 1649, Greenville, TX 75401, 1984.

2. Yogananda, Paramahansa, Autobiography of a Yogi, Self Realization Fellowship,, 3880 San Rafael Ave., Los Angeles, CA 90065, 1985.

3. Cheney, Margaret, Man Out of Time, Prentice Hall, 1981.

4. Hunt, Inez and Draper. Wanetta, W., Lightning In His Hand, The Life Story Of Nikola Tesla, Omni Publications, Hawthorne, CA, 1981.

5. O'Neal, John, J., Prodigal Genius, The Life Of Nikola Tesla, Ives Washington, Inc., 1944.

6. Anderson, Leland, personal communication. See also Anderson, L.I., and Ratzlaff, J.T., Dr. Nikola Tesla Bibliography, Ragusan Press, 936 Industrial Avenue, Palo Alto, CA 94303, 1979.

7. Nikhilananda, Swami, Vivekananda, The Yogas and Other Works, Ramakrishna-Vivekananda Center, New York, 1973.

8. Nikhilananda, Swami.

9. Dobson, John, personal communication.

7. Dobson, John, Advaita Vedanta and Modern Science, Vedanta Book Center, 5423 S. Hyde Park, Chicago, IL 60615, 1979.

10. Nikhilananda, Swami.

11. Burke, Marie Louise, Swami Vivekananda in the West, New Discoveries, The World Teacher, Advaita Ashrama, Mayavati, India, 1985, p. 500

12. Grotz, T., "Artificially Stimulated Resonance of the Earth's Schumann Cavity Waveguide", Proceedings of the Third International New Energy Technology Symposium/Exhibition, June 25th-28th, 1988, Hull, Quebec, Planetary Association for Clean Energy, 191 Promenade du Portage/600, Hull, Quebec J8X 2K6 Canada

13. From the personal collection of L. Anderson.

14. Russell, Lao. personal communication.

15. The University of Science and Philosophy, Swannanoa, Waynesboro, VA 22980, (703) 942-5161.

16. First written by Tesla on May 13, 1907, for the "Actors Fair Fund", text transcribed from an A.L.S. in the collections of the Bakken Library of Electricity in Life. The article later appeared in the "New York American", July 6, 1930, pg. 10.

17. Tesla, Nikola, The New Art of Projecting Concentrated Non-Dispersive Energy Through Natural Media, Proceedings of the Tesla Centennial Symposium, Grotz, T. & Rauscher, E., Editors, 1984.

18. Turchi, P.J.,Conte, D.,Seiler, S., Electrostatic Acceleration of Microprojectiles to Ultrahypervelocities, "Proceedings of the Seventh Pulsed Power Conference", June 12th-14th, Monterey, California, Jointly Sponsored by the DOD, DOE, and the IEEE Electron Devices Society.

19. "Death Ray for Planes", New York Times, September 20, 1940.

20. Pawlicki, T.B., Exploring Hyperspace, 848 Fort Street, Victoria, B.C., Canada, electronic book on floppy disk, 1988, (Log onto the TESLA BBS at (719) 486-2775 for copy of ASCII text files)

21. Broad, William J., "Tesla a Bizarre Genius, Regains Aura of Greatness", New York Times, Aug. 28th, 1984

22. Deleted

23. Grotz, T., & Sheppard, J., The Nikola Tesla Museum of Science and Technology submitted to the Board of Directors December 12th, 1986. [Available as an ASCII text file on the TESLA BBS (719) 486-2775]

24. Cheney, Margaret, Tesla, Man Out of Time, Prentice Hall Inc, Englewood Cliffs, NJ, 1981.

25. Gordan, Bruce, private communication, 1988.

26. Arguelles, Jose & Lloydine, personal communication.

27. Hercules, Michael, The Circle of Love, published by the author.

28. Castenada, Carlos, The Power of Silence, Further Lessons of don Jaun, Simon and Schuster, New York, 1987, Pg. 120.

About the Author

Mr. Toby Grotz, President, Wireless Engineering is an electrical engineer and has 16 years experience in the field of geophysics, aerospace and industrial research and design. While working for the Geophysical Services Division of Texas Instruments and at the University of Texas at Dallas, Mr. Grotz was introduced to and worked with the geophysical concepts which are of importance to the wireless transmission of power. As a Senior Engineer at Martin Marietta, Mr. Grotz designed and supervised the construction of industrial process control systems and designed and built devices and equipment for use in research and development and for testing space flight hardware. Mr. Grotz also worked for the public utility industry installing mini

computer based pollutant measuring data acquisition systems in fossil fuel power plants and as a results engineer in a nuclear power plant. Mr. Grotz organized and chaired the 1984 Tesla Centennial Symposium and the 1986 International Tesla Symposium and was president of the International Tesla Society, a not for profit corporation formed as a result the first symposium. As Project Manager for Project Tesla, Mr. Grotz aided in the design and construction of a recreation of the equipment Nikola Tesla used for wireless transmission of power experiments in 1899 in Colorado Springs. Mr. Grotz received his B.S.E.E. from the University of Connecticut in 1973.

ETHER AND THE THEORY OF RELATIVITY

BY ALBERT EINSTEIN

AN ADDRESS DELIVERED ON MAY 5TH, 1920, IN THE UNIVERSITY OF LEYDEN

How does it come about that alongside of the idea of ponderable matter, which is derived by abstraction from everyday life, the physicists set the idea of the existence of another kind of matter, the ether? The explanation is probably to be sought in those phenomena which have given rise to the theory of action at a distance, and in the properties of light which have led to the undulatory theory. Let us devote a little while to the consideration of these two subjects.

Outside of physics we know nothing of action at a distance. When we try to connect cause and effect in the experiences which natural objects afford us, it seems at first as if there were no other mutual actions than those of immediate contact, e.g. the communication of motion by impact, push and pull, heating or inducing combustion by means of a flame, etc. It is true that even in everyday experience weight, which is in a sense action at a distance, plays a very important part. But since in daily experience the weight of bodies meets us as something constant, something not linked to any cause which is variable in time or place, we do not in everyday life speculate as to the cause of gravity, and therefore do not become conscious of its character as action at a distance. It was Newton's theory of gravitation that first assigned a cause for gravity by interpreting it as action at a distance, proceeding from masses. Newton's theory is probably the greatest stride ever made in the effort towards the causal nexus of natural phenomena. And yet this theory evoked a lively sense of discomfort among Newton's contemporaries, because it seemed to be in conflict with the principle springing from the rest of experience, that there can be reciprocal action only through contact, and not through immediate action at a distance.

It is only with reluctance that man's desire for knowledge endures a dualism of thls kind. How was unity to be preserved in his comprehension of the forces of nature? Either by trying to look upon contact forces as being themselves distant forces which admittedly are observable only at a very small distance and this was the road which Newton's followers, who were entirely under the spell of his doctrine, mostly preferred to take; or by assuming that the Newtonian action at a distance is only apparently immediate action at a

distance, but in truth is conveyed by a medium permeating space, whether by movements or by elastic deformation of this medium. Thus the endeavour toward a unified view of the nature of forces leads to the hypothesis of an ether. This hypothesis, to be sure, did not at first bring with it any advance in the theory of gravitation or in physics generally, so that it became customary to treat Newton's law of force as an axiom not further reducible. But the ether hypothesis was bound always to play some part in physical science, even if at first only a latent part.

When in the first half of the nineteenth century the far-reaching similarity was revealed which subsists between the properties of light and those of elastic waves in ponderable bodies, the ether hypothesis found fresh support. 1t appeared beyond question that light must be interpreted as a vibratory process in an elastic, inert medium filling up universal space. It also seemed to be a necessary consequence of the fact that light is capable of polarisation that this medium, the ether, must be of the nature of a solid body, because transverse waves are not possible in a fluid, but only in a solid. Thus the physicists were bound to arrive at the theory of the ``quas-irigid'' luminiferous ether, the parts of which can carry out no movements relatively to one another except the small movements of deformation which correspond to light-waves.

This theory also called the theory of the stationary luminiferous ether moreover found a strong support in an experiment which is also of fundamental importance in the special theory of relativity, the experiment of Fizeau, from which one was obliged to infer that the luminiferous ether does not take part in the movements of bodies. The phenomenon of aberration also favoured the theory of the quasi-rigid ether.

The development of the theory of electricity along the path opened up by Maxwell and Lorentz gave the development of our ideas concerning the ether quite a peculiar and unexpected turn. For Maxwell himself the ether indeed still had properties which were purely mechanical, although of a much more complicated kind than the mechanical properties of tangible solid bodies. But neither Maxwell nor his followers succeeded in elaborating a mechanical model for the ether which might furnish a satisfactory mechanical interpretation of Maxwell's laws of the electro-magnetic field. The laws were clear and simple, the mechanical interpretations clumsy and contradictory. Almost imperceptibly the theoretical physicists adapted themselves to a situation which, from the standpoint of their mechanical programme, was very depressing. They were particularly influenced by the electro-dynamical investigations of Heinrich Hertz. For whereas they previously had required of a conclusive theory that it should content itself with the fundamental concepts which belong exclusively to mechanics (e.g. densities, velocities, deformations, stresses) they gradually accustomed themselves to admitting electric and magnetic force as fundamental concepts side by side with those of

mechanics, without requiring a mechanical interpretation for them. Thus the purely mechanical view of nature was gradually abandoned. But this change led to a fundamental dualism which in the long-run was insupportable. A way of escape was now sought in the reverse direction, by reducing the principles of mechanics to those of electricity, and this especially as confidence in the strict validity of the equations of Newton's mechanics was shaken by the experiments with b-rays and rapid kathode rays.

This dualism still confronts us in unextenuated form in the theory of Hertz, where matter appears not only as the bearer of velocities, kinetic energy, and mechanical pressures, but also as the bearer of electromagnetic fields. Since such fields also occur in vacuo i.e. in free ether the ether also appears as bearer of electromagnetic fields. The ether appears indistinguishable in its functions from ordinary matter. Within matter it takes part in the motion of matter and in empty space it has everywhere a velocity; so that the ether has a definitely assigned velocity throughout the whole of space. There is no fundamental difference between Hertz's ether and ponderable matter (which in part subsists in the ether).

The Hertz theory suffered not only from the defect of ascribing to matter and ether, on the one hand mechanical states, and on the other hand electrical states, which do not stand in any conceivable relation to each other; it was also at variance with the result of Fizeau's important experiment on the velocity of the propagation of light in moving fluids, and with other established experimental results.

Such was the state of things when H. A. Lorentz entered upon the scene. He brought theory into harmony with experience by means of a wonderful simplification of theoretical principles. He achieved this, the most important advance in the theory of electricity since Maxwell, by taking from ether its mechanical, and from matter its electromagnetic qualities. As in empty space, so too in the interior of material bodies, the ether, and not matter viewed atomistically, was exclusively the seat of electromagnetic fields. According to Lorentz the elementary particles of matter alone are capable of carrying out movements; their electromagnetic activity is entirely confined to the carrying of electric charges. Thus Lorentz succeeded in reducing all electromagnetic happenings to Maxwell's equations for free space.

As to the mechanical nature of the Lorentzian ether, it may be said of it, in a somewhat playful spirit, that immobility is the only mechanical property of which it has not been deprived by H. A. Lorentz. 1t may be added that the whole change in the conception of the ether which the special theory of relativity brought about, consisted in taking away from the ether its last mechanical quality, namely, its immobility. How this is to be understood will forthwith be expounded.

The space-time theory and the kinematics of the special theory of relativity were modelled on the Maxwell-Lorentz theory of the electromagnetic field. This theory therefore satisfies the conditions of the special theory of relativity, but when viewed from the latter it acquires a novel aspect. For if K be a system of co-ordinates relatively to which the Lorentzian ether is at rest, the Maxwell-Lorentz equations are valid primarily with reference to K. But by the special theory of relativity the same equations without any change of meaning also hold in relation to any new system of co-ordinates K' which is moving in uniform translation relatively to K. Now comes the anxious question: Why must I in the theory distinguish the K system above all K' systems, which are physically equivalent to it in all respects, by assuming that the ether is at rest relatively to the K system? For the theoretician such an asymmetry in the theoretical structure, with no corresponding asymmetry in the system of experience, is intolerable. If we assume the ether to be at rest relatively to K, but in motion relatively to K', the physical equivalence of K and K' seems to me from the logical standpoint, not indeed downright incorrect, but nevertheless inacceptable.

The next position which it was possible to take up in face of this state of things appeared to be the following. The ether does not exist at all. The electromagnetic fields are not states of a medium, and are not bound down to any bearer, but they are independent realities which are not reducible to anything else, exactly like the atoms of ponderable matter. This conception suggests itself the more readily as, according to Lorentz's theory, electromagnetic radiation, like ponderable matter, brings impulse and energy with it, and as, according to the special theory of relativity, both matter and radiation are but special forms of distributed energy, ponderable mass losing its isolation and appearing as a special form of energy.

More careful reflection teaches us, however, that the special theory of relativity does not compel us to deny ether. We may assume the existence of an ether,; only we must give up ascribing a definite state of motion to it, i.e. we must by abstraction take from it the last mechanical characteristic which Lorentz had still left it. We shall see later that this point of view, the conceivability of which shall at once endeavour to make more intelligible by a somewhat halting comparison, is justified by the results of the general theory of relativity.

Think of waves on the surface of water. Here we can describe two entirely different things. Either we may observe how the undulatory surface forming the boundary between water and air alters in the course of time; or else with the help of small floats, for instance we can observe how the position of the separate particles of water alters in the course of time. If the existence of such floats for tracking the motion of the particles of a fluid were a fundamental impossibility in physics if, in fact, nothing else whatever were observable than the shape of the space occupied by the water as it varies in time, we should

have no ground for the assumption that water consists of immovable particles. But all the same we could characterize it as a medium.

We have something like this in the electromagnetic field. For we may picture the field to ourselves as consisting of lines of force. If we wish to interpret these lines of force to ourselves as something inmaterial in the ordinary sense, we are tempted to interpret the dynamic processes as motions of these lines of force, such that each separate line of force is tracked through the course of time. It is well known, however, that this way of regarding the electromagnetic field leads to contradictions.

Generalizing we must say this: There inay be supposed to be extended physical objects to which the idea of motion cannot be applied. They may not be thought of as consisting of particles which allow themselves to be separately tracked through time. In Minkowski's idiom this is expressed as follows: Not every extended conformation in the four-dimensional world can be regarded as composed of worldthreads. The special theory of relativity forbids us to assume the ether to consist of particles observable through time, but the hypothesis of ether in itself in conflict with the special theory of relativity. Only we must be on our guard against ascribing a state of motion to the ether.

Certainly, from the standpoint of the special theory of relativity, the ether hypothesis appears at first to be an empty hypothesis. 1n the equations of the electromagnetic field there occur, in addition to the densities of the electric charge, only the intensities of the field. The career of electromagnetic processes in vacuum appears to be completely determined by these equations, uninfluenced by other physical quantities. The electromagnetic fields appear as ultimate, irreducible realities, and at first it seems superfluous to postulate a homogeneous, isotropic ether-medium, and to envisage electromagnetic fields as states of this medium.

But on the other hand there is a weighty argument to be adduced in favour of the ether hypothesis. To deny the ether is ultimately to assume that empty space has no physical qualities whatever. The fundamental facts of mechanics do not harmonize with this view. For the mechanical behaviour of a corporeal system hovering freely in empty space depends not only on relative positions (distances) and relative velocities, but also on its state of rotation, which physically may be taken as a characteristic not appertaining to the system in itself. In order to be able to look upon the rotation of the system, at least formally, as something real, Newton objectivises space. Since he classes his absolute space together with real things, for him rotation relative to an absolute space is also something real. Newton might no less well have called his absolute space ``Ether''; what is essential is merely that besides observable objects, another thing, which is not perceptible, inust be looked upon as real, to enable acceleration or rotation to be looked upon as something real.

It is true that Mach tried to avoid having to accept as real something which is not observable by endeavouring to substitute in mechanics a mean acceleration with reference to the totality of the masses in the universe in place of an acceleration with reference to absolute space. But inertial resistance opposed to relative acceleration of distant masses presupposes action at a distance; and as the modern physicist does not believe that he may accept this action at a distance, he comes back once inore, if he follows Mach, to the ether, which has to serve as medium for the effects of inertia. But this conception of the ether to which we are led by Mach's way of thinking differs essentially from the ether as conceived by Newton, by Fresnel, and by Lorentz. Mach's ether not only conditions the behaviour of inert masses, but is also conditioned in its state by them.

Mach's idea finds its full development in the ether of the general theory of relativity. According to this theory the metrical qualities of the continuum of space-time differ in the environment of different points of space-time, and are partly conditioned by the matter existing outside of the territory under consideration. This space-time variability of the reciprocal relations of the standards of space and time, or, perhaps, the recognition of the fact that ``empty space'' in its physical relation is neither homogeneous nor isotropic, compelling us to describe its state by ten functions (the gravitation potentials g), has, I think, finally disposed of the view that space is physically empty. But therewith the conception of the ether has again acquired an intelligible content, although this content differs widely from that of the ether of the mechanical undulatory theory of light. The ether of the general theory of relativity is a medium which is itself devoid of all mechanical and kinematical qualities, but helps to determine mechanical (and electromagnetic) events.

What is fundamentally new in the ether of the general theory of relativity as opposed to the ether of Lorentz consists in this, that the state of the former is at every place determined by connections with the matter and the state of the ether in neighbouring places, which are amenable to law in the form of differential equations,; whereas the state of the Lorentzian ether in the absence of electromagnetic fields is conditioned by nothing outside itself, and is everywhere the same. The ether of the general theory of relativity is transmuted conceptually into the ether of Lorentz if we substitute constants for the functions of space which describe the former, disregarding the causes which condition its state. Thus we may also say, I think, that the ether of the general theory of relativity is the outcome of the Lorentzian ether, through relativation.

As to the part which the new ether is to play in the physics of the future we are not yet clear. We know that it determines the metrical relations in the space-time continuum, e.g. the configurative possibilities of solid bodies as well as the gravitational fields; but we do not know whether it has an essential share in the structure of the electrical elementary particles constituting matter.

Nor do we know whether it is only in the proximity of ponderable masses that its structure differs essentially from that of the Lorentzian ether; whether the geometry of spaces of cosmic extent is approximately Euclidean. But we can assert by reason of the relativistic equations of gravitation that there must be a departure from Euclidean relations, with spaces of cosmic order of magnitude, if there exists a positive mean density, no matter how small, of the matter in the universe. In this case the universe must of necessity be spatially unbounded and of finite magnitude, its magnitude being determined by the value of that inean density.

If we consider the gravitational field and the electromagnetic field from the standpoint of the ether hypothesis, we find a remarkable difference between the two. There can be no space nor any part of space without gravitational potentials; for these confer upon space its metrical qualities, without which it cannot be imagined at all. The existence of the gravitational field is inseparably bound up with the existence of space. On the other hand a part of space may very well be imagined without an electromagnetic field; thus in contrast with the gravitational field, the electromagnetic field seems to be only secondarily linked to the ether, the formal nature of the electromagnetic field being as yet in no way determined by that of gravitational ether. From the present state of theory it looks as if the electromagnetic field, as opposed to the gravitational field, rests upon an entirely new formal motif, as though nature might just as well have endowed the gravitational ether with fields of quite another type, for example, with fields of a scalar potential, instead of fields of the electromagnetic type.

Since according to our present conceptions the elementary particles of matter are also, in their essence, nothing else than condensations of the electromagnetic field, our present view of the universe presents two realities which are completely separated from each other conceptually, although connected causally, namely, gravitational ether and electromagnetic field, or as they might also be called space and matter.

Of course it would be a great advance if we could succeed in comprehending the gravitational field and the electromagnetic field together as one unified conformation. Then for the first time the epoch of theoretical physics founded by Faraday and Maxwell would reach a satisfactory conclusion. The contrast between ether and matter would fade away, and, through the general theory of relativity, the whole of physics would become a complete system of thought, like geometry, kinematics, and the theory of gravitation. An exceedingly ingenious attempt in this direction has been made by the mathematician H. Weyl,; but I do not believe that his theory will hold its ground in relation to reality. Further, in contemplating the immediate future of theoretical physics we ought not unconditionally to reject the possibility that the

facts comprised in the quantum theory may set bounds to the field theory beyond which it cannot pass.

Recapitulating, we may say that according to the general theory of relativity space is endowed with physical qualities; in this sense, therefore, there exists an ether. According to the general theory of relativity space without ether is unthinkable; for in such space there not only wonld be no propagation of light, but also no possibility of existence for standards of space and time (measuring-rods and clocks), nor therefore any space-time intervals in the physical sense. But this ether may not be thought of as endowed with the quality characteristic of ponderable media, as consisting of parts which may be tracked through time. The idea of motion may not be applied to it.

AETHER, RELATIVITY AND SUPERFLUIDITY

BY BARRY C. MINGST

Abstract

A review of the basics of special and general relativity. The basis of both special relativity and general relativity is superfluid equations -- Maxwell's equations for special relativity and generalized superfluid equations for general relativity. Demonstration that a superfluid aether results in both special and general relativity as special cases. Resolution of the Feynman arguments against an aether as a gravitational source. Discussion of the Thirring-Lenz experiment tending to confirm physical aether medium versus "mathematical" or "continuum" cause of gravity.

Introduction

"According to the general theory of relativity space is endowed with physical qualities; in this sense, therefore, there exists an aether. According to the general theory of relativity space without aether is unthinkable."

A. Einstein, Sidelights on Relativity, 1922, page 23.

This paper examines one possible physically causative agent for gravitation of matter bodies. This causative agent is a superfluid aether. This aether is not matter, but matter is affected by the aether. Superfluidity is the basis for Maxwell's equations, special relativity, and general relativity.

The concept of the aether arose from the study of the behavior of wave action and light. Even before the kinetic theory of gases provided microscopic concepts, the study of the sensible world allowed a fairly consistent view of wave action. Light was clearly identified in the wave category of phenomena. The debate as to what the ultimate underlying nature of light was (wave or particulate) spanned several centuries of theory and experiment. Not until the twentieth century was it ever contended that "waves" of light did not have an underlying physical medium.

The main objection to fluid aether theories came from light's propagation as transverse waves. Up to the time of the general abandonment of deterministic (classical) physics at the microscopic level (with the rise of quantum physics in the 1920's) no "reasonable" way to explain this behavior of light was generally accepted. "The" aether theory being tested by the famous Michaelson-Morely experiment was the "solid" aether theory that was in

ascendence at the time. This theory assumed that the aether was physically separate from matter -- that is, they were not related.

The demise of the concept of the aether resulted from the tumultuous evolution of the physical concepts of the early twentieth century (quantum theory and general relativity). Quantum mechanicists developed the concepts of "probability density" and non-causality. General relativists picked up on the shorthand of space-time developed by Minkowski in 1908 for special relativity and expanded it to a mathematical "space-time continuum." Although most specifically denied a physical medium, Einstein clearly realized that both special and general relativity were based on fluid dynamical models {Handbook of Physics, Condon and Odishaw, Page 2-50, Section 29}.

The Derivation of Maxwell's Equations

One of the most successful theoretical works in physics is Maxwell's theory of electricity and magnetism. Maxwell's equations united and mathematically quantified the interaction of electrical and magnetic effects. In deriving these equations, Maxwell made certain assumptions about the nature of the medium that carried electricity, magnetism, and light. The primary assumption used by Maxwell was that the underlying medium could be described using the perfect fluid vortex theory developed by Hemholtz.

"The consideration of the action of magnetism on polarized light leads, as we have seen, to the conclusion that in a medium under the action of magnetic force is something belonging to the same mathematical class as an angular velocity, whose axis is in the direction of the magnetic force, forms a part of the phenomenon.

"This angular velocity cannot be that of any portion of the medium of sensible dimensions rotating as a whole. We must therefore conceive the rotation to be that of very small portions of the medium, each rotating on its own axis. This is the hypothesis of molecular vortices.

"The motion of these vortices, though, as we have shewn ..., does not sensibly affect the visible motions of large bodies, may be such as to affect that vibratory motion on which the propagation of light, according to the undulatory theory, depends. The displacements of the medium, during the propagation of light, will produce a disturbance of the vortices, and the vortices when so disturbed may react on the medium so as to affect the mode of propagation of the ray."...

"... We shall therefore assume that the variation of vortices caused by the displacement of the medium is subject to the same conditions which Hemholtz, in his great memoir on Vortex-motion, has shewn to regulate the variation of the vortices of a perfect fluid."

J. Maxwell, A Treatise on Electricity and Magnetism, 1873, sections 822 and 823.

There have been attempts in the past to "expand" Maxwell's equations in the name of symmetry. One of these was the concept of magnetic monopoles. It was determined that magnetic monopoles could be inserted into Maxwell's equations and the equations would remain self-consistent and usable. The hunt for magnetic monopoles in the 1970's ended without any confirmed monopoles. Another attempt was the expansion of Maxwell's equations to include positive and negative charges as "carriers" of the weak nuclear force. This is what is now known as the "electroweak" force. This expansion of Maxwell's equations is also self-consistent and usable. In this case particles of mass roughly in the range expected have been found.

What is missing from these expansions is any physical concept that would give rise to these expansions. It must be stressed that Maxwell derived his equations. He did not just write them down and then note that they happened to work. The derivation was the direct result of the physical postulates (superfluid aether and vortices) he made in his derivation. Magnetic monopoles and "weak" nuclear theory do not arise from Maxwell's equations. There is therefore no physical basis for expecting these equations to work.

The Derivation of Special Relativity

The special theory of relativity was derived from Maxwell's Equations. The Special Theory was a leap of quantification based on an apparent anomaly. Maxwell's equations imply that the measured speed of light (in a vacuum) is constant for any observer -- regardless of how that observer was moving relative to the source of light.

In developing Special Relativity, Einstein postulated the universality of the speed of light and applied the mathematical consequences to see where they would lead. The primary result of the special theory of relativity was the equivalence of matter and energy (E=mc2). The Lorentz-Fitzgerald relations had been developed earlier from standard aether wave theories (which is why they are called Lorentz-Fitzgerald equations instead of Einstein equations). Special Relativity is therefore based on the superfluid derivations of Maxwell and Hemholtz.

Minkowski Space-Time

The concept of "space-time" was first developed by Minkowski in 1908 for use with the Special Theory of Relativity. In this first incarnation, Minkowski pointed out that the mathematical equations may be written in a shorthand form by regarding time and the three physical coordinates as four coordinates in a four-dimensional space, called "space-time."

In an inertial, cartesian reference frame a pulse of light emitted at time t=t0 and location x = x0, y = y0, and z = z0 will be noted at a point x, y, z, t given by the equation {eq 4.2 An Introduction to Tensor Calculus, Relativity and Cosmology, D Lawden, 1975, Wiley and Sons}:

This equation describes an expanding spherical shell for the light pulse. A shorthand version of this equation was developed by Minkowski by the use of the mathematical device of setting:

x = x1, y = x2, z = x3, and ict = x4; where i = SqrRoot (-1)

The standard Minkowski space-time is given as {eq. 4.5, An Introduction to Tensor Calculus, Relativity and Cosmology, D Lawden, 1975, Wiley and Sons}:

General Relativity

Einstein's "field" equations may be written in the tensor form:

In this form, Gaß is the "Einstein Tensor", Lambda is the "cosmological constant" (usually set to zero), g is the "metric" tensor, k is a constant set to 8p, and Taß is the "stress-energy tensor." This form is actually shorthand notation for ten coupled differential equations {Equation 8.7, A first course in general relativity, Schutz, Cambridge University Press, 1990}. The value of 8p is obtained by demanding that Einstein's equations predict the correct behavior of planets in the solar system -- the Newtonian Limit {ibid, p199}.

The claim is currently made that the mathematics of General Relativity requires the curvature of space. The question "How?" is answered with "It just does." The question of why the object travels the shortest path in curved space is also not addressed. General Relativity can give no answer because these are the basic postulates of the theory.

The differences in the concepts between General Relativity and Newtonian gravity are:

Newtonian: Mass (somehow) causes a gravitational force which causes true acceleration.

Einsteinian: Mass (somehow) causes a warping of space which results in apparent acceleration.

But the description of causation as a curvature of space is not sufficient to encompass what else General Relativity includes. If spacial curvature were all there were to General Relativity, there would be no difference in calculations between General Relativity and Newtonian gravity. General Relativity also imposes superfluid equations onto gravitational relationships. The imposition of superfluid equations has a very significant effect: the speed of propagation of gravity is thereby made finite. The finite transmission speed (and related

superfluid properties) is the significant difference between Newtonian gravity and General Relativity.

General Relativity is a relativistic theory of gravity. The first postulate of General Relativity is that the source of the gravitational field is the stress-energy tensor of a perfect fluid, T {sections 4.6 & 4.7, A first course in general relativity, Schutz}. This "stress-energy tensor" contains four non-zero components. These four components are the density of the perfect fluid and the pressure of the perfect fluid in each of the three physical axes. A perfect fluid in general relativity is defined as a fluid that has no viscosity and no heat conduction. It is a generalization of the "ideal gas" of ordinary thermodynamics.

Newtonian gravity is regarded as the result of a force. General Relativity distinguishes gravity from all other forces because "all bodies given the same initial velocity follow the same trajectory in a gravitational field, regardless of their internal composition" {ibid, p121}. Specifically, attempting to define a primal reference frame is considered "vacuous, since no free particle could possibly be a physical 'marker' for it" {ibid, p122}. This second postulate became the Equivalence Principle: Uniform gravitational fields are equivalent to frames that accelerate uniformly relative to inertial frames.

Although it is often stated that General Relativity shows that mass curves space, what GR actually states is that a curved spacetime represents the effects of gravity. The distinction is critical. All GR really requires is that free particles (and photons) act as if space were curved in some manner. All this means is that their trajectories curve in the presence of a massive object {ibid, p125}.

The same argument could be made for Coriolis forces. If we examine the coriolis forces that affect trajectories of moving objects over the surface of a rotating planet, we could reach the same results by postulating that Latitude "curves" space. The results of our calculations would be identical to those based on the physical cause. But we would not gain any knowledge of the cause, because we would not be looking for one.

In the direct application of its basic postulate, General Relativity suffers from the same basic weakness as the Newtonian quantification of gravity. No basis is given in General Relativity for how mass "curves" space, why masses follow the "shortest" path through curved space, or why the principle of equivalence exists. This is "action at a distance" reformulated. Einstein himself noted this weakness in that matter had to be added in to the equations "by hand" {The Reluctant Father of Black Holes, Scientific American, June 1996, p83}.

Thirring Lenz Experiment

General Relativity has some weaknesses in explaining accelerations seen in the vicinity of massive, rapidly spinning objects. In this situation, the Einsteinian/Newtonian quantification predicts no effects on first principles. But the Einsteinian formula solutions "require" a non-zero tangential velocity to be imparted by a spinning mass.

First principles of a space-time continuum cannot explain accelerations in the vicinity of rapidly rotating massive objects because the "warp" of space-time does not change with the rotation of the object. It has been explained that "inertial dragging" takes place. The explanation of inertial dragging (reference frame dragging) is a description without identification of a cause that can be traced to the base theory {pp 6 & 18-20, Rotating Fields in General Relativity, J. Islam, 1985}. According to this reference "(t)he precise connection in all its details has not yet been worked out."

But such a "drag" implies that there is a friction in the motion of mass with respect to the space-time continuum itself. Friction due to motion with respect to the continuum requires that the continuum be a fixed, primal reference frame -- which must be denied due to the basic assumption of relativity, that there can be no primal reference frame. General relativistic formulations show the requirement of tangential motion when the assumption is made that the continuum is a superfluid.

Resolution of Some Arguments Against

Aether Cause of Gravity

LeSage first discussed the possible "shadowing" of "ultra-mundane particles" as a cause of gravity in 1784. This approach has been abandoned several times by different people. According to Feynman, LeSage-type theories fail as follows:

"This particular idea has the following trouble: the earth, in moving around the sun, would impinge on more particles which are coming from its forward side than from its hind side ... . Therefore there would be more impulse given the earth from the front, and the earth would feel a resistance to motion and would be slowing up in its orbit. One can calculate how long it would take for the earth to stop as a result of this resistance, and it would not take long enough for the earth to still be in its orbit, so this mechanism does not work. No machinery has ever been invented that 'explains' gravity without also predicting some other phenomenon that does not exist."

R. Feynman, Lectures on Physics, 1963, volume 1, chapter 7, pp 9-10

Performing a calculation of the type above leads to a "drag" on the order of 10-13 m/sec2 {Dr. Steve Carlip, private communication to Paul Stowe}. A continuous acceleration on this order would stop the earth in around a million years.

But there is an unstated assumption in Feynman's argument that the "aether particles" are not circulating with the Earth's orbital motion. This is an excellent first assumption, but is it true? The presumption of particles circulating at the same orbital speed of the Earth appears at first to be only an excuse for "saving the theory."

However, we saw above that the mathematics of General Relativity and the observed Thirring-Lenz effect requires that there be some rotational motion in the vicinity of a rotating body. According to the primary assumptions of General Relativity, the Thirring-Lenz effect has no "basis." A superfluid aether would cause accelerations as a result of imparting a vortex spin on the aether field which would then accelerate the target body.

The sun is rotating rapidly in the direction of planetary (earth) orbits. According to General Relativity, the only solution that is not possible in such a situation is irrotational motion in the aether corpuscles. The key assumption in the argument that the earth "would impinge on more particles which are coming from its forward side than from its hind side" is based on non-circulating particles. According to General Relativity, this assumption is found to be invalid! Also, if the aether fluid is indeed a superfluid, once a rotation of the fluid is started it will continue without loss of energy.

The Feynman argument against the LeSage-type hypothesis was completely plausible, for there is no obvious reason to expect that the aether would be rotating along with the earth. But field rotation is both observed and a mathematical requirement of the superfluid vorticity in General Relativity. So, for the moment at least, our theory remains consistent with General Relativity.

This is not the only possible explanation for the earth not spiralling into the sun. The Feynman argument rests on the additional assumption that gravity (and the aether drag) is the only force acting on the earth's orbital motion. But -- in order to contract from a protostar -- the sun must have somehow lost most of it's angular momentum to the planets. If this mechanism were the result of the rotating solar magnetic field, the solar field will interact with the magnetosphere of the earth (and the plasma within it). This interaction will lead to a transfer of angular momentum from the sun to the earth. In short -- all possible sources of orbital impulse must be examined before we throw out a superfluid aether.

The basis for Feynman's argument was the same as one made for the irrotational earth (geocentric cosmos), and dealt with by Galileo in his Dialog on Two World Systems in 1632. The argument went as follows:

According to (Claudius Ptolemy and Tycho Brahe), if the earth were moving (rotating) an object thrown vertically upward would not descend along the same line ..., the point on the earth under the object would have shifted while the object was in the air. Furthermore, if the earth were moving (rotating) from west to east, the direction required to explain the appearance of the heavens, then ... (p)eople on the earth would perpetually feel an east wind, just as a rider feels a wind in his face as he travels along. ...

Galileo had refuted the arguments ... in his Dialogue Concerning the Two Chief World Systems. Objects ... belong to the moving system of the earth, and as parts they participate in the motion of the whole in addition to their own observable motions."

Radner and Radner, Science and Unreason, Wadworth Publishing Company, 1982, p34

As the air moves with a rotating earth, so the aether moves with the orbiting earth. They are part of the same "world system." It is only because the aether is so much less noticeable than the air (to us) that we accept Feynman's argument without close examination. By General Relativity and the Thirring-Lenz effect, the aether MUST move around the rotating sun and the orbiting earth. A Feynman-type argument can only be used if it is demonstrated beyond any doubt that the two components are not part of the same "world system." Whenever one component is affected by the other they must be part of the same, coupled, world system -- and the interdependence cannot be dismissed without serious thought. In this case the wind affects the surface of the earth or the aether is presumed to affect the earth's orbit.

Even if the Thirring-Lenz effect has no bearing, there is also the gravitational "sling" argument. If gravity is the result of a superfluid aether, then the speed of propagation of gravity must be finite. If the speed of gravity is finite, then orbiting masses will accelerate out of orbit. This is supposedly due to the "lead" of the gravitational force, due to the past position of the second object. This is one "push" that could overcome or balance the "drag" of the aether. Proponents of GR state that it is only the "delicate balance" of GR that keeps the orbits from accelerating or decelerating.

Summary

Maxwell's equations were explicitly developed as fluid dynamical models, and require an underlying physical medium. Special relativity was derived from Maxwell's equations. General relativity is based on perfect fluid equations.

Thus, any theory based on one of these three theories implicitly retains all fluid dynamical properties. Any denial of an underlying physical medium by such a theorist is therefore hollow -- and merely shows ignorance on the part of

the practitioner concerning the history and derivation of the equations that are being used.

"Fundamental challenges to disciplines tend to come from outside. It is customary for students to be introduced to their fields of study gradually, as slowly unfolding mysteries, so that by the time they can see their subject as a whole, they have been so thoroughly imbued with conventional preconceptions and patterns of thought that they are extremely unlikely to be able to question its basic premises."

Martin Bernal Black Athena: The Afroasiatic Roots of Classical Civilization, Vol. I, 1987

A LOOK AT SCALAR TECHNOLOGY AND ONE OF ITS APPLICATIONS

BY WARREN YORK

EXTRAORDINARY SCIENCE, VOL. 2, NO. 1, 1990

3d Time & Space

For simplicity and concept of understanding I will be describing what we have come to know as the real world or what we perceive as being a three dimensional time and space on a linear plane.

The three dimensions being length, height and width. It really is a four dimensional space of which time being a man made factor for reference is the fourth dimension.

In reality space time is curved. If we zero in close enough we can talk about it as if it were linear if for nothing other than simplicity and understanding. If I were to try and talk about time and space as it really is then it would become complex dealing with arcs, spherical dimensions and higher mathemathics as kerr metrics. For now we will consider our dimension as a three dimensional time cube.

Hyperspace

In Fig. 1 we have our 3D Space/Time Cube. Our X axis will represent the axis of acceleration. The Z axis is our matter or object axis.

As our object target we will use a rectangular box having known length, height and width. [See Fig.5] It is not important to assign values to these figures as of yet. The pictorial concept is the important value of what I have to say about time and space.

We will let the Y axis represent Lambda or Light. It is light itself and not necessarily the speed of light. This would mean that light is 90 degrees in our 3D Space/Time Cube to matter. If we shifted reference points by rotation this would make our Z axis or matter axis now light and our Y axis which was our Light axis now matter. This is important for this is where Planks constant comes in. This makes Planks constant as important in our 3D Space/Time Cube as the speed of light is in the formula E=MC squared, E being energy, M the mass and C the speed of light.

You should now have a clear picture or viewpoint in your mind of the 3 dimensional rectangular box resting in our 3D Space/Time Cube in reference to our linear X,Y and X axis or perceivable world.

The fourth dimension being acceleration or the change in time one, delta one start reference point and time two or delta two the last reference point which will also give us the distance traveled between delta one and delta two. Now in Fig.5 look at the leading edge of our box which is parallel with the Y axis or light axis Lambda.

Now this leading edge is our reference point when we start talking about delta one to delta two or acceleration to the speed of light. Yes we cannot accelerate matter to the speed of light due to friction, but for all purposes we don't know that yet.

Let's just say we can for now and friction and other factors do not have an effect on our box. This friction and other factors is what Chuck Yeager thought he found at Mach one as the demon. Well the demon is there but way above Mach one and way below the speed of light. The demon is friction and resistance factors of which we don't need to worry about in our pictorial view. [See Fig.4 & 5] Now let's say we just found some super fuel called Element 115 for now. This is an inside pun, but it will do for those of you who need a physical means to drive our box to and beyond the speed of light.

We now set our box the Z axis in motion along the direction to the right on the X axis or acceleration plane. As we accelerate to the speed of light we will start to bend Space/Time itself. This means our Z axis will start to swing up toward our Y axis as we approach the speed of light. [See Fig. 5, A, B & C] Notice if we redraw our box in reference to our grid the box will seem to elongate as space/time is bent. This is what Einstein was talking about in relativity with the Lorentz Transformation.

Keep in mind at this point we are not moving along with the new box but looking at it from its original starting point. If we were to move with the box we would see no change in the space warp as to the box itself. In other words the box would not seem to elongate from within its own reference point but only from the original observers viewpoint.

Now in our three dimensional space/time there is one thing that we perceive in only two dimensions and that is a shadow of which light is a contributing factor. Now from our orignal reference point when we reach the speed of light the box would be perceived as a beam of light and the matter axis would have been warped or bent back on itself and from our original observer point would no longer be in our 3D space.

At that point if we continue to accelerate with our super fuel Element 115 to two times the speed of light we are now swapping our X axis for the Y axis since we have flipped 90 degrees and the box is in its new dimension.

When the box once again reaches another C in acceleration from delta one we would once again see the box but it would be 180 degrees out from our old 3 dimensional point. After it reaches three C and goes on to 4 C then you can kiss it goodbye for all practical purposes.

How long before we ever reached one C we found that demon that Yeager was looking for. Now friction and the other resistive factors [The Demon] tell us Mother Nature will never allow us to approach the problem of acceleration to the speed of light by shear brute force alone. How sad, for I think we were on to something if it just wasn't for this Demon.

Wait! there is still hope. Let's fool Mother nature. Is there another way to bend Space/Time itself? Mother nature does it every day herself.

Before we can go on we must stop and look at just what is Space/Time itself. It's been called the Aether among other things. Let's just look at it as Jello or flexible rubber that is relative to us. It can and is detected but misunderstood as electromagnetic fields.

RF radiation or wave propagation through this space time are constructed with electromagnetic fields but in such a manner that they cause propagation in space time where electromagnetic fields alone only stress, twist and distort space time.

When the fields are removed by cutting off electron flow in a conductor [coil] the space time snaps back to the form before the distortion. This brings us to just what is this space time we have been talking about?

The Aether

This flexible rubber, Jello or what ever you wish to call it is Space Time itself or what Space Time is made up of. It has been called the Aether in the past so we shall also call it the Aether.

Now I know there has been debates on the existance of an Aether or not for many years. The last acceptance was that it did not exist. For thoses of you who wish to research into this aspect may wish to review the Silvertooth experiment. "

Abstract #1: Michelson-Morley type experiments are shown to be non-sequitors because their logic fails to take into account the relationship between wavelength and propagation velocity. An experimental demonstration of anisotropy in wavelength is described." [1] "

Abstract #2: After a lapse of 100 years the Silvertooth experiment has achieved Michelson's objective and detected the Earth's motion through space by optical interference. The consequences of this new experiment will have a traumatic effect on physics. A related issue is the question of

reinterpreting the null result of the Trouton-Noble experiment, the electrodynamic equivalent of the Michelson-Morley experiment." [2]

Now nature distorts this Aether all the time by natural proccesses that take place. We can see the results and feel this distortion as pressure of the Aether [3 dimensional Space/Time].

If you have ever placed two magnets next to each other you can see and feel the attracting or repelling forces involved in this distortion of Space/Time. We call this magnetic flux but it is the actual Aether you feel and see as movement taking place.

Now if we send electrons down a conductor we find a magnetic flux is generated in accordance to the left hand rule. That is the flux or Aether is moving in the direction or twisting in the direction of the left hand rule based on direction of electron flow or travel.

[See Extraordinary Science, Volume 1, Issue 2, page 9]

In figure 2 I have attempted to show the flux from a moving electron down a conductor. I did not display it as I had wished. In reality, it will look more like a spring as the flux lags the electrons movement through the Aether.

Now we see that not only can nature produce a small space/time distortion with the distortion being the magnetic fields themselves but man can generate the same distortions but controled with electromegnetics. Since this is true then man can get around the demon by bending space/time [Aether] with Scalar technology of which electromagnetics makes up such processes. See Fig. 3.

To bend Space/Time and produce time travel or invisibility you will need to build at least four generators. One of the generators will need to be as a time reference point for the other three generators which control the bending of the X, Y, and Z axis. [See Fig. 4 & 5.]

We will be going over this again and again in the future as I show more and more of the actual mechanism in producing such effects. It is only important to obtain a slight pictorial view of how this application is linked to Scalar Technology.

There is a lot more involved than this simple view I have just given but I hope you have a little better understanding of how a process can actually be produced and what you may be playing with in your search to understand Scalar. Remember I have presented this view on a linear plane of which it is not in reality.

It can be done on a spherical plane but what it will look like will be a mirror image folding in on itself. For now just try to understand it using our 3D Space/Time Cube. This application will fall in the field of The Philadelphia

Experiment, Hyperspace drives and Time travel. We have only begun our journey into Scalar Technology. The UNIFIELD!

References

[1] & [2] Speculations in Science and Technology, Volume 10, Number 1, 1987

A SECOND APPLICATION OF SCALAR TECHNOLOGY: GRAVITY

BY WARREN E. YORK

I wish to point out a correction in FIG.3 of last issue. The direction of the arrows indicating Aether rotation and stated as being the same thing as a magnetic field is shown going in the counter clockwise direction for the positive end or right side of the drawing.

This flow should be changed to show clockwise rotation for the right side or positive side only. This error was noticed due to recent developments and observations of Aether mechanics. This brings me to the correction on the second error which was stated as the Aether and EMF [magnetic flux field] being one in the same thing.

This is half true. It is now my understanding that the Aether flow is inverse to the magnetic flux flow and non symmetrical to it. Fig 2. For those of you who are technicians or professionals, you should be aware of the two electron flow theories.

The first and accepted one is that positive energy travels from positive to negative from a battery or source through a conductor and the not so accepted but also true theory of hole flow.

That is the empty space left in an atom's outer orbit which is like a hole which travels backwards in the conductor. That would be negative to positive.

So the new understanding is that the Aether flow is inverse to magnetic flow. Electrons and Aether flow interact with each other. The next correction is a typo of the word Ether. I had spelled Either and it should be Aether to indicate other than the gas called Ether. [See last issue]

[Fig.3 Extraordinary Science, Jan/Feb/Mar 1990, page 17]

Researchers

Matt Campbell currently employed by the U.S. Government has taken me up on my offer to form a small think tank research team. Matt lives here in El Paso, Texas and has a strong background on the new technologies. He had read my article on Scalar Technologies and found a direct relationship with his own study on Vortexes. He learned I was right here in the same town and called to drop by and compare notes.

We learned we were both studying the same thing and decided to join ideas and reasoning which I have already set into motion under the title Scalar Technologies. Since we have joined forces our deductions have progressed to the engineering of a prototype model test coil. Fig 1A.

Dr. Henry C. Montieth has agreed to work with us and review our work so as to keep us on track and prevent wasted man hours on an improper assumption or an erroneous test run. Dr. Montieth has twenty years of service with Sandia National Laboratory in Albuquerque, New Mexico; he holds a PhD in applied Physics as well as a Master's degree in electrical engineering.

Dr. Montieth has written several papers of which one I will list here under references [19] for those of you who wish to review how he thinks in relation to our work. He knows of Lt. Col Tom Beardon's work and is a theoretical physicist himself. As an educated critic his understanding of our approach will be most helpful in this study.

I am in the process of contacting other researchers but time to fit everything into one day is hard to find. My personal feeling is that the most knowledgeable man in this field I have come across to date is Dr. Moray B. King. I am in hopes he will join us in some behalf in this study in the near future. You may have seen one of his papers here in Extraordinary Science, Oct/Nov/Dec 1989, page 8, Scalar Current. I have talked with him over the phone but to date strange as it may seem we have not had the chance to compare notes and thoughts.

From what I have read of his thinking from his book [Tapping The Zero-Point Energy] we have come up with the same deductions without knowing of each others work. I would also like to give my special thanks to Theodor Ernst Bart a research and development engineer in Switzerland for RCA laboratories. Through his own research in scalar technology he has sent me lab photos Fig 2. showing Aetheric flow using a color TV screen as an instrument. This idea was first suggested and done by Lt. Col Tom Beardon.

In our approach we review the work and papers of others to formulate and engineer working models of our own on the different concepts. In short we are trying to take ideas and concepts and turn them into reality through working experiments and practical devices. Your insight and suggestions are welcome to help formulate and narrow down these tests.

Gravity

In our last issue I had discussed how scalar may relate to interdimensional doorways or windows. Since this time I have obtained a short video of such a process actually taking place. The manipulation of Time and Space itself or better termed manipulation of the Aether.

I did not go into how to actually make a doorway or window but only show how Scalar is a part in the process to develop such a device. Hence when you manipulate time and space you also will have effects of gravity. There is a lot of work to be done with this process and for obvious reasons it is very tricky, involved and dangerous.

Without a time sync or Aether flow lock one could end up with matter embedded within matter as reported in Project Rainbow [Philadelphia Experiment]. Before we can go on to discuss just how scalar technology can produce gravity we need a pictorial view of just what gravity is.

Notice I did not say anti-gravity. That brings us to just what is gravity? Has anybody ever explained the true nature of gravity to you? In other words what gravity really is or its makeup?

Well some people say it is a pressure or outside force and others say it is a wave or something called a graviton that makes it up. Still they have been unable to identify it in a test. We can detect it because we see the effect of it but we cannot describe the nature of just what it really is.

If you look at the equations of EMF or Maxwells equations and those of gravity you will see similarities in nature. If you have ever played with two magnets and seen and felt the fields you are close to just what the true nature of gravity is. If we look at the properties of EMF we find two polarities or charges if electrostatic. That is a minus and a plus.

In EMF, like charges repel and unlike attract. You can see this with the north and south poles of a magnet. Place two souths or two norths together and you will notice the repulsion. Likewise place two like poles together and you will see the attraction.

The earth has a North pole and a South pole just like a magnet. Fig 2A I know what you are thinking, but no, gravity is not a magnetic field or at least not as we know magnetic fields to be. The best way is to give you a pictorial view of the mechanics of gravity.

Take a look at Fig.3A, an electron's graphic orrery and its interactions with the Aether. The Aether is a fluid grid of reciprocating type of energy which is omnidirectional, has duality properties and is that of all time and space is made of; however, I will not go into what the exact nature of the Aether is at this time.

Now when we send this electron down a conductor Fig 5 from outer orbit to outer orbit of each atom in the conductor we are moving on the direction line or "I" the inertia line represented as the X axis. Fig 3A.

Notice in Fig 5 the cone or spiral shaped rotation the Aether and the inverse flow of the magnetic flux field takes. Now in Fig 2A. if you look at the electron in respect as it being earth then you will see its magnetic Aether

inverse flux fields around its axis of rotation or EMF flux fields as north and south poles [labeled "P"].

Now picture all these electrons in the outer orbits of each bit of matter on Earth and the Earth rotating on it pole axis. Fig 1. This is what gives earth its magnetic flux and inverse Aether fields and north and south poles. Fig 2A. The "F" or flux field is what is known as a closed loop of Aether rotation. Keep this in mind for this accounts for the similarities in formulas of electromagnetic fields and gravity formulas.

Electromagnetic having plus or minus or attraction and repulsion and gravity only having attraction. To produce a gravity field all one has to do is create an Aether flow pump which is in one direction. Now how does matter or a planet produce this Aether pump that we observe as gravity? Fig 1 The nucleus of the atom plays a part but once again let's keep it simple and just look at one aspect for now.

Movement of matter through the Aether due to spin on [just for now] the electron causes friction on the Aether. If you move Aether through mass you get gravity. If you move mass through Aether you get inertia.

By the way, the Aether itself causes the spin of the electron. They can effect each other and this is where friction is termed. Time and space is moving through our ball of matter and from another viewpoint matter is moving through time and space, time and space being the Aether or one in the same.

Aether is omnidirectional reciprocating energy and it can impart that energy in the form of rotation of the electron since they interact with each other. Now this friction which is the imparting mechanism between the Aether and the electron and will direct or curve the Aether to an extent from the surface of the electron.

Put a bunch of these little spinning surfaces together and they direct or pump the Aether to the center of the matter in question. Fig 1. Aether being energy with no mass can fill an infinite amount of space at the center with no problem of conflict with itself.

There is no difference in a bucket of Aether or a pinhead of Aether. It takes up no space since it is energy and what space is made of. This also is where the duality of the Aether comes in. By space I also mean empty space or the lack of matter. Matt's vortex technology holds true to this process.

Scalar is a means of engineering controlled vortex in a specific manner to produce a desired effect. Using scalar technology we can produce this Aether pump [Aether Diode] with control. This means that we can produce a gravity point and everything within our field will fall to that point with no effect on the normal gravity field produced by the planet since our new field overrides the earth's field.

With a balance between this new point and the planet's gravity field, or pump, we can have control of field enclosed matter. This is why I did not say anti-gravity for we generate our own gravity which is not really anti-gravity. There is a video tape out which will demonstrate this effect in part.[15] Longitudinal waves, or RC, as Matt and I call it is put through a light bulb [with no gases only a vacuum]. Standard current gives off the glow of photons and heat can be felt from the lamp.

When RC current is used the lamp is brighter, cool to the touch and has new noticeable characteristics besides the color of illumination. First, it has electrostatic characteristics where a copper mesh ribbon will be attracted to the source of the light; and secondly your hand can feel the pressure Aethric flow from the source.

This pressure is omni-radial Aether flow or kin to gravity but not in the form of a monopole direction yet. This is the start of building what can be called a tractor-beam device. Thats one that can attract or repel matter as down a laser beam. Dr. Z, I am told, is working on just such a device. Nature produces a monopole flow of Aether all the time in matter and we call this gravity. Fig 1.

Realization of A New Form of Energy Generated - [RC] or Reciprocating Current

In a recent understanding of scalar technology Matt and myself have come to a realization of a new form of energy which is produced and needed to drive this Aether pump to produce gravity.

We are not the first to discover it but the first to go on record calling it RC [Reciprocating Current] Dr. King calls it Scalar Current and Dr. Nikola Tesla called it longitudinal waves.

Now Tesla was known for AC [Alternating Current] and Westinghouse for DC [Direct Current]. Direct current is the current from a battery cell with negative to positive flow [hole theory] or positive to negative flow [electron flow theory].

We can thank Tesla for our using AC voltage today. He found that AC was more efficient and could travel longer distances without need of amplification. We have not done away with DC, for it is still needed in car batteries flashlights, and portable electronic equipment. We do not use DC through the house wiring because AC is the more efficient for this purpose. With RC, DC and AC will still be needed, but RC will have some advantages over AC or DC. RC voltage will travel on the surface of the conductor therefore giving characteristics of superconductivity.

That is to say that resistance will not be of great importance with RC. It is known as cold electrons due to this ability and most incandescent lamps will almost never burn out due to very little heating up of the filament.

You would not be able to use RC voltage on an electric stove or heating blanket or total electric heater.

Another property of RC is electrostatic characteristics. RC voltage will travel down a conductor almost like microwave does in a waveguide.

The E [electric] and B [magnetic] fields have traded positions with the B field being longitudinal now to the conductor. Fig 5A [23]

This is where Tesla got the name longitudinal wave. Matt and I choose to use RC due to it fitting into the scheme of things along with AC and DC.

No big changes will be needed to adapt RC to the now existing wiring. Most likely RC will be generated off the main line used for AC at the point of need. Likewise DC will be used in much the same way as far as application.

I don't think you will find large RC power plants for this would be impractical and not needed. A Tesla coil will produce this RC energy or you may wish to build a coil similar to our test coil being used to map the fields and properties of RC current. Fig 1A,1B & 4A

Unlike this basic construction given here of an RC generator our test coil has eight primaries of which only four are shown in Fig 4A & 1B and my scalar coil described in Jul/Aug/Sep issue as the secondary.

It turns out that coil described in issue Jul/Aug/Sep 1989 Extradordinary Science, page 16 will generate scalar activity but is better used as an induction receiving coil for this RC energy. The coils are self tuned through K1 which is a adjustable induction vibrator. Fig 6A.[22]

I want to recap for just a minute and then present a paper written by Matt Campbell on our work. Matt will be saying the same thing but in a different manner.

Between the two of us we hope you will get a clearer view of the important points we are trying to bring out to assist you in your own research into this fantastic technology and related topics.

Our present work is in mapping of the fields. The following recap is what we have found or are in the process of finding to be true or not true in this research.

1. The Aether exists. It is Time and Space itself. [1]

2. The Aether is reciprocating omnidirectional grid of energy by nature. [19]

3. The Aether and EMF are gyroscopic in nature.

4. The Aether has properties of duality. The Aether is a fluidatic energy Fig 7A. and follows some of the fluid dynamic laws of other known fluids but unique with additional properties being that of a fluidatic energy. Mass and energy properties kind of like the photon. The photon

may be the Aether itself but in a different form. Light is matter ninety degrees to the Aether or our 3D Space/Time and the Aether is light ninety degrees to matter in our 3D Space/Time.[See last Issue]

5. The Aether is relative to the speed of light.

6. The Aether interacts with the electron and perhaps the proton.Fig 4

7. The Aether is an inverse flow of the EMF flux field but non symmetrical. It can form nodel lodes or zones unlike the closed loop of flux in a magnetic field.

8. The fluid flow of Aether reacts on the surface of an electron as the water vortexes do on earth. The flows will be " Hi's to Lo's" but relative to your reference and the poles of spin. Fig 2.

9. Aether moving through Mass gives Gravity effects. Fig 7A

10. Mass moving through the Aether gives Inertia effects. [Like in a Gyro]

11. A conductor moving through a EMF flux field or a EMF flux field moving through a conductor gives electrons.

12. Electrons moving through a conductor gives you EMF flux.

13. In the flux field flow the North and South Pole would be the same as a Lo in Aether flow flux and the equator would be a Hi. Fig 3.

14. Without Aether nothing would exist. It is time/space and existence itself.

15. Scalar technology is but one method of munipulating the Aether but unique do to the results it produces. It is the key factor in studying and understanding gravity, time and relativity.

16. All Aether effects can be obtained and explained from conventional methods now in practice.

17. I suspect the proton and neutron interact with the Aether also.

I feel the neutron has the biggest play in this role of gravity. Further investigation will be needed to find out but the neutron is a happy particle with the same equalness or balance of charge in relationship to mass so to speak as the Aether has an equalness [reciprocating] of high's and lo's in relationship to energy.[2]

To make it simple I feel the neutron tends to lock into the Aether itself due to gyroscopic action and is pulled along with the flow where the electron and proton are only part of the total balance of this vortex where they effect or warp the Aether to each it's own happy balance of the total reciprocation or vortex.[20]

There is much testing and exploring to be done. I hope this will give some of you new insight into your own research and you will share your

findings with the rest of us. This info will only get us into the ballpark but I feel that is a good place to start for we are closer to home plate now then left field where man has been for some time.

The door is only unlocked. It is time to peek in and explore for all mankind both present and past.

BEYOND THE EVENT HORIZON

BY MATT CAMPBELL AND WARREN YORK

Introduction

This paper is the joint research effort of Warren York and myself, telephone conferences with Dr. Henry C. Monteith, G. Harry Stine, Moray B. King, and Oliver Nichelson.

Additional information was provided by private correspondences with James Bozonas. I wish to extend a "THANK-YOU" and note to Peter Lindermann of Boderland Sciences Research Foundation, who unknowingly assisted our research in the video tape TESLA LONGITUDIAL ELECTRICITY.

You had the stars in your hand and you almost let them slip through your fingers. Let the reader please keep in mind that this paper is open to debate and experimentation. Changes to the theories introduced here will appear in later works.

Also a note on the nature of the Aether, namely that as pure energy it reciprocates from highs to lows, and takes on characteristics of duality like a photon but is unique in its own right.

This paper is to show some of the fields of energy associated with relativity and reveal new forms of energy which can be derived from these fields. Future papers will explain the relationships of these forms of energy with the unified field theory and the mechanics of relativity.

The Silvertooth experiment [1] proves that the Aether exists. The nature of the Aether as that of pure energy, flowing like a fluid, elastic like a rubber band, and forming a 3D grid filling all parts of space from microcosmic to macrocosmic scales.[2]

When stress is placed on the Aether grid free energy is produced [3] and the reference point which mankind uses to observe his universe shifts.[4] The Aether is responsible for electrostatics, electromagnetism, gravity, nucleonic forces, and possibly even the mystery of life [5] and consciousness itself. Without the Aether, nothing can exist in the universe as man knows of it today.

Gravity is an illusion manufactured by the Aether flow orienting itself towards the center of a mass. Hence matter behaves like an Aether pump. [6] A mass moving with equal speed with the Aether will feel no gravitational pull,

however when halted in the flow, a resulting " Gravitational " field is felt by the mass. This can be referred to as Aether pressure. Fig. 1

From Fig 1 one can deduct that a " Gravitational Field " increases towards the surface of a mass, decreases from the surface towards the center of said mass, and that no limitation need be placed upon the number of nodal lines depicting Aether pressure since said Aether pressure has no mass.

If the force of gravity pulling down upon a mass towards the center of another mass is an illusion produced by Aether pressure which is Aether flow in one direction, then tidal forces and rotation of cosmic bodies can be explained.[7]

When the Aether flow forms a loop instead of a vector, a magnetic field is the result. The direction of the flow of the nodal lines of force of a magnetic field is also an illusion, produced by the Aether flowing in the opposite direction. See figure 2. [8]

This theory fits the aether model, but remains to be proven. The following depiction of an electrostatic field is also subject to the same test.

In an electron gravity, rotation, magnetic and static fields exist.[2] The same should hold true for the proton. The proton cannot be ignored in the mechanics of the Aether since it constitutes such a large part of the atom.

Logically when one affects the electrons surrounding the nucleus of an atom, then the nucleus must also be affected. Figure 3 depicts the fields associated with an electron.

If the poles are reversed for a proton, the equator becoming a high and the poles becoming a low, then the Aether flow is reversed, causing the proton to act as a sink for the static field and since the electron already acts as a source for the static field, an attraction results between the electron and proton. [9] See figure 4.

Without becoming involved any further in the atomic structure of the atom, electron flow in a conductor will be reviewed since the object of this paper is to map the electromagnetic fields surrounding a conductor when a potential is applied.

Referring to figure 5 When a potential [c] is placed at the ends of conductor [a] the electron [b] begins to accelerate. At this point voltage is almost zero, current is very high, power is almost zero, resistance is nearly zero and power propogation [h] in the form of heat is at the temperature of the rest of the conductor.

A magnetic vorticity [n] forms [f] that is centripetal in nature, and the Aether [g] forms a centrifugal field. When the electron reaches the point of

maximum acceleration at the end of vector [d] voltage is high, current is low, power is high and resistance is high.

Maximum power [s] in the form of heat occurs. Also the electron [b] no longer "feels gravity" since acceleration is complete and the electron [b] is moving at the same rate as the Aether flowing between the potential.

When the potential is removed the opposite occurs in all cases with the exception of the direction of Aether vorticity. See Fig.6.

An Aether vorticity is formed, and the magnetic field becomes centrifugal in nature. From this one can see that the right hand rule for the Aether vortex is the only apparent constant in time, and active when an electron is being accelerated or resisted [10].

Taking this into consideration and Aether vacuum forms between two conductors when a potential is applied or removed, the potentials being in the same direction. See fig. 7.

To reiterate the processes of manufacturing a combined Aether vorticity a potential [c] is placed at the ends of conductors [a] accelerating electron [b] along vector [d] to the point of maximum acceleration [e] producing Aether flow vorticity [f] which is combining the Aether vorticities of conductors [a] and eliminating Aetheric nodal lines of force form between the two conductors producing an Aetheric vacuum between the conductors which grows with time reaching a maximum level at [e] and forming a cone of zero point energy [g].

The elasticity of the Aether is responsible for moving mass offset from the center point between the two conductors as the Aether vacuum increases. This can be demonstrated when a third conductor is placed between the first two and parallel with the same. Figure 8 is an axial view of this process.

When electron flow [b] is initiated through conductors [a] the Aether vortex flow [c] moves electrons [d] from the center to the edge of the middle conductor. This type of current will be called reciprocating current, since the electrons oscillate from the center to the edge and back again in the middle of the conductor.[12]

This reciprocating current is directly related with zero point energy discussed earlier and possess a novel effect which is unusual in electrical theory but can at least be partially explained with modern electrical theory.

Fig.9 Demonstrates the effects reciprocating current produces in a conductor. As electrons [b] move from the centerf conductor [a] a magnetic vortex is formed[c] which constructs a mirror image of itself.

A resulting magnetic loop [f] is formed along the edge of the conductor [a] which resembles a magnetic monopole when conductor [a] is introduced into a complete circuit. The two magnetic loops formed by the two

electrons are mutually bucking. The center of conductor [a] possess a positive charge and the edge is negative.

Power dissipation in the form of thermal radiation dissipates along the length of the conductor as well in the Y to Z plane. In summary, thermal radiation and the magnetic field forms in the Y-Z plane, and electrostatic potential forms in the X to Y plane.

Note that a capacitor vaguely simulates the same effect, but uses a dielectric instead. This process can be partially recreated with conventional electricity such as AC or DC, but cannot be completely duplicated.

The conductor takes on new characteristics, appearing as a super-conductor since the electrons never reach their maximum speed and are arrested in their paths at the boundary of the conductor.

The electrostatic field formed must exist among the entire length of the conductor in a circuit,causing the conductor to behave like a waveguide. Therefore reciprocating current has minimum power dissipation and transfers its energy with a waveguide effect.

Towards the center of the conductor on the Y-Z plane the magnetic and Aetheric fields cancel, leaving one field accounting for, gravitation.

Recall the Aether grid, if the Aether is cancelled on the X-Y plane and the Y-Z plane, then it still exists on the X-Z plane and manifests itself as gravity.

Gyroscopic precession can control this element. in Fig. 4 when a bucking magnetic vorticity produced in [c] of Fig. 9 encounters the poles of either the electron or proton, the electron or proton must flip ninety degrees towards the center of attraction between the two.

If one flips, the other must also flip to compensate for the bucking fields and reach equilibrium. when this occurs, the rotation of the mass is arrested and a new direction of rotation begins to result.

During this period of change gyroscopic precession attempts to replace the rotation mass in its former position, resulting in a pulling effect, the same force that manifests itself as gravity, inertia and centrifugal force.

If a larger mass consisting of a great number of atoms were subjected to the same process, the effect would constitute all the atoms acting as a gyroscope, and the mass in question should draw itself back to its former position. This is a crude example of a gravitational field generator, [14] a device that forms a difference in Aether pressure in a given direction.

Fig. 10 demonstrates how a small degree of control can be used with these fields to produce specific results. K1 is an adjustable relay. L1A, L1B, L2A, and L2B are electromagnets. B1 and B2 are bifilar windings in series.

A full voltage spike wave is generated by K1. See Fig. 11. On one cycle bucking magnetic fields are produced across B1 and reversed for 2. On the negative cycle the opposite is true.

A reciprocating current occurs across the incandescent bulb. The bulb does not give off heat and should possess electrostatic properties.

A compass placed on the wire should not point perpendicular, but parallel with the wire instead. Aetheric pressure would also be felt around the wire and incandescent bulb. [15]

The primary reason for using bifilar windings is to insure the mutual cancellation of electric current and produce a universal bucking magnetic field. [11] B1 and B2 yield universal magnetic fields. See Fig. 12.

Two electromagnets placed end to end does not do the same thing. See Fig 13. When the different coils are combined as in Fig. 10 zones of zero point energy exist on the X-Z plane, the Y axis and the Y-Z plane. This allows for some degree of control of the Aether grid.

The incandescent bulb can be replaced by a coil. Another coil for the second bifilar winding can be placed on top of the first at a ninety degree intersection and the whole wrapped in a torroidial fashion [16] See Fig. 14.

Upon close examination the scalar fields produced at the intersection of the windings results in gyroscopic precession 13 of the atoms in all planes of 3D space towards one direction and a gravitational field is produced in the given direction. The torroid prevents torque from spinning the coil on its axis.

When a 3-phase spike wave is introduced to the primaries of the separate scalar generators and the three separate torroidial coils are stacked like a sandwich [16] a continuous difference in aether pressure is produced in a given direction resulting in a constant gravitational field in the said direction. See Fig 15 and 16.

This is levitation. If a second set of torroidial coils is placed adjacent to the first, the gravitational vectors will meet in the center. If this is done with all three axis, a strong omnidirectional gravitational field will form. See Fig. 17.

This is the same thing that occurs naturally in a mass. An intense gravitational field will create a singularity at the intersection, thus reversing time.

The power level, phasing and duration of the activation will determine how far back in time [17] the target will travel. This does not violate the laws of casualty or relativity.[18]

For example, if a dice is thrown, only one of six possible outcomes will result. Five other possibilities still exist, and if our target subject travels backwards on the world time line to the moment the dice was first thrown and throws it again, the possibilities of a different outcome are one in five.

The same holds true if said target subject travels backwards in time and prevents his parents from meeting. In order for this to happen, he had to travel back in time. But his genetic structure and life history has been altered.

The life history of our target subject should eventually lead to the construction and operation of the time control device. See Fig. 18.

According to this theory, a very high number of alternate realities exist with each passing event.

In conclusion, it seems to the writer of this paper a humorous trick to use a 1.5 volt battery and a wire to shift mankind's reference point from one possible reality to another, however these theories are open to debate and experimentation.

References

1. E.W. Silvertooth, "Experimental Detection of the Aether", Speculations in Science and Technology, Vol. 10, No. 1, Pg.3 May 1986.
2. Nikholas J. Medvedeff, Nuclear Dynamics, 1961.
3. John C. Bedini, Bedini's Free Energy Generator, Tesla Book Company, 1984.
4. Warren E. York, "Scalar Wave Technology", Extraordinary Science, Jan/Feb/Mar 1990.
5. T.J.J. See, " New Wave Theory of the Aether", Astronomische Nachrichten, Band 211, Nr. 5044, Pg.51.
6. Shinichi Seike, The Principles of Ultra Relativity, International Space Research Consortium, 1972.
7. William F. Hamilton, Center of the Vortex, Telos Publishing Co., 1986.
8. Theodor Ernst Bart, Private Correspondence with Warren E. York, November 5, 1989.
9. Carl F. Krafft, The structure of the Atom, High Energy Enterprises, March 1, 1990.
10. Thomas E. Bearden, Excalibur Briefing, Strawberry Hill Press, 1980.
11. Moray B. King, Taping the Zero Point Energy, Paraclete Publishing, 1989.

12. Thomas Commerford Martin, The Inventions, Researches of Nikola Tesla, The Electrical Engineer, 1894.
13. Joseph Westley Newmann, The Energy Machine of Joseph Newmann, 1986.
14. Prof. Sinichi Seike, The Principles of Ultrarelativity, International Space Research Consortium, Third Edition, Ch. 9-3, Pg. 152.
15. Eric Dollard and Peter Lindemann, Tesla Longitudial Electricity, Borderland Sciences Research Foundation, Video, 1988.
16. Carl Frederick Krafft, Glimpses of the Unseen World, High Energy Enterprises, March 1, 1990.
17. N. A. Kozyrev, Possibility of the Experimental Study of the Properties of Time, Joint Publication Research Service, May 2, 1968.
18. Adrian Berry, The Iron Sun, Crossing the Universe Through Black Holes, Warner Books, 1977.
19. Dr. Henry C. Monteith, Dynamic Gravity and Electromagnetic Processes, July 21, 1987.
20. Mel E. Winfield, The Science of Actuality, 1983
21. David H. Freedman, "Gravity's Revenge", Discover, May 1990.
22. Robert W. Marks, "The New Physics and Chemistry Dictionary and Handbook", Bantam Books, Pg. 109, April 1967
23. John H. Mauldin, "Particles in Nature", The Chronological Discovery of the New Physics, TAB Books, 1968

THE ELECTROMAGNETIC FIELD & CLERK MAXWELL

ARTICLES BY ALBERT EINSTEIN & THOMAS F. TORRANCE

Introduction

This reference article is included in the aether compilation of articles for a number of reasons. Firstly, it was the understanding of Clerk Maxwell that there existed some form of luminiferous medium which bore the propagation of the electromagnetic field. Secondly, the nature of the electromagnetic field itself is the closest specification that man has made in relation to the nature of light - the medium of his highest physical sense - that of vision.

Thirdly, the summation by Albert Einstein of the work of Clerk Maxwell on the nature of the electromagnetic field is of outstanding resource. In a separate article, entitled Aether and the Theory of Relativity, there may be found a more direct discussion concerning the aether by Albert Einstein. The value of the article found below is its addressing the nature of light, and the scientific specifications thereof.

I am indebted to the the publishers of James Clerk Maxwell - A Dynamical Theory of the Electromagnetic Field - and in particular to its editor, Torrance, who has authored the introduction to this book, and thus the first of the two references which are produced below. They are presented here on a not-for-profit basis, and rather in an effort to provide information for those who know themselves as the students of life. There is currently one further resource which relates to the work of James Clerk Maxwell. It is the outline of a book which he had published in 1882 entitled Matter And Motion.

All the best for now,

Pete Brown

Southern Autumn of 97

James Clerk Maxwell

A Dynamic Theory of the Electromagnetic Field

Introduced and edited by T.F. Torrance (1982)

Three observations may now be offered in concluding this Introduction.

(1) Clerk Maxwell created for the first time a field theory which was independently testable against Newtonian force theories. He created a situation in which the dominance of Newtonian mechanics over the whole spectrum of physical science was called into question and decisive steps were taken in the direction of a non-mechanical thoroughly relational understanding of the intelligible connections immanent in the universe. No doubt Clerk Maxwell did not realise the far-reaching implications of his work which was to change the basic perspective and direction of physical science and alter our understanding of the world of space and time. With reference to Clerk Maxwell's two basic papers, On Physical Lines of Force and A Dynamical Theory of the Electromagnetic Field, Ivan Tolstoy has recently given us the following appraisal. 'For us, with our hundred or so years of perspective, these two papers - Maxwell's theory of electromagnetism - are a turning point in the history of science.

The theory is, first of all a synthesis - one of the greatest in the history of science. It unifies two kinds of force - the electric and the magnetic - under one: the electromagnetic field. This unification was the direct, logical consequence of Faraday's experimental work; it had a been begun by others - Ampere, Weber, W. Thomson. But Maxwell crystallized this, the first of the modern unified field theories and gave it the mathematical form which remains immortal under the name of Maxwell's equations - a system of relationships between changing electric and magnetic fields - a whole universe of electromagnetic phenomena, miraculously contained in a few lines of elegant mathematics.

(2) Clerk Maxwell's work was of profound conceptual importance for it had the effect of reorganising the epistemological and logical substructure of physical science, not only through his determination of the mathematical properties of radiation which has had immense implications for scientific technology, but through the way in which he conceived and developed the nature of the field and established the reality of the field as the underlying reality of all spatio-temporal phenomena. At this point we cannot do better than let Einstein himself speak.

'The formulation of these equations is the most important event in physics since Newton's time, not only because of their wealth of content, but also because they form a pattern for a new type of law. The characteristic features of Maxwell's equations, appearing in all other equations of modern physics, are summarized in one sentence. Maxwell's equations are laws representing the structure of the field.... All space is the scene of these laws and not, as for mechanical laws, only points in which matter or charges are present.

Moreover, it should be pointed out, that since the epistemological form of Clerk Maxwell's general equations does not depend on the way in which the observer, or the person who measures the fields, is moving, they have the

effect of establishing the objectivity of scientific knowledge in a new and a profounder way than was possible in the post-Newtonian, and certainly, the post-Kantian, outlook upon the universe.

(3) Physical science as it stemmed from Clerk Maxwell's revolutionary ideas was left with a serious, and perhaps an ultimately irresolvable problem, of which, as we have seen, he himself seems to have been aware. This relates to the fact that although his equations expressed the mathematical properties of the energy intrinsic to the continuous field of space and time, he was unable to reconcile in a satisfactory manner, the ways in which the two basic forms of this energy, in respect of position and motion, manifest themselves. Thus, as Einstein has expressed it, while Clerk Maxwell's partial differential equations appeared as the natural expression of the primary realities of physics, in a particular area of theoretical physics,

'the continuous field appeared side by side with the material point as the representative of physical reality. This dualism has to this day not disappeared, disturbing as it must evidently be to any systematic mind.

Clerk Maxwell's problem remains with us in the difficulties that have emerged in the reconciliation of relativity theory and quantum theory, not to mention a unified field theory which will take in thermodynamics and gravity theory as well - although some way toward the solution may well lie along the line of thought which both Michael Faraday and Clerk Maxwell entertained, that the relations between particles in a field of force must be thought of as constituting, in part at least, what particles actually are. However, it is doubtful whether in the nature of the case the duality between particle and field can ever be completely removed any more than the distinction between the temporal and the spatial aspects of space-time.

Maxwell's Influence on the Development

of the Conception of Physical Reality

Albert Einstein

Written for the centenary of Maxwell's birth [1931]

The belief in an external world independent of the observing subject lies at the foundation of all natural science. However, since sense-perceptions only inform us about this external world, or physical reality, indirectly, it is only in a speculative way that it can be grasped by us. Consequently our conceptions of physical reality can never be final. We must always be ready to change these conceptions, i.e. the axiomatic basis of physics, in order to do justice to the facts of observation in the most complete way that is logically possible. In

actual fact, a glance at the development of physics shows that this axiomatic basis has met with radical changes from time to time.

The greatest change in the axiomatic basis of physics, and correspondingly in our conception of the structure of reality, since the foundation of theoretical physics through Newton, came about through the researches of Faraday and Maxwell on electromagnetic phenomena. In what follows we shall try to present this in a more precise way, while taking the earlier and later development into account.

In accordance with Newton's system, physical reality is characterised by concepts of space, time, the material point and force (interaction between material points). Physical events are to be thought of as movements according to law of material points in space. The material point is the only representative of reality in so far as it is subject to change. The concept of the material point is obviously due to observable bodies; one conceived of the material point on the analogy of movable bodies by omitting characteristics of extension, form, spatial locality, and all their 'inner' qualities, retaining only inertia, translation, and the additional concept of force. The material bodies which had psychologically given rise to the formation of the concept of 'material point' had now for their part to be conceived as a system of material points. It is to be noted that this theoretical system is essentially atomistic and mechanistic.

All happening was to be conceived of as purely mechanical, that is, merely as motions of material points according to Newton's laws of motion.

The most unsatisfactory aspect of this theoretical system - apart from the difficulty relating to the concept of 'absolute space' which has recently been brought back into the discussion - lay mainly in the doctrine of light, which Newton quite logically had also thought of as consisting of material points. Even at that time the question must already have been felt acutely: What happens to the material points that constitute light, when light itself is absorbed? Moreover, it is altogether unsatisfactory to introduce into the discussion two quite different kinds of material points which had to be put forward to represent ponderable matter and light. Then later on electrical corpuscles were added as a third sort with fundamentally different properties. Besides, it was a weakness in the basic structure that interacting forces had to be postulated quite arbitrarily to account for what happens. Nevertheless, this conception of reality accomplished a lot. How, then. did the conviction arise that it should be abandoned?

In order to give his system mathematical form at all, Newton had first to invent the concept of the differential quotient, and to draw up the laws of motion in the form of total differential equations - perhaps the greatest intellectual step that it has ever been given to one man to take. Partial differential equations were not needed for this, and Newton did not make any methodical use of

them. Partial differential equations were needed, however, for the formulation of the mechanics of deformable bodies; this is bound up with the fact that in such problems the way and the manner in which bodies were thought of as constructed out of material points did not play a significant part to begin with.

Thus the partial differential equation came into theoretical physics as a servant, but little by little it took on the role of master. This began in the nineteenth century, when under the pressure of observational facts the undulatory theory of light asserted itself. Light in empty space was conceived as a vibration of the ether, and it seemed idle to conceive of this in turn as a conglomeration of material points. Here for the first time partial differential equations appeared as the natural expression of the primary realities of physics. In a particular area of theoretical physics the continuous field appeared side by side with the material point as the representative of physical reality. This dualism has to this day not disappeared, disturbing as it must be to any systematic mind.

If the idea of physical reality had ceased to be purely atomistic, it still remained purely mechanistic for the time being. One still sought to interpret all happening as the motion of inert bodies: indeed one could not at all imagine any other way of conceiving of things. Then came the great revolution which will be linked with the names of Faraday, Maxwell, Hertz for all time. Maxwell had the lion s share in this revolution. He showed that the whole of what was known at that time about light and electromagnetic phenomena could be represented by his famous double system of partial differential equations, in which the electric and the magnetic fields made their appearance as dependent variables. To be sure Maxwell did try to find a way of grounding or justifying these equations through mechanical thought-models. However. he employed several models of this kind side by side, and took none of them really seriously, so that only the equations themselves appeared as the essential matter. and the field forces which appeared in them as ultimate entities not reducible to anything else. By the turn of the century the conception of the electromagnetic field as an irreducible entity was already generally established and serious theorists had given up confidence in the justification, or the possibility, of a mechanical foundation for Maxwell's equations. Soon. on the contrary an attempt was made to give a field-theoretical account of material points and their inertia with the help of Maxwell's field theory, but this attempt did not meet with any ultimate success.

If we disregard the important particular results which Maxwell's life work brought about in important areas of physics, and direct attention to the modification which the conception of physical reality experienced through him, we can say: Before Maxwell people thought of physical reality - in so far as it represented events in nature-as material points, whose changes consist only in motions which are subject to total differential equations. After Maxwell they

thought of physical reality as represented by continuous fields, not mechanically explicable, which are subject to partial differential equations. This change in the conception of reality is the most profound and the most fruitful that physics has experienced since Newton; but it must also be granted that the complete realisation of the programme implied in this idea has not by any means been carried out yet. The successful systems of physics, which have been set up since then, represent rather compromises between these two programmes, which because of their character as compromises bear the mark of what is provisional and logically incomplete, although in some areas they have made great advances. - Of these the first that must be mentioned is Lorentz's theory of electrons, in which the field and electric corpuscles appear beside one another as equivalent elements in the comprehension of reality. There followed the special and general theory of relativity which - although based entirely on field theory considerations-hitherto could not avoid the independent introduction of material points and total differential equations.

The last and most successful creation of theoretical physics, quantum mechanics, differs fundamentally in its principles from the two programmes which we will briefly designate as Newton's and Maxwell's. For the quantities which appear in its laws lay no claim to describe physical reality itself but only the probabilities for the occurrence of one of the physical realities to which attention is being directed. Dirac, to whom in my judgement. we are indebted for the most logically complete account of this theory rightly points to the fact that it would not be easy, for example. to give a theoretical description of a photon in such a way that there would be comprised in the description sufficient reason for a judgement as to whether the photon will pass a polarisator set obliquely in its path or not.

Nevertheless. I am inclined to think that physicists will not be satisfied in the long run with this kind of indirect description of reality, even if an adaptation of the theory to the demand of general relativity can be achieved in a satisfactory way. Then they must surely be brought back to the attempt to realise the programme which may suitably be designated as Maxwellian: a description of physical reality in terms of fields which satisfy partial differential equations in a way that is free from singularities.

BEYOND E=MC2

A FIRST GLIMPSE OF A POSTMODERN PHYSICS, IN WHICH MASS, INERTIA AND GRAVITY ARISE FROM UNDERLYING ELECTROMAGNETIC PROCESSES

BERNHARD HAISCH, ALFONSO RUEDA & H.E. PUTHOFF

PUBLISHED IN THE SCIENCES, VOL. 34, NO. 6, NOVEMBER / DECEMBER 1994, PP. 26-31

The most famous of all equations must surely be E=mc2. In popular culture that relation between energy and mass is virtually synonymous with relativity, and Einstein, its originator, has become a symbol of modern physics. The usual interpretation of the equation is that one kind of fundamental physical thing, mass (m in the equation), can be converted into a quite different kind of fundamental physical thing, energy (E in the equation), and vice versa; the two quantities are inextricably intertwined, related by the factor c2, the square of the velocity of light. The energy of the sun, for instance, comes from nuclear fusion, in which the nuclei of hydrogen atoms fuse together to become the nuclei of helium atoms. In the prevailing view, mass is lost in the fusion reaction, and as one popular astronomy textbook puts it, "The small fraction of mass that disappears in the process is converted into energy according to the formula E=mc2."

Recent work by us and others now appears to offer a radically different insight into the relation E=mc2, as well as into the very idea of mass itself. To put it simply, the concept of mass may be neither fundamental nor necessary in physics. In the view we will present, Einstein's formula is even more significant than physicists have realized. It is actually a statement about how much energy is required to give the appearance of a certain amount of mass, rather than about the conversion of one fundamental thing, energy, into another fundamental thing, mass.

Indeed, if that view is correct, there is no such thing as mass-only electric charge and energy, which together create the illusion of mass. The physical universe is made up of massless electric charges immersed in a vast, energetic, all-pervasive electromagnetic field. It is the interaction of those charges and the electromagnetic field that creates the appearance of mass. In other words, the magazine you now hold in your hands is massless; properly

understood, it is physically nothing more than a collection of electric charges embedded in a universal energetic electromagnetic field and acted on by the field in such a way as to make you think the magazine has the property of mass. Its apparent weight and solidity arise from the interactions of charges and field.

Besides recasting the prevailing view of mass, this idea would address one of the most profound problems of physics, the riddle of how gravity can be unified with the other three fundamental forces of nature. The electromagnetic force and the weak force, which is responsible for nuclear decay, have been shown to be two manifestations of a single force, appropriately called the electroweak force. There are tantalizing hints that the strong force, which binds nuclei together, will someday be unified with the electroweak force. But until now gravity has resisted all attempts at unification. If the new view is correct, however, gravity would not need to be separately unified. Just as mass would arise from the electromagnetic force, so would gravity.

What is mass? Two key properties define the concept of the mass of a given amount of matter, namely, its inertia and the gravitation to which the matter gives rise. Inertia was defined by Galileo as the property of matter that keeps an object in uniform motion once given an impetus, until the object is acted upon by some further impetus. Galileo's idea was generalized and quantified by Newton in his Principia. The tendency of an object to remain in uniform motion, and the tendency of the motion to change when impetus is applied, Newton expressed in one compact equation. The equation states that the acceleration a, or change of velocity, is proportional to the force F applied, where the constant of proportionality is the inertial mass m of the object in question: thus, F=ma.

In other words, inertial mass is the resistance an object offers to being accelerated when it is subjected to a force. In Newton's equation of motion, when the application of a force ceases, the acceleration goes to zero, and the object remains in uniform motion. Objects are assumed to resist acceleration, because that resistance is an innate property of matter.

But try as he might, Newton could not explain the origin of inertia. Imagine, he suggested, that the universe is empty except for a bucket partly filled with water. Furthermore, imagine the shape of the surface of the water: Is it flat? Then the water must be at rest. Is it curved, shaped in cross section like a parabolic reflector? Then the water must be rotating. But rotating with respect to what? That was the profound dilemma that Newton identified. If the universe were truly empty, as his thought experiment required, there would be no background against which the rotation could be measured. But because the shape of the water surface signals whether a rotation is taking place, Newton

concluded that there is a fundamental spatial frame of reference, an "absolute space."

Some 200 years later the nineteenth-century Austrian physicist and philosopher Ernst Mach took a contrary view. To Mach, Newton's thought experiment demonstrated the absurdity of the idea of absolute space. The shape of the water in a rotating bucket, Mach held, was conferred, somehow, through the presence of all the other matter in the universe. Thus Mach agreed with Newton that the property of inertia creates the need for a reference frame; he simply disagreed that such a reference frame could exist as a distinct, absolute entity. Distant matter, however, could define the reference frame. Unfortunately, his conjecture, which has come to be known as Mach's principle, remains more of a philosophical statement than a testable scientific proposition.

In the early twentieth century a number of investigators, including Max Abraham, Hendrik Antoon Lorentz and Henri Poincare, suggested that inertial mass might arise from an effect called electrostatic self-energy. Any charged particle-the electron, for instance-possesses a certain quantity of electric charge. The charge is the source of an electric field, which carries energy-the electrostatic self-energy. It was proposed that the electrostatic self-energy might correspond to the inertial mass of the charged particle, through the equation E=mc2. But the theoretical mass of the electrostatic electron derived from the equation is many orders of magnitude larger than the actual observed mass of the electron, and the self-repulsion of the electrostatic forces would quickly disperse the electrostatic electron. Hence the theory fails.

Our work suggests inertia is a property arising out of the vast, all-pervasive electromagnetic field we mentioned earlier, which is called the zero-point field (ZPF). The name comes from the fact that the field is held to exist in a vacuum-what is commonly thought of as "empty" space-even at the temperature of absolute zero, at which all thermal radiation is absent. The background energy of the vacuum serves as the reference, or zero point, for all processes. To understand how the ZPF might give rise to inertia, one must understand something about the nature of the field itself.

Theoretical considerations indicate that the ZPF should be a background sea of electromagnetic radiation that is both uniform and isotropic (the same in all directions). The reader may already be familiar with a somewhat similar concept: the remnant radiation from the big bang. According to big bang cosmology, the universe began with a titanic explosion, which gave rise to hot, energetic radiation distributed throughout the infant universe. As the universe expanded and cooled, the radiation became much less energetic, but it still pervades space as a faint and nearly isotropic background of microwave radiation.

Like the cosmic microwave background, the ZPF is a sea of radiation that fills the entire universe. There is a major difference, however. The cosmic microwave background has a rather feeble spectrum identical with the spectrum of an object in thermal equilibrium at a temperature of only 2.76 degrees Celsius above absolute zero. In contrast, the ZPF is a highly energetic emission whose predicted radiation spectrum departs radically from the spectrum of an object in thermal equilibrium. Instead of trailing off at high frequencies, the energy of the ZPF continues to rise sharply with the frequency of the radiation. Quantitatively, the energy density is proportional to the cube of the frequency; double the frequency, and the energy increases by a factor of eight. At what frequency the ZPF spectrum finally cuts off or loses its ability to interact with matter are important and still unresolved issues.

A more profound difference between the cosmic microwave background and the ZPF is a result of the origin of the two emissions. When you switch on a lightbulb, the source of the light emission is clear; it is the heat produced by an electric current in the filament. The source of the cosmic microwave background can also be traced to known physical phenomena, namely, the heat radiation associated with the big bang, as modified by the later expansion and cooling of the universe. The origin of the ZPF is more esoteric. In fact, two distinct views about it exist today.

The conventional view traces the ZPF to the laws of quantum mechanics, the theory forged early in the present century to describe the atom. Any electromagnetic field is characterized by the frequency, polarization and direction of propagation of its radiation. A set of values for those three quantities defines a single so-called mode of the field. Every possible mode can be populated by an arbitrary number of photons, the fundamental quanta of electromagnetic radiation. But according to the probabilities calculated in quantum mechanics, even at its minimum energy, each mode will contain one photon half the time and no photons the other half the time. In a field of zero energy each mode would, with certainty, contain no photons, but that is impossible because of the equal probability that each mode also contains one photon. Thus every mode acts, on average, as if it were populated with at least one-half photon (in addition to whatever other natural or man-made radiation happens to be present).

All such modes add up quickly. Since the energy density of the ZPF increases as the cube of the frequency, the amount of energy making up the ZPF is enormous. That energy, in the conventional view, is simply forced into existence by the laws of quantum mechanics. Not surprisingly, it is regarded in quantum fashion as sometimes real and sometimes virtual, depending on the problem at hand.

The competing theory for the origin of the ZPF comes from what has heretofore been an obscure discipline within physics known as stochastic

electrodynamics, a modern version of much earlier twentieth-century investigations by Einstein, Max Planck, Walther Nernst, Ludwig Hopf and Otto Stern. Stochastic electrodynamics postulates that the ZPF is as real as any other radiation field. In such a view the existence of a real ZPF is as fundamental as the existence of the universe itself. The only difference between stochastic electrodynamics and ordinary classical physics is the single assumption of the presence of this all-pervasive, real ZPF, which happens to be an intrinsic part of the universe.

One justification for making such an assumption is that by adding the ZPF to classical physics many quantum phenomena can be derived without invoking the usual laws or logic of quantum mechanics. It is premature to claim that all quantum phenomena could be explained by stochastic electrodynamics (that is, classical physics plus the ZPF), but that claim may one day turn out to be the case. In that event, one would have to make a choice. One could accept the laws of classical physics as only partly true, with a wholly different set of quantum laws required to complete the laws of physics; that is essentially what is done in physics now. Or one could accept the laws of classical physics as the only necessary laws, provided they are supplemented by the presence of the ZPF.

Whether the ZPF arises from quantum laws or is simply an intrinsic part of the universe, an important question remains: Why do people not sense the presence of the radiation if indeed it is made up of real electromagnetic waves spanning the spectrum of radio waves, light and X rays? The idea that space could be filled with a vast sea of energy does seem to contradict everyday experience. The answer to the question lies in the utter uniformity and isotropy of the field. There is no way to sense something that is absolutely the same everywhere, outside and inside everything. To put the matter in everyday terms, if you lie perfectly still in a tub of water at body temperature, you cannot feel the heat of the water.

Motion through a medium almost always gives rise to asymmetries, which then makes it possible to detect the medium. But in the case of the ZPF, motion through space at a constant velocity does not make the field detectable, because the field has the property of being "Lorentz invariant." (Lorentz invariance is a critical difference between the modern ZPF and nineteenth-century concepts of an ether.) The field becomes detectable only when a body is accelerated through space. In the mid-1970s the physicists Paul C. W. Davies, now at the University of Adelaide in Australia, and William G. Unruh, now at the University of British Columbia, showed that as a moving observer accelerates through the ZPF, the ZPF spectrum becomes distorted, and the distortion increases with increasing acceleration. Can the distortion be seen? Yes indeed, but not with one's eyes, because the energies involved are minute.

Although the distortion is small, it is extremely important: our analysis shows that it is the origin of inertia. In an article published last February in Physical Review A, we showed that when an electromagnetically interacting particle is accelerated through the ZPF, a force is exerted on the charge; the force is directly proportional to the acceleration but acts in the direction opposite to it. In other words, the charge experiences an electromagnetic force as resistance to acceleration. We interpret the resistance associated with the charge as the very inertia Newton regarded as an innate property of matter. Note that we do not say, "associated with the mass of the particle." In our formulation, the m in Newton's second law of motion, F=ma, becomes nothing more than a coupling constant between acceleration and an external electromagnetic force. Thus what we are proposing is that Newton's second law can be derived from the laws of electrodynamics, provided one assumes an underlying zero-point field.

Our work suggests that the conventional Newtonian idea of mass must be boldly reinterpreted. If we are correct, physical theory need no longer suppose that there is something called mass having an innate property, inertia, that resists acceleration; what is really happening, instead, is that an electromagnetic force acts on the charge inside matter to create the effect of inertia. Indeed, it appears that the more parsimonious interpretation is not even that there is charge lurking "inside matter," but that there is only charge. The presence of charge and its interaction with the ZPF creates the forces we all experience and attribute to the existence of matter. Our interpretation would apply even to an electrically neutral particle such as the neutron, because the neutron, at the most fundamental level, is thought to be made up of smaller particles called quarks, which do carry electric charge.

We have had little to say so far about the second key property for the concept of mass, the gravitation to which matter gives rise. But experimental evidence shows that an object's inertial mass, or its resistance to acceleration, is equivalent to the object's gravitational mass, or its mass in a gravitational field. Einstein's general theory of relativity is based on the assumption that inertial and gravitational mass are equivalent and indistinguishable-the so-called principle of equivalence. Hence it stands to reason that if the ZPF gives rise to the phenomenon of inertia, it must also in some way generate the effect of gravity. This audacious idea was proposed as early as 1968 by the Russian physicist and dissident Andrei D. Sakharov, but he never fully developed the concept into a scientific theory.

In 1989 the idea was taken up by one of us (Puthoff) and formulated within the framework of stochastic electrodynamics into a preliminary but quantifiable, nonrelativistic representation of Newtonian gravitation. The underlying principle is remarkably intuitive. If a charged particle is subjected to ZPF interactions, it will be forced to fluctuate in response to the random jostlings of the

electromagnetic waves of the ZPF. Moreover, since the ZPF is all-pervasive, charged particles everywhere in the universe will be forced to fluctuate. Now a basic result from classical electrodynamics is that a fluctuating electric charge emits an electromagnetic radiation field. The result is that all charges in the universe will emit secondary electromagnetic fields in response to their interactions with the primary field, the ZPF.

The secondary electromagnetic fields turn out to have a remarkable property. Between any two particles they give rise to an attractive force. The force is much weaker than the ordinary attractive or repulsive forces between two stationary electric charges, and it is always attractive, whether the charges are positive or negative. The result is that the secondary fields give rise to an attractive force we propose may be identified with gravity.

It is important to note that the fluctuations are relativistic-that is, the charges move at velocities at or close to the speed of light. The energy associated with the fluctuations-which for historical reasons is given the German name zitterbewegung, or trembling movement-is interpreted as the energy equivalent of gravitational rest mass. Since the gravitational force is caused by the trembling motion, there is no need to speak any longer of a gravitational mass as the source of gravitation. The source of gravitation is the driven motion of a charge, not the attractive power of the thing physicists are used to thinking of as mass. To interpret Einstein's equation E=mc2, we would say that mass is not equivalent to energy. Mass is energy.

Naturally there are a host of objections that have been or can be raised to our radical interpretation of mass. One important objection is that for gravity our model so far is nonrelativistic, whereas the zitterbewegung motions are relativistic. Another possible objection is that we treat the ZPF as real, not virtual, as conventional quantum theory does-even though real, measurable forces can be attributed to it. One such force is the so-called Casimir force between two parallel plates.

It is also claimed that if the ZPF really exists, it would be such an enormous source of gravitational force that the radius of curvature of the universe would be several orders of magnitude smaller than the nucleus of an atom. Of course, such a conclusion directly conflicts with everyday experience. The fallacy in the argument is that in the Sakharov-Puthoff model the ZPF as a whole would not itself gravitate. The gravitational force results from perturbations of the ZPF in the presence of matter. In the Sakharov-Puthoff model, then, the uniform ZPF is not a gravitational source and hence would not contribute to curving the universe.

A third large question also remains to be answered. How can our theory of Newtonian-like gravity be reconciled with twentieth-century measurements of effects predicted only from general relativity? How, for example, can our theory

account for the gravitational deflection of light, the measurement of which in 1919 served as the first proof of general relativity? On that point we can only conjecture. Sakharov suggested accounting for the effects of general relativity by introducing the concept of an "elasticity of space," analogous to the well-known curvature of space-time. The answer could also lie in the proper treatment of the so-called Dirac sea of particle-antiparticle pairs. The question of general relativistic effects, however, is a valid concern that legitimately challenges the interrelated ZPF concepts of gravity and inertia.

Serious as the objection appears to be, we propose that it is prudent to suspend judgment. A great deal of work lies ahead to test and refine our concepts. We and others will continue to study the problem, and in due course the theoretical foundations of those proposals will either be verified or be shown to contain some irreparable flaw. As controversial as the ideas and their implications might be, however, we are encouraged that we are on the right track because of a second analysis now being carried out by one of us (Rueda). In the new analysis it appears that you obtain the same electromagnetic relation between force and acceleration as you get in the original analysis, yet the approach is entirely different. We also submit that a theory that offers new insights with elegance and simplicity is a compelling approach to reality, and we suggest that our view of inertial and gravitational mass has a certain elegance and simplicity.

If our ideas prove to be correct, they will point to revisions in the understanding of physics at the most fundamental level. Even if our approach based on stochastic electrodynamics turns out to be flawed, the idea that the vacuum is involved in the creation of inertia is bound to stay. Perhaps even bolder than the concepts themselves are their implications. If inertia and gravity are like other manifestations of electromagnetic phenomena, it might someday be possible to manipulate them by advanced engineering techniques. That possibility, however remote, makes a compelling case for pressing on with the work.

Bernhard Haisch is a staff scientist at the Lockheed Martin Solar and Astrophysics Laboratory in California and a regular visiting fellow at the Max-Planck-Institut fuer extraterrestrische Physik in Garching, Germany.

Alfonso Rueda is a professor of electrical engineering at California State University in Long Beach.

H. E. Puthoff is director of the Institute for Advanced Studies at Austin, Texas.

EINSTEIN SPATIAL ETHER SINK PARADIGM:

BIG BANG - RAISIN BREAD THEORY AND PHOTON ABSORPTION

SUGGEST MECHANISMS UNDERLYING GENERAL RELATIVITY

BY HENRY C. WARREN JR.

General Relativity (GR) has some perplexing aspects such as

1. Suggesting singularities

2. Failing to explain how mass causes the curvature of space; and

3. Failing to predict the Casimir Effect (CE), which must affect, gravitational measurements since it and conventional gravity coexist.

Regarding singularities as mathematical misstatements and curved space as the result of a more fundamental process, this paper proposes that a different reality underlies the Riemannian math of GR than Einstein assumed. Curvature is seen as a result, not a cause of gravity.

I believe the following paradigm fulfills the requirements of being the simplest, most easily understood, adequate theory of gravity.

Lacking the mathematical ability to validate or invalidate it, I am hoping that someone who has this ability will be intrigued enough to do the suggested tests in whole or in part.

Introduction

I do not know what space is. But General Relativity warps it and has it steer mass and light. Big Bang Theory expands it. Raisin Bread Cosmology has it carry matter and energy along for the ride. The Dynamic Vacuum perturbs it. Some theorists loop it. Some state that matter cannot exist outside it and some even insist there is no outside. All the foregoing suggest that space - or the fabric thereof - is substantive. It is important when thinking about space to keep concepts straight. Matter and energy do not disappear when they "annihilate" they become photons i.e. gamma rays, etc. Nor do matter - antimatter pairs spring from nothing, but from radiation or other particles. Further, Bell's Theorem and Alain Aspect's experiments and the Dynamic

Vacuum suggest that there exists an underlying spatial reality to which we may be electromagnetically blind.

Einstein believed he had eliminated the need for an ether with Special Relativity, but with General Relativity, he in effect substituted space itself for that ether. In a 1920 lecture Einstein acknowledged the necessity of an ether, although he insisted that the properties of the ether must not violate Special Relativity. What GR did was rename the ether and call it space; an unfortunate choice of terminology as it makes intentional reference to truly empty space, difficult. Some physicists seem unclear regarding this issue, sometimes referring to space as if it were truly empty and at other times as if it were substantive.

Left to my own devices, I would prefer using expressions such as fabric of space or medium in space without spelling out precisely the nature of that fabric or medium. It may be that the Plank length is an indicator of the mesh of this fabric, but this may be an artifact of the fact that we and our measuring devices are electromagnetic in nature. However, the impact of Einstein's terminology cannot be ignored. Also, I sense possible similarities between the strings of some modern theories and the fluctuations of certain Casimir type models and the aetherons of some ether based theories. With that and Einstein's 1920 lecture in mind, and with the understanding that a rose by any other name is still a rose and that any theory which assigns physical properties to space is an ether theory, I use the term Einstein Spatial Ether (ESE) instead of space in my paradigm. Where I use the term "space" to refer to the ideas associated with General Relativity I put it in quotes. Coming full circle, I reiterate that the precise nature of space has yet to be comprehended.

I am struck by diagrams of matter streaming toward neutron stars, "black holes" and the great attractor and perceive a similarity between this streaming and Continental Drift. It strikes me that if the universe was generated by the expansion of all of observable "space" and energy from a Big Bang, with space carrying matter along for the ride as proposed in Raisin Bread Cosmology, then the process ought to be reversible.

To put matters in a nutshell, I propose that if one process can emit "space", another can absorb it, with "space" carrying matter and energy along for the ride in both cases.

The absorption and emission of radiation in the form of photons is demonstrated daily in particle accelerators. And the emission and absorption of W particles and gluons is central to much of modern physics. So the notion that gravity is the result of an absorption process is by no means far fetched.

Also, apparently, traditional gravity and the Casimir Effect can be independently demonstrated in the laboratory. Thus, the two phenomena may

exist side by side and interact. The following provides for a simple paradigm of gravity and explores the possible marriage of gravity and the Casimir Effect.

As George Gamov observes in his book Thirty Years That Shook Physics, "...if one would assume that light propagates with infinite velocity ..., Einstein's entire theory would reduce to the classical mechanics of Isaac Newton." The finite speed of light and the Lorentz - Fitzgerald Contraction (or transformation) play key roles spelling out the differences.

Because of my limited mathematical ability I take a three step approach:

1. I show how my model produces Newtonian results; then;

2. I attempt to show it will also produce results consistent with General Relativity.

3. I show how my model explains the null results of the Michelson - Morley experiment.

The Model

I propose that the BB process involved the emission, externalization and out-streaming - of space from a preexisting source or state, which I call the Alpha Entity (or state) in order to avoid the baggage associated with the concept of a singularity. Why this occurred no one knows yet; but most scientists believe that it did.

Once emitted, Einstein Spatial Ether obeyed Newton's Laws of Motion and revealed different phases of its personality - including a possible inflationary episode - as it expanded and cooled. Conversely, I propose that the Big Crunch will involve the absorption, internalization and in-streaming of ESE into what I call the Omega Entity, going through another series of phase changes in the process. Thus, I view the expansion process associated with the BB / Alpha Entity as the other side of the coin of that associated with the Big Crunch/Omega Entity and as we shall see: gravitation.

I postulate that all gravitational bodies act as Einstein Spatial Ether Sinks because they soak up and internalize Einstein Spatial Ether, causing in-streaming which carries energy and mass towards themselves in the process. Thus, any Big Crunch, any formation of black holes, and ordinary gravity result from the absorption of ESE including all the matter and energy contained in it. Where does the absorbed Einstein Spatial Ether go? Both Einstein's Principle of the Equivalence of Energy and Matter and Big Bang Theory posit that enormous energy and matter can be incorporated into (stored in) an incredibly small volume. All these processes cause the universe or portions of it to get denser and to occupy less volume, but does not change the overall matter/energy content of the universe. Radiation in all its forms would be an offsetting process.

The unidirectional (monopole) nature of gravity in this model is due to the absorption process causing Einstein Spatial Ether to flow only towards gravitational bodies and not away from them.

It is further posited that as large masses, including the precursor to the Omega Entity, swallow and internalize Einstein Spatial Ether, the mass-energy complex will undergo "phase changes" as it becomes more dense until its appetite for ESE is satiated or because there just isn't any ESE left outside the entity and the process stops.

In this discussion the largest mass in a system being examined, such as a sun, is treated as stationary and the surrounding masses, such as planets and specs of dust, are referred to as inertial masses, although it is unlikely that any mass is truly stationary. The terms body, mass, and sink may be used interchangeably with the understanding that masses are gravitational bodies that act as Einstein Spatial Ether Sinks in this model.

4. Newtonian Consistancy

Assume a stationary massive body that soaks up Einstein Spatial Ether, much as a sponge soaks up water. As surrounding ESE streams toward the massive body, it carries all surrounding masses and energy inward as in RBC (Two dimensional examples would be continental drift and a conveyer belt). Thus, in this model gravitational bodies are regarded as Einstein Spatial Ether Sinks (ESES).

But an inertial mass passing by, in addition to being carried along by the in-flowing stream, also acts like a sponge and absorbs Einstein Spatial Ether, helping close the gap between the two masses as they both "reel in the rope of space in a tug of war," which accounts for the attraction between two masses being proportional to the product of the masses.

Like sponges soak water in an aquarium,

mass soaks up the fabric of space in all directions.

"Tug of War Felt at X".

But mass gobbles Einstein Spatial Ether in all directions and the swallowing on the side away from the inertial mass offsets the dynamics of that towards the stationary mass. The effect of this action is to allow the inertial mass to passively drift along with in-streaming conveyer belt of ESE. Thus, the mass of the inertial body can be disregarded when calculating its falling rate, which is why all bodies do fall at the same rate.

The pattern of inflowing Einstein Spatial Ether associated with a mass comprises its gravitational field. Force field geometry causes the velocity of the ESE to increase as a mass is approached. Thus, the Inverse Square Law

applies and the strength of the field varies with the inverse square of the distance and acceleration occurs.

5. Consistancy With General Relativity

This model explains Einstein's elevator thought experiment better than the curved space paradigm. It becomes obvious why gravity cannot be distinguished from an acceleration. Gravity is due to an acceleration, the acceleration of Einstein Spatial Ether.

Tidal gravity behaves as in GR. Objects are stretched in the direction of streaming and squeezed perpendicular to it.

The gravitational redshift and gravitational lensing are both explained by this model.

Geodesic travel would occur and flattened surfaces at one instant would undergo Riemannian curvature with the passage of time in the presence of massive bodies because of the radial nature of the ESE streaming. But this curvature is a result of the gravitation not a cause of it.

Appropriate bending of light and advance in the perihelion of Mercury would occur per the calculations referenced toward the end of this homepage.

As light (yellow) travels near a mass it curves,

because space (blue) accelerates and the angles of vectors change.

Inertial mass is tied to gravitational mass, because both result from the same dynamics, the absorption of Einstein Spatial Ether by a gravitational sink.

Gravity and Inertia

Einstein referred to gravity as an apparent or fictional force. But gravitational action has two components, an active component and a passiveone.

If true forces are defined as being active and apparent or fictional forces as passive, then the first component, in which space is warped in GR or absorbed in this paradigm, is a true force.

The second, in which mass takes the path of least resistance in GR or drifts with the flow in this paradigm, can be considered an apparent or fictional force.

Einstein Spatial Ether Sinks and Relative Motion

Massive (gravitational) bodies act as Einstein Spatial Ether Sinks (ESES) absorbing space omnidirectionally. The dynamics of the flow of ESE into a massive body forms a gravitational field which obeys the Inverse Square law. The absorption process entrains the ESE being absorbed for an extensive

distance. That is, the field tends to be anchored, tethered or frozen to the gravitational body and travel with it. This is the simple result of Cause and Effect and the fact that the field is a creation of the gravitational body. Thus, the gravitational body (mass or sink) and its associated field form a unit which operates as a system.

The system tends to passively drift or flow with the "Background Einstein Spatial Ether" (ESE not associated with the systems gravitational field) because its interactions with the Background ESE are equal in all directions and it has no reason to behave otherwise. If the Background is not accelerating the system experiences no relative motion with regard to that stream. An inertial gravitational body, with zero forward momentum of its own and absent the application of forces other than gravity, which experiences the gravitational field of a stationary mass will travel with the inflowing ESE stream associated with the stationary body's gravitational sink.

But, because of the Inverse Square Law, a gravitational ESE stream accelerates and relative motion occurs as a result. How other forces operate is not well understood, but other forces also cause accelerations and any acceleration causes relative motion between the affected mass and the background Einstein Spatial Ether.

But these inertial masses continue omnidirectional absorption and the relative motion is not detectable in the immediate vicinity of the mass. This is because the relative motion is mediated by the gravitational field which obeys the Inverse Square Law and a gradient is associated with the system. While the gravitational field can be regarded reaching to infinity, a zone or margin is reached where the impact is negligible that serves as a functional outer limit. Near a mass the gravitational field is strong and under the tight control of the sink and equal inflow of Einstein Spatial Ether prevails. Toward the outer limits the field is so weak that no meaningful relative motion occurs between the system and the background, so resistance to uniform flow by the Background ESE is nil. All the adjustment for relative motion occurs transitionally between the functional outer limits of the field and the immediate vicinity of the mass.

Inertial Mass

Although at a far distance the motion of the system has little or no impact on the surrounding Einstein Spatial Ether, as the system is approached, surrounding space increasingly gets caught up in the dynamics of the system, at first resisting, then going with the flow. The process is modulated by the inertial behavior of space attempting to maintain constant flow into the massive body from all directions. Inertial mass is then a measure of the impact of a gravitational body and its associated field on the larger surrounding ESE. That is, it is a measure of the sink's strength and the need for the larger surrounding

ESE to adjust to the system, even though the gradient associated with the system allows the impact on distant ESE to be nil at a great distance and the uniform motion of a non-accelerating body to occur without resistance.

Acceleration and Inertia

Just as gravity has two components in my model, so does inertia.

The passive component is described by Newton's first law of motion: "An entity will continue at rest or in uniform motion in a straight line, unless a force acts upon it." Cause and Effect require that all entities behave thus. This component has nothing to do with mass and applies to light and Einstein Spatial Ether as well as to massive bodies.

The active</I. or resistive component is that which is associated with the concept of mass, momentum, and the vector component of inertia called centrifugal force. This component is associated with Newton's second and third laws and it is this component on or through which forces operate. This is the component for which gravitational and inertial masses are said to be equal by General Relativity. This component is due to a displacement between a gravitational body (mass or sink) and its own gravitational field.

Linear Inertia and Acceleration

During stationary or uniform motion the mass remains in the center of its own gravitational field. Cause and Effect dictate that this be so as the field is the sink's creation. Thus, mass does not experience its own field during uniform motion.

But when a gravitational body (mass or sink) is accelerated there is a time lag between when it and its associated field adjust to the new situation. The result is that the mass will traverse and experience a part of its own gravitational field, which will attempt to restore the mass to its central place in the system.

I owe this insight to Petr Beckmann's book Einstein Plus Two in which he describes a similar processes associated with electromagnetic inertia. He notes that the field about stationary charge or a charge in uniform motion is frozen to it and such a charge does not feel its own field, whereas an accelerated charge catches up to or crosses (my words) and feels its own field. Beckmann uses this dynamic in his analysis of the orbital mechanics of charged particles and Quantum Mechanics.

Because we do not understand how forces other than gravity operate, we will examine this process from two perspectives and get the same result. (Graphic will soon be provided that illustrate these concepts.)

Case1. If we assume that the accelerating force can operate upon the body without disturbing the field, the body will accelerate forward and drag the field along. But the field, having its own momentum, will take some small amount of time to respond. The result is the mass now overtakes a portion of its own field and experiences the backflowing stream more than the forwardly directed stream. The net internal force by the field is counter to its forward acceleration.

Case 2. Now we will examine the more likely scenario. The force operates via the Einstein Spatial Ether, accelerating a stream containing the gravitational body and its field (or a portion thereof). In this case, the field starts to pass the body and the forwardly directed stream is felt more than the backward one. But a time delay occurs before the gravitational body can respond. This is actually a two stage event with two time delays involved. The first is associated with the difference between when the force is applied and the response of the field, and the second is associated with the difference between the response of the field and the response of the gravitational mass. This two stage delay process represents the inertial resistive force. The size of the entrained field, which is determined by the strength of the sink, influences the degree of delay.

The important point is that the same result occurs in both cases. Although I believe that Case 2 is the more likely scenario in most situations, there are times when it is appropriate to think in terms of Case 1. This is analogous to thinking in terms of positive current flow instead of negative electron flow in a wire.

In addition, another phenomenon takes place. Any time there is relative motion between a body and a medium a pressure or bow wave forms in one direction with a thinning or stretching of the medium to the stern. For example, if one places a beach ball in a pond and pushes it forward a bow wave forms in front of the ball. This would be analogous to Case 1.

If one were to hold the beach ball still in a flowing stream a "stern" wave would form on the upstream side with a comparable depletion of stream flow on the downstream side. Let the ball loose and after a short time delay it will flow with the stream. This scenario is analogous to Case 2. I am not suggesting that that the two processes (relative or counter flow and the bow wave) are additive mathematically. The bow wave phenomenon is just an indicator that the volley ball is experiencing delayed action during relative stream flow. Inertia Associated With Spin

Elsewhere I have analyzed inertia associated with a spinning flywheel in terms of the foregoing dynamics and have shown that the model works. The analysis also reveals that the gravitational field associated with a spinning gravitational body is irrotational at low velocities. That is, the field does not

rotate (or does so very slightly at most) with a body rotating at low velocities. The results of this analysis is consistent with the Michelson - Gale experiment and the behavior of the Foucault pendulum and the behavior of electric fields associated with charged particles. At spin velocities approaching the speed of light Lorentz transformation type calculations become relevant because of the inability of the field to mediate between the sink and the background Einstein Spatial Ether in a timely manner.

1. Michelson - Morley And Special Relativity

The absorption and entrainment components of this paradigm effectively explain the null results of the Michelson-Morley experiment. This aspect of the paradigm is serendipitous. I did not see it coming. I now realize that the Lorentz - FitzGerald Contraction is just a mathematically useful artifact. Michelson, himself, believed that the ether was entrained and never accepted Special Relativity. I have added the concept of a gravitational system with a sink, whose absorption capabilities is the driving force behind this entrainment, and a field that moderates between the relation of a gravitational body and the Background Einstein Spatial Ether.. Thus, there is no relative motion between a gravitational mass and "space" in the body's immediate vicinity and incoming light approaches even a moving mass at the same velocity from all directions. The so called Lorentz - Fitzgerald Contraction is a mathematical adjustment between expectations of what would occur if mass did not absorb and entrain ESE and what occurs because it does. There is no need for slowing clocks or shrinking measuring sticks.

I and several others (including George Marklin, Henry Lindner, and Steven Rado) have independently proposed a test of this hypothesis. We note that all Michelson - Morley experiments have been run tangentially to the surface of the earth. Thus all vector components of in-streaming space canceled. We propose that if the apparatus, or one arm of it, is oriented vertically a drift will be detected.

However, the gravitational redshift and its effect on atomic clocks is real. So is the increase in mass which is associated with increased velocity as long as mass is regarded as a measure of inertia.

Increasing a body's velocity may somehow increase it's ability to absorb Einstein Spatial Ether. At first blush this may seem absurd, but it is consistent with the principle of equivalence of mass and energy and some of the mysterious events revealed in particle accelerators. As one of many possible strange scenarios an electron can emit a photon which can split into a second electron and positron which can then recombine into a photon and be absorbed by a third electron. How does one get an electron and a positron

from a photon emitted by an electron? By the addition of the energy necessary to accelerate the electron to a higher velocity.

Another process may also be relevant.

I owe the following insight to Steven Rado, who in pp 254 - 259 of his book, Aethro-Kinematics, has proposed a mechanism based on Aerodynamic principles and Mach number type calculations, which I have adapted to my scheme.

Relative motion of a gravitational body through background Einstein Spatial Ether is easily accommodated at slow velocities because of the negligible impact of the field on the background and visa versa at the margins of the system. As velocities approach the speed of light the ability of the system to modulate between the gravitational body and the background Einstein Spatial Ether and the ability of the background to accommodate such motion declines because the necessary communication cannot exceed the speed of light. At high velocities a particle or body simply travels further during the time adjustment to its behavior is attempted. Thus a pressure or bow wave builds reflective of powerful relative motion, resulting in resistive behavior consistent with the Lorentz - FitzGerald contraction. The inability of adjustment's to a particle's behavior to occur in a timely manner as its velocity approaches that of light is the cause of much nonintuitive phenomena.

Discussion

This model or paradigm was motivated by the obvious circular logic in the steel ball - rubber sheet analogy used by Einstein to demonstrate how mass warps space. Gravity is used there to demonstrate how gravity warps space. The apple stem analogy, which has lately come to replace it after decades of failure by General Relativists to spot the foregoing circular logic, suffers from the defect that it does not show how the ant crawling on the apples surface exerts its effect on the apples shape.

More importantly, the reactions of physicists when I started pointing out the circular logic years ago, caused me to question the meticulousness with which the underlying mechanism of gravity was thought through. I was surprised by more than one case of an established physicist acknowledging the circular nature of the space blanket analogy, while still using it as a teaching tool. Apparently the predictive ability of the math in most cases was so good that inability to explain the underlying mechanism without resorting to circular logic - or just as bad in my opinion, because they really depend upon the same circular logic, embedding diagrams in hyperspace, was brushed aside. I am inclined to refer to the rubber sheet anology as the space blanket analogy, regarding it as a false comforter.

I assumed from the start that math of both Special and General Relativity must on the whole be good, but that a different reality must underpin this math. This model has mass absorb space not warp it, but the result mathematically should be as if space were Riemannian.

At least one Noble Prize winner has had similar doubts about the curved space paradigm while basically accepting the math. The following is a quote from p147 of Steven Weinberg's Gravitation and Cosmology.

".....At one time it was even hoped that the rest of physics could be brought into a geometric formulation, but this hope has met with disappointment, and the geometric interpretation of the theory of gravity has dwindled to a mere analogy, which lingers in our language like 'metric," "affine connection' and 'curvature', but is not otherwise very useful....."

I was not alone in the belief that the underlying mechanism for how gravity works was not understood.

In the May 1994 Scientific American article, Unbearable Lightness, the statement is made that "... researchers have never attained a satisfactory understanding of the fundamental nature of gravity."

In the October 1995 issue of Discover, Ed Belbruno, a mathematician at the U. of Minnesota, is quoted as saying, "...However you have to understand what gravity is and we don't understand it..."

In QED Richard Feynman states, "...Gravitation is, so far, not understandable in terms of other phenomena."

Even Kip Thorne, who in my opinion pushes curved space to the limit, acknowledges in pages 399 through 403 of his book, Black Holes and Time Warps, that a flat space paradigm in which gravity influences the lengths of rulers and the speed of clocks provides the same results as the curved space paradigm.

I started by trying to explain everything using a model based solely on the Casimir Effect and submitted that thinking to several people four or five years ago. Getting no response, perhaps because the Casimir Effect has been regarded as a short range force or just because I am a layman. I took it to mean my ideas were unsound, but I now know that is not necessarily the case. I also now know that Haisch and Rueda and Putoff are proposing that inertia is a Zero Point Field Lorentz Force, Puthoff treats gravity as a side effect of Zero Point Fluctuations and Yilmaz and Alley treat the gravitational field as having mass energy equivalence and call for a correction to Einstein's field equations. Alan Schwartz is attempting to show that the Casimir Effect causes the Equivalency Principle to not hold precisely.

I will take a detour and discuss my Casimir Effect Paradigm briefly because I am still open to the Casimir Effect playing a modulating role on my

model with one eye on it possibly helping bridge the gap between gravity and electromagnetic phenomena.

Massive bodies have been shown to serve as shields for each other from vacuum dynamics on their distal sides with the result that they are driven together. As they direct the flow of Einstein Spatial Ether towards themselves, massive bodies would project a zone of shieldingfrom dynamics on their distal sides, casting a shadow of calm - a zone of protection - on their proximal sides. The size and "strength" of the zone of protection would be dependent on the size of the respective masses and their separation. The tugging of ESE between two massive bodies could also dampen vacuum dynamics between them, providing another mechanism for the operation of the Casimir Effect.

The fact is conventional gravity and the Casimir Effect do exist side by side and General Relativity has not dealt with this situation. I see similarities between this sink paradigm's and Beckmann's handling of electromagnetic inertia. I also see similarities between the behavior of the Casimir Effect, which conventional wisdom regards as an electromagnetic phenomenon, and that of certain ether theories based on gas law type mechanics. So my present openness regarding the Casimir Effect may not represent a weakness.

Ramifications of the Einstein Spatial Ether Sink Paradigm

This paradigm suggests three possible linkages with quantum dynamics. It shifts the focus from outside massive bodies to internal events, namely, the hunger for and internalization of Einstein Spatial Ether by mass, it points to the similar behavior of gravitational and electromagnetic inertia, and it is open to a possible role by the Casimir Effect.

Although the sponge scenario could be regarded as an explanation of "how mass curves space," both it and the CE scenario really regard curved space as an artifact. Conditions are created for which Einstein's "dimpled space blanket" would be an analogy if it were not for the circular logic used in that analogy. But attention should be focused on the streaming process, not the resulting curvature.

This paradigm differs from General Relatively in its treatment of black holes and what some call singularities. It seems to me that the curved space paradigm attempts to stuff matter and energy into black holes via an external process, namely the warping of "space". The paradigm which I propose is driven by processes internal to black holes, so called singularities, and Omega Entities with "space" being internalized instead of warped.

Some of the phase changes associated with Omega Entity formation may be the converse of those already postulated by BB and Inflationary models, but at least one more additional phase change obviously occurs, because something , the ultimate mass-energy complex , which this paradigm calls the

Alpha Entity existed before the BB. In a sense gravity is most likely a converse of the strong force in that while the strong force operates over a very short distance, gravity ceases to operate at very short distances within high densities as the result of a this final phase change. Such a process "in reverse" has also been proposed in the Inflationary model which suggest a period when space expanded much more rapidly than at present for a very short period of time. Thus the suggestion that a phase might exist where contraction is much slower then evidenced due to present gravitational forces - and ceases altogether - is a reasonable one. It may be that gravity did not become operative until the Higg's field or something like it "crystallized out" and will disappear when that entity or state evaporates.

If "space" is internalized during absorption, there would be decreasing amounts of it outside the precursor to the Omega Entity to apply inward pressure and squeeze the rest of matter out of existence as some relativists predict. The assertion of some that no force can withstand intense gravity is obviously false or there would never have been a BB in the first place. Further, such squeezing scenarios fail to take into consideration the negative feedback mechanism resulting from the decreased gravitational force due to the loss of the matter that was supposedly squeezed out of existence.

Those who believe in Black Holes as more than just dense bodies of matter, have another problem if they also believe that the speed of light cannot be exceeded. In order for light never to escape the gravitational fields of such bodies some process, be it the warping of space or some other mechanism, must be operating faster than the speed of light. Somehow the distance that light travels through "space" must be made to increase faster then the speed of light or gravity must be shown to slow the speed of light, which in turn creates problems for the principles upon which the Hubble expansion is based.

Whether or not the Alpha and Omega conditions are precisely similar; are two separate creatures; or different aspects of one persistent entity The Alpha - Omega Entity; and whether or not the Alpha Entity totally expends itself in the formation of space are begged for the moment. The Omega Entity may not exist as an identifiable state until the end of a long process of gravitational accumulation and consolidation and resulting phase changes. However, the emission, externalization, out-streaming and absorption, internalization, in-streaming processes are consistent with the equivalence of energy and matter, the absorption and emission of photons, and the concept of a dynamic vacuum.

I note that all or nearly all of the major past and present alternatives to this paradigm fall into the trap of having to create something out of nothing, either from a singularity or continuously. This paradigm avoids that pitfall and

assumes that recycling occurs in this case as it does throughout the rest of nature.

Current alternatives to Einstein's warped space scenario tend to fall into two main categories.

1. Casting a shadow or "push" type processes such as proposed in my earlier Casimir Effect analogy and certain tachyon models.

2. "Pull" type processes such as is associated with the Einstein Spatial Ether Sink model.

Those who propose an ideal gas type ether sink model have both "pull" and "push" components. The "pull" or absorption creates a localized rarefaction and the surrounding ether provides the "push".

"Push" models have a problem in that an infinite universe filled with their stuff is required or at some point their model runs out of push and must dissipate.

I am not aware of any infinite thing, only processes. When one divides by zero, one is saying, "I can decide not to divide as many times as I wish." Likewise, there is no limit on the number of times one body can orbit another if ware and tare, friction, etc. can be eliminated. Nor is there any theoretical limit on how long something can last, if certain laws of nature are suspended. Likewise there is no limit on how far the universe can expand into the nothingness beyond, save for any internal constraints possessed by the universe itself. But there is no scientifically documented infinite thing.

"Pull" type models such as mine have the challenge of explaining what causes the sink. I beg the issue of why mass absorbs Einstein Spatial Ether for the moment, much as Einstein begged the issue of how mass warps "space"; but I note that the absorption and emission of photons by electrons and other particles is a well documented fact and I point to the expansion and possible contraction of the universe as involving the same process as my theory. I note only that if one entity can externalize "space", it is not unreasonable to expect another to internalize it. Thus, this paradigm goes one step further in the explanatory process. Streaming, which is here the counterpart to curving "space", is explained as the result of absorption is referenced to other theoretically accepted processes.

Henry Lindner has a home page that describes an ether sink model, which is close to mine. However, his ether does not posses "inertia", a concept which is crucial in my model.

Steven Rado has a home page and a book, which I have referenced previously. In both he uses the terminology sink vortex. I agree with the sink part of his concept, but not the vortex aspect as he applies it to gravity. His use of vortices seems to be more readily applicable to electromagnetism.

I have confidence that the absorption - in streaming - conveyer belt - portion of my model is true. I am gaining an increasing intuition that a linkage with Casimir type processes is valid, if for no other reason then that once the concept of Einstein Spatial Ether is accepted, a mechanism for Casimir type processes is available. A potential bridge to electromagnetic and Quantum Mechanical processes is beginning to take shape in my mind based on electromagnetic inertia, orbital mechanics, Bohm type pilot waves, Bell's Theorem, Alain Aspect's experiments and the understanding that natural processes cannot be less then three dimensional in nature.

It appears that Robert L. Kirkwood in volume 92, number 6 and volume 95, number 4 of Physics Review has done calculations whose results are consistent with the core portion of my paradigm providing appropriate results, including the bending of light and the advance in the perihelion of Mercury. Extensive calculations in Petr Beckmann's book "Einstein Plus Two" are also consistent with an entrained ether theory such as mine fulfilling all predictions of both Special and General Relativity, once again including the bending of light and the advance in the perihelion of Mercury. I hope a competent mathematician will confirm that the above math is valid and applicable to my model and that the experimental test proposed in the author's quote under MICHELSON - MORLEY AND SPECIAL RELATIVITY is done. If the math fits and drift is detected, then I suggest the Einstein Spatial Ether Sink Paradigm or some modification of it as a replacement for the warped space paradigm.

This paradigm leads to further predictions about the universe, which can be read by selecting Further SPECULATION.

ON INTERNAL WORK AND ANTIGRAVITY WITH NEWTON, FARADAY, AND MAXWELL

BY THOMAS E. BEARDEN

Internal work is an eerie kind of thing! There are several things involved. I will try to discuss one or two briefly.

First, Faraday believed fervently that his lines of force existed as taut physical strings (everyone at the time, Faraday included, believed in a MATERIAL ether). So he thought that EM disturbances were simply the disturbances of these taut strings. That was then a transverse string wave.

So to Faraday, "EM shaking" in the ether was just these physical lines of force shaking (like a transverse twanging string wave). NOTE that he just assumed away the body of any string holder to provide the tensile forces on that string! In short, without realizing it he threw away Newton's third law reaction forces from his material strings.

Maxwell stated point blank that he would read no other EM theory until he had thorougly studied Faraday's work. He also wrote a paper on those physical lines of force. He mathematized them with a tube of force concept.

But he also ASSUMED away the body of the mysterious missing string holder, and also thereby discarded Newton's third law reaction from his electrodynamic theory. The third law is STILL missing from the theory today!

When electrodynamicists do an experiment, say by introducing some EM energy to be absorbed, etc., the third law recoil force and energy DOES appear. It is GENERATED in their experiment, but the cause for it does not appear in their model! So they piously raise their eyes to heaven and say, "Oh, yes, we know that will occur. That's due to Newton's third law."

Well, Newton's third law is a DESCRIPTION of what happens. It is not the CAUSE of anything, being instead of a cause, an EFFECT.

In short, there never were any twanging strings in the vacuum ether, and Faraday's lines of force are not even lines of force! THERE ARE NO FORCES IN THE VACUUM.

In the first place, force is not the primary CAUSE of acceleration of a mass! Force is not SEPARATE from mass. Rigorously, the definition of force is F is identically d/dt (mv). As can be seen, mass is a COMPONENT of force. In the vacuum, all that exists are changes in the vacuum potential. In other words, you get gradients of scalar potential and swirls which we identify as vector potentials or currents of potential.

There is no E-field in the vacuum, for example, in the sense presently used.

Electrodynamics assumes that at every point in the vacuum, there exists

? (1) a point unit north pole,

? (2) a point coulomb of positive electrical charge, and

? (3) a point unit mass.

Electrodynamics theory then describes how those assumed point entities move and react. THAT's what the equations actually describe, the movements of those three entities. They do NOT prescribe what exists in the vacuum, WITHOUT that observable matter being there!

Classical electrodynamics still completely and erroneously assumes the MATERIAL ETHER. You would think they would have got the message since the Michelson Morley experiment in 1888 destroyed the MATERIAL ether. All that happened was that one day the electrodynamicists said, "Okay, so there's no ether! Okay, we are not using one!" And they never changed a cottonpicking equation!

What really happens with a scalar potential at a point, e.g., is that it increases or decreases. Look at the points in the neighborhood around that point of interest.

If the potential increases at the focal point, then it has not yet increased at the points around it at an infinitesimal distance from it. So it has a set of radial gradients all around, with respect to the ambient vacuum potential points in its neighborhood.

Well, each one of those radial gradients is (erroneously) called a force in classical EM. But for each radial there is an opposite and equal radial. Try increasing or decreasing the potential at that point any way you wish, you still produce a set of equal and opposite (bidirectional) EM "forces".

The point is, the waves are always created as PAIRS of equal and opposite waves. It's more like a "rhythmic squeeze" wave than anything else. In the real world, the antiwave portion is actually a phase conjugate, and superposed spatially upon the wave, in each biwave pair.

That's how Whittaker came to show that any scalar potential is a set of biwave pairs. And in each pair, there is a wave and its antiwave (true phase conjugate). But that means that this doesn't generate any NET force!

Voila! It contains excess or minus energy at that point, but it did not translate anything. That increase in the local energy density of vacuum spacetime is ruthlessly a CURVATURE of local ST, in the GR sense.

So what is produced in the vacuum is a GRAVITATIONAL wave, not an EM wave at all! This is consistent with modern gauge theory, when one thinks

long enough about it, because gauge theory regards gravity itself as simply the "restoration of symmetry" when a force of any kind is formed.

In other words, Sakharov's hypothesis is true; gravity is not a separate field in the sense of Maxwell, but is always made from other fields. In fact, it is just NEWTON's THIRD LAW revealing itself, particularly in electrodynamics!

Now let's look a little deeper. Suppose we have this harmonic set of wave/antiwave pairs (this scalar potential) coming onto an atom of matter.

Well, the time-forward wave halves get stripped off and interact with the time-forward part of the atom (i.e., the electron shells).

The atom can be regarded as a set of dynamic dipoles, where a positive charge in the nucleus and a negative charge in the electron shells comprise one of the dynamic dipoles.

The dipole is a "splitter" of the G-wave incoming. It splits that thing into two EM waves momentarily.

The forward time wave half interacts with an electron in the electron shells, and the reversed time wave half interacts with the positive charge end of the dipole down in the nucleus.

That generates Newton's third law recoil of the nucleus, which is admitted but usually ignored in electrodynamics.

Point is, for all the energy interactions ongoing in the electron shells, there are equal and opposite EM energy interactions ongoing in the nuclei. We ignore the latter.

NOW to the inner work. As you can see, when you do some work on the atom with EM radiation, you simultaneously do some equal and opposite inner work in the nucleus. (One can use this to get antigravity and free energy and all sorts of goodies).

Now in nonlinear optics, one interacts that G-wave (i.e., with its EM biwave pairs) as it is coming in, by nonlinear EM wave interactions such as four-wave mixing. The time-reversed wave half doesn't get to reach the nucleus; instead, it is flipped right back toward where it came from. And along with it goes up to all the energy in any additional pump waves on the atom.

So a phase conjugate mirror, no matter how powerfully pumped, DOES NOT RECOIL when it emits the powerfully amplified phase conjugate replica wave!

The reason is that the MECHANISM generating Newton's third law recoil of the nuclei, did not happen because the cause (the incoming "missing" time-reversed wave half) was redirected before it reached the nucleus.

Now that's an interesting way to intercept the "cause" of internal work, and redirect and use it, BEFORE it comes into its causative interaction to generate internal work.

Now if you continue to do the POSITIVE work half (in the Sweet device, the work done in the load), and in fact increase the positive work half, while simultaneously rejecting the excess negative half, you have a missing "Newton's third law" reaction for the excess positive work being done in the load. That means you have a missing restoration of symmetry, for the excess positive power being done in the load.

That means you have just exactly that much ANTIGRAVITY formed. That is, if restoring symmetry is what exhibiting gravitational force is, then DENYING the restoration of symmetry is what dis-exhibiting (denying) so much gravitational force is.

So by denying the restoration of symmetry for extra power in the load, you create ANTIGRAVITY by just that amount of power.

Let us reason together. Gravitational energy is already known to be (embarrassingly) negative energy. Well, what is "negative energy" in layman's terms? It's just energy that was never there, but does work against you. Again, it's just our old friend Newton's third law, hiding in disguise.

So we get gravity when we let the time-reversed half of the EM waves interact with atomic nuclei.

We get an absence of gravity when those waves come in but the antiwaves do not reach the nucleus and do not interact with the nucleus.

READ THAT AGAIN, THAT'S PURE MAGIC!

So to get antigravity, you bring in some EXCESS phase conjugate (time-reversed) EM energy, together with some excess energy (the other half accompanying it, since you bring them in, in pairs. You let the time-forward half go to the external circuit and the load, and do excess work in the load.

But you do not let the excess part of the incoming time-reversed energy reach the nucleus. Instead, you multiwave-interact with it before it reaches the nuclei. You send it back on its way. So what does that do?

Well, if you bring in extra gravitational energy (cause), and then REPEL it, WHILE LETTING ITS INCOMING FORWARD-TIME MATCHING ENERGY BE DIVERTED TO THE LOAD AND DO WORK IN THE LOAD, that's the exact thing as creating that much ANTIGRAVITATIONAL energy.

In short, that's how you produce antigravity. Or, if you wish, that's how you get a unilateral thrust.

Just point that antigravity thrust in the correct direction, and the unilateral antigravity thrust force will occur in that direction.

For propulsion, then you fly it like a helicopter. With thrust upward, you lift straight up or hover, or lower down gently. By angling the direction to have a forward component, you also move forward while hovering, climbing, lowering, etc..

That was the gist of my theory of gravitation that I got Sparky Sweet to test with the vacuum triode amplifier. I had estimated that it would levitate at about 1500 watts.

But one would get magnetic charges (monopoles) deposited in the barium ferrite magnets as one increased the power above the nominal 500 watts design. So I warned him not to go above 1,000 watts, because the magnets might explode and kill him. (They go off like hand grenades when the yield point is reached, and Sparky did explode a few magnets at various times this way!)

Anyway, he increased the load in 100 watt increments, to 1,000 watts, and that thing reduced its weight on the bench nicely and smoothly by 90 percent. If the experiment had failed, I would have had to go back to the drawing board. But it worked beautifully.

So the gist of the internal work is that you directly involve

? (1) Newton's third law being added back to classical EM,

? (2) turning EM into G and vice versa, <;i(3) putting Faraday's missing string holder back in there,

? (4) increasing the potential cause for internal work, then rerouting it back out before it interacts in the nucleus, and

? (5) finding Maxwell's missing "tensioning agent" in the vacuum.

Maxwell actually pointed out, carefully, that his theory was not finished because he had assumed this stress in the ether, but had not been able to account for it, and therefore further work had to be done.

Heaviside also warned that the present EM theory was just first order, and suitable for first order effects, but was not to be considered as finished.

In his opinion, initially the engineers would have sufficient trouble learning that first order theory and applying it. So the refinement of the theory could come later.

Hope this is a little clearer.

BALANCING FREE ENERGY DEVICES

BY THOMAS E. BEARDEN

I think the way to "balance" the use of free energy may very well come down to this:

First, you can reuse energy over and over. The only real conservation of energy law is that "energy can neither be created nor destroyed. Period."

This means that, when you "use" a joule of energy (e.g., suppose you scatter a joule of incoming energy, in a resistor), then you still have that joule of energy remaining AFTER you've done a joule of work.

So in May this year at the 4th International Energy Conference, I pointed out that you can RETROREFLECT the energy, after it's already "passed through" the circuit, and get it back (or some of it, depending on the reflection coefficient) to "reuse" (i.e. scatter) once again.

I pointed out that this already occurs in intensely scattering media, and provides the well-known anti-Stokes emission phenomenon, which IS DEFINED as emission by the medium of more energy than one puts in! In other words, the fact that one can get overunity has been recognized in the anti-Stokes emission phenomenon for over 30 years.

Now all energy comes from the vacuum. Sorry about that to the electrodynamicists, but if they will read a little particle physics, it has been known for 40 years that any electrical charge or electrical dipole is a "broken symmetry" in the violent energy flux of the vacuum. That's a proven thing.

By definition of "broken symmetry" in a virtual particle flux (which is what the vacuum energy is), particle physics tells us that

? (1) that asymmetrical portion (i.e., the "gated" portion or "extracted" portion) changes from virtual to "observable", and

? (2) that observable energy flow component will be radiating away from the charge or dipole.

Note that electrodynamics doesn't even know what the whack an electrical charge is, much less a dipole! There is presently no definition of electrical charge in physics.

Anyway, the point is that any dipole

? (1) already freely extracts energy from the seething vacuum, due to the dipole's asymmetry in that flux, and

? (2) already puts out an observable flow of energy as a result.

Well, our electrodynamics profs forget to tell us that! Because it doesn't appear in the 130-odd years-old electrodynamics model! But it's been known for over 40 years in particle physics. It would be nice if the various disciplines would "scrub" their older stuff and correct it, when later and different information uncovered in science has falsified it. They don't, at least not in electrodynamics.

Anyway, we have these facts from particle physics:

? (1) an electrical charge freely extracts energy from the vacuum, and

? (2) it outputs that energy as a radial flow away from it, in all directions, and

? (3) that energy flow is of the kind that we call "observable" (i.e., detectable in that it will translate matter under the right conditions).

Well, there is only one kind of observable energy flow from an electrical charge! And that is the so-called Poynting flow S. (Simplest form is S = E x H, although there are expressions also for the absence of the magnetic field and so on.

Also, the real thing is S = E x H + G, as pointed out by Heaviside who independently discovered it about the same time as Poynting. Poynting got the direction wrong by 90 degrees, and missed the other factor G.

In fact, Poynting effectively limited the energy flow vector S to the energy collection flow in a circuit (the Slepian vector j-phi, for energy density flow).

Well, that throws away almost all of the energy flow extracted from the vacuum by a source dipole in an electrical circuit. Let's put it this way.

The source dipole extracts freely from the vacuum an enormous flow of energy, and sends it out along the external part of the conductors in its external circuit. All space around those conductors (transmission lines) is filled with this Poynting flow.

The total energy flow is enormous. But only a tiny, tiny smidgeon is intercepted by the surface charges in the wires (and components). Just that tiny portion of S that is in a small sheath directly adjacent to the conductor/component surfaces, gets intercepted and diverted (diverged) into the circuit to drive the electrons as j-phi.

And thereby hangs a tail. All that Poynting got in his derivation was effectively that divergent part. He also got the direction wrong. Heaviside corrected him as to the direction, and also pointed out that THE DIVERGENT COMPONENT OF THE POYNTING FLOW IS ONLY A TINY PORTION OF THE ENTIRE FLOW.

Most of the flow in the space surrounding the circuitry DOES NOT contact those surface charges, DOES not get diverged. So the nondivergent component is huge (nominally about 10exp13 times as much energy flow as

our feeble circuits intercept and collect from the small, small local sheath in contact). The divergent component is about 10exp(-13) of the entire S-flow.

Now contrary to the textbook, the Poynting flow is still in virtual form, but it is in ORGANIZED virtual form. So our normal circuits have

? (1) taken enormous energy from the local vacuum, and

? (2) put back almost all that energy, in flowing nondivergent form.

The reason our feeble electrical circuits do not produce lots of general relativity phenomena, stopping watches and clocks, time dilation, etc. is because they are so damned inefficient, almost to the point of extinction!

So you can say that the normal inefficient circuitry only has a "general relativity reaction coefficient" of about 10exp(-13). That means you normally don't have to bother about time effects, curvature of spacetime, conditioning the vacuum, and oddball ST curvature effects on minds and biological systems. The vacuum doesn't locally "condition" very much.

Now if you were to materially increase the efficiency of that localized "interception and divergence" (i.e., collection) by the circuitry or medium or whatever, then as the orders of magnitude increase, you can get appreciable gravitational effects and all the other. In other words, now you are taking out a lot of local energy as virtual flow, BY PROCESSING IT THROUGH THE CIRCUIT AND ITS LOAD TO FORM "OBSERVABLE" PHOTONS.

The precise difference is this: Putting back virtual photon stuff immediately restores the ether (vacuum). Putting back observable photon stuff is actually putting back DISTURBANCES in the overall magnitude of the vacuum, NOT local virtual photon content. And thereby lies the rub!

It means if we get a good "free energy" system, but do work that produces almost totally OBSERVABLE scattered photons, then we have a local vacuum problem.

We are drawing out the energy in its native form, but we are not putting it back in its native form. So we are "continuing to enlarge the hole" in the natural state energy of the local vacuum. And that gives us the problems.

Well, there is an obvious technical solution. We must REPROCESS those observable photons scattered by our loads, back into virtual and uncorrelated photons.

In that case, we would be back to our present power situation: We could draw, collect, and utilize megawatts or gigawatts of power (easily, if we accent those principles of increasing the collection in the circuitry or medium, as I gave in May 1997) if we are careful to reprocess most of the scattered "waste" photons from our work processes, back into virtual photons which inject directly into the native vacuum format.

There's another way to help also. When we draw out a certain rate of NATIVE energy format, and process it into observable format, then instead of just propagating that waste observable energy out of there, we can RETROREFLECT it repeatedly and intensely, and reuse it.

That way, we dig a certain size "hole" in the local vacuum native energy, so to speak, and then stop. We reprocess most of the waste energy, so our overall POTENTIAL (i.e., density of collected energy) can be very great, without getting into all the weird "vacuum conditioning" effects.

That is, we store up an intense reservoir of recycling observable energy, and use and reuse that energy over and over. In the real world, we can only do that so much, but in an intensely scattering medium that can be appreciable (as shown by Patterson's macroscopic adaptation of anti-Stokes emission and by Lawandy's use of colloidal solutions of titanium dioxide (main ingredient in white paint) to achieve great energy gain and lasing without population inversion).

In other words, you set up a given "storage" of "cumulation" of recycling energy. The actual linear flow of the energy can then be enormous, without taking out nearly that much from the native vacuum energy format.

You only have to replenish the losses or inefficiencies of the recovery process.

Say, e.g., that you can get good efficiencies in cumulation recovery so that only 10exp(-6) of the energy is being irretrievably lost. Then you can power substantially large loads without too much fuss from the native vacuum.

AND, you can also apply to those losses a "reprocessing into native format" process, to further reduce the local vacuum environment's degradation.

I have wished for some time that we could get the Department of Energy and the Universities turned on to this type of thing and to overunity. That still seems to be almost a lost cause. They simply can't seem to get it through their heads that only by altering Maxwell's equations (regauging symmetrically, the Lorentz condition) have they ASSUMED AWAY the overunity systems that Maxwell's unregauged equations rigorously allow and prescribe.

And they can't seem to get it through their heads that (electromagnetically) the work-energy theorem W = (phi)(q) is a special case for ONE-PASS of the Poynting energy flow along and around a circuit, and on off into space.

(You get a completely different version when you use multiple passes by retroreflection (particularly by phase conjugate reflection).

Then you have to use something like W = (alpha)(phi)(q), where alpha is a factor due to multipass, multicollection. In that case, alpha <1.0 gives you the conventional case, alpha = 1.0 gives the limit of the conventional case, and

alpha1.0 gives you the multiple pass, multiple collections case as demonstrated by anti-Stokes emission.

Anyhow, I hope this overly long expose' helps clarify the problem of powerful overunity mechanisms initiating dramatic alterations of the local vacuum and of spacetime, unless certain precautionary measures are taken.

MASS MODIFICATION EXPERIMENT DEFINITION STUDY

BY ROBERT L FORWARD, FEBRUARY 1996

INFINITE ENERGY MAGAZINE, JULY-AUGUST 1996

Editor's Note: We are publishing this U.S. Air Force technical report by Dr. Robert L. Forward, because it offers excellent introductory material about Zero Point Energy. It also suggests a range of experiments that demonstrate macroscopic effects that ZPE can promote--including possible alterations of inertial mass. As a colleague of Robert Forward, I know that he does not necessarily "buy" the evidence for some of the macroscopic over-unity devices we report on, including "cold fusion." Rut give him time! (He's also an accomplished science fiction writer, so he'll soon have a lot more to write about when O/U devices power his computer.) -- Eugene Mallove

Abstract

The vacuum is proving to be one of the hottest topics in contemporary physics. It is a source of numerous effects: force fields that emerge from nowhere, particles popping in and out of existence, and energetic jitterings with no apparent power source. Many researchers see the vacuum as a central ingredient of 21st Century physics. Some even believe the vacuum may be harnessed to provide a limitless supply of energy. This report summarizes an attempt to find an experiment that would test the Haisch, Rueda, and Puthoff (HRP) conjecture that the mass and inertia of a body are induced effects brought about by changes in the quantum-fluctuation energy of the vacuum. However, it was not possible to identify a definitive experiment. But, it was possible to identify an experiment that might be able to prove or disprove that the inertial mass of a body can be altered by making changes in the vacuum surrounding the body. Other experiments, which do not involve mass modification, but which teach something about the vacuum, were also defined and included in a ranked list of experiments. This report also contains an annotated bibliography and a list of scientists active in the field.

Mass Modification Experiment Definition Study Goals

The goal of this study contract was to define an experiment that could conclusively determine, one way or the other, whether the mass of a body

could be modified by modifying the vacuum fluctuations around or in that body. If the mass of a body can be modified in even a small way, that fact will be of importance to science. If the mass of a body can be modified significantly, that fact will be of importance to Air Force missions.

The study was instigated by the conjectures by Puthoff (1989) and his colleagues Haisch, Rueda, and Puthoff(1994) that the gravitational mass and the inertial mass of a body are induced effects brought about by changes in the fluctuation energy of the vacuum when the body is present. The study was not limited to the Puthoff conjectures. Other theories concerning the various effects of vacuum fluctuations were also considered.

Puthoff, Haisch, and Rueda were contacted in an attempt to identify a definitive experiment. This requires that the theory proposed by Puthoff and colleagues make a numerical prediction of a specific result, and requires that the experimental apparatus have the sensitivity and precision to measure the predicted result to high accuracy. If the experimental result agrees with the theoretical prediction, then the Puthoff conjecture will have been proven to be "correct" (as much as any theory can be proven to be correct), while if the experimental result does not agree with the theoretical prediction, the Puthoff conjecture will have been conclusively proven to be wrong. Unfortunately, it was not possible to identify a definitive experiment. There are experiments presently being undertaken by Puthoff, which, if successful, will prove the Puthoff conjecture correct. The failure of these experiments to produce a result, however, will not prove the Puthoff conjecture wrong, since the theory does not give a firm prediction of the magnitude of the effect being looked for.

It was possible, however, to identify an experiment which might be able to prove or disprove that the inertial mass of a body can be changed by making changes in the vacuum surrounding the body. The theory this experiment is based upon is the well-accepted theory of Quantum Electrodynamics. Much work needs to be done, however, both on the theoretical analysis and the experimental design, before one can say if the experiment is feasible. Other experiments, which do not involve mass modification, but which teach us something about the vacuum, were also defined and included on a ranked list of experiments.

The report also contains an annotated bibliography of the publications used in preparing the report. The papers referenced in the text by an author's name and a date, refer to entries in the bibliography. The report concludes with an annotated list of those scientists active in the field of vacuum fluctuations.

Rationale For Study And Recommended Experiments

At first glance, it might seem that experiments to study the electromagnetic fluctuation energy of the vacuum are so esoteric and so

devoid of practical applications that they should be funded solely by the National Science Foundation, if at all. Yet, experiments to study the vacuum could lead to real advances in space power and propulsion technology as well as expanding our knowledge of basic physics.

The situation is reminiscent of the feld of nuclear energy in the 1930s. Scientists were only just beginning to understand the structure of the atom. The element radium had been purified. It violated the law of energy conservation by continuously giving off heat and radiation. It seemed to be an inexhaustible source of "free energy. Uranium, mostly used to give a "vaseline yellow" color to glass, was also known to give off radiation that would fog photographic plates.

Soon scientific knowledge increased. The atoms were a nucleus made of protons and neutrons surrounded by a cloud of electrons. The number of protons and electrons determined the element, while the number of neutrons determined the "isotope" of that element. Finally, scientists realized that the "free energy" coming from certain isotopes of radium and other elements was not really "free" at all. Instead, a small amount of mass m was being converted into large amount of energy E according to the equation E=mc2, where c is the speed of light. Using this equation, "nuclear energy" could be estimated to produce 9x10'3 joules of energy per gram of mass.

Then, neutrons were found to be capable of fissioning certain isotopes of heavy elements, releasing "nuclear energy" on demand. Even then, "nuclear energy" was not considered very practical. It was thought that either gigantic "atom smashers" or large "atomic piles" would have to be constructed to obtain the "nuclear energy. It was only after much knowledge had been gained about the fission process, and much chemical engineering work had gone into isotope separation techniques, that it was finally realized that nuclear energy could be obtained from highly enriched uranium-235 or plutonium-239, by a technique as physically simple as putting in contact two precisely machined pieces of isotopically purified metal!

Thus, in just a few decades, the esoteric, poorly understood phenomena of "nuclear energy of the atom" went from being a scientific curiosity into being a major technology. In addition to weapons, nuclear energy In the form of plutonium isotopes is being used as the primary power source in NASA deep space missions. Compact nuclear reactors supply larger amounts of power for classified satellites. Nuclear electric propulsion is the technologically preferred method of sending a crewed mission to Mars, and particle bed reactor rockets would be a major component of our space defense shield if we were still at loggerheads with the USSR.

We are now in the 1990s, looking at the esoteric, poorly-understood phenomena of "electromagnetic fluctuation energy of the vacuum." We can

estimate the "vacuum energy density" to be 10^108 J/cc, and the vacuum mass density to be 10^94 g/cc, much higher numbers than those associated with nuclear energy. In the same way that we once did not understand the atom, we presently do not understand the vacuum. We need to carry out careful experiments to accurately measure the electromagnetic fluctuations in the vacuum and how those fluctuations affect matter. That is the purpose of the two highest priority experiments. From these experiments, we expect to learn enough to propose additional experiments that will lead to a better understanding of the vacuum and how it affects the inertial and gravitational mass of bodies. This, in turn, could lead to concepts for "control" of the vacuum and control of the mass of an object. I have already shown [Forward (1984)] that it is possible to extract energy from the "electromagnetic fluctuations of the vacuum." The amount of energy that can be extracted using this technique is just a minute fraction of the 10108 J/cc that is calculated to be available. But as we learn more about the vacuum, it is expected that better energy extraction techniques can be found. (Perhaps a technique as physically simple as putting in contact two precisely microfabricated sandwiches of ultrafine metaldielectric multilayers?)

One such possible energy extraction experiment is third on the prioritized list of experiments. According to our present theories about the vacuum, if we place a single proton in the center of a cold, empty vacuum chamber, then within one second that proton, driven by the electromagnetic fluctuations of the vacuum, will gain an energy of 1000 eV. Since it only cost us a few eV to ionize a hydrogen atom to obtain the proton and place the proton in the vacuum chamber, there is a substantial gain predicted. At first glance it looks like this experiment provides a source of "free energy," similar to the "free energy" that seemed to come from radium. We are sure that nature is not going to allow us to get away with this violation of the law of energy conservation. We will probably find that the energy is not "free" but is coming from somewhere else--probably from the immense energy density of the vacuum itself.

So, although the field of "electromagnetic fluctuation energy of the vacuum is admittedly an esoteric, little-understood field, it does seem to have definite potential as an energy source. It also could have the potential of changing the mass of an object. And, since theory predicts that the vacuum has an enormous mass density as well as an enormous energy density, it might one day be possible to interact enough with the vacuum to "push" on it with a "vacuum drive." Alternatively, perhaps one day it might be possible to operate a "vacuum rocket" that uses energy obtained from the vacuum to expel reaction mass also obtained from the vacuum.

An Introductory Tutorial On The Quantum Mechanical Zero

Temperature Electromagnetic Fluctuations Of The Vacuum

The main body of this report discusses a number of possible experiments to measure the effect of the quantum mechanical zero temperature electromagnetic fluctuations of the vacuum on macroscopic objects. This introductory tutorial gives a short background survey of those parts of quantum theory that create in a supposedly empty vacuum, even a vacuum at zero absolute temperature, fluctuating electromagnetic radiation fields and even fluctuating numbers of charged-particle pairs. [This tutorial will attempt to explain "how, but not "why," because nobody knows why nature behaves in this admittedly strange way.]

Quantum Mechanics

The well-accepted Theory of Quantum Mechanics has many aspects. The two aspects that are most important for this tutorial are that:

(1) Matter and energy are quantized.

(2) Certain types of measurements cannot be made precisely; there is always some uncertainiy in the measurement. (This is called the Heisenberg Uncertainty Principle.)

Quantization Of Matter And Energy

Matter is quantized. A block of matter, although seemingly a continuously dividable substance, is ultimately found to be made up of "quanta" called atoms. An atom consists of a small massive nucleus surrounded by a large cloud of electrons. The electron cloud acts as a "spring" suspension for the mass of the nucleus, and suspends it in its place in the block of matter. This mass-spring system can vibrate. The frequency of vibration is f=(k/m)ln where k is the spring constant of the electron cloud and m is the mass of the nucleus. The amplitude or energy of the vibration is determined by the temperature of the block. The higher the temperature, the more energy there is (on the average) in the vibrations of the atoms.

The energy of vibration is quantized too. The vibrational energy of the atoms come in "quanta" of energy e=hf, where f is the natural frequency of the vibration of the mass-spring, and h=6.63x10^-34 has is a very small constant called Planck's ! constant. These vibrational quanta have been named "phonons.

Now here comes the interesting part. When the equations of quantum mechanics are used to determine the "average energy" <E> of the vibrations of the atoms, the answer is <E>=[n(T)+1/2]hf, where the number of phonons n(T) is a function of temperature such that when T=O K, n(T)=O. Thus, even at zero temperature, quantum mechanics predicts that each of the atoms will have

an average residual energy of <E>=hf/2. This residual energy is an average. It is not that the energy of each atom is a "half a phonon," but that roughly half the atoms have one (perhaps more) vibrational quanta or phonons, while the others have no phonon.

The phonon distribution rapidly changes with time as the phonons are passed back and forth between the many atoms. This residual energy at zero absolute temperature predicted by the equations of quantum mechanics is the so-called "Quantum Mechanical Zero Temperature Vibrational Fluctuations of Matter.

This quantum mechanical fluctuation energy of the atoms in matter has been measured by measuring the vibrations in a crystal as the temperature of the crystal is lowered. The experimental data agrees with the predictions of the equations of quantum mechanics, so the quantum mechanical zero temperature vibrational fluctuations of atoms in matter is real. It is this residual quantum mechanical vibrational energy that keeps liquid helium from freezing even when it is cooled to within microdegrees of absolute zero temperature.

Uncertainty Principle

There is a quantum mechanical "reason" for this zero temperature fluctuation energy-the Uncertainty Principle. The Heisenberg Uncertainty Principle of Quantum Mechanics states that it is not possible to precisely measure the position x and the momentum p=mv of a particle at the same time (m is the mass of the particle and v is its velocity). The accuracy of the position measurement ~x and the accuracy of the momentum measurement ap must obey the relation ~xap~h. If there were no residual vibrational energy in the atoms in the block of matter to keep the nuclei in motion, then at T=O K, the nucleus of each atom would be standing still (~v=O) and be right in the center of its cloud of electrons (~x=O), which would violate the Uncertainty Principle. Needless to say, many scientists (including Einstein) have tried hard to come up with an experiment in which the position and momentum of a particle is measured at the same time to an accuracy better than ~x~p~h. They all failed, and scientists are now pretty sure that the Uncertainty Principle is more than a "principle," it is a "law" of nature.

There is a corollary to the position-momentum uncertainty pair that will be important later. The Uncertainty Principle also states that it is not possible to precisely measure the energy E of a particle in an infinitely short time t. The accuracy of the energy measurement ~E of a particle and the time interval i~t in which the energy measurement is made, have to obey the relation ~Eat2h.

Electromagnetic Fluctuations Of The Vacuum

With the above as background, we now get to the quantum mechanical zero temperature electromagnetic fluctuations of the vacuum. A region of empty space surrounded by matter at absolute zero temperature would seemly have no energy in it. Yet, since electromagnetic vibrations (light and radio waves) can pass unhindered through the vacuum, the vacuum contains the potential to support these vibrations. If we treat this region of vacuum in the same manner as we treated the block of matter, we can say that the vacuum can support electromagnetic vibrations of frequency f. The quantum mechanical equations for the electromagnetic vibrations in the region of vacuum are identical in mathematical form to the equations for the mass-spring vibrations of the atoms in the block of matter, so the equation for the average energy <E> of each of the possible electromagnetic vibrations is the same: <E>=[n(T)+ In]hf. Only now, n(T) is the number of photons as a function of temperature, and, as before, when T=O K, n(T)=O. But also, as in the atom case, even when T is at absolute zero, quantum mechanics predicts that each possible electromagnetic vibration in the region of vacuum will have a residual average energy of <E>=hW2. This residual energy is an average. It is not that each possible electromagnetic vibration has a "half a photon" but that roughly half the electromagnetic vibrations have one (perhaps more) photons, while the others have no photon.

Now comes the real problem, and the major reason why we need to carry out experiments to verify that the quantum mechanical electromagnetic fluctuations of the vacuum behave as the equations of quantum mechanics predicts. The block of matter has a large, but finite, number of atoms and therefore a finite total quantum mechanical vibrational fluctuation energy. The region of vacuum, however, can support an infinity of electromagnetic vibrations. The region of vacuum cannot support electromagnetic vibrations with wavelengths larger than its largest dimension, but it can certainly support those electromagnetic vibrations with wavelengths smaller than its size, such as infrared, optical, ultraviolet, x-ray, gamma-ray, etc. vibrations. There is no known limit to how small an electromagnetic wavelength can be. Each of these infinity of possible electromagnetic vibrations has an average energy of <E>=hfl 2. So, according to this train of logic, a region of vacuum is not empty, but instead is teeming with an infinity of "half-photons" of electromagnetic energy. The famous physicist Richard Feynman estimated that if the minimum wavelength of electromagnetic vibrations was assumed to be approximately the size of a proton, the "energy density" of the vacuum would be 10108 J/cc 01 equivalently, the vacuum would have a "mass density" of 10"" g/cc. This is much greater than typical nuclear densities of 10'4 g/cc. It is this high predicted energy and mass content of the vacuum that gives rise to the hopes of many that it may be possible to either: extract "free energy" from the

vacuum, "push" on the mass of the vacuum, or use the vacuum mass as "reaction mass.

The quantum physicists explain away this "infinity" of energy by saying that since the vacuum pervades everything, it is only the "differences" in the vacuum energy that are produced by the presence of matter that counts. Needless to say, although the quantum physicists have been able to adjust their equations to cancel out this "infinity" and get the right answers, this is not a philosophically satisfactory solution.

Charged-Particle Pair Fluctuations Of The Vacuum

Not only does quantum mechanics predict that the vacuum is teeming with electromagnetic energy, the uncertainty principle predicts that the vacuum is also teeming with pairs of charged particles called electron-positron pairs. Since the fluctuation photons in the vacuum have energy, then no matter what their energy is supposed to be, there is a finite probability that for a very short time at their energy will be "uncertain" by an amount ~E that is sufficient to create a positron-electron pair. This event, of course, violates the law of conservation of energy, but quantum mechanics allows the violation to take place provided the positron-electron pair annihilates back into the original low energy photon in a time shorter than the time izt allowed by the uncertainty relation ~EL~t>h. This means that the supposedly empty vacuum is not only full of photons, but also has a tenuous "plasma" of charged positron-electron pairs. This "plasma" makes the vacuum have an index of refraction slightly different than unity and makes it respond non-linearly to strong electromagnetic fields.

Verification

It would be simple to say that since this train of logic concerning the effect of quantum mechanics on the vacuum has led to such ridiculously high estimated energy density levels for supposedly empty space, that there is something wrong with the logic, and the vacuum does not have quantum mechanical electromagnetic fluctuations at zero temperature. Yet experiment after experiment has been carried out whose results can be explained by assuming that the quantum mechanical zero temperature electromagnetic fluctuations of the vacuum are real. One such experiment is the Casimir experiment, described in more detail in the main body of the report. In this experiment, two uncharged conducting plates are put near each other with a vacuum between them. Prior to the introduction of the plates, the region of vacuum between the plates had an infinity of possible electromagnetic vibrations and an infinite amount of quantum mechanical electromagnetic fluctuation energy. Since the plates are conducting, they will short-circuit those

electromagnetic vibrations that do not have zero electric field at the position of the conducting plates. In effect, this cuts in "half" the "infinity" of electromagnetic vibrations allowed in the region of vacuum between the plates. The vacuum now has less energy than it did before the plates were introduced. This "negative energy" in the region of vacuum produces a force on the plates that pulls the plates together. A similar result is predicted when the plates are made of dielectrics instead of conductors. This attractive force can be quite large and has been accurately measured using dielectric plates. These experiments show that indeed, the vacuum does contain quantum mechanical zero temperature electromagnetic fluctuations. Experiments using conducting plates are more difficult and have yet to be done accurately. Such an experiment is at the top of the priority list in the body of the report.

Another important experiment was the Lamb-Retherford experiment, where the frequency of microwave radiation emitted by an excited hydrogen atom was compared with theory. The theory only agreed with the experiments when the theorists assumed that the vacuum between the proton nucleus and the orbiting electron in the hydrogen atom had a tenuous plasma of positron-electron pairs in it, that shifted the electron orbital energy just the right amount to agree with experiment. Thus, this experiment shows that, indeed, the vacuum does contain quantum mechanical charged-particle pair fluctuations at zero temperature.

There are many other experiments and phenomena that can only be explained by assuming that the quantum mechanical zero temperature electromagnetic fluctuations of the vacuum are real. Even such mundane phenomena as the surface tension of liquids and the clumping of smoke particles are explained by assuming that the vacuum contains residual electromagnetic fluctuations even at zero absolute temperature.

Alternate Theory

There does exist an alternate theory. In this "Fluctuating Charged Particle Source Field Theory," it is assumed that although the quantum mechanical zero temperature vibrational fluctuations of atoms in matter do exist, the quantum mechanical zero temperature electromagnetic fluctuations of the vacuum do not exist. (The theory does not explain why one type of fluctuation is allowed and the other is not allowed, it just assumes it.) The theory then goes on to say that all the experiments to date, including the Casimir experiment and the Lamb-Retherford experiment can be explained by saying that: (1)The quantum mechanical zero temperature vibrational fluctuations of matter causes the charged particles in the apparatus to undergo random vibrational fluctuations. (2) These fluctuating charged particle "sources" emit electromagnetic radiation fields that travel through the vacuum where they are "received" by all the other charged particles in the apparatus. (3) The electromagnetic radiation field acts

on the receiving charged particles to cause them to move "in phase" with the transmitting charged particle "sources." (4) The "in phase" motions of the two widely separated charged particles produce correlated forces between the "source" particle and the "receiving" particle that in turn produce the observed experimental results.

Amazingly enough, this alternate theory where the vacuum is assumed to have no fluctuations, seems to make the same predictions as the quantum theory where the vacuum fluctuations are assumed real. There is an experiment that can possibly distinguish between the two theories. It is described in the report.

Summary

There is a lot more to quantum mechanics than quantization of mass and energy and the Heisenberg uncertainty principle, but I hope this introductory tutorial has been enough to help you understand why it is important to learn more about the quantum mechanical zero temperature electromagnetic fluctuations of the vacuum. Hopefully, the experiments proposed in the body of the report, if successfully carried out, can increase our knowledge and eventual applications of this "enigma cloaked in nothingness" called the vacuum.

Ranked List Of Possible Experiments

The following is a list of possible experiments ranked in order in terms of: (1) Improving our understanding of the vacuum. (2) The feasibility of carrying out the experiment. (3) Producing a modification in the gravitational or inertial mass of a body. In the pages following are more detailed discussions of the selected experiments.

1. Measurement of Casimir Force on Conducting Plates

The Casimir force on closely spaced conducting plates has never been measured accurately over a wide range of spacings or a wide range of conducting materials. Such experiments need to be done to verify that the force predicted by Casimir (1948) is real and applies to all conducting plates despite their composition. This experiment is ranked first because it is fundamental and relatively easy to carry out with modest funding. It also has the advantage that once a university or contracting team has carried out the first set of experiments, additional experiments with different conductors and different conductor shapes can be carried out on-site at AFPL with duplicate apparatus.

2. Casimir Stress Induced Anisotropic Inertial Mass Measurement

Scharnhorst (1990) used quantum electrodynamics to predict that the speed of light between two conducting plates is anisotropic, with the speed perpendicular to the plates being greater than c. The anisotropic inertial mass experiment assumes that the mass of a body between two conducting plates will also be anisotropic, and proposes to measure that mass anisotropy using a nuclear magnetic resonance technique developed by Drever (1961). This experiment is ranked second despite its great difficulty, because the theory will give a definite prediction of the magnitude of the mass anisotropy expected, so either a positive or negative experimental result will provide a definitive test.

3. Generating "Subcosmic Rays" in a Cold Vacuum Chamber

Rueda, Haisch, and Cole (1995) predict that the electromagnetic fluctuations in the vacuum will accelerate isolated charged particles to high speeds. The theory predicts energy gains of a proton of the order of 1000 eV per second. This should be easily measured by "releasing" a "cooled" antiproton in a cryogenically cooled electromagnetic trap and measuring how fast it reaches the walls and annihilates. This experiment is ranked third, despite its complexity and cost, because a positive result would "prove" that you can continuously extract unlimited amounts of "free energy" from the vacuum. We know, of course, that nature is not going to let us violate the law of energy conservation, but finding out how nature enforces the energy conservation law will teach us new physics.

4. "Inertia Wind" Experiment

Puthoff, in unpublished work that extrapolates from the paper by Haisch, Rueda, and Puthoff (1994), predicts that a pair of 40 kg masses rotating in a 1 m radius circle at 20 rpm will create an "inertia wind" that will "push" on a sensing mass. He originally predicted the magnitude of the "inertia wind" force would be comparable to the magnitude of the Newtonian force produced by the 40 kg masses. His coauthors are skeptical of the predicted magnitude, and

Puthoff is reworking the calculations to obtain a more definitive prediction. This experiment, despite its simplicity and direct relevance, is ranked fourth because, while a positive result will "prove" the theory, a null result will prove nothing. There are also grave doubts that a large effect of this type would have gone unobserved before now.

In addition to the ranked experiments, there are two additional experiments that are described in the main body of the report, but which are not recommended for consideration because the Principal Investigator was not able to identify an experimental approach that would be able to carry out the desired measurement at the signal-to-noise levels required. Perhaps someone reading this report can devise an experimental approach that will make a measurement feasible.

Nonlinearity of Vacuum Experiments

Ding and Kaplan (1989) proposed to generate second-harmonic photons by focusing laser light on a vacuum containing a magnetic field. This is the only experiment known that can distinguish between the two alternate models for vacuum fluctuation effects, the model where the vacuum itself has electromagnetic fluctuations, and the model where the charged particles in the experimental apparatus are doing the fluctuating. Unfortunately, recent estimates by Kaplan and Ding (1995) on the laser power and magnetic field strengths needed have resulted in numbers that are beyond the capabilities of present lasers and magnets.

Making and Weighing "Casimatter"

Schwartz has recently proposed over the Internet that it might be possible to physically "weigh" the Casimir energy in a sample of "Casimatter" composed of thousands of layers of 80 nm thick aluminum alternating with 50 nm thick magnesium fluoride (MgF,). The Casimir energy generated between the conducting aluminum plates would make a finite (negative) contribution to the energy and thereby the mass of the Casimatter sample. He proposes weighing the sample of Casimatter, heating the Casimatter to destroy the layer separation, thus eliminating the Casimir energy contribution, then weighing it again. The mass measurement accuracy required is estimated to be greater than a part in 10^17. The force sensitivity levels are beyond the present capabilities of available atomic force microscopes and the accuracy required for a frequency measurement is beyond the capabilities of available clocks.

Measurement Of Casimir Force On Conducting Plates

In a difficult to find, but widely quoted paper entitled, "On the attraction between two perfectly conducting plates," Casimir (1948) predicted that the quantum fluctuations of the vacuum should produce a pressure P or force F per unit area A on two perfectly conducting uncharged plates given by:

P = F / A = ?hc / 480L^4

where h=6.63x10-34 J·s is Planck's constant, c=300 Mm/s is the speed of light, and L is the separation distance between plates. The appearance of Planck's constant indicates that the effect is due to a quantum mechanical phenomenon. The amazing aspect of the equation is that the predicted force is independent of the material of the plates, as long as they can be considered "perfectly conducting." This means that the equation should be good down to separation distances L that are comparable to the cutoff wavelength of the material.

Everyone assumes that the Casimir force between two conducting plates has been "experimentally demonstrated." It has not. Nearly all the published "Casimir force" experiments used dielectric plates such as glass, quartz, or mica instead, with the most accurate data obtained using cylindrically curved mica surfaces [Israelachvili and Tabor (1972)].

Barton points out that these experiments on dielectrics are not tests of the Casimir force, but instead are tests on the allied but significantly different Van der Waals forces. The Van der Waals force between two dielectric plates is predicted by an equation in the paper by Lifshitz (1956):

F / A = ?hc / 480L^4 (E-1/E+1)^2 ?(E)

where E is the dielectric constant of the plates, and ~(E) is a function that varies from 0.35 when E=1 to 1.0 when E -+ m . It is true the Lifshitz equation turns into the Casimir equation when the dielectric constant is allowed to go to infinity, but anything involving an infinity is suspect.

The last experiments on highlv conducting metal plates were carried out by Sparnaay (1958). His measurements on two chromium or two chromium-steel plates did "not seriously deviate from Casimir's predictions, although the attractions found are somewhat too large. No attractions could be measured between two aluminum plates." The data in the Sparnaay paper is of poor quality. Not only was the magnitude of the Casimir coefficient poorly determined, but because of the experimental difficulties the 1/L4 behavior with separation distance L was not firmly established, and there was no attempt to

show a failure of the Casimir force law at small plate separations when L is smaller than the cutoff wavelength of the conductor.

The most recent experiments using "conducting" plates were published by Arnold, et al. (1979). These experiments used semiconducting silicon plates rather than highly conducting metal plates. Amold found a change when the silicon was illuminated to make it more conducting, but the experimental results did not agree well with the Casimir theory.

Sen (1995) at the University of Washington is presently attempting to measure the Casimir force between two gold-plated quartz flats 5 cm in diameter. The experiment is an undergraduate honors project, which will impact on the time and money available to make thorough measurements. There will also be no attempt to make measurements at close plate separations. Serry, et al. (1995) at the University of Illinois at Chicago are planning Casimir force experiments using aluminum plates embedded in and supported by a silicon-fabrication-based microelectromechanical structure. The minimum separation distances obtainable using this fabrication technique should be better than L=20 nm. The Casimir forces on the supported aluminum plates can be measured using a modification of a commercially available atomic force microscope. The first goal of the UIC group is to build an "Anharmonic Casimir Oscillator" that will oscillate about an equilibrium between the Casimir force and the force of a spring. Such structures could be used to make precise measurements of the Casimir force at different separation distances L and for different conductors. Onofrio and Carugno (1995) in Italy are also planning a Casimir force experiment between conducting plates using a tunneling electromechanical transducer.

It is recommended that the first priority in proposed experiments to study the properties of the vacuum is an experiment to measure the Casimir force between two conducting plates. The experiment should be carried out with a number of different metals over a wide range of plate separations with an accuracy that can determine not only the coefficient in the Casimir equation, but the 1/L4 variation in the force.

The experiments should also be designed to show that the Casimir coefficient and the 1/L4 law are independent of the type of conductor used--down to the point where the separation distance becomes comparable to the cutoff wavelength of the metal. That minimal separation distance, in turn, should be a predictable function of the cutoff wavelength of the conductor being used.

The experiments should investigate other structures than parallel plates, since the Casimir force between conductors is not always attractive. A hollow conducting sphere experiences an outward repulsive force [the most accurate recent calculation is by Milton (1978)]. Ambjorn and Wolfram (1983) have derived the Casimir energy per unit volume for conducting rectangular boxes.

Cubes have positive energy and repulsive forces on the walls, long rectangles or parallel plates have negative energy and attractive forces on the walls, while a rectangular box of relative dimensions 1 by 1 by 3.3 has zero Casimir force. It would be desirable to verify these predictions.

Casimir Stress Induced Anisotropic Inertial Mass Measurment

The Casimir stresses on the vacuum space between two conducting plates are anisotropic. Scharnhorst (1990) and Barton (1990) [see also Barton and Scharnhorst (1993)] used this stress anisotropy to predict an anisotropy in the velocity of light. According to their theoretical calculations, the velocity of light parallel to the conducting plates has the speed of light in an unbounded vacuum, q=c,, while the velocity of light perpendicular to the plates has a speed greater than c by the amount:

C1 / c0 = 1 + 11 ?^2 / 8100 a^2 / (L / Le)^4

where L is the spacing between the Casimir plates, the fine structure constant a=1/137, and L,=h/2Tcm,c=3.86x1 0‑13 m/rad= 0.386 ltm/rad is the reduced Compton wavelength of the electron. Numerically, this amounts to a difference of:

c1 / c0 = 1 + 1.49x10^-56 (meters / L)^4

which implies that the speed of light perpendicular to the conducting places is greater than c.

Some important features of this result are [Barton (1990)]:

(1) This anisotropy of the vacuum space between Casimir plates is calculated to be greater than any dispersion effect, so the phase and group velocities of the light are both given by the same equation and both are greater than c, causing concerns about violation of causality. Fortunately for the sensibilities of those worried about this, Milonni and Svozil (1990) show that Heisenberg uncertainty principle will probably work to prevent the use of faster-thane propagation for the reliable transmission of information back in time.

(2) The size of the effect is the same everywhere between the plates except perhaps very near to the surface of the plates where some of the approximations used might not be valid. By very close, Scharnhorst (1990) states "near denotes a distance of a few Compton wavelengths apart from the plates." An electron Compton wavelength is 2~L,=2.43pm, much smaller than proposed Casimir plate separation distances, typically measured in nm.

Estimate Of Anisotropy Magnitude

It is possible (although difficult) to use ion beam lithography and other sub-micron microelectronic fabrication and processing techniques to construct microelectromechanical structures, such as Casimir volumes, electromagnetic antennas and guides, and atomic force microscopes, with dimensions, spacings, and control of motion accurate to distances of 1 nm (10 A) or less. Our real limit to the spacing distance L, however, is not our ability to fabricate the required Casimir structures. The theory behind equation (3) assumes that the Casimir plates are conducting at all frequencies of the electromagnetic spectrum. Real metals become transparent in the ultraviolet. The broadest band reflector is aluminum, which has a reflectance of 99% in the long infrared, a reflectance of 90% at a wavelength of 120 nm, and becomes transparent at 10 nm [AIP Handbook 1972), see Table 6g-1, pp 6-124ff and Table 69-2, pp 6-157]. Little data exists between the available 120 nm and the 10 no data points, but I would estimate that the minimum wavelength at which the Casimir plates can be considered conducting is about h=60 nm/cycle, or a reduced wavelength of about h/2x=10 nm/rad.

If the theorists agree that equation (3) can be applied to aluminum Casimir plates at a separation distance of L=10 nm, then the maximum magnitude of the Scharnhorst effect achievable in a fabricatable piece of apparatus becomes:

c1/cII = 1 + 1.49x10^-24

The question now is: Is it possible to measure such a small anisotropy?

Measurement Of The Scharnhorst Effect On Light Speed

I have been unable to conceive of a method for measuring an anisotropy in the speed of light between two conducting /13CFasimir plates at the level of parts in 10-24 3ne could think of converting the velocity measurement into a frequency measurement by finding the resonant frequency of a tuned cavity for different Casimir plate spacings, but there are many things other than the Scharnhorst effect that will cause the resonant frequency of a cavity to change.

In addition to the experimental difficulties of making a speed of light measurement, there are theoretical problems that must be addressed first. There have been papers published [Milonni and Svozil (1990) being just one example] which show that the Heisenberg uncertainty principle will produce timing uncertainties in the atoms used to generate and detect the light photons used in the speed measurement. These timing uncertainties will prevent the

accurate measurement of the speed of light or the sending of information faster than c.

Effect Of Casimir Stresses On Inertial Mass

As Landis pointed out in the NASA/JPL Workshop on Advanced Quantum Relativity Theory Propulsion [Bennett, et al. (1995)], if the velocity of light is anisotropic between Casimir plates, then since m=E/c2, perhaps the mass of an object will be anisotropic too. If this is true, it might be easier to measure the anisotropy of inertial mass between Casimir plates than the anisotropy of the velocity of light.

We are not sure that the Casimir stresses will affect the inertial mass of an object. The theory behind the Scharnhorst effect is a perturbation analysis of the inherent nonlinearities in the postulated quantum fluctuations of the electromagnetic fields in the vacuum. Using a simplified model: The fluctuation photons in the vacuum, no matter what their energy, have a finite probability of producing a virtual electronpositron pair with a rest mass energy of 2 x 511 keV, as long as the pair recombines back into the original photon in a time ~t shorter than that allowed by the m' Heisenberg uncertainty principle for the energy difference aE. In this model, the vacuum has a weak virtual "plasma" of charged particle pairs in it, which makes the vacuum polarizable, and gives the vacuum an index of refraction that is not unity. Scharnhorst's actual calculation was not of the speed of light, but of the index of refraction of the vacuum between Casimir plates. He found that the index of refraction was anisotropic, with the index equal to unity in the directions parallel to the plates and slightly less than unity [see equation (24) of Scharnhorst (1990)1 perpendicular to the plates. Scharnhorst then converted this anisotropy in the index of refraction into an anisotropy in the speed of light [see equation (25) of Scharnhorst (1990)1. Since an index of refraction less than unity means a speed of light greater than c, this result gave the Scharnhorst effect its world-wide notoriety.

The important message is that the Scharnhorst calculations showed only that the electromagnetic index of refraction between two conducting Casimir plates is anisotropic. I think everyone agrees that the calculation of the anisotropy in the index of refraction is correct. I also think everyone agrees that an anisotropy in the index of refraction will result in an anisotropy in the speed of light. It is not obvious, however, that an anisotropy in the index of refraction for electromagnetic radiation for the vacuum between two conducting plates will produce an anisotropy in the inertial mass of a body. This needs to be verified by a competent theoretician.

Estimate Of The Scharnhorst Effect On Inertial Mass

I will now assume that the theorists ultimately conclude that, indeed, two conducting Casimir plates will not only produce an anisotropic index of refraction between the plates, and an anisotropic speed of light for photons traveling between the plates, but also an anisotropy in the inertial mass of a body placed between the plates.

The magnitude of the inertial mass anisotropy difference can be estimated by assuming that the total relativistic energy E in the famous equation E=mc' is a constant that is not affected by the Casimir stress. Substituting the two values for the velocity of light from equation (3) and solving for the mass results in:

M1 = E/C2I = E/c20 = m0

And

M1 = E/c2I = [1 - 2 11?^2 / 8100 a^2 / (L/Le)^4] m0

Here, m, is the scalar inertial mass (assumed to be equal to the scalar rest mass) of the body in an unconstrained vacuum where there are no Casimir stresses, and m, and mi are the perpendicular and parallel components of the inertial mass tenser postulated to exist when the body is subjected to Casimir stresses produced by the electromagnetic field constraints resulting from the presence of the two conducting plates.

The assumption that the total relativistic energy of the body, E, is not affected by the presence of the Casimir plates needs to be checked by a competent theoretician. Even if E is also affected by the Casimir stress, it could still turn out that the resultant inertial mass is still an anisotropic tenser, but Derhaos by a different factor than that in eauation (7).

Under the assumption that equation (7) is valid, and that the calculated Casimir stresses apply for plate separation distances as small as L=10 nm, the predicted numerical value for the maximum anisotropy that can be expected in the inertial mass of a body between two conducting Casimir plates is:

MI / MI = 1 - 3.17x10^-24

This is a small difference, but 35 years ago, using relatively crude equipment, Drever (1961) measured the anisotropy of the inertial mass of the nucleus of a lithium-7 atom and found the anisotropy to be zero at a sensitivity

level of 5x10~23. If the Drever technique, or something similar to it, could be applied to a sample confined between two conducting Casimir plates, and the sensitivity of the detecting apparatus could be improved by a few orders of magnitude, then it should be possible to measure the anisotropy of inertial mass caused by two conducting plates at the level predicted by the well-accepted theory of quantum electrodynamics. The experiment would thus conclusively demonstrate, one way or the other, whether anisotropic Casimir stresses between two conducting plates can produce a change in the inertial mass of a body.

Hughes-Drever Anisotropic Inertial Mass Null Experiment

The motivation for the Drever experiment [first carried out by Hughes in 1960 at a lower sensitivity was an experimental test of Mach's principle--that the inertial mass of a body may arise from a gravitational coupling with distant matter. Since there is a concentration of matter at the center of our Galaxy, then, depending upon what physical and mathematical models one used for Mach's principle, this excess of nearby matter might result in an anisotropy of inertia along the (bi)direction to the mass excess, which could be detected experimentally as the Earth rotated the apparatus with respect to the Galactic center.

According to some theories referred to by Drever (1961), this anisotropy in inertial mass should cause shifts in the energy levels of atoms and nuclei subjected to a magnetic field. Specifically, in a nucleus with spin 1=3/2, the energies of the states with magnetic quantum numbers m= ~312 would be increased slightly if the magnetic field were parallel to the direction of the center of the Galaxy, while the energies of the states with ml=~112 would be decreased by an equal amount. If the magnetic field were perpendicular to the direction to the center of the Galaxy, the energies would be shifted in the opposite directions. For the models of inertia being proposed at the time, the predicted ratio of the anisotropy in inertial mass for the nucleus was in the order of 10-13. Drever found it was zero to a sensitivity of 5x10~23.

The isotope used was lithium-7, with a nucleus of spin 1=3/2, caused by an unpaned Pg/2 proton. The four energy levels of a nucleus of spin 312 in a magnetic field are normally equally spaced. The three resonant frequencies between the four states are the same and there is a single resonance. If the ml=+312 energy levels are shifted with respect to the ml=fli2 levels, then the single resonance is split into a triplet. The minimum splitting detectable is usually limited by inhomogeneities in the magnetic field, so a weak uniform field is desirable. The magnetic field used in the experiment was the earth's field.

In the experiment, the lithium-7 sample, in the form of a solution of lithium nitrate, was contained in a plastic bottle surrounded by a coil placed with its axis perpendicular to the direction of the earth's field. A direct current through the loop produced a field of about 200 gauss. When this field was switched off rapidly, the resultant nuclear magnetic moment precessed about the earth's field and an alternating e.m.f. signal was generated in the coil. With no anisotropy to cause shifts in the energy levels, there would be a single resonant frequency present and the signal would decay exponentially with a time constant equal to the transverse relaxation time of the spin system. **f**, however, an anisotropy in inertial mass exists, the resonance response would be split into a close triplet, and the signal would exhibit beats, corresponding to interference between the oscillations at the three resonance frequencies. Very long beat periods would show up as changes in the decay curve shape and l/e time as the experimental parameters that changed the anisotropy were varied. In Drever's null experiment, the rotation of the earth changed the direction with respect to the Galactic center once a sidereal day No variation was found. This corresponds to [Drever (1961)1: "an upper limit for the ratio of the anisotropic part of the inertial mass of a proton to the isotropic part of the order of 5x 10-23..

It should be noted at this point that the lithium-7 nuclei being measured were in a non-symmetric chemical compound, were surrounded by non-symmetric polar water molecules, and a large fraction of them were up against container walls, yet these nonsymmetric surroundings did not induce shifts in the magnetic energy levels that would mimic a differential shift in the energy levels caused by an anisotropic inertial mass of the nucleus.

The fundamental beauty of the Drever experiment is that the nucleus is "self-referencing" in that the ml=~3/2 and ~1/2 nuclear magnetic states produce identical transition frequencies despite large and non-symmetric changes in the surrounding environment that can produce large changes in the absolute energies of the magnetic states. but do not produce differential shifts between the 3/2 and 1/2 states, This probably occurs largely because the nucleus is small in size compared to the distances to neighboring perturbing atoms. IliS only when the nucleus itself changes, by developina an anisotropv in inertial mass, that the transition frequencies change with respect to each other and produce the beat notes. The beat notes are the signal that something has happened.

Caveats Concerning Other Effects Masking Scharnhorst Effect

Barton and Scharnhorst point out that there are other effects that may produce a mass anisotropy that may mask the mass anisotropy produced by the Scharnhorst effect. These effects are of first order in a, and therefore much larger. How precisely they might influence any specific measurement would

need to be thought through. There are papers available that discuss these effects, such as G. Barton, "Quantum mechanics of charged particles near a plasma surface," J. Phys. A10, 601 (1977), and for particles between two mirrors in G. Barton, Proc. Roy. Sec. (London) A320, 251 (1970), and an update with applications to a neutral atom in Proc. Poy. Sec. (London) A410, 141 (1987). All of these need to be investigated by a competent theorist before much time is spent on designing experiments.

I suspect, however, that these papers will either produce an "effective mass" or an "effective mass anisotropy" that comes about due to the interaction of the charges in the i~P~S under consideration with the charges in the plasma or mirrors. These are not fundamental changes in the inertial rest mass of the atom, just an "effective mass" induced by the coupling of the atom to its surroundings. I would suspect that these nonsymmetric effects, just like the non-symmetric effects in the original Drever experiment, will not cause a change in the magnetic level spacing. This, however, needs to be proven.

Applying Free Precession To A Casimir Anisotropy Experiment

The Drever measurement was made by using a nuclear magnetic free precession technique on a bottle of water containing lithium nitrate, which gave better relaxation times than other compounds. The frequency of precession in the earth's magnetic field was 800 Hz and the decay time of the signal was 3.7 s. In practice, the signal was weak and it was necessary to use 2.5 liters of sample to obtain an adequate signal-to-noise ratio. It is obvious that much thought and work needs to be done to convert this experiment into one that can be done within the confines of two closely spaced conducting plates.

Extracting the Signal

The free precession signal in the Drever experiment was a radio-frequency signal of about 800 Hz. The radio frequency is proportional to the applied magnetic field. It might be thought that the nearby presence of the conducting Casimir plates would prevent extraction of the signal. It should be possible, however, to design the radio-frequency portions of the detection circuit so that the conducting Casimir plates are part of the circuit. For example, the Casimir plates could also be the capacitor plates of an RLC circuit resonant at the desired radio frequency. Alternatively, the plates could be designed with spiral conductive pattern, so that could simultaneously be a "pickup coil" at the des radio frequency signal band and a "mirror" at optical wavelengths. In another approach, the applied magnetic field could be increased until the signal frequency is in the microwave band. The Casimir plates could then be designed as a "waveguide" with a very small height-towidth ratio, operating in the transverseelectric (TE) mode, to extract the signals in the desired

microwave band in the direction parallel to the conducting plates, while acting as a mirror at optical frequencies in the direction perpendicular to the plates.

Drive signals can be inserted into the sample either by modifying the structure of the conducting plates as mentioned before, or by simply driving the conducting plates hard with a high power signal and having a small portion of the drive power leak through the conducting plates into the sample inside by evanescent wave propagation.

Sample Size

Drever used a 2.5 liter=2.5x103 cc sample in order to get sufficient signal. The volume in between two 5 cm by 5 cm Casimir plates separated by 10 nm is 2.5x10~ 5 cc, or a factor of 108 reduction in sample size and expected signal, even if we used the entire volume, since the Scharnhorst effect is constant everywhere in the region between the plates. Unless some other complication arises, I would propose filling the volume between the Casimir plates entirely with sample in the form of a high resistivity, low loss dielectric (either liquid or solid). A solid dielectric containing the desired 1=3/2 spin nuclei would be especially easy to work with. Starting with a flat substrate, the deposition of a layer of aluminum, a layer of the dielectric with the desired thickness, and another layer of aluminum (perh~E with some structure to allow electromagnetic coupled to the sample), would result in an encapsulated sample ready to test.

The sample volume and output signal can be increased by designing the radio frequency portion of the structure as a long, possibly folded, waveguide, or as a series or folded parallel multiplate capacitor, with the capacitor plates acting also as the conducting Casimir plates.

Effect of Sample on Casimir Stress

The theorists who calculate the expected mass anisotropy effect should be asked to look at the case where the space between the conducting plates is not a vacuum at zero temperature, but a dielectric with a finite index of refraction, a finite (but very high) resistivity, and a finite temperature. Barton (1990) has already done this for the vacuum between conducting plates at a finite temperature. 1 expect the results of the theoretical calculations will be that the anisotropic Casimir stress remains, although the magnitude may be changed slightly. One expected side effect of filling the cavity with a dielectric sample medium is that although the speed of light will still be anisotropic, the speed of light perpendicular to the plates will no longer be greater than c.

Measurement Sensitivity

The sensitivity of electronic amplifiers has improved substantially in the past 35 years. It is not known whether that improvement has been enough to not only compensate for the decreased sample size, but to also provide additional margin to close the gap between the 5x 10~23 sensitivity of the Drever measurement and the 3.17x10~24 sensitivity needed to measure the Casimir stress induced inertial mass anisotropy as giver equation (8). To improve the signal·to-noise ratio, experts in NMR need to be consulted as to the best nucleus to use, the best compound to put it in, the best host lattice or solution, the optimum magnetic field strength to be applied, the best radio frequency circuit-amplifier combination to extract the response signal, and the best NMR technique to be used (driven resonance or free precession).

Summary

Theorists using the well-accepted theory of Quantum Electrodynamics to calculate the effects of the quantum fluctuations in the vacuum, predict that the velocity of light can be changed by Casimir stresses induced in the vacuum by the presence of a pair of closely spaced conducting plates. It is not yet known, but it is suspected, that the same Casimir stresses will cause a change in the inertial mass of an object. The effect is minute, but it may be possible to design an experiment using a nuclear magnetic resonance free precession technique to measure that change in the inertial mass. The result of the experiment will either be that the inertial mass of a body can be changed, or that our theories of the vacuum must be changed. The implications for either experimental result will be significant.

Generating "Subcosmic Rays" In A Cold Vacuum Chamber

Calculations by Rueda (1978), Cole (1995) and Rueda, Haisch and Cole (1995), indicate that in a very empty region of space with few particles and weak magnetic fields, the vacuum fluctuations will randomly push charged particles to higher and higher speeds until they approach the speed of light. This might be the cause for cosmic rays. According to Haisch, there is a quite large effect on protons, of the order of 1000 eV increase in energy per second. This level of energy is much greater than the thermal energy of a gas of 312 kT (0.04 eV at T=300 K), and larger than any stray "patch" voltages that may exist in a piece of experimental apparatus.

It might be possible to set up a very empty, very cold vacuum chamber, with a single charged particle in it, and monitor the velocity of the charged particle with time to see if it is accelerated. Haisch has suggested that instead of a proton, that an antiproton be used. This suggestion has many advantages

over attempting to use any other particle. Since the theory gives a definitive prediction for a proton, the result should be the same for an antiproton. A single antiproton can been trapped, cooled to millikelvin temperatures, and its presence and initial position in the trap confirmed before the trap voltages are turned oft. A sealed cryogenically cooled trap has essentially no residual air molecules in it. This has been proven by keeping 100,000 antiprotons in a trap for over a month without losing any since an annihilation of an antiproton by a nucleus would have produced easily detectable gamma rays or high energy pions. The traps can be made with a large working area along the axial direction. The antiproton can be "dropped" from essentially zero starting velocity and let fall a number of centimeters. Longer "drop" times can be obtained using a drop tower.

When the antiproton finally strikes the wall of the trap, it will annihilate with the wall nuclei. The annihilation produces 2-6 gamma rays and 3-7 high energy pions, all of which are easily detected by a surrounding complex of radiation detectors. The pion tracks and the gamma ray events can be triangulated back to determine the annihilation point to a mm or so, so the exact time and place of the annihilation event can be determined.

The experiment would then be repeated a number of times until a pattern of annihilation events is obtained. If the pattern is concentrated at the trap bottom, then only gravity accelerations are involved. If the pattern is concentrated at a few spots on the trap walls, then there are "work function patches" on the walls that are attracting the antiprotons to the patches by their electrical potential. If however, the pattern is random in space and very short in time, then this is good evidence that the vacuum electromagnetic fluctuations are the acceleration mechanism. One important aspect of this experiment, is that if the acceleration mechanism is found to operate, then this demonstrates at least one mechanism for the continuous

"Inertia Wind" Experiment

According to unpublished studies by Puthoff, accelerating and decelerating inertial masses interact with the surrounding vacuum fluctuation field and create an "inertia wind" that propagates out through the vacuum. If a test mass is placed near the source, the outspreading inertia wind will interact with the test mass, pushing or pulling it, and causing it to respond. Puthoff originally calculated that a pair of 40 kg source masses rotating in a 1 meter radius circle at about 20 rpm can create an attractive or repulsive inertia wind force on a test mass comparable in amplitude to the attractive Newtonian gravitation force of the source masses. Puthoff has built some apparatus and is presently conducting experiments. The output of his sensing apparatus is presently dominated by large noise signals, such as ground noise and magnetic coupling to the rotating steel beam holding the generating masses.

There is yet no publication which describes the experimental apparatus and which outlines in mathematical detail the physical model used to predict the experimental result. Such information that exists can be obtained by contacting Puthoff directly.

Although Puthoff feels that the "inertia wind" theoretical model he is using to design the experiment and predict the experimental results is a straightforward extrapolation of the theory in the paper by Haisch, Rueda, and Puthoff (1994), his coauthors on the original paper are skeptical of the predicted magnitude, and Puthoff is now reworking the calculations to obtain a more definitive prediction. Rueda, in particular, feels that any "wave" generated by an accelerating mass would stay attached to the mass as a "solitonic type" wave, and would not create an "inertia wind" to detect.

The reason this experiment is placed low on the priority list is that Puthoff's colleagues on his theoretical paper do not agree with Puthoff's inertia wind theoretical extension of their joint paper. Thus, this experiment fails the criteria that a null result will disprove the theory.

It would seem to me, that a force this large would have been noticed before, especially during gravity antenna calibration experiments carried out by Forward and Miller [J. App. Phys. 38, 512-518 (1967)) using rotating masses and Sinsky [Ph.D. Thesis, University of Maryland (1967)1 using vibrating masses. These experiments should be reanalyzed using the Puthoff "inertia wind" model to see if the "inertia wind" effect should have been seen in those papers. Puthoff and Little are presently analyzing the Forward paper.

Also, according to Puthoff, rapidly rotating gyroscopes should produce an inertia wind. This should lead to measurable forces and torques of one gyroscope on another. It would seem that these forces would have easily been seen by now, especially if torques are generated, since the gyroscopes on precision inertial platforms are fairly close to each other. Again, calculations need to be done.

Nonlinearity Of Vacuum Experiments

In the paper, "Nonlinear Magneto-Optics of Vacuum: Second-Harmonic Generation," Ding and Kaplan (1989) proposed to generate second-harmonic "doubled" photons by focusing intense pulsed laser light on a region of the vacuum that had a strong magnetic field in it. According to classical electromagnetic theory, the electromagnetic field is completely linear, so there should be no interaction between the laser photons and the magnetic field. But if the fluctuations of the vacuum are taken into account, then the virtual positronelectron particle pairs created by the fluctuations result in a polarizable "plasma" in the region that can provide the nonlinear coupling mechanism needed to generate the second-harmonic photons.

This experiment is important since it can distinguish between two existing physical models for the vacuum. In the standard quantum mechanical model, not only do atoms in matter undergo residual vibrational fluctuations even at zero absolute temperature, but the vacuum itself contains residual electromagnetic fluctuations. In the alternative "Fluctuating Charged Particle

Source Field Theory model, it is assumed that although atoms undergo residual vibrational fluctuations, there are no electromagnetic fluctuations of the vacuum and especially, there are no charged-particle positron-electron pairs being created in the vacuum. All the effects that occur in this model are produced by the vibrational fluctuations of the charged particle "sources" in the apparatus creating electromagnetic fields that pass through the vacuum to the other charged particles in the apparatus, causing them to vibrate in phase with the "source" particles. This "in-phase" sympathetic vibration produces forces which produce the experimental results.

The interaction region in the proposed experiment by Ding and Kaplan will contain only laser light, magnetic fields, and vacuum. It will contain no charges, no polarizable particles, and no conductors, so there is no mechanism to explain a successful experimental result from the fluctuating chargedparticle source field point of view--unless one cannot ignore the currents in the source of the magnetic field, even though that source is distant from the interaction region. A positive result from the experiment of the right magnitude would "prove" that the vacuum itself contains quantum fluctuations of the electromagnetic field. A null result from the experiment would "prove" that the fluctuation charged-particle source field model is the more "correct" model, and the idea that the vacuum itself has fluctuations is not a correct physical picture.

This experiment would be difficult to do, since it requires high laser intensities and high magnetic fields at the same time. The field intensities required to produce a detectable number of doubled photons were recently re-estimated by Kaplan and Ding (1995) to be 1022 W/cm2 of pulsed laser flux focused on a 1000 T pulsed magnetic field. These required laser intensities are far beyond those projected to be available in the near future, so this experiment is not recommended for consideration at the present time.

There is an alternate way to do the experiment. Instead of concentrating a large number of laser photons of moderate photon energy into a small region to obtain the required high photon energy density, the energy of the individual photons can be increased so as to obtain the required high energy density with fewer photons. An Italian group (Bakalov, et al. 1994) has proposed an experiment using a 9 T magnetic field and high energy photons produced by a particle accelerator rather than a laser. A successful measurement would amount to a direct observation of the "polarization" of the vacuum produced by

the production of charged-particle positron-electron pairs in the vacuum. This experiment is being funded as part of the Italian high energy physics program.

Making And Weighing Casimatter

Alan M. Schwartz has recently proposed over the Internet that it might be possible to physically "weigh" the Casimir energy in a multigram sample of "Casimatter," composed of thousands of layers of 80 nm thick aluminum alternating with 50 nm thick magnesium fluoride (MgF2), which is a good dielectric that is easy to deposit. The Casimir energy generated between the conducting aluminum plates would make a finite (negative) contribution to the energy and thereby the mass of the Casimatter sample. He proposes weighing the sample of Casimatter, heating the Casimatter to destroy the layer separation, thus eliminating the Casimir energy contribution and turning the Casimatter into ordinary matter, then weighing it again. His internet message did not go into great detail and did not give an estimate of the size of the effect to be expected. It is, however, relatively easy to take his idea, push it to the extreme, and see if the maximum calculated mass difference is within the reach of possible future measurement techniques, and thus is a possible candidate for a mass modification experiment.

Aluminum has a reflectance of 90% at a wavelength of h=120 nm/cycle [AIP Handbook, 3rd Ed. (1972), Table 6g-1, page 6-124] and drops after that, but there is no handbook information what the cutoff wavelength is. (Elsewhere in this report, on page 15, 1 estimate it at h=60 nmicycle.) The minimum thickness of aluminum film needed to give that high 90% reflectance is about 40 nm [AIP Handbook, 3rd Ed. (1972), Table 6g4, p. 6159], although the reflectance of a thin aluminum film is still 87% at 30 nm thickness and 76% at 20 nm thickness, so thinner films can be considered if desired.

I will assume (as I did on page 15), that the appropriate Casimir plate spacing L for a given cutoff wavelength is not the wavelength (L=h), or half the wavelength (L=h/2), but instead the reduced wavelength given by L=~J2a. [This assumption needs to be verified by a competent theorist, and if not correct, then the following analysis needs to be revised with new numbars.]

Given the above, let us consider an extreme version of Casimatter, consisting solely of a very large number of very thin aluminum film layers at very close spacings. I will make the conservative assumption that the reflectance cutoff wavelength for aluminum is A=120 nm/cycle (90% reflecting), which means that we can consider a spacing between the aluminum plates in the Casimaner of L=A/2r(=20 nm, and the thickness of the aluminum films as 40 nm. To simplify things, I will assume that the 20 nm spacing between the aluminum films will be filled with an ideal dielectric with index of refraction 1 and density 1 gicc.

The Casimir formula for the energy per unit area between conducting plates of area A and spacing L is:

u = U/A = - ?hc / 1440L^3

where h=6.63x~ 0-34 J.s and c=300 Mmis. From this, it is easy to calculate the energy density e in the volume between two of the plate pairs of area A and separation L that make up one of the layers.

e = u/L = = U/LA = - ?hc / 1440L^4

For a spacing of L=20 nm, the (negative) energy density is -2.7 kJ1 m3 or -2.7 mJ/cc. This energy density gives the vacuum a relativistic mass density p, of:

Pv = e/c^2 = ?h / 1440cL^4

which for a layer spacing of L=20 nm results in a negative mass density for the vacuum of -3.0x10~14 kgim3 or -3.0x10~17 gicc.

If we assume the thickness of the aluminum plates to be T=40 nm and the separation between the plates to be L=20 nm. then 213rds of the volume will be aluminum with density 2.7 gicc and 1/3rd will be the ideal dielectric with density 1 gicc, for an average density of the matter in the Casimatter of 2.23 gicc. The 1/3rd containing the dielectric will also contain the negative Casimir mass density of -3.0x10~17 g/cc, for an aver age density of the vacuum energy in the Casimatter of 1.0X10^-17 g/cc.

For an experiment, we would want to fabricate about a cubic centimeter of Casimatter, probably in the form of a plate in cm by 10 cm by 0.01 cm thick. Since the thickness of a layer pair is 40 nm of aluminum followed by 20 nm of dielectric, or 60 nm overall, there would be 1667 layer pairs, not that difficult to fabricate. The real question would be whether it is possible to measure a sample and its container vial massing a few grams to an accuracy of 10-17 g or better. Right now, I can't think of a way to do it, since the force levels are beyond the present capabilities of available atomic force micro-scopes and the accuracy required for a frequency measurement is beyond the capabilities of available clocks.

People thinking about working on this idea should appreciate that the energy density levels involved are smaller than chemical energies and an experiment must include accurate calorimetry. For example, since aluminum

has a specific heat of about 0.9 JIK·S, in order to measure the estimated Casimir energy density of the Casimatter of 2.7 mJ/cc, a 1 cc sample would have to be temperature controlled to better than a millikelvin, and the heat flow into or out of the sample would have to be known to better than a millijoule. In fact, a useful first experiment would be to fabricate some Casimatter and measure how much it cools off as the negative Casimir energy in the Casimatter is eliminated by destroying the internal structure. This thermal-type experiment would show that the Casimir effect produces measurable negative energy, but it would not give any definitive experimental evidence for a mass modification effect.

Annotated Condensed Bibliography

This bibliography is not complete. It merely contains the more important papers that I used in writing this report.

AmbjBm, Jan and Stephen Wolfram, "Properties of the Vacuum. 1. Mechanical and Thermodynamic, Annals Physics 147, 1 32 (1983) paper derives Casimir energy per unit volume for conducting rectangular boxes. Cubes have positive energy and repulsive forces on the walls, long rectangles or parallel plates have negative energy and attractive forces on the walls. See especially Fig. 4.2 on page 16. Be careful in using this paper since the calculations are for many different types of fields--scalar, vector. etc, and many different boundary conditions. Make sure you get the right one for the electromagnetic field and electromagnetic boundary conditions. See also Hacyan (1993).)

Arnold, W,, S, Hunklinger, and K. Dransfeld, "influence of optical absorption on the van der Waals interaction between solids," Physical Review B19, 6049-6056 (1979): Erratum, Physical Review 821, 1713 (1980).[Last measurement of the Casimir force (15 years ago!). Crystalline quartz, borosilicate glass, and silicon. Good agreement with data, but the experiments only ranged from 80 to 1000 nm and didn't get very far into the 1/L3 unretarded region. The Casimir force between two silicon surfaces increased when the silicon was illuminated. However, silicon seemed to behave differently than expected at close distances. Reason for difference not known.]

Bakalov, D,, et al.,"PVLAS - Vacuum Birefringence and Production and Detection of Nearly Massless, Weakly Coupled Particles by Optical Techniques," Nuclear Physics B S35, 180-182 (1994). [PVLAS is an experiment designed to measure the vacuum magnetic birefringence. It is based on a very sensitive ellipsometer and a 9 T superconducting dipole magnetic. See also Cantatore (1991).]

Barton, G., "Faster-than-c light between parallel mirrors: the Scharnhorst effect rederived," Physics Letters 8237, 559-562 (1990). [Rederives the Scharnhorst effect from another viewpoint and ends up agreeing with Scharnhorst. See also Milonni and Svozil (1990).]

Barton, G. and K. Scharnhorst, "OED between parallel mirrors: light signals faster than c, or amplified by the vacuum, J. Physics A26, 2037-2046 (1993). [Either the high-frequency index of refraction of the vacuum between parallel mirrors is less than one, indicating that light travels faster than c, or at some range of the higher frequencies, the imaginary part of the index of refraction becomes negative, which means that the vacuum is an amplifier of light.)

Bennett, Gary L., Robert L, Forward, and Robert H. Frisbee, "Report on the NASAIJPL Workshop on Advanced QuantumiRelativity Theory Propulsion," AIAA Paper 95-2599, 31st AIAA/ASME/SAE/qSG Joint Propulsion Conference, San Diego, CA (JII July 1995). [See page 10 for discussion ol~YP1 Scharnhorst effect.]

Black, W,, J.G.V. de Jongh, J.T.G. Overbeek, and M.J. Sparnaay, "Measurements of retarded van der Walls' forces," Trans. Faraday Son'ety 56, 1597-1608 (1960). [Measured liL4 terce for two flat glass plates and 1/L3 force for flat plate and spherical surf ace. Data full of scatter. Lots of information on experimental techniques and problems that must be avoided. This paper supersedes previous papers by Spamaay, 1957 and 1958, and Overbeek and Sparnaay, 1954.]

Boyer, T.H,, "Equilibrium distributions for relativistic free particles in thermal radiation within classical electrodynamics, Physical Review A20, 1246-1259 (1979). (Calculates that free charges acted on by zeropoint radiation will randomly diffuse to higher and higher velocities. Used by Cole (1995) and Rueda, Haisch and Cole (1995) for their astrophysical papers.]

Cantatore, G., F. Dellavalle, E. Milotti, L. Dabrowski, and C, Rizzo, "Proposed Measurement of the Vacuum Birefringence Induced by a Magnetic-Field on HighEnergy Photons," Physics Letters 8265, 418-424 (1991). [Proposes an experimental set-up to observe and measure the interaction between high energy photons and a strong magnetic field. The successful measurement of such an effect would amount to a direct observation of QED vacuum polarization. See also Bakalov (1994).]

Carlip, S., "Comment on 'Gravity as a zero-point-fluetuation force'," Physical Review A47, 3452-3453 (1993). [Puthoff's reply follows. Carlip says that PY~ did his calculations wrong and Puthoff replies t~m did them right.)

Casimir, H,B.G., "On the attraction between two perfectly conducting plates," Proceeding Koninklijke Nederlandse Akademie van

Wetenschappen, Amsterdam 51, No. 7, 793-796 (1948) [in English]. [The paper that started it all. It is an extrapolation of the more detailed paper, Casimir and Polder (1948).]

Casimir, H,B.G, and D. Polder, "The influence of retardation on the London-van der Waals forces, Physical Review 73, 360-372 (1948). [Applies retardation to the London-van der Waals calculations of the attraction between a neutral atom to a wall and two neutral atoms. London and van der Waals got liR3 and 1/R6 (which didn't agree with experiment). Retardation makes the forces drop off as ii R4 and liR7. The "correction factor" had Planck's constant in it, indicating the extra factor of 1/R had something to do with quantum theory. Casimir then wrote his paper (1948) on the attraction between two conducting plates.)

Cole, Daniel C., "Possible thermodynamic law violations and astrophysical issues for secular acceleration of electrodynamic particles in the vacuum," Physical Review E51, 1663-1674 (1995). [See Rueda (1978). Boyer (1979) and Rueda, Haisch and Cole (1995). Tries to explain away the thermodynamic problems associated with the unrestrained growth of the speed of charged particles driven by vacuum fluctuations.]

Deriagin, B.V. and I.I. Abrikosova, "Direct measurements of molecular attraction of solids," J. Phys. C~PPL: Solids 5, 1-10 (1958). [A summary of previous pill Data on quartz surfaces, glass surfaces, and c~F~:;i~~' um-quartz, using a spherical surface against a flat surface. Good deal of information about experimental pro cedures to get rid of electrical patch effects and dust.]

Ding, Y.J. and A.E. Kaplan, "Nonlinear Magneto-Optics of Vacuum: Second-Harmonic Generation, Physical Rev,ew Letters 63, 2725-2728 (18 December 1989). [Predicts that a high power laser beam focused ACie" a strong magnetic field will produce second-har~onlc photons due to the nonlinearity of the photon~hoton scattering in the vacuum. Milonni agrees that if not successful, then this shows that the vacuum itself has no fluctuations and the source model is a more correct physical model of the vacuum. The power required was increased substantially in the recent paper by Kaplan and Ding (1995).]

Drever, R.W.P., "A search for anisotropy of inertial mass using a free precession technique, Philosophical Magazine 6, 683-687 (1961). [Experiment done to test Mach's Principle of inertia. Can detect anisotropy of inertial mass to 5x10~23~]

Forward, Robert L., "Extracting electrical energy from the vacuum by cohesion of charged foliated conductors." Physical Review BJO, 1700-1702 (15 August 1984). [Proposes to convert the "surface energy" of a foliated conductor into electrical energy by cohering the leaves of the foliated

conductor into a solid block (with less surface energy) under the control of a bidirectional power supply that extracts energy in the form of electricity. Does not violate energy conservation laws.]

Hacyan, S., R. Jauregul and C. Villarreal, "Spectrum of quantum electromagnetic fluctuations in rectangular cavities, Physical Review A47. 4204-4211 (1993). [Calculates Casimir energy and pressure in rectangu· lar cavities. Agrees in general with Ambje~m and Wolf ram (1983), but finds slight differences. See Fig. 1.)

Haisch, Bernhard, Alfonso Rueda, and H.E. Puthoff, "inertia as a zero-point-field Lorentz force", Physical Review A49, 678-694 (1994). (One of the two papers that initiated the study. States that the inertia of a body is caused by the fluctuations of the vacuum. No objections to this paper have been published yet.]

Hawton, Margaret. "One-photon operators and the role of vacuum fluctuations in the Casimir force," Physical Review A50. 1057-1061 (1994). [Proposes that spontaneous emission and the Casimir force can be explained by creation of single photons at the positions of charged particles]

Hessels, E.A., PW. Arcuni, F.J. Deck, and S.R. Lundeen, "Microwave spectroscopy of high-L, n=10 Rydberg states of helium, Physical Review A46, 2622-2641 (1992). [Long, detailed experimental paper. Although the electron and the rest of the helium atom is charged, so that electric forces are dominant, the Casimir-Polder retarded forces must be included in the theory to get the right result. For example, the separation between the 10G and 10H levels is 491,005.2 kHz, while the theory predicts 491,007.5 kHz, of which 42.2 kHz is the retardation effect. The residual of 2.27+0.5 kHz (5 sigma) is not understood.]

Hunklinger, S., H. Gersselmann, and W. Arnold, "A dynamic method for measuring the van der Waals forces between macroscopic bodies. Rev. Sci. Instruments 43, 584-587 (1972). (Reasonably accurate measurement of liL4 law at distances of 80 to 800 nm. Uses speaker cone modulation of one plate to measure the derivative of the Casimir force as a function of separation distance.]

Iacopini, E., "Casimir effect at macroscopic distances," Physical Review A48, 129-131 (1993). r lc~Casimir force on the mirrors will be periodic using confocal mirror resonator structure to Casimir force at a few centimeters. Predicts with change in mirror separation. I don't think the analysis has been done carefully enough. Needs to be verified by a good vacuum theorist.]

Israelachvili, J.N. and D. Tabor. "Measurement of van der Waals dispersion forces in the range 1.5 to 130 nm," Proc. Roy. Sec. A331, 19-38 41972). [Very good experimental results showing both liL4 and 1/L3 laws.

Done with mica cylinders rather than metal plates. Supersedes Tabor and Winterton, 1969.]

Kaplan, A.E. and Y.J. Ding, "Field-Gradient-Induced Second Harmonic Generation in Magnetized Vacuum. [Submitted to JOSA B (1995). New calculations increase the estimated laser power required to 1022 W/cm2 from the estimated power of 1014 W/cm2 in their previous paper by Ding and Kaplan (1989).]

Kitchener, J.A. and A.P Presser, "Direct measurement of the long-range van der Waals forces", Proc. Royal Sec. A242, 403-409 (1957). (Reasonably good measurement of l/L4 law. Experimental technique shows that "mosaic" charges on the plates are a problem error source.]

Latorre, Jose, Pedro Pascual and Rolf Tarrach, "Speed of light in non-trivial vacua," Nuclear Physics 8437, 60-82 (1995). [Interesting paper that shows that the speed of light in vacuum is given by a very general formula clc0=1-44a2pi135m4, where a is the fine structure constant, m is the mass of the electron, and p is the energy density of the field being considered. This seems to hold for electric, magnetic, gravitational, temperature, and Casimir fields, including the mysterious factor of 11. If the energy density p is negative, as it is in the gravitational and Casimir field cases, then the speed of light is faster than cOj

Levi, Barbara Goss (editorial summary), "New evidence confirms old predictions of retarded forces," Physics Today, 18(April 1993). [Readable summary of what was going on in the field of long range interatomic forces as of 1993.]

Lifshitz, E.M., "The theory of molecular attractive forces between solids," Soviet Physics JETP 2, 73-83 (1956) [Zh. Eksp. Teer. Fit 29, 94 (1955)1. [Good theoretical paper deriving the Casimir force for dielectrics instead of conductors.]

Milonni, P.W., "Casimir forces without the vacuum radiation field," Physical Review A25, 1315-1327 (1982). [One of many papers by Milonni showing that there are two alternative physical models for the various Casimir effects--vacuum fluctuation fields and charged particle source fields. This paper calculates the Casimir-Polder attraction of a neutral atom and a plate, and the van der Waals force between two neutral atoms.]

Milonni, Peter W., The Ouantum Vacuum: An Introduction to Ouantum Electronics, Academic Press, New York (1994). (Book containing highly mathematical discussion of many quantum vacuum fluctuation phenomena including a number of experiments. Very good on the "history" of the field, but not an easy read for experimentally oriented types.]

Milonni, P.W. and M.-L. Shih, "Source theory of the Casimir force," Physical Review A45, 4241-71 (1992). [A more recent paper that does the

calculation for the Casimir force between plates using many different physical models. This paper intimates that it might be possible to modify or modulate the van der Waals interaction by spatially coherent laser radiation.]

Milonni, Peter W., and Karl Svozil, "impossibility of measuring faster-than-c signaling by the Scharnhorst effect," Physics Letters 8248, 437-438 (1990). [Calculates that quantum uncertainties in turning on an electromagnetic signal will create errors in timing larger than the time difference created by the signal propagating 'Yaster-thanlight." It is not that Scharnhorst is wrong, it is just that a simple propagation time measurement will not lead to a violation of causality because of basic quantum uncertainties.]

Milton, Kimball A., Lester L. DeRaad, Jr., and Julian Schwinger, "Casimir Self-Stress on a Perfectly Conducting Spherical Shell," Annals Physics 115, 388403 (1978). [Recalculates the repulsive stress on a sphere to higher accuracy.]

Mostepanenko, V.M. and N.N. Trunov. "The Casimir effect and its applications, Soviet PXhysics Usp. 31, 965-987 (1988) [Usp. Fit. Nauk 156, 385-426 (1998), in Russian.]. [General review paper of the Casimir effect. Authors make the point on page 980 that the Casim~forceexperiments shows the physical reality of the fluctuations of the electromagnetic fields in the vacuum, while the Lamb-Retherford experiments show the physical reality of the fluctuations of the virtual particles (positron-electron pairs) in the vacuum.]

Onofrio, Roberto and Giovannl Carugno,"Detecting Casimir forces using a tunneling electromechanical transducer, Physics Letters A198. 365-370 (1995). [Authors mention on page 369 that the gravity force of the Casimir disks are larger than the Casimir forces.)

Puthoff, H.E., "Gravity as a zero-point-fluctuation force," Physical Review A39, 2333-2342 (1989). [One of the two papers that started this study effort. Takes an idea by Sakharov and puts some mathematical flesh on it. The major problem with the paper is the assumption that ALL matter is made up of charged point-mass particles, such as electrons and quarks. This is nearly true, but electromagnetic fields and gluons do contribute to the gravity of an object, but they are not made of charged point-mass particles.)

Rueda, A., "Model of Einstein and Hopf for Protons in Zero-Point Field and Cosmic-Ray Spectrum," II Nuovo Cimento 48A, 155-183 (1978). [It is proposed that the acceleration of cosmic-ray protons is caused by the zero-point electromagnetic fluctuations of the vacuum.]

Rueda, Alfonso, Bernhard Haisch, and Daniel C. Cole, "Vacuum zero-point field pressure instability in astrophysical plasmas and the formation of cosmic voids," Astrophysical J. 445, 7-16 (1995). [Amplifies what is said in Rueda (1978), Boyer (1979) and Cole (1995). The fluctuations of the vacuum in empty space will accelerate charged particles in regions of space of low

density and low magnetic fields until the particles become very high energy cosmic rays.]

Sassaroli, E., Y.N. Srivastava, and A. Wldom, "Photon production by the dynamical Casimir effect," Physical Review A50, 1027-1034 (1994). ISee also Srivastava, Widom, and Friedman (1985). They show that it is possible to create intense photon radiation when two conducting plates are modulated periodically. Widom reports they are planning on doing experiments to look for this effect.]

Scharnhorst. K., "On propagation of light in the vacuum between plates," Physics Letters 8236, 354-359 (1990). [Calculates that the velocity of light between two Casimir plates is anisotropic, with the velocity of light perpendicular to the plates being greater than the velocity of light in unconfined space. See Barton (1990), Barton and Scharnhorst (993), and Milonni and Svozil (1990).] ~K. Scharnhorst wishes to p4Oint out that Eq. (26) in this paper should read ~c/c-1.5x10~56 a4·)

Sen, Dev. "Casimir force measurement between two goldplated quartz flats at large separations," oral paper at meeting of the APS Division of Atomic, Molecular, and Optical Physics, Toronto, Canada (15-19 May 1995). [Viewgraph copies only. No paper" was prepared. The only ongoing experiment attempting to measure the Casimir force between conducting plates. Dev Sen is doing the experiment as an undergraduate honors project at the University of Washington under the supervision of Prof. Steve K. Lamoreaux. He has recently achieved a plate separation of 8 ~m during setup, but still has a long way to go before starting to take data.]

Serry, F Michael, Dirk Walliser, and G. Jordan Mackay, "The anharmonic Casimir oscillator (AGO): The Casimir effect in a model microelectromechanical system," IEEE/ASME J~ Microelectromechanical Structures (Dec 1995). [Analysis of a microelectromechanical structure that should oscillate about an equilibrium between the Casimir force and the force of a spring, and a voltage activated mechanical "switch" that uses the Casimir force to hold the switch closed. The group plans on fabricating the structures analyzed.]

Sldles, J.A., at al., "Magnetic resonance force microscopy," Review of Modern Physics 67, 249-265 (1995). (Reviews a possible method for measuring a small terce on a small body. Basically an atomic force microscope modified to measure nuclear magnetic moments by measuring the force on the sample.]

Spamaay, M.J.. "Measurements of Attractive Forces Between Flat Plates," Physica 24, 751-764 (1958). [Last measurement made of Casimir force between metal plates. Data poor in quality. Chromium-steel and chromium plates produced attractive forces, but all author could say was, "The observed attractions do not contradict Casimir's theoretical prediction." Was not able to

measure forces between aluminum plates. Often got repulsion (probably due to dust or oxide) instead of attraction.)

Srlvastava, Y., A. Wldom, and M.H. Friedman, "Microchips as precision quantum-electrodynamic probes, Physical Review Letters, 55, 2246-2248 (1985). [Calculates that the QED fluctuations for present metal-oxide-semiconductor field-effect transistors is typically 0.1 of the electrostatic energy. See also Sassaroli. Srivastava and Widom (1994).]

Sukenlk, C.I., M.G. Boshler, D. Cho, V. Sandoghdar and E.A. Hinds. "Measurement of the Casimir-Polder Force," Physical Review Letters 70, 560-563 (1993). [Fairly convincing measurement of attraction of a neutral, unexcited sodium atom to a conducting wall, showing retardation must be taken into account.]

Short List Of Active Researchers In Vacuum Fluctuations

Barton, Gabrlel Physics and Astronomy Division University of Sussex, Brighten BN1 9QH, England, UR G.Barton@sussex.ac.uk Theoretical work on many aspects of vacuum fluctuation, including the problem of the superluminal speed of light between Casimir plates.

Boyer, Timothy H. Department of Physics The City College of the City University of New York Convent Avenue at 138th Street New York, New York 10031 USA boyer@sci.ccny.cuny·edu Many theoretical papers on vacuum fluctuations.

Braginsky, Vladlmlr B. Moscow State University, Moscow 119899, Russia brag@mol.phys.msu·su Coauthor with F.Ya. Khalili on vacuum fluctuation "friction" and "damping." Usually works on gravitational radiation antennas and "quantum non-demolition" measurement techniques.

Cantatore, G. Departimento Fisica, Univ. Trieste, 1-34127 Trieste, Italy Papers on interaction of high energy photons with a magnetic field.

Carugno,Glovannl Institute Nazionale di Fisica Nucleare Sezione di Padova, 35131 Padua Italy Paper with Roberto Onofrio on detecting casimir forces using a tunneling electromechanical transducer Paper on interaction of high energy photons with a magnetic field.

Cole, Danlel C. IBM Corporation, Essex Junction, VT 05452 USA dan cole@vnet.ibm.com Go-author with Haisch and Rueda on cosmic void ZPF particle acceleration paper.

Ding, Yujie (Y.J.) Department of Physics and Astronomy Bowling Green State University 104 Overman Hall Ridge Street, Bowling Green, OH 43403 USA yding@andy.bgsu,edu Go-author of papers on nonlinear magneto-optics of vacuum with A.E. Kaplan.

Drever, Ron Physics Department, California Institute of Technology Pasadena, CA 91125 USA rond@tapir.caltech.edu Measured anisotropy of inertia to 5x10-23 in 1961 paper. Now running CalTech portion of LIGO (Laser Interferometer Gravitational Observatoryl.

Eberlein, Claudia Newnham College, Sidgewick Ave. Cambridge, CB3 9DF England, UK claudia@cromwell·physics.uiac.edu Papers on theory of sonoluminescence being due to the Unruh effect.

Forward, Robert L. Forward Unlimited, P.O. Box 2783, Malibu, CA 90265 USA forward@whidbey.com Paper on extracting electrical energy from the vacuum. Conducted contract studies of vacuum fluctuation phenomena for the U.S. Air Force and NASA/JPL.

Haisch, Dr. Bernhard Lockheed Solar and Astrophysics Laboratory Div. 9130, Bldg. 252, Lockheed Pale Alto Research Lab. 3251 Hanover St., Pale Alto, CA 94304 USA haisch@sag.space.lockheed.com Coauthor with Puthoff and Rueda on vacuum fluctuations being the source of inertial mass. High energy physicist and Associate Editor, The Astrophysical Journal.

Hawton, Margaret Department of Physics, Lakehead University Thunder Bay, Ontario, Canada P7B 5E1 mhawton@gale.lakeheadu.ca Papers on source fluctuations causing effects rather than vacuum fluctuations. Doesn't believe in vacuum fluctuations.

Hinds, E.A. Physics Department, Yale University POB 6666, New Haven, CT 06520 USA Paper on measurement of the Casimir-Polder force with ground state sodium atoms between plates with G.I. Sukenik, M.G. Goshier, D. Cho, and V. Sandoghdar.

lacopini, E. Dipartimento di Fisica dell'llniversita di Firenze Florence, Italy Proposed experiment to use confocal mirrors as Casimir plates to measure the Casimir force at centimeter distances.

Kaplan, Alexander A., Prof. Dept. Electrical and Computer Engineering, The Johns Hopkins University, 3400 N. Charles Street, Baltimore, MD 21218 USA sasha@super.ece.jhu.edu hnp:il psi.ece.jhu.edui-kaplan Go-author of papers on non-linear magneto-optics of the vacuum with Yujie Dins.

Lamoreaux, Steve K. Physics Department, Bldg. F-15 University of Washington, Seattle, WA 98195 USA lamore@galileo.phys.washington.edu Faculty adviser to Dev Sen on experiment to measure the Casimir force between two gold-plated quartz flats at large distances.

Latorre,JoseL Departament d'Estructura i Constituents de la Materia Facultat de Fisica, Universitat de Barcelona Diagonal 647, 08028 Barcelona, Spain latorre@ecm.ub.es Wrote 1995 paper calculating the speed of light for a different "non-irivial vacua" with Pedro Pascual (pascual@ecm.ub.es) and Rolf Tarrach (rolf@ecm.ub.es)

Maclay, G. Jordan Department of Electrical Engineering and Computer Science University of Illinois at Chicago MIC 154, P.O. Box 4348, Chicago, IL 60680 USA He and students are looking at measuring and using Gasimir forces in microelectromechanical structures.

Mead, Franklln B., Jr. PVRRF Air Force Phillips Laboratory, Edwards tLF CA 93524-7680 USA Has filed patent on extracting energy from the vacuum.

Milonnr, Peter W. Theoretical Division, LANL, Los Alamos, NM 87545 USA pwm@t4.lanl gov Many papers showing that effects attributed to vacuum fluctuations can be explained by correlated quantum fluctuations of the source charges in the experimental apparatus.

Onotrio, Roberto Dipartimento di Fisica, Universita di Padova Via Marzolo 8, 35131 Padua Italy onofrio%38619.hepnet@csa4.LBl.gov Paper with Giovanni Garugno on detecting Gasimir forces using a tunneling electromechanical transducer Paper with Bakalov on interaction of high energy photons with a magnetic field. Has also worked on quantum non-demolition measurement techniques.

Puthon,Hal E. Institute for Advanced Studies at Austin 4030 Braker Lane W., Suite 300, Austit, TX 78759 USA puthoff@aol.com The person that started all this by saying that gravity and inertia are cased by vacuum fluctuations.

Rueda,Alfonso Dept. Electrical Engineering, ECS-518 California State University at Long Beach 1250 Bellflower Blvd, Long Beach, CA 90840-8303 arueda@csulb.edu Many papers on vacuum fluctuations. Go-author with Puthoff and Haisch on vacuum fluctuations being the source of inertial mass.

Scharnhorst, Klaus Department of Physics, University of Wales Sw Singleton Park, Swansea SA2 8PP, Wales, UR T R.Scharnhorst@swansea·ac·uk Theorist, discovered the Scharnhorst effect, that the speed of light is greater than c perpendicular to Gasimir plates.

Schwartz, Alan M. (Uncle Al) Chief Technical Officer, Molecular Genesis Life Sciences LTD, Vancouver, BC, Canada Snailmail Address: 49 Fabriano, Irvine, CA 92720-2525 USA unclealO@ix.netcom.com ("zero" before @) http:~vvv.com/ adsint/treehandluncleali Suggested making and weighing "Gasimatter". Only publications on Gasimatter to date are on e-mail from Schwartz and in this report.

Sen, Dev Honors Undergraduate Student Physics Department, Univ. Washington, Seattle, WA 98195 USA Home: 1304 NE 42nd Ave. #209, Seattle, WA 98105 USA dsen@u.washington.edu Carrying out experiment on Casimir plates made of gold-plated quartz flats, trying to measure Casimir force at large distances.

Tarrach, Roll Departament d'Estructura i Constituents de la Materia Facultat de Ffsica, Universitat de Barcelona Diagonal 647, 08028 Barcelona, Spain rolf@ecm.ub.es Wrote 1995 paper calculating the speed of light for a

number of different "non-tn'vial vacua" with Pedro Pascual (pascual@scm.ub.esJ and Jose Latorre (latorreEecm.ub.es)

Widom, Alien Physics Department, Northeastern University, Boston. MA02115 USAwidom@neu.edu Papers on microchips and vacuum radiation from moving conductors

INTERESTING READING LIST

BY ZACK WIDUP'S

I have put together a list of materials (books, papers etc.) that I have read over the last few years which I feel would assist in understanding free energy, non conventional physics, etc. I have arranged them in alphabetical order of authors.

Y. Aharonov and D. Bohm, "Significance of Electromagnetic Potentials in the Quantum Theory", Phys. Rev. Second Series, Vol. 115, No. 3, August 1, 1959, pp. 485-491

Thomas E. Bearden, THE EXCALIBUR BRIEFING

Thomas E. Bearden, NEW TESLA ELECTROMAGNETICS

Thomas E. Bearden, PART I: THE SOLUTION TO TESLA'S SECRETS AND THE SOVIET TESLA WEAPONS; PART II: REFERENCE ARTICLES FOR SOLUTIONS TO TESLA'S SECRETS

Thomas E. Bearden, TOWARD A NEW ELECTROMAGNETICS PART III: CLARIFYING THE VECTOR PRINCIPLE

Thomas E. Bearden, TOWARD A NEW ELECTROMAGNETICS PART IV: VECTORS AND MECHANISMS CLARIFIED

Thomas E. Bearden, THE FINAL SECRET OF FREE ENERGY

Thomas E. Bearden, CANCER AND THE UNRESOLVED HEALTH ISSUES IN THE BIOLOGICAL EFFECTS OF EM FIELDS AND RADIATION

Thomas E. Bearden, STAR WARS NOW! THE BOHM-AHARONOV EFFECT, SCALAR INTERFEROMETRY, AND SOVIET WEAPONIZATION

John Bedini, BEDINI'S FREE ENERGY GENERATOR

Sir Jagadis Chandra Bose, RESPONSE IN THE LIVING AND NON-LIVING

Sir Jagadis Chandra Bose, COLLECTED PHYSICAL PAPERS

Timothy H. Boyer, "Random electrodynamics: The theory of classical electrodynamics with classical electromagnetic zero-point radiation", Phys. Rev. D, Vol. 11, No. 4, 15 Feb. 1975, pp. 790-808

Hugh L. Everett III, THE MANY-WORLDS INTERPRETATION OF QUANTUM MECHANICS

Richard P. Feynman, THE FEYNMAN LECTURES ON PHYSICS

R. A. Ford, SPACE ENERGY RECEIVERS

Jack S. Greenberg and Walter Greiner, "Search for the Sparking of the Vacuum", Physics Today, August 1982, pp. 24-32

W. J. Hooper, Ph.D, NEW HORIZONS IN ELECTRIC, MAGNETIC AND GRAVITATIONAL FIELD THEORY

W. J. Hooper, Ph.D., THE ALL-ELECTRIC MOTIONAL ELECTRIC FIELD GENERATOR AND ITS POTENTIAL

W. J. Hooper, Ph.D., EXPERIMENTAL NOTES OF DR. WILLIAM J. HOOPER (compiled by Frances G. Gibson)

Oleg B. Jefimenko, ELECTROSTATIC MOTORS

Oleg B. Jefimenko, CAUSALITY, ELECTROMAGNETIC INDUCTION AND GRAVITATION

D. A. Kelly, MANUAL OF FREE ENERGY DEVICES & SYSTEMS

Louis Kervran, BIOLOGICAL TRANSMUTATIONS

Moray B. King, TAPPING THE ZERO-POINT ENERGY

Misner, Thorne and Wheeler, GRAVITATION

Eike Muller, EXPERIMENTS WITH A KROMREY AND A BRANDT-TESLA CONVERTER BUILT BY JOHN BEDINI with comments by Tom Bearden

Charles Muses, "Aplied Hypernumbers: Computational Concepts", Applied Mathematics and Computation, Vol. 3, No. 3, 1977, pp. 211-226

Charles Muses, "Hypernumbers - II. Further Concepts and Computational Applications", Applied Mathematics and Computation, Vol. 4, No. 1, 1978, pp. 45-66

A QUANTUM BROOM SWEEPS CLEAN

BERNHARD HAISCH; LOCKHEED MARTIN SOLAR & ASTROPHYSICS LABORATORY, PALO ALTO, CALIFORNIA

ALFONSO RUEDA; CALIFORNIA STATE UNIVERSITY, LONG BEACH

PUBLISHED IN MERCURY, VOL. 25, NO. 2, MARCH / APRIL 1996, PP. 12-15

Pity the astronomers and physicists. They toss and turn at night wondering why the universe is lumpy, and rack their brains trying to unify the four fundamental forces of nature. Now a new theory, which claims to solve both problems at once, will probably cost them more sleep.

The most fundamental equation in physics is the relation between force, mass, and acceleration which Isaac Newton postulated over three centuries ago: F=ma. It defines the concept of inertia, the resistance that an object puts up to a change in motion. To make something move faster or slower, you need to apply a force, and the force you need to apply is greater for larger masses. This is such a simple, intuitive fact that it seems more foolish than profound to ask, Why is it true? Why do objects have inertia?

As fundamental as this question is, a convincing answer has eluded the likes of Albert Einstein and Richard Feynman. Ideas about inertia have fallen into two schools. Newton himself argued it is an intrinsic property of matter, capable of no further explanation. To tell whether an object possesses inertia, you do not have to measure its motion with respect to external reference points; you need only look for the telltale distortions that occur whenever a body that has inertia accelerates. Rotation, for example, is one form of acceleration. As Earth rotates, its equator bulges out -- a dead giveaway that our planet possesses inertia.

Newton's idea of absolute acceleration, one that did not need external objects to define it, bothered many scientists -- among them the 19th-century Austrian physicist and philosopher Ernst Mach, whose ideas helped to inspire Einstein's theories of relativity. Mach argued that all motion is relative. If Earth were all alone in a hypothetical universe devoid of other matter, how would it know whether it was rotating? And if Earth did not know whether it was rotating,

how would its equator know whether to bulge out? Mach resolved this paradox by concluding that the solitary Earth could not have any inertia. Somehow, the Earth's inertia is generated by the presence of other matter in the universe.

But how? Einstein thought that his general theory of relativity would embody Mach's principle, but it turned out not to. The source of inertia remained a mystery until, we believe, 1994 -- when, together with Harold Puthoff of the Institute for Advanced Studies in Austin, Texas, we proposed a radical theory: that inertia is an electromagnetic force that switches on whenever an object accelerates through space. It turns out that Mach was almost right. In our theory, inertia does depend on an external frame of reference, but this frame of reference is provided not by the other bodies in the universe, but by an electromagnetic field that pervades the cosmos. This field, in turn, arises because of quantum mechanical ferment in the vacuum -- a subject shaping up as a major theme of 21st-century physics.

Last year, we realized that the vacuum also might explain another great mystery of modern science: how the universe, at the largest scales, came to look like a whiffle ball. The honeycombed arrangement of galaxy clusters may hold the key to understanding how inertia, gravity, and mass came to be.

Sponges and Swiss Cheese

Four years ago, the NASA Cosmic Background Explorer detected blemishes in the microwave afterglow of the Big Bang. Astronomers were relieved. It was the first evidence that the early universe was not perfectly smooth and uniform [see ``New Image of the Universe Soon After Creation,'' May/June 1992, p. 91]. Perfect uniformity would have left no way for cosmologists to explain how the lumpy present-day universe could arise from utterly homogeneous primordial stuff. Yet the COBE discovery accounted for only the highest level of inhomogeneity, on scales of 1 to 2 billion light- years (see images on p. 13). The largest structures known today in the universe are 10 times smaller.

Those structures are the great voids and sheets. Astronomers have known for some time that galaxies are concentrated into enormous clusters, but in the past decade, observers have discovered that the clusters are themselves concentrated into vast sheets, or walls. In between the walls are giant voids almost free of galaxies (see diagram above). The size of the cosmic voids ranges from tens to hundreds of millions of light-years. On these scales, the universe looks like Swiss cheese or a sponge: more hole than substance [see ``Mapping the Universe,'' May/June 1990, p. 66].

How did this superstructure come about? Gravitation can explain the clumping if you assume the universe had just the right mixture of ordinary matter, cold dark matter, and hot dark matter. But this leaves astronomers a bit

uneasy. After all, we do not know what the dark matter is or whether it could exist in the necessary amounts. The recent announcement that white dwarfs may comprise half the dark matter in our galaxy does not help, because the cosmological dark matter would have had to reside outside galaxies and consist of material entirely unlike ordinary atoms.

Under these circumstances, the prudent thing to do is to examine other possible explanations, to search for the dark horse in addition to the dark matter. Can we account for the structures without having to populate the universe with unknown kinds of matter?

Deep intergalactic space, where the large-scale structures began to form, is a cosmic desert. Out there, the density of gas is low, so low that gas particles are subject only to minute forces exerted by the vacuum that surrounds them. The word vacuum innocently implies ``empty,'' but nothing in quantum mechanics is ever so straightforward. The vacuum of modern physics is far from empty -- quite the opposite. It is a seething soup of subatomic particles and energy fields bubbling in and out of existence, a cauldron where the very notions of ``space'' and ``time'' may take on their meaning.

The not-so-empty vacuum is a consequence of the fact -- recognized by German physicist Werner Heisenberg in 1927 -- that you can never remove all the energy from anything. Take an electromagnetic field. It consists of photons, individual packets of energy each in a state defined by its direction, frequency, and polarization. Try as you might, you could never remove all the photons from any given state. According to the principles of quantum mechanics, every state must have a minimum population of either zero or one photon, with equal probability. The average of zero and one is one-half. Therefore there must be, on average, the equivalent of at least half a photon in every possible state.

Half a Photon Here, Half a Photon There

Half a photon in each state is not much -- a 100-watt light bulb puts out 100 billion billion photons every second -- but there are countless possible states. The result is a vast sea of radiation underlying the universe. All those virtual photons constitute the electromagnetic zero-point field, so named because it is present even at a temperature of absolute zero. In the deepest reaches of intergalactic space, where particles are so widely spaced that their mutual interactions are weak, this irreducible radiation field comes into play. In 1910, about halfway between the publication of special and general relativity, Einstein and his colleague Ludwig Hopf investigated how a thin gas would react when immersed in an electromagnetic radiation field. The radiation, they found, would have two counteracting effects on each gas particle. The particle would jiggle as photons bombarded it at random, but its motion would be opposed by a drag force due to the Doppler effect. The Doppler effect would stiffen the

resistance of photons in the direction that the particle was trying to move. The particle would smack head-on into blueshifted photons, which, being more energetic than the photons from other directions, would push it back the way it came. This drag force would prevent the random jiggles of the gas particle from developing into net motion.

The Einstein-Hopf process would be an interesting, but irrelevant, curiosity were it not for one peculiarity that sets the electromagnetic quantum vacuum apart from other radiation fields: the shape of its spectrum. The shape is exactly proportional to the frequency cubed -- precisely the right shape to be ``Lorentz invariant." A spectrum with this shape does not produce a Doppler effect. The photons that a gas particle meets head-on in the quantum vacuum are no more energetic than those that strike the particle from behind. Consequently, the photons can offer no concerted resistance to uniform motion. (The spectrum and directional distribution of photons, however, do change for particles that are accelerating; this is the origin of inertia in our theory, as discussed in the box on p. 15.)

This idiosyncrasy of the vacuum electromagnetic field throws the Einstein-Hopf process out of balance (see figure on p. 14). Once gas particles are set in motion by the random fluctuations of the electromagnetic field, nothing can stop them. Over millions of years they accelerate steadily, reaching velocities near to that of light and moving across astronomical distances.

Astrophysicists are no strangers to this mechanism. Twenty years ago, one of us proposed it as a possible source of the most energetic cosmic rays. Most cosmic rays consist of electrons, protons, and ions, but those of extremely high energy are missing the electrons. The Einstein-Hopf process would explain this, because it operates more efficiently on protons and ions than on electrons. What no one had considered was that this process could also segregate matter on a cosmological scale.

When we first looked into the matter, the Einstein-Hopf process sounded too good to be true. By transferring energy from virtual photons into real particles, would the process yield something for nothing? To check, we teamed up with IBM physicist Daniel Cole, an expert on the quantum vacuum. For over five years, Cole had been assessing whether theories of the vacuum violate any basic principles, such as the conservation of mass-energy or the second law of thermodynamics. He was able to find nothing amiss with the quantum Einstein-Hopf mechanism.

Emptiness Begets Emptiness

The Einstein-Hopf process works best in places where particles hardly ever collide with each other, since collisions prevent the particles from building up speed. The less matter there is, the more the matter wants to go

someplace else. Thus the tendency is for regions of low density to empty out even more, and for regions of high density to become denser. This is exactly the sort of snowball effect that cosmologists have been looking for to explain how matter congregated to form sheets and walls. At some point, the acceleration must have come to an end, or else all matter would have clumped into a single mega-galaxy. We believe that the end drew near when the agglomerating sheets developed appreciable magnetic fields. As the particles scurried into sheets, they dragged along their primordial magnetic fields. Those fields piled up, creating a magnetic pressure that ultimately balanced the Einstein-Hopf evacuation process. Gravity took over to form smaller structures, such as galaxies. The end result, we proposed last spring in The Astrophysical Journal, was the honeycombed structure of the universe.

The theory rests on many assumptions, and the one that worries us is the most fundamental: that the quantum vacuum produces a real electromagnetic field. Physicists normally treat the virtual photons as just that: virtual, hence unable to produce any far-reaching real effects. But numerous experiments indicate the field may indeed influence matter. The quantum vacuum creates an attraction between neutral parallel plates, as predicted by Dutch physicist Hendrick Casimir in 1948 and confirmed experimentally several years later. The interaction of the vacuum electromagnetic field with electrons causes a shift of hydrogen spectral lines, as discovered by American physicists Willis Lamb Jr. and Robert Retherford in 1947 and explained later that year by Hans Bethe. And the spontaneous emission of photons can be altered by changing the electromagnetic environment of atoms; this suggests that ``spontaneous'' emission is actually stimulated by the fluctuations of the vacuum.

If the zero-point field is real, it should be possible to reproduce the Einstein-Hopf process in the laboratory. The main obstacle would be achieving densities comparable to those in the cosmic voids: less than one particle per cubic meter. But if we could even approximate this, the effect might be measurable. One possibility would be to create an extremely low temperature magnetic trap and inject anti-protons into it. If the Einstein-Hopf process ejected the anti-protons, the experimenter should see them annihilate with protons in the matter surrounding the trap.

The idea that the zero-point field might really exist dates to the early 20th century, when there was not yet a clear division between classical and quantum physics. Quantum mechanics emerged from a radical, and unsupported, assumption that German physicist Max Planck made in 1900: that the energy of a system can only take on certain discrete, or quantized, values. >From this hypothesis, he was able to explain the blackbody spectrum of the light that stars and other glowing bodies give off. Planck searched for something to explain the quantization, and one possibility he considered was

that space is filled with unseen energy, a proposal also made by Walther Nernst in 1916.

During the 1920s, quantum mechanics proved so successful that physicists abandoned the search for an underlying cause of quantization. Quantization, like inertia, came to be regarded as just a given, a new law of nature. But in a series of papers beginning in 1969, Timothy Boyer appears to have vindicated Planck by deriving the blackbody spectrum directly from classical physics, without quantization -- by positing a background zero-point field. This reopens the questions that concerned Planck.

Is it possible that quantum mechanics is classical physics done in the presence of a zero-point field? Could the counterintuitive laws of quantum physics someday go the way of Ptolemaic epicycles? Quantum mechanics is certainly successful in terms of predicting observations, but so was Ptolemaic astronomy. In fact, the Ptolemaic system predicted planetary positions much better than Nicolaus Copernicus's initial theory. If astronomers had simply rejected the Copernican model, rather than worked to fix its shortcomings, we would still think Earth is the center of the universe.

As Planck did when he first derived the blackbody spectrum, we have taken a pragmatic approach: suppose that the quantum vacuum does produce real effects and consider the implications. Many new theories are ad hoc, conjured up to explain one thing and unable to explain anything else. The fact that the zero-point field might account for inertia, gravity, quantization, and, now, cosmic voids indicates that it is worth investigating.

BERNHARD M. HAISCH is an astrophysicist at the Lockheed Martin Solar and Astrophysics Laboratory in Palo Alto, Calif. He is a scientific editor of The Astrophysical Journal and the managing editor of the Journal of Scientific Exploration. When he is not rethinking scientific paradigms, Haisch, writing under the name of Bernie Sims, is a songwriter and producer. His and his wife's first commercially released song on a major label, Common Ground, will be on the forthcoming album by new Nashville artist Paul Jefferson. Haisch's email address is haisch@sag.space.lockheed.com.

ALFONSO RUEDA is a professor of electrical engineering at California State University in Long Beach. His email address is arueda@csulb.edu. For more information on the zero-point field theory, see the authors' article ``Beyond E=mc2'' in the November/December 1994 issue of The Sciences. Their technical papers appeared in Physical Review A, volume 49, p. 678 and The Astrophysical Journal, volume 445, p. 7.

Illustration captions

An astrophysical Genesis. More precisely, this is a map of the cosmic microwave background radiation, which reflects the distribution of matter shortly after the Big Bang. Darker areas had a higher density, brighter areas a lower density. NASA released a similar map in 1992, but it was based on preliminary measurements, which were so prone to noise that scientists could not be certain what was real. This latest map, released in January, contains more signal than noise. Even the smallest feature on the map is far larger than the largest structure astronomers see in the universe today. Images courtesy of Charles L. Bennett, NASA Goddard Space Flight Center. Holes. The universe is full of holes. The regions shown on this diagram, which depicts a cube 500 million light-years on a side, are all but empty of luminous matter. These voids interconnect like the holes in your kitchen sponge. This diagram is based on an early-1990s redshift survey of infrared galaxies by Queen Mary College, the University of Durham, Oxford University, and the University of Toronto. Our Milky Way is at the center. Diagram courtesy of Carlos S. Frenk.

The Einstein-Hopf process. In a near-vacuum, collisions between gas particles are rare; collisions between particles and photons are more important. The photons are part of whatever electromagnetic field the particles happen to be immersed in. These photons are always hitting each particle from all sides, but not with equal strength. Those that hit a moving particle head-on are more energetic than those striking from behind, because of the Doppler effect. This imbalance automatically keeps the particle velocities in check (top). There is one exception: If the dominant electromagnetic field is the zero-point field, the spectrum of the field cancels out the Doppler effect, so that photons striking head-on are no more energetic than any other photons (bottom). As a result, the particles are free to move without restraint. Diagrams by Bernhard M. Haisch.

The Illusion of Mass

Maybe there is no such thing as ``mass'' -- only charge, which gives the illusion of mass when it is immersed in the quantum vacuum. It is an audacious idea, but one that would unify gravitation with the other fundamental forces of nature. Physicists universally accept the reality of the quantum vacuum, a sea of virtual particles and photons that wink in and out of existence too fast to be seen. But physicists are less confident that the virtual photons could create a real electromagnetic field. For starters, this zero-point field would raise problems with general relativity.

Einstein's theory states that energy produces gravity in the same way that matter does. Just as a planet attracts other bodies gravitationally, an electromagnetic field attracts bodies gravitationally. A uniform zero-point field

that filled the universe would be an enormous source of gravitation -- so enormous that it should reduce the universe to microscopic size. This is clearly not the case.

Two linked theories have been proposed to resolve this paradox. If correct, they would constitute a paradigm shift in our view of matter itself. The first theory grew out of a suggestion made by the Russian physicist Andrei Sakharov in 1968 that gravity could originate in the quantum vacuum. Harold Puthoff published a quantitative, albeit preliminary, development of this idea in 1989. According to his theory, the zero-point field would cause charged particles, such as the electron or the quarks inside protons and neutrons, to oscillate. Whenever a charged particle oscillates, it emits electromagnetic waves of its own. These secondary fields would attract other charged particles.

If true, this theory would unify gravity with electromagnetism -- an unexpected resolution to the long search for a unified theory. It would neatly answer the general relativity paradox. In this view, gravitation is caused by secondary fields induced by the zero-point field; the zero-point field, in and of itself, cannot produce gravitation.

The second theory is our proposed mechanism for inertia. Einstein's principle of equivalence tells us that inertial and gravitational mass are the same. If gravitation is electromagnetic, inertia must be, too. This implies a complete rethinking of what matter really is.

The zero-point field is completely uniform for observers in uniform motion. But it is asymmetric for observers in accelerated motion. In 1994, we and Puthoff examined a phenomenon no one had thought to investigate before: how the magnetic component of the zero-point field interacts with matter during acceleration. The result was surprising, to say the least. The magnetic Lorentz force opposed acceleration with a strength that varied in direct proportion to the magnitude of the acceleration (see figure). It looked like a derivation of Newton's second law, F=ma, heretofore considered an underivable postulate.

What we feel and interpret as ``mass'' is, in this theory, an electromagnetic resistance arising out of the zero-point field. If it is true that mass is a consequence of charge, rather than an inherent property of matter, it might be possible (in the distant future) to build anti-gravity devices that would switch off the inertia of objects.

Are there objections to this theory? Certainly. We propose it not as a done-deal, but as a new approach to long-standing, unresolved fundamental problems. There are two major reservations. First, we treated the quantum vacuum as if it were a perfectly real electromagnetic field. The available evidence on this issue is ambiguous, and more experiments need to be done -- ranging from laboratory measurements of the Casimir force to astronomical observations of large-scale structure in the universe.

Second, even our simple model demanded a complex mathematical analysis, which is difficult to verify. For instance, we ignored non-electromagnetic vacuum fields, such as those associated with the gluon particles that bind quarks together. We are now completing a different approach that avoids this and other problems, and the preliminary results have confirmed the first approach. We hope that more researchers will look into these problems, drawn by the appeal of unsuspected deep connections.

Illustration caption

The origin of inertia? Quantum mechanics predicts that photons are constantly flitting on and off the stage of existence. These photons are ``virtual'' in that each survives so short a time that the rest of us hardly notice. Collectively, however, they have observable effects, one of which was predicted by physicists Paul Davies and William Unruh in the mid-1970s and studied in detail by the authors. To a particle sitting still or moving uniformly, the field of virtual photons looks the same in all directions (top left). But as the particle begins to accelerate, the field ceases to look the same in the fore and aft directions (top center). For faster accelerations, the asymmetry worsens (top right). Physicists had thought the Davies-Unruh effect was an esoteric curiosity significant only near black holes. But the authors have found that the asymmetry creates a force similar to the radiation pressure that pushes cometary dust tails away from the Sun. This force always opposes the acceleration (bottom). Voilà, inertia. Diagrams by Bernhard M. Haisch.

ZERO-POINT VACUUM FLUCTUATION

TOWARDS A UNIFIED ELECTRODYNAMIC VIEW OF THE FUNDAMENTAL FIELDS OF NATURE

BY DON REED, RAUM&ZEIT, VOL 3, NO 2, 1992

We surveyed a novel electromagnetic field based on the topology of a Moebius band or a Klein bottle. This field is apparently the agent for the production of unique phenomena, chief of which among these is the decrease of gravitational potential or mass of certain substances placed within the proximity of the field.

Such phenomena are clearly foreign to present scientific understanding. from the standpoint of the bodies of knowledge underlying rela-tivity. quantum physics, and even classical electromagnetic theory. However. it is not entirely inconceivable that the structure of nature at its primordial sub-atomic level might be the seat of a ubiquitous groundform energy field. Furthermore. its dynamical char-acteristics could account for known phenomena in the relativistic and quantum domains, as well as certain recorded anomalous phenomena which cannot as yet be incorporated into contemporary scientific paradigms.

Exactly such a feature has played an important role in explicating many of the initially enigmatic findings of quantum electrodynamics in particular. It has been termed the "zero-point vacuum fluctuations," or ZPF. The name derives from the existence of this basic energy even at the lowest temperature in nature, 0° Kelvin. One of the substantial effects of this postulated fluctuating vacuum groundform is the oscillatory feature ascribed to the elec-tron as it interacts with the ZPF. known as the "Zitterbewegung" or jitter (ZBW will be suitable for our purposes). In view of the recent emergence of oper-ating free energy machines. it will be advantageous to study the characteristics of the Zitterbewegung. In this light, focusing on the ZBW will provide us with a rational basis with which to ascribe the workings of such devices, to prevent the classification of them as perpetual motion machines.

At this juncture. it would be prudent to outline to readers unfamiliar with these topics. the history of discoveries in the peculiarities of electron behavior that brought these notions to light. The initial difficulty came at the turn of the century with the aborted attempt by H. A. Lorentz to compatibly integrate the electron into the electromagnetic field theory of Maxwell-Hertz.(1) The prob-lems arose from Lorentz' assumption of a spherical charge distribution

emanating from an electron treated as a structureless point source of the Coulomb electrostatic field. The result obtained was a quantiatively divergent (infinite) interaction energy between the electron and its own radiation field. Despite many later attempts to correct this defect. none have yet succeeded. In the mid-1920s. the spectral evidence of the so-called "anomalous" Zeeman effect, as well as the observed space quantization of the electron magnetic moment demonstrated by the Stern-Gerlach experiment, compelled physicists to ascribe to the electron a self angular momentum factor called "spin."(2) Yet the quantum aspects of this particular dynamics showed that spin could not in any sense be related to the intuitive notions of ordinary rota-tional motion. It was the first phe-nomenon in the history of science that had absolutely no correspondence with any concept in the macroscopic world. The mysterious nature of this notion was underscored by Born when he described it as: "The idea of a spin without the existence of something spinning ..." Moreover, any attempts to ascribe a geometric structure to spin were summarily prevented by the de-velopment of the Schrodinger wave equation and Heisenberg matrix wave mechanics in the late 1920s. According to the philosophical underpinnings of this so-called Copenhagen Interpre-tation of quantum theory. no structure of sub-atomic units (apart from point particles) is possible.

In the early 1930s, Dirac's model, based upon a relativistic covariant lin-earization of the Schrodinger equation, demonstrated that electron spin is a direct consequence of the mathematical structure of the theory.(3) Specifically, this entailed the use of a unique four-component wave function (spinors) which accounted for the observed half-integral spin of the electron, the anomalous Zeeman effect, and the existence of negative energy states by the prediction of the positron.

By the middle 1940s, the Dirac theory was found to be deficient since it could not account for the small, albeit measurable. anomalous magnetic moment of the electron. Through quantum electrodynamics as developed by Schwinger, Bethe, Feynman, the rea-son for the anomalous moment was discovered to be due to the electron's self-interaction with the substratum vi-brations. To this, in turn, was ap-pended the term zero-point vacuum fluctuations. One key experiment which verified the influence of the ZPF, was the Lamb shift of the spectral lines of hydrogen.(4) The Zitterbewegung mo-tion (ZBW), was then applied to the reaction of the electron to the ambient ZPF, describing the area in which the electron tends to oscillate with the di-mensions of the Compton wavelength (V/mc). Actually, the concept of the ZBW concept was first introduced by Schrodinger to interpret high-frequency oscillations in free particle wave packets of the Dirac theory. These oscillations, with angular frequency 2mc^2 /h/. were interpreted as interference be-tween positive and negative energy components of a wave packet.

Until recently, the majority of the prac-titioners of quantum field theory attributed no real significance to the ZBW. It was held that the ZBW is a mathematical artifact of the one-particle Dirac theory. which does not appear in a correctly formulated quantum field theory. Others, inasimilarvein, claimed that the ZB\Al is an inconsequential erratic motion of the electron due to random electron-positron pair creation and annihilation. However. important new evidence has surfaced causing a growing group of the physics commu-nity to regard the ZBW in a more substantial role. Indeed, the findings reached by several prominent theo-retical physicists(5) is that the ZBVY is a localized helical motion of the electron with an angular momentum which can be identified with the electron spin. In re-casting the Dirac theory in the Clifford analysis of his multivector geometric algebra, D. Hestenes(6) has said to bare the geometric content of electron spin, which has been formerly shrouded by the formalistic artifice of matrix me-chanics and quantum field theory. According to these findings, the ZBW need not be attributed to interference between positive and negative energy states as Schrodinger originally pro-posed. but provides the key to a com-plete understanding of the Dirac theory of the electrons, including a physical interpretation for the complex phase factor in the Dirac wave function. Furthermore. he has convincingly re-vealed. through mathematical argu-ment. the unprecendented picture of the electron as the seat of a bound oscillating electromagnetic field similar to de Brogue's concept of a pilot wave. Thus it tells us that the ZBW is re-sponsible for a kind of electromagnetic wave-particle duality which is implicit not only in the Dirac theory. but has manifestations in every application in quantum mechanics. even in the non-relativistic domain covered by the Schrodinger theory. Contrary to or-thodox opinion which views the elec-tromagnetic field as merely incidental to quantum theory. the new findings by Hestenes and others. ascribes a central role to the electromagnetic field. In this sense, not only is the latter a generating source for ZPF. but it is the seat of the associated electron Zitterbewegung, its characteristic half-integral spin. and all other manifestations of quantum physics including the uncertainty in position and momentum of sub-atomic units. The uncertainty relations can now be viewed as consequences of a zero-point particle motion with a fixed zero-point angular momentum, the spin of the electron. This explains why the limiting constant /h/2 in the uncer-tainty relations (Ax * Ap = /h/ 2) is exactly equal to the magnitude of the electron spin.

In this regard, the once obscure paper of Furutsu(7) takes on the significance of landmark proportions. His two-part monograph investigation, in conjunction with Hestene's work and the work of Puthoff, to be described, deserves close scrutiny by all theorists concerned with explicating the fundamental questions of physics. Furutsu mathematically showed that the classical statistical theory of electomagnetic waves in a fluctuating medium

corresponds to the commutation relations in the quantum mechanics of the Heisenberg equation of motion. Specifically, there exists a one to one correspondence between the so-called Green's function in the statistical wave theory. and the associated probability amplitude function in quantum mechanics. which satisfies the Schrodinger equation.

Although these revelations indeed point to a possible major role of the electro-magnetic field in quantum mechanics. the reader may well wonder what significance such findings may have for revealing the long sought-after master field of nature under which both gravi-tational and electromagnetic phenomena are unified and subsumed. For one thing, the discovery of a sub-atomic feature demonstrating the theoretical link between gravitation and electro-magnetism would tend to help place such phenomena generated by the Moebius Electromagnetic field in a more substantial and less of a fictional light when considering possibilities for viable future alternate energy sources.

One key for the realization of this primordial unified field structure. is to adopt the model originally promoted in 1967 by Sakharov.(8) This model pur-ports that gravitation is not a funda-mental interaction at all. but rather an induced effect brought about by changes in the ZPF when matter is present, in much the same way as the Van der Waals and Casimir forces. Pursuing the Sakharov hypothesis further, in a recent article in the Physical Review, H. Puthoff (9) develops a classical model of ZPF founded upon the related work of T. Boyer on stochastic electrody-namics.(10) The Puthoff work predicts a value for the Newtonian gravitational constant G which is determined as a direct function of the oscillatory frequency of the ZPF:

G = Pic^5 / 2/h/ wc o wdw, wc = (Pic5/ /h/G) 1/2

where Wc corresponds to an effective Planck cutoff frequency of the ZPF spectrum. Thus the small value of the gravitational constant is an inverse re-flection of the high frequency cutoff value of the ZPF. Here, gravitational mass is shown to correspond to the kinetic energy of the ZPF-induced particle motion, or ZBW. while the customary attractive inverse square law force is attributed to a long range Van der Waals type. associated with the broad spectrum ZPF radiation fields, also generated by the ZBW. Now we are beginning to clearly see a pattern developing which possibly reveals the ZPF as the master electrodynamic field underlying all phenomena in physics.

Considering the high oscillatory frequency of the ZPF (~10^24 cycles per second), one might wonder whether the microscopic domain could be engineered as a viable energy source. Following this lead, in another article(11) Puthoff suggests that engineering of the ZPF might have enormous implications for power generation. He bases this view on the so-called Casimir effect, which is an experimentally verified ZPF-induced powerful attractive quantum force between closely spaced metal or dielectric plates. Along these

lines Puthoff suggests that engineers try designing zero-point energy machines with a cold, charged plasma or gas. Like the metal plates. the Casimir effect would pinch the plasma together producing energy in the form of heat and condensed charged particles.

The various so-called free energy de-vices now in operation might be em-ploying similar principles, allowing co-herence of the ZPF under specific exci-tation of the vacuum, producing visible macroscopic effects. One such device is the Plasmatron generator built by Moscow physicist A. Chernetsky.(12) This apparatus reportedly takes 700 watts of electricity, and via heavy cur-rent pulse discharge created through unstable plasma states, gives back 3500 watts manufacturing slightly more than three horsepower out of nothing. The mysterious discharge stimulating addi-tional energy extraction was called self-generating discharge. Measurements showed that part of the discharge power went back into the network as if two series-connected electromotive forces are at work. In one special test, current discharge was so great that a megawatt substation near the experiment burned out. This brings to mind a similar event experienced by Nikola Tesla during one of his experiments where a power plant caught fire. It is entirely possible that vacuum energy from the ZPF can explain both these incidents.

Another prominent energy device which operates independently of any priming power other than a manual start, appears to be a true free energy system. This is the Swiss M-L Converter first mentioned by Davidson in his book The Secret of the Creative Vacuum.(13) It provides some of the power used by the spiritual community of Methernitha. The dynamic com-ponents of this device constitute a modern version of a self-propelled Wimshurst machine, with large Leyden jars forming capacitors for electrostatic energy stoarge.(14) Once the machine is started manually, the high electrostatic potential generated primes the system. Solid state components include twin bifilar-wound coils situated within the capacitors. In addition there are two horseshoe magnets also wound with bifilar coils and other self-standing ca-pacitors connected in the circuit. Interestingly. this is a hybrid system, since it involves both dynamic and solid-state conversion features. There is a harmonous combination of electrostatic as well as electromagnetic circuit elements. Notably. a similar hybrid power combination comprised the Hutch inson-Hathaway experiments of the 1980s. which produced anomalous phenomena via the crudely constructed arrangement which ad-joined a Van Der Graaff generator to two modified Tesla coils, along with other field-shaping elements.(15) The videotaped record of these experiments shows the complete levitation of several objects including 20 pound tool boxes. as well as the frequent catastrophic fracturing of pieces of metal or other samples, giving them the appearance of corrugated cardboard.

Another device in which output power is claimed to exceed that input by a factor of ten, is the recent invention by Hyde.(16) Although not too many details apart from the patent are yet available, electrical engineer M. King offers an excellent analysis of its principles of operation as well as interesting insight into its mode of anomalous energy generation.(17) Once again, the coherence of the ZPF is counted among the main possibilities for this surplus energy production.

Thus, in many ways it appears that the concept of the passive 19th century luminiferous aether plenum that had been banished with the advent of Einsteinian Relativity. has returned in a much different guise invested with the dynamic properties of the ZPF as enumerated by quantum field theory. In the next chapter of this series. we will examine a specific geometric model for this primordial energy field. based upon the toroidal topology invested within Kenneth Killic's tachion pair arrangement. In accordance with this model, the land-mark work of physicist Peter Gschwind will be investigated and found to contain a natural mathematical structure (biquatemion analysis) which, in a projective geometric framework, can be effectively brought to bare on many of the current enigmas of physics.

References

1. Lorentz. HA.. Theory of Electrons, New York. Dover reprint.
2. Gerlach. W.. Stern. 0.. ZeitschriftFuer Physik vol. 9.1922. p.349.
3. Dirac. P.. Proceedings of the Royal Society (London). Al 24(1928), p.610.
4. Lomb, H.. Science. vol.123, 1956.p.439.
5. Huang. K.. "On the Zitterbewegung Of the Electron", American Journal of Physics, vol.20,1952, p.479. Barut, A.O., Bracken, A.j, Physical Review D, vol.23,1981, p.2454.
6. Hestenes, B.. Quantum Mechanics from Self-Interaction", Foundations of Physics, vol. 15 no.1, 1985.p.63. "The Zitterhewegung Interpretation of Quantum Mechanics", Foundations of Physics, vol.20 no.10,1990, p.1213.
7. Furutsu. K., On the Statistical Theotyof Electromagnetic Waves in O Fluctuating Medium(I)". Natl Bur. Stds. Journal of Research. vol. 67D (Radio Propagation). no.3.1963. p.303. On the Statis-tical Theory of Electromagnetic Waves in a Fluctuating Medium(JI). NatL Bur. Stds. Monograph 79.1970. p.1.
8. Sakharov. A.D.. Doki. Akad. Nauk SSSR, (Soviet Physics-Doklady). vol. 12.1968. p.1040.

9. Puthoff. H. E.. "Gravity as a Zero-Point Fluctuation Force". Physical Review A vol, 39 no.5.1989. p.2333.
10. Boyer. T.. Physical Review D. vol.21. 1980. p.2137.
11. Puthoff. H. B.. "The Energetic Vacuum: Implications for Energv Research". Speculations in Science and Tech-nology vol.13 no.3.1990. p.247.
12. Samokhin. A.. "Vacuum Energv – A Breakthrough?". Speculations in Sci-ence and Technology. vol.13 no.3. 1990. p.273. Davies. 0.. "Volatile Vacu-ums . Omni. vol.13 no. 5.1991. p.56.
13. Davidson. J.. The Secret of the Cre-ative Vacuum. 1989. p.231.
14. Kelly, D.. "A Review' of the Free Energv Scenario". Speculations in Science & Technology. vol.13 no.3 1990. p.267.
15. Hathaway. G. B.. "An Introduction to Non-Conventional Propulsion Technology". Proc. of the 1988 Intl. Tesla Symposium. 1988. Chap. 6. p.1.
16. Hyde. W.. "Electrostatic Energv Field Power Generating System". U.S. Patent no.4.897.592.1990.
17. King. M. B.. "Tapping the Zero-Point Energy as an Energy Source". Speculations in Science and Technology. vol.13 no.3.1990. p.258. Unpub. paper. 1991.

(No Model.) 2 Sheets—Sheet 1.

N. TESLA.

ELECTRICAL TRANSMISSION OF POWER.

No. 382,281. Patented May 1, 1888.

Fig. 1

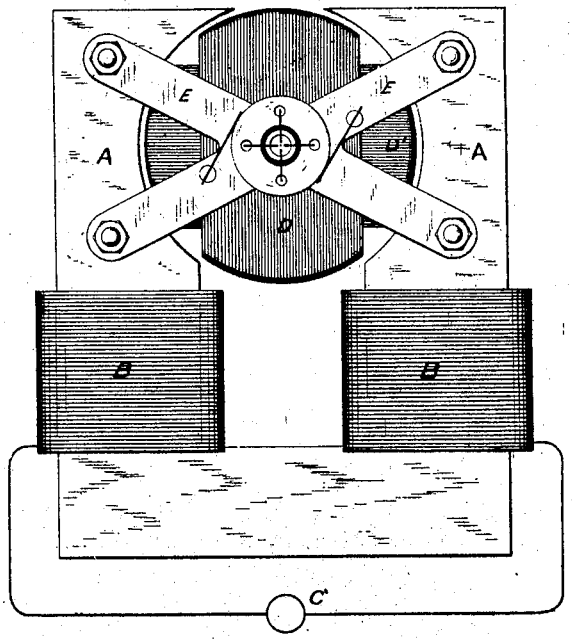

Fig. 2

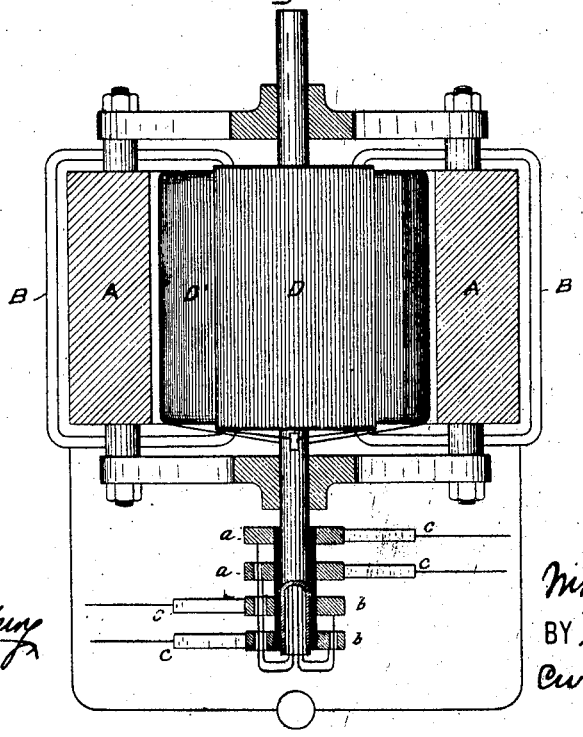

WITNESSES:
Raphael Netter.
Henry F. Newbury

INVENTOR.
Nikola Tesla.
BY Duncan,
Curtis & Page.
ATTORNEYS.

(No Model.) 2 Sheets—Sheet 2.

N. TESLA.

ELECTRICAL TRANSMISSION OF POWER.

No. 382,281. Patented May 1, 1888.

Fig. 3

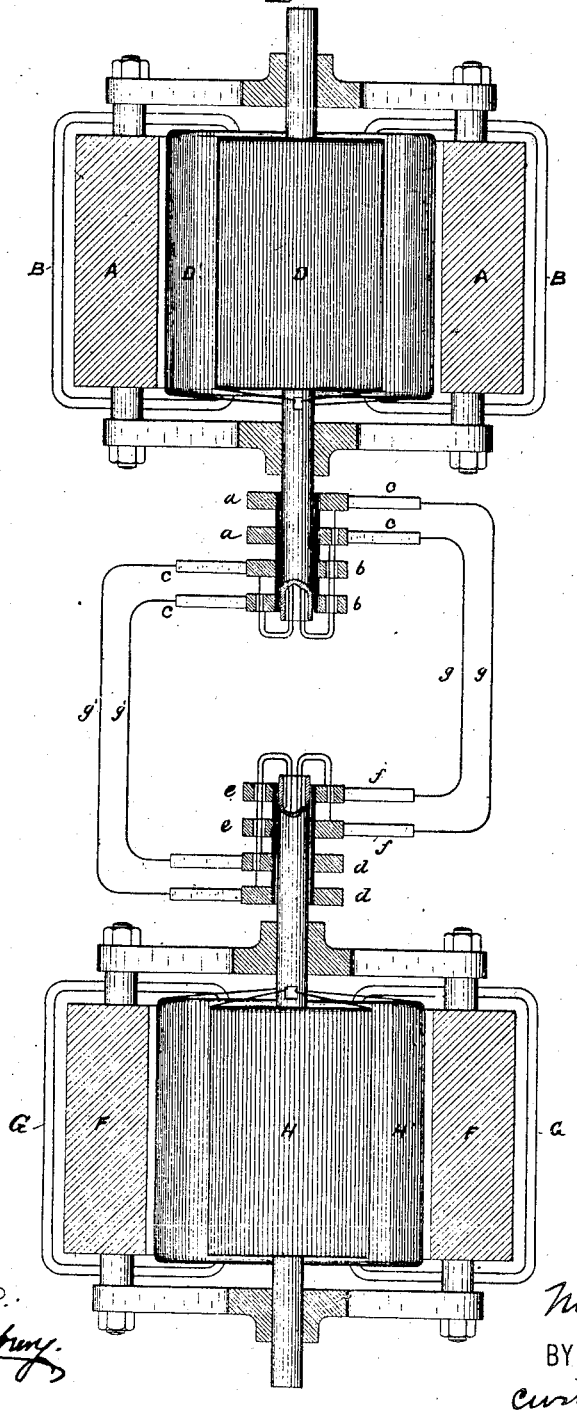

WITNESSES:
Raphael Netter.
Henry L. Newbury.

INVENTOR.
Nikola Tesla
BY Duncan, Curtis & Page
ATTORNEYS

UNITED STATES PATENT OFFICE.

NIKOLA TESLA, OF NEW YORK, N. Y.

ELECTRICAL TRANSMISSION OF POWER.

SPECIFICATION forming part of Letters Patent No. 382,281, dated May 1, 1888.

Original application filed November 30, 1887, Serial No. 256,562. Divided and this application filed March 9, 1888. Serial No. 266,756. (No model.)

To all whom it may concern:

Be it known that I, NIKOLA TESLA, from Smiljan, Lika, border country of Austria-Hungary, and residing in the city, county, and State of New York, have invented certain new and useful Improvements in the Electric Transmission of Power, of which the following is a specification, this application being a division of an application filed by me November 30, 1887, Serial No. 256,562.

In a previous application filed by me—viz., No. 252,132, filed October 12, 1887—I have set forth an improvement in motors and in the mode or method of operating the same, which, generally stated, consists in progressively and continuously shifting the poles or lines of maximum magnetic effect of either the field-magnets or armature, or both, of a motor, and thereby producing a movement of rotation in the motor. The means which I have shown for effecting this, while varying in detail, are exemplified in the following system, which, for present purposes, it will be sufficient to consider as a typical embodiment of the invention.

The motor is wound with coils forming independent energizing-circuits on the armature, which is a cylinder or disk mounted to rotate between two opposite magnetic poles. These coils are connected up with corresponding induced or current-producing circuits in an alternating-current generator. As a result of this, when the generator is set in motion, currents of alternately-opposite direction are directed through the energizing-coils of the motor in such manner as to produce a progressive shifting or rotation of the magnetic poles of the motor-armature. This movement of the poles of the armature obviously tends to rotate the armature in the opposite direction to that in which the movement of the poles takes place, owing to the attractive force between said poles and the field-magnets, and the speed of rotation increases from the start until it equals that of the generator, supposing both motor and generator to be alike.

As the magnetic poles of the armature are shifted in a direction opposite to that in which the armature rotates, it will be apparent that when the normal speed is attained the poles of the armature will assume a fixed position relatively to the field-magnets, and that in consequence the field-magnets will be energized by magnetic induction, exhibiting two distinct poles, one on each of the pole-pieces. In starting the motor, however, the speed of the armature being comparatively slow, the pole-pieces are subjected to rapid reversals of magnetic polarity; but as the speed increases these reversals become less and less frequent and finally cease, when the movement of the armature becomes synchronous with that of the generator. This being the case, the field-cores or the pole-pieces of the motor become a magnet, but by induction only.

I have found that advantageous results are secured by winding the field-magnets with a coil or coils and passing a continuous current through them, thus maintaining a permanent field, and in this feature my present invention consists.

I shall now describe the apparatus which I have devised for carrying out this invention and explain the mode of using or operating the same.

Figure 1 is an end view in elevation of my improved motor. Fig. 2 is a part horizontal central section, and Fig. 3 is a diagrammatic representation of the motor and generator combined and connected for operation.

Let A A in Fig. 1 represent the legs or pole-pieces of a field-magnet, around which are coils B B, included in the circuit of a continuous-current generator, C, which is adapted to impart magnetism to the said poles in the ordinary manner.

D D′ are two independent coils wound upon a suitable cylindrical or equivalent armature-core, which, like all others used in a similar manner, should be split or divided up into alternate magnetic and insulating parts in the usual way. This armature is mounted in non-magnetic cross-bars E E, secured to the poles of the field-magnet. The terminals of the armature-coils D D′ are connected to insulated sliding contact-rings *a a b b*, carried by the armature-shaft, and brushes *c c* bear upon these rings to convey to the coils the currents which operate the motor.

The generator for operating this motor is or

may be of precisely identical construction, and for convenience of reference I have marked in Fig. 3 its parts, as follows: F F, the field-magnets energized by a continuous current passing in its field-coils G G; H H', the coils carried by the cylindrical armature; *d e e*, the friction or collecting rings carried by the armature-shaft and forming the terminals of the armature-coils; and *f f* the collecting-brushes which deliver the currents developed in the armature-coils to the two circuits *g g'*, which connect the generator with the motor.

The operation of this system will be understood from the foregoing. The action of the generator by causing a progressive shifting of the poles in the motor-armature sets up in the latter a rotation opposite in direction to that in which the poles move. If, now, the continuous current be directed through the field-coils so as to strongly energize the magnet A A, the speed of the motor, which depends upon that of the generator, will not be increased, but the power which produces its rotation will be increased in proportion to the energy supplied through the coils B B. It is characteristic of this motor that its direction of rotation is not reversed by reversing the direction of the current through its field-coils, for the direction of rotation depends not upon the polarity of the field, but upon the direction in which the poles of the armature are shifted. To reverse the motor the connections of either of the circuits *g g'* must be reversed.

I have found that if the field-magnet of the motor be strongly energized by its coils B B, and the circuits through the armature-coils closed, assuming the generator to be running at a certain speed, the motor will not start; but if the field be but slightly energized, or in general in such condition that the magnetic influence of the armature preponderates in determining its magnetic condition, the motor will start, and with sufficient current will reach its maximum or normal speed. For this reason it is desirable to keep at the start, and until the motor has attained its normal speed, or nearly so, the field-circuit open, or to permit but little current to pass through it. I have found, however, if the fields of both the generator and motor be strongly energized that starting the generator starts the motor, and that the speed of the motor is increased in synchronism with the generator.

Motors constructed and operated on this principle maintain almost absolutely the same speed for all loads within their normal working limits, and in practice I have observed that if the motor be overloaded to such an extent as to check its speed the speed of the generator, if its motive power be not too great, is diminished synchronously with that of the motor.

I have in other applications shown how the construction of these or similar motors may be varied in certain well-known ways—as, for instance, by rotating the field about a stationary armature or rotating conductors within the field—but I do not illustrate these features further herein, as with the illustration which I have given I regard the rest as within the power of a person skilled in the art to construct.

I am aware that a device embodying the characteristics of a motor and having a permanently-magnetized field-magnet has been operated by passing through independent coils on its armature a direct or continuous current in opposite directions. Such a system, however, I do not regard as capable of the practical applications for which my invention is designed, nor is it the same in principle or mode of operation, mainly in that the shifting of the poles is intermittent and not continuous, and that there is necessarily involved a waste of energy.

In my present application I do not limit myself to any special form of motor, nor of the means for producing the alternating currents as distinguished from what are called "reversed currents," and I may excite or energize the field of the motor and of the generator by any source of current which will produce the desired result.

What I claim is—

The method herein described of transmitting power by electro-magnetic motors, which consists in continuously and progressively shifting the poles of one element of the motor by alternating currents and magnetizing the other element by a direct or continuous current, as set forth.

NIKOLA TESLA.

Witnesses:
FRANK B. MURPHY,
FRANK E. HARTLEY.

No. 645,576.

N. TESLA. Patented Mar. 20, 1900.

SYSTEM OF TRANSMISSION OF ELECTRICAL ENERGY.

(Application filed Sept. 2, 1897.)

(No Model.)

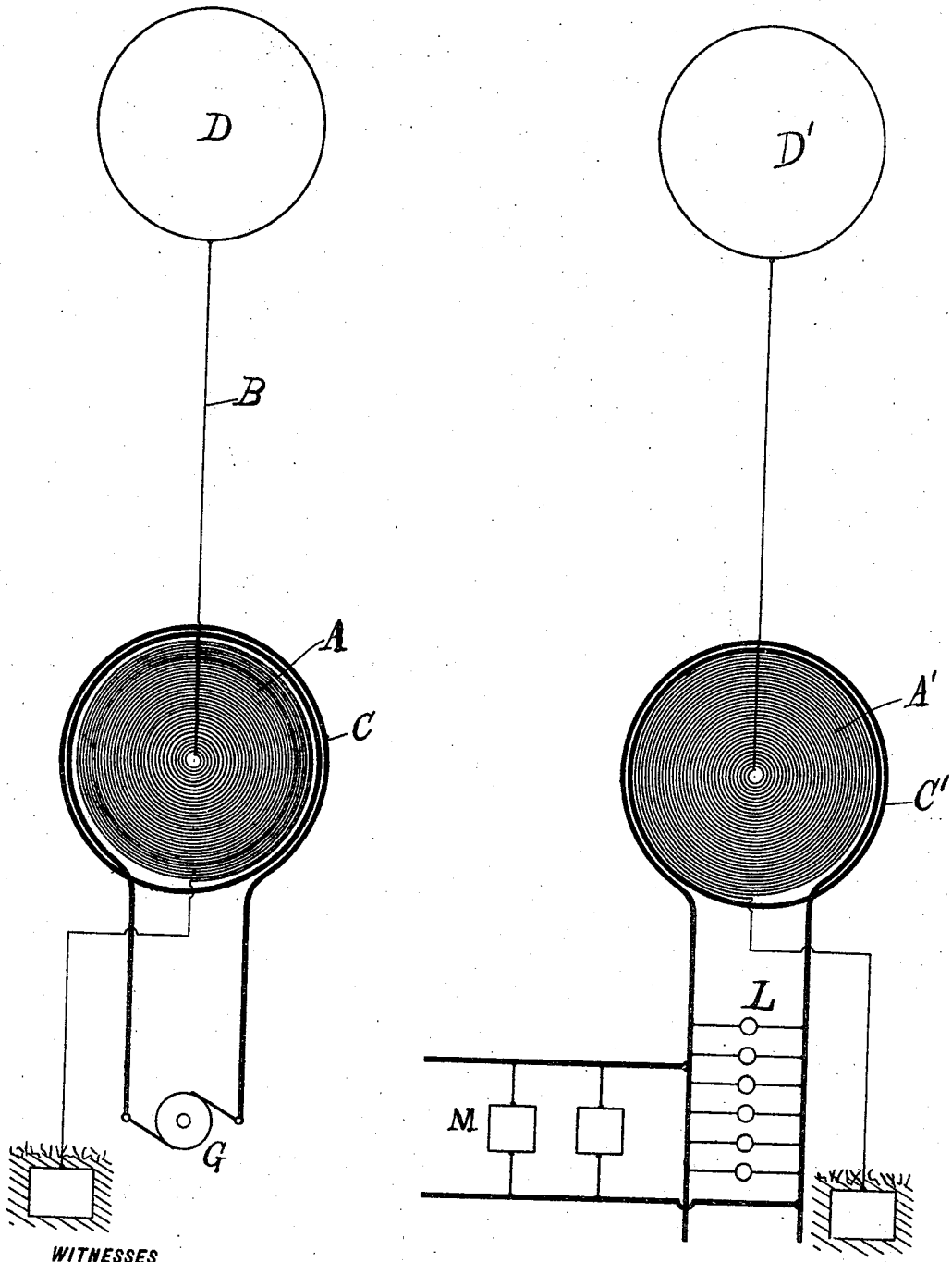

WITNESSES

Harry N. Cooper

M. Lawson Dyer.

INVENTOR

Nikola Tesla

BY

Kerr, Curtis & Page

ATTORNEYS.

UNITED STATES PATENT OFFICE.

NIKOLA TESLA, OF NEW YORK, N. Y.

SYSTEM OF TRANSMISSION OF ELECTRICAL ENERGY.

SPECIFICATION forming part of Letters Patent No. 645,576, dated March 20, 1900.

Application filed September 2, 1897. Serial No. 650,343. (No model.)

To all whom it may concern:

Be it known that I, NIKOLA TESLA, a citizen of the United States, residing at New York, in the county and State of New York, have invented certain new and useful Improvements in Systems of Transmission of Electrical Energy, of which the following is a specification, reference being had to the drawing accompanying and forming a part of the same.

It has been well known heretofore that by rarefying the air inclosed in a vessel its insulating properties are impaired to such an extent that it becomes what may be considered as a true conductor, although one of admittedly very high resistance. The practical information in this regard has been derived from observations necessarily limited in their scope by the character of the apparatus or means heretofore known and the quality of the electrical effects producible thereby. Thus it has been shown by William Crookes in his classical researches, which have so far served as the chief source of knowledge of this subject, that all gases behave as excellent insulators until rarefied to a point corresponding to a barometric pressure of about seventy-five millimeters, and even at this very low pressure the discharge of a high-tension induction-coil passes through only a part of the attenuated gas in the form of a luminous thread or arc, a still further and considerable diminution of the pressure being required to render the entire mass of the gas inclosed in a vessel conducting. While this is true in every particular so long as electromotive or current impulses such as are obtainable with ordinary forms of apparatus are employed, I have found that neither the general behavior of the gases nor the known relations between electrical conductivity and barometric pressure are in conformity with these observations when impulses are used such as are producible by methods and apparatus devised by me and which have peculiar and hitherto unobserved properties and are of effective electromotive forces, measuring many hundred thousands or millions of volts. Through the continuous perfection of these methods and apparatus and the investigation of the actions of these current impulses I have been led to the discovery of certain highly-important and useful facts which have hitherto been unknown. Among these and bearing directly upon the subject of my present application are the following: First, that atmospheric or other gases, even under normal pressure, when they are known to behave as perfect insulators, are in a large measure deprived of their dielectric properties by being subjected to the influence of electromotive impulses of the character and magnitude I have referred to and assume conducting and other qualities which have been so far observed only in gases greatly attenuated or heated to a high temperature, and, second, that the conductivity imparted to the air or gases increases very rapidly both with the augmentation of the applied electrical pressure and with the degree of rarefaction, the law in this latter respect being, however, quite different from that heretofore established. In illustration of these facts a few observations, which I have made with apparatus devised for the purposes here contemplated, may be cited. For example, a conductor or terminal, to which impulses such as those here considered are supplied, but which is otherwise insulated in space and is remote from any conducting-bodies, is surrounded by a luminous flame-like brush or discharge often covering many hundreds or even as much as several thousands of square feet of surface, this striking phenomenon clearly attesting the high degree of conductivity which the atmosphere attains under the influence of the immence electrical stresses to which it is subjected. This influence is, however, not confined to that portion of the atmosphere which is discernible by the eye as luminous and which, as has been the case in some instances actually observed, may fill the space within a spherical or cylindrical envelop of a diameter of sixty feet or more, but reaches out to far remote regions, the insulating qualities of the air being, as I have ascertained, still sensibly impaired at a distance many hundred times that through which the luminous discharge projects from the terminal and in all probability much farther. The distance extends with the increase of the electromotive force of the impulses, with the diminution of the density of the atmosphere, with the elevation of the active terminal above the ground, and also, apparently, in a slight measure, with the degree of moisture contained in

the air. I have likewise observed that this region of decidedly-noticeable influence continuously enlarges as time goes on, and the discharge is allowed to pass not unlike a conflagration which slowly spreads, this being possibly due to the gradual electrification or ionization of the air or to the formation of less insulating gaseous compounds. It is, furthermore, a fact that such discharges of extreme tensions, approximating those of lightning, manifest a marked tendency to pass upward away from the ground, which may be due to electrostatic repulsion, or possibly to slight heating and consequent rising of the electrified or ionized air. These latter observations make it appear probable that a discharge of this character allowed to escape into the atmosphere from a terminal maintained at a great height will gradually leak through and establish a good conducting-path to more elevated and better conducting air strata, a process which possibly takes place in silent lightning discharges frequently witnessed on hot and sultry days. It will be apparent to what an extent the conductivity imparted to the air is enhanced by the increase of the electromotive force of the impulses when it is stated that in some instances the area covered by the flame discharge mentioned was enlarged more than sixfold by an augmentation of the electrical pressure, amounting scarcely to more than fifty per cent. As to the influence of rarefaction upon the electric conductivity imparted to the gases it is noteworthy that, whereas the atmospheric or other gases begin ordinarily to manifest this quality at something like seventy-five millimeters barometric pressure with the impulses of excessive electromotive force to which I have referred, the conductivity, as already pointed out, begins even at normal pressure and continuously increases with the degree of tenuity of the gas, so that at, say, one hundred and thirty millimeters pressure, when the gases are known to be still nearly perfect insulators for ordinary electromotive forces, they behave toward electromotive impulses of several millions of volts like excellent conductors, as though they were rarefied to a much higher degree. By the discovery of these facts and the perfection of means for producing in a safe, economical, and thoroughly-practicable manner current impulses of the character described it becomes possible to transmit through easily-accessible and only moderately-rarefied strata of the atmosphere electrical energy not merely in insignificant quantities, such as are suitable for the operation of delicate instruments and like purposes, but also in quantities suitable for industrial uses on a large scale up to practically any amount and, according to all the experimental evidence I have obtained, to any terrestrial distance. To conduce to a better understanding of this method of transmission of energy and to distinguish it clearly, both in its theoretical aspect and in its practical bearing, from other known modes of transmission, it is useful to state that all previous efforts made by myself and others for transmitting electrical energy to a distance without the use of metallic conductors, chiefly with the object of actuating sensitive receivers, have been based, in so far as the atmosphere is concerned, upon those qualities which it possesses by virtue of its being an excellent insulator, and all these attempts would have been obviously recognized as ineffective if not entirely futile in the presence of a conducting atmosphere or medium. The utilization of any conducting properties of the air for purposes of transmission of energy has been hitherto out of the question in the absence of apparatus suitable for meeting the many and difficult requirements, although it has long been known or surmised that atmospheric strata at great altitudes—say fifteen or more miles above sea-level—are, or should be, in a measure, conducting; but assuming even that the indispensable means should have been produced then still a difficulty, which in the present state of the mechanical arts must be considered as insuperable, would remain—namely, that of maintaining terminals at elevations of fifteen miles or more above the level of the sea. Through my discoveries before mentioned and the production of adequate means the necessity of maintaining terminals at such inaccessible altitudes is obviated and a practical method and system of transmission of energy through the natural media is afforded essentially different from all those available up to the present time and possessing, moreover, this important practical advantage, that whereas in all such methods or systems heretofore used or proposed but a minute fraction of the total energy expended by the generator or transmitter was recoverable in a distant receiving apparatus by my method and appliances it is possible to utilize by far the greater portion of the energy of the source and in any locality however remote from the same.

Expressed briefly, my present invention, based upon these discoveries, consists then in producing at one point an electrical pressure of such character and magnitude as to cause thereby a current to traverse elevated strata of the air between the point of generation and a distant point at which the energy is to be received and utilized.

In the accompanying drawing a general arrangement of apparatus is diagrammatically illustrated such as I contemplate employing in the carrying out of my invention on an industrial scale—as, for instance, for lighting distant cities or districts from places where cheap power is obtainable.

Referring to the drawing, A is a coil, generally of many turns and of a very large diameter, wound in spiral form either about a magnetic core or not, as may be found necessary. C is a second coil, formed of a conductor of much larger section and smaller

length, wound around and in proximity to the coil A. In the transmitting apparatus the coil A constitutes the high-tension secondary and the coil C the primary of much lower tension of a transformer. In the circuit of the primary C is included a suitable source of current G. One terminal of the secondary A is at the center of the spiral coil, and from this terminal the current is led by a conductor B to a terminal D, preferably of large surface, formed or maintained by such means as a balloon at an elevation suitable for the purposes of transmission, as before described. The other terminal of the secondary A is connected to earth and, if desired, also to the primary in order that the latter may be at substantially the same potential as the adjacent portions of the secondary, thus insuring safety. At the receiving-station a transformer of similar construction is employed; but in this case the coil A′, of relatively-thin wire, constitutes the primary and the coil C′, of thick wire or cable, the secondary of the transformer. In the circuit of the latter are included lamps L, motors M, or other devices for utilizing the current. The elevated terminal D′ is connected with the center of the coil A′, and the other terminal of said coil is connected to earth and preferably, also, to the coil C′ for the reasons above stated.

It will be observed that in coils of the character described the potential gradually increases with the number of turns toward the center, and the difference of potential between the adjacent turns being comparatively small a very high potential, impracticable with ordinary coils, may be successfully obtained. It will be, furthermore, noted that no matter to what an extent the coils may be modified in design and construction, owing to their general arrangement and manner of connection, as illustrated, those portions of the wire or apparatus which are highly charged will be out of reach, while those parts of the same which are liable to be approached, touched, or handled will be at or nearly the same potential as the adjacent portions of the ground, this insuring, both in the transmitting and receiving apparatus and regardless of the magnitude of the electrical pressure used, perfect personal safety, which is best evidenced by the fact that although such extreme pressures of many millions of volts have been for a number of years continuously experimented with no injury has been sustained neither by myself or any of my assistants.

The length of the thin-wire coil in each transformer should be approximately one-quarter of the wave length of the electric disturbance in the circuit, this estimate being based on the velocity of propagation of the disturbance through the coil itself and the circuit with which it is designed to be used. By way of illustration if the rate at which the current traverses the circuit, including the coil, be one hundred and eighty-five thousand miles per second then a frequency of nine hundred and twenty-five per second would maintain nine hundred and twenty-five stationary waves in a circuit one hundred and eighty-five thousand miles long and each wave would be two hundred miles in length. For such a low frequency, to which I shall resort only when it is indispensable to operate motors of the ordinary kind under the conditions above assumed, I would use a secondary of fifty miles in length. By such an adjustment or porportioning of the length of wire in the secondary coil or coils the points of highest potential are made to coincide with the elevated terminals D D′, and it should be understood that whatever length be given to the wires this condition should be complied with in order to attain the best results.

As the main requirement in carrying out my invention is to produce currents of an excessively-high potential, this object will be facilitated by using a primary current of very considerable frequency, since the electromotive force obtainable with a given length of conductor is proportionate to the frequency; but the frequency of the current is in a large measure arbitrary, for if the potential be sufficiently high and if the terminals of the coils be maintained at the proper altitudes the action described will take place, and a current will be transmitted through the elevated air strata, which will encounter little and possibly even less resistance than if conveyed through a copper wire of a practicable size. Accordingly the construction of the apparatus may be in many details greatly varied; but in order to enable any person skilled in the mechanical and electrical arts to utilize to advantage in the practical applications of my system the experience I have so far gained the following particulars of a model plant which has been long in use and which was constructed for the purpose of obtaining further data to be used in the carrying out of my invention on a large scale are given. The transmitting apparatus was in this case one of my electrical oscillators, which are transformers of a special type, now well known and characterized by the passage of oscillatory discharges of a condenser through the primary. The source G, forming one of the elements of the transmitter, was a condenser of a capacity of about four one-hundredths of a microfarad and was charged from a generator of alternating currents of fifty thousand volts pressure and discharged by means of a mechanically-operated break five thousand times per second through the primary C. The latter consisted of a single turn of stout stranded cable of inappreciable resistance and of an inductance of about eight thousand centimeters, the diameter of the loop being very nearly two hundred and forty-four centimeters. The total inductance of the primary circuit was approximately ten thousand centimeters, so that the primary circuit vibrated generally according to adjustment,

from two hundred and thirty thousand to two hundred and fifty thousand times per second. The high-tension coil A in the form of a flat spiral was composed of fifty turns of heavily-insulated cable No. 8 wound in one single layer, the turns beginning close to the primary loop and ending near its center. The outer end of the secondary or high-tension coil A was connected to the ground, as illustrated, while the free end was led to a terminal placed in the rarefied air stratum through which the energy was to be transmitted, which was contained in an insulating-tube of a length of fifty feet or more, within which a barometric pressure varying from about one hundred and twenty to one hundred and fifty millimeters was maintained by means of a mechanical suction-pump. The receiving-transformer was similarly proportioned, the ratio of conversion being the reciprocal of that of the transmitter, and the primary high-tension coil A′ was connected, as illustrated, with the end near the low-tension coil C′ to the ground and with the free end to a wire or plate likewise placed in the rarefied air stratum and at the distance named from the transmitting-terminal. The primary and secondary circuits in the transmitting apparatus being carefully synchronized, an electromotive force from two to four million volts and more was obtainable at the terminals of the secondary coil A, the discharge passing freely through the attenuated air stratum maintained at the above barometric pressures, and it was easy under these conditions to transmit with fair economy considerable amounts of energy, such as are of industrial moment, to the receiving apparatus for supplying from the secondary coil C′ lamps L or kindred devices. The results were particularly satisfactory when the primary coil or system A′, with its secondary C′, was carefully adjusted, so as to vibrate in synchronism with the transmitting coil or system A C. I have, however, found no difficulty in producing with apparatus of substantially the same design and construction electromotive forces exceeding three or four times those before mentioned and have ascertained that by their means current impulses can be transmitted through much-denser air strata. By the use of these I have also found it practicable to transmit notable amounts of energy through air strata not in direct contact with the transmitting and receiving terminals, but remote from them, the action of the impulses, in rendering conducting air of a density at which it normally behaves as an insulator, extending, as before remarked, to a considerable distance. The high electromotive force obtained at the terminals of coil or conductor A was, as will be seen, in the preceding instance, not so much due to a large ratio of transformation as to the joint effect of the capacities and inductances in the synchronized circuits, which effect is enhanced by a high frequency, and it will be obviously understood that if the latter be reduced a greater ratio of transformation should be resorted to, especially in cases in which it may be deemed of advantage to suppress as much as possible, and particularly in the transmitting-coil A, the rise of pressure due to the above effect and to obtain the necessary electromotive force solely by a large transformation ratio.

While electromotive forces such as are produced by the apparatus just described may be sufficient for many purposes to which my system will or may be applied, I wish to state that I contemplate using in an industrial undertaking of this kind forces greatly in excess of these, and with my present knowledge and experience in this novel field I would estimate them to range from twenty to fifty million volts and possibly more. By the use of these much greater forces larger amounts of energy may be conveyed through the atmosphere to remote places or regions, and the distance of transmission may be thus extended practically without limit.

As to the elevation of the terminals D D′ it is obvious that it will be determined by a number of things, as by the amount and quality of the work to be performed, by the local density and other conditions of the atmosphere, by the character of the surrounding country, and such considerations as may present themselves in individual instances. Thus if there be high mountains in the vicinity the terminals should be at a greater height, and generally they should always be, if practicable, at altitudes much greater than those of the highest objects near them in order to avoid as much as possible the loss by leakage. In some cases when small amounts of energy are required the high elevation of the terminals, and more particularly of the receiving-terminal D′, may not be necessary, since, especially when the frequency of the currents is very high, a sufficient amount of energy may be collected at that terminal by electrostatic induction from the upper air strata, which are rendered conducting by the active terminal of the transmitter or through which the currents from the same are conveyed.

With reference to the facts which have been pointed out above it will be seen that the altitudes required for the transmission of considerable amounts of electrical energy in accordance with this method are such as are easily accessible and at which terminals can be safely maintained, as by the aid of captive balloons supplied continuously with gas from reservoirs and held in position securely by steel wires or by any other means, devices, or expedients, such as may be contrived and perfected by ingenious and skilled engineers. From my experiments and observations I conclude that with electromotive impulses not greatly exceeding fifteen or twenty million volts the energy of many thousands of horse-power may be transmitted over vast distances, measured by many hundreds and

even thousands of miles, with terminals not more than thirty to thirty-five thousand feet above the level of the sea, and even this comparatively-small elevation will be required chiefly for reasons of economy, and, if desired, it may be considerably reduced, since by such means as have been described practically any potential that is desired may be obtained, the currents through the air strata may be rendered very small, whereby the loss in the transmission may be reduced.

It will be understood that the transmitting as well as the receiving coils, transformers, or other apparatus may be in some cases movable—as, for example, when they are carried by vessels floating in the air or by ships at sea. In such a case, or generally, the connection of one of the terminals of the high-tension coil or coils to the ground may not be permanent, but may be intermittently or inductively established, and any such or similar modifications I shall consider as within the scope of my invention.

While the description here given contemplates chiefly a method and system of energy transmission to a distance through the natural media for industrial purposes, the principles which I have herein disclosed and the apparatus which I have shown will obviously have many other valuable uses—as, for instance, when it is desired to transmit intelligible messages to great distances, or to illuminate upper strata of the air, or to produce, designedly, any useful changes in the condition of the atmosphere, or to manufacture from the gases of the same products, as nitric acid, fertilizing compounds, or the like, by the action of such current impulses, for all of which and for many other valuable purposes they are eminently suitable, and I do not wish to limit myself in this respect. Obviously, also, certain features of my invention here disclosed will be useful as disconnected from the method itself—as, for example, in other systems of energy transmission, for whatever purpose they may be intended, the transmitting and receiving transformers arranged and connected as illustrated, the feature of a transmitting and receiving coil or conductor, both connected to the ground and to an elevated terminal and adjusted so as to vibrate in synchronism, the proportioning of such conductors or coils, as above specified, the feature of a receiving-transformer with its primary connected to earth and to an elevated terminal and having the operative devices in its secondary, and other features or particulars, such as have been described in this specification or will readily suggest themselves by a perusal of the same.

I do not claim in this application a transformer for developing or converting currents of high potential in the form herewith shown and described and with the two coils connected together, as and for the purpose set forth, having made these improvements the subject of a patent granted to me November 2, 1897, No. 593,138, nor do I claim herein the apparatus employed in carrying out the method of this application when such apparatus is specially constructed and arranged for securing the particular object sought in the present invention, as these last-named features are made the subject of an application filed as a division of this application on February 19, 1900, Serial No. 5,780.

What I now claim is—

1. The method hereinbefore described of transmitting electrical energy through the natural media, which consists in producing at a generating-station a very high electrical pressure, causing thereby a propagation or flow of electrical energy, by conduction, through the earth and the air strata, and collecting or receiving at a distant point the electrical energy so propagated or caused to flow.

2. The method hereinbefore described of transmitting electrical energy, which consists in producing at a generating-station a very high electrical pressure, conducting the current caused thereby to earth and to a terminal at an elevation at which the atmosphere serves as a conductor therefor, and collecting the current by a second elevated terminal at a distance from the first.

3. The method hereinbefore described of transmitting electrical energy through the natural media, which consists in producing between the earth and a generator-terminal elevated above the same, at a generating-station, a sufficiently-high electromotive force to render elevated air strata conducting, causing thereby a propagation or flow of electrical energy, by conduction, through the air strata, and collecting or receiving at a point distant from the generating-station the electrical energy so propagated or caused to flow.

4. The method hereinbefore described of transmitting electrical energy through the natural media, which consists in producing between the earth and a generator-terminal elevated above the same, at a generating-station, a sufficiently-high electromotive force to render the air strata at or near the elevated terminal conducting, causing thereby a propagation or flow of electrical energy, by conduction, through the air strata, and collecting or receiving at a point distant from the generating-station the electrical energy so propagated or caused to flow.

5. The method hereinbefore described of transmitting electrical energy through the natural media, which consists in producing between the earth and a generator-terminal elevated above the same, at a generating-station, electrical impulses of a sufficiently-high electromotive force to render elevated air strata conducting, causing thereby current impulses to pass, by conduction, through the air strata, and collecting or receiving at a point distant from the generating-station, the energy of the current impulses by means of a circuit synchronized with the impulses.

6. The method hereinbefore described of

transmitting electrical energy through the natural media, which consists in producing between the earth and a generator-terminal elevated above the same, at a generating-station, electrical impulses of a sufficiently-high electromotive force to render the air strata at or near the elevated terminal conducting, causing thereby current impulses to pass through the air strata, and collecting or receiving at a point distant from the generating-station the energy of the current impulses by means of a circuit synchronized with the impulses.

7. The method hereinbefore described of transmitting electrical energy through the natural media, which consists in producing between the earth and a generator-terminal elevated above the same, at a generating-station, electrical impulses of a wave length so related to the length of the generating circuit or conductor as to produce the maximum potential at the elevated terminal, and of sufficiently-high electromotive force to render elevated air strata conducting, causing thereby a propagation of electrical impulses through the air strata, and collecting or receiving at a point distant from the generating-station the energy of such impulses by means of a receiving-circuit having a length of conductor similarly related to the wave length of the impulses.

8. The method hereinbefore described of transmitting electrical energy through the natural media, which consists in producing between the earth and a generator-terminal elevated above the same, at a generating-station, a sufficiently-high electromotive force to render elevated air strata conducting, causing thereby a propagation or flow of electrical energy through the air strata, by conduction, collecting or receiving the energy so transmitted by means of a receiving-circuit at a point distant from the generating-station, using the receiving-circuit to energize a secondary circuit, and operating translating devices by means of the energy so obtained in the secondary circuit.

9. The method hereinbefore described of transmitting electrical energy through the natural media, which consists in generating current impulses of relatively-low electromotive force at a generating-station, utilizing such impulses to energize the primary of a transformer, generating by means of such primary circuit impulses in a secondary surrounding by the primary and connected to the earth and to an elevated terminal, of sufficiently-high electromotive force to render elevated air strata conducting, causing thereby impulses to be propagated through the air strata, collecting or receiving the energy of such impulses, at a point distant from the generating-station, by means of a receiving-circuit connected to the earth and to an elevated terminal, and utilizing the energy so received to energize a secondary circuit of low potential surrounding the receiving-circuit.

NIKOLA TESLA.

Witnesses:
M. LAWSON DYER,
G. W. MARTLING.

No. 685,012. Patented Oct. 22, 1901.

N. TESLA.

MEANS FOR INCREASING THE INTENSITY OF ELECTRICAL OSCILLATIONS.

(Application filed Mar. 21, 1900. Renewed July 3, 1901.)

(No Model.)

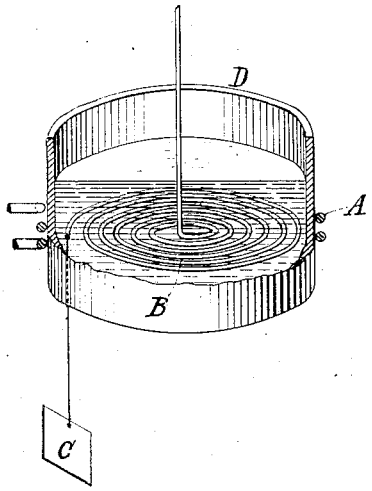

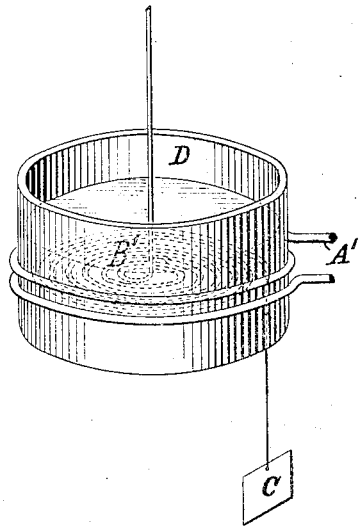

Witnesses:
Raphael Netter
Benjamin Miller.

Nikola Tesla, Inventor
by Kerr, Page & Cooper Attys.

UNITED STATES PATENT OFFICE.

NIKOLA TESLA, OF NEW YORK, N. Y.

MEANS FOR INCREASING THE INTENSITY OF ELECTRICAL OSCILLATIONS.

SPECIFICATION forming part of Letters Patent No. 685,012, dated October 22, 1901.

Application filed March 21, 1900. Renewed July 3, 1901. Serial No. 66,980. (No model.)

To all whom it may concern:

Be it known that I, NIKOLA TESLA, a citizen of the United States, residing at the borough of Manhattan, in the city, county, and State of New York, have invented certain new and useful Improvements in Means for Increasing the Intensity of Electrical Oscillations, of which the following is a specification, reference being had to the drawings accompanying and forming part of the same.

In many scientific and practical uses of electrical impulses or oscillations—as, for example, in systems of transmitting intelligence to distant points—it is of great importance to intensify as much as possible the current impulses or vibrations which are produced in the circuits of the transmitting and receiving instruments, particularly of the latter.

It is well known that when electrical impulses are impressed upon a circuit adapted to oscillate freely the intensity of the oscillations developed in the same is dependent on the magnitude of its physical constants and the relation of the periods of the impressed and of the free oscillations. For the attainment of the best result it is necessary that the periods of the impressed should be the same as that of the free oscillations, under which conditions the intensity of the latter is greatest and chiefly dependent on the inductance and resistance of the circuit, being directly proportionate to the former and inversely to the latter. In order, therefore, to intensify the impulses or oscillations excited in the circuit—in other words, to produce the greatest rise of current or electrical pressure in the same—it is desirable to make its inductance as large and its resistance as small as practicable. Having this end in view I have devised and used conductors of special forms and of relatively very large cross-section; but I have found that limitations exist in regard to the increase of the inductance as well as to the diminution of the resistance. This will be understood when it is borne in mind that the resonant rise of current or pressure in a freely-oscillating circuit is proportionate to the frequency of the impulses and that a large inductance in general involves a slow vibration. On the other hand, an increase of the section of the conductor with the object of reducing its resistance is, beyond a certain limit, of little or no value, principally because electrical oscillations, particularly those of high frequency, pass mainly through the superficial conducting layers, and while it is true that this drawback may be overcome in a measure by the employment of thin ribbons, tubes, or stranded cables, yet in practice other disadvantages arise, which often more than offset the gain.

It is a well-established fact that as the temperature of a metallic conductor rises its electrical resistance increases, and in recognition of this constructors of commercial electrical apparatus have heretofore resorted to many expedients for preventing the coils and other parts of the same from becoming heated when in use, but merely with a view to economizing energy and reducing the cost of construction and operation of the apparatus.

Now I have discovered that when a circuit adapted to vibrate freely is maintained at a low temperature the oscillations excited in the same are to an extraordinary degree magnified and prolonged, and I am thus enabled to produce many valuable results which have heretofore been wholly impracticable.

Briefly stated, then, my invention consists in producing a great increase in the intensity and duration of the oscillations excited in a freely-vibrating or resonating circuit by maintaining the same at a low temperature.

Ordinarily in commercial apparatus such provision is made only with the object of preventing wasteful heating, and in any event its influence upon the intensity of the oscillations is very slight and practically negligible, for as a rule impulses of arbitrary frequency are impressed upon a circuit, irrespective of its own free vibrations, and a resonant rise is expressly avoided.

My invention, it will be understood, does not primarily contemplate the saving of energy, but aims at the attainment of a distinctly novel and valuable result—that is, the increase to the greatest practicable degree of the intensity and duration of free oscillations. It may be usefully applied in all cases when this special object is sought, but offers exceptional advantages in those instances in which the freely-oscillating discharges of a condenser are utilized.

The best and most convenient manner of

carrying out the invention of which I am now aware is to surround the freely-vibrating circuit or conductor, which is to be maintained at a low temperature, with a suitable cooling medium, which may be any kind of freezing mixture or agent, such as liquid air, and in order to derive the fullest benefit from the improvement the circuit should be primarily constructed so as to have the greatest possible self-induction and the smallest practicable resistance, and other rules of construction which are now recognized should be observed. For example, when in a system of transmission of energy for any purpose through the natural media the transmitting and receiving conductors are connected to earth and to an insulated terminal, respectively, the lengths of these conductors should be one-quarter of the wave length of the disturbance propagated through them.

In the accompanying drawing I have shown graphically a disposition of apparatus which may be used in applying practically my invention.

The drawing illustrates in perspective two devices, either of which may be the transmitter, while the other is the receiver. In each there is a coil of few turns and low resistance, (designated in one by A and in the other by A'.) The former coil, supposed to be forming part of the transmitter, is to be connected with a suitable source of current, while the latter is to be included in circuit with a receiving device. In inductive relation to said coils in each instrument is a flat spirally-wound coil B or B', one terminal of which is shown as connected to a ground-plate C, while the other, leading from the center, is adapted to be connected to an insulated terminal, which is generally maintained at an elevation in the air. The coils B B' are placed in insulating-receptacles D, which contain the freezing agent and around which the coils A and A' are wound.

Coils in the form of a flat spiral, such as those described, are eminently suited for the production of free oscillations; but obviously conductors or circuits of any other form may be used, if desired.

From the foregoing the operation of the apparatus will now be readily understood. Assume, first, as the simplest case that upon the coil A of the transmitter impulses or oscillations of an arbitrary frequency and irrespective of its own free vibrations are impressed. Corresponding oscillations will then be induced in the circuit B, which, being constructed and adjusted, as before indicated, so as to vibrate at the same rate, will greatly magnify them, the increase being directly proportionate to the product of the frequency of the oscillations and the inductance of circuit B and inversely to the resistance of the latter. Other conditions remaining the same, the intensity of the oscillations in the resonating-circuit B will be increased in the same proportion as its resistance is reduced. Very often, however, the conditions may be such that the gain sought is not realized directly by diminishing the resistance of the circuit. In such cases the skilled expert who applies the invention will turn to advantage the reduction of resistance by using a correspondingly longer conductor, thus securing a much greater self-induction, and under all circumstances he will determine the dimensions of the circuit, so as to get the greatest value of the ratio of its inductance to its resistance, which determines the intensity of the free oscillations. The vibrations of coil B, greatly strengthened, spread to a distance and on reaching the tuned receiving-conductor B' excite corresponding oscillations in the same, which for similar reasons are intensified, with the result of inducing correspondingly stronger currents or oscillations in circuit A', including the receiving device. When, as may be the case in the transmission of intelligible signals, the circuit A is periodically closed and opened, the effect upon the receiver is heightened in the manner above described not only because the impulses in the coils B and B' are strengthened, but also on account of their persistence through a longer interval of time. The advantages offered by the invention are still more fully realized when the circuit A of the transmitter instead of having impulses of an arbitrary frequency impressed upon it is itself permitted to vibrate at its own rate, and more particularly so if it be energized by the freely-oscillating high-frequency discharges of a condenser. In such a case the cooling of the conductor A, which may be effected in any suitable manner, results in an extraordinary magnification of the oscillation in the resonating-circuit B, which I attribute to the increased intensity as well as greater number of the high-frequency oscillations obtained in the circuit A. The receiving-coil B' is energized stronger in proportion and induces currents of greater intensity in the circuit A'. It is evident from the above that the greater the number of the freely-vibrating circuits which alternately receive and transmit energy from one to another the greater, relatively, will be the gain secured by applying my invention.

I do not of course intend to limit myself to the specific manner and means described of artificial cooling, nor to the particular forms and arrangements of the circuits shown. By taking advantage of the facts above pointed out and of the means described I have found it possible to secure a rise of electrical pressure in an excited circuit very many times greater than has heretofore been obtainable, and this result makes it practicable, among other things, to greatly extend the distance of transmission of signals and to exclude much more effectively interference with the same than has been possible heretofore.

Having now described my invention, what I claim is—

1. The combination with a circuit adapted

to vibrate freely, of means for artificially cooling the same to a low temperature, as herein set forth.

2. In an apparatus for transmitting or receiving electrical impulses or oscillations, the combination with a primary and a secondary circuit, adapted to vibrate freely in response to the impressed oscillations, of means for artificially cooling the same to a low temperature, as herein set forth.

3. In a system for the transmission of electrical energy, a circuit upon which electrical oscillations are impressed, and which is adapted to vibrate freely, in combination with a receptacle containing an artificial refrigerant in which said circuit is immersed, as herein set forth.

4. The means of increasing the intensity of the electrical impulses or oscillations impressed upon a freely-vibrating circuit, consisting of an artificial refrigerant combined with and applied to such circuit and adapted to maintain the same at a low temperature.

5. The means of intensifying and prolonging the electrical oscillations produced in a freely-vibrating circuit, consisting of an artificial refrigerant applied to such circuit and adapted to maintain the same at a uniformly-low temperature.

6. In a system for the transmission of energy, a series of transmitting and receiving circuits adapted to vibrate freely, in combination with means for artificially maintaining the same at a low temperature, as set forth.

NIKOLA TESLA.

Witnesses:
JOHN C. KERR,
M. LAWSON DYER.

No. 685,956. Patented Nov. 5, 1901.

N. TESLA.

APPARATUS FOR UTILIZING EFFECTS TRANSMITTED THROUGH NATURAL MEDIA.

(Application filed Nov. 2, 1899. Renewed May 29, 1901.)

(No Model.)

Fig. 1

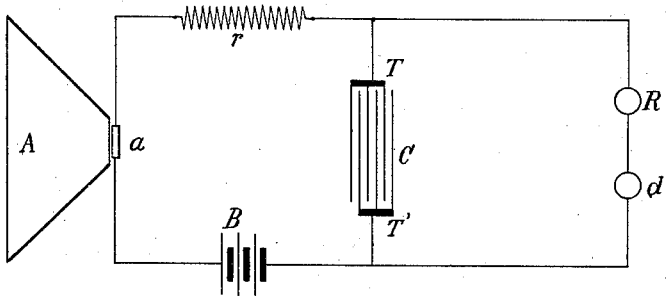

Fig. 2

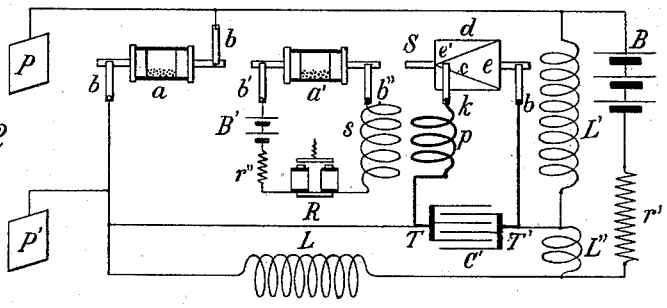

Fig. 3

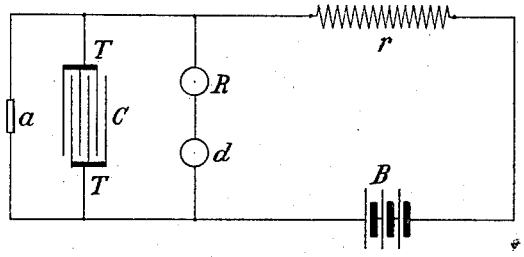

Fig. 4

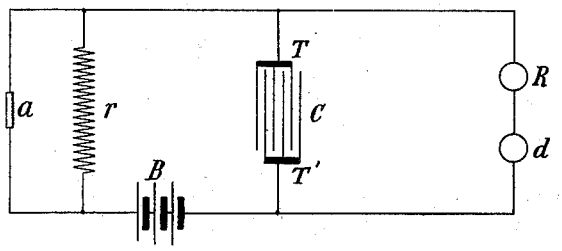

Fig. 5

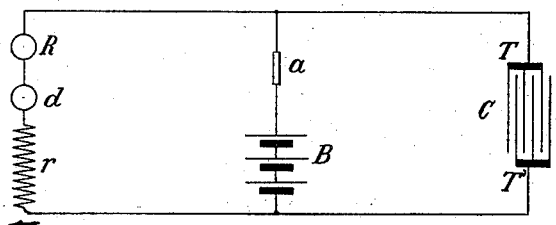

Witnesses:
Raphael Netter
M. Lawson Dyer.

Inventor
Nikola Tesla
by Kerr, Page & Cooper, Attorneys.

THE NORRIS PETERS CO., PHOTO-LITHO., WASHINGTON, D. C.

UNITED STATES PATENT OFFICE.

NIKOLA TESLA, OF NEW YORK, N. Y.

APPARATUS FOR UTILIZING EFFECTS TRANSMITTED THROUGH NATURAL MEDIA.

SPECIFICATION forming part of Letters Patent No. 685,956, dated November 5, 1901

Original application filed August 1, 1899, Serial No. 725,749. Divided and this application filed November 2, 1899. Renewed May 29, 1901. Serial No. 62,318. (No model.)

To all whom it may concern:

Be it known that I, NIKOLA TESLA, a citizen of the United States, residing at New York city, in the county and State of New York, have invented a new and useful Improvement in Apparatus for Utilizing Effects Transmitted from a Distance to a Receiving Device Through the Natural Media, of which the following is a specification, reference being had to the accompanying drawings, which form a part of the same.

The subject of my present invention is an improvement in the art of utilizing effects transmitted from a distance to a receiving device through the natural media; and it consists in the novel apparatus hereinafter described.

This application is a division of one filed by me August 1, 1899, Serial No. 725,749, and based upon and claiming the method herein described and which may be practiced by the use of the apparatus forming the subject of this application.

My invention is particularly useful in connection with methods and apparatus for operating distant receiving devices by means of electrical disturbances produced by proper transmitters and conveyed to such receiving devices through the natural media; but it obviously has a wider range of applicability and may be employed, for example, in the investigation or utilization of terrestrial, solar, or other disturbances produced by natural causes.

Several ways or methods of transmitting electrical disturbances through the natural media and utilizing them to operate distant receivers are now known and have been applied with more or less success for accomplishing a variety of useful results. One of these ways consists in producing by a suitable apparatus rays or radiations—that is, disturbances—which are propagated in straight lines through space, directing them upon a receiving or recording apparatus at a distance, and thereby bringing the latter into action. This method is the oldest and best known and has been brought particularly into prominence in recent years through the investigations of Heinrich Hertz. Another method consists in passing a current through a circuit, preferably one inclosing a very large area, inducing thereby in a similar circuit situated at a distance another current and affecting by the same in any convenient way a receiving device. Still another way, which has also been known for many years, is to pass in any suitable manner a current through a portion of the ground, as by connecting to two points of the same, preferably at a considerable distance from each other, the two terminals of a generator and to energize by a part of the current diffused through the earth a distant circuit, which is similarly arranged and grounded at two points widely apart and which is made to act upon a sensitive receiver. These various methods have their limitations, one especially, which is common to all, being that the receiving circuit or instrument must be maintained in a definite position with respect to the transmitting apparatus, which often imposes great disadvantages upon the use of the apparatus.

In several applications filed by me and patents granted to me I have disclosed other methods of accomplishing results of this nature, which may be briefly described as follows: In one system the potential of a point or region of the earth is varied by imparting to it intermittent or alternating electrifications through one of the terminals of a suitable source of electrical disturbances, which, to heighten the effect, has its other terminal connected to an insulated body, preferably of large surface and at an elevation. The electrifications communicated to the earth spread in all directions through the same, reaching a distant circuit, which generally has its terminals arranged and connected similarly to those of the transmitting source and operates upon a highly-sensitive receiver. Another method is based upon the fact that the atmospheric air, which behaves as an excellent insulator to currents generated by ordinary apparatus, becomes a conductor under the influence of currents or impulses of enormously high electromotive force, which I have devised means for generating. By such means air strata, which are easily accessible, are rendered available for the production of many desired effects at distances however great. This method, furthermore, allows ad-

vantage to be taken of many of those improvements which are practicable in the ordinary systems of transmission involving the use of a metallic conductor.

Obviously whatever method be employed it is desirable that the disturbances produced by the transmitting apparatus should be as powerful as possible, and by the use of certain forms of high-frequency apparatus, which I have devised and which are now well known, important practical advantages are in this respect secured. Furthermore, since in most cases the amount of energy conveyed to the distant circuit is but a minute fraction of the total energy emanating from the source it is necessary for the attainment of the best results that whatever the character of the receiver and the nature of the disturbances as much as possible of the energy conveyed should be made available for the operation of the receiver, and with this object in view I have heretofore, among other means, employed a receiving-circuit of high self-induction and very small resistance and of a period such as to vibrate in synchronism with the disturbances, whereby a number of separate impulses from the source were made to coöperate, thus magnifying the effect exerted upon and insuring the action of the receiving device. By these means decided advantages have been secured in many instances; but very often the improvement is either not applicable at all, or, if so, the gain is very slight. Evidently when the source is one producing a continuous pressure or delivering impulses of long duration it is impracticable to magnify the effects in this manner, and when, on the other hand, it is one furnishing short impulses of extreme rapidity of succession the advantage obtained in this way is insignificant, owing to the radiation and the unavoidable frictional waste in the receiving-circuit. These losses reduce greatly both the intensity and the number of the coöperative impulses, and since the initial intensity of each of these is necessarily limited only an insignificant amount of energy is thus made available for a single operation of the receiver. As this amount is consequently dependent on the energy conveyed to the receiver by one single impulse, it is evidently necessary to employ either a very large and costly, and therefore objectionable, transmitter, or else to resort to the equally objectionable use of a receiving device too delicate and too easily deranged. Furthermore, the energy obtained through the coöperation of the impulses is in the form of extremely rapid vibrations and because of this unsuitable for the operation of ordinary receivers, the more so as this form of energy imposes narrow restrictions in regard to the mode and time of its application to such devices. To overcome these and other limitations and disadvantages that have heretofore existed in such systems of transmission of signals or intelligence and to render possible an investigation of impulses or disturbances propagated through the natural media from any kind of source and their practical utilization for any purpose to which they are applicable, I have devised a novel method, which I have described in a pending application, filed June 24, 1899, Serial No. 721,790, and which, broadly stated, consists in effecting during any desired time interval a storage of energy derived from such impulses and utilizing the potential energy so obtained for operating a receiving device.

My present invention is intended for the same general purposes, and it comprises another apparatus by means of which similar results may be obtained.

The chief feature which distinguishes the method of my present from that of my former invention, just referred to, is that the energy stored is not, as in the former instance, obtained from the energy of the disturbances or effects transmitted from a distance, but from an independent source.

Expressed generally, the present method consists in charging a storage device with energy from an independent source, controlling the charging of said device by the action of the effects or disturbances transmitted through the natural media, and coincidently using the stored energy for operating a receiving device.

A great variety of disturbances, produced either by suitably-constructed transmitters or by natural causes, are at present known to be propagated through the natural media, and there are also a variety of means or devices enabling energy to be stored, and in view of this I wish to say that I consider the utilization of any such disturbances and the employment of any of these means as within the scope of my present invention so long as the use of the general method hereinbefore stated is involved.

The best way of carrying out my invention which I at present know is to store electrical energy obtained from a suitable electrical generator in a condenser and to control the storage or the application of this energy by means of a sensitive device acted upon by the effects or disturbances, and thereby cause the operation of the receiver.

In the practical application of this method I usually proceed as follows: At any point where I desire to investigate or to utilize for any purpose effects or disturbances propagated through the natural media from any kind of source I provide a suitable generator of electricity—as, for example, a battery and a condenser—which I connect to the poles of the generator in series with a sensitive device capable of being modified in its electrical resistance or other property by the action of the disturbances emitted from the source. To the terminals of the condenser I connect the receiver which is to be operated in series with another device of suitable construction, which performs the function of periodically discharging the condenser through

the receiver at and during such intervals of time as may be best suitable for the purpose contemplated. This latter device may merely consist of two stationary electrodes separated by a feeble dielectric layer of minute thickness, but sufficient to greatly reduce or practically interrupt the current in the circuit under normal conditions, or it may comprise terminals one or more of which are movable and actuated by any suitable force and are adapted to be brought into and out of contact with each other in any convenient manner. The sensitive device may be any of the many devices of this kind which are known to be affected by the disturbances, impulses, or effects propagated through the media, and it may be of such a character that normally—that is, when not acted upon—it entirely prevents the passage of electricity from the generator to the condenser, or it may be such that it allows a gradual leaking through of the current and a charging of the condenser at a slow rate. In any case it will be seen that if the disturbances, of whatever nature they may be, cause an appreciable diminution in the electrical resistance of the sensitive device the current from the battery will pass more readily into the condenser, which will be charged at a more rapid rate, and consequently each of its discharges through the receiver, periodically effected by the special device before referred to which performs this function, will be stronger than normally—that is, when the sensitive device is not acted upon by the disturbances. Evidently then if the receiver be so adjusted that it does not respond to the comparatively feeble normal discharges of the condenser, if they should occur, but only to those stronger ones which take place upon the diminution of the resistance of the sensitive device it will be operated only when this device is acted upon by the disturbances, thus making it possible to investigate and to utilize the latter for any desired purpose.

The general principle underlying my invention and the operation of the various devices used will be clearly understood by reference to the accompanying drawings, in which—

Figure 1 is a diagram illustrating a typical arrangement of apparatus which may be used in carrying my method into practice, and Figs. 2, 3, 4, and 5 similar diagrams of modified arrangements of apparatus for the same purpose.

In Fig. 1, C is a condenser, to the terminals T and T′ of which is connected a charging-circuit, including a battery B, a sensitive device *a*, and a resistance *r*, all connected in series, as illustrated. The battery should be preferably of very constant electromotive force and of an intensity carefully determined to secure the best results. The resistance *r*, which may be a frictional or an inductive one, is not absolutely necessary; but it is of advantage to use it in order to facilitate adjustment, and for this purpose it may be made variable in any convenient and preferably continuous manner. Assuming that the disturbances which are to be investigated or utilized for some practical end are rays identical with or resembling those of ordinary light, the sensitive device *a* may be a selenium cell properly prepared, so as to be highly susceptible to the influence of the rays, the action of which should be intensified by the use of a reflector A. (Shown in the drawings.) It is well known that when cells of this kind are exposed to such rays of greatly-varying intensity they undergo corresponding modifications of their electrical resistance; but in the ways they have been heretofore used they have been of very limited utility.

In addition to the circuit including the sensitive device or cell *a* another circuit is provided, which is likewise connected to the terminals T T′ of the condenser. This circuit, which may be called the "receiving-circuit," includes the receiver R and in series with it a device *d*, before referred to, which performs the duty of periodically discharging the condenser through the receiver. It will be noted that, as shown in Fig. 1, the receiving-circuit is in permanent connection with the battery and condenser-terminal T, and it should be stated that it is sometimes desirable to entirely insulate the receiving-circuit at all times, except the moments when the device *d* operates to discharge the condenser, thus preventing any disturbing influence which might otherwise be caused in this circuit by the battery or the condenser during the period when the receiver should not be acted upon. In such a case two devices, as *d*, may be used, one in each connection from the condenser to the receiving-circuit, or else one single device of this kind, but of a suitably-modified construction, so that it will make and break simultaneously and at proper intervals of time both of the connections of this circuit with the condenser T and T′.

From the foregoing the operation of the apparatus, as illustrated in Fig. 1, will be at once understood. Normally—that is, when it is not influenced by the rays at all or very slightly—the cell *a*, being of a comparatively high resistance, permits only a relatively feeble current to pass from the battery into the condenser, and hence the latter is charged at too slow a rate to accumulate during the time interval between two succeeding operations of the device *d* sufficient energy to operate the receiver or, generally speaking, to produce the required change in the receiving-circuit. This condition is readily secured by a proper selection and adjustment of the various devices described, so that the receiver will remain unresponsive to the feeble discharges of the condenser which may take place when the cell *a* is acted upon but slightly or not at all by the rays or disturbances; but if now new rays are permitted to fall upon the cell or if the intensity of those already acting upon it be increased by any cause then

its resistance will be diminished and the condenser will be charged by the battery at a more rapid rate, enabling sufficient potential energy to be stored in the condenser during the period of inaction of the device *d* to operate the receiver or to bring about any desired change in the receiving-circuit when the device *d* acts. If the rays acting upon the cell or sensitive device *a* are varied or intermitted in any arbitrary manner, as when transmitting intelligence in the usual way from a distant station by means of short and long signals, the apparatus may readily be made to record or to enable an operator to read the message, since the receiver—supposing it to be an ordinary magnetic relay, for example—will be operated by each signal from the sending-station a certain number of times, having some relation to the duration of each signal. It will be readily seen, however, that if the rays are varied in any other way, as by impressing upon them changes in intensity, the succeeding condenser discharges will undergo corresponding changes in intensity, which may be indicated or recorded by a suitable receiver and distinguished irrespectively of duration.

With reference to Fig. 1 it may be useful to state that the electrical connections of the various devices illustrated may be made in many different ways. For instance, the sensitive device instead of being in series, as shown, may be in a shunt to the condenser, this modification being illustrated in Fig. 3, in which the devices already described are indicated by similar letters to correspond with those of Fig. 1. In this case it will be observed that the condenser, which is being charged from the battery B through the resistance *r*, preferably inductive and properly related to the capacity of the condenser, will store less energy when the sensitive device *a* is energized by the rays, and its resistance thereby diminished. The adjustment of the various instruments may then be such that the receiver will be operated only when the rays are diminished in intensity or interrupted and entirely prevented from falling upon the sensitive cell, or the sensitive device may be placed, as shown in Fig. 4, in a shunt to the resistance *r* or inserted in any suitable way in the circuit containing the receiver—for example, as illustrated in Fig. 5—in both of which figures the various devices are lettered to correspond with those in Fig. 1, so that the figures become self-explanatory. Again, the several instruments may be connected in the manner of a Wheatstone bridge, as will be hereinafter explained with reference to Fig. 2, or otherwise connected or related; but in each case the sensitive device will have the same duty to perform—that is, to control the energy stored and utilized in some suitable way for causing the operation of the receiver in correspondence with the intermittances or variations of the effects or disturbances—and in each instance by a judicious selection of the devices and careful adjustment the advantages of my method may be more or less completely secured. I find it preferable, however, to follow the plan which I have illustrated and described.

It will be observed that the condenser is an important element in the combination. I have shown that by reason of its unique properties it greatly adds to the efficacy of this method. It allows the energy accumulated in it to be discharged instantaneously, and therefore in a highly effective manner. It magnifies in a large degree the current supplied from the battery, and owing to these features it permits energy to be stored and discharged at practically any rate desired, and thereby makes it possible to obtain in the receiving-circuit very great changes of the current strength by impressing upon the battery-current very small variations. Other means of storage possessing these characteristics to a useful degree may be employed without departing from the broad spirit of my invention; but I prefer to use a condenser, since in these respects it excels any other storage device of which I have knowledge.

In Fig. 2 a modified arrangement of apparatus is illustrated which is particularly adapted for the investigation and utilization of very feeble impulses or disturbances, such as may be used in conveying signals or producing other desired effects at very great distances. In this case the energy stored in the condenser is passed through the primary of a transformer, the secondary circuit of which contains the receiver, and in order to render the apparatus still more suitable for use in detecting feeble impulses, in addition to the sensitive device which is acted upon by the impulses, another such device is included in the secondary circuit of the transformer. The scheme of connections is in the main that of a Wheatstone bridge, the four branches of which are formed by the sensitive device *a* and resistances L, L′, and L″, all of which should be preferably inductive and also adjustable in a continuous manner, or at least by very small steps. The condenser C′, which is generally made of considerable capacity, is connected to two opposite points of the bridge, while a battery B, in series with a continuously-adjustable non-inductive resistance *r*′, is connected to the other pair of opposite points, as usual. The four resistances included in the branches of the bridge—namely, *a*, L, L′, and L″—are of a suitable size and so proportioned that under normal conditions—that is, when the device *a* is not influenced at all or only slightly by the disturbances—there will be no difference of potential, or, in any case, the minimum of the same at the terminals T and T′ of the condenser. It is assumed in the present instance that the disturbances to be investigated or utilized are such as will produce a difference of electric potential, however small, between two points or regions in the natural media, as the earth, the water,

or the air, and in order to apply this potential difference effectively to the sensitive device *a* the terminals of the same are connected to two plates P and P', which should be of as large a surface as practicable and so located in the media that the largest possible difference of potential will be produced by the disturbances between the terminals of the sensitive device. This device is in the present case one of familiar construction, consisting of an insulating-tube, which is indicated by the heavy lines in the drawings and which has its ends closed tightly by two conducting-plugs with reduced extensions, upon which bear two brushes *b b*, through which the currents are conveyed to the device. The tubular space between the plugs is partially filled with a conducting sensitive powder, as indicated, the proper amount of the same and the size of its grains being determined and adjusted beforehand by experiment. This tube I rotate by clockwork or other means at a uniform and suitable rate of speed, and under these conditions I find that this device behaves toward disturbances of the kind before assumed in a manner similar to that of a stationary cell of celenium toward rays of light. Its electrical resistance is diminished when it is acted upon by the disturbances and is automatically restored upon the cessation of their influence. It is of advantage to employ round grains of powder in the tube, and in any event it is important that they should be of as uniform size and shape as possible and that provision should be made for maintaining an unchanging and very dry atmosphere in the tube. To the terminals T and T' of the condenser C' is connected a coil *p*, usually consisting of a few turns of a conductor of very small resistance, which is the primary of the transformer before referred to, in series with a device *d*, which effects the discharge of the condenser through the coil *p* at predetermined intervals of time. In the present case this device consists of a cylinder made partly of conducting and partly of insulating material *e* and *e'*, respectively, which is rotated at the desired rate of speed by any suitable means. The conducting part *e* is in good electrical connection with shaft S and is provided with tapering segments, as *f*, upon which slides a brush *k*, which should preferably be capable of longitudinal adjustment along the cylinder. Another brush *b'*, which is connected to the condenser-terminal T', being arranged to bear upon the shaft S, it will be seen that whenever the brush *k* comes in contact with a conducting-segment *e* the circuit including the primary *p* will be completed and the condenser, if energized, discharged through the same. By an adjustment of the speed of rotation of the cylinder and a displacement of the brush *k* along the axis of the same the circuit may be made to open and close in as rapid succession and remain open or closed during such intervals of time as may be desired. In inductive relation to the primary *p* is a secondary coil *s*, usually of much thinner wire and of many more turns than the former, to which are connected in a series a receiver R, illustrated as an ordinary magnetic relay, a continuously-adjustable non-inductive resistance *r''*, a battery B' of a properly-determined and very constant electromotive force, and finally a sensitive device *a'* of the same or similar construction as *a*, which is likewise rotated at a uniform speed and which, with its brushes *b' b''*, closes the secondary circuit. The electromotive force of the battery B' is so graduated by means of the adjustable resistance *r''* that the dielectric layers in the sensitive device *a'* are strained very nearly to the point of breaking down and give way upon a slight increase of the electrical pressure on the terminals of the device. It will of course be understood that the resistance *r''* is used mainly because of convenience and that it may be dispensed with, in which case the adjustment may be effected in many other ways, as by determining the proper amount or coarseness of the sensitive powder or by varying the distance apart of the metallic plugs in the ends of the tube. The same may be said of the resistance *r'*, which is in series with the battery B and serves to graduate the force of the latter, so that the dielectric layers of the sensitive device *a* are subjected to a similar strain and maintained in a state of delicate poise.

The various instruments being connected and adjusted in the manner described, it will now be readily seen from the foregoing that under normal conditions, the device *a* being unaffected by the disturbances, or practically so, and there being no or only a very insignificant amount of energy stored in the condenser, the periodical closure of the primary circuit of the transformer through the operation of the device *d* will have no appreciable effect upon the primary coil *p*, and hence no currents will be generated in the secondary coil *s*, at least not such as would disturb the state of delicate balance existing in the secondary circuit including the receiver, and therefore the latter will not be actuated by the battery B'; but when, owing to the disturbances or impulses propagated through the media from a distant source, an additional electromotive force, however small, is created between the terminals of the device *a* the dielectric layers in the same, unable to support the increased strain, give way and allow the current of the battery B to pass through, thus causing a difference of potential at the terminals T and T' of the condenser. A sufficient amount of energy being now stored in this instrument during the time interval between each two succeeding operations of the device *d*, each closure of the primary circuit by the latter results in the passage of a sudden current impulse through the coil *p*, which induces a corresponding current of relatively high electromotive force in

the secondary coil *s*. Owing to this the dielectric in the device *a'* gives way, and the current of the battery B' being allowed to pass the receiver R is operated, but only for a moment, since by the rotation of the devices *a*, *a'*, and *d*, which may be all driven from the same shaft, the original conditions are restored, assuming, of course, that the electromotive force set up by the disturbances at the terminals of the sensitive device *a* is only momentary or of a duration not longer than the time of closure of the primary circuit; otherwise the receiver will be actuated a number of times and so long as the influence of the disturbances upon the device *a* continues. In order to render the discharged energy of the condenser more effective in causing the operation of the receiver, the resistance of the primary circuit should be very small and the secondary coil *s* should have a number of turns many times greater than that of the primary coil *p*. It will be noted that since the condenser under the above assumptions is always charged in the same direction the strongest current impulse in the secondary coil, which is induced at the moment when the brush *k* comes in contact with segment *e*, is also of unchanging direction, and for the attainment of the best results it is necessary to connect the secondary coil so that the electromotive force of this impulse will be added to that of the battery and will momentarily strengthen the same. However, under certain conditions, which are well understood by those skilled in the art, the devices will operate whichever way the secondary be connected. It is preferable to make the inductive resistances L and L' relatively large, as they are in a shunt to the device *a* and might, if made too small, impair its sensitiveness. On the other hand, the resistance L'' should not be too large and should be related to the capacity of the condenser and the number of makes and breaks effected by the device *d* in well-known ways. Similar considerations apply, of course, to the circuits including the primary *p* and secondary *s*, respectively.

By carefully observing well-known rules of scientific design and adjustment of the instruments the apparatus may be made extremely sensitive and capable of responding to the feeblest influences, thus making it possible to utilize impulses or disturbances transmitted from very great distances and too feeble to be detected or utilized in any of the ways heretofore known, and on this account the method here described lends itself to many scientific and practical uses of great value.

Obviously the character of the devices and the manner in which they are connected or related may be greatly varied without departing from the spirit of my invention.

What I claim as new, and desire to secure by Letters Patent, is—

1. In an apparatus for utilizing effects or disturbances transmitted through the natural media from a distant source, the combination of an electrical storage device, a charging-circuit connected therewith and including a device sensitive to the action of the effects or disturbances and determining under their control the flow of current in the charging-circuit, a receiving-circuit including a receiver, and means for periodically discharging the storage device through the receiving-circuit, substantially as described.

2. In an apparatus for utilizing effects or disturbances transmitted through the natural media from a distant source, the combination of a condenser, a charging-circuit connected therewith and including a source of electricity and a device sensitive to the action of the effects or disturbances and determining under their control the flow of current in the charging-circuit, a receiving-circuit including a receiver, and means for periodically discharging the condenser through the receiving-circuit, substantially as described.

3. In an apparatus for utilizing effects or disturbances transmitted through the natural media from a distant source, the combination of a circuit including a source of electricity, a storage device adapted to be charged thereby and a device normally of very high resistance but adapted to have its resistance reduced when acted upon by the effects or disturbances, with a receiving-circuit connected with the storage device and including a receiver and a device adapted to open and close the receiving-circuit at predetermined intervals of time, substantially as described.

4. In an apparatus for utilizing effects or disturbances transmitted through the natural media from a distant source, the combination of a circuit including a source of electricity, a condenser and a device normally of very high resistance but adapted to have its resistance reduced when acted upon by the effects or disturbances, with a receiving-circuit connected with the condenser and including a receiver and a device adapted to open and close the receiving-circuit at predetermined intervals of time, substantially as described.

5. In an apparatus for utilizing effects or disturbances transmitted from a distant source, the combination of a circuit including a source of electricity, a storage device adapted to be charged thereby and a device, normally of very high resistance but adapted to have its resistance reduced when acted upon by the effects or disturbances, with a receiving-circuit connected with the storage device and including the primary of a transformer and a device adapted to open and close such second circuit at predetermined intervals of time, and a receiver included in the secondary of the transformer, substantially as described.

6. In an apparatus for utilizing effects or disturbances transmitted from a distant source, the combination of an electrical storage device, a charging-circuit connected therewith and including a device sensitive to the

action of the effects or disturbances and determining under their control the flow of the current in the charging-circuit, and a receiving-circuit supplied with energy from the storage device and including a receiver and a device sensitive to electrical variations in the receiving-circuit, substantially as described.

7. In an apparatus for utilizing effects or disturbances transmitted through the natural media from a distant source, the combination of a condenser, a charging-circuit connected therewith and including a device sensitive to the action of the effects or disturbances and determining under their control the flow of the current in the charging-circuit, and a receiving-circuit supplied with energy from the condenser and including a receiver and a device sensitive to electrical variations in the receiving-circuit, substantially as described.

8. In an apparatus for utilizing effects or disturbances transmitted through the natural media from a distant source, the combination of a circuit, an independent local source of electricity included therein, a storage device connected with the said circuit and adapted to receive energy from the said source, a device normally of very high resistance, but adapted to have its resistance reduced when acted upon by the effects or disturbances, a receiving-circuit connected with the storage device, a transformer, the primary of which is included in said receiving-circuit, a device adapted to open and close the receiving-circuit at predetermined intervals of time, a receiver, and a device, normally of very high resistance, but adapted to have its resistance reduced when acted upon by the effects or disturbances, and included in the secondary circuit of the transformer, as set forth.

9. In an apparatus for utilizing effects or disturbances transmitted from a distant source, the combination with a storage device and an independent source of energy for charging the same, of a receiving-circuit connected with the storage device, a device sensitive to the effects or disturbances and determining under their control the flow of current in the receiving-circuit, substantially as set forth.

10. In an apparatus for utilizing effects or disturbances transmitted through the natural media from a distant source, the combination with a storage device and an independent source of energy for charging the same, of a receiving-circuit connected with the storage device, a device sensitive to the effects or disturbances and adapted to have its resistance varied by the action thereon of such effects or disturbances and determining under their control the flow of current in the receiving-circuit, substantially as set forth.

11. In an apparatus for utilizing effects or disturbances transmitted from a distant source, the combination of a storage device, a battery or similar independent source of energy for charging the same, a sensitive device adapted to have its resistance varied under the influence of the effects or disturbances, a receiver adapted to be operated by the discharge of the storage device, the sensitive device being in one branch of a Wheatstone bridge, the storage device in one of the cross connections between two opposite points of the bridge, and the battery in the other cross connection, and resistances L, L′ and L″ in the three remaining branches of the bridge, as set forth.

12. In an apparatus for utilizing effects or disturbances transmitted through the natural media from a distant source, the combination of a storage device, a battery or like independent source of energy for charging the same, a sensitive device adapted to have its resistance varied under the influence of the effects or disturbances, a circuit connected with the terminals of the storage device, a transformer having its primary in said circuit and a receiver in the secondary circuit of the transformer, the sensitive device being in one branch of a Wheatstone bridge, the storage device in one of the cross connections between opposite points of the bridge and the battery in the other cross connection, and resistances L, L′ and L″ in the three remaining branches of the bridge, as set forth.

NIKOLA TESLA.

Witnesses:
E. A. SUNDERLIN,
D. D. LORD.

No. 685,957. Patented Nov. 5, 1901.

N. TESLA.

APPARATUS FOR THE UTILIZATION OF RADIANT ENERGY.

(Application filed Mar. 21, 1901.)

(No Model.)

Fig. 1

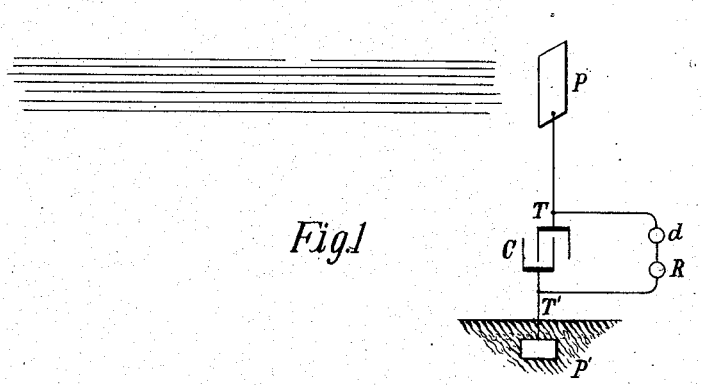

Fig. 2

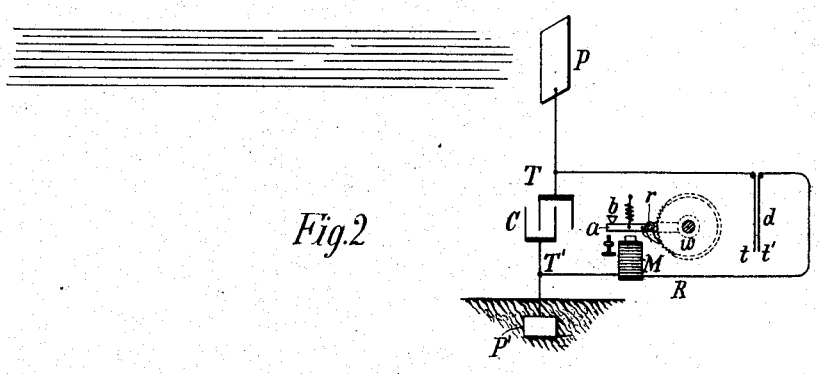

Fig. 3

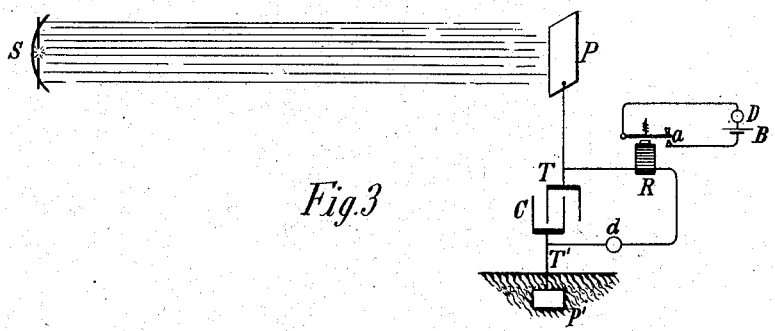

Fig. 4

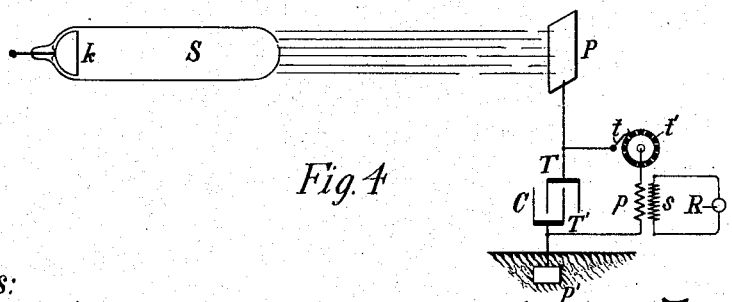

Witnesses:
Randall Potter
M. Lawson Dyer.

Inventor
Nicola Tesla
by Kerr, Page & Cooper Attys.

THE NORRIS PETERS CO., PHOTO-LITHO., WASHINGTON, D. C.

UNITED STATES PATENT OFFICE.

NIKOLA TESLA, OF NEW YORK, N. Y.

APPARATUS FOR THE UTILIZATION OF RADIANT ENERGY.

SPECIFICATION forming part of Letters Patent No. 685,957, dated November 5, 1901.

Application filed March 21, 1901. Serial No. 52,153. (No model.)

To all whom it may concern:

Be it known that I, NIKOLA TESLA, a citizen of the United States, residing at the borough of Manhattan, in the city, county, and State of New York, have invented certain new and useful Improvements in Apparatus for the Utilization of Radiant Energy, of which the following is a specification, reference being had to the drawings accompanying and forming a part of the same.

It is well known that certain radiations—such as those of ultra-violet light, cathodic, Roentgen rays, or the like—possess the property of charging and discharging conductors of electricity, the discharge being particularly noticeable when the conductor upon which the rays impinge is negatively electrified. These radiations are generally considered to be ether vibrations of extremely small wave lengths, and in explanation of the phenomena noted it has been assumed by some authorities that they ionize or render conducting the atmosphere through which they are propagated. My own experiments and observations, however, lead me to conclusions more in accord with the theory heretofore advanced by me that sources of such radiant energy throw off with great velocity minute particles of matter which are strongly electrified, and therefore capable of charging an electrical conductor, or, even if not so, may at any rate discharge an electrified conductor either by carrying off bodily its charge or otherwise.

My present application is based upon a discovery which I have made that when rays or radiations of the above kind are permitted to fall upon an insulated conducting-body connected to one of the terminals of a condenser while the other terminal of the same is made by independent means to receive or to carry away electricity a current flows into the condenser so long as the insulated body is exposed to the rays, and under the conditions hereinafter specified an indefinite accumulation of electrical energy in the condenser takes place. This energy after a suitable time interval, during which the rays are allowed to act, may manifest itself in a powerful discharge, which may be utilized for the operation or control of mechanical or electrical devices or rendered useful in many other ways.

In applying my discovery I provide a condenser, preferably of considerable electrostatic capacity, and connect one of its terminals to an insulated metal plate or other conducting-body exposed to the rays or streams of radiant matter. It is very important, particularly in view of the fact that electrical energy is generally supplied at a very slow rate to the condenser, to construct the same with the greatest care. I use, by preference, the best quality of mica as dielectric, taking every possible precaution in insulating the armatures, so that the instrument may withstand great electrical pressures without leaking and may leave no perceptible electrification when discharging instantaneously. In practice I have found that the best results are obtained with condensers treated in the manner described in a patent granted to me February 23, 1897, No. 577,671. Obviously the above precautions should be the more rigorously observed the slower the rate of charging and the smaller the time interval during which the energy is allowed to accumulate in the condenser. The insulated plate or conducting-body should present as large a surface as practicable to the rays or streams of matter, I having ascertained that the amount of energy conveyed to it per unit of time is under otherwise identical conditions proportionate to the area exposed, or nearly so. Furthermore, the surface should be clean and preferably highly polished or amalgamated. The second terminal or armature of the condenser may be connected to one of the poles of a battery or other source of electricity or to any conducting body or object whatever of such properties or so conditioned that by its means electricity of the required sign will be supplied to the terminal. A simple way of supplying positive or negative electricity to the terminal is to connect the same either to an insulated conductor supported at some height in the atmosphere or to a grounded conductor, the former, as is well known, furnishing positive and the latter negative electricity. As the rays or supposed streams of mat-

ter generally convey a positive charge to the first condenser-terminal, which is connected to the plate or conductor above mentioned, I usually connect the second terminal of the condenser to the ground, this being the most convenient way of obtaining negative electricity, dispensing with the necessity of providing an artificial source. In order to utilize for any useful purpose the energy accumulated in the condenser, I furthermore connect to the terminals of the same a circuit including an instrument or apparatus which it is desired to operate and another instrument or device for alternately closing and opening the circuit. This latter may be any form of circuit-controller, with fixed or movable parts or electrodes, which may be actuated either by the stored energy or by independent means.

My discovery will be more fully understood from the following description and annexed drawings, to which reference is now made, and in which—

Figure 1 is a diagram showing the general arrangement of apparatus as usually employed. Fig. 2 is a similar diagram illustrating more in detail typical forms of the devices or elements used in practice, and Figs. 3 and 4 are diagrammatical representations of modified arrangements suitable for special purposes.

As illustrative of the manner in which the several parts or elements of the apparatus in one of its simplest forms are to be arranged and connected for useful operation, reference is made to Fig. 1, in which C is the condenser, P the insulated plate or conducting-body which is exposed to the rays, and P′ another plate or conductor which is grounded, all being joined in series, as shown. The terminals T T′ of the condenser are also connected to a circuit which includes a device R to be operated and a circuit-controlling device *d* of the character above referred to.

The apparatus being arranged as shown, it will be found that when the radiations of the sun or of any other source capable of producing the effects before described fall upon the plate P an accumulation of electrical energy in the condenser C will result. This phenomenon, I believe, is best explained as follows: The sun, as well as other sources of radiant energy, throws off minute particles of matter positively electrified, which, impinging upon the plate P, communicate continuously an electrical charge to the same. The opposite terminal of the condenser being connected to the ground, which may be considered as a vast reservoir of negative electricity, a feeble current flows continuously into the condenser, and inasmuch as these supposed particles are of an inconceivably small radius or curvature, and consequently charged to a relatively very high potential, this charging of the condenser may continue, as I have actually observed, almost indefinitely, even to the point of rupturing the dielectric. If the device *d* be of such character that it will operate to close the circuit in which it is included when the potential in the condenser has reached a certain magnitude, the accumulated charge will pass through the circuit, which also includes the receiver R, and operate the latter.

In illustration of a particular form of apparatus which may be used in carrying out my discovery I now refer to Fig. 2. In this figure, which in the general arrangement of the elements is identical to Fig. 1, the device *d* is shown as composed of two very thin conducting-plates *t t′*, placed in close proximity and very mobile, either by reason of extreme flexibility or owing to the character of their support. To improve their action, they should be inclosed in a receptacle, from which the air may be exhausted. The plates *t t′* are connected in series with a working circuit, including a suitable receiver, which in this case is shown as consisting of an electromagnet M, a movable armature *a*, a retractile spring *b*, and a ratchet-wheel *w*, provided with a spring-pawl *r*, which is pivoted to armature *a*, as illustrated. When the radiations of the sun or other radiant source fall upon plate P, a current flows into the condenser, as above explained, until the potential therein rises sufficiently to attract and bring into contact the two plates *t t′*, and thereby close the circuit connected to the two condenser-terminals. This permits a flow of current which energizes the magnet M, causing it to draw down the armature *a* and impart a partial rotation to the ratchet-wheel *w*. As the current ceases the armature is retracted by the spring *b*, without, however, moving the wheel *w*. With the stoppage of the current the plates *t t′* cease to be attracted and separate, thus restoring the circuit to its original condition.

Fig. 3 shows a modified form of apparatus used in connection with an artificial source of radiant energy, which in this instance may be an arc emitting copiously ultra-violet rays. A suitable reflector may be provided for concentrating and directing the radiations. A magnet R and circuit-controller *d* are arranged as in the previous figures; but in the present case the former instead of performing itself the whole work only serves the purpose of alternately opening and closing a local circuit, containing a source of current B and a receiving or translating device D. The controller *d*, if desired, may consist of two fixed electrodes separated by a minute air-gap or weak dielectric film, which breaks down more or less suddenly when a definite difference of potential is reached at the terminals of the condenser and returns to its original state upon the passage of the discharge.

Still another modification is shown in Fig. 4, in which the source S of radiant energy is a special form of Roentgen tube devised by

me, having but one terminal *k*, generally of aluminium, in the form of half a sphere, with a plain polished surface on the front side, from which the streams are thrown off. It may be excited by attaching it to one of the terminals of any generator of sufficiently high electromotive force; but whatever apparatus be used it is important that the tube be exhausted to a high degree, as otherwise it might prove entirely ineffective. The working or discharge circuit connected to the terminals T T′ of the condenser includes in this case the primary *p* of a transformer and a circuit-controller comprising a fixed terminal or brush *t* and a movable terminal *t′* in the shape of a wheel, with conducting and insulating segments, which may be rotated at an arbitrary speed by any suitable means. In inductive relation to the primary wire or coil *p* is a secondary *s*, usually of a much greater number of turns, to the ends of which is connected a receiver R. The terminals of the condenser being connected, as indicated, one to an insulated plate P and the other to a grounded plate P′, when the tube S is excited rays or streams of matter are emitted from the same, which convey a positive charge to the plate P and condenser-terminal T, while terminal T′ is continuously receiving negative electricity from the plate P′. This, as before explained, results in an accumulation of electrical energy in the condenser, which goes on as long as the circuit including the primary *p* is interrupted. Whenever the circuit is closed owing to the rotation of the terminal *t′*, the stored energy is discharged through the primary *p*, this giving rise in the secondary *s* to induced currents, which operate the receiver R.

It is clear from what has been stated above that if the terminal T′ is connected to a plate supplying positive instead of negative electricity the rays should convey negative electricity to plate P. The source S may be any form of Roentgen or Lenard tube; but it is obvious from the theory of action that in order to be very effective the electrical impulses exciting it should be wholly or at least preponderatingly of one sign. If ordinary symmetrical alternating currents are employed, provision should be made for allowing the rays to fall upon the plate P only during those periods when they are productive of the desired result. Evidently if the radiations of the source be stopped or intercepted or their intensity varied in any manner, as by periodically interrupting or rythmically varying the current exciting the source, there will be corresponding changes in the action upon the receiver R, and thus signals may be transmitted and many other useful effects produced. Furthermore, it will be understood that any form of circuit-closer which will respond to or be set in operation when a predetermined amount of energy is stored in the condenser may be used in lieu of the device specifically described with reference to Fig. 2 and also that the special details of construction and arrangement of the several parts of the apparatus may be very greatly varied without departure from the invention.

Having described my invention, what I claim is—

1. An apparatus for utilizing radiant energy, comprising in combination a condenser, one armature of which is subjected to the action of rays or radiations, independent means for charging the other armature, a circuit and apparatus therein adapted to be operated or controlled by the discharge of the condenser, as set forth.

2. An apparatus for utilizing radiant energy, comprising in combination, a condenser, one armature of which is subjected to the action of rays or radiations, independent means for charging the other armature, a local circuit connected with the condenser-terminals, a circuit-controller therein and means adapted to be operated or controlled by the discharge of the condenser when the local circuit is closed, as set forth.

3. An apparatus for utilizing radiant energy, comprising in combination, a condenser, one terminal of which is subjected to the action of rays or radiations, independent means for charging the other armature, a local circuit connected with the condenser-terminals, a circuit-controller therein dependent for operation on a given rise of potential in the condenser, and devices operated by the discharge of the condenser when the local circuit is closed, as set forth.

4. An apparatus for utilizing radiant energy, comprising in combination, a condenser, one terminal of which is subjected to the action of rays or radiations, and the other of which is connected with the ground, a circuit and apparatus therein adapted to be operated by the discharge of the accumulated energy in the condenser, as set forth.

5. An apparatus for utilizing radiant energy, comprising in combination, a condenser, one terminal of which is subjected to the action of rays or radiations and the other of which is connected with the ground, a local circuit connected with the condenser-terminals, a circuit-controller therein and means adapted to be operated by the discharge of the condenser when the local circuit is closed, as set forth.

6. An apparatus for utilizing radiant energy, comprising in combination, a condenser, one terminal of which is subjected to the action of rays or radiations and the other of which is connected with the ground, a local circuit connected with the condenser-terminals, a circuit-controller therein adapted to be operated by a given rise of potential in the condenser, and devices operated by the discharge of the condenser when the local circuit is closed, as set forth.

7. An apparatus for utilizing radiant en-

ergy, comprising a condenser, having one terminal connected to earth and the other to an elevated conducting-plate, which is adapted to receive the rays from a distant source of radiant energy, a local circuit connected with the condenser-terminals, a receiver therein, and a circuit-controller therefor which is adapted to be operated by a given rise of potential in the condenser, as set forth.

NIKOLA TESLA.

Witnesses:
M. LAWSON DYER,
RICHARD DONOVAN.

No. 787,412. PATENTED APR. 18, 1905.

N. TESLA.

ART OF TRANSMITTING ELECTRICAL ENERGY THROUGH THE NATURAL MEDIUMS.

APPLICATION FILED MAY 16, 1900. RENEWED JUNE 17, 1902.

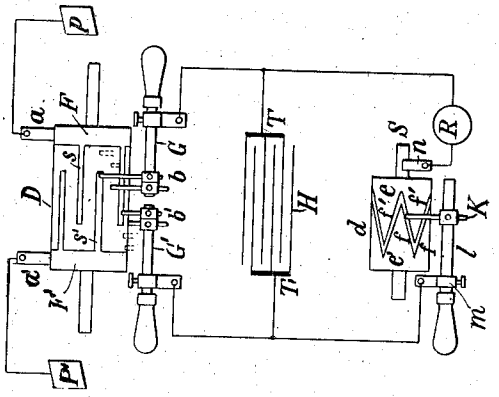

Fig. 2

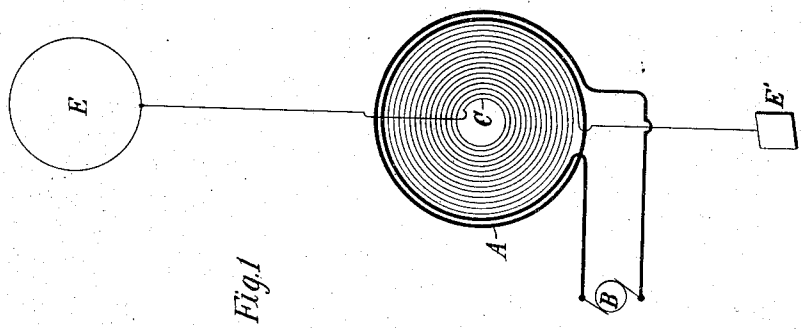

Fig. 1

Witnesses:
Raphael Netter
M. Lawson Dyer.

Nikola Tesla Inventor
by Kerr Page & Cooke Attys

No. 787,412. Patented April 18, 1905.

UNITED STATES PATENT OFFICE.

NIKOLA TESLA, OF NEW YORK, N. Y.

ART OF TRANSMITTING ELECTRICAL ENERGY THROUGH THE NATURAL MEDIUMS.

SPECIFICATION forming part of Letters Patent No. 787,412, dated April 18, 1905.

Application filed May 16, 1900. Renewed June 17, 1902. Serial No. 112,034.

To all whom it may concern:

Be it known that I, NIKOLA TESLA, a citizen of the United States, residing in the borough of Manhattan, in the city, county, and State of New York, have discovered a new and useful Improvement in the Art of Transmitting Electrical Energy Through the Natural Media, of which the following is a specification, reference being had to the drawings accompanying and forming a part of the same.

It is known since a long time that electric currents may be propagated through the earth, and this knowledge has been utilized in many ways in the transmission of signals and the operation of a variety of receiving devices remote from the source of energy, mainly with the object of dispensing with a return conducting-wire. It is also known that electrical disturbances may be transmitted through portions of the earth by grounding only one of the poles of the source, and this fact I have made use of in systems which I have devised for the purposes of transmitting through the natural media intelligible signals or power and which are now familiar; but all experiments and observations heretofore made have tended to confirm the opinion held by the majority of scientific men that the earth, owing to its immense extent, although possessing conducting properties, does not behave in the manner of a conductor of limited dimensions with respect to the disturbances produced, but, on the contrary, much like a vast reservoir or ocean, which while it may be locally disturbed by a commotion of some kind remains unresponsive and quiescent in a large part or as a whole. Still another fact now of common knowledge is that when electrical waves or oscillations are impressed upon such a conducting-path as a metallic wire reflection takes place under certain conditions from the ends of the wire, and in consequence of the interference of the impressed and reflected oscillations the phenomenon of "stationary waves" with maxima and minima in definite fixed positions is produced. In any case the existence of these waves indicates that some of the outgoing waves have reached the boundaries of the conducting-path and have been reflected from the same. Now I have discovered that notwithstanding its vast dimensions and contrary to all observations heretofore made the terrestrial globe may in a large part or as a whole behave toward disturbances impressed upon it in the same manner as a conductor of limited size, this fact being demonstrated by novel phenomena, which I shall hereinafter describe.

In the course of certain investigations which I carried on for the purpose of studying the effects of lightning discharges upon the electrical condition of the earth I observed that sensitive receiving instruments arranged so as to be capable of responding to electrical disturbances created by the discharges at times failed to respond when they should have done so, and upon inquiring into the causes of this unexpected behavior I discovered it to be due to the character of the electrical waves which were produced in the earth by the lightning discharges and which had nodal regions following at definite distances the shifting source of the disturbances. From data obtained in a large number of observations of the maxima and minima of these waves I found their length to vary approximately from twenty-five to seventy kilometers, and these results and certain theoretical deductions led me to the conclusion that waves of this kind may be propagated in all directions over the globe and that they may be of still more widely differing lengths, the extreme limits being imposed by the physical dimensions and properties of the earth. Recognizing in the existence of these waves an unmistakable evidence that the disturbances created had been conducted from their origin to the most remote portions of the globe and had been thence reflected, I conceived the idea of producing such waves in the earth by artificial means with the object of utilizing them for many useful purposes for which they are or might be found applicable. This problem was rendered extremely difficult owing to the immense dimensions of the planet, and consequently enormous movement of electricity or rate at which electrical energy had to be delivered in order to approximate, even in a remote degree, movements or rates which are manifestly attained in the displays of elec-

trical forces in nature and which seemed at first unrealizable by any human agencies; but by gradual and continuous improvements of a generator of electrical oscillations, which I have described in my Patents Nos. 645,576 and 649,621, I finally succeeded in reaching electrical movements or rates of delivery of electrical energy not only approximating, but, as shown in many comparative tests and measurements, actually surpassing those of lightning discharges, and by means of this apparatus I have found it possible to reproduce whenever desired phenomena in the earth the same as or similar to those due to such discharges. With the knowledge of the phenomena discovered by me and the means at command for accomplishing these results I am enabled not only to carry out many operations by the use of known instruments, but also to offer a solution for many important problems involving the operation or control of remote devices which for want of this knowledge and the absence of these means have heretofore been entirely impossible. For example, by the use of such a generator of stationary waves and receiving apparatus properly placed and adjusted in any other locality, however remote, it is practicable to transmit intelligible signals or to control or actuate at will any one or all of such apparatus for many other important and valuable purposes, as for indicating wherever desired the correct time of an observatory or for ascertaining the relative position of a body or distance of the same with reference to a given point or for determining the course of a moving object, such as a vessel at sea, the distance traversed by the same or its speed, or for producing many other useful effects at a distance dependent on the intensity, wave length, direction or velocity of movement, or other feature or property of disturbances of this character.

I shall typically illustrate the manner of applying my discovery by describing one of the specific uses of the same—namely, the transmission of intelligible signals or messages between distant points—and with this object reference is now made to the accompanying drawings, in which—

Figure 1 represents diagrammatically the generator which produces stationary waves in the earth, and Fig. 2 an apparatus situated in a remote locality for recording the effects of these waves.

In Fig. 1, A designates a primary coil forming part of a transformer and consisting generally of a few turns of a stout cable of inappreciable resistance, the ends of which are connected to the terminals of a source of powerful electrical oscillations, diagrammatically represented by B. This source is usually a condenser charged to a high potential and discharged in rapid succession through the primary, as in a type of transformer invented by me and not well known; but when it is desired to produce stationary waves of great lengths an alternating dynamo of suitable construction may be used to energize the primary A. C is a spirally-wound secondary coil within the primary having the end nearer to the latter connected to the ground E′ and the other end to an elevated terminal E. The physical constants of coil C, determining its period of vibration, are so chosen and adjusted that the secondary system E′ C E is in the closest possible resonance with the oscillations impressed upon it by the primary A. It is, moreover, of the greatest importance in order to still further enhance the rise of pressure and to increase the electrical movement in the secondary system that its resistance be as small as practicable and its self-induction as large as possible under the conditions imposed. The ground should be made with great care, with the object of reducing its resistance. Instead of being directly grounded, as indicated, the coil C may be joined in series or otherwise to the primary A, in which case the latter will be connected to the plate E′; but be it that none or a part or all of the primary or exciting turns are included in the coil C the total length of the conductor from the ground-plate E′ to the elevated terminal E should be equal to one-quarter of the wave length of the electrical disturbance in the system E′ C E or else equal to that length multiplied by an odd number. This relation being observed, the terminal E will be made to coincide with the points of maximum pressure in the secondary or excited circuit, and the greatest flow of electricity will take place in the same. In order to magnify the electrical movement in the secondary as much as possible, it is essential that its inductive connection with the primary A should not be very intimate, as in ordinary transformers, but loose, so as to permit free oscillation—that is to say, their mutual induction should be small. The spiral form of coil C secures this advantage, while the turns near the primary A are subjected to a strong inductive action and develop a high initial electromotive force. These adjustments and relations being carefully completed and other constructive features indicated rigorously observed, the electrical movement produced in the secondary system by the inductive action of the primary A will be enormously magnified, the increase being directly proportionate to the inductance and frequency and inversely to the resistance of the secondary system. I have found it practicable to produce in this manner an electrical movement thousands of times greater than the initial—that is, the one impressed upon the secondary by the primary A—and I have thus reached activities or rates of flow of electrical energy in the system E′ C E measured by many tens of thousands of horsepower. Such immense movements of elec-

BEST AVAILABLE COPY

tricity give rise to a variety of novel and striking phenomena, among which are those already described. The powerful electrical oscillations in the system E' C E being communicated to the ground cause corresponding vibrations to be propagated to distant parts of the globe, whence they are reflected and by interference with the outgoing vibrations produce stationary waves the crests and hollows of which lie in parallel circles relatively to which the ground-plate E' may be considered to be the pole. Stated otherwise, the terrestrial conductor is thrown into resonance with the oscillations impressed upon it just like a wire. More than this, a number of facts ascertained by me clearly show that the movement of electricity through it follows certain laws with nearly mathematical rigor. For the present it will be sufficient to state that the planet behaves like a perfectly smooth or polished conductor of inappreciable resistance with capacity and self induction uniformly distributed along the axis of symmetry of wave propagation and transmitting slow electrical oscillations without sensible distortion and attenuation.

Besides the above three requirements seem to be essential to the establishment of the resonating condition.

First. The earth's diameter passing through the pole should be an odd multiple of the quarter wave length—that is, of the ratio between the velocity of light—and four times the frequency of the currents.

Second. It is necessary to employ oscillations in which the rate of radiation of energy into space in the form of hertzian or electromagnetic waves is very small. To give an idea, I would say that the frequency should be smaller than twenty thousand per second, though shorter waves might be practicable. The lowest frequency would appear to be six per second, in which case there will be but one node, at or near the ground-plate, and, paradoxical as it may seem, the effect will increase with the distance and will be greatest in a region diametrically opposite the transmitter. With oscillations still slower the earth, strictly speaking, will not resonate, but simply act as a capacity, and the variation of potential will be more or less uniform over its entire surface.

Third. The most essential requirement is, however, that irrespective of frequency the wave or wave-train should continue for a certain interval of time, which I have estimated to be not less than one-twelfth or probably 0.08484 of a second and which is taken in passing to and returning from the region diametrically opposite the pole over the earth's surface with a mean velocity of about four hundred and seventy-one thousand two hundred and forty kilometers per second.

The presence of the stationary waves may be detected in many ways. For instance, a circuit may be connected directly or inductively to the ground and to an elevated terminal and tuned to respond more effectively to the oscillations. Another way is to connect a tuned circuit to the ground at two points lying more or less in a meridian passing through the pole E' or, generally stated, to any two points of a different potential.

In Fig. 2 I have shown a device for detecting the presence of the waves such as I have used in a novel method of magnifying feeble effects which I have described in my Patents Nos. 685,953 and 685,955. It consists of a cylinder D, of insulating material, which is moved at a uniform rate of speed by clockwork or other suitable motive power and is provided with two metal rings F F', upon which bear brushes a and a', connected, respectively, to the terminal plates P and P'. From the rings F F' extend narrow metallic segments s and s', which by the rotation of the cylinder D are brought alternately into contact with double brushes b and b', carried by and in contact with conducting-holders h and h', supported in metallic bearings G and G', as shown. The latter are connected to the terminals T and T' of a condenser H, and it should be understood that they are capable of angular displacement as ordinary brush-supports. The object of using two brushes, as b and b', in each of the holders h and h' is to vary at will the duration of the electric contact of the plates P and P' with the terminals T and T', to which is connected a receiving-circuit including a receiver R and a device d, performing the duty of closing the receiving-circuit at predetermined intervals of time and discharging the stored energy through the receiver. In the present case this device consists of a cylinder made partly of conducting and partly of insulating material e and e', respectively, which is rotated at the desired rate of speed by any suitable means. The conducting part e is in good electrical connection with the shaft S and is provided with tapering segments $f f'$, upon which slides a brush k, supported on a conducting-rod l, capable of longitudinal adjustment in a metallic support m. Another brush, n, is arranged to bear upon the shaft S, and it will be seen that whenever one of the segments f' comes in contact with the brush k the circuit including the receiver R is completed and the condenser discharged through the same. By an adjustment of the speed or rotation of the cylinder d and a displacement of the brush k along the cylinder the circuit may be made to open and close in as rapid succession and remain open or closed during such intervals of time as may be desired. The plates P and P', through which the electrical energy is conveyed to the brushes a and a', may be at a considerable distance from each other in the ground or one in the ground and the other in the air, preferably at some height. If but one plate is connected to earth and the other maintained at an

elevation, the location of the apparatus must be determined with reference to the position of the stationary waves established by the generator, the effect evidently being greatest in a maximum and zero in a nodal region. On the other hand, if both plates be connected to earth the points of connection must be selected with reference to the difference of potential which it is desired to secure, the strongest effect being of course obtained when the plates are at a distance equal to half the wave length.

In illustration of the operation of the system let it be assumed that alternating electrical impulses from the generator are caused to produce stationary waves in the earth, as above described, and that the receiving apparatus is properly located with reference to the position of the nodal and ventral regions of the waves. The speed of rotation of the cylinder D is varied until it is made to turn in synchronism with the alternate impulses of the generator, and the position of the brushes b and b' is adjusted by angular displacement or otherwise, so that they are in contact with the segments S and S′ during the periods when the impulses are at or near the maximum of their intensity. These requirements being fulfilled, electrical charges of the same sign will be conveyed to each of the terminals of the condenser, and with each fresh impulse it will be charged to a higher potential. The speed of rotation of the cylinder d being adjustable at will, the energy of any number of separate impulses may thus be accumulated in potential form and discharged through the receiver R upon the brush k coming in contact with one of the segments f'. It will be understood that the capacity of the condenser should be such as to allow the storing of a much greater amount of energy than is required for the ordinary operation of the receiver. Since by this method a relatively great amount of energy and in a suitable form may be made available for the operation of a receiver, the latter need not be very sensitive; but when the impulses are very weak or when it is desired to operate a receiver very rapidly any of the well-known sensitive devices capable of responding to very feeble influences may be used in the manner indicated or in other ways. Under the conditions described it is evident that during the continuance of the stationary waves the receiver will be acted upon by current impulses more or less intense, according to its location with reference to the maxima and minima of said waves; but upon interrupting or reducing the flow of the current the stationary waves will disappear or diminish in intensity. Hence a great variety of effects may be produced in a receiver, according to the mode in which the waves are controlled. It is practicable, however, to shift the nodal and ventral regions of the waves at will from the sending-station, as by varying the length of the waves under observance of the above requirements. In this manner the regions of maximum and minimum effect may be made to coincide with any receiving station or stations. By impressing upon the earth two or more oscillations of different wave length a resultant stationary wave may be made to travel slowly over the globe, and thus a great variety of useful effects may be produced. Evidently the course of a vessel may be easily determined without the use of a compass, as by a circuit connected to the earth at two points, for the effect exerted upon the circuit will be greatest when the plates P P′ are lying on a meridian passing through ground-plate E′ and will be *nil* when the plates are located at a parallel circle. If the nodal and ventral regions are maintained in fixed positions, the speed of a vessel carrying a receiving apparatus may be exactly computed from observations of the maxima and minima regions successively traversed. This will be understood when it is stated that the projections of all the nodes and loops on the earth's diameter passing through the pole or axis of symmetry of the wave movement are all equal. Hence in any region at the surface the wave length can be ascertained from simple rules of geometry. Conversely, knowing the wave length, the distance from the source can be readily calculated. In like ways the distance of one point from another, the latitude and longitude, the hour, &c., may be determined from the observation of such stationary waves. If several such generators of stationary waves, preferably of different length, were installed in judiciously-selected localities, the entire globe could be subdivided in definite zones of electric activity, and such and other important data could be at once obtained by simple calculation or readings from suitably-graduated instruments. Many other useful applications of my discovery will suggest themselves, and in this respect I do not wish to limit myself. Thus the specific plan herein described of producing the stationary waves might be departed from. For example, the circuit which impresses the powerful oscillations upon the earth might be connected to the latter at two points. In this application I have advanced various improvements in means and methods of producing and utilizing electrical effects which either in connection with my present discovery or independently of the same may be usefully applied.

I desire it to be understood that such novel features as are not herein specifically claimed will form the subjects of subsequent applications.

What I now claim is—

1. The improvement in the art of transmitting electrical energy to a distance which consists in establishing stationary electrical waves in the earth, as set forth.

2. The improvement in the art of transmit-

ting electrical energy to a distance which consists in impressing upon the earth electrical oscillations of such character as to produce stationary electrical waves therein, as set forth.

3. The improvement in the art of transmitting and utilizing electrical energy which consists in establishing stationary electrical waves in the natural conducting media, and operating thereby one or more receiving devices remote from the source of energy, as set forth.

4. The improvement in the art of transmitting and utilizing electrical energy which consists in establishing in the natural conducting media, stationary electrical waves of predetermined length and operating thereby one or more receiving devices remote from the source of energy and properly located with respect to the position of such waves, as herein set forth.

5. The improvement in the art of transmitting and utilizing electrical energy, which consists in establishing in the natural conducting media, stationary electrical waves, and varying the length of such waves, as herein set forth.

6. The improvement in the art of transmitting and utilizing electrical energy, which consists in establishing in the natural conducting media stationary electrical waves and shifting the nodal and ventral regions of these waves, as described.

NIKOLA TESLA.

Witnesses:
M. LAWSON DYER,
BENJAMIN MILLER.

N. TESLA.

APPARATUS FOR TRANSMITTING ELECTRICAL ENERGY.

APPLICATION FILED JAN. 18, 1902. RENEWED MAY 4, 1907.

1,119,732. Patented Dec. 1, 1914.

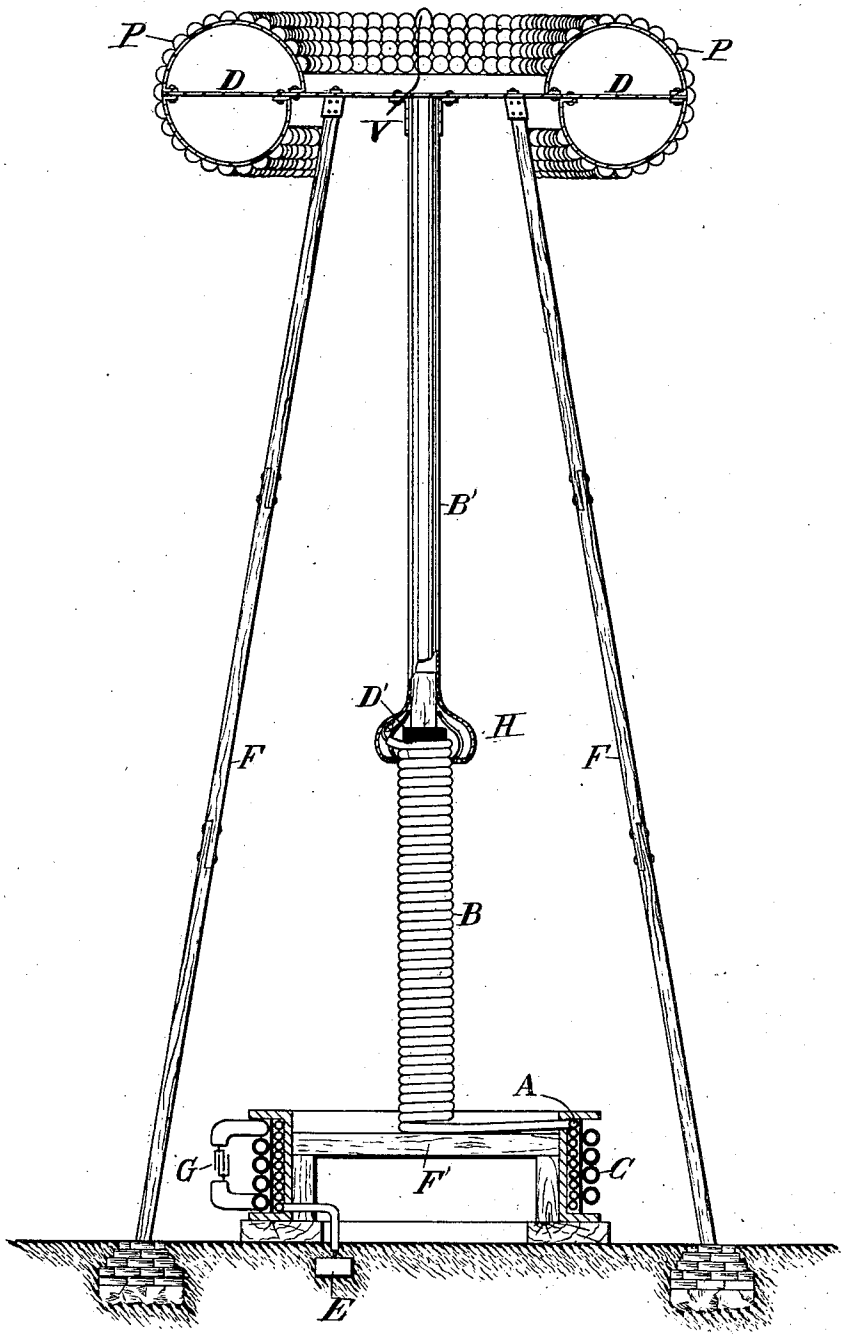

WITNESSES:

M. Lawson Dyer

Benjamin Miller.

INVENTOR,

Nikola Tesla,

BY Kerr, Page & Cooper,

his ATTORNEYS.

UNITED STATES PATENT OFFICE.

NIKOLA TESLA, OF NEW YORK, N. Y.

APPARATUS FOR TRANSMITTING ELECTRICAL ENERGY.

1,119,732. Specification of Letters Patent. Patented Dec. 1, 1914.

Application filed January 18, 1902, Serial No. 90,245. Renewed May 4, 1907. Serial No. 371,817.

To all whom it may concern:

Be it known that I, NIKOLA TESLA, a citizen of the United States, residing in the borough of Manhattan, in the city, county, and State of New York, have invented certain new and useful Improvements in Apparatus for Transmitting Electrical Energy, of which the following is a specification, reference being had to the drawing accompanying and forming a part of the same.

In endeavoring to adapt currents or discharges of very high tension to various valuable uses, as the distribution of energy through wires from central plants to distant places of consumption, or the transmission of powerful disturbances to great distances, through the natural or non-artificial media, I have encountered difficulties in confining considerable amounts of electricity to the conductors and preventing its leakage over their supports, or its escape into the ambient air, which always takes place when the electric surface density reaches a certain value.

The intensity of the effect of a transmitting circuit with a free or elevated terminal is proportionate to the quantity of electricity displaced, which is determined by the product of the capacity of the circuit, the pressure, and the frequency of the currents employed. To produce an electrical movement of the required magnitude it is desirable to charge the terminal as highly as possible, for while a great quantity of electricity may also be displaced by a large capacity charged to low pressure, there are disadvantages met with in many cases when the former is made too large. The chief of these are due to the fact that an increase of the capacity entails a lowering of the frequency of the impulses or discharges and a diminution of the energy of vibration. This will be understood when it is borne in mind, that a circuit with a large capacity behaves as a slackspring, whereas one with a small capacity acts like a stiff spring, vibrating more vigorously. Therefore, in order to attain the highest possible frequency, which for certain purposes is advantageous and, apart from that, to develop the greatest energy in such a transmitting circuit, I employ a terminal of relatively small capacity, which I charge to as high a pressure as practicable. To accomplish this result I have found it imperative to so construct the elevated conductor, that its outer surface, on which the electrical charge chiefly accumulates, has itself a large radius of curvature, or is composed of separate elements which, irrespective of their own radius of curvature, are arranged in close proximity to each other and so, that the outside ideal surface enveloping them is of a large radius. Evidently, the smaller the radius of curvature the greater, for a given electric displacement, will be the surface-density and, consequently, the lower the limiting pressure to which the terminal may be charged without electricity escaping into the air. Such a terminal I secure to an insulating support entering more or less into its interior, and I likewise connect the circuit to it inside or, generally, at points where the electric density is small. This plan of constructing and supporting a highly charged conductor I have found to be of great practical importance, and it may be usefully applied in many ways.

Referring to the accompanying drawing, the figure is a view in elevation and part section of an improved free terminal and circuit of large surface with supporting structure and generating apparatus.

The terminal D consists of a suitably shaped metallic frame, in this case a ring of nearly circular cross section, which is covered with half spherical metal plates P P, thus constituting a very large conducting surface, smooth on all places where the electric charge principally accumulates. The frame is carried by a strong platform expressly provided for safety appliances, instruments of observation, etc., which in turn rests on insulating supports F F. These should penetrate far into the hollow space formed by the terminal, and if the electric density at the points where they are bolted to the frame is still considerable, they may be specially protected by conducting hoods as H.

A part of the improvements which form the subject of this specification, the transmitting circuit, in its general features, is identical with that described and claimed in my original Patents Nos. 645,576 and 649,621. The circuit comprises a coil A which is in close inductive relation with a primary C, and one end of which is connected to a ground-plate E, while its other end is led through a separate self-induction coil B and a metallic cylinder B′ to the terminal D.

The connection to the latter should always be made at, or near the center, in order to secure a symmetrical distribution of the current, as otherwise, when the frequency is very high and the flow of large volume, the performance of the apparatus might be impaired. The primary C may be excited in any desired manner, from a suitable source of currents G, which may be an alternator or condenser, the important requirement being that the resonant condition is established, that is to say, that the terminal D is charged to the maximum pressure developed in the circuit, as I have specified in my original patents before referred to. The adjustments should be made with particular care when the transmitter is one of great power, not only on account of economy, but also in order to avoid danger. I have shown that it is practicable to produce in a resonating circuit as E A B B′ D immense electrical activities, measured by tens and even hundreds of thousands of horse-power, and in such a case, if the points of maximum pressure should be shifted below the terminal D, along coil B, a ball of fire might break out and destroy the support F or anything else in the way. For the better appreciation of the nature of this danger it should be stated, that the destructive action may take place with inconceivable violence. This will cease to be surprising when it is borne in mind, that the entire energy accumulated in the excited circuit, instead of requiring, as under normal working conditions, one quarter of the period or more for its transformation from static to kinetic form, may spend itself in an incomparably smaller interval of time, at a rate of many millions of horse power. The accident is apt to occur when, the transmitting circuit being strongly excited, the impressed oscillations upon it are caused, in any manner more or less sudden, to be more rapid than the free oscillations. It is therefore advisable to begin the adjustments with feeble and somewhat slower impressed oscillations, strengthening and quickening them gradually, until the apparatus has been brought under perfect control. To increase the safety, I provide on a convenient place, preferably on terminal D, one or more elements or plates either of somewhat smaller radius of curvature or protruding more or less beyond the others (in which case they may be of larger radius of curvature) so that, should the pressure rise to a value, beyond which it is not desired to go, the powerful discharge may dart out there and lose itself harmlessly in the air. Such a plate, performing a function similar to that of a safety valve on a high pressure reservoir, is indicated at V.

Still further extending the principles underlying my invention, special reference is made to coil B and conductor B′. The latter is in the form of a cylinder with smooth or polished surface of a radius much larger than that of the half spherical elements P P, and widens out at the bottom into a hood H, which should be slotted to avoid loss by eddy currents and the purpose of which will be clear from the foregoing. The coil B is wound on a frame or drum D^1 of insulating material, with its turns close together. I have discovered that when so wound the effect of the small radius of curvature of the wire itself is overcome and the coil behaves as a conductor of large radius of curvature, corresponding to that of the drum. This feature is of considerable practical importance and is applicable not only in this special instance, but generally. For example, such plates at P P of terminal D, though preferably of large radius of curvature, need not be necessarily so, for provided only that the individual plates or elements of a high potential conductor or terminal are arranged in proximity to each other and with their outer boundaries along an ideal symmetrical enveloping surface of a large radius of curvature, the advantages of the invention will be more or less fully realized. The lower end of the coil B—which, if desired, may be extended up to the terminal D—should be somewhat below the uppermost turn of coil A. This, I find, lessens the tendency of the charge to break out from the wire connecting both and to pass along the support F′.

Having described my invention, I claim:

1. As a means for producing great electrical activities a resonant circuit having its outer conducting boundaries, which are charged to a high potential, arranged in surfaces of large radii of curvature so as to prevent leakage of the oscillating charge, substantially as set forth.

2. In apparatus for the transmission of electrical energy a circuit connected to ground and to an elevated terminal and having its outer conducting boundaries, which are subject to high tension, arranged in surfaces of large radii of curvature substantially as, and for the purpose described.

3. In a plant for the transmission of electrical energy without wires, in combination with a primary or exciting circuit a secondary connected to ground and to an elevated terminal and having its outer conducting boundaries, which are charged to a high potential, arranged in surfaces of large radii of curvature for the purpose of preventing leakage and loss of energy, substantially as set forth.

4. As a means for transmitting electrical energy to a distance through the natural media a grounded resonant circuit, comprising a part upon which oscillations are impressed and another for raising the ten-

sion, having its outer conducting boundaries on which a high tension charge accumulates arranged in surfaces of large radii of curvature, substantially as described.

5. The means for producing excessive electric potentials consisting of a primary exciting circuit and a resonant secondary having its outer conducting elements which are subject to high tension arranged in proximity to each other and in surfaces of large radii of curvature so as to prevent leakage of the charge and attendant lowering of potential, substantially as described.

6. A circuit comprising a part upon which oscillations are impressed and another part for raising the tension by resonance, the latter part being supported on places of low electric density and having its outermost conducting boundaries arranged in surfaces of large radii of curvature, as set forth.

7. In apparatus for the transmission of electrical energy without wires a grounded circuit the outer conducting elements of which have a great aggregate area and are arranged in surfaces of large radii of curvature so as to permit the storing of a high charge at a small electric density and prevent loss through leakage, substantially as described.

8. A wireless transmitter comprising in combination a source of oscillations as a condenser, a primary exciting circuit and a secondary grounded and elevated conductor the outer conducting boundaries of which are in proximity to each other and arranged in surfaces of large radii of curvature, substantially as described.

9. In apparatus for the transmission of electrical energy without wires an elevated conductor or antenna having its outer high potential conducting or capacity elements arranged in proximity to each other and in surfaces of large radii of curvature so as to overcome the effect of the small radius of curvature of the individual elements and leakage of the charge, as set forth.

10. A grounded resonant transmitting circuit having its outer conducting boundaries arranged in surfaces of large radii of curvature in combination with an elevated terminal of great surface supported at points of low electric density, substantially as described.

NIKOLA TESLA.

Witnesses:
M. LAMSON DYER,
RICHARD DONOVAN.

PLANS TO DISPENSE WITH ARTILLERY OF THE PRESENT TYPE

by Nikola Tesla

Previous Article Next Article

The Sun, New York, November 21, 1898

. . . Referring to my latest invention [the telautomaton], I wish to bring out a point which has been overlooked. I arrived, as has been stated, at the idea through entirely abstract speculations on the human organism, which I conceived to be a self-propelling machine, the motions of which are governed by impressions received through the eye. Endeavoring to construct a mechanical model resembling in its essential, material features the human body, I was led to combine a controlling device, or organ sensitive to certain waves, with a body provided with propelling and directing mechanism, and the rest naturally followed. Originally the idea interested me only from the scientific point of view, but soon I saw that I had made a departure which sooner or later must produce a profound change in things and conditions presently existing. I hope this change will be for the good only, for, if it were otherwise, I wish that I had never made the invention. The future may or may not bear out my present convictions, but I can not refrain from saying that it is difficult for me to see at present how, with such a principle brought to great perfection, as it undoubtedly will be in the course of time, guns can maintain themselves as weapons. We shall be able, by availing ourselves of this advance, to send a projectile at much greater distance, it will not be limited in any way by weight or amount of explosive charge, we shall be able to submerge it at command, to arrest it in its flight, and call it back, and send it out again and explode it at will, and, more than this, it will never make a miss, since all chance in this regard, if hitting the object of attack were at all required, is eliminated. But the chief feature of such a weapon is still to be told; namely, it may be made to respond only to a certain note or tune, it may be endowed with selective power. Directly such an arm is produced, it becomes almost impossible to meet it with a corresponding development. It is this feature, perhaps more than in its power of destruction, that its tendency to arrest the development of arms and to stop warfare will reside.

With renewed thanks, I remain,
Very truly yours,
N. Tesla.

New York, November 19, 1898

Prodigal Genius

BIOGRAPHY OF NIKOLA TESLA

1994 Brotherhood of Life, Inc.,
110 Dartmouth, SE, Albuquerque,
New Mexico 87106 USA

"SPECTACULAR" is a mild word for describing the strange experiment with life that comprises the story of Nikola Tesla, and "amazing" fails to do adequate justice to the results that burst from his experiences like an exploding rocket. It is the story of the dazzling scintillations of a superman who created a new world; it is a story that condemns woman as an anchor of the flesh which retards the development of man and limits his accomplishment--and, paradoxically, proves that even the most successful life, if it does not include a woman, is a dismal failure.

Even the gods of old, in the wildest imaginings of their worshipers, never undertook such gigantic tasks of world-wide dimension as those which Tesla attempted and accomplished. On the basis of his hopes, his dreams, and his achievements he rated the status of the Olympian gods, and the Greeks would have so enshrined him. Little is the wonder that so-called practical men, with their noses stuck in profit-and-loss statements, did not understand him and thought him strange.

The light of human progress is not a dim glow that gradually becomes more luminous with time. The panorama of human evolution is illumined by sudden bursts of dazzling brilliance in intellectual accomplishments that throw their beams far ahead to give us a glimpse of the distant future, that we may more correctly guide our wavering steps today. Tesla, by virtue of the amazing discoveries and inventions which he showered on the world, becomes one of the most resplendent flashes that has ever brightened the scroll of human advancement.

Tesla created the modern era; he was unquestionably one of the world's greatest geniuses, but he leaves no offspring, no legatees of his brilliant mind, who might aid in administering that world; he created fortunes for multitudes of others but himself died penniless, spurning wealth that might be gained from his discoveries. Even as he walked among the teeming millions of New York he became a fabled individual who seemed to belong to the far-distant

future or to have come to us from the mystical realm of the gods, for he seemed to be an admixture of a Jupiter or a Thor who hurled the shafts of lightning; an Ajax who defied the Jovian bolts; a Prometheus who transmuted energy into electricity to spread over the earth; an Aurora who would light the skies as a terrestrial electric lamp; a Mazda who created a sun in a tube; a Hercules who shook the earth with his mechanical vibrators; a Mercury who bridged the ambient realms of space with his wireless waves--and a Hermes who gave birth to an electrical soul in the earth that set it pulsating from pole to pole.

This spark of intellectual incandescence, in the form of a rare creative genius, shot like a meteor into the midst of human society in the latter decades of the past century; and he lived almost until today. His name became synonymous with magic in the intellectual, scientific, engineering and social worlds, and he was recognized as an inventor and discoverer of unrivaled greatness. He made the electric current his slave. At a time when electricity was considered almost an occult force, and was looked upon with terror-stricken awe and respect, Tesla penetrated deeply into its mysteries and performed so many marvelous feats with it that, to the world, he became a master magician with an unlimited repertoire of scientific legerdemain so spectacular that it made the accomplishments of most of the inventors of his day seem like the work of toy-tinkers.

Tesla was an inventor, but he was much more than a producer of new devices: he was a discoverer of new principles, opening many new empires of knowledge which even today have been only partly explored. In a single mighty burst of invention he created the world of power of today; he brought into being our electrical power era, the rock-bottom foundation on which the industrial system of the entire world is builded; he gave us our mass-production system, for without his motors and currents it could not exist; he created the race of robots, the electrical mechanical men that are replacing human labor; he gave us every essential of modern radio; he invented the radar forty years before its use in World War II; he gave us our modern neon and other forms of gaseous-tube lighting; he gave us our fluorescent lighting; he gave us the high-frequency currents which are performing their electronic wonders throughout the industrial and medical worlds; he gave us remote control by wireless; he helped give us World War II, much against his will--for the misuse of his

superpower system and his robot controls in industry made it possible for politicians to have available a tremendous surplus of power, production facilities, labor and materials, with which to indulge in the most frightful devastating war that the maniacal mind could conceive. And these discoveries are merely the inventions made by the master mind of Tesla which have thus far been utilized--scores of others remain still unused.

Yet Tesla lived and labored to bring peace to the world. He dedicated his life to lifting the burdens from the shoulders of mankind; to bringing a new era of peace, plenty and happiness to the human race. Seeing the coming of World War II, implemented and powered by his discoveries, he sought to prevent it; offered the world a device which he maintained would make any country, no matter how small, safe within its borders--and his offer was rejected.

More important by far, however, than all his stupendously significant electrical discoveries is that supreme invention--Nikola Tesla the Superman--the human instrument which shoved the world forward with an accelerating lunge like an airplane cast into the sky from a catapult. Tesla, the scientist and inventor, was himself an invention, just as much as was his alternating-current system that put the world on a superpower basis.

Tesla was a superman, a self-made superman, invented and designed specifically to perform wonders; and he achieved them in a volume far beyond the capacity of the world to absorb. His life he designed on engineering principles to enable him to serve as an automaton, with utmost efficiency, for the discovery and application of the forces of Nature to human welfare. To this end he sacrificed love and pleasure, seeking satisfaction only in his accomplishments, and limiting his body solely to serving as a tool of his technically creative mind.

With our modern craze for division of labor and specialization of effort to gain efficiency of production in our industrial machine, one hesitates to think of a future in which Tesla's invention of the superman might be applied to the entire human race, with specialization designed for every individual from birth.

The superman that Tesla designed was a scientific saint. The inventions that this scientific martyr produced were designed for the peace, happiness and security of the human race, but they have been applied to create scarcity, depressions and devastating war. Suppose the superman invention were also developed and prostituted to the purposes of war-mongering politicians? Tesla glimpsed the possibilities and suggested the community life of the bee as a threat to our social structure unless the elements of individual and community lives are properly directed and personal freedom protected.

Tesla's superman was a marvelously successful invention--for Tesla--which seemed, as far as the world could observe, to function satisfactorily. He eliminated love from his life; eliminated women even from his thoughts. He went beyond Plato, who conceived of a spiritual companionship between man and woman free from sexual desires; he eliminated even the spiritual companionship. He designed the isolated life into which no woman and no man could enter; the self-suficient individuality from which all sex considerations were completely eliminated; the genius who would live entirely as a thinking and a working machine.

Tesla's superman invention was a producer of marvels, and he thought that he had, by scientific methods, succeeded in eliminating love from his life. That abnormal life makes a fascinating experiment for the consideration of the philosopher and psychologist, for he did not succeed in eliminating love. It manifested itself despite his conscientious efforts at suppression; and when it did so it came in the most fantastic form, providing a romance the like of which is not recorded in the annals of human history.

Tesla's whole life seems unreal, as if he were a fabled creature of some Olympian world. A reporter, after writing a story of his discoveries and inventions, concluded, "His accomplishments seem like the dream of an intoxicated god." It was Tesla's invention of the polyphase alternating-current system that was directly responsible for harnessing Niagara Falls and opened the modern electrical superpower era in which electricity is transported for hundred of miles, to operate the tens of thousands of mass-production factories of industrial systems. Every one of the tall Martian-like towers of the electrical transmission lines that stalk across the earth, and whose wires carry

electricity to distant cities, is a monument to Tesla; every powerhouse, every dynamo and every motor that drives every machine in the country is a monument to him.

Superseding himself, he discovered the secret of transmitting electrical power to the utmost ends of the earth without wires, and demonstrated his system by which useful amounts of power could be drawn from the earth anywhere merely by making a connection to the ground; he set the entire earth in electrical vibration with a generator which spouted lightning that rivaled the fiery artillery of the heavens. It was as a minor portion of this discovery that he created the modern radio system; he planned our broadcasting methods of today, forty years ago when others saw in wireless only the dot-dash messages that might save ships in distress.

He produced lamps of greater brilliance and economy than those in common use today; he invented the tube, fluorescent and wireless lamps which we now consider such up-to-the-minute developments; and he essayed to set the entire atmosphere of the earth aglow with his electric currents, to change our world into a single terrestrial lamp and to make the skies at night shine as does the sun by day.

If other first-magnitude inventors and discoverers may be considered torches of progress, Tesla was a conflagration. He was the vehicle through which the blazing suns of a brighter tomorrow focused their incandescent beams on a world that was not prepared to receive their light. Nor is it remarkable that this radiant personality should have led a strange and isolated life. The value of his contributions to society cannot be overrated. we can now analyze, to some extent, the personality that produced them. He stands as a synthetic genius, a self-made superman, the greatest invention of the greatest inventor of all times. But when we consider Tesla as a human being, apart from his charming and captivating social manners, it is hard to imagine a worse nightmare than a world inhabited entirely by geniuses.

When Nature makes an experiment and achieves an improvement it is necessary that it be accomplished in such a way that the progress will not be lost with the individual but will be passed on to future generations. In man, this requires a utilization of the social values of the race, cooperation

of the individual with his kind, that the improved status may be propagated and become a legacy of all. Tesla intentionally engineered love and women out of his life, and while he achieved gigantic intellectual stature, he failed to achieve its perpetuation either through his own progeny or through disciples. The superman he constructed was not great enough to embrace a wife and continue to exist as such. The love he sought to suppress in his life, and which he thought was associated only with women, is a force which, in its various aspects, links together all members of the human race.

In seeking to suppress this force entirely Tesla severed the bonds which might have brought to him the disciples who would, through other channels, have perpetuated the force of his prodigal genius. As a result, he succeeded in imparting to the world only the smallest fraction of the creative products of his synthetic superman.

The creation of a superman as demonstrated by Tesla was a grand experiment in human evolution, well worthy of the giant intellect that grew out of it, but it did not come up to Nature's standards; and the experiment will have to be made many times more before we learn how to create a super race with the minds of Teslas that can tap the hidden treasury of Nature's store of knowledge, yet endowed too with the vital power of love that will unlock forces, more powerful than any which we now glimpse, for advancing the status of the human race.

There was no evidence whatever that a superman was being born

when the stroke of midnight between July 9 and 10, in the year 1856, brought a son, Nikola, to the home of the Rev. Milutin Tesla and Djouka, his wife, in the hamlet of Smiljan, in the Austro-Hungarian border province of Lika, now a part of Yugoslavia. The father of the new arrival, pastor of the village church, was a former student in an oficers' training school who had rebelled against the restrictions of Army life and turned to the ministry as the field in which he could more satisfactorily express himself. The mother, although totally unable to read or write, was nevertheless an intellectually brilliant woman, who without the help of literal aids became really well educated.

Both father and mother contributed to the child a valuable heritage of culture developed and passed on by ancestral families that had been community leaders for many generations. The father came from a family that contributed sons in equal numbers to the Church and to the Army. The mother was a member of the Mandich family whose sons, for generations without number, had, with very few exceptions, become ministers of the Serbian Orthodox Church, and whose daughters were chosen as wives by ministers.

Djouka, the mother of Nikola Tesla (her given name in English translation would be Georgina), was the eldest daughter in a family of seven children. Her father, like her husband, was a minister of the Serbian Orthodox Church, Her mother, after a period of failing eyesight, had become blind shortly after the seventh child was born; so Djouka, the eldest daughter, at a tender age was compelled to take over the major share of her mother's duties. This not alone prevented her from attending school: her work at home so completely consumed her time that she was unable to acquire even the rudiments of reading and writing through home study. This was a strange situation in the cultured family of which she was a member. Tesla, however, always credited his unlettered mother rather than his erudite father with being the source from which he inherited his inventive ability. She devised many household labor-saving instruments. She was, in addition, a very practical individual, and her well-educated husband wisely left in her hands all business matters involving both the church and his household.

An unusually retentive memory served this remarkable woman as a good substitute for literacy. As the family moved in cultured circles she absorbed by ear much of the cultural riches of the community. She could repeat, without error or omission, thousands of verses of the national poetry of her country--the sagas of the Serbs--and could recite long passages from the Bible. She could narrate from memory the entire poetical- philosophical work Gorski ffenac (Mountain fireath), written by Bishop Petrovich Njegosh. She also possessed artistic talent and a versatile dexterity in her fingers for expressing it. She earned wide fame throughout the countryside for her beautiful needlework. According to Tesla, so great were her dexterity and her patience that she could, when over sixty, using only her fingers, tie three knots in an eyelash.

The remarkable abilities of this clever woman who had no formal education were transmitted to her five children. The elder son, Dane Tesla, born seven years before Nikola, was the family favorite because of the promise of an outstanding career which his youthful cleverness indicated was in store for him. He foreshadowed in his early years the strange manifestations which in his surviving brother were a prelude to greatness.

Tesla's father started his career in the military service, a likely choice for the son of an oficer; but he apparently did not inherit his father's liking for Army life. So slight an incident as criticism for failure to keep his brass buttons brightly polished caused him to leave military school. He was probably more of a poet and philosopher than a soldier. He wrote poetry which was published in contemporary papers. He also wrote articles on current problems which he signed with a pseudonym, "Srbin Pravicich." This, in Serb, means "Man of Justice." He spoke, read and wrote Serbo-Croat, German and Italian. It was probably his interest in poetry and philosophy that caused him to be attracted to Djouka Mandich. She was twenty-five and Milutin was two years older. He married her in 1847. His attraction to the daughter of a pastor probably influenced his next choice of a career, for he then entered the ministry and was soon ordained a priest.

He was made pastor of the church at Senj, an important seaport with facilities for a cultural life. He gave satisfaction, but apparently he achieved success among his parishioners on the basis of a pleasing personality and an understanding of problems rather than by using any great erudition in theological and ecclesiastical matters.

A few years after he was placed in charge of this parish, a new archbishop, elevated to head of the diocese, wished to survey the capabilities of the priests in his charge and offered a prize for the best sermon preached on his oficial visit. The Rev. Milutin Tesla was bubbling over, at the time, with interest in labor as a major factor in social and economic problems. To preach a sermon on this topic was, from the viewpoint of expediency, a totally impractical thing to do. Nobody, however, had ever accused the Rev. Mr. Tesla of being practical, so doing the impractical thing was quite in harmony with his nature. He chose the subject which held his greatest interest; and

when the archbishop arrived, he listened to a sermon on "Labor."

Months later Senj was surprised by an unanticipated visit from the archbishop, who announced that the Rev. Mr. Tesla had preached the best sermon, and awarded him a red sash which he was privileged to wear on all occasions. Shortly afterward he was made pastor at Smiljan, where his parish then embraced forty homes. He was later placed in charge of the much larger parish in the nearby city of Gospic. His first three children, Milka, Dane and Angelina, were born at Senj. Nikola and his younger sister, Marica, were born at Smiljan.

Tesla's early environment, then, was that of an agricultural community in a high plateau region near the eastern shore of the Adriatic Sea in the Velebit Mountains, a part of the Alps, a mountain chain stretching from Switzerland to Greece. He did not see his first steam locomotive until he was in his `teens, so his aptitude for mechanical matters did not grow out of his environment.

Tesla's homeland is today called Yugoslavia, a country whose name means "Land of the Southern Slavs." It embraces several former separate countries, Serbia, Bosnia, Croatia, Montenegro, Dalmatia and also Slovenia. The Tesla and Mandich families originally came from the western part of Serbia near Montenegro. Smiljan, the village where Tesla was born, is in the province of Lika, and at the time of his birth this was a dependent province held by the Austro-Hungarian Empire as part of Croatia and Slovenia.

Tesla's surname dates back more than two and a half centuries. Before that time the family name was Draganic (pronounced as if spelled Drag'-a-nitch). The name Tesla (pronounced as spelled, with equal emphasis on both syllables), in a purely literal sense, is a trade name like Smith, firight or Carpenter. As a common noun it describes a woodworking tool which, in English, is called an adz. This is an axe with a broad cutting blade at right angles to the handle, instead of parallel as in the more familiar form. It is used in cutting large tree trunks into squared timbers. In the Serbo-Croat language, the name of the tool is tesla. There is a tradition in the Draganic family that the members of one branch were given the nickname "Tesla" because of an inherited trait which caused practically all of them to have very large, broad and protruding front

teeth which greatly resembled the triangular blade of the adz.

The name Draganic and derivatives of it appear frequently in other branches of the Tesla family as a given name. When used as a given name it is frequently translated "Charlotte," but as a generic term it holds the meaning "dear" and as a surname is translated "Darling."

The majority of Tesla's ancestors for whom age records are available lived well beyond the average span of life for their times, but no definite record has been found of the ancestor who, Tesla claimed, lived to be one hundred and forty years of age. (His father died at the age of fifty-nine, and his mother at seventy-one.)

Although many of Tesla's ancestors were dark eyed, his eyes were a gray-blue. He claimed his eyes were originally darker, but that as a result of the excessive use of his brain their color changed. His mother's eyes, however, were gray and so are those of some of his nephews. It is probable, therefore, that his gray eyes were inherited, rather than faded by excessive use of the brain.

Tesla grew to be very tall and very slender--tallness was a family and a national trait. When he attained full growth he was exactly two meters, or six feet two and one-quarter inches tall. while his body was slender, it was built within normal proportions. His hands, however, and particularly his thumbs, seemed unusually long.

Nikola's older brother Dane was a brilliant boy and his parents gloried in their good fortune in being blessed with such a fine son. There was, however, a difference of seven years in the two boys' ages, and since the elder brother died as the result of an accident at the age of twelve, when Nikola was but five years old, a fair comparison of the two seems hardly possible. The loss of their first-born son was a great blow to his mother and father; the grief and regrets of the family were manifest in idealizing his talents and predicting possibilities of greatness he might have realized, and this situation was a challenge to Nikola in his youth.

The superman Tesla developed out of the superboy Nikola. Forced to rise above the normal level by an urge to carry on for his dearly beloved departed brother, and also on his

own account to exceed the great accomplishment his brother might have attained had he lived, he unconsciously drew upon strange resources within. The existence of these resources might have remained unsuspected for a lifetime, as happens with the run of individuals, if Nikola had not felt the necessity for creating a larger sphere of life for himself.

He was aware as a boy that he was not like other boys in his thoughts, in his amusements and in his hobbies. He could do the things that other lads his age usually do, and many things that they could not do. It was these latter things that interested him most, and he could find no companions who would share his enthusiasms for them. This situation caused him to isolate himself from contemporaries, and made him aware that he was destined for an unusual place if not great accomplishments in life. His boyish mind was continually exploring realms which his years had not reached, and his boyhood attainments frequently were worthy of men of mature age.

He had, of course, the usual experience of unusual incidents that fall to the lot of a small boy. One of the earliest events which Tesla recalled was a fall into a tank of hot milk that was being scalded in the process used by the natives of that region as a hygienic measure, anticipating the modern process of pasteurizing.

Shortly afterward he was accidentally locked in a remote mountain chapel which was visited only at widely separated intervals. He spent the night in the small building before his absence was discovered and his possible hiding place determined.

Living close to Nature, with ample opportunity for observing the flight of birds, which has ever filled men with envy, he did what many another boy has done with the same results. An umbrella, plus imagination, offered to him a certain solution of the problem of free flight through the air. The roof of a barn was his launching platform. The umbrella was large, but its condition was much the worse for many years of service; it turned inside out before the flight was well started. No bones were broken, but he was badly shaken up and spent the next six weeks in bed. Probably, though, he had better reason for making this experiment than most of the others who have tried it. He revealed that practically all his life he experienced a

peculiar reaction when breathing deeply. When he breathed deeply he was overcome by a feeling of lightness, as if his body had lost all weight; and he should, he concluded, be able to fly through the air merely by his will to do so. He did not learn, in boyhood, that he was unusual in this respect.

One day when he was in his fifth year, one of his chums received a gift of a fishing line, and all the boys in the group planned a fishing trip. On that day he was on the outs with his chums for some unremembered reason. As a result, he was informed he could not join them. He was not permitted even to see the fishing line at close range. He had glimpsed, however, the general idea of a hook on the end of a string. In a short time he had fashioned his own interpretation of a hook. The refinement of a barb had not occurred to him and he also failed to evolve the theory of using bait when he went off on his own fishing expedition. The baitless hook failed to attract any fish but, while dangling in the air, much to Tesla's surprise and satisfaction it snared a frog that leaped at it. He came home with a bag of nearly two dozen frogs. It may have been a day on which the fish were not biting, but at any rate his chums came home from the use of their new hook and line without any fish. His triumph was complete. When he later revealed his technique, all the boys in the neighborhood copied his hook and method, and in a short time the frog population of the region was greatly depleted.

The contents of birds' nests always excited Tesla's curiosity. He rarely disturbed their contents or occupants. On one occasion, however, he climbed a rocky crag to investigate an eagle's nest and took from it a baby eagle which he kept locked in a barn. A bird on the wing he considered fair prey for his sling shot, with which he was a star performer.

About this time he became intrigued with a piece of hollow tube cut from a cane growing in the neighborhood. This he played with until he had evolved a blow gun and later, by making a plunger and plugging one end of the tube with a wad of wet hemp, a pop gun. He then undertook the making of larger pop guns, and contrived one in which the end of the plunger was held against the chest and the tube pulled energetically toward the body. He engaged in the manufacture of this article for his chums, as a five-year-old businessman. When a number of window panes happened to

get broken accidentally by getting in the way of his hemp wad, his inventive proclivities in this field were quickly curbed by the destruction of the pop guns and the administration of the parental rod.

Tesla started his formal education by attending the village school in Smiljan before he reached his fifth birthday. A few years later his father received his appointment as pastor of a church in the nearby city of Gospic, so the family moved there. This was a sad day for young Tesla. He had lived close to Nature, and loved the open country and the high mountains among which he had thus far spent all of his life. The sudden transition to the artificialities of the city was a very definite shock to him. He was out of harmony with his new surroundings.

His advent into the city life of Gospic, at the age of seven, got off to an unfortunate start. As the new minister in town, his father was anxious to have everything move smoothly. Tesla was required to dress in his best clothes and attend the Sunday services. Naturally, he dreaded this ordeal and was very happy when assigned the task of ringing the bell summoning the worshipers to the service and announcing the close of the ceremonies. This gave him an opportunity to remain unseen in the belfry while the parishioners, their daughters and dude sons were arriving and departing.

Thinking he had waited long enough after the close of the service for the church to be cleared on this first Sunday, he came downstairs three steps at a time. A wealthy woman parishioner wearing a skirt with a long train that fashionably dragged along the ground, and who had come to the service with a retinue of servants, remained after the other parishioners to have a talk with the new pastor. She was just making an impressive exit when Tesla's final jump down the stairs landed him on the train, ripping this dignity-preserving appendage from the woman's dress. Her mortification and rage and his father's anger came upon him simultaneously. Parishioners loitering outside rushed back to revel in the spectacle. Thereafter no one dared be pleasant to this youngster who had enraged the wealthy dowager who domineered it over the social community. He was practically ostracized by the parishioners, and continued so until he redeemed himself in a spectacular manner.

Tesla felt strange and defeated in his ignorance of city ways. He met the situation first by avoidance. He did not care to leave his home. The boys of his age were neatly dressed every day. They were dudes and he did not belong. Even as a child Tesla was meticulously careful in dress. At the earliest moment, however, he would slip work clothes over his dress clothes and go wandering in the woods or engage in mechanical work. He could not enjoy life if limited to the activities in which he could engage while dressed up. Tesla, however, possessed ingenuity, and there was rarely a situation in which he was not able to use it. He also possessed knowledge of the ways of Nature. These gave him a distinct superiority over the city boys.

About a year after the family moved to Gospic a new fire company was organized. It was to be supplied with a pump which would replace the useful but inadequate bucket brigade. The members of the new organization obtained brightly colored uniforms and practiced marching for parades. Eventually the new pump arrived. It was a man-power pump to be operated by sixteen men. A parade and demonstration of the new apparatus was arranged. Almost everyone in Gospic turned out for the event and followed to the river front for the pump demonstration. Tesla was among them. He paid no attention to the speeches but was all eyes for the brightly painted apparatus. He did not know how it worked but would have loved to take it apart and investigate the insides.

The time for the demonstration came when the last speaker, finishing his dedicatory address, gave the order to start the pumping operation that would send a stream of water shooting skyward from the nozzle. The eight men regimented on either side of the pump bowed and rose in alternate unison as they raised and lowered the bars that operated the pistons of the pump. But nothing else happened, not a drop of water came from the nozzle!

Oficials of the fire company started feverishly to make adjustments and, after each attempt, set the sixteen men oscillating up and down at the pump handles, but each time without results. The lines of hose between the pump and the nozzle were straightened out, they were disconnected from the pump and connected again. But no water came from the far end of the hose to reward the efforts of the perspiring firemen.

Tesla was among the usual group of urchins that always manages to get inside the lines on such occasions. He tried to see everything that was going on from the closest possible vantage point and undoubtedly got on the nerves of the vexed oficials when their repeated efforts were frustrated by continuous failures. As one of the oficials turned for the tenth time to vent his frustration on the urchins and order them away from his range of action, Tesla grabbed him by the arm.

"I know what to do, Mister," said Tesla. "you keep pumping."

Dashing for the river, Tesla peeled his clothes off quickly and dove into the water. He swam to the suction hose that was supposed to draw the water supply from the river. He found it kinked, so that no water could flow into it, and flattened by the vacuum created by the pumping. When he straightened out the kink, the water rushed into the line. The nozzlemen had stood at their post for a long time, receiving a continuous repetition of warnings to be prepared each time an adjustment was made, but, as nothing happened on these successive occasions, they had gradually relaxed their attention and were giving little thought to the direction in which the nozzle was pointed. When the stream of water did shoot skyward, down it came on the assembled oficials and townspeople. This item of unexpected drama excited the crowd at the other end of the line near the pump, and to give vent to their joy they seized the scantily dressed Tesla, boosted him to the shoulders of a couple of the firemen, and led a procession around the town. The seven-year-old Tesla was the hero of the day.

Later on Tesla, in explaining the incident, said that he had had not the faintest idea of how the pump worked; but as he watched the men struggle with it, he got an intuitive flash of knowledge that told him to go to the hose in the river. On looking back to that event, he said, he knew how Archimedes must have felt when, after discovering the law of the displacement of water by floating objects, he ran naked through the streets of Syracuse shouting "Eureka!

At the age of seven Tesla had tasted the pleasures of public acclaim

for his ingenuity. And further, he had done something which the dudes, the boys of his age in the city, could not do

and which even their fathers could not do. He had found himself. He was now a hero, and it could be forgotten that he had jumped on a woman's skirt and ripped the train off.

Tesla never lost an opportunity to hike through the nearby mountains where he could again enjoy the pleasures of his earlier years spent so close to Nature. On these occasions he would often wonder if there was still operating a crude water wheel which he made and installed, when he was less than five years old, across the mountain brook near his home in Smiljan.

The wheel consisted of a not too well-smoothed disk cut from a tree trunk in some lumbering operations. Through its center he was able to cut a hole and force into it a somewhat straight branch of a tree, the ends of which he rested in two sticks with crotches which he forced into the rock on either bank of the brook. This arrangement permitted the lower part of the disk to dip in the water and the current caused it to rotate. To the lad there was a great deal of originality employed in making this ancient device. The wheel wobbled a bit but to him it was a marvelous piece of construction, and he got no end of pleasure out of watching his water wheel obtain power from the brook.

This experiment undoubtedly made a life-long impression on his young plastic mind and endowed him with the desire, ever afterward manifested in his work, of obtaining power from Nature's sources which are always being dissipated and always being replenished.

In this smooth-disk water wheel we find an early clue to his later invention of the smooth-disk turbine. In his later experience he discovered that all water wheels have paddles--but his little water wheel had operated without paddles.

Tesla's first experiment in original methods of power production was made when he was nine years old. It demonstrated his ingenuity and originality, if nothing else. It was a sixteen-bug-power engine. He took two thin slivers of wood, as thick as a toothpick and several times as long, and glued them together in the form of a cross, so they looked like the arms of a windmill. At the point of intersection they were glued to a spindle made of another thin sliver of wood. On this he slipped a very small pulley

with about the diameter of a pea. A piece of thread acting as a driving belt was slipped over this and also around the circumference of a much larger but light pulley which was also mounted on a thin spindle. The power for this machine was furnished by sixteen May bugs (June bugs in the United States). He had collected a jar full of the insects, which were very much of a pest in the neighborhood. With a little dab of glue four bugs were afixed, heading in the same direction, to each of the four arms of the windmill arrangement. The bugs beat their wings, and if they had been free would have flown away at high speed. They were, however, attached to the cross arms, so instead they pulled them around at high speed. These, being connected by the thread belt to the large pulley, caused the latter to turn at low speed; but it developed, Tesla reports, a surprisingly large torque, or turning power.

Proud of his bug-power motor and its continuous operation--the bugs did not cease flying for hours--he called in one of the boys in the neighborhood to admire it. The lad was a son of an Army oficer. The visitor was amused for a short time by the bug motor, until he spied the jar of still unused May bugs. Without hesitation he opened the jar, fished out the bugs--and ate them. This so nauseated Tesla that he chased the boy out of the house and destroyed the bug motor. For years he could not tolerate the sight of May bugs without a return of this unpleasant reaction.

This event greatly annoyed Tesla because he had planned to add more spindles to the shaft and stick on more fliers until he had more than a one-hundred-bug-power motor.

TESLA'S years in school were more important for the activities in which he engaged in after-school hours than for what he learned in the classroom. At the age of ten, having finished his elementary studies in the Normal School, Tesla entered the college, called the Real Gymnasium, at Gospic. This was not an unusually early age to enter the Real Gymnasium, as that school corresponds more to our grammar school and junior high school than to our college.

One of the requirements, and one to which an unusually large percentage of the class time was devoted throughout the four years, was freehand drawing. Tesla detested the subject almost to the point of open rebellion, and his marks were accordingly very low, but not entirely owing to a lack of ability.

Tesla was left-handed as a boy, but later became ambidextrous. Left-handedness was a definite handicap in the freehand-drawing studies, but he could have done much better work than he actually produced and would have gotten higher marks if it were not for a piece of altruism in which he engaged. A student whom he could excel in drawing was striving hard for a scholarship. Were he to receive the lowest marks in freehand drawing, he would be unable to obtain the scholarship. Tesla sought to help his fellow student by intentionally getting the lowest rating in the small class.

Mathematics was his favorite subject and he distinguished himself in that study. His unusual proficiency in this field was not considered a counterbalancing virtue to make amends for his lack of enthusiasm for freehand drawing. A strange power permitted him to perform unusual feats in mathematics. He possessed it from early boyhood, but had considered it a nuisance and tried to be rid of it because it seemed beyond his control.

If he thought of an object it would appear before him exhibiting the appearance of solidity and massiveness. So greatly did these visions possess the attributes of actual objects that it was usually dificult for him to distinguish between vision and reality. This abnormal faculty functioned in a very useful fashion in his school work with mathematics.

If he was given a problem in arithmetic or algebra, it was immaterial to him whether he went to the blackboard to work it out or whether he remained in his seat. His strange faculty permitted him to see a visioned blackboard on which the problem was written, and there appeared on this blackboard all of the operations and symbols required in working out the solution. Each step appeared much more rapidly than he could work it out by hand on the actual slate. As a result, he could give the solution almost as quickly as the whole problem was stated.

His teachers, at first, had some doubts about his honesty, thinking he had worked out some clever deceit for getting the right answers. In due time their skepticism was dispelled and they accepted him as a student who was unusually apt at mental arithmetic. He would not reveal this power to anyone and would discuss it only with his mother, who in the past had encouraged him in his efforts to banish it. Now that the power had demonstrated some definite usefulness, though, he was not so anxious to be completely rid of it, but desired to bring it under his complete control.

Work that Tesla did outside school hours interested him much more than his school work. He was a rapid reader and had a memory that was retentive to the point, almost, of infallibility. He found it easy to acquire foreign languages. In addition to his native Serbo-Croat language he became proficient in the use of German, French and Italian. This opened to him great stores of knowledge to which other students did not have access, yet this knowledge, apparently, was of little use to him in his school work. He was interested in things mechanical but the school provided no manual training course. Nevertheless, he became proficient in the working of wood and metals with tools and methods of his own contriving.

In the classroom of one of the upper grades of the Real Gymnasium models of water wheels were on exhibition. They were not working models but nevertheless they aroused Tesla's enthusiasm. They recalled to him the crude wheel he had constructed in the hills of Smiljan. He had seen pictures of the magnificent Niagara Falls. Coupling the power possibilities presented by the majestic waterfalls and the intriguing possibilities he saw in the models of the water wheels, he aroused in himself a passion to accomplish a grand achievement. Waxing eloquent on the subject, he told his father, "Some day I am going to America and harness Niagara Falls to produce power." Thirty years later he was to see this prediction fulfilled.

There were many books in his father's library. The knowledge in those books interested him more than that which he received in school and he wished to spend his evenings reading them. As in other matters, he carried this to an extreme, so his father forbade him to read them, fearing that he would ruin his eyes in the poor light of tallow candles then used for illumination. Nikola sought to

circumvent this ruling by taking candles to his room and reading after he was sent to bed, but his violation of orders was soon discovered and the family candle supply was hidden. Next he fashioned a candle mould out of a piece of tin and made his own candles. Then, by plugging the keyhole and the chinks around the door, he was able to spend the night hours reading volumes purloined from his father's bookshelves. Frequently, he said, he would read through the entire night and feel none the worse for the loss of sleep. Eventual discovery, however, brought paternal discipline of a vigorous nature. He was about eleven years old at this time.

Like other boys of his age he played with bows and arrows. He made bigger bows, and better, straighter shooting arrows, and his marksmanship was excellent. He was not willing to stop at that point. He started building arbalists. These could be described as bow-and-arrow guns. The bow is mounted on a frame and the string pulled back and caught on a peg from which it is released by a trigger. The arrow is laid on the midpoint of the bow, its end against the taut string. The bow lies horizontal on the frame whereas in ordinary manual shooting the bow is held in vertical position. For this reason the device is sometimes called the crossbow. In setting an arbalist the beam is placed against the abdomen and the string pulled back with all possible force. Tesla did this so often, he said, that his skin at the point of pressure became calloused until it was more like a crocodile's hide. When shot into the air the arrows from his arbalist were never recovered, for they went far out of sight. At close range they would pass through a pine board an inch thick.

Tesla got a thrill out of archery not experienced by other boys. He was, in imagination, riding those arrows which he shot out of sight into the blue vault of the heavens. That sense of exhilaration he experienced when breathing deeply gave him such a feeling of lightness he convinced himself that in this state it would be relatively easy for him to fly through the air if he only could devise some mechanical aid that would launch him and enable him to overcome what he thought was only a slight remaining weight in his body. His earlier disastrous jump from the barn roof had not disillusioned him. His conclusions were in keeping with his sensations; but a twelve-year-old lad exploring this dificult field alone cannot be condemned too severely for not discovering that our senses sometimes deceive us, or

rather that we sometimes deceive ourselves in interpreting what our senses tell us.

In breathing deeply he was overventilating his lungs, taking out some of the residual carbon dioxide which is chemical "ashes," and largely inert, and replacing it with air containing a mixture of equally inert nitrogen and very active oxygen. The latter being present in more than normal proportions immediately began to upset chemical balances throughout the body. The reaction on the brain produces a result which does not differ greatly from alcohol intoxication. A number of cults use this procedure to induce "mystical" or "occult" experiences. How was a twelve-year-old boy to know all these things? He could see that birds did an excellent job in flying. He was convinced that some day man would fly, and he wanted to produce the machine that would get him off the ground and into the air.

The big idea came to him when he learned about the vacuum--a space within a container from which all air had been exhausted. He learned that every object exposed to the air was under a pressure of about fourteen pounds per square inch, while in a vacuum objects were free of such pressure. He figured that a pressure of fourteen pounds should turn a cylinder at high speed and he could arrange to get advantage of such pressure by surrounding one half of a cylinder with a vacuum and having the remaining half of its surface exposed to air pressure. He carefully built a box of wood. At one end was an opening into which a cylinder was fitted with a very high order of accuracy, so that the box would be airtight; and on one side of the cylinder the edge of the box made a right-angle contact. On the cylinder's other side the box made a tangent, or flat, contact. This arrangement was made because he wanted the air pressure to be exerted at a tangent to the surface of the cylinder--a situation that he knew would be required in order to produce rotation. If he could get that cylinder to rotate, all he would have to do in order to fly would be to attach a propeller to a shaft from the cylinder, strap the box to his body and obtain continuous power from his vacuum box that would lift him through the air. His theory of course was fallacious, but he had no means of knowing that at the time.

The workmanship on this box was undoubtedly of a very high order, considering it was made by a self-instructed twelve-year-old mechanic. When he connected his vacuum pump, an

ordinary air pump with its valves reversed, he found the box was airtight, so he pulled out all the air, watching the cylinder intently while doing so. Nothing happened for many strokes of the pump except that it made his back lame to pull the pump handle upward while he created the most "powerful" possible vacuum. He rested for a moment. He was breathing deeply from exertion, overventilating his lungs, and getting that joyous, dizzy, light-as-air feeling which was a highly satisfactory mental environment for his experiment.

Suddenly the cylinder started to turn--slowly! His experiment was a success! His vacuum-power box was working! He would fly!

Tesla was delirious with joy. He went into a state of ecstasy. There was no one with whom he could share this joy, as he had taken no one into his confidence. It was his secret and he was forced to endure its joys alone. The cylinder continued to turn slowly. It was no hallucination. It was real. It did not speed up, however, and this was disappointing. He had visualized it turning at a tremendous speed but it was actually turning extremely slowly. His idea, at least, he figured, was correct. With a little better workmanship, perhaps he could make the cylinder turn faster. He stood spellbound watching it turn at a snail's pace for less than half a minute--and then the cylinder stopped. That broke the spell and ended for the time his mental air flights.

He hunted for the trouble and quickly located what he was sure was the cause of the dificulty. Since the vacuum, he theorized, is the source of power, then, if the power stops, it must be because the vacuum is gone. His pump, he felt sure, must be leaking air. He pulled up the handle. It came up easily and that meant very definitely he had lost the vacuum in the box. He again pumped out the air--and again when he reached a high vacuum the cylinder started to turn slowly and continued to do so for a fraction of a minute. When it stopped he again pumped a vacuum and again the cylinder turned. This time he continued to operate the pump and the cylinder continued to turn. He could keep it turning as long as he desired by continuing to pump the vacuum.

There was nothing wrong with his theory, as far as he could see. He went over the pump very carefully, making

improvements which would give him a high vacuum, and studied the valve to make that a better guard of the vacuum in the box. He worked on the project for weeks but despite his best efforts he could get no better results than the slow movement of the cylinder.

Finally the truth came to him in a flash--he was losing the vacuum in the box because the air was leaking in around the cylinder on that side where the flat board was tangent to the surface of the cylinder. As the air flowed into the box it pulled the cylinder around with it very slowly. When the air stopped flowing into the box the cylinder stopped turning. He knew now his theory was wrong. He had supposed that even with the vacuum being maintained, and no air leaking in, the air pressure would be exerted at a tangent to the surface of the cylinder and the pressure would produce motion in the same way as pushing on the rim of a wheel will cause it to turn. He discovered later, however, that the air pressure is exerted at right angles to the surface of the cylinder at all points, like the direction of the spokes of a wheel, and therefore it could not be used to produce rotation in the way he planned.

This experiment, nevertheless, was not a total loss, even though it greatly disheartened him. The knowledge that the air leaking into a vacuum had actually produced even a small amount of rotation in a cylinder remained with him and led directly, many years later, to his invention of the "Tesla turbine," the steam engine that broke all records for horsepower developed per pound of weight--what he called "a power house in a hat."

Nature seemed to be constantly engaged in staging spectacular demonstrations for young Tesla, revealing to him samples of the secret of her mighty forces.

Tesla was roaming in the mountains with some chums one winter day after a storm in which the snow fell moist and sticky. A small snowball rolled on the ground quickly gathered more snow to itself and soon became a big one that was not too easy to move. Tiring of making snowmen and snow houses on level stretches of ground, the boys took to throwing snowballs down the sloping ground of the mountain. Most of them were duds--that is, they got stalled in the soft snow before they accumulated additional volume. A few rolled a distance, grew larger and then bogged down and stopped. One, however, found just the right conditions; it

rolled until it was a large ball and then spread out, rolling up the snow at the sides as if it were rolling up a giant carpet, and then suddenly it turned into an avalanche. Soon an irresistible mass of snow was moving down the steep slope. It stripped the mountainside clean of snow, trees, soil and everything else it could carry before it and with it. The great mass landed in the valley below with a thud that shook the mountain. The boys were frightened because there was snow above them on the mountain that might have been shaken into a downward slide, carrying them along buried in it.

This event made a profound impression on Tesla and it dominated a great deal of his thinking in later life. He had witnessed a snowball weighing a few ounces starting an irresistible, devastating movement of thousands of tons of inert matter. It convinced him that there are tremendous forces locked up in Nature that can be released in gigantic amounts, for useful as well as destructive purposes, by the employment of small trigger forces. He was always on the lookout for such triggers in his later experiments.

Tesla even as a boy was an original thinker and he never hesitated to think thoughts on a grand scale, always carrying everything to its largest ultimate dimension as a means of exploring the cosmos. This is demonstrated by another event that took place the following summer. He was wandering alone in the mountains when storm clouds started to fill the sky. There was a flash of lightning and almost immediately a deluge of rain descended on him.

There was implanted in his thirteen-year-old mind on that occasion a thought which he carried with him practically all his life. He saw the lightning flash and then saw the rain come down in torrents, so he reasoned that the lightning flash produced the downpour. The idea become firmly fixed in his mind that electricity controlled the rain, and that if one could produce lightning at will, the weather would be brought under control. Then there would be no dry periods in which crops would be ruined; deserts could be turned into vineyards, the food supply of the world would be greatly increased, and there would be no lack of food anywhere on the globe. why could he not produce lightning?

The observation and the conclusions drawn from it by young Tesla were worthy of a more mature mind, and it would

require a genius among the adults to have evolved the project of controlling the world's weather through such means. There was, however, a flaw in his observation. He saw the lightning come first and the rain afterward. Further investigation would have revealed to him that the order of events was reversed higher in the air. It was the rain that came first and the lightning afterward up in the cloud. The lightning, however, arrived first because it made the trip from the cloud in less than 1/100,000 of a second, while the raindrops required several seconds to fall to the ground.

At this time there was planted in Tesla's mind the seed of a project which matured more than thirty years later when, in the mountains of Colorado, he actually produced bolts of lightning, and planned later to use them to bring rain. He never succeeded in convincing the U.S. Patent Ofice of the practicability of the rain-making plan.

Tesla, as a boy, knew no limits to the universe of his thinking; and as a result he built an intellectual realm suficiently large to provide ample space in which his more mature mind could operate without encountering retarding barriers.

Tesla finished his course at the Real Gymnasium in Gospic in 1870,

at the age of fourteen. He had distinguished himself as a scholar. In one grade, however, his mathematics professor gave him less than a passing mark for his year's work. Tesla felt an injustice had been done him, so he went to the director of the school and demanded that he be given the strictest kind of examination in the subject. This was done in the presence of the director and the professor, and Tesla passed it with an almost perfect mark.

His fine work at school and the recognition by the towns-people that he possessed a broader scope of knowledge than any other youth in town led the trustees of the public library to ask him to classify the books in their possession and make a catalogue. He had already read most of the books in his father's extensive library, so he was pleased to have close access to a still larger collection and undertook the task with considerable enthusiasm. He had scarcely begun work on this project when it was interrupted by a long intermittent illness. When he felt too depressed

to go to the library he had quantities of the books brought to his home, and these he read while confined to his bed. His illness reached a critical stage and physicians gave up hope of saving his life.

Tesla's father knew that he was a delicate child and, having lost his other son, tried to throw every possible safeguard around this one. He was greatly pleased over his son's brilliant accomplishments in almost every activity in which he engaged, but he recognized as a danger to Nikola's health the great intensity with which he tackled projects. Nikola's trend toward engineering was to him a dangerous development, as he thought work in that field would make too heavy demands upon him, not only because of the nature of the work but in the extended years of study in which he would have to engage. If, however, the boy entered the ministry, it would not be necessary for him to extend his studies beyond the Real Gymnasium which he had just completed. For this reason his father favored a career for him in the Church.

Illness threw everything into a somber aspect. When the critical stage of his illness was reached and his strength was at its lowest ebb, Nikola manifested no inclination to help himself get better by developing an enthusiasm for anything. It was in this stage of his illness that he glanced listlessly at one of the library books. It was a volume by Mark Twain. The book held his interest and then aroused his enthusiasm for life, enabling him to pass a crisis, and his health gradually returned to normal. Tesla credited the Mark Twain book with saving his life, and when, years later, he met Twain, they became very close friends.

At the age of fifteen Tesla, in 1870, continued his studies at the Higher Real Gymnasium, corresponding to our college, at Karlovac (Carlstadt) in Croatia. His attendance at this school was made possible by an invitation from a cousin of his father's, married to a Col. Brankovic, whose home was in Karlovac, to come and live with her and her husband, a retired Army oficer, while attending school. His life there was none too happy. Scarcely had he arrived when he contracted malaria from the mosquitoes in the Karlovac lowlands, and he was never free from the malady for years afterward.

Tesla relates that he was hungry all during the three years he spent at Karlovac. There was plenty of deliciously prepared food in the home, but his aunt held the theory that because his health seemed none too rugged he should not eat heavy meals. Her husband, a gruff and rugged individual, when carving a second helping for himself, would sometimes try to slip a healthy slice of meat onto Tesla's plate; but the Colonel was always overruled by his wife, who would take back the slice and carve one to the thinness of a sheet of paper, warning her husband, "Niko is delicate and we must be very careful not to overload his stomach."

His studies at Karlovac interested him, however, and he completed the four-year course in three years, tackling the school work with a dangerous enthusiasm, partly as an escape mechanism to divert his attention from the none too pleasing conditions where he was living. The lasting favorable impression which Tesla carried away from Karlovac concerned his professor of physics, a clever and original experimenter, who amazed him with the feats he performed with laboratory apparatus. He could not get enough of this course. He wanted to devote his whole time henceforth to electrical experimenting. He knew he would not be satisfied in any other field. His mind was made up; he had selected his career.

His father wrote to him shortly before his graduation advising him not to return home when school was closed but to go on a long hunting trip. Tesla, however, was anxious to get home--to surprise his parents with the good news that he had completed his work at the Higher Real Gymnasium a year ahead of schedule, and to announce his decision to make the study of electricity his life work. Greatly worried, his parents, who at that moment were making strenuous efforts to protect his health, were doubly alarmed. first, there was his violation of the instruction sent him not to return to Gospic. The reason for this advice they had not disclosed--an epidemic of cholera was raging. And second, there was his decision to enter on a career which they feared would make dangerous demands on his delicate health. On returning home, he found his plan definitely opposed. This made him very unhappy. In addition, he would shortly have to face a situation which was even more repugnant than entering upon a career in the Church, and that was the compulsory three-years' service in the Army. Those two powerful factors were operating against

him and seeking to thwart him in his burning desire to start immediately unraveling the mystery and harnessing the great power of electricity.

Nothing, he thought, could exceed the dificulty of the predicament in which he found himself. In this, however, he was mistaken, for he was soon to face a much more serious problem. On the very day after his arrival home, while these issues were still red hot, he became ill with cholera. He had come home malnourished because of the inadequate amount of food to which he had been limited and the strain of his intense application to his studies. Besides, he was still suffering from malaria. Then came the cholera. Now all other problems became secondary to the immediate one of maintaining life itself against the deadly scourge. His physical condition made the doctors despair of saving him. Nevertheless, he survived the crisis, but it left him in a thoroughly weakened and run-down condition. For nine months he lay in bed almost a physical wreck. He had frequent sinking spells and from each successive one it seemed harder to rally him.

Life held no incentive for him. If he survived he would be forced to enter the Army and, if nothing happened to prevent him from finishing that term of something worse than slavery, he would be forced to study for the ministry. He did not care whether he survived or not. Left to his own decision, he would not have rallied from earlier sinking spells; but the decision was not left to him. Some force stronger than his own consciousness carried him through, but it had to succeed in spite of him and not because of any assistance he was giving. The sinking spells came on with startling regularity, each one with increasing depth. It seemed a miracle that he had come out of the last one, and now with less reserve strength he was sinking into another and edging rapidly into unconsciousness. His father entered his room and tried desperately to rouse him and stir him to a more cheerful and hopeful attitude in which he could help himself and do more than the doctors could do for him, but without results.

"I could--get well--if you--would let me--study electrical--engineering," said the prostrate young man in a hardly audible whisper. He had scarcely enough energy left for even this effort; and having made the speech, he seemed to be dropping over the edge of nothingness. His father,

bending intently over him and fearing the end had come, seized him.

"Nikola," he commanded, "you cannot go. you must stay. you will be an engineer. Do you hear me? you will go to the best engineering school in the world and you will be a great engineer. Nikola, you must come back, you must come back and become a great engineer."

The eyes of the prostrate figure opened slowly. Now there was a light shining in the eyes where before they presented a death-like glaze. The face moved a little, very little, but the slight change this movement made seemed to be in the direction of a smile. It was a smile, a weak one, and he was able to keep his eyes open although it was very apparently a struggle for him to do so.

"Thank God" said his father. "you heard me, Nikola. you will go to an engineering school and become a great engineer. Do you understand me?"

There was not enough energy for voice but the smile became a little more definite.

Another crisis in which he had escaped death by the narrowest margin had been passed. His rise out of this situation seemed almost miraculous. It seemed to him, Tesla later related, that from that instant he felt as if he were drawing vital energy from his loved ones who surrounded him; and this he used to rally himself out of the shadow.

He was again able to whisper. "I will get well," he said weakly. He breathed deeply, as deep as his frail tired frame would permit, of the oxygen which he had found so stimulating in the past. It was the first time he had done so in the nine months since he became ill. With each breath he felt reinvigorated. He seemed to get stronger by the minute.

In a very short time he was taking nourishment and within a week he was able to sit up. In a few days more he was on his feet. Life now would be glorious. He would be an electrical engineer. Everything he dreamed of would come true. As the days passed he recovered his strength at a remarkably rapid rate and his hearty appetite returned. It was now early summer. He would prepare himself to enter the fall term at an engineering school.

But there was something he had forgotten, everyone in the family had forgotten, in the stress of his months of illness. It was now brought sharply to his and their attention. An Army summons--he must face three years' military servitude! was his remarkable recovery to be ruined by this catastrophe, which seemed all the worse now that his chosen career seemed otherwise nearer? Failure to respond to a military summons meant jail--and after that the service in addition. How would he solve this problem?

There is no record of what took place. This spot in his career Tesla glossed over with the statement that his father considered it advisable for him to go off on a year's hunting expedition to recover his health. At any rate, Nikola disappeared. He left with a hunting outfit and some books and paper. where he spent the year, no one knows--probably at some hideaway in the mountains. In the meantime, he was a fugitive from Army service.

For any ordinary individual this situation would be a most serious one. For Tesla it had all the gravity associated with ordinary cases, plus the complication that his family on his father's side was a traditional military family whose members had won high rank and honors in Army activities, and many of whom were now in the service of Austria-Hungary. For a member of that family to become equivalent to a "draft dodger" and a "conscientious objector," both, was a serious blow to its prestige, and could provoke a scandal if word of the situation got into circulation. Tesla's father used this circumstance and the fact of NikoIa's delicate health as talking points to induce his relatives in Army positions to use their influence to enable his son to escape conscription and avoid punishment for failing to respond to the Army call. In this he was successful, apparently, but required considerable time in which to make the arrangements.

Hiding in the mountains and with a year's time to kill, on this enforced vacation Tesla was able to indulge in working out totally fantastic plans for some gigantic projects. One of the plans was for the construction and operation of an under-ocean tube, connecting Europe and the United States, by which mail could be transported in spherical containers moved through the tube by water pressure. He discovered early in his calculations that the friction of the water on the walls of the tube would require such a tremendous

amount of power to overcome it that it made the project totally impracticable. Since, however, he was working on the project entirely for his own amusement, he eliminated friction from the calculations and was then able to design a very interesting system of high-speed intercontinental mail delivery. The factor which made this interesting project impracticable--the drag of the water on the sides of the tube--Tesla was later to utilize when he invented his novel steam turbine.

The other project with which he amused himself was drawn upon an even larger scale and required a still higher order of imagination. He conceived the project of building a ring around the earth at the Equator, somewhat resembling the rings around the planet Saturn. The earth ring, however, was to be a solid structure whereas Saturn's rings are made up of dust particles.

Tesla loved to work with mathematics, and this project gave him an excellent opportunity to use all of the mathematical techniques available to him. The ring which Tesla planned was to be a rigid structure constructed on a gigantic system of scaffolding extending completely around the earth. Once the ring was complete, the scaffolding was to be removed and the ring would stay suspended in space and rotating at the same speed as the earth.

Some use might be found for the project, Tesla said, if someone could find a means of providing reactionary forces that could make the ring stand still with respect to the earth while the latter whirled underneath it at a speed of 1,000 miles per hour. This would provide a high-speed "moving" platform system of transportation which would make it possible for a person to travel around the earth in a single day.

In this project, he admitted, he encountered the same problem as did Archimedes, who said "Give me a fulcrum and a lever long enough and I will move the earth." "The fulcrum in space on which to rest the lever was no more attainable than was the reactionary force needed to halt the spinning of the hypothetical ring around the earth," said Tesla. There were a number of other factors which he found necessary to ignore in this project, but ignore them he did so that they would not interfere with his mathematical practice and his cosmical engineering plans.

With his health regained, and the danger of punishment by the Army removed, Tesla returned to his home in Gospic to remain a short time before going to Graumltz, where he was to study electrical engineering as his father had promised he could do. This marked the turning point in his life. Finished with boyhood dreams and play, he was now ready to settle down to his serious life work. He had played at being a god, not hesitating to plan refashioning the earth as a planet. His life work was to produce accomplishments hardly less fantastic than his boyhood dreams.

TESLA entered manhood with a definite knowledge that nameless forces were shaping for him an unrevealed destiny. It was a situation he had to feel rather than be able to identify and describe in words. His goal he could not see and the course leading to it he could not discern. He knew very definitely the field in which he intended to spend his life, and using such physical laws as he knew he decided to plan a life which, as an engineering project, would be operated under principles that would yield the highest index of efficiency. He did not, at this time, have a complete plan of life drawn up, but there were certain elements which he knew intuitively he would not include in his operations, so he avoided all activities and interests that would bring them in as complications. It was to be a single-purpose life, devoted entirely to science with no provisions whatever for play or romance.

It was with this philosophy of life that Tesla in 1875, at the age of 19, went to Graumltz, in Austria, to study electrical engineering at the Polytechnic Institute. He intended henceforth to devote all his energies to mastering that strange, almost occult force, electricity, and to harness it for human welfare.

His first effort to put this philosophy to a practical test almost resulted in disaster despite the fact that it worked successfully. Tesla completely eliminated recreation and plunged into his studies with such enthusiastic devotion that he allowed himself only four hours' rest, not all of which he spent in slumber. He would go to bed at eleven o'clock and read himself to sleep. He was up again in the small hours of the morning, tackling his studies.

Under such a schedule he was able to pass, at the end of the first term, his examinations in nine subjects--nearly twice as many as were required. His diligence greatly impressed the members of the faculty. The dean of the technical faculty wrote to Tesla's father, "your son is a star of first rank." The strain, however, was affecting his health. He desired to make a spectacular showing to demonstrate to his father in a practical way his appreciation of the permission he gave to study engineering. When he returned to his home at the end of the school term with the highest marks that could be awarded in all the subjects passed, he expected to be joyfully received by his father and praised for his good work. Instead, his parent showed only the slightest enthusiasm for his accomplishment but a great deal of interest in his health, and criticized Nikola for endangering it after his earlier narrow escape from death. Unknown to Tesla until several years afterward, the professor at the Polytechnic Institute had written to his father early in the term, asking him to take his son out of the school, as he was in danger of killing himself through overwork.

On his return to the Institute for the second year he decided to limit his studies to physics, mechanics and mathematics. This was fortunate because it gave him more time in which to handle a situation that arose later in his studies, and was to lead to his first and perhaps greatest invention.

Early in his second year at the Institute there was received from Paris a piece of electrical equipment, a Gramme machine, that could be used as either a dynamo or motor. If turned by mechanical power it would generate electricity, and if supplied with electricity it would operate as a motor and produce mechanical power. It was a direct-current machine.

When Prof. Poeschl demonstrated the machine, Tesla was greatly impressed by its performance except in one respect--a great deal of sparking took place at the commutator. Tesla stated his objections to this defect.

"It is inherent in the nature of the machine," replied Prof. Poeschl. "It may be reduced to a great extent, but as long as we use commutators it will always be present to some degree. As long as electricity flows in one direction,

and as long as a magnet has two poles each of which acts oppositely on the current, we will have to use a commutator to change, at the right moment, the direction of the current in the rotating armature."

"That is obvious," Tesla countered. "The machine is limited by the current used. I am suggesting that we get rid of the commutator entirely by using alternating current."

Long before the machine was received, Tesla had studied the theory of the dynamo and motor, and he was convinced that the whole system could be simplified in some way. The solution of the problem, however, evaded his grasp, nor was he at all sure the problem could be solved--until Prof. Poeschl gave his demonstration. The assurance then came to him like a commanding flash.

The first sources of current were batteries which produced a small steady flow. When man sought to produce electricity from mechanical power, he sought to make the same kind the batteries produced: a steady flow in one direction. The kind of current a dynamo would produce when coils of wire were whirled in a magnetic field was not this kind of current--it flowed first in one direction and then in the other. The commutator was invented as a clever device for circumventing this seeming handicap of artificial electricity and making the current come out in a one-directional flow.

The flash that came to Tesla was to let the current come out of the dynamo with its alternating directions of flow, thus eliminating the commutator, and feed this kind of current to the motors, thus eliminating the need in them for commutators. Many another scientist had played with that idea long before it occurred to Tesla, but in his case it came to him as such a vivid, illuminating flash of understanding that he knew his visualization contained the correct and practical answer. He saw both the motors and dynamos operating without commutators, and doing so very efficiently. He did not, however, see the extremely important and essential details of how this desirable result could be accomplished, but he felt an overpowering assurance that he could solve the problem. It was for this reason that he stated his objections to the Gramme machine with a great deal of confidence to his professor. what he did not expect was to draw a storm of criticism.

Prof. Poeschl, however, deviated from his set program of lectures and devoted the next one to Tesla's objections. With methodical thoroughness he picked Tesla's proposal apart and, disposing of one point after another, demonstrated its impractical nature so convincingly that he silenced even Tesla. He ended his lecture with the statement: "Mr. Tesla will accomplish great things, but he certainly never will do this. It would be equivalent to converting a steady pulling force like gravity into rotary effort. It is a perpetual motion scheme, an impossible idea."

Tesla, although silenced temporarily, was not convinced. The professor had paid him a nice compliment in devoting a whole lecture to his observation, but, as is so often the case, the compliment was loaded with what was expected by the professor to be a crushing defeat for the one whom he complimented. Tesla was nevertheless greatly impressed by his authority; and for a while he weakened in his belief that he had correctly understood his vision. It was as clear-cut and definite as the visualizations that came to him of the solutions of mathematical problems which he was always able to prove correct. But perhaps, after all, he was in this case a victim of a self-induced hallucination. All other things Prof. Poeschl taught were solidly founded on demonstrable fact, so perhaps his teacher was right in his objections to the alternating-current idea.

Deep down in his innermost being, however, Tesla held firmly to the conviction that his idea was a correct one. Criticism only temporarily submerged it, and soon it came bobbing back to the surface of his thinking. He gradually convinced himself that, contrary to his usual procedure, Prof. Poeschl had in this case demonstrated merely that he did not know how to accomplish a given result, a defficiency which he shared with everyone else in the world, and therefore could not speak with authority on this subject. And, in addition, Tesla reasoned, the closing remark with which Prof. Poeschl believed he had clinched his argument--"It would be equivalent to converting a steady pulling force like gravity into a rotary effort--was contradicted by Nature, for was not the steady pulling force of gravity making the moon revolve around the earth and the earth revolve around the sun?

"I could not demonstrate my belief at that time," said Tesla, "but it came to me through what I might call

instinct, for lack of a better name. But instinct is something which transcends knowledge. we undoubtedly have in our brains some finer fibers which enable us to perceive truths which we could not attain through logical deductions, and which it would be futile to attempt to achieve through any wilful effort of thinking."

His enthusiasm and confidence in himself restored, Tesla tackled the problem with renewed vigor. His power of visualization--the ability to see as solid objects before him the things that he conceived in his mind, and which he had considered such a great annoyance in childhood--now proved to be of great aid to him in trying to unravel this problem. He made an elastic rebound from the intellectual trouncing administered by his Professor and was tackling the problem in methodical fashion.

In his mind he constructed one machine after another, and as he visioned them before him he could trace out with his finger the various circuits through armature and field coils, and follow the course of the rapidly changing currents. But in no case did he produce the desired rotation. Practically all the remainder of the term he spent on this problem. He had passed so many examinations during the first term that he had plenty of time to spend on this problem during the second.

It seemed, however, that he was doomed to fail in this project, for at the term's end he was no nearer the solution than he was when he started. His pride had been injured and he was fighting on the defensive side. He did not know that those seeming failures in his mental and laboratory experiments were to serve later as the raw material out of which yet another vision was to be created.

A radical change had taken place in Tesla's mode of life while at Graumltz. The first year he had acted like an intellectual glutton, overloading his mind and nearly wrecking his health in the process. In the second year he allowed more time for digesting the mental food of which he was partaking, and permitted himself more recreation. About this time Tesla took to card-playing as a means of relaxation. His keen mental processes and highly developed powers of deduction enabled him to win more frequently than he lost. He never retained the money he won but returned it to the losers at the end of the game. When he lost, however, this procedure was not reciprocated by the other

players. He also developed a passion for billiards and chess, in both of which he became remarkably proficient.

The fondness for card-playing which Tesla developed at Graumltz got him into an embarrassing situation. Toward the end of the term his father sent him money to pay for his trip to Prague and for the expenses incident to enrolling as a student at the university. Instead of going directly to Prague, Tesla returned to Gospic for a visit to the family. Sitting in at a card game with some youths of the city, Tesla found his usual luck had deserted him, and he lost the money set aside for his university expenses. He confessed to his mother what he had done. She did not criticize him. Perhaps the fates were using this method for protecting him from overwork that might ruin his health, she reasoned, since he needed rest and relaxation. Losses of money were much easier to handle than loss of health. Borrowing some money from a friend, she gave it to Tesla with the words, "Here you are. Satisfy yourself." Returning to the game, he experienced a change in luck and came out of it not only with the money his mother had given him but practically all of the university expense money he had previously lost. These winnings he did not return to the losers as was his previous custom. He returned home, gave his mother the money she had advanced him, and announced that he would never again indulge in card-playing.

Instead of going to the University of Prague in the fall of 1878 as he had planned, Tesla accepted a lucrative position that was offered him in a technical establishment at Maribor, near Graumltz. He was paid sixty florins a month and a separate bonus for the completed work, a very generous compensation compared with the prevailing wages. During this year Tesla lived very modestly and saved his earnings.

The money he had saved at Maribor enabled him to pay his way through a year at the University of Prague, where he extended his studies in mathematics and physics. He continued experimenting with the one big challenging alternating-current idea that was occupying his mind. He had explored, unsuccessfully, a large number of methods and, though his failures gave support to Prof. Poeschl's contention that he would never succeed, he was unwilling to give up his theory. He still had faith that he would find the solution of his problem. He knew electrical science was young and growing, and felt deep within his consciousness

that he would make the important discovery that would greatly expand the infant science to the powerful giant of the future.

It would have been a pleasure to Tesla to have continued his studies, but it now was necessary for him to make his own living. His father's death, following Tesla's graduation from the University at Prague, made it necessary for him to be self-supporting. Now he needed a job. Europe was extending an enthusiastic reception to Alexander Graham Bell's new American invention, the telephone, and Tesla heard that a central station was to be installed in Budapest. The head of the enterprise was a friend of the family. The situation seemed a promising one.

Without waiting to ascertain the situation in Budapest, Tesla, full of youthful hope and the self-assurance which is typical of the untried graduate, traveled to that city, expecting to walk into an engineering position in the new telephone project. He quickly discovered, on his arrival, that there was no position open; nor could one be created for him, as the project was still in the discussion stage.

It was, however, urgently necessary for financial reasons, that he secure immediately a job of some kind. The best he could obtain was a much more modest one than he had anticipated. The salary was so microscopically small he would never name the amount, but it was suficient to enable him to avoid starvation. He was employed as draftsman by the Hungarian Government in its Central Telegraph Ofice, which included the newly developing telephone in its jurisdiction.

It was not long before Tesla's outstanding ability attracted the attention of the Inspector in Chief. Soon he was transferred to a more responsible position in which he was engaged in designing and in making calculations and estimates in connection with new telephone installations. When the new telephone exchange was finally started in Budapest in 1881, he was placed in charge of it.

Tesla was very happy in his new position. At the age of twenty-five he was in full charge of an engineering enterprise. His inventive faculty was fully occupied and he made many improvements in telephone central-station apparatus. Here he made his first invention, then called a telephone repeater, or amplifier, but which today would be

more descriptively called a loud speaker--an ancestor of the sound producer now so common in the home radio set. This invention was never patented and was never publicly described, but, Tesla later declared, in its originality, design, performance and ingenuity it would make a creditable showing alongside his better-known creations that followed. His chief interest, however, was still the alternating-current motor problem whose solution continued to elude him.

Always an indefatigable worker, always using up his available energy with the greatest number of activities he could crowd into a day, always rebelling because the days had too few hours in them and the hours too few minutes, and the seconds that composed them were of too short duration, and always holding himself down to a five-hour period of rest with only two hours of that devoted to sleep, he continually used up his vital reserves and eventually had to balance accounts with Nature. He was forced finally to discontinue work.

The peculiar malady that now affected him was never diagnosed by the doctors who attended him. It was, however, an experience that nearly cost him his life. To doctors he appeared to be at death's door. The strange manifestations he exhibited attracted the attention of a renowned physician, who declared medical science could do nothing to aid him. One of the symptoms of the illness was an acute sensitivity of all of the sense organs. His senses had always been extremely keen, but this sensitivity was now so tremendously exaggerated that the effects were a form of torture. The ticking of a watch three rooms away sounded like the beat of hammers on an anvil. The vibration of ordinary city trafic, when transmitted through a chair or bench, pounded through his body. It was necessary to place the legs of his bed on rubber pads to eliminate the vibrations. Ordinary speech sounded like thunderous pandemonium. The slightest touch had the mental effect of a tremendous blow. A beam of sunlight shining on him produced the effect of an internal explosion. In the dark he could sense an object at a distance of a dozen feet by a peculiar creepy sensation in his forehead. His whole body was constantly wracked by twitches and tremors. His pulse, he said, would vary from a few feeble throbs per minute to more than one hundred and fifty.

Throughout this mysterious illness he was fighting with powerful desire to recover his normal condition. He had before him a task he must accomplish--he must attain the solution of the alternating-current motor problem. He felt intuitively during his months of torment that the solution was coming ever nearer, and that he must live in order to be there when it crystallized out of his unconscious mind. During this period he was unable to concentrate on this or any other subject.

Once the crisis was past and the symptoms diminished, improvement came rapidly and with it the old urge to tackle problems. He could not give up his big problem. It had become a part of him. working on it was no longer a matter of choice. He knew that if he stopped he would die, and he knew equally well that if he failed he would perish. He was enmeshed in an invisible web of intangible structure that was tightening around him. The feeling that it was bringing the solution nearer to him--just beyond his finger tips--was cause for both regret and rejoicing. That problem when solved would leave a tremendous vacancy in his life, he feared.

yet in spite of his feeling of optimism it was still a tremendous problem without a solution.

When the acute sensitivity reduced to normal, permitting him to resume work, he took a walk in the city park of Budapest with a former classmate, named Szigeti, one late afternoon in February, 1882. while a glorious sunset overspread the sky with a flamboyant splash of throbbing colors, Tesla engaged in one of his favorite hobbies--reciting poetry. As a youth he had memorized many volumes, and he was now pleased to note that the terrific punishment his brain had experienced had not diminished his memory. One of the works which he could recite from beginning to end was Goethe's Faust.

The prismatic panorama which the sinking sun was painting in the sky reminded him of some of Goethe's beautiful lines:

"The glow retreats, done is the day of toil"

"It yonder hastes, new fields of life exploring"

"Ah, that no wing can lift me from the soil"

"Upon its track to follow, follow soaring"

Tesla, tall, lean and gaunt, but with a fire in his eye that matched the flaming clouds of the heavens, waved his arms in the air and swayed his body as he voiced the undulating lines. He faced the color drama of the sky as if addressing the red-glowing orb as it flung its amorphous masses of hue, tint and chrome across the domed vault of heaven.

Suddenly the animated figure of Tesla snapped into a rigid pose as if he had fallen into a trance. Szigeti spoke to him but got no answer. Again his words were ignored. The friend was about to seize the towering motionless figure and shake him into consciousness when instead Tesla spoke.

"Watch me!" said Tesla, blurting out the words like a child bubbling over with emotion: "Watch me reverse it." He was still gazing into the sun as if that incandescent ball had thrown him into a hypnotic trance.

Szigeti recalled the image from Goethe that Tesla had been reciting: "The glow retreats . . . It yonder hastes, new fields of life exploring" a poetic description of the setting sun, and then his next words-- "watch me! watch me reverse it." Did Tesla mean the sun? Did he mean that he could arrest the motion of the sun about to sink below the horizon, reverse its action and start it rising again toward the zenith?

"Let us sit and rest for a while," said Szigeti. He turned him toward a bench, but Tesla was not to be moved.

"Don't you see it?" expostulated the excited Tesla. "See how smoothly it is running? Now I throw this switch--and I reverse it. See! It goes just as smoothly in the opposite direction. watch! I stop it. I start it. There is no sparking. There is nothing on it to spark."

"But I see nothing," said Szigeti. "The sun is not sparking. Are you ill?"

"you do not understand," beamed the still excited Tesla, turning as if to bestow a benediction on his companion. "It is my alternating-current motor I am talking about. I have solved the problem. Can't you see it right here in front of

me, running almost silently? It is the rotating magnetic field that does it. See how the magnetic field rotates and drags the armature around with it? Isn't it beautiful? Isn't it sublime? Isn't it simple? I have solved the problem. Now I can die happy. But I must live, I must return to work and build the motor so I can give it to the world. No more will men be slaves to hard tasks. My motor will set them free, it will do the work of the world."

Szigeti now understood. Tesla had previously told him about his attempt to solve the problem of an alternating-current motor, and he grasped the full meaning of the scientist's words. Tesla had never told him, however, about his ability to visualize objects which he conceived in his mind, so it was necessary to explain the vision he saw, and that the solution had come to him suddenly while they were admiring the sunset.

Tesla was now a little more composed, but he was floating on air in a frenzy of almost religious ecstasy. He had been breathing deeply in his excitement, and the overventilation of his lungs had produced a state of exhilaration.

Picking up a twig, he used it as a scribe to draw a diagram on the dusty surface of the dirt walk. As he explained the technical principles of his discovery, his friend quickly grasped the beauty of his conception, and far into the night they remained together discussing its possibilities.

The conception of a rotating magnetic field was a majestically beautiful one. It introduced to the scientific world a new principle of sublime grandeur whose simplicity and utility opened a vast new empire of useful applications. In it Tesla had achieved the solution which his professor had declared was impossible of attainment.

Alternating-current motors had heretofore presented what seemed an insoluble problem because the magnetic field produced by alternating currents changed as rapidly as the current. Instead of producing a turning force they churned up useless vibration.

Up to this time everyone who tried to make an alternating-current motor used a single circuit, just as was in direct current. As a result the projected motor proved to be like a single-cylinder steam engine, stalled at dead center, at the top or bottom of the stroke.

what Tesla did was to use two circuits, each one carrying the same frequency of alternating-current, but in which the current waves were out of step with each other. This was equivalent to adding to an engine a second cylinder. The pistons in the two cylinders were connected to the shaft so that their cranks were at in angle to each other which caused them to reach the top or bottom of the stroke at different times. The two could never be on dead center at the same time. If one were on dead center, the other would be off and ready to start the engine turning with a power stroke.

This analogy oversimplifies the situation, of course, for Tesla's discovery was much more far-reaching and fundamental. what Tesla had discovered was a means of creating a rotating magnetic field, a magnetic whirlwind in space which possessed fantastically new and intriguing properties. It was an utterly new conception. In direct-current motors a fixed magnetic field was tricked by mechanical means into producing rotation in an armature by connecting successively through a commutator each of a series of coils arranged around the circumference of a cylindrical armature. Tesla produced a field of force which rotated in space at high speed and was able to lock tightly into its embrace an armature which required no electrical connections. The rotating field possessed the property of transferring wirelessly through space, by means of its lines of force, energy to the simple closed circuit coils on the isolated armature which enabled it to build up its own magnetic field that locked itself into the rotating magnetic whirlwind produced by the field coils. The need for a commutator was completely eliminated.

Now that this magnificent solution of his most dificult scientific problem was achieved, Tesla's troubles were not over; they were just beginning; but, during the next two months, he was in a state of ecstatic pleasure playing with his new toy. It was not necessary for him to construct models of copper and iron: in his mental workshop he constructed them in wide variety. A constant stream of new ideas was continuously rushing through his mind. They came so fast, he said, that he could neither utilize nor record them all. In this short period he evolved every type of motor which was later associated with his name.

He worked out the design of dynamos, motors, transformers and all other devices for a complete alternating-current system. He multiplied the effectiveness of the two-phase system by making it operate on three or more alternating currents simultaneously. This was his famous polyphase power system.

The mental constructs were built with meticulous care as concerned size, strength, design and material; and they were tested mentally, he maintained, by having them run for weeks--after which time he would examine them thoroughly for signs of wear. Here was a most unusual mind being utilized in a most unusual way. If he at any time built a "mental machine," his memory ever afterward retained all of the details, even to the finest dimensions.

The state of supreme happiness which Tesla was enjoying was destined soon, however, to end. The telephone central station by which he was employed, and which was controlled by Puskas, that friend of the family, was sold. When Puskas returned to Paris, he recommended Tesla for a job in the Paris establishment with which he was associated, and Tesla gladly followed up his opportunity. Paris, he reasoned, would be a wonderful springboard from which to catapult his great invention on the world.

The budding superman Tesla came to Paris light in baggage but with his head filled to bursting with his wonderful discovery of the rotating magnetic field and scores of significant inventions based on it. If he had been a typical inventor, he would have gone among people wearing a look indicating that he knew something important, but maintaining absolute secrecy concerning the nature of his inventions. He would be fearful that someone would steal his secret. But Tesla's attitude was just the reverse of this. He had something to give to the world and he wanted the world to know about it, the whole fascinating story with all the revealing technical details. He had not then learned, and never did learn, the craft of being shrewd and cunning. His life plan was on a secular basis. He cared less for the advantages of the passing moment, more for the ultimate goal; and he wanted to give his newly discovered polyphase system of alternating-current to the human race that all men could benefit from it. He knew there was a fortune in his invention. How he could extract this fortune he did not know. He knew that there was a higher law of compensation under which he would derive adequate benefits

from the gift to the world of his discovery. The method by which this would work out did not interest him nearly so much as the necessity for getting someone to listen to the details of his fascinating invention.

Six feet two inches tall, slender, quiet of demeanor, meticulously neat in dress, full of self-confidence, he carried himself with an air that shouted, "I defy you to show me an electrical problem I can't solve"--an attitude that was consistent with his twenty-five years, but also matched by his ability.

Through Puskas's letter of recommendation he obtained a position with the Continental Edison Company, a French company organized to make dynamos, motors and install lighting systems under the Edison patents.

He obtained quarters on the Boulevard St. Michel, but in the evenings visited and dined at the best cafes as long as his salary lasted. He made contact with many Americans engaged in electrical enterprises. wherever he could get a patient ear, among those who had an understanding of electrical matters, he described his alternating-current system of dynamos and motors.

Did someone steal his invention? Not the slightest danger. He could not even give it away. No one was even slightly interested. The closest approach to a nibble was when Dr. Cunningham, an American, a foreman in the plant where Tesla was employed, suggested formation of a stock company.

With his great alternating-current-system invention pounding at his brain and demanding some way in which it could be developed, it was a hardship for him to be forced to work all day on direct-current machines. Nowadays, though, his health was robust. He would arise shortly after five o'clock in the morning, walk to the Seine, swim for half an hour, and then walk to Ivry, near the gates of Paris, where he was employed, a trip that required an hour of lively stepping. It was then half-past seven. The next hour he spent in eating a very substantial breakfast which never seemed suficient to keep his appetite from developing into a disturbing factor long before noon.

The work to which he was assigned at the Continental Edison Company factory was of a variegated character, largely that of a junior engineer. In a short time he was given a

traveling assignment as a "trouble shooter" which required him to visit electrical installations in various parts of France and Germany. Tesla did not relish "trouble shooting" but he did a conscientious job and studied intensely the dificulties he encountered at each powerhouse. He was soon able to present a definite plan for improving the dynamos manufactured by his company. He presented his suggestions and received permission to apply them to some machines. When tested they were a complete success. He was then asked to design automatic regulators, for which there was a great need. These too gave an excellent performance.

The company had been placed in an embarrassing position and was threatened with heavy loss through an accident at the railroad station in Strassburg in Alsace, then in Germany, where a powerhouse and electric lights had been installed. At the opening ceremony, at which Emperor fiilliam I was present, a short circuit in the wiring caused an explosion that blew out one of the walls. The German government refused to accept the installation. Tesla was sent, early in 1883, to put the plant in working order and straighten out the situation. The technical problem presented no dificulties but he found it necessary to use a great deal of tact and good judgment in handling the mass of red tape extruded by the German government as precaution against further mishaps.

Once he got the job well under way he gave some time to constructing an actual two-phase alternating-current motor embodying his rotary-magnetic-field discovery. He had constructed so many in his mind since that never-to-be-forgotten day in Budapest when he made his great invention. He had brought materials with him from Paris for this purpose and found a machine shop near the Strassburg station where he could do some of the work. He did not have as much time available as he had expected, and, while he was a clever amateur machinist, nevertheless the work took time. He was very fussy, making every piece of metal exact in dimensions to better than the thousandth of an inch and then carefully polishing it.

Eventually there was a miscellaneous collection of parts in that Strassburg machine shop. They had been constructed without the aid of working drawings. Tesla could project before his eyes a picture, complete in every detail, of every part of the machine. These pictures were more vivid than any blueprint and he remembered exact dimensions which

he had calculated mentally for each item. He did not have to test parts through partial assembly. He knew they would fit.

From these parts Tesla quickly assembled a dynamo, to generate the two-phase alternating current which he needed to operate his alternating-current motor, and finally his new induction motor. There was no difference between the motor he built and the one which he visualized. So real was the visualized one that it had all the appearance of solidity. The one he built in the machine shop presented no elements of novelty to him. It was exactly as he had visualized it a year before. He had mentally experimented with its exact counterpart and with many variations of it during the months that had passed since the great vision came to him while rhapsodizing the sunset sky in Budapest.

The assembly completed, he started up his power generator. The time for the great final test of the validity of his theory had arrived. He would close a switch and if the motor turned his theory would be proven correct. If nothing happened, if the armature of his motor just stood still, but vibrated, his theory was not correct and he had been feeding his mind on hallucinations, based on fantasy not on fact.

He closed the switch. Instantly the armature turned, built up to full speed in a flash and then continued to operate in almost complete silence. He closed the reversing switch and the armature instantly stopped and as quickly started turning in the opposite direction. This was complete vindication of his theory.

In this experiment he had tested only his two-phase system; but he needed no laboratory demonstration to convince him that his three-phase systems for generating electricity and for using this current for transmission and power production would work even better, and that his single-phase system would work almost as well. With this working model he would now be able to convey to the minds of others the visions he had been treasuring for so long.

This test meant much more to Tesla than just the successful completion of an invention; it meant a triumph for his method of discovering new truths through the unique mental processes he used of visualizing constructs long before they were produced from materials. From these results he

drew an unbounded sense of self-confidence; he could think and work his way to any goal he set.

There was good reason for Tesla's self-assurance. He had just passed his twenty-seventh birthday. It seemed to him only yesterday that Prof. Poeschl had seemingly so completely vanquished him for saying that he could operate a motor by alternating current. Now he had demonstrably accomplished what the learned professor said could never be done.

Tesla now had available a completely novel type of electrical system utilizing alternating current, which was much more flexible and vastly more efficient than the direct-current system. But now that he had it, what could he do with it? The executives of the Continental Edison Company by whom he was employed had continually refused to listen to his alternating-current theories. He felt it would be useless to try to interest them in even the working model. He had made many friends during his stay in Strassburg, among them the Mayor of the city, M. Bauzin, who shared his enthusiasm about the commercial possibilities of the new system and hoped it would result in the establishment of a new industry that would bring fame and prosperity to his city.

The Mayor brought together a number of wealthy Strassburgers. To them the new motor was shown in operation, and the new system and its possibilities described, by both Tesla and the Mayor. The demonstration was a success from the technical viewpoint but otherwise a total loss. Not one member of the group showed the slightest interest. Tesla was dejected. It was beyond his comprehension that the greatest invention in electrical science, with unlimited commercial possibilities, should be rejected so completely.

M. Bauzin assured him that he would undoubtedly receive a more satisfactory reception for his invention in Paris. Delays of oficialdom in finally accepting the completed installation at the Strassburg station, however, postponed his return to Paris until the spring of 1884. Meanwhile, Tesla looked forward with pleasurable expectancy to a triumphant return to Paris. He had been promised a substantial compensation if he was successful in handling the Strassburg assignment; also, that he would be similarly compensated for the improvements in design of motors and

dynamos, and for the automatic regulators for dynamos. It was possible that this would supply him with enough cash to build a full-size demonstration set for his polyphase alternating-current system, so that the tremendous advantages of his system over direct current could be shown in operation. Then he would have no trouble raising the needed capital.

When he got back to the company's ofices in Paris and asked for a settlement of his Strassburg and automatic-regulator accounts, he was given what in modern terminology is called the "runaround." To use fictitious names, as Tesla told the story, the executive, Mr. Smith, who gave him the assignments, now told him he had no jurisdiction over financial arrangements; that was all in the hands of the executive, Mr. Brown. Mr. Brown explained that he administered financial matters but had no authority to initiate projects or to make payments other than those directed by the chief executive, Mr. Jones. Mr. Jones explained that such matters were in the hands of his department executives, and that he never interfered with their decisions, so Tesla must see the executive in charge of technical matters, Mr. Smith. Tesla traveled this vicious circle several times with the same result and finally gave up in disgust. He decided not to renew his offer of the alternating-current system nor to show his motor in operation, and resigned his position immediately.

Tesla was undoubtedly entitled to an amount in excess of $25,000 for the regulators he designed and for his services in Strassburg. Had the executives been endowed with even a smattering of horse sense, or the ordinary garden variety of honesty, they would have made an attempt to settle for $5,000, at the least. Tesla, hard pressed for cash, would undoubtedly have accepted such an amount, although with a feeling that he was being cheated in a large way.

Such an offer would probably have held Tesla on the payroll of the company and preserved for it the possession of the world's greatest inventor and one who at the time had definitely demonstrated he was an extremely valuable employee.

For a paltry few thousand dollars they lost not only a man who would have saved them many times that amount every year, but they also lost an opportunity to obtain world

control of the greatest and most profitable electrical invention ever made.

One of the administrators of the company, Mr. Charles Batchellor, Manager of the works, who was a former assistant and close personal friend of Thomas A. Edison, urged Tesla to go to the United States and work with Edison. There he would have a chance to work on improvements to the Edison dynamos and motors. Tesla decided to follow Mr. Batchellor's suggestion. He sold his books and all other personal possessions except a few articles which he expected to take with him. He assembled his very limited financial resources, purchased tickets for his railroad trip and transatlantic journey to New York. His baggage consisted of a small bundle of clothes carried under his arm and some other items stuffed into his pockets.

The final hours were busy ones and, as he was about to board the train, just as it was ready to pull out of the station, he discovered his package of baggage was missing. Reaching quickly for his wallet, which contained his railroad and steamship tickets and all his money, he was horrified to discover that that too was missing. There was some loose change in his pocket, how much he did not know--he did not have time to count it. His train was pulling out. what should he do? If he missed this train, he would also miss the boat--but he could not ride on either without tickets. He ran alongside the moving train, trying to make up his mind. His long legs enabled him to keep up with it without dificulty at first, but now it was gaining speed. He finally decided to jump aboard. The loose change he discovered was suficient to take care of the railroad fare, with a negligible remainder. He explained his situation to the skeptical steamship oficials and, when no one else showed up to claim his reservations on the ship up to the time of sailing, he was permitted to embark.

To one as fastidious as Tesla, a long steamship journey without adequate clothing was a trying experience. He had expected to encounter annoyances when getting along with the minimum amount of clothing which he planned carrying with him, but when even that limited layout was lost the annoyance became hardship. Coupled with this was the memory of disappointment and resentment over his recent experiences.

The ship offered little to interest him. He explored it thoroughly and in doing so made some contacts with members of the ship's company. There was unrest among the crew. There was unrest in Tesla also. He extended sympathy to members of the crew in their claimed unjust treatment. The grievances affecting the crew had built up one of those situations in which a small spark can cause a large explosion. The spark flew somewhere on the ship while Tesla was below decks in the crew's quarters. The captain and oficers got tough and, with some loyal members of the crew, decided to settle the trouble with belaying pins as clubs. It quickly became a battle royal. Tesla found himself in the middle of a fight which when anyone saw a head he hit it.

Had Tesla not been young as well as tall and strong, his useful career might have ended at this point. He had long arms in proportion to his six feet two inches of height. The fist at the end of his arm could reach as far as a club in the hands of an adversary, and his height enabled him to tower over the other fighters so his head was not easy to reach. He struck hard and often, never knowing for or against which side he was fighting. He was on his feet when the fight was over, something which could not be said of a score of the crew members. The oficers had subdued what they called a mutiny, but they too carried indications that they had been through a battle. Tesla was definitely not invited to sit at the captain's table during the voyage.

He spent the remainder of his journey nursing scores of bruises and sitting in meditation at the stern of the ship, which too slowly made its way to New York. Soon he would set foot on the "land of golden promise" and meet the famous Mr. Edison. He was destined to learn that it was really a "land of golden promise"--but also to discover something that would open his eyes about the fulfillment of promises.

when Tesla stepped out of the Immigration Ofice at Castle Garden, Manhattan, in the summer of 1884, his possessions consisted of four cents, a book of his own poems, a couple

of technical articles he had written, calculations for designing a flying machine, and some mathematical work done in an effort to solve an extremely dificult integral. He had Mr. Batchellor's letter introducing him to Mr. Edison, and the address of a friend. In this letter to Edison, Batchellor wrote: "I know two great men and you are one of them; the other is this young man."

Lacking carfare, Tesla had to walk the several miles to his friend's home. The first person he spoke to, seeking traveling directions, was a policeman, a gruff individual. The way he supplied the information suggested to Tesla that he was willing to start a fight on the subject. Although Tesla spoke English very well, all he understood of the policeman's lingo was the direction in which he pointed his club.

while walking in what he believed was the right direction, wondering how he would be able to contrive a meal and lodgings out of four cents should he be unable to locate his friend, he passed a shop in which he could see a man working on an electrical machine that seemed to him familiar. He entered just as the man was about to give up as impossible the task of repairing the device.

"Let me do it," said Tesla, "I will make it operate." And without more ado he tackled the job. It proved to be a dificult task but eventually the machine was working again.

"I need a man like you to handle these blankety-blank foreign machines," said the man. "Do you want a job?"

Tesla thanked him and told him he was on his way to another job, whereupon the man handed him twenty dollars. Tesla had expected no compensation for doing what he considered a slight favor, and said so, but the man insisted his work was worth that much, and he was glad to pay it. Never was Tesla more thankful for a windfall. He was now assured of food and lodgings for the time being. With the aid of walking directions, this time more graciously given, he located his friend and was a guest at his home overnight. The next day he went to Edison's New York headquarters, then on South Fifth Avenue (now West Broadway).

The introduction by Mr. Batchellor gave him ready access to Mr. Edison, who was busily engaged in problems in connection with his new generating station and electric-

light system--the former located in downtown Pearl Street and serving a relatively small radius of territory.

Tesla was favorably impressed by Edison on their first meeting. He marveled that a man so limited in education could accomplish so much in so technical a field as electricity. It caused Tesla to wonder if all the time he had spent in gaining an education of very broad scope had not been wasted. would he have been further ahead if he had started his practical work on the basis of experience, as Edison had done? He definitely decided, however, before many days had passed, that the time and effort he had spent on his education constituted the wisest kind of an investment.

Edison, for his part, was none too favorably impressed by Tesla. Edison was an inventor who got his results by trial-and-error methods. Tesla calculated everything mentally and solved his problems before doing any "work" on them. As a result, the two great men spoke an entirely different technical language. There was one more very important difference. Edison belonged to the direct-current and Tesla to the alternating-current school of thought. The electricians of that day could, and did, become highly emotional over their differences of opinion on this subject. Discussions roused all the fervor of a religious or political debate, and everything unpleasant was associated with the adherents on the other side of the discussion. The least unpleasant thought applied to an opponent was that he was of a low order of mentality. When Tesla enthusiastically described his polyphase system and told Edison he believed alternating-current was the only practical kind of current to use in a power-and-lighting system, Edison laughed. Edison was using direct current in his system. He told Tesla very bluntly he was not interested in alternating-current; there was no future to it and anyone who dabbled in that field was wasting his time; and besides, it was a deadly current whereas direct current was safe. Tesla did not yield any ground in the discussion--nor could he make any progress in his effort to get Edison to listen to a presentation of his polyphase power system. On technical grounds, they were worlds apart.

Nevertheless, because of Batchellor's statement on the valuable work he had done on the Edison direct-current machines in Europe, Tesla was, without much formality, given a job on Edison's staff--doing minor routine work. A

few weeks later he had an opportunity to demonstrate his ability. Edison had installed one of his electric-light plants on the steamship Oregon, the fastest and most up-to-date passenger ship of that time. The installation worked well for many months but finally both dynamos went out of commission. It was impossible to remove the dynamos and install new ones, so it was necessary to repair the old ones in some way--but this, Edison had been told, was impossible without taking them to the shop. The scheduled sailing date of the ship had passed and Edison was being placed in an embarrassing position over the accumulating days of delay caused by his machines.

Edison asked Tesla if he would go to the ship and see what could be done about the situation. This was in the afternoon. Taking such instruments as he thought he would need, Tesla went aboard the Oregon. He found that short circuits had caused some of the armature coils to be burned out; and open circuits had developed elsewhere on the machines.

Calling on members of the crew to assist him, Tesla worked through the night and by 4 am had both machines running as well as they did the day they were newly installed. walking back to the shop on lower Fifth Avenue at 5 am, in the dim early dawn he met a group of men just leaving. In it were Edison, Batchellor, who had returned from Paris in the meantime, and several others who had finished their night's work and were returning to their homes.

"Here is our Parisian running around nights," said Edison.

"Am just coming back from the Oregon," Tesla replied. "Both machines are operating."

Edison, amazed, shook his head and turned away without another word. On rejoining the group he said to Batchellor, loud enough for the keen-eared Tesla to hear him, "Batchellor, this is a damn good man."

Thereafter Tesla's status on the staff was raised several levels and he was given closer contact with design and operating problems. He found the work interesting and applied himself to it more than eighteen hours a day, from 10:30 am until 5 am, every day including Sundays. Edison, observing his industry, told him, "I have had many hard-working assistants but you take the cake." Tesla observed

many ways in which the dynamos could be improved in design to operate more efficiently. He outlined his plan to Edison, and stressed the increased output and lower cost of operating that would result from the changes he suggested. Edison, quick to appreciate the value of increased efficiency, replied, "There's fifty thousand dollars in it for you if you can do it."

Tesla designed twenty-four types of dynamos, eliminating the long-core field magnets then in use and substituting the more efficient short cores, and provided some automatic controls, on which patents were taken out. Months later, when the task was finished, and some of the new machines built and tested and found measuring up to his promises, Tesla asked to be paid the $50,000. Edison replied, "Tesla, you don't understand our American humor." Tesla was shocked to discover that what he thought was a specific promise was being tossed aside merely as a standard practical joke of the day. He received not a penny of compensation from the new designs and inventions, or for the tremendous amount of overtime, beyond the none too generous weekly pay. He resigned his job immediately. This was in the spring of 1885.

In the period of less than a year which he spent with Edison, Tesla had developed a good reputation in electrical circles; so when he was free he was offered an opportunity to capitalize on it. A group of promoters offered to form a company under his name. This looked like a possible chance to bring out his alternating-current system, and he eagerly entered into the project. But when he urged his plan, the promoters informed him they were not interested in alternating-current. what they wanted him to develop was a practical arc light for street and factory illumination. In about a year he developed the desired lamp, took out several patents on his invention, and its manufacture and use were under way.

From a technical point of view the venture was a success, but Tesla himself suffered another painful financial experience in connection with it. He had been paid a comparatively small salary during the period of development. According to the agreement, he was to receive his principal compensation in the form of shares of stock in the company. He received a beautifully engraved stock certificate, and then, by some manipulations he did not understand, he was forced out of the company and aspersions

were cast upon his ability as an engineer and an inventor. When he sought to convert the certificate into cash, he found that the shares of newly organized companies of undemonstrated power to earn dividends possess very slight value. His opinion of financial men in both the Old World and the New was taking on a decidedly uncomplimentary bias.

Now came the most unpleasant experience of Tesla's life. He was without a source of income, and from the spring of 1886 to the spring of 1887 he was forced to work as a day laborer. "I lived," he said, "through a year of terrible heartaches and bitter tears, my suffering being intensified by material want." Business conditions were none too good in the country. Not only did he have difficulty in getting anyone to listen to his alternating-current project, but even in his effort to earn room and board as a laborer he had tremendous competition, and found it none too easy to secure the most menial tasks at almost starvation wages. He would never discuss this period of his life, probably because it was so unpleasant that he banished all thoughts of it from his memory. Some electrical repair work and even ditch digging at $2 a day were among the jobs he tackled. He resented the utter waste of his abilities more than the personal degradation involved. His education, he said, seemed a mockery.

During the winter of early 1887, while engaged in ditch digging, he attracted the attention of the foreman of the gang who, too, was being forced by circumstances to work below his accustomed level. The foreman was impressed by Tesla's story of his inventions and his great hopes for his alternating-current system. Through this foreman, Tesla said, he was introduced to Mr. A. K. Brown of the Western Union Telegraph Company who put up some of his own money and interested a friend in joining him in Tesla's project.

These two gentlemen organized and financed the Tesla Electric Company, and in April, 1887, established a laboratory at 33-35 South Fifth Avenue (now West Broadway), near Bleecker Street, not far from the shop of the Edison Company. Edison had turned down Tesla's alternating-current idea--and now Tesla was his neighbor with a laboratory of his own, starting to develop the competing idea. Within this small area was to be fought the great battle of the electrical industry over the question of whether direct or alternating current should be used. Edison, already famous, was wholeheartedly committed to direct current; his

powerhouses were operating in several cities and, in addition, he had the support of the famous financier, J. P. Morgan. Tesla, on the other hand, was unknown and had only very modest financial support. The direct current was technically simple, whereas alternating-current was technically complex. Tesla knew, however, that in these complexities were unlimited possibilities for usefulness.

Tesla's dark days were over. yet he was soon to discover that the acceptance or rejection of the alternating-current system was not based on technical facts but upon financial considerations, emotional reactions and prejudices, and that human nature was a bigger factor than scientific truths. Nevertheless, in a short time, he would see some of his greatest hopes and dreams realized, and success in large measure reward his efforts.

Once he had achieved something resembling fair conditions under which to carry on his work, the rising star of Tesla's genius shot across the electrical heavens like a meteor. As soon as the newly organized Tesla Electric Company opened its South Fifth Avenue laboratories he started the construction of a variety of pieces of dynamo electric machinery. It was not necessary for him to do any calculating, or work out blueprints. Everything was crystal clear in his mind down to the finest detail of each piece of apparatus. As a result he very quickly produced the working units with which he demonstrated the principles of his polyphase alternating-current system. The single piece of apparatus he had built while in Strassburg, the first model of the induction motor, supplied the physical proof he needed that all the remainder of his calculations were correct.

The apparatuses built in his new laboratory were identical with those which he conceived during the two months in Budapest following the remarkable revelation of the principle of the revolving magnetic field. He did not make the slightest change, he said, in the machines he had mentally constructed at that time. When the machines were physically constructed not one of them failed to operate as he had anticipated. Five years had elapsed since he evolved the designs. In the meantime he had not committed a line to paper--yet he had remembered perfectly every last detail.

Tesla produced as rapidly as the machines could be constructed three complete systems of alternating-current

machinery--for single-phase, two-phase and three-phase currents--and made experiments with four- and six-phase currents. In each of the three principal systems he produced the dynamos for generating the currents, the motors for producing power from them and transformers for raising and reducing the voltages, as well as a variety of devices for automatically controlling the machinery. He not only produced the three systems but provided methods by which they could be interconnected, and modifications providing a variety of means of using each of the systems. A few months after opening the laboratory he submitted his two-phase motor to Prof. fi. A. Anthony, of Cornell University, for testing. Prof. Anthony reported that it had an efficiency equal to that of the best direct-current motors.

Tesla now not only constructed the machines which he visualized but he worked out the basic mathematical theory underlying all of the apparatus. The mathematical theory was so basic that it covered not only the principles applying to machinery for operation at 60 cycles per second, which is the frequency now in standard use, but applied equally well to the whole range of low- and high-frequency currents. With Edison direct current, it had not been found practicable to work with potentials higher than 220 volts on distribution systems; but with alternating-current it was possible to produce and transmit currents of many thousands of volts, thus permitting economical distribution, and these could be reduced to the lower voltages for customer use.

Tesla sought to obtain a single patent covering the entire system and all of its constituent dynamos, transformers, distribution systems and motors. His patent attorneys, Duncan, Curtis&Page, filed the application for this patent October 12, 1887, six months after the laboratory opened and five and a half years after Tesla had made his rotary magnetic-field invention.

The Patent Ofice, however, objected to considering such an "omnibus" application and insisted it be broken down to seven separate inventions, with individual applications filed on each. Two groups of separate applications were filed, on November 30 and December 23 respectively. These inventions were so original and covered such a virgin field of electrical science that they encountered practically no dificulties in the Patent Ofice and within about six months

the patents were issued. (They were numbered 381,968; 381,969; 381,970; 382,279; 382,280; 382,281 and 382,282. These covered his single and polyphase motors, his distribution system and polyphase transformers. In April of the following year, 1888, he applied for and was later granted five more patents, which included the four-and three-wire three-phase systems. These were numbered 390,413; 390,414; 390,415; 390,721; and 390,820. Within the year he applied for and was granted eighteen more: 401,520; 405,858; 405,859; 416,191; 416,192; 416,193; 416,194; 416,195; 418,248; 424,036; 433,700; 433.701; 433,702; 433,703; 445,207; 445,067; 459,772 and 464,666.)

As a succession of fundamental patents started to issue from the Patent Ofice to Tesla, the attention of the electrical engineering profession was drawn to this practically unknown inventor. The significance of his epoch-making discoveries was quickly grasped and he was invited to deliver a lecture before the American Institute of Electrical Engineers on May 16, 1888. This invitation was evidence that he had "arrived." Tesla accepted the invitation and put his whole heart into preparing the lecture which, he felt, would enable him to tell the electrical world the magnificent story of his complete alternating-current system and the tremendous advantages it possessed over direct-current.

This lecture became a classic of the electrical engineering field. In it Tesla presented the theory and practical application of alternating-current to power engineering. This, with his patents, described the foundation, in the matter of circuits, machines and operation, and theory, upon which almost the entire electrical system of the country was established and is still operating today. No new development of anything even slightly approaching comparable magnitude has been made in the field of electrical engineering down to the present time.

Tesla's lecture, and the inventions and discoveries which he included in it, established him before the electrical engineering profession as the father of the whole field of alternating-current power system, and the outstanding inventor in the electrical field.

It is not easy to visualize the tremendous burst of electrical development and progress that came out of Tesla's laboratory in the few months after he established

it. He produced a tidal wave of advancement which carried the electrical world into the opening of the new power age in one grand surge--although it took several years, naturally, for the commercial exploitation to get under way. The world of electrical engineering was amazed, bewildered and mystified by the host of discoveries thrown into its midst in rapid succession from the Tesla laboratory, and was filled with admiration for the prodigious new genius who had flared up within its ranks.

Tesla's power system, employing high voltage for transmission, released electrical powerhouses using direct current from functioning as purely local enterprises, capable of serving an area within a radius of one mile at the very most. His motors used alternating-current that could be economically transmitted hundreds of miles, and he provided an economical two- and three-phase system for transmission lines.

The stupendous changes which the Tesla alternating-current inventions and discoveries brought about in the electrical industry can be realized by considering the handicap under which the direct-current powerhouses of the Edison system had operated up to that time. Electricity was generated in powerhouses by relatively small-size dynamos, and the current then distributed to customers over copper conductors laid in conduits under the streets. Some of the electrical energy fed into these conductors at the powerhouse did not arrive as electricity at the far end of the line but was converted along the route to useless heat by the resistance of the conductors.

Electrical energy is composed of two factors, the current, or amount of electricity, and the voltage, or the pressure under which the current is moved. Resistance losses were undergone by the current regardless of the voltage. One ampere of current experienced a definite loss caused by resistance and this loss was the same whether the pressure was 100, or 1,000 or 100,000 volts. If the current value remained fixed, then the amount of energy transported over a wire varied with the voltage. There is, for example, 100,000 times as much energy transported over a wire carrying a current of one ampere at 100,000 volts as there is when the current is one ampere and the pressure is one volt.

If the amount of current carried by a wire is doubled, the heat losses are increased four fold; if the current is tripled, these losses are increased nine fold, and if the current is increased four fold, the losses rise sixteen fold. This situation put definite limits to the amount of current which could be loaded on to conductors.

In addition there is an accompanying drop in pressure. In a half-mile-long conductor, of the size adopted and under the average currents carried, there would be a drop of about 30 volts. To compensate for this, to some extent, the dynamos were designed to generate 120 volts instead of the standard 110 volts for which lamps were designed. Near the powerhouse the customers would get excess voltage--and a half-mile away their current would be delivered at 90 volts. The early Edison carbon lamps were none too brilliant at 110 volts and gave much less than satisfactory illumination at 90 volts.

As a result of this situation the generation and distribution of direct-electric current became very much of a localized matter. The Edison powerhouse could serve an area less than a mile in diameter. In order to give service to a large city it would be necessary to have a powerhouse in every square mile, or even closer if a uniformly satisfactory current were to be supplied. Outside large cities the situation became even more dificult. This was a severe handicap if electricity was to become the universal power source.

Tesla's alternating-current power system, which Edison so emphatically rejected when it was offered to him, freed electricity from its bondage to local isolation. Not alone were his alternating-current motors more simple and flexible than the direct-current machines, but it was possible by a highly efficient method of using transformers, which consisted of two coils of wire around an iron core, to step up the voltage and simultaneously step down the current in a proportionate amount, or use the process in reverse. The amount of energy involved, however, would remain practically unchanged.

Copper wire entails a heavy investment when it is bought by the mile. The diameter of the wire sets the limit to the amount of current it will carry. With the Edison direct-current system there was no practical way for transforming an electric current. The voltage remained fixed and when

the current was increased to the carrying capacity of the wire no further expansion was possible on that circuit.

With the Tesla system the amount of energy a wire would transport would be increased tremendously by increasing the voltage and letting the current remain fixed below the carrying limit of the circuit. A very small wire could carry a thousand or more times as much electrical energy in the Tesla polyphase alternating system as it could in the Edison direct-current system.

By using Tesla's alternating-current system electricity could be delivered economically at vast distances from the powerhouse. It would be possible, if desired, to burn coal at the mouth of a mine for generating electricity, and deliver the current cheaply at distant cities, or to generate electricity where water power was available and transmit it to distant points where it could be used.

Tesla rescued the electrical giant from the apron strings of the powerhouse and gave it geographical freedom, the opportunity to expand into the wide-open spaces and work its magic. He laid the foundation for our present superpower system. A development of such magnitude was bound to be loaded with dynamite, and action was sure to follow as soon as someone set a match to the fuse.

TESLA'S spectacular lecture and demonstration before the American Institute of Electrical Engineers in New York focused on his work the attention of the electrical fraternity throughout the world. There was no doubt in the mind of the vast majority of electrical engineers that Tesla's discoveries created a new epoch in the electrical industry. But what could be done about it? There were few manufacturers who could take advantage of it. His discoveries were in the same predicament as a ten-pound diamond. No one would question the value of the stone but who would be in a position to purchase it or make any use of it?

Tesla had given no specific thought to commercializing his work at this time. He was in the midst of a program of experimental work which was far from complete and he desired to finish it before engaging in another line of activity. He expected that there would be no alternative to establishing his own company and engaging in the manufacture of his dynamos, motors and transformers. Such a course would take him away from the original experimental work which greatly fascinated him, and which he did not wish to interrupt. Commercializing his inventions, therefore, was a problem that could be postponed, as far as he was concerned, at least as long as the present financing of his work continued.

George Westinghouse, head of the Westinghouse Electric Company in Pittsburgh, was a man of vision. He was already famous as an inventor of numerous electrical devices but principally for his air brake for trains, and had made a fortune out of the exploitation of his own inventions. He recognized the tremendous commercial possibilities presented by Tesla's discoveries and the vast superiority of the alternating- over the direct- current system. He was a practical man of business and was not limited in his choice between the two systems.

Edison, head of the Edison General Electric Company, on the other hand, was under a limitation. Edison's invention was the incandescent electric lamp. Having developed this project, he was faced with finding some way to use it commercially. In order to sell his lamps to the public it was necessary to make the electricity available for lighting them. This necessitated the building of powerhouses and distribution systems. Another kind of electric lamp was already available--the arc lamp--in which he was but slightly interested. The Edison system powerhouses were standardized on low-voltage direct current. At that time direct-current motors were in use, and most technical men believed it was not at all likely there would ever be a practical alternating-current motor. The direct-current system, therefore, offered a number of advantages of a practical nature from Edison's viewpoint.

Westinghouse had no pet project comparable to the incandescent lamp around which he had to throw protecting conditions such as direct-current limitations, so he could look at the Tesla alternating-current discoveries from an unbiased and purely objective point of view. He reached his

decision a month after Tesla's lecture. Having done this, he forwarded a brief note to Tesla, making an engagement to see him in the latter's laboratory.

The two inventors had not previously met but each of them was well acquainted with the other's work. Westinghouse, born in 1846, was ten years older than Tesla. He was a short, stout, bearded, impressive-looking individual, and had a habit of directness in conducting his affairs that amounted almost to bluntness. Tesla, thirty-two years old, was tall, dark, handsome, slender and suave. They made a strongly contrasting pair as they stood in Tesla's laboratory, but they had three things in common: they both were inventors, engineers and loved electricity. Tesla had in his laboratory dynamos, transformers, and motors with which he could demonstrate his discoveries and models in actual operating conditions. Here Westinghouse was right at home and quickly became completely sold on the inventor and his inventions.

So favorably impressed was Westinghouse that he decided to act quickly. The story was related to the author by Tesla.

"I will give you one million dollars cash for your alternating-current patents, plus royalty," Westinghouse blurted at the startled Tesla. This tall, suave gentleman, however, gave no outward sign that he had almost been bowled over by surprise.

"If you will make the royalty one dollar per horsepower, I will accept the offer," Tesla replied.

"A million cash, a dollar a horsepower royalty," Westinghouse repeated.

"That is acceptable," said Tesla.

"Sold," said Westinghouse. "you will receive a check and a contract in a few days."

Here was a case of two great men, each possessed with the power of seeing visions of the future on a gigantic panorama, and each with complete faith in the other, arranging a tremendous transaction with utter disregard of details.

The amount involved was unquestionably a record one, for that time, for an invention. while Tesla liked to think of his complete polyphase system as a single invention, he was, nevertheless, selling about twenty inventions on which patents were already issued, and about as many more still to issue. With a total of forty patents involved in the transaction, most of them strongly basic in nature, he received, therefore, about $25,000 per patent. Westinghouse thereby obtained a record-breaking bargain by buying the patents in wholesale quantities.

Westinghouse arranged with Tesla to come to Pittsburgh "at a high salary" for a year, to act as consultant in the commercial application of his inventions. The generous offer made by the Pittsburgh magnate for the purchase of his patents made it unnecessary for Tesla to have any more worries about having to devote a major portion of his time to exploiting his inventions commercially through his own company. He could afford, therefore, to give this year of his time.

The apparatus which Tesla demonstrated to Westinghouse when the latter visited his laboratory, and which worked so beautifully, was designed for operation with a current of 60 cycles. Tesla's investigation had demonstrated that this was the frequency at which the greatest efficiency of operation could be achieved. At higher frequencies there was a saving in the amount of iron required; but the drop in efficiency, and design dificulties that developed, were not compensated for by the very small saving in cost of metal. At lower frequencies the amount of iron required increased, and the apparatus grew in size faster than increased efficiency justified.

Tesla went to Pittsburgh and expected to clear up all problems in less than a year. Here, though, he encountered engineers who faced the problem of producing a motor with a design that would insure, first, certainty of smooth and reliable operation; second, economy of operation; third, economy in use of materials; fourth, ease of manufacture; as well as other problems. Tesla had these problems in mind but not with the urgency with which the engineers faced them. In addition he was quite adamant in the choice of 60 cycles as the standard frequency for alternating current while engineers, who had experience on 133 cycles, were not so sure that the lower frequency would be best for the Tesla motors. At any rate there was conflict between the

inventor, interested mainly in principles, and engineers interested in practical design problems. Very definite problems were encountered in making the Tesla motor work on a single-phase current in small sizes. In this type of design, artifices had to be incorporated in the motor to achieve some of the characteristics of a two-phase current from the single-phase current that was supplied to operate it.

Tesla was thoroughly disgusted with the situation. He felt his advice concerning his own invention was not being accepted, so he quit Pittsburgh. Westinghouse was sure the situation would work itself out. Seeking to persuade Tesla to remain, he offered him, Tesla revealed many years later, twenty-four thousand dollars a year, one third of the net income of the company and his own laboratory, if he would stay on and direct the development of his system. Tesla, now wealthy and anxious to return to original research, rejected the offer.

Development work proceeded after Tesla left, and soon practical designs were produced for all sizes of motors and dynamos, and their manufacture started. Tesla was happy to note that the 60-cycle standard, his emphatic choice, but which had been questioned on the ground it was less practical in small units, had been adopted as the standard frequency.

On returning to his New York laboratory, Tesla declared that he had not made a single worth-while contribution to electrical science during the year he spent at Pittsburgh. "I was not free at Pittsburgh," he explained; "I was dependent and could not work. To do creative work I must be completely free. When I became free of that situation ideas and inventions rushed through my brain like a Niagara." During the following four years he devoted a large fraction of his time to further developments of his polyphase power system, and applied for, and was granted, forty-five patents. Those granted in foreign countries would bring the total to several times this number.

The ideas of the two giants among inventors--Edison and Tesla--were meeting in head-on battle. Out of the laboratories of the two geniuses, within sight of each other in South Fifth Avenue in New York, had come world-shaking developments.

There had been considerable conflict between Edison, who adhered strictly to direct current, and those who supported the claims for alternating current. The Thomson-Houston Company and the Westinghouse Electric Company had extensively developed this field for series electric lighting and arc lighting before the Tesla power system was developed. Edison had engaged in many tilts at these competitors, attacking alternating-current as unsafe because of the high voltages used. The advent of the Tesla system added fuel to the fire.

It was Tesla's belief that when the New York State Prison authorities adopted high-voltage alternating current for electrocution of condemned prisoners, the Edison interests had engineered the project to discredit alternating current. There is no doubt about the aid the prison authorities' choice gave the direct-current group; but their decision was undoubtedly based on the fact that direct current could not, by any practical means, be produced at the high voltages required, whereas alternating-current potentials could be very easily increased. Direct current is just as deadly, at the same voltage and amperage, as alternating current. In this "war of the currents," however, as in other wars, appeal to the emotions, instead of to simple facts, were the governing influences.

The task of putting the United States on an electrical power basis--which is what George Westinghouse undertook when he began to exploit the Tesla patent--was a gigantic one requiring not only engineering talent but capital. The Westinghouse Electric Company experienced a tremendous expansion in the volume of its business, but the upward surge came at a time when the country was going into a stage of commercial and financial depression; and Westinghouse soon found himself in dificulties.

This was, in addition, an era in which competing giant financial interests were battling for control of the industrial structure of the country through control of capital. It was a time of mergers, a period when the financial interests were building larger units of production by uniting smaller companies in related fields, frequently forcing these combinations without regard to what the owners of the companies desired.

One merger, internally initiated and arranged by mutual consent, brought together the Thomson-Houston Company and the Edison General Electric Company, the two biggest competitors of Westinghouse Electric, to form the present General Electric Company. This was a challenge to competing financial interests.

Westinghouse had expanded his business at a very rapid rate in exploiting the Tesla patents. Because his financial structure thereby lost a certain amount of flexibility, he became vulnerable to financial operators and soon found himself in the toils of a merger that involved uniting several other small companies with his organization. Financial interests that had stepped into the situation demanded that the Westinghouse Electric Company be reorganized as a step toward bringing about a merger with it of the U. S. Electric Company and the Consolidated Electric Light Company, the new unit to be known as the Westinghouse Electric and Manufacturing Company.

Before this reorganization would be consummated the financial advisers, in strategic positions, insisted that Westinghouse jettison some of his plans and projects which they considered inadvisable or a detriment to getting the new company onto a new foundation that would be sounder from a financial point of view.

One of the requirements was that Westinghouse get rid of the contract with Tesla calling for royalty payments of $1 per horsepower on all alternating-current articles sold under his patents. (No documentary evidence exists concerning this contract. The author located two sources of information. One was in complete agreement with the story here related. The other states that the million-dollar payment was advance royalties and Tesla so described it to him, declaring no further royalties were paid.) The financial advisers pointed out that if the business which Westinghouse expected the company would do under the Tesla patents in the ensuing year was anywhere near as great as estimated, the amount to be paid out under this contract would be tremendous, totaling millions of dollars; and this, at the time of reorganization, appeared a dangerous burden, imperiling the stability which they were trying to attain for the new organization.

Westinghouse strenuously objected to the procedure. This patent-royalty payment, he insisted, was in accordance with

usual procedures and would not be a burden on the company, as it was included in costs of production, was paid for by the customers, and did not come out of the company's earnings. Westinghouse, himself an inventor of first magnitude, had a strong sense of justice in his dealings with inventors.

The financial advisers, however, were not to be overruled. They nailed Westinghouse on the spot by insisting that the million dollars he had paid Tesla was more than adequate compensation for an invention, and that by making such an exorbitant payment he had imperiled the financial structure of his company and jeopardized his bankers' interest. Any further imperiling of the reorganization by any effort to retain the royalty contract would, it was argued, result in the withdrawing of support that would save the company.

The situation boiled down to the common "Either-Or" technique.

Westinghouse was required to handle the negotiations with Tesla. No situation could be more embarrassing to him. Nevertheless, Westinghouse was a realist among realists. He never hesitated to face facts squarely and with a blunt directness. "I will give you one million dollars cash for your alternating-current patents, plus royalty": he had been both brief and blunt when he purchased the patents from Tesla. Now he was faced with the problem of undoing the situation into which he had entered with such brevity. Then money talked and he held the money. Now Tesla held the dominant position; he held a perfectly valid contract worth many millions, and he could go to court to force compliance with its terms. Edison's successful suit against infringers of his electric-light patent, bringing disaster to many companies that violated his patent property rights, had caused the whole industrial world to hold a new and wholesome respect for patent rights.

Westinghouse had no reason for believing that Tesla would show the slightest inclination to relinquish his contract or permit its terms to be changed to provide a smaller rate of royalty. He knew that Tesla's pride had been hurt by the disagreement with the Pittsburgh engineers, and that he might not now be in a conciliatory mood. On the other hand, Westinghouse knew that he had succeeded in having Tesla's ideas adopted. His greatest comfort came from the fact that he had entered into the contract with good faith--and with

the same good faith he was trying to handle a much less satisfactory situation. Perhaps he could offer Tesla an executive position in the company in lieu of the contract. There would be mutual advantages in such an arrangement.

There is no means of fixing the definite value of the contract Tesla held. His patents covered every department of the new alternating-current power system, and royalties could be collected on powerhouse equipment and motors. At that time the electric power industry had barely started; no one could look into the future and see the tremendous volume of business that would be developed. (The latest data available indicate that in 1941 there was 162,000,000 horsepower of electrical generating machinery in operation in the United States, practically all of it for alternating current. Assuming a uniform growth from 1891 to 1941, the installed horsepower in 1905, when the first Tesla patents would have expired, would have been about twenty million. This figure is, apparently, too high.

According to a census of central stations in the United States conducted by T. Commerford Martin (Electrical World, March 14, 1914) the horsepower of generators in operation in 1902 was 1,620,000 and in 1907 the figure had risen to 6,900,000. On a pro rata, per-year basis, this would make the figure for 1905, the year when Tesla's first patents expired, 5,000,000. During this period many manufacturers who had been using steam power installed dynamos in their factories and operated isolated plants. These would not be included in the central-station figures and, if added, would bring the total horsepower to perhaps 7,000,000. Tesla would have been entitled to $7,000,000 royalties on this equipment, on the basis of his $1-per-horsepower arrangement. In addition he would have been entitled to royalties on motors that used the power generated by these dynamos. If only three quarters of the current generated were used for power, this would have entitled him to additional royalties of $5,000,000, or a total of $12,000,000.)

It would be a tough job for any executive, no matter how shrewd or clever, to talk a man out of a contract that would net him many millions of dollars, or induce him to accept a reduction in rates amounting to millions.

Westinghouse called on Tesla, meeting him in the same South Fifth Avenue laboratory where he had purchased the patents

four years before. Without preliminaries or apologies Westinghouse explained the situation.

"your decision," said the Pittsburgh magnate, "determines the fate of the Westinghouse Company."

"Suppose I should refuse to give up my contract; what would you do then?" asked Tesla.

"In that event you would have to deal with the bankers, for I would no longer have any power in the situation," Westinghouse replied.

"And if I give up the contract you will save your company and retain control so you can proceed with your plans to give my polyphase system to the world?" Tesla continued.

"I believe your polyphase system is the greatest discovery in the field of electricity," Westinghouse explained. "It was my efforts to give it to the world that brought on the present difficulty, but I intend to continue, no matter what happens, to proceed with my original plans to put the country on an alternating-current basis."

"Mr. Westinghouse," said Tesla, drawing himself up to his full height of six feet two inches and beaming down on the Pittsburgh magnate who was himself a big man, "you have been my friend, you believed in me when others had no faith; you were brave enough to go ahead and pay me a million dollars when others lacked courage; you supported me when even your own engineers lacked vision to see the big things ahead that you and I saw; you have stood by me as a friend. The benefits that will come to civilization from my polyphase system mean more to me than the money involved. Mr. Westinghouse, you will save your company so that you can develop my inventions. Here is your contract and here is my contract--I will tear both of them to pieces and you will no longer have any troubles from my royalties. Is that suficient?"

Matching his actions to his words Tesla tore up the contract and threw it in the waste basket; and Westinghouse, thanks to Tesla's magnificent gesture, was able to return to Pittsburgh and use the facilities of the reorganized company, which became the present Westinghouse Electric and Manufacturing Company, to make good his

promise to Tesla to make his alternating-current system available to the world.

Probably nowhere in history is there recorded so magnificent a sacrifice to friendship as that involved in Tesla's stupendous gift to Westinghouse of $12,000,000 in unpaid royalties, although Westinghouse personally received only indirect benefits from it.

It is also probable that the failure to pay Tesla these royalties resulted in one of the greatest handicaps to scientific and industrial progress which the human race has experienced. A few years later Tesla, still an intellectual giant far from the peak of his greatest growth, still pouring forth a profusion of inventions and discoveries of first magnitude, equal in importance to his first efforts which put the world on an electrical power basis, found himself without funds with which to develop his discoveries, with the result that many of them have been lost.

Nearly fifty years after this majestic relinquishment of wealth on the altar of friendship, during which time Tesla had had opportunity to see the United States and the world as a whole wax wealthy out of the power he had made available, he was called on to respond, with a speech, to honorary citation by the Institute of Immigrant Welfare. Tesla, then about eighty, was unable to appear in person. He had experienced decades of poverty in which he faced ridicule for his failure to develop inventions which he declared he had made, and had been forced to move frequently from hotel to hotel, owing to inability to pay his bills. In spite of these experiences he developed no rancor toward Westinghouse in whose behalf he sacrificed his $12,000,000 in royalties. Instead, he retained his original warm friendship. This is indicated by a statement in the speech he sent to the Institute to be read at its dinner held in the Hotel Biltmore, May 12, 1938:

"George Westinghouse was, in my opinion, the only man on this globe who could take my alternating-current system under the circumstances then existing and win the battle against prejudice and money power. He was a pioneer of imposing stature, one of the world's true noblemen of whom America may well be proud and to whom humanity owes an immense debt of gratitude."

when Tesla left the Westinghouse plant at Pittsburgh in 1889 to return to his laboratory in New York, he entered a new world. The magnificent polyphase system which he had already produced was but a small sample of the greater wonders that still remained to be revealed, and he was anxious to start exploring the new realm.

He was not approaching an entirely unknown realm in which he would have to feel his way in darkness in the hope of stumbling upon something of value, although anyone else at that time would have been in that position. On that fateful afternoon in February in Budapest in 1882, when he was given the vision of the rotating magnetic field, there had come with it an illumination that revealed to him the whole cosmos, in its infinite variations and its myriad of forms of manifestations, as a symphony of alternating currents. For him, the harmonies of the universe were played on a scale of electrical vibrations of a vast range in octaves. In one of the lower octaves was a single note, the 60-cycle-per second alternating current, and in one of the higher octaves was visible light with its frequency of billions of cycles per second.

Tesla had in mind a course of experimentation in which he would explore this region of electrical vibration between his alternating current and light waves. He would increase the frequency of the alternating current through the unknown intervening regions. If one note in a lower octave produced such a magnificent invention as the rotating magnetic field and the polyphase system, who could imagine the glorious possibilities that lay hidden on other notes in higher octaves? And there were thousands of octaves to be explored. He would construct an electrical harmonium by producing electrical vibrations in all frequencies, and study their characteristics. He would then, he hoped, be able to understand the motif of the cosmic symphony of electrical vibrations that pervaded the entire universe.

Tesla, at the age of thirty-three, was now wealthy. He had received $1,000,000 from the Westinghouse Company for his first crop of inventions. Of this, $500,000 went to A. K. Brown and his associate who had financed his experiments. Still greater inventions were to follow. He would never

need money. He would, he then believed, have royalties in the millions from his alternating-current patents. He could spend as freely as he wished, penetrating the secrets of Nature and applying his discoveries to human welfare. It was his responsibility to be so engaged. He knew he was gifted as no other man had been blessed with vision, talent and ability; and he in turn would endow the world with supernal treasures of scientific knowledge which he would extract from the secret recesses of the universe and, through the activities of his mighty mind, transform into agencies to brighten the lives, lighten the labors and increase the happiness of the human race.

was he a superegoist in his attitude? If so, he was not activated by selfish motives. To him it mattered not what he thought, so long as he remained objective in his thinking and his thoughts could be translated into demonstrable facts. what if he did consider himself greater than other men: did not this viewpoint conform to the facts? Suppose he did consider himself a man of destiny. Could he not bring evidence to support the contention? It was not necessary for Tesla actually to see an event occur in order to enjoy its realization. Had he not as a youth declared that he would make a practical alternating-current motor, only to be told by his professor that the goal was impossible of attainment--and had he not already accomplished this "impossibility"? Had he not taken the direct-current dynamos of Edison, whom all the world looked upon as a great genius, and had he not greatly improved their design and operation; and in addition, had he not produced a vastly superior system for producing, distributing and using electricity? To all of these inquiries Tesla could answer in the afirmative without going beyond the bounds of modesty concerning his achievements.

His attitude was not that of an egoist. It was an attitude of supreme faith in himself and in the vision that had been given him. To a man of ability, with such supreme faith in himself, and necessary financial resources to advance his purposes, the world of accomplishments is without limits. This was the picture of Tesla as he returned to his laboratory in lower Fifth Avenue, New York, in the latter part of 1889.

Tesla had studied a wide range of frequencies of alternating current in order to select the frequency at

which his polyphase system would operate most efficiently. His calculations indicated important changes in characteristics and effects as the frequency of the current was increased; and his observations with the electrical machinery he built confirmed his calculations. He noted that ever smaller quantities of iron were required as the frequencies were increased, and he now wished to explore the very high frequencies at which unusual effects should be produced without any iron in the magnetic circuit.

When, back in Budapest following his rotating magnetic-field discovery, he had played with mental calculations of the properties of alternating currents all the way from the very lowest frequency up to that of light, no one had yet explored this region. James Clerk Maxwell, at Cambridge University, England, had, however, nine years before, in 1873, published his beautiful presentation on an electromagnetic theory of light, and his equations indicated that there was a vast range of electro-magnetic vibrations above and below visible light--vibrations of much longer and much shorter wavelengths. while Tesla was engaged in making models of his polyphase system in 1887, too, Professor Heinrich Hertz, in Germany, put the Maxwell theory to test in the range of waves a few meters long. He was able to produce such waves by the spark discharge of an induction coil, and was able to absorb such waves from space and change them back to a small spark at some distance from the coil.

Hertz's work gave support to Tesla's theory that there was an interesting discovery to be made on almost every note of the whole gamut of vibrations between the known ones of the electrical current and those of light. Tesla felt sure that if he could continually increase the frequency of electrical vibrations until they equaled that of light, he would be able to produce light by a direct and highly efficient process instead of the extremely wasteful process used in the Edison incandescent lamp, in which the useful light waves were a very small fraction of the wasted heat waves emitted in the process, and only five per cent of the electrical energy was effectively utilized.

Tesla started his investigations by building rotary alternating-current dynamos with up to 384 magnetic poles, and with these devices he was able to generate currents up to 10,000 cycles per second. He found that these high-frequency currents presented many fascinating possibilities

for even more efficient power transmission than his very practical 60-cycle polyphase system. He therefore carried on a parallel line of research into transformers for raising and lowering the voltage of such currents.

High-frequency alternating-current dynamos, similar to those designed by Tesla in 1890, were subsequently developed by F. W. Alexanderson into the high-power wireless transmitters which put transatlantic wireless transmission, more than two decades later, on such a sound practical basis that the Government would not permit control of it to go to a foreign country and preserved for the United States its predominant position in world wireless.

The high-frequency current transformers which Tesla developed proved to be spectacular performers. They contained not a trace of iron; as a matter of fact, the presence of iron was found to interfere with their operation. They were air-core transformers and consisted merely of concentric primary and secondary coils. The voltages he was able to produce with these transformers, which became known as Tesla coils, were very high. In the early experiments he attained potentials that would spark across a couple of inches of air, but in a short time he made tremendous progress and was producing flaming discharges. In working with these voltages he encountered dificulties in insulating his apparatus, and so he developed the technique that is now in universal use in high-tension apparatus: that of immersing the apparatus in oil and excluding all air from the coils, a discovery of great commercial importance.

There was a limit, however, above which the use of rotary generators of high-frequency currents was not practicable, so Tesla set about the task of developing a different type of generator. There was nothing novel about the basic idea he employed. In rotary dynamos, current is generated by moving a wire in a circle past a number of magnetic poles in succession. The same effect can be attained by moving the wire back and forth with an oscillating motion in front of one magnetic pole. No one, however, had as yet produced a practical reciprocating dynamo. Tesla produced one that was extremely practical for his particular purpose; but otherwise it had little utility, and he later felt that he could have employed much better the time he spent on it. It was an ingenious single-cylinder engine without valves, and

could be operated by compressed air or steam. It was supplied with ports like a small two-cycle marine engine. A rod extended from the piston through the cylinder head at either end, and at each end of the rods was attached a flat coil of wire which, by the reciprocating action of the piston, was caused to move back and forth through the field of an electromagnet. The magnetic field through its cushioning effect served as a flywheel.

Tesla was able to obtain a speed of 20,000 oscillations per minute, and to maintain such a remarkable degree of constancy in operation that he proposed the maintenance of equally constant speed of operation for his 60-cycle polyphase system and the use of synchronous motors, geared down to the proper extent, as clocks which would furnish correct time wherever alternating current was available. This proposal furnished the foundation for our modern electric clocks. As with many another of his practical and useful suggestions, he did not take out a patent on the idea, and gained no financial advantage from it.

In working with his polyphase system, Tesla gained a thorough understanding of the part played by the two factors, capacity and inductance, in alternating-current circuits; the former acting like a spring and the latter like a storage tank. His calculations indicated that with currents of suficiently high frequency it would be possible to produce resonance with relatively small values of inductance and capacity. Producing resonance is tuning a circuit electrically. The mechanical effects analogous to electrical resonance are the causing of a pendulum to swing through a wide arc by giving it a series of very light but equally timed touches, or the destruction of a bridge by soldiers marching in unison over it. Each small vibration re-enforces its predecessors until tremendous effects are built up.

In a tuned electrical circuit a condenser supplies the capacity and a coil of wire supplies the inductance. A condenser ordinarily consists of two parallel metal plates separated from each other a short distance by an insulating material. Each plate is connected to either end of the inductance coil. The size of the condenser and the coil is determined by the frequency of the current. The coil-condenser combination and the current are tuned to each other. The current can be pictured as flowing into the condenser until it is fully charged. It then flows

elastically into the inductance coil, which stores the energy by building up its magnetic field. When the current ceases to flow in the coil, the magnetic field collapses and gives back to the coil the energy previously used in building up the magnetic field, thus causing a current to flow back into the condenser to charge it up to overflowing again, so that it is ready to repeat the process. This flow back and forth between the condenser and coil takes place in step with the periodic reversal of the alternating current which supplies the energy when resonance is established. Each time it takes place, the charging current comes along at the right instant to give it a boost, so that the oscillations build up to tremendous values.

Tesla, in discussing this plan of electrical tuning of circuits in a lecture, given several years later, said:

The first question to answer then is whether pure resonance effects are producible. Theory and experiment show that such is impossible in nature for, as the oscillations become more vigorous, the losses in vibrating bodies and environing media rapidly increase, and necessarily check the vibrations, which would otherwise go on increasing forever. It is a fortunate circumstance that pure resonance is not producible for, if it were, there is no telling what dangers might lie in wait for the innocent experimenter. But, to a certain degree, resonance is producible, the magnitude of the effects being limited by the imperfect conductivity and imperfect elasticity of the media, or, generally stated, frictional losses. The smaller these losses the more striking are the effects.

Tesla applied the electrical tuning principles to his coils and discovered that he was able to produce tremendous resonance effects and build up very high voltages. The tuning principles he developed in 1890 are those which have made our modern radio, and the development of the earlier art, "wireless," possible. He had been working with, and demonstrating, these principles before others who received credit had begun to learn the first lessons in electricity.

Seeking a new source of high-frequency currents, higher than could be produced by any mechanical apparatus, Tesla made use of a discovery that had been made the year in which he was born, by Lord Kelvin, in England, in 1856, and for which no use had thus far been found. Up to the time of Kelvin's discovery it had been believed that when a

condenser was discharged the electricity flowed out of one plate into the other, like water being poured from a glass, thus establishing equilibrium. Kelvin showed that the process was far more interesting and complex; that its action was like the bobbing up and down that takes place when a weighted stretched spring is released. The electricity, he showed, rushes from one plate into the other and then back again, the process continuing until all of the stored up energy is used up in overcoming frictional losses. The back-and-forth surges take place at a tremendously high frequency, hundreds of millions a second.

The combination of condenser discharges and tuned circuits opened a new realm in electrical science as significant and as important as Tesla's polyphase system. He worked out remarkably simple and automatic methods for charging the condensers by low voltage (direct and alternating currents), and discharging them through his new air-core transformers, or Tesla coils, to produce currents of enormously high voltages that oscillated at the tremendously high frequency of the condenser discharge. The properties of these currents were unlike anything that had been seen before. He was again pioneering in an entirely new field, with tremendous possibilities. He labored feverishly in his laboratory; and as he lay in bed at night for his five-hours' rest, which included two hours of sleep, he formulated new experiments.

Tesla announced the heating effect of high-frequency currents on the body in 1890 and proposed their use as a therapeutic device. In this he was a pioneer, but soon had many imitators here and abroad who claimed to be originators. He made no effort to protect his discovery or prevent the pirating of his invention. When the same observation was made thirty-five years later in laboratories using vacuum-tube oscillators as the source of the high-frequency currents, it was hailed as a new discovery and developed as a modern wonder. Tesla's original discovery is, however, the basis of a vast array of very recent electronic applications in which high-frequency currents are used to produce heat for industrial purposes.

When he gave his first lecture on the subject before the American Institute of Electrical Engineers at Columbia College, in May, 1891, he was able to produce spark discharges five inches long, indicating a potential of

about 100,000 volts, but, more important, he was able to produce phenomena which included, electrical sheets of flame, and a variety of new forms of illumination--electric lamps the like of which had never been seen before, nor dreamed of in the wildest imagination of any experimenter.

This lecture produced a sensation in engineering circles. He was already famous in this field for the astounding revelations he had made before the same organization on that earlier occasion when he described his discovery of the polyphase alternating current system. That discovery was an intellectual accomplishment of bewildering brilliance, made impressive by the tremendous commercial importance of the discovery. The experiments with the high-frequency and high-potential currents, however, were spectacular; the crackling of the high-voltage sparks, the flashing of the high-potential sheets of electrical flame; the brilliant bulbs and tubes of electrical fire, the amazing physical effects he produced with the new currents, made a profound emotional appeal to the startled beholders.

The man who could produce these two pioneering developments within two years must be more than a genius! The news of his new accomplishment flashed quickly throughout the world, and Tesla's fame now rested on a double foundation.

The world-wide fame that came to him at this time was unfortunate. Tesla would have been entirely superhuman had he not derived a great deal of satisfaction out of the hero-worshiping adulation that now came to him. It was only five years ago that he had been hungry and penniless in the streets of New York, competing with equally hungry hordes of unemployed for the few existent jobs calling for brute labor, while his head bulged with important inventions which he was anxious to give to the world. No one would listen to him then--and now the intellectual elite of the nation were honoring him as an unrivaled genius.

Tesla was a spectacular figure in New York in 1891. A tall, dark, handsome, well-built individual who had a flair for wearing clothes that gave him an air of magnificence, who spoke perfect English but carried an atmosphere of European culture which was worshiped at that time, he was an outstanding personality to all who beheld him. Hidden behind his quiet, self-effacing demeanor, and an extreme modesty that manifested itself as an exaggerated shyness, was the mind of a genius which had worked electrical

wonders that fired the imagination of all and exceeded the understanding of the vast majority of the population. In addition Tesla was a young man, not yet thirty-five, who had recently received a million dollars and was a bachelor.

A bachelor with a million dollars, culture and fame, could not avoid being a shining mark in New York in the early years of the gay nineties. Many were the designing matrons with marriageable daughters who cast envious eyes in the direction of this eligible young man. The social leaders looked upon him as a fascinating decoration for their salons. The big men of business looked upon him as a good man to know. The intellectuals of the day found his almost unbelievable accomplishments a source of inspiration.

Except at formal dinners Tesla always dined alone, and never under any circumstances would he dine with a woman at a two-some dinner. No matter how much a woman might gush over him or strive to gain his favor, Tesla, in most adamant fashion, maintained a thoroughly impersonal attitude. At the Waldorf-Astoria and at Delmonico's he had particular tables which were always reserved for him. They occupied secluded positions in the dining rooms because when he entered either room he was the cynosure of all eyes and did not enjoy being on exhibition.

In spite of all of the adulation that was heaped upon him, Tesla had but one desire--to continue his laboratory experiments undisturbed by outside distractions. There was a tremendous empire of new knowledge to be explored. He was fired with a potential of enthusiasm for the work that was as high as the voltage of the currents with which he was working, and new ideas were coming to him with almost the rapidity of the cycles in his high-frequency current.

There were three broad fields in which he wished to develop applications which were now clearly outlined in his mind: a system of wireless power transmission that would excel his own polyphase system, a new type of illumination, and the wireless transmission of intelligence. He wished to work on them all simultaneously. They were not separate and isolated subjects but all closely intermeshed, all notes on that vast cosmic scale of vibration represented by his beloved alternating currents. He did not wish to play on one note at a time, as would a violinist; he preferred to play as a pianist, striking many notes at once and weaving them into beautiful chords. Where it possible to occupy the

position of leader and simultaneously play all of the instruments in a great symphony orchestra, he would have been still better pleased. The instruments in his orchestra, however, would be electrical devices oscillating in tune with their energizing currents or with their environment. To the extent that he was unable to realize his most expansive desires, he was under mental pressure that drove him to a working pace which no individual of ordinary strength could withstand without a resulting complete physical breakdown.

The spectacular lecture and demonstration on high-frequency and high-potential currents which he gave before the American Institute of Electrical Engineers in February, 1891, at Columbia College, created as profound a sensation as did his earlier one. Each opened an entirely new realm of scientific investigation and practical discoveries. The discoveries contained in either lecture would have been suficient to stand as the fruit of a lifetime's work and bring lasting fame. Two such events in rapid succession seemed almost unbelievable--yet Tesla seemed to be scarcely well launched on his career, with more important work still to come.

Requests that he give lectures came from learned societies throughout this country and Europe, but he begged to be excused because of the tremendous pressure on his time which his work entailed. Equally insistent were the social demands that were being made upon him. Social groups sought in every way to honor him, and incidentally to shine in his reflected glory. Tesla was not vulnerable to the importunings of the socialites who sought him merely as a scintillating satellite, but the clever "lion hunters" of that day soon discovered his Achilles' heel--an intelligent interest in his accomplishments and a sympathetic ear for his dreams of wonders still to come.

With this technique in successful operation, Tesla was captured and soon completely lionized. He was guest of honor at a continuous round of functions and he met the social obligations involved in them by staging, in return, elaborate dinners at the Waldorf-Astoria followed by demonstration parties at his laboratory on South Fifth Avenue. Tesla never did a halfway job on anything. When he staged a dinner he left nothing to chance in the matter of cuisine, service and decorations. He sought rare fish and fowl, meats of surpassing excellence, and choicest liquors

and exquisite wines of the best vintages. His dinners were the talk of the town and having been a guest at a Tesla dinner was a mark of social distinction, proof of membership in the inner group of the elite within Ward MacAllister's "400." At these dinners Tesla presided as a most meticulous host, or more accurately, as an old-world absolute monarch, for he would sample all food brought to the dining room; and rarely did an event pass without the grandiose host sending back some sauce or wine of unquestioned excellence as unworthy of his guests.

Following each of these meals Tesla would escort his guests to his laboratory below Washington Square; and here his demonstrations were even more spectacular than his dinners. He had a flair for the dramatic; and the strange-looking devices with which his laboratory was furnished provided a grotesque and bizarre background for the fantastic displays of seemingly unearthly forces that with invisible fingers set objects whirling, caused globes and tubes of various shapes to glow resplendently in unfamiliar colors as if a section of a distant sun were suddenly transplanted into the darkened room, and crackling of fire and hissing sheets of flame to issue from monster coils to the accompaniment of sulfurous fumes of ozone produced by the electrical discharges that suggested this magician's chamber was connected directly with the seething vaults of hell. Nor was this illusion dispelled when Tesla would permit hundreds of thousands of volts of electricity to pass through his body and light a lamp or melt a wire which he held.

The amazing feat of harmlessly passing through his body currents of tremendously high voltage and high frequency was one which Tesla evolved by his mental experiments long before he had an opportunity to test them in his laboratory. The low-frequency alternating currents, such as are now used on home-lighting circuits, would, he knew from unpleasant experiences, produce a painful shock if passed through the body. When light waves impinged on the body, however, no such painful sensation was produced. The only difference between the electric currents and light waves, he reasoned, was a matter of frequency, the electric currents oscillating at the rate of 60 per second and the light waves at billions per second.

Somewhere between these two extremes the shock-producing property of electromagnetic vibrations must disappear; and

he surmised the point would be near the lower end of the gap. Damage done to the body by electric shock he divided into two factors, one--the destruction of tissues by the heating effect which increased or diminished as the amperage of the current was raised or lowered; and two--the sensation of acute pain which varied with the number of alternations of the current, each alternation producing a single stimulus which was transmitted by the nerves as a pain.

Nerves, he knew, could respond to stimuli up to a rate of about 700 per second, but were unable to transmit impulses received at a more rapid rate. In this respect they acted very much like the ear, which is unable to hear air vibrations above a frequency of about 15,000 per second, and the eye, which is blind to color vibrations of a frequency higher than that in violet light.

When he constructed his high-frequency alternating-current dynamos, he had frequencies up to 20,000 per second with which to test his theory; and by finger tests across the terminals he was able to demonstrate that the nerves were unable to perceive the individual vibrations at this rapid rate. The amperage, which carried the tissue-destroying power, was still too high in the output of these machines to pass safely through his body, even though the sensation of pain was lacking.

By passing these currents through his newly invented air-core transformers, he could increase their voltage ten-thousand fold and reduce the amperage proportionately. The current density would thereby be reduced below the point at which it would injure tissues. He would then have a current which would not produce sensation and would not harm the tissues. He cautiously tested the theory by passing the currents through two fingers, then his arm, next from hand to hand through his body and finally from his head to his feet. If a spark jumped to or from his body, there was a pin-prick sensation at the point of contact, but this could be eliminated by holding a piece of metal to and from which the spark could jump while the current passed through the tissues without producing any sensation.

The energy content of these currents, which is proportionate to the current multiplied by the voltage, could be very high and produce spectacular effects such as melting metal rods, exploding lead disks, and lighting

incandescent or vacuum-tube lamps after passing painlessly through his body.

The European scientific societies were persistent in their efforts to induce Tesla to accept their invitations to lecture before them, and finally he acceded. He set extravagantly high standards for the contents of his lectures, and their preparation entailed a tremendous amount of labor. All of the material had to be entirely new. He would never repeat an experiment previously presented. Every technical statement had to be tested at least twenty times to insure complete accuracy. His lectures would last two or three hours; and every minute of the time was crowded with new and awe-inspiring demonstrations of his constant stream of discoveries. He used a great array of devices fashioned by himself and built in his own laboratories to illustrate his talks. A Tesla lecture, therefore, was an extremely important event in the scientific world and a most impressive occasion to those who were fortunate enough to be able to attend.

Tesla arranged to give a lecture before the Institution of Electrical Engineers in London on February 3, 1892, and one before the International Society of Engineers in Paris on February nineteenth. His decision to give the European lectures was influenced to some extent by the fact that they would afford him an opportunity to visit his home in Gospic, for recent letters had indicated that his mother's health was failing.

The lecture before the Institution of Electrical Engineers was a great success. English engineering journals, as will be seen, had been niggardly in extending recognition to Tesla for priority in the discovery of the rotating magnetic field, and had belittled the practical value of his polyphase alternating-current system, but in this attitude they were not representative of the great body of engineers, who were most generous in their praise and enthusiasm; and the attitude of the engineers was shared by the English scientists.

When Tesla arrived in London he was entertained at many places by famous men. At the Royal Institution, where the immortal Michael Faraday had carried on his fundamental researches in magnetism and electricity, Sir James Dewar, and a committee of equally famous scientists, sought to prevail upon Tesla to repeat his lecture before that

organization. Tesla could be plain stubborn in sticking to his plans, and in this case was exhibiting his usual firmness. The famous Scottish scientist matched Tesla's stubbornness with an equal persuasive persistence. He escorted Tesla to Faraday's chair, an almost sacred relic to English science, seated him in this throne, and then brought out an almost equally precious heirloom, a portion of a bottle of whiskey, the remainder of Faraday's personal supply, untouched for nearly a quarter of a century. Out of this he poured a generous half glass for Tesla. Sir James won. Tesla relented and gave the lecture the following evening.

Lord Rayleigh, the eminent English physicist, was chairman of the meeting at the Royal Institution, which was attended by the elite of the scientific world and a generous representation of the nobility of the realm. Rayleigh, after witnessing the performance of Tesla's experiments, which were none the less awe inspiring to scientists than to laymen, showered words of praise on the inventor.

Rayleigh declared that Tesla possessed a great gift for the discovery of fundamental scientific principles, and urged that he concentrate his efforts on some one big idea.

Tesla, in his conversation after the meeting, disclaimed ability as a great discoverer; but in this he was merely being modest, for he knew that he was unique among men in his ability to discover fundamental truths. He did, however, give very serious consideration to Rayleigh's suggestion that he concentrate on some one big idea. It is doubtful, however, whether Rayleigh's suggestion was good advice. Tesla's mind had a range that was cosmic in magnitude and adjusted to broad slashing advances through unknown regions. Rayleigh's advice was like suggesting to an explorer who had unique ability for penetrating an unknown continent and opening it to civilization that he settle down and cultivate a homestead, since that would give more definite and specific returns for efforts expended.

Two weeks later Tesla gave his scheduled lecture before the Physical Society in Paris and repeated it before the International Society of Electrical Engineers. This was his second visit to Paris since he had quit his job with the Continental Edison Company in that city eight years before. Immediately after leaving the Westinghouse Company in the

autumn of 1889--at which time, too, he completed his U.S. citizenship requirements--he had made a brief visit to Paris to attend the International Exposition. In the meantime, the fame of his polyphase system had spread to Europe; and to this was added the glory for his spectacular work with the new high-frequency currents. He was given a hero's reception in Paris, as well as in London.

It would be interesting to know what thoughts passed through the minds of the executives of the Continental Edison Company as they observed the tremendous contributions to science and industry by the engineer whose services they had lost through their penny-wise tactics when they were offered in 1883, and could undoubtedly have purchased for a relatively small amount, the polyphase system for which Westinghouse paid Tesla $1,000,000 five years later.

A tesla lecture was an avalanche of new and fascinating electrical knowledge. He completely overwhelmed his listeners with a wealth of spectacular original experiments, and as a result almost every individual contribution lost its identity in the dazzling concentration of the whole galaxy of startling developments.

In the 1892 lectures, entitled "Experiments with Alternating Currents of High Potential and High Frequency," Tesla described many of his discoveries which are only coming into general use today and are being hailed as modern inventions. Among these are the "neon" and other gas-filled lamps, and phosphorescent lamps. Many of the discoveries described are still unutilized, including, as will be seen, the carbon or metallic-button incandescent lamp, requiring but a single wire connection; and still others, which he later discovered, were rich producers of the mysterious X-rays.

The transcript of these lectures runs to 40,000 words. Scores of pieces of apparatus were used and usually several experiments were performed with each. He described "wireless" lamps, glowing glass tubes that required no wire connection for their operation. He described motors which operated on one wire, and "wireless" or "no wire" motors. But perhaps the most important development he described was the sensitive electronic tube--the original of all our modern radio and other electronic tubes--which, he

predicted, was the device that would permit receiving wireless telegraph messages across the Atlantic. Of all these discoveries we shall presently have more to say in detail.

It had been Tesla's intention to make a short visit to his early home in Gospic when his lectures were out of the way, but circumstances forced him to make the trip sooner than he expected. Returning to his hotel after delivering the second Paris lecture, he received word that his mother was gravely ill. He rushed to the railroad station, arriving in time to board a train just about to pull out. He telegraphed ahead for special transportation facilities to shorten his trip, and succeeded in reaching Gospic in time to see his mother alive. He arrived in the afternoon and she died that night.

The great anxiety from which Tesla suffered during his sleepless rush from Paris to Gospic caused a patch of hair on the right side of his head to turn white over night. Within a month its jet black color was restored naturally.

Almost immediately after his mother's death, Tesla contracted an illness which incapacitated him for many weeks. When he recovered, he visited his sister Marica, in Plaski, for two weeks. From there he went to Belgrade, the capital of Serbia, where he arrived in May and was received as a national hero.

During the weeks of enforced physical inactivity imposed on him by his illness, Tesla took stock of himself and became thoroughly dissatisfied with the manner in which he had been conducting his life. No human being could feel anything but a pleasurable reaction in response to the adulation that had been heaped upon him during the past two years. Tesla, however, prided himself upon his wisdom in having so designed his life that he would not become a victim of human frailties, but would function far above the normal human level of physical limitations and intellectual activities. Now Tesla saw, in retrospect, that insofar as he had adhered to his superman plan of life, he had succeeded in achieving his goal of producing the works of a superman at a rate which astounded the world. When, however, he submitted to the first blandishments of the lion hunters after his New York lecture in May, 1891, he observed, social activities had cut into his available time and had interfered with his creative activities. He had let

the "man magnificent" supersede his "superman," and two years of valuable time had been largely lost. In addition, he had spent that totally unproductive year at the Westinghouse plant. At the close of that period, he had vowed he would never again work for anyone. He now vowed that he would put an end to the vacuous social activities into which he had been inveigled.

It was not easy for Tesla to live up to his good resolutions, for his European trip had greatly enhanced his fame and triumphant celebrations were scheduled on his reappearance in New York. Nevertheless, he rejected all invitations. He returned to the Hotel Gerlach, where he lived a solitary existence. With a pent-up reserve of physical energy owing to his long abstinence from his heavy daily routine of work, he plunged with great vigor into his new program which was to open up new and enchanting realms of scientific wonders.

THE first public application of Tesla's polyphase alternating-current system was made at the Chicago World's Fair, the Columbian Exposition, which opened in 1893 to celebrate the four-hundredth anniversary of the discovery of America. This was the first world's fair for which electric lighting was a possibility, and the architects availed themselves of the opportunities it afforded for obtaining spectacular effects in illuminating the grounds and buildings at night, as well as for interior lighting during the day. The Westinghouse Electric Company secured the contract for installing all power and lighting equipment at the Fair, and took full advantage of this opportunity to use the Tesla system and demonstrate its great versatility. It supplied all the current used for lighting and power.

while the Chicago World's Fair was in reality a monument to Tesla, he had, in addition, a personal exhibition in which he demonstrated his most recent inventions. One of his exhibits was a spinning egg, made of metal. The egg was shown lying on top of a small velvet-covered circular platform. When Tesla closed a switch the egg stood on its small end and rotated at a high speed as if by magic. The "magic" phase of this feat appealed to a public which, however, grasped little of the explanation that it

illustrated the principle of the rotating magnetic field produced by the polyphase alternating currents. In other of his exhibits, glass tubes suspended in space or held in his hands lighted up in an equally "magical" fashion.

But his most spectacular feat was to let 1,000,000 volts pass through his body. This was alternating current of very high frequency as well as high voltage. He had discovered means of producing such currents. Eight years had passed since Edison, attacking high-voltage alternating current as deadly, had refused to become interested in Tesla's polyphase system. Now the Tesla system was providing the electricity for the great world's fair and the Edison direct-current system was ignored. The final gesture of victory was for Tesla to answer Edison's charge that alternating current was deadly by passing the highest voltage of it ever produced through his own body for many minutes without the slightest sign of harm. This bit of showmanship endeared Tesla to the public and brought him a tremendous burst of world-wide fame. Unfortunately, however, it obscured his more important work with polyphase currents.

The next great achievement to be attained by his polyphase system was the harnessing of Niagara Falls. (Before this was done, and even before the opening of the Chicago fair, the practicability of his system was demonstrated in Europe; but this had been undertaken without his knowledge. A practical test of the transmission of polyphase alternating current at 30,000 volts was made between a hydroelectric station at Lauffen and the City of Frankfurt, the current being used to furnish electricity at a fair held at the latter city. This installation was built in 1891. The current was used to light incandescent and arc lamps and also to operate a Tesla motor.) In 1886 a charter had been granted for developing power at the Falls. The project made slow progress and was taken over by a New York group which organized the Cataract Construction Company, of which Edward Dean Adams was made president. Mr. Adams' company desired to develop power on the largest scale possible. The total energy supply available in the Falls had been variously estimated from 4,000,000 to 9,000,000 horsepower. Mr. Adams organized the International Niagara Commission for the purpose of ascertaining the best means of harnessing the Falls, and made Lord Kelvin, the famous English scientist, its chairman. A prize of $3,000 was offered for the most practical plan submitted.

Tesla had predicted nearly thirty years before, as a boy, that he would someday harness Niagara Falls. Here was the opportunity. In the meantime, he had made it possible to fulfil his boyhood boast by completing the series of inventions which made it possible to change the hydraulic power of the Falls into electrical energy.

The prize-offer plan adopted by Mr. Adams did not, however, set well with Mr. Westinghouse when he was urged to submit a proposal. He replied, "These people are trying to get one hundred thousand dollars' worth of information for three thousand dollars. When they are ready to talk business we will submit our plans." This adamant attitude of Westinghouse was one handicap for the Tesla alternating-current plan. The second big handicap was the fact that Lord Kelvin had declared himself in favor of the use of direct current.

About twenty plans were submitted in the contest but none of them was accepted by the commission, and no prize was awarded. The big electrical companies, Westinghouse, Edison General Electric and Thomson-Houston, did not submit plans. This took place in 1890.

Original developers of the Falls planned to use locally the mechanical power provided by water wheels; but the only practical plan was, clearly, the generation of electricity by dynamos driven by water wheels, and the distribution of the current throughout the district. There was a good additional market for it at Buffalo, a large industrial city about twenty-two miles distant. There was always the hope, too, that the current could be transmitted to New York City and serve the rich intervening territory. If direct current were used, its transmission twenty-two miles to Buffalo was totally unfeasible. The Tesla alternating-current system, however, made the transmission to Buffalo extremely practicable and the delivery of the current to New York City a possibility.

In due time the Cataract Construction Company decided that the hydroelectric system was the only feasible one, and proposals and bids were asked on a power system consisting of three generating units, each of 5,000 horsepower, from the Westinghouse Electric Company and the General Electric Company. Each one submitted a proposal to install a Tesla polyphase generating system. The General Electric Company,

successor to the Edison General Electric Company, having in the meantime secured a license to use the Tesla patents, proposed to install a three-phase system, and Westinghouse a two-phase system. The first proposal concerned the building of the powerhouse. A second proposal on which bids were asked concerned the transmission line between Niagara Falls and Buffalo and a distribution system in the latter city.

Bids were asked for early in 1893, and in October of that year Mr. Adams announced that the Westinghouse plan for the powerhouse and the General Electric plan for the transmission line were accepted. The latter included a transformation of the two-phase current from the generators into three-phase current to be transmitted to Buffalo. This change indicated the flexibility of the Tesla polyphase system.

Westinghouse completed the powerhouse and in 1895 it stood ready to deliver 15,000 horsepower; the most gigantic piece of electrical engineering conceived or accomplished up to that time. In 1896 General Electric completed the transmission and distribution system, and electrical power extracted from Niagara Falls, without in any way impairing the beauty of the spectacle they presented, was delivered to industries through the Falls and Buffalo areas. So successful was this installation that the Westinghouse Company installed seven additional generating units, bringing the output to 50,000 horsepower. A second equivalent powerhouse, also using alternating current, was later built by the General Electric Company. Today, the powerhouses at Niagara Falls are linked directly with the electric power system in New York City, all using the Tesla system.

Dr. Charles F. Scott, Professor Emeritus of Electrical Engineering at wale University, and former president of the American Institute of Electrical Engineers, who was a Westinghouse engineer when that company was developing the Tesla system, in a memorial review of Tesla's accomplishments, (Published in Electrical Engineering, August 1943, pp. 351-555.) describes the Niagara development and its results:

The simultaneous development of the Niagara project and the Tesla system was a fortuitous coincidence. No adequate method of handling large power was available in 1890; but

while the hydraulic tunnel was under construction, the development of polyphase apparatus justified the oficial decision of May 6, 1893, five years and five days after the issuing of Tesla's patents, to use his system. The Polyphase method brought success to the Niagara project; and reciprocally Niagara brought immediate prestige to the new electric system.

Power was delivered in August 1895 to the first customer, the Pittsburgh Reduction Company (now Aluminum Company of America) for producing aluminum by the Hall process, patented in the eventful year 1886. . . .

In 1896 transmission from Niagara Falls to Buffalo, 22 miles, was inaugurated. Compare this gigantic and universal system capable of uniting many power sources in a superpower system, with the multiplicity of Lilliputian "systems" which previously supplied electrical service. As Mr. Adams aptly explained: "Formerly the various kinds of current required by different kinds of lamps and motors were generated locally; by the Niagara-Tesla system only one kind of current is generated, to be transmitted to places of use and then changed to the desired form."

The Niagara demonstration of current for all purposes from large generators led immediately to similar power systems in New York City--for the elevated and street railways and for the subway; for steam railway electrification; and for the Edison systems, either by operating substations for converting alternating current to direct current or by changing completely to A.C. service.

The culminating year 1896 inaugurated two far reaching developments for the extension of polyphase power, one commercial and one engineering. By exchange of patent rights, the General Electric Company obtained license rights under Tesla patents, later made impregnable by nearly a score of court decisions. Also the Parsons turbine, accompanied by its foremost engineer, was transplanted to America and enabled George Westinghouse to bring to fruition by a new method the ideal of his first patent, a "rotary steam engine." The acme of the reciprocating engine came in the early 1900's; a century's development produced the great engines that drove 5,000 to 7,500 kilowatt alternators for New York's elevated and subway. But the rapidly growing steam turbine of different types soon doomed the engine to obsolescence; single units

with the capacity of a score of the largest engines are now supplying power to the metropolis. Single powerhouses now supply more power than all of the thousands of central stations and isolated plants of 1890.

Prof. Scott concludes: "The evolution of electric power from the discovery of Faraday in 1831 to the initial great installation of the Tesla polyphase system in 1896 is undoubtedly the most tremendous event in all engineering history."

Lord Kelvin, who had originally favored direct current for Niagara, later conceded, but only after the system was in operation, that alternating current had many more advantages for long-distance distribution systems, and declared, "Tesla has contributed more to electrical science than any man up to his time."

There should never have been the slightest shadow of doubt concerning the credit due to Tesla not only for discovering the rotating magnetic field but also for inventing the first practical alternating-current motor, the polyphase system of alternating currents, dynamos for generating them, a variety of motors for converting the currents into power, a system of polyphase transformers for raising and lowering voltages, and economical methods for transmitting electrical power for long distances. Nevertheless, credit for priority has unjustly been given to and taken by others. Tesla succeeded in establishing his claims; but in the meantime, however, damage was done by raising these unfair claims, and to this day the electrical engineering profession, and public service and major electrical industries, have never extended to Tesla the credit to which he is entitled. If they had done so, the name of Tesla would carry at least as much fame as the names Edison and Westinghouse.

Tesla, as we have seen, made his rotating magnetic field invention in 1882, and within two months evolved the complete power system, including all the apparatus which he later patented. In 1883 he described his invention to oficials of the Continental Edison Company. In 1884 he demonstrated his motor to the mayor of Strassburg and others. In this same year he described the invention to Thomas A. Edison. In 1885 he sought to have the promoters of the Tesla Arc Light Company develop his system. In 1887 he secured financial backing and built a series of the

dynamos and motors which were tested by Prof. Anthony of Cornell University. On October 12, 1887, the first patent applications covering his basic inventions were revealed to the Patent Ofice. The patents were granted on various dates in the early months of 1888. On May 16, 1888, he presented a demonstration and description of his basic inventions before the American Institute of Electrical Engineers in New York. So much for the record.

The first complication arose when Prof. Galileo Ferraris, a physicist in the University of Turin, presented a paper on "Rotazioni elettrodynamiche" (Electrodynamic Rotation) before the Turin Academy in March, 1888. This was six years after Tesla made his discovery, five years after he demonstrated his motor and six months after he had applied for patents on his system. Prof. Ferraris had been carrying on researches in the field of optics. The problem that particularly interested him was polarized light. In this period it was considered necessary to build mechanical models to demonstrate all scientific principles. It was not very dificult to devise models to demonstrate the nature of plane-polarized light, but circularly polarized light presented a more dificult problem.

Prof. Ferraris gave some thought to this problem in 1885, but made no progress until 1888 when he turned to alternating currents for a solution. In that period light was erroneously thought of as a continuously undulating wave in the ether. Prof. Ferraris took the continuously alternating current as an analogue of the plane-polarized light wave. For a mechanical analogue of the circularly polarized light wave he visualized a second train of waves 90 degrees out of step with the first, giving a right-angle vector to the component that should manifest itself by rotation. This paralleled the solution at which Tesla had arrived six years earlier.

In arranging a laboratory demonstration Prof. Ferraris used a copper cylinder suspended on a thread to represent the light waves, and caused two magnetic fields to operate on it at right angles to each other. When the currents were turned on, the cylinder rotated, wound up the thread on which it was suspended and raised itself. This was an excellent model of rotary polarized light waves. The model bore no resemblance to a motor, nor did the Turin scientist have any intention that it should be so considered. It was

a laboratory demonstration in optics, using an electrical analogy.

Prof. Ferraris' next experiment mounted the copper cylinder on a shaft and divided each of his two coils into two parts, placing one on either side of the copper cylinder. The device worked up to a speed of 900 revolutions per minute--and beyond this point lost power so rapidly it ceased to operate entirely. He tried iron cylinders but they did not work nearly so well as the copper ones. Prof. Ferraris predicted no future for the device as a power source, but he did predict it would find usefulness as the operating principle for a meter for measuring current.

Prof. Ferraris thus demonstrated that he failed by a wide margin to grasp the principle which Tesla developed. The Italian scientist found that the use of the magnetic iron cylinder interfered with the operations of his device, whereas Tesla, following the correct theory, utilized iron cores for the magnetic field of his motor, used an iron armature, and obtained an efficiency of about 95 per cent in his first motor, which had a rating of about a quarter horsepower. The efficiency of Ferraris' device was less than 25 per cent.

It was Prof. Ferraris' belief that he had performed an important service to science by demonstrating that the rotating magnetic field could not be used on any practical basis for producing mechanical power from alternating current. He never deviated from this conclusion, nor did he ever claim that he had anticipated Tesla's discovery of a practical means for utilizing the rotating field for producing power. Knowing that his process was entirely different from Tesla's, he never advanced a claim to independent discovery of the alternating-current motor. He even conceded that Tesla had arrived at his discovery of the rotating magnetic field entirely independently of him, and that Tesla could not in any way have known of his work before publication.

A description of Prof. Ferraris' experiments, however, was published in The Electrician, in London, May 25, 1888 (page 86). This was accompanied by the statement:

Whether the apparatus devised by Prof. Ferraris will lead to the discovery of an alternating current motor is a question we do not pretend to prophesy, but as the

principle involved may also have other applications, notably in the construction of meters for measuring the supply of electricity . . .

A year before this time Prof. Anthony had already tested Tesla's alternating-current motors in the United States and reported that they attained an order of efficiency equal to that of direct-current motors; and Tesla's U.S. patents had been publicly announced several months previously.

It was obvious that the editors of this London publication were not keeping up to date on developments in the United States.

Tesla responded quickly, informing the editors of their oversight and submitting an article describing his motors and the results obtained with them.

No great enthusiasm was exhibited by the editors of The Electrician. They receded to only the least possible extent from their stand in favor of Ferraris by publishing an editorial note:

Our issue of the 25th of May contained an abstract of a paper by Prof. Galileo Ferraris describing a method of producing a revolving resultant magnetic field by means of a pair of coils with the axes at right angles and traversed by alternating currents, and we drew attention to the possibility that the principle of the apparatus might be applied to the construction of an alternating current motor. The paper by Mr. Nikola Tesla, which appears in our columns this week, contains a description of such a motor, founded on exactly the same principle. (VoI. XX, p. 165, June 15, 1888.)

No attention was drawn to the fact that Ferraris had reached the conclusion that the principle could never be used for making a practical motor, whereas Tesla had produced such a motor.

This attitude toward the American development did not disappear from the London engineering journals. Later the Electrical Review (London: Vol. XXVIII, p. 291, March 6, 1891) published an editorial which opened with the statement:

For several years past, from the days of Prof. Ferraris' investigations, which were followed by those of Tesla and Zipernowski and a host of imitators, we have periodically heard of the question of alternating current motors being solved.

At this time the Westinghouse Company was already commercially exploiting the successful and practical Tesla polyphase system in the United States. Not one word of credit to Tesla appeared in the London engineering press.

A letter of protest dated March 17, 1891, was forwarded by Tesla, and this was published some weeks later (p. 446) by the Review. He said in part:

In all civilized countries patents have been obtained almost without a single reference to anything which would have in the least degree rendered questionable the novelty of the invention. The first published essay--an account of some laboratory experiments by Prof. Ferraris--was published in Italy six or seven months after the date of filing my application for the foundation patents. . . . yet in your issue of March 6, I read: "For several years past, from the days of Prof. Ferraris' investigations, which were followed by those of Tesla and Zipernowski and a host of imitators, we have periodically heard of the question of alternating current motors being solved.

No one can say that I have not been free in acknowledging the merit of Prof. Ferraris, and I hope that my statement of facts will not be misinterpreted. Even if Prof. Ferraris' essay would have anticipated the date of filing of my application, yet, in the opinion of all fair minded men, I would have been entitled to the credit of having been the first to produce a practical motor; for Prof. Ferraris denies in his essay the value of the invention for the transmission of power. . . .

Thus in the most essential features of the system--the generators with two or three currents of differing phase, the three wire system, the closed coil armature, the motors with direct current in the field, etc.,--I would stand alone, even had Prof. Ferraris' essay been published many years ago. . . .

Most of these facts, if not all, are perfectly well known in England; yet according to some papers, one of the

leading English electricians does not hesitate to say that I have worked in the direction indicated by Prof. Ferraris, and in your issue above referred to it seems I am called an imitator.

Now, I ask you where is that well known English fairness. I am a pioneer and I am called an imitator. I am not an imitator. I produce original work or none at all.

This letter was published; but the Electrical Review neither expressed regret for the misstatement nor extended recognition to Tesla.

Charles Proteus Steinmetz, later to achieve fame as the electrical wizard of the General Electric Company, came to the support of Tesla. In a paper presented before the American Institute of Electrical Engineers, he said: "Ferraris built only a little toy, and his magnetic circuits, so far as I know, were completed in air, not in iron, though that hardly makes any difference."(Transactions, A.I.E.E., VoI. VIII, p. 591, 1891.)

Other American engineers likewise rallied to Tesla's support.

An industrial exposition, as already mentioned, was held at Frankfurt, Germany, in 1891. The United States Navy sent Carl Hering, an electrical engineer who had done much writing for technical journals, as observer to report on any developments that would be of interest to the Navy. Hering, unfortunately, had not informed himself of the inventions embodied in the Tesla patents before going abroad.

The outstanding new development at the Frankfurt exposition was the first public application of Tesla's system. The grounds and building were lighted by electricity brought to the city by a long-distance transmission line over which electricity was carried from the hydroelectric station at Lauffen by three-phase alternating current carried at 30,000 volts. There was exhibited a two-horsepower motor operated by the three-phase current.

Hering recognized the significance of the new development, and sent back enthusiastic reports describing it as of German origin. In his article in the Electrical World

(N.Y.), he waxed enthusiastic about the work of Dolivo Dobrowolsky in designing the three-phase motor and its associated system, hailing it as an outstanding scientific discovery and of tremendous commercial importance. The impression was given that all other inventors had missed the main point, and that Dobrowolsky had achieved the grand broad accomplishment that would set the pace for future power developments. Nor was Hering the only one to whom this impression was communicated.

Ludwig Gutman, an American electrical engineer, a delegate to the Frankfurt Electrical Congress, in a paper on "The Inventor of the Rotary field System," delivered before that body, slammed back at Dobrowolsky. He stated:

As we have enjoyed in America several years' experience with this system represented by the Tesla motors I must oppose the assertion lately made by Herr von Dobrowolsky at a meeting of the Electrotechnische Zesellschaft held here in Frankfurt. The gentleman said: "I believe I am able to assert that the motor problem for large and small works has been by this completely solved." This assertion goes most likely too far. The problem was already solved, theoretically and electrically, in 1889. (Electrical World, N.Y.: Oct. 17, 1891)

Dobrowolsky, in a paper published in the Electrotechnische Zeitschrift (p. 149-150; 1891), reduced his claim to that of having produced the first practical alternating-current motor; and he asserted that in the Tesla two-phase motor there were field pulsations amounting to 40 per cent, while in his three-phase motor, in operation at the Frankfurt exposition, these were greatly reduced.

Even this reduced claim of Dobrowolsky's was quickly smashed. It drew fire from an American and an English source, and also from the chief engineer of the project of which his motor was a part.

Dr. Michael I. Pupin, of the Department of Engineering, Columbia University, analyzing Dobrowolsky's claim, (Ibid., Dec. 26, 1891) demonstrated that he had failed to comprehend the basic principles of the Tesla system, and that the three-phase system which he claimed as his own was included in Tesla's inventions.

C. E. L. Brown, the engineer in charge of the pioneering Lauffen-Frankfurt 30,000-volt transmission system and its three-phase generating system, including the Dobrowolsky motor, settled definitely and completely the question of credit for the whole system. In a letter published in the Electrical World (Nov. 7, 1891), he concluded with the statement: "The three phase current as applied at Frankfurt is due to the labors of Mr. Tesla and will be found clearly specified in his patents."

Mr. Brown wrote letters to other technical publications to this same effect, and in them criticized Mr. Hering for failing to give Tesla his due credit, and for diverting it to Dobrowolsky.

These criticisms finally brought a response from Mr. Hering. This appeared in the Electrical World, Feb. 6, 1892:

As Mr. C. E. L. Brown, in communications to the Electrical World and other journals, seems determined to insist that I have neglected the work of Mr. Tesla on rotary current I wish to state there is no one more willing than myself to give Mr. Tesla due credit for his work, and I have always considered him to be an original inventor of the rotary field system and first to reduce it to practice, and I believe I so stated in my articles. If I have at any time failed to give him credit for the extent to which he developed it, it has been because Mr. Tesla has been too modest (or perhaps prudent) to let the world know what he has accomplished. When the articles which have caused this discussion were being written Mr. Tesla's patents were not accessible to me. Just where Mr. Dobrowolsky's improvements begin I have not been able to ascertain. . . .

Dobrowolsky, though he may have been an independent inventor, admits Tesla's work is prior to his . . . The modesty of both of these gentlemen would, I feel sure, lead to a clear understanding. Regarding the subject of priority it may be of interest here to say that in a conversation with Prof. Ferraris last summer that gentleman told me with very becoming modesty that, although he had experimented with the rotary field several years before Tesla's work was published he did not think it was possible that Tesla could have known of his work and he therefore believed Tesla invented it entirely independently. He also stated that Tesla developed it much further than he (Ferraris) did.

Thus the scientists and engineers in the United States, Germany and Italy gave Tesla clear and unquestioned credit for being the sole inventor of the magnificent polyphase electrical system in all of its details. French and British journals then fell in line.

Thus, by 1892, there was universal acclaim for Tesla as the unquestioned inventor of the alternating-current motor and the polyphase system in engineering circles. There was none, therefore, to dispute his claim or to seek to rob him of credit when his fame reached the public through the operation of his system at the World's Fair in Chicago in 1893, and later when his system made possible the harnessing of Niagara Falls.

In due time, however, there came many who claimed to have made improvements on Tesla's inventions; and widespread efforts were made to exploit these "improvements." The Westinghouse Company, now owners of the Tesla patents, undertook to defend the patents and to prosecute infringers. As a result about twenty suits were carried to the courts, and, in every one of them, decisions gave a decisive victory to Tesla.

A sample of the sweeping decisions that were handed down is that of Judge Townsend in the United States Circuit Court of Connecticut in September, 1900, when, passing judgment on the first group of basic patents, he said in part:

It remained to the genius of Tesla to capture the unruly, unrestrained and hitherto opposing elements in the field of nature and art and to harness them to draw the machines of man. It was he who first showed how to transform the toy of Arago into an engine of power; the "laboratory experiment" of Bailey into a practically successful motor; the indicator into a driver; he first conceived the idea that the very impediments of reversal in direction, the contra-indications of alternations might be transformed into power-producing rotations, a whirling field of force.

what others looked upon as only invincible barriers, impassable currents and contradictory forces he seized, and by harmonizing their directions utilized in practical motors in distant cities the power of Niagara.

The resentments and antagonisms engendered by the unvarying series of successful decisions caused individuals who were adversely affected to vent their antagonisms on Tesla although he had not in ten years held any personal interests in the patents.

The situation that developed is well described by B. A. Behrend, later vice-president of the American Institute of Electrical Engineers:

It is a peculiar trait of ignorant men to go always from one extreme to another, and those who were once the blind admirers of Mr. Tesla, exalting him to an extent which can be likened only to the infatuated praise bestowed on victims of popular admiration, are now eagerly engaged in his derision. There is something deeply melancholy in the prospect, and I can never think of Nikola Tesla without warming up to my subject and condemning the injustice and ingratitude which he has received alike at the hands of the public and of the engineering profession. (Western Electrician, Sept., 1907)

With the scientific and engineering worlds, and the courts, extending to him a clear title to the honor of being the great pioneer discoverer and inventor of the principles and machines that created the modern electrical system, Tesla stands without a rival as the genius who gave the world the electrical power age that made our mass-production industrial system possible. The name Tesla should, therefore, in all right and justice, be the most famous name in the engineering world today.

RETURNING to his laboratory in March, 1893, after his European and American lectures, Tesla banished all social activities from his life program, and, bursting with energy, pitched headlong into experimental work in connection with his wireless system. He made repeated experiments in working out the refinement of his principle of tuning circuits to resonance with each other. He built more than one hundred coils covering a wide range of electrical tuning characteristics. He also built numerous oscillators for producing high-frequency currents, and condensers and inductances for tuning both sending and receiving coils to any desired frequency or wavelength.

He demonstrated that he could cause any one of hundreds of coils to respond selectively and powerfully to its particular wavelength emitted by an oscillator while all others remained inert; but he discovered that tuned electrical coils have, to a further extent, the same properties as tuned musical string, in that they vibrate not only to the fundamental note but also to a wide range of upper, and particularly lower, harmonics. This characteristic could be usefully employed in connection with the design of sending- and receiving-station antennas, but it militated against the sharp, exclusive response tuning of coils. At close range, and with the powerful currents Tesla used in his laboratory, the harmonics were a handicap--when greater distance separated sending and receiving coils, this trouble became a minor one.

It became obvious to Tesla that it was going to be dificult to arrange an early demonstration of his worldwide system of intelligence and of power, so he planned a compromise system in which he would use a smaller central transmitter and smaller relay stations at certain distances.

In an interview with Arthur Brisbane, the famous editor, Tesla announced in The world of July 22, 1894, the certainty of his plans. He said:

you would think me a dreamer and very far gone if I should tell you what I really hope for. But I can tell you that I look forward with absolute confidence to sending messages through the earth without any wires. I have also great hopes of transmitting electric force in the same way without waste. Concerning the transmission of messages through the earth I have no hesitation in predicting success. I must first ascertain exactly how many vibrations to the second are caused by disturbing the mass of electricity which the earth contains. My machine for transmitting must vibrate as often to put itself in accord with the electricity in the earth.

During the following winter he designed and built his transmitting station and a receiving station for this purpose. It worked well within the close range of the laboratory and between points in the city. Like the artist who is never willing to declare a picture finished but must continue to apply an unending series of slight improvements, Tesla continued to add refinements so that he would be assured of a perfect test in the spring, when he

planned to take his receiving set up the Hudson River on a small boat to test its response at extended distances.

with Tesla, as with Caesar, though, came tragedy on the Ides of March. For Tesla it was the unlucky 13th of March, 1895, when fire broke out during the night in the lower part of the building in which his laboratory was located and swept through the entire structure. The two floors on which his equipment was located dropped to the basement, their entire contents destroyed. Not a single article was saved. The major portion of Tesla's fortune was invested in the apparatus in that building. He carried no insurance on it. The loss was total.

The monetary loss was the least important factor in the shock which Tesla sustained. The apparatus and the countless experiments in scores of subjects with which they were associated were part of Tesla's self. His work of a lifetime was swept away. All of his records, papers, mementos, his famous world's Fair exhibit were gone. His laboratory, in which he had demonstrated his wonders to the elite and intelligentsia of New York, to the most famous men and women of the country and the world, was no more. And this tragedy had come just when he was ready to make his first distance demonstration of his wireless system.

Tesla was in a tough spot financially. The laboratory was the property of the Tesla Electric Company, owned by Tesla and A. K. Brown who had, with an associate, put up the funds to finance Tesla's demonstration of his polyphase alternating-current system prior to its sale to Westinghouse for $1,000,000. Some of that money was divided as cash among the associates, as stated; and the remainder had gone into the laboratory for further developments. The resources of the company were now wiped out and Tesla's individual resources were almost at the vanishing point. He was receiving some patent royalties from Germany on his polyphase motors and dynamos. This income would be adequate to take care of his living expenses but not suficient to enable him to maintain an experimental laboratory.

Mr. Adams, active head of the Morgan group that had developed the hydroelectric station at Niagara Falls, using Tesla's polyphase system, now came to the inventor's rescue. He proposed and arranged for the formation of a new company which would finance the continuation of Tesla's experiments, and he offered to subscribe one hundred

thousand dollars of the proposed half-million dollars of capital stock of the company.

with this support Tesla proceeded to set up a new laboratory. He secured quarters at 46 East Houston Street, and started operations there in July, 1895, four months after his South Fifth Avenue laboratory had been destroyed.

Adams paid forty thousand dollars as the first installment of his subscription. He took an active personal interest in Tesla's work, and spent a great deal of time in the laboratory. Knowing from the successful operation of the Niagara Falls plant that Tesla, technically, was extremely practical, Adams was deeply impressed by the plans for wireless transmission of intelligence and of power. He declared he was willing to go still further than his original plan of financial support, and he proposed that the plan include the taking in of his son as an active partner in Tesla's work.

Such an arrangement would amount to an alliance for Tesla with the powerful Morgan financial group. It was the support of J. P. Morgan that gave financial guidance to the formation of the General Electric Company and made possible the building of the fiaterside Station, the first big Edison powerhouse in New York, and it was a Morgan group that, by making possible the development of Niagara, had given the Tesla system a tremendous boost. The prestige that would come from a Morgan association would probably be even more potent than the actual monetary aid involved. with this alliance Tesla's financial future was assured. There would come to his aid, through it, the support of the world's greatest organizational genius and practical promotion powers. The tragedy of the fire that brought about this situation could yet prove a great blessing.

Tesla made his decision. what influenced him to reach the determination that guided him, no one ever learned. He rejected Mr. Adams' offer. From a practical point of view there is no way of explaining his action. But no one could ever successfully demonstrate that Tesla was practical in a commercial and financial sense.

with the forty thousand dollars that Adams subscribed, Tesla was able to keep actively engaged in research for about three years. He probably could have secured subscriptions of many times that amount if he had been

willing to put forth even a slight effort in that direction, but he was interested mainly in getting his experiments well under way rather than worrying about future financial needs. He had full faith that the future would bring him many millions of dollars as a token of the many billions of value he would give it through his inventions.

It took Tesla about a year to get his laboratory equipped and to build an array of experimental apparatus. Almost nothing that he used could be purchased in the market; everything had to be specially made by his workmen under his direction. In the spring of 1897 he was ready to make, on his wireless transmitter and receiver, the distance tests which had been interrupted by the fire two years before.

The success of these tests were announced by Tesla in an interview with a representative of the Electrical Review which was published in the issue of July 9, 1897, of that journal. It stated:

Nearly every telegraphic inventor has for years dreamed in his waking hours of the possibility of communicating without wires. From time to time there has appeared in the technical journals a reference to the experiments showing the almost universal belief among electricians that, some day, wires will be done away with. Experiments have been made attempting to prove the possibilities, but it has remained for Mr. Nikola Tesla to advance a theory, and experimentally prove it, that wireless communication is a possibility and by no means a distant possibility. Indeed, after six years of careful and conscientious work, Mr. Tesla has arrived at a stage where some insight into the future is possible.

A representative of the Electrical Review receives the assurance personally from Mr. Tesla who, by the way, is nothing if not conservative, that electrical communication without wires is an accomplished fact and that the method employed and the principles involved have nothing in them to prevent messages being transmitted and intelligibly received between distant points. Already he has constructed both a transmitting apparatus and an electrical receiver which at distant points is sensitive to the signals of the transmitter, regardless of earth currents or points of the

compass. And this has been done with a surprisingly small expenditure of energy.

Naturally, Mr. Tesla is averse to explaining all details of his invention, but allows it to be understood that he avails himself of what, for the present, may be termed the electrostatic equilibrium; that if this be disturbed at any point on the earth the disturbance can with proper apparatus be distinguished at a distant point and thus the means of signalling and reading signals becomes practicable once the concrete instruments are available. Mr. Tesla announced his belief in the possibilities, but he did so after having satisfied himself by actual test of apparatus designed by him. Much work has yet to be done, and he has since then given close attention and study to the problem.

Details are not yet available, for obvious reasons, and we now merely chronicle Mr. Tesla's statement that he has really accomplished wireless communication over reasonably long distances with small expenditure of energy and has only to perfect apparatus to go to any extent. Morse's 40 mile experiment in the old days was on a far less certain basis than the wireless possibilities of today.

Tesla's work with high frequency and high potential currents has been notable. As long ago as 1891 he foretold the present results, both as to vacuum tube lighting and intercommunication without wires. The former has in his hands assumed a condition capable of a public demonstration of the phenomena of the electrostatic molecular forces. Numberless experiments were carried out, and from what then was a startling frequency of 10,000 per second Mr. Tesla has advanced to what now is a moderate rate at 2,000,000 oscillations per second

This announcement recorded the birth of modern radio--radio as it is in use today--born on a boat traveling up the Hudson River, carrying the receiving set twenty-five miles from the Houston Street laboratory, a distance which was a small fraction of the range of the set but enough to demonstrate its capabilities. Such an accomplishment was worthy of a flamboyant smash announcement instead of Tesla's very modest statement and the even more conservative manner in which the Electrical Review treated the news. Tesla had to protect not only his patent rights, which would be jeopardized by premature disclosure, but also had to be on guard against invention invaders and

patent pirates, with whom he had previously had unpleasant experiences. The Electrical Review, naturally enough, was fearful of the consequences of "sticking its neck out" by too enthusiastic a reception before full details were available.

The fundamental patents on Tesla's system were issued on September 2, 1897, just two months after his announcement. They are numbered 645,576 and 649,621. In these patents he describes all the fundamental features of the radio broadcasting and receiving circuits in use today. Once patent protection was secured, Tesla did not long delay in letting the public in on his discoveries. His presentation took the form of a spectacular demonstration at Madison Square Garden.

wireless transmission of intelligence is a modern satisfaction of one of the oldest cravings of man, who has always sought the annihilation of distance by communication through space without material linkage over the intervening expanse. Early experimenters with the telephone, particularly, were enthusiastic seekers of a method of wireless electrical communication that would convey the voice through space in the manner in which the air conducted sound. David Edward Hughes had noted, in 1879, that when an electric spark was produced anywhere in his house he heard a noise in his telephone receiver. He traced the effect to the action of the carbon granules in contact with a metal disk in his telephone transmitter which acted as a detector of the space waves by sticking together slightly, reducing the resistance of the mass, and producing a click in the receiver.

Prof. A. E. Dolbear, of Tufts College, amplified this observation and set up, in 1882, a demonstration set using the principle but eliminating the telephone set. He used a spark coil for creating waves and a mass of carbon granules for detecting them. This is exactly the "wireless" system which Marconi "discovered" fourteen years later.

Edison, engaged by the Western Union Telegraph Company to break the monopoly which Bell held by his invention of the telephone, had succeeded, in 1885, in sending a message from a moving train by "wireless." A wire strung on the train paralleling a telegraph wire strung on poles along the track made it possible to bridge the intervening few feet by an inductive effect--the same effect which causes

annoyance by creating "cross talk," or a mixing of conversations over two telephone circuits located close to each other. fi. M. Preece, in England, made a similar experiment about the same time. The extremely short distances over which such systems worked prevented them from having any practical usefulness.

An entirely different type of wireless communication had been developed by Alexander Graham Bell in 1880 and 1881. This was given the name radiophone, but Bell insisted on calling it the photophone. The photophone transmitted the voice over a beam of light. The transmitter consisted of a very thin glass or mica mirror, which could be vibrated by the voice. This reflected a beam of light, usually sunlight, to a distant receiving device. The simple receiver consisted of a chemist's test tube, into which a selected material was placed. The top of the tube was closed by a cork through which two small rubber tubes were inserted, the other ends being placed in the ears. A very great variety of materials could be placed in the test tube as detectors. when the beam of light, vibrated by the voice, impinged on the material in the tube, an absorption of heat took place which set the air in the tube in vibration, thus reproducing the voice that was carried by the light beam. Bell also used selenium as a detector. It responded to the visible rays and produced an electrical effect. The experiments, obviously, were of little practical value as the basis for a system of wireless communication.

Michael Faraday, in London, had described in 1845 his theory of the relationship between light and the electromagnetic lines of force; and in 1862 James Clerk Maxwell published an analysis of Faraday's work which gave a mathematical basis for the theory that light waves were electromagnetic in nature, and that it was possible for such waves to exist very much shorter and very much longer than the known wavelength of visible light. This was a challenge to scientists to prove the existence of such waves.

Prof. Heinrich Hertz, at Bonn, Germany, from 1886 to 1888, undertook the search for the waves longer than light or heat. He produced them by the spark discharge of an induction coil and recaptured them from space, at short distances, in the form of a tiny spark that jumped the gap in a slotted ring of wire. Sir Oliver Lodge, in England,

was simultaneously seeking to measure equally small electrical waves in wire circuits.

This, then, had been the situation in the scientific world when Tesla began his work in 1889. The plan for wireless communication which he presented in 1892 and 1893, as will be described in a moment, shows how his magnificent concept and tremendously advanced knowledge towered mountain high over all contemporaries.

when Tesla left the Westinghouse plant in the fall of 1889, he had immediately turned to the next phase of his development of the alternating-current Weld--a new system of distributing energy by means of high-frequency alternating currents which would be a far more magnificent discovery than his polyphase system. within the next two years he had explored the principles by which energy could be distributed broadcast without the use of wires, and these he had demonstrated with powerful coils in his laboratory. The distribution of intelligence, later called "wireless," was but a single phase of the larger project.

Tesla described, in 1892, the first electronic tube designed for use as a detector in a radio system, and demonstrated its characteristics in his lectures in London and Paris in February and March of that year. (The tube, however, had been developed in 1890.) He described in February and March of the following year, 1893, his system of radio broadcasting, presenting its principles in detail, in lectures before the Franklin Institute in Philadelphia and at the convention of the National Electric Light Association held in St. Louis.

Tesla's electronic tube, his 1890 invention, was the ancestor of the detecting and amplifying tubes in use today. His demonstration of this tube is a matter of record in the archives of four societies before which he exhibited it in February and March of 1892--the Institute of Electrical Engineers and the Royal Society of London and the Physical Society of France and the International Society of Electrical Engineers in Paris. He stated in these lectures:

If there is any motion which is measurable going on in space, such a brush ought to reveal it. It is, so to speak, a beam of light, frictionless, devoid of inertia.

I think it may find practical applications in telegraphy. with such a brush it would be possible to send dispatches across the Atlantic, for instance, with any speed, since its sensitiveness may be so great the slightest changes will affect it.

The "brush" in Tesla's tube was a beam of electrons. The electron, however, had not yet been discovered. Nevertheless, Tesla gave an accurate description of its nature, demonstrating the remarkable accuracy of his interpretation of strange phenomena. So sensitive was this electronic beam that a small horseshoe magnet an inch wide at a distance of six feet caused movement of the electron beam in either direction, depending on the position in which the magnet was held.

If anyone approached the tube from a distance of many feet the beam, or brush, would swing to the opposite side of the tube. If one walked around the tube even at a distance of ten feet, the beam would move likewise, keeping its center end always pointed at the moving object. The slightest movement of a finger, or even the tensing of muscle, would bring a swinging response from the beam.

In the same 1892 lecture in which he described this first electronic tube, Tesla demonstrated lamps which were lighted without wire connections (wireless light) and also a motor which operated without wire connections to the energizing coils (wireless power); and he had again presented these developments at his exhibition at the Chicago Columbian Exposition early in 1893.

It was with all this experience behind him, giving him full assurance that his system was entirely practical and operative, that Tesla presented at the Franklin Institute and at the convention of the National Electric Light Association in February and March, 1893, a very cautious and conservative statement concerning his plan. Even at these 1893 lectures, Tesla could have staged a demonstration of wireless transmission of intelligence by placing one of his resonant coils, surmounted by one of his electronic "brush" tubes, or one of his low-pressure air lamps, in the lecture hall and causing it to respond to signals sent out by an energized coil of similar wavelength but located at a considerable distance from the building. The experiment was a standard procedure in his laboratory.

This, however, would be a purely local effect, whereas his radio transmission system was one planned on a world-wide basis requiring much more powerful apparatus than he had thus far built. To pass off a purely local effect as a demonstration of a world-wide system, even though the observed results would have been identical, would have been a case of intellectual dishonesty to which Tesla would not stoop; yet this demonstration of wireless would have been more spectacular and powerful than any staged by any other inventor in more than a half-dozen years following.

Describing his world-wide system at the 1893 National Electric Light Association meeting, he said:

In connection with resonance effects and the problems of transmission of energy over a single conductor, which was previously considered, I would say a few words on a subject which constantly fills my thoughts, and which concerns the welfare of all. I mean the transmission of intelligible signals, or, perhaps, even power, to any distance without the use of wires. I am becoming more convinced of the practicability of the scheme; and though I know full well that the great majority of scientific men will not believe that such results can be practically and immediately realized, yet I think that all consider the developments in recent years by a number of workers to have been such as to encourage thought and experiment in this direction. My conviction has grown so strong that I no longer look upon the plan of energy or intelligence transmission as a mere theoretical possibility, but as a serious problem in electrical engineering, which must be carried out some day.

The idea of transmitting intelligence without wires is the natural outcome of the most recent results of electrical investigations. Some enthusiasts have expressed their belief that telephony to any distance by induction through air is possible. I cannot stretch my imagination so far, but I do firmly believe that it is practical to disturb, by means of powerful machines, the electrostatic conditions of the earth, and thus transmit intelligible signals, and, perhaps, power. In fact, what is there against carrying out such a scheme?

We now know that electrical vibrations may be transmitted through a single conductor. why then not try to avail ourselves of the earth for this purpose? We need not be frightened by the idea of distance. To the weary wanderer

counting the mileposts, the earth may appear very large; but to the happiest of all men, the astronomer, who gazes at the heavens, and by their standards judges the magnitude of our globe, it appears very small. And so I think it must seem to the electrician; for when he considers the speed with which an electrical disturbance is propagated through the earth, all his ideas of distance must completely vanish.

A point of great importance would be first to know what is the capacity of the earth, and what charge does it contain if electrified. Though we have no positive evidence of a charged body existing in space without other oppositely electrified bodies being near, there is a fair probability that the earth is such a body, for by whatever process it was separated--and this is the accepted view of its origin--it must have retained a charge, as occurs in all processes of mechanical separation. . . .

If we can ever ascertain at what period the earth's charge, when disturbed, oscillates, with respect to an oppositely charged system or known circuit, we shall know a fact possibly of the greatest importance to the welfare of the human race. I propose to seek for the period by means of an electrical oscillator or a source of alternating currents.

One of the terminals of this source would be connected to the earth, as, for instance, to the city water mains, the other to an insulated body of large surface. It is possible that the outer conducting air strata or free space contains an opposite charge, and that, together with the earth, they form a condenser of large capacity. In such case the period of vibration may be very low and an alternating dynamo machine might serve for the purpose of the experiment. I would then transform the current to a potential as high as it would be found possible, and connect the ends of the high tension secondary to the ground and to the insulated body. By varying the frequency of the currents and carefully observing the potential of the insulated body, and watching for the disturbance at various neighboring points of the earth's surface, resonance might be detected.

Should, as the majority of scientific men in all probability believe, the period be extremely small, then a dynamo machine would not do, and a proper electrical oscillator would have to be produced, and perhaps it might not be possible to obtain such rapid vibrations. But

whether this be possible or not, and whether the earth contains a charge or not, and whatever may be its period of vibration, it is certainly possible--for of this we have daily evidence--to produce some electrical disturbance suficiently powerful to be perceptible by suitable instruments at any point on the earth's surface. . . .

Theoretically, then, it could not require a great amount of energy to produce a disturbance perceptible at a great distance, or even all over the surface of the globe. Now, it is quite certain that at any point within a certain radius of the sources, a properly adjusted self induction and capacity device can be set in action by resonance. But not only this can be done, but another source, s 1, similar to s, or any number of such sources, can be set to work in synchronism with the latter, and the vibration thus intensified and spread over a large area, or a flow of electricity produced to or from source s 1, if the same or of opposite phase to the source s.

I think that, beyond doubt, it is possible to operate electrical devices in a city, through the ground or pipe system, by resonance from an electrical oscillator located at a central point. But the practical solution of this problem would be of incomparably smaller benefit to man than the realization of the scheme of transmitting intelligence, or, perhaps, power, to any distance through the earth or environing medium. If this is at all possible, distance does not mean anything. Proper apparatus must first be produced, by means of which the problem can be attacked, and I have devoted much thought to this subject. I am firmly convinced it can be done, and I hope we shall live to see it done.

The lecture before the Franklin Institute contained a similar statement. An additional paragraph from it can be quoted:

If by means of powerful machinery, rapid variations of the earth's potential were produced, a grounded wire reaching up to some height would be traversed by a current which could be increased by connecting the free end of the wire to a body of some size. . . . The experiment, which would be of great scientific interest, would probably best succeed on a ship at sea. In this manner, even if it were not possible to operate machinery, intelligence might be transmitted quite certainly.

Tesla thus presented in these lectures the principles which he had learned in his laboratory experiments, during the previous three years, were necessary for successful wireless communication.

Several fundamental requirements were presented which will be understood by any non-technical person who has had even slight experience with radio receiving sets: 1. An antenna, or &aerial wire; 2. A ground connection; 3. An &aerial-ground circuit containing inductance and capacity; 4. Adjustable inductance and capacity (for tuning); 5. Sending and receiving sets tuned to resonance with each other; and 6. Electronic tube detectors. He had still earlier invented a loud speaker.

These embody the fundamental principles of radio, and are used in every sending and receiving set today.

Radio as it exists today is, therefore, the product of the genius of Nikola Tesla. He is the original inventor of the system as a whole and of all the principal electrical components. The man who, next to Tesla, is entitled to the greatest amount of credit is Sir Oliver Lodge, the great English scientist. Even Lodge, however, failed to grasp the fundamental picture that Tesla presented.

Lodge, early in 1894, had put a Hertz spark gap in a copper cylinder open at one end; and in this way he produced a beam of ultra-short-wave oscillations which could be transmitted in any direction. He did the same for the receiving set. Since the incoming waves could be received from only one direction, this receiving set was able to locate the direction from which the transmitted waves came. with this set he completely anticipated Marconi by two years. In the summer of that year, in a demonstration before the British Association for the Advancement of Science at Oxford, he sent Morse signals, with an improved set, between two buildings separated by several hundred feet.

It is little wonder, then, that Marconi, who started his studies of wireless in 1895, created no stir in the scientific circles in England when he came from Italy to London in 1896 with a wireless set that in every essential feature was the same as that demonstrated by Lodge in 1894. He used a parabolic reflector, so his set was little more

than an electrical searchlight. He did, however, bring an alternative feature to replace the parabolic beam reflector. This was a ground connection and antenna, or &aerial wire, for both sending and receiving set. This was exactly what Tesla had described in his plan published three years before.

when Hertz made his experiments to demonstrate the identical nature of light and longer electromagnetic waves, he intentionally sought to use the shortest waves it was practicable to produce. They were measured in inches--much less than a yard long. They were entirely satisfactory for his experiment. when the wireless experimenters copied his methods they took over the short-wave plan without ever asking a question as to what wavelength should be used for wireless communication; the thought seems not to have dawned on them that there were other wavelengths that could be produced and used--all except Tesla.

Tesla took the trouble, with the spirit of a real scientist to repeat exactly the experiments of Hertz; and he published his results, stating that he found a number of important differences and calling attention to the inadequacies of Hertz's experimental methods.

Having experimented with a wide gamut of wavelengths of high-frequency currents and studied the properties of each section of the spectrum, he knew that the short wavelengths were totally unsuitable for communication purposes. He knew that the useful wavelengths ranged from 100 meters to many thousands of meters. He knew that the combination of induction coil and Hertz ball-type spark-gap oscillator could never have any practical usefulness in producing the kind of electrical pulsations required. Even with the highly efficient apparatus available today, scientists have been unable to use in communication (except for special purposes) the ultra-short waves which Tesla in his wisdom condemned and Marconi, owing to his inexperience, tried to use.

The history of the succeeding years in wireless is the story of the failure of the short waves of Lodge and Marconi and their followers, and the shifting over to the longer waves described by Tesla; and the dropping of their crash method of signaling and its replacement by the refined and highly efficient method of tuning to each other the sending and receiving stations by the methods

discovered by Tesla; and adoption of Tesla's continuous waves.

In addition, these groping workers saw in wireless only a point-to-point or station-to-station method of signaling. None of them foresaw the broadcasting system which Tesla described in 1893. The system invented and discovered by Tesla is the one in use today; but who ever heard anyone giving Tesla the slightest credit?

NINE

TESLA was prolific in opening up vast new empires of knowledge. He showered his discoveries on the world at such a rapid rate and in such a nonchalant manner that he seems to have benumbed the minds of the scientists of his age. He was too busy to spend time developing the technical or commercial applications of each new discovery--there were too many other new and important revelations within his vision that must be brought to light. Discoveries were not happenstance events to him. He visualized them far in advance of their unfolding in the laboratory. He had a definite program of pioneering research in virgin fields of investigation; and when this was accomplished he would, he felt, have a long lifetime still ahead of him in which he could return to the practical utilization of those already revealed.

Meanwhile, he had found a whole new world of interesting effects in the discharges produced by his coils when energized with the currents of extremely high frequency. He built larger and larger coils and experimented with a variety of shapes as constructions. From the common cylindrical type of coil he developed the cone-shaped coil, and this development he carried still further by designing the flat helix, or pancake-shaped coil.

The extremely high-frequency currents furnished a mathematical paradise in which Tesla could develop his equations to his heart's content. Through his mathematical abilities and his strange power of visualization he could frequently make, very quickly, whole series of discoveries that it took a long time to catch up with in actual laboratory constructions. This was true of the phenomena of resonance, or tuned circuits.

Because of their relatively short wavelength, it was comparatively easy to build condensers for tuning the circuits. when a circuit is tuned the electric current that flows in it oscillates rhythmically, just as does a musical string which, when struck or plucked, vibrates and builds up loops of even lengths with motionless points between them. There may be only one of these loops, or there can be many.

Tesla did not invent the idea of electrical resonance. It was inherent in the mathematical description of the condenser discharge as developed by Lord Kelvin, and in the physical nature of alternating currents; but Tesla changed it from a buried mathematical equation to sparking physical reality. It is the analogy of acoustical resonance which is a natural property of matter. However, there were no practical circuits in which resonance could manifest itself until Tesla developed alternating currents, particularly the high-frequency currents. He put the master's touch to the research in this field by developing the principle of resonance in individual circuits through adjustment of capacity and inductance; the amplification of effects by inductive coupling of two tuned circuits, and the peculiar manifestations of resonance in a circuit tuned to a quarter of the wavelength of the energizing current. This latter development was a stroke of pure genius.

In the vibrating string, two loops measure a complete wavelength and one loop measures half a wavelength, since one of the loops is up when the other is down. Between the two loops is a nodal point which does not move. From the nodal point to the top of a loop is a quarter wavelength. Taking the quarter wavelength as a unit, one end is motionless and the other end swings through the greatest amplitude of vibration.

By tuning his coils to quarter wavelengths, one end of the coil, Tesla found, would be entirely inactive while the other end would swing through tremendous electrical activity. Here was a unique situation, one end of a small coil inert and the other end spouting a flood of sparks of hundreds of thousands or even millions of volts. In a physical analogy it seemed like the Niagara River reaching the edge of the precipice--and then its waters shooting mountain high in a gigantic fountain instead of falling into the chasm.

The quarter-wavelength coil is the electrical counterpart of the vibrating tine of the tuning fork, the ordinary clock pendulum, or the vibrating reed. Once accomplished, it was a simple thing--but its discovery was a work of genius. It was a development that could have come with certainty to a master mind working on broad principles, as Tesla was doing all his life, and only by the most improbable chance to those who without illumination were tinkering with gadgets and hoping to stumble on something out of which they could make a fortune.

A high-voltage coil with one dead end greatly simplified many problems. One of Tesla's big problems had been the finding of means to insulate the high-voltage secondary coil of transformers from the low-voltage primary which energized it. Tesla's discovery eliminated the voltage entirely from one end of the secondary so it could be connected directly to the primary or to the ground, while the other end continued to spout its lightning. It was for utilizing this situation that he developed the conical and pancake-shaped coils.

Tesla's laboratory was filled with a variety of coils. He discovered early in his researches that while operating a coil of a given wavelength, other coils in the laboratory, tuned either to this wavelength or one of its harmonics, would respond sympathetically by spouting a crown of sparks although not connected in any way to the operating coil.

Here was an example of transmission of energy to a distance through space. It was not necessary for Tesla to make a series of experiments to understand the implications of this situation. He was never lost in a new territory which he opened. His mind rose to such heights of understanding that he could survey a revealed world in a glance.

Tesla planned a spectacular demonstration of the new principle. He had his workmen string a wire on insulating supports on all four walls near the ceiling of the largest room in his laboratory. The wire was connected to one of his oscillators.

It was late at night when the installation was ready for the experiment. In order to make the test, Tesla prepared two tubes of glass about three feet long and a half-inch in

diameter. He sealed one end of each, slightly evacuated the air from the tubes and then sealed the other ends.

Tesla told the workmen he wanted the room completely darkened for the test, all lights out; and when he gave the signal he wanted the switch of his oscillator closed. "If my theory is correct," he explained, "when you close the switch these tubes will become swords of fire."

walking to the middle of the room Tesla gave orders to turn out all lights. The laboratory was in pitch darkness. A workman stood with his hand on the switch of the oscillator.

"Now!" shouted Tesla.

Instantly the great room was flooded with brilliant but weird blue-white light and the workmen beheld the tall, slim figure of Tesla in the middle of the room waving vigorously what looked like two flaming swords. The two glass tubes glowed with an unearthly radiance, and he would parry and thrust with them as if he were in a double fencing match.

To the workmen in the laboratory, it was a common experience for Tesla to perform spectacular feats; but this went beyond all limits. He had previously lighted his electric vacuum lamps but they were always connected to coils that supplied them with electricity. Now they lighted without being connected to any source of electricity.

This demonstration, made in 1890, led to Tesla's adopting the technique as the permanent method of lighting his laboratories. The loop around the ceiling was always energized; and if anyone wished a light at any position, it was only necessary to take a glass tube and place it in any convenient location.

when tesla undertook the development of a new kind of electric light, he went to the sun for his model. He saw in the photo- sphere, or outer gaseous layer of the sun, light being created by the vibration of molecules. That was the theory then prevalent; and he sought to use the same method.

In the tremendous burst of revelation which he received in the park at Budapest as he gazed into the flaming orb of

the setting sun, there had flashed into his mind, as we have seen, not only the marvelous invention of the rotary magnetic field and the many uses of multiple alternating currents, but also the grand generalization that everything in Nature operated on the principle of vibrations that corresponded to alternating currents. The host of inventions and discoveries which he made in all succeeding years had their roots, too, in that sublime experience.

In the sun, it was believed, light was created when the molecules were vibrated by heat. Tesla sought to improve on this method by vibrating the molecules by electrical forces. The sparks and electrical flames created by his high-voltage coils were associated, he believed, with molecular vibrations in the air. If he could bottle the gases of the air and set them in vibration electrically, they should produce light without heat, since the energy was supplied by cold electric currents.

Sir fiilliam Crookes, who, long before Edison, produced an incandescent electric light by sealing an electrically heated wire in a vacuum tube, had carried out an extended series of experiments in conducting electricity through the gases in glass vessels under a variety of conditions ranging from atmospheric pressure to the highest vacuum obtainable, and had produced some strange effects. Crookes used the high-voltage current produced by the old-fashioned induction coil.

Tesla expected that when he bottled the strange effects he had observed with his currents of extremely high frequency, he would produce manifestations radically different from those found by Crookes, or Geissler, who also worked in this field. In this he was not disappointed.

Four types of an entirely new kind of electric light were produced by Tesla, using electrically activated molecules of gas: 1. Tubes in which a solid body was rendered incandescent; 2. Tubes in which phosphorescent and fluorescent materials were caused to luminesce; 3. Tubes in which rarefied gases became luminous, and 4. Tubes in which luminosity was produced in gases at ordinary pressures.

Like Crookes, Tesla passed his high-frequency currents through gases at all pressures, from lowest-pressure vacuum to normal atmospheric pressure, and obtained brilliant luminous effects exceeding anything previously attained. He

substituted for air in his tubes other gases, including mercury vapor, and observed the peculiar color and other effects they yielded.

Noting the variety of colors the various gases, and even air, showed under different pressures, Tesla suspected that not all of the energy radiated was given off as visible light, but that some of it emanated as black light. Testing this hypothesis, he placed sulphide of zinc and other phosphorescent and fluorescent materials in his tubes and caused them to glow. In these experiments (they were made in 1889) Tesla laid the foundation for our most recently developed type of highly efficient lamps used in fluorescent lighting which are generally believed to have been invented in recent years. This system of utilizing the wasted ultra-violet or invisible black light by changing it to visible light by means of phosphorescent substances is Tesla's invention. Roentgen was using similar tubes, but of plain glass and the fluorescent substance on a table in his laboratory when, a half-dozen years later, he discovered X-rays. Tesla invented, also, the neon-tube type of lamp, and even bent his tubes to form letters and geometrical shapes, as is done in neon-tube signs. This is true in spite of some antecedent and concurrent laboratory experiments by Crookes and J. J. Thompson, neither of whom developed any lamps or practical applications.

Tesla had discovered early in 1890 that his high-frequency currents had properties so different from the ordinary induction-coil, or spark-coil, currents, that he was able to light his tubes just as well, and sometimes even better, with only one wire connecting them with the high-tension transformer, the return circuit being effected wirelessly through space.

In working with types of lamps consisting of tubes in the center of which there was a conducting wire, and with the tube filled with air under a partial vacuum, Tesla discovered that the gas would serve as a better conductor of the high-frequency current than the wire. From this observation he was able to develop many spectacular experiments which appeared to violate the most fundamental laws of electricity. He was able to short circuit lamps and other apparatus with heavy bars of metal which, with ordinary currents, would completely deprive the devices of electricity so they would be unable to operate. However, with his high-frequency currents, the lamps would light and

the devices operate just as if the short-circuiting bar were not present.

One of his startling experiments consisted of placing a long glass tube partially evacuated of its air inside a slightly longer copper tube with a closed end. A slit was cut in the copper tube in its central section so the tube inside would be seen. when the copper tube was connected in the high-frequency circuit, the air in the tube was brilliantly illuminated; but no evidence could be found of any current flowing through the short-circuiting copper shell. The electricity preferred to pass through the glass tube, by induction, to the enclosed partially evacuated air, pass through the low-pressure air for the full length of the tube, and then pass out the other end by induction, rather than traverse the complete metal path in the surrounding metal tube.

we have then, [said Tesla], as far as we can now see, in the gas a conductor which is capable of transmitting electric impulses of any frequency which we may be able to produce. Could the frequency be brought high enough, then a queer system of distribution, which would be likely to interest gas companies, might be realized; metal pipes filled with gas--the metal being the insulator and the gas the conductor--supplying phosphorescent bulbs, or perhaps devices not yet invented.

This remarkable conductivity of gases, including the air, at low pressures, later led Tesla to suggest, in a published statement in 1914, a system of lighting on a terrestrial scale in which he proposed to treat the whole earth, with its surrounding atmosphere, as if it were a single lamp.

The atmosphere is under the greatest pressure at the surface of the earth, owing to the weight of the overlying air. As we go higher in the air there are increasing amounts below us and less above, so, the greater the elevation, the lower is the pressure of the air.

At higher altitudes the gases in the atmosphere are in the same condition as the air in the partially evacuated tubes he prepared in his laboratory, Tesla explained, and therefore it would serve as an excellent conductor of high-frequency currents. The aurora borealis is a natural example of the effect Tesla sought, and it is produced by

Nature as Tesla planned; but this was not known when he evolved his idea.

The flow of a suficient amount of the electricity in the right form through the upper regions of the atmosphere would cause the air to become luminous. The whole earth would be transformed into a giant lamp, with the night sky completely illuminated. It would be unnecessary, he pointed out, to use any lamps along streets, roads or other outdoor areas, except during periods in which storms or low clouds prevailed. Ocean travel would be made safer and more pleasant, for the sky over the whole ocean would be illuminated, making the night as bright as day.

The methods by which Tesla intended to conduct his high-frequency currents to the upper air have not been published. when he outlined the project, he stated that the plan did not present any dificulties that could not be handled in a practical way. This meant that he had definite means for accomplishing his purpose.

The air, he stated, possesses a high degree of conductivity for high-frequency currents at an altitude of 35,000 feet, but could be used effectively at lower altitudes. The accuracy of Tesla's prediction with respect to the conductivity of the upper air is attested by one of the problems encountered today in the operation of airplanes at altitudes even lower than 25,000 feet. The ignition system, carrying high-voltage currents to the spark plugs in the airplane engines, which explodes the gas in the cylinders, has been giving trouble at the higher altitudes because the electricity escapes with a great deal of freedom into the surrounding air. At lower altitudes the air is an excellent insulator, especially for direct current and low-frequency currents, but, as Tesla discovered, at the higher altitudes where low pressures prevail it becomes an excellent conductor for the high-frequency currents. The wires leading to spark plugs become surrounded by a corona, or electrical halo, which indicates the escape of the current. This interferes with the efficiency, if it does not entirely prevent the operation, of devices employing high-frequency or high-potential currents, such as radio apparatus. (Since Tesla discovered that metal wires and rods which act as excellent conductors for direct and low-frequency currents can act as excellent insulators for his high-frequency currents, it is obvious that the common suggestion made for delivering a current to the upper air

by means of metal cables suspended from balloons is entirely impractical.)

This proposal by Tesla to transform the earth into a giant lamp was again referred to by him in the twenties. At this time he was without funds for carrying on experimental work, and, as he never announced details until after he had tested them in practice, he withheld a disclosure of his methods. He was hopeful, however, that he would soon secure money enough to permit him to test his plan.

The author bombarded Tesla with questions in an effort to learn the general plan he had in mind. Tesla was adamant.

"If I should answer three more of your questions you would know as much about my plan as I do," he replied.

"Nevertheless, Dr. Tesla," I replied, "I am going to outline in my article the only plan that appears to me to be feasible under our known physical laws, and you can deny or afirm it. your molecular bombardment tubes are prolific producers of ultra-violet and X-rays and could produce a powerful beam of this radiation which would ionize the air through great distances. when these rays pass through the air they ionize it, making it a good conductor of electricity of all kinds at suficiently high voltages. By producing such a beam on a high mountain and directing it upward this would provide a conducting path through the air to any height desired. you could then send your high-frequency currents to the upper air without leaving the ground."

"If you publish that," said Tesla, "it must appear as your plan, not mine."

The article was published with the foregoing speculation in it; but neither afirmation nor denial was forthcoming from the inventor, and nothing more can be said in its favor. Tesla may have had a simpler and more practical plan in mind. (Since completing this volume the author has learned that Tesla planned to install a bank of powerful ultra-violet lamps on top of his tower at wardencliff (cf. p. 207), and had the upper Platform designed to receive them.)

There was one other plan which Tesla discussed on a number of occasions when considering terrestrial electrical conditions, and which he may have had in mind in this

connection. He pointed out that the earth is a good conductor of electricity and the upper air is also a good conductor, while the intervening lower stratum of air is an insulator for many kinds of current. This combination provides what is known as a condenser, a device which will store and discharge electricity. By charging the earth, the upper air would become charged by induction. when our spinning earth was so transformed into a terrestrial Leyden jar, it could be alternately charged and discharged, so that a current would flow both in the upper air and in the ground, producing the electrical flow which would cause the upper air to become self-luminous. Tesla, however, never became quite so specific in applying the condenser plan to this problem as the preceding sentence indicates. His plan may still exist in his papers, which, at the present writing, are sealed against inspection except by Government oficials.

Out of the almost empty space in a six-inch vacuum tube Tesla succeeded in extracting at least five epoch-making discoveries. Tesla's lamp was more prolific in producing wonders than the Aladdin's lamp of the Arabian Nights. He gave his "magic" lamp to science fifty years ago. This magic talisman was Tesla's carbon-button lamp which, apart from the other discoveries that came of it, was in itself, just as a lamp, a brilliant scientific discovery--and still remains unused. Edison developed the practical incandescent filament electric lamp and was entitled to, and receives, a tremendous amount of credit for his accomplishment. Tesla invented an absolutely original type of lamp, the incandescent-button lamp, which gives twenty times as much light for the same amount of current consumed; and his contribution remains practically unknown.

The carbon-button type of lamp was described by Tesla in his lecture before the American Institute of Engineers in New York in May, 1891, and further developments were presented in the lectures which he gave in England and France in February and March, 1892. In his New York lecture he said:

Electrostatic effects are in many ways available for the production of light. For instance, we may place a body of some refractory material in a closed, and preferably in a more or less air exhausted, globe, connect it to a source of high, rapidly alternating potential, causing the molecules of the gas to strike it many times a second at

enormous speeds, and in this way, with trillions of invisible hammers, pound it until it gets incandescent. Or we may place a body in a very highly exhausted globe, and by employing very high frequencies and potentials maintain it at any desired degree of incandescence.

He made a vast number of experiments with this carbon-button lamp and gave a description of the most significant ones in his lecture before the English and French scientific societies in the spring of 1892. It was, however, only one of the many new types of lamps and other important developments which he included in this spectacular presentation of his work.

The carbon-button lamps were of very simple construction. Basically they consisted of a spherical glass globe three to six inches in diameter, in the center of which was a piece of solid refractory material mounted on the end of a wire which protruded through the globe and served as a single-wire connection with the source of high-frequency currents. The globe contained rarefied air.

when the high-frequency current was connected with the lamp, molecules of the air in the globe, coming in contact with the central button, became charged and were repelled at high velocity to the glass globe where they lost their charge and were then repelled back at equally high velocity, striking the button. Millions of millions of such processes each second caused the button to become heated to incandescence.

In these simple glass globes Tesla was able to produce extremely high temperatures, the upper limit of which seemed to be determined by the amount of current used. He was able to vaporize carbon directly into a gas, observing that the liquid state was so unstable it could not exist. Zirconia, the most heat-resistant substance known, could be melted instantly. He tried diamonds and rubies as buttons--and they too were vaporized. when using the device as a lamp it was not his desire to melt the substances; but he always carried experiments to their upper and lower limits. Carborundum, he observed, was so refractory that it was possible when using buttons made of this material (calcium carbide) to run the lamps at higher current densities than was possible with other substances. Carborundum did not vaporize so readily, nor did it make deposits on the inside of the globe.

Tesla thus evolved a technique in operating the lamps whereby the incandescent button transferred its heat energy to the molecules of the very small amount of gas in the tube so that they became a source of light, thus causing the lamps to function like the sun, the button being the massive body of the sun and the surrounding gas like the photosphere, or atmospheric light-emitting layer, of that body.

Tesla had a keen sense of dramatic values, but quite apart from this he undoubtedly enjoyed a unique satisfaction when he was able to light this miniature sun in the currents that he passed through his body--high-frequency currents of hundreds of thousands of volts. with one hand grasping a terminal of his high-frequency transformer and the other holding aloft this bulb containing an incandescent miniature sun which he had created--posing like the Statue of Liberty--he was able to make his new lamp radiate its brilliant illumination. Here, you might say, was the superman manifesting his ultramundane accomplishments. In addition, there was a satisfaction which was associated purely with the plane of ordinary mortals. Edison had laughed at his plan for developing the alternating-current system, and had declared that these currents were not only useless but deadly. Surely, this was an adequate answer; Tesla would let Nature make his replies.

Observing this working model of the incandescent sun which he could hold in his hand, Tesla was quick to see many of the implications of its phenomena. Every electrical wave that surged through the tiny central bead caused a shower of particles to radiate from it at tremendous velocity and strike the surrounding glass globe, only to be reflected back to the bead. The sun, Tesla reasoned, is an incandescent body that carries a high electrical charge and it, too, will emit vast showers of tiny particles, each carrying great energy because of its extremely high velocity. In the case of the sun, and other stars like it, there was no glass globe to act as a barrier, so the showers of particles continued out into the vast realms of surrounding space.

All space was filled with these particles and they were continually bombarding the earth, blasting matter wherever they struck, just as they did in his globes. He had seen this process take place in his globes, where the most

refractory carbon beads could be shattered into atomic dust by the bombardment of the electrified particles.

He sought to detect these particles striking the earth: one of the manifestations of this bombardment, he declared, was the aurora borealis. The records of the experimental methods by which he detected these rays are not available; but he published an announcement that he had detected them, measured their energy, and found that they moved with tremendously high velocities imparted to them by the hundreds of millions of volts potential of the sun.

Neither the scientists nor the general public in the early nineties were in a mood for such fantastic figures, or for any claim that the earth was bombarded by such destructive rays. It would be describing the situation in very conservative fashion to state that Tesla's report was not taken seriously.

when, however, the French physicist, Henri Becquerel, in 1896, discovered the mysterious rays emitted by uranium, and subsequent investigations, culminating with the discovery by Pierre and Marie Curie, in Paris, of radium, whose atoms were exploding spontaneously without apparent cause, Tesla was able to point to his cosmic rays as the simple cause of the radioactivity of radium, thorium, uranium and other substances. And he predicted that other substances would also be found to be made radioactive by bombardment with these rays. The victory for Tesla, however, was only temporary, for the scientific world did not accept his theory. Nevertheless, Tesla was a better prophet than he knew, or anyone else suspected.

Thirty years later Dr. Robert A. Millikan rediscovered these rays, believing them to be vibratory in character like light, and was followed by Dr. Arthur H. Compton, who proved the existence of cosmic rays consisting of high-velocity particles of matter, just as Tesla described them. They started by finding energies of ten million volts; and today the energies are far up in the billions and even trillions of electron volts. And these and other investigators describe these rays as shattering atoms of matter producing showers of debris--just as Tesla predicted.

In 1934, Frederick Joliot, son-in-law of the Curies, discovered that artificial radioactivity was produced in

ordinary materials by bombarding them with particles in just the manner which Tesla described. Joliot received the Nobel Prize for his discovery; no one gives any credit to Tesla.

Tesla's molecular-bombardment lamp was the ancestor of another very modern development--the atom-smashing cyclotron. The cyclotron, developed by E. O. Lawrence, of the University of California, during the past twenty years, is a device in which electrified particles are whirled in a magnetic field in a circular chamber until they reach a very high velocity, and are then led out of the chamber in a narrow stream. The giant machine, with a magnet as high as a house, partially completed at present writing, will emit so powerful a beam of charged particles that, according to Prof. Lawrence, if allowed to impinge on a building brick they will totally disintegrate it. The smaller models were used to bombard a variety of substances to render them radioactive, to disintegrate them or transmute their atoms into those of other elements.

The small glass globe, six inches or less in diameter, holding Tesla's molecular-bombardment lamp produced exactly this same disintegrating effect on solid matter, probably with a more intensified effect than any atom-smashing cyclotron now in existence despite their tremendous size. (Even small ones weigh twenty tons.)

In describing one of the experiments with his lamp, one in which a ruby was mounted in a carbon button, Tesla said:

It was found, among other things, that in such cases, no matter where the bombardment began, just as soon as a high temperature was reached there was generally one of the bodies which seemed to take most of the bombardment upon itself, the other, or others, being thereby relieved. This quality appeared to depend principally on the point of fusion, and on the facility with which the body was "evaporated," or, generally speaking, disintegrated--meaning by the latter term not only the throwing off of atoms, but likewise of larger lumps. The observation made was in accordance with generally accepted notions. In a highly exhausted bulb electricity is carried off from the electrode by independent carriers, which are partly atoms, or molecules, of the residual atmosphere, and partly the atoms, molecules, or lumps thrown off from the electrode. If the electrode is composed of bodies of different

character, and if one of these is more easily disintegrated than the others, most of the electricity supplied is carried off from that body, which is then brought to a higher temperature than the others, and this the more, as upon an increase of the temperature the body is still more easily disintegrated.

Substances which resisted melting in temperatures attainable in laboratory furnaces of that day were easily disintegrated in Tesla's simple-lamp disintegrator, which provided a powerful beam of disintegrating particles by having them concentrated from all directions by a spherical reflector (the globe of his lamp), a kind a three-dimension burning glass, but operating with electrified particles instead of heat rays. It accomplished the same effect as the heavy atom disintegrators of today, but much more efficiently in a globe so light in weight it almost floated off in air. Its simplicity and efficiency is further increased by the fact that it causes the substance that is being disintegrated to supply the particles by which the disintegration is effected.

There is one more very modern discovery of great importance embodied in Tesla's molecular-bombardment lamp--the point electron miscroscope, which provides magnifications of a million diameters, or ten to twenty times more powerful than the better known electron microscope which in turn is capable of magnifications up to fifty times greater than the optical microscope.

In the point electron microscope, electrified particles shoot out in straight lines from a tiny active spot on a piece of substance kept at a high potential, and reproduce on the spherical surface of a glass globe the pattern of the microscopically small area from which the particles are issuing. The size of the glass sphere furnishes the only limit to the degree of magnification that can be obtained; the greater the radius, the greater the magnification. Since electrons are smaller than light waves, objects too small to be seen by light waves can be tremendously enlarged by the patterns produced by the emitted electrons.

Tesla produced on the surface of the spherical globe of his lamp phosphorescent images of what was taking place on the disintegrating button when he used extremely high vacuum. He described this effect in his lectures in the spring of 1892, and his description will stand with hardly a change

in a word for a description of the million-magnification point electron microscope. Quoting from his lecture:

To the eye the electrode appears uniformly brilliant, but there are upon it points constantly shifting and wandering about, of a temperature far above the mean, and this materially hastens the process of deterioration. . . . Exhaust a bulb to a very high degree, so that with a fairly high potential the discharge cannot pass--that is, not a luminous one, for a weak invisible discharge occurs always, in all probability. Now raise slowly and carefully the potential, leaving the primary current no more than for an instant. At a certain point, two, three or half a dozen phosphorescent spots will appear on the globe. These places of the glass are evidently more violently bombarded than the others, this being due to the unevenly distributed electric density, necessitated, of course, by sharp projections, or, generally speaking, irregularities of the electrode. But the luminous patches are constantly changing in position, which is especially well observed if one manages to produce very few, and this indicates that the configuration of the electrode is rapidly changing.

It would be an act of simple justice if in the future scientists would extend credit to Tesla for being the one who discovered the electron microscope. There is no reduction in the glory due him because he did not specifically describe the electron, then unknown, in its operations, but assumed the effect was due to electrically charged atoms.

when Tesla studied the performance of various models of this and his other gaseous lamps, he observed that the output of visible light changed under various operating conditions. He knew they gave off both visible and invisible rays. He used a variety of phosphorescent and fluorescent substances for detecting the ultra-violet or black light. Usually, the changes in the visible and ultra-violet light about balanced each other; as one increased the other decreased, with the remainder of the energy accounted for by heat losses. In his molecular-bombardment lamp he found, he reported in his 1892 lectures, "visible black light and a very special radiation." He was experimenting with this radiation which, he reported, produced shadowgraph pictures on plates in metal containers, in his laboratory when it was destroyed by fire in March, 1895.

This "very special radiation" was not further described at that time in published articles; but when Prof. fiilhelm Konrad Roentgen, in Germany, in December, 1895, announced the discovery of X-rays, Tesla was able immediately to reproduce the same results by means of his "very special radiation," indicating that these and X-rays had very similar properties although produced in somewhat different ways. Immediately upon reading Roentgen's announcement, Tesla forwarded to the German scientist shadowgraph pictures produced by his "very special radiation." Roentgen replied: "The pictures are very interesting. If you would only be so kind as to disclose the manner in which you obtained them."

Tesla did not consider that this situation gave him any priority in the discovery of X-rays, nor did he ever advance any claims; but he immediately started an extensive series of investigations into their nature. while others were trying to coax out of the type of tube used by Roentgen enough X-rays to take shadow photographs through such thin structures as the hands and feet held very close to the bulb, Tesla was taking photographs through the skull at a distance of forty feet from the tube. He elsewhere described at this time an unidentified type of radiation coming from a spark gap, when a heavy current was passed, that was not a transverse wave like light, or Hertzian waves, and could not be stopped by interposing metal plates.

Tesla, thus, in one lecture reporting his investigations covering a period of two years, offered to the world--in addition to his new electric vacuum lamps, his highly efficient incandescent lamp, and his high-frequency and high-potential currents and apparatus--at least five outstanding scientific discoveries: 1. Cosmic rays; 2. Artificial radioactivity; 3. Disintegrating beam of electrified particles, or atom smasher; 4. Electron microscope; and 5. "Very special radiation" (X-rays).

At least four of these innovations, when "rediscovered" up to forty years later, won Nobel Prizes for others; and Tesla's name is never mentioned in connection with them.

Yet Tesla's lifetime work was hardly well started!

TEN

TESLA had a remarkable ability for carrying on simultaneously a number of widely different lines of scientific research. while pursuing his studies of high-frequency electrical oscillations with all of their ramifications from vacuum lamps to radio, he was also investigating mechanical vibrations; and he had a rare foresight into the many useful applications to which they could be put, and which have since been realized.

Tesla never did things by halves. Almost everything he attempted went off like a flash of lightning with a very satisfactory resounding clap of thunder following. Even when he did not so plan events, they appeared to fashion themselves into spectacular climaxes. In 1896 while his fame was still on the ascendant he planned a nice quiet little vibration experiment in his Houston Street laboratory. Since he had moved into these quarters in 1895, the place had established a reputation for itself because of the peculiar noises and lights that emanated from it at all hours of the day and night, and because it was constantly being visited by the most famous people in the country.

The quiet little vibration experiment produced an earthquake, a real earthquake in which people and buildings and everything in them got a more tremendous shaking than they did in any of the natural earthquakes that have visited the metropolis. In an area of a dozen square city blocks, occupied by hundreds of buildings housing tens of thousands of persons, there was a sudden roaring and shaking, shattering of panes of glass, breaking of steam, gas and water pipes. Pandemonium reigned as small objects danced around rooms, plaster descended from walls and ceilings, and pieces of machinery weighing tons were moved from their bolted anchorages and shifted to awkward spots in factory lofts.

"It was all caused, quite unexpectedly, by a little piece of apparatus you could slip in your pocket," said Tesla.

The device that precipitated the sudden crisis had been used for a long time by Tesla as a toy to amuse his

friends. It was a mechanical oscillator, and was used to produce vibrations. The motor-driven device that the barber straps on his hand to give a patron an "electric massage" is a descendant of Tesla's mechanical oscillator. There is, of course, nothing electric about an "electric massage" except the power used to produce vibrations which are transmitted through the barber's fingers to the scalp.

Tesla developed in the early nineties a mechanical-electrical oscillator for the generation of high-frequency alternating currents. The driving engine produced on a shaft simple reciprocating motion that was not changed to rotary motion. Mounted on either end of the shaft was a coil of many turns of wire that moved back and forth with high frequency between the poles of electromagnets, and in this way generated high-frequency alternating currents.

The engine was claimed by Tesla to have a very high efficiency compared to the common type of engine, which changed reciprocating to rotary motion by means of a crank shaft. It had no valves or other moving parts, except the reciprocating piston with its attached shaft and coils, so that mechanical losses were very low. It maintained such an extremely high order of constancy of speed, he stated, that the alternating current generated by the oscillator could be used to drive clocks, without any pendulum or balance-wheel control mechanisms, and they would keep time more accurately than the sun.

This engine may have had industrial possibilities but Tesla was not interested in them. To him it was just a convenient way of producing a high-frequency alternating current constant in frequency and voltage, or mechanical vibrations, if used without the electrical parts. He operated the engine on compressed air and also by steam at 320 pounds and also at 80 pounds pressure.

while perfecting this device, he had opportunity to observe interesting effects produced by vibration. These were objectionable in the engine when it was used as a dynamo, so he adopted suitable measures to eliminate or suppress them. The vibrations as such, however, interested him. Although they were detrimental to the machine, he found their physiological effects were, at times, quite pleasant. Later he built a small mechanical oscillator driven by compressed air which was designed for no other purpose than to produce vibrations. He built a platform insulated from

the floor by rubber and cork. He then mounted the oscillator on the under side of the platform. The purpose of the rubber and cork under the platform was to keep the vibrations from leaking into the building and thereby reducing the effect on the platform. Visitors found this vibrating platform one of the most interesting of the great array of fascinating and fantastic exhibits with which he dazzled the society folk who flocked to his laboratory.

Great hopes were entertained by Tesla of applying these vibrations for therapeutic and health-improving effects. He had opportunity to observe, through his own experience and that of his employees, that they produce some very definite physiological actions.

Samuel Clemens, better known to the public as "Mark Twain," and Tesla were close friends. Clemens was a frequent visitor to the Tesla laboratory. Tesla had been playing with his vibratory mechanism for some time, and had learned a good deal about the results that followed from varying doses of vibration, when one evening Clemens dropped in.

Clemens, on learning about the new mechanism, wanted to experience its vitalizing vibrations. He stood on the platform while the oscillator set it into operation. He was thrilled by the new experience. He was full of adjectives. "This gives you vigor and vitality," he exclaimed. After he had been on the platform for a while Tesla advised him: "you have had enough, Mr. Clemens. you had better come down now."

"Not by a jugfull," replied Clemens. "I am enjoying myself."

"But you had better come down, Mr. Clemens. It is best that you do so," insisted Tesla.

"you couldn't get me off this with a derrick," laughed Clemens.

"Remember, I am advising you, Mr. Clemens."

"I'm having the time of my life. I'm going to stay right up here and enjoy myself. Look here, Tesla, you don't appreciate what a wonderful device you have here to give a lift to tired humanity. . . . Clemens continued along this line for several minutes. Suddenly he stopped talking, bit

his lower lip, straightened his body and stalked stiffy but suddenly from the platform.

"Quick, Tesla! Where is it?" snapped Clemens, half begging, half demanding.

"Right over here, through that little door in the corner," said Tesla. "And remember, Mr. Clemens, I advised you to come down some time ago," he called after the rapidly moving figure.

The laxative effect of the vibrator was an old story to the members of the laboratory staff.

Tesla pursued his studies of mechanical vibrations in many directions. This was almost a virgin field for scientific research. Scarcely any fundamental research had been done in the field since Pythagoras, twenty-five hundred years before, had established the science of music through his study of vibrating strings; and many of the wonders with which Tesla had startled the world in the field of high-frequency and high-potential currents had grown out of his simple secret for tuning electrical circuits so that the electricity vibrated in resonance with its circuit. He now visualized mechanical vibrations building up resonance conditions in the same way, to produce effects of tremendous magnitude on physical objects.

In order to carry out what he expected to be some minor and very small-scale experiments, he screwed the base of one of his small mechanical oscillators to an iron supporting pillar in the middle of his laboratory and set it into oscillation. It had been his observation that it took some time to build up its maximum speed of vibration. The longer it operated the faster the tempo it attained. He had noticed that all objects did not respond in the same way to vibrations. One of the many objects around the laboratory would suddenly go into violent vibration as it came into resonance with the fundamental vibration of the oscillator or some harmonic of it. As the period of the oscillator changed, the first object would stop and some other object in resonance with the new rate would start vibrating. The reason for this selective response was very clear to Tesla, but he had never previously had the opportunity to observe the phenomenon on a really large scale.

Tesla's laboratory was on an upper floor of a loft building. It was on the north side of Houston Street, and the second house east of Mulberry Street. About three hundred feet south of Houston Street on the east side of Mulberry Street was the long, four-story red-brick building famous as Police Headquarters. Throughout the neighborhood there were many loft buildings ranging from five to ten stories in height, occupied by factories of all kinds. Sandwiched between them were the small narrow tenement houses of a densely packed Italian population. A few blocks to the south was Chinatown, a few blocks to the west was the garment-trades area, a short distance to the east was a densely crowded tenement-house district.

It was in this highly variegated neighborhood that Tesla unexpectedly staged a spectacular demonstration of the properties of sustained powerful vibrations. The surrounding population knew about Tesla's laboratory, knew that it was a place where strange, magical, mysterious events took place and where an equally strange man was doing fearful and wonderful things with that tremendously dangerous secret agent known as electricity. Tesla, they knew, was a man who was to be both venerated and feared, and they did a much better job of fearing than of venerating him.

Quite unmindful of what anyone thought about him, Tesla carried on his vibration and all other experiments. Just what experiment he had in mind on this particular morning will never be known. He busied himself with preparations for it while his oscillator on the supporting iron pillar of the structure kept building up an ever higher frequency of vibrations. He noted that every now and then some heavy piece of apparatus would vibrate sharply, the floor under him would rumble for a second or two--that a window pane would sing audibly, and other similar transient events would happen--all of which was quite familiar to him. These observations told him that his oscillator was tuning up nicely, and he probably wondered why he had not tried it firmly attached to a solid building support before.

Things were not going so well in the neighborhood, however. Down in Police Headquarters in Mulberry Street the "cops" were quite familiar with strange sounds and lights coming from the Tesla laboratory. They could hear clearly the sharp snapping of the lightnings created by his coils. If

anything queer was happening in the neighborhood, they knew that Tesla was in back of it in some way or other.

On this particular morning the cops were surprised to feel the building rumbling under their feet. Chairs moved across floors with no one near them. Objects on the oficers' desks danced about and the desks themselves moved. It must be an earthquake! It grew stronger. Chunks of plaster fell from the ceilings. A flood of water ran down one of the stairs from a broken pipe. The windows started to vibrate with a shrill note that grew more intense. Some of the windows shattered.

"That isn't an earthquake," shouted one of the oficers, "it's that blankety-blank Tesla. Get up there quickly," he called to a squad of men, "and stop him. Use force if you have to, but stop him. He'll wreck the city."

The officers started on a run for the building around the corner. Pouring into the streets were many scores of people excitedly leaving near-by tenement and factory buildings, believing an earthquake had caused the smashing of windows, breaking of pipes, moving of furniture and the strange vibrations.

without waiting for the slow-pokey elevator, the cops rushed up the stairs--and as they did so they felt the building vibrate even more strongly than did police headquarters. There was a sense of impending doom--that the whole building would disintegrate--and their fears were not relieved by the sound of smashing glass and the queer roars and screams that came from the walls and floors.

Could they reach Tesla's laboratory in time to stop him? Or would the building tumble down on their heads and everyone in it be buried in the ruins, and probably every building in the neighborhood? Maybe he was making the whole earth shake in this way! would this madman be destroying the world? It was destroyed once before by water. Maybe this time it would be destroyed by that agent of the devil that they call electricity!

Just as the cops rushed into Tesla's laboratory to tackle--they knew not what--the vibrations stopped and they beheld a strange sight. They arrived just in time to see the tall gaunt figure of the inventor swing a heavy sledge hammer and shatter a small iron contraption mounted on the post in

the middle of the room. Pandemonium gave way to a deep, heavy silence.

Tesla was the first to break the silence. Resting his sledge hammer against the pillar, he turned his tall, lean, coatless figure to the cops. He was always selfpossessed, always a commanding presence--an effect that could in no way be attributed to his slender build, but seemed more to emanate from his eyes. Bowing from the waist in his courtly manner, he addressed the policemen, who were too out of breath to speak, and probably overawed into silence by their fantastic experience.

"Gentlemen," he said, "I am sorry, but you are just a trifle too late to witness my experiment. I found it necessary to stop it suddenly and unexpectedly and in an unusual way just as you entered. If you will come around this evening I will have another oscillator attached to this platform and each of you can stand on it. you will, I am sure, find it a most interesting and pleasurable experience. Now you must leave, for I have many things to do. Good day, gentlemen."

George Scherff, Tesla's secretary, was standing nearby when Tesla so dramatically smashed his earthquake maker. Tesla never told the story beyond this point, and Mr. Scherff declares he does not recall what the response of the cops was. Imagination must finish the finale to the story.

At the moment, though, Tesla was quite sincere in his attitude. He had no idea of what had happened elsewhere in the neighborhood as a result of his experiment, but the effect on his own laboratory had been sufficiently threatening to cause him to halt it suddenly. when he learned the details, however, he was convinced that he was correct in his belief that the field of mechanical vibrations was rich with opportunities for scientific investigation. we have no records available of any further major experiments with vibration in that laboratory. Perhaps the Police and Building Departments had offered some emphatic suggestions to him concerning experiments of this nature.

Tesla's observations in this experiment were limited to what took place on the floor of the building in which his laboratory was located, but apparently very little happened there until a great deal had happened elsewhere. The

oscillator was firmly fixed to a supporting column and there were similar supporting columns directly under it on each floor down to the foundations. The vibrations were transmitted through the columns to the ground. This section of the city is built on deep sand that extends down some hundreds of feet before bed rock is reached. It is well known to seismologists that earthquake vibrations are transmitted by sand with much greater intensity than they are by rock. The ground under the building and around it was, therefore, an excellent transmitter of mechanical vibrations, which spread out in all directions. They may have reached a mile or more. They were more intense, of course, near their source and became weaker as the distance increased. However, even weak vibrations that are sustained can build up surprisingly large effects when they are absorbed by an object with which they are in resonance. A distant object in resonance can be thrown into strong vibration whereas a much nearer object not in resonance will be left unaffected.

It was this selective resonance that was, apparently, operating in Tesla's experiment. Buildings other than his own came into resonance with the increasing tempo of his oscillator long before his own building was affected. After the pandemonium was under way for some time elsewhere and the higher frequencies were reached, his immediate surroundings started to come into resonance.

when resonance is reached the effects follow instantly and powerfully. Tesla knew this, so when he observed dangerous resonance effects developing in his building he realized he had to act fast. The oscillator was being operated by compressed air supplied by a motor-driven compressor that fed the air into a tank, where it was stored under pressure. Even if the motor were shut off, there was plenty of air in the tank to keep the oscillator going for many minutes--and in that time the building could be completely wrecked and reduced to a pile of debris. with the vibrations reaching this dangerous amplitude, there was no time to try to disconnect the vibrator from the air line or to do anything about releasing the air from the tank. There was time for only one thing, and Tesla did that. He grabbed the near-by sledge hammer and took a mighty swing at the oscillator in hopes of putting it out of operation. He succeeded in his first attempt.

The device was made of cast iron and was of rugged construction. There were no delicate parts that could be easily damaged. Tesla has never published a description of the device, but its construction was principally that of a piston which moved back and forth inside a cast-iron cylinder. The only way to stop it from operating was to smash the outer cylinder. Fortunately, that is what happened from the first blow.

As Tesla turned around after delivering this lucky blow and beheld the visiting policemen, he could not understand the reason for their visit. The dangerous vibrations had developed in his building only within the preceding minute, and the policemen would not have had time to plan a visit in connection with them, he figured, so they must have come for some other less critical purpose, and therefore he proposed to dismiss them until a more opportune moment.

Tesla related this experience to me when I asked the inventor's opinion of a plan that I had suggested some time previously to Elmer Sperry, Jr., son of the famous inventor of many gyroscope devices. when a heavy gyroscope, such as is used in stabilizing ships, is forced to turn on its axis, it transmits a powerful downward thrust through the bearings in which the supporting gimbal is mounted. If a battery of such gyroscopes were mounted in regions where severe earthquakes take place it would transmit thrusts to the ground at equally timed intervals and build up resonance vibrations in the strata of the earth that would cause earthquake strains to be released while they were of small magnitude, thus producing very small earthquakes instead of letting the strains build up to large magnitudes which, when they let go, would cause devastating earthquakes.

The idea made a strong appeal to Tesla; and in his discussion, after telling me of the experience here related, he further declared that he had so far developed his study of vibrations that he could establish a new science of "telegeodynamics" which would deal not only with the transmission of powerful impulses through the earth to distant points to produce effects of large magnitude--in addition, he could use the same principles to detect distant objects. In the later thirties, before the outbreak of the war, he declared that he could apply these principles for the detection of submarines or other ships

at a distance, even though they were lying at anchor and no engines operating on them.

His system of telegeodynamics, using mechanical vibrations, Tesla declared, would make it possible to determine the physical constant of the earth and to locate ore deposits far beneath the surface. This latter prediction has since been fulfilled, for many oil fields have been discovered by studying the vibrations reflected from sub-surface strata.

"So powerful are the effects of the telegeodynamic oscillator," said Tesla in reviewing the subject in the thirties, "that I could now go over to the Empire State Building and reduce it to a tangled mass of wreckage in a very short time. I could accomplish this result with utmost certainty and without any dificulty whatever. I would use a small mechanical vibrating device, an engine so small you could slip it in your pocket. I could attach it to any part of the building, start it in operation, allow it twelve to thirteen minutes to come to full resonance. The building would first respond with gentle tremors, and the vibrations would then become so powerful that the whole structure would go into resonant oscillations of such great amplitude and power that rivets in the steel beams would be loosened and sheared. The outer stone coating would be thrown off and then the skeleton steel structure would collapse in all its parts. It would take about 2.5 (This figure may have been .25 or 2.5 horsepower. The notes are old and somewhat indistinct. Memory favors the latter figure.) horsepower to drive the oscillator to produce this effect"

Tesla developed his inventions to the point at which they were spectacular performers before they were demonstrated to the public. when presented, the performance always greatly exceeded the promise. This was the case with his first public demonstration of "wireless," but he complicated the situation by coupling with his radio invention another new idea--the robot.

Tesla staged his demonstration in the great auditorium of Madison Square Garden, then on the north side of Madison Square, in September, 1898, as part of the first annual Electrical Exhibition. He had a large tank built in the center of the arena and in this he placed an iron-hulled boat a few feet long, shaped like an ark, which he operated by remote control by means of his wireless system.

Extending upward from the center of the roof of the boat was a slender metal rod a few feet high which served as an antenna, or &aerial, for receiving the wireless wave. Near the bow and stern were two small metal tubes about a foot high surmounted by small electric lamps. The interior of the hull was packed with a radio receiving set and a variety of motor-driven mechanisms which put into effect the operating orders sent to the boat by wireless waves. There was a motor for propelling the boat and another motor for operating the servo-mechanism, or mechanical brain, that interpreted the orders coming from the wireless receiving set and translated them into mechanical motions, which included steering the boat in any direction, making it stop, start, go forward or backward, or light either lamp. The boat could thus be put through the most complicated maneuvers.

Anyone attending the exhibition could call the maneuver for the boat, and Tesla, with a few touches on a telegraph key, would cause the boat to respond. His control point was at the far end of the great arena.

The demonstration created a sensation and Tesla again was the popular hero. It was a front-page story in the newspapers. Everyone knew the accomplishment was a wonderful one, but few grasped the significance of the event or the importance of the fundamental discovery which it demonstrated. The basic aspects of the invention were obscured by the glamor of the demonstration.

The Spanish American war was under way. The success of the U.S. Navy in destroying the Spanish fleets was the leading topic of conversation. There was resentment over the blowing up of the U.S.S. Maine in Havana Harbor. Tesla's demonstration fired the imagination of everyone because of its possibilities as a weapon in naval warfare.

waldemar Kaempffert, then a student in City College and now Science Editor of the New York Times, discussed its use as a weapon with Tesla.

"I see," said Kaempffert, "how you could load an even larger boat with a cargo of dynamite, cause it to ride submerged, and explode the dynamite whenever you wished by pressing the key just as easily as you can cause the light on the bow to shine, and blow up from a distance by wireless even the largest of battleships." (Edison had

earlier designed an electric torpedo which received its power by a cable that remained connected with the mother ship.)

Tesla was patriotic, and was proud of his status, which he had acquired in 1889, as a citizen of the United States. He had offered his invention to the Government as a naval weapon, but at heart he was opposed to war.

"you do not see there a wireless torpedo," snapped back Tesla with fire flashing in his eyes, "you see there the first of a race of robots, mechanical men which will do the laborious work of the human race.

The "race of robots" was another of Tesla's original and important contributions to human welfare. It was one of the items of his colossal project for increasing human energy and improving the efficiency of its utilization. He visualized the application of the robot idea to warfare as well as to peaceful pursuits; and out of the broad principles enunciated, he developed an accurate picture of warfare as it is being carried on today with the use of giant machines as weapons--the robots he described.

"This evolution," he stated in an article in the Century Magazine of June, 1900, "will bring more and more into prominence a machine or mechanism with the fewest individuals as an element of warfare. . . . Greatest possible speed and maximum rate of energy delivery by the war apparatus will be the main object. The loss of life will become smaller. . . ."

Outlining the experiences that led him to design the robots, or automatons, as he called them, Tesla stated:

I have by every thought and act of mine, demonstrated, and do so daily, to my absolute satisfaction that I am an automaton endowed with power of movement, which merely responds to external stimuli beating upon my sense organs, and thinks and moves accordingly. . . .

with these experiences it was only natural that, long ago, I conceived the idea of constructing an automaton which would mechanically represent me, and which would respond, as I do myself, but, of course, in a much more primitive manner, to external influences. Such an automaton evidently had to have motive power, organs for locomotion, directive

organs, and one or more sensitive organs so adapted as to be excited by external stimuli.

This machine would, I reasoned, perform its movements in the manner of a living being, for it would have all of the chief elements of the same. There was still the capacity for growth, propagation, and, above all, the mind which would be wanting to make the model complete. But growth was not necessary in this case since a machine could be manufactured full-grown, so to speak. As to capacity for propagation, it could likewise be left out of consideration, for in the mechanical model it merely signified a process of manufacture.

whether the automaton be of flesh and bone, or of wood and steel, mattered little, provided it could perform all the duties required of it like an intelligent being. To do so it would have to have an element corresponding to the mind, which would effect the control of its movements and operations, and cause it to act, in any unforeseen case that might present itself, with knowledge, reason, judgement and experience. But this element I could easily embody in it by conveying to it my own intelligence, my own understanding. So this invention was evolved, and so a new art came into existence, for which the name "telautomatics" has been suggested, which means the art of controlling the movements and operations of distant automatons.

In order to give the automaton an individual identity it would be provided with a particular electrical tuning, Tesla explained, to which it alone would respond when waves of that particular frequency were sent from a control transmitting station; and other automatons would remain inactive until their frequency was transmitted. This was Tesla's fundamental radio tuning invention, the need for which other radio inventors had not yet glimpsed although Tesla had described it publicly a half-dozen years earlier.

Tesla not only used in the control of his automaton the long waves now used in broadcasting--which are very different from the short waves used by Marconi and all others; for those could be interfered with by the imposition of an intervening object--but he was explaining the use, through his system of tuning, of the spectrum of allocations for individual stations that now appears on the dials of radio receiving sets. He continued:

By the simple means described the knowledge, experience, judgement--the mind, so to speak--of the distant operator were embodied in that machine, which was thus enabled to move and perform all of its operations with reason and intelligence. It behaved just like a blindfolded person obeying directions received through the ear.

The automatons so far constructed had "borrowed minds," so to speak, as each formed merely part of the distant operator who conveyed to it his intelligent orders; but this art is only in the beginning.

I purpose to show that, however impossible it may now seem, an automaton may be contrived which will have its "own mind," and by this I mean that it will be able, independently of any operator, left entirely to itself, to perform, in response to external influences affecting its sensitive organs, a great variety of acts and operations as if it had intelligence.

It will be able to follow a course laid out or to obey orders given far in advance; it will be capable of distinguishing between what it ought and ought not to do, and of making experiences or, otherwise stated, of recording impressions which will deffinitely affect its subsequent actions. In fact I have already conceived such a plan.

Although I evolved this invention many years ago and explained it to my visitors very frequently in my laboratory demonstrations, it was not until much later, long after I had perfected it, that it became known, when, naturally enough, it gave rise to much discussion and to sensational reports.

But the true significance of this new art was not grasped by the majority, nor was the great force of the underlying principle recognized. As nearly as I could judge from the numerous comments which then appeared, the results I had obtained were considered as entirely impossible. Even the few who were disposed to admit the practicability of the invention saw in it merely an automobile torpedo, which was to be used for the purpose of blowing up battleships, with doubtful success. . . .

But the art I have evolved does not contemplate merely the change of direction of a moving vessel; it affords means of

absolutely controlling in every respect, all the innumerable translatory movements, as well as the operations of all the internal organs, no matter how many, of an individualized automaton.

Tesla, in an unpublished statement, prepared fifteen years later, recorded his experience in developing automata, and his unsuccessful effort to interest the war Department, and likewise commercial concerns, in his wirelessly controlled devices.

The idea of constructing an automaton, to bear out my theory, presented itself to me early but I did not begin active work until 1893, when I started my wireless investigations. During the succeeding two or three years, a number of automatic mechanisms, actuated from a distance by wireless control, were constructed by me and exhibited to visitors in my laboratory.

In 1896, however, I designed a complete machine capable of a multitude of operations, but the consummation of my labors was delayed until later in 1897. This machine was illustrated and described in my article in the Century Magazine of June 1900, and other periodicals of that time and, when first shown in the beginning of 1898, it created a sensation such as no other invention of mine has ever produced.

In November 1898, a basic patent on the novel art was granted to me, but only after the Examiner-in-Chief had come to New York and witnessed the performance, for what I claimed seemed unbelievable. I remember that when later I called on an oficial in Washington, with a view of offering the invention to the Government, he burst out in laughter upon my telling him what I had accomplished. Nobody thought then that there was the faintest prospect of perfecting such a device.

It is unfortunate that in this patent, following the advice of my attorneys, I indicated the control as being effected through the medium of a single circuit and a well-known form of detector, for the reason that I had not yet secured protection on my methods and apparatus for individualization. As a matter of fact, my boats were controlled through the joint action of several circuits and interference of every kind was excluded. Most generally I employed receiving circuits in the form of loops, including

condensers, because the discharges of my high tension transmitter ionized the air in the hall so that even a very small &aerial would draw electricity from the surrounding atmosphere for hours.

Just to give an idea, I found, for instance, that a bulb 12" in diamater, highly exhausted, and with one single terminal to which a short wire was attached, would deliver well on to one thousand successive flashes before all charge of the air in the laboratory was neutralized. The loop form of receiver was not sensitive to such a disturbance and it is curious to note that it is becoming popular at this late date. In reality it collects much less energy than the aerials or a long grounded wire, but it so happens that it does away with a number of defects inherent to the present wireless devices.

In demonstrating my invention before audiences, the visitors were requested to ask any questions, however involved, and the automaton could answer them by signs. This was considered magic at that time but was extremely simple, for it was myself who gave the replies by means of the device.

At the same period another larger telautomatic boat was constructed. It was controlled by loops having several turns placed in the hull, which was made entirely water tight and capable of submergence. The apparatus was similar to that used in the first with the exception of certain special features I introduced as, for example, incandescent lamps which afforded a visible evidence of the proper functioning of the machine and served for other purposes.

These automata, controlled within the range of vision of the operator, were, however, the first and rather crude steps in the evolution of the Art of Telautomatics as I had conceived it. The next logical improvement was its application to automatic mechanisms beyond the limits of vision and at great distances from the center of control, and I have ever since advocated their employments as instruments of warfare in preference to guns. The importance of this now seems to be recognized, if I am to judge from casual announcements through the press of achievements which are said to be extraordinary but contain no merit of novelty whatever.

In an imperfect manner it is practicable, with the existing wireless plants, to launch an aeroplane, have it follow a certain approximate course, and perform some operation at a distance of many hundreds of miles. A machine of this kind can also be mechanically controlled in several ways and I have no doubt that it may prove of some usefulness in war. But there are, to my best knowledge, no instrumentalities in existence today with which such an object could be accomplished in a precise manner. I have devoted years of study to this matter and have evolved means, making such and greater wonders easily realizable.

As stated on a previous occasion, when I was a student at college I conceived a flying machine quite unlike the present ones. The underlying principle was sound but could not be carried into practice for want of a prime-mover of suficiently great activity. In recent years I have successfully solved this problem and am now planning aerial machines devoid of sustaining planes, ailerons, propellers and other external attachments, which will be capable of immense speeds and are very likely to furnish powerful arguments for peace in the near future. Such a machine, sustained and propelled entirely by reaction, can be controlled either mechanically or by wireless energy. By installing proper plants it will be practicable to project a missile of this kind into the air and drop it almost on the very spot designated which may be thousands of miles away. But we are not going to stop at this.

Tesla is here describing--nearly fifty years ago--the radio-controlled rocket, which is still a confidential development of world war II, and the rocket bombs used by the Germans to attack England. The rocket-type airship is a secret which probably died with Tesla, unless it is contained in his papers sealed by the Government at the time of his death. This, however, is unlikely, as Tesla, in order to protect his secrets, did not commit his major inventions to paper, but depended on an almost infallible memory for their preservation.

"Telautomata," he concluded, "will be ultimately produced, capable of acting as if possessed of their own intelligence and their advent will create a revolution. As early as 1898 I proposed to representatives of a large manufacturing concern the construction and public exhibition of an automobile carriage which, left to itself, would perform a great variety of operations involving something akin to

judgment. But my proposal was deemed chimerical at that time and nothing came from it."

Tesla, at the Madison Square Garden demonstration in 1898 which lasted for a week, presented to the world, then, two stupendous developments, either of which alone would have been too gigantic to have been satisfactorily assimilated by the public in a single presentation. Either one of the ideas dimmed the glory of the other.

This first public demonstration of wireless, the forerunner of modern radio, in the amazing stage of development to which Tesla carried it, at this early date, was too tremendous a project to be encompassed within a single dramatization. In the hands of a competent public-relations councillor, or publicity man, as he was called in those days (but the employment of one was utterly abhorrent to Tesla), this demonstration would have been limited to the wireless aspect alone, and would have included just a simple two-way sending-and-receiving set for the transmission of messages by the Morse dots and dashes. Suitably dramatized, this would have been a suficient thrill for one show. At a subsequent show he could have brought in the tuning demonstration which would have shown the selective response of each of a series of coils, indicated by his strange-looking vacuum-tube lamps. The whole story of just the tuning of wireless circuits and stations to each other was too big for any one demonstration. An indication of its possibilities was all the public could absorb.

The robot, or automaton, idea was a new and an equally stupendous concept, the possibilities of which were not lost, however, on clever inventors; for it brought in the era of the modern labor-saving device--the mechanization of industry on a mass-production basis.

Using the Tesla principles, John Hays Hammond, Jr. developed an electric dog, on wheels, that followed him like a live pup. It was motor operated and controlled by a light beam through selenium cells placed behind lenses used for eyes. He also operated a yacht, entirely without a crew, which was sent out to sea from Boston harbor and brought back to its wharf by wireless control.

A manless airplane was developed toward the close of the First world war. It rose from the ground, flew one hundred

miles to a selected target, dropped its bombs, and returned to its home airport, all by wireless control. It was also developed so that on a signal from a distant radio station the plane would rise into the air, choose the proper direction, fly to a city hundreds of miles away and set itself down in the airport at that city. This Tesla-type robot was developed in the plant of the Sperry Gyroscope Company, where Elmer Sperry invented a host of amazing mechanical robots controlled by gyroscopes, such as the automatic pilots for airplanes and for ships.

All of the modern control devices using electronic tubes and electric eyes that make machines seem almost human and enable them to perform with superhuman activity, dependability, accuracy and low cost, are children of Tesla's robot, or automaton. The most recent development, in personalized form, was the mechanical man, a metal human monster giant, that walked, talked, smoked a cigarette, and obeyed spoken orders, in the exhibit of the Westinghouse Electric and Manufacturing Company at the New York world's Fair. Robots have been used, as well, to operate hydroelectric powerhouses and isolated substations of powerhouses.

In presenting this superabundance of scientific discovery in a single demonstration, Tesla was manifesting the superman in an additional role that pleased him greatly--that of the man magnificent. He would astound the world with a superlative demonstration not only of the profundity of the accomplishments of the superman, but, in addition, of the prolific nature of the mind of the man magnificent who could shower on the world a superabundance of scientific discoveries.

ELEVEN

TESLA was now ready for new worlds to conquer. After presenting to the public his discoveries relating to wireless signaling or the transmission of intelligence, as he called it, Tesla was anxious to get busy on the power phase: his projected world-wide distribution of power by wireless methods.

Again Tesla was faced with a financial problem or, to state the matter simply, he was broke. The $40,000 which was paid for the stock of the Nikola Tesla Company by Adams had been spent. The company had no cash on hand; but it held patents worth many millions if they had been handled in a practical way. A gift of $10,000 from John Hays Hammond, the famous mining engineer, had financed the work leading up to the Madison Square Garden wireless and robot demonstration.

Tesla had built ever larger and more powerful oscillators in his Houston Street laboratory. when he constructed one that produced 4,000,000 volts he reached beyond the limits in which high voltage could be handled within a city building. The sparks jumped to the walls, floors and ceilings. He needed a larger open space. He wanted to build vastly larger coils. He dreamed of a tremendous structure he would like to build somewhere in the open country spaces. He felt certain his wireless patents would prove tremendously valuable in a short time, and he would then have all the money he needed to build his laboratory. But he had already progressed to the point at which further advancement demanded the use of such a building--and he was broke. A loan of $10,000 offered by his friend Crawford, of the dry goods firm of Simpson and Crawford, took care of immediate needs.

Leonard E. Curtis, of the Colorado Springs Electric Company, a great admirer of Tesla, when he heard of Tesla's plan to conduct experiments on a gigantic scale, invited him to locate his laboratory at Colorado Springs, where he would provide him with the necessary land and all the electric power he needed for his work.

Col. John Jacob Astor, owner of the waldorf-Astoria, held his famous dining-room guest in the highest esteem as a personal friend, and kept in close touch with the progress of his investigations. when he heard that his researches were being halted through lack of funds, he made available to Tesla the $30,000 he needed in order to take advantage of Curtis' offer and build a temporary plant at Colorado Springs. Tesla arrived in Colorado in May, 1899, bringing with him some of his laboratory workers, and accompanied by an engineering associate, Fritz Lowenstein.

while Tesla was making experiments on natural lightning and other subjects in his mountain laboratory, the construction work on his high-power transmitting apparatus was being

rushed. He gave his personal supervision to even the finest details of every piece of apparatus. He was working in a virgin field. None had gone before him to pave the way or gain experience that would be helpful to him in designing his experiments or his machines. He was entirely on his own, working without human guidance of any kind, exploring a field of knowledge far beyond that which anyone else had reached. He had previously astonished the world in developing a system of power transmission in which pressures of tens of thousands of volts were used; now he was working with millions of volts, and no one knew what would happen when such tremendous potentials were produced. He believed, however, that he would make his own magnificent polyphase system obsolete by creating a better one.

In about three months after his arrival at Colorado Springs the building with its fantastic shapes, towers and masts was completed, and the giant oscillator with which the principal experiment was to be made was ready for operation.

The wild, rugged, mountainous terrain of Colorado, in which Tesla set up his laboratory, is a natural generator of tremendous electrical activity, producing lightning discharges of a magnitude and intensity probably not equaled anywhere else on earth. Overwhelming bolts from both earth and sky flashed with frightening frequency during the almost daily lightning storms. Tesla made a very detailed study of natural lightning while his apparatus, which would imitate it, was being constructed. He learned a great deal about the characteristics of the various kinds of discharges.

The gods of the natural lightning may have become a bit jealous of this individual who was undertaking to steal their thunder, as Prometheus had stolen fire, and sought to punish him by wrecking his fantastic looking structure. It was badly damaged, and narrowly escaped destruction, by a bolt of lightning, not one that made a direct hit but one that struck ten miles away.

The blast hit the laboratory at the exact time, to the split second, that Tesla predicted it would. It was caused by a tidal wave of air coming from a particular type of lightning discharge. Tesla tells the story in an unpublished report. He stated:

I have had many opportunities for checking this value by observation of explosions and lightning discharges. An ideal case of this kind presented itself at Colorado Springs in July 1899 while I was carrying on tests with my broadcasting power station which was the only wireless plant in existence at that time.

A heavy cloud had gathered over Pikes Peak range and suddenly lightning struck at a point just ten miles away. I timed the flash instantly and upon making a quick computation told my assistants that the tidal wave would arrive in 48.5 seconds. Exactly with the lapse of this time interval a terrific blow struck the building which might have been thrown off the foundation had it not been strongly braced. All the windows on one side and a door were demolished and much damage done in the interior.

Taking into account the energy of the electric discharge and its duration, as well as that of an explosion, I estimated that the concussion was about equivalent to that which might have been produced at that distance by the ignition of twelve tons of dynamite.

The experimental station which Tesla erected was an almost square barnlike structure nearly one hundred feet on each side. The sides were twenty-five feet high, and from them the roof sloped upward toward the center. From the middle of the roof rose a skeleton pyramidal tower made of wood. The top of this tower was nearly eighty feet above the ground. Extensions of the slanting roof beams extended outward to the ground to serve as flying buttresses to reinforce the tower. Through the center of the tower extended a mast nearly two hundred feet high, at the top of which was mounted a copper ball about three feet in diameter. The mast carried a heavy wire connecting the ball with the apparatus in the laboratory. The mast was arranged in sections so that it could be disjointed and lowered.

There were many pieces of apparatus in the building, and many forms and sizes of his Tesla coils, or high-frequency current transformers. The principal device was his "magnifying transmitter." This was merely a very large Tesla coil. A circular fence-like wall seventy-five feet in diameter was built in the large central room of the structure, and on this were wound the turns of the giant primary coil of the magnifying transmitter. The secondary

was a coil about ten feet in diameter, of about seventy-five turns of wire wound on a cylindrical skeletonized framework of wood. It had a vertical length of about ten feet and was mounted in the center of the room several feet above the floor. In the center of this coil was the bottom part of the mast. The roof above this portion of the room could be slid outward in two sections, so that no material came within a long distance of the mast and its wire conductor within the lower third of the distance above the ground.

One of the first problems Tesla sought to solve when he began his researches in the mountains of Colorado was whether the earth was an electrically charged body. Nature is usually very generous in her response when scientists ask her, in their experiments, questions of first magnitude. Tesla not only received a very satisfactory answer to his question but in addition a revelation of tremendous importance, an unveiling of a secret of Nature's operations which places in the hands of man a means of manipulating electrical forces on a terrestrial scale.

It was desirable for Tesla to learn whether the earth was electrically charged for the same reason that a violinist would want to know whether the strings of his instrument lay loose and inert across the bridge or whether they were tense and taut so that they would produce a musical note if plucked, or a football player would want to know if the pigskin were inflated or limp.

If the earth were uncharged, it would act as a vast sink into which electricity would have to be flowed in tremendous amounts to bring it to the state in which it could be made to vibrate electrically. An uncharged earth would somewhat complicate Tesla's plans. He quickly discovered that the earth is charged to an extremely high potential and is provided with some kind of a mechanism for maintaining its voltage. It was while determining this fact that he made his second big discovery.

Tesla made the first announcement of his discovery shortly after his return to New York in an amazing article in the Century of June, 1900, but the story is best told by Tesla in an article in the Electrical world and Engineer, May 5, 1904:

In the middle of June, while preparations for other work were going on, I arranged one of my receiving transformers with the view of determining in a novel manner, experimentally, the electrical potential of the globe and studying its periodic and casual fluctuations. This formed part of a plan carefully mapped out in advance

A highly sensitive, self restorative device, controlling a recording instrument, was included in the secondary circuit, while the primary was connected to the ground and the secondary to an elevated terminal of adjustable capacity. The variations of electrical potential gave rise to electrical surgings in the primary; these generated secondary currents, which in turn affected the sensitive device and recorder in proportion to their intensity.

The earth was found to be, literally, alive with electrical vibrations, and soon I was deeply absorbed in this interesting investigation. No better opportunity for such observations as I intended to make could be found anywhere.

Colorado is a country famous for the natural displays of electric force. In that dry and rarefied atmosphere the sun's rays beat on objects with fierce intensity. I raised steam to a dangerous pressure, in barrels filled with concentrated salt solution and the tinfoil coating of some of my elevated terminals shrivelled in the fiery blaze. An experimental high tension transformer, carelessly exposed to the rays of the setting sun, had most of its insulating compound melted and was rendered useless.

Aided by the dryness and rarefaction of the air, the water evaporates as in a boiler, and static electricity is generated in abundance. Lightning discharges are, accordingly, very frequent and sometimes of inconceivable violence. On one occasion approximately 12,000 discharges occurred within two hours, and all in the radius of certainly less than 50 kilometers [about 30 miles] from the laboratory. Many of them resembled gigantic trees of fire with the trunks up or down. I never saw fireballs, but as a compensation for my disappointment I succeeded later in determining the mode of their formation and producing them artificially.

In the latter part of the same month I noticed several times that my instruments were affected stronger by discharges taking place at great distances than by those

near by. This puzzled me very much. what was the cause? A number of observations proved that it could not be due to differences in the intensity of individual discharges and I readily ascertained that the phenomenon was not the result of a varying relation between the periods of my receiving circuits and those of the terrestrial disturbances.

One night as I was walking home with an assistant, meditating over these experiences, I was suddenly staggered by a thought. Years ago when I wrote a chapter of my lecture before the Franklin Institute and the National Electric Light Association, it had presented itself to me, but I dismissed it as absurd and impossible. I banished it again. Nevertheless, my instinct was aroused and somehow I felt that I was nearing a great revelation.

It was on the 3rd of July [1899]--the date I shall never forget--when I obtained the first decisive experimental evidence of a truth of overwhelming importance for the advancement of humanity.

A dense mass of strongly charged clouds gathered in the west and toward evening a violent storm broke loose which, after spending much of its fury in the mountains, was driven away with great velocity over the plains. Heavy and long persistent arcs formed almost in regular time intervals. My observations were now greatly facilitated and rendered more accurate by the experiences already gained. I was able to handle my instruments quickly and I was prepared. The recording apparatus being properly adjusted, its indications became fainter and fainter with increasing distance of the storm, until they ceased altogether.

I was watching in eager expectation. Surely enough, in a little while the indications again began, grew stronger and stronger, and, after passing through a maximum, gradually decreased and ceased once more. Many times, in regularly recurring intervals, the same actions were repeated until the storm which, as evident from simple computations, was moving with nearly constant speed, had retreated to a distance of about 300 kilometers [about 180 miles]. Nor did these strange actions stop then, but continued to manifest themselves with undiminished force.

Subsequently similar observations were also made by my assistant, Mr. Fritz Lowenstein, and shortly afterward several admirable opportunities presented themselves which

brought out, still more forcibly and unmistakably, the true nature of the wonderful phenomenon. No doubt whatever remained: I was observing stationary waves.

As the source of the disturbances moved away the receiving circuit came successively upon their nodes and loops. Impossible as it seemed, this planet, despite its vast extent, behaved like a conductor of limited dimensions. The tremendous significance of this fact in the transmission of energy by my system had already become quite clear to me.

Not only was it practicable to send telegraphic messages to any distance without wires, as I recognized long ago, but also to impress upon the entire globe the faint modulations of the human voice, far more still, to transmit power, in unlimited amounts to any terrestrial distance and almost without loss.

To get a more familiar picture of the problem that Tesla tackled in seeking to determine if the earth were charged and if it could be set into electrical vibration, one can visualize the difference between a bath tub that is empty and one that contains water. The uncharged earth would be like an empty tub; the charged earth like one containing water. It is easy to produce waves in the tub containing the water. By placing one's hand in the water and moving it back and forth, lengthwise, a short distance at the right rhythm, the water is soon rushing back and forth in a wave whose amplitude grows at a tremendously rapid rate until, if the hand motion is continued, the water may splash as high as the ceiling.

The earth can be visualized as an extremely large container holding a fluid; and in the center is a small plunger arrangement which can be moved tip and down a short distance in the proper rhythm. The waves travel to the edge of the container and are reflected back to the center, from which they again go outward re-enforced by the movement of the plunger.

The reaction between the outgoing and incoming waves, both in resonance with the medium in which they are traveling, causes stationary waves to be produced on the water, the surface having the appearance of a single series of waves frozen in a fixed position.

In Tesla's experiments the lightning discharges that played the part of the plunger causing the waves were moving rapidly to the eastward, and they carried the whole series of fixed, or stationary, waves with them. The measuring device remained fixed so the wave series, with its loops and nodes, moved past it, causing the measured potentials to rise and fall.

The experiment not only demonstrated that the earth was filled with electricity, but that this electricity could be disturbed so that rhythmic vibrations could be struck, resonance could be produced, causing effects of tremendous magnitude. Soldiers marching in unison across a bridge and wrecking it by the resulting vibration would again be a case in point.

Tesla produced the spectacular effects of extremely high potentials and high frequency by producing electrical resonance in his circuits--by tuning the electricity--and now he had discovered that he would be able to produce, easily, the same effect in the earth as if it were a single condenser and coil combined, a pure electrical resonating unit, by charging and discharging it rhythmically with his high-frequency, high-potential oscillations.

In this magnificent experiment Tesla the superman was at his best; the boldness of his undertaking fired the imagination, and the success he achieved should have earned for him undying fame.

Eventually, the giant coils with their banks of condensers and other apparatus in, the Colorado laboratory were ready for use in full-scale experiments. Every piece of equipment was thoroughly inspected and tested by Tesla and the moment had finally arrived for the critical test of the highest voltage experiment that had ever been made. He expected to top his own earlier records one hundred times over, and to produce tens of thousands of times higher voltages than ever had been produced in the high-voltage transmission lines at Niagara Falls.

There was not the faintest shadow of doubt in Tesla's mind as to whether his giant oscillator would work. He knew it would work, but he also knew that he was going to produce millions of volts and tremendously heavy currents; and neither he nor anyone else knew how these terrific explosions of electrical energy would act. He knew that he

had planned the experiment so that the first bolts of man-made lightning ever created would shoot from the top of the 200-foot-tall mast.

Tesla asked Kolman Czito, who had worked with him for many years in his laboratories in New York, to preside at the switch-board through which current was brought into the laboratory from the powerhouse of the Colorado Springs Electric Company by an overhead transmission line two miles long.

"when I give you the word," said Tesla to Czito, "you close the switch for one second--not longer."

The inventor took a position near the door of the laboratory from which he could view the giant coil in the center of the great barnlike room--but not too close to it, for a stray bolt of his own lightning might inflict a painful burn. From the point where he stood he could look upward toward the open roof and see the three-foot copper ball on top of the slender 200-foot mast that had its base in the center of the cagelike secondary coil. A quick visual survey of the situation, and Tesla gave the signal--"Now."

Czito jammed home the switch and as quickly pulled it out. In that brief interval the secondary coil was crowned with a mass of hairlike electrical fire, there was a crackling sound in various parts of the room and a sharp snap far overhead.

"Fine," said Tesla, "the experiment is working beautifully. we will try it again in exactly the same way. Now!"

Again Czito jammed home the switch for a second and opened it. Again the plumes of electrical fire came from the coil, minor sparks crackled in all parts of the laboratory and the very sharp snap came through the open roof from far overhead.

"This time," said Tesla, "I am going to watch the top of the mast from the outside. when I give you the signal I want you to close the switch and leave it closed until I give you the signal to open it." So saying, he started for the near-by open door.

Reaching a point outside from which he could see the copper ball on top of the needlelike mast, Tesla called through the door, "Czito, close the switch--Now!"

Czito again jammed the switch closed and jumped back--but held his arm extended to yank open the blades quickly should he receive an emergency signal. Nothing much had happened on the quick-contact closing, but now the apparatus would be given an opportunity to build up its full strength and no one knew what to expect. He knew that the apparatus would draw a very heavy current through a primary coil that looked like a "short circuit," and he knew that short circuits could be very destructive if the current was allowed to continue to flow. The switchboard could become a scene of interesting activity if any thing let go. Czito expected the quick flash and explosive blast of a short circuit a second or two after the switch was closed. Several seconds passed with no short circuit.

As soon as the switch was closed there came again the same crackling sound, the same snap high in the air that he had heard before. Now it was followed by a tremendous upsurge of sound. The crackling from the coil swelled into a crescendo of vicious snaps. From above the roof the original staccato snap was followed by a sharper one--and by another that was like the report of a rifle. The next was still louder. They came closer together like the rattle of a machine gun. The bang high in the air became tremendously louder; it was now the roar of a cannon, with the discharges rapidly following each other as if a gigantic artillery battle was taking place over the building. The sound was terrifying and the thunder shook the building in most threatening fashion.

There was a strange ghostly blue light in the great barnlike structure. The coils were flaming with masses of fiery hair. Everything in the building was spouting needles of flame, and the place filled with the sulphurous odor of ozone, fumes of the sparks, which was all that was needed to complete the conviction that hell was breaking loose and belching into the building.

As Czito stood near the switch he could feel and see the sparks jump from his fingers, each pricking like a needle stuck into his flesh. He wondered if he would be able to reach for the switch and turn off the power that was creating this electrical pandemonium--would the sparks

become longer and more powerful if he approached the switch? Must this head-splitting racket go on forever? It's getting worse, that tremendous ear-wrecking bang, bang, bang overhead. why doesn't Tesla stop it before it shakes down the building? Should he open the switch of his own accord? Maybe Tesla has been hit, perhaps killed, and can't give orders to open the switch!

It seemed to Czito that the demonstration had been going on for an hour but as a matter of fact it had lasted thus far for only a minute; nevertheless, a tremendous amount of activity had been crowded into that short space of time.

Outside stood Tesla, properly attired in cutaway coat and black derby hat for the auspicious occasion, his slender six-foot-two figure bearing signs of close relationship to the mastlike rod sticking out of his bizarre barnlike structure. His height was increased by a one-inch-thick layer of rubber on the soles and heels of his shoes, used as electrical insulation.

As he gave the switch-closing "Now" signal to Czito, he turned his eyes heavenward to the ball on top of the mast. He had hardly spoken when he saw a short hairlike spark dart from the ball. It was only about ten feet long, and thin. Before he had time to be pleased, there was a second and a third and a fourth spark, each longer, brighter and bluer than its predecessor.

"Ah!" ejaculated Tesla, forgetting to close his mouth that was widely opened for a shout. He clenched his hands for joy and raised them skyward toward the top of the mast.

More sparks! Longer and longer! Ten, twenty, thirty, forty, fifty, sixty, seventy, eighty feet. Brighter and bluer! Not thread-like sparks now but fingers of fire. Wriggling rods of flame that lashed viciously into the heavens. The sparks were now as thick as his arm as they left the ball.

Tesla's eyes almost popped out of his head as he saw full-fledged bolts of lightning darting into the air, accompanied by a barrage of tremendous crashes of thunder. Those lightning bolts were now half again the length of the building, more than 135 feet long, and the thunder was being heard in Cripple Creek fifteen miles away.

Suddenly--silence!

Tesla rushed into the building.

"Czito! Czito! Czito! why did you do that? I did not tell you to open the switch. Close it again quickly!"

Czito pointed at the switch. It was still closed. He then pointed at the voltmeter and ammeter on the switchboard. The needles of both of them registered zero.

Tesla sized up the situation instantly. The incoming wires carrying power to the laboratory were "dead."

"Czito," he snapped, "call up the powerhouse quickly. They must not do that. They have cut off my power".

The telephone call was put through to the powerhouse. Tesla grabbed the phone and shouted into it:

"This is Nikola Tesla. you have cut off my power! you must give me back power immediately! you must not cut off my power."

"Cut off your power, nothing," came the gruff reply from the other end of the line. "you've thrown a short circuit on our line with your blankety-blank-blank experiments and wrecked our station. you've knocked our generator off the line and she's now on fire. you won't get any more power!"

Tesla had built his apparatus substantially, so that it would be able to carry the tremendously heavy currents he expected to draw off the line. while his own equipment was able to stand what amounted to a heavy short circuit, he had overloaded the generator at the Colorado Springs Electric Company powerhouse, which tried manfully to carry the added burden--but the heavy surge of current was too much for the dynamo that was not designed to stand such heavy overloads. Its wires became hotter and hotter, and finally the insulation took fire and the copper wire in the armature coils melted like wax, opening its circuits so that it ceased to generate electricity.

The powerhouse had a second, standby, generator which was started up in a short time. Tesla was insistent that he be supplied with current from this machine as soon as it was running, but his demand was refused. In the future, he was told, he would be supplied with current from a dynamo

operated independently from the one supplying the Company's regular customers. The independent dynamo, he was told, would be the one that was already burned out--and he would get no service until it was repaired. Tesla offered to pay the cost of an extra-special rush job on the repairs if he were permitted to handle the work. Alternating-current dynamos were no mystery to him. Taking his workers from the laboratory to the powerhouse he soon had the repair job under way, and in less than a week the dynamo was again operating.

A lightning stroke produces its spectacular pyrotechnics and earthvibrating effects with less than a nickel's worth of electricity--at a five-cent-a-kilowatt hour rate, which is somewhat less than the average household rate for current. It consists of tremendously heavy currents, many thousands of amperes at millions of volts, but it lasts only a few millionths of a second. If supplied with this "nickel's worth" of current continuously, the lightning flash would last indefinitely.

Tesla, in his Colorado Springs laboratory, was pumping a steady flow of current worth, at the above rate, about $15.00 an hour into the earth. In an hour he charged the earth with several hundred times as much electrical energy as is contained in a single lightning stroke. Owing to resonance phenomena, he could build up electrical effects in the earth greatly exceeding those of lightning since it was only necessary, once resonance was established, to supply energy equal to frictional losses, in order to maintain this condition.

In describing his work with the giant oscillator, Tesla, using conservative estimates of his results, stated in his article in the Century Magazine of June, 1900:

However extraordinary the results shown may appear, they are but trifling compared with those attainable by apparatus designed on these same principles. I have produced electrical discharges the actual path of which, from end to end, was probably more than 100 feet long; but it would not be dificult to reach lengths 100 times as great.

I have produced electrical movements occurring at the rate of approximately 100,000 horsepower, but rates of one, five or ten million horsepower are easily practicable. In these

experiments effects were developed incomparably greater than ever produced by any human agencies, and yet these results are but an embryo of what is to be.

The method used by Tesla to set the earth in electrical oscillation is the electrical counterpart of the mechanical device previously described, the plunger bobbing up and down at the right rhythm that created the stationary waves in the water.

Tesla used a stream of electrons which were pumped into and drawn out of the earth at a rapid rhythmic rate. At the time the experiments were made, the electron still was not known to be the fundamental atom of electricity, so the operation was spoken of simply as the flow of electricity.

The pumping operation was carried on at a rate of 150,000 oscillations per second. These would produce electrical pulsations with a wavelength of 2,000 meters (about 6,600 feet).

when the moving waves expanded outward from Colorado Springs, they traveled in all directions in ever increasing circles until they passed over the bulge of the earth, and then in ever smaller circles and with increasing intensity converged on the diametrically opposite point of the earth, a trifle to the west of the two French Islands, Amsterdam and St. Paul, in the area between the Indian and Antarctic Oceans midway between the southern tip of Africa and the southwest corner of Australia. Here a tremendous electrical south pole was built up, marked by a wave of great amplitude that rose and fell in unison with Tesla's apparatus at its north pole in Colorado Springs. As this wave fell, it sent back an electrical echo which produced the same effect at Colorado Springs. Just as it arrived back at Colorado Springs, the oscillator was working to build up a wave that would re-enforce it and send it back more powerfully than before to the antipode to repeat the performance.

If there were no losses in this operation--if the earth were a perfect electrical conductor, and there were no other sources of resistance--this resonance phenomenon would build up to a destructive action of gigantic proportions, even with the charging source of only about 300 horsepower which Tesla used. Voltages of gigantic magnitudes would be built up. Charged particles of matter

would be hurled outward from the earth with vast energies, and eventually even the solid matter of the earth would be affected and the whole planet disintegrated. Pure resonance, however, is not attainable. Tesla frequently stressed the fortunate nature of this fact; for otherwise disastrous results could be produced by small amounts of energy. The electrical resistance of the globe would prevent the attainment of pure resonance; but practical resonance can be attained with safety by supplying continuously the amount of energy lost in resistance--and this supplies perfect control of the situation.

with the earth set in electrical oscillation, a source of energy is provided at all spots on the earth. This could be drawn off and made available for use by a suitable simple apparatus which would contain the same elements as the tuning unit in a radio set, but larger (a coil and a condenser), a ground connection and metal rod as high as a cottage. Such a combination would absorb, at any point on the earth's surface, energy from the waves rushing back and forth between the electrical north and south poles created by the Tesla oscillators. No other equipment would be needed to supply light to the home, provided with Tesla's simple vacuum-tube lamps, or to produce heating effects. (For the operation of ordinary-type motors, a frequency changer would be needed. Tesla, indeed, developed ironless motors that would operate on high-frequency currents, but they could not compete in efficiency with motors operated on low-frequency currents. Frequency transformation, however, is now a very practical operation.)

The apparatus that Tesla used to charge the earth is very simple in principle. In its elementary form it consists of a circuit containing a large coil and condenser of the correct electrical dimensions to give it the desired frequency of oscillation, a source of electric current for energizing the circuit, and a step-up transformer, also tuned, for increasing the voltage.

The current of a few hundred volts obtained from the powerhouse was stepped up by an ordinary iron box transformer to more than 30,000 volts and at this potential was fed into a condenser which, when filled, discharged into the coil connected across its terminals. The rate of the back-and-forth surge of current from condenser into coil and coil back to condenser, in endless repetition, is determined by the capacity of the condenser for holding

current and the length, or inductance, of the coil through which the discharge must travel. An arc between the joint terminals of condenser and coil completed the free oscillating path of the high-frequency current.

In an oscillating circuit the current is at zero value at the start of each cycle, rises to a high value and drops to zero again at the end of each half cycle. The voltage does the same. Both build up to high values at the midpoint of each half cycle.

The coil through which the current flows is surrounded by a magnetic field produced by the current. with heavy current flows, these fields can become very extensive and of high intensity, particularly at the midpoint in each half cycle.

The primary coil, or energizing circuit of Tesla's oscillator, consisted of a number of turns of heavy wire mounted on a circular fence eighty feet in diameter in the great hall of his laboratory. In the space within this fenced enclosure the magnetic field built up to a crescendo of intensity with each half cycle of the current in the primary coil. As the magnetic circles of force moved to the center of the enclosure, they became more concentrated and built up a high density of energy in space in this region.

Centered in this area was another coil perfectly tuned to vibrate electrically in resonance with the crescendo of energy in which it was immersed 300,000 times per second. This coil--about ten feet in diameter, consisting of nearly one hundred turns on a cagelike frame about ten feet high--in responding resonantly, built up potentials with maximum values of more than 100,000,000 volts. No scientist has ever succeeded in building up currents with even one tenth of this potential since that time.

when the first surge of magnetic energy crashed into this coil, it caused a downward avalanche of electrons from the coil into the earth, thereby inflating the earth electrically and raising its potential. The next surge of magnetic energy was of the opposite polarity and caused a tidal wave of electrons from the earth to rush through the coil and upward to the terminal of the coil, which was the metal ball mounted on the mast 200 feet high.

The downward flood of electrons was spread over the wide area of the earth but the return upward flood was

concentrated on a small metal ball on top of the mast, upon which tremendously high potentials developed. The electrons on the ball were under explosive electrical pressure and were forced to escape. They made a spearpoint of attack on the surrounding air, broke a small opening, and through this rushed uncounted billions of billions of electrons, their mad stampede rendering their path through the air incandescent for a distance of scores of feet--in other words, producing a flash of lightning.

Having thus succeeded in making the earth oscillate as if it were a piece of laboratory apparatus, Tesla would now proceed to test the practical applications of his unique method of worldwide power transmission. (In describing the mode of transmission of his oscillating currents through the earth, Tesla claimed the path of the discharge was from his station directly through the center of the earth and in a straight line to the antipode, the return being by the same route, and that the current on this straight-line path traveled at its normal velocity--the speed of light. This flow, he declared, produced an accompanying surface flow of current, which was in step at the starting point and when they rejoined at the antipode; and this necessitated higher velocities in flowing over the surface of the earth. The surface velocities would be infinite at each of the antipodes, and would decrease rapidly until at the equatorial region of this axis it would travel at the normal velocity of the currents.)

The full story of Tesla's accomplishments at Colorado Springs has never been told and never will be told. He carried the records, engraved on his almost infallible memory, with him when he died. Fritz Lowenstein, a competent electrical engineer, interested in high-frequency currents, was his assistant at Colorado Springs. Tesla, however, took neither Lowenstein nor anyone else into his confidence.

It was not necessary for Tesla to write the detailed records of experiments which scientists and engineers make, as routine, of their laboratory tests. He possessed a most remarkable memory, supplemented by his strange power of visualizing again, in their full aspects of reality, any past events. He needed no reference books, for he could quickly derive any desired formula from basic concepts; and he even carried a table of logarithms in his head. For these reasons there is a great lack of written records on

his experiments, and what is recorded is mostly of a minor nature.

Fundamental facts of great importance that he intended to develop later in a practical manner were stored in the archives of his mind to await the time when he would be able to present a practical working model of the inventions based on his discoveries. He had no fear that he would be anticipated by others because he was so far in advance of his contemporaries that he could safely bide his time for developing his ideas.

It was Tesla's intention to make the development of his discoveries a one-man job. He was completely confident, at this time, of his ability to live a century and a quarter, and to be actively engaged in creative experimental work up to at least his one-hundredth birthday, at which time he would give serious thought to the task of writing his biography and a complete record of his experimental work. Up to almost his eightieth year he adhered to this plan without doubt as to its ultimate consummation.

As a result of this most unfortunate design, technical details are lacking concerning the principal discoveries made at Colorado Springs. By piecing together the fragmentary material published in a number of publications, however, it appears evident that Tesla, in addition to experiments with his gigantic current movements, as a means of establishing world-wide broadcasts and making a number of detectors for such use, tested his power transmission system at a distance of twenty-six miles from his laboratory and was able to light two hundred incandescent lamps, of the Edison type, with electrical energy extracted from the earth while his oscillator was operating. These lamps consumed about fifty watts each; and if two hundred were used in the test bank, the energy consumed would be 10,000 watts, or approximately thirteen horsepower.

Transmission of thirteen horsepower wirelessly through the earth for a distance of twenty-six miles can be accepted as a very adequate demonstration of the practicability of Tesla's plan. He claimed an efficiency of higher than 95 per cent for this method of energy transmission; so he could, undoubtedly, with a 300 horsepower oscillator, operate more than a dozen such test demonstrations simultaneously anywhere on the globe. with respect to the latter point he stated, "In this new system it matters

little--in fact, almost nothing--whether the transmission is effected at a distance of a few miles, or of a few thousand miles."

"while I have not as yet," he stated in the Century article of June, 1900, "actually effected a transmission of a considerable amount of energy, such as would be of industrial importance, to a great distance by this new method, I have operated several model plants under exactly the same conditions which will exist in a large plant of this kind, and the practicability of the system is thoroughly demonstrated."

Tesla was insistent, in his latter decades, on the existence, the actuality, the importance and availability of many undisclosed discoveries which he made at Colorado Springs. The author urged upon Tesla two or three times the desirability of making a disclosure, against the ever present danger of an accident that might cause them to be lost to the world; and when the inventor was unimpressed by this possibility, he was asked to permit the author to do something that would bring about their practical development. Tesla was courteously appreciative of the interest manifested, but he was very emphatic in his insistence that he would handle his own affairs as he saw fit, and that he expected shortly to have adequate funds to develop his inventions.

Tesla returned to New York, in the fall of 1899, broke once more, but with the knowledge that his efforts had greatly enriched humanity with important scientific discoveries. yet even more important was the new attitude his work had made possible: man had achieved a method through which he could control his gigantic planet, could look upon this heavenly body from the godlike vantage point in which he could view it as a piece of laboratory apparatus to be manipulated as he willed.

The pictures which Tesla brought back to New York showing the gigantic electrical discharges from his oscillator, and the stories he related of his experiences, created a tremendous impression in his circle of friends. It was then that Robert Underwood Johnson, one of the editors of the Century Magazine, at whose home in Madison Avenue, in the exclusive Murray Hill section, Tesla was a frequent and informal visitor, requested the inventor to write an article telling of his accomplishments.

when the article was written, Johnson returned it, telling Tesla he had served a mess of cold philosophical stones instead of a dish of hot throbbing facts. The inventor had made but scant reference to his recent astounding accomplishments, but developed instead a philosophical system in which the progress of humanity was viewed as purely a mechanical process, activated by the sources of energy available. Three times the article went back to Tesla and was as many times rewritten, despite the high literary quality of the work on each occasion.

The article, which carried the title "The Problem of Increasing Human Energy," created a sensation. Among those whose interest it aroused was J. Pierpont Morgan--a most fortunate circumstance for Tesla. The great financier had a soft spot for geniuses, and Tesla was a perfect example of the species.

Morgan the financier was famous, but Morgan the philanthropist, a greater personality, was to the general public non-existent, so carefully guarded against publicity were his benefactions. In this he was not always completely successful for there are, of necessity, two parties to a benefficence, the giver and the receiver; and the pride and gratitude of the latter can develop into a weak spot in the shell of secrecy.

Tesla was invited to Morgan's home and quickly became a favorite with the family. His record of accomplishment which promised still greater achievements in the future, his pleasant personality, his high moral standards of conduct, his celibate manner of life and his manner of subordinating himself to his work, his boylike enthusiasm, were factors that caused him to be admired not only by Morgan but by all others who knew him well.

Morgan made inquiries of Tesla concerning his financial structure. There were, in those days, a limited number of strong financial groups who were playing a terrestrial game of chess with the world's economic resources; the discoveries of a genius like Tesla might well have a profound effect on the destinies of one or more of these groups, and it would be well for an operator in this field to know more of the inventor's commitments. Undoubtedly, it was a source of surprise and satisfaction to Morgan when he

learned that Tesla was a lone operator and now entirely without funds needed to carry on his researches.

Morgan knew well the inestimable value of Tesla's polyphase alternating-current system. The Niagara development was a Morgan enterprise, and gigantic plans were being builded on its already proven success. The man who laid the scientific and engineering foundation for this new and profitable industrial electrical era was broke and engaged in developing a new source of power distribution. He had supplanted Edison's half-mile power pygmy with a giant having a thousand-mile range, and now he was working on a system which experiments had shown could distribute power wirelessly to the ends of the earth with but a small fraction of the losses of the Edison system in distributing power by wire for half a mile, and could even send current around the earth cheaper than his own alternating-current system could distribute it at a distance of one hundred miles. The economic implications of this development staggered the imagination. what effect would it have on the chess game being played by the world's financial groups?

would the new wireless-distribution-of-power system fit into the existing economic and financial structure? Could it be usefully applied without derangements of greater magnitude than the benefits it would produce? If it were adopted for development, who would be best suited to control it? Could it be controlled in a practical way when any spot on earth would be an outlet for an unlimited reservoir of power for anyone who cared to tap it with a simple device? How could compensation be collected for the service rendered?

These were some of the most obvious aspects of Tesla's world power system that would instantly present themselves to the practical mind of Morgan. In addition, Tesla was proposing a world-wide broadcasting system for distributing news, entertainment, knowledge, and a host of other interesting items. Morgan could well understand the practical aspects of wireless communication in which a charge could be made for transmitting messages from point to point, which was a part of the Tesla system--but, to the inventor's way of thinking, only a minor part compared to the more important broadcasting and power-distribution systems.

A Morgan would understand that ingenious minds could work out some method for placing such world-wide services on a practical profit-paying basis; but this whole new Tesla development had a fantastical aspect that was upsetting to so-called "practical" minds not accustomed to thinking first-magnitude thoughts. The new system might prove more important than the polyphase system which went as a record-breaking bargain to Westinghouse for $1,000,000. Westinghouse was then the most powerful competitor of the Edison system which Morgan had backed, and particularly of the General Electric Company whose financing Morgan had arranged. Although Westinghouse secured a monopoly, means were found for causing him to share it, by a license agreement, with the General Electric Company, so the Morgan company had equal opportunities to exploit the rich market.

History might now be repeating itself with the same inventor, who now had a hypersuperpower system to supplant his own superpower system. In this case Morgan could place himself in a position to seize the monopoly of world power.

The group holding a monopoly control over such a system could develop it, or not develop it, as it saw fit; it could be developed to produce a profit by supplanting or supplementing the satisfactory wire distribution system, or it could be put on the shelf to prevent it from interfering with the existing system. A monopoly of it could prevent any other group from securing it and using it as a club to force concessions from those controlling existing enterprises. Ownership of the Tesla world-power and world-broadcasting patents might well prove an extremely profitable investment even if a very high price were paid for them.

But there was also a more subtle viewpoint. without a strong backing by a powerful source of capital, a world-wide system such as Tesla proposed could never be brought into operating existence. If a powerful group had an opportunity to get in on the ground floor and secure monopoly control and failed to do so, and let it become apparent that this was done intentionally, the effect of such a decision could easily result in scaring off any other groups and effectually preventing anyone from ever backing the system.

Morgan, however, in his contacts with Tesla, brought no commercial or practical aspects into the situation. His

interest was entirely that of a patron seeking to aid a genius to express his creative talents. He made gifts to Tesla to which there were no strings attached. The inventor could use the money as he saw fit. No definite information is available as to the amount of those contributions, but an authoritative source, close to Tesla, fixes the amount which he received within a very short period at $150,000. Later contributions, spread over a long period of years, are believed to have brought the total to double this amount.

Tesla made no secret of Morgan's support. He stated, in the article in the Electrical world and Engineer, published March 5, 1904, describing his wireless power work up to that time:

"For a large part of the work which I have done so far I am indebted to the noble generosity of Mr. J. Pierpont Morgan, which was all the more welcome and stimulating, as it was extended at a time when those, who have since promised most, were the greatest of doubters."

when Morgan made his first contribution, the rumor got into circulation that he was financially interested in the enterprise upon which Tesla now embarked. The resulting situation contained some elements of usefulness for Tesla because of the tremendous prestige of the financier. when, however, Tesla later found himself critically in need of funds, and it became apparent that Morgan was not financially involved in the project and apparently was not coming to the rescue of the inventor, then the reaction set in and the situation became distinctly and definitely unsatisfactory.

In 1900, however, Tesla had $150,000 on hand and a gigantic idea to be put into operation. The world-shaking superman, riding his tidal wave of fame and popularity, set to work.

THE year 1900 marked to Tesla not only the opening of a new century but also the beginning of the world-superpower and radio-broadcasting era. With the encouragement of J. P. Morgan to spur him on--if he could accommodate any more spurring than his own inner drive furnished--and with $150,000 in cash from the same source, he was set to embark

upon a gigantic venture, the building of a world wireless-power and a world broadcasting station.

The cash on hand would be totally inadequate to finance the project to completion, but this did not deter him from making a start. He needed a laboratory both to replace the Houston Street establishment, which had become entirely inadequate, and to include equipment of the type employed at Colorado Springs, but designed for use in the actual world-broadcasting process. The location was determined as the result of an arrangement he made with James S. Warden, manager and director of the Suffolk County Land Company, a lawyer and banker from the West who had acquired two thousand acres of land at Shoreham, in Suffolk County, Long Island, about sixty miles from New York. The land was made the basis of a real-estate development under the name Wardencliff.

Tesla visualized a power-and-broadcasting station which would employ thousands of persons. He undertook the establishment, eventually, of a Radio City, something far more ambitious than the enterprise in Rockefeller Center in New York which bears this name today. Tesla planned to have all wavelength channels broadcast from a single station, a project which would have given him a complete monopoly of the radio-broadcasting business. What an opportunity near-sighted businessmen of his day overlooked in not getting in on his project! But in that day Tesla was about the only one who visualized modern broadcasting. Everyone else visualized wireless as being useful only for sending telegraphic communications between ship and shore and across the ocean.

Mr. Warden saw possibilities of a sort in Tesla's plan, however, and offered him a tract of two hundred acres, of which twenty acres were cleared, for his power station, with the expectation that the two thousand men who would shortly be employed in the station would build homes on convenient sites in the remainder of the 2,000-acre tract. Tesla accepted.

Stanford White, the famous designer of many churches and other architectural monuments throughout the country, was one of Tesla's friends. He now disclosed to the famous architect his vision of an industrial "city beautiful" and sought his co-operation in realizing his dream. Mr. White was enthusiastic about the idea and, as his contribution to

Tesla's work, offered to underwrite the cost of designing the strange tower the inventor sketched, and all of the architectural work involved in the general plan for the city. The actual work was done by W. D. Crow, of East Orange, N. J., one of Mr. White's associates, who later became famous as a designer of hospitals and other institutional buildings.

It was a fantastic-looking tower, with strange structural limitations, which Mr. Crow found himself designing. Tesla required a tower, about 154 feet high, to support at its peak a giant copper electrode 100 feet in diameter and shaped like a gargantuan doughnut with a tubular diameter of twenty feet. (This was later changed to a hemispherical electrode.)

The tower would have to be a skeletonized structure, built almost entirely of wood, metal to be reduced to an utter minimum and any metal fixtures employed to be of copper. No engineering data were available on wood structures of this height and type.

The structure Tesla required had a large amount of "sail area," or surface exposed to wind, concentrated at the top, creating stresses that had to be provided for in a tower that itself possessed only limited stability. Mr. Crow solved the engineering problems and then the equally diffcult task of incorporating esthetic qualities in such an edifice.

When the design was completed another diffculty was encountered. None of the well-known builders could be induced to undertake the task of erecting the tower. A competent framer, associated with Norcross Bros., who were a large contracting firm in those days, finally took over the contract, although he, too, expressed fears that the winter gales might overturn the structure. (It stood, however, for a dozen years. When the Government, for military reasons decided it was necessary to remove this conspicuous landmark during the First World War, heavy charges of dynamite were necessary in order to topple it, and even then it remained intact on the ground like a fallen Martian invader out of Wells' War of the Worlds.) The tower was completed in 1902, and with it a large low brick building more than 100 feet square which would provide quarters for the powerhouse and laboratory. While the structures were being built, Tesla commuted every day

from the Waldorf-Astoria to Wardencliff, arriving at the near-by Shoreham station shortly after eleven am and remaining until three-thirty. He was always accompanied by a man servant, a Serbian, who carried a heavy hamper filled with food. When the laboratory transferred from Houston Street was in full operation at Wardencliff, Tesla rented the Bailey cottage near the Long Island Sound shore and there made his home for a year.

The heavy equipment, the dynamos and motors, that Tesla desired for his plant were of an unusual design not produced by manufacturers, and he encountered many vexatious delays in securing such material. He was able to carry on a wide range of high-frequency current and other experiments in his new laboratory, but the principal project, that of setting up the worldwide broadcasting station, lagged. Meanwhile, he had a number of glass blowers making tubes for use in transmitting and receiving his broadcast programs. This was a dozen years before De Forest invented the form of radio tube now in general use. The secret of Tesla's tubes died with him.

Tesla seemed to be entirely fearless of his high-frequency currents of millions of volts. He had, nevertheless, the greatest respect for the electric current in all forms, and was extremely careful in working on his apparatus. When working on circuits that might come "alive," he always worked with one hand in his pocket, using the other to manipulate tools. He insisted that all of his workers do likewise when working on the 60-cycle low-frequency alternating-current circuits, whether the potential was 50,000 or 110 volts. This safeguard reduced the possibility of a dangerous current finding a circuit through the arms across the body, where there was chance that it might stop the action of the heart.

In spite of the great care which he manifested in all of his experimental work, he had a narrow escape from losing his life at the Wardencliff plant. He was making experiments on the properties of small-diameter jets of water moving at high velocity and under very high pressures, of the order of 10,000 pounds per square inch. Such a stream could be struck by a heavy iron bar without the stream being disrupted. The impinging bar would bounce back as if it had struck another solid iron bar--a strange property for a mechanically weak substance like water. The cylinder holding the water under high pressure was a heavy

one made of wrought iron. Tesla was unable to secure a wrought-iron cap for the upper surface, so he used a heavier one of cast iron, a more brittle metal. One day when he raised the pressure to a point higher than he had previously used, the cylinder exploded. The cast-iron cap broke and a large fragment shot within a few inches of his face as it went on a slanting path upward and finally crashed through the roof. The high-pressure stream of water had peculiar destructive effects on anything with which it came in contact, even tough, strong metals. Tesla never revealed the purpose or the results of these high-pressure experiments.

Tesla's insistence on the utmost neatness in his laboratory almost resulted in a tragedy through a case of thoughtlessness on the part of an assistant. Arrangements were being made for installing a heavy piece of machinery which was to be lag bolted to the thick concrete floor. Holes had been drilled in the concrete. The plan called for pouring molten lead into these holes and screwing the heavy bolts into the metal when it cooled. As soon as the holes were drilled, a young assistant starting cleaning up the debris. He not only swept up the stone chips and dust: he got a mop and thoroughly washed that area of the floor, thoughtlessly letting some of the water get into the holes. He then dried the floor. In the meantime Tesla and George Scherff, who was his financial secretary but also served in any way in which he could be helpful, were melting the lead which would hold the lag screws in the holes in the floor. Scherff took the first large ladleful of lead from the furnace and started across the laboratory to where the holes had been drilled, followed shortly by Tesla bearing another ladle.

Scherff bent down--and as he poured the hot liquid metal into one of the holes an explosion followed instantly. The molten lead was blown upward into his face in a shower of searing hot drops of liquid metal. The water which the assistant used to swab the floor had settled into the holes and, when the melted lead come in contact with it, it was changed to steam which shot the lead out of the hole like a bullet out of the barrel of a rifle. Both men were showered with drops of hot metal and dropped their ladles. Tesla, being several feet away, was only slightly injured; but Scherff was very seriously burned about the face and hands. Drops of the metal had struck his eyes and so severely

burned them that it was feared for a while that his sight could not be saved.

However, despite the almost unlimited possibilities for accidents in connection with the vast variety of experiments which Tesla conducted in totally unexplored fields, using high voltages, high amperages, high pressures, high velocities and high temperatures, he went through his entire career with only one accident in which he suffered injury. In that a sharp instrument slipped, entered his palm and penetrated through the hand. The accident to Scherff was the only one in which a member of his staff was injured, with the exception of a young assistant who developed X-ray burns. He had probably been exposed to the rays from one of Tesla's tubes which, unknown to Tesla and everyone else, had been producing them even before Roentgen announced their discovery. Tesla had given them another name and had not fully investigated their properties. This was probably the first case of X-ray burns on record.

Tesla was an indefatigable worker, and it was hard for him to understand why others were incapable of such feats of endurance as he was able to accomplish. He was willing to pay unusually high wages to workers who were willing to stick with him on protracted tasks but never demanded that anyone work beyond a reasonable day's labor. On one occasion a piece of long-awaited equipment arrived and Tesla was anxious to get it installed and operating as quickly as possible. The electricians worked through twenty-four hours, stopping only for meals, and then for another twenty-four hours. The workers then dropped out, one by one, picking out nooks in the building in which to sleep. While they took from eight to twelve hours' sleep, Tesla continued to work; and when they came back to the job Tesla was still going strong and worked with them through his third sleepless twenty-four-hour period. The men were then given several days off in which to rest up; but Tesla, apparently none the worse for his seventy-two hours of toil, went through his next day of experiments, accomplishing a total of eighty-four hours without sleep or rest.

The plant at Wardencliff was intended primarily for demonstrating the radio-broadcasting phase of his "World System"; the power-distribution station was to be built at Niagara Falls.

Tesla at this time published a brochure on his "World System" which indicates the remarkable state of advancement he had projected in the wireless art, now called radio, while other experimenters were struggling to acquire familiarity with rudimentary devices. At that time, however, his promises seemed fantastic. The brochure contained the following description of his system and his objectives:

The World System has resulted from a combination of several original discoveries made by the inventor in the course of long continued research and experimentation. It makes possible not only the instantaneous and precise wireless transmission of any kind of signals, messages or characters, to all parts of the world, but also the interconnection of the existing telegraph, telephone, and other signal stations without any change in their present equipment. By its means, for instance, a telephone subscriber here many call up any other subscriber on the Globe. An inexpensive receiver, not bigger than a watch, will enable him to listen anywhere, on land or sea, to a speech delivered, or music played in some other place, however distant. These examples are cited merely to give an idea of the possibilities of this great scientific advance, which annihilates distance and makes that perfect conductor, the Earth, available for all the innumerable purposes which human ingenuity has found for a line wire. One far reaching result of this is that any device capable of being operated through one or more wires (at a distance obviously restricted) can likewise be actuated, without artificial conductors and with the same facility and accuracy, at distances to which there are no limits other than those imposed by the physical dimensions of the Globe. Thus, not only will entirely new fields for commercial exploitation be opened up by this ideal method of transmission, but the old ones vastly extended.

The World System is based on the application of the following important inventions and discoveries:

1. The Tesla Transformer. This apparatus is, in the production of electrical vibrations, as revolutionary as gunpowder was in warfare. Currents many times stronger than any ever generated in the usual ways, and sparks over 100 feet long have been produced by the inventor with an instrument of this kind.

2. The Magnifying Transmitter. This is Tesla's best invention--a peculiar transformer specially adapted to excite the Earth, which is in the transmission of electrical energy what the telescope is in astronomical observation. By the use of this marvelous device he has already set up electrical movements of greater intensity than those of lightning and passed a current, suffcient to light more than 200 incandescent lamps, around the Globe.

3. The Tesla Wireless System. This system comprises a number of improvements and is the only means known for transmitting economically electrical energy to a distance without wires. Careful tests and measurements in connection with an experimental station of great activity, erected by the inventor in Colorado, have demonstrated that power in any desired amount can be conveyed clear across the Globe if necessary, with a loss not exceeding a few per cent.

4. The Art of Individualization. This invention of Tesla is to primitive tuning what refined language is to unarticulated expression. It makes possible the transmission of signals or messages absolutely secret and exclusive both in active and passive aspect, that is, non-interfering as well as non-interferable. Each signal is like an individual of unmistakable identity and there is virtually no limit to the number of stations or instruments that can be simultaneously operated without the slightest mutual disturbance.

5. The Terrestrial Stationary Waves. This wonderful discovery, popularly explained, means that the Earth is responsive to electrical vibrations of definite pitch just as a tuning fork to certain waves of sound. These particular electrical vibrations, capable of powerfully exciting the Globe, lend themselves to innumerable uses of great importance commercially and in many other respects.

The first World System power plant can be put in operation in nine months. With this power plant it will be practical to attain electrical activities up to ten million horsepower and it is designed to serve for as many technical achievements as are possible without undue expense. Among these the following may be mentioned:

1. Interconnection of the existing telegraph exchanges of offces all over the World;

2. Establishment of a secret and non-interferable government telegraph service;

3. Interconnection of all the present telephone exchanges or offces all over the Globe;

4. Universal distribution of general news, by telegraph or telephone, in connection with the Press;

5. Establishment of a World System of intelligence transmission for exclusive private use;

6. Interconnection and operation of all stock tickers of the world;

7. Establishment of a world system of musical distribution, etc.;

8. Universal registration of time by cheap clocks indicating the time with astronomical precision and requiring no attention whatever;

9. Facsimile transmission of typed or handwritten characters, letters, checks, etc.;

10. Establishment of a universal marine service enabling navigators of all ships to steer perfectly without compass, to determine the exact location, hour and speed, to prevent collisions and disasters, etc.;

11. Inauguration of a system of world printing on land and sea;

12. Reproduction anywhere in the world of photographic pictures and all kinds of drawings or records.

Thus, more than forty years ago, Tesla planned to inaugurate every feature of modern radio, and several facilities which have not yet been developed. He was to continue, for another twenty years, to be the only "wireless" inventor who had yet visualized a broadcasting service.

While at work on his Wardencliff radio-broadcasting plant, Tesla was also evolving plans for establishing his world power station at Niagara Falls. So sure was he of the

successful outcome of his efforts that he stated in a newspaper interview in 1903 that he would light the lamps of the coming international exposition in Paris with power wirelessly transmitted from the Falls. Circumstances, however, prevented him from making good this promise. His diffculties and his plans were outlined in a statement published in the Electrical World and Engineer, March 5, 1904:

The first of these central plants would have been already completed had it not been for unforeseen delays which, fortunately, have nothing to do with its purely technical features. But this loss of time, while vexatious, may, after all, prove to be a blessing in disguise. The best design of which I know has been adopted, and the transmitter will emit a wave complex of a total maximum activity of 10,000,000 horsepower, one percent of which is amply suffcient to "girdle the globe." This enormous rate of energy delivery, approximately twice that of the combined falls of Niagara, is obtainable only by the use of certain artifices, which I shall make known in due course.

For a large part of the work which I have done so far I am indebted to the noble generosity of Mr. J. Pierpont Morgan, which was all the more welcome and stimulating, as it was extended at a time when those, who have since promised most, were the greatest of doubters. I have also to thank my friend Stanford White, for much unselfish and valuable assistance. This work is now far advanced, and though the results may be tardy, they are sure to come.

Meanwhile, the transmission of energy on an industrial scale is not being neglected. The Canadian Niagara Power Company have offered me a splendid inducement, and next to achieving success for the sake of the art, it will give me the greatest satisfaction to make their concession financially profitable to them. In this first power plant, which I have been designing for a long time, I propose to distribute 10,000 horsepower under a tension of 10,000,000 volts, which I am now able to produce and handle with safety.

This energy will be collected all over the globe preferably in small amounts, ranging from a fraction of one to a few horsepower. One of the chief uses will be the illumination of isolated homes. It takes very little power to light a dwelling with vacuum tubes operated by high frequency

currents and in each instance a terminal a little above the roof will be suffcient. Another valuable application will be the driving of clocks and other such apparatus. These clocks will be exceedingly simple, will require absolutely no attention and will indicate rigorously correct time. The idea of impressing upon the earth American time is fascinating and very likely to become popular. There are innumerable devices of all kinds which are either now employed or can be supplied and by operating them in this manner I may be able to offer a great convenience to the whole world with a plant of no more than 10,000 horsepower. The introduction of this system will give opportunities for invention and manufacture such as have never presented themselves before.

Knowing the far reaching importance of this first attempt and its effect upon future development, I shall proceed slowly and carefully. Experience has taught me not to assign a term to enterprises the consummation of which is not wholly dependent on my own abilities and exertions. But I am hopeful that these great realizations are not far off and I know that when this first work is completed they will follow with mathematical certitude.

When the great truth accidentally revealed and experimentally confirmed is fully recognized, that this planet, with all its appalling immensity, is to electric current virtually no more than a small metal ball and that by this fact many possibilities, each baffling the imagination and of incalculable consequence, are rendered absolutely sure of accomplishment; when the first plant is inaugurated, and it is shown that a telegraphic message, almost as secret and non-interferable as a thought, can be transmitted to any terrestrial distance, the sound of the human voice, with all its intonations and inflections, faithfully and instantly reproduced at any point of the globe, the energy of a waterfall made available for supplying light, heat or motive power, anywhere on sea, or land, or high in the air--humanity will be like an ant heap stirred up with a stick: See the excitement coming.

The Niagara Falls plant was never built; and diffculties, soon enough, were encountered at the Wardencliff plant not only in securing desired equipment but also finances.

Tesla's greatest oversight was that he neglected to invent, so to speak, a device for making the unlimited quantities

of money that were necessary to develop his other inventions. As we have seen, he was utterly lacking in the phase of personality that made possible the securing of financial returns directly from his inventions. An individual with his ability could have made millions out of each of a number of Tesla's minor inventions. If he had taken the trouble, for example, to collect annual royalties on twenty or more different kinds of devices put out by as many manufacturers employing his Tesla coil for medical treatments, he would have had ample income to finance his World Wireless System.

His mind, however, was too fully occupied with fascinating scientific problems. He had, at times, nearly a score of highly skilled workmen constantly employed in his laboratory developing the electrical inventions he was continuing to make at a rapid rate. Armed guards were always stationed around the laboratory to prevent spying on his inventions. His payroll was heavy, his bank balance became dangerously low, but he was so immersed in his experimental work that he continuously put off the task of making an effort to repair his finances. He soon found himself facing judgments obtained by creditors on accounts upon which he could not make payments. He was forced, in 1905, to close the Wardencliff laboratory.

The fantastic tower in front of the laboratory was never completed. The doughnut-shaped copper electrode was never built because Tesla changed his mind and decided to have a copper hemisphere 100 feet in diameter and 50 feet high built on top of the 154-foot cone-shaped tower. A skeleton framework for holding the hemispherical plates was built, but the copper sheeting was never applied to it. The 300-horsepower dynamos and the apparatus for operating the broadcasting station were left intact, but they were eventually removed by the engineering firm that installed them and had not been paid.

Tesla opened an offce at 165 Broadway, in New York, where for a while he tried to contrive some means for reviving his project. Thomas Fortune Ryan, the well-known financier, and H. O. Havemeyer, the leading sugar refiner, aided him with contributions of $10,000 and $5,000 respectively. Instead of using these to open another laboratory, he applied them to paying off the debts on his now defunct World Wireless System. He paid off every penny due to every creditor.

When it became apparent that Tesla was in financial diffculties, many who had assumed that Morgan was financially involved as an investor in his project were disillusioned. When specific inquiries revealed that the great financier held no interest whatever in the enterprise, the rumor got into circulation that Morgan had withdrawn his support; and when no reason for such action could be learned the rumor expanded to carry the story that Tesla's system was impracticable. As a matter of fact, Morgan continued to make generous personal contributions to Tesla almost up to the time of his own death; and his son did so to a lesser extent for a short time.

Tesla made no effort to combat the growing rumors.

If Tesla could have tolerated a business manager, and had placed the development of his patents in the hands of a businessman, he could have established as early as 1896 a practical ship-to-shore, and probably a trans-oceanic wireless service; and these would have given him a monopoly in this field. He was asked to rig up a wireless set on a boat to report the progress of the international yacht race for Lloyds of London in 1896, but he refused the offer, which was a lucrative one, on the grounds that he would not demonstrate his system publicly on less than a world-wide basis because it could be confused with the amateurish efforts being made by other experimenters. If he had accepted this offer--and he could have met the requirements without the least technical diffculty--he undoubtedly would have found his interests diverted to some extent into a profitable commercial channel that might have made a vast, and favorable, change in the second half of his life.

Tesla, however, could not be bothered with minor, even though profitable projects. The superman, the man magnificent, was too strong in him. The man who had put industry on an electrical power basis, the man who had set the whole earth in vibration, could not fill a minor role of carrying messages for hire. He would function in his major capacity or not at all; he would be a Jupiter, never a Mercury.

George Scherff, who was engaged by Tesla as bookkeeper and secretary when he opened his Houston Street laboratory, was a practical individual. He managed, as far as was humanly possible, to keep the inventor disentangled in his contacts

with the business world. The more he knew Tesla, the better he liked him; and the more respect he had for his genius and his ability as an inventor, the more he became conscious of the fact that this genius was totally lacking in business ability.

Scherff was understandably distressed by a situation in which an enterprise was continuously spending money but never receiving any. He sought to protect as far as possible the $40,000 which Tesla received from Adams as an investment in the enterprise; and it was stretched to cover more than three years of great activity. Scherff wanted Tesla to work out plans for deriving an income from his inventions. Each new development which Tesla produced was studied by Scherff and made the basis for a plan for manufacture and sale of a device. Tesla uniformly rejected all the suggestions. "This is all small-time stuff," he would reply. "I cannot be bothered with it."

Even when it was pointed out to him that many manufacturers were using his Tesla coils, selling great numbers of them and making plenty of money out of them, his interest could not be aroused to enter this profitable field, nor to permit Scherff to arrange to have a sideline set-up which could be conducted without interfering with his research work. Nor could he be induced to bring suits to protect his invention and seek to make the manufacturers pay him royalties. He admitted, however, "If the manufacturers paid me twenty-five cents on each coil they sold I would be a wealthy man."

When Lloyds of London made their request that he set up a wireless outfit on a boat and report the international yacht races of 1896, by his new wireless system, and offered a generous honorarium, Scherff became insistent that the offer be accepted; and he urged Tesla to drop all other work temporarily and use the publicity he would get from the exploit as a means of floating a commercial company for transmitting wireless messages between ship and shore and across the ocean, pointing out that money would be made both in manufacturing the apparatus and in transmitting messages. The company, Scherff suggested, could be operated by managers to produce an income and Tesla could return to his work of making inventions and always have plenty of money to pay for the cost of his researches.

Scherff can look back today, as he sits on the porch of his Westchester home, and decide, through a retrospect of fifty years, that his plan was basically sound, with the Radio Corporation of America, its extensive manufacturing facilities and its worldwide communication system, its tremendous capital system and earnings, as evidence in support of the claim.

Tesla's reply to the proposal was, as usual, "Mr. Scherff, that is small-time stuff. I cannot be bothered with it. Just wait until you see the magnificent inventions I am going to produce, and then we will all make millions."

Tesla's millions never came. Scherff remained with him until the Wardencliff laboratory closed, owing to the lack of income, which he had been trying to circumvent. Scherff then established a lucrative connection with the Union Sulphur Co. but he still continued, without taking compensation, to give Tesla one day a week of his time and keep his business affairs disentangled as far as possible. Tesla was meticulously careful about paying everyone who performed any service for him, but this was counterbalanced by an active faculty for contracting bills without waiting to see if he had funds on hand to meet them. Money was an annoying anchor that always seemed to be dragging and hindering his research activities--something that was too mundane to merit the time and attention he should be giving to more important things.

Scherff, tight-lipped and businesslike, cannot be induced to talk of Tesla's affairs. If he were, instead, a loquacious philosopher, he might be induced to smile over the frailties of human nature, and the strange pranks which fate can play on individuals, as he thinks of Tesla, who, on the basis of a single invention, might have become an individual Radio Corporation of America and failed to do so, and who passed up equal chances on two hundred other inventions, any one of which could have produced a fortune. And for contrast, he can recall occasions in recent decades when it was necessary to make modest loans to the great Tesla to permit him to meet the need for current personal necessities. But Scherff refuses to permit any close questions or discussion about these incidents.

THIRTEEN

WHEN his World Wireless System project crashed, Tesla turned again to a project to which he had given considerable thought at the time he was developing his polyphase alternating-current system: that of developing a rotary engine which would be as far in advance of existing steam engines as his alternating-current system was ahead of the direct-current system, and which could be used for driving his dynamos.

All of the steam engines in use in powerhouses at that time were of the reciprocating type; essentially the same as those developed by Newcomer and Watt, but larger in size, better in construction and more effcient in operation.

Tesla's engine was of a different type--a turbine in which jets of steam injected between a series of disks produced rotary motion at high velocity in the cylinder on which these disks were mounted. The steam entered at the outer edge of the disks, pursued a spiral path of a dozen or more convolutions, and left the engine near the central shaft.

When Tesla informed a friend in 1902 that he was working on an engine project, he declared he would produce an engine so small, simple and powerful that it would be a "powerhouse in a hat." The first model, which he made about 1906, fulfilled this promise. It was small enough to fit into the dome of a derby hat, measured a little more than six inches in its largest dimension, and developed thirty horsepower. The power-producing performance of this little engine vastly exceeded that of every known kind of prime mover in use at that time. The engine weighed a little less than ten pounds. Its output was therefore three horsepower per pound. The rotor weighed only a pound and a half, and its light weight and high power yield gave Tesla a slogan which he used on his letterheads and envelopes--"Twenty horsepower per pound."

There was nothing new, of course, in the basic idea of obtaining circular motion directly from a stream of moving fluid. Windmills and water wheels, devices as old as history, performed this feat. Hero, the Alexandrian writer, about 200 bc, described, but he did not invent, the first turbine. It consisted of a hollow sphere of metal mounted on an axle, with two tubes sticking out of the sphere at a tangent to its surface. When water was placed in the sphere

and the device was suspended in a fire, the reaction of the steam coming out of the tubes caused the device to rotate.

Tesla's ingenious and original development of the turbine idea probably had its origin in that amusing and unsuccessful experiment he made when, as a boy, he tried to build a vacuum motor and observed its wooden cylinder turn slightly by the drag of the air leaking into the vacuum chamber. Later, too, when as a youth he fled to the mountains to escape military service and played with the idea of transporting mail across the ocean through an underwater tube, through which a hollow sphere was to be carried by a rapidly moving stream of water, he had discovered that the friction of the water on the walls of the tube made the idea impracticable. The friction would slow down the velocity of the stream of water so that excessive amounts of power would be required to move the water at a desired speed and pressure. Conversely, if the water moved at this speed, the friction caused it to try to drag the enclosing tube along with it.

It was this friction which Tesla now utilized in his turbine. A jet of steam rushing at high velocity between disks with a very small distance separating them was slowed down by the friction--but the disks, being capable of rotation, moved with increasing velocity until it was almost equal to that of the steam. In addition to the friction factor, there exists a peculiar attraction between gases and metal surfaces; and this made it possible for the moving steam to grip the metal of the disks more effectively and drag them around at high velocities. The first model which Tesla made in 1906 had twelve disks five inches in diameter. It was operated by compressed air, instead of steam, and attained a speed of 20,000 revolutions per minute. It was Tesla's intention eventually to use oil as fuel, burning it in a nozzle and taking advantage of the tremendous increase in volume, in the change from a liquid to burned highly expanded gases, to turn the rotor. This would eliminate the use of boilers for generating steam and give the direct process proportional increased effciency.

Had Tesla proceeded with the development of his turbine in 1889 when he returned from the Westinghouse plant, his turbine might perhaps have been the one eventually developed to replace the slow, big, lumbering reciprocating engines then in use. The fifteen years, however, which he

devoted to the development of currents of high potential and high frequency, had entailed a delay which gave opportunity for developers of other turbine ideas to advance their work to a stage which now was effective in putting Tesla in the status of a very late starter. In the meantime, turbines had been developed which were virtually windmills in a box. They consisted of rotors with small buckets or vanes around the circumference which were struck by the incoming steam jet. They lacked the simplicity of the Tesla turbine; but by the time Tesla introduced his type, the others were well entrenched in the development stage.

Tesla's first tiny motor was built in 1906 by Julius C. Czito, who operated at Astoria, Long Island, a machine shop for making inventor's models. He also built the subsequent 1911 and 1925 models of the turbine, and many other devices on which Tesla worked up to 1929. Mr. Czito's father had been a member of Tesla's staff in the Houston Street laboratories, from 1892 to 1899, and at Colorado Springs.

Mr. Czito's description of the first model is as follows:

The rotor consisted of a stack of very thin disks six inches in diameter, made of German silver. The disks were one thirty-second of an inch thick and were separated by spacers of the same metal and same thickness but of much smaller diameter which were cut in the form of a cross with a circular center section. The extended arms served as ribs to brace the disks.

There were eight disks and the edgewise face of the stack was only one-half inch across. They were mounted on the center of a shaft about six inches long. The shaft was nearly an inch in diameter in the mid section and was tapered in steps to less than half an inch at the ends. The rotor was set in a casing made in four parts bolted together.

The circular chamber where the rotor turned was accurately machined to allow a clearance of one sixty-fourth of an inch between the casing and the face of the rotor. Mr. Tesla desired an almost touching fit between the rotor face and the casing when the latter was turning. The large clearance was necessary because the rotor attained tremendously high speeds, averaging 35,000 revolutions per minute. At this speed the centrifugal force generated by

the turning movement was so great it appreciably stretched the metal in the rotating disks. Their diameter when turning at top speed was one thirty-second of an inch greater than when they were standing still.

A larger model was built by Tesla in 1910. It had disks twelve inches in diameter, and with a speed of 10,000 revolutions per minute it developed 100 horsepower, indicating a greatly improved effciency over the first model. It developed more than three times as much power at half the speed.

During the following year, 1911, still further improvements were made. The disks were reduced to a diameter of 9.75 inches and the speed of operation was cut down by ten per cent, to 9,000 revolutions per minute--and the power output increased by ten per cent, to 110 horsepower!

Following this test, Tesla issued a statement in which he declared:

I have developed 110 horsepower with disks nine and three quarter inches in diameter and making a thickness of about two inches. Under proper conditions the performance might have been as much as 1,000 horsepower. In fact there is almost no limit to the mechanical performance of such a machine. This engine will work with gas, as in the usual type of explosion engine used in automobiles and airplanes, even better than it did with steam. Tests which I have conducted have shown that the rotary effort with gas is greater than with steam.

Enthusiastic over the success of his smaller models of the turbine, operated on compressed air, and to a more limited extent by direct combustion of gasoline, Tesla designed and built a larger, double unit, which he planned to test with steam in the Waterside Station, the main powerhouse of the New York Edison Company.

This was a station which had originally been designed to operate on the direct-current system developed by Edison--but it was now operating throughout on Tesla's polyphase alternating-current system.

Now Tesla, invading the Edison sanctum to test a new type of turbine which he hoped would replace the types in use, was definitely in enemy territory. The fact that he had

Morgan backing, and that the Edison Company was a "Morgan company," had no nullifying effect on the Edison-Tesla feud.

This situation was not softened in any way by Tesla's method of carrying on his tests. Tesla was a confirmed "sun dodger"; he preferred to work at night rather than in the daytime. Powerhouses, not from choice but from necessity, have their heaviest demands for current after sunset. The day load would be relatively light; but as darkness approached, the dynamos started to groan under the increasing night load. The services of the workers at the Waterside Station were made available to Tesla for the setting up and tests of his turbine with the expectation that the work would be done during the day when the tasks of the workers were easiest.

Tesla, however, would rarely show up until five o'clock in the afternoon, or later, and would turn a deaf ear to the pleas of workers that he arrive earlier. He insisted that certain of the workers whom he favored remain after their five-o'clock quitting time on the day shift to work with him on an overtime basis. Nor did he maintain a conciliatory attitude toward the engineering staff or the offcials of the company. The attitudes, naturally, were mutual.

The turbine Tesla built for this test had a rotor 18 inches in diameter which turned at a speed of 9,000 revolutions per minute. It developed 200 horsepower. The overall dimensions of the engine were--three feet long, two feet wide and two feet high. It weighed 400 pounds.

Two such turbines were built and installed in a line on a single base. The shafts of both were connected to a torque rod. Steam was fed to both engines so that, if they were free to rotate, they would turn in opposite directions. The power developed was measured by the torque rod connected to the two opposing shafts.

At a formal test, to which Tesla invited a great many guests, he issued a statement in which he said, as reported, in part:

It should be noted that although the experimental plant develops 200 horsepower with 125 pounds at the supply pipe and free exhaust it could show an output of 300 horsepower

with full pressure of the supply circuit. If the turbine were compounded and the exhaust were led to a low pressure unit carrying about three times the number of disks contained in the high pressure element, with connection to a condenser affording 28.5 to 29.0 inches of vacuum the results obtained in the present high pressure machine indicate that the compounded unit would give an output of 600 horsepower without great increase of dimensions. This estimate is very conservative.

Tests have shown that when the turbine is running at 9,000 revolutions per minute under an inlet pressure of 125 pounds to the square inch and with free exhaust 200 brake horsepower are developed. The consumption under these conditions of maximum output is 38 pounds of saturated steam per horsepower per hour, a very high effciency when we consider that the heat drop, measured by thermometers, is only 130 B.T.U. and that the energy transformation is effected in one stage. Since three times the number of heat units are available in a modern plant with superheat and high vacuum the utilization of these facilities would mean a consumption of less than 12 pounds per horsepower hour in such turbines adapted to take the full drop.

Under certain conditions very high thermal effciencies have been obtained which demonstrate that in large machines based on this principle steam consumption will be much lower and should approximate the theoretical minimum thus resulting in the nearly frictionless turbine transmitting almost the entire expansive energy of the steam to the shaft.

It should be kept in mind that all of the turbines which Tesla built and tested were single-stage engines, using about one-third of the energy of the steam. In practical use, they were intended to be installed with a second stage which would employ the remaining energy and increase the power output about two or three fold. (The two types of turbines in common use each have a dozen and more stages within a single shell.)

Some of the Edison electric camp, observing the torque-rod tests and apparently not understanding that in such a test the two rotors remain stationary--their opposed pressures staging a tug of war measured as torque--circulated the story that the turbine was a complete failure; that this turbine would not be practical if its effciency had been

increased a thousand fold. It was stories such as these that contributed to the imputation that Tesla was an impractical visionary. The Tesla turbine, however, used as a single-stage engine, functioning as a pygmy power producer, in the form in which it was actually tested, anticipated by more than twenty-five years a type of turbine which has been installed in recent years in the Waterside Station. This is a very small engine, with blades on its rotor, known as a "topping turbine," which is inserted in the steam line between the boilers and the ordinary turbines. Steam of increased pressure is supplied, and the topping turbine skims this "cream" from the steam and exhausts steam that runs the other turbines in their normal way.

The General Electric Company was developing the Curtis turbine at that time, and the Westinghouse Electric and Manufacturing Company was developing the Parsons turbine; and neither company showed the slightest interest in Tesla's demonstration.

Further development of his turbine on a larger scale would have required a large amount of money--and Tesla did not possess even a small amount.

Finally he succeeded in interesting the Allis Chalmers Manufac-

turing Company of Milwaukee, builders of reciprocating engines and turbines, and other heavy machinery. In typical Tesla fashion, though, he manifested in his negotiations such a lack of diplomacy and insight into human nature that he would have been better off if he had completely failed to make any arrangements for exploiting the turbine.

Tesla, an engineer, ignored the engineers on the Allis Chalmers staff and went directly to the president. While an engineering report was being prepared on his proposal, he went to the Board of Directors and "sold" that body on his project before the engineers had a chance to be heard. Three turbines were built. Two of them had twenty disks eighteen inches in diameter and were tested with steam at eighty pounds pressure. They developed at speeds of 12,000 and 10,000 revolutions per minute, respectively, 200 horsepower. This was exactly the same power output as had been achieved by Tesla's 1911 model, which had disks of half this diameter and was operated at 9,000 revolutions

under 125 pounds pressure. A much larger engine was tackled next. It had fifteen disks sixty inches in diameter, was designed to operate at 3,600 revolutions per minute, and was rated at 500 kilowatts capacity, or about 675 horsepower.

Hans Dahlstrand, Consulting Engineer of the Steam Turbine Department, reports, in part:

We also built a 500 kw steam turbine to operate at 3,600 revolutions. The turbine rotor consisted of fifteen disks 60 inches in diameter and one eighth inch thick. The disks were placed approximately one eighth inch apart. The unit was tested by connecting to a generator. The maximum mechanical effciency obtained on this unit was approximately 38 per cent when operating at steam pressure of approximately 80 pounds absolute and a back pressure of approximately 3 pounds absolute and 100 degrees F superheat at the inlet.

When the steam pressure was increased above that given the mechanical effciency dropped, consequently the design of these turbines was of such a nature that in order to obtain maximum effciency at high pressure, it would have been necessary to have more than one turbine in series.

The effciency of the small turbine units compares with the effciency obtainable on small impulse turbines running at speeds where they can be directly connected to pumps and other machinery. It is obvious, therefore, that the small unit in order to obtain the same effciency had to operate at from 10,000 to 12,000 revolutions and it would have been necessary to provide reduction gears between the steam turbine and the driven unit.

Furthermore, the design of the Tesla turbine could not compete as far as manufacturing costs with the smaller type of impulse units. It is also questionable whether the rotor disks, because of light construction and high stress, would have lasted any length of time if operating continuously.

The above remarks apply equally to the large turbine running at 3,600 revolutions. It was found when this unit was dismantled that the disks had distorted to a great extent and the opinion was that these disks would ultimately have failed if the unit had been operated for any length of time.

The gas turbine was never constructed for the reason that the company was unable to obtain suffcient engineering information from Mr. Tesla indicating even an approximate design that he had in mind.

Tesla appears to have walked out on the tests at this stage. In Milwaukee, however, there was no George Westinghouse to save the situation. Later, during the twenties, the author asked Tesla why he had terminated his work with the Allis Chalmers Company. He replied: "They would not build the turbines as I wished"; and he would not amplify the statement further.

The Allis Chalmers Company later became the pioneer manufacturers of another type of gas turbine that has been in successful operation for years.

While the Dahlstrand report may appear to be severely critical of the Tesla turbine and to reveal fundamental weaknesses in it not found in other turbines, such is not the case. The report is, in general, a fair presentation of the results; and the description of apparent weaknesses merely offers from another viewpoint the facts which Tesla himself stated about the turbine in his earlier test--that when employed as a single-stage engine it uses only about a third of the energy of the steam, and that to utilize the remainder, it would have to be compounded with a second turbine.

The reference to a centrifugal force of 70,000 pounds resulting from the high speed of rotation of the rotor, causing damage to the disks, refers to a common experience with all types of turbines. This is made clear in a booklet on "The Story of the Turbine," issued during the past year by the General Electric Company, in which it is stated:

It [the turbine] had to wait until engineers and scientists could develop materials to withstand these pressures and speeds. For example, a single bucket in a modern turbine travelling at 600 miles per hour has a centrifugal force of 90,000 pounds trying to pull it from its attachment on the bucket wheel and shaft. . . .

In this raging inferno the high pressure buckets at one end of the turbine run red hot while a few feet away the large buckets in the last stages run at 600 miles per hour

through a storm of tepid rain--so fast that the drops of condensed steam cut like a sand blast.

Dahlstrand reported that diffculties were encountered in the Tesla turbine from vibration, making it necessary to re-enforce the disks. That this diffculty is common to all turbines is further indicated by the General Electric booklet, which states:

Vibration cracked buckets and wheels and wrecked turbines, sometimes within a few hours and sometimes after years of operation. This vibration was caused by taking such terrific amounts of power from relatively light machinery--it some cases as much as 400 horsepower out of a bucket weighing but a pound or two. . . .

The major problems of the turbine are four--high temperatures, high pressures, high speeds and internal vibration. And their solution lies in engineering, research and manufacturing skill.

These problems are still awaiting their final solution, even with the manufacturers who have been building turbines for forty years; and the fact that they were encountered in the Tesla turbine, and so reported, is not a final criticism of Tesla's invention in the earliest stages of its development.

There have been whisperings in engineering circles during the past year or two to indicate a revival of interest in the Tesla turbine and the possibility that the makers of the Curtis and Parsons types may extend their lines to include the Tesla type for joint operation with the others. The development of new alloys, which can now almost be made to order with desired qualities of mechanical stability under conditions of high temperature and great stresses, is largely responsible for this turn of events.

It is a possibility that if the Tesla turbine were constructed with the benefft of two or more stages, thus giving it the full operating range of either the Curtis or the Parsons turbine, and were built with the same beneffts of engineering skill and modern metallurgical developments as have been lavished on these two turbines, the vastly greater simplicity of the Tesla turbine would enable it to manifest greater effciencies of operation and economies of construction.

FOURTEEN

THE highest honor which the world can confer upon its scholars is the Nobel Prize founded by Alfred B. Nobel, the Swedish scientist who gained his wealth through the invention of dynamite. Five awards are made annually, and each carries an honorarium of about $40,000 in normal times.

An announcement came from Sweden, in 1912, that Nikola Tesla and Thomas A. Edison had been chosen to share the 1912 award in physics. The awards, however, were never made; and the prize went instead to Gustav Dalen, a Swedish scientist.

The full story of what took place is not known. The correspondence on the subject is not available. It is definitely established that Tesla refused to accept the award. Tesla was very much in need of money at this time and the $20,000, which would have been his share of the divided award, would have aided him to continue his work. Other factors, however, had a more potent influence.

Tesla made a very definite distinction between the inventor of useful appliances and the discoverer of new principles. The discoverer of new principles, he stated in conversation with the author, is a pioneer who opens up new fields of knowledge into which thousands of inventors flock to make commercial applications of the newly revealed information. Tesla declared himself a discoverer and Edison an inventor; and he held the view that placing the two in the same category would completely destroy all sense of the relative value of the two accomplishments.

It is quite probable that Tesla was also influenced by the fact that the Nobel Prize in physics had been awarded to Marconi three years earlier, a situation that greatly disappointed him. To have the award go first to Marconi, and then to be asked to share the award with Edison, was too great a derogation of the relative value of his work to the world for Tesla to bear without rebelling.

Tesla was the first, and probably the only, scientist to refuse this famous prize.

One of the highest honors in the engineering world, too, is the Edison Medal, founded by unnamed friends of Thomas A. Edison, and awarded each year by the American Institute of Electrical Engineers, at its annual convention, for outstanding contribution to electrical art and science. Usually, the recipients are very happy to receive the award; but in 1917, when the committee voted to present the medal to Tesla, a different situation developed.

The chairman of the Edison Medal committee was B. A. Behrend, who had been one of the first electrical engineers to grasp the tremendous significance of Tesla's alternating-current discoveries and their far-reaching importance to every department of the electrical industry. A few outstanding engineers were able, at the beginning, to understand the intricacies of new alternating-current procedures which Tesla's discoveries made of immediate practical importance; but it was Behrend who developed a beautiful, simple mathematical technique, known as the "circle diagram," which made it possible to work out problems of designing alternating-current machinery with great ease, and also to understand the complex phenomena that were taking place within such devices. He published innumerable articles on the subject in the technical journals and wrote the standard textbook on the subject, The Induction Motor. Fame and fortune came to Behrend. He achieved recognition as one of the outstanding electrical engineers, and was later elected vice-president of the American Institute of Electrical Engineers. So important was his work to the commercial world that he was considered a probable recipient of the Edison Medal.

Behrend had started publishing articles on his circle diagram discovery in 1896 but he did not meet Tesla until 1901, when Tesla required a particular type of motor for his World Wireless plant being built at Wardencliff, L. I., and the task of designing it was assigned to the engineering department of a manufacturing company of which Behrend was in charge. After Tesla and Behrend met, a very close personal friendship developed between the two men. Behrend was one of the few who thoroughly understood Tesla's work; and the inventor, lonely in the absence of individuals with minds of his own caliber, greatly appreciated Behrend's friendship.

Behrend believed, therefore, that he was rendering Tesla a token of his highest appreciation when he managed to maneuver the award of the Edison Medal to him; and he was quite happy to carry out the mission of bearing the good news to the inventor. The announcement, however, did not make Tesla happy. He did not want the Edison Medal, he would not receive it!

Behrend, greatly surprised at Tesla's rebuff, asked him if he would not explain the situation that caused it.

"Let us forget the whole matter, Mr. Behrend. I appreciate your good will and your friendship but I desire you to return to the committee and request it to make another selection for a recipient. It is nearly thirty years since I announced my rotating magnetic field and alternating-current system before the Institute. I do not need its honors and someone else may find them useful."

It would have been impossible for Behrend to deny that the Institute had indeed failed, over this long period, to honor the man whose discoveries were responsible for creating the jobs held by probably more than three quarters of the members of the Institute, while honors had been distributed to many others for relatively minor accomplishments. Still, using the privilege of friendship, Behrend pressed for a further explanation.

"You propose," Tesla replied, "to honor me with a medal which I could pin upon my coat and strut for a vain hour before the members and guests of your Institute. You would bestow an outward semblance of honoring me but you would decorate my body and continue to let starve, for failure to supply recognition, my mind and its creative products which have supplied the foundation upon which the major portion of your Institute exists. And when you would go through the vacuous pantomime of honoring Tesla you would not be honoring Tesla but Edison who has previously shared unearned glory from every previous recipient of this medal."

Behrend, however, after several visits, finally prevailed upon Tesla to accept the medal.

Custom requires that the recipient of a medal deliver a formal address. On the occasions, a quarter of a century

earlier, when Tesla was invited to address the Institute, he had had ample laboratory facilities, and had invested a great deal of time, effort, thought and money in the preparation of his lectures. For them, however, he was awarded no honors. Now he was without laboratory facilities and without adequate financial resources, although his more mature mind was as filled with ideas and unborn inventions as it had ever been. He was not required to present a demonstration lecture. In this matter, however, Tesla was a victim of his own past performances; and there was an expectancy that he would emerge from the comparative oblivion which had enshrouded him for more than a decade, and come, like a master magician, bearing some wondrous new gifts of invention to the world.

Tesla attended some of the meetings of the convention, and Behrend, none too certain about what the medalist might do, took him in tow following the afternoon session and escorted him to the Hotel St. Regis, where Tesla now made his home, and where both donned their formal dress for the evening's ceremonies.

The first event on the evening's program was a private dinner at the Engineers' Club, tendered by the Institute to the medalist, who was the guest of honor, and attended by previous recipients of the Edison Medal, as well as members of the committee and the offcers of the Institute. It was a gala occasion and represented an unusual concentration of the world's greatest electrical engineering talent. Tesla could be relied upon to lend brilliance to any such occasion, but, while his sparkling conversation added to the gayety of the group, he was distinctly ill at ease.

The Engineers' Club, on the south side of 40th Street, between Fifth and Sixth Avenues, faces Bryant Park, the eastern third of which is occupied by the classical building of the New York Public Library, facing Fifth Avenue from 40th to 42nd Streets. The United Engineering Societies Building, an imposing structure on the north side of 39th, stands almost back-to-back with the Engineers' Club. By stepping a few feet across an alley, it is possible to go from one building to the other.

Following the dinner in the Engineers' Club, the brilliant group at the medalist's dinner made their way across the alley and proceeded through the crowded lobby of the Engineering Societies Building, which was abuzz with the

multitudinous activities associated with a convention. The party entered the elevators which carried them to the large auditorium on the fifth floor where the medal presentations were to take place.

The auditorium was crowded with an audience that had come largely from formal dinners held as part of the convention program. The floor and gallery were filled to capacity. The buzz of animated conversation died down as there filed onto the stage the outstanding figures of the electrical world, in "tails" and white ties, who were to serve as the "wax works" of the ceremonies and to take some part in the presentation.

As the wax works took their previously assigned chairs, the stage was set for the opening of the ceremonies. But the opening did not take place according to schedule. There was consternation in the group as it was discovered that the chair reserved for the chief participant in the event was empty.

Tesla was missing!

The side hall, leading off the stage, and the anterooms were searched, but there was no sign of him. Members of the committee slipped out to retrace their steps through the lobby and back to the Club dining room. A man as tall as Tesla could not be hidden in any group, yet there was not a sign of him in either building.

The delay in opening the meeting in the auditorium was embarrassing--but the ceremonies could not be started without Tesla, and where was he?

It seemed hardly possible that an imposing figure like Tesla, his height exaggerated by the streamlined contours of his swallow-tailed formal evening dress, and in the almost worshipful custody of a score of outstanding intellects, could vanish without any of them observing his going.

Behrend rushed back from the Club to the auditorium, hopeful that Tesla had preceded him; but he found that such was not the case. All the washrooms in both buildings had been searched; he was concealed in none of them. No one could offer a theory to account for his disappearance.

None but Behrend knew of Tesla's aversion to accepting the Edison Medal, yet even he had not the slightest knowledge of what had become of the famous inventor. He recalled noting the shadowy walks of Bryant Park opposite the Club as he and Tesla stepped from the taxicab earlier in the evening, and he wondered if Tesla had retreated there for some quiet meditation before the ceremony. He hurried out of the Club.

As Behrend stepped into Bryant Park, the last faint glimmerings of dusk were visible in the high sky; but in the park the shades of night were gathering and here and there could be heard the faint twitterings of birds. The twittering of the birds brought, like a flash, to Behrend's mind the scene he had observed in Tesla's apartment at the Hotel St. Regis. In the room which Tesla had arranged as a reading room and offce was a roll-top desk, and on top of this were four neat circular baskets, in two of which pigeons were nestled. Before they left the apartment Tesla went to the window, which was kept open at all times, whistled softly, and two more pigeons quickly flew into the room. Just before leaving for the dinner Tesla fed the pigeons, and having done so slipped a paper bag filled with something into his pocket. The possible significance of this latter act did not occur to Behrend until he heard the twittering of the birds in the park.

With all possible speed Behrend rushed out of the park, down 40th Street toward Fifth Avenue, and up the steps to the plaza of the Library. Here he beheld a sight that amazed him almost beyond belief in what his eyes told him. Here was the missing man. He had recalled that Tesla regularly visited the Library, St. Patrick's Cathedral, or other places to feed the pigeons.

In the center of a large thin circle of observers stood the imposing figure of Tesla, wearing a crown of two pigeons on his head, his shoulders and arms festooned with a dozen more, their white or pale-blue bodies making strong contrast with his black suit and black hair, even in the dusk. On either of his outstretched hands was another bird, while seemingly hundreds more made a living carpet on the ground in front of him, hopping about and pecking at the bird seed he had been scattering.

It was Behrend's impulse to rush in, shoo the birds away and, seizing the missing man, rush him back to the

auditorium. Something caused him to halt. Such an abrupt action seemed almost sacrilegious. As he hesitated momentarily, Tesla caught sight of him and slowly shifted the position of one hand to raise a warning finger. As he did so, however, he moved slowly toward Behrend; and as he came close, some of the birds flew from Tesla's shoulders to Behrend's. Apparently sensing a disturbing situation, though, all the birds flew to the ground.

Appealing to Tesla not to let him down, nor to embarrass those who were waiting at the meeting, Behrend prevailed upon the inventor to return to the auditorium. Little did Behrend know how much more the pigeons meant to Tesla than did the Edison Medal; and little could anyone have suspected the fantastic secret in Tesla's life, of which the outer manifestation was his faithful feeding of his feathered friends. To Behrend it was just another, and in this case very embarrassing, manifestation of the nonconformity of genius. Of this, more later.

Returning to the auditorium, Behrend explained in a quick aside to the president that Tesla had been temporarily ill, but that his condition was now quite satisfactory. The opening of the meeting had been delayed about twenty minutes.

In his presentation speech, Behrend pointed out that by an extraordinary coincidence, it was exactly 29 years ago, to the very day and hour, that Nikola Tesla presented his original description of his polyphase alternating-current system. He added:

Not since the appearance of Faraday's "Experimental Researches in Electricity" has a great experimental truth been voiced so simply and so clearly as this description of Mr. Tesla's great discovery of the generation and utilization of polyphase alternating currents. He left nothing to be done by those who followed him. His paper contained the skeleton even of the mathematical theory.

Three years later, in 1891, there was given the first great demonstration, by Swiss engineers, of the transmission of power at 30,000 volts from Lauffen to Frankfort by means of Mr. Tesla's system. A few years later this was followed by the development of the Cataract Construction Company, under the presidency of our member, Mr. Edward D. Adams, and with the aid of the engineers of the Westinghouse Company. It is

interesting to recall here tonight that in Lord Kelvin's support to Mr. Adams, Lord Kelvin recommended the use of direct current for the development of power at Niagara Falls and for its transmission to Buffalo.

The due appreciation or even enumeration of the results of Mr. Tesla's invention is neither practicable nor desirable at this moment. There is a time for all things. Suffce it to say that, were we to seize and eliminate from our industrial world the results of Mr. Tesla's work, the wheels of industry would cease to turn, our electric cars and trains would stop, our towns would be dark, our mills would be dead and idle. Yes, so far reaching is this work, that it has become the warp and woof of industry. . . . His name marks an epoch in the advance of electrical science. From that work has sprung a revolution in the electrical art.

We asked Mr. Tesla to accept this medal. We did not do this for the mere sake of conferring a distinction, or of perpetuating a name; for so long as men occupy themselves with our industry, his work will be incorporated in the common thought of our art, and the name of Tesla runs no more risk of oblivion than does that of Faraday, or that of Edison.

Nor indeed does this Institute give this medal as evidence that Mr. Tesla's work has its offcial sanction. His work stands in no need of such sanction.

No, Mr. Tesla, we beg you to cherish this medal as a symbol of our gratitude for a new creative thought, the powerful impetus, akin to revolution, which you have given to our art and to our science. You have lived to see the work of your genius established. What shall a man desire more than this? There rings out to us a paraphrase of Pope's lines on Newton:

"Nature and Nature's laws lay hid in night:

"God said, Let Tesla be, and all was light."

No record remains of Tesla's acceptance speech. He did not prepare a formal address. He had intended to make but a brief response, but instead he became involved in anecdotal narration and a preview of the future of electrical science

which, in the absence of the limiting influence of a written copy, became quite lengthy.

It is doubtful if anyone in the audience, or on the stage, grasped the full significance of Behrend's words when he said, "We asked Mr. Tesla to accept this medal." And fewer still were the members of the Institute who had any conception of the extent or importance of Tesla's contribution to their science. His major inventions had been announced thirty years before. The majority of the engineers present belonged to the younger generation; and they had been taught from textbooks that almost completely omitted mention of Tesla's work.

FIFTEEN

THE announcement by Tesla in his latter years that attracted the greatest amount of attention concerned his discovery of what has briefly, but not too accurately, been termed a death ray. Earlier reports had come from Europe of the invention of death rays, beams of radiation that would cause airships on which they impinged to burst into flame, the steel bodies of tanks to melt and the machinery of ships to stop operating, but all gave indications of being part of the game of diplomatic buncombe.

The prelude to Tesla's death-ray announcement came several years in advance, in the form of a declaration that he had made discoveries concerning a new form of power generation which, when applied, would make the largest existing turbine-dynamo units in the powerhouses look like pygmies. He made this announcement in interviews with the press in 1933, and declared that he was also working on a new kind of generator for the production of radiation of all kinds and in the greatest intensities. He made similar announcements the following year.

Both of these announcements were entitled to receive the most serious consideration, even though they were not accompanied by experimental evidence, and revealed no technical details.

When Tesla was talking as a scientist he was opposed to wars on moral, economic and all practical and theoretical grounds. But, like most scientists, when he stopped thinking as a scientist and let his emotions rule his thoughts, he found exceptions in which he felt some wars and situations were justifiable. As a scientist he was unwilling to have the discoveries of scientists applied to the purposes of war makers, but when the emotional phase of his nature took the ruling position he was willing to apply his genius to devising measures that would prevent wars by supplying protective devices.

This attitude is exemplified in the following statement, which he had prepared in the twenties but did not publish:

At present many of the ablest minds are trying to devise expedients for preventing a repetition of the awful conflict which is only theoretically ended and the duration and main issues of which I correctly predicted in an article printed in the Sun of December 20, 1914. The League is not a remedy but, on the contrary, in the opinion of a number of competent men, may bring about results just the opposite. It is particularly regrettable that a punitive policy was adopted in framing the terms of peace because a few years hence it will be possible for nations to fight without armies, ships or guns, by weapons far more terrible, to the destructive action and range of which there is virtually no limit. Any city at any distance whatever from the enemy can be destroyed by him and no power on earth can stop him from doing so. If we want to avert an impending calamity and a state of things which may transform this globe into an inferno, we should push the development of flying machines and wireless transmission of energy without an instant's delay and with all the power and resources of the nation.

Tesla saw preventive possibilities in his new invention which embodied "death-ray" characteristics, and which was made several years after the foregoing statement was written. He saw it providing a curtain of protection which any country, no matter how small, could use as a defense against invasion. While he might offer it as a defensive weapon, however, there would be nothing to stop military men from using it as a weapon of offense.

Tesla never gave the slightest hint concerning the principles under which his device operated.

There are indications, at any rate, that Tesla was working on a high-potential direct-current system for generating and transmitting electricity to long distances. Direct current at very high voltages can be transmitted much more effciently than alternating current. There has been no practical way of generating direct current at high voltages. It was because of this that Tesla's polyphase alternating-current system was adopted for our present nationwide superpower system, since it made the use of high voltages practicable. But, despite its effciencies, it entailed certain losses which could be eliminated if direct current of suffciently high voltage could be obtained. Such a system would supersede his alternating-current system but not displace it.

Direct current, perhaps at several million volts potential, would be used to transmit current for long distances, perhaps clear across the continent, providing a kind of express transmission system, to which the existing alternating-current system would be tied for local distribution. In addition to the direct-current transmission system, he appears to have worked out a high-voltage direct-current generator and a new type of direct-current motor which would operate without a commutator.

The inventions were starting to dam up in Tesla's mind like water in a reservoir to which there was no outlet.

Just as he developed his alternating-current system into the high-frequency, high-potential field of power distribution by wireless, which he demonstrated at Colorado Springs, so he appears to have carried his direct-current system forward and linked it with his alternating-current wireless distribution system, so that he could use both in a super-interlocking system. As this remained unapplied, he further evolved it and produced a plan for operating with it what appears to be a beam system of wireless transmission of energy which might involve the use of a stream of particles such as are used in the atom-smashing cyclotron.

As time passed from the latter twenties, through the latter thirties, the hints which Tesla would drop about his work became more complicated, and so ambiguous that they aroused skepticism rather than respect. He would not reveal the nature of his discoveries until he had secured patents, and

he would not apply for patents until he had made actual working models, and he could not make the working models because he had no money. Samuel Insull, the public utilities magnate, had for many years made frequent and generous contributions to Tesla. They were usually applied to outstanding debts and were not large enough to enable him to engage in laboratory research work.

Tesla, however, never exhibited the slightest outward sign of bitterness over the situation. Instead, he always appeared in the rle of confirmed optimist, always maintaining a spirit of hopefulness that he would achieve by his own efforts the money he needed to carry out his elaborated plans. This is indicated in a letter he wrote to B. A. Behrend, who had induced him to accept the Edison Medal, and who was probably in his confidence to a greater extent than anyone else:

"I am hard at work on those discoveries of mine, I told you about, from which I hope to derive a sum in eight figures (not counting the cents, of course) enabling me to erect that wireless power plant at my own expense. And what I shall accomplish by that other invention I came specially to see you about, I do not dare to tell you. This is stated in all seriousness."

The invention about which he dared not speak was probably his direct-current generating and transmitting system.

In an interview given in 1933, he said his power generator was of the simplest kind--just a big mass of steel, copper and aluminum, comprising a stationary and a rotating part, peculiarly assembled. He was planning, he said, to generate electricity and transmit it to a distance by his alternating system; but the direct-current system could also be employed if the heretofore insuperable diffculties of insulating the transmission line could be overcome.

A year later he had developed the beam-transmission plan; and he made an ambiguous statement concerning it which was reported in the press as news of a "death ray" since the description seemed to fit into the same mold as those wild and improbable statements that had come out of Europe some years before. A writer in the New York World-Telegram described Tesla's plan as "nebulous." This drew a reply from Tesla July 24, 1934) in which the following paragraphs appeared:

Still another item which has interested me is a report from Washington in the World Telegram of July 13, 1934, to the effect that scientists doubt the death ray effects. I am quite in agreement with these doubters and probably more pessimistic in this respect than anybody else, for I speak from long experience.

Rays of the requisite energy cannot be produced, and, then again, their intensity diminishes with the square of the distance. Not so the agent I employ, which will enable us to transmit to a distant point more energy than is possible by any other kind of ray.

We are all fallible, but as I examine the subject in the light of my present theoretical and experimental knowledge I am filled with deep convictions that I am giving to the world something far beyond the wildest dreams of inventors of all time.

This is the first written statement by Tesla in which he mentions his "ray"; but I had, as already noted, obtained some confidential statements from him, during the preceding year or so, concerning results he hoped to achieve through his new discovery, the nature of which he kept as a well-protected secret. Three years later, in 1937, Tesla permitted me to write a news story for the New York Herald Tribune on his new power-and-ray discovery. In it I stressed the usefulness of the discovery for delivering power to ships for travel across the ocean, thus eliminating the need for carrying fuel supplies, rather than its use as a weapon for defense or offense.

On this occasion I tried to get him to reveal some technical details, but he successfully parried every question and gave no information beyond the statement that the transmitting plant on shore was one which he would be able to erect at a cost of about $2,000,000, and the energy would be transmitted by a ray or beam of infinitesimally small cross section, one hundred thousandth of a centimeter in diameter. To other newspapers which copied my story he gave the figure as one millionth of a square centimeter.

Later, I wrote a somewhat critical review of his plan and sought to draw him out by reviewing the properties of electro-magnetic radiation in all parts of the spectrum. Finding none that possessed any known characteristics

needed to make his ray practical, I also reviewed the properties of all known particles of matter, and stated that none of these would serve his purpose with the possible exception of the unelectrified particle, the neutron. He made no revealing response to the article.

At his birthday dinner in 1938, at the Hotel New Yorker, Tesla described briefly his combination wireless-power transmission and death ray, adding little to what has already been stated; and in a later part of his speech he declared that he had developed a method for interplanetary communication, in which he would be able to transmit not only communication signals of small strength but energies involving thousands of horsepower.

On this occasion I asked him if he would be specific concerning the effects produced, and whether they would be visible from the earth; for example--could he produce an effect on the moon suffciently large to be seen by an astronomer watching the moon through a high-power telescope? To this he replied that he would be able to produce in the dark region of the thin crescent new moon an incandescent spot that would glow like a bright star so that it could be seen without the aid of a telescope.

It would appear probable that Tesla proposed to use for this purpose the beam he described in connection with his wirelesspower "death ray." The limitation of the destructive effects of the beam, which he visualized as two hundred miles, was due to the fact that the beam had a straight-line trajectory. Tesla stated that the curvature of the earth set a limit on the distance of operation, so the two-hundred-mile span of operation gave an indication of the greatest practical height of a tower from which the beam could be directed. He expected to use potentials of about 50,000,000 volts in his system, but whether of direct or alternating current is unknown.

The only written statement by Tesla on this subject is in his manuscript of the talk which was delivered, in absentia, some months later before the Institute of Immigrant Welfare in response to its honorary citation. In this was included the following paragraph:

"To go to another subject: I have devoted much of my time during the year past to perfecting of a new small and compact apparatus by which energy in considerable amounts

can now be flashed through interstellar space to any distance without the slightest dispersion. I had in mind to confer with my friend, George E. Hale, the great astronomer and solar expert, regarding the possible use of this invention in connection with his own researches. In the meantime, however, I am expecting to put before the Institute of France an accurate description of the device with data and calculations and claim the Pierre Gutzman Prize of 100,000 francs for means of communication with other worlds, feeling perfectly sure that it will be awarded to me. The money, of course, is a trifling consideration, but for the great historical honor of being the first to achieve this miracle I would be almost willing to give my life."

SELF-MADE SUPERMAN

SIXTEEN

IT WAS during a period when he was most busily occupied with his experiments with high-frequency and high-potential currents, from 1892 to 1894, that Tesla had found time to give serious thought to yet another type of problem, matter and energy; and from it he derived what he described as a new physical principle. This he developed to the point at which he was able to propound a new dynamic theory of gravity.

While this principle guided much of his thinking, he did not make any announcements concerning it until close to the end of his life. Such disclosures as have been made, however, leave this much obvious: Tesla considered his theory wholly inconsistent with the theory of relativity, and with the modern theory concerning the structure of the atom and the mutual interconversion of matter and energy. Tesla continuously attacked the validity of Einstein's work; and until two or three years before his death, he ridiculed the belief that energy could be obtained from matter.

These antagonisms were most unfortunate, as they placed Tesla in conflict with modern experimental physics. This was totally unnecessary, for Tesla could undoubtedly have adhered to his principle and interpreted it so that it was

not inconsistent with the modern theories. The antagonism was probably attributable to psychological factors rather than scientific inconsistencies.

The only statement Tesla has made concerning his principle and his theory is that contained in the lecture he prepared for delivery before the Institute of Immigrant Welfare (May 12, 1938). In this he stated:

During the succeeding two years [1893 and 1894] of intense concentration I was fortunate enough to make two far reaching discoveries. The first was a dynamic theory of gravity, which I have worked out in all details and hope to give to the world very soon. It explains the causes of this force and the motions of heavenly bodies under its influence so satisfactorily that it will put an end to idle speculation and false conceptions, as that of curved space. . . .

Only the existence of a field of force can account for the motions of the bodies as observed, and its assumption dispenses with space curvature. All literature on this subject is futile and destined to oblivion. So are all attempts to explain the workings of the universe without recognizing the existence of the ether and the indispensable function it plays in the phenomena.

My second discovery was of a physical truth of the greatest importance. As I have searched the entire scientific records in more than a half dozen languages for a long time without finding the least anticipation, I consider myself the original discoverer of this truth, which can be expressed by the statement: There is no energy in matter other than that received from the environment.

On my 79th birthday I made a brief reference to it, but its meaning and significance have become clearer to me since then. It applies rigorously to molecules and atoms as well as to the largest heavenly bodies, and to all matter in the universe in any phase of its existence from its very formation to its ultimate disintegration

Tesla's mind was inflexible in the matter of his attitude toward relativity and the modern theories. Had he published his principle and theory of gravity at the beginning of the century it would, without doubt, have then received very serious consideration and perhaps general acceptance,

although it is diffcult to make an intelligent surmise without knowledge of his postulates. If published, it might have had some influence on Einstein's thinking. The field of force which Tesla mentions as being necessary to explain the movements of the planets might have been his contribution to eliminating the need for the ether which was accomplished by Einstein's theory. The two theories might have been merged, in which case there probably would have resulted a harmonious development of the thinking of the two geniuses.

In this latter case Tesla could very well have shaped his thinking to see a consistency between his theory that there is no energy in matter other than that received from its environment, and the modern viewpoint that all matter consists of energy into which it is convertible; for when matter is converted to energy, the energy returns to the environment from whence it came when the particles were formed.

There appears to be a frustration involved in Tesla's attitude which could have been resolved by early publication of his theory. If this had taken place, Tesla's powerful intellect and his strange ability to solve problems would have been brought to bear on the problems of atomic physics and he, in turn, would have received tremendous benefits from the application of the newer knowledge in the fields in which he was supreme.

Tesla's ability to generate tremendously high voltages would have been of great assistance in the task of "smashing the atom." Other scientists, even today, are struggling to produce currents with a potential of 5,000,000 volts, whereas Tesla, forty years ago, had generated potentials of 135,000,000 volts.

The inconsistency between Tesla's principle and the picture of the atom consisting of a small complex nucleus surrounded by planetary electrons--which inconsistency was more existent in Tesla's mind than in Nature--caused him to develop an antagonism to all scientific developments which called for a picture that differed from the billiard-ball type of atom in vogue in the eighteen-eighties. To him, a smashed atom was like a smashed billiard ball.

The electron, however, had a real existence to Tesla. He accepted it as a kind of sub-atom, a fourth state of

matter, as described by Sir William Crookes, who discovered it. Tesla visualized it as associated with but not a part of the atom. The electric charge it carried was entirely distinct from the electron. Electricity, to him, was a fluid much more highly attenuated than any known form of matter, and with highly specific properties of its own for which it was not dependent upon matter. The charge on the electron was due to a surface layer of electricity covering it, and it could receive many layers, giving it multiple charges, all of which could be dissipated. These statements were similar to those which he had published a half-century before.

According to the modern theory, on the other hand, the electrical nature of the electron, described as its charge, is a characteristic inherent in the nature of the energy crystallized about a point which gives the electron its existence, and the electron is one of the particles, or units of energy, of which the atom is composed.

In discussing articles by scientists in the field of atomic physics, Tesla would register his protests that their theories were untenable and the claims unfounded; and he was particularly emphatic when experiments in which energy emissions from atoms were recorded.

"Atomic power is an illusion," he frequently declared. He furnished several written statements in which he said that with his currents of several million volts he had, countless times, smashed uncounted billions of atoms--and he knew that no emission of energy accompanied the process.

On one occasion Tesla took me to task rather severely for my failure to publish his statements. I replied: "I withheld them in order to protect your reputation. You are making too great a virtue of consistency. It is not necessary that you adhere to the theories you held as a youth, and I am convinced that deep down in your heart you hold newer theories that are in harmony with scientific developments in other fields, but because you have disagreed with, and attacked some modern theories, you feel you must be consistent and attack them all. I am convinced that in the development of your death-ray device your thinking was along the lines of the modern theory of the structure of the atom and the nature of matter and energy."

Tesla thereupon let me know in no uncertain terms that he held very definite ideas concerning efforts on the part of others to do his thinking for him. This conversation took place about 1935; and I did not hear from him for many months. I observed, however, that in his later conversations he was much less dogmatic concerning modern theories, and a few years later he stated that he was planning an apparatus which would make possible a definite testing of the modern theory of atomic structure, with the expectation that his new power system and energy beam would release atomic energy more effectively than any device then in use by physicists.

Having endorsed, finally, the belief that man will be able to smash, transmute, create or destroy atoms, and control vast amounts of energy, he waxed poetic on the subject. He extended man's control over atoms and energy to a cosmic scale, and saw him shaping the universe according to our desires. In an unpublished article, entitled "Man's Greatest Achievement," he wrote:

There manifests itself in the fully developed being--Man--a desire mysterious, inscrutable and irresistible: to imitate nature, to create, to work himself the wonders he perceives. Inspired to this task he searches, discovers and invents, designs and constructs, and covers with monuments of beauty, grandeur and awe, the star of his birth. He descends into the bowels of the globe to bring forth its hidden treasures and to unlock its immense imprisoned energies for his use. He invades the dark depths of the ocean and the azure regions of the sky. He peers into the innermost nooks and recesses of molecular structure and lays bare to his gaze worlds infinitely remote. He subdues and puts to his service the Werce, devastating spark of Prometheus, the titanic forces of the waterfall, the wind and the tide. He tames the thundering bolt of Jove and annihilates time and space. He makes the great Sun itself his obedient toiling slave. Such is his power and might that the heavens reverberate and the whole earth trembles by the mere sound of his voice.

What has the future in store for this strange being, born of a breath, of perishable tissue, yet immortal, with his powers fearful and divine? What magic will be wrought by him in the end? What is to be his greatest deed, his crowning achievement?

Long ago he recognized that all perceptible matter comes from a primary substance, or a tenuity beyond conception, filling all space, the Akasa or luminiferous ether, which is acted upon by the life-giving Prana or creative force, calling into existence, in never ending cycles, all things and phenomena. The primary substance, thrown into infinitesimal whirls of prodigious velocity, becomes gross matter; the force subsiding, the motion ceases and matter disappears, reverting to the primary substance.

Can Man control this grandest, most awe-inspiring of all processes in nature? Can he harness her inexhaustible energies to perform all their functions at his bidding, more still cause them to operate simply by the force of his will?

If he could do this, he would have powers almost unlimited and supernatural. At his command, with but a slight effort on his part, old worlds would disappear and new ones of his planning would spring into being. He could fix, solidify and preserve the ethereal shapes of his imagining, the fleeting visions of his dreams. He could express all the creations of his mind on any scale, in forms concrete and imperishable. He could alter the size of this planet, control its seasons, guide it along any path he might choose through the depths of the Universe. He could cause planets to collide and produce his suns and stars, his heat and light. He could originate and develop life in all its infinite forms.

To create and to annihilate material substance, cause it to aggregate in forms according to his desire, would be the supreme manifestation of the power of Man's mind, his most complete triumph over the physical world, his crowning achievement, which would place him beside his Creator, make him fulfill his ultimate destiny.

Tesla, in his eighties, was still manifesting the superman complex, and on even more elaborate a scale than when in his twenties. In his earlier dreams his visions were terrestrial, but in later life they were extended to embrace the entire universe.

Even on the cosmic scale, however, Tesla spoke in terms of matter and energy. These two entities, according to his reasoning, were suffcient to explain all observed

phenomena, a situation which militated against the discovery of any new agencies.

The civilizations of the ancient world knew nothing of electricity and magnetism; the controlled manifestations of these two phases of a single force-entity have provided us with a new civilization and a new cultural outlook on life, as well as broadened horizons within the life sphere. There is no reason why we should not look forward to the discovery of new forces which are as different from electricity as electricity is from the winds of the air and the waves of the ocean. If inadequate explanations of vital phenomena are accepted as satisfactory, embracing extravagant extensions of known forces, the way is closed to the discovery of unknown forces and the opening of any new realms of knowledge. This was the limitation which the science of the last quarter of the past century placed upon itself; and Tesla's philosophy was a product of that period. It was diffcult for him to reshape it in his later years.

The memory departments of most individuals' brains are like offce filing systems, an excellent dumping ground for everything that comes along--but try to find a filed item later. Tesla's powers of memorizing were prodigious. A quick reading of a page gave him a permanent record of it; he could always recall before his eyes a photographic record of it to be read, and could study at his convenience. Study, for Tesla, was a far different process than for the average person. He had no need for a reference library; he could consult in his mind any page of any textbook he had read, any formula, equation, or item in a table of logarithms, and it would flash before his eyes. He could recite scores of books, complete from memory. The saving in time which this made possible in research work was tremendous.

This strange faculty of vision was supernormal but entirely natural and was due, probably, to a structural characteristic in his brain which provided a direct channel between the memory and the visual areas of his cerebral hemispheres. It provided him with a very useful new sense.

The human brain is made up of two sections, the right and left sides, each of which, in some of its phases, is a complete brain; and both halves function together as a single unit. There are many layers in the brain parallel

with its surface, each connected to the others by complex nerve fibers, like threads sewing together the layers of an onion. The outer layer seems to be directly associated with our consciousness. The surface is divided into specialized areas, There is a band across the mid-section of each hemisphere from ear to ear over the top of the brain, devoted to the senses, and here are separate areas for the sensory faculties--sight, hearing, taste, smell--while near by are regions for the motor or muscular activities of the various parts of the body. The back lobe of the brain appears to be the home of the memory and the front lobe of some higher faculties of integration, the nature of which we do not as yet understand.

In normal processes of seeing, the eye forms a picture of an object on the retina, a screen on the back of the eyeball. The retina is supplied with thousands of nerve endings all packed together like stalks of asparagus in a bunch. The tip ends are provided with photosensitive processes, and when light strikes any one of them it transmits over the optic nerve a signal to the brain which is recorded as a visual response in the sight area of each half of the brain. By cooperation of all the nerve endings, the complete picture seen is transmitted. The actual seeing, then, is done in the brain and not in the eye. When an object is seen by the brain, a record of that visual experience is transmitted from the sight area of the brain to the memory center in the back part of the brain; and similar records are sent by all other sensory centers. Ordinarily this is a one-way process, the stimuli going in the direction of the memory and nothing coming back to the sensory area. If this were not so, our sense areas of the brain would be continuously reenacting old experiences and mixing them with the new, incoming experiences, causing annoying confusion.

The memory area contains a complete record of all sensory experiences we have had. In our thinking processes we use some little-understood mechanism for connecting together items stored in the memory area to produce useful combinations or relationships, or, in other words, new ideas. The memory appears to function on a subconscious level but we seem to be able to activate fibers that reach down to the desired strata at the right point to connect the memory level with the consciousness level. In this way we can recall experiences, but this experience of memory is

far different from the original experience of sight out of which the original memory record was made.

If, however, in this process of recollection, the nerve fiber linking the sight area of the brain and the memory area were to be activated, then we would see again by the sharp processes of vision the object which caused the memory record we are trying to recollect.

The act of creative thinking seems to consist of assembling two or more memory records of sensory experiences into a combination which possesses entirely new characteristics that were not apparent in the component parts. If the nerve linkage just referred to were to operate in a two-way process with the visual area, then we would be able to see the new creation as if it were a really existing object seen by the eye, although the whole operation was limited to the brain.

This process is hypothetically the one which took place in Tesla's brain and gave him tremendously greater powers of creative work than are possible to the ordinary individual. Was this conceivably a new in-vention made by Mother Nature and tried out by her on Tesla?

Tesla himself never understood the neurological, or physiological, processes underlying this strange faculty. To him it was an absolutely real experience to see in front of him as solid objects the subjects of his creative thoughts. He believed that the image of the thing he saw was sent back from the brain along the optic nerve to the eye, and that it existed as a picture on the retina where, by some suitable means, it could be seen by others--or that by means of adequate amplifying devices, such as are used in television, it could be projected on a screen. He even proposed such devices. (The apparent flaw in his reasoning followed on his mistake in thinking that he was doing this supernormal seeing with his eye, whereas the process was confined to his brain; and the reflex action from the memory centers stopped at the visual centers instead of, as he believed, being continued forward through the optical nerve to the retina.)

Tesla described his experience with this strange faculty in an interview with M. K. Wisehart, published under the title "Making Your Imagination Work for You" in the American Magazine, April, 1921. He stated:

During my boyhood I had suffered from a peculiar affliction due to the appearance of images, which were often accompanied by strong flashes of light. When a word was spoken, the image of the object designated would present itself so vividly to my vision that I could not tell whether what I saw was real or not. . . . Even though I reached out and passed my hand through it, the image would remain fixed in space.

In trying to free myself from these tormenting appearances, I tried to concentrate my thoughts on some peaceful, quieting scene I had witnessed. This would give me momentary relief; but when I had done it two or three times the remedy would begin to lose its force. Then I began to take mental excursions beyond the small world of my actual knowledge. Day and night, in imagination, I went on journeys--saw new places, cities, countries, and all the time I tried hard to make these imaginary things very sharp and clear in my mind. I imagined myself living in countries I had never seen, and I made imaginary friends, who were very dear to me and really seemed alive.

This I did constantly until I was seventeen, when my thoughts turned seriously to invention. Then, to my delight, I found I could visualize with the greatest facility. I needed no models, drawings, or experiments. I could picture them all in my mind. . . .

By that faculty of visualizing, which I learned in my boyish efforts to rid myself of annoying images, I have evolved what is, I believe, a new method of materializing inventive ideas and conceptions. It is a method which may be of great usefulness to any imaginative man, whether he is an inventor, businessman or artist.

Some people, the moment they have a device to construct or any piece of work to perform, rush at it without adequate preparation, and immediately become engrossed in details, instead of the central idea. They may get results, but they sacrifice quality.

Here, in brief, is my own method: After experiencing a desire to invent a particular thing, I may go on for months or years with the idea in the back of my head. Whenever I feel like it, I roam around in my imagination and think

about the problem without any deliberate concentration. This is a period of incubation.

Then follows a period of direct effort. I choose carefully the possible solutions of the problem. I am considering, and gradually center my mind on a narrowed field of investigation. Now, when I am deliberately thinking of the problem in its specific features, I may begin to feel that I am going to get the solution. And the wonderful thing is, that if I do feel this way, then I know I have really solved the problem and shall get what I am after.

The feeling is as convincing to me as though I already had solved it. I have come to the conclusion that at this stage the actual solution is in my mind subconsciously, though it may be a long time before I am aware of it consciously.

Before I put a sketch on paper, the whole idea is worked out mentally. In my mind I change the construction, make improvements, and even operate the device. Without ever having drawn a sketch I can give the measurements of all parts to workmen, and when completed all these parts will fit, just as certainly as though I had made the actual drawings. It is immaterial to me whether I run my machine in my mind or test it in my shop.

The inventions I have conceived in this way have always worked. In thirty years there has not been a single exception. My first electric motor, the vacuum tube wireless light, my turbine engine and many other devices have all been developed in exactly this way.

That Tesla believed his mental visualizations brought images from his brain to the back of his eye is indicated by some statements he made in his famous lecture before the National Electric Light Association convention at St. Louis, in March, 1893, when announcing his discovery of radio. These statements about vision had no relationship to the subject of the lecture, and the fact that he interjected them indicated that his experiences with this strange power had a powerful influence on his inventive thinking. He said:

It can be taken as a fact, which the theory of the action of the eye implies, that for each external impression, that is for each image produced on the retina, the ends of the visual nerves, concerned in the conveyance of the

impressions to the mind, must be under a peculiar stress or in a vibratory state. It now does not seem improbable that, when by the power of thought an image is evoked, a distinct reflex action, no matter how weak, is exerted upon certain ends of the visual nerves, and therefore upon the retina. Will it ever be within human power to analyze the condition of the retina, when disturbed by thought or reflex action, by the help of some optical or other means of such sensitiveness that a clear idea of its state might be obtained? If this were possible, then the problem of reading one's thoughts with precision, like the characters of an open book, might be much easier to solve than many problems belonging to the domain of positive physical science, in the solution of which many, if not the majority, of scientific men implicitly believe.

Helmholtz has shown that the fundi of the eye are themselves luminous, and he was able to see in total darkness the movements of his arm by the light of his own eyes. This is one of the most remarkable experiments recorded in the history of science, and probably only a few men could satisfactorily repeat it, for it is very likely that the luminosity of the eyes is associated with uncommon activity of the brain and great imaginative power. It is fluorescence of brain action, as it were.

Another fact having a bearing on this subject, which has probably been noted by many, since it is stated in popular expressions, but which I cannot recollect to have found chronicled as a positive result of observation is that, at times, when a sudden idea or image presents itself to the intellect, there is a painful sensation of luminosity produced in the eye observed even in broad daylight.

Forty years later Tesla was still interested in the possibility of capturing a photographic record of thoughts. He stated in interviews that if his theory were correct--that thoughts are recorded on the retina--it should be possible to photograph what is revealed on this screen in the eye, and project enlarged images of it.

There is nothing illogical about Tesla's reasoning concerning his strange faculty of visualizing and the possibility of finding a corresponding image on the retina. There is a bare possibility that in an extreme case, as was his, a reflex arc may have extended from the brain to the retina; but the probability that it did not is stronger. If

he had possessed the ability to take others into his confidence in his experiments, he would have been able to stage some simple tests in the laboratory of an ophthalmologist which would have given him some definite experimental evidence to support or dispose of his theories, as far as photographic thought images were concerned.

About 1920 tesla had prepared, although he never published, an announcement of what he declared was "An Astounding Discovery." It involved factors which he called "cosmic"; but it likewise presented situations which the practicers of voodoo in Haiti, and other intellectually unveneered portions of the human race, would receive with perfect understanding. Since Tesla, one of the most highly civilized individuals, could evolve this conception, it is probable that other supercultured individuals or groups could find it in harmony with their ideas and experiences.

It involves, however, a situation in which the soulless "matter and energy" automaton (to which status we have seen Tesla relegate human beings) is able to judge ethical values, and, like a pontiff presiding over a court of morals, inflict punishment for transgressions.

Here is Tesla's description of his "astounding discovery":

While I have failed to obtain any evidence in support of the contentions of psychologists and spiritualists, I have proved to my complete satisfaction the automatism of life, not only through continuous observation of individual actions, but even more conclusively, through certain generalizations. These amount to a discovery which I consider of the greatest moment to human society and on which I shall briefly dwell.

I got the first inkling of this astounding truth when I was still a very young man, but for many years I interpreted what I noted simply as coincidences. Namely, whenever either myself or a person to whom I was attached, or a cause to which I was devoted, was hurt by others in a particular way, which might be best popularly characterized as the most unfair imaginable, I experienced a singular and undefinable pain which, for want of a better term, I have qualified as "cosmic," and shortly thereafter, and invariably, those who have inflicted it came to grief. After many such cases I confided this to a number of

friends, who had the opportunity to convince themselves of the truth of the theory which I have gradually formulated and which may be stated in the following words.

Our bodies are of similar construction and exposed to the same external influences. This results in likeness of response and concordance of the general activities on which all our social and other rules and laws are based. We are automata entirely controlled by the forces of the medium, being tossed about like corks on the surface of the water, but mistaking the resultant of the impulses from the outside for free will.

The movements and other actions we perform are always life-preservative and though seemingly quite independent from one another, we are connected by invisible links. So long as the organism is in perfect order it responds accurately to the agents that prompt it, but the moment there is some derangement in any individual, his self-preservative power is impaired.

Everybody understands, of course, that if one becomes deaf, has his eyesight weakened, or his limbs injured, the chances for his continued existence are lessened. But this is also true, and perhaps more so, of certain defects in the brain which deprive the automaton, more or less, of that vital quality and cause it to rush into destruction.

A very sensitive and observant being, with his highly developed mechanism all intact, and acting with precision in obedience to the changing conditions of the environment, is endowed with a transcending mechanical sense, enabling him to evade perils too subtle to be directly perceived. When he comes in contact with others whose controlling organs are radically faulty, the sense asserts itself and he feels the "cosmic" pain.

The truth of this has been borne out in hundreds of instances and I am inviting other students of nature to devote attention to this subject, believing that, through combined and systematic effort, results of incalculable value to the world will be attained.

Tesla's uncommunicative nature concerning his own intimate experiences has undoubtedly deprived the world of many interesting stories. He was unquestionably an abnormal individual, and of a type that does have what are known as

"psychic experiences." He was emphatic in his denial that he ever had experiences of that sort; yet he has related incidents that clearly belong in the psychic category. He seemed to be fearful that an admission of psychic experiences would cause him to be misunderstood as supporting spiritualism, or theories that something operates in life other than matter and energy.

Whenever he was asked for his philosophy of life, he would elaborate a theory that the human body is a meat machine which responds to external forces.

One evening in New York, as Tesla and the author sat in the lobby of the Hotel Governor Clinton, the inventor discussed his meat-machine theory. It was a materialistic philosophy typical of the Victorian era. We are, he held, composed of only those things which are identified in the test tube and weighed in the balance. We have only those properties which we receive from the atoms of which our bodies are constructed. Our experiences, which we call life, are a complex mixture of the responses of our component atoms to the external forces of our environment.

Such a philosophy has the virtue of simplicity and brevity of presentation; and it lends itself readily to being propounded with a positiveness that reacts on the propounder, and transforms his attitude into one of dogmatism in which emphatically expressed opinion is often confused with and substituted for factual evidence.

"I don't believe a word of your theory," I replied to Tesla's exposition, "and, thank God, I am convinced you don't believe a word of it either. The strongest proof I have that your theory is totally inadequate is that Tesla exists. Under your theory we could not have a Tesla. Tesla possesses a creative mind and, in his accomplishments, stands high above all other men. If your theory were correct, we would either all be geniuses like Tesla or we would all be mental mediocrities living in these meat machines you describe, all responding in the same way to the uniform, inanimate and uncreative external forces."

"But we are all meat machines," replied Tesla, "and it happens that I am a much more sensitive machine than other people and I receive impressions to which they are inert, and I can both understand and interpret these impressions. I am simply a finer automaton than others," he insisted.

"This difference, which you admit between yourself and others, Dr. Tesla, completely disproves your theory, from my viewpoint," I responded. "Your sensitiveness would be a purely random incident. In the integration of this randomness, with respect to all individuals, all of us would probably once, possibly very much more frequently, rise to the height of manifesting genius as you have done all your life. Even though the strokes of genius would manifest intermittently, all such individuals would receive the permanent rating as geniuses. Genius does not manifest, even intermittently, in all of us, so your meat-machine theory appears, to me, untenable, If you were really frank with me, you would tell me of many experiences you have had, strange experiences, that you could not explain, that do not fit into your meat-machine theory, and which you have been afraid to discuss with anyone for fear they would misunderstand you and perhaps ridicule you. I, however, will not find these experiences strange and beyond understanding, and one of these days you will open up and tell me about them."

As happened whenever I disagreed with him, after that evening I did not see Tesla for a while. In due time, however, I had a great many telephone conversations with him. Our discussion seemed to have brought about a change in his attitude toward me; and the next time I saw him he confided, "Mr. O'Neill, you understand me better than anyone else in the world." I mention this to indicate the correctness of my belief that there was another Tesla hidden within that synthetic individual, the superman, which Tesla sought to pass off on the public as his real self.

I did not, at this time, know about Tesla's "astounding discovery," or of some of his experiences about which I later learned. Had I known of these, my discussion with him could have been more specific.

SEVENTEEN

ALTHOUGH Tesla thoroughly disbelieved in psychical phenomena, as previously indicated, he had many experiences which belong in this category; and he neither discredited nor disavowed their reality. Such paradoxes were common in all matters concerning him.

Tesla, for example, completely rejected telepathy as a phase of psychical phenomena, but he was firmly convinced that mind could communicate directly with mind. When asked about his belief in telepathy by a newspaper reporter in the early nineties, Tesla replied: "What is usually taken as evidence of the existence of telepathy is mere coincidence. But the working of the human mind through observation and reason interests and amazes me. And then he added the paradoxical statement: "Suppose I make up my mind to murder you. In an instant you would know it. Now, isn't that wonderful enough? By what process does the mind get at all this?"

Reduced to its simplest terms, this interview states: Psychical telepathy does not exist as a reality; but the transmission of thought from mind directly to mind is a wonderful phenomenon, worthy of scientific study.

The paradox here is due to the fact that, at the period in which Tesla was speaking, all psychical phenomena were supposed to be mediated by the intervention of spirits, or souls of the departed. Such a theory had no place in Tesla's philosophy, since he did not believe in immortality and felt that he could explain all phenomena in terms of matter and energy; and the spirit was supposed to lie beyond both of these categories. Thinking, however, was, according to Tesla's theories, something which resulted from the interaction of matter and energy in the brain; and as this process probably produced waves in the ether, there was no reason why the waves sent out by one mind should not be received by another, with resulting transfer of thought.

Tesla would not discuss anything bordering on psychical experiences outside the circle of his relatives, however. On one occasion, though, he probably saved the lives of three of his friends through a premonition; and he related the incident to his nephew, Sava N. Kosanovich, who thus retells it:

"I heard from Tesla that he had premonitions. He explained his in a mechanical way, saying he was a sensitive receiver

that registers any disturbance. He declared that each man is like an automaton which reacts to external impressions.

"He told me of one instance in which he had held a big party here in New York for some of his friends who planned to take a certain train for Philadelphia. He felt a powerful urge not to let the friends depart as planned and forcibly detained them so that they missed the train on which they had planned to travel. This train met with an accident in which there were a large number of casualties. This happened sometime in the 90's.

"When his sister Angelina was ill, and died, he sent a telegram in which he said: "I had a vision that Angelina was arising and disappearing. I sensed all is not well."

Tesla himself tells a most remarkable story of two supernormal events, in an unpublished manuscript. It records a situation in which, owing to overwork, his strange phenomenon of visualization disappeared, or died, and was reborn. In coming back, it grew up quickly by repeating the visualization of events of earliest childhood and successively re-enacting later events, until it brought him to the actual moment and capped the climax by then presenting a visualization of an event that had not yet taken place.

The story of this experience, as told by Tesla:

I will tell of an extraordinary experience which may be of interest to students of psychology. I had produced a striking phenomenon with my grounded transmitter and was endeavoring to ascertain its true significance in relation to the currents propagated through the earth. It seemed a hopeless undertaking and for more than a year I worked unremittingly but in vain. This profound study so entirely absorbed me that I became forgetful of everything else, even of my undermined health. At last, as I was on the point of breaking down, nature applied the preservative, inducing lethal sleep.

Regaining my senses, I realized with consternation that I was unable to visualize scenes from my life except those of infancy, the very first ones that had entered my consciousness. Curiously enough, these appeared before my vision with startling distinctness and afforded me welcome relief. Night after night, when retiring, I would think of

them and more and more of my previous existence was revealed. The image of my mother was always the principal figure in the spectacle that slowly unfolded, and a consuming desire to see her again gradually took possession of me.

This feeling grew so strong that I resolved to drop all work and satisfy my longing. But I found it too hard to break away from the laboratory and several months elapsed during which I succeeded in reviving all the impressions of my past life up to the spring of 1892.

In the next picture that came out of the mist of oblivion, I saw myself at the Hotel de la Paix in Paris just coming to from one of my peculiar sleeping spells caused by prolonged exertion of the brain. Imagine the pain and distress I felt when it flashed upon my mind that a dispatch was handed to me at that very moment bearing the sad news that my mother was dying.

It was especially remarkable that all during this period of partially obliterated memory I was fully alive to everything touching on the subject of my research. I could recall the smallest details and the least insignificant observations in my experiments and even recite pages of texts and complex mathematical formulae.

This was a prevision of the event which took place immediately after his Paris lecture, as described in an earlier chapter, in which he rushed home in time to see his mother just before she died.

The second incident also concerns the death of his mother, and is told in another connection in the same manuscript. He states:

For many years I have endeavored to solve the enigma of death and watched eagerly for every kind of spiritual indication. But only once in the course of my existence have I had an experience which, momentarily, impressed me as supernatural. It was at the time of my mother's death.

I had become completely exhausted by pain and long vigilance and one night was carried to a building about two blocks from our home. As I lay helpless there, I thought that if my mother died while I was away from her bedside she would surely give me a sign.

Two or three months before I was in London in company with my late friend, Sir William Crookes, when spiritualism was discussed and I was under full sway of these thoughts. I might not have paid attention to other men but was susceptible to his arguments as it was his epochal work on radiant matter, which I had read as a student, that made me embrace the electrical career.

I reflected that the conditions for a look into the beyond were most favorable, for my mother was a woman of genius and particularly excelling in the powers of intuition. During the whole night every fiber of my brain was strained in expectancy, but nothing happened until early in the morning when I fell into a sleep or perhaps a swoon, and saw a cloud carrying angelic figures of marvelous beauty, one of whom gazed upon me lovingly and gradually assumed the features of my mother. The apparition slowly floated across the room and vanished and I was awakened by an indescribably sweet song of many voices. In that instant a certitude, which no words can express, came upon me that my mother had just died. And that was true.

I was unable to understand the tremendous weight of the painful knowledge I received in advance and wrote a letter to Sir William Crookes while still under the domination of these impressions and in poor bodily health.

When I recovered I sought for a long time the external cause of this strange manifestation and to my great relief, I succeeded after many months of fruitless effort. I had seen the painting of a celebrated artist, representing allegorically one of the seasons in the form of a cloud with a group of angels which seem to actually float in the air, and this had struck me forcibly. It was exactly the same that appeared in my dream with the exception of my mother's likeness. The music came from the choir in the church nearby at the early mass of Easter morning, explaining everything satisfactorily in conformity to scientific facts.

This "scientific" explanation by Tesla is, of course, totally unscientific. It ignores the three principal facts: one, that he had what he identified at the time as a supernormal experience that brought with it a certitude that words could not describe; two, that this experience conveyed a revelation of his mother's death, which he

understood as such; and, three, that the event took place at the exact time of her death. The mechanism by which the phenomenon was produced utilized the memories stored in Tesla's mind (of the painting, for example) as the vehicle by which the information could be presented to him in understandable, though symbolic, form. In addition, there was the premonition given several months previously as the climax of an extended phenomenon involving his mother.

Tesla's efforts to explain away "scientifically" everything of a psychical or spiritual nature, and the inadequate explanations which were satisfactory to him for this purpose, are an indication of a conflict that was taking place within him in an effort to reconcile the purely materialistic "matter and energy" superman, into which he fashioned himself, with the underlying individual into which was born a great capacity for manifesting a deep spiritual insight into life, but which he suppressed.

One of the strangest luncheon parties Tesla ever staged was that given by him to a prize fighter, Fritzie Zivic. It was served in one of the private dining rooms of the Hotel New Yorker in 1940. Fritzie Zivic was scheduled to take part in a prize fight at Madison Square Garden for the welterweight championship, and the luncheon was held at noon on the day of the battle.

Fritzie was one of six brothers, all of whom were either professional prize fighters or wrestlers. They lived at Pittsburgh where their father conducted a beer saloon. They were all born in Pittsburgh, but were the sons of parents, natives of Yugoslavia, whose diffcult-to-pronounce Slavonic name was shortened to Zivic by the brothers for their professional activities.

Tesla had all six of the brothers as his guests. The only other guests were William L. Laurence, science writer of the New York Times, and the author.

Three very different types of individuals were gathered around the table. The six fighting brothers were all fine physical specimens. They averaged medium height but their powerful, chunky bodies, deep chests and broad shoulders made them seem rather short. All were clear eyed, had clear complexions and clean-cut features, were conservatively dressed in sack suits, and wore white linen collars. The two newspapermen presented an appearance in strong contrast

with the fighters, and in contrast with all the others was Tesla. Laurence, with his great mop of jet black hair combed straight back, looked more like a musician.

Tesla was seated at the head of the table. At his right sat Fritzie and next to him ranged three of his brothers. Opposite them sat two other brothers and Mr. Laurence. The author sat at the far end of the table.

Tesla did not arrange one of his famous duck dinners for this occasion--he had other plans. As soon as the party was seated, Tesla stood up. The broad, stocky Fritzie looked like a pygmy by comparison. Tesla was attired in a light-weight, tight-fitting, black, single-breasted sack suit which made him look more slender than usual. He had lost considerable weight in the preceding year, and this accentuated the sharp, bony contour which his face had taken on in his latter years. His face, of the ascetic type, now was crowned with thinning locks of silvery white hair. His long slender hands, delicately shaped, started to wave over the seated prize fighter, who smiled up at the strange figure towering above him.

"I am ordering for you a nice thick beefsteak, two inches thick, so that you will have plenty of strength tonight to win the championship by a . . . "

The fighter had both hands up, trying to interrupt the gesticulating figure of the scientist.

"No," protested Fritzie, "I am in training and I cannot eat a steak today."

"You listen to me," shouted the insistent voice of Tesla, whose swinging arms and swaying body made him appear to be going through the antics of a cheer leader at a football game. "I'll tell you how to train. You will train on beefsteak. I am going to get you a beefsteak two inches thick and dripping with blood so that you will be able to . . ."

The five brothers now joined Fritzie in his protest.

"He can't eat beefsteak today. He would lose the fight, Dr. Tesla," they chorused.

"No, he won't lose the fight," shot back Tesla. "You must think of the heroes of our national Serbian poetry. They were redblooded men and mighty fighters. You too must fight for the glory of Serbia, and you need beefsteak dripping in blood to do it!"

Tesla had worked himself into a fine frenzy and was waving his arms and punching his palms as if he were at the ringside at an exciting moment in the battle. His frenzy was lost on Fritzie and his brother pugilists. They were unmoved. Fritzie replied:

"I will win, Dr. Tesla. I will fight for the glory of Yugoslavia and when the referee gives me the decision and I speak into the microphone I will also say I fought for Dr. Tesla--but no beefsteak today, Dr. Tesla, please."

"All right, Fritzie, you can have whatever you want," Tesla agreed, "but your brothers will have their beefsteak."

"No, Dr. Tesla," replied the eldest brother, "if Fritzie cannot have beefsteak neither will we. We will eat whatever he eats."

Fritzie ordered scrambled eggs on toast, with bacon, and a glass of milk. The five brothers gave duplicate orders and the two newspapermen did likewise.

Tesla laughed heartily. "So that is what you do your fighting on today," he said between chuckles.

For himself, the blood-thirsty 83-year-old scientist ordered "A dish of hot milk"; and on this diet he managed to summon a tremendous amount of energy during the meal which he directed toward urging Fritzie to give his opponent "everything you've got" and "make it a knockout in the first round."

It was a strange dinner. Despite the greatly outnumbering pugilists with their hard set faces and chunky powerful bodies, the thin, bony faced, sharp featured, almost emaciated scientist with his sunken eyes, and his thin, silky silver hair, easily dominated the scene. Everyone was at ease despite the brothers' anticipation of Fritzie's impending battle and Tesla's enthusiasm. Yet, in spite of the fact that everyone was relaxed, there was an eerie kind of tenseness linking the peculiar assemblage. Once I became

conscious of the situation, I watched developments with interest. I had experienced such conditions previously but never under such circumstances as these.

Mr. Laurence, of the Times, was seated at my right. He began to act a bit restless while only halfway through the meal. Several times he looked under the table. He in turn rubbed his ankle, his knee, his calf. He shifted his position. He rubbed his elbow and later his forearm. I managed to catch his eye.

"Anything bothering you, Bill?" I asked, knowing full well what was happening.

"There is something strange going on here," he replied.

A couple of minutes later he again reached, and looked under the table.

"Feel anything?" I asked.

"Yes," he replied, seemingly a bit worried. "Something hot is touching me at different spots. I can feel the heat but I can't see anything that is doing it. Do you feel it, too?" he asked.

"Don't worry about it," I assured him. "I know what it is, and will tell you all about it later. Just make as close observations as you can now."

The phenomenon continued until the party broke up. On our way back to our offces, I explained to Mr. Laurence.

"You have often laughed at me for my gullibility in accepting the reality of the so-called psychic experiences," I said. "Now you have had one. As soon as that luncheon got well under way, after Dr. Tesla's fiery outburst had quieted down, I sensed a peculiar tenseness in the air around me. At times the atmosphere seemed webby to my face and hands, so I suspected something unusual might happen.

"That gathering was a perfect set-up for a psychic seance, and if it was held in the dark there is no telling what we might have observed. Here were six powerfully built men, closely in rapport with each other, all filled to the bursting point with vital energy waiting for an event that

would release an emotional outburst. In addition, we had Dr. Tesla staging an emotional outburst the like of which he probably never before exhibited throughout his life. He was supercharged with a different kind of vital energy. Just visualize Dr. Tesla as a medium acting as a co-ordinator, in some unknown way, to release these pent-up stores of vital energy which, again in an unknown manner, organized channels of conduction through which this energy was transferred from levels of high potential to levels of lower potential.

"In this case we were the levels of lower potential, for I had exactly the same experiences you had, with these energy-transfer channels in space making contact with various parts of my body and producing areas in which I, too, experienced a sensation of intense heat.

"You have read reports of seances in which the sitters reported that they experienced cool breezes. In these situations the action is the reverse of what we experienced, for in the seances energy was being drawn from the sitters to be organized by the so-called medium for the production of phenomena.

"Some kind of highly attenuated energy-bearing fluid was, in our experience today, drawn from the bodies of the fighters and fed into our bodies--and in the seances it is drawn from the bodies of the sitters and fed into that of the medium, or to a central collecting point. In a report which I have written on my seance observations, I have called this substance psynovial fluid, which is merely a convenient abbreviation for new psychic fluid.

"Now that you have had today's experience, you will understand why a few years ago I risked having Dr. Tesla figuratively massacre me when I told him he was using his meat-machine philosophy of human life to cover up a lot of strange experiences he has had, and about which he was afraid to talk. . . ."

Another strange supernormal experience came to Tesla a few days before he died, but he was probably totally unaware that the situation had any unusual aspects.

Early one morning he called his favorite messenger boy, Kerrigan, gave him a sealed envelope, and ordered him to

deliver it as quickly as possible. It was addressed to "Mr. Samuel Clemens, 35 South Fifth Ave., New York City."

Kerrigan returned in a short time with the statement that he could not deliver the message because the address was incorrect. There is no such street as South Fifth Ave., the boy reported; and in the neighborhood of that number on Fifth Ave. no one by the name of Clemens could be located.

Tesla became annoyed. He told Kerrigan: "Mr. Clemens is a very famous author who writes under the name Mark Twain, and you should have no trouble locating him at the address I gave you. He lives there."

Kerrigan reported to the manager of his office and told him of his diffculty. The manager told him: "Of course you couldn't find South Fifth Avenue. Its name was changed to West Broadway years ago, and you won't be able to deliver a message to Mark Twain because he has been dead for twenty-five years."

Armed with this information, Kerrigan returned to Tesla, and the reception accorded his announcements left him still further confused.

"Don't you dare to tell me that Mark Twain is dead," said Tesla. "He was in my room, here, last night. He sat in that chair and talked to me for an hour. He is having financial diffculties and needs my help. So you go right back to that address and deliver that envelope--and don't come back until you have done so." (The address to which he sent the messenger was that of Tesla's first laboratory!)

Kerrigan returned to his offce. The envelope, not too well sealed, was opened in the hope it would give some clue as to how the message could be delivered, The envelope contained a blank sheet of paper wrapped around twenty $5 bills! When Kerrigan tried to return the money, Tesla told him, with great annoyance, either to deliver the money or keep it.

The last two decades of Tesla's life were filled with many embarrassing situations concerning unpaid hotel bills, and it would seem that by some process of transference this situation was shifted to his perception of Mark Twain.

In view of Tesla's highly intensified abilities to see the subjects of his thoughts as materialized objects, the simpler theory would be that by his usual process he had summoned the vision of Mark Twain, Tesla and Mark Twain were very good friends, and the inventor had every reason for knowing that the heavy-thinking humorist was dead, Such being the case, how was he able to forget his death? An objective theory can be offered which may, or may not, contain the correct explanation.

Tesla's memory was filled with many recollections of Mark Twain, dating back to his early youth when he credited the reading of one of the humorist's books with having brought him out of a critical illness. Twenty years later, when Tesla related this incident, the humorist was so deeply affected he wept. A close friendship followed, filled with many pleasant incidents. Every incident concerning Mark Twain was laid down in Tesla's memory. How these records are filed in the brain we do not know, but we might assume, for the moment, that the arrangement is orderly enough, with the system based on a time sequence in which each successive incident is filed on an earlier one, the latest ones being on top. When Tesla started the process of visualizing Mark Twain in his room (and it probably operated on a subconscious level), he penetrated through the stack of memory records until he reached one that was satisfactory, and then concentrated so heavy a flow of vital energy in carrying this to the visualization center of his brain that it burned out, and destroyed, or narcotized, all later memory records that lay above it. As a result, after the visualization process was over, there was no record in Tesla's memory files of anything that happened in his relations with Mark Twain, following the pleasant record he had so strangely relived. All subsequent memory records were wiped out, including his memory of Mark Twain's death. It would then be perfectly logical for him to reach the conclusion that Mark Twain was still alive!

Several versions of this story are in circulation. They all have in common Tesla's belief that Mark Twain was still alive; that he himself had very recently been in communication with him, and sought to send him money to meet a diffcult situation.

Pirated, lied about, ignored, (Dr. W. H. Eccles concludes an obituary memorial, in Nature (London), February 13, 1943:--"Throughout his long life of 85 years Tesla seldom

directed attention to his own successes, never wrote up again his old work, and rarely claimed priority though continually pirated. Such reserve is particularly striking in a mind so rich in creative thought, so competent in practical achievement.") Tesla carried on his work during the latter decades, always hoping that he would be able to arrange matters so that he would be able to finance all the inventions he was treasuring in his mind. His pride would not permit him to admit financial embarrassment. He was forced frequently to leave hotels because of unpaid bills. His friend, B. A. Behrend, author of the book, The Induction Motor, which had clarified Tesla's theory for engineers, when visiting New York and finding the inventor moved from the hotel where he last found him, in each instance paid his bills, and caused Tesla's held baggage to be forwarded to him.

In the early thirties, when it seemed as if financial discouragements would "have him down," Tesla, however, appeared as optimistic as ever. He declared: "It is impossible for anyone to gain any idea of the inspiration I gain from my applied inventions which have become a matter of history, and of the force it supplies to urge me forward to greater achievements. I continually experience an inexpressible satisfaction from the knowledge that my polyphase system is used throughout the world to lighten the burdens of mankind and increase comfort and happiness, and that my wireless system, in all of its essential features, is employed to render a service to and bring pleasure to people in all parts of the earth."

When his wireless-power system was mentioned, he exhibited no sign of resentment over the collapse of his project but replied philosophically: "Perhaps I was a little premature. We can get along without it as long as my polyphase system continues to meet our needs. Just as soon as the need arises, however, I have the system ready to be used with complete success."

On his eightieth birthday he was asked if he expected actually to construct and operate his recently announced inventions, and in reply he quoted, in German, a stanza from Goethe's Faust:

"The God that in my bosom lives"

"Can move my deepest inmost soul,"

"Power to all my thought he gives"

"But outside he has no control."

It had been Tesla's intention to write his autobiography. He desired to have the story of his work recorded with a most meticulous regard for accuracy; and this, he felt, no one but himself could bring to it. He declared that he had no intention of starting work on this project until he had accomplished the application of all of his major discoveries. Several persons who proposed writing his biography received only a refusal of the requested co-operation. Kenneth Swezey, a writer on scientific subjects, maintained close contact with Tesla for a number of years, and it was expected that Tesla would co-operate with him in such a project. Swezey assembled seventy letters from leading scientists and engineers in all parts of the world as a surprise for Tesla on his seventy-fifth birthday, at which time the letters, bound in a memorial volume, were presented to him. These letters, reprinted in Yugoslavia, led to the establishment of the Tesla Institute in that country. Swezey was engaged in war work and expected, at the time of Tesla's death, to enter the Navy; otherwise he might have undertaken the task of writing Tesla's biography. Tesla, even up to his eighty-fourth year, expected to recover more robust health and to live beyond the century mark. It is probable, therefore, that he had not started work on his autobiography. Whether or not any parts of it have been written is impossible to ascertain at the present time. All Tesla's records were sealed by the Custodian of Alien Property, although Tesla was a citizen of the United States.

During the last half-dozen years of his life, Tesla, happily, was supplied with enough money to meet his immediate needs, thanks to the payment to him of an honorarium of $7,200 a year, by the Yugoslav government, as patron of the Tesla Institute, established in Belgrade. (The Society for the Foundation of the Tesla Institute at Belgrade was organized as Tesla neared his eightieth year. It enlisted support from the scholars, the government, commercial interests and the people as a whole. From the government and private sources an endowment was subscribed which was adequate to erect and equip a research laboratory and maintain it in operation as an institute. The Institute was opened in 1936, in commemoration of Tesla's eightieth

anniversary. A week of observance was held throughout Yugoslavia and formal celebrations were held at Belgrade on May 26, 27 and 28, at Zagreb on May 30, and at his native village, Smiljan, on June 2 and also on July 12.) Even with this income, however, and with a very limited range of activity (being confined largely to his room), during the last two years Tesla still managed to fall behind in his hotel bill. This was owing to his unlimited generosity. He was very generous in bestowing tips on all who performed the slightest service for him, and in responding to the slightest suggestion that anyone was in need of assistance.

During the latter part of 1942 he spent most of the time in bed, mentally active but physically weak. He permitted no visitors to come to his room, not even close associates of earlier years. He insisted to hotel employees that he was not ill and refused to listen to questions that he have a doctor visit him. He gave orders that even hotel employees were not to enter his room unless he summoned them.

On January 5, Tuesday morning, he permitted the maid to come to his room, and then gave orders to guard his room closely so that he would not be disturbed. This was done. It was not unusual for Tesla to give orders that he was not to be disturbed for protracted periods. Early Friday morning (January 8) a maid with a premonition, risking his displeasure, entered Tesla's room and found him dead. He looked peaceful, as if resting, with a suggestion of a smile on his gaunt bony face. The superman died as he had lived--alone.

The police were notified that Tesla had died alone and without medical attendance. The coroner declared his death due to natural causes incident to senility; and that he had died on the night of Thursday, January 7, 1943, some hours before the maid entered the room. Operatives from the Federal Bureau of Investigation came and opened the safe in his room and took the papers it contained, to examine them for a reported important secret invention of possible use in the war. The body was removed to Campbell's Funeral Parlors at Madison Avenue and 81st Street.

Funeral services were held at the Cathedral of St. John the Divine, on Tuesday, January 12, at 4 pm. Bishop Manning offered the opening sentences of the Burial Offce and Final Prayer. Following the services, the body was removed to

Ferncliff Cemetery at Ardsley, N. Y., and was later cremated.

AFTERGLOW

EIGHTEEN

DESPITE his celibate life, and his almost hermitlike existence in his own intellectual sphere, Tesla was, in his social contacts, a charming individual. The year he had spent digging ditches and doing hard manual labor, when he could get a job of any kind, and his experience during that time of sleeping in any shelter he could obtain and eating any kind of food he could manage to secure, undoubtedly made a tremendous and lasting, impression on him. The fact that he could never be induced to discuss this period would so indicate. Yet it probably softened him in a beneffcial way--by a going-through-the-mill process. But it had been a grievous insult to his personality to be valued only for the brute strength in his muscles; and this rankled ever after.

Once he had obtained funds through the founding of his laboratory and the sale of his patents to Westinghouse, he thereafter maintained an almost princely status. He knew how to wear clothes to increase the impressiveness of his appearance; his tallness gave him something of an advantage over others; his obvious physical strength brought him a respect that forbade any invasion of his attitude; his excellent English and the care he exercised to use the language correctly, and his command of a half-dozen other languages, established him as a scholar; and the first batch of his alternating-current inventions created for him in the mind of the public a reputation for outstanding scientific accomplishment. The fact that he always spoke of the value of his inventions to the world, and not of the greatness of his own accomplishment, endeared him to all who met him.

When Tesla was riding a tidal wave of popularity during the nineties, he was averse to publicity; but frequently well-known writers for the newspapers were able to break through the barriers and secure "feature" articles. An excellent description of him, keyed to the manner of the period, is contained in an article written by Franklin Chester, in the

Citizen of August 22, 1897. The portion referring to his personal appearance and activities follows:

So far as personal appearance goes no one can look upon him without feeling his force. He is more than six feet tall and very slender. Yet he possesses great physical power. His hands are large, his thumbs abnormally long, and this is a sign of great intelligence. His hair is black and straight, a deep shining black. He brushes it sharply from over his ears, so that it makes a ridge with serrated edges.

His cheekbones are high and prominent, the mark of the Slav: his skin is like marble that age has given the first searing of yellow. His eyes are blue, deeply set, and they burn like balls of fire. Those weird flashes of light he makes with his instruments seem also to shoot from them. His head is wedge shaped. His chin is almost a point.

Never was a human being filled with loftier ideals. Never did a man labor so unceasingly, so earnestly, so unselfishly for the benefft of the race. Tesla is not rich. He does not trouble himself about money. Had he chosen to follow in the footsteps of Edison he could be, perhaps, the richest man in the world, and Tesla is just 40 years old.

Tesla is, above all things, a serious man, undoubtedly the most serious man in New York. Yet he has a keen sense of humor and the most beautiful manners. He is the most genuinely modest of men. He knows no jealousy. He has never decried the accomplishments of another, never refused credit.

When he talks you listen. You do not know what he is saying, but it enthralls you. You feel the importance without understanding the meaning. He speaks the perfect English of a highly educated foreigner, without accent and with precision. He speaks eight languages equally well.

The daily life of this man has been the same, practically, ever since he has been in New York. He lives in the Gerlach, a very quiet family hotel, in 27th street, between Broadway and Sixth avenue. He starts for his laboratory before 9 o'clock in the morning, all day long he lives in his weird, uncanny world, reaching forth to capture new power to gain fresh knowledge.

No stranger ever sees him at his work. No one knows of his assistants. At rare intervals he presents some experiments in his laboratory, and there is no sacrifice that thousands of people would not make to gain admission to these.

Usually he works until 6 o'clock, but he may stay later. The absence of natural light does not trouble him. Tesla makes sunlight in his workshop.

At exactly 8 o'clock he enters the Waldorf. He is attired in irreproachable evening clothes. In the winter time he never wears an evening jacket, but always the coat with tails.

He finishes his dinner at exactly 10 o'clock, and leaves his hotel, either to go to his rooms to study or to return to his laboratory to work through the night.

Arthur Brisbane, who later became Hearst's famous editor, interviewed Tesla and published in The World, August 22, 1894, the longest story he had written on a famous person. He declared Tesla "Our Foremost Electrician--Greater Even than Edison," and included the following description of him:

He has eyes set very far back in his head. They are rather light. I asked him how he could have such light eyes and be a Slav. He told me that his eyes were once much darker, but that using his mind a great deal had made them many shades lighter. I have often heard it said that using the brain makes the eyes lighter in color. Tesla's confirmation of the theory through his personal experience is important.

He is very thin, is more than six feet tall, and weighs less than a hundred and forty pounds. He has very big hands. His thumbs are remarkably big, even for such big hands. They are extraordinarily big. This is a good sign. The thumb is the intellectual part of the hand. The apes have very small thumbs. Study them and you will notice this.

Nikola Tesla has a head that spreads out at the top like a fan. His head is shaped like a wedge. His chin is as pointed as an ice-pick. His mouth is too small. His chin, though not weak, is not strong enough. His face cannot be studied and judged like the faces of other men, for he is not a worker in practical fields. He lives his life up in

the top of his head, where ideas are born, and up there he has plenty of room. His hair is jet black and curly. He stoops--most men do when they have no peacock blood in them. He lives inside of himself. He takes a profound interest in his own work. He has that supply of self-love and self-confidence which usually goes with success. And he differs from most of the men who are written and talked about in the fact that he has something to tell.

Tesla had, to be sure, a sense of humor and enjoyed putting over a subtle joke. Before the period in which he became a regular diner at the Waldorf-Astoria, he dined nightly at Delmonico's, then the smartest hostelry in the city, and a gathering place for "The 400." Tesla was the most famous and spectacular figure among the famous patrons of the famous place, but he always dined alone. He could never be induced to join other groups and never had a guest of his own. After dining he would always return to work at his laboratory.

One evening some of his friends, believing that he was working too hard and should get some relaxation, induced him to join them in a game of billiards. They assumed he had neglected to learn how to play games, so, on arriving at the billiard room, they explained to him how to hold the cue, strike the balls, and other elements of the game. Tesla had not played billiards in a dozen years; but during his second year at Graumltz, when he was a year ahead in his studies and spent his evenings in the cafe's, he had become an expert billiardist. When the experts at Delmonico's gave him preparatory instruction, he asked some "dumb" questions, and made some intentional miscues. Taking on one of the players and still asking silly questions, he tried the most diffcult way of making shots--to demonstrate his purely amateur status--and made them, to the amazement of the experts. Several of them took him on that evening, and he defeated all of them with badly unbalanced scores. He declared the new game give him a wonderful opportunity to practice very abstract mathematical theories; and the experts at Delmonico's spread stories about the wonderful accomplishment of Scientist Tesla in mastering the game in a single evening and defeating the best players in the city. The story got into the newspapers. Tesla refused to play any more, declaring he was in danger of becoming so enthusiastic over the game that it would interfere with his researches.

This same man magnificent who graced the Waldorf-Astoria and Delmonico's was not averse, however, to visiting the Bowery, which was but a block away from his Houston Street laboratory. He repaired to a thirst-quenching emporium on that thoroughfare one afternoon shortly after a denizen of the Bowery, Steve Brodie, had achieved fame by jumping, or at least claiming to have jumped, off the Brooklyn Bridge. As Tesla raised his glass of whiskey he said to the bartender: "You know what Steve said as he was about to jump off the bridge--`Down he goes"'; and with that he downed his liquor in a gulp.

A near-by drinker, a little the worse for several, misunderstood Tesla's remark and got the impression he had heard Steve Brodie telling the final episode of his feat. He rushed up to Tesla to buy him a drink, and was joined by his friends. Tesla with a laugh shook them off and dashed out of the bar, while the misguided drinker started after him yelling, "Stop him, that's Steve." On the street the pedestrians misunderstood the thick-tongued drinker's shout and joined him in the chase, calling "Stop, thief!" Tesla's long legs rendered him a valuable service and he got a lead on the crowd, dashed into an alley, over a fence and climbed a fire escape on the back of his own building, reached his laboratory through a window, quickly donned a blacksmith's apron and started hammering a bar of metal. His pursuers, however, failed to trace him.

Tesla was idolized by the Serbians in New York. A great many of them could claim to be distant relatives through either the Tesla or Mandich side of the family, and those who could not claim this distinction revered him none the less, despite the fact he never accepted invitations to take part in their social or other functions.

One day an excited Serbian, a laborer, came to his apartment at the Waldorf-Astoria to beg his aid. He had gotten into a fight and pummeled a fellow Serbian, who had sworn out a warrant for his arrest. The visitor did not have any money but wanted to go to Chicago to escape arrest. Would Tesla please lend him the money for his railroad fare?

"So you assaulted a man and now want to run away to escape punishment," said Tesla. "You may run away from the law but you are not going to escape punishment; you are going to get it right now!" Seizing a cane and grasping the man by

the back of the neck, he ran him around the room, beating the dust out of the seat of his trousers until the man cried for mercy.

"Do you think you can be a better man in Chicago and keep out of fights?" Tesla asked him. The man was sure he could. He received the money for his railroad fare and a few dollars more.

So great was Tesla's popularity in the nineties that many persons came to dine in the Palm Room at the Waldorf just to catch a glimpse of the famous inventor. He arranged to leave his offce at six, but just before leaving he would telephone the order for his dinner to the headwaiter, always insisting that none less could serve him. The meal was required to be ready at eight o'clock. In the meantime he would go to his room and array himself in formal evening attire--white tie and tails. He dined alone, except on the rare occasions when he would give a dinner to a group to meet his social obligations.

Money was always a nuisance detail to Tesla. For about fifteen years, following 1888, he always had all he needed to meet his obligations; and he lived well. After about 1902 his financial road became quite rocky--but his fame was greater than ever, and likewise the need for maintaining his standard of living if he was to recoup his fortune. He continued to stage frequent large dinners at the Waldorf to repay his social obligations, and had diffculty in accustoming himself to a money deffciency. On one occasion, when a large party was assembled in a private dining room, the headwaiter whispered to him that a most excellent dinner was prepared and ready to serve as he had ordered it, but that the credit department insisted it could not be served until he paid for it in advance. "Get Mr. Morgan on the telephone in the manager's offce and I will be down there immediately," Tesla fumed. In a short time a more-than-adequate check was delivered to Tesla by a messenger. Many such occasions are reported to have arisen, but were always straightened out in the manager's offce, usually without any outside intervention.

The closest approach to home life which Tesla enjoyed came to him through Robert Underwood Johnson diplomat and poet, and one of the editors of the Century Magazine, whose home was in Madison Avenue in the fashionable Murray Hill district. Tesla and Johnson were very close friends. A love

of poetry was one of the several interests they had in common. Johnson wrote, and published in the Century, in April, 1895, a short poem on his visit to Tesla's laboratory. This led to a cooperative enterprise in which he paraphrased many pieces of Serbian poetry from literal translations made by Tesla, who could recite many thousands of lines of such material from memory. About forty pages of these translations, with an introductory note by Tesla, appeared in the next edition of Poems by Johnson.

Persons famous in all fields of activity were frequent guests in the Johnson home, and formal dinners were constantly being held for brilliant assemblages of personalities. Tesla was present as frequently as he could be induced to come, but he preferred to avoid all formal dinners as much as possible. He was, however, a very frequent informal visitor, arriving unexpected, and often at most unusual hours. It was not uncommon for Tesla to arrive at the Johnson home after midnight, after the family had retired, and for "Bob" and "Nick" to sit up for hours reveling in the exchange of a magnificent array of ideas. (Johnson and "Willie" K. Vanderbilt, were, as has been noted, the only individuals who rated the exchange of first names with Tesla.)

Tesla's visits to the Johnson home were always many hours long. He would arrive in a hansom cab, which he always required to wait for him to return to his hotel only a few blocks distant. The Johnson children learned to take advantage of this, and when he arrived early in the evening they would get his permission to use the cab for a drive through Central Park while he chatted at home.

Tesla enjoyed the opera and at one time attended the performances quite frequently. William K. Vanderbilt's box was always available to him, as likewise were those of many other patrons of the Metropolitan. He occasionally attended the theatre. His favorite actress was Elsie Ferguson who, he declared, knew how to dress and was the most graceful woman he had ever seen on the stage. He gradually dropped both the theatre and opera in favor of the movies, but was an infrequent attendant even at those. He would not witness a tragedy but enjoyed comedy and the lighter aspects of entertainment.

One of his close friends was Rear Admiral Richmond Pearson Hobson, the Spanish American War hero. In later years,

Hobson was the only person who was able to cajole Tesla into breaking a long vigil at his intellectual pursuits for a session at the movies.

Tesla did not subscribe to any religion. Early in life he severed his relations with the Church and did not accept its doctrines. At his seventy-fifth birthday dinner he declared that that which is called the soul is merely one of the functions of the body, and that when the activities of the body cease, the soul ceases to exist.

It is difficult for a man to appear as a hero to his secretary, but to Miss Dorothy F. Skerritt, who served Tesla in this capacity for many years until he closed his offce when he was seventy, he remained a saintly superman. Her description of Tesla, at this age, records him as possessing the same magnetic personality that so impressed writers thirty years earlier. She wrote:

As one approached Mr. Tesla he beheld a tall, gaunt man. He appeared to be an almost divine being. When about 70 he stood erect, his extremely thin body immaculately and simply attired in clothing of a subdued coloring. Neither scarf pin nor ring adorned him. His bushy black hair was parted in the middle and brushed back briskly from his high broad forehead, deeply lined by his close concentration on scientific problems that stimulated and fascinated him. From under protruding eyebrows his deepset, steel gray, soft, yet piercing eyes, seemed to read your innermost thoughts. As he waxed enthusiastic about fields to conquer and achievements to attain his face glowed with almost ethereal radiance, and his listeners were transported from the commonplaces of today to imaginative realms of the future. His genial smile and nobility of bearing always denoted the gentlemanly characteristics that were so ingrained in his soul.

Until the last, Tesla was meticulously careful about his clothes. He knew how to dress well and did so. He declared to a secretary, in 1910, that he was the best-dressed man on Fifth Avenue and intended to maintain that standard. This was not because of personal vanity. Neatness and fastidiousness in clothes were entirely in harmony with every other phase of his personality. He did not maintain a large wardrobe and he wore no jewelry of any kind. Good clothes fitted in very nicely with his courtly bearing. He observed, however, that in the matter of clothes the world

takes a man at his own valuation, as expressed in his appearance, and frequently eases his way to his objective through small courtesies not extended to less prepossessing individuals.

He was partial to the waisted coat. No matter what he wore, however, it carried an air of quiet elegance. The only type of hat he wore was the black derby. He carried a cane and wore, usually, gray suede gloves.

Tesla paid $2.50 a pair for his gloves, wore them for a week and then discarded them even though they still appeared as fresh as when they came from the maker. He standardized his style of ties and always wore the four-in-hand. The design motive was of minor importance but the colors were limited to a combination of red and black. He purchased a new tie every week, paying always one dollar.

Silk shirts, plain white, were the only kind Tesla would wear. As with other articles of his clothing, such as pajamas, his initials were always embroidered on the left chest.

Handkerchiefs he purchased in large numbers because he never sent them to the laundry. After their first use they were discarded. He liked a good quality of linen and purchased a standard package brand. His collars were never laundered, either. He never wore one more than once.

Tesla always wore high-laced shoes, except on formal occasions. He required a long narrow shoe and insisted on a last that had a neatly tapered square-toe effect. His shoes were undoubtedly made to order, for the tops extended halfway up his calf, a style that could not be purchased in merchant shoe stores. His tallness in all probability made this additional support at the ankles desirable.

The single use of articles, such as handkerchiefs and collars, extended to napkins. Tesla had a germ phobia, and it acted like so much sand in the social machinery of his life. He required that the table he used in the dining room of his hotel be not used by others. A fresh table cloth was required for every meal. He also required that a stack of two dozen napkins be placed on the left side of the table. As each item of silverware and each dish was brought to him--and he required that they be sterilized by heat before leaving the kitchen--he would pick each one up, interposing

a napkin between his hand and the utensil, and use another napkin to clean it. He could then drop both napkins on the floor. Even for a simple meal, he usually ran through the full stock of napkins. Flies were his pet abomination. A fly alighting on his table was adequate cause for removing everything from the table and making an entirely new start with the meal.

Tesla was fortunate in that the headwaiter at the Waldorf-Astoria, during the period he was living there, Mr. Peterson, was afterward headwaiter at the Hotel Pennsylvania, where he later lived for several years. A story was in circulation to the effect that both at the Waldorf and at the Pennsylvania a special chef was employed to prepare Tesla's meals, but Mr. Peterson states that this story was untrue.

In his earlier years, for dinner, he greatly enjoyed fine thick steaks, preferably the filet mignon, and it was not unusual for him to consume two or three at a sitting. Later his preference turned to lamb, and he would frequently order a roast saddle of it. While the saddle was usually large enough to serve a party of several persons, as a rule he ate of it only the central portion of the tenderloin. A crown of baby lamb chops was another favorite dish. He also relished roast squab with nut stuffng. In fowl, however, his choice was roast duck. He required that it be roasted under a smothering of celery stalks. This method of preparing the duck was of his own devising. He very often made it the central motif around which a dinner was designed when entertaining friends, and on such occasions he would go to the kitchen to superintend its preparation. Duck so prepared was nevertheless delicious. Of the duck he ate only the meat on either side of the breast bone.

With the passing decades, Tesla shifted away from a meat diet. He substituted fish, always boiled, and finally eliminated the meat entirely. He later almost entirely eliminated the fish and lived on a vegetarian diet. Milk was his main standby, and toward the end of his life it was the principal item of diet, served warm.

As a youth he drank a great deal of coffee, and, while he gradually became aware that he suffered unfavorable influences from it, he found it a diffcult habit to break. When he finally made the decision to drink no more of it, he adhered to his good intentions but was forced to

recognize the fact that the desire for it remained. He combated this by ordering with each meal a pot of his favorite coffee, and having a cup of it poured so that he would get the aroma. It required ten years for the aroma of the coffee to transform itself into a nuisance so that he felt secure in no longer having it served. Tea and cocoa he also considered injurious.

He was a heavy smoker in his youth, mostly of cigars. A sister who seemed fatally ill, when he was in his early twenties, said she would try to get better if he would give up smoking. He did so immediately. His sister recovered, and he never smoked again.

Tesla drank whiskey, for this he considered a very beneffcial source of energy and an invaluable means for prolonging life. It was responsible, he believed, for the longevity enjoyed by many of his ancestors. It would enable him, he declared early in the century, to live to one hundred and fifty. When prohibition came along with the First World War, he denounced it as an intolerable interference with the rights of citizens. Nevertheless, he promptly gave up the use of whiskey and all other beverages except milk and water. He declared, however, that the elimination of whiskey would reduce his expectation of life to one hundred and thirty years.

Stimulants were not necessary to help him to think, Tesla said. A brisk walk he found much better as an aid for concentration. He seemed to be in a dream when walking. Even one whom he knew very well he would pass at close range and not see, though he might appear to be looking directly at him. His thoughts were usually miles away from where he was. It was this practice, apparently, which was responsible for the accident, in 1937, when he was struck and severely injured by a taxicab. As a matter of fact, he had stated in an interview two years earlier that he would probably be killed by a truck or taxicab while jaywalking.

Tesla's weight, stripped, was 142 pounds, and, except during brief periods of illness, hardly varied a pound from 1888 to about 1926, when he intentionally reduced his weight five pounds.

One of Tesla's indulgences, over many years, was scalp massages. He would visit a barbershop three times a week and have the barber rub his scalp for half an hour. He was

insistent upon the barber placing a clean towel on his chair but, strangely enough, he did not object to the use of the common shaving mug and brush.

Tesla always claimed that he never slept more than two hours a night. His retiring time, he said, was five am, and he would arise at ten am after spending only two hours in sleep, three hours being too much. Once a year, he admitted, he would sleep for five hours--and that would result in building up a tremendous reserve of energy. He never stopped working, he claimed,--even when asleep. Tesla laughed at Edison's claim that he slept only four hours a night. It was a regular practice with Edison, he said, to sit down in his laboratory and doze off into a three-hour nap about twice a day. It is possible that Tesla, too, obtained some sleep in a similar fashion, perhaps without being conscious of the fact. Hotel employees have related that it was quite common to see Tesla standing transfixed in his room for hours at a time, so oblivious to his surroundings that they were able to work around his room without his being, apparently, aware of their presence.

Tesla always provided his offce with a separate washroom which no one but himself was permitted to use. He would wash his hands on the slightest pretext. When he did so, he required that his secretary hand him a freshly laundered towel each time to dry them.

He went to extremes to avoid shaking hands. He usually placed his hands behind his back when anyone approached who he feared might make an effort to shake hands, and this frequently led to embarrassing moments. If by chance a visitor to his offce should catch him off guard and shake his hand, Tesla was so upset that he would be unable to pay attention to the visitor's mission and frequently would dismiss him before it was completely stated; and immediately he would rush to the washroom and scour his hands. Workmen eating their lunch with dirty hands almost nauseated him.

Pearls, too, were one of Tesla's phobias. If a woman guest at a dinner party to which he was invited wore pearls, he was unable to eat. Smooth round surfaces, in general, were an abomination to him; it had even taken him a long time to learn to tolerate billiard balls.

Tesla never knew the experience of having a headache. In spite of a number of cases of serious illness, in his independent years he was never attended by a doctor.

There were reasons for practically all of Tesla's phobias, not all of them generally known. His germ phobia can be traced back to his two serious illnesses early in life, both of which were probably cholera, a disease constantly prevalent in his native land, caused by a germ transmitted by impure drinking water and by contact between individuals.

Tesla was not oblivious of his idiosyncrasies; he was quite aware of them and of the friction which they caused in his daily life. They were an essential part of him, however, and he could no more have dispensed with them than he could his right arm. They were probably one of the consequences of his solitary mode of life or, possibly, a contributing cause of it.

6NINETEEN

Tesla's mind always seemed to be under an explosive pressure. An avalanche of ideas was forever straining for release. He seemed to be unable to keep up with the flood of his own thoughts. He never had suffcient facilities to keep his accomplishments equal to his projects. If he had an army of adequately trained assistants, he would still be insuffciently equipped. As a result, those associated with him always experienced a sense of "drive"; yet he was a most generous employer both in the matter of wages paid and the number of hours of work required. He frequently demanded overtime work but always paid generously for it.

Nevertheless, Tesla was not an easy man to work for. He was most meticulously neat in his personal affairs and required all workers to be the same. He was an excellent mechanic and set extremely high standards, by his own accomplishments, for all work done in his shops. He greatly admired cleverness in his assistants, frequently rewarding them with extra compensation for diffcult jobs well done,

but was extremely impatient with stupidity and carelessness.

Although Tesla maintained a staff of draughtsmen, he never used them in his own design work on machines, and tolerated them only because of unavoidable contacts with other organizations. When having machines constructed for his own use, he would give individual instruction on each part. The workman scheduled to do the machinework would be summoned to Tesla's desk, where the inventor would make an almost microscopically small sketch in the middle of a large sheet of paper. No matter how detailed the piece of work, or its size, the sketch was always less than one inch in its largest dimensions. If Tesla made the slightest slip of the pencil in drawing the sketch, he would not make an erasure but would start over on another sheet of paper. All dimensions were given verbally. When the drawing was finished, the workman was not permitted to take it with him to the shop to guide him in his work. Tesla would destroy the drawing and require the machinist to work from memory. Tesla depended entirely on his memory for all details, he never reduced his mentally completed plans to paper for guidance in construction--and he believed others could achieve this ability if they would make suffcient effort. So he sought to force them to try by insisting on their working without drawings.

All those who worked with Tesla greatly admired him for his remarkable ability to keep track of a vast number of finest details concerning every phase of the many projects he had under way simultaneously. No employee was ever given any more information than was absolutely essential for completing a project. No one was ever told the purposes for which a machine or article was to be used. Tesla claimed that Edison received more ideas from his associates than he contributed, so he himself bent over backward to avoid this situation. He felt that he was the richest man in the world in the matter of ideas and needed none from anyone else; and he intended to prevent all from contributing any.

Tesla was probably very unfair to Edison in this respect. The two men were entirely different and distinct types. Tesla was totally lacking in the university type of mind; that is, the mind which is adapted to cooperate with others in acquiring knowledge and conducting research. He could neither give nor receive, but was entirely adequate to his own requirements. Edison had more of the cooperative, or

executive, type of mind. He was able to attract brilliant associates and to delegate to them major portions of his inventive research projects. He had the ability to act as a catalyzer, to stimulate them to creative mental activities, and thus multiply his own creative abilities. If Tesla had possessed this ability, his record of accomplishment would have been tremendously magnified.

The inability to work with others, the inability to share his plans, was the greatest handicap from which Tesla suffered. It completely isolated him from the rest of the intellectual structure of his time and caused the world to lose a vast amount of creative thought which he was unable to translate into complete inventions. It is a duty of a master to train pupils who will carry on after him--but Tesla refused to accept this responsibility. Had Tesla, in his most active period, associated with him a half-dozen brilliant young scientists, they would have been in a position to link him with the engineering and scientific worlds from which, despite his eminence and his outstanding accomplishments, he was to a great extent isolated because of his unusual personal characteristics. His fame was so secure that the success of his assistants could not have detracted from it; but the master would have shone more brightly in the brilliant accomplishments of his pupils. He might well have attracted some practical young men who could have aided him by assuming the burden of making practical application of some of the minor but important inventions from which he could have earned suffcient profit to pay the cost of maintaining his laboratories. Many scores of important inventions have undoubtedly been lost to the world because of Tesla's intellectual hermit characteristics. Undoubtedly, he indirectly inspired many young men to become inventors.

Tesla responded powerfully to personal idiosyncrasies in individuals with whom he worked. When his reaction was unfavorable, he was unable to tolerate the presence of the person within eyeshot. When carrying on his experimental work at the Allis Chalmers plant in Milwaukee, for example, he did not increase his popularity by insisting that certain workers be dropped from the crew working on the turbine because he did not like their looks. Since, as noted earlier, he had already antagonized the engineers in that plant by going over their heads to the president and board of directors, the turbine job went forward in something less than a cooperative atmosphere.

Tesla was thoroughly impractical throughout, too, in handling money matters. When he was working on the Union Sulphur Company turbine project, a ship was made available for his use, free, during the day; but if he worked after six pm it would cost him $20 per hour. He never showed up at the ship until six o'clock. Every night, in addition, he had to hand out $10 for suppers for the crew. In the course of a year these costs totaled about $12,000, which must have cut heavily into the retainer he received. Nor were these his only additional expenses. Almost every night he handed a $5 tip to his principal assistants among the crew, and once a week to all members of the crew. These manifestations of generosity were not, of course, a total loss to Tesla; they might rather be classed as necessities, for he was very dictatorial in directing his assistants.

Inquiries among the employees at hotels where he lived revealed that he had a reputation for acting in a most cavalier manner toward the servants. He was almost cruel in the manner in which he ordered them around, but would make immediate compensation by the generous tips he bestowed.

He was always, however, very considerate of women, and even men, on his offce staff. If any one of them did an unusually fine piece of work, everyone on the staff was informed of it. Criticism was always delivered privately to the individual involved.

Tesla had a standing rule that every messenger boy who came to his offce was to receive a tip of twenty-five cents, and he set aside a fund of $10 a week for this purpose.

If necessity required that he keep his staff of young women secretaries and typists working overtime for several hours, he would provide them with a dinner at Delmonico's. He would hire a cab for the girls and would follow them in another cab. After making arrangements to pay the bill, and paying the tip in advance, he would leave.

Tesla timed his arrival at the offce so that he entered at the stroke of noon. He required that his secretary should be standing immediately inside the door to receive him and take his hat, cane and gloves. His offces were opened by nine o'clock each morning, so all routine matters would be handled before his arrival. Before Tesla arrived, all the shades in the offce had to be drawn so that no outdoor

light was admitted and night conditions were simulated. The inventor, as remarked, was a "sun dodger." He appeared to be at his best at night and at some kind of disadvantage in daylight; at any rate, he preferred the night for work and what he called his recreation.

The only time Tesla would permit the shades of his offce to be raised was when a lightning storm was raging. The various offces he leased faced on open spaces. The 8 West 40th Street offce was on the south side of Bryant Park, in the east end of which was the low-roofed structure that housed the New York Public Library. From his windows on the twentieth floor, he could look beyond the city roof scape below him and obtain a broad view of the sky.

When the rumbles of distant thunder announced that the fireworks of the sky would presently be flashing, it was not only permissible to raise the shades--it was obligatory. Tesla loved to watch lightning flash. The black mohair couch would be drawn close to the windows so that he could lie on it, completely relaxed, while his vision commanded a full view of the northern or the western sky. He was always talking to himself, but during a lightning storm he would become eloquent. His conversation on such occasions was never recorded. He wished to be a lone observer of this gorgeous spectacle, and his secretaries were quite willing that he should be so accommodated. By finger measurements and counting seconds he was able to calculate the distance, length and voltage of each flash.

How thrilled Tesla must have been by these tremendous sparks, many times longer than he had been able to produce in his Colorado Springs laboratory! He had successfully imitated Nature's electrical fireworks, but he had not as yet exceeded her performance.

The ancient Romans sublimated their frustrations by the forces of Nature by creating the mental concept of their mightiest god, Jupiter, as one endowed with the power of creating lightning and hurling his bolts at earth. Tesla had refused to accept frustration; but, like the ancient Romans, he too set up a mental concept, a superman not inferior to the Romans' ruling god, who would control the forces of Nature. Yes, Tesla thoroughly enjoyed a lightning storm. From his mohair couch, he used to applaud the lightning; he approved of it. He may even have been a little bit jealous.

Tesla never married; no woman, with the exception of his mother and his sisters, ever shared the smallest fraction of his life. He idolized his mother and admired his sisters for their intellectual accomplishments. One of his sisters, Marica, exhibited unusual ability as a mathematician and had greater ability than his own for memorizing long passages from books. He attributed to his mother most of his abilities as an inventor, and he continuously spoke in praise of her ability to contrive useful gadgets for the household, often regretting that she had not been born into an environment in which she would have been able to manifest to a larger world her many creative talents. He was not unaware of the values which a woman could bring into a man's life, for he had ever before him the vast contributions which his mother made to his father's welfare and happiness. However, he lived instead a blueprint life, one which he had planned in his early youth, one designed along engineering lines, with all of the time and energies available to be directed to invention and none to be dissipated on emotional projects.

From the romantic point of view, Tesla as a young man was not unattractive. He was too tall and slender to pose as the physical Adonis, but his other qualifications more than compensated for this possible defect. He was handsome of face, had a magnetic personality, but was quiet, almost shy; he was soft spoken, well educated and wore clothes well in spite of inadequate funds with which to keep up a wardrobe. However, he avoided romantic encounters, or any situations that would lead up to them, just as assiduously as other young men sought them. He would not permit his thoughts to wander into romantic channels, and with thoughts successfully controlled, action control became a problem of vanishing magnitude. He did not develop an antagonism to women; he solved the problem, instead, by idealizing them.

A typical instance of how he avoided romance is furnished by an incident that occurred in Paris when he returned to that city to give a lecture on his alternating-current system after he had become world famous. His wonderful discoveries were the principal topic of conversation of the day, and he was the cynosure of all eyes wherever he went. The situation was entirely pleasant to Tesla. Less than ten years before, the executives the Continental Edison Company, in that city, had not alone rejected the

alternating-current system he had offered them but had cheated him of his just earnings. Now he was returning to that city after receiving recognition and wealth in the United States and fame throughout the world. He was in Paris as a returned hero and the world was at his feet.

As he sat in an outdoor cafe; with a young male friend, amidst a chattering, fashionably dressed crowd, a graceful, gorgeously gowned young woman, with a stylishly coiffured crown of red hair, whom he instantly recognized as Sarah Bernhardt, the famous French actress--the "divine Sarah"--swung close to his table and when a few feet away very auspiciously dropped a tiny lace handkerchief.

Tesla was on his feet in an instant. He recovered the handkerchief, and with his hat in his other hand, bowing low from the waist, he handed the wisp of lace to the beautiful tragedienne, saying: "Mademoiselle, your handkerchief." Without even an upward glance at her graciously smiling face, he returned to his chair and resumed his conversation about his experiments on a world wireless system of power transmission.

When a newspaper reporter once asked Tesla why he had not married, his reply, as contained in the published interview was:

I have planned to devote my whole life to my work and for that reason I am denied the love and companionship of a good woman; and more, too.

I believe that a writer or a musician should marry. They gain inspiration that leads to finer achievement.

But an inventor has so intense a nature, with so much in it of wild, passionate quality that, in giving himself to a woman, he would give up everything, and so take everything from his chosen field: It is a pity, too; sometimes we feel so lonely.

In my student days I have known what it was to pass forty-eight hours at a stretch at a gaming table, undergoing intense emotion, that which most people believe is the strongest that can be known, but it is tame and insipid compared with that sublime moment when you see the labor of weeks fructify in a successful experiment that proves your theories. . . .

"Many times has Nikola Tesla known that supreme happiness," said the interviewer, "and he is likely to know it often again. It is impossible that his life work can be finished at forty. It would seem that his powers are only reaching their maturity."

Tesla was not unappreciative of the activities of the many women who showed a sincere interest in his welfare, and who tried to make life tolerable and pleasant for an obviously none-too-well-adjusted scientist projected into a social world from which he would have been only too willing to escape. He spoke glowingly of the first Mrs. Clarence Mackay (e Duer), Mrs. Jordan L. Mott, and of the beauty of Lady Ribblesdale (the former Mrs. John Jacob Astor). He admired the energetic idealism of Miss Anne Morgan; but never was the situation brightened by a single tint of romance.

He was impressed by the tall, graceful and charming Miss Marguerite Merington, a talented pianist and writer on musical subjects, who was a frequent dinner guest at the Johnson home.

"Why do you not wear diamonds and jewelry like other women?" Tesla undiplomatically asked Miss Merington, one evening.

"It is not a matter of choice with me," she replied, "but if I had enough money to load myself with diamonds I could think of better ways of spending it."

"What would you do with money if you had it?" the inventor continued.

"I would prefer to purchase a home in the country, except that I would not enjoy commuting to the suburbs," Miss Merington replied.

"Ah! Miss Merington, when I start getting my millions I will solve that problem. I will buy a square block here in New York and build a villa for you in the center and plant trees all around it. Then you will have your country home and will not have to leave the city."

Tesla was most generous in the distribution of his always still-to-be-gotten millions; none of his friends would ever

have lacked anything they desired if he had had suffcient funds with which to satisfy their wishes. His promises, however, were always to be fulfilled--"When I start getting my millions."

Tesla had, as might be expected, very definite ideas about how women should dress. He also had clear-cut ideas about the feminine figure. He disliked the big "hefty" type and utterly detested fat women. The super-upholstered type, flashily dressed and heavily jeweled, that wasted time in hotel lobbies, were his pet abomination. He liked women trim, slim, graceful and agile.

One of his secretaries, well proportioned and a graceful blonde, wore to the offce one day a dress that was in the very latest style. It was a summer dress made from a pretty print. The prevailing style called for an extremely low waist line, well down on the hips, several inches below its natural location. This gave a relatively short skirt and from the neck to the hips the dress was almost a plain cylinder. The style was very new, and was enjoying an intense but brief wave of popularity. The secretary was an excellent seamstress and had made the dress herself, an accomplishment of which she was justly proud.

Tesla summoned the secretary. She breezed into his sanctum not expecting, but hoping, that he would say something nice about her new dress.

"Miss," he said, "what is that you are wearing? You cannot wear that on this errand on which I wish you to go. I wished to have you take a note to a very important banker down town, and what would he think if someone from my offce should come to him wearing such a monstrosity of a gown? How can you be such a slave to fashion? Whatever the fashion designers say is the style you buy and wear. Miss, you have good sense and good taste, so why did you let the saleslady in the store force a dress like this on you? Now if you were also very clever like my sister who makes all her own dresses you would not be forced to wear any such abominable style as this, then you too could make your own clothes and you could wear sensible gowns. You should always follow nature in the design of your clothes. Do not let a style designer deform nature for you, for then you become hideous instead of attractive. Now, Miss, you get into a cab, so not many people will see you, and go to your

home and get into a sensible dress and return as soon as you can so you can take this letter down town for me."

Tesla never addressed any of his woman employees by either their Christian names or surnames. The only form of address he used to them was "Miss." As he spoke it, it sounded like "Meese," and he could make it very expressive. When he addressed the secretary wearing the gown of which he disapproved, it sounded like "Meeeeeeesssse." It could also be an abrupt, abbreviated expletive.

When a young woman on his office staff left his employ to get married, Tesla preached this sermonette to the remaining members:

"Do not marry too young. When you marry too young, men marry you mostly for your beauty and ten years later when your beauty is gone, they tire of you and become interested in someone else."

Tesla's attitude toward woman was paradoxical; he idealized woman--put her up on a pedestal--and yet he also viewed women in a purely objective and materialistic way, as if no spiritual concepts were involved in their make-up. This was undoubtedly an outward expression of the conflict that was taking place within his own life, between the normal healthy attitude toward female companionship, and the coldly objective planning of his life under which he refused to share the smallest fraction of his life with any woman.

Only the finest type of women could approach within friendship distance of Tesla, and such individuals were idealized by him without the least diffculty; he could desex them mentally so that the vector or emotional attraction was eliminated. To the remainder he did not bother to apply this process. They had no attraction for him.

Out of the welter of human affairs, however, he visioned the rising of a superior breed of human beings, few in number but of vastly elevated intellectual status, while the remainder of the race leveled itself on a merely productive and reproductive plane, which, however, could represent a considerable improvement over existing conditions. He sought to fashion an idealism out of purely materialistic concepts of human nature. This was a hold-

over from the materialistic, agnostic views which were fashionable and prevalent among scientists in the formative period of his youth. This phase of his attitude was not particularly hard to break down in his latter years; but the phase which represented an engineering approach to the solution of problems of the human race was more firmly held, although he was willing to admit that spiritual factors had a real existence and should be considered in such planning.

His views concerning women received their only expression in published form in the article written for Collier's, in 1924, by John B. Kennedy, from an interview with Tesla. On this occasion, he said:

The struggle of the human female toward sex equality will end up in a new sex order, with the females superior. The modern woman, who anticipates in merely superficial phenomenon the advancement of her sex, is but a surface symptom of something deeper and more potent fomenting in the bosom of the race.

It is not in the shallow physical imitation of the men that women will assert first their equality and later their superiority, but in the awakening of the intellect of women.

But the female mind has demonstrated a capacity for all the mental acquirements and achievements of men, and as generations ensue that capacity will be expanded; the average woman will be as well educated as the average man, and then better educated, for the dormant faculties of her brain will be stimulated into an activity that will be all the more intense because of centuries of repose

Women will ignore precedent and startle civilization with their progress.

The acquisition of new fields of endeavor by women, their gradual usurpation of leadership, will dull and finally dissipate feminine sensibilities, will choke the maternal instinct so that marriage and motherhood may become abhorrent and human civilization draw closer and closer to the perfect civilization of the bee.

The significance of this lies in the principle dominating the economy of the bee--the most highly organized and

intelligently coordinated system of any form of non-rational animal life--the all governing supremacy of the instinct for immortality which makes divinity out of motherhood.

The center of all bee life is the queen. She dominates the hive, not through hereditary right, for any egg may be hatched into a reigning queen, but because she is the womb of the insect race.

There are vast desexualized armies of workers whose sole aim and business in life is hard work. It is the perfection of communism, of socialized, cooperative life wherein all things, including the young, are the common property of all.

Then there are the virgin bees, the princess bees, the females which are selected from the eggs of the queen when they are hatched and preserved in case an unfruitful queen should bring disappointment to the hive. And there are the male bees, few in number, unclean in habit, tolerated only because they are necessary to mate with the queen. . . .

The queen returns to the hive, impregnated, carrying with her tens of thousands of eggs--a future city of bees, and then begins the cycle of reproduction, the concentration of the teeming life of the hive in unceasing work for the birth of the new generation.

Imagination falters at the prospect of a human analogy to this mysterious and superbly dedicated civilization of the bee; but when we consider how the human instinct for race perpetuation dominates life in all its normal and exaggerated and perverse manifestations, there is ironic justice in the possibility that this instinct, with the intellectual advance of women, may be finally expressed after the manner of the bee, though it will take centuries to break down the habits and customs of peoples that bar the way to such a simply and scientifically ordered civilization.

If Tesla had been even half as well informed in the biological sciences as he was in the physical sciences, he probably would not have seen a possible solution of human problems in the social structure adapted to the limitations of an insect species which can never hope to utilize tools, and draw upon natural forces vastly exceeding their own

energy sources, to work out their destiny. And more important is the fact that the bees can never hope to use advanced intellectual powers to improve their biological status, as can the human race. With a better knowledge of biological sciences he might have discovered that the physiological processes that control perpetuation of the individual are indissolubly linked to the processes that control the perpetuation of the race, and that by utilizing as much biological knowledge and spiritual insight, in designing a superman, as he utilized materialistic engineering principles, he might have designed himself as a more complete and potent superman, better adjusted to merging his intellectual creations into the current life of the race through a better understanding of human affairs.

Tesla tried to convince the world that he had succeeded in eliminating love and romance from his life; but he did not succeed. That failure (or perhaps from another aspect it was a success), is the story of the secret chapter of Tesla's life.

TWENTY

THE most obvious outward characteristic of Tesla's life was his proclivity for feeding pigeons in public places. His friends knew he did it but never knew why. To the pedestrians on Fifth Avenue he was a familiar figure on the plazas of the Public Library at 42nd Street and St. Patrick's Cathedral at 50th Street. When he appeared and sounded a low whistle, the blue- and brown- and white-feathered flocks would appear from all directions, carpet the walks in front of him and even perch upon him while he scattered bird seed or permitted them to feed from his hand.

During the last three decades of his life, it is probable that not one out of tens of thousands who saw him knew who he was. His fame had died down and the generation that knew him well had passed on. Even when the newspapers, once a year, would break out in headlines about Tesla and his latest predictions concerning scientific wonders to come, no one associated that name with the excessively tall, very lean man, wearing clothes of a bygone era, who almost daily appeared to feed his feathered friends. He was just one of the strange individuals of whom it takes a great many of varying types to make up a complete population of a great metropolis.

When he started the practice, and no one knows just when that was, he was always dressed in the height of fashion and some of the world's most famous figures could frequently be seen in his company and joining him in scattering the bird seed, but there came a time when he paid less attention to his clothes, and those he wore became more and more old fashioned.

Fifth Avenue after midnight is a far different thoroughfare than the busy artery of human and vehicular traffic it is during the day. It is deserted. One can walk for blocks and meet no one except a policeman. On several occasions the author, by chance, met Tesla on an after-midnight walk up Fifth Avenue, going toward the library. Usually Tesla was quite willing to have one walk with him and chat upon a street encounter during the day, but on these after-midnight occasions he was definite about his desire to be left alone. "You will leave me now," he would say, bringing an abrupt end to a conversation hardly begun. The natural assumption was that Tesla was engaged on a definite line of thought and did not wish his mind to be diverted from its concentration on some knotty scientific problem. How far this was from the truth! And, as I learned much later, what a sacred significance these midnight pilgrimages to feed the pigeons--which would come to his call, even from their nocturnal roost--had for him!

It was hard for almost everyone to understand why Tesla, engaged in momentous scientific developments, working twice as many hours as the average individual, could see his way clear to spend time scattering bird seed. The Herald Tribune, in an editorial, once stated: "He would leave his experiments for a time and feed the silly and inconsequential pigeons in Herald Square."

It was a routine procedure in Tesla's offce, however, for one of his secretaries to go down town on a given day each week and purchase three pounds each of rape, hemp and canary seed. This was mixed in his offce, and each day he took a small paper bag filled with the seed and started on his rounds.

If, on any day, he was unable to make his pigeon-feeding rounds, he would call a Western Union messenger boy, pay him his fee, plus a dollar tip, and send him to feed the birds.

In addition to feeding the birds in the streets, Tesla took care of pigeons in his rooms in the various hotels in which he made his home. He usually had basket nests for from one to four pigeons in his room and kept a cask of seed on hand to feed them. The window to the room in which he kept these nests was never closed.

Tesla became quite ill in his 40th Street offce, one day in 1921. He was unable to work and lay upon his couch. As the symptoms became more alarming and there was a possibility that he might not be able to return to his room in the Hotel St. Regis, he summoned his secretary to give her an "important" message. As he spoke the important message, he required the secretary to repeat each phrase after him to make sure that no errors would be made. This required repetition was a usual procedure with him; but in this case he was so ill, practically prostrate, that he seemed hardly to have energy enough to speak the message a single time.

"Miss," he whispered, "Call Hotel St. Regis--"

"Yes sir," she responded, "Call Hotel St. Regis--"

"Get the housekeeper on the fourteenth floor--"

"Get the housekeeper on the fourteenth floor--"

"Tell her to go to Mr. Tesla's room--"

"Tell her to go to Mr. Tesla's room--"

"And feed the pigeon today--"

"And feed the pigeon today--"

"The white female with touches of light gray in its wings--"

"The white female with touches of light gray in its wings--"

"And to continue doing this--"

"And to continue doing this--"

"Until she receives further orders from me--"

"Until she receives further orders from me--"

"There is plenty of feed in Mr. Tesla's room."

"There is plenty of feed in Mr. Tesla's room."

"Miss," he pleaded, "this is very important. Will you repeat the whole message to me so I can be sure you have it correct."

"Call Hotel St. Regis; get the housekeeper on the fourteenth floor. Tell her to go to Mr. Tesla's room and feed the pigeon today, the white female with touches of light gray on its wings, and continue doing this until she receives further orders from me. There is plenty of feed in Mr. Tesla's room."

"Ah, yes," said Tesla, his eyes brightening as he spoke, "the white one with touches of light gray in its wings. And if I am not here tomorrow, you will repeat that message then and every day until you get my further orders. Do it now, Miss--it is very important."

Tesla's orders were always carried out to the letter and this one particularly, since he had placed such unusual emphasis on it. His secretary and the members of his staff felt that his illness must be more serious than it seemed to be, since at a time when he had a great many very serious problems on his hands and he appeared to be on the verge of a siege of illness, the more pressing situations were completely forgotten and his only thought was of a pigeon. He must be delirious, so they thought.

Some months later Tesla failed one day to show up at his offce, and when his secretary telephoned to his hotel, the inventor informed her that he was all right, but that his pigeon was ill and he dared not leave the room for fear she would need him. He remained in his room for several days.

About a year later Tesla came to his offce earlier than usual one day, and apparently very much disturbed. He carried a small bundle in a tender manner on his bent arm. He telephoned to Julius Czito, a machinist on whom he frequently depended to perform unusual tasks, and asked him to come to the offce. Czito lived in the suburbs. He told him briefly that the bundle contained a pigeon that had

died in his room at the hotel, and that he desired to have it properly buried on Czito's property where the grave could be cared for. Czito, in relating the incident years afterward, said he was tempted, on leaving the offce, to drop the package in the first garbage can he found; but something caused him to desist and he took it to his home. Before he could perform the burial, Tesla telephoned to his home and asked him to return the package the next morning. How Tesla disposed of it is not known.

In 1924 Tesla's financial condition fell to a very low level. He was completely broke. He was unable to pay his rent and there were some judgments against him for other unpaid bills. A deputy sheriff appeared at his offce one afternoon to seize everything in the offce to satisfy a judgment. Tesla managed to talk the sheriff into delaying seizure. When the offcial had gone he took stock of his situation. He had not paid his secretaries' wages for two weeks and he now owed them for another fraction of a week. He was entirely without funds in the bank. A search of his safe disclosed that the only object of negotiable value was the heavy gold Edison Medal presented to him by the American Institute of Electrical Engineers in 1917.

"Miss, and Miss," he said, addressing the secretaries. "This medal contains about one hundred dollars' worth of gold. I will have it cut in half and give each of you one-half, or one of you can take all of it and I will later pay the other."

The two young women, Miss Dorothy F. Skerritt and Miss Muriel Arbus, refused to permit him either to damage or part with the medal, and offered instead to aid him with the meager amounts of cash they had in their purses, which offer he refused with thanks. (A few weeks later the girls received their back salaries, at $35 per week, and an additional two weeks' salary.)

A search of the cash drawer revealed a little over $5.00--all the money he possessed.

"Ah! Miss," he said, "that will be enough to buy the bird seed. I am all out of seed, so will you go down town in the morning and purchase some and deliver it to my hotel."

Again calling his trusted aide, Czito (whom he was forced to leave unpaid to the extent of $1,000), he put up to him

the problem of vacating the offce immediately. Within a few hours the entire contents of the offces were stored in a near-by offce building.

A short time later he was forced to leave his apartment in the Hotel St. Regis. His bill had been unpaid for some time, but the immediate cause was associated with pigeons. He had been spending more time in his hotel room, which also became his offce, and devoted more time to feeding pigeons. Great flocks of them would come to his windows and into the rooms, and their dirt on the outside of the building became a problem to the management and on the inside to the maids. He sought to solve the problem by putting the birds in a hamper and having George Scherff take them to his Westchester home. Three weeks later, when first given their freedom, they returned, one making the trip in half an hour. Tesla was given his choice of ceasing to feed the pigeons or leaving the hotel. He left.

He next made his home at the Hotel Pennsylvania. He remained there a few years and the same situation, both as to bills and pigeons, developed. He moved to the Hotel Governor Clinton--and in about a year went through the same experience. He next moved to the Hotel New Yorker, in 1933, where he spent the final ten years of his life.

After midnight one night in the fall of 1937, Tesla started out from the Hotel New Yorker to make his regular pilgrimage to the Cathedral and the Library to feed the pigeons. In crossing a street a couple of blocks from the hotel an accident happened, how is unknown. In spite of his agility, he was unable to avoid contact with a moving taxicab, and was thrown heavily to the ground. He raised no question as to who was at fault, refused medical aid, and asked merely to be taken to his hotel in another cab.

Arriving at the hotel, he went to bed and had scarcely got under the covers when he telephoned for his favorite messenger boy, Kerrigan, from a near-by Western Union offce, gave him the package of bird seed and directed him to complete the task which he had started and the accident interrupted.

The next day, when it was apparent that he would be unable to take his usual daily walks for some time to come, he hired the messenger for six months to feed the pigeons every day. Tesla's back had been severely wrenched in the

accident, and three ribs broken, but the full extent of his injuries will never be known for, in keeping with his almost lifelong custom, he refused to consult a doctor. Pneumonia developed but for this he also refused medical aid. He was bedridden for some months, and was unable to carry on his practice of feeding pigeons from his window; and soon they failed to come.

In the spring of 1938 he was able to get up. He at once resumed his pigeon-feeding walks on a much more limited scale, but frequently had a messenger act for him.

This devotion to his pigeon-feeding task seemed to everyone who knew him like nothing more than the hobby of an eccentric scientist, but if they could have looked into Tesla's heart, or read his mind, they would have discovered that they were witnessing the world's most fantastic, yet tender and pathetic love affair.

Tesla, as a self-made superman, suffered from the limitations of his maker. Endowed with an intelligence above the average in both quality and quantity, and with some supernormal faculties, he was able to erect a superman higher in stature than himself; but the greater height was attained by sacrificing other dimensions, and in this diminution of breadth and thickness existed a deffciency.

When he was a youth and his mind was in its most plastic and formative stage, he adopted, as we have seen, the then prevalent agnostic and materialistic view of life. Today science has emancipated itself from slavery to either an antagonistic mysticism or materialism, and is willing to consider both as harmonious parts of a comprehensive approach to the understanding of Nature, but is conscious that it has not yet learned how to manipulate or control the more intangible factors upon which the mystics have builded their structures of knowledge. Vast realms of human experience have been rejected in all ages by scientists, of whatever name, who failed to fit them in logical arrangement in their inadequate and too simplified natural philosophies. By rejecting the phenomena that lay beyond their intellectual abilities, the scientists and philosophers did not eliminate them nor prevent their manifestations. The phenomena so rejected, however, were given an academic home by the ecclesiasts, who accepted them without understanding, or hope of understanding, and thus incarcerated them in the foundation of the religious

mysteries where they served a useful purpose, for upon an unknown it is possible to build a greater unknown.

The mystical experiences of the saints, of whatever faith, are demonstrations of forces which are natural functions of the phenomenon of life, expressed in varying degree in step with the expanding unfoldment of the individual toward an advanced state of evolution.

Tesla was an individual in an advanced state of development, and there came to him experiences which he refused to accept as experiments; accepting the benefits which came to him but which transported them. This was true, for example, in the case of the burst of revelation which came to him revealing scores of tremendously valuable inventions--while he strolled in the park at Budapest, and which differed only in degree and type, but not in fundamental nature, from the blinding light which came to Saul on the road to Damascus, and to others to whom illumination has come by similar processes.

His materialistic concepts made him intellectually blind to the strange phenomenon by which revelation, or illumination, had come to him, but made him more keenly appreciative of the value of that which was revealed. It must not be understood that this revelation was a happenstance phenomenon of the moment, for Tesla, endowed by Nature with an intellect capable of vast unfoldment, had exerted almost superhuman efforts to achieve that which was revealed to him, and the effort was not unassociated with the result.

In a contrary direction, Tesla suppressed a tremendously large or important realm of his life by the planned elimination of love and romance from his thoughts and experience. Just as his efforts to discover the physical secrets of Nature built up forces that penetrated to the plane of revelation, so did his equally tremendous effort to suppress love and romance build up forces, beyond his control, that were operating to express themselves. There was a parallel situation in his philosophy of natural phenomena, in that he suppressed all spiritual aspects of Nature and confined himself to the purely materialistic aspects.

Two forces, one of love and romance in his personal nature, and the other the spiritual aspects of Nature in his

philosophy, as applied to his work, were incarcerated in a limbo of his personality, seeking an outlet into the paradise of expression and manifestation. And they obtained that outlet, expressing their nature by the form of the manifestation; but Tesla failed to recognize them. Tesla, rejecting the love of woman and thinking that he had engineered a complete elimination of the problem of love, failed to excise from his nature the capacity to love, and when this capacity expressed itself, it did so by directing its energies through a channel he left unguarded in planning the self-made superman.

The manifestation of these united forces of love and spirituality resulted in a fantastic situation, probably without parallel in human annals. Tesla told me the story; but if I did not have a witness who assured me that he heard exactly what I heard, I would have convinced myself that I had had nothing more tangible than a dream experience. It was the love story of Tesla's life. In the story of his strange romance, I saw instantly the reason for those unremitting daily journeys to feed the pigeons, and those midnight pilgrimages when he wished to be alone. I recalled those occasions when I had happened to meet him on deserted Fifth Avenue and, when I spoke to him, he replied, "You will now leave me." He told his story simply, briefly and without embellishments, but there was still a surging of emotion in his voice.

"I have been feeding pigeons, thousands of them, for years; thousands of them, for who can tell--

"But there was one pigeon, a beautiful bird, pure white with light gray tips on its wings; that one was different. It was a female. I would know that pigeon anywhere.

"No matter where I was that pigeon would find me; when I wanted her I had only to wish and call her and she would come flying to me. She understood me and I understood her.

"I loved that pigeon.

"Yes," he replied to an unasked question. "Yes, I loved that pigeon, I loved her as a man loves a woman, and she loved me. When she was ill I knew, and understood; she came to my room and I stayed beside her for days. I nursed her back to health. That pigeon was the joy of my life. If she

needed me, nothing else mattered. As long as I had her, there was a purpose in my life.

"Then one night as I was lying in my bed in the dark, solving problems, as usual, she flew in through the open window and stood on my desk. I knew she wanted me; she wanted to tell me something important so I got up and went to her.

"As I looked at her I knew she wanted to tell me--she was dying. And then, as I got her message, there came a light from her eyes--powerful beams of light.

"Yes," he continued, again answering an unasked question, "it was a real light, a powerful, dazzling, blinding light, a light more intense than I had ever produced by the most powerful lamps in my laboratory.

"When that pigeon died, something went out of my life. Up to that time I knew with a certainty that I would complete my work, no matter how ambitious my program, but when that something went out of my life I knew my life's work was finished.

"Yes, I have fed pigeons for years; I continue to feed them, thousands of them, for after all, who can tell--"

There was nothing more to say. We parted in silence. The talk took place in a corner of the mezzanine in the Hotel New Yorker. I was accompanied by William L. Laurence, science writer of the New York Times. We walked several blocks on Seventh Avenue before we spoke.

No longer was there any mystery to the midnight pilgrimages when he called the pigeons from their niches in the Gothic tracery of the Cathedral, or from under the eaves of the Greek temple that houses the Library--pursuing, among the thousands of them . . . "For after all, who can tell . . .?"

It is out of phenomena such as Tesla experienced when the dove flew out of the midnight darkness and into the blackness of his room and flooded it with blinding light, and the revelation that came to him out of the dazzling sun in the park at Budapest, that the mysteries of religion are built. But he comprehended them not; for, if he had not suppressed the rich mystical inheritance of his ancestors

that would have brought enlightenment, he would have understood the symbolism of the Dove.

ACKNOWLEDGMENTS

MUCH valuable aid has been received from many sources in the preparation of this volume. For this helpful co-operation my thanks are due to:

Sava N. Kosanovic, Minister of State of Yugoslavia, and Tesla's nephew, for making available books, family records, transcripts of records, pictures, and for correcting the manuscript of many chapters; and to his secretary, Miss Charlotte Muzar;

Miss Dorothy Skerritt and Miss Muriel Arbus, Tesla's secretaries; and George Scherff and Julius C. Czito, business associates;

Mrs. Margaret C. Behrend, for the privilege of reading correspondence between her husband and Tesla; and to Dr. W. B. Earle, Dean of Engineering, Clemson Agricultural College, for pictures and other material from the Behrend Collection in the college library;

Mrs. Agnes Holden, daughter of the late Robert Underwood Johnson, ambassador, and editor of the Century Magazine; Miss Marguerite Merington; Mrs. Grizelda M. Hobson, widow of the late Rear Admiral Hobson; Waldemar Kaempffert, Science Editor of the New York Times; Professor Emeritus Charles F. Scott, Department of Electrical Engineering, Yale University; Hans Dahlstrand, of the Allis Chalmers Manufacturing Co.; Leo Maloney, Manager of the Hotel New Yorker; and W. D. Crow, architect of the Tesla tower, for reminiscences, data, or helpful conversations concerning their contacts with Tesla;

Florence S. Hellman, Chief of the Bibliographic Division, Library of Congress; Olive E. Kennedy, Research Librarian of the Public Information Center, National Electric Manufacturers Association; A. P. Peck, Managing Editor of

the Scientific American; Myrta L. Mason, and Charles F. Pflaging, for bibliographic aid;

G. Edward Pendray and his associates in the Westinghouse Electric and Manufacturing Co., and C. D. Wagoner and his associates in the General Electric Co., for correcting, or reading and making helpful suggestions in connection with many chapters;

William L. Laurence, science writer of the New York Times, and Bloyce Fitzgerald, for exchange of data;

Randall Warden; William Spencer Bowen, President of the Bowen Research Corp.; G. H. Clark, of the Radio Corporation of America; Kenneth M. Swezey, of Popular Science; Mrs. Mabel Fleischer and Carl Payne Tobey, who have aided in a variety of ways;

Colliers--The National Weekly; The American Magazine; the New York World-Telegram and the General Electric Co., for permission to quote copyrighted material, for which credit is given where quoted; and

Peggy O'Neill Grayson, my daughter, for extended secretarial service.

To all the foregoing I extend my sincere thanks.

John J. O'Neill

Freeport, L. I.

New York

July 15, 1944

Prodigal Genius

BIOGRAPHY OF NIKOLA TESLA

1994 Brotherhood of Life, Inc.,
110 Dartmouth, SE, Albuquerque,
New Mexico 87106 USA

"SPECTACULAR" is a mild word for describing the strange experiment with life that comprises the story of Nikola Tesla, and "amazing" fails to do adequate justice to the results that burst from his experiences like an exploding rocket. It is the story of the dazzling scintillations of a superman who created a new world; it is a story that condemns woman as an anchor of the flesh which retards the development of man and limits his accomplishment--and, paradoxically, proves that even the most successful life, if it does not include a woman, is a dismal failure.

Even the gods of old, in the wildest imaginings of their worshipers, never undertook such gigantic tasks of world-wide dimension as those which Tesla attempted and accomplished. On the basis of his hopes, his dreams, and his achievements he rated the status of the Olympian gods, and the Greeks would have so enshrined him. Little is the wonder that so-called practical men, with their noses stuck in profit-and-loss statements, did not understand him and thought him strange.

The light of human progress is not a dim glow that gradually becomes more luminous with time. The panorama of human evolution is illumined by sudden bursts of dazzling brilliance in intellectual accomplishments that throw their beams far ahead to give us a glimpse of the distant future, that we may more correctly guide our wavering steps today. Tesla, by virtue of the amazing discoveries and inventions which he showered on the world, becomes one of the most resplendent flashes that has ever brightened the scroll of human advancement.

Tesla created the modern era; he was unquestionably one of the world's greatest geniuses, but he leaves no offspring, no legatees of his brilliant mind, who might aid in administering that world; he created fortunes for multitudes of others but himself died penniless, spurning wealth that might be gained from his discoveries. Even as he walked among the teeming millions of New York he became a fabled individual who seemed to belong to the far-distant

future or to have come to us from the mystical realm of the gods, for he seemed to be an admixture of a Jupiter or a Thor who hurled the shafts of lightning; an Ajax who defied the Jovian bolts; a Prometheus who transmuted energy into electricity to spread over the earth; an Aurora who would light the skies as a terrestrial electric lamp; a Mazda who created a sun in a tube; a Hercules who shook the earth with his mechanical vibrators; a Mercury who bridged the ambient realms of space with his wireless waves--and a Hermes who gave birth to an electrical soul in the earth that set it pulsating from pole to pole.

This spark of intellectual incandescence, in the form of a rare creative genius, shot like a meteor into the midst of human society in the latter decades of the past century; and he lived almost until today. His name became synonymous with magic in the intellectual, scientific, engineering and social worlds, and he was recognized as an inventor and discoverer of unrivaled greatness. He made the electric current his slave. At a time when electricity was considered almost an occult force, and was looked upon with terror-stricken awe and respect, Tesla penetrated deeply into its mysteries and performed so many marvelous feats with it that, to the world, he became a master magician with an unlimited repertoire of scientific legerdemain so spectacular that it made the accomplishments of most of the inventors of his day seem like the work of toy-tinkers.

Tesla was an inventor, but he was much more than a producer of new devices: he was a discoverer of new principles, opening many new empires of knowledge which even today have been only partly explored. In a single mighty burst of invention he created the world of power of today; he brought into being our electrical power era, the rock-bottom foundation on which the industrial system of the entire world is builded; he gave us our mass-production system, for without his motors and currents it could not exist; he created the race of robots, the electrical mechanical men that are replacing human labor; he gave us every essential of modern radio; he invented the radar forty years before its use in World War II; he gave us our modern neon and other forms of gaseous-tube lighting; he gave us our fluorescent lighting; he gave us the high-frequency currents which are performing their electronic wonders throughout the industrial and medical worlds; he gave us remote control by wireless; he helped give us World War II, much against his will--for the misuse of his

superpower system and his robot controls in industry made it possible for politicians to have available a tremendous surplus of power, production facilities, labor and materials, with which to indulge in the most frightful devastating war that the maniacal mind could conceive. And these discoveries are merely the inventions made by the master mind of Tesla which have thus far been utilized--scores of others remain still unused.

Yet Tesla lived and labored to bring peace to the world. He dedicated his life to lifting the burdens from the shoulders of mankind; to bringing a new era of peace, plenty and happiness to the human race. Seeing the coming of World War II, implemented and powered by his discoveries, he sought to prevent it; offered the world a device which he maintained would make any country, no matter how small, safe within its borders--and his offer was rejected.

More important by far, however, than all his stupendously significant electrical discoveries is that supreme invention--Nikola Tesla the Superman--the human instrument which shoved the world forward with an accelerating lunge like an airplane cast into the sky from a catapult. Tesla, the scientist and inventor, was himself an invention, just as much as was his alternating-current system that put the world on a superpower basis.

Tesla was a superman, a self-made superman, invented and designed specifically to perform wonders; and he achieved them in a volume far beyond the capacity of the world to absorb. His life he designed on engineering principles to enable him to serve as an automaton, with utmost efficiency, for the discovery and application of the forces of Nature to human welfare. To this end he sacrificed love and pleasure, seeking satisfaction only in his accomplishments, and limiting his body solely to serving as a tool of his technically creative mind.

With our modern craze for division of labor and specialization of effort to gain efficiency of production in our industrial machine, one hesitates to think of a future in which Tesla's invention of the superman might be applied to the entire human race, with specialization designed for every individual from birth.

The superman that Tesla designed was a scientific saint. The inventions that this scientific martyr produced were designed for the peace, happiness and security of the human race, but they have been applied to create scarcity, depressions and devastating war. Suppose the superman invention were also developed and prostituted to the purposes of war-mongering politicians? Tesla glimpsed the possibilities and suggested the community life of the bee as a threat to our social structure unless the elements of individual and community lives are properly directed and personal freedom protected.

Tesla's superman was a marvelously successful invention--for Tesla--which seemed, as far as the world could observe, to function satisfactorily. He eliminated love from his life; eliminated women even from his thoughts. He went beyond Plato, who conceived of a spiritual companionship between man and woman free from sexual desires; he eliminated even the spiritual companionship. He designed the isolated life into which no woman and no man could enter; the self-suficient individuality from which all sex considerations were completely eliminated; the genius who would live entirely as a thinking and a working machine.

Tesla's superman invention was a producer of marvels, and he thought that he had, by scientific methods, succeeded in eliminating love from his life. That abnormal life makes a fascinating experiment for the consideration of the philosopher and psychologist, for he did not succeed in eliminating love. It manifested itself despite his conscientious efforts at suppression; and when it did so it came in the most fantastic form, providing a romance the like of which is not recorded in the annals of human history.

Tesla's whole life seems unreal, as if he were a fabled creature of some Olympian world. A reporter, after writing a story of his discoveries and inventions, concluded, "His accomplishments seem like the dream of an intoxicated god." It was Tesla's invention of the polyphase alternating-current system that was directly responsible for harnessing Niagara Falls and opened the modern electrical superpower era in which electricity is transported for hundred of miles, to operate the tens of thousands of mass-production factories of industrial systems. Every one of the tall Martian-like towers of the electrical transmission lines that stalk across the earth, and whose wires carry

electricity to distant cities, is a monument to Tesla; every powerhouse, every dynamo and every motor that drives every machine in the country is a monument to him.

Superseding himself, he discovered the secret of transmitting electrical power to the utmost ends of the earth without wires, and demonstrated his system by which useful amounts of power could be drawn from the earth anywhere merely by making a connection to the ground; he set the entire earth in electrical vibration with a generator which spouted lightning that rivaled the fiery artillery of the heavens. It was as a minor portion of this discovery that he created the modern radio system; he planned our broadcasting methods of today, forty years ago when others saw in wireless only the dot-dash messages that might save ships in distress.

He produced lamps of greater brilliance and economy than those in common use today; he invented the tube, fluorescent and wireless lamps which we now consider such up-to-the-minute developments; and he essayed to set the entire atmosphere of the earth aglow with his electric currents, to change our world into a single terrestrial lamp and to make the skies at night shine as does the sun by day.

If other first-magnitude inventors and discoverers may be considered torches of progress, Tesla was a conflagration. He was the vehicle through which the blazing suns of a brighter tomorrow focused their incandescent beams on a world that was not prepared to receive their light. Nor is it remarkable that this radiant personality should have led a strange and isolated life. The value of his contributions to society cannot be overrated. we can now analyze, to some extent, the personality that produced them. He stands as a synthetic genius, a self-made superman, the greatest invention of the greatest inventor of all times. But when we consider Tesla as a human being, apart from his charming and captivating social manners, it is hard to imagine a worse nightmare than a world inhabited entirely by geniuses.

When Nature makes an experiment and achieves an improvement it is necessary that it be accomplished in such a way that the progress will not be lost with the individual but will be passed on to future generations. In man, this requires a utilization of the social values of the race, cooperation

of the individual with his kind, that the improved status may be propagated and become a legacy of all. Tesla intentionally engineered love and women out of his life, and while he achieved gigantic intellectual stature, he failed to achieve its perpetuation either through his own progeny or through disciples. The superman he constructed was not great enough to embrace a wife and continue to exist as such. The love he sought to suppress in his life, and which he thought was associated only with women, is a force which, in its various aspects, links together all members of the human race.

In seeking to suppress this force entirely Tesla severed the bonds which might have brought to him the disciples who would, through other channels, have perpetuated the force of his prodigal genius. As a result, he succeeded in imparting to the world only the smallest fraction of the creative products of his synthetic superman.

The creation of a superman as demonstrated by Tesla was a grand experiment in human evolution, well worthy of the giant intellect that grew out of it, but it did not come up to Nature's standards; and the experiment will have to be made many times more before we learn how to create a super race with the minds of Teslas that can tap the hidden treasury of Nature's store of knowledge, yet endowed too with the vital power of love that will unlock forces, more powerful than any which we now glimpse, for advancing the status of the human race.

There was no evidence whatever that a superman was being born

when the stroke of midnight between July 9 and 10, in the year 1856, brought a son, Nikola, to the home of the Rev. Milutin Tesla and Djouka, his wife, in the hamlet of Smiljan, in the Austro-Hungarian border province of Lika, now a part of Yugoslavia. The father of the new arrival, pastor of the village church, was a former student in an oficers' training school who had rebelled against the restrictions of Army life and turned to the ministry as the field in which he could more satisfactorily express himself. The mother, although totally unable to read or write, was nevertheless an intellectually brilliant woman, who without the help of literal aids became really well educated.

Both father and mother contributed to the child a valuable heritage of culture developed and passed on by ancestral families that had been community leaders for many generations. The father came from a family that contributed sons in equal numbers to the Church and to the Army. The mother was a member of the Mandich family whose sons, for generations without number, had, with very few exceptions, become ministers of the Serbian Orthodox Church, and whose daughters were chosen as wives by ministers.

Djouka, the mother of Nikola Tesla (her given name in English translation would be Georgina), was the eldest daughter in a family of seven children. Her father, like her husband, was a minister of the Serbian Orthodox Church, Her mother, after a period of failing eyesight, had become blind shortly after the seventh child was born; so Djouka, the eldest daughter, at a tender age was compelled to take over the major share of her mother's duties. This not alone prevented her from attending school: her work at home so completely consumed her time that she was unable to acquire even the rudiments of reading and writing through home study. This was a strange situation in the cultured family of which she was a member. Tesla, however, always credited his unlettered mother rather than his erudite father with being the source from which he inherited his inventive ability. She devised many household labor-saving instruments. She was, in addition, a very practical individual, and her well-educated husband wisely left in her hands all business matters involving both the church and his household.

An unusually retentive memory served this remarkable woman as a good substitute for literacy. As the family moved in cultured circles she absorbed by ear much of the cultural riches of the community. She could repeat, without error or omission, thousands of verses of the national poetry of her country--the sagas of the Serbs--and could recite long passages from the Bible. She could narrate from memory the entire poetical- philosophical work Gorski ffenac (Mountain fireath), written by Bishop Petrovich Njegosh. She also possessed artistic talent and a versatile dexterity in her fingers for expressing it. She earned wide fame throughout the countryside for her beautiful needlework. According to Tesla, so great were her dexterity and her patience that she could, when over sixty, using only her fingers, tie three knots in an eyelash.

The remarkable abilities of this clever woman who had no formal education were transmitted to her five children. The elder son, Dane Tesla, born seven years before Nikola, was the family favorite because of the promise of an outstanding career which his youthful cleverness indicated was in store for him. He foreshadowed in his early years the strange manifestations which in his surviving brother were a prelude to greatness.

Tesla's father started his career in the military service, a likely choice for the son of an oficer; but he apparently did not inherit his father's liking for Army life. So slight an incident as criticism for failure to keep his brass buttons brightly polished caused him to leave military school. He was probably more of a poet and philosopher than a soldier. He wrote poetry which was published in contemporary papers. He also wrote articles on current problems which he signed with a pseudonym, "Srbin Pravicich." This, in Serb, means "Man of Justice." He spoke, read and wrote Serbo-Croat, German and Italian. It was probably his interest in poetry and philosophy that caused him to be attracted to Djouka Mandich. She was twenty-five and Milutin was two years older. He married her in 1847. His attraction to the daughter of a pastor probably influenced his next choice of a career, for he then entered the ministry and was soon ordained a priest.

He was made pastor of the church at Senj, an important seaport with facilities for a cultural life. He gave satisfaction, but apparently he achieved success among his parishioners on the basis of a pleasing personality and an understanding of problems rather than by using any great erudition in theological and ecclesiastical matters.

A few years after he was placed in charge of this parish, a new archbishop, elevated to head of the diocese, wished to survey the capabilities of the priests in his charge and offered a prize for the best sermon preached on his oficial visit. The Rev. Milutin Tesla was bubbling over, at the time, with interest in labor as a major factor in social and economic problems. To preach a sermon on this topic was, from the viewpoint of expediency, a totally impractical thing to do. Nobody, however, had ever accused the Rev. Mr. Tesla of being practical, so doing the impractical thing was quite in harmony with his nature. He chose the subject which held his greatest interest; and

when the archbishop arrived, he listened to a sermon on "Labor."

Months later Senj was surprised by an unanticipated visit from the archbishop, who announced that the Rev. Mr. Tesla had preached the best sermon, and awarded him a red sash which he was privileged to wear on all occasions. Shortly afterward he was made pastor at Smiljan, where his parish then embraced forty homes. He was later placed in charge of the much larger parish in the nearby city of Gospic. His first three children, Milka, Dane and Angelina, were born at Senj. Nikola and his younger sister, Marica, were born at Smiljan.

Tesla's early environment, then, was that of an agricultural community in a high plateau region near the eastern shore of the Adriatic Sea in the Velebit Mountains, a part of the Alps, a mountain chain stretching from Switzerland to Greece. He did not see his first steam locomotive until he was in his `teens, so his aptitude for mechanical matters did not grow out of his environment.

Tesla's homeland is today called Yugoslavia, a country whose name means "Land of the Southern Slavs." It embraces several former separate countries, Serbia, Bosnia, Croatia, Montenegro, Dalmatia and also Slovenia. The Tesla and Mandich families originally came from the western part of Serbia near Montenegro. Smiljan, the village where Tesla was born, is in the province of Lika, and at the time of his birth this was a dependent province held by the Austro-Hungarian Empire as part of Croatia and Slovenia.

Tesla's surname dates back more than two and a half centuries. Before that time the family name was Draganic (pronounced as if spelled Drag'-a-nitch). The name Tesla (pronounced as spelled, with equal emphasis on both syllables), in a purely literal sense, is a trade name like Smith, firight or Carpenter. As a common noun it describes a woodworking tool which, in English, is called an adz. This is an axe with a broad cutting blade at right angles to the handle, instead of parallel as in the more familiar form. It is used in cutting large tree trunks into squared timbers. In the Serbo-Croat language, the name of the tool is tesla. There is a tradition in the Draganic family that the members of one branch were given the nickname "Tesla" because of an inherited trait which caused practically all of them to have very large, broad and protruding front

teeth which greatly resembled the triangular blade of the adz.

The name Draganic and derivatives of it appear frequently in other branches of the Tesla family as a given name. When used as a given name it is frequently translated "Charlotte," but as a generic term it holds the meaning "dear" and as a surname is translated "Darling."

The majority of Tesla's ancestors for whom age records are available lived well beyond the average span of life for their times, but no definite record has been found of the ancestor who, Tesla claimed, lived to be one hundred and forty years of age. (His father died at the age of fifty-nine, and his mother at seventy-one.)

Although many of Tesla's ancestors were dark eyed, his eyes were a gray-blue. He claimed his eyes were originally darker, but that as a result of the excessive use of his brain their color changed. His mother's eyes, however, were gray and so are those of some of his nephews. It is probable, therefore, that his gray eyes were inherited, rather than faded by excessive use of the brain.

Tesla grew to be very tall and very slender--tallness was a family and a national trait. When he attained full growth he was exactly two meters, or six feet two and one-quarter inches tall. while his body was slender, it was built within normal proportions. His hands, however, and particularly his thumbs, seemed unusually long.

Nikola's older brother Dane was a brilliant boy and his parents gloried in their good fortune in being blessed with such a fine son. There was, however, a difference of seven years in the two boys' ages, and since the elder brother died as the result of an accident at the age of twelve, when Nikola was but five years old, a fair comparison of the two seems hardly possible. The loss of their first-born son was a great blow to his mother and father; the grief and regrets of the family were manifest in idealizing his talents and predicting possibilities of greatness he might have realized, and this situation was a challenge to Nikola in his youth.

The superman Tesla developed out of the superboy Nikola. Forced to rise above the normal level by an urge to carry on for his dearly beloved departed brother, and also on his

own account to exceed the great accomplishment his brother might have attained had he lived, he unconsciously drew upon strange resources within. The existence of these resources might have remained unsuspected for a lifetime, as happens with the run of individuals, if Nikola had not felt the necessity for creating a larger sphere of life for himself.

He was aware as a boy that he was not like other boys in his thoughts, in his amusements and in his hobbies. He could do the things that other lads his age usually do, and many things that they could not do. It was these latter things that interested him most, and he could find no companions who would share his enthusiasms for them. This situation caused him to isolate himself from contemporaries, and made him aware that he was destined for an unusual place if not great accomplishments in life. His boyish mind was continually exploring realms which his years had not reached, and his boyhood attainments frequently were worthy of men of mature age.

He had, of course, the usual experience of unusual incidents that fall to the lot of a small boy. One of the earliest events which Tesla recalled was a fall into a tank of hot milk that was being scalded in the process used by the natives of that region as a hygienic measure, anticipating the modern process of pasteurizing.

Shortly afterward he was accidentally locked in a remote mountain chapel which was visited only at widely separated intervals. He spent the night in the small building before his absence was discovered and his possible hiding place determined.

Living close to Nature, with ample opportunity for observing the flight of birds, which has ever filled men with envy, he did what many another boy has done with the same results. An umbrella, plus imagination, offered to him a certain solution of the problem of free flight through the air. The roof of a barn was his launching platform. The umbrella was large, but its condition was much the worse for many years of service; it turned inside out before the flight was well started. No bones were broken, but he was badly shaken up and spent the next six weeks in bed. Probably, though, he had better reason for making this experiment than most of the others who have tried it. He revealed that practically all his life he experienced a

peculiar reaction when breathing deeply. When he breathed deeply he was overcome by a feeling of lightness, as if his body had lost all weight; and he should, he concluded, be able to fly through the air merely by his will to do so. He did not learn, in boyhood, that he was unusual in this respect.

One day when he was in his fifth year, one of his chums received a gift of a fishing line, and all the boys in the group planned a fishing trip. On that day he was on the outs with his chums for some unremembered reason. As a result, he was informed he could not join them. He was not permitted even to see the fishing line at close range. He had glimpsed, however, the general idea of a hook on the end of a string. In a short time he had fashioned his own interpretation of a hook. The refinement of a barb had not occurred to him and he also failed to evolve the theory of using bait when he went off on his own fishing expedition. The baitless hook failed to attract any fish but, while dangling in the air, much to Tesla's surprise and satisfaction it snared a frog that leaped at it. He came home with a bag of nearly two dozen frogs. It may have been a day on which the fish were not biting, but at any rate his chums came home from the use of their new hook and line without any fish. His triumph was complete. When he later revealed his technique, all the boys in the neighborhood copied his hook and method, and in a short time the frog population of the region was greatly depleted.

The contents of birds' nests always excited Tesla's curiosity. He rarely disturbed their contents or occupants. On one occasion, however, he climbed a rocky crag to investigate an eagle's nest and took from it a baby eagle which he kept locked in a barn. A bird on the wing he considered fair prey for his sling shot, with which he was a star performer.

About this time he became intrigued with a piece of hollow tube cut from a cane growing in the neighborhood. This he played with until he had evolved a blow gun and later, by making a plunger and plugging one end of the tube with a wad of wet hemp, a pop gun. He then undertook the making of larger pop guns, and contrived one in which the end of the plunger was held against the chest and the tube pulled energetically toward the body. He engaged in the manufacture of this article for his chums, as a five-year-old businessman. When a number of window panes happened to

get broken accidentally by getting in the way of his hemp wad, his inventive proclivities in this field were quickly curbed by the destruction of the pop guns and the administration of the parental rod.

Tesla started his formal education by attending the village school in Smiljan before he reached his fifth birthday. A few years later his father received his appointment as pastor of a church in the nearby city of Gospic, so the family moved there. This was a sad day for young Tesla. He had lived close to Nature, and loved the open country and the high mountains among which he had thus far spent all of his life. The sudden transition to the artificialities of the city was a very definite shock to him. He was out of harmony with his new surroundings.

His advent into the city life of Gospic, at the age of seven, got off to an unfortunate start. As the new minister in town, his father was anxious to have everything move smoothly. Tesla was required to dress in his best clothes and attend the Sunday services. Naturally, he dreaded this ordeal and was very happy when assigned the task of ringing the bell summoning the worshipers to the service and announcing the close of the ceremonies. This gave him an opportunity to remain unseen in the belfry while the parishioners, their daughters and dude sons were arriving and departing.

Thinking he had waited long enough after the close of the service for the church to be cleared on this first Sunday, he came downstairs three steps at a time. A wealthy woman parishioner wearing a skirt with a long train that fashionably dragged along the ground, and who had come to the service with a retinue of servants, remained after the other parishioners to have a talk with the new pastor. She was just making an impressive exit when Tesla's final jump down the stairs landed him on the train, ripping this dignity-preserving appendage from the woman's dress. Her mortification and rage and his father's anger came upon him simultaneously. Parishioners loitering outside rushed back to revel in the spectacle. Thereafter no one dared be pleasant to this youngster who had enraged the wealthy dowager who domineered it over the social community. He was practically ostracized by the parishioners, and continued so until he redeemed himself in a spectacular manner.

Tesla felt strange and defeated in his ignorance of city ways. He met the situation first by avoidance. He did not care to leave his home. The boys of his age were neatly dressed every day. They were dudes and he did not belong. Even as a child Tesla was meticulously careful in dress. At the earliest moment, however, he would slip work clothes over his dress clothes and go wandering in the woods or engage in mechanical work. He could not enjoy life if limited to the activities in which he could engage while dressed up. Tesla, however, possessed ingenuity, and there was rarely a situation in which he was not able to use it. He also possessed knowledge of the ways of Nature. These gave him a distinct superiority over the city boys.

About a year after the family moved to Gospic a new fire company was organized. It was to be supplied with a pump which would replace the useful but inadequate bucket brigade. The members of the new organization obtained brightly colored uniforms and practiced marching for parades. Eventually the new pump arrived. It was a man-power pump to be operated by sixteen men. A parade and demonstration of the new apparatus was arranged. Almost everyone in Gospic turned out for the event and followed to the river front for the pump demonstration. Tesla was among them. He paid no attention to the speeches but was all eyes for the brightly painted apparatus. He did not know how it worked but would have loved to take it apart and investigate the insides.

The time for the demonstration came when the last speaker, finishing his dedicatory address, gave the order to start the pumping operation that would send a stream of water shooting skyward from the nozzle. The eight men regimented on either side of the pump bowed and rose in alternate unison as they raised and lowered the bars that operated the pistons of the pump. But nothing else happened, not a drop of water came from the nozzle!

Oficials of the fire company started feverishly to make adjustments and, after each attempt, set the sixteen men oscillating up and down at the pump handles, but each time without results. The lines of hose between the pump and the nozzle were straightened out, they were disconnected from the pump and connected again. But no water came from the far end of the hose to reward the efforts of the perspiring firemen.

Tesla was among the usual group of urchins that always manages to get inside the lines on such occasions. He tried to see everything that was going on from the closest possible vantage point and undoubtedly got on the nerves of the vexed oficials when their repeated efforts were frustrated by continuous failures. As one of the oficials turned for the tenth time to vent his frustration on the urchins and order them away from his range of action, Tesla grabbed him by the arm.

"I know what to do, Mister," said Tesla. "you keep pumping."

Dashing for the river, Tesla peeled his clothes off quickly and dove into the water. He swam to the suction hose that was supposed to draw the water supply from the river. He found it kinked, so that no water could flow into it, and flattened by the vacuum created by the pumping. When he straightened out the kink, the water rushed into the line. The nozzlemen had stood at their post for a long time, receiving a continuous repetition of warnings to be prepared each time an adjustment was made, but, as nothing happened on these successive occasions, they had gradually relaxed their attention and were giving little thought to the direction in which the nozzle was pointed. When the stream of water did shoot skyward, down it came on the assembled oficials and townspeople. This item of unexpected drama excited the crowd at the other end of the line near the pump, and to give vent to their joy they seized the scantily dressed Tesla, boosted him to the shoulders of a couple of the firemen, and led a procession around the town. The seven-year-old Tesla was the hero of the day.

Later on Tesla, in explaining the incident, said that he had had not the faintest idea of how the pump worked; but as he watched the men struggle with it, he got an intuitive flash of knowledge that told him to go to the hose in the river. On looking back to that event, he said, he knew how Archimedes must have felt when, after discovering the law of the displacement of water by floating objects, he ran naked through the streets of Syracuse shouting "Eureka!

At the age of seven Tesla had tasted the pleasures of public acclaim

for his ingenuity. And further, he had done something which the dudes, the boys of his age in the city, could not do

and which even their fathers could not do. He had found himself. He was now a hero, and it could be forgotten that he had jumped on a woman's skirt and ripped the train off.

Tesla never lost an opportunity to hike through the nearby mountains where he could again enjoy the pleasures of his earlier years spent so close to Nature. On these occasions he would often wonder if there was still operating a crude water wheel which he made and installed, when he was less than five years old, across the mountain brook near his home in Smiljan.

The wheel consisted of a not too well-smoothed disk cut from a tree trunk in some lumbering operations. Through its center he was able to cut a hole and force into it a somewhat straight branch of a tree, the ends of which he rested in two sticks with crotches which he forced into the rock on either bank of the brook. This arrangement permitted the lower part of the disk to dip in the water and the current caused it to rotate. To the lad there was a great deal of originality employed in making this ancient device. The wheel wobbled a bit but to him it was a marvelous piece of construction, and he got no end of pleasure out of watching his water wheel obtain power from the brook.

This experiment undoubtedly made a life-long impression on his young plastic mind and endowed him with the desire, ever afterward manifested in his work, of obtaining power from Nature's sources which are always being dissipated and always being replenished.

In this smooth-disk water wheel we find an early clue to his later invention of the smooth-disk turbine. In his later experience he discovered that all water wheels have paddles--but his little water wheel had operated without paddles.

Tesla's first experiment in original methods of power production was made when he was nine years old. It demonstrated his ingenuity and originality, if nothing else. It was a sixteen-bug-power engine. He took two thin slivers of wood, as thick as a toothpick and several times as long, and glued them together in the form of a cross, so they looked like the arms of a windmill. At the point of intersection they were glued to a spindle made of another thin sliver of wood. On this he slipped a very small pulley

with about the diameter of a pea. A piece of thread acting as a driving belt was slipped over this and also around the circumference of a much larger but light pulley which was also mounted on a thin spindle. The power for this machine was furnished by sixteen May bugs (June bugs in the United States). He had collected a jar full of the insects, which were very much of a pest in the neighborhood. With a little dab of glue four bugs were afixed, heading in the same direction, to each of the four arms of the windmill arrangement. The bugs beat their wings, and if they had been free would have flown away at high speed. They were, however, attached to the cross arms, so instead they pulled them around at high speed. These, being connected by the thread belt to the large pulley, caused the latter to turn at low speed; but it developed, Tesla reports, a surprisingly large torque, or turning power.

Proud of his bug-power motor and its continuous operation--the bugs did not cease flying for hours--he called in one of the boys in the neighborhood to admire it. The lad was a son of an Army oficer. The visitor was amused for a short time by the bug motor, until he spied the jar of still unused May bugs. Without hesitation he opened the jar, fished out the bugs--and ate them. This so nauseated Tesla that he chased the boy out of the house and destroyed the bug motor. For years he could not tolerate the sight of May bugs without a return of this unpleasant reaction.

This event greatly annoyed Tesla because he had planned to add more spindles to the shaft and stick on more fliers until he had more than a one-hundred-bug-power motor.

TESLA'S years in school were more important for the activities in which he engaged in after-school hours than for what he learned in the classroom. At the age of ten, having finished his elementary studies in the Normal School, Tesla entered the college, called the Real Gymnasium, at Gospic. This was not an unusually early age to enter the Real Gymnasium, as that school corresponds more to our grammar school and junior high school than to our college.

One of the requirements, and one to which an unusually large percentage of the class time was devoted throughout the four years, was freehand drawing. Tesla detested the subject almost to the point of open rebellion, and his marks were accordingly very low, but not entirely owing to a lack of ability.

Tesla was left-handed as a boy, but later became ambidextrous. Left-handedness was a definite handicap in the freehand-drawing studies, but he could have done much better work than he actually produced and would have gotten higher marks if it were not for a piece of altruism in which he engaged. A student whom he could excel in drawing was striving hard for a scholarship. Were he to receive the lowest marks in freehand drawing, he would be unable to obtain the scholarship. Tesla sought to help his fellow student by intentionally getting the lowest rating in the small class.

Mathematics was his favorite subject and he distinguished himself in that study. His unusual proficiency in this field was not considered a counterbalancing virtue to make amends for his lack of enthusiasm for freehand drawing. A strange power permitted him to perform unusual feats in mathematics. He possessed it from early boyhood, but had considered it a nuisance and tried to be rid of it because it seemed beyond his control.

If he thought of an object it would appear before him exhibiting the appearance of solidity and massiveness. So greatly did these visions possess the attributes of actual objects that it was usually dificult for him to distinguish between vision and reality. This abnormal faculty functioned in a very useful fashion in his school work with mathematics.

If he was given a problem in arithmetic or algebra, it was immaterial to him whether he went to the blackboard to work it out or whether he remained in his seat. His strange faculty permitted him to see a visioned blackboard on which the problem was written, and there appeared on this blackboard all of the operations and symbols required in working out the solution. Each step appeared much more rapidly than he could work it out by hand on the actual slate. As a result, he could give the solution almost as quickly as the whole problem was stated.

His teachers, at first, had some doubts about his honesty, thinking he had worked out some clever deceit for getting the right answers. In due time their skepticism was dispelled and they accepted him as a student who was unusually apt at mental arithmetic. He would not reveal this power to anyone and would discuss it only with his mother, who in the past had encouraged him in his efforts to banish it. Now that the power had demonstrated some definite usefulness, though, he was not so anxious to be completely rid of it, but desired to bring it under his complete control.

Work that Tesla did outside school hours interested him much more than his school work. He was a rapid reader and had a memory that was retentive to the point, almost, of infallibility. He found it easy to acquire foreign languages. In addition to his native Serbo-Croat language he became proficient in the use of German, French and Italian. This opened to him great stores of knowledge to which other students did not have access, yet this knowledge, apparently, was of little use to him in his school work. He was interested in things mechanical but the school provided no manual training course. Nevertheless, he became proficient in the working of wood and metals with tools and methods of his own contriving.

In the classroom of one of the upper grades of the Real Gymnasium models of water wheels were on exhibition. They were not working models but nevertheless they aroused Tesla's enthusiasm. They recalled to him the crude wheel he had constructed in the hills of Smiljan. He had seen pictures of the magnificent Niagara Falls. Coupling the power possibilities presented by the majestic waterfalls and the intriguing possibilities he saw in the models of the water wheels, he aroused in himself a passion to accomplish a grand achievement. Waxing eloquent on the subject, he told his father, "Some day I am going to America and harness Niagara Falls to produce power." Thirty years later he was to see this prediction fulfilled.

There were many books in his father's library. The knowledge in those books interested him more than that which he received in school and he wished to spend his evenings reading them. As in other matters, he carried this to an extreme, so his father forbade him to read them, fearing that he would ruin his eyes in the poor light of tallow candles then used for illumination. Nikola sought to

circumvent this ruling by taking candles to his room and reading after he was sent to bed, but his violation of orders was soon discovered and the family candle supply was hidden. Next he fashioned a candle mould out of a piece of tin and made his own candles. Then, by plugging the keyhole and the chinks around the door, he was able to spend the night hours reading volumes purloined from his father's bookshelves. Frequently, he said, he would read through the entire night and feel none the worse for the loss of sleep. Eventual discovery, however, brought paternal discipline of a vigorous nature. He was about eleven years old at this time.

Like other boys of his age he played with bows and arrows. He made bigger bows, and better, straighter shooting arrows, and his marksmanship was excellent. He was not willing to stop at that point. He started building arbalists. These could be described as bow-and-arrow guns. The bow is mounted on a frame and the string pulled back and caught on a peg from which it is released by a trigger. The arrow is laid on the midpoint of the bow, its end against the taut string. The bow lies horizontal on the frame whereas in ordinary manual shooting the bow is held in vertical position. For this reason the device is sometimes called the crossbow. In setting an arbalist the beam is placed against the abdomen and the string pulled back with all possible force. Tesla did this so often, he said, that his skin at the point of pressure became calloused until it was more like a crocodile's hide. When shot into the air the arrows from his arbalist were never recovered, for they went far out of sight. At close range they would pass through a pine board an inch thick.

Tesla got a thrill out of archery not experienced by other boys. He was, in imagination, riding those arrows which he shot out of sight into the blue vault of the heavens. That sense of exhilaration he experienced when breathing deeply gave him such a feeling of lightness he convinced himself that in this state it would be relatively easy for him to fly through the air if he only could devise some mechanical aid that would launch him and enable him to overcome what he thought was only a slight remaining weight in his body. His earlier disastrous jump from the barn roof had not disillusioned him. His conclusions were in keeping with his sensations; but a twelve-year-old lad exploring this dificult field alone cannot be condemned too severely for not discovering that our senses sometimes deceive us, or

rather that we sometimes deceive ourselves in interpreting what our senses tell us.

In breathing deeply he was overventilating his lungs, taking out some of the residual carbon dioxide which is chemical "ashes," and largely inert, and replacing it with air containing a mixture of equally inert nitrogen and very active oxygen. The latter being present in more than normal proportions immediately began to upset chemical balances throughout the body. The reaction on the brain produces a result which does not differ greatly from alcohol intoxication. A number of cults use this procedure to induce "mystical" or "occult" experiences. How was a twelve-year-old boy to know all these things? He could see that birds did an excellent job in flying. He was convinced that some day man would fly, and he wanted to produce the machine that would get him off the ground and into the air.

The big idea came to him when he learned about the vacuum--a space within a container from which all air had been exhausted. He learned that every object exposed to the air was under a pressure of about fourteen pounds per square inch, while in a vacuum objects were free of such pressure. He figured that a pressure of fourteen pounds should turn a cylinder at high speed and he could arrange to get advantage of such pressure by surrounding one half of a cylinder with a vacuum and having the remaining half of its surface exposed to air pressure. He carefully built a box of wood. At one end was an opening into which a cylinder was fitted with a very high order of accuracy, so that the box would be airtight; and on one side of the cylinder the edge of the box made a right-angle contact. On the cylinder's other side the box made a tangent, or flat, contact. This arrangement was made because he wanted the air pressure to be exerted at a tangent to the surface of the cylinder--a situation that he knew would be required in order to produce rotation. If he could get that cylinder to rotate, all he would have to do in order to fly would be to attach a propeller to a shaft from the cylinder, strap the box to his body and obtain continuous power from his vacuum box that would lift him through the air. His theory of course was fallacious, but he had no means of knowing that at the time.

The workmanship on this box was undoubtedly of a very high order, considering it was made by a self-instructed twelve-year-old mechanic. When he connected his vacuum pump, an

ordinary air pump with its valves reversed, he found the box was airtight, so he pulled out all the air, watching the cylinder intently while doing so. Nothing happened for many strokes of the pump except that it made his back lame to pull the pump handle upward while he created the most "powerful" possible vacuum. He rested for a moment. He was breathing deeply from exertion, overventilating his lungs, and getting that joyous, dizzy, light-as-air feeling which was a highly satisfactory mental environment for his experiment.

Suddenly the cylinder started to turn--slowly! His experiment was a success! His vacuum-power box was working! He would fly!

Tesla was delirious with joy. He went into a state of ecstasy. There was no one with whom he could share this joy, as he had taken no one into his confidence. It was his secret and he was forced to endure its joys alone. The cylinder continued to turn slowly. It was no hallucination. It was real. It did not speed up, however, and this was disappointing. He had visualized it turning at a tremendous speed but it was actually turning extremely slowly. His idea, at least, he figured, was correct. With a little better workmanship, perhaps he could make the cylinder turn faster. He stood spellbound watching it turn at a snail's pace for less than half a minute--and then the cylinder stopped. That broke the spell and ended for the time his mental air flights.

He hunted for the trouble and quickly located what he was sure was the cause of the dificulty. Since the vacuum, he theorized, is the source of power, then, if the power stops, it must be because the vacuum is gone. His pump, he felt sure, must be leaking air. He pulled up the handle. It came up easily and that meant very definitely he had lost the vacuum in the box. He again pumped out the air--and again when he reached a high vacuum the cylinder started to turn slowly and continued to do so for a fraction of a minute. When it stopped he again pumped a vacuum and again the cylinder turned. This time he continued to operate the pump and the cylinder continued to turn. He could keep it turning as long as he desired by continuing to pump the vacuum.

There was nothing wrong with his theory, as far as he could see. He went over the pump very carefully, making

improvements which would give him a high vacuum, and studied the valve to make that a better guard of the vacuum in the box. He worked on the project for weeks but despite his best efforts he could get no better results than the slow movement of the cylinder.

Finally the truth came to him in a flash--he was losing the vacuum in the box because the air was leaking in around the cylinder on that side where the flat board was tangent to the surface of the cylinder. As the air flowed into the box it pulled the cylinder around with it very slowly. When the air stopped flowing into the box the cylinder stopped turning. He knew now his theory was wrong. He had supposed that even with the vacuum being maintained, and no air leaking in, the air pressure would be exerted at a tangent to the surface of the cylinder and the pressure would produce motion in the same way as pushing on the rim of a wheel will cause it to turn. He discovered later, however, that the air pressure is exerted at right angles to the surface of the cylinder at all points, like the direction of the spokes of a wheel, and therefore it could not be used to produce rotation in the way he planned.

This experiment, nevertheless, was not a total loss, even though it greatly disheartened him. The knowledge that the air leaking into a vacuum had actually produced even a small amount of rotation in a cylinder remained with him and led directly, many years later, to his invention of the "Tesla turbine," the steam engine that broke all records for horsepower developed per pound of weight--what he called "a power house in a hat."

Nature seemed to be constantly engaged in staging spectacular demonstrations for young Tesla, revealing to him samples of the secret of her mighty forces.

Tesla was roaming in the mountains with some chums one winter day after a storm in which the snow fell moist and sticky. A small snowball rolled on the ground quickly gathered more snow to itself and soon became a big one that was not too easy to move. Tiring of making snowmen and snow houses on level stretches of ground, the boys took to throwing snowballs down the sloping ground of the mountain. Most of them were duds--that is, they got stalled in the soft snow before they accumulated additional volume. A few rolled a distance, grew larger and then bogged down and stopped. One, however, found just the right conditions; it

rolled until it was a large ball and then spread out, rolling up the snow at the sides as if it were rolling up a giant carpet, and then suddenly it turned into an avalanche. Soon an irresistible mass of snow was moving down the steep slope. It stripped the mountainside clean of snow, trees, soil and everything else it could carry before it and with it. The great mass landed in the valley below with a thud that shook the mountain. The boys were frightened because there was snow above them on the mountain that might have been shaken into a downward slide, carrying them along buried in it.

This event made a profound impression on Tesla and it dominated a great deal of his thinking in later life. He had witnessed a snowball weighing a few ounces starting an irresistible, devastating movement of thousands of tons of inert matter. It convinced him that there are tremendous forces locked up in Nature that can be released in gigantic amounts, for useful as well as destructive purposes, by the employment of small trigger forces. He was always on the lookout for such triggers in his later experiments.

Tesla even as a boy was an original thinker and he never hesitated to think thoughts on a grand scale, always carrying everything to its largest ultimate dimension as a means of exploring the cosmos. This is demonstrated by another event that took place the following summer. He was wandering alone in the mountains when storm clouds started to fill the sky. There was a flash of lightning and almost immediately a deluge of rain descended on him.

There was implanted in his thirteen-year-old mind on that occasion a thought which he carried with him practically all his life. He saw the lightning flash and then saw the rain come down in torrents, so he reasoned that the lightning flash produced the downpour. The idea become firmly fixed in his mind that electricity controlled the rain, and that if one could produce lightning at will, the weather would be brought under control. Then there would be no dry periods in which crops would be ruined; deserts could be turned into vineyards, the food supply of the world would be greatly increased, and there would be no lack of food anywhere on the globe. why could he not produce lightning?

The observation and the conclusions drawn from it by young Tesla were worthy of a more mature mind, and it would

require a genius among the adults to have evolved the project of controlling the world's weather through such means. There was, however, a flaw in his observation. He saw the lightning come first and the rain afterward. Further investigation would have revealed to him that the order of events was reversed higher in the air. It was the rain that came first and the lightning afterward up in the cloud. The lightning, however, arrived first because it made the trip from the cloud in less than 1/100,000 of a second, while the raindrops required several seconds to fall to the ground.

At this time there was planted in Tesla's mind the seed of a project which matured more than thirty years later when, in the mountains of Colorado, he actually produced bolts of lightning, and planned later to use them to bring rain. He never succeeded in convincing the U.S. Patent Ofice of the practicability of the rain-making plan.

Tesla, as a boy, knew no limits to the universe of his thinking; and as a result he built an intellectual realm suficiently large to provide ample space in which his more mature mind could operate without encountering retarding barriers.

Tesla finished his course at the Real Gymnasium in Gospic in 1870,

at the age of fourteen. He had distinguished himself as a scholar. In one grade, however, his mathematics professor gave him less than a passing mark for his year's work. Tesla felt an injustice had been done him, so he went to the director of the school and demanded that he be given the strictest kind of examination in the subject. This was done in the presence of the director and the professor, and Tesla passed it with an almost perfect mark.

His fine work at school and the recognition by the towns-people that he possessed a broader scope of knowledge than any other youth in town led the trustees of the public library to ask him to classify the books in their possession and make a catalogue. He had already read most of the books in his father's extensive library, so he was pleased to have close access to a still larger collection and undertook the task with considerable enthusiasm. He had scarcely begun work on this project when it was interrupted by a long intermittent illness. When he felt too depressed

to go to the library he had quantities of the books brought to his home, and these he read while confined to his bed. His illness reached a critical stage and physicians gave up hope of saving his life.

Tesla's father knew that he was a delicate child and, having lost his other son, tried to throw every possible safeguard around this one. He was greatly pleased over his son's brilliant accomplishments in almost every activity in which he engaged, but he recognized as a danger to Nikola's health the great intensity with which he tackled projects. Nikola's trend toward engineering was to him a dangerous development, as he thought work in that field would make too heavy demands upon him, not only because of the nature of the work but in the extended years of study in which he would have to engage. If, however, the boy entered the ministry, it would not be necessary for him to extend his studies beyond the Real Gymnasium which he had just completed. For this reason his father favored a career for him in the Church.

Illness threw everything into a somber aspect. When the critical stage of his illness was reached and his strength was at its lowest ebb, Nikola manifested no inclination to help himself get better by developing an enthusiasm for anything. It was in this stage of his illness that he glanced listlessly at one of the library books. It was a volume by Mark Twain. The book held his interest and then aroused his enthusiasm for life, enabling him to pass a crisis, and his health gradually returned to normal. Tesla credited the Mark Twain book with saving his life, and when, years later, he met Twain, they became very close friends.

At the age of fifteen Tesla, in 1870, continued his studies at the Higher Real Gymnasium, corresponding to our college, at Karlovac (Carlstadt) in Croatia. His attendance at this school was made possible by an invitation from a cousin of his father's, married to a Col. Brankovic, whose home was in Karlovac, to come and live with her and her husband, a retired Army oficer, while attending school. His life there was none too happy. Scarcely had he arrived when he contracted malaria from the mosquitoes in the Karlovac lowlands, and he was never free from the malady for years afterward.

Tesla relates that he was hungry all during the three years he spent at Karlovac. There was plenty of deliciously prepared food in the home, but his aunt held the theory that because his health seemed none too rugged he should not eat heavy meals. Her husband, a gruff and rugged individual, when carving a second helping for himself, would sometimes try to slip a healthy slice of meat onto Tesla's plate; but the Colonel was always overruled by his wife, who would take back the slice and carve one to the thinness of a sheet of paper, warning her husband, "Niko is delicate and we must be very careful not to overload his stomach."

His studies at Karlovac interested him, however, and he completed the four-year course in three years, tackling the school work with a dangerous enthusiasm, partly as an escape mechanism to divert his attention from the none too pleasing conditions where he was living. The lasting favorable impression which Tesla carried away from Karlovac concerned his professor of physics, a clever and original experimenter, who amazed him with the feats he performed with laboratory apparatus. He could not get enough of this course. He wanted to devote his whole time henceforth to electrical experimenting. He knew he would not be satisfied in any other field. His mind was made up; he had selected his career.

His father wrote to him shortly before his graduation advising him not to return home when school was closed but to go on a long hunting trip. Tesla, however, was anxious to get home--to surprise his parents with the good news that he had completed his work at the Higher Real Gymnasium a year ahead of schedule, and to announce his decision to make the study of electricity his life work. Greatly worried, his parents, who at that moment were making strenuous efforts to protect his health, were doubly alarmed. first, there was his violation of the instruction sent him not to return to Gospic. The reason for this advice they had not disclosed--an epidemic of cholera was raging. And second, there was his decision to enter on a career which they feared would make dangerous demands on his delicate health. On returning home, he found his plan definitely opposed. This made him very unhappy. In addition, he would shortly have to face a situation which was even more repugnant than entering upon a career in the Church, and that was the compulsory three-years' service in the Army. Those two powerful factors were operating against

him and seeking to thwart him in his burning desire to start immediately unraveling the mystery and harnessing the great power of electricity.

Nothing, he thought, could exceed the dificulty of the predicament in which he found himself. In this, however, he was mistaken, for he was soon to face a much more serious problem. On the very day after his arrival home, while these issues were still red hot, he became ill with cholera. He had come home malnourished because of the inadequate amount of food to which he had been limited and the strain of his intense application to his studies. Besides, he was still suffering from malaria. Then came the cholera. Now all other problems became secondary to the immediate one of maintaining life itself against the deadly scourge. His physical condition made the doctors despair of saving him. Nevertheless, he survived the crisis, but it left him in a thoroughly weakened and run-down condition. For nine months he lay in bed almost a physical wreck. He had frequent sinking spells and from each successive one it seemed harder to rally him.

Life held no incentive for him. If he survived he would be forced to enter the Army and, if nothing happened to prevent him from finishing that term of something worse than slavery, he would be forced to study for the ministry. He did not care whether he survived or not. Left to his own decision, he would not have rallied from earlier sinking spells; but the decision was not left to him. Some force stronger than his own consciousness carried him through, but it had to succeed in spite of him and not because of any assistance he was giving. The sinking spells came on with startling regularity, each one with increasing depth. It seemed a miracle that he had come out of the last one, and now with less reserve strength he was sinking into another and edging rapidly into unconsciousness. His father entered his room and tried desperately to rouse him and stir him to a more cheerful and hopeful attitude in which he could help himself and do more than the doctors could do for him, but without results.

"I could--get well--if you--would let me--study electrical--engineering," said the prostrate young man in a hardly audible whisper. He had scarcely enough energy left for even this effort; and having made the speech, he seemed to be dropping over the edge of nothingness. His father,

bending intently over him and fearing the end had come, seized him.

"Nikola," he commanded, "you cannot go. you must stay. you will be an engineer. Do you hear me? you will go to the best engineering school in the world and you will be a great engineer. Nikola, you must come back, you must come back and become a great engineer."

The eyes of the prostrate figure opened slowly. Now there was a light shining in the eyes where before they presented a death-like glaze. The face moved a little, very little, but the slight change this movement made seemed to be in the direction of a smile. It was a smile, a weak one, and he was able to keep his eyes open although it was very apparently a struggle for him to do so.

"Thank God" said his father. "you heard me, Nikola. you will go to an engineering school and become a great engineer. Do you understand me?"

There was not enough energy for voice but the smile became a little more definite.

Another crisis in which he had escaped death by the narrowest margin had been passed. His rise out of this situation seemed almost miraculous. It seemed to him, Tesla later related, that from that instant he felt as if he were drawing vital energy from his loved ones who surrounded him; and this he used to rally himself out of the shadow.

He was again able to whisper. "I will get well," he said weakly. He breathed deeply, as deep as his frail tired frame would permit, of the oxygen which he had found so stimulating in the past. It was the first time he had done so in the nine months since he became ill. With each breath he felt reinvigorated. He seemed to get stronger by the minute.

In a very short time he was taking nourishment and within a week he was able to sit up. In a few days more he was on his feet. Life now would be glorious. He would be an electrical engineer. Everything he dreamed of would come true. As the days passed he recovered his strength at a remarkably rapid rate and his hearty appetite returned. It was now early summer. He would prepare himself to enter the fall term at an engineering school.

But there was something he had forgotten, everyone in the family had forgotten, in the stress of his months of illness. It was now brought sharply to his and their attention. An Army summons--he must face three years' military servitude! was his remarkable recovery to be ruined by this catastrophe, which seemed all the worse now that his chosen career seemed otherwise nearer? Failure to respond to a military summons meant jail--and after that the service in addition. How would he solve this problem?

There is no record of what took place. This spot in his career Tesla glossed over with the statement that his father considered it advisable for him to go off on a year's hunting expedition to recover his health. At any rate, Nikola disappeared. He left with a hunting outfit and some books and paper. where he spent the year, no one knows--probably at some hideaway in the mountains. In the meantime, he was a fugitive from Army service.

For any ordinary individual this situation would be a most serious one. For Tesla it had all the gravity associated with ordinary cases, plus the complication that his family on his father's side was a traditional military family whose members had won high rank and honors in Army activities, and many of whom were now in the service of Austria-Hungary. For a member of that family to become equivalent to a "draft dodger" and a "conscientious objector," both, was a serious blow to its prestige, and could provoke a scandal if word of the situation got into circulation. Tesla's father used this circumstance and the fact of NikoIa's delicate health as talking points to induce his relatives in Army positions to use their influence to enable his son to escape conscription and avoid punishment for failing to respond to the Army call. In this he was successful, apparently, but required considerable time in which to make the arrangements.

Hiding in the mountains and with a year's time to kill, on this enforced vacation Tesla was able to indulge in working out totally fantastic plans for some gigantic projects. One of the plans was for the construction and operation of an under-ocean tube, connecting Europe and the United States, by which mail could be transported in spherical containers moved through the tube by water pressure. He discovered early in his calculations that the friction of the water on the walls of the tube would require such a tremendous

amount of power to overcome it that it made the project totally impracticable. Since, however, he was working on the project entirely for his own amusement, he eliminated friction from the calculations and was then able to design a very interesting system of high-speed intercontinental mail delivery. The factor which made this interesting project impracticable--the drag of the water on the sides of the tube--Tesla was later to utilize when he invented his novel steam turbine.

The other project with which he amused himself was drawn upon an even larger scale and required a still higher order of imagination. He conceived the project of building a ring around the earth at the Equator, somewhat resembling the rings around the planet Saturn. The earth ring, however, was to be a solid structure whereas Saturn's rings are made up of dust particles.

Tesla loved to work with mathematics, and this project gave him an excellent opportunity to use all of the mathematical techniques available to him. The ring which Tesla planned was to be a rigid structure constructed on a gigantic system of scaffolding extending completely around the earth. Once the ring was complete, the scaffolding was to be removed and the ring would stay suspended in space and rotating at the same speed as the earth.

Some use might be found for the project, Tesla said, if someone could find a means of providing reactionary forces that could make the ring stand still with respect to the earth while the latter whirled underneath it at a speed of 1,000 miles per hour. This would provide a high-speed "moving" platform system of transportation which would make it possible for a person to travel around the earth in a single day.

In this project, he admitted, he encountered the same problem as did Archimedes, who said "Give me a fulcrum and a lever long enough and I will move the earth." "The fulcrum in space on which to rest the lever was no more attainable than was the reactionary force needed to halt the spinning of the hypothetical ring around the earth," said Tesla. There were a number of other factors which he found necessary to ignore in this project, but ignore them he did so that they would not interfere with his mathematical practice and his cosmical engineering plans.

With his health regained, and the danger of punishment by the Army removed, Tesla returned to his home in Gospic to remain a short time before going to Graumltz, where he was to study electrical engineering as his father had promised he could do. This marked the turning point in his life. Finished with boyhood dreams and play, he was now ready to settle down to his serious life work. He had played at being a god, not hesitating to plan refashioning the earth as a planet. His life work was to produce accomplishments hardly less fantastic than his boyhood dreams.

TESLA entered manhood with a definite knowledge that nameless forces were shaping for him an unrevealed destiny. It was a situation he had to feel rather than be able to identify and describe in words. His goal he could not see and the course leading to it he could not discern. He knew very definitely the field in which he intended to spend his life, and using such physical laws as he knew he decided to plan a life which, as an engineering project, would be operated under principles that would yield the highest index of efficiency. He did not, at this time, have a complete plan of life drawn up, but there were certain elements which he knew intuitively he would not include in his operations, so he avoided all activities and interests that would bring them in as complications. It was to be a single-purpose life, devoted entirely to science with no provisions whatever for play or romance.

It was with this philosophy of life that Tesla in 1875, at the age of 19, went to Graumltz, in Austria, to study electrical engineering at the Polytechnic Institute. He intended henceforth to devote all his energies to mastering that strange, almost occult force, electricity, and to harness it for human welfare.

His first effort to put this philosophy to a practical test almost resulted in disaster despite the fact that it worked successfully. Tesla completely eliminated recreation and plunged into his studies with such enthusiastic devotion that he allowed himself only four hours' rest, not all of which he spent in slumber. He would go to bed at eleven o'clock and read himself to sleep. He was up again in the small hours of the morning, tackling his studies.

Under such a schedule he was able to pass, at the end of the first term, his examinations in nine subjects--nearly twice as many as were required. His diligence greatly impressed the members of the faculty. The dean of the technical faculty wrote to Tesla's father, "your son is a star of first rank." The strain, however, was affecting his health. He desired to make a spectacular showing to demonstrate to his father in a practical way his appreciation of the permission he gave to study engineering. When he returned to his home at the end of the school term with the highest marks that could be awarded in all the subjects passed, he expected to be joyfully received by his father and praised for his good work. Instead, his parent showed only the slightest enthusiasm for his accomplishment but a great deal of interest in his health, and criticized Nikola for endangering it after his earlier narrow escape from death. Unknown to Tesla until several years afterward, the professor at the Polytechnic Institute had written to his father early in the term, asking him to take his son out of the school, as he was in danger of killing himself through overwork.

On his return to the Institute for the second year he decided to limit his studies to physics, mechanics and mathematics. This was fortunate because it gave him more time in which to handle a situation that arose later in his studies, and was to lead to his first and perhaps greatest invention.

Early in his second year at the Institute there was received from Paris a piece of electrical equipment, a Gramme machine, that could be used as either a dynamo or motor. If turned by mechanical power it would generate electricity, and if supplied with electricity it would operate as a motor and produce mechanical power. It was a direct-current machine.

When Prof. Poeschl demonstrated the machine, Tesla was greatly impressed by its performance except in one respect--a great deal of sparking took place at the commutator. Tesla stated his objections to this defect.

"It is inherent in the nature of the machine," replied Prof. Poeschl. "It may be reduced to a great extent, but as long as we use commutators it will always be present to some degree. As long as electricity flows in one direction,

and as long as a magnet has two poles each of which acts oppositely on the current, we will have to use a commutator to change, at the right moment, the direction of the current in the rotating armature."

"That is obvious," Tesla countered. "The machine is limited by the current used. I am suggesting that we get rid of the commutator entirely by using alternating current."

Long before the machine was received, Tesla had studied the theory of the dynamo and motor, and he was convinced that the whole system could be simplified in some way. The solution of the problem, however, evaded his grasp, nor was he at all sure the problem could be solved--until Prof. Poeschl gave his demonstration. The assurance then came to him like a commanding flash.

The first sources of current were batteries which produced a small steady flow. When man sought to produce electricity from mechanical power, he sought to make the same kind the batteries produced: a steady flow in one direction. The kind of current a dynamo would produce when coils of wire were whirled in a magnetic field was not this kind of current--it flowed first in one direction and then in the other. The commutator was invented as a clever device for circumventing this seeming handicap of artificial electricity and making the current come out in a one-directional flow.

The flash that came to Tesla was to let the current come out of the dynamo with its alternating directions of flow, thus eliminating the commutator, and feed this kind of current to the motors, thus eliminating the need in them for commutators. Many another scientist had played with that idea long before it occurred to Tesla, but in his case it came to him as such a vivid, illuminating flash of understanding that he knew his visualization contained the correct and practical answer. He saw both the motors and dynamos operating without commutators, and doing so very efficiently. He did not, however, see the extremely important and essential details of how this desirable result could be accomplished, but he felt an overpowering assurance that he could solve the problem. It was for this reason that he stated his objections to the Gramme machine with a great deal of confidence to his professor. what he did not expect was to draw a storm of criticism.

Prof. Poeschl, however, deviated from his set program of lectures and devoted the next one to Tesla's objections. With methodical thoroughness he picked Tesla's proposal apart and, disposing of one point after another, demonstrated its impractical nature so convincingly that he silenced even Tesla. He ended his lecture with the statement: "Mr. Tesla will accomplish great things, but he certainly never will do this. It would be equivalent to converting a steady pulling force like gravity into rotary effort. It is a perpetual motion scheme, an impossible idea."

Tesla, although silenced temporarily, was not convinced. The professor had paid him a nice compliment in devoting a whole lecture to his observation, but, as is so often the case, the compliment was loaded with what was expected by the professor to be a crushing defeat for the one whom he complimented. Tesla was nevertheless greatly impressed by his authority; and for a while he weakened in his belief that he had correctly understood his vision. It was as clear-cut and definite as the visualizations that came to him of the solutions of mathematical problems which he was always able to prove correct. But perhaps, after all, he was in this case a victim of a self-induced hallucination. All other things Prof. Poeschl taught were solidly founded on demonstrable fact, so perhaps his teacher was right in his objections to the alternating-current idea.

Deep down in his innermost being, however, Tesla held firmly to the conviction that his idea was a correct one. Criticism only temporarily submerged it, and soon it came bobbing back to the surface of his thinking. He gradually convinced himself that, contrary to his usual procedure, Prof. Poeschl had in this case demonstrated merely that he did not know how to accomplish a given result, a defficiency which he shared with everyone else in the world, and therefore could not speak with authority on this subject. And, in addition, Tesla reasoned, the closing remark with which Prof. Poeschl believed he had clinched his argument--"It would be equivalent to converting a steady pulling force like gravity into a rotary effort--was contradicted by Nature, for was not the steady pulling force of gravity making the moon revolve around the earth and the earth revolve around the sun?

"I could not demonstrate my belief at that time," said Tesla, "but it came to me through what I might call

instinct, for lack of a better name. But instinct is something which transcends knowledge. we undoubtedly have in our brains some finer fibers which enable us to perceive truths which we could not attain through logical deductions, and which it would be futile to attempt to achieve through any wilful effort of thinking."

His enthusiasm and confidence in himself restored, Tesla tackled the problem with renewed vigor. His power of visualization--the ability to see as solid objects before him the things that he conceived in his mind, and which he had considered such a great annoyance in childhood--now proved to be of great aid to him in trying to unravel this problem. He made an elastic rebound from the intellectual trouncing administered by his Professor and was tackling the problem in methodical fashion.

In his mind he constructed one machine after another, and as he visioned them before him he could trace out with his finger the various circuits through armature and field coils, and follow the course of the rapidly changing currents. But in no case did he produce the desired rotation. Practically all the remainder of the term he spent on this problem. He had passed so many examinations during the first term that he had plenty of time to spend on this problem during the second.

It seemed, however, that he was doomed to fail in this project, for at the term's end he was no nearer the solution than he was when he started. His pride had been injured and he was fighting on the defensive side. He did not know that those seeming failures in his mental and laboratory experiments were to serve later as the raw material out of which yet another vision was to be created.

A radical change had taken place in Tesla's mode of life while at Graumltz. The first year he had acted like an intellectual glutton, overloading his mind and nearly wrecking his health in the process. In the second year he allowed more time for digesting the mental food of which he was partaking, and permitted himself more recreation. About this time Tesla took to card-playing as a means of relaxation. His keen mental processes and highly developed powers of deduction enabled him to win more frequently than he lost. He never retained the money he won but returned it to the losers at the end of the game. When he lost, however, this procedure was not reciprocated by the other

players. He also developed a passion for billiards and chess, in both of which he became remarkably proficient.

The fondness for card-playing which Tesla developed at Graumltz got him into an embarrassing situation. Toward the end of the term his father sent him money to pay for his trip to Prague and for the expenses incident to enrolling as a student at the university. Instead of going directly to Prague, Tesla returned to Gospic for a visit to the family. Sitting in at a card game with some youths of the city, Tesla found his usual luck had deserted him, and he lost the money set aside for his university expenses. He confessed to his mother what he had done. She did not criticize him. Perhaps the fates were using this method for protecting him from overwork that might ruin his health, she reasoned, since he needed rest and relaxation. Losses of money were much easier to handle than loss of health. Borrowing some money from a friend, she gave it to Tesla with the words, "Here you are. Satisfy yourself." Returning to the game, he experienced a change in luck and came out of it not only with the money his mother had given him but practically all of the university expense money he had previously lost. These winnings he did not return to the losers as was his previous custom. He returned home, gave his mother the money she had advanced him, and announced that he would never again indulge in card-playing.

Instead of going to the University of Prague in the fall of 1878 as he had planned, Tesla accepted a lucrative position that was offered him in a technical establishment at Maribor, near Graumltz. He was paid sixty florins a month and a separate bonus for the completed work, a very generous compensation compared with the prevailing wages. During this year Tesla lived very modestly and saved his earnings.

The money he had saved at Maribor enabled him to pay his way through a year at the University of Prague, where he extended his studies in mathematics and physics. He continued experimenting with the one big challenging alternating-current idea that was occupying his mind. He had explored, unsuccessfully, a large number of methods and, though his failures gave support to Prof. Poeschl's contention that he would never succeed, he was unwilling to give up his theory. He still had faith that he would find the solution of his problem. He knew electrical science was young and growing, and felt deep within his consciousness

that he would make the important discovery that would greatly expand the infant science to the powerful giant of the future.

It would have been a pleasure to Tesla to have continued his studies, but it now was necessary for him to make his own living. His father's death, following Tesla's graduation from the University at Prague, made it necessary for him to be self-supporting. Now he needed a job. Europe was extending an enthusiastic reception to Alexander Graham Bell's new American invention, the telephone, and Tesla heard that a central station was to be installed in Budapest. The head of the enterprise was a friend of the family. The situation seemed a promising one.

Without waiting to ascertain the situation in Budapest, Tesla, full of youthful hope and the self-assurance which is typical of the untried graduate, traveled to that city, expecting to walk into an engineering position in the new telephone project. He quickly discovered, on his arrival, that there was no position open; nor could one be created for him, as the project was still in the discussion stage.

It was, however, urgently necessary for financial reasons, that he secure immediately a job of some kind. The best he could obtain was a much more modest one than he had anticipated. The salary was so microscopically small he would never name the amount, but it was suficient to enable him to avoid starvation. He was employed as draftsman by the Hungarian Government in its Central Telegraph Ofice, which included the newly developing telephone in its jurisdiction.

It was not long before Tesla's outstanding ability attracted the attention of the Inspector in Chief. Soon he was transferred to a more responsible position in which he was engaged in designing and in making calculations and estimates in connection with new telephone installations. When the new telephone exchange was finally started in Budapest in 1881, he was placed in charge of it.

Tesla was very happy in his new position. At the age of twenty-five he was in full charge of an engineering enterprise. His inventive faculty was fully occupied and he made many improvements in telephone central-station apparatus. Here he made his first invention, then called a telephone repeater, or amplifier, but which today would be

more descriptively called a loud speaker--an ancestor of the sound producer now so common in the home radio set. This invention was never patented and was never publicly described, but, Tesla later declared, in its originality, design, performance and ingenuity it would make a creditable showing alongside his better-known creations that followed. His chief interest, however, was still the alternating-current motor problem whose solution continued to elude him.

Always an indefatigable worker, always using up his available energy with the greatest number of activities he could crowd into a day, always rebelling because the days had too few hours in them and the hours too few minutes, and the seconds that composed them were of too short duration, and always holding himself down to a five-hour period of rest with only two hours of that devoted to sleep, he continually used up his vital reserves and eventually had to balance accounts with Nature. He was forced finally to discontinue work.

The peculiar malady that now affected him was never diagnosed by the doctors who attended him. It was, however, an experience that nearly cost him his life. To doctors he appeared to be at death's door. The strange manifestations he exhibited attracted the attention of a renowned physician, who declared medical science could do nothing to aid him. One of the symptoms of the illness was an acute sensitivity of all of the sense organs. His senses had always been extremely keen, but this sensitivity was now so tremendously exaggerated that the effects were a form of torture. The ticking of a watch three rooms away sounded like the beat of hammers on an anvil. The vibration of ordinary city trafic, when transmitted through a chair or bench, pounded through his body. It was necessary to place the legs of his bed on rubber pads to eliminate the vibrations. Ordinary speech sounded like thunderous pandemonium. The slightest touch had the mental effect of a tremendous blow. A beam of sunlight shining on him produced the effect of an internal explosion. In the dark he could sense an object at a distance of a dozen feet by a peculiar creepy sensation in his forehead. His whole body was constantly wracked by twitches and tremors. His pulse, he said, would vary from a few feeble throbs per minute to more than one hundred and fifty.

Throughout this mysterious illness he was fighting with powerful desire to recover his normal condition. He had before him a task he must accomplish--he must attain the solution of the alternating-current motor problem. He felt intuitively during his months of torment that the solution was coming ever nearer, and that he must live in order to be there when it crystallized out of his unconscious mind. During this period he was unable to concentrate on this or any other subject.

Once the crisis was past and the symptoms diminished, improvement came rapidly and with it the old urge to tackle problems. He could not give up his big problem. It had become a part of him. working on it was no longer a matter of choice. He knew that if he stopped he would die, and he knew equally well that if he failed he would perish. He was enmeshed in an invisible web of intangible structure that was tightening around him. The feeling that it was bringing the solution nearer to him--just beyond his finger tips--was cause for both regret and rejoicing. That problem when solved would leave a tremendous vacancy in his life, he feared.

yet in spite of his feeling of optimism it was still a tremendous problem without a solution.

When the acute sensitivity reduced to normal, permitting him to resume work, he took a walk in the city park of Budapest with a former classmate, named Szigeti, one late afternoon in February, 1882. while a glorious sunset overspread the sky with a flamboyant splash of throbbing colors, Tesla engaged in one of his favorite hobbies--reciting poetry. As a youth he had memorized many volumes, and he was now pleased to note that the terrific punishment his brain had experienced had not diminished his memory. One of the works which he could recite from beginning to end was Goethe's Faust.

The prismatic panorama which the sinking sun was painting in the sky reminded him of some of Goethe's beautiful lines:

"The glow retreats, done is the day of toil"

"It yonder hastes, new fields of life exploring"

"Ah, that no wing can lift me from the soil"

"Upon its track to follow, follow soaring"

Tesla, tall, lean and gaunt, but with a fire in his eye that matched the flaming clouds of the heavens, waved his arms in the air and swayed his body as he voiced the undulating lines. He faced the color drama of the sky as if addressing the red-glowing orb as it flung its amorphous masses of hue, tint and chrome across the domed vault of heaven.

Suddenly the animated figure of Tesla snapped into a rigid pose as if he had fallen into a trance. Szigeti spoke to him but got no answer. Again his words were ignored. The friend was about to seize the towering motionless figure and shake him into consciousness when instead Tesla spoke.

"Watch me!" said Tesla, blurting out the words like a child bubbling over with emotion: "Watch me reverse it." He was still gazing into the sun as if that incandescent ball had thrown him into a hypnotic trance.

Szigeti recalled the image from Goethe that Tesla had been reciting: "The glow retreats . . . It yonder hastes, new fields of life exploring" a poetic description of the setting sun, and then his next words-- "watch me! watch me reverse it." Did Tesla mean the sun? Did he mean that he could arrest the motion of the sun about to sink below the horizon, reverse its action and start it rising again toward the zenith?

"Let us sit and rest for a while," said Szigeti. He turned him toward a bench, but Tesla was not to be moved.

"Don't you see it?" expostulated the excited Tesla. "See how smoothly it is running? Now I throw this switch--and I reverse it. See! It goes just as smoothly in the opposite direction. watch! I stop it. I start it. There is no sparking. There is nothing on it to spark."

"But I see nothing," said Szigeti. "The sun is not sparking. Are you ill?"

"you do not understand," beamed the still excited Tesla, turning as if to bestow a benediction on his companion. "It is my alternating-current motor I am talking about. I have solved the problem. Can't you see it right here in front of

me, running almost silently? It is the rotating magnetic field that does it. See how the magnetic field rotates and drags the armature around with it? Isn't it beautiful? Isn't it sublime? Isn't it simple? I have solved the problem. Now I can die happy. But I must live, I must return to work and build the motor so I can give it to the world. No more will men be slaves to hard tasks. My motor will set them free, it will do the work of the world."

Szigeti now understood. Tesla had previously told him about his attempt to solve the problem of an alternating-current motor, and he grasped the full meaning of the scientist's words. Tesla had never told him, however, about his ability to visualize objects which he conceived in his mind, so it was necessary to explain the vision he saw, and that the solution had come to him suddenly while they were admiring the sunset.

Tesla was now a little more composed, but he was floating on air in a frenzy of almost religious ecstasy. He had been breathing deeply in his excitement, and the overventilation of his lungs had produced a state of exhilaration.

Picking up a twig, he used it as a scribe to draw a diagram on the dusty surface of the dirt walk. As he explained the technical principles of his discovery, his friend quickly grasped the beauty of his conception, and far into the night they remained together discussing its possibilities.

The conception of a rotating magnetic field was a majestically beautiful one. It introduced to the scientific world a new principle of sublime grandeur whose simplicity and utility opened a vast new empire of useful applications. In it Tesla had achieved the solution which his professor had declared was impossible of attainment.

Alternating-current motors had heretofore presented what seemed an insoluble problem because the magnetic field produced by alternating currents changed as rapidly as the current. Instead of producing a turning force they churned up useless vibration.

Up to this time everyone who tried to make an alternating-current motor used a single circuit, just as was in direct current. As a result the projected motor proved to be like a single-cylinder steam engine, stalled at dead center, at the top or bottom of the stroke.

what Tesla did was to use two circuits, each one carrying the same frequency of alternating-current, but in which the current waves were out of step with each other. This was equivalent to adding to an engine a second cylinder. The pistons in the two cylinders were connected to the shaft so that their cranks were at in angle to each other which caused them to reach the top or bottom of the stroke at different times. The two could never be on dead center at the same time. If one were on dead center, the other would be off and ready to start the engine turning with a power stroke.

This analogy oversimplifies the situation, of course, for Tesla's discovery was much more far-reaching and fundamental. what Tesla had discovered was a means of creating a rotating magnetic field, a magnetic whirlwind in space which possessed fantastically new and intriguing properties. It was an utterly new conception. In direct-current motors a fixed magnetic field was tricked by mechanical means into producing rotation in an armature by connecting successively through a commutator each of a series of coils arranged around the circumference of a cylindrical armature. Tesla produced a field of force which rotated in space at high speed and was able to lock tightly into its embrace an armature which required no electrical connections. The rotating field possessed the property of transferring wirelessly through space, by means of its lines of force, energy to the simple closed circuit coils on the isolated armature which enabled it to build up its own magnetic field that locked itself into the rotating magnetic whirlwind produced by the field coils. The need for a commutator was completely eliminated.

Now that this magnificent solution of his most dificult scientific problem was achieved, Tesla's troubles were not over; they were just beginning; but, during the next two months, he was in a state of ecstatic pleasure playing with his new toy. It was not necessary for him to construct models of copper and iron: in his mental workshop he constructed them in wide variety. A constant stream of new ideas was continuously rushing through his mind. They came so fast, he said, that he could neither utilize nor record them all. In this short period he evolved every type of motor which was later associated with his name.

He worked out the design of dynamos, motors, transformers and all other devices for a complete alternating-current system. He multiplied the effectiveness of the two-phase system by making it operate on three or more alternating currents simultaneously. This was his famous polyphase power system.

The mental constructs were built with meticulous care as concerned size, strength, design and material; and they were tested mentally, he maintained, by having them run for weeks--after which time he would examine them thoroughly for signs of wear. Here was a most unusual mind being utilized in a most unusual way. If he at any time built a "mental machine," his memory ever afterward retained all of the details, even to the finest dimensions.

The state of supreme happiness which Tesla was enjoying was destined soon, however, to end. The telephone central station by which he was employed, and which was controlled by Puskas, that friend of the family, was sold. When Puskas returned to Paris, he recommended Tesla for a job in the Paris establishment with which he was associated, and Tesla gladly followed up his opportunity. Paris, he reasoned, would be a wonderful springboard from which to catapult his great invention on the world.

The budding superman Tesla came to Paris light in baggage but with his head filled to bursting with his wonderful discovery of the rotating magnetic field and scores of significant inventions based on it. If he had been a typical inventor, he would have gone among people wearing a look indicating that he knew something important, but maintaining absolute secrecy concerning the nature of his inventions. He would be fearful that someone would steal his secret. But Tesla's attitude was just the reverse of this. He had something to give to the world and he wanted the world to know about it, the whole fascinating story with all the revealing technical details. He had not then learned, and never did learn, the craft of being shrewd and cunning. His life plan was on a secular basis. He cared less for the advantages of the passing moment, more for the ultimate goal; and he wanted to give his newly discovered polyphase system of alternating-current to the human race that all men could benefit from it. He knew there was a fortune in his invention. How he could extract this fortune he did not know. He knew that there was a higher law of compensation under which he would derive adequate benefits

from the gift to the world of his discovery. The method by which this would work out did not interest him nearly so much as the necessity for getting someone to listen to the details of his fascinating invention.

Six feet two inches tall, slender, quiet of demeanor, meticulously neat in dress, full of self-confidence, he carried himself with an air that shouted, "I defy you to show me an electrical problem I can't solve"--an attitude that was consistent with his twenty-five years, but also matched by his ability.

Through Puskas's letter of recommendation he obtained a position with the Continental Edison Company, a French company organized to make dynamos, motors and install lighting systems under the Edison patents.

He obtained quarters on the Boulevard St. Michel, but in the evenings visited and dined at the best cafes as long as his salary lasted. He made contact with many Americans engaged in electrical enterprises. wherever he could get a patient ear, among those who had an understanding of electrical matters, he described his alternating-current system of dynamos and motors.

Did someone steal his invention? Not the slightest danger. He could not even give it away. No one was even slightly interested. The closest approach to a nibble was when Dr. Cunningham, an American, a foreman in the plant where Tesla was employed, suggested formation of a stock company.

With his great alternating-current-system invention pounding at his brain and demanding some way in which it could be developed, it was a hardship for him to be forced to work all day on direct-current machines. Nowadays, though, his health was robust. He would arise shortly after five o'clock in the morning, walk to the Seine, swim for half an hour, and then walk to Ivry, near the gates of Paris, where he was employed, a trip that required an hour of lively stepping. It was then half-past seven. The next hour he spent in eating a very substantial breakfast which never seemed suficient to keep his appetite from developing into a disturbing factor long before noon.

The work to which he was assigned at the Continental Edison Company factory was of a variegated character, largely that of a junior engineer. In a short time he was given a

traveling assignment as a "trouble shooter" which required him to visit electrical installations in various parts of France and Germany. Tesla did not relish "trouble shooting" but he did a conscientious job and studied intensely the dificulties he encountered at each powerhouse. He was soon able to present a definite plan for improving the dynamos manufactured by his company. He presented his suggestions and received permission to apply them to some machines. When tested they were a complete success. He was then asked to design automatic regulators, for which there was a great need. These too gave an excellent performance.

The company had been placed in an embarrassing position and was threatened with heavy loss through an accident at the railroad station in Strassburg in Alsace, then in Germany, where a powerhouse and electric lights had been installed. At the opening ceremony, at which Emperor fiilliam I was present, a short circuit in the wiring caused an explosion that blew out one of the walls. The German government refused to accept the installation. Tesla was sent, early in 1883, to put the plant in working order and straighten out the situation. The technical problem presented no dificulties but he found it necessary to use a great deal of tact and good judgment in handling the mass of red tape extruded by the German government as precaution against further mishaps.

Once he got the job well under way he gave some time to constructing an actual two-phase alternating-current motor embodying his rotary-magnetic-field discovery. He had constructed so many in his mind since that never-to-be-forgotten day in Budapest when he made his great invention. He had brought materials with him from Paris for this purpose and found a machine shop near the Strassburg station where he could do some of the work. He did not have as much time available as he had expected, and, while he was a clever amateur machinist, nevertheless the work took time. He was very fussy, making every piece of metal exact in dimensions to better than the thousandth of an inch and then carefully polishing it.

Eventually there was a miscellaneous collection of parts in that Strassburg machine shop. They had been constructed without the aid of working drawings. Tesla could project before his eyes a picture, complete in every detail, of every part of the machine. These pictures were more vivid than any blueprint and he remembered exact dimensions which

he had calculated mentally for each item. He did not have to test parts through partial assembly. He knew they would fit.

From these parts Tesla quickly assembled a dynamo, to generate the two-phase alternating current which he needed to operate his alternating-current motor, and finally his new induction motor. There was no difference between the motor he built and the one which he visualized. So real was the visualized one that it had all the appearance of solidity. The one he built in the machine shop presented no elements of novelty to him. It was exactly as he had visualized it a year before. He had mentally experimented with its exact counterpart and with many variations of it during the months that had passed since the great vision came to him while rhapsodizing the sunset sky in Budapest.

The assembly completed, he started up his power generator. The time for the great final test of the validity of his theory had arrived. He would close a switch and if the motor turned his theory would be proven correct. If nothing happened, if the armature of his motor just stood still, but vibrated, his theory was not correct and he had been feeding his mind on hallucinations, based on fantasy not on fact.

He closed the switch. Instantly the armature turned, built up to full speed in a flash and then continued to operate in almost complete silence. He closed the reversing switch and the armature instantly stopped and as quickly started turning in the opposite direction. This was complete vindication of his theory.

In this experiment he had tested only his two-phase system; but he needed no laboratory demonstration to convince him that his three-phase systems for generating electricity and for using this current for transmission and power production would work even better, and that his single-phase system would work almost as well. With this working model he would now be able to convey to the minds of others the visions he had been treasuring for so long.

This test meant much more to Tesla than just the successful completion of an invention; it meant a triumph for his method of discovering new truths through the unique mental processes he used of visualizing constructs long before they were produced from materials. From these results he

drew an unbounded sense of self-confidence; he could think and work his way to any goal he set.

There was good reason for Tesla's self-assurance. He had just passed his twenty-seventh birthday. It seemed to him only yesterday that Prof. Poeschl had seemingly so completely vanquished him for saying that he could operate a motor by alternating current. Now he had demonstrably accomplished what the learned professor said could never be done.

Tesla now had available a completely novel type of electrical system utilizing alternating current, which was much more flexible and vastly more efficient than the direct-current system. But now that he had it, what could he do with it? The executives of the Continental Edison Company by whom he was employed had continually refused to listen to his alternating-current theories. He felt it would be useless to try to interest them in even the working model. He had made many friends during his stay in Strassburg, among them the Mayor of the city, M. Bauzin, who shared his enthusiasm about the commercial possibilities of the new system and hoped it would result in the establishment of a new industry that would bring fame and prosperity to his city.

The Mayor brought together a number of wealthy Strassburgers. To them the new motor was shown in operation, and the new system and its possibilities described, by both Tesla and the Mayor. The demonstration was a success from the technical viewpoint but otherwise a total loss. Not one member of the group showed the slightest interest. Tesla was dejected. It was beyond his comprehension that the greatest invention in electrical science, with unlimited commercial possibilities, should be rejected so completely.

M. Bauzin assured him that he would undoubtedly receive a more satisfactory reception for his invention in Paris. Delays of oficialdom in finally accepting the completed installation at the Strassburg station, however, postponed his return to Paris until the spring of 1884. Meanwhile, Tesla looked forward with pleasurable expectancy to a triumphant return to Paris. He had been promised a substantial compensation if he was successful in handling the Strassburg assignment; also, that he would be similarly compensated for the improvements in design of motors and

dynamos, and for the automatic regulators for dynamos. It was possible that this would supply him with enough cash to build a full-size demonstration set for his polyphase alternating-current system, so that the tremendous advantages of his system over direct current could be shown in operation. Then he would have no trouble raising the needed capital.

When he got back to the company's ofices in Paris and asked for a settlement of his Strassburg and automatic-regulator accounts, he was given what in modern terminology is called the "runaround." To use fictitious names, as Tesla told the story, the executive, Mr. Smith, who gave him the assignments, now told him he had no jurisdiction over financial arrangements; that was all in the hands of the executive, Mr. Brown. Mr. Brown explained that he administered financial matters but had no authority to initiate projects or to make payments other than those directed by the chief executive, Mr. Jones. Mr. Jones explained that such matters were in the hands of his department executives, and that he never interfered with their decisions, so Tesla must see the executive in charge of technical matters, Mr. Smith. Tesla traveled this vicious circle several times with the same result and finally gave up in disgust. He decided not to renew his offer of the alternating-current system nor to show his motor in operation, and resigned his position immediately.

Tesla was undoubtedly entitled to an amount in excess of $25,000 for the regulators he designed and for his services in Strassburg. Had the executives been endowed with even a smattering of horse sense, or the ordinary garden variety of honesty, they would have made an attempt to settle for $5,000, at the least. Tesla, hard pressed for cash, would undoubtedly have accepted such an amount, although with a feeling that he was being cheated in a large way.

Such an offer would probably have held Tesla on the payroll of the company and preserved for it the possession of the world's greatest inventor and one who at the time had definitely demonstrated he was an extremely valuable employee.

For a paltry few thousand dollars they lost not only a man who would have saved them many times that amount every year, but they also lost an opportunity to obtain world

control of the greatest and most profitable electrical invention ever made.

One of the administrators of the company, Mr. Charles Batchellor, Manager of the works, who was a former assistant and close personal friend of Thomas A. Edison, urged Tesla to go to the United States and work with Edison. There he would have a chance to work on improvements to the Edison dynamos and motors. Tesla decided to follow Mr. Batchellor's suggestion. He sold his books and all other personal possessions except a few articles which he expected to take with him. He assembled his very limited financial resources, purchased tickets for his railroad trip and transatlantic journey to New York. His baggage consisted of a small bundle of clothes carried under his arm and some other items stuffed into his pockets.

The final hours were busy ones and, as he was about to board the train, just as it was ready to pull out of the station, he discovered his package of baggage was missing. Reaching quickly for his wallet, which contained his railroad and steamship tickets and all his money, he was horrified to discover that that too was missing. There was some loose change in his pocket, how much he did not know--he did not have time to count it. His train was pulling out. what should he do? If he missed this train, he would also miss the boat--but he could not ride on either without tickets. He ran alongside the moving train, trying to make up his mind. His long legs enabled him to keep up with it without dificulty at first, but now it was gaining speed. He finally decided to jump aboard. The loose change he discovered was suficient to take care of the railroad fare, with a negligible remainder. He explained his situation to the skeptical steamship oficials and, when no one else showed up to claim his reservations on the ship up to the time of sailing, he was permitted to embark.

To one as fastidious as Tesla, a long steamship journey without adequate clothing was a trying experience. He had expected to encounter annoyances when getting along with the minimum amount of clothing which he planned carrying with him, but when even that limited layout was lost the annoyance became hardship. Coupled with this was the memory of disappointment and resentment over his recent experiences.

The ship offered little to interest him. He explored it thoroughly and in doing so made some contacts with members of the ship's company. There was unrest among the crew. There was unrest in Tesla also. He extended sympathy to members of the crew in their claimed unjust treatment. The grievances affecting the crew had built up one of those situations in which a small spark can cause a large explosion. The spark flew somewhere on the ship while Tesla was below decks in the crew's quarters. The captain and oficers got tough and, with some loyal members of the crew, decided to settle the trouble with belaying pins as clubs. It quickly became a battle royal. Tesla found himself in the middle of a fight which when anyone saw a head he hit it.

Had Tesla not been young as well as tall and strong, his useful career might have ended at this point. He had long arms in proportion to his six feet two inches of height. The fist at the end of his arm could reach as far as a club in the hands of an adversary, and his height enabled him to tower over the other fighters so his head was not easy to reach. He struck hard and often, never knowing for or against which side he was fighting. He was on his feet when the fight was over, something which could not be said of a score of the crew members. The oficers had subdued what they called a mutiny, but they too carried indications that they had been through a battle. Tesla was definitely not invited to sit at the captain's table during the voyage.

He spent the remainder of his journey nursing scores of bruises and sitting in meditation at the stern of the ship, which too slowly made its way to New York. Soon he would set foot on the "land of golden promise" and meet the famous Mr. Edison. He was destined to learn that it was really a "land of golden promise"--but also to discover something that would open his eyes about the fulfillment of promises.

when Tesla stepped out of the Immigration Ofice at Castle Garden, Manhattan, in the summer of 1884, his possessions consisted of four cents, a book of his own poems, a couple

of technical articles he had written, calculations for designing a flying machine, and some mathematical work done in an effort to solve an extremely dificult integral. He had Mr. Batchellor's letter introducing him to Mr. Edison, and the address of a friend. In this letter to Edison, Batchellor wrote: "I know two great men and you are one of them; the other is this young man."

Lacking carfare, Tesla had to walk the several miles to his friend's home. The first person he spoke to, seeking traveling directions, was a policeman, a gruff individual. The way he supplied the information suggested to Tesla that he was willing to start a fight on the subject. Although Tesla spoke English very well, all he understood of the policeman's lingo was the direction in which he pointed his club.

while walking in what he believed was the right direction, wondering how he would be able to contrive a meal and lodgings out of four cents should he be unable to locate his friend, he passed a shop in which he could see a man working on an electrical machine that seemed to him familiar. He entered just as the man was about to give up as impossible the task of repairing the device.

"Let me do it," said Tesla, "I will make it operate." And without more ado he tackled the job. It proved to be a dificult task but eventually the machine was working again.

"I need a man like you to handle these blankety-blank foreign machines," said the man. "Do you want a job?"

Tesla thanked him and told him he was on his way to another job, whereupon the man handed him twenty dollars. Tesla had expected no compensation for doing what he considered a slight favor, and said so, but the man insisted his work was worth that much, and he was glad to pay it. Never was Tesla more thankful for a windfall. He was now assured of food and lodgings for the time being. With the aid of walking directions, this time more graciously given, he located his friend and was a guest at his home overnight. The next day he went to Edison's New York headquarters, then on South Fifth Avenue (now West Broadway).

The introduction by Mr. Batchellor gave him ready access to Mr. Edison, who was busily engaged in problems in connection with his new generating station and electric-

light system--the former located in downtown Pearl Street and serving a relatively small radius of territory.

Tesla was favorably impressed by Edison on their first meeting. He marveled that a man so limited in education could accomplish so much in so technical a field as electricity. It caused Tesla to wonder if all the time he had spent in gaining an education of very broad scope had not been wasted. would he have been further ahead if he had started his practical work on the basis of experience, as Edison had done? He definitely decided, however, before many days had passed, that the time and effort he had spent on his education constituted the wisest kind of an investment.

Edison, for his part, was none too favorably impressed by Tesla. Edison was an inventor who got his results by trial-and-error methods. Tesla calculated everything mentally and solved his problems before doing any "work" on them. As a result, the two great men spoke an entirely different technical language. There was one more very important difference. Edison belonged to the direct-current and Tesla to the alternating-current school of thought. The electricians of that day could, and did, become highly emotional over their differences of opinion on this subject. Discussions roused all the fervor of a religious or political debate, and everything unpleasant was associated with the adherents on the other side of the discussion. The least unpleasant thought applied to an opponent was that he was of a low order of mentality. When Tesla enthusiastically described his polyphase system and told Edison he believed alternating-current was the only practical kind of current to use in a power-and-lighting system, Edison laughed. Edison was using direct current in his system. He told Tesla very bluntly he was not interested in alternating-current; there was no future to it and anyone who dabbled in that field was wasting his time; and besides, it was a deadly current whereas direct current was safe. Tesla did not yield any ground in the discussion--nor could he make any progress in his effort to get Edison to listen to a presentation of his polyphase power system. On technical grounds, they were worlds apart.

Nevertheless, because of Batchellor's statement on the valuable work he had done on the Edison direct-current machines in Europe, Tesla was, without much formality, given a job on Edison's staff--doing minor routine work. A

few weeks later he had an opportunity to demonstrate his ability. Edison had installed one of his electric-light plants on the steamship Oregon, the fastest and most up-to-date passenger ship of that time. The installation worked well for many months but finally both dynamos went out of commission. It was impossible to remove the dynamos and install new ones, so it was necessary to repair the old ones in some way--but this, Edison had been told, was impossible without taking them to the shop. The scheduled sailing date of the ship had passed and Edison was being placed in an embarrassing position over the accumulating days of delay caused by his machines.

Edison asked Tesla if he would go to the ship and see what could be done about the situation. This was in the afternoon. Taking such instruments as he thought he would need, Tesla went aboard the Oregon. He found that short circuits had caused some of the armature coils to be burned out; and open circuits had developed elsewhere on the machines.

Calling on members of the crew to assist him, Tesla worked through the night and by 4 am had both machines running as well as they did the day they were newly installed. walking back to the shop on lower Fifth Avenue at 5 am, in the dim early dawn he met a group of men just leaving. In it were Edison, Batchellor, who had returned from Paris in the meantime, and several others who had finished their night's work and were returning to their homes.

"Here is our Parisian running around nights," said Edison.

"Am just coming back from the Oregon," Tesla replied. "Both machines are operating."

Edison, amazed, shook his head and turned away without another word. On rejoining the group he said to Batchellor, loud enough for the keen-eared Tesla to hear him, "Batchellor, this is a damn good man."

Thereafter Tesla's status on the staff was raised several levels and he was given closer contact with design and operating problems. He found the work interesting and applied himself to it more than eighteen hours a day, from 10:30 am until 5 am, every day including Sundays. Edison, observing his industry, told him, "I have had many hard-working assistants but you take the cake." Tesla observed

many ways in which the dynamos could be improved in design to operate more efficiently. He outlined his plan to Edison, and stressed the increased output and lower cost of operating that would result from the changes he suggested. Edison, quick to appreciate the value of increased efficiency, replied, "There's fifty thousand dollars in it for you if you can do it."

Tesla designed twenty-four types of dynamos, eliminating the long-core field magnets then in use and substituting the more efficient short cores, and provided some automatic controls, on which patents were taken out. Months later, when the task was finished, and some of the new machines built and tested and found measuring up to his promises, Tesla asked to be paid the $50,000. Edison replied, "Tesla, you don't understand our American humor." Tesla was shocked to discover that what he thought was a specific promise was being tossed aside merely as a standard practical joke of the day. He received not a penny of compensation from the new designs and inventions, or for the tremendous amount of overtime, beyond the none too generous weekly pay. He resigned his job immediately. This was in the spring of 1885.

In the period of less than a year which he spent with Edison, Tesla had developed a good reputation in electrical circles; so when he was free he was offered an opportunity to capitalize on it. A group of promoters offered to form a company under his name. This looked like a possible chance to bring out his alternating-current system, and he eagerly entered into the project. But when he urged his plan, the promoters informed him they were not interested in alternating-current. what they wanted him to develop was a practical arc light for street and factory illumination. In about a year he developed the desired lamp, took out several patents on his invention, and its manufacture and use were under way.

From a technical point of view the venture was a success, but Tesla himself suffered another painful financial experience in connection with it. He had been paid a comparatively small salary during the period of development. According to the agreement, he was to receive his principal compensation in the form of shares of stock in the company. He received a beautifully engraved stock certificate, and then, by some manipulations he did not understand, he was forced out of the company and aspersions

were cast upon his ability as an engineer and an inventor. When he sought to convert the certificate into cash, he found that the shares of newly organized companies of undemonstrated power to earn dividends possess very slight value. His opinion of financial men in both the Old World and the New was taking on a decidedly uncomplimentary bias.

Now came the most unpleasant experience of Tesla's life. He was without a source of income, and from the spring of 1886 to the spring of 1887 he was forced to work as a day laborer. "I lived," he said, "through a year of terrible heartaches and bitter tears, my suffering being intensified by material want." Business conditions were none too good in the country. Not only did he have difficulty in getting anyone to listen to his alternating-current project, but even in his effort to earn room and board as a laborer he had tremendous competition, and found it none too easy to secure the most menial tasks at almost starvation wages. He would never discuss this period of his life, probably because it was so unpleasant that he banished all thoughts of it from his memory. Some electrical repair work and even ditch digging at $2 a day were among the jobs he tackled. He resented the utter waste of his abilities more than the personal degradation involved. His education, he said, seemed a mockery.

During the winter of early 1887, while engaged in ditch digging, he attracted the attention of the foreman of the gang who, too, was being forced by circumstances to work below his accustomed level. The foreman was impressed by Tesla's story of his inventions and his great hopes for his alternating-current system. Through this foreman, Tesla said, he was introduced to Mr. A. K. Brown of the Western Union Telegraph Company who put up some of his own money and interested a friend in joining him in Tesla's project.

These two gentlemen organized and financed the Tesla Electric Company, and in April, 1887, established a laboratory at 33-35 South Fifth Avenue (now West Broadway), near Bleecker Street, not far from the shop of the Edison Company. Edison had turned down Tesla's alternating-current idea--and now Tesla was his neighbor with a laboratory of his own, starting to develop the competing idea. Within this small area was to be fought the great battle of the electrical industry over the question of whether direct or alternating current should be used. Edison, already famous, was wholeheartedly committed to direct current; his

powerhouses were operating in several cities and, in addition, he had the support of the famous financier, J. P. Morgan. Tesla, on the other hand, was unknown and had only very modest financial support. The direct current was technically simple, whereas alternating-current was technically complex. Tesla knew, however, that in these complexities were unlimited possibilities for usefulness.

Tesla's dark days were over. yet he was soon to discover that the acceptance or rejection of the alternating-current system was not based on technical facts but upon financial considerations, emotional reactions and prejudices, and that human nature was a bigger factor than scientific truths. Nevertheless, in a short time, he would see some of his greatest hopes and dreams realized, and success in large measure reward his efforts.

Once he had achieved something resembling fair conditions under which to carry on his work, the rising star of Tesla's genius shot across the electrical heavens like a meteor. As soon as the newly organized Tesla Electric Company opened its South Fifth Avenue laboratories he started the construction of a variety of pieces of dynamo electric machinery. It was not necessary for him to do any calculating, or work out blueprints. Everything was crystal clear in his mind down to the finest detail of each piece of apparatus. As a result he very quickly produced the working units with which he demonstrated the principles of his polyphase alternating-current system. The single piece of apparatus he had built while in Strassburg, the first model of the induction motor, supplied the physical proof he needed that all the remainder of his calculations were correct.

The apparatuses built in his new laboratory were identical with those which he conceived during the two months in Budapest following the remarkable revelation of the principle of the revolving magnetic field. He did not make the slightest change, he said, in the machines he had mentally constructed at that time. When the machines were physically constructed not one of them failed to operate as he had anticipated. Five years had elapsed since he evolved the designs. In the meantime he had not committed a line to paper--yet he had remembered perfectly every last detail.

Tesla produced as rapidly as the machines could be constructed three complete systems of alternating-current

machinery--for single-phase, two-phase and three-phase currents--and made experiments with four- and six-phase currents. In each of the three principal systems he produced the dynamos for generating the currents, the motors for producing power from them and transformers for raising and reducing the voltages, as well as a variety of devices for automatically controlling the machinery. He not only produced the three systems but provided methods by which they could be interconnected, and modifications providing a variety of means of using each of the systems. A few months after opening the laboratory he submitted his two-phase motor to Prof. fi. A. Anthony, of Cornell University, for testing. Prof. Anthony reported that it had an efficiency equal to that of the best direct-current motors.

Tesla now not only constructed the machines which he visualized but he worked out the basic mathematical theory underlying all of the apparatus. The mathematical theory was so basic that it covered not only the principles applying to machinery for operation at 60 cycles per second, which is the frequency now in standard use, but applied equally well to the whole range of low- and high-frequency currents. With Edison direct current, it had not been found practicable to work with potentials higher than 220 volts on distribution systems; but with alternating-current it was possible to produce and transmit currents of many thousands of volts, thus permitting economical distribution, and these could be reduced to the lower voltages for customer use.

Tesla sought to obtain a single patent covering the entire system and all of its constituent dynamos, transformers, distribution systems and motors. His patent attorneys, Duncan, Curtis&Page, filed the application for this patent October 12, 1887, six months after the laboratory opened and five and a half years after Tesla had made his rotary magnetic-field invention.

The Patent Ofice, however, objected to considering such an "omnibus" application and insisted it be broken down to seven separate inventions, with individual applications filed on each. Two groups of separate applications were filed, on November 30 and December 23 respectively. These inventions were so original and covered such a virgin field of electrical science that they encountered practically no dificulties in the Patent Ofice and within about six months

the patents were issued. (They were numbered 381,968; 381,969; 381,970; 382,279; 382,280; 382,281 and 382,282. These covered his single and polyphase motors, his distribution system and polyphase transformers. In April of the following year, 1888, he applied for and was later granted five more patents, which included the four-and three-wire three-phase systems. These were numbered 390,413; 390,414; 390,415; 390,721; and 390,820. Within the year he applied for and was granted eighteen more: 401,520; 405,858; 405,859; 416,191; 416,192; 416,193; 416,194; 416,195; 418,248; 424,036; 433,700; 433.701; 433,702; 433,703; 445,207; 445,067; 459,772 and 464,666.)

As a succession of fundamental patents started to issue from the Patent Ofice to Tesla, the attention of the electrical engineering profession was drawn to this practically unknown inventor. The significance of his epoch-making discoveries was quickly grasped and he was invited to deliver a lecture before the American Institute of Electrical Engineers on May 16, 1888. This invitation was evidence that he had "arrived." Tesla accepted the invitation and put his whole heart into preparing the lecture which, he felt, would enable him to tell the electrical world the magnificent story of his complete alternating-current system and the tremendous advantages it possessed over direct-current.

This lecture became a classic of the electrical engineering field. In it Tesla presented the theory and practical application of alternating-current to power engineering. This, with his patents, described the foundation, in the matter of circuits, machines and operation, and theory, upon which almost the entire electrical system of the country was established and is still operating today. No new development of anything even slightly approaching comparable magnitude has been made in the field of electrical engineering down to the present time.

Tesla's lecture, and the inventions and discoveries which he included in it, established him before the electrical engineering profession as the father of the whole field of alternating-current power system, and the outstanding inventor in the electrical field.

It is not easy to visualize the tremendous burst of electrical development and progress that came out of Tesla's laboratory in the few months after he established

it. He produced a tidal wave of advancement which carried the electrical world into the opening of the new power age in one grand surge--although it took several years, naturally, for the commercial exploitation to get under way. The world of electrical engineering was amazed, bewildered and mystified by the host of discoveries thrown into its midst in rapid succession from the Tesla laboratory, and was filled with admiration for the prodigious new genius who had flared up within its ranks.

Tesla's power system, employing high voltage for transmission, released electrical powerhouses using direct current from functioning as purely local enterprises, capable of serving an area within a radius of one mile at the very most. His motors used alternating-current that could be economically transmitted hundreds of miles, and he provided an economical two- and three-phase system for transmission lines.

The stupendous changes which the Tesla alternating-current inventions and discoveries brought about in the electrical industry can be realized by considering the handicap under which the direct-current powerhouses of the Edison system had operated up to that time. Electricity was generated in powerhouses by relatively small-size dynamos, and the current then distributed to customers over copper conductors laid in conduits under the streets. Some of the electrical energy fed into these conductors at the powerhouse did not arrive as electricity at the far end of the line but was converted along the route to useless heat by the resistance of the conductors.

Electrical energy is composed of two factors, the current, or amount of electricity, and the voltage, or the pressure under which the current is moved. Resistance losses were undergone by the current regardless of the voltage. One ampere of current experienced a definite loss caused by resistance and this loss was the same whether the pressure was 100, or 1,000 or 100,000 volts. If the current value remained fixed, then the amount of energy transported over a wire varied with the voltage. There is, for example, 100,000 times as much energy transported over a wire carrying a current of one ampere at 100,000 volts as there is when the current is one ampere and the pressure is one volt.

If the amount of current carried by a wire is doubled, the heat losses are increased four fold; if the current is tripled, these losses are increased nine fold, and if the current is increased four fold, the losses rise sixteen fold. This situation put definite limits to the amount of current which could be loaded on to conductors.

In addition there is an accompanying drop in pressure. In a half-mile-long conductor, of the size adopted and under the average currents carried, there would be a drop of about 30 volts. To compensate for this, to some extent, the dynamos were designed to generate 120 volts instead of the standard 110 volts for which lamps were designed. Near the powerhouse the customers would get excess voltage--and a half-mile away their current would be delivered at 90 volts. The early Edison carbon lamps were none too brilliant at 110 volts and gave much less than satisfactory illumination at 90 volts.

As a result of this situation the generation and distribution of direct-electric current became very much of a localized matter. The Edison powerhouse could serve an area less than a mile in diameter. In order to give service to a large city it would be necessary to have a powerhouse in every square mile, or even closer if a uniformly satisfactory current were to be supplied. Outside large cities the situation became even more dificult. This was a severe handicap if electricity was to become the universal power source.

Tesla's alternating-current power system, which Edison so emphatically rejected when it was offered to him, freed electricity from its bondage to local isolation. Not alone were his alternating-current motors more simple and flexible than the direct-current machines, but it was possible by a highly efficient method of using transformers, which consisted of two coils of wire around an iron core, to step up the voltage and simultaneously step down the current in a proportionate amount, or use the process in reverse. The amount of energy involved, however, would remain practically unchanged.

Copper wire entails a heavy investment when it is bought by the mile. The diameter of the wire sets the limit to the amount of current it will carry. With the Edison direct-current system there was no practical way for transforming an electric current. The voltage remained fixed and when

the current was increased to the carrying capacity of the wire no further expansion was possible on that circuit.

With the Tesla system the amount of energy a wire would transport would be increased tremendously by increasing the voltage and letting the current remain fixed below the carrying limit of the circuit. A very small wire could carry a thousand or more times as much electrical energy in the Tesla polyphase alternating system as it could in the Edison direct-current system.

By using Tesla's alternating-current system electricity could be delivered economically at vast distances from the powerhouse. It would be possible, if desired, to burn coal at the mouth of a mine for generating electricity, and deliver the current cheaply at distant cities, or to generate electricity where water power was available and transmit it to distant points where it could be used.

Tesla rescued the electrical giant from the apron strings of the powerhouse and gave it geographical freedom, the opportunity to expand into the wide-open spaces and work its magic. He laid the foundation for our present superpower system. A development of such magnitude was bound to be loaded with dynamite, and action was sure to follow as soon as someone set a match to the fuse.

TESLA'S spectacular lecture and demonstration before the American Institute of Electrical Engineers in New York focused on his work the attention of the electrical fraternity throughout the world. There was no doubt in the mind of the vast majority of electrical engineers that Tesla's discoveries created a new epoch in the electrical industry. But what could be done about it? There were few manufacturers who could take advantage of it. His discoveries were in the same predicament as a ten-pound diamond. No one would question the value of the stone but who would be in a position to purchase it or make any use of it?

Tesla had given no specific thought to commercializing his work at this time. He was in the midst of a program of experimental work which was far from complete and he desired to finish it before engaging in another line of activity. He expected that there would be no alternative to establishing his own company and engaging in the manufacture of his dynamos, motors and transformers. Such a course would take him away from the original experimental work which greatly fascinated him, and which he did not wish to interrupt. Commercializing his inventions, therefore, was a problem that could be postponed, as far as he was concerned, at least as long as the present financing of his work continued.

George Westinghouse, head of the Westinghouse Electric Company in Pittsburgh, was a man of vision. He was already famous as an inventor of numerous electrical devices but principally for his air brake for trains, and had made a fortune out of the exploitation of his own inventions. He recognized the tremendous commercial possibilities presented by Tesla's discoveries and the vast superiority of the alternating- over the direct- current system. He was a practical man of business and was not limited in his choice between the two systems.

Edison, head of the Edison General Electric Company, on the other hand, was under a limitation. Edison's invention was the incandescent electric lamp. Having developed this project, he was faced with finding some way to use it commercially. In order to sell his lamps to the public it was necessary to make the electricity available for lighting them. This necessitated the building of powerhouses and distribution systems. Another kind of electric lamp was already available--the arc lamp--in which he was but slightly interested. The Edison system powerhouses were standardized on low-voltage direct current. At that time direct-current motors were in use, and most technical men believed it was not at all likely there would ever be a practical alternating-current motor. The direct-current system, therefore, offered a number of advantages of a practical nature from Edison's viewpoint.

Westinghouse had no pet project comparable to the incandescent lamp around which he had to throw protecting conditions such as direct-current limitations, so he could look at the Tesla alternating-current discoveries from an unbiased and purely objective point of view. He reached his

decision a month after Tesla's lecture. Having done this, he forwarded a brief note to Tesla, making an engagement to see him in the latter's laboratory.

The two inventors had not previously met but each of them was well acquainted with the other's work. Westinghouse, born in 1846, was ten years older than Tesla. He was a short, stout, bearded, impressive-looking individual, and had a habit of directness in conducting his affairs that amounted almost to bluntness. Tesla, thirty-two years old, was tall, dark, handsome, slender and suave. They made a strongly contrasting pair as they stood in Tesla's laboratory, but they had three things in common: they both were inventors, engineers and loved electricity. Tesla had in his laboratory dynamos, transformers, and motors with which he could demonstrate his discoveries and models in actual operating conditions. Here Westinghouse was right at home and quickly became completely sold on the inventor and his inventions.

So favorably impressed was Westinghouse that he decided to act quickly. The story was related to the author by Tesla.

"I will give you one million dollars cash for your alternating-current patents, plus royalty," Westinghouse blurted at the startled Tesla. This tall, suave gentleman, however, gave no outward sign that he had almost been bowled over by surprise.

"If you will make the royalty one dollar per horsepower, I will accept the offer," Tesla replied.

"A million cash, a dollar a horsepower royalty," Westinghouse repeated.

"That is acceptable," said Tesla.

"Sold," said Westinghouse. "you will receive a check and a contract in a few days."

Here was a case of two great men, each possessed with the power of seeing visions of the future on a gigantic panorama, and each with complete faith in the other, arranging a tremendous transaction with utter disregard of details.

The amount involved was unquestionably a record one, for that time, for an invention. while Tesla liked to think of his complete polyphase system as a single invention, he was, nevertheless, selling about twenty inventions on which patents were already issued, and about as many more still to issue. With a total of forty patents involved in the transaction, most of them strongly basic in nature, he received, therefore, about $25,000 per patent. Westinghouse thereby obtained a record-breaking bargain by buying the patents in wholesale quantities.

Westinghouse arranged with Tesla to come to Pittsburgh "at a high salary" for a year, to act as consultant in the commercial application of his inventions. The generous offer made by the Pittsburgh magnate for the purchase of his patents made it unnecessary for Tesla to have any more worries about having to devote a major portion of his time to exploiting his inventions commercially through his own company. He could afford, therefore, to give this year of his time.

The apparatus which Tesla demonstrated to Westinghouse when the latter visited his laboratory, and which worked so beautifully, was designed for operation with a current of 60 cycles. Tesla's investigation had demonstrated that this was the frequency at which the greatest efficiency of operation could be achieved. At higher frequencies there was a saving in the amount of iron required; but the drop in efficiency, and design dificulties that developed, were not compensated for by the very small saving in cost of metal. At lower frequencies the amount of iron required increased, and the apparatus grew in size faster than increased efficiency justified.

Tesla went to Pittsburgh and expected to clear up all problems in less than a year. Here, though, he encountered engineers who faced the problem of producing a motor with a design that would insure, first, certainty of smooth and reliable operation; second, economy of operation; third, economy in use of materials; fourth, ease of manufacture; as well as other problems. Tesla had these problems in mind but not with the urgency with which the engineers faced them. In addition he was quite adamant in the choice of 60 cycles as the standard frequency for alternating current while engineers, who had experience on 133 cycles, were not so sure that the lower frequency would be best for the Tesla motors. At any rate there was conflict between the

inventor, interested mainly in principles, and engineers interested in practical design problems. Very definite problems were encountered in making the Tesla motor work on a single-phase current in small sizes. In this type of design, artifices had to be incorporated in the motor to achieve some of the characteristics of a two-phase current from the single-phase current that was supplied to operate it.

Tesla was thoroughly disgusted with the situation. He felt his advice concerning his own invention was not being accepted, so he quit Pittsburgh. Westinghouse was sure the situation would work itself out. Seeking to persuade Tesla to remain, he offered him, Tesla revealed many years later, twenty-four thousand dollars a year, one third of the net income of the company and his own laboratory, if he would stay on and direct the development of his system. Tesla, now wealthy and anxious to return to original research, rejected the offer.

Development work proceeded after Tesla left, and soon practical designs were produced for all sizes of motors and dynamos, and their manufacture started. Tesla was happy to note that the 60-cycle standard, his emphatic choice, but which had been questioned on the ground it was less practical in small units, had been adopted as the standard frequency.

On returning to his New York laboratory, Tesla declared that he had not made a single worth-while contribution to electrical science during the year he spent at Pittsburgh. "I was not free at Pittsburgh," he explained; "I was dependent and could not work. To do creative work I must be completely free. When I became free of that situation ideas and inventions rushed through my brain like a Niagara." During the following four years he devoted a large fraction of his time to further developments of his polyphase power system, and applied for, and was granted, forty-five patents. Those granted in foreign countries would bring the total to several times this number.

The ideas of the two giants among inventors--Edison and Tesla--were meeting in head-on battle. Out of the laboratories of the two geniuses, within sight of each other in South Fifth Avenue in New York, had come world-shaking developments.

There had been considerable conflict between Edison, who adhered strictly to direct current, and those who supported the claims for alternating current. The Thomson-Houston Company and the Westinghouse Electric Company had extensively developed this field for series electric lighting and arc lighting before the Tesla power system was developed. Edison had engaged in many tilts at these competitors, attacking alternating-current as unsafe because of the high voltages used. The advent of the Tesla system added fuel to the fire.

It was Tesla's belief that when the New York State Prison authorities adopted high-voltage alternating current for electrocution of condemned prisoners, the Edison interests had engineered the project to discredit alternating current. There is no doubt about the aid the prison authorities' choice gave the direct-current group; but their decision was undoubtedly based on the fact that direct current could not, by any practical means, be produced at the high voltages required, whereas alternating-current potentials could be very easily increased. Direct current is just as deadly, at the same voltage and amperage, as alternating current. In this "war of the currents," however, as in other wars, appeal to the emotions, instead of to simple facts, were the governing influences.

The task of putting the United States on an electrical power basis--which is what George Westinghouse undertook when he began to exploit the Tesla patent--was a gigantic one requiring not only engineering talent but capital. The Westinghouse Electric Company experienced a tremendous expansion in the volume of its business, but the upward surge came at a time when the country was going into a stage of commercial and financial depression; and Westinghouse soon found himself in dificulties.

This was, in addition, an era in which competing giant financial interests were battling for control of the industrial structure of the country through control of capital. It was a time of mergers, a period when the financial interests were building larger units of production by uniting smaller companies in related fields, frequently forcing these combinations without regard to what the owners of the companies desired.

One merger, internally initiated and arranged by mutual consent, brought together the Thomson-Houston Company and the Edison General Electric Company, the two biggest competitors of Westinghouse Electric, to form the present General Electric Company. This was a challenge to competing financial interests.

Westinghouse had expanded his business at a very rapid rate in exploiting the Tesla patents. Because his financial structure thereby lost a certain amount of flexibility, he became vulnerable to financial operators and soon found himself in the toils of a merger that involved uniting several other small companies with his organization. Financial interests that had stepped into the situation demanded that the Westinghouse Electric Company be reorganized as a step toward bringing about a merger with it of the U. S. Electric Company and the Consolidated Electric Light Company, the new unit to be known as the Westinghouse Electric and Manufacturing Company.

Before this reorganization would be consummated the financial advisers, in strategic positions, insisted that Westinghouse jettison some of his plans and projects which they considered inadvisable or a detriment to getting the new company onto a new foundation that would be sounder from a financial point of view.

One of the requirements was that Westinghouse get rid of the contract with Tesla calling for royalty payments of $1 per horsepower on all alternating-current articles sold under his patents. (No documentary evidence exists concerning this contract. The author located two sources of information. One was in complete agreement with the story here related. The other states that the million-dollar payment was advance royalties and Tesla so described it to him, declaring no further royalties were paid.) The financial advisers pointed out that if the business which Westinghouse expected the company would do under the Tesla patents in the ensuing year was anywhere near as great as estimated, the amount to be paid out under this contract would be tremendous, totaling millions of dollars; and this, at the time of reorganization, appeared a dangerous burden, imperiling the stability which they were trying to attain for the new organization.

Westinghouse strenuously objected to the procedure. This patent-royalty payment, he insisted, was in accordance with

usual procedures and would not be a burden on the company, as it was included in costs of production, was paid for by the customers, and did not come out of the company's earnings. Westinghouse, himself an inventor of first magnitude, had a strong sense of justice in his dealings with inventors.

The financial advisers, however, were not to be overruled. They nailed Westinghouse on the spot by insisting that the million dollars he had paid Tesla was more than adequate compensation for an invention, and that by making such an exorbitant payment he had imperiled the financial structure of his company and jeopardized his bankers' interest. Any further imperiling of the reorganization by any effort to retain the royalty contract would, it was argued, result in the withdrawing of support that would save the company.

The situation boiled down to the common "Either-Or" technique.

Westinghouse was required to handle the negotiations with Tesla. No situation could be more embarrassing to him. Nevertheless, Westinghouse was a realist among realists. He never hesitated to face facts squarely and with a blunt directness. "I will give you one million dollars cash for your alternating-current patents, plus royalty": he had been both brief and blunt when he purchased the patents from Tesla. Now he was faced with the problem of undoing the situation into which he had entered with such brevity. Then money talked and he held the money. Now Tesla held the dominant position; he held a perfectly valid contract worth many millions, and he could go to court to force compliance with its terms. Edison's successful suit against infringers of his electric-light patent, bringing disaster to many companies that violated his patent property rights, had caused the whole industrial world to hold a new and wholesome respect for patent rights.

Westinghouse had no reason for believing that Tesla would show the slightest inclination to relinquish his contract or permit its terms to be changed to provide a smaller rate of royalty. He knew that Tesla's pride had been hurt by the disagreement with the Pittsburgh engineers, and that he might not now be in a conciliatory mood. On the other hand, Westinghouse knew that he had succeeded in having Tesla's ideas adopted. His greatest comfort came from the fact that he had entered into the contract with good faith--and with

the same good faith he was trying to handle a much less satisfactory situation. Perhaps he could offer Tesla an executive position in the company in lieu of the contract. There would be mutual advantages in such an arrangement.

There is no means of fixing the definite value of the contract Tesla held. His patents covered every department of the new alternating-current power system, and royalties could be collected on powerhouse equipment and motors. At that time the electric power industry had barely started; no one could look into the future and see the tremendous volume of business that would be developed. (The latest data available indicate that in 1941 there was 162,000,000 horsepower of electrical generating machinery in operation in the United States, practically all of it for alternating current. Assuming a uniform growth from 1891 to 1941, the installed horsepower in 1905, when the first Tesla patents would have expired, would have been about twenty million. This figure is, apparently, too high.

According to a census of central stations in the United States conducted by T. Commerford Martin (Electrical World, March 14, 1914) the horsepower of generators in operation in 1902 was 1,620,000 and in 1907 the figure had risen to 6,900,000. On a pro rata, per-year basis, this would make the figure for 1905, the year when Tesla's first patents expired, 5,000,000. During this period many manufacturers who had been using steam power installed dynamos in their factories and operated isolated plants. These would not be included in the central-station figures and, if added, would bring the total horsepower to perhaps 7,000,000. Tesla would have been entitled to $7,000,000 royalties on this equipment, on the basis of his $1-per-horsepower arrangement. In addition he would have been entitled to royalties on motors that used the power generated by these dynamos. If only three quarters of the current generated were used for power, this would have entitled him to additional royalties of $5,000,000, or a total of $12,000,000.)

It would be a tough job for any executive, no matter how shrewd or clever, to talk a man out of a contract that would net him many millions of dollars, or induce him to accept a reduction in rates amounting to millions.

Westinghouse called on Tesla, meeting him in the same South Fifth Avenue laboratory where he had purchased the patents

four years before. Without preliminaries or apologies Westinghouse explained the situation.

"your decision," said the Pittsburgh magnate, "determines the fate of the Westinghouse Company."

"Suppose I should refuse to give up my contract; what would you do then?" asked Tesla.

"In that event you would have to deal with the bankers, for I would no longer have any power in the situation," Westinghouse replied.

"And if I give up the contract you will save your company and retain control so you can proceed with your plans to give my polyphase system to the world?" Tesla continued.

"I believe your polyphase system is the greatest discovery in the field of electricity," Westinghouse explained. "It was my efforts to give it to the world that brought on the present difficulty, but I intend to continue, no matter what happens, to proceed with my original plans to put the country on an alternating-current basis."

"Mr. Westinghouse," said Tesla, drawing himself up to his full height of six feet two inches and beaming down on the Pittsburgh magnate who was himself a big man, "you have been my friend, you believed in me when others had no faith; you were brave enough to go ahead and pay me a million dollars when others lacked courage; you supported me when even your own engineers lacked vision to see the big things ahead that you and I saw; you have stood by me as a friend. The benefits that will come to civilization from my polyphase system mean more to me than the money involved. Mr. Westinghouse, you will save your company so that you can develop my inventions. Here is your contract and here is my contract--I will tear both of them to pieces and you will no longer have any troubles from my royalties. Is that suficient?"

Matching his actions to his words Tesla tore up the contract and threw it in the waste basket; and Westinghouse, thanks to Tesla's magnificent gesture, was able to return to Pittsburgh and use the facilities of the reorganized company, which became the present Westinghouse Electric and Manufacturing Company, to make good his

promise to Tesla to make his alternating-current system available to the world.

Probably nowhere in history is there recorded so magnificent a sacrifice to friendship as that involved in Tesla's stupendous gift to Westinghouse of $12,000,000 in unpaid royalties, although Westinghouse personally received only indirect benefits from it.

It is also probable that the failure to pay Tesla these royalties resulted in one of the greatest handicaps to scientific and industrial progress which the human race has experienced. A few years later Tesla, still an intellectual giant far from the peak of his greatest growth, still pouring forth a profusion of inventions and discoveries of first magnitude, equal in importance to his first efforts which put the world on an electrical power basis, found himself without funds with which to develop his discoveries, with the result that many of them have been lost.

Nearly fifty years after this majestic relinquishment of wealth on the altar of friendship, during which time Tesla had had opportunity to see the United States and the world as a whole wax wealthy out of the power he had made available, he was called on to respond, with a speech, to honorary citation by the Institute of Immigrant Welfare. Tesla, then about eighty, was unable to appear in person. He had experienced decades of poverty in which he faced ridicule for his failure to develop inventions which he declared he had made, and had been forced to move frequently from hotel to hotel, owing to inability to pay his bills. In spite of these experiences he developed no rancor toward Westinghouse in whose behalf he sacrificed his $12,000,000 in royalties. Instead, he retained his original warm friendship. This is indicated by a statement in the speech he sent to the Institute to be read at its dinner held in the Hotel Biltmore, May 12, 1938:

"George Westinghouse was, in my opinion, the only man on this globe who could take my alternating-current system under the circumstances then existing and win the battle against prejudice and money power. He was a pioneer of imposing stature, one of the world's true noblemen of whom America may well be proud and to whom humanity owes an immense debt of gratitude."

when Tesla left the Westinghouse plant at Pittsburgh in 1889 to return to his laboratory in New York, he entered a new world. The magnificent polyphase system which he had already produced was but a small sample of the greater wonders that still remained to be revealed, and he was anxious to start exploring the new realm.

He was not approaching an entirely unknown realm in which he would have to feel his way in darkness in the hope of stumbling upon something of value, although anyone else at that time would have been in that position. On that fateful afternoon in February in Budapest in 1882, when he was given the vision of the rotating magnetic field, there had come with it an illumination that revealed to him the whole cosmos, in its infinite variations and its myriad of forms of manifestations, as a symphony of alternating currents. For him, the harmonies of the universe were played on a scale of electrical vibrations of a vast range in octaves. In one of the lower octaves was a single note, the 60-cycle-per second alternating current, and in one of the higher octaves was visible light with its frequency of billions of cycles per second.

Tesla had in mind a course of experimentation in which he would explore this region of electrical vibration between his alternating current and light waves. He would increase the frequency of the alternating current through the unknown intervening regions. If one note in a lower octave produced such a magnificent invention as the rotating magnetic field and the polyphase system, who could imagine the glorious possibilities that lay hidden on other notes in higher octaves? And there were thousands of octaves to be explored. He would construct an electrical harmonium by producing electrical vibrations in all frequencies, and study their characteristics. He would then, he hoped, be able to understand the motif of the cosmic symphony of electrical vibrations that pervaded the entire universe.

Tesla, at the age of thirty-three, was now wealthy. He had received $1,000,000 from the Westinghouse Company for his first crop of inventions. Of this, $500,000 went to A. K. Brown and his associate who had financed his experiments. Still greater inventions were to follow. He would never

need money. He would, he then believed, have royalties in the millions from his alternating-current patents. He could spend as freely as he wished, penetrating the secrets of Nature and applying his discoveries to human welfare. It was his responsibility to be so engaged. He knew he was gifted as no other man had been blessed with vision, talent and ability; and he in turn would endow the world with supernal treasures of scientific knowledge which he would extract from the secret recesses of the universe and, through the activities of his mighty mind, transform into agencies to brighten the lives, lighten the labors and increase the happiness of the human race.

was he a superegoist in his attitude? If so, he was not activated by selfish motives. To him it mattered not what he thought, so long as he remained objective in his thinking and his thoughts could be translated into demonstrable facts. what if he did consider himself greater than other men: did not this viewpoint conform to the facts? Suppose he did consider himself a man of destiny. Could he not bring evidence to support the contention? It was not necessary for Tesla actually to see an event occur in order to enjoy its realization. Had he not as a youth declared that he would make a practical alternating-current motor, only to be told by his professor that the goal was impossible of attainment--and had he not already accomplished this "impossibility"? Had he not taken the direct-current dynamos of Edison, whom all the world looked upon as a great genius, and had he not greatly improved their design and operation; and in addition, had he not produced a vastly superior system for producing, distributing and using electricity? To all of these inquiries Tesla could answer in the afirmative without going beyond the bounds of modesty concerning his achievements.

His attitude was not that of an egoist. It was an attitude of supreme faith in himself and in the vision that had been given him. To a man of ability, with such supreme faith in himself, and necessary financial resources to advance his purposes, the world of accomplishments is without limits. This was the picture of Tesla as he returned to his laboratory in lower Fifth Avenue, New York, in the latter part of 1889.

Tesla had studied a wide range of frequencies of alternating current in order to select the frequency at

which his polyphase system would operate most efficiently. His calculations indicated important changes in characteristics and effects as the frequency of the current was increased; and his observations with the electrical machinery he built confirmed his calculations. He noted that ever smaller quantities of iron were required as the frequencies were increased, and he now wished to explore the very high frequencies at which unusual effects should be produced without any iron in the magnetic circuit.

When, back in Budapest following his rotating magnetic-field discovery, he had played with mental calculations of the properties of alternating currents all the way from the very lowest frequency up to that of light, no one had yet explored this region. James Clerk Maxwell, at Cambridge University, England, had, however, nine years before, in 1873, published his beautiful presentation on an electromagnetic theory of light, and his equations indicated that there was a vast range of electro-magnetic vibrations above and below visible light--vibrations of much longer and much shorter wavelengths. while Tesla was engaged in making models of his polyphase system in 1887, too, Professor Heinrich Hertz, in Germany, put the Maxwell theory to test in the range of waves a few meters long. He was able to produce such waves by the spark discharge of an induction coil, and was able to absorb such waves from space and change them back to a small spark at some distance from the coil.

Hertz's work gave support to Tesla's theory that there was an interesting discovery to be made on almost every note of the whole gamut of vibrations between the known ones of the electrical current and those of light. Tesla felt sure that if he could continually increase the frequency of electrical vibrations until they equaled that of light, he would be able to produce light by a direct and highly efficient process instead of the extremely wasteful process used in the Edison incandescent lamp, in which the useful light waves were a very small fraction of the wasted heat waves emitted in the process, and only five per cent of the electrical energy was effectively utilized.

Tesla started his investigations by building rotary alternating-current dynamos with up to 384 magnetic poles, and with these devices he was able to generate currents up to 10,000 cycles per second. He found that these high-frequency currents presented many fascinating possibilities

for even more efficient power transmission than his very practical 60-cycle polyphase system. He therefore carried on a parallel line of research into transformers for raising and lowering the voltage of such currents.

High-frequency alternating-current dynamos, similar to those designed by Tesla in 1890, were subsequently developed by F. W. Alexanderson into the high-power wireless transmitters which put transatlantic wireless transmission, more than two decades later, on such a sound practical basis that the Government would not permit control of it to go to a foreign country and preserved for the United States its predominant position in world wireless.

The high-frequency current transformers which Tesla developed proved to be spectacular performers. They contained not a trace of iron; as a matter of fact, the presence of iron was found to interfere with their operation. They were air-core transformers and consisted merely of concentric primary and secondary coils. The voltages he was able to produce with these transformers, which became known as Tesla coils, were very high. In the early experiments he attained potentials that would spark across a couple of inches of air, but in a short time he made tremendous progress and was producing flaming discharges. In working with these voltages he encountered dificulties in insulating his apparatus, and so he developed the technique that is now in universal use in high-tension apparatus: that of immersing the apparatus in oil and excluding all air from the coils, a discovery of great commercial importance.

There was a limit, however, above which the use of rotary generators of high-frequency currents was not practicable, so Tesla set about the task of developing a different type of generator. There was nothing novel about the basic idea he employed. In rotary dynamos, current is generated by moving a wire in a circle past a number of magnetic poles in succession. The same effect can be attained by moving the wire back and forth with an oscillating motion in front of one magnetic pole. No one, however, had as yet produced a practical reciprocating dynamo. Tesla produced one that was extremely practical for his particular purpose; but otherwise it had little utility, and he later felt that he could have employed much better the time he spent on it. It was an ingenious single-cylinder engine without valves, and

could be operated by compressed air or steam. It was supplied with ports like a small two-cycle marine engine. A rod extended from the piston through the cylinder head at either end, and at each end of the rods was attached a flat coil of wire which, by the reciprocating action of the piston, was caused to move back and forth through the field of an electromagnet. The magnetic field through its cushioning effect served as a flywheel.

Tesla was able to obtain a speed of 20,000 oscillations per minute, and to maintain such a remarkable degree of constancy in operation that he proposed the maintenance of equally constant speed of operation for his 60-cycle polyphase system and the use of synchronous motors, geared down to the proper extent, as clocks which would furnish correct time wherever alternating current was available. This proposal furnished the foundation for our modern electric clocks. As with many another of his practical and useful suggestions, he did not take out a patent on the idea, and gained no financial advantage from it.

In working with his polyphase system, Tesla gained a thorough understanding of the part played by the two factors, capacity and inductance, in alternating-current circuits; the former acting like a spring and the latter like a storage tank. His calculations indicated that with currents of suficiently high frequency it would be possible to produce resonance with relatively small values of inductance and capacity. Producing resonance is tuning a circuit electrically. The mechanical effects analogous to electrical resonance are the causing of a pendulum to swing through a wide arc by giving it a series of very light but equally timed touches, or the destruction of a bridge by soldiers marching in unison over it. Each small vibration re-enforces its predecessors until tremendous effects are built up.

In a tuned electrical circuit a condenser supplies the capacity and a coil of wire supplies the inductance. A condenser ordinarily consists of two parallel metal plates separated from each other a short distance by an insulating material. Each plate is connected to either end of the inductance coil. The size of the condenser and the coil is determined by the frequency of the current. The coil-condenser combination and the current are tuned to each other. The current can be pictured as flowing into the condenser until it is fully charged. It then flows

elastically into the inductance coil, which stores the energy by building up its magnetic field. When the current ceases to flow in the coil, the magnetic field collapses and gives back to the coil the energy previously used in building up the magnetic field, thus causing a current to flow back into the condenser to charge it up to overflowing again, so that it is ready to repeat the process. This flow back and forth between the condenser and coil takes place in step with the periodic reversal of the alternating current which supplies the energy when resonance is established. Each time it takes place, the charging current comes along at the right instant to give it a boost, so that the oscillations build up to tremendous values.

Tesla, in discussing this plan of electrical tuning of circuits in a lecture, given several years later, said:

The first question to answer then is whether pure resonance effects are producible. Theory and experiment show that such is impossible in nature for, as the oscillations become more vigorous, the losses in vibrating bodies and environing media rapidly increase, and necessarily check the vibrations, which would otherwise go on increasing forever. It is a fortunate circumstance that pure resonance is not producible for, if it were, there is no telling what dangers might lie in wait for the innocent experimenter. But, to a certain degree, resonance is producible, the magnitude of the effects being limited by the imperfect conductivity and imperfect elasticity of the media, or, generally stated, frictional losses. The smaller these losses the more striking are the effects.

Tesla applied the electrical tuning principles to his coils and discovered that he was able to produce tremendous resonance effects and build up very high voltages. The tuning principles he developed in 1890 are those which have made our modern radio, and the development of the earlier art, "wireless," possible. He had been working with, and demonstrating, these principles before others who received credit had begun to learn the first lessons in electricity.

Seeking a new source of high-frequency currents, higher than could be produced by any mechanical apparatus, Tesla made use of a discovery that had been made the year in which he was born, by Lord Kelvin, in England, in 1856, and for which no use had thus far been found. Up to the time of Kelvin's discovery it had been believed that when a

condenser was discharged the electricity flowed out of one plate into the other, like water being poured from a glass, thus establishing equilibrium. Kelvin showed that the process was far more interesting and complex; that its action was like the bobbing up and down that takes place when a weighted stretched spring is released. The electricity, he showed, rushes from one plate into the other and then back again, the process continuing until all of the stored up energy is used up in overcoming frictional losses. The back-and-forth surges take place at a tremendously high frequency, hundreds of millions a second.

The combination of condenser discharges and tuned circuits opened a new realm in electrical science as significant and as important as Tesla's polyphase system. He worked out remarkably simple and automatic methods for charging the condensers by low voltage (direct and alternating currents), and discharging them through his new air-core transformers, or Tesla coils, to produce currents of enormously high voltages that oscillated at the tremendously high frequency of the condenser discharge. The properties of these currents were unlike anything that had been seen before. He was again pioneering in an entirely new field, with tremendous possibilities. He labored feverishly in his laboratory; and as he lay in bed at night for his five-hours' rest, which included two hours of sleep, he formulated new experiments.

Tesla announced the heating effect of high-frequency currents on the body in 1890 and proposed their use as a therapeutic device. In this he was a pioneer, but soon had many imitators here and abroad who claimed to be originators. He made no effort to protect his discovery or prevent the pirating of his invention. When the same observation was made thirty-five years later in laboratories using vacuum-tube oscillators as the source of the high-frequency currents, it was hailed as a new discovery and developed as a modern wonder. Tesla's original discovery is, however, the basis of a vast array of very recent electronic applications in which high-frequency currents are used to produce heat for industrial purposes.

When he gave his first lecture on the subject before the American Institute of Electrical Engineers at Columbia College, in May, 1891, he was able to produce spark discharges five inches long, indicating a potential of

about 100,000 volts, but, more important, he was able to produce phenomena which included, electrical sheets of flame, and a variety of new forms of illumination--electric lamps the like of which had never been seen before, nor dreamed of in the wildest imagination of any experimenter.

This lecture produced a sensation in engineering circles. He was already famous in this field for the astounding revelations he had made before the same organization on that earlier occasion when he described his discovery of the polyphase alternating current system. That discovery was an intellectual accomplishment of bewildering brilliance, made impressive by the tremendous commercial importance of the discovery. The experiments with the high-frequency and high-potential currents, however, were spectacular; the crackling of the high-voltage sparks, the flashing of the high-potential sheets of electrical flame; the brilliant bulbs and tubes of electrical fire, the amazing physical effects he produced with the new currents, made a profound emotional appeal to the startled beholders.

The man who could produce these two pioneering developments within two years must be more than a genius! The news of his new accomplishment flashed quickly throughout the world, and Tesla's fame now rested on a double foundation.

The world-wide fame that came to him at this time was unfortunate. Tesla would have been entirely superhuman had he not derived a great deal of satisfaction out of the hero-worshiping adulation that now came to him. It was only five years ago that he had been hungry and penniless in the streets of New York, competing with equally hungry hordes of unemployed for the few existent jobs calling for brute labor, while his head bulged with important inventions which he was anxious to give to the world. No one would listen to him then--and now the intellectual elite of the nation were honoring him as an unrivaled genius.

Tesla was a spectacular figure in New York in 1891. A tall, dark, handsome, well-built individual who had a flair for wearing clothes that gave him an air of magnificence, who spoke perfect English but carried an atmosphere of European culture which was worshiped at that time, he was an outstanding personality to all who beheld him. Hidden behind his quiet, self-effacing demeanor, and an extreme modesty that manifested itself as an exaggerated shyness, was the mind of a genius which had worked electrical

wonders that fired the imagination of all and exceeded the understanding of the vast majority of the population. In addition Tesla was a young man, not yet thirty-five, who had recently received a million dollars and was a bachelor.

A bachelor with a million dollars, culture and fame, could not avoid being a shining mark in New York in the early years of the gay nineties. Many were the designing matrons with marriageable daughters who cast envious eyes in the direction of this eligible young man. The social leaders looked upon him as a fascinating decoration for their salons. The big men of business looked upon him as a good man to know. The intellectuals of the day found his almost unbelievable accomplishments a source of inspiration.

Except at formal dinners Tesla always dined alone, and never under any circumstances would he dine with a woman at a two-some dinner. No matter how much a woman might gush over him or strive to gain his favor, Tesla, in most adamant fashion, maintained a thoroughly impersonal attitude. At the Waldorf-Astoria and at Delmonico's he had particular tables which were always reserved for him. They occupied secluded positions in the dining rooms because when he entered either room he was the cynosure of all eyes and did not enjoy being on exhibition.

In spite of all of the adulation that was heaped upon him, Tesla had but one desire--to continue his laboratory experiments undisturbed by outside distractions. There was a tremendous empire of new knowledge to be explored. He was fired with a potential of enthusiasm for the work that was as high as the voltage of the currents with which he was working, and new ideas were coming to him with almost the rapidity of the cycles in his high-frequency current.

There were three broad fields in which he wished to develop applications which were now clearly outlined in his mind: a system of wireless power transmission that would excel his own polyphase system, a new type of illumination, and the wireless transmission of intelligence. He wished to work on them all simultaneously. They were not separate and isolated subjects but all closely intermeshed, all notes on that vast cosmic scale of vibration represented by his beloved alternating currents. He did not wish to play on one note at a time, as would a violinist; he preferred to play as a pianist, striking many notes at once and weaving them into beautiful chords. Where it possible to occupy the

position of leader and simultaneously play all of the instruments in a great symphony orchestra, he would have been still better pleased. The instruments in his orchestra, however, would be electrical devices oscillating in tune with their energizing currents or with their environment. To the extent that he was unable to realize his most expansive desires, he was under mental pressure that drove him to a working pace which no individual of ordinary strength could withstand without a resulting complete physical breakdown.

The spectacular lecture and demonstration on high-frequency and high-potential currents which he gave before the American Institute of Electrical Engineers in February, 1891, at Columbia College, created as profound a sensation as did his earlier one. Each opened an entirely new realm of scientific investigation and practical discoveries. The discoveries contained in either lecture would have been suficient to stand as the fruit of a lifetime's work and bring lasting fame. Two such events in rapid succession seemed almost unbelievable--yet Tesla seemed to be scarcely well launched on his career, with more important work still to come.

Requests that he give lectures came from learned societies throughout this country and Europe, but he begged to be excused because of the tremendous pressure on his time which his work entailed. Equally insistent were the social demands that were being made upon him. Social groups sought in every way to honor him, and incidentally to shine in his reflected glory. Tesla was not vulnerable to the importunings of the socialites who sought him merely as a scintillating satellite, but the clever "lion hunters" of that day soon discovered his Achilles' heel--an intelligent interest in his accomplishments and a sympathetic ear for his dreams of wonders still to come.

With this technique in successful operation, Tesla was captured and soon completely lionized. He was guest of honor at a continuous round of functions and he met the social obligations involved in them by staging, in return, elaborate dinners at the Waldorf-Astoria followed by demonstration parties at his laboratory on South Fifth Avenue. Tesla never did a halfway job on anything. When he staged a dinner he left nothing to chance in the matter of cuisine, service and decorations. He sought rare fish and fowl, meats of surpassing excellence, and choicest liquors

and exquisite wines of the best vintages. His dinners were the talk of the town and having been a guest at a Tesla dinner was a mark of social distinction, proof of membership in the inner group of the elite within Ward MacAllister's "400." At these dinners Tesla presided as a most meticulous host, or more accurately, as an old-world absolute monarch, for he would sample all food brought to the dining room; and rarely did an event pass without the grandiose host sending back some sauce or wine of unquestioned excellence as unworthy of his guests.

Following each of these meals Tesla would escort his guests to his laboratory below Washington Square; and here his demonstrations were even more spectacular than his dinners. He had a flair for the dramatic; and the strange-looking devices with which his laboratory was furnished provided a grotesque and bizarre background for the fantastic displays of seemingly unearthly forces that with invisible fingers set objects whirling, caused globes and tubes of various shapes to glow resplendently in unfamiliar colors as if a section of a distant sun were suddenly transplanted into the darkened room, and crackling of fire and hissing sheets of flame to issue from monster coils to the accompaniment of sulfurous fumes of ozone produced by the electrical discharges that suggested this magician's chamber was connected directly with the seething vaults of hell. Nor was this illusion dispelled when Tesla would permit hundreds of thousands of volts of electricity to pass through his body and light a lamp or melt a wire which he held.

The amazing feat of harmlessly passing through his body currents of tremendously high voltage and high frequency was one which Tesla evolved by his mental experiments long before he had an opportunity to test them in his laboratory. The low-frequency alternating currents, such as are now used on home-lighting circuits, would, he knew from unpleasant experiences, produce a painful shock if passed through the body. When light waves impinged on the body, however, no such painful sensation was produced. The only difference between the electric currents and light waves, he reasoned, was a matter of frequency, the electric currents oscillating at the rate of 60 per second and the light waves at billions per second.

Somewhere between these two extremes the shock-producing property of electromagnetic vibrations must disappear; and

he surmised the point would be near the lower end of the gap. Damage done to the body by electric shock he divided into two factors, one--the destruction of tissues by the heating effect which increased or diminished as the amperage of the current was raised or lowered; and two--the sensation of acute pain which varied with the number of alternations of the current, each alternation producing a single stimulus which was transmitted by the nerves as a pain.

Nerves, he knew, could respond to stimuli up to a rate of about 700 per second, but were unable to transmit impulses received at a more rapid rate. In this respect they acted very much like the ear, which is unable to hear air vibrations above a frequency of about 15,000 per second, and the eye, which is blind to color vibrations of a frequency higher than that in violet light.

When he constructed his high-frequency alternating-current dynamos, he had frequencies up to 20,000 per second with which to test his theory; and by finger tests across the terminals he was able to demonstrate that the nerves were unable to perceive the individual vibrations at this rapid rate. The amperage, which carried the tissue-destroying power, was still too high in the output of these machines to pass safely through his body, even though the sensation of pain was lacking.

By passing these currents through his newly invented air-core transformers, he could increase their voltage ten-thousand fold and reduce the amperage proportionately. The current density would thereby be reduced below the point at which it would injure tissues. He would then have a current which would not produce sensation and would not harm the tissues. He cautiously tested the theory by passing the currents through two fingers, then his arm, next from hand to hand through his body and finally from his head to his feet. If a spark jumped to or from his body, there was a pin-prick sensation at the point of contact, but this could be eliminated by holding a piece of metal to and from which the spark could jump while the current passed through the tissues without producing any sensation.

The energy content of these currents, which is proportionate to the current multiplied by the voltage, could be very high and produce spectacular effects such as melting metal rods, exploding lead disks, and lighting

incandescent or vacuum-tube lamps after passing painlessly through his body.

The European scientific societies were persistent in their efforts to induce Tesla to accept their invitations to lecture before them, and finally he acceded. He set extravagantly high standards for the contents of his lectures, and their preparation entailed a tremendous amount of labor. All of the material had to be entirely new. He would never repeat an experiment previously presented. Every technical statement had to be tested at least twenty times to insure complete accuracy. His lectures would last two or three hours; and every minute of the time was crowded with new and awe-inspiring demonstrations of his constant stream of discoveries. He used a great array of devices fashioned by himself and built in his own laboratories to illustrate his talks. A Tesla lecture, therefore, was an extremely important event in the scientific world and a most impressive occasion to those who were fortunate enough to be able to attend.

Tesla arranged to give a lecture before the Institution of Electrical Engineers in London on February 3, 1892, and one before the International Society of Engineers in Paris on February nineteenth. His decision to give the European lectures was influenced to some extent by the fact that they would afford him an opportunity to visit his home in Gospic, for recent letters had indicated that his mother's health was failing.

The lecture before the Institution of Electrical Engineers was a great success. English engineering journals, as will be seen, had been niggardly in extending recognition to Tesla for priority in the discovery of the rotating magnetic field, and had belittled the practical value of his polyphase alternating-current system, but in this attitude they were not representative of the great body of engineers, who were most generous in their praise and enthusiasm; and the attitude of the engineers was shared by the English scientists.

When Tesla arrived in London he was entertained at many places by famous men. At the Royal Institution, where the immortal Michael Faraday had carried on his fundamental researches in magnetism and electricity, Sir James Dewar, and a committee of equally famous scientists, sought to prevail upon Tesla to repeat his lecture before that

organization. Tesla could be plain stubborn in sticking to his plans, and in this case was exhibiting his usual firmness. The famous Scottish scientist matched Tesla's stubbornness with an equal persuasive persistence. He escorted Tesla to Faraday's chair, an almost sacred relic to English science, seated him in this throne, and then brought out an almost equally precious heirloom, a portion of a bottle of whiskey, the remainder of Faraday's personal supply, untouched for nearly a quarter of a century. Out of this he poured a generous half glass for Tesla. Sir James won. Tesla relented and gave the lecture the following evening.

Lord Rayleigh, the eminent English physicist, was chairman of the meeting at the Royal Institution, which was attended by the elite of the scientific world and a generous representation of the nobility of the realm. Rayleigh, after witnessing the performance of Tesla's experiments, which were none the less awe inspiring to scientists than to laymen, showered words of praise on the inventor.

Rayleigh declared that Tesla possessed a great gift for the discovery of fundamental scientific principles, and urged that he concentrate his efforts on some one big idea.

Tesla, in his conversation after the meeting, disclaimed ability as a great discoverer; but in this he was merely being modest, for he knew that he was unique among men in his ability to discover fundamental truths. He did, however, give very serious consideration to Rayleigh's suggestion that he concentrate on some one big idea. It is doubtful, however, whether Rayleigh's suggestion was good advice. Tesla's mind had a range that was cosmic in magnitude and adjusted to broad slashing advances through unknown regions. Rayleigh's advice was like suggesting to an explorer who had unique ability for penetrating an unknown continent and opening it to civilization that he settle down and cultivate a homestead, since that would give more definite and specific returns for efforts expended.

Two weeks later Tesla gave his scheduled lecture before the Physical Society in Paris and repeated it before the International Society of Electrical Engineers. This was his second visit to Paris since he had quit his job with the Continental Edison Company in that city eight years before. Immediately after leaving the Westinghouse Company in the

autumn of 1889--at which time, too, he completed his U.S. citizenship requirements--he had made a brief visit to Paris to attend the International Exposition. In the meantime, the fame of his polyphase system had spread to Europe; and to this was added the glory for his spectacular work with the new high-frequency currents. He was given a hero's reception in Paris, as well as in London.

It would be interesting to know what thoughts passed through the minds of the executives of the Continental Edison Company as they observed the tremendous contributions to science and industry by the engineer whose services they had lost through their penny-wise tactics when they were offered in 1883, and could undoubtedly have purchased for a relatively small amount, the polyphase system for which Westinghouse paid Tesla $1,000,000 five years later.

A tesla lecture was an avalanche of new and fascinating electrical knowledge. He completely overwhelmed his listeners with a wealth of spectacular original experiments, and as a result almost every individual contribution lost its identity in the dazzling concentration of the whole galaxy of startling developments.

In the 1892 lectures, entitled "Experiments with Alternating Currents of High Potential and High Frequency," Tesla described many of his discoveries which are only coming into general use today and are being hailed as modern inventions. Among these are the "neon" and other gas-filled lamps, and phosphorescent lamps. Many of the discoveries described are still unutilized, including, as will be seen, the carbon or metallic-button incandescent lamp, requiring but a single wire connection; and still others, which he later discovered, were rich producers of the mysterious X-rays.

The transcript of these lectures runs to 40,000 words. Scores of pieces of apparatus were used and usually several experiments were performed with each. He described "wireless" lamps, glowing glass tubes that required no wire connection for their operation. He described motors which operated on one wire, and "wireless" or "no wire" motors. But perhaps the most important development he described was the sensitive electronic tube--the original of all our modern radio and other electronic tubes--which, he

predicted, was the device that would permit receiving wireless telegraph messages across the Atlantic. Of all these discoveries we shall presently have more to say in detail.

It had been Tesla's intention to make a short visit to his early home in Gospic when his lectures were out of the way, but circumstances forced him to make the trip sooner than he expected. Returning to his hotel after delivering the second Paris lecture, he received word that his mother was gravely ill. He rushed to the railroad station, arriving in time to board a train just about to pull out. He telegraphed ahead for special transportation facilities to shorten his trip, and succeeded in reaching Gospic in time to see his mother alive. He arrived in the afternoon and she died that night.

The great anxiety from which Tesla suffered during his sleepless rush from Paris to Gospic caused a patch of hair on the right side of his head to turn white over night. Within a month its jet black color was restored naturally.

Almost immediately after his mother's death, Tesla contracted an illness which incapacitated him for many weeks. When he recovered, he visited his sister Marica, in Plaski, for two weeks. From there he went to Belgrade, the capital of Serbia, where he arrived in May and was received as a national hero.

During the weeks of enforced physical inactivity imposed on him by his illness, Tesla took stock of himself and became thoroughly dissatisfied with the manner in which he had been conducting his life. No human being could feel anything but a pleasurable reaction in response to the adulation that had been heaped upon him during the past two years. Tesla, however, prided himself upon his wisdom in having so designed his life that he would not become a victim of human frailties, but would function far above the normal human level of physical limitations and intellectual activities. Now Tesla saw, in retrospect, that insofar as he had adhered to his superman plan of life, he had succeeded in achieving his goal of producing the works of a superman at a rate which astounded the world. When, however, he submitted to the first blandishments of the lion hunters after his New York lecture in May, 1891, he observed, social activities had cut into his available time and had interfered with his creative activities. He had let

the "man magnificent" supersede his "superman," and two years of valuable time had been largely lost. In addition, he had spent that totally unproductive year at the Westinghouse plant. At the close of that period, he had vowed he would never again work for anyone. He now vowed that he would put an end to the vacuous social activities into which he had been inveigled.

It was not easy for Tesla to live up to his good resolutions, for his European trip had greatly enhanced his fame and triumphant celebrations were scheduled on his reappearance in New York. Nevertheless, he rejected all invitations. He returned to the Hotel Gerlach, where he lived a solitary existence. With a pent-up reserve of physical energy owing to his long abstinence from his heavy daily routine of work, he plunged with great vigor into his new program which was to open up new and enchanting realms of scientific wonders.

THE first public application of Tesla's polyphase alternating-current system was made at the Chicago World's Fair, the Columbian Exposition, which opened in 1893 to celebrate the four-hundredth anniversary of the discovery of America. This was the first world's fair for which electric lighting was a possibility, and the architects availed themselves of the opportunities it afforded for obtaining spectacular effects in illuminating the grounds and buildings at night, as well as for interior lighting during the day. The Westinghouse Electric Company secured the contract for installing all power and lighting equipment at the Fair, and took full advantage of this opportunity to use the Tesla system and demonstrate its great versatility. It supplied all the current used for lighting and power.

while the Chicago World's Fair was in reality a monument to Tesla, he had, in addition, a personal exhibition in which he demonstrated his most recent inventions. One of his exhibits was a spinning egg, made of metal. The egg was shown lying on top of a small velvet-covered circular platform. When Tesla closed a switch the egg stood on its small end and rotated at a high speed as if by magic. The "magic" phase of this feat appealed to a public which, however, grasped little of the explanation that it

illustrated the principle of the rotating magnetic field produced by the polyphase alternating currents. In other of his exhibits, glass tubes suspended in space or held in his hands lighted up in an equally "magical" fashion.

But his most spectacular feat was to let 1,000,000 volts pass through his body. This was alternating current of very high frequency as well as high voltage. He had discovered means of producing such currents. Eight years had passed since Edison, attacking high-voltage alternating current as deadly, had refused to become interested in Tesla's polyphase system. Now the Tesla system was providing the electricity for the great world's fair and the Edison direct-current system was ignored. The final gesture of victory was for Tesla to answer Edison's charge that alternating current was deadly by passing the highest voltage of it ever produced through his own body for many minutes without the slightest sign of harm. This bit of showmanship endeared Tesla to the public and brought him a tremendous burst of world-wide fame. Unfortunately, however, it obscured his more important work with polyphase currents.

The next great achievement to be attained by his polyphase system was the harnessing of Niagara Falls. (Before this was done, and even before the opening of the Chicago fair, the practicability of his system was demonstrated in Europe; but this had been undertaken without his knowledge. A practical test of the transmission of polyphase alternating current at 30,000 volts was made between a hydroelectric station at Lauffen and the City of Frankfurt, the current being used to furnish electricity at a fair held at the latter city. This installation was built in 1891. The current was used to light incandescent and arc lamps and also to operate a Tesla motor.) In 1886 a charter had been granted for developing power at the Falls. The project made slow progress and was taken over by a New York group which organized the Cataract Construction Company, of which Edward Dean Adams was made president. Mr. Adams' company desired to develop power on the largest scale possible. The total energy supply available in the Falls had been variously estimated from 4,000,000 to 9,000,000 horsepower. Mr. Adams organized the International Niagara Commission for the purpose of ascertaining the best means of harnessing the Falls, and made Lord Kelvin, the famous English scientist, its chairman. A prize of $3,000 was offered for the most practical plan submitted.

Tesla had predicted nearly thirty years before, as a boy, that he would someday harness Niagara Falls. Here was the opportunity. In the meantime, he had made it possible to fulfil his boyhood boast by completing the series of inventions which made it possible to change the hydraulic power of the Falls into electrical energy.

The prize-offer plan adopted by Mr. Adams did not, however, set well with Mr. Westinghouse when he was urged to submit a proposal. He replied, "These people are trying to get one hundred thousand dollars' worth of information for three thousand dollars. When they are ready to talk business we will submit our plans." This adamant attitude of Westinghouse was one handicap for the Tesla alternating-current plan. The second big handicap was the fact that Lord Kelvin had declared himself in favor of the use of direct current.

About twenty plans were submitted in the contest but none of them was accepted by the commission, and no prize was awarded. The big electrical companies, Westinghouse, Edison General Electric and Thomson-Houston, did not submit plans. This took place in 1890.

Original developers of the Falls planned to use locally the mechanical power provided by water wheels; but the only practical plan was, clearly, the generation of electricity by dynamos driven by water wheels, and the distribution of the current throughout the district. There was a good additional market for it at Buffalo, a large industrial city about twenty-two miles distant. There was always the hope, too, that the current could be transmitted to New York City and serve the rich intervening territory. If direct current were used, its transmission twenty-two miles to Buffalo was totally unfeasible. The Tesla alternating-current system, however, made the transmission to Buffalo extremely practicable and the delivery of the current to New York City a possibility.

In due time the Cataract Construction Company decided that the hydroelectric system was the only feasible one, and proposals and bids were asked on a power system consisting of three generating units, each of 5,000 horsepower, from the Westinghouse Electric Company and the General Electric Company. Each one submitted a proposal to install a Tesla polyphase generating system. The General Electric Company,

successor to the Edison General Electric Company, having in the meantime secured a license to use the Tesla patents, proposed to install a three-phase system, and Westinghouse a two-phase system. The first proposal concerned the building of the powerhouse. A second proposal on which bids were asked concerned the transmission line between Niagara Falls and Buffalo and a distribution system in the latter city.

Bids were asked for early in 1893, and in October of that year Mr. Adams announced that the Westinghouse plan for the powerhouse and the General Electric plan for the transmission line were accepted. The latter included a transformation of the two-phase current from the generators into three-phase current to be transmitted to Buffalo. This change indicated the flexibility of the Tesla polyphase system.

Westinghouse completed the powerhouse and in 1895 it stood ready to deliver 15,000 horsepower; the most gigantic piece of electrical engineering conceived or accomplished up to that time. In 1896 General Electric completed the transmission and distribution system, and electrical power extracted from Niagara Falls, without in any way impairing the beauty of the spectacle they presented, was delivered to industries through the Falls and Buffalo areas. So successful was this installation that the Westinghouse Company installed seven additional generating units, bringing the output to 50,000 horsepower. A second equivalent powerhouse, also using alternating current, was later built by the General Electric Company. Today, the powerhouses at Niagara Falls are linked directly with the electric power system in New York City, all using the Tesla system.

Dr. Charles F. Scott, Professor Emeritus of Electrical Engineering at wale University, and former president of the American Institute of Electrical Engineers, who was a Westinghouse engineer when that company was developing the Tesla system, in a memorial review of Tesla's accomplishments, (Published in Electrical Engineering, August 1943, pp. 351-555.) describes the Niagara development and its results:

The simultaneous development of the Niagara project and the Tesla system was a fortuitous coincidence. No adequate method of handling large power was available in 1890; but

while the hydraulic tunnel was under construction, the development of polyphase apparatus justified the oficial decision of May 6, 1893, five years and five days after the issuing of Tesla's patents, to use his system. The Polyphase method brought success to the Niagara project; and reciprocally Niagara brought immediate prestige to the new electric system.

Power was delivered in August 1895 to the first customer, the Pittsburgh Reduction Company (now Aluminum Company of America) for producing aluminum by the Hall process, patented in the eventful year 1886. . . .

In 1896 transmission from Niagara Falls to Buffalo, 22 miles, was inaugurated. Compare this gigantic and universal system capable of uniting many power sources in a superpower system, with the multiplicity of Lilliputian "systems" which previously supplied electrical service. As Mr. Adams aptly explained: "Formerly the various kinds of current required by different kinds of lamps and motors were generated locally; by the Niagara-Tesla system only one kind of current is generated, to be transmitted to places of use and then changed to the desired form."

The Niagara demonstration of current for all purposes from large generators led immediately to similar power systems in New York City--for the elevated and street railways and for the subway; for steam railway electrification; and for the Edison systems, either by operating substations for converting alternating current to direct current or by changing completely to A.C. service.

The culminating year 1896 inaugurated two far reaching developments for the extension of polyphase power, one commercial and one engineering. By exchange of patent rights, the General Electric Company obtained license rights under Tesla patents, later made impregnable by nearly a score of court decisions. Also the Parsons turbine, accompanied by its foremost engineer, was transplanted to America and enabled George Westinghouse to bring to fruition by a new method the ideal of his first patent, a "rotary steam engine." The acme of the reciprocating engine came in the early 1900's; a century's development produced the great engines that drove 5,000 to 7,500 kilowatt alternators for New York's elevated and subway. But the rapidly growing steam turbine of different types soon doomed the engine to obsolescence; single units

with the capacity of a score of the largest engines are now supplying power to the metropolis. Single powerhouses now supply more power than all of the thousands of central stations and isolated plants of 1890.

Prof. Scott concludes: "The evolution of electric power from the discovery of Faraday in 1831 to the initial great installation of the Tesla polyphase system in 1896 is undoubtedly the most tremendous event in all engineering history."

Lord Kelvin, who had originally favored direct current for Niagara, later conceded, but only after the system was in operation, that alternating current had many more advantages for long-distance distribution systems, and declared, "Tesla has contributed more to electrical science than any man up to his time."

There should never have been the slightest shadow of doubt concerning the credit due to Tesla not only for discovering the rotating magnetic field but also for inventing the first practical alternating-current motor, the polyphase system of alternating currents, dynamos for generating them, a variety of motors for converting the currents into power, a system of polyphase transformers for raising and lowering voltages, and economical methods for transmitting electrical power for long distances. Nevertheless, credit for priority has unjustly been given to and taken by others. Tesla succeeded in establishing his claims; but in the meantime, however, damage was done by raising these unfair claims, and to this day the electrical engineering profession, and public service and major electrical industries, have never extended to Tesla the credit to which he is entitled. If they had done so, the name of Tesla would carry at least as much fame as the names Edison and Westinghouse.

Tesla, as we have seen, made his rotating magnetic field invention in 1882, and within two months evolved the complete power system, including all the apparatus which he later patented. In 1883 he described his invention to oficials of the Continental Edison Company. In 1884 he demonstrated his motor to the mayor of Strassburg and others. In this same year he described the invention to Thomas A. Edison. In 1885 he sought to have the promoters of the Tesla Arc Light Company develop his system. In 1887 he secured financial backing and built a series of the

dynamos and motors which were tested by Prof. Anthony of Cornell University. On October 12, 1887, the first patent applications covering his basic inventions were revealed to the Patent Ofice. The patents were granted on various dates in the early months of 1888. On May 16, 1888, he presented a demonstration and description of his basic inventions before the American Institute of Electrical Engineers in New York. So much for the record.

The first complication arose when Prof. Galileo Ferraris, a physicist in the University of Turin, presented a paper on "Rotazioni elettrodynamiche" (Electrodynamic Rotation) before the Turin Academy in March, 1888. This was six years after Tesla made his discovery, five years after he demonstrated his motor and six months after he had applied for patents on his system. Prof. Ferraris had been carrying on researches in the field of optics. The problem that particularly interested him was polarized light. In this period it was considered necessary to build mechanical models to demonstrate all scientific principles. It was not very dificult to devise models to demonstrate the nature of plane-polarized light, but circularly polarized light presented a more dificult problem.

Prof. Ferraris gave some thought to this problem in 1885, but made no progress until 1888 when he turned to alternating currents for a solution. In that period light was erroneously thought of as a continuously undulating wave in the ether. Prof. Ferraris took the continuously alternating current as an analogue of the plane-polarized light wave. For a mechanical analogue of the circularly polarized light wave he visualized a second train of waves 90 degrees out of step with the first, giving a right-angle vector to the component that should manifest itself by rotation. This paralleled the solution at which Tesla had arrived six years earlier.

In arranging a laboratory demonstration Prof. Ferraris used a copper cylinder suspended on a thread to represent the light waves, and caused two magnetic fields to operate on it at right angles to each other. When the currents were turned on, the cylinder rotated, wound up the thread on which it was suspended and raised itself. This was an excellent model of rotary polarized light waves. The model bore no resemblance to a motor, nor did the Turin scientist have any intention that it should be so considered. It was

a laboratory demonstration in optics, using an electrical analogy.

Prof. Ferraris' next experiment mounted the copper cylinder on a shaft and divided each of his two coils into two parts, placing one on either side of the copper cylinder. The device worked up to a speed of 900 revolutions per minute--and beyond this point lost power so rapidly it ceased to operate entirely. He tried iron cylinders but they did not work nearly so well as the copper ones. Prof. Ferraris predicted no future for the device as a power source, but he did predict it would find usefulness as the operating principle for a meter for measuring current.

Prof. Ferraris thus demonstrated that he failed by a wide margin to grasp the principle which Tesla developed. The Italian scientist found that the use of the magnetic iron cylinder interfered with the operations of his device, whereas Tesla, following the correct theory, utilized iron cores for the magnetic field of his motor, used an iron armature, and obtained an efficiency of about 95 per cent in his first motor, which had a rating of about a quarter horsepower. The efficiency of Ferraris' device was less than 25 per cent.

It was Prof. Ferraris' belief that he had performed an important service to science by demonstrating that the rotating magnetic field could not be used on any practical basis for producing mechanical power from alternating current. He never deviated from this conclusion, nor did he ever claim that he had anticipated Tesla's discovery of a practical means for utilizing the rotating field for producing power. Knowing that his process was entirely different from Tesla's, he never advanced a claim to independent discovery of the alternating-current motor. He even conceded that Tesla had arrived at his discovery of the rotating magnetic field entirely independently of him, and that Tesla could not in any way have known of his work before publication.

A description of Prof. Ferraris' experiments, however, was published in The Electrician, in London, May 25, 1888 (page 86). This was accompanied by the statement:

Whether the apparatus devised by Prof. Ferraris will lead to the discovery of an alternating current motor is a question we do not pretend to prophesy, but as the

principle involved may also have other applications, notably in the construction of meters for measuring the supply of electricity . . .

A year before this time Prof. Anthony had already tested Tesla's alternating-current motors in the United States and reported that they attained an order of efficiency equal to that of direct-current motors; and Tesla's U.S. patents had been publicly announced several months previously.

It was obvious that the editors of this London publication were not keeping up to date on developments in the United States.

Tesla responded quickly, informing the editors of their oversight and submitting an article describing his motors and the results obtained with them.

No great enthusiasm was exhibited by the editors of The Electrician. They receded to only the least possible extent from their stand in favor of Ferraris by publishing an editorial note:

Our issue of the 25th of May contained an abstract of a paper by Prof. Galileo Ferraris describing a method of producing a revolving resultant magnetic field by means of a pair of coils with the axes at right angles and traversed by alternating currents, and we drew attention to the possibility that the principle of the apparatus might be applied to the construction of an alternating current motor. The paper by Mr. Nikola Tesla, which appears in our columns this week, contains a description of such a motor, founded on exactly the same principle. (VoI. XX, p. 165, June 15, 1888.)

No attention was drawn to the fact that Ferraris had reached the conclusion that the principle could never be used for making a practical motor, whereas Tesla had produced such a motor.

This attitude toward the American development did not disappear from the London engineering journals. Later the Electrical Review (London: Vol. XXVIII, p. 291, March 6, 1891) published an editorial which opened with the statement:

For several years past, from the days of Prof. Ferraris' investigations, which were followed by those of Tesla and Zipernowski and a host of imitators, we have periodically heard of the question of alternating current motors being solved.

At this time the Westinghouse Company was already commercially exploiting the successful and practical Tesla polyphase system in the United States. Not one word of credit to Tesla appeared in the London engineering press.

A letter of protest dated March 17, 1891, was forwarded by Tesla, and this was published some weeks later (p. 446) by the Review. He said in part:

In all civilized countries patents have been obtained almost without a single reference to anything which would have in the least degree rendered questionable the novelty of the invention. The first published essay--an account of some laboratory experiments by Prof. Ferraris--was published in Italy six or seven months after the date of filing my application for the foundation patents. . . . yet in your issue of March 6, I read: "For several years past, from the days of Prof. Ferraris' investigations, which were followed by those of Tesla and Zipernowski and a host of imitators, we have periodically heard of the question of alternating current motors being solved.

No one can say that I have not been free in acknowledging the merit of Prof. Ferraris, and I hope that my statement of facts will not be misinterpreted. Even if Prof. Ferraris' essay would have anticipated the date of filing of my application, yet, in the opinion of all fair minded men, I would have been entitled to the credit of having been the first to produce a practical motor; for Prof. Ferraris denies in his essay the value of the invention for the transmission of power. . . .

Thus in the most essential features of the system--the generators with two or three currents of differing phase, the three wire system, the closed coil armature, the motors with direct current in the field, etc.,--I would stand alone, even had Prof. Ferraris' essay been published many years ago. . . .

Most of these facts, if not all, are perfectly well known in England; yet according to some papers, one of the

leading English electricians does not hesitate to say that I have worked in the direction indicated by Prof. Ferraris, and in your issue above referred to it seems I am called an imitator.

Now, I ask you where is that well known English fairness. I am a pioneer and I am called an imitator. I am not an imitator. I produce original work or none at all.

This letter was published; but the Electrical Review neither expressed regret for the misstatement nor extended recognition to Tesla.

Charles Proteus Steinmetz, later to achieve fame as the electrical wizard of the General Electric Company, came to the support of Tesla. In a paper presented before the American Institute of Electrical Engineers, he said: "Ferraris built only a little toy, and his magnetic circuits, so far as I know, were completed in air, not in iron, though that hardly makes any difference."(Transactions, A.I.E.E., VoI. VIII, p. 591, 1891.)

Other American engineers likewise rallied to Tesla's support.

An industrial exposition, as already mentioned, was held at Frankfurt, Germany, in 1891. The United States Navy sent Carl Hering, an electrical engineer who had done much writing for technical journals, as observer to report on any developments that would be of interest to the Navy. Hering, unfortunately, had not informed himself of the inventions embodied in the Tesla patents before going abroad.

The outstanding new development at the Frankfurt exposition was the first public application of Tesla's system. The grounds and building were lighted by electricity brought to the city by a long-distance transmission line over which electricity was carried from the hydroelectric station at Lauffen by three-phase alternating current carried at 30,000 volts. There was exhibited a two-horsepower motor operated by the three-phase current.

Hering recognized the significance of the new development, and sent back enthusiastic reports describing it as of German origin. In his article in the Electrical World

(N.Y.), he waxed enthusiastic about the work of Dolivo Dobrowolsky in designing the three-phase motor and its associated system, hailing it as an outstanding scientific discovery and of tremendous commercial importance. The impression was given that all other inventors had missed the main point, and that Dobrowolsky had achieved the grand broad accomplishment that would set the pace for future power developments. Nor was Hering the only one to whom this impression was communicated.

Ludwig Gutman, an American electrical engineer, a delegate to the Frankfurt Electrical Congress, in a paper on "The Inventor of the Rotary field System," delivered before that body, slammed back at Dobrowolsky. He stated:

As we have enjoyed in America several years' experience with this system represented by the Tesla motors I must oppose the assertion lately made by Herr von Dobrowolsky at a meeting of the Electrotechnische Zesellschaft held here in Frankfurt. The gentleman said: "I believe I am able to assert that the motor problem for large and small works has been by this completely solved." This assertion goes most likely too far. The problem was already solved, theoretically and electrically, in 1889. (Electrical World, N.Y.: Oct. 17, 1891)

Dobrowolsky, in a paper published in the Electrotechnische Zeitschrift (p. 149-150; 1891), reduced his claim to that of having produced the first practical alternating-current motor; and he asserted that in the Tesla two-phase motor there were field pulsations amounting to 40 per cent, while in his three-phase motor, in operation at the Frankfurt exposition, these were greatly reduced.

Even this reduced claim of Dobrowolsky's was quickly smashed. It drew fire from an American and an English source, and also from the chief engineer of the project of which his motor was a part.

Dr. Michael I. Pupin, of the Department of Engineering, Columbia University, analyzing Dobrowolsky's claim, (Ibid., Dec. 26, 1891) demonstrated that he had failed to comprehend the basic principles of the Tesla system, and that the three-phase system which he claimed as his own was included in Tesla's inventions.

C. E. L. Brown, the engineer in charge of the pioneering Lauffen-Frankfurt 30,000-volt transmission system and its three-phase generating system, including the Dobrowolsky motor, settled definitely and completely the question of credit for the whole system. In a letter published in the Electrical World (Nov. 7, 1891), he concluded with the statement: "The three phase current as applied at Frankfurt is due to the labors of Mr. Tesla and will be found clearly specified in his patents."

Mr. Brown wrote letters to other technical publications to this same effect, and in them criticized Mr. Hering for failing to give Tesla his due credit, and for diverting it to Dobrowolsky.

These criticisms finally brought a response from Mr. Hering. This appeared in the Electrical World, Feb. 6, 1892:

As Mr. C. E. L. Brown, in communications to the Electrical World and other journals, seems determined to insist that I have neglected the work of Mr. Tesla on rotary current I wish to state there is no one more willing than myself to give Mr. Tesla due credit for his work, and I have always considered him to be an original inventor of the rotary field system and first to reduce it to practice, and I believe I so stated in my articles. If I have at any time failed to give him credit for the extent to which he developed it, it has been because Mr. Tesla has been too modest (or perhaps prudent) to let the world know what he has accomplished. When the articles which have caused this discussion were being written Mr. Tesla's patents were not accessible to me. Just where Mr. Dobrowolsky's improvements begin I have not been able to ascertain. . . .

Dobrowolsky, though he may have been an independent inventor, admits Tesla's work is prior to his . . . The modesty of both of these gentlemen would, I feel sure, lead to a clear understanding. Regarding the subject of priority it may be of interest here to say that in a conversation with Prof. Ferraris last summer that gentleman told me with very becoming modesty that, although he had experimented with the rotary field several years before Tesla's work was published he did not think it was possible that Tesla could have known of his work and he therefore believed Tesla invented it entirely independently. He also stated that Tesla developed it much further than he (Ferraris) did.

Thus the scientists and engineers in the United States, Germany and Italy gave Tesla clear and unquestioned credit for being the sole inventor of the magnificent polyphase electrical system in all of its details. French and British journals then fell in line.

Thus, by 1892, there was universal acclaim for Tesla as the unquestioned inventor of the alternating-current motor and the polyphase system in engineering circles. There was none, therefore, to dispute his claim or to seek to rob him of credit when his fame reached the public through the operation of his system at the World's Fair in Chicago in 1893, and later when his system made possible the harnessing of Niagara Falls.

In due time, however, there came many who claimed to have made improvements on Tesla's inventions; and widespread efforts were made to exploit these "improvements." The Westinghouse Company, now owners of the Tesla patents, undertook to defend the patents and to prosecute infringers. As a result about twenty suits were carried to the courts, and, in every one of them, decisions gave a decisive victory to Tesla.

A sample of the sweeping decisions that were handed down is that of Judge Townsend in the United States Circuit Court of Connecticut in September, 1900, when, passing judgment on the first group of basic patents, he said in part:

It remained to the genius of Tesla to capture the unruly, unrestrained and hitherto opposing elements in the field of nature and art and to harness them to draw the machines of man. It was he who first showed how to transform the toy of Arago into an engine of power; the "laboratory experiment" of Bailey into a practically successful motor; the indicator into a driver; he first conceived the idea that the very impediments of reversal in direction, the contra-indications of alternations might be transformed into power-producing rotations, a whirling field of force.

what others looked upon as only invincible barriers, impassable currents and contradictory forces he seized, and by harmonizing their directions utilized in practical motors in distant cities the power of Niagara.

The resentments and antagonisms engendered by the unvarying series of successful decisions caused individuals who were adversely affected to vent their antagonisms on Tesla although he had not in ten years held any personal interests in the patents.

The situation that developed is well described by B. A. Behrend, later vice-president of the American Institute of Electrical Engineers:

It is a peculiar trait of ignorant men to go always from one extreme to another, and those who were once the blind admirers of Mr. Tesla, exalting him to an extent which can be likened only to the infatuated praise bestowed on victims of popular admiration, are now eagerly engaged in his derision. There is something deeply melancholy in the prospect, and I can never think of Nikola Tesla without warming up to my subject and condemning the injustice and ingratitude which he has received alike at the hands of the public and of the engineering profession. (Western Electrician, Sept., 1907)

With the scientific and engineering worlds, and the courts, extending to him a clear title to the honor of being the great pioneer discoverer and inventor of the principles and machines that created the modern electrical system, Tesla stands without a rival as the genius who gave the world the electrical power age that made our mass-production industrial system possible. The name Tesla should, therefore, in all right and justice, be the most famous name in the engineering world today.

RETURNING to his laboratory in March, 1893, after his European and American lectures, Tesla banished all social activities from his life program, and, bursting with energy, pitched headlong into experimental work in connection with his wireless system. He made repeated experiments in working out the refinement of his principle of tuning circuits to resonance with each other. He built more than one hundred coils covering a wide range of electrical tuning characteristics. He also built numerous oscillators for producing high-frequency currents, and condensers and inductances for tuning both sending and receiving coils to any desired frequency or wavelength.

He demonstrated that he could cause any one of hundreds of coils to respond selectively and powerfully to its particular wavelength emitted by an oscillator while all others remained inert; but he discovered that tuned electrical coils have, to a further extent, the same properties as tuned musical string, in that they vibrate not only to the fundamental note but also to a wide range of upper, and particularly lower, harmonics. This characteristic could be usefully employed in connection with the design of sending- and receiving-station antennas, but it militated against the sharp, exclusive response tuning of coils. At close range, and with the powerful currents Tesla used in his laboratory, the harmonics were a handicap--when greater distance separated sending and receiving coils, this trouble became a minor one.

It became obvious to Tesla that it was going to be dificult to arrange an early demonstration of his worldwide system of intelligence and of power, so he planned a compromise system in which he would use a smaller central transmitter and smaller relay stations at certain distances.

In an interview with Arthur Brisbane, the famous editor, Tesla announced in The world of July 22, 1894, the certainty of his plans. He said:

you would think me a dreamer and very far gone if I should tell you what I really hope for. But I can tell you that I look forward with absolute confidence to sending messages through the earth without any wires. I have also great hopes of transmitting electric force in the same way without waste. Concerning the transmission of messages through the earth I have no hesitation in predicting success. I must first ascertain exactly how many vibrations to the second are caused by disturbing the mass of electricity which the earth contains. My machine for transmitting must vibrate as often to put itself in accord with the electricity in the earth.

During the following winter he designed and built his transmitting station and a receiving station for this purpose. It worked well within the close range of the laboratory and between points in the city. Like the artist who is never willing to declare a picture finished but must continue to apply an unending series of slight improvements, Tesla continued to add refinements so that he would be assured of a perfect test in the spring, when he

planned to take his receiving set up the Hudson River on a small boat to test its response at extended distances.

with Tesla, as with Caesar, though, came tragedy on the Ides of March. For Tesla it was the unlucky 13th of March, 1895, when fire broke out during the night in the lower part of the building in which his laboratory was located and swept through the entire structure. The two floors on which his equipment was located dropped to the basement, their entire contents destroyed. Not a single article was saved. The major portion of Tesla's fortune was invested in the apparatus in that building. He carried no insurance on it. The loss was total.

The monetary loss was the least important factor in the shock which Tesla sustained. The apparatus and the countless experiments in scores of subjects with which they were associated were part of Tesla's self. His work of a lifetime was swept away. All of his records, papers, mementos, his famous world's Fair exhibit were gone. His laboratory, in which he had demonstrated his wonders to the elite and intelligentsia of New York, to the most famous men and women of the country and the world, was no more. And this tragedy had come just when he was ready to make his first distance demonstration of his wireless system.

Tesla was in a tough spot financially. The laboratory was the property of the Tesla Electric Company, owned by Tesla and A. K. Brown who had, with an associate, put up the funds to finance Tesla's demonstration of his polyphase alternating-current system prior to its sale to Westinghouse for $1,000,000. Some of that money was divided as cash among the associates, as stated; and the remainder had gone into the laboratory for further developments. The resources of the company were now wiped out and Tesla's individual resources were almost at the vanishing point. He was receiving some patent royalties from Germany on his polyphase motors and dynamos. This income would be adequate to take care of his living expenses but not suficient to enable him to maintain an experimental laboratory.

Mr. Adams, active head of the Morgan group that had developed the hydroelectric station at Niagara Falls, using Tesla's polyphase system, now came to the inventor's rescue. He proposed and arranged for the formation of a new company which would finance the continuation of Tesla's experiments, and he offered to subscribe one hundred

thousand dollars of the proposed half-million dollars of capital stock of the company.

with this support Tesla proceeded to set up a new laboratory. He secured quarters at 46 East Houston Street, and started operations there in July, 1895, four months after his South Fifth Avenue laboratory had been destroyed.

Adams paid forty thousand dollars as the first installment of his subscription. He took an active personal interest in Tesla's work, and spent a great deal of time in the laboratory. Knowing from the successful operation of the Niagara Falls plant that Tesla, technically, was extremely practical, Adams was deeply impressed by the plans for wireless transmission of intelligence and of power. He declared he was willing to go still further than his original plan of financial support, and he proposed that the plan include the taking in of his son as an active partner in Tesla's work.

Such an arrangement would amount to an alliance for Tesla with the powerful Morgan financial group. It was the support of J. P. Morgan that gave financial guidance to the formation of the General Electric Company and made possible the building of the fiaterside Station, the first big Edison powerhouse in New York, and it was a Morgan group that, by making possible the development of Niagara, had given the Tesla system a tremendous boost. The prestige that would come from a Morgan association would probably be even more potent than the actual monetary aid involved. with this alliance Tesla's financial future was assured. There would come to his aid, through it, the support of the world's greatest organizational genius and practical promotion powers. The tragedy of the fire that brought about this situation could yet prove a great blessing.

Tesla made his decision. what influenced him to reach the determination that guided him, no one ever learned. He rejected Mr. Adams' offer. From a practical point of view there is no way of explaining his action. But no one could ever successfully demonstrate that Tesla was practical in a commercial and financial sense.

with the forty thousand dollars that Adams subscribed, Tesla was able to keep actively engaged in research for about three years. He probably could have secured subscriptions of many times that amount if he had been

willing to put forth even a slight effort in that direction, but he was interested mainly in getting his experiments well under way rather than worrying about future financial needs. He had full faith that the future would bring him many millions of dollars as a token of the many billions of value he would give it through his inventions.

It took Tesla about a year to get his laboratory equipped and to build an array of experimental apparatus. Almost nothing that he used could be purchased in the market; everything had to be specially made by his workmen under his direction. In the spring of 1897 he was ready to make, on his wireless transmitter and receiver, the distance tests which had been interrupted by the fire two years before.

The success of these tests were announced by Tesla in an interview with a representative of the Electrical Review which was published in the issue of July 9, 1897, of that journal. It stated:

Nearly every telegraphic inventor has for years dreamed in his waking hours of the possibility of communicating without wires. From time to time there has appeared in the technical journals a reference to the experiments showing the almost universal belief among electricians that, some day, wires will be done away with. Experiments have been made attempting to prove the possibilities, but it has remained for Mr. Nikola Tesla to advance a theory, and experimentally prove it, that wireless communication is a possibility and by no means a distant possibility. Indeed, after six years of careful and conscientious work, Mr. Tesla has arrived at a stage where some insight into the future is possible.

A representative of the Electrical Review receives the assurance personally from Mr. Tesla who, by the way, is nothing if not conservative, that electrical communication without wires is an accomplished fact and that the method employed and the principles involved have nothing in them to prevent messages being transmitted and intelligibly received between distant points. Already he has constructed both a transmitting apparatus and an electrical receiver which at distant points is sensitive to the signals of the transmitter, regardless of earth currents or points of the

compass. And this has been done with a surprisingly small expenditure of energy.

Naturally, Mr. Tesla is averse to explaining all details of his invention, but allows it to be understood that he avails himself of what, for the present, may be termed the electrostatic equilibrium; that if this be disturbed at any point on the earth the disturbance can with proper apparatus be distinguished at a distant point and thus the means of signalling and reading signals becomes practicable once the concrete instruments are available. Mr. Tesla announced his belief in the possibilities, but he did so after having satisfied himself by actual test of apparatus designed by him. Much work has yet to be done, and he has since then given close attention and study to the problem.

Details are not yet available, for obvious reasons, and we now merely chronicle Mr. Tesla's statement that he has really accomplished wireless communication over reasonably long distances with small expenditure of energy and has only to perfect apparatus to go to any extent. Morse's 40 mile experiment in the old days was on a far less certain basis than the wireless possibilities of today.

Tesla's work with high frequency and high potential currents has been notable. As long ago as 1891 he foretold the present results, both as to vacuum tube lighting and intercommunication without wires. The former has in his hands assumed a condition capable of a public demonstration of the phenomena of the electrostatic molecular forces. Numberless experiments were carried out, and from what then was a startling frequency of 10,000 per second Mr. Tesla has advanced to what now is a moderate rate at 2,000,000 oscillations per second

This announcement recorded the birth of modern radio--radio as it is in use today--born on a boat traveling up the Hudson River, carrying the receiving set twenty-five miles from the Houston Street laboratory, a distance which was a small fraction of the range of the set but enough to demonstrate its capabilities. Such an accomplishment was worthy of a flamboyant smash announcement instead of Tesla's very modest statement and the even more conservative manner in which the Electrical Review treated the news. Tesla had to protect not only his patent rights, which would be jeopardized by premature disclosure, but also had to be on guard against invention invaders and

patent pirates, with whom he had previously had unpleasant experiences. The Electrical Review, naturally enough, was fearful of the consequences of "sticking its neck out" by too enthusiastic a reception before full details were available.

The fundamental patents on Tesla's system were issued on September 2, 1897, just two months after his announcement. They are numbered 645,576 and 649,621. In these patents he describes all the fundamental features of the radio broadcasting and receiving circuits in use today. Once patent protection was secured, Tesla did not long delay in letting the public in on his discoveries. His presentation took the form of a spectacular demonstration at Madison Square Garden.

wireless transmission of intelligence is a modern satisfaction of one of the oldest cravings of man, who has always sought the annihilation of distance by communication through space without material linkage over the intervening expanse. Early experimenters with the telephone, particularly, were enthusiastic seekers of a method of wireless electrical communication that would convey the voice through space in the manner in which the air conducted sound. David Edward Hughes had noted, in 1879, that when an electric spark was produced anywhere in his house he heard a noise in his telephone receiver. He traced the effect to the action of the carbon granules in contact with a metal disk in his telephone transmitter which acted as a detector of the space waves by sticking together slightly, reducing the resistance of the mass, and producing a click in the receiver.

Prof. A. E. Dolbear, of Tufts College, amplified this observation and set up, in 1882, a demonstration set using the principle but eliminating the telephone set. He used a spark coil for creating waves and a mass of carbon granules for detecting them. This is exactly the "wireless" system which Marconi "discovered" fourteen years later.

Edison, engaged by the Western Union Telegraph Company to break the monopoly which Bell held by his invention of the telephone, had succeeded, in 1885, in sending a message from a moving train by "wireless." A wire strung on the train paralleling a telegraph wire strung on poles along the track made it possible to bridge the intervening few feet by an inductive effect--the same effect which causes

annoyance by creating "cross talk," or a mixing of conversations over two telephone circuits located close to each other. fi. M. Preece, in England, made a similar experiment about the same time. The extremely short distances over which such systems worked prevented them from having any practical usefulness.

An entirely different type of wireless communication had been developed by Alexander Graham Bell in 1880 and 1881. This was given the name radiophone, but Bell insisted on calling it the photophone. The photophone transmitted the voice over a beam of light. The transmitter consisted of a very thin glass or mica mirror, which could be vibrated by the voice. This reflected a beam of light, usually sunlight, to a distant receiving device. The simple receiver consisted of a chemist's test tube, into which a selected material was placed. The top of the tube was closed by a cork through which two small rubber tubes were inserted, the other ends being placed in the ears. A very great variety of materials could be placed in the test tube as detectors. when the beam of light, vibrated by the voice, impinged on the material in the tube, an absorption of heat took place which set the air in the tube in vibration, thus reproducing the voice that was carried by the light beam. Bell also used selenium as a detector. It responded to the visible rays and produced an electrical effect. The experiments, obviously, were of little practical value as the basis for a system of wireless communication.

Michael Faraday, in London, had described in 1845 his theory of the relationship between light and the electromagnetic lines of force; and in 1862 James Clerk Maxwell published an analysis of Faraday's work which gave a mathematical basis for the theory that light waves were electromagnetic in nature, and that it was possible for such waves to exist very much shorter and very much longer than the known wavelength of visible light. This was a challenge to scientists to prove the existence of such waves.

Prof. Heinrich Hertz, at Bonn, Germany, from 1886 to 1888, undertook the search for the waves longer than light or heat. He produced them by the spark discharge of an induction coil and recaptured them from space, at short distances, in the form of a tiny spark that jumped the gap in a slotted ring of wire. Sir Oliver Lodge, in England,

was simultaneously seeking to measure equally small electrical waves in wire circuits.

This, then, had been the situation in the scientific world when Tesla began his work in 1889. The plan for wireless communication which he presented in 1892 and 1893, as will be described in a moment, shows how his magnificent concept and tremendously advanced knowledge towered mountain high over all contemporaries.

when Tesla left the Westinghouse plant in the fall of 1889, he had immediately turned to the next phase of his development of the alternating-current Weld--a new system of distributing energy by means of high-frequency alternating currents which would be a far more magnificent discovery than his polyphase system. within the next two years he had explored the principles by which energy could be distributed broadcast without the use of wires, and these he had demonstrated with powerful coils in his laboratory. The distribution of intelligence, later called "wireless," was but a single phase of the larger project.

Tesla described, in 1892, the first electronic tube designed for use as a detector in a radio system, and demonstrated its characteristics in his lectures in London and Paris in February and March of that year. (The tube, however, had been developed in 1890.) He described in February and March of the following year, 1893, his system of radio broadcasting, presenting its principles in detail, in lectures before the Franklin Institute in Philadelphia and at the convention of the National Electric Light Association held in St. Louis.

Tesla's electronic tube, his 1890 invention, was the ancestor of the detecting and amplifying tubes in use today. His demonstration of this tube is a matter of record in the archives of four societies before which he exhibited it in February and March of 1892--the Institute of Electrical Engineers and the Royal Society of London and the Physical Society of France and the International Society of Electrical Engineers in Paris. He stated in these lectures:

If there is any motion which is measurable going on in space, such a brush ought to reveal it. It is, so to speak, a beam of light, frictionless, devoid of inertia.

I think it may find practical applications in telegraphy. with such a brush it would be possible to send dispatches across the Atlantic, for instance, with any speed, since its sensitiveness may be so great the slightest changes will affect it.

The "brush" in Tesla's tube was a beam of electrons. The electron, however, had not yet been discovered. Nevertheless, Tesla gave an accurate description of its nature, demonstrating the remarkable accuracy of his interpretation of strange phenomena. So sensitive was this electronic beam that a small horseshoe magnet an inch wide at a distance of six feet caused movement of the electron beam in either direction, depending on the position in which the magnet was held.

If anyone approached the tube from a distance of many feet the beam, or brush, would swing to the opposite side of the tube. If one walked around the tube even at a distance of ten feet, the beam would move likewise, keeping its center end always pointed at the moving object. The slightest movement of a finger, or even the tensing of muscle, would bring a swinging response from the beam.

In the same 1892 lecture in which he described this first electronic tube, Tesla demonstrated lamps which were lighted without wire connections (wireless light) and also a motor which operated without wire connections to the energizing coils (wireless power); and he had again presented these developments at his exhibition at the Chicago Columbian Exposition early in 1893.

It was with all this experience behind him, giving him full assurance that his system was entirely practical and operative, that Tesla presented at the Franklin Institute and at the convention of the National Electric Light Association in February and March, 1893, a very cautious and conservative statement concerning his plan. Even at these 1893 lectures, Tesla could have staged a demonstration of wireless transmission of intelligence by placing one of his resonant coils, surmounted by one of his electronic "brush" tubes, or one of his low-pressure air lamps, in the lecture hall and causing it to respond to signals sent out by an energized coil of similar wavelength but located at a considerable distance from the building. The experiment was a standard procedure in his laboratory.

This, however, would be a purely local effect, whereas his radio transmission system was one planned on a world-wide basis requiring much more powerful apparatus than he had thus far built. To pass off a purely local effect as a demonstration of a world-wide system, even though the observed results would have been identical, would have been a case of intellectual dishonesty to which Tesla would not stoop; yet this demonstration of wireless would have been more spectacular and powerful than any staged by any other inventor in more than a half-dozen years following.

Describing his world-wide system at the 1893 National Electric Light Association meeting, he said:

In connection with resonance effects and the problems of transmission of energy over a single conductor, which was previously considered, I would say a few words on a subject which constantly fills my thoughts, and which concerns the welfare of all. I mean the transmission of intelligible signals, or, perhaps, even power, to any distance without the use of wires. I am becoming more convinced of the practicability of the scheme; and though I know full well that the great majority of scientific men will not believe that such results can be practically and immediately realized, yet I think that all consider the developments in recent years by a number of workers to have been such as to encourage thought and experiment in this direction. My conviction has grown so strong that I no longer look upon the plan of energy or intelligence transmission as a mere theoretical possibility, but as a serious problem in electrical engineering, which must be carried out some day.

The idea of transmitting intelligence without wires is the natural outcome of the most recent results of electrical investigations. Some enthusiasts have expressed their belief that telephony to any distance by induction through air is possible. I cannot stretch my imagination so far, but I do firmly believe that it is practical to disturb, by means of powerful machines, the electrostatic conditions of the earth, and thus transmit intelligible signals, and, perhaps, power. In fact, what is there against carrying out such a scheme?

We now know that electrical vibrations may be transmitted through a single conductor. why then not try to avail ourselves of the earth for this purpose? We need not be frightened by the idea of distance. To the weary wanderer

counting the mileposts, the earth may appear very large; but to the happiest of all men, the astronomer, who gazes at the heavens, and by their standards judges the magnitude of our globe, it appears very small. And so I think it must seem to the electrician; for when he considers the speed with which an electrical disturbance is propagated through the earth, all his ideas of distance must completely vanish.

A point of great importance would be first to know what is the capacity of the earth, and what charge does it contain if electrified. Though we have no positive evidence of a charged body existing in space without other oppositely electrified bodies being near, there is a fair probability that the earth is such a body, for by whatever process it was separated--and this is the accepted view of its origin--it must have retained a charge, as occurs in all processes of mechanical separation. . . .

If we can ever ascertain at what period the earth's charge, when disturbed, oscillates, with respect to an oppositely charged system or known circuit, we shall know a fact possibly of the greatest importance to the welfare of the human race. I propose to seek for the period by means of an electrical oscillator or a source of alternating currents.

One of the terminals of this source would be connected to the earth, as, for instance, to the city water mains, the other to an insulated body of large surface. It is possible that the outer conducting air strata or free space contains an opposite charge, and that, together with the earth, they form a condenser of large capacity. In such case the period of vibration may be very low and an alternating dynamo machine might serve for the purpose of the experiment. I would then transform the current to a potential as high as it would be found possible, and connect the ends of the high tension secondary to the ground and to the insulated body. By varying the frequency of the currents and carefully observing the potential of the insulated body, and watching for the disturbance at various neighboring points of the earth's surface, resonance might be detected.

Should, as the majority of scientific men in all probability believe, the period be extremely small, then a dynamo machine would not do, and a proper electrical oscillator would have to be produced, and perhaps it might not be possible to obtain such rapid vibrations. But

whether this be possible or not, and whether the earth contains a charge or not, and whatever may be its period of vibration, it is certainly possible--for of this we have daily evidence--to produce some electrical disturbance suficiently powerful to be perceptible by suitable instruments at any point on the earth's surface. . . .

Theoretically, then, it could not require a great amount of energy to produce a disturbance perceptible at a great distance, or even all over the surface of the globe. Now, it is quite certain that at any point within a certain radius of the sources, a properly adjusted self induction and capacity device can be set in action by resonance. But not only this can be done, but another source, s 1, similar to s, or any number of such sources, can be set to work in synchronism with the latter, and the vibration thus intensified and spread over a large area, or a flow of electricity produced to or from source s 1, if the same or of opposite phase to the source s.

I think that, beyond doubt, it is possible to operate electrical devices in a city, through the ground or pipe system, by resonance from an electrical oscillator located at a central point. But the practical solution of this problem would be of incomparably smaller benefit to man than the realization of the scheme of transmitting intelligence, or, perhaps, power, to any distance through the earth or environing medium. If this is at all possible, distance does not mean anything. Proper apparatus must first be produced, by means of which the problem can be attacked, and I have devoted much thought to this subject. I am firmly convinced it can be done, and I hope we shall live to see it done.

The lecture before the Franklin Institute contained a similar statement. An additional paragraph from it can be quoted:

If by means of powerful machinery, rapid variations of the earth's potential were produced, a grounded wire reaching up to some height would be traversed by a current which could be increased by connecting the free end of the wire to a body of some size. . . . The experiment, which would be of great scientific interest, would probably best succeed on a ship at sea. In this manner, even if it were not possible to operate machinery, intelligence might be transmitted quite certainly.

Tesla thus presented in these lectures the principles which he had learned in his laboratory experiments, during the previous three years, were necessary for successful wireless communication.

Several fundamental requirements were presented which will be understood by any non-technical person who has had even slight experience with radio receiving sets: 1. An antenna, or &aerial wire; 2. A ground connection; 3. An &aerial-ground circuit containing inductance and capacity; 4. Adjustable inductance and capacity (for tuning); 5. Sending and receiving sets tuned to resonance with each other; and 6. Electronic tube detectors. He had still earlier invented a loud speaker.

These embody the fundamental principles of radio, and are used in every sending and receiving set today.

Radio as it exists today is, therefore, the product of the genius of Nikola Tesla. He is the original inventor of the system as a whole and of all the principal electrical components. The man who, next to Tesla, is entitled to the greatest amount of credit is Sir Oliver Lodge, the great English scientist. Even Lodge, however, failed to grasp the fundamental picture that Tesla presented.

Lodge, early in 1894, had put a Hertz spark gap in a copper cylinder open at one end; and in this way he produced a beam of ultra-short-wave oscillations which could be transmitted in any direction. He did the same for the receiving set. Since the incoming waves could be received from only one direction, this receiving set was able to locate the direction from which the transmitted waves came. with this set he completely anticipated Marconi by two years. In the summer of that year, in a demonstration before the British Association for the Advancement of Science at Oxford, he sent Morse signals, with an improved set, between two buildings separated by several hundred feet.

It is little wonder, then, that Marconi, who started his studies of wireless in 1895, created no stir in the scientific circles in England when he came from Italy to London in 1896 with a wireless set that in every essential feature was the same as that demonstrated by Lodge in 1894. He used a parabolic reflector, so his set was little more

than an electrical searchlight. He did, however, bring an alternative feature to replace the parabolic beam reflector. This was a ground connection and antenna, or &aerial wire, for both sending and receiving set. This was exactly what Tesla had described in his plan published three years before.

when Hertz made his experiments to demonstrate the identical nature of light and longer electromagnetic waves, he intentionally sought to use the shortest waves it was practicable to produce. They were measured in inches--much less than a yard long. They were entirely satisfactory for his experiment. when the wireless experimenters copied his methods they took over the short-wave plan without ever asking a question as to what wavelength should be used for wireless communication; the thought seems not to have dawned on them that there were other wavelengths that could be produced and used--all except Tesla.

Tesla took the trouble, with the spirit of a real scientist to repeat exactly the experiments of Hertz; and he published his results, stating that he found a number of important differences and calling attention to the inadequacies of Hertz's experimental methods.

Having experimented with a wide gamut of wavelengths of high-frequency currents and studied the properties of each section of the spectrum, he knew that the short wavelengths were totally unsuitable for communication purposes. He knew that the useful wavelengths ranged from 100 meters to many thousands of meters. He knew that the combination of induction coil and Hertz ball-type spark-gap oscillator could never have any practical usefulness in producing the kind of electrical pulsations required. Even with the highly efficient apparatus available today, scientists have been unable to use in communication (except for special purposes) the ultra-short waves which Tesla in his wisdom condemned and Marconi, owing to his inexperience, tried to use.

The history of the succeeding years in wireless is the story of the failure of the short waves of Lodge and Marconi and their followers, and the shifting over to the longer waves described by Tesla; and the dropping of their crash method of signaling and its replacement by the refined and highly efficient method of tuning to each other the sending and receiving stations by the methods

discovered by Tesla; and adoption of Tesla's continuous waves.

In addition, these groping workers saw in wireless only a point-to-point or station-to-station method of signaling. None of them foresaw the broadcasting system which Tesla described in 1893. The system invented and discovered by Tesla is the one in use today; but who ever heard anyone giving Tesla the slightest credit?

NINE

TESLA was prolific in opening up vast new empires of knowledge. He showered his discoveries on the world at such a rapid rate and in such a nonchalant manner that he seems to have benumbed the minds of the scientists of his age. He was too busy to spend time developing the technical or commercial applications of each new discovery--there were too many other new and important revelations within his vision that must be brought to light. Discoveries were not happenstance events to him. He visualized them far in advance of their unfolding in the laboratory. He had a definite program of pioneering research in virgin fields of investigation; and when this was accomplished he would, he felt, have a long lifetime still ahead of him in which he could return to the practical utilization of those already revealed.

Meanwhile, he had found a whole new world of interesting effects in the discharges produced by his coils when energized with the currents of extremely high frequency. He built larger and larger coils and experimented with a variety of shapes as constructions. From the common cylindrical type of coil he developed the cone-shaped coil, and this development he carried still further by designing the flat helix, or pancake-shaped coil.

The extremely high-frequency currents furnished a mathematical paradise in which Tesla could develop his equations to his heart's content. Through his mathematical abilities and his strange power of visualization he could frequently make, very quickly, whole series of discoveries that it took a long time to catch up with in actual laboratory constructions. This was true of the phenomena of resonance, or tuned circuits.

Because of their relatively short wavelength, it was comparatively easy to build condensers for tuning the circuits. when a circuit is tuned the electric current that flows in it oscillates rhythmically, just as does a musical string which, when struck or plucked, vibrates and builds up loops of even lengths with motionless points between them. There may be only one of these loops, or there can be many.

Tesla did not invent the idea of electrical resonance. It was inherent in the mathematical description of the condenser discharge as developed by Lord Kelvin, and in the physical nature of alternating currents; but Tesla changed it from a buried mathematical equation to sparking physical reality. It is the analogy of acoustical resonance which is a natural property of matter. However, there were no practical circuits in which resonance could manifest itself until Tesla developed alternating currents, particularly the high-frequency currents. He put the master's touch to the research in this field by developing the principle of resonance in individual circuits through adjustment of capacity and inductance; the amplification of effects by inductive coupling of two tuned circuits, and the peculiar manifestations of resonance in a circuit tuned to a quarter of the wavelength of the energizing current. This latter development was a stroke of pure genius.

In the vibrating string, two loops measure a complete wavelength and one loop measures half a wavelength, since one of the loops is up when the other is down. Between the two loops is a nodal point which does not move. From the nodal point to the top of a loop is a quarter wavelength. Taking the quarter wavelength as a unit, one end is motionless and the other end swings through the greatest amplitude of vibration.

By tuning his coils to quarter wavelengths, one end of the coil, Tesla found, would be entirely inactive while the other end would swing through tremendous electrical activity. Here was a unique situation, one end of a small coil inert and the other end spouting a flood of sparks of hundreds of thousands or even millions of volts. In a physical analogy it seemed like the Niagara River reaching the edge of the precipice--and then its waters shooting mountain high in a gigantic fountain instead of falling into the chasm.

The quarter-wavelength coil is the electrical counterpart of the vibrating tine of the tuning fork, the ordinary clock pendulum, or the vibrating reed. Once accomplished, it was a simple thing--but its discovery was a work of genius. It was a development that could have come with certainty to a master mind working on broad principles, as Tesla was doing all his life, and only by the most improbable chance to those who without illumination were tinkering with gadgets and hoping to stumble on something out of which they could make a fortune.

A high-voltage coil with one dead end greatly simplified many problems. One of Tesla's big problems had been the finding of means to insulate the high-voltage secondary coil of transformers from the low-voltage primary which energized it. Tesla's discovery eliminated the voltage entirely from one end of the secondary so it could be connected directly to the primary or to the ground, while the other end continued to spout its lightning. It was for utilizing this situation that he developed the conical and pancake-shaped coils.

Tesla's laboratory was filled with a variety of coils. He discovered early in his researches that while operating a coil of a given wavelength, other coils in the laboratory, tuned either to this wavelength or one of its harmonics, would respond sympathetically by spouting a crown of sparks although not connected in any way to the operating coil.

Here was an example of transmission of energy to a distance through space. It was not necessary for Tesla to make a series of experiments to understand the implications of this situation. He was never lost in a new territory which he opened. His mind rose to such heights of understanding that he could survey a revealed world in a glance.

Tesla planned a spectacular demonstration of the new principle. He had his workmen string a wire on insulating supports on all four walls near the ceiling of the largest room in his laboratory. The wire was connected to one of his oscillators.

It was late at night when the installation was ready for the experiment. In order to make the test, Tesla prepared two tubes of glass about three feet long and a half-inch in

diameter. He sealed one end of each, slightly evacuated the air from the tubes and then sealed the other ends.

Tesla told the workmen he wanted the room completely darkened for the test, all lights out; and when he gave the signal he wanted the switch of his oscillator closed. "If my theory is correct," he explained, "when you close the switch these tubes will become swords of fire."

walking to the middle of the room Tesla gave orders to turn out all lights. The laboratory was in pitch darkness. A workman stood with his hand on the switch of the oscillator.

"Now!" shouted Tesla.

Instantly the great room was flooded with brilliant but weird blue-white light and the workmen beheld the tall, slim figure of Tesla in the middle of the room waving vigorously what looked like two flaming swords. The two glass tubes glowed with an unearthly radiance, and he would parry and thrust with them as if he were in a double fencing match.

To the workmen in the laboratory, it was a common experience for Tesla to perform spectacular feats; but this went beyond all limits. He had previously lighted his electric vacuum lamps but they were always connected to coils that supplied them with electricity. Now they lighted without being connected to any source of electricity.

This demonstration, made in 1890, led to Tesla's adopting the technique as the permanent method of lighting his laboratories. The loop around the ceiling was always energized; and if anyone wished a light at any position, it was only necessary to take a glass tube and place it in any convenient location.

when tesla undertook the development of a new kind of electric light, he went to the sun for his model. He saw in the photo- sphere, or outer gaseous layer of the sun, light being created by the vibration of molecules. That was the theory then prevalent; and he sought to use the same method.

In the tremendous burst of revelation which he received in the park at Budapest as he gazed into the flaming orb of

the setting sun, there had flashed into his mind, as we have seen, not only the marvelous invention of the rotary magnetic field and the many uses of multiple alternating currents, but also the grand generalization that everything in Nature operated on the principle of vibrations that corresponded to alternating currents. The host of inventions and discoveries which he made in all succeeding years had their roots, too, in that sublime experience.

In the sun, it was believed, light was created when the molecules were vibrated by heat. Tesla sought to improve on this method by vibrating the molecules by electrical forces. The sparks and electrical flames created by his high-voltage coils were associated, he believed, with molecular vibrations in the air. If he could bottle the gases of the air and set them in vibration electrically, they should produce light without heat, since the energy was supplied by cold electric currents.

Sir fiilliam Crookes, who, long before Edison, produced an incandescent electric light by sealing an electrically heated wire in a vacuum tube, had carried out an extended series of experiments in conducting electricity through the gases in glass vessels under a variety of conditions ranging from atmospheric pressure to the highest vacuum obtainable, and had produced some strange effects. Crookes used the high-voltage current produced by the old-fashioned induction coil.

Tesla expected that when he bottled the strange effects he had observed with his currents of extremely high frequency, he would produce manifestations radically different from those found by Crookes, or Geissler, who also worked in this field. In this he was not disappointed.

Four types of an entirely new kind of electric light were produced by Tesla, using electrically activated molecules of gas: 1. Tubes in which a solid body was rendered incandescent; 2. Tubes in which phosphorescent and fluorescent materials were caused to luminesce; 3. Tubes in which rarefied gases became luminous, and 4. Tubes in which luminosity was produced in gases at ordinary pressures.

Like Crookes, Tesla passed his high-frequency currents through gases at all pressures, from lowest-pressure vacuum to normal atmospheric pressure, and obtained brilliant luminous effects exceeding anything previously attained. He

substituted for air in his tubes other gases, including mercury vapor, and observed the peculiar color and other effects they yielded.

Noting the variety of colors the various gases, and even air, showed under different pressures, Tesla suspected that not all of the energy radiated was given off as visible light, but that some of it emanated as black light. Testing this hypothesis, he placed sulphide of zinc and other phosphorescent and fluorescent materials in his tubes and caused them to glow. In these experiments (they were made in 1889) Tesla laid the foundation for our most recently developed type of highly efficient lamps used in fluorescent lighting which are generally believed to have been invented in recent years. This system of utilizing the wasted ultra-violet or invisible black light by changing it to visible light by means of phosphorescent substances is Tesla's invention. Roentgen was using similar tubes, but of plain glass and the fluorescent substance on a table in his laboratory when, a half-dozen years later, he discovered X-rays. Tesla invented, also, the neon-tube type of lamp, and even bent his tubes to form letters and geometrical shapes, as is done in neon-tube signs. This is true in spite of some antecedent and concurrent laboratory experiments by Crookes and J. J. Thompson, neither of whom developed any lamps or practical applications.

Tesla had discovered early in 1890 that his high-frequency currents had properties so different from the ordinary induction-coil, or spark-coil, currents, that he was able to light his tubes just as well, and sometimes even better, with only one wire connecting them with the high-tension transformer, the return circuit being effected wirelessly through space.

In working with types of lamps consisting of tubes in the center of which there was a conducting wire, and with the tube filled with air under a partial vacuum, Tesla discovered that the gas would serve as a better conductor of the high-frequency current than the wire. From this observation he was able to develop many spectacular experiments which appeared to violate the most fundamental laws of electricity. He was able to short circuit lamps and other apparatus with heavy bars of metal which, with ordinary currents, would completely deprive the devices of electricity so they would be unable to operate. However, with his high-frequency currents, the lamps would light and

the devices operate just as if the short-circuiting bar were not present.

One of his startling experiments consisted of placing a long glass tube partially evacuated of its air inside a slightly longer copper tube with a closed end. A slit was cut in the copper tube in its central section so the tube inside would be seen. when the copper tube was connected in the high-frequency circuit, the air in the tube was brilliantly illuminated; but no evidence could be found of any current flowing through the short-circuiting copper shell. The electricity preferred to pass through the glass tube, by induction, to the enclosed partially evacuated air, pass through the low-pressure air for the full length of the tube, and then pass out the other end by induction, rather than traverse the complete metal path in the surrounding metal tube.

we have then, [said Tesla], as far as we can now see, in the gas a conductor which is capable of transmitting electric impulses of any frequency which we may be able to produce. Could the frequency be brought high enough, then a queer system of distribution, which would be likely to interest gas companies, might be realized; metal pipes filled with gas--the metal being the insulator and the gas the conductor--supplying phosphorescent bulbs, or perhaps devices not yet invented.

This remarkable conductivity of gases, including the air, at low pressures, later led Tesla to suggest, in a published statement in 1914, a system of lighting on a terrestrial scale in which he proposed to treat the whole earth, with its surrounding atmosphere, as if it were a single lamp.

The atmosphere is under the greatest pressure at the surface of the earth, owing to the weight of the overlying air. As we go higher in the air there are increasing amounts below us and less above, so, the greater the elevation, the lower is the pressure of the air.

At higher altitudes the gases in the atmosphere are in the same condition as the air in the partially evacuated tubes he prepared in his laboratory, Tesla explained, and therefore it would serve as an excellent conductor of high-frequency currents. The aurora borealis is a natural example of the effect Tesla sought, and it is produced by

Nature as Tesla planned; but this was not known when he evolved his idea.

The flow of a suficient amount of the electricity in the right form through the upper regions of the atmosphere would cause the air to become luminous. The whole earth would be transformed into a giant lamp, with the night sky completely illuminated. It would be unnecessary, he pointed out, to use any lamps along streets, roads or other outdoor areas, except during periods in which storms or low clouds prevailed. Ocean travel would be made safer and more pleasant, for the sky over the whole ocean would be illuminated, making the night as bright as day.

The methods by which Tesla intended to conduct his high-frequency currents to the upper air have not been published. when he outlined the project, he stated that the plan did not present any dificulties that could not be handled in a practical way. This meant that he had definite means for accomplishing his purpose.

The air, he stated, possesses a high degree of conductivity for high-frequency currents at an altitude of 35,000 feet, but could be used effectively at lower altitudes. The accuracy of Tesla's prediction with respect to the conductivity of the upper air is attested by one of the problems encountered today in the operation of airplanes at altitudes even lower than 25,000 feet. The ignition system, carrying high-voltage currents to the spark plugs in the airplane engines, which explodes the gas in the cylinders, has been giving trouble at the higher altitudes because the electricity escapes with a great deal of freedom into the surrounding air. At lower altitudes the air is an excellent insulator, especially for direct current and low-frequency currents, but, as Tesla discovered, at the higher altitudes where low pressures prevail it becomes an excellent conductor for the high-frequency currents. The wires leading to spark plugs become surrounded by a corona, or electrical halo, which indicates the escape of the current. This interferes with the efficiency, if it does not entirely prevent the operation, of devices employing high-frequency or high-potential currents, such as radio apparatus. (Since Tesla discovered that metal wires and rods which act as excellent conductors for direct and low-frequency currents can act as excellent insulators for his high-frequency currents, it is obvious that the common suggestion made for delivering a current to the upper air

by means of metal cables suspended from balloons is entirely impractical.)

This proposal by Tesla to transform the earth into a giant lamp was again referred to by him in the twenties. At this time he was without funds for carrying on experimental work, and, as he never announced details until after he had tested them in practice, he withheld a disclosure of his methods. He was hopeful, however, that he would soon secure money enough to permit him to test his plan.

The author bombarded Tesla with questions in an effort to learn the general plan he had in mind. Tesla was adamant.

"If I should answer three more of your questions you would know as much about my plan as I do," he replied.

"Nevertheless, Dr. Tesla," I replied, "I am going to outline in my article the only plan that appears to me to be feasible under our known physical laws, and you can deny or afirm it. your molecular bombardment tubes are prolific producers of ultra-violet and X-rays and could produce a powerful beam of this radiation which would ionize the air through great distances. when these rays pass through the air they ionize it, making it a good conductor of electricity of all kinds at suficiently high voltages. By producing such a beam on a high mountain and directing it upward this would provide a conducting path through the air to any height desired. you could then send your high-frequency currents to the upper air without leaving the ground."

"If you publish that," said Tesla, "it must appear as your plan, not mine."

The article was published with the foregoing speculation in it; but neither afirmation nor denial was forthcoming from the inventor, and nothing more can be said in its favor. Tesla may have had a simpler and more practical plan in mind. (Since completing this volume the author has learned that Tesla planned to install a bank of powerful ultra-violet lamps on top of his tower at wardencliff (cf. p. 207), and had the upper Platform designed to receive them.)

There was one other plan which Tesla discussed on a number of occasions when considering terrestrial electrical conditions, and which he may have had in mind in this

connection. He pointed out that the earth is a good conductor of electricity and the upper air is also a good conductor, while the intervening lower stratum of air is an insulator for many kinds of current. This combination provides what is known as a condenser, a device which will store and discharge electricity. By charging the earth, the upper air would become charged by induction. when our spinning earth was so transformed into a terrestrial Leyden jar, it could be alternately charged and discharged, so that a current would flow both in the upper air and in the ground, producing the electrical flow which would cause the upper air to become self-luminous. Tesla, however, never became quite so specific in applying the condenser plan to this problem as the preceding sentence indicates. His plan may still exist in his papers, which, at the present writing, are sealed against inspection except by Government oficials.

Out of the almost empty space in a six-inch vacuum tube Tesla succeeded in extracting at least five epoch-making discoveries. Tesla's lamp was more prolific in producing wonders than the Aladdin's lamp of the Arabian Nights. He gave his "magic" lamp to science fifty years ago. This magic talisman was Tesla's carbon-button lamp which, apart from the other discoveries that came of it, was in itself, just as a lamp, a brilliant scientific discovery--and still remains unused. Edison developed the practical incandescent filament electric lamp and was entitled to, and receives, a tremendous amount of credit for his accomplishment. Tesla invented an absolutely original type of lamp, the incandescent-button lamp, which gives twenty times as much light for the same amount of current consumed; and his contribution remains practically unknown.

The carbon-button type of lamp was described by Tesla in his lecture before the American Institute of Engineers in New York in May, 1891, and further developments were presented in the lectures which he gave in England and France in February and March, 1892. In his New York lecture he said:

Electrostatic effects are in many ways available for the production of light. For instance, we may place a body of some refractory material in a closed, and preferably in a more or less air exhausted, globe, connect it to a source of high, rapidly alternating potential, causing the molecules of the gas to strike it many times a second at

enormous speeds, and in this way, with trillions of invisible hammers, pound it until it gets incandescent. Or we may place a body in a very highly exhausted globe, and by employing very high frequencies and potentials maintain it at any desired degree of incandescence.

He made a vast number of experiments with this carbon-button lamp and gave a description of the most significant ones in his lecture before the English and French scientific societies in the spring of 1892. It was, however, only one of the many new types of lamps and other important developments which he included in this spectacular presentation of his work.

The carbon-button lamps were of very simple construction. Basically they consisted of a spherical glass globe three to six inches in diameter, in the center of which was a piece of solid refractory material mounted on the end of a wire which protruded through the globe and served as a single-wire connection with the source of high-frequency currents. The globe contained rarefied air.

when the high-frequency current was connected with the lamp, molecules of the air in the globe, coming in contact with the central button, became charged and were repelled at high velocity to the glass globe where they lost their charge and were then repelled back at equally high velocity, striking the button. Millions of millions of such processes each second caused the button to become heated to incandescence.

In these simple glass globes Tesla was able to produce extremely high temperatures, the upper limit of which seemed to be determined by the amount of current used. He was able to vaporize carbon directly into a gas, observing that the liquid state was so unstable it could not exist. Zirconia, the most heat-resistant substance known, could be melted instantly. He tried diamonds and rubies as buttons--and they too were vaporized. when using the device as a lamp it was not his desire to melt the substances; but he always carried experiments to their upper and lower limits. Carborundum, he observed, was so refractory that it was possible when using buttons made of this material (calcium carbide) to run the lamps at higher current densities than was possible with other substances. Carborundum did not vaporize so readily, nor did it make deposits on the inside of the globe.

Tesla thus evolved a technique in operating the lamps whereby the incandescent button transferred its heat energy to the molecules of the very small amount of gas in the tube so that they became a source of light, thus causing the lamps to function like the sun, the button being the massive body of the sun and the surrounding gas like the photosphere, or atmospheric light-emitting layer, of that body.

Tesla had a keen sense of dramatic values, but quite apart from this he undoubtedly enjoyed a unique satisfaction when he was able to light this miniature sun in the currents that he passed through his body--high-frequency currents of hundreds of thousands of volts. with one hand grasping a terminal of his high-frequency transformer and the other holding aloft this bulb containing an incandescent miniature sun which he had created--posing like the Statue of Liberty--he was able to make his new lamp radiate its brilliant illumination. Here, you might say, was the superman manifesting his ultramundane accomplishments. In addition, there was a satisfaction which was associated purely with the plane of ordinary mortals. Edison had laughed at his plan for developing the alternating-current system, and had declared that these currents were not only useless but deadly. Surely, this was an adequate answer; Tesla would let Nature make his replies.

Observing this working model of the incandescent sun which he could hold in his hand, Tesla was quick to see many of the implications of its phenomena. Every electrical wave that surged through the tiny central bead caused a shower of particles to radiate from it at tremendous velocity and strike the surrounding glass globe, only to be reflected back to the bead. The sun, Tesla reasoned, is an incandescent body that carries a high electrical charge and it, too, will emit vast showers of tiny particles, each carrying great energy because of its extremely high velocity. In the case of the sun, and other stars like it, there was no glass globe to act as a barrier, so the showers of particles continued out into the vast realms of surrounding space.

All space was filled with these particles and they were continually bombarding the earth, blasting matter wherever they struck, just as they did in his globes. He had seen this process take place in his globes, where the most

refractory carbon beads could be shattered into atomic dust by the bombardment of the electrified particles.

He sought to detect these particles striking the earth: one of the manifestations of this bombardment, he declared, was the aurora borealis. The records of the experimental methods by which he detected these rays are not available; but he published an announcement that he had detected them, measured their energy, and found that they moved with tremendously high velocities imparted to them by the hundreds of millions of volts potential of the sun.

Neither the scientists nor the general public in the early nineties were in a mood for such fantastic figures, or for any claim that the earth was bombarded by such destructive rays. It would be describing the situation in very conservative fashion to state that Tesla's report was not taken seriously.

when, however, the French physicist, Henri Becquerel, in 1896, discovered the mysterious rays emitted by uranium, and subsequent investigations, culminating with the discovery by Pierre and Marie Curie, in Paris, of radium, whose atoms were exploding spontaneously without apparent cause, Tesla was able to point to his cosmic rays as the simple cause of the radioactivity of radium, thorium, uranium and other substances. And he predicted that other substances would also be found to be made radioactive by bombardment with these rays. The victory for Tesla, however, was only temporary, for the scientific world did not accept his theory. Nevertheless, Tesla was a better prophet than he knew, or anyone else suspected.

Thirty years later Dr. Robert A. Millikan rediscovered these rays, believing them to be vibratory in character like light, and was followed by Dr. Arthur H. Compton, who proved the existence of cosmic rays consisting of high-velocity particles of matter, just as Tesla described them. They started by finding energies of ten million volts; and today the energies are far up in the billions and even trillions of electron volts. And these and other investigators describe these rays as shattering atoms of matter producing showers of debris--just as Tesla predicted.

In 1934, Frederick Joliot, son-in-law of the Curies, discovered that artificial radioactivity was produced in

ordinary materials by bombarding them with particles in just the manner which Tesla described. Joliot received the Nobel Prize for his discovery; no one gives any credit to Tesla.

Tesla's molecular-bombardment lamp was the ancestor of another very modern development--the atom-smashing cyclotron. The cyclotron, developed by E. O. Lawrence, of the University of California, during the past twenty years, is a device in which electrified particles are whirled in a magnetic field in a circular chamber until they reach a very high velocity, and are then led out of the chamber in a narrow stream. The giant machine, with a magnet as high as a house, partially completed at present writing, will emit so powerful a beam of charged particles that, according to Prof. Lawrence, if allowed to impinge on a building brick they will totally disintegrate it. The smaller models were used to bombard a variety of substances to render them radioactive, to disintegrate them or transmute their atoms into those of other elements.

The small glass globe, six inches or less in diameter, holding Tesla's molecular-bombardment lamp produced exactly this same disintegrating effect on solid matter, probably with a more intensified effect than any atom-smashing cyclotron now in existence despite their tremendous size. (Even small ones weigh twenty tons.)

In describing one of the experiments with his lamp, one in which a ruby was mounted in a carbon button, Tesla said:

It was found, among other things, that in such cases, no matter where the bombardment began, just as soon as a high temperature was reached there was generally one of the bodies which seemed to take most of the bombardment upon itself, the other, or others, being thereby relieved. This quality appeared to depend principally on the point of fusion, and on the facility with which the body was "evaporated," or, generally speaking, disintegrated--meaning by the latter term not only the throwing off of atoms, but likewise of larger lumps. The observation made was in accordance with generally accepted notions. In a highly exhausted bulb electricity is carried off from the electrode by independent carriers, which are partly atoms, or molecules, of the residual atmosphere, and partly the atoms, molecules, or lumps thrown off from the electrode. If the electrode is composed of bodies of different

character, and if one of these is more easily disintegrated than the others, most of the electricity supplied is carried off from that body, which is then brought to a higher temperature than the others, and this the more, as upon an increase of the temperature the body is still more easily disintegrated.

Substances which resisted melting in temperatures attainable in laboratory furnaces of that day were easily disintegrated in Tesla's simple-lamp disintegrator, which provided a powerful beam of disintegrating particles by having them concentrated from all directions by a spherical reflector (the globe of his lamp), a kind a three-dimension burning glass, but operating with electrified particles instead of heat rays. It accomplished the same effect as the heavy atom disintegrators of today, but much more efficiently in a globe so light in weight it almost floated off in air. Its simplicity and efficiency is further increased by the fact that it causes the substance that is being disintegrated to supply the particles by which the disintegration is effected.

There is one more very modern discovery of great importance embodied in Tesla's molecular-bombardment lamp--the point electron miscroscope, which provides magnifications of a million diameters, or ten to twenty times more powerful than the better known electron microscope which in turn is capable of magnifications up to fifty times greater than the optical microscope.

In the point electron microscope, electrified particles shoot out in straight lines from a tiny active spot on a piece of substance kept at a high potential, and reproduce on the spherical surface of a glass globe the pattern of the microscopically small area from which the particles are issuing. The size of the glass sphere furnishes the only limit to the degree of magnification that can be obtained; the greater the radius, the greater the magnification. Since electrons are smaller than light waves, objects too small to be seen by light waves can be tremendously enlarged by the patterns produced by the emitted electrons.

Tesla produced on the surface of the spherical globe of his lamp phosphorescent images of what was taking place on the disintegrating button when he used extremely high vacuum. He described this effect in his lectures in the spring of 1892, and his description will stand with hardly a change

in a word for a description of the million-magnification point electron microscope. Quoting from his lecture:

To the eye the electrode appears uniformly brilliant, but there are upon it points constantly shifting and wandering about, of a temperature far above the mean, and this materially hastens the process of deterioration. . . . Exhaust a bulb to a very high degree, so that with a fairly high potential the discharge cannot pass--that is, not a luminous one, for a weak invisible discharge occurs always, in all probability. Now raise slowly and carefully the potential, leaving the primary current no more than for an instant. At a certain point, two, three or half a dozen phosphorescent spots will appear on the globe. These places of the glass are evidently more violently bombarded than the others, this being due to the unevenly distributed electric density, necessitated, of course, by sharp projections, or, generally speaking, irregularities of the electrode. But the luminous patches are constantly changing in position, which is especially well observed if one manages to produce very few, and this indicates that the configuration of the electrode is rapidly changing.

It would be an act of simple justice if in the future scientists would extend credit to Tesla for being the one who discovered the electron microscope. There is no reduction in the glory due him because he did not specifically describe the electron, then unknown, in its operations, but assumed the effect was due to electrically charged atoms.

when Tesla studied the performance of various models of this and his other gaseous lamps, he observed that the output of visible light changed under various operating conditions. He knew they gave off both visible and invisible rays. He used a variety of phosphorescent and fluorescent substances for detecting the ultra-violet or black light. Usually, the changes in the visible and ultra-violet light about balanced each other; as one increased the other decreased, with the remainder of the energy accounted for by heat losses. In his molecular-bombardment lamp he found, he reported in his 1892 lectures, "visible black light and a very special radiation." He was experimenting with this radiation which, he reported, produced shadowgraph pictures on plates in metal containers, in his laboratory when it was destroyed by fire in March, 1895.

This "very special radiation" was not further described at that time in published articles; but when Prof. fiilhelm Konrad Roentgen, in Germany, in December, 1895, announced the discovery of X-rays, Tesla was able immediately to reproduce the same results by means of his "very special radiation," indicating that these and X-rays had very similar properties although produced in somewhat different ways. Immediately upon reading Roentgen's announcement, Tesla forwarded to the German scientist shadowgraph pictures produced by his "very special radiation." Roentgen replied: "The pictures are very interesting. If you would only be so kind as to disclose the manner in which you obtained them."

Tesla did not consider that this situation gave him any priority in the discovery of X-rays, nor did he ever advance any claims; but he immediately started an extensive series of investigations into their nature. while others were trying to coax out of the type of tube used by Roentgen enough X-rays to take shadow photographs through such thin structures as the hands and feet held very close to the bulb, Tesla was taking photographs through the skull at a distance of forty feet from the tube. He elsewhere described at this time an unidentified type of radiation coming from a spark gap, when a heavy current was passed, that was not a transverse wave like light, or Hertzian waves, and could not be stopped by interposing metal plates.

Tesla, thus, in one lecture reporting his investigations covering a period of two years, offered to the world--in addition to his new electric vacuum lamps, his highly efficient incandescent lamp, and his high-frequency and high-potential currents and apparatus--at least five outstanding scientific discoveries: 1. Cosmic rays; 2. Artificial radioactivity; 3. Disintegrating beam of electrified particles, or atom smasher; 4. Electron microscope; and 5. "Very special radiation" (X-rays).

At least four of these innovations, when "rediscovered" up to forty years later, won Nobel Prizes for others; and Tesla's name is never mentioned in connection with them.

Yet Tesla's lifetime work was hardly well started!

TEN

TESLA had a remarkable ability for carrying on simultaneously a number of widely different lines of scientific research. while pursuing his studies of high-frequency electrical oscillations with all of their ramifications from vacuum lamps to radio, he was also investigating mechanical vibrations; and he had a rare foresight into the many useful applications to which they could be put, and which have since been realized.

Tesla never did things by halves. Almost everything he attempted went off like a flash of lightning with a very satisfactory resounding clap of thunder following. Even when he did not so plan events, they appeared to fashion themselves into spectacular climaxes. In 1896 while his fame was still on the ascendant he planned a nice quiet little vibration experiment in his Houston Street laboratory. Since he had moved into these quarters in 1895, the place had established a reputation for itself because of the peculiar noises and lights that emanated from it at all hours of the day and night, and because it was constantly being visited by the most famous people in the country.

The quiet little vibration experiment produced an earthquake, a real earthquake in which people and buildings and everything in them got a more tremendous shaking than they did in any of the natural earthquakes that have visited the metropolis. In an area of a dozen square city blocks, occupied by hundreds of buildings housing tens of thousands of persons, there was a sudden roaring and shaking, shattering of panes of glass, breaking of steam, gas and water pipes. Pandemonium reigned as small objects danced around rooms, plaster descended from walls and ceilings, and pieces of machinery weighing tons were moved from their bolted anchorages and shifted to awkward spots in factory lofts.

"It was all caused, quite unexpectedly, by a little piece of apparatus you could slip in your pocket," said Tesla.

The device that precipitated the sudden crisis had been used for a long time by Tesla as a toy to amuse his

friends. It was a mechanical oscillator, and was used to produce vibrations. The motor-driven device that the barber straps on his hand to give a patron an "electric massage" is a descendant of Tesla's mechanical oscillator. There is, of course, nothing electric about an "electric massage" except the power used to produce vibrations which are transmitted through the barber's fingers to the scalp.

Tesla developed in the early nineties a mechanical-electrical oscillator for the generation of high-frequency alternating currents. The driving engine produced on a shaft simple reciprocating motion that was not changed to rotary motion. Mounted on either end of the shaft was a coil of many turns of wire that moved back and forth with high frequency between the poles of electromagnets, and in this way generated high-frequency alternating currents.

The engine was claimed by Tesla to have a very high efficiency compared to the common type of engine, which changed reciprocating to rotary motion by means of a crank shaft. It had no valves or other moving parts, except the reciprocating piston with its attached shaft and coils, so that mechanical losses were very low. It maintained such an extremely high order of constancy of speed, he stated, that the alternating current generated by the oscillator could be used to drive clocks, without any pendulum or balance-wheel control mechanisms, and they would keep time more accurately than the sun.

This engine may have had industrial possibilities but Tesla was not interested in them. To him it was just a convenient way of producing a high-frequency alternating current constant in frequency and voltage, or mechanical vibrations, if used without the electrical parts. He operated the engine on compressed air and also by steam at 320 pounds and also at 80 pounds pressure.

while perfecting this device, he had opportunity to observe interesting effects produced by vibration. These were objectionable in the engine when it was used as a dynamo, so he adopted suitable measures to eliminate or suppress them. The vibrations as such, however, interested him. Although they were detrimental to the machine, he found their physiological effects were, at times, quite pleasant. Later he built a small mechanical oscillator driven by compressed air which was designed for no other purpose than to produce vibrations. He built a platform insulated from

the floor by rubber and cork. He then mounted the oscillator on the under side of the platform. The purpose of the rubber and cork under the platform was to keep the vibrations from leaking into the building and thereby reducing the effect on the platform. Visitors found this vibrating platform one of the most interesting of the great array of fascinating and fantastic exhibits with which he dazzled the society folk who flocked to his laboratory.

Great hopes were entertained by Tesla of applying these vibrations for therapeutic and health-improving effects. He had opportunity to observe, through his own experience and that of his employees, that they produce some very definite physiological actions.

Samuel Clemens, better known to the public as "Mark Twain," and Tesla were close friends. Clemens was a frequent visitor to the Tesla laboratory. Tesla had been playing with his vibratory mechanism for some time, and had learned a good deal about the results that followed from varying doses of vibration, when one evening Clemens dropped in.

Clemens, on learning about the new mechanism, wanted to experience its vitalizing vibrations. He stood on the platform while the oscillator set it into operation. He was thrilled by the new experience. He was full of adjectives. "This gives you vigor and vitality," he exclaimed. After he had been on the platform for a while Tesla advised him: "you have had enough, Mr. Clemens. you had better come down now."

"Not by a jugfull," replied Clemens. "I am enjoying myself."

"But you had better come down, Mr. Clemens. It is best that you do so," insisted Tesla.

"you couldn't get me off this with a derrick," laughed Clemens.

"Remember, I am advising you, Mr. Clemens."

"I'm having the time of my life. I'm going to stay right up here and enjoy myself. Look here, Tesla, you don't appreciate what a wonderful device you have here to give a lift to tired humanity. . . . Clemens continued along this line for several minutes. Suddenly he stopped talking, bit

his lower lip, straightened his body and stalked stiffy but suddenly from the platform.

"Quick, Tesla! Where is it?" snapped Clemens, half begging, half demanding.

"Right over here, through that little door in the corner," said Tesla. "And remember, Mr. Clemens, I advised you to come down some time ago," he called after the rapidly moving figure.

The laxative effect of the vibrator was an old story to the members of the laboratory staff.

Tesla pursued his studies of mechanical vibrations in many directions. This was almost a virgin field for scientific research. Scarcely any fundamental research had been done in the field since Pythagoras, twenty-five hundred years before, had established the science of music through his study of vibrating strings; and many of the wonders with which Tesla had startled the world in the field of high-frequency and high-potential currents had grown out of his simple secret for tuning electrical circuits so that the electricity vibrated in resonance with its circuit. He now visualized mechanical vibrations building up resonance conditions in the same way, to produce effects of tremendous magnitude on physical objects.

In order to carry out what he expected to be some minor and very small-scale experiments, he screwed the base of one of his small mechanical oscillators to an iron supporting pillar in the middle of his laboratory and set it into oscillation. It had been his observation that it took some time to build up its maximum speed of vibration. The longer it operated the faster the tempo it attained. He had noticed that all objects did not respond in the same way to vibrations. One of the many objects around the laboratory would suddenly go into violent vibration as it came into resonance with the fundamental vibration of the oscillator or some harmonic of it. As the period of the oscillator changed, the first object would stop and some other object in resonance with the new rate would start vibrating. The reason for this selective response was very clear to Tesla, but he had never previously had the opportunity to observe the phenomenon on a really large scale.

Tesla's laboratory was on an upper floor of a loft building. It was on the north side of Houston Street, and the second house east of Mulberry Street. About three hundred feet south of Houston Street on the east side of Mulberry Street was the long, four-story red-brick building famous as Police Headquarters. Throughout the neighborhood there were many loft buildings ranging from five to ten stories in height, occupied by factories of all kinds. Sandwiched between them were the small narrow tenement houses of a densely packed Italian population. A few blocks to the south was Chinatown, a few blocks to the west was the garment-trades area, a short distance to the east was a densely crowded tenement-house district.

It was in this highly variegated neighborhood that Tesla unexpectedly staged a spectacular demonstration of the properties of sustained powerful vibrations. The surrounding population knew about Tesla's laboratory, knew that it was a place where strange, magical, mysterious events took place and where an equally strange man was doing fearful and wonderful things with that tremendously dangerous secret agent known as electricity. Tesla, they knew, was a man who was to be both venerated and feared, and they did a much better job of fearing than of venerating him.

Quite unmindful of what anyone thought about him, Tesla carried on his vibration and all other experiments. Just what experiment he had in mind on this particular morning will never be known. He busied himself with preparations for it while his oscillator on the supporting iron pillar of the structure kept building up an ever higher frequency of vibrations. He noted that every now and then some heavy piece of apparatus would vibrate sharply, the floor under him would rumble for a second or two--that a window pane would sing audibly, and other similar transient events would happen--all of which was quite familiar to him. These observations told him that his oscillator was tuning up nicely, and he probably wondered why he had not tried it firmly attached to a solid building support before.

Things were not going so well in the neighborhood, however. Down in Police Headquarters in Mulberry Street the "cops" were quite familiar with strange sounds and lights coming from the Tesla laboratory. They could hear clearly the sharp snapping of the lightnings created by his coils. If

anything queer was happening in the neighborhood, they knew that Tesla was in back of it in some way or other.

On this particular morning the cops were surprised to feel the building rumbling under their feet. Chairs moved across floors with no one near them. Objects on the oficers' desks danced about and the desks themselves moved. It must be an earthquake! It grew stronger. Chunks of plaster fell from the ceilings. A flood of water ran down one of the stairs from a broken pipe. The windows started to vibrate with a shrill note that grew more intense. Some of the windows shattered.

"That isn't an earthquake," shouted one of the oficers, "it's that blankety-blank Tesla. Get up there quickly," he called to a squad of men, "and stop him. Use force if you have to, but stop him. He'll wreck the city."

The officers started on a run for the building around the corner. Pouring into the streets were many scores of people excitedly leaving near-by tenement and factory buildings, believing an earthquake had caused the smashing of windows, breaking of pipes, moving of furniture and the strange vibrations.

without waiting for the slow-pokey elevator, the cops rushed up the stairs--and as they did so they felt the building vibrate even more strongly than did police headquarters. There was a sense of impending doom--that the whole building would disintegrate--and their fears were not relieved by the sound of smashing glass and the queer roars and screams that came from the walls and floors.

Could they reach Tesla's laboratory in time to stop him? Or would the building tumble down on their heads and everyone in it be buried in the ruins, and probably every building in the neighborhood? Maybe he was making the whole earth shake in this way! would this madman be destroying the world? It was destroyed once before by water. Maybe this time it would be destroyed by that agent of the devil that they call electricity!

Just as the cops rushed into Tesla's laboratory to tackle--they knew not what--the vibrations stopped and they beheld a strange sight. They arrived just in time to see the tall gaunt figure of the inventor swing a heavy sledge hammer and shatter a small iron contraption mounted on the post in

the middle of the room. Pandemonium gave way to a deep, heavy silence.

Tesla was the first to break the silence. Resting his sledge hammer against the pillar, he turned his tall, lean, coatless figure to the cops. He was always selfpossessed, always a commanding presence--an effect that could in no way be attributed to his slender build, but seemed more to emanate from his eyes. Bowing from the waist in his courtly manner, he addressed the policemen, who were too out of breath to speak, and probably overawed into silence by their fantastic experience.

"Gentlemen," he said, "I am sorry, but you are just a trifle too late to witness my experiment. I found it necessary to stop it suddenly and unexpectedly and in an unusual way just as you entered. If you will come around this evening I will have another oscillator attached to this platform and each of you can stand on it. you will, I am sure, find it a most interesting and pleasurable experience. Now you must leave, for I have many things to do. Good day, gentlemen."

George Scherff, Tesla's secretary, was standing nearby when Tesla so dramatically smashed his earthquake maker. Tesla never told the story beyond this point, and Mr. Scherff declares he does not recall what the response of the cops was. Imagination must finish the finale to the story.

At the moment, though, Tesla was quite sincere in his attitude. He had no idea of what had happened elsewhere in the neighborhood as a result of his experiment, but the effect on his own laboratory had been sufficiently threatening to cause him to halt it suddenly. when he learned the details, however, he was convinced that he was correct in his belief that the field of mechanical vibrations was rich with opportunities for scientific investigation. we have no records available of any further major experiments with vibration in that laboratory. Perhaps the Police and Building Departments had offered some emphatic suggestions to him concerning experiments of this nature.

Tesla's observations in this experiment were limited to what took place on the floor of the building in which his laboratory was located, but apparently very little happened there until a great deal had happened elsewhere. The

oscillator was firmly fixed to a supporting column and there were similar supporting columns directly under it on each floor down to the foundations. The vibrations were transmitted through the columns to the ground. This section of the city is built on deep sand that extends down some hundreds of feet before bed rock is reached. It is well known to seismologists that earthquake vibrations are transmitted by sand with much greater intensity than they are by rock. The ground under the building and around it was, therefore, an excellent transmitter of mechanical vibrations, which spread out in all directions. They may have reached a mile or more. They were more intense, of course, near their source and became weaker as the distance increased. However, even weak vibrations that are sustained can build up surprisingly large effects when they are absorbed by an object with which they are in resonance. A distant object in resonance can be thrown into strong vibration whereas a much nearer object not in resonance will be left unaffected.

It was this selective resonance that was, apparently, operating in Tesla's experiment. Buildings other than his own came into resonance with the increasing tempo of his oscillator long before his own building was affected. After the pandemonium was under way for some time elsewhere and the higher frequencies were reached, his immediate surroundings started to come into resonance.

when resonance is reached the effects follow instantly and powerfully. Tesla knew this, so when he observed dangerous resonance effects developing in his building he realized he had to act fast. The oscillator was being operated by compressed air supplied by a motor-driven compressor that fed the air into a tank, where it was stored under pressure. Even if the motor were shut off, there was plenty of air in the tank to keep the oscillator going for many minutes--and in that time the building could be completely wrecked and reduced to a pile of debris. with the vibrations reaching this dangerous amplitude, there was no time to try to disconnect the vibrator from the air line or to do anything about releasing the air from the tank. There was time for only one thing, and Tesla did that. He grabbed the near-by sledge hammer and took a mighty swing at the oscillator in hopes of putting it out of operation. He succeeded in his first attempt.

The device was made of cast iron and was of rugged construction. There were no delicate parts that could be easily damaged. Tesla has never published a description of the device, but its construction was principally that of a piston which moved back and forth inside a cast-iron cylinder. The only way to stop it from operating was to smash the outer cylinder. Fortunately, that is what happened from the first blow.

As Tesla turned around after delivering this lucky blow and beheld the visiting policemen, he could not understand the reason for their visit. The dangerous vibrations had developed in his building only within the preceding minute, and the policemen would not have had time to plan a visit in connection with them, he figured, so they must have come for some other less critical purpose, and therefore he proposed to dismiss them until a more opportune moment.

Tesla related this experience to me when I asked the inventor's opinion of a plan that I had suggested some time previously to Elmer Sperry, Jr., son of the famous inventor of many gyroscope devices. when a heavy gyroscope, such as is used in stabilizing ships, is forced to turn on its axis, it transmits a powerful downward thrust through the bearings in which the supporting gimbal is mounted. If a battery of such gyroscopes were mounted in regions where severe earthquakes take place it would transmit thrusts to the ground at equally timed intervals and build up resonance vibrations in the strata of the earth that would cause earthquake strains to be released while they were of small magnitude, thus producing very small earthquakes instead of letting the strains build up to large magnitudes which, when they let go, would cause devastating earthquakes.

The idea made a strong appeal to Tesla; and in his discussion, after telling me of the experience here related, he further declared that he had so far developed his study of vibrations that he could establish a new science of "telegeodynamics" which would deal not only with the transmission of powerful impulses through the earth to distant points to produce effects of large magnitude--in addition, he could use the same principles to detect distant objects. In the later thirties, before the outbreak of the war, he declared that he could apply these principles for the detection of submarines or other ships

at a distance, even though they were lying at anchor and no engines operating on them.

His system of telegeodynamics, using mechanical vibrations, Tesla declared, would make it possible to determine the physical constant of the earth and to locate ore deposits far beneath the surface. This latter prediction has since been fulfilled, for many oil fields have been discovered by studying the vibrations reflected from sub-surface strata.

"So powerful are the effects of the telegeodynamic oscillator," said Tesla in reviewing the subject in the thirties, "that I could now go over to the Empire State Building and reduce it to a tangled mass of wreckage in a very short time. I could accomplish this result with utmost certainty and without any dificulty whatever. I would use a small mechanical vibrating device, an engine so small you could slip it in your pocket. I could attach it to any part of the building, start it in operation, allow it twelve to thirteen minutes to come to full resonance. The building would first respond with gentle tremors, and the vibrations would then become so powerful that the whole structure would go into resonant oscillations of such great amplitude and power that rivets in the steel beams would be loosened and sheared. The outer stone coating would be thrown off and then the skeleton steel structure would collapse in all its parts. It would take about 2.5 (This figure may have been .25 or 2.5 horsepower. The notes are old and somewhat indistinct. Memory favors the latter figure.) horsepower to drive the oscillator to produce this effect"

Tesla developed his inventions to the point at which they were spectacular performers before they were demonstrated to the public. when presented, the performance always greatly exceeded the promise. This was the case with his first public demonstration of "wireless," but he complicated the situation by coupling with his radio invention another new idea--the robot.

Tesla staged his demonstration in the great auditorium of Madison Square Garden, then on the north side of Madison Square, in September, 1898, as part of the first annual Electrical Exhibition. He had a large tank built in the center of the arena and in this he placed an iron-hulled boat a few feet long, shaped like an ark, which he operated by remote control by means of his wireless system.

Extending upward from the center of the roof of the boat was a slender metal rod a few feet high which served as an antenna, or &aerial, for receiving the wireless wave. Near the bow and stern were two small metal tubes about a foot high surmounted by small electric lamps. The interior of the hull was packed with a radio receiving set and a variety of motor-driven mechanisms which put into effect the operating orders sent to the boat by wireless waves. There was a motor for propelling the boat and another motor for operating the servo-mechanism, or mechanical brain, that interpreted the orders coming from the wireless receiving set and translated them into mechanical motions, which included steering the boat in any direction, making it stop, start, go forward or backward, or light either lamp. The boat could thus be put through the most complicated maneuvers.

Anyone attending the exhibition could call the maneuver for the boat, and Tesla, with a few touches on a telegraph key, would cause the boat to respond. His control point was at the far end of the great arena.

The demonstration created a sensation and Tesla again was the popular hero. It was a front-page story in the newspapers. Everyone knew the accomplishment was a wonderful one, but few grasped the significance of the event or the importance of the fundamental discovery which it demonstrated. The basic aspects of the invention were obscured by the glamor of the demonstration.

The Spanish American war was under way. The success of the U.S. Navy in destroying the Spanish fleets was the leading topic of conversation. There was resentment over the blowing up of the U.S.S. Maine in Havana Harbor. Tesla's demonstration fired the imagination of everyone because of its possibilities as a weapon in naval warfare.

waldemar Kaempffert, then a student in City College and now Science Editor of the New York Times, discussed its use as a weapon with Tesla.

"I see," said Kaempffert, "how you could load an even larger boat with a cargo of dynamite, cause it to ride submerged, and explode the dynamite whenever you wished by pressing the key just as easily as you can cause the light on the bow to shine, and blow up from a distance by wireless even the largest of battleships." (Edison had

earlier designed an electric torpedo which received its power by a cable that remained connected with the mother ship.)

Tesla was patriotic, and was proud of his status, which he had acquired in 1889, as a citizen of the United States. He had offered his invention to the Government as a naval weapon, but at heart he was opposed to war.

"you do not see there a wireless torpedo," snapped back Tesla with fire flashing in his eyes, "you see there the first of a race of robots, mechanical men which will do the laborious work of the human race.

The "race of robots" was another of Tesla's original and important contributions to human welfare. It was one of the items of his colossal project for increasing human energy and improving the efficiency of its utilization. He visualized the application of the robot idea to warfare as well as to peaceful pursuits; and out of the broad principles enunciated, he developed an accurate picture of warfare as it is being carried on today with the use of giant machines as weapons--the robots he described.

"This evolution," he stated in an article in the Century Magazine of June, 1900, "will bring more and more into prominence a machine or mechanism with the fewest individuals as an element of warfare. . . . Greatest possible speed and maximum rate of energy delivery by the war apparatus will be the main object. The loss of life will become smaller. . . ."

Outlining the experiences that led him to design the robots, or automatons, as he called them, Tesla stated:

I have by every thought and act of mine, demonstrated, and do so daily, to my absolute satisfaction that I am an automaton endowed with power of movement, which merely responds to external stimuli beating upon my sense organs, and thinks and moves accordingly. . . .

with these experiences it was only natural that, long ago, I conceived the idea of constructing an automaton which would mechanically represent me, and which would respond, as I do myself, but, of course, in a much more primitive manner, to external influences. Such an automaton evidently had to have motive power, organs for locomotion, directive

organs, and one or more sensitive organs so adapted as to be excited by external stimuli.

This machine would, I reasoned, perform its movements in the manner of a living being, for it would have all of the chief elements of the same. There was still the capacity for growth, propagation, and, above all, the mind which would be wanting to make the model complete. But growth was not necessary in this case since a machine could be manufactured full-grown, so to speak. As to capacity for propagation, it could likewise be left out of consideration, for in the mechanical model it merely signified a process of manufacture.

whether the automaton be of flesh and bone, or of wood and steel, mattered little, provided it could perform all the duties required of it like an intelligent being. To do so it would have to have an element corresponding to the mind, which would effect the control of its movements and operations, and cause it to act, in any unforeseen case that might present itself, with knowledge, reason, judgement and experience. But this element I could easily embody in it by conveying to it my own intelligence, my own understanding. So this invention was evolved, and so a new art came into existence, for which the name "telautomatics" has been suggested, which means the art of controlling the movements and operations of distant automatons.

In order to give the automaton an individual identity it would be provided with a particular electrical tuning, Tesla explained, to which it alone would respond when waves of that particular frequency were sent from a control transmitting station; and other automatons would remain inactive until their frequency was transmitted. This was Tesla's fundamental radio tuning invention, the need for which other radio inventors had not yet glimpsed although Tesla had described it publicly a half-dozen years earlier.

Tesla not only used in the control of his automaton the long waves now used in broadcasting--which are very different from the short waves used by Marconi and all others; for those could be interfered with by the imposition of an intervening object--but he was explaining the use, through his system of tuning, of the spectrum of allocations for individual stations that now appears on the dials of radio receiving sets. He continued:

By the simple means described the knowledge, experience, judgement--the mind, so to speak--of the distant operator were embodied in that machine, which was thus enabled to move and perform all of its operations with reason and intelligence. It behaved just like a blindfolded person obeying directions received through the ear.

The automatons so far constructed had "borrowed minds," so to speak, as each formed merely part of the distant operator who conveyed to it his intelligent orders; but this art is only in the beginning.

I purpose to show that, however impossible it may now seem, an automaton may be contrived which will have its "own mind," and by this I mean that it will be able, independently of any operator, left entirely to itself, to perform, in response to external influences affecting its sensitive organs, a great variety of acts and operations as if it had intelligence.

It will be able to follow a course laid out or to obey orders given far in advance; it will be capable of distinguishing between what it ought and ought not to do, and of making experiences or, otherwise stated, of recording impressions which will deffinitely affect its subsequent actions. In fact I have already conceived such a plan.

Although I evolved this invention many years ago and explained it to my visitors very frequently in my laboratory demonstrations, it was not until much later, long after I had perfected it, that it became known, when, naturally enough, it gave rise to much discussion and to sensational reports.

But the true significance of this new art was not grasped by the majority, nor was the great force of the underlying principle recognized. As nearly as I could judge from the numerous comments which then appeared, the results I had obtained were considered as entirely impossible. Even the few who were disposed to admit the practicability of the invention saw in it merely an automobile torpedo, which was to be used for the purpose of blowing up battleships, with doubtful success. . . .

But the art I have evolved does not contemplate merely the change of direction of a moving vessel; it affords means of

absolutely controlling in every respect, all the innumerable translatory movements, as well as the operations of all the internal organs, no matter how many, of an individualized automaton.

Tesla, in an unpublished statement, prepared fifteen years later, recorded his experience in developing automata, and his unsuccessful effort to interest the war Department, and likewise commercial concerns, in his wirelessly controlled devices.

The idea of constructing an automaton, to bear out my theory, presented itself to me early but I did not begin active work until 1893, when I started my wireless investigations. During the succeeding two or three years, a number of automatic mechanisms, actuated from a distance by wireless control, were constructed by me and exhibited to visitors in my laboratory.

In 1896, however, I designed a complete machine capable of a multitude of operations, but the consummation of my labors was delayed until later in 1897. This machine was illustrated and described in my article in the Century Magazine of June 1900, and other periodicals of that time and, when first shown in the beginning of 1898, it created a sensation such as no other invention of mine has ever produced.

In November 1898, a basic patent on the novel art was granted to me, but only after the Examiner-in-Chief had come to New York and witnessed the performance, for what I claimed seemed unbelievable. I remember that when later I called on an oficial in Washington, with a view of offering the invention to the Government, he burst out in laughter upon my telling him what I had accomplished. Nobody thought then that there was the faintest prospect of perfecting such a device.

It is unfortunate that in this patent, following the advice of my attorneys, I indicated the control as being effected through the medium of a single circuit and a well-known form of detector, for the reason that I had not yet secured protection on my methods and apparatus for individualization. As a matter of fact, my boats were controlled through the joint action of several circuits and interference of every kind was excluded. Most generally I employed receiving circuits in the form of loops, including

condensers, because the discharges of my high tension transmitter ionized the air in the hall so that even a very small &aerial would draw electricity from the surrounding atmosphere for hours.

Just to give an idea, I found, for instance, that a bulb 12" in diamater, highly exhausted, and with one single terminal to which a short wire was attached, would deliver well on to one thousand successive flashes before all charge of the air in the laboratory was neutralized. The loop form of receiver was not sensitive to such a disturbance and it is curious to note that it is becoming popular at this late date. In reality it collects much less energy than the aerials or a long grounded wire, but it so happens that it does away with a number of defects inherent to the present wireless devices.

In demonstrating my invention before audiences, the visitors were requested to ask any questions, however involved, and the automaton could answer them by signs. This was considered magic at that time but was extremely simple, for it was myself who gave the replies by means of the device.

At the same period another larger telautomatic boat was constructed. It was controlled by loops having several turns placed in the hull, which was made entirely water tight and capable of submergence. The apparatus was similar to that used in the first with the exception of certain special features I introduced as, for example, incandescent lamps which afforded a visible evidence of the proper functioning of the machine and served for other purposes.

These automata, controlled within the range of vision of the operator, were, however, the first and rather crude steps in the evolution of the Art of Telautomatics as I had conceived it. The next logical improvement was its application to automatic mechanisms beyond the limits of vision and at great distances from the center of control, and I have ever since advocated their employments as instruments of warfare in preference to guns. The importance of this now seems to be recognized, if I am to judge from casual announcements through the press of achievements which are said to be extraordinary but contain no merit of novelty whatever.

In an imperfect manner it is practicable, with the existing wireless plants, to launch an aeroplane, have it follow a certain approximate course, and perform some operation at a distance of many hundreds of miles. A machine of this kind can also be mechanically controlled in several ways and I have no doubt that it may prove of some usefulness in war. But there are, to my best knowledge, no instrumentalities in existence today with which such an object could be accomplished in a precise manner. I have devoted years of study to this matter and have evolved means, making such and greater wonders easily realizable.

As stated on a previous occasion, when I was a student at college I conceived a flying machine quite unlike the present ones. The underlying principle was sound but could not be carried into practice for want of a prime-mover of suficiently great activity. In recent years I have successfully solved this problem and am now planning aerial machines devoid of sustaining planes, ailerons, propellers and other external attachments, which will be capable of immense speeds and are very likely to furnish powerful arguments for peace in the near future. Such a machine, sustained and propelled entirely by reaction, can be controlled either mechanically or by wireless energy. By installing proper plants it will be practicable to project a missile of this kind into the air and drop it almost on the very spot designated which may be thousands of miles away. But we are not going to stop at this.

Tesla is here describing--nearly fifty years ago--the radio-controlled rocket, which is still a confidential development of world war II, and the rocket bombs used by the Germans to attack England. The rocket-type airship is a secret which probably died with Tesla, unless it is contained in his papers sealed by the Government at the time of his death. This, however, is unlikely, as Tesla, in order to protect his secrets, did not commit his major inventions to paper, but depended on an almost infallible memory for their preservation.

"Telautomata," he concluded, "will be ultimately produced, capable of acting as if possessed of their own intelligence and their advent will create a revolution. As early as 1898 I proposed to representatives of a large manufacturing concern the construction and public exhibition of an automobile carriage which, left to itself, would perform a great variety of operations involving something akin to

judgment. But my proposal was deemed chimerical at that time and nothing came from it."

Tesla, at the Madison Square Garden demonstration in 1898 which lasted for a week, presented to the world, then, two stupendous developments, either of which alone would have been too gigantic to have been satisfactorily assimilated by the public in a single presentation. Either one of the ideas dimmed the glory of the other.

This first public demonstration of wireless, the forerunner of modern radio, in the amazing stage of development to which Tesla carried it, at this early date, was too tremendous a project to be encompassed within a single dramatization. In the hands of a competent public-relations councillor, or publicity man, as he was called in those days (but the employment of one was utterly abhorrent to Tesla), this demonstration would have been limited to the wireless aspect alone, and would have included just a simple two-way sending-and-receiving set for the transmission of messages by the Morse dots and dashes. Suitably dramatized, this would have been a suficient thrill for one show. At a subsequent show he could have brought in the tuning demonstration which would have shown the selective response of each of a series of coils, indicated by his strange-looking vacuum-tube lamps. The whole story of just the tuning of wireless circuits and stations to each other was too big for any one demonstration. An indication of its possibilities was all the public could absorb.

The robot, or automaton, idea was a new and an equally stupendous concept, the possibilities of which were not lost, however, on clever inventors; for it brought in the era of the modern labor-saving device--the mechanization of industry on a mass-production basis.

Using the Tesla principles, John Hays Hammond, Jr. developed an electric dog, on wheels, that followed him like a live pup. It was motor operated and controlled by a light beam through selenium cells placed behind lenses used for eyes. He also operated a yacht, entirely without a crew, which was sent out to sea from Boston harbor and brought back to its wharf by wireless control.

A manless airplane was developed toward the close of the First world war. It rose from the ground, flew one hundred

miles to a selected target, dropped its bombs, and returned to its home airport, all by wireless control. It was also developed so that on a signal from a distant radio station the plane would rise into the air, choose the proper direction, fly to a city hundreds of miles away and set itself down in the airport at that city. This Tesla-type robot was developed in the plant of the Sperry Gyroscope Company, where Elmer Sperry invented a host of amazing mechanical robots controlled by gyroscopes, such as the automatic pilots for airplanes and for ships.

All of the modern control devices using electronic tubes and electric eyes that make machines seem almost human and enable them to perform with superhuman activity, dependability, accuracy and low cost, are children of Tesla's robot, or automaton. The most recent development, in personalized form, was the mechanical man, a metal human monster giant, that walked, talked, smoked a cigarette, and obeyed spoken orders, in the exhibit of the Westinghouse Electric and Manufacturing Company at the New York world's Fair. Robots have been used, as well, to operate hydroelectric powerhouses and isolated substations of powerhouses.

In presenting this superabundance of scientific discovery in a single demonstration, Tesla was manifesting the superman in an additional role that pleased him greatly--that of the man magnificent. He would astound the world with a superlative demonstration not only of the profundity of the accomplishments of the superman, but, in addition, of the prolific nature of the mind of the man magnificent who could shower on the world a superabundance of scientific discoveries.

ELEVEN

TESLA was now ready for new worlds to conquer. After presenting to the public his discoveries relating to wireless signaling or the transmission of intelligence, as he called it, Tesla was anxious to get busy on the power phase: his projected world-wide distribution of power by wireless methods.

Again Tesla was faced with a financial problem or, to state the matter simply, he was broke. The $40,000 which was paid for the stock of the Nikola Tesla Company by Adams had been spent. The company had no cash on hand; but it held patents worth many millions if they had been handled in a practical way. A gift of $10,000 from John Hays Hammond, the famous mining engineer, had financed the work leading up to the Madison Square Garden wireless and robot demonstration.

Tesla had built ever larger and more powerful oscillators in his Houston Street laboratory. when he constructed one that produced 4,000,000 volts he reached beyond the limits in which high voltage could be handled within a city building. The sparks jumped to the walls, floors and ceilings. He needed a larger open space. He wanted to build vastly larger coils. He dreamed of a tremendous structure he would like to build somewhere in the open country spaces. He felt certain his wireless patents would prove tremendously valuable in a short time, and he would then have all the money he needed to build his laboratory. But he had already progressed to the point at which further advancement demanded the use of such a building--and he was broke. A loan of $10,000 offered by his friend Crawford, of the dry goods firm of Simpson and Crawford, took care of immediate needs.

Leonard E. Curtis, of the Colorado Springs Electric Company, a great admirer of Tesla, when he heard of Tesla's plan to conduct experiments on a gigantic scale, invited him to locate his laboratory at Colorado Springs, where he would provide him with the necessary land and all the electric power he needed for his work.

Col. John Jacob Astor, owner of the waldorf-Astoria, held his famous dining-room guest in the highest esteem as a personal friend, and kept in close touch with the progress of his investigations. when he heard that his researches were being halted through lack of funds, he made available to Tesla the $30,000 he needed in order to take advantage of Curtis' offer and build a temporary plant at Colorado Springs. Tesla arrived in Colorado in May, 1899, bringing with him some of his laboratory workers, and accompanied by an engineering associate, Fritz Lowenstein.

while Tesla was making experiments on natural lightning and other subjects in his mountain laboratory, the construction work on his high-power transmitting apparatus was being

rushed. He gave his personal supervision to even the finest details of every piece of apparatus. He was working in a virgin field. None had gone before him to pave the way or gain experience that would be helpful to him in designing his experiments or his machines. He was entirely on his own, working without human guidance of any kind, exploring a field of knowledge far beyond that which anyone else had reached. He had previously astonished the world in developing a system of power transmission in which pressures of tens of thousands of volts were used; now he was working with millions of volts, and no one knew what would happen when such tremendous potentials were produced. He believed, however, that he would make his own magnificent polyphase system obsolete by creating a better one.

In about three months after his arrival at Colorado Springs the building with its fantastic shapes, towers and masts was completed, and the giant oscillator with which the principal experiment was to be made was ready for operation.

The wild, rugged, mountainous terrain of Colorado, in which Tesla set up his laboratory, is a natural generator of tremendous electrical activity, producing lightning discharges of a magnitude and intensity probably not equaled anywhere else on earth. Overwhelming bolts from both earth and sky flashed with frightening frequency during the almost daily lightning storms. Tesla made a very detailed study of natural lightning while his apparatus, which would imitate it, was being constructed. He learned a great deal about the characteristics of the various kinds of discharges.

The gods of the natural lightning may have become a bit jealous of this individual who was undertaking to steal their thunder, as Prometheus had stolen fire, and sought to punish him by wrecking his fantastic looking structure. It was badly damaged, and narrowly escaped destruction, by a bolt of lightning, not one that made a direct hit but one that struck ten miles away.

The blast hit the laboratory at the exact time, to the split second, that Tesla predicted it would. It was caused by a tidal wave of air coming from a particular type of lightning discharge. Tesla tells the story in an unpublished report. He stated:

I have had many opportunities for checking this value by observation of explosions and lightning discharges. An ideal case of this kind presented itself at Colorado Springs in July 1899 while I was carrying on tests with my broadcasting power station which was the only wireless plant in existence at that time.

A heavy cloud had gathered over Pikes Peak range and suddenly lightning struck at a point just ten miles away. I timed the flash instantly and upon making a quick computation told my assistants that the tidal wave would arrive in 48.5 seconds. Exactly with the lapse of this time interval a terrific blow struck the building which might have been thrown off the foundation had it not been strongly braced. All the windows on one side and a door were demolished and much damage done in the interior.

Taking into account the energy of the electric discharge and its duration, as well as that of an explosion, I estimated that the concussion was about equivalent to that which might have been produced at that distance by the ignition of twelve tons of dynamite.

The experimental station which Tesla erected was an almost square barnlike structure nearly one hundred feet on each side. The sides were twenty-five feet high, and from them the roof sloped upward toward the center. From the middle of the roof rose a skeleton pyramidal tower made of wood. The top of this tower was nearly eighty feet above the ground. Extensions of the slanting roof beams extended outward to the ground to serve as flying buttresses to reinforce the tower. Through the center of the tower extended a mast nearly two hundred feet high, at the top of which was mounted a copper ball about three feet in diameter. The mast carried a heavy wire connecting the ball with the apparatus in the laboratory. The mast was arranged in sections so that it could be disjointed and lowered.

There were many pieces of apparatus in the building, and many forms and sizes of his Tesla coils, or high-frequency current transformers. The principal device was his "magnifying transmitter." This was merely a very large Tesla coil. A circular fence-like wall seventy-five feet in diameter was built in the large central room of the structure, and on this were wound the turns of the giant primary coil of the magnifying transmitter. The secondary

was a coil about ten feet in diameter, of about seventy-five turns of wire wound on a cylindrical skeletonized framework of wood. It had a vertical length of about ten feet and was mounted in the center of the room several feet above the floor. In the center of this coil was the bottom part of the mast. The roof above this portion of the room could be slid outward in two sections, so that no material came within a long distance of the mast and its wire conductor within the lower third of the distance above the ground.

One of the first problems Tesla sought to solve when he began his researches in the mountains of Colorado was whether the earth was an electrically charged body. Nature is usually very generous in her response when scientists ask her, in their experiments, questions of first magnitude. Tesla not only received a very satisfactory answer to his question but in addition a revelation of tremendous importance, an unveiling of a secret of Nature's operations which places in the hands of man a means of manipulating electrical forces on a terrestrial scale.

It was desirable for Tesla to learn whether the earth was electrically charged for the same reason that a violinist would want to know whether the strings of his instrument lay loose and inert across the bridge or whether they were tense and taut so that they would produce a musical note if plucked, or a football player would want to know if the pigskin were inflated or limp.

If the earth were uncharged, it would act as a vast sink into which electricity would have to be flowed in tremendous amounts to bring it to the state in which it could be made to vibrate electrically. An uncharged earth would somewhat complicate Tesla's plans. He quickly discovered that the earth is charged to an extremely high potential and is provided with some kind of a mechanism for maintaining its voltage. It was while determining this fact that he made his second big discovery.

Tesla made the first announcement of his discovery shortly after his return to New York in an amazing article in the Century of June, 1900, but the story is best told by Tesla in an article in the Electrical world and Engineer, May 5, 1904:

In the middle of June, while preparations for other work were going on, I arranged one of my receiving transformers with the view of determining in a novel manner, experimentally, the electrical potential of the globe and studying its periodic and casual fluctuations. This formed part of a plan carefully mapped out in advance

A highly sensitive, self restorative device, controlling a recording instrument, was included in the secondary circuit, while the primary was connected to the ground and the secondary to an elevated terminal of adjustable capacity. The variations of electrical potential gave rise to electrical surgings in the primary; these generated secondary currents, which in turn affected the sensitive device and recorder in proportion to their intensity.

The earth was found to be, literally, alive with electrical vibrations, and soon I was deeply absorbed in this interesting investigation. No better opportunity for such observations as I intended to make could be found anywhere.

Colorado is a country famous for the natural displays of electric force. In that dry and rarefied atmosphere the sun's rays beat on objects with fierce intensity. I raised steam to a dangerous pressure, in barrels filled with concentrated salt solution and the tinfoil coating of some of my elevated terminals shrivelled in the fiery blaze. An experimental high tension transformer, carelessly exposed to the rays of the setting sun, had most of its insulating compound melted and was rendered useless.

Aided by the dryness and rarefaction of the air, the water evaporates as in a boiler, and static electricity is generated in abundance. Lightning discharges are, accordingly, very frequent and sometimes of inconceivable violence. On one occasion approximately 12,000 discharges occurred within two hours, and all in the radius of certainly less than 50 kilometers [about 30 miles] from the laboratory. Many of them resembled gigantic trees of fire with the trunks up or down. I never saw fireballs, but as a compensation for my disappointment I succeeded later in determining the mode of their formation and producing them artificially.

In the latter part of the same month I noticed several times that my instruments were affected stronger by discharges taking place at great distances than by those

near by. This puzzled me very much. what was the cause? A number of observations proved that it could not be due to differences in the intensity of individual discharges and I readily ascertained that the phenomenon was not the result of a varying relation between the periods of my receiving circuits and those of the terrestrial disturbances.

One night as I was walking home with an assistant, meditating over these experiences, I was suddenly staggered by a thought. Years ago when I wrote a chapter of my lecture before the Franklin Institute and the National Electric Light Association, it had presented itself to me, but I dismissed it as absurd and impossible. I banished it again. Nevertheless, my instinct was aroused and somehow I felt that I was nearing a great revelation.

It was on the 3rd of July [1899]--the date I shall never forget--when I obtained the first decisive experimental evidence of a truth of overwhelming importance for the advancement of humanity.

A dense mass of strongly charged clouds gathered in the west and toward evening a violent storm broke loose which, after spending much of its fury in the mountains, was driven away with great velocity over the plains. Heavy and long persistent arcs formed almost in regular time intervals. My observations were now greatly facilitated and rendered more accurate by the experiences already gained. I was able to handle my instruments quickly and I was prepared. The recording apparatus being properly adjusted, its indications became fainter and fainter with increasing distance of the storm, until they ceased altogether.

I was watching in eager expectation. Surely enough, in a little while the indications again began, grew stronger and stronger, and, after passing through a maximum, gradually decreased and ceased once more. Many times, in regularly recurring intervals, the same actions were repeated until the storm which, as evident from simple computations, was moving with nearly constant speed, had retreated to a distance of about 300 kilometers [about 180 miles]. Nor did these strange actions stop then, but continued to manifest themselves with undiminished force.

Subsequently similar observations were also made by my assistant, Mr. Fritz Lowenstein, and shortly afterward several admirable opportunities presented themselves which

brought out, still more forcibly and unmistakably, the true nature of the wonderful phenomenon. No doubt whatever remained: I was observing stationary waves.

As the source of the disturbances moved away the receiving circuit came successively upon their nodes and loops. Impossible as it seemed, this planet, despite its vast extent, behaved like a conductor of limited dimensions. The tremendous significance of this fact in the transmission of energy by my system had already become quite clear to me.

Not only was it practicable to send telegraphic messages to any distance without wires, as I recognized long ago, but also to impress upon the entire globe the faint modulations of the human voice, far more still, to transmit power, in unlimited amounts to any terrestrial distance and almost without loss.

To get a more familiar picture of the problem that Tesla tackled in seeking to determine if the earth were charged and if it could be set into electrical vibration, one can visualize the difference between a bath tub that is empty and one that contains water. The uncharged earth would be like an empty tub; the charged earth like one containing water. It is easy to produce waves in the tub containing the water. By placing one's hand in the water and moving it back and forth, lengthwise, a short distance at the right rhythm, the water is soon rushing back and forth in a wave whose amplitude grows at a tremendously rapid rate until, if the hand motion is continued, the water may splash as high as the ceiling.

The earth can be visualized as an extremely large container holding a fluid; and in the center is a small plunger arrangement which can be moved tip and down a short distance in the proper rhythm. The waves travel to the edge of the container and are reflected back to the center, from which they again go outward re-enforced by the movement of the plunger.

The reaction between the outgoing and incoming waves, both in resonance with the medium in which they are traveling, causes stationary waves to be produced on the water, the surface having the appearance of a single series of waves frozen in a fixed position.

In Tesla's experiments the lightning discharges that played the part of the plunger causing the waves were moving rapidly to the eastward, and they carried the whole series of fixed, or stationary, waves with them. The measuring device remained fixed so the wave series, with its loops and nodes, moved past it, causing the measured potentials to rise and fall.

The experiment not only demonstrated that the earth was filled with electricity, but that this electricity could be disturbed so that rhythmic vibrations could be struck, resonance could be produced, causing effects of tremendous magnitude. Soldiers marching in unison across a bridge and wrecking it by the resulting vibration would again be a case in point.

Tesla produced the spectacular effects of extremely high potentials and high frequency by producing electrical resonance in his circuits--by tuning the electricity--and now he had discovered that he would be able to produce, easily, the same effect in the earth as if it were a single condenser and coil combined, a pure electrical resonating unit, by charging and discharging it rhythmically with his high-frequency, high-potential oscillations.

In this magnificent experiment Tesla the superman was at his best; the boldness of his undertaking fired the imagination, and the success he achieved should have earned for him undying fame.

Eventually, the giant coils with their banks of condensers and other apparatus in, the Colorado laboratory were ready for use in full-scale experiments. Every piece of equipment was thoroughly inspected and tested by Tesla and the moment had finally arrived for the critical test of the highest voltage experiment that had ever been made. He expected to top his own earlier records one hundred times over, and to produce tens of thousands of times higher voltages than ever had been produced in the high-voltage transmission lines at Niagara Falls.

There was not the faintest shadow of doubt in Tesla's mind as to whether his giant oscillator would work. He knew it would work, but he also knew that he was going to produce millions of volts and tremendously heavy currents; and neither he nor anyone else knew how these terrific explosions of electrical energy would act. He knew that he

had planned the experiment so that the first bolts of man-made lightning ever created would shoot from the top of the 200-foot-tall mast.

Tesla asked Kolman Czito, who had worked with him for many years in his laboratories in New York, to preside at the switch-board through which current was brought into the laboratory from the powerhouse of the Colorado Springs Electric Company by an overhead transmission line two miles long.

"when I give you the word," said Tesla to Czito, "you close the switch for one second--not longer."

The inventor took a position near the door of the laboratory from which he could view the giant coil in the center of the great barnlike room--but not too close to it, for a stray bolt of his own lightning might inflict a painful burn. From the point where he stood he could look upward toward the open roof and see the three-foot copper ball on top of the slender 200-foot mast that had its base in the center of the cagelike secondary coil. A quick visual survey of the situation, and Tesla gave the signal--"Now."

Czito jammed home the switch and as quickly pulled it out. In that brief interval the secondary coil was crowned with a mass of hairlike electrical fire, there was a crackling sound in various parts of the room and a sharp snap far overhead.

"Fine," said Tesla, "the experiment is working beautifully. we will try it again in exactly the same way. Now!"

Again Czito jammed home the switch for a second and opened it. Again the plumes of electrical fire came from the coil, minor sparks crackled in all parts of the laboratory and the very sharp snap came through the open roof from far overhead.

"This time," said Tesla, "I am going to watch the top of the mast from the outside. when I give you the signal I want you to close the switch and leave it closed until I give you the signal to open it." So saying, he started for the near-by open door.

Reaching a point outside from which he could see the copper ball on top of the needlelike mast, Tesla called through the door, "Czito, close the switch--Now!"

Czito again jammed the switch closed and jumped back--but held his arm extended to yank open the blades quickly should he receive an emergency signal. Nothing much had happened on the quick-contact closing, but now the apparatus would be given an opportunity to build up its full strength and no one knew what to expect. He knew that the apparatus would draw a very heavy current through a primary coil that looked like a "short circuit," and he knew that short circuits could be very destructive if the current was allowed to continue to flow. The switchboard could become a scene of interesting activity if any thing let go. Czito expected the quick flash and explosive blast of a short circuit a second or two after the switch was closed. Several seconds passed with no short circuit.

As soon as the switch was closed there came again the same crackling sound, the same snap high in the air that he had heard before. Now it was followed by a tremendous upsurge of sound. The crackling from the coil swelled into a crescendo of vicious snaps. From above the roof the original staccato snap was followed by a sharper one--and by another that was like the report of a rifle. The next was still louder. They came closer together like the rattle of a machine gun. The bang high in the air became tremendously louder; it was now the roar of a cannon, with the discharges rapidly following each other as if a gigantic artillery battle was taking place over the building. The sound was terrifying and the thunder shook the building in most threatening fashion.

There was a strange ghostly blue light in the great barnlike structure. The coils were flaming with masses of fiery hair. Everything in the building was spouting needles of flame, and the place filled with the sulphurous odor of ozone, fumes of the sparks, which was all that was needed to complete the conviction that hell was breaking loose and belching into the building.

As Czito stood near the switch he could feel and see the sparks jump from his fingers, each pricking like a needle stuck into his flesh. He wondered if he would be able to reach for the switch and turn off the power that was creating this electrical pandemonium--would the sparks

become longer and more powerful if he approached the switch? Must this head-splitting racket go on forever? It's getting worse, that tremendous ear-wrecking bang, bang, bang overhead. why doesn't Tesla stop it before it shakes down the building? Should he open the switch of his own accord? Maybe Tesla has been hit, perhaps killed, and can't give orders to open the switch!

It seemed to Czito that the demonstration had been going on for an hour but as a matter of fact it had lasted thus far for only a minute; nevertheless, a tremendous amount of activity had been crowded into that short space of time.

Outside stood Tesla, properly attired in cutaway coat and black derby hat for the auspicious occasion, his slender six-foot-two figure bearing signs of close relationship to the mastlike rod sticking out of his bizarre barnlike structure. His height was increased by a one-inch-thick layer of rubber on the soles and heels of his shoes, used as electrical insulation.

As he gave the switch-closing "Now" signal to Czito, he turned his eyes heavenward to the ball on top of the mast. He had hardly spoken when he saw a short hairlike spark dart from the ball. It was only about ten feet long, and thin. Before he had time to be pleased, there was a second and a third and a fourth spark, each longer, brighter and bluer than its predecessor.

"Ah!" ejaculated Tesla, forgetting to close his mouth that was widely opened for a shout. He clenched his hands for joy and raised them skyward toward the top of the mast.

More sparks! Longer and longer! Ten, twenty, thirty, forty, fifty, sixty, seventy, eighty feet. Brighter and bluer! Not thread-like sparks now but fingers of fire. Wriggling rods of flame that lashed viciously into the heavens. The sparks were now as thick as his arm as they left the ball.

Tesla's eyes almost popped out of his head as he saw full-fledged bolts of lightning darting into the air, accompanied by a barrage of tremendous crashes of thunder. Those lightning bolts were now half again the length of the building, more than 135 feet long, and the thunder was being heard in Cripple Creek fifteen miles away.

Suddenly--silence!

Tesla rushed into the building.

"Czito! Czito! Czito! why did you do that? I did not tell you to open the switch. Close it again quickly!"

Czito pointed at the switch. It was still closed. He then pointed at the voltmeter and ammeter on the switchboard. The needles of both of them registered zero.

Tesla sized up the situation instantly. The incoming wires carrying power to the laboratory were "dead."

"Czito," he snapped, "call up the powerhouse quickly. They must not do that. They have cut off my power".

The telephone call was put through to the powerhouse. Tesla grabbed the phone and shouted into it:

"This is Nikola Tesla. you have cut off my power! you must give me back power immediately! you must not cut off my power."

"Cut off your power, nothing," came the gruff reply from the other end of the line. "you've thrown a short circuit on our line with your blankety-blank-blank experiments and wrecked our station. you've knocked our generator off the line and she's now on fire. you won't get any more power!"

Tesla had built his apparatus substantially, so that it would be able to carry the tremendously heavy currents he expected to draw off the line. while his own equipment was able to stand what amounted to a heavy short circuit, he had overloaded the generator at the Colorado Springs Electric Company powerhouse, which tried manfully to carry the added burden--but the heavy surge of current was too much for the dynamo that was not designed to stand such heavy overloads. Its wires became hotter and hotter, and finally the insulation took fire and the copper wire in the armature coils melted like wax, opening its circuits so that it ceased to generate electricity.

The powerhouse had a second, standby, generator which was started up in a short time. Tesla was insistent that he be supplied with current from this machine as soon as it was running, but his demand was refused. In the future, he was told, he would be supplied with current from a dynamo

operated independently from the one supplying the Company's regular customers. The independent dynamo, he was told, would be the one that was already burned out--and he would get no service until it was repaired. Tesla offered to pay the cost of an extra-special rush job on the repairs if he were permitted to handle the work. Alternating-current dynamos were no mystery to him. Taking his workers from the laboratory to the powerhouse he soon had the repair job under way, and in less than a week the dynamo was again operating.

A lightning stroke produces its spectacular pyrotechnics and earthvibrating effects with less than a nickel's worth of electricity--at a five-cent-a-kilowatt hour rate, which is somewhat less than the average household rate for current. It consists of tremendously heavy currents, many thousands of amperes at millions of volts, but it lasts only a few millionths of a second. If supplied with this "nickel's worth" of current continuously, the lightning flash would last indefinitely.

Tesla, in his Colorado Springs laboratory, was pumping a steady flow of current worth, at the above rate, about $15.00 an hour into the earth. In an hour he charged the earth with several hundred times as much electrical energy as is contained in a single lightning stroke. Owing to resonance phenomena, he could build up electrical effects in the earth greatly exceeding those of lightning since it was only necessary, once resonance was established, to supply energy equal to frictional losses, in order to maintain this condition.

In describing his work with the giant oscillator, Tesla, using conservative estimates of his results, stated in his article in the Century Magazine of June, 1900:

However extraordinary the results shown may appear, they are but trifling compared with those attainable by apparatus designed on these same principles. I have produced electrical discharges the actual path of which, from end to end, was probably more than 100 feet long; but it would not be dificult to reach lengths 100 times as great.

I have produced electrical movements occurring at the rate of approximately 100,000 horsepower, but rates of one, five or ten million horsepower are easily practicable. In these

experiments effects were developed incomparably greater than ever produced by any human agencies, and yet these results are but an embryo of what is to be.

The method used by Tesla to set the earth in electrical oscillation is the electrical counterpart of the mechanical device previously described, the plunger bobbing up and down at the right rhythm that created the stationary waves in the water.

Tesla used a stream of electrons which were pumped into and drawn out of the earth at a rapid rhythmic rate. At the time the experiments were made, the electron still was not known to be the fundamental atom of electricity, so the operation was spoken of simply as the flow of electricity.

The pumping operation was carried on at a rate of 150,000 oscillations per second. These would produce electrical pulsations with a wavelength of 2,000 meters (about 6,600 feet).

when the moving waves expanded outward from Colorado Springs, they traveled in all directions in ever increasing circles until they passed over the bulge of the earth, and then in ever smaller circles and with increasing intensity converged on the diametrically opposite point of the earth, a trifle to the west of the two French Islands, Amsterdam and St. Paul, in the area between the Indian and Antarctic Oceans midway between the southern tip of Africa and the southwest corner of Australia. Here a tremendous electrical south pole was built up, marked by a wave of great amplitude that rose and fell in unison with Tesla's apparatus at its north pole in Colorado Springs. As this wave fell, it sent back an electrical echo which produced the same effect at Colorado Springs. Just as it arrived back at Colorado Springs, the oscillator was working to build up a wave that would re-enforce it and send it back more powerfully than before to the antipode to repeat the performance.

If there were no losses in this operation--if the earth were a perfect electrical conductor, and there were no other sources of resistance--this resonance phenomenon would build up to a destructive action of gigantic proportions, even with the charging source of only about 300 horsepower which Tesla used. Voltages of gigantic magnitudes would be built up. Charged particles of matter

would be hurled outward from the earth with vast energies, and eventually even the solid matter of the earth would be affected and the whole planet disintegrated. Pure resonance, however, is not attainable. Tesla frequently stressed the fortunate nature of this fact; for otherwise disastrous results could be produced by small amounts of energy. The electrical resistance of the globe would prevent the attainment of pure resonance; but practical resonance can be attained with safety by supplying continuously the amount of energy lost in resistance--and this supplies perfect control of the situation.

with the earth set in electrical oscillation, a source of energy is provided at all spots on the earth. This could be drawn off and made available for use by a suitable simple apparatus which would contain the same elements as the tuning unit in a radio set, but larger (a coil and a condenser), a ground connection and metal rod as high as a cottage. Such a combination would absorb, at any point on the earth's surface, energy from the waves rushing back and forth between the electrical north and south poles created by the Tesla oscillators. No other equipment would be needed to supply light to the home, provided with Tesla's simple vacuum-tube lamps, or to produce heating effects. (For the operation of ordinary-type motors, a frequency changer would be needed. Tesla, indeed, developed ironless motors that would operate on high-frequency currents, but they could not compete in efficiency with motors operated on low-frequency currents. Frequency transformation, however, is now a very practical operation.)

The apparatus that Tesla used to charge the earth is very simple in principle. In its elementary form it consists of a circuit containing a large coil and condenser of the correct electrical dimensions to give it the desired frequency of oscillation, a source of electric current for energizing the circuit, and a step-up transformer, also tuned, for increasing the voltage.

The current of a few hundred volts obtained from the powerhouse was stepped up by an ordinary iron box transformer to more than 30,000 volts and at this potential was fed into a condenser which, when filled, discharged into the coil connected across its terminals. The rate of the back-and-forth surge of current from condenser into coil and coil back to condenser, in endless repetition, is determined by the capacity of the condenser for holding

current and the length, or inductance, of the coil through which the discharge must travel. An arc between the joint terminals of condenser and coil completed the free oscillating path of the high-frequency current.

In an oscillating circuit the current is at zero value at the start of each cycle, rises to a high value and drops to zero again at the end of each half cycle. The voltage does the same. Both build up to high values at the midpoint of each half cycle.

The coil through which the current flows is surrounded by a magnetic field produced by the current. with heavy current flows, these fields can become very extensive and of high intensity, particularly at the midpoint in each half cycle.

The primary coil, or energizing circuit of Tesla's oscillator, consisted of a number of turns of heavy wire mounted on a circular fence eighty feet in diameter in the great hall of his laboratory. In the space within this fenced enclosure the magnetic field built up to a crescendo of intensity with each half cycle of the current in the primary coil. As the magnetic circles of force moved to the center of the enclosure, they became more concentrated and built up a high density of energy in space in this region.

Centered in this area was another coil perfectly tuned to vibrate electrically in resonance with the crescendo of energy in which it was immersed 300,000 times per second. This coil--about ten feet in diameter, consisting of nearly one hundred turns on a cagelike frame about ten feet high--in responding resonantly, built up potentials with maximum values of more than 100,000,000 volts. No scientist has ever succeeded in building up currents with even one tenth of this potential since that time.

when the first surge of magnetic energy crashed into this coil, it caused a downward avalanche of electrons from the coil into the earth, thereby inflating the earth electrically and raising its potential. The next surge of magnetic energy was of the opposite polarity and caused a tidal wave of electrons from the earth to rush through the coil and upward to the terminal of the coil, which was the metal ball mounted on the mast 200 feet high.

The downward flood of electrons was spread over the wide area of the earth but the return upward flood was

concentrated on a small metal ball on top of the mast, upon which tremendously high potentials developed. The electrons on the ball were under explosive electrical pressure and were forced to escape. They made a spearpoint of attack on the surrounding air, broke a small opening, and through this rushed uncounted billions of billions of electrons, their mad stampede rendering their path through the air incandescent for a distance of scores of feet--in other words, producing a flash of lightning.

Having thus succeeded in making the earth oscillate as if it were a piece of laboratory apparatus, Tesla would now proceed to test the practical applications of his unique method of worldwide power transmission. (In describing the mode of transmission of his oscillating currents through the earth, Tesla claimed the path of the discharge was from his station directly through the center of the earth and in a straight line to the antipode, the return being by the same route, and that the current on this straight-line path traveled at its normal velocity--the speed of light. This flow, he declared, produced an accompanying surface flow of current, which was in step at the starting point and when they rejoined at the antipode; and this necessitated higher velocities in flowing over the surface of the earth. The surface velocities would be infinite at each of the antipodes, and would decrease rapidly until at the equatorial region of this axis it would travel at the normal velocity of the currents.)

The full story of Tesla's accomplishments at Colorado Springs has never been told and never will be told. He carried the records, engraved on his almost infallible memory, with him when he died. Fritz Lowenstein, a competent electrical engineer, interested in high-frequency currents, was his assistant at Colorado Springs. Tesla, however, took neither Lowenstein nor anyone else into his confidence.

It was not necessary for Tesla to write the detailed records of experiments which scientists and engineers make, as routine, of their laboratory tests. He possessed a most remarkable memory, supplemented by his strange power of visualizing again, in their full aspects of reality, any past events. He needed no reference books, for he could quickly derive any desired formula from basic concepts; and he even carried a table of logarithms in his head. For these reasons there is a great lack of written records on

his experiments, and what is recorded is mostly of a minor nature.

Fundamental facts of great importance that he intended to develop later in a practical manner were stored in the archives of his mind to await the time when he would be able to present a practical working model of the inventions based on his discoveries. He had no fear that he would be anticipated by others because he was so far in advance of his contemporaries that he could safely bide his time for developing his ideas.

It was Tesla's intention to make the development of his discoveries a one-man job. He was completely confident, at this time, of his ability to live a century and a quarter, and to be actively engaged in creative experimental work up to at least his one-hundredth birthday, at which time he would give serious thought to the task of writing his biography and a complete record of his experimental work. Up to almost his eightieth year he adhered to this plan without doubt as to its ultimate consummation.

As a result of this most unfortunate design, technical details are lacking concerning the principal discoveries made at Colorado Springs. By piecing together the fragmentary material published in a number of publications, however, it appears evident that Tesla, in addition to experiments with his gigantic current movements, as a means of establishing world-wide broadcasts and making a number of detectors for such use, tested his power transmission system at a distance of twenty-six miles from his laboratory and was able to light two hundred incandescent lamps, of the Edison type, with electrical energy extracted from the earth while his oscillator was operating. These lamps consumed about fifty watts each; and if two hundred were used in the test bank, the energy consumed would be 10,000 watts, or approximately thirteen horsepower.

Transmission of thirteen horsepower wirelessly through the earth for a distance of twenty-six miles can be accepted as a very adequate demonstration of the practicability of Tesla's plan. He claimed an efficiency of higher than 95 per cent for this method of energy transmission; so he could, undoubtedly, with a 300 horsepower oscillator, operate more than a dozen such test demonstrations simultaneously anywhere on the globe. with respect to the latter point he stated, "In this new system it matters

little--in fact, almost nothing--whether the transmission is effected at a distance of a few miles, or of a few thousand miles."

"while I have not as yet," he stated in the Century article of June, 1900, "actually effected a transmission of a considerable amount of energy, such as would be of industrial importance, to a great distance by this new method, I have operated several model plants under exactly the same conditions which will exist in a large plant of this kind, and the practicability of the system is thoroughly demonstrated."

Tesla was insistent, in his latter decades, on the existence, the actuality, the importance and availability of many undisclosed discoveries which he made at Colorado Springs. The author urged upon Tesla two or three times the desirability of making a disclosure, against the ever present danger of an accident that might cause them to be lost to the world; and when the inventor was unimpressed by this possibility, he was asked to permit the author to do something that would bring about their practical development. Tesla was courteously appreciative of the interest manifested, but he was very emphatic in his insistence that he would handle his own affairs as he saw fit, and that he expected shortly to have adequate funds to develop his inventions.

Tesla returned to New York, in the fall of 1899, broke once more, but with the knowledge that his efforts had greatly enriched humanity with important scientific discoveries. yet even more important was the new attitude his work had made possible: man had achieved a method through which he could control his gigantic planet, could look upon this heavenly body from the godlike vantage point in which he could view it as a piece of laboratory apparatus to be manipulated as he willed.

The pictures which Tesla brought back to New York showing the gigantic electrical discharges from his oscillator, and the stories he related of his experiences, created a tremendous impression in his circle of friends. It was then that Robert Underwood Johnson, one of the editors of the Century Magazine, at whose home in Madison Avenue, in the exclusive Murray Hill section, Tesla was a frequent and informal visitor, requested the inventor to write an article telling of his accomplishments.

when the article was written, Johnson returned it, telling Tesla he had served a mess of cold philosophical stones instead of a dish of hot throbbing facts. The inventor had made but scant reference to his recent astounding accomplishments, but developed instead a philosophical system in which the progress of humanity was viewed as purely a mechanical process, activated by the sources of energy available. Three times the article went back to Tesla and was as many times rewritten, despite the high literary quality of the work on each occasion.

The article, which carried the title "The Problem of Increasing Human Energy," created a sensation. Among those whose interest it aroused was J. Pierpont Morgan--a most fortunate circumstance for Tesla. The great financier had a soft spot for geniuses, and Tesla was a perfect example of the species.

Morgan the financier was famous, but Morgan the philanthropist, a greater personality, was to the general public non-existent, so carefully guarded against publicity were his benefactions. In this he was not always completely successful for there are, of necessity, two parties to a benefficence, the giver and the receiver; and the pride and gratitude of the latter can develop into a weak spot in the shell of secrecy.

Tesla was invited to Morgan's home and quickly became a favorite with the family. His record of accomplishment which promised still greater achievements in the future, his pleasant personality, his high moral standards of conduct, his celibate manner of life and his manner of subordinating himself to his work, his boylike enthusiasm, were factors that caused him to be admired not only by Morgan but by all others who knew him well.

Morgan made inquiries of Tesla concerning his financial structure. There were, in those days, a limited number of strong financial groups who were playing a terrestrial game of chess with the world's economic resources; the discoveries of a genius like Tesla might well have a profound effect on the destinies of one or more of these groups, and it would be well for an operator in this field to know more of the inventor's commitments. Undoubtedly, it was a source of surprise and satisfaction to Morgan when he

learned that Tesla was a lone operator and now entirely without funds needed to carry on his researches.

Morgan knew well the inestimable value of Tesla's polyphase alternating-current system. The Niagara development was a Morgan enterprise, and gigantic plans were being builded on its already proven success. The man who laid the scientific and engineering foundation for this new and profitable industrial electrical era was broke and engaged in developing a new source of power distribution. He had supplanted Edison's half-mile power pygmy with a giant having a thousand-mile range, and now he was working on a system which experiments had shown could distribute power wirelessly to the ends of the earth with but a small fraction of the losses of the Edison system in distributing power by wire for half a mile, and could even send current around the earth cheaper than his own alternating-current system could distribute it at a distance of one hundred miles. The economic implications of this development staggered the imagination. what effect would it have on the chess game being played by the world's financial groups?

would the new wireless-distribution-of-power system fit into the existing economic and financial structure? Could it be usefully applied without derangements of greater magnitude than the benefits it would produce? If it were adopted for development, who would be best suited to control it? Could it be controlled in a practical way when any spot on earth would be an outlet for an unlimited reservoir of power for anyone who cared to tap it with a simple device? How could compensation be collected for the service rendered?

These were some of the most obvious aspects of Tesla's world power system that would instantly present themselves to the practical mind of Morgan. In addition, Tesla was proposing a world-wide broadcasting system for distributing news, entertainment, knowledge, and a host of other interesting items. Morgan could well understand the practical aspects of wireless communication in which a charge could be made for transmitting messages from point to point, which was a part of the Tesla system--but, to the inventor's way of thinking, only a minor part compared to the more important broadcasting and power-distribution systems.

A Morgan would understand that ingenious minds could work out some method for placing such world-wide services on a practical profit-paying basis; but this whole new Tesla development had a fantastical aspect that was upsetting to so-called "practical" minds not accustomed to thinking first-magnitude thoughts. The new system might prove more important than the polyphase system which went as a record-breaking bargain to Westinghouse for $1,000,000. Westinghouse was then the most powerful competitor of the Edison system which Morgan had backed, and particularly of the General Electric Company whose financing Morgan had arranged. Although Westinghouse secured a monopoly, means were found for causing him to share it, by a license agreement, with the General Electric Company, so the Morgan company had equal opportunities to exploit the rich market.

History might now be repeating itself with the same inventor, who now had a hypersuperpower system to supplant his own superpower system. In this case Morgan could place himself in a position to seize the monopoly of world power.

The group holding a monopoly control over such a system could develop it, or not develop it, as it saw fit; it could be developed to produce a profit by supplanting or supplementing the satisfactory wire distribution system, or it could be put on the shelf to prevent it from interfering with the existing system. A monopoly of it could prevent any other group from securing it and using it as a club to force concessions from those controlling existing enterprises. Ownership of the Tesla world-power and world-broadcasting patents might well prove an extremely profitable investment even if a very high price were paid for them.

But there was also a more subtle viewpoint. without a strong backing by a powerful source of capital, a world-wide system such as Tesla proposed could never be brought into operating existence. If a powerful group had an opportunity to get in on the ground floor and secure monopoly control and failed to do so, and let it become apparent that this was done intentionally, the effect of such a decision could easily result in scaring off any other groups and effectually preventing anyone from ever backing the system.

Morgan, however, in his contacts with Tesla, brought no commercial or practical aspects into the situation. His

interest was entirely that of a patron seeking to aid a genius to express his creative talents. He made gifts to Tesla to which there were no strings attached. The inventor could use the money as he saw fit. No definite information is available as to the amount of those contributions, but an authoritative source, close to Tesla, fixes the amount which he received within a very short period at $150,000. Later contributions, spread over a long period of years, are believed to have brought the total to double this amount.

Tesla made no secret of Morgan's support. He stated, in the article in the Electrical world and Engineer, published March 5, 1904, describing his wireless power work up to that time:

"For a large part of the work which I have done so far I am indebted to the noble generosity of Mr. J. Pierpont Morgan, which was all the more welcome and stimulating, as it was extended at a time when those, who have since promised most, were the greatest of doubters."

when Morgan made his first contribution, the rumor got into circulation that he was financially interested in the enterprise upon which Tesla now embarked. The resulting situation contained some elements of usefulness for Tesla because of the tremendous prestige of the financier. when, however, Tesla later found himself critically in need of funds, and it became apparent that Morgan was not financially involved in the project and apparently was not coming to the rescue of the inventor, then the reaction set in and the situation became distinctly and definitely unsatisfactory.

In 1900, however, Tesla had $150,000 on hand and a gigantic idea to be put into operation. The world-shaking superman, riding his tidal wave of fame and popularity, set to work.

THE year 1900 marked to Tesla not only the opening of a new century but also the beginning of the world-superpower and radio-broadcasting era. With the encouragement of J. P. Morgan to spur him on--if he could accommodate any more spurring than his own inner drive furnished--and with $150,000 in cash from the same source, he was set to embark

upon a gigantic venture, the building of a world wireless-power and a world broadcasting station.

The cash on hand would be totally inadequate to finance the project to completion, but this did not deter him from making a start. He needed a laboratory both to replace the Houston Street establishment, which had become entirely inadequate, and to include equipment of the type employed at Colorado Springs, but designed for use in the actual world-broadcasting process. The location was determined as the result of an arrangement he made with James S. Warden, manager and director of the Suffolk County Land Company, a lawyer and banker from the West who had acquired two thousand acres of land at Shoreham, in Suffolk County, Long Island, about sixty miles from New York. The land was made the basis of a real-estate development under the name Wardencliff.

Tesla visualized a power-and-broadcasting station which would employ thousands of persons. He undertook the establishment, eventually, of a Radio City, something far more ambitious than the enterprise in Rockefeller Center in New York which bears this name today. Tesla planned to have all wavelength channels broadcast from a single station, a project which would have given him a complete monopoly of the radio-broadcasting business. What an opportunity near-sighted businessmen of his day overlooked in not getting in on his project! But in that day Tesla was about the only one who visualized modern broadcasting. Everyone else visualized wireless as being useful only for sending telegraphic communications between ship and shore and across the ocean.

Mr. Warden saw possibilities of a sort in Tesla's plan, however, and offered him a tract of two hundred acres, of which twenty acres were cleared, for his power station, with the expectation that the two thousand men who would shortly be employed in the station would build homes on convenient sites in the remainder of the 2,000-acre tract. Tesla accepted.

Stanford White, the famous designer of many churches and other architectural monuments throughout the country, was one of Tesla's friends. He now disclosed to the famous architect his vision of an industrial "city beautiful" and sought his co-operation in realizing his dream. Mr. White was enthusiastic about the idea and, as his contribution to

Tesla's work, offered to underwrite the cost of designing the strange tower the inventor sketched, and all of the architectural work involved in the general plan for the city. The actual work was done by W. D. Crow, of East Orange, N. J., one of Mr. White's associates, who later became famous as a designer of hospitals and other institutional buildings.

It was a fantastic-looking tower, with strange structural limitations, which Mr. Crow found himself designing. Tesla required a tower, about 154 feet high, to support at its peak a giant copper electrode 100 feet in diameter and shaped like a gargantuan doughnut with a tubular diameter of twenty feet. (This was later changed to a hemispherical electrode.)

The tower would have to be a skeletonized structure, built almost entirely of wood, metal to be reduced to an utter minimum and any metal fixtures employed to be of copper. No engineering data were available on wood structures of this height and type.

The structure Tesla required had a large amount of "sail area," or surface exposed to wind, concentrated at the top, creating stresses that had to be provided for in a tower that itself possessed only limited stability. Mr. Crow solved the engineering problems and then the equally diffcult task of incorporating esthetic qualities in such an edifice.

When the design was completed another diffculty was encountered. None of the well-known builders could be induced to undertake the task of erecting the tower. A competent framer, associated with Norcross Bros., who were a large contracting firm in those days, finally took over the contract, although he, too, expressed fears that the winter gales might overturn the structure. (It stood, however, for a dozen years. When the Government, for military reasons decided it was necessary to remove this conspicuous landmark during the First World War, heavy charges of dynamite were necessary in order to topple it, and even then it remained intact on the ground like a fallen Martian invader out of Wells' War of the Worlds.) The tower was completed in 1902, and with it a large low brick building more than 100 feet square which would provide quarters for the powerhouse and laboratory. While the structures were being built, Tesla commuted every day

from the Waldorf-Astoria to Wardencliff, arriving at the near-by Shoreham station shortly after eleven am and remaining until three-thirty. He was always accompanied by a man servant, a Serbian, who carried a heavy hamper filled with food. When the laboratory transferred from Houston Street was in full operation at Wardencliff, Tesla rented the Bailey cottage near the Long Island Sound shore and there made his home for a year.

The heavy equipment, the dynamos and motors, that Tesla desired for his plant were of an unusual design not produced by manufacturers, and he encountered many vexatious delays in securing such material. He was able to carry on a wide range of high-frequency current and other experiments in his new laboratory, but the principal project, that of setting up the worldwide broadcasting station, lagged. Meanwhile, he had a number of glass blowers making tubes for use in transmitting and receiving his broadcast programs. This was a dozen years before De Forest invented the form of radio tube now in general use. The secret of Tesla's tubes died with him.

Tesla seemed to be entirely fearless of his high-frequency currents of millions of volts. He had, nevertheless, the greatest respect for the electric current in all forms, and was extremely careful in working on his apparatus. When working on circuits that might come "alive," he always worked with one hand in his pocket, using the other to manipulate tools. He insisted that all of his workers do likewise when working on the 60-cycle low-frequency alternating-current circuits, whether the potential was 50,000 or 110 volts. This safeguard reduced the possibility of a dangerous current finding a circuit through the arms across the body, where there was chance that it might stop the action of the heart.

In spite of the great care which he manifested in all of his experimental work, he had a narrow escape from losing his life at the Wardencliff plant. He was making experiments on the properties of small-diameter jets of water moving at high velocity and under very high pressures, of the order of 10,000 pounds per square inch. Such a stream could be struck by a heavy iron bar without the stream being disrupted. The impinging bar would bounce back as if it had struck another solid iron bar--a strange property for a mechanically weak substance like water. The cylinder holding the water under high pressure was a heavy

one made of wrought iron. Tesla was unable to secure a wrought-iron cap for the upper surface, so he used a heavier one of cast iron, a more brittle metal. One day when he raised the pressure to a point higher than he had previously used, the cylinder exploded. The cast-iron cap broke and a large fragment shot within a few inches of his face as it went on a slanting path upward and finally crashed through the roof. The high-pressure stream of water had peculiar destructive effects on anything with which it came in contact, even tough, strong metals. Tesla never revealed the purpose or the results of these high-pressure experiments.

Tesla's insistence on the utmost neatness in his laboratory almost resulted in a tragedy through a case of thoughtlessness on the part of an assistant. Arrangements were being made for installing a heavy piece of machinery which was to be lag bolted to the thick concrete floor. Holes had been drilled in the concrete. The plan called for pouring molten lead into these holes and screwing the heavy bolts into the metal when it cooled. As soon as the holes were drilled, a young assistant starting cleaning up the debris. He not only swept up the stone chips and dust: he got a mop and thoroughly washed that area of the floor, thoughtlessly letting some of the water get into the holes. He then dried the floor. In the meantime Tesla and George Scherff, who was his financial secretary but also served in any way in which he could be helpful, were melting the lead which would hold the lag screws in the holes in the floor. Scherff took the first large ladleful of lead from the furnace and started across the laboratory to where the holes had been drilled, followed shortly by Tesla bearing another ladle.

Scherff bent down--and as he poured the hot liquid metal into one of the holes an explosion followed instantly. The molten lead was blown upward into his face in a shower of searing hot drops of liquid metal. The water which the assistant used to swab the floor had settled into the holes and, when the melted lead come in contact with it, it was changed to steam which shot the lead out of the hole like a bullet out of the barrel of a rifle. Both men were showered with drops of hot metal and dropped their ladles. Tesla, being several feet away, was only slightly injured; but Scherff was very seriously burned about the face and hands. Drops of the metal had struck his eyes and so severely

burned them that it was feared for a while that his sight could not be saved.

However, despite the almost unlimited possibilities for accidents in connection with the vast variety of experiments which Tesla conducted in totally unexplored fields, using high voltages, high amperages, high pressures, high velocities and high temperatures, he went through his entire career with only one accident in which he suffered injury. In that a sharp instrument slipped, entered his palm and penetrated through the hand. The accident to Scherff was the only one in which a member of his staff was injured, with the exception of a young assistant who developed X-ray burns. He had probably been exposed to the rays from one of Tesla's tubes which, unknown to Tesla and everyone else, had been producing them even before Roentgen announced their discovery. Tesla had given them another name and had not fully investigated their properties. This was probably the first case of X-ray burns on record.

Tesla was an indefatigable worker, and it was hard for him to understand why others were incapable of such feats of endurance as he was able to accomplish. He was willing to pay unusually high wages to workers who were willing to stick with him on protracted tasks but never demanded that anyone work beyond a reasonable day's labor. On one occasion a piece of long-awaited equipment arrived and Tesla was anxious to get it installed and operating as quickly as possible. The electricians worked through twenty-four hours, stopping only for meals, and then for another twenty-four hours. The workers then dropped out, one by one, picking out nooks in the building in which to sleep. While they took from eight to twelve hours' sleep, Tesla continued to work; and when they came back to the job Tesla was still going strong and worked with them through his third sleepless twenty-four-hour period. The men were then given several days off in which to rest up; but Tesla, apparently none the worse for his seventy-two hours of toil, went through his next day of experiments, accomplishing a total of eighty-four hours without sleep or rest.

The plant at Wardencliff was intended primarily for demonstrating the radio-broadcasting phase of his "World System"; the power-distribution station was to be built at Niagara Falls.

Tesla at this time published a brochure on his "World System" which indicates the remarkable state of advancement he had projected in the wireless art, now called radio, while other experimenters were struggling to acquire familiarity with rudimentary devices. At that time, however, his promises seemed fantastic. The brochure contained the following description of his system and his objectives:

The World System has resulted from a combination of several original discoveries made by the inventor in the course of long continued research and experimentation. It makes possible not only the instantaneous and precise wireless transmission of any kind of signals, messages or characters, to all parts of the world, but also the interconnection of the existing telegraph, telephone, and other signal stations without any change in their present equipment. By its means, for instance, a telephone subscriber here many call up any other subscriber on the Globe. An inexpensive receiver, not bigger than a watch, will enable him to listen anywhere, on land or sea, to a speech delivered, or music played in some other place, however distant. These examples are cited merely to give an idea of the possibilities of this great scientific advance, which annihilates distance and makes that perfect conductor, the Earth, available for all the innumerable purposes which human ingenuity has found for a line wire. One far reaching result of this is that any device capable of being operated through one or more wires (at a distance obviously restricted) can likewise be actuated, without artificial conductors and with the same facility and accuracy, at distances to which there are no limits other than those imposed by the physical dimensions of the Globe. Thus, not only will entirely new fields for commercial exploitation be opened up by this ideal method of transmission, but the old ones vastly extended.

The World System is based on the application of the following important inventions and discoveries:

1. The Tesla Transformer. This apparatus is, in the production of electrical vibrations, as revolutionary as gunpowder was in warfare. Currents many times stronger than any ever generated in the usual ways, and sparks over 100 feet long have been produced by the inventor with an instrument of this kind.

2. The Magnifying Transmitter. This is Tesla's best invention--a peculiar transformer specially adapted to excite the Earth, which is in the transmission of electrical energy what the telescope is in astronomical observation. By the use of this marvelous device he has already set up electrical movements of greater intensity than those of lightning and passed a current, suffcient to light more than 200 incandescent lamps, around the Globe.

3. The Tesla Wireless System. This system comprises a number of improvements and is the only means known for transmitting economically electrical energy to a distance without wires. Careful tests and measurements in connection with an experimental station of great activity, erected by the inventor in Colorado, have demonstrated that power in any desired amount can be conveyed clear across the Globe if necessary, with a loss not exceeding a few per cent.

4. The Art of Individualization. This invention of Tesla is to primitive tuning what refined language is to unarticulated expression. It makes possible the transmission of signals or messages absolutely secret and exclusive both in active and passive aspect, that is, non-interfering as well as non-interferable. Each signal is like an individual of unmistakable identity and there is virtually no limit to the number of stations or instruments that can be simultaneously operated without the slightest mutual disturbance.

5. The Terrestrial Stationary Waves. This wonderful discovery, popularly explained, means that the Earth is responsive to electrical vibrations of definite pitch just as a tuning fork to certain waves of sound. These particular electrical vibrations, capable of powerfully exciting the Globe, lend themselves to innumerable uses of great importance commercially and in many other respects.

The first World System power plant can be put in operation in nine months. With this power plant it will be practical to attain electrical activities up to ten million horsepower and it is designed to serve for as many technical achievements as are possible without undue expense. Among these the following may be mentioned:

1. Interconnection of the existing telegraph exchanges of offces all over the World;

2. Establishment of a secret and non-interferable government telegraph service;

3. Interconnection of all the present telephone exchanges or offces all over the Globe;

4. Universal distribution of general news, by telegraph or telephone, in connection with the Press;

5. Establishment of a World System of intelligence transmission for exclusive private use;

6. Interconnection and operation of all stock tickers of the world;

7. Establishment of a world system of musical distribution, etc.;

8. Universal registration of time by cheap clocks indicating the time with astronomical precision and requiring no attention whatever;

9. Facsimile transmission of typed or handwritten characters, letters, checks, etc.;

10. Establishment of a universal marine service enabling navigators of all ships to steer perfectly without compass, to determine the exact location, hour and speed, to prevent collisions and disasters, etc.;

11. Inauguration of a system of world printing on land and sea;

12. Reproduction anywhere in the world of photographic pictures and all kinds of drawings or records.

Thus, more than forty years ago, Tesla planned to inaugurate every feature of modern radio, and several facilities which have not yet been developed. He was to continue, for another twenty years, to be the only "wireless" inventor who had yet visualized a broadcasting service.

While at work on his Wardencliff radio-broadcasting plant, Tesla was also evolving plans for establishing his world power station at Niagara Falls. So sure was he of the

successful outcome of his efforts that he stated in a newspaper interview in 1903 that he would light the lamps of the coming international exposition in Paris with power wirelessly transmitted from the Falls. Circumstances, however, prevented him from making good this promise. His diffculties and his plans were outlined in a statement published in the Electrical World and Engineer, March 5, 1904:

The first of these central plants would have been already completed had it not been for unforeseen delays which, fortunately, have nothing to do with its purely technical features. But this loss of time, while vexatious, may, after all, prove to be a blessing in disguise. The best design of which I know has been adopted, and the transmitter will emit a wave complex of a total maximum activity of 10,000,000 horsepower, one percent of which is amply suffcient to "girdle the globe." This enormous rate of energy delivery, approximately twice that of the combined falls of Niagara, is obtainable only by the use of certain artifices, which I shall make known in due course.

For a large part of the work which I have done so far I am indebted to the noble generosity of Mr. J. Pierpont Morgan, which was all the more welcome and stimulating, as it was extended at a time when those, who have since promised most, were the greatest of doubters. I have also to thank my friend Stanford White, for much unselfish and valuable assistance. This work is now far advanced, and though the results may be tardy, they are sure to come.

Meanwhile, the transmission of energy on an industrial scale is not being neglected. The Canadian Niagara Power Company have offered me a splendid inducement, and next to achieving success for the sake of the art, it will give me the greatest satisfaction to make their concession financially profitable to them. In this first power plant, which I have been designing for a long time, I propose to distribute 10,000 horsepower under a tension of 10,000,000 volts, which I am now able to produce and handle with safety.

This energy will be collected all over the globe preferably in small amounts, ranging from a fraction of one to a few horsepower. One of the chief uses will be the illumination of isolated homes. It takes very little power to light a dwelling with vacuum tubes operated by high frequency

currents and in each instance a terminal a little above the roof will be suffcient. Another valuable application will be the driving of clocks and other such apparatus. These clocks will be exceedingly simple, will require absolutely no attention and will indicate rigorously correct time. The idea of impressing upon the earth American time is fascinating and very likely to become popular. There are innumerable devices of all kinds which are either now employed or can be supplied and by operating them in this manner I may be able to offer a great convenience to the whole world with a plant of no more than 10,000 horsepower. The introduction of this system will give opportunities for invention and manufacture such as have never presented themselves before.

Knowing the far reaching importance of this first attempt and its effect upon future development, I shall proceed slowly and carefully. Experience has taught me not to assign a term to enterprises the consummation of which is not wholly dependent on my own abilities and exertions. But I am hopeful that these great realizations are not far off and I know that when this first work is completed they will follow with mathematical certitude.

When the great truth accidentally revealed and experimentally confirmed is fully recognized, that this planet, with all its appalling immensity, is to electric current virtually no more than a small metal ball and that by this fact many possibilities, each baffling the imagination and of incalculable consequence, are rendered absolutely sure of accomplishment; when the first plant is inaugurated, and it is shown that a telegraphic message, almost as secret and non-interferable as a thought, can be transmitted to any terrestrial distance, the sound of the human voice, with all its intonations and inflections, faithfully and instantly reproduced at any point of the globe, the energy of a waterfall made available for supplying light, heat or motive power, anywhere on sea, or land, or high in the air--humanity will be like an ant heap stirred up with a stick: See the excitement coming.

The Niagara Falls plant was never built; and diffculties, soon enough, were encountered at the Wardencliff plant not only in securing desired equipment but also finances.

Tesla's greatest oversight was that he neglected to invent, so to speak, a device for making the unlimited quantities

of money that were necessary to develop his other inventions. As we have seen, he was utterly lacking in the phase of personality that made possible the securing of financial returns directly from his inventions. An individual with his ability could have made millions out of each of a number of Tesla's minor inventions. If he had taken the trouble, for example, to collect annual royalties on twenty or more different kinds of devices put out by as many manufacturers employing his Tesla coil for medical treatments, he would have had ample income to finance his World Wireless System.

His mind, however, was too fully occupied with fascinating scientific problems. He had, at times, nearly a score of highly skilled workmen constantly employed in his laboratory developing the electrical inventions he was continuing to make at a rapid rate. Armed guards were always stationed around the laboratory to prevent spying on his inventions. His payroll was heavy, his bank balance became dangerously low, but he was so immersed in his experimental work that he continuously put off the task of making an effort to repair his finances. He soon found himself facing judgments obtained by creditors on accounts upon which he could not make payments. He was forced, in 1905, to close the Wardencliff laboratory.

The fantastic tower in front of the laboratory was never completed. The doughnut-shaped copper electrode was never built because Tesla changed his mind and decided to have a copper hemisphere 100 feet in diameter and 50 feet high built on top of the 154-foot cone-shaped tower. A skeleton framework for holding the hemispherical plates was built, but the copper sheeting was never applied to it. The 300-horsepower dynamos and the apparatus for operating the broadcasting station were left intact, but they were eventually removed by the engineering firm that installed them and had not been paid.

Tesla opened an offce at 165 Broadway, in New York, where for a while he tried to contrive some means for reviving his project. Thomas Fortune Ryan, the well-known financier, and H. O. Havemeyer, the leading sugar refiner, aided him with contributions of $10,000 and $5,000 respectively. Instead of using these to open another laboratory, he applied them to paying off the debts on his now defunct World Wireless System. He paid off every penny due to every creditor.

When it became apparent that Tesla was in financial diffculties, many who had assumed that Morgan was financially involved as an investor in his project were disillusioned. When specific inquiries revealed that the great financier held no interest whatever in the enterprise, the rumor got into circulation that Morgan had withdrawn his support; and when no reason for such action could be learned the rumor expanded to carry the story that Tesla's system was impracticable. As a matter of fact, Morgan continued to make generous personal contributions to Tesla almost up to the time of his own death; and his son did so to a lesser extent for a short time.

Tesla made no effort to combat the growing rumors.

If Tesla could have tolerated a business manager, and had placed the development of his patents in the hands of a businessman, he could have established as early as 1896 a practical ship-to-shore, and probably a trans-oceanic wireless service; and these would have given him a monopoly in this field. He was asked to rig up a wireless set on a boat to report the progress of the international yacht race for Lloyds of London in 1896, but he refused the offer, which was a lucrative one, on the grounds that he would not demonstrate his system publicly on less than a world-wide basis because it could be confused with the amateurish efforts being made by other experimenters. If he had accepted this offer--and he could have met the requirements without the least technical diffculty--he undoubtedly would have found his interests diverted to some extent into a profitable commercial channel that might have made a vast, and favorable, change in the second half of his life.

Tesla, however, could not be bothered with minor, even though profitable projects. The superman, the man magnificent, was too strong in him. The man who had put industry on an electrical power basis, the man who had set the whole earth in vibration, could not fill a minor role of carrying messages for hire. He would function in his major capacity or not at all; he would be a Jupiter, never a Mercury.

George Scherff, who was engaged by Tesla as bookkeeper and secretary when he opened his Houston Street laboratory, was a practical individual. He managed, as far as was humanly possible, to keep the inventor disentangled in his contacts

with the business world. The more he knew Tesla, the better he liked him; and the more respect he had for his genius and his ability as an inventor, the more he became conscious of the fact that this genius was totally lacking in business ability.

Scherff was understandably distressed by a situation in which an enterprise was continuously spending money but never receiving any. He sought to protect as far as possible the $40,000 which Tesla received from Adams as an investment in the enterprise; and it was stretched to cover more than three years of great activity. Scherff wanted Tesla to work out plans for deriving an income from his inventions. Each new development which Tesla produced was studied by Scherff and made the basis for a plan for manufacture and sale of a device. Tesla uniformly rejected all the suggestions. "This is all small-time stuff," he would reply. "I cannot be bothered with it."

Even when it was pointed out to him that many manufacturers were using his Tesla coils, selling great numbers of them and making plenty of money out of them, his interest could not be aroused to enter this profitable field, nor to permit Scherff to arrange to have a sideline set-up which could be conducted without interfering with his research work. Nor could he be induced to bring suits to protect his invention and seek to make the manufacturers pay him royalties. He admitted, however, "If the manufacturers paid me twenty-five cents on each coil they sold I would be a wealthy man."

When Lloyds of London made their request that he set up a wireless outfit on a boat and report the international yacht races of 1896, by his new wireless system, and offered a generous honorarium, Scherff became insistent that the offer be accepted; and he urged Tesla to drop all other work temporarily and use the publicity he would get from the exploit as a means of floating a commercial company for transmitting wireless messages between ship and shore and across the ocean, pointing out that money would be made both in manufacturing the apparatus and in transmitting messages. The company, Scherff suggested, could be operated by managers to produce an income and Tesla could return to his work of making inventions and always have plenty of money to pay for the cost of his researches.

Scherff can look back today, as he sits on the porch of his Westchester home, and decide, through a retrospect of fifty years, that his plan was basically sound, with the Radio Corporation of America, its extensive manufacturing facilities and its worldwide communication system, its tremendous capital system and earnings, as evidence in support of the claim.

Tesla's reply to the proposal was, as usual, "Mr. Scherff, that is small-time stuff. I cannot be bothered with it. Just wait until you see the magnificent inventions I am going to produce, and then we will all make millions."

Tesla's millions never came. Scherff remained with him until the Wardencliff laboratory closed, owing to the lack of income, which he had been trying to circumvent. Scherff then established a lucrative connection with the Union Sulphur Co. but he still continued, without taking compensation, to give Tesla one day a week of his time and keep his business affairs disentangled as far as possible. Tesla was meticulously careful about paying everyone who performed any service for him, but this was counterbalanced by an active faculty for contracting bills without waiting to see if he had funds on hand to meet them. Money was an annoying anchor that always seemed to be dragging and hindering his research activities--something that was too mundane to merit the time and attention he should be giving to more important things.

Scherff, tight-lipped and businesslike, cannot be induced to talk of Tesla's affairs. If he were, instead, a loquacious philosopher, he might be induced to smile over the frailties of human nature, and the strange pranks which fate can play on individuals, as he thinks of Tesla, who, on the basis of a single invention, might have become an individual Radio Corporation of America and failed to do so, and who passed up equal chances on two hundred other inventions, any one of which could have produced a fortune. And for contrast, he can recall occasions in recent decades when it was necessary to make modest loans to the great Tesla to permit him to meet the need for current personal necessities. But Scherff refuses to permit any close questions or discussion about these incidents.

THIRTEEN

WHEN his World Wireless System project crashed, Tesla turned again to a project to which he had given considerable thought at the time he was developing his polyphase alternating-current system: that of developing a rotary engine which would be as far in advance of existing steam engines as his alternating-current system was ahead of the direct-current system, and which could be used for driving his dynamos.

All of the steam engines in use in powerhouses at that time were of the reciprocating type; essentially the same as those developed by Newcomer and Watt, but larger in size, better in construction and more effcient in operation.

Tesla's engine was of a different type--a turbine in which jets of steam injected between a series of disks produced rotary motion at high velocity in the cylinder on which these disks were mounted. The steam entered at the outer edge of the disks, pursued a spiral path of a dozen or more convolutions, and left the engine near the central shaft.

When Tesla informed a friend in 1902 that he was working on an engine project, he declared he would produce an engine so small, simple and powerful that it would be a "powerhouse in a hat." The first model, which he made about 1906, fulfilled this promise. It was small enough to fit into the dome of a derby hat, measured a little more than six inches in its largest dimension, and developed thirty horsepower. The power-producing performance of this little engine vastly exceeded that of every known kind of prime mover in use at that time. The engine weighed a little less than ten pounds. Its output was therefore three horsepower per pound. The rotor weighed only a pound and a half, and its light weight and high power yield gave Tesla a slogan which he used on his letterheads and envelopes--"Twenty horsepower per pound."

There was nothing new, of course, in the basic idea of obtaining circular motion directly from a stream of moving fluid. Windmills and water wheels, devices as old as history, performed this feat. Hero, the Alexandrian writer, about 200 bc, described, but he did not invent, the first turbine. It consisted of a hollow sphere of metal mounted on an axle, with two tubes sticking out of the sphere at a tangent to its surface. When water was placed in the sphere

and the device was suspended in a fire, the reaction of the steam coming out of the tubes caused the device to rotate.

Tesla's ingenious and original development of the turbine idea probably had its origin in that amusing and unsuccessful experiment he made when, as a boy, he tried to build a vacuum motor and observed its wooden cylinder turn slightly by the drag of the air leaking into the vacuum chamber. Later, too, when as a youth he fled to the mountains to escape military service and played with the idea of transporting mail across the ocean through an underwater tube, through which a hollow sphere was to be carried by a rapidly moving stream of water, he had discovered that the friction of the water on the walls of the tube made the idea impracticable. The friction would slow down the velocity of the stream of water so that excessive amounts of power would be required to move the water at a desired speed and pressure. Conversely, if the water moved at this speed, the friction caused it to try to drag the enclosing tube along with it.

It was this friction which Tesla now utilized in his turbine. A jet of steam rushing at high velocity between disks with a very small distance separating them was slowed down by the friction--but the disks, being capable of rotation, moved with increasing velocity until it was almost equal to that of the steam. In addition to the friction factor, there exists a peculiar attraction between gases and metal surfaces; and this made it possible for the moving steam to grip the metal of the disks more effectively and drag them around at high velocities. The first model which Tesla made in 1906 had twelve disks five inches in diameter. It was operated by compressed air, instead of steam, and attained a speed of 20,000 revolutions per minute. It was Tesla's intention eventually to use oil as fuel, burning it in a nozzle and taking advantage of the tremendous increase in volume, in the change from a liquid to burned highly expanded gases, to turn the rotor. This would eliminate the use of boilers for generating steam and give the direct process proportional increased effciency.

Had Tesla proceeded with the development of his turbine in 1889 when he returned from the Westinghouse plant, his turbine might perhaps have been the one eventually developed to replace the slow, big, lumbering reciprocating engines then in use. The fifteen years, however, which he

devoted to the development of currents of high potential and high frequency, had entailed a delay which gave opportunity for developers of other turbine ideas to advance their work to a stage which now was effective in putting Tesla in the status of a very late starter. In the meantime, turbines had been developed which were virtually windmills in a box. They consisted of rotors with small buckets or vanes around the circumference which were struck by the incoming steam jet. They lacked the simplicity of the Tesla turbine; but by the time Tesla introduced his type, the others were well entrenched in the development stage.

Tesla's first tiny motor was built in 1906 by Julius C. Czito, who operated at Astoria, Long Island, a machine shop for making inventor's models. He also built the subsequent 1911 and 1925 models of the turbine, and many other devices on which Tesla worked up to 1929. Mr. Czito's father had been a member of Tesla's staff in the Houston Street laboratories, from 1892 to 1899, and at Colorado Springs.

Mr. Czito's description of the first model is as follows:

The rotor consisted of a stack of very thin disks six inches in diameter, made of German silver. The disks were one thirty-second of an inch thick and were separated by spacers of the same metal and same thickness but of much smaller diameter which were cut in the form of a cross with a circular center section. The extended arms served as ribs to brace the disks.

There were eight disks and the edgewise face of the stack was only one-half inch across. They were mounted on the center of a shaft about six inches long. The shaft was nearly an inch in diameter in the mid section and was tapered in steps to less than half an inch at the ends. The rotor was set in a casing made in four parts bolted together.

The circular chamber where the rotor turned was accurately machined to allow a clearance of one sixty-fourth of an inch between the casing and the face of the rotor. Mr. Tesla desired an almost touching fit between the rotor face and the casing when the latter was turning. The large clearance was necessary because the rotor attained tremendously high speeds, averaging 35,000 revolutions per minute. At this speed the centrifugal force generated by

the turning movement was so great it appreciably stretched the metal in the rotating disks. Their diameter when turning at top speed was one thirty-second of an inch greater than when they were standing still.

A larger model was built by Tesla in 1910. It had disks twelve inches in diameter, and with a speed of 10,000 revolutions per minute it developed 100 horsepower, indicating a greatly improved effciency over the first model. It developed more than three times as much power at half the speed.

During the following year, 1911, still further improvements were made. The disks were reduced to a diameter of 9.75 inches and the speed of operation was cut down by ten per cent, to 9,000 revolutions per minute--and the power output increased by ten per cent, to 110 horsepower!

Following this test, Tesla issued a statement in which he declared:

I have developed 110 horsepower with disks nine and three quarter inches in diameter and making a thickness of about two inches. Under proper conditions the performance might have been as much as 1,000 horsepower. In fact there is almost no limit to the mechanical performance of such a machine. This engine will work with gas, as in the usual type of explosion engine used in automobiles and airplanes, even better than it did with steam. Tests which I have conducted have shown that the rotary effort with gas is greater than with steam.

Enthusiastic over the success of his smaller models of the turbine, operated on compressed air, and to a more limited extent by direct combustion of gasoline, Tesla designed and built a larger, double unit, which he planned to test with steam in the Waterside Station, the main powerhouse of the New York Edison Company.

This was a station which had originally been designed to operate on the direct-current system developed by Edison--but it was now operating throughout on Tesla's polyphase alternating-current system.

Now Tesla, invading the Edison sanctum to test a new type of turbine which he hoped would replace the types in use, was definitely in enemy territory. The fact that he had

Morgan backing, and that the Edison Company was a "Morgan company," had no nullifying effect on the Edison-Tesla feud.

This situation was not softened in any way by Tesla's method of carrying on his tests. Tesla was a confirmed "sun dodger"; he preferred to work at night rather than in the daytime. Powerhouses, not from choice but from necessity, have their heaviest demands for current after sunset. The day load would be relatively light; but as darkness approached, the dynamos started to groan under the increasing night load. The services of the workers at the Waterside Station were made available to Tesla for the setting up and tests of his turbine with the expectation that the work would be done during the day when the tasks of the workers were easiest.

Tesla, however, would rarely show up until five o'clock in the afternoon, or later, and would turn a deaf ear to the pleas of workers that he arrive earlier. He insisted that certain of the workers whom he favored remain after their five-o'clock quitting time on the day shift to work with him on an overtime basis. Nor did he maintain a conciliatory attitude toward the engineering staff or the offcials of the company. The attitudes, naturally, were mutual.

The turbine Tesla built for this test had a rotor 18 inches in diameter which turned at a speed of 9,000 revolutions per minute. It developed 200 horsepower. The overall dimensions of the engine were--three feet long, two feet wide and two feet high. It weighed 400 pounds.

Two such turbines were built and installed in a line on a single base. The shafts of both were connected to a torque rod. Steam was fed to both engines so that, if they were free to rotate, they would turn in opposite directions. The power developed was measured by the torque rod connected to the two opposing shafts.

At a formal test, to which Tesla invited a great many guests, he issued a statement in which he said, as reported, in part:

It should be noted that although the experimental plant develops 200 horsepower with 125 pounds at the supply pipe and free exhaust it could show an output of 300 horsepower

with full pressure of the supply circuit. If the turbine were compounded and the exhaust were led to a low pressure unit carrying about three times the number of disks contained in the high pressure element, with connection to a condenser affording 28.5 to 29.0 inches of vacuum the results obtained in the present high pressure machine indicate that the compounded unit would give an output of 600 horsepower without great increase of dimensions. This estimate is very conservative.

Tests have shown that when the turbine is running at 9,000 revolutions per minute under an inlet pressure of 125 pounds to the square inch and with free exhaust 200 brake horsepower are developed. The consumption under these conditions of maximum output is 38 pounds of saturated steam per horsepower per hour, a very high effciency when we consider that the heat drop, measured by thermometers, is only 130 B.T.U. and that the energy transformation is effected in one stage. Since three times the number of heat units are available in a modern plant with superheat and high vacuum the utilization of these facilities would mean a consumption of less than 12 pounds per horsepower hour in such turbines adapted to take the full drop.

Under certain conditions very high thermal effciencies have been obtained which demonstrate that in large machines based on this principle steam consumption will be much lower and should approximate the theoretical minimum thus resulting in the nearly frictionless turbine transmitting almost the entire expansive energy of the steam to the shaft.

It should be kept in mind that all of the turbines which Tesla built and tested were single-stage engines, using about one-third of the energy of the steam. In practical use, they were intended to be installed with a second stage which would employ the remaining energy and increase the power output about two or three fold. (The two types of turbines in common use each have a dozen and more stages within a single shell.)

Some of the Edison electric camp, observing the torque-rod tests and apparently not understanding that in such a test the two rotors remain stationary--their opposed pressures staging a tug of war measured as torque--circulated the story that the turbine was a complete failure; that this turbine would not be practical if its effciency had been

increased a thousand fold. It was stories such as these that contributed to the imputation that Tesla was an impractical visionary. The Tesla turbine, however, used as a single-stage engine, functioning as a pygmy power producer, in the form in which it was actually tested, anticipated by more than twenty-five years a type of turbine which has been installed in recent years in the Waterside Station. This is a very small engine, with blades on its rotor, known as a "topping turbine," which is inserted in the steam line between the boilers and the ordinary turbines. Steam of increased pressure is supplied, and the topping turbine skims this "cream" from the steam and exhausts steam that runs the other turbines in their normal way.

The General Electric Company was developing the Curtis turbine at that time, and the Westinghouse Electric and Manufacturing Company was developing the Parsons turbine; and neither company showed the slightest interest in Tesla's demonstration.

Further development of his turbine on a larger scale would have required a large amount of money--and Tesla did not possess even a small amount.

Finally he succeeded in interesting the Allis Chalmers Manufac-

turing Company of Milwaukee, builders of reciprocating engines and turbines, and other heavy machinery. In typical Tesla fashion, though, he manifested in his negotiations such a lack of diplomacy and insight into human nature that he would have been better off if he had completely failed to make any arrangements for exploiting the turbine.

Tesla, an engineer, ignored the engineers on the Allis Chalmers staff and went directly to the president. While an engineering report was being prepared on his proposal, he went to the Board of Directors and "sold" that body on his project before the engineers had a chance to be heard. Three turbines were built. Two of them had twenty disks eighteen inches in diameter and were tested with steam at eighty pounds pressure. They developed at speeds of 12,000 and 10,000 revolutions per minute, respectively, 200 horsepower. This was exactly the same power output as had been achieved by Tesla's 1911 model, which had disks of half this diameter and was operated at 9,000 revolutions

under 125 pounds pressure. A much larger engine was tackled next. It had fifteen disks sixty inches in diameter, was designed to operate at 3,600 revolutions per minute, and was rated at 500 kilowatts capacity, or about 675 horsepower.

Hans Dahlstrand, Consulting Engineer of the Steam Turbine Department, reports, in part:

We also built a 500 kw steam turbine to operate at 3,600 revolutions. The turbine rotor consisted of fifteen disks 60 inches in diameter and one eighth inch thick. The disks were placed approximately one eighth inch apart. The unit was tested by connecting to a generator. The maximum mechanical effciency obtained on this unit was approximately 38 per cent when operating at steam pressure of approximately 80 pounds absolute and a back pressure of approximately 3 pounds absolute and 100 degrees F superheat at the inlet.

When the steam pressure was increased above that given the mechanical effciency dropped, consequently the design of these turbines was of such a nature that in order to obtain maximum effciency at high pressure, it would have been necessary to have more than one turbine in series.

The effciency of the small turbine units compares with the effciency obtainable on small impulse turbines running at speeds where they can be directly connected to pumps and other machinery. It is obvious, therefore, that the small unit in order to obtain the same effciency had to operate at from 10,000 to 12,000 revolutions and it would have been necessary to provide reduction gears between the steam turbine and the driven unit.

Furthermore, the design of the Tesla turbine could not compete as far as manufacturing costs with the smaller type of impulse units. It is also questionable whether the rotor disks, because of light construction and high stress, would have lasted any length of time if operating continuously.

The above remarks apply equally to the large turbine running at 3,600 revolutions. It was found when this unit was dismantled that the disks had distorted to a great extent and the opinion was that these disks would ultimately have failed if the unit had been operated for any length of time.

The gas turbine was never constructed for the reason that the company was unable to obtain suffcient engineering information from Mr. Tesla indicating even an approximate design that he had in mind.

Tesla appears to have walked out on the tests at this stage. In Milwaukee, however, there was no George Westinghouse to save the situation. Later, during the twenties, the author asked Tesla why he had terminated his work with the Allis Chalmers Company. He replied: "They would not build the turbines as I wished"; and he would not amplify the statement further.

The Allis Chalmers Company later became the pioneer manufacturers of another type of gas turbine that has been in successful operation for years.

While the Dahlstrand report may appear to be severely critical of the Tesla turbine and to reveal fundamental weaknesses in it not found in other turbines, such is not the case. The report is, in general, a fair presentation of the results; and the description of apparent weaknesses merely offers from another viewpoint the facts which Tesla himself stated about the turbine in his earlier test--that when employed as a single-stage engine it uses only about a third of the energy of the steam, and that to utilize the remainder, it would have to be compounded with a second turbine.

The reference to a centrifugal force of 70,000 pounds resulting from the high speed of rotation of the rotor, causing damage to the disks, refers to a common experience with all types of turbines. This is made clear in a booklet on "The Story of the Turbine," issued during the past year by the General Electric Company, in which it is stated:

It [the turbine] had to wait until engineers and scientists could develop materials to withstand these pressures and speeds. For example, a single bucket in a modern turbine travelling at 600 miles per hour has a centrifugal force of 90,000 pounds trying to pull it from its attachment on the bucket wheel and shaft. . . .

In this raging inferno the high pressure buckets at one end of the turbine run red hot while a few feet away the large buckets in the last stages run at 600 miles per hour

through a storm of tepid rain--so fast that the drops of condensed steam cut like a sand blast.

Dahlstrand reported that diffculties were encountered in the Tesla turbine from vibration, making it necessary to re-enforce the disks. That this diffculty is common to all turbines is further indicated by the General Electric booklet, which states:

Vibration cracked buckets and wheels and wrecked turbines, sometimes within a few hours and sometimes after years of operation. This vibration was caused by taking such terrific amounts of power from relatively light machinery--it some cases as much as 400 horsepower out of a bucket weighing but a pound or two. . . .

The major problems of the turbine are four--high temperatures, high pressures, high speeds and internal vibration. And their solution lies in engineering, research and manufacturing skill.

These problems are still awaiting their final solution, even with the manufacturers who have been building turbines for forty years; and the fact that they were encountered in the Tesla turbine, and so reported, is not a final criticism of Tesla's invention in the earliest stages of its development.

There have been whisperings in engineering circles during the past year or two to indicate a revival of interest in the Tesla turbine and the possibility that the makers of the Curtis and Parsons types may extend their lines to include the Tesla type for joint operation with the others. The development of new alloys, which can now almost be made to order with desired qualities of mechanical stability under conditions of high temperature and great stresses, is largely responsible for this turn of events.

It is a possibility that if the Tesla turbine were constructed with the benefft of two or more stages, thus giving it the full operating range of either the Curtis or the Parsons turbine, and were built with the same beneffts of engineering skill and modern metallurgical developments as have been lavished on these two turbines, the vastly greater simplicity of the Tesla turbine would enable it to manifest greater effciencies of operation and economies of construction.

FOURTEEN

THE highest honor which the world can confer upon its scholars is the Nobel Prize founded by Alfred B. Nobel, the Swedish scientist who gained his wealth through the invention of dynamite. Five awards are made annually, and each carries an honorarium of about $40,000 in normal times.

An announcement came from Sweden, in 1912, that Nikola Tesla and Thomas A. Edison had been chosen to share the 1912 award in physics. The awards, however, were never made; and the prize went instead to Gustav Dalen, a Swedish scientist.

The full story of what took place is not known. The correspondence on the subject is not available. It is definitely established that Tesla refused to accept the award. Tesla was very much in need of money at this time and the $20,000, which would have been his share of the divided award, would have aided him to continue his work. Other factors, however, had a more potent influence.

Tesla made a very definite distinction between the inventor of useful appliances and the discoverer of new principles. The discoverer of new principles, he stated in conversation with the author, is a pioneer who opens up new fields of knowledge into which thousands of inventors flock to make commercial applications of the newly revealed information. Tesla declared himself a discoverer and Edison an inventor; and he held the view that placing the two in the same category would completely destroy all sense of the relative value of the two accomplishments.

It is quite probable that Tesla was also influenced by the fact that the Nobel Prize in physics had been awarded to Marconi three years earlier, a situation that greatly disappointed him. To have the award go first to Marconi, and then to be asked to share the award with Edison, was too great a derogation of the relative value of his work to the world for Tesla to bear without rebelling.

Tesla was the first, and probably the only, scientist to refuse this famous prize.

One of the highest honors in the engineering world, too, is the Edison Medal, founded by unnamed friends of Thomas A. Edison, and awarded each year by the American Institute of Electrical Engineers, at its annual convention, for outstanding contribution to electrical art and science. Usually, the recipients are very happy to receive the award; but in 1917, when the committee voted to present the medal to Tesla, a different situation developed.

The chairman of the Edison Medal committee was B. A. Behrend, who had been one of the first electrical engineers to grasp the tremendous significance of Tesla's alternating-current discoveries and their far-reaching importance to every department of the electrical industry. A few outstanding engineers were able, at the beginning, to understand the intricacies of new alternating-current procedures which Tesla's discoveries made of immediate practical importance; but it was Behrend who developed a beautiful, simple mathematical technique, known as the "circle diagram," which made it possible to work out problems of designing alternating-current machinery with great ease, and also to understand the complex phenomena that were taking place within such devices. He published innumerable articles on the subject in the technical journals and wrote the standard textbook on the subject, The Induction Motor. Fame and fortune came to Behrend. He achieved recognition as one of the outstanding electrical engineers, and was later elected vice-president of the American Institute of Electrical Engineers. So important was his work to the commercial world that he was considered a probable recipient of the Edison Medal.

Behrend had started publishing articles on his circle diagram discovery in 1896 but he did not meet Tesla until 1901, when Tesla required a particular type of motor for his World Wireless plant being built at Wardencliff, L. I., and the task of designing it was assigned to the engineering department of a manufacturing company of which Behrend was in charge. After Tesla and Behrend met, a very close personal friendship developed between the two men. Behrend was one of the few who thoroughly understood Tesla's work; and the inventor, lonely in the absence of individuals with minds of his own caliber, greatly appreciated Behrend's friendship.

Behrend believed, therefore, that he was rendering Tesla a token of his highest appreciation when he managed to maneuver the award of the Edison Medal to him; and he was quite happy to carry out the mission of bearing the good news to the inventor. The announcement, however, did not make Tesla happy. He did not want the Edison Medal, he would not receive it!

Behrend, greatly surprised at Tesla's rebuff, asked him if he would not explain the situation that caused it.

"Let us forget the whole matter, Mr. Behrend. I appreciate your good will and your friendship but I desire you to return to the committee and request it to make another selection for a recipient. It is nearly thirty years since I announced my rotating magnetic field and alternating-current system before the Institute. I do not need its honors and someone else may find them useful."

It would have been impossible for Behrend to deny that the Institute had indeed failed, over this long period, to honor the man whose discoveries were responsible for creating the jobs held by probably more than three quarters of the members of the Institute, while honors had been distributed to many others for relatively minor accomplishments. Still, using the privilege of friendship, Behrend pressed for a further explanation.

"You propose," Tesla replied, "to honor me with a medal which I could pin upon my coat and strut for a vain hour before the members and guests of your Institute. You would bestow an outward semblance of honoring me but you would decorate my body and continue to let starve, for failure to supply recognition, my mind and its creative products which have supplied the foundation upon which the major portion of your Institute exists. And when you would go through the vacuous pantomime of honoring Tesla you would not be honoring Tesla but Edison who has previously shared unearned glory from every previous recipient of this medal."

Behrend, however, after several visits, finally prevailed upon Tesla to accept the medal.

Custom requires that the recipient of a medal deliver a formal address. On the occasions, a quarter of a century

earlier, when Tesla was invited to address the Institute, he had had ample laboratory facilities, and had invested a great deal of time, effort, thought and money in the preparation of his lectures. For them, however, he was awarded no honors. Now he was without laboratory facilities and without adequate financial resources, although his more mature mind was as filled with ideas and unborn inventions as it had ever been. He was not required to present a demonstration lecture. In this matter, however, Tesla was a victim of his own past performances; and there was an expectancy that he would emerge from the comparative oblivion which had enshrouded him for more than a decade, and come, like a master magician, bearing some wondrous new gifts of invention to the world.

Tesla attended some of the meetings of the convention, and Behrend, none too certain about what the medalist might do, took him in tow following the afternoon session and escorted him to the Hotel St. Regis, where Tesla now made his home, and where both donned their formal dress for the evening's ceremonies.

The first event on the evening's program was a private dinner at the Engineers' Club, tendered by the Institute to the medalist, who was the guest of honor, and attended by previous recipients of the Edison Medal, as well as members of the committee and the offcers of the Institute. It was a gala occasion and represented an unusual concentration of the world's greatest electrical engineering talent. Tesla could be relied upon to lend brilliance to any such occasion, but, while his sparkling conversation added to the gayety of the group, he was distinctly ill at ease.

The Engineers' Club, on the south side of 40th Street, between Fifth and Sixth Avenues, faces Bryant Park, the eastern third of which is occupied by the classical building of the New York Public Library, facing Fifth Avenue from 40th to 42nd Streets. The United Engineering Societies Building, an imposing structure on the north side of 39th, stands almost back-to-back with the Engineers' Club. By stepping a few feet across an alley, it is possible to go from one building to the other.

Following the dinner in the Engineers' Club, the brilliant group at the medalist's dinner made their way across the alley and proceeded through the crowded lobby of the Engineering Societies Building, which was abuzz with the

multitudinous activities associated with a convention. The party entered the elevators which carried them to the large auditorium on the fifth floor where the medal presentations were to take place.

The auditorium was crowded with an audience that had come largely from formal dinners held as part of the convention program. The floor and gallery were filled to capacity. The buzz of animated conversation died down as there filed onto the stage the outstanding figures of the electrical world, in "tails" and white ties, who were to serve as the "wax works" of the ceremonies and to take some part in the presentation.

As the wax works took their previously assigned chairs, the stage was set for the opening of the ceremonies. But the opening did not take place according to schedule. There was consternation in the group as it was discovered that the chair reserved for the chief participant in the event was empty.

Tesla was missing!

The side hall, leading off the stage, and the anterooms were searched, but there was no sign of him. Members of the committee slipped out to retrace their steps through the lobby and back to the Club dining room. A man as tall as Tesla could not be hidden in any group, yet there was not a sign of him in either building.

The delay in opening the meeting in the auditorium was embarrassing--but the ceremonies could not be started without Tesla, and where was he?

It seemed hardly possible that an imposing figure like Tesla, his height exaggerated by the streamlined contours of his swallow-tailed formal evening dress, and in the almost worshipful custody of a score of outstanding intellects, could vanish without any of them observing his going.

Behrend rushed back from the Club to the auditorium, hopeful that Tesla had preceded him; but he found that such was not the case. All the washrooms in both buildings had been searched; he was concealed in none of them. No one could offer a theory to account for his disappearance.

None but Behrend knew of Tesla's aversion to accepting the Edison Medal, yet even he had not the slightest knowledge of what had become of the famous inventor. He recalled noting the shadowy walks of Bryant Park opposite the Club as he and Tesla stepped from the taxicab earlier in the evening, and he wondered if Tesla had retreated there for some quiet meditation before the ceremony. He hurried out of the Club.

As Behrend stepped into Bryant Park, the last faint glimmerings of dusk were visible in the high sky; but in the park the shades of night were gathering and here and there could be heard the faint twitterings of birds. The twittering of the birds brought, like a flash, to Behrend's mind the scene he had observed in Tesla's apartment at the Hotel St. Regis. In the room which Tesla had arranged as a reading room and offce was a roll-top desk, and on top of this were four neat circular baskets, in two of which pigeons were nestled. Before they left the apartment Tesla went to the window, which was kept open at all times, whistled softly, and two more pigeons quickly flew into the room. Just before leaving for the dinner Tesla fed the pigeons, and having done so slipped a paper bag filled with something into his pocket. The possible significance of this latter act did not occur to Behrend until he heard the twittering of the birds in the park.

With all possible speed Behrend rushed out of the park, down 40th Street toward Fifth Avenue, and up the steps to the plaza of the Library. Here he beheld a sight that amazed him almost beyond belief in what his eyes told him. Here was the missing man. He had recalled that Tesla regularly visited the Library, St. Patrick's Cathedral, or other places to feed the pigeons.

In the center of a large thin circle of observers stood the imposing figure of Tesla, wearing a crown of two pigeons on his head, his shoulders and arms festooned with a dozen more, their white or pale-blue bodies making strong contrast with his black suit and black hair, even in the dusk. On either of his outstretched hands was another bird, while seemingly hundreds more made a living carpet on the ground in front of him, hopping about and pecking at the bird seed he had been scattering.

It was Behrend's impulse to rush in, shoo the birds away and, seizing the missing man, rush him back to the

auditorium. Something caused him to halt. Such an abrupt action seemed almost sacrilegious. As he hesitated momentarily, Tesla caught sight of him and slowly shifted the position of one hand to raise a warning finger. As he did so, however, he moved slowly toward Behrend; and as he came close, some of the birds flew from Tesla's shoulders to Behrend's. Apparently sensing a disturbing situation, though, all the birds flew to the ground.

Appealing to Tesla not to let him down, nor to embarrass those who were waiting at the meeting, Behrend prevailed upon the inventor to return to the auditorium. Little did Behrend know how much more the pigeons meant to Tesla than did the Edison Medal; and little could anyone have suspected the fantastic secret in Tesla's life, of which the outer manifestation was his faithful feeding of his feathered friends. To Behrend it was just another, and in this case very embarrassing, manifestation of the nonconformity of genius. Of this, more later.

Returning to the auditorium, Behrend explained in a quick aside to the president that Tesla had been temporarily ill, but that his condition was now quite satisfactory. The opening of the meeting had been delayed about twenty minutes.

In his presentation speech, Behrend pointed out that by an extraordinary coincidence, it was exactly 29 years ago, to the very day and hour, that Nikola Tesla presented his original description of his polyphase alternating-current system. He added:

Not since the appearance of Faraday's "Experimental Researches in Electricity" has a great experimental truth been voiced so simply and so clearly as this description of Mr. Tesla's great discovery of the generation and utilization of polyphase alternating currents. He left nothing to be done by those who followed him. His paper contained the skeleton even of the mathematical theory.

Three years later, in 1891, there was given the first great demonstration, by Swiss engineers, of the transmission of power at 30,000 volts from Lauffen to Frankfort by means of Mr. Tesla's system. A few years later this was followed by the development of the Cataract Construction Company, under the presidency of our member, Mr. Edward D. Adams, and with the aid of the engineers of the Westinghouse Company. It is

interesting to recall here tonight that in Lord Kelvin's support to Mr. Adams, Lord Kelvin recommended the use of direct current for the development of power at Niagara Falls and for its transmission to Buffalo.

The due appreciation or even enumeration of the results of Mr. Tesla's invention is neither practicable nor desirable at this moment. There is a time for all things. Suffce it to say that, were we to seize and eliminate from our industrial world the results of Mr. Tesla's work, the wheels of industry would cease to turn, our electric cars and trains would stop, our towns would be dark, our mills would be dead and idle. Yes, so far reaching is this work, that it has become the warp and woof of industry. . . . His name marks an epoch in the advance of electrical science. From that work has sprung a revolution in the electrical art.

We asked Mr. Tesla to accept this medal. We did not do this for the mere sake of conferring a distinction, or of perpetuating a name; for so long as men occupy themselves with our industry, his work will be incorporated in the common thought of our art, and the name of Tesla runs no more risk of oblivion than does that of Faraday, or that of Edison.

Nor indeed does this Institute give this medal as evidence that Mr. Tesla's work has its offcial sanction. His work stands in no need of such sanction.

No, Mr. Tesla, we beg you to cherish this medal as a symbol of our gratitude for a new creative thought, the powerful impetus, akin to revolution, which you have given to our art and to our science. You have lived to see the work of your genius established. What shall a man desire more than this? There rings out to us a paraphrase of Pope's lines on Newton:

"Nature and Nature's laws lay hid in night:

"God said, Let Tesla be, and all was light."

No record remains of Tesla's acceptance speech. He did not prepare a formal address. He had intended to make but a brief response, but instead he became involved in anecdotal narration and a preview of the future of electrical science

which, in the absence of the limiting influence of a written copy, became quite lengthy.

It is doubtful if anyone in the audience, or on the stage, grasped the full significance of Behrend's words when he said, "We asked Mr. Tesla to accept this medal." And fewer still were the members of the Institute who had any conception of the extent or importance of Tesla's contribution to their science. His major inventions had been announced thirty years before. The majority of the engineers present belonged to the younger generation; and they had been taught from textbooks that almost completely omitted mention of Tesla's work.

FIFTEEN

THE announcement by Tesla in his latter years that attracted the greatest amount of attention concerned his discovery of what has briefly, but not too accurately, been termed a death ray. Earlier reports had come from Europe of the invention of death rays, beams of radiation that would cause airships on which they impinged to burst into flame, the steel bodies of tanks to melt and the machinery of ships to stop operating, but all gave indications of being part of the game of diplomatic buncombe.

The prelude to Tesla's death-ray announcement came several years in advance, in the form of a declaration that he had made discoveries concerning a new form of power generation which, when applied, would make the largest existing turbine-dynamo units in the powerhouses look like pygmies. He made this announcement in interviews with the press in 1933, and declared that he was also working on a new kind of generator for the production of radiation of all kinds and in the greatest intensities. He made similar announcements the following year.

Both of these announcements were entitled to receive the most serious consideration, even though they were not accompanied by experimental evidence, and revealed no technical details.

When Tesla was talking as a scientist he was opposed to wars on moral, economic and all practical and theoretical grounds. But, like most scientists, when he stopped thinking as a scientist and let his emotions rule his thoughts, he found exceptions in which he felt some wars and situations were justifiable. As a scientist he was unwilling to have the discoveries of scientists applied to the purposes of war makers, but when the emotional phase of his nature took the ruling position he was willing to apply his genius to devising measures that would prevent wars by supplying protective devices.

This attitude is exemplified in the following statement, which he had prepared in the twenties but did not publish:

At present many of the ablest minds are trying to devise expedients for preventing a repetition of the awful conflict which is only theoretically ended and the duration and main issues of which I correctly predicted in an article printed in the Sun of December 20, 1914. The League is not a remedy but, on the contrary, in the opinion of a number of competent men, may bring about results just the opposite. It is particularly regrettable that a punitive policy was adopted in framing the terms of peace because a few years hence it will be possible for nations to fight without armies, ships or guns, by weapons far more terrible, to the destructive action and range of which there is virtually no limit. Any city at any distance whatever from the enemy can be destroyed by him and no power on earth can stop him from doing so. If we want to avert an impending calamity and a state of things which may transform this globe into an inferno, we should push the development of flying machines and wireless transmission of energy without an instant's delay and with all the power and resources of the nation.

Tesla saw preventive possibilities in his new invention which embodied "death-ray" characteristics, and which was made several years after the foregoing statement was written. He saw it providing a curtain of protection which any country, no matter how small, could use as a defense against invasion. While he might offer it as a defensive weapon, however, there would be nothing to stop military men from using it as a weapon of offense.

Tesla never gave the slightest hint concerning the principles under which his device operated.

There are indications, at any rate, that Tesla was working on a high-potential direct-current system for generating and transmitting electricity to long distances. Direct current at very high voltages can be transmitted much more effciently than alternating current. There has been no practical way of generating direct current at high voltages. It was because of this that Tesla's polyphase alternating-current system was adopted for our present nationwide superpower system, since it made the use of high voltages practicable. But, despite its effciencies, it entailed certain losses which could be eliminated if direct current of suffciently high voltage could be obtained. Such a system would supersede his alternating-current system but not displace it.

Direct current, perhaps at several million volts potential, would be used to transmit current for long distances, perhaps clear across the continent, providing a kind of express transmission system, to which the existing alternating-current system would be tied for local distribution. In addition to the direct-current transmission system, he appears to have worked out a high-voltage direct-current generator and a new type of direct-current motor which would operate without a commutator.

The inventions were starting to dam up in Tesla's mind like water in a reservoir to which there was no outlet.

Just as he developed his alternating-current system into the high-frequency, high-potential field of power distribution by wireless, which he demonstrated at Colorado Springs, so he appears to have carried his direct-current system forward and linked it with his alternating-current wireless distribution system, so that he could use both in a super-interlocking system. As this remained unapplied, he further evolved it and produced a plan for operating with it what appears to be a beam system of wireless transmission of energy which might involve the use of a stream of particles such as are used in the atom-smashing cyclotron.

As time passed from the latter twenties, through the latter thirties, the hints which Tesla would drop about his work became more complicated, and so ambiguous that they aroused skepticism rather than respect. He would not reveal the nature of his discoveries until he had secured patents, and

he would not apply for patents until he had made actual working models, and he could not make the working models because he had no money. Samuel Insull, the public utilities magnate, had for many years made frequent and generous contributions to Tesla. They were usually applied to outstanding debts and were not large enough to enable him to engage in laboratory research work.

Tesla, however, never exhibited the slightest outward sign of bitterness over the situation. Instead, he always appeared in the rle of confirmed optimist, always maintaining a spirit of hopefulness that he would achieve by his own efforts the money he needed to carry out his elaborated plans. This is indicated in a letter he wrote to B. A. Behrend, who had induced him to accept the Edison Medal, and who was probably in his confidence to a greater extent than anyone else:

"I am hard at work on those discoveries of mine, I told you about, from which I hope to derive a sum in eight figures (not counting the cents, of course) enabling me to erect that wireless power plant at my own expense. And what I shall accomplish by that other invention I came specially to see you about, I do not dare to tell you. This is stated in all seriousness."

The invention about which he dared not speak was probably his direct-current generating and transmitting system.

In an interview given in 1933, he said his power generator was of the simplest kind--just a big mass of steel, copper and aluminum, comprising a stationary and a rotating part, peculiarly assembled. He was planning, he said, to generate electricity and transmit it to a distance by his alternating system; but the direct-current system could also be employed if the heretofore insuperable diffculties of insulating the transmission line could be overcome.

A year later he had developed the beam-transmission plan; and he made an ambiguous statement concerning it which was reported in the press as news of a "death ray" since the description seemed to fit into the same mold as those wild and improbable statements that had come out of Europe some years before. A writer in the New York World-Telegram described Tesla's plan as "nebulous." This drew a reply from Tesla July 24, 1934) in which the following paragraphs appeared:

Still another item which has interested me is a report from Washington in the World Telegram of July 13, 1934, to the effect that scientists doubt the death ray effects. I am quite in agreement with these doubters and probably more pessimistic in this respect than anybody else, for I speak from long experience.

Rays of the requisite energy cannot be produced, and, then again, their intensity diminishes with the square of the distance. Not so the agent I employ, which will enable us to transmit to a distant point more energy than is possible by any other kind of ray.

We are all fallible, but as I examine the subject in the light of my present theoretical and experimental knowledge I am filled with deep convictions that I am giving to the world something far beyond the wildest dreams of inventors of all time.

This is the first written statement by Tesla in which he mentions his "ray"; but I had, as already noted, obtained some confidential statements from him, during the preceding year or so, concerning results he hoped to achieve through his new discovery, the nature of which he kept as a well-protected secret. Three years later, in 1937, Tesla permitted me to write a news story for the New York Herald Tribune on his new power-and-ray discovery. In it I stressed the usefulness of the discovery for delivering power to ships for travel across the ocean, thus eliminating the need for carrying fuel supplies, rather than its use as a weapon for defense or offense.

On this occasion I tried to get him to reveal some technical details, but he successfully parried every question and gave no information beyond the statement that the transmitting plant on shore was one which he would be able to erect at a cost of about $2,000,000, and the energy would be transmitted by a ray or beam of infinitesimally small cross section, one hundred thousandth of a centimeter in diameter. To other newspapers which copied my story he gave the figure as one millionth of a square centimeter.

Later, I wrote a somewhat critical review of his plan and sought to draw him out by reviewing the properties of electro-magnetic radiation in all parts of the spectrum. Finding none that possessed any known characteristics

needed to make his ray practical, I also reviewed the properties of all known particles of matter, and stated that none of these would serve his purpose with the possible exception of the unelectrified particle, the neutron. He made no revealing response to the article.

At his birthday dinner in 1938, at the Hotel New Yorker, Tesla described briefly his combination wireless-power transmission and death ray, adding little to what has already been stated; and in a later part of his speech he declared that he had developed a method for interplanetary communication, in which he would be able to transmit not only communication signals of small strength but energies involving thousands of horsepower.

On this occasion I asked him if he would be specific concerning the effects produced, and whether they would be visible from the earth; for example--could he produce an effect on the moon suffciently large to be seen by an astronomer watching the moon through a high-power telescope? To this he replied that he would be able to produce in the dark region of the thin crescent new moon an incandescent spot that would glow like a bright star so that it could be seen without the aid of a telescope.

It would appear probable that Tesla proposed to use for this purpose the beam he described in connection with his wirelesspower "death ray." The limitation of the destructive effects of the beam, which he visualized as two hundred miles, was due to the fact that the beam had a straight-line trajectory. Tesla stated that the curvature of the earth set a limit on the distance of operation, so the two-hundred-mile span of operation gave an indication of the greatest practical height of a tower from which the beam could be directed. He expected to use potentials of about 50,000,000 volts in his system, but whether of direct or alternating current is unknown.

The only written statement by Tesla on this subject is in his manuscript of the talk which was delivered, in absentia, some months later before the Institute of Immigrant Welfare in response to its honorary citation. In this was included the following paragraph:

"To go to another subject: I have devoted much of my time during the year past to perfecting of a new small and compact apparatus by which energy in considerable amounts

can now be flashed through interstellar space to any distance without the slightest dispersion. I had in mind to confer with my friend, George E. Hale, the great astronomer and solar expert, regarding the possible use of this invention in connection with his own researches. In the meantime, however, I am expecting to put before the Institute of France an accurate description of the device with data and calculations and claim the Pierre Gutzman Prize of 100,000 francs for means of communication with other worlds, feeling perfectly sure that it will be awarded to me. The money, of course, is a trifling consideration, but for the great historical honor of being the first to achieve this miracle I would be almost willing to give my life."

SELF-MADE SUPERMAN

SIXTEEN

IT WAS during a period when he was most busily occupied with his experiments with high-frequency and high-potential currents, from 1892 to 1894, that Tesla had found time to give serious thought to yet another type of problem, matter and energy; and from it he derived what he described as a new physical principle. This he developed to the point at which he was able to propound a new dynamic theory of gravity.

While this principle guided much of his thinking, he did not make any announcements concerning it until close to the end of his life. Such disclosures as have been made, however, leave this much obvious: Tesla considered his theory wholly inconsistent with the theory of relativity, and with the modern theory concerning the structure of the atom and the mutual interconversion of matter and energy. Tesla continuously attacked the validity of Einstein's work; and until two or three years before his death, he ridiculed the belief that energy could be obtained from matter.

These antagonisms were most unfortunate, as they placed Tesla in conflict with modern experimental physics. This was totally unnecessary, for Tesla could undoubtedly have adhered to his principle and interpreted it so that it was

not inconsistent with the modern theories. The antagonism was probably attributable to psychological factors rather than scientific inconsistencies.

The only statement Tesla has made concerning his principle and his theory is that contained in the lecture he prepared for delivery before the Institute of Immigrant Welfare (May 12, 1938). In this he stated:

During the succeeding two years [1893 and 1894] of intense concentration I was fortunate enough to make two far reaching discoveries. The first was a dynamic theory of gravity, which I have worked out in all details and hope to give to the world very soon. It explains the causes of this force and the motions of heavenly bodies under its influence so satisfactorily that it will put an end to idle speculation and false conceptions, as that of curved space. . . .

Only the existence of a field of force can account for the motions of the bodies as observed, and its assumption dispenses with space curvature. All literature on this subject is futile and destined to oblivion. So are all attempts to explain the workings of the universe without recognizing the existence of the ether and the indispensable function it plays in the phenomena.

My second discovery was of a physical truth of the greatest importance. As I have searched the entire scientific records in more than a half dozen languages for a long time without finding the least anticipation, I consider myself the original discoverer of this truth, which can be expressed by the statement: There is no energy in matter other than that received from the environment.

On my 79th birthday I made a brief reference to it, but its meaning and significance have become clearer to me since then. It applies rigorously to molecules and atoms as well as to the largest heavenly bodies, and to all matter in the universe in any phase of its existence from its very formation to its ultimate disintegration

Tesla's mind was inflexible in the matter of his attitude toward relativity and the modern theories. Had he published his principle and theory of gravity at the beginning of the century it would, without doubt, have then received very serious consideration and perhaps general acceptance,

although it is diffcult to make an intelligent surmise without knowledge of his postulates. If published, it might have had some influence on Einstein's thinking. The field of force which Tesla mentions as being necessary to explain the movements of the planets might have been his contribution to eliminating the need for the ether which was accomplished by Einstein's theory. The two theories might have been merged, in which case there probably would have resulted a harmonious development of the thinking of the two geniuses.

In this latter case Tesla could very well have shaped his thinking to see a consistency between his theory that there is no energy in matter other than that received from its environment, and the modern viewpoint that all matter consists of energy into which it is convertible; for when matter is converted to energy, the energy returns to the environment from whence it came when the particles were formed.

There appears to be a frustration involved in Tesla's attitude which could have been resolved by early publication of his theory. If this had taken place, Tesla's powerful intellect and his strange ability to solve problems would have been brought to bear on the problems of atomic physics and he, in turn, would have received tremendous benefits from the application of the newer knowledge in the fields in which he was supreme.

Tesla's ability to generate tremendously high voltages would have been of great assistance in the task of "smashing the atom." Other scientists, even today, are struggling to produce currents with a potential of 5,000,000 volts, whereas Tesla, forty years ago, had generated potentials of 135,000,000 volts.

The inconsistency between Tesla's principle and the picture of the atom consisting of a small complex nucleus surrounded by planetary electrons--which inconsistency was more existent in Tesla's mind than in Nature--caused him to develop an antagonism to all scientific developments which called for a picture that differed from the billiard-ball type of atom in vogue in the eighteen-eighties. To him, a smashed atom was like a smashed billiard ball.

The electron, however, had a real existence to Tesla. He accepted it as a kind of sub-atom, a fourth state of

matter, as described by Sir William Crookes, who discovered it. Tesla visualized it as associated with but not a part of the atom. The electric charge it carried was entirely distinct from the electron. Electricity, to him, was a fluid much more highly attenuated than any known form of matter, and with highly specific properties of its own for which it was not dependent upon matter. The charge on the electron was due to a surface layer of electricity covering it, and it could receive many layers, giving it multiple charges, all of which could be dissipated. These statements were similar to those which he had published a half-century before.

According to the modern theory, on the other hand, the electrical nature of the electron, described as its charge, is a characteristic inherent in the nature of the energy crystallized about a point which gives the electron its existence, and the electron is one of the particles, or units of energy, of which the atom is composed.

In discussing articles by scientists in the field of atomic physics, Tesla would register his protests that their theories were untenable and the claims unfounded; and he was particularly emphatic when experiments in which energy emissions from atoms were recorded.

"Atomic power is an illusion," he frequently declared. He furnished several written statements in which he said that with his currents of several million volts he had, countless times, smashed uncounted billions of atoms--and he knew that no emission of energy accompanied the process.

On one occasion Tesla took me to task rather severely for my failure to publish his statements. I replied: "I withheld them in order to protect your reputation. You are making too great a virtue of consistency. It is not necessary that you adhere to the theories you held as a youth, and I am convinced that deep down in your heart you hold newer theories that are in harmony with scientific developments in other fields, but because you have disagreed with, and attacked some modern theories, you feel you must be consistent and attack them all. I am convinced that in the development of your death-ray device your thinking was along the lines of the modern theory of the structure of the atom and the nature of matter and energy."

Tesla thereupon let me know in no uncertain terms that he held very definite ideas concerning efforts on the part of others to do his thinking for him. This conversation took place about 1935; and I did not hear from him for many months. I observed, however, that in his later conversations he was much less dogmatic concerning modern theories, and a few years later he stated that he was planning an apparatus which would make possible a definite testing of the modern theory of atomic structure, with the expectation that his new power system and energy beam would release atomic energy more effectively than any device then in use by physicists.

Having endorsed, finally, the belief that man will be able to smash, transmute, create or destroy atoms, and control vast amounts of energy, he waxed poetic on the subject. He extended man's control over atoms and energy to a cosmic scale, and saw him shaping the universe according to our desires. In an unpublished article, entitled "Man's Greatest Achievement," he wrote:

There manifests itself in the fully developed being--Man--a desire mysterious, inscrutable and irresistible: to imitate nature, to create, to work himself the wonders he perceives. Inspired to this task he searches, discovers and invents, designs and constructs, and covers with monuments of beauty, grandeur and awe, the star of his birth. He descends into the bowels of the globe to bring forth its hidden treasures and to unlock its immense imprisoned energies for his use. He invades the dark depths of the ocean and the azure regions of the sky. He peers into the innermost nooks and recesses of molecular structure and lays bare to his gaze worlds infinitely remote. He subdues and puts to his service the Werce, devastating spark of Prometheus, the titanic forces of the waterfall, the wind and the tide. He tames the thundering bolt of Jove and annihilates time and space. He makes the great Sun itself his obedient toiling slave. Such is his power and might that the heavens reverberate and the whole earth trembles by the mere sound of his voice.

What has the future in store for this strange being, born of a breath, of perishable tissue, yet immortal, with his powers fearful and divine? What magic will be wrought by him in the end? What is to be his greatest deed, his crowning achievement?

Long ago he recognized that all perceptible matter comes from a primary substance, or a tenuity beyond conception, filling all space, the Akasa or luminiferous ether, which is acted upon by the life-giving Prana or creative force, calling into existence, in never ending cycles, all things and phenomena. The primary substance, thrown into infinitesimal whirls of prodigious velocity, becomes gross matter; the force subsiding, the motion ceases and matter disappears, reverting to the primary substance.

Can Man control this grandest, most awe-inspiring of all processes in nature? Can he harness her inexhaustible energies to perform all their functions at his bidding, more still cause them to operate simply by the force of his will?

If he could do this, he would have powers almost unlimited and supernatural. At his command, with but a slight effort on his part, old worlds would disappear and new ones of his planning would spring into being. He could fix, solidify and preserve the ethereal shapes of his imagining, the fleeting visions of his dreams. He could express all the creations of his mind on any scale, in forms concrete and imperishable. He could alter the size of this planet, control its seasons, guide it along any path he might choose through the depths of the Universe. He could cause planets to collide and produce his suns and stars, his heat and light. He could originate and develop life in all its infinite forms.

To create and to annihilate material substance, cause it to aggregate in forms according to his desire, would be the supreme manifestation of the power of Man's mind, his most complete triumph over the physical world, his crowning achievement, which would place him beside his Creator, make him fulfill his ultimate destiny.

Tesla, in his eighties, was still manifesting the superman complex, and on even more elaborate a scale than when in his twenties. In his earlier dreams his visions were terrestrial, but in later life they were extended to embrace the entire universe.

Even on the cosmic scale, however, Tesla spoke in terms of matter and energy. These two entities, according to his reasoning, were suffcient to explain all observed

phenomena, a situation which militated against the discovery of any new agencies.

The civilizations of the ancient world knew nothing of electricity and magnetism; the controlled manifestations of these two phases of a single force-entity have provided us with a new civilization and a new cultural outlook on life, as well as broadened horizons within the life sphere. There is no reason why we should not look forward to the discovery of new forces which are as different from electricity as electricity is from the winds of the air and the waves of the ocean. If inadequate explanations of vital phenomena are accepted as satisfactory, embracing extravagant extensions of known forces, the way is closed to the discovery of unknown forces and the opening of any new realms of knowledge. This was the limitation which the science of the last quarter of the past century placed upon itself; and Tesla's philosophy was a product of that period. It was diffcult for him to reshape it in his later years.

The memory departments of most individuals' brains are like offce filing systems, an excellent dumping ground for everything that comes along--but try to find a filed item later. Tesla's powers of memorizing were prodigious. A quick reading of a page gave him a permanent record of it; he could always recall before his eyes a photographic record of it to be read, and could study at his convenience. Study, for Tesla, was a far different process than for the average person. He had no need for a reference library; he could consult in his mind any page of any textbook he had read, any formula, equation, or item in a table of logarithms, and it would flash before his eyes. He could recite scores of books, complete from memory. The saving in time which this made possible in research work was tremendous.

This strange faculty of vision was supernormal but entirely natural and was due, probably, to a structural characteristic in his brain which provided a direct channel between the memory and the visual areas of his cerebral hemispheres. It provided him with a very useful new sense.

The human brain is made up of two sections, the right and left sides, each of which, in some of its phases, is a complete brain; and both halves function together as a single unit. There are many layers in the brain parallel

with its surface, each connected to the others by complex nerve fibers, like threads sewing together the layers of an onion. The outer layer seems to be directly associated with our consciousness. The surface is divided into specialized areas, There is a band across the mid-section of each hemisphere from ear to ear over the top of the brain, devoted to the senses, and here are separate areas for the sensory faculties--sight, hearing, taste, smell--while near by are regions for the motor or muscular activities of the various parts of the body. The back lobe of the brain appears to be the home of the memory and the front lobe of some higher faculties of integration, the nature of which we do not as yet understand.

In normal processes of seeing, the eye forms a picture of an object on the retina, a screen on the back of the eyeball. The retina is supplied with thousands of nerve endings all packed together like stalks of asparagus in a bunch. The tip ends are provided with photosensitive processes, and when light strikes any one of them it transmits over the optic nerve a signal to the brain which is recorded as a visual response in the sight area of each half of the brain. By cooperation of all the nerve endings, the complete picture seen is transmitted. The actual seeing, then, is done in the brain and not in the eye. When an object is seen by the brain, a record of that visual experience is transmitted from the sight area of the brain to the memory center in the back part of the brain; and similar records are sent by all other sensory centers. Ordinarily this is a one-way process, the stimuli going in the direction of the memory and nothing coming back to the sensory area. If this were not so, our sense areas of the brain would be continuously reenacting old experiences and mixing them with the new, incoming experiences, causing annoying confusion.

The memory area contains a complete record of all sensory experiences we have had. In our thinking processes we use some little-understood mechanism for connecting together items stored in the memory area to produce useful combinations or relationships, or, in other words, new ideas. The memory appears to function on a subconscious level but we seem to be able to activate fibers that reach down to the desired strata at the right point to connect the memory level with the consciousness level. In this way we can recall experiences, but this experience of memory is

far different from the original experience of sight out of which the original memory record was made.

If, however, in this process of recollection, the nerve fiber linking the sight area of the brain and the memory area were to be activated, then we would see again by the sharp processes of vision the object which caused the memory record we are trying to recollect.

The act of creative thinking seems to consist of assembling two or more memory records of sensory experiences into a combination which possesses entirely new characteristics that were not apparent in the component parts. If the nerve linkage just referred to were to operate in a two-way process with the visual area, then we would be able to see the new creation as if it were a really existing object seen by the eye, although the whole operation was limited to the brain.

This process is hypothetically the one which took place in Tesla's brain and gave him tremendously greater powers of creative work than are possible to the ordinary individual. Was this conceivably a new in-vention made by Mother Nature and tried out by her on Tesla?

Tesla himself never understood the neurological, or physiological, processes underlying this strange faculty. To him it was an absolutely real experience to see in front of him as solid objects the subjects of his creative thoughts. He believed that the image of the thing he saw was sent back from the brain along the optic nerve to the eye, and that it existed as a picture on the retina where, by some suitable means, it could be seen by others--or that by means of adequate amplifying devices, such as are used in television, it could be projected on a screen. He even proposed such devices. (The apparent flaw in his reasoning followed on his mistake in thinking that he was doing this supernormal seeing with his eye, whereas the process was confined to his brain; and the reflex action from the memory centers stopped at the visual centers instead of, as he believed, being continued forward through the optical nerve to the retina.)

Tesla described his experience with this strange faculty in an interview with M. K. Wisehart, published under the title "Making Your Imagination Work for You" in the American Magazine, April, 1921. He stated:

During my boyhood I had suffered from a peculiar affliction due to the appearance of images, which were often accompanied by strong flashes of light. When a word was spoken, the image of the object designated would present itself so vividly to my vision that I could not tell whether what I saw was real or not. . . . Even though I reached out and passed my hand through it, the image would remain fixed in space.

In trying to free myself from these tormenting appearances, I tried to concentrate my thoughts on some peaceful, quieting scene I had witnessed. This would give me momentary relief; but when I had done it two or three times the remedy would begin to lose its force. Then I began to take mental excursions beyond the small world of my actual knowledge. Day and night, in imagination, I went on journeys--saw new places, cities, countries, and all the time I tried hard to make these imaginary things very sharp and clear in my mind. I imagined myself living in countries I had never seen, and I made imaginary friends, who were very dear to me and really seemed alive.

This I did constantly until I was seventeen, when my thoughts turned seriously to invention. Then, to my delight, I found I could visualize with the greatest facility. I needed no models, drawings, or experiments. I could picture them all in my mind. . . .

By that faculty of visualizing, which I learned in my boyish efforts to rid myself of annoying images, I have evolved what is, I believe, a new method of materializing inventive ideas and conceptions. It is a method which may be of great usefulness to any imaginative man, whether he is an inventor, businessman or artist.

Some people, the moment they have a device to construct or any piece of work to perform, rush at it without adequate preparation, and immediately become engrossed in details, instead of the central idea. They may get results, but they sacrifice quality.

Here, in brief, is my own method: After experiencing a desire to invent a particular thing, I may go on for months or years with the idea in the back of my head. Whenever I feel like it, I roam around in my imagination and think

about the problem without any deliberate concentration. This is a period of incubation.

Then follows a period of direct effort. I choose carefully the possible solutions of the problem. I am considering, and gradually center my mind on a narrowed field of investigation. Now, when I am deliberately thinking of the problem in its specific features, I may begin to feel that I am going to get the solution. And the wonderful thing is, that if I do feel this way, then I know I have really solved the problem and shall get what I am after.

The feeling is as convincing to me as though I already had solved it. I have come to the conclusion that at this stage the actual solution is in my mind subconsciously, though it may be a long time before I am aware of it consciously.

Before I put a sketch on paper, the whole idea is worked out mentally. In my mind I change the construction, make improvements, and even operate the device. Without ever having drawn a sketch I can give the measurements of all parts to workmen, and when completed all these parts will fit, just as certainly as though I had made the actual drawings. It is immaterial to me whether I run my machine in my mind or test it in my shop.

The inventions I have conceived in this way have always worked. In thirty years there has not been a single exception. My first electric motor, the vacuum tube wireless light, my turbine engine and many other devices have all been developed in exactly this way.

That Tesla believed his mental visualizations brought images from his brain to the back of his eye is indicated by some statements he made in his famous lecture before the National Electric Light Association convention at St. Louis, in March, 1893, when announcing his discovery of radio. These statements about vision had no relationship to the subject of the lecture, and the fact that he interjected them indicated that his experiences with this strange power had a powerful influence on his inventive thinking. He said:

It can be taken as a fact, which the theory of the action of the eye implies, that for each external impression, that is for each image produced on the retina, the ends of the visual nerves, concerned in the conveyance of the

impressions to the mind, must be under a peculiar stress or in a vibratory state. It now does not seem improbable that, when by the power of thought an image is evoked, a distinct reflex action, no matter how weak, is exerted upon certain ends of the visual nerves, and therefore upon the retina. Will it ever be within human power to analyze the condition of the retina, when disturbed by thought or reflex action, by the help of some optical or other means of such sensitiveness that a clear idea of its state might be obtained? If this were possible, then the problem of reading one's thoughts with precision, like the characters of an open book, might be much easier to solve than many problems belonging to the domain of positive physical science, in the solution of which many, if not the majority, of scientific men implicitly believe.

Helmholtz has shown that the fundi of the eye are themselves luminous, and he was able to see in total darkness the movements of his arm by the light of his own eyes. This is one of the most remarkable experiments recorded in the history of science, and probably only a few men could satisfactorily repeat it, for it is very likely that the luminosity of the eyes is associated with uncommon activity of the brain and great imaginative power. It is fluorescence of brain action, as it were.

Another fact having a bearing on this subject, which has probably been noted by many, since it is stated in popular expressions, but which I cannot recollect to have found chronicled as a positive result of observation is that, at times, when a sudden idea or image presents itself to the intellect, there is a painful sensation of luminosity produced in the eye observed even in broad daylight.

Forty years later Tesla was still interested in the possibility of capturing a photographic record of thoughts. He stated in interviews that if his theory were correct--that thoughts are recorded on the retina--it should be possible to photograph what is revealed on this screen in the eye, and project enlarged images of it.

There is nothing illogical about Tesla's reasoning concerning his strange faculty of visualizing and the possibility of finding a corresponding image on the retina. There is a bare possibility that in an extreme case, as was his, a reflex arc may have extended from the brain to the retina; but the probability that it did not is stronger. If

he had possessed the ability to take others into his confidence in his experiments, he would have been able to stage some simple tests in the laboratory of an ophthalmologist which would have given him some definite experimental evidence to support or dispose of his theories, as far as photographic thought images were concerned.

About 1920 tesla had prepared, although he never published, an announcement of what he declared was "An Astounding Discovery." It involved factors which he called "cosmic"; but it likewise presented situations which the practicers of voodoo in Haiti, and other intellectually unveneered portions of the human race, would receive with perfect understanding. Since Tesla, one of the most highly civilized individuals, could evolve this conception, it is probable that other supercultured individuals or groups could find it in harmony with their ideas and experiences.

It involves, however, a situation in which the soulless "matter and energy" automaton (to which status we have seen Tesla relegate human beings) is able to judge ethical values, and, like a pontiff presiding over a court of morals, inflict punishment for transgressions.

Here is Tesla's description of his "astounding discovery":

While I have failed to obtain any evidence in support of the contentions of psychologists and spiritualists, I have proved to my complete satisfaction the automatism of life, not only through continuous observation of individual actions, but even more conclusively, through certain generalizations. These amount to a discovery which I consider of the greatest moment to human society and on which I shall briefly dwell.

I got the first inkling of this astounding truth when I was still a very young man, but for many years I interpreted what I noted simply as coincidences. Namely, whenever either myself or a person to whom I was attached, or a cause to which I was devoted, was hurt by others in a particular way, which might be best popularly characterized as the most unfair imaginable, I experienced a singular and undefinable pain which, for want of a better term, I have qualified as "cosmic," and shortly thereafter, and invariably, those who have inflicted it came to grief. After many such cases I confided this to a number of

friends, who had the opportunity to convince themselves of the truth of the theory which I have gradually formulated and which may be stated in the following words.

Our bodies are of similar construction and exposed to the same external influences. This results in likeness of response and concordance of the general activities on which all our social and other rules and laws are based. We are automata entirely controlled by the forces of the medium, being tossed about like corks on the surface of the water, but mistaking the resultant of the impulses from the outside for free will.

The movements and other actions we perform are always life-preservative and though seemingly quite independent from one another, we are connected by invisible links. So long as the organism is in perfect order it responds accurately to the agents that prompt it, but the moment there is some derangement in any individual, his self-preservative power is impaired.

Everybody understands, of course, that if one becomes deaf, has his eyesight weakened, or his limbs injured, the chances for his continued existence are lessened. But this is also true, and perhaps more so, of certain defects in the brain which deprive the automaton, more or less, of that vital quality and cause it to rush into destruction.

A very sensitive and observant being, with his highly developed mechanism all intact, and acting with precision in obedience to the changing conditions of the environment, is endowed with a transcending mechanical sense, enabling him to evade perils too subtle to be directly perceived. When he comes in contact with others whose controlling organs are radically faulty, the sense asserts itself and he feels the "cosmic" pain.

The truth of this has been borne out in hundreds of instances and I am inviting other students of nature to devote attention to this subject, believing that, through combined and systematic effort, results of incalculable value to the world will be attained.

Tesla's uncommunicative nature concerning his own intimate experiences has undoubtedly deprived the world of many interesting stories. He was unquestionably an abnormal individual, and of a type that does have what are known as

"psychic experiences." He was emphatic in his denial that he ever had experiences of that sort; yet he has related incidents that clearly belong in the psychic category. He seemed to be fearful that an admission of psychic experiences would cause him to be misunderstood as supporting spiritualism, or theories that something operates in life other than matter and energy.

Whenever he was asked for his philosophy of life, he would elaborate a theory that the human body is a meat machine which responds to external forces.

One evening in New York, as Tesla and the author sat in the lobby of the Hotel Governor Clinton, the inventor discussed his meat-machine theory. It was a materialistic philosophy typical of the Victorian era. We are, he held, composed of only those things which are identified in the test tube and weighed in the balance. We have only those properties which we receive from the atoms of which our bodies are constructed. Our experiences, which we call life, are a complex mixture of the responses of our component atoms to the external forces of our environment.

Such a philosophy has the virtue of simplicity and brevity of presentation; and it lends itself readily to being propounded with a positiveness that reacts on the propounder, and transforms his attitude into one of dogmatism in which emphatically expressed opinion is often confused with and substituted for factual evidence.

"I don't believe a word of your theory," I replied to Tesla's exposition, "and, thank God, I am convinced you don't believe a word of it either. The strongest proof I have that your theory is totally inadequate is that Tesla exists. Under your theory we could not have a Tesla. Tesla possesses a creative mind and, in his accomplishments, stands high above all other men. If your theory were correct, we would either all be geniuses like Tesla or we would all be mental mediocrities living in these meat machines you describe, all responding in the same way to the uniform, inanimate and uncreative external forces."

"But we are all meat machines," replied Tesla, "and it happens that I am a much more sensitive machine than other people and I receive impressions to which they are inert, and I can both understand and interpret these impressions. I am simply a finer automaton than others," he insisted.

"This difference, which you admit between yourself and others, Dr. Tesla, completely disproves your theory, from my viewpoint," I responded. "Your sensitiveness would be a purely random incident. In the integration of this randomness, with respect to all individuals, all of us would probably once, possibly very much more frequently, rise to the height of manifesting genius as you have done all your life. Even though the strokes of genius would manifest intermittently, all such individuals would receive the permanent rating as geniuses. Genius does not manifest, even intermittently, in all of us, so your meat-machine theory appears, to me, untenable, If you were really frank with me, you would tell me of many experiences you have had, strange experiences, that you could not explain, that do not fit into your meat-machine theory, and which you have been afraid to discuss with anyone for fear they would misunderstand you and perhaps ridicule you. I, however, will not find these experiences strange and beyond understanding, and one of these days you will open up and tell me about them."

As happened whenever I disagreed with him, after that evening I did not see Tesla for a while. In due time, however, I had a great many telephone conversations with him. Our discussion seemed to have brought about a change in his attitude toward me; and the next time I saw him he confided, "Mr. O'Neill, you understand me better than anyone else in the world." I mention this to indicate the correctness of my belief that there was another Tesla hidden within that synthetic individual, the superman, which Tesla sought to pass off on the public as his real self.

I did not, at this time, know about Tesla's "astounding discovery," or of some of his experiences about which I later learned. Had I known of these, my discussion with him could have been more specific.

SEVENTEEN

ALTHOUGH Tesla thoroughly disbelieved in psychical phenomena, as previously indicated, he had many experiences which belong in this category; and he neither discredited nor disavowed their reality. Such paradoxes were common in all matters concerning him.

Tesla, for example, completely rejected telepathy as a phase of psychical phenomena, but he was firmly convinced that mind could communicate directly with mind. When asked about his belief in telepathy by a newspaper reporter in the early nineties, Tesla replied: "What is usually taken as evidence of the existence of telepathy is mere coincidence. But the working of the human mind through observation and reason interests and amazes me. And then he added the paradoxical statement: "Suppose I make up my mind to murder you. In an instant you would know it. Now, isn't that wonderful enough? By what process does the mind get at all this?"

Reduced to its simplest terms, this interview states: Psychical telepathy does not exist as a reality; but the transmission of thought from mind directly to mind is a wonderful phenomenon, worthy of scientific study.

The paradox here is due to the fact that, at the period in which Tesla was speaking, all psychical phenomena were supposed to be mediated by the intervention of spirits, or souls of the departed. Such a theory had no place in Tesla's philosophy, since he did not believe in immortality and felt that he could explain all phenomena in terms of matter and energy; and the spirit was supposed to lie beyond both of these categories. Thinking, however, was, according to Tesla's theories, something which resulted from the interaction of matter and energy in the brain; and as this process probably produced waves in the ether, there was no reason why the waves sent out by one mind should not be received by another, with resulting transfer of thought.

Tesla would not discuss anything bordering on psychical experiences outside the circle of his relatives, however. On one occasion, though, he probably saved the lives of three of his friends through a premonition; and he related the incident to his nephew, Sava N. Kosanovich, who thus retells it:

"I heard from Tesla that he had premonitions. He explained his in a mechanical way, saying he was a sensitive receiver

that registers any disturbance. He declared that each man is like an automaton which reacts to external impressions.

"He told me of one instance in which he had held a big party here in New York for some of his friends who planned to take a certain train for Philadelphia. He felt a powerful urge not to let the friends depart as planned and forcibly detained them so that they missed the train on which they had planned to travel. This train met with an accident in which there were a large number of casualties. This happened sometime in the 90's.

"When his sister Angelina was ill, and died, he sent a telegram in which he said: "I had a vision that Angelina was arising and disappearing. I sensed all is not well."

Tesla himself tells a most remarkable story of two supernormal events, in an unpublished manuscript. It records a situation in which, owing to overwork, his strange phenomenon of visualization disappeared, or died, and was reborn. In coming back, it grew up quickly by repeating the visualization of events of earliest childhood and successively re-enacting later events, until it brought him to the actual moment and capped the climax by then presenting a visualization of an event that had not yet taken place.

The story of this experience, as told by Tesla:

I will tell of an extraordinary experience which may be of interest to students of psychology. I had produced a striking phenomenon with my grounded transmitter and was endeavoring to ascertain its true significance in relation to the currents propagated through the earth. It seemed a hopeless undertaking and for more than a year I worked unremittingly but in vain. This profound study so entirely absorbed me that I became forgetful of everything else, even of my undermined health. At last, as I was on the point of breaking down, nature applied the preservative, inducing lethal sleep.

Regaining my senses, I realized with consternation that I was unable to visualize scenes from my life except those of infancy, the very first ones that had entered my consciousness. Curiously enough, these appeared before my vision with startling distinctness and afforded me welcome relief. Night after night, when retiring, I would think of

them and more and more of my previous existence was revealed. The image of my mother was always the principal figure in the spectacle that slowly unfolded, and a consuming desire to see her again gradually took possession of me.

This feeling grew so strong that I resolved to drop all work and satisfy my longing. But I found it too hard to break away from the laboratory and several months elapsed during which I succeeded in reviving all the impressions of my past life up to the spring of 1892.

In the next picture that came out of the mist of oblivion, I saw myself at the Hotel de la Paix in Paris just coming to from one of my peculiar sleeping spells caused by prolonged exertion of the brain. Imagine the pain and distress I felt when it flashed upon my mind that a dispatch was handed to me at that very moment bearing the sad news that my mother was dying.

It was especially remarkable that all during this period of partially obliterated memory I was fully alive to everything touching on the subject of my research. I could recall the smallest details and the least insignificant observations in my experiments and even recite pages of texts and complex mathematical formulae.

This was a prevision of the event which took place immediately after his Paris lecture, as described in an earlier chapter, in which he rushed home in time to see his mother just before she died.

The second incident also concerns the death of his mother, and is told in another connection in the same manuscript. He states:

For many years I have endeavored to solve the enigma of death and watched eagerly for every kind of spiritual indication. But only once in the course of my existence have I had an experience which, momentarily, impressed me as supernatural. It was at the time of my mother's death.

I had become completely exhausted by pain and long vigilance and one night was carried to a building about two blocks from our home. As I lay helpless there, I thought that if my mother died while I was away from her bedside she would surely give me a sign.

Two or three months before I was in London in company with my late friend, Sir William Crookes, when spiritualism was discussed and I was under full sway of these thoughts. I might not have paid attention to other men but was susceptible to his arguments as it was his epochal work on radiant matter, which I had read as a student, that made me embrace the electrical career.

I reflected that the conditions for a look into the beyond were most favorable, for my mother was a woman of genius and particularly excelling in the powers of intuition. During the whole night every fiber of my brain was strained in expectancy, but nothing happened until early in the morning when I fell into a sleep or perhaps a swoon, and saw a cloud carrying angelic figures of marvelous beauty, one of whom gazed upon me lovingly and gradually assumed the features of my mother. The apparition slowly floated across the room and vanished and I was awakened by an indescribably sweet song of many voices. In that instant a certitude, which no words can express, came upon me that my mother had just died. And that was true.

I was unable to understand the tremendous weight of the painful knowledge I received in advance and wrote a letter to Sir William Crookes while still under the domination of these impressions and in poor bodily health.

When I recovered I sought for a long time the external cause of this strange manifestation and to my great relief, I succeeded after many months of fruitless effort. I had seen the painting of a celebrated artist, representing allegorically one of the seasons in the form of a cloud with a group of angels which seem to actually float in the air, and this had struck me forcibly. It was exactly the same that appeared in my dream with the exception of my mother's likeness. The music came from the choir in the church nearby at the early mass of Easter morning, explaining everything satisfactorily in conformity to scientific facts.

This "scientific" explanation by Tesla is, of course, totally unscientific. It ignores the three principal facts: one, that he had what he identified at the time as a supernormal experience that brought with it a certitude that words could not describe; two, that this experience conveyed a revelation of his mother's death, which he

understood as such; and, three, that the event took place at the exact time of her death. The mechanism by which the phenomenon was produced utilized the memories stored in Tesla's mind (of the painting, for example) as the vehicle by which the information could be presented to him in understandable, though symbolic, form. In addition, there was the premonition given several months previously as the climax of an extended phenomenon involving his mother.

Tesla's efforts to explain away "scientifically" everything of a psychical or spiritual nature, and the inadequate explanations which were satisfactory to him for this purpose, are an indication of a conflict that was taking place within him in an effort to reconcile the purely materialistic "matter and energy" superman, into which he fashioned himself, with the underlying individual into which was born a great capacity for manifesting a deep spiritual insight into life, but which he suppressed.

One of the strangest luncheon parties Tesla ever staged was that given by him to a prize fighter, Fritzie Zivic. It was served in one of the private dining rooms of the Hotel New Yorker in 1940. Fritzie Zivic was scheduled to take part in a prize fight at Madison Square Garden for the welterweight championship, and the luncheon was held at noon on the day of the battle.

Fritzie was one of six brothers, all of whom were either professional prize fighters or wrestlers. They lived at Pittsburgh where their father conducted a beer saloon. They were all born in Pittsburgh, but were the sons of parents, natives of Yugoslavia, whose diffcult-to-pronounce Slavonic name was shortened to Zivic by the brothers for their professional activities.

Tesla had all six of the brothers as his guests. The only other guests were William L. Laurence, science writer of the New York Times, and the author.

Three very different types of individuals were gathered around the table. The six fighting brothers were all fine physical specimens. They averaged medium height but their powerful, chunky bodies, deep chests and broad shoulders made them seem rather short. All were clear eyed, had clear complexions and clean-cut features, were conservatively dressed in sack suits, and wore white linen collars. The two newspapermen presented an appearance in strong contrast

with the fighters, and in contrast with all the others was Tesla. Laurence, with his great mop of jet black hair combed straight back, looked more like a musician.

Tesla was seated at the head of the table. At his right sat Fritzie and next to him ranged three of his brothers. Opposite them sat two other brothers and Mr. Laurence. The author sat at the far end of the table.

Tesla did not arrange one of his famous duck dinners for this occasion--he had other plans. As soon as the party was seated, Tesla stood up. The broad, stocky Fritzie looked like a pygmy by comparison. Tesla was attired in a light-weight, tight-fitting, black, single-breasted sack suit which made him look more slender than usual. He had lost considerable weight in the preceding year, and this accentuated the sharp, bony contour which his face had taken on in his latter years. His face, of the ascetic type, now was crowned with thinning locks of silvery white hair. His long slender hands, delicately shaped, started to wave over the seated prize fighter, who smiled up at the strange figure towering above him.

"I am ordering for you a nice thick beefsteak, two inches thick, so that you will have plenty of strength tonight to win the championship by a . . . "

The fighter had both hands up, trying to interrupt the gesticulating figure of the scientist.

"No," protested Fritzie, "I am in training and I cannot eat a steak today."

"You listen to me," shouted the insistent voice of Tesla, whose swinging arms and swaying body made him appear to be going through the antics of a cheer leader at a football game. "I'll tell you how to train. You will train on beefsteak. I am going to get you a beefsteak two inches thick and dripping with blood so that you will be able to . . ."

The five brothers now joined Fritzie in his protest.

"He can't eat beefsteak today. He would lose the fight, Dr. Tesla," they chorused.

"No, he won't lose the fight," shot back Tesla. "You must think of the heroes of our national Serbian poetry. They were redblooded men and mighty fighters. You too must fight for the glory of Serbia, and you need beefsteak dripping in blood to do it!"

Tesla had worked himself into a fine frenzy and was waving his arms and punching his palms as if he were at the ringside at an exciting moment in the battle. His frenzy was lost on Fritzie and his brother pugilists. They were unmoved. Fritzie replied:

"I will win, Dr. Tesla. I will fight for the glory of Yugoslavia and when the referee gives me the decision and I speak into the microphone I will also say I fought for Dr. Tesla--but no beefsteak today, Dr. Tesla, please."

"All right, Fritzie, you can have whatever you want," Tesla agreed, "but your brothers will have their beefsteak."

"No, Dr. Tesla," replied the eldest brother, "if Fritzie cannot have beefsteak neither will we. We will eat whatever he eats."

Fritzie ordered scrambled eggs on toast, with bacon, and a glass of milk. The five brothers gave duplicate orders and the two newspapermen did likewise.

Tesla laughed heartily. "So that is what you do your fighting on today," he said between chuckles.

For himself, the blood-thirsty 83-year-old scientist ordered "A dish of hot milk"; and on this diet he managed to summon a tremendous amount of energy during the meal which he directed toward urging Fritzie to give his opponent "everything you've got" and "make it a knockout in the first round."

It was a strange dinner. Despite the greatly outnumbering pugilists with their hard set faces and chunky powerful bodies, the thin, bony faced, sharp featured, almost emaciated scientist with his sunken eyes, and his thin, silky silver hair, easily dominated the scene. Everyone was at ease despite the brothers' anticipation of Fritzie's impending battle and Tesla's enthusiasm. Yet, in spite of the fact that everyone was relaxed, there was an eerie kind of tenseness linking the peculiar assemblage. Once I became

conscious of the situation, I watched developments with interest. I had experienced such conditions previously but never under such circumstances as these.

Mr. Laurence, of the Times, was seated at my right. He began to act a bit restless while only halfway through the meal. Several times he looked under the table. He in turn rubbed his ankle, his knee, his calf. He shifted his position. He rubbed his elbow and later his forearm. I managed to catch his eye.

"Anything bothering you, Bill?" I asked, knowing full well what was happening.

"There is something strange going on here," he replied.

A couple of minutes later he again reached, and looked under the table.

"Feel anything?" I asked.

"Yes," he replied, seemingly a bit worried. "Something hot is touching me at different spots. I can feel the heat but I can't see anything that is doing it. Do you feel it, too?" he asked.

"Don't worry about it," I assured him. "I know what it is, and will tell you all about it later. Just make as close observations as you can now."

The phenomenon continued until the party broke up. On our way back to our offces, I explained to Mr. Laurence.

"You have often laughed at me for my gullibility in accepting the reality of the so-called psychic experiences," I said. "Now you have had one. As soon as that luncheon got well under way, after Dr. Tesla's fiery outburst had quieted down, I sensed a peculiar tenseness in the air around me. At times the atmosphere seemed webby to my face and hands, so I suspected something unusual might happen.

"That gathering was a perfect set-up for a psychic seance, and if it was held in the dark there is no telling what we might have observed. Here were six powerfully built men, closely in rapport with each other, all filled to the bursting point with vital energy waiting for an event that

would release an emotional outburst. In addition, we had Dr. Tesla staging an emotional outburst the like of which he probably never before exhibited throughout his life. He was supercharged with a different kind of vital energy. Just visualize Dr. Tesla as a medium acting as a co-ordinator, in some unknown way, to release these pent-up stores of vital energy which, again in an unknown manner, organized channels of conduction through which this energy was transferred from levels of high potential to levels of lower potential.

"In this case we were the levels of lower potential, for I had exactly the same experiences you had, with these energy-transfer channels in space making contact with various parts of my body and producing areas in which I, too, experienced a sensation of intense heat.

"You have read reports of seances in which the sitters reported that they experienced cool breezes. In these situations the action is the reverse of what we experienced, for in the seances energy was being drawn from the sitters to be organized by the so-called medium for the production of phenomena.

"Some kind of highly attenuated energy-bearing fluid was, in our experience today, drawn from the bodies of the fighters and fed into our bodies--and in the seances it is drawn from the bodies of the sitters and fed into that of the medium, or to a central collecting point. In a report which I have written on my seance observations, I have called this substance psynovial fluid, which is merely a convenient abbreviation for new psychic fluid.

"Now that you have had today's experience, you will understand why a few years ago I risked having Dr. Tesla figuratively massacre me when I told him he was using his meat-machine philosophy of human life to cover up a lot of strange experiences he has had, and about which he was afraid to talk. . . ."

Another strange supernormal experience came to Tesla a few days before he died, but he was probably totally unaware that the situation had any unusual aspects.

Early one morning he called his favorite messenger boy, Kerrigan, gave him a sealed envelope, and ordered him to

deliver it as quickly as possible. It was addressed to "Mr. Samuel Clemens, 35 South Fifth Ave., New York City."

Kerrigan returned in a short time with the statement that he could not deliver the message because the address was incorrect. There is no such street as South Fifth Ave., the boy reported; and in the neighborhood of that number on Fifth Ave. no one by the name of Clemens could be located.

Tesla became annoyed. He told Kerrigan: "Mr. Clemens is a very famous author who writes under the name Mark Twain, and you should have no trouble locating him at the address I gave you. He lives there."

Kerrigan reported to the manager of his office and told him of his diffculty. The manager told him: "Of course you couldn't find South Fifth Avenue. Its name was changed to West Broadway years ago, and you won't be able to deliver a message to Mark Twain because he has been dead for twenty-five years."

Armed with this information, Kerrigan returned to Tesla, and the reception accorded his announcements left him still further confused.

"Don't you dare to tell me that Mark Twain is dead," said Tesla. "He was in my room, here, last night. He sat in that chair and talked to me for an hour. He is having financial diffculties and needs my help. So you go right back to that address and deliver that envelope--and don't come back until you have done so." (The address to which he sent the messenger was that of Tesla's first laboratory!)

Kerrigan returned to his offce. The envelope, not too well sealed, was opened in the hope it would give some clue as to how the message could be delivered, The envelope contained a blank sheet of paper wrapped around twenty $5 bills! When Kerrigan tried to return the money, Tesla told him, with great annoyance, either to deliver the money or keep it.

The last two decades of Tesla's life were filled with many embarrassing situations concerning unpaid hotel bills, and it would seem that by some process of transference this situation was shifted to his perception of Mark Twain.

In view of Tesla's highly intensified abilities to see the subjects of his thoughts as materialized objects, the simpler theory would be that by his usual process he had summoned the vision of Mark Twain, Tesla and Mark Twain were very good friends, and the inventor had every reason for knowing that the heavy-thinking humorist was dead, Such being the case, how was he able to forget his death? An objective theory can be offered which may, or may not, contain the correct explanation.

Tesla's memory was filled with many recollections of Mark Twain, dating back to his early youth when he credited the reading of one of the humorist's books with having brought him out of a critical illness. Twenty years later, when Tesla related this incident, the humorist was so deeply affected he wept. A close friendship followed, filled with many pleasant incidents. Every incident concerning Mark Twain was laid down in Tesla's memory. How these records are filed in the brain we do not know, but we might assume, for the moment, that the arrangement is orderly enough, with the system based on a time sequence in which each successive incident is filed on an earlier one, the latest ones being on top. When Tesla started the process of visualizing Mark Twain in his room (and it probably operated on a subconscious level), he penetrated through the stack of memory records until he reached one that was satisfactory, and then concentrated so heavy a flow of vital energy in carrying this to the visualization center of his brain that it burned out, and destroyed, or narcotized, all later memory records that lay above it. As a result, after the visualization process was over, there was no record in Tesla's memory files of anything that happened in his relations with Mark Twain, following the pleasant record he had so strangely relived. All subsequent memory records were wiped out, including his memory of Mark Twain's death. It would then be perfectly logical for him to reach the conclusion that Mark Twain was still alive!

Several versions of this story are in circulation. They all have in common Tesla's belief that Mark Twain was still alive; that he himself had very recently been in communication with him, and sought to send him money to meet a diffcult situation.

Pirated, lied about, ignored, (Dr. W. H. Eccles concludes an obituary memorial, in Nature (London), February 13, 1943:--"Throughout his long life of 85 years Tesla seldom

directed attention to his own successes, never wrote up again his old work, and rarely claimed priority though continually pirated. Such reserve is particularly striking in a mind so rich in creative thought, so competent in practical achievement.") Tesla carried on his work during the latter decades, always hoping that he would be able to arrange matters so that he would be able to finance all the inventions he was treasuring in his mind. His pride would not permit him to admit financial embarrassment. He was forced frequently to leave hotels because of unpaid bills. His friend, B. A. Behrend, author of the book, The Induction Motor, which had clarified Tesla's theory for engineers, when visiting New York and finding the inventor moved from the hotel where he last found him, in each instance paid his bills, and caused Tesla's held baggage to be forwarded to him.

In the early thirties, when it seemed as if financial discouragements would "have him down," Tesla, however, appeared as optimistic as ever. He declared: "It is impossible for anyone to gain any idea of the inspiration I gain from my applied inventions which have become a matter of history, and of the force it supplies to urge me forward to greater achievements. I continually experience an inexpressible satisfaction from the knowledge that my polyphase system is used throughout the world to lighten the burdens of mankind and increase comfort and happiness, and that my wireless system, in all of its essential features, is employed to render a service to and bring pleasure to people in all parts of the earth."

When his wireless-power system was mentioned, he exhibited no sign of resentment over the collapse of his project but replied philosophically: "Perhaps I was a little premature. We can get along without it as long as my polyphase system continues to meet our needs. Just as soon as the need arises, however, I have the system ready to be used with complete success."

On his eightieth birthday he was asked if he expected actually to construct and operate his recently announced inventions, and in reply he quoted, in German, a stanza from Goethe's Faust:

"The God that in my bosom lives"

"Can move my deepest inmost soul,"

"Power to all my thought he gives"

"But outside he has no control."

It had been Tesla's intention to write his autobiography. He desired to have the story of his work recorded with a most meticulous regard for accuracy; and this, he felt, no one but himself could bring to it. He declared that he had no intention of starting work on this project until he had accomplished the application of all of his major discoveries. Several persons who proposed writing his biography received only a refusal of the requested co-operation. Kenneth Swezey, a writer on scientific subjects, maintained close contact with Tesla for a number of years, and it was expected that Tesla would co-operate with him in such a project. Swezey assembled seventy letters from leading scientists and engineers in all parts of the world as a surprise for Tesla on his seventy-fifth birthday, at which time the letters, bound in a memorial volume, were presented to him. These letters, reprinted in Yugoslavia, led to the establishment of the Tesla Institute in that country. Swezey was engaged in war work and expected, at the time of Tesla's death, to enter the Navy; otherwise he might have undertaken the task of writing Tesla's biography. Tesla, even up to his eighty-fourth year, expected to recover more robust health and to live beyond the century mark. It is probable, therefore, that he had not started work on his autobiography. Whether or not any parts of it have been written is impossible to ascertain at the present time. All Tesla's records were sealed by the Custodian of Alien Property, although Tesla was a citizen of the United States.

During the last half-dozen years of his life, Tesla, happily, was supplied with enough money to meet his immediate needs, thanks to the payment to him of an honorarium of $7,200 a year, by the Yugoslav government, as patron of the Tesla Institute, established in Belgrade. (The Society for the Foundation of the Tesla Institute at Belgrade was organized as Tesla neared his eightieth year. It enlisted support from the scholars, the government, commercial interests and the people as a whole. From the government and private sources an endowment was subscribed which was adequate to erect and equip a research laboratory and maintain it in operation as an institute. The Institute was opened in 1936, in commemoration of Tesla's eightieth

anniversary. A week of observance was held throughout Yugoslavia and formal celebrations were held at Belgrade on May 26, 27 and 28, at Zagreb on May 30, and at his native village, Smiljan, on June 2 and also on July 12.) Even with this income, however, and with a very limited range of activity (being confined largely to his room), during the last two years Tesla still managed to fall behind in his hotel bill. This was owing to his unlimited generosity. He was very generous in bestowing tips on all who performed the slightest service for him, and in responding to the slightest suggestion that anyone was in need of assistance.

During the latter part of 1942 he spent most of the time in bed, mentally active but physically weak. He permitted no visitors to come to his room, not even close associates of earlier years. He insisted to hotel employees that he was not ill and refused to listen to questions that he have a doctor visit him. He gave orders that even hotel employees were not to enter his room unless he summoned them.

On January 5, Tuesday morning, he permitted the maid to come to his room, and then gave orders to guard his room closely so that he would not be disturbed. This was done. It was not unusual for Tesla to give orders that he was not to be disturbed for protracted periods. Early Friday morning (January 8) a maid with a premonition, risking his displeasure, entered Tesla's room and found him dead. He looked peaceful, as if resting, with a suggestion of a smile on his gaunt bony face. The superman died as he had lived--alone.

The police were notified that Tesla had died alone and without medical attendance. The coroner declared his death due to natural causes incident to senility; and that he had died on the night of Thursday, January 7, 1943, some hours before the maid entered the room. Operatives from the Federal Bureau of Investigation came and opened the safe in his room and took the papers it contained, to examine them for a reported important secret invention of possible use in the war. The body was removed to Campbell's Funeral Parlors at Madison Avenue and 81st Street.

Funeral services were held at the Cathedral of St. John the Divine, on Tuesday, January 12, at 4 pm. Bishop Manning offered the opening sentences of the Burial Offce and Final Prayer. Following the services, the body was removed to

Ferncliff Cemetery at Ardsley, N. Y., and was later cremated.

AFTERGLOW

EIGHTEEN

DESPITE his celibate life, and his almost hermitlike existence in his own intellectual sphere, Tesla was, in his social contacts, a charming individual. The year he had spent digging ditches and doing hard manual labor, when he could get a job of any kind, and his experience during that time of sleeping in any shelter he could obtain and eating any kind of food he could manage to secure, undoubtedly made a tremendous and lasting, impression on him. The fact that he could never be induced to discuss this period would so indicate. Yet it probably softened him in a beneffcial way--by a going-through-the-mill process. But it had been a grievous insult to his personality to be valued only for the brute strength in his muscles; and this rankled ever after.

Once he had obtained funds through the founding of his laboratory and the sale of his patents to Westinghouse, he thereafter maintained an almost princely status. He knew how to wear clothes to increase the impressiveness of his appearance; his tallness gave him something of an advantage over others; his obvious physical strength brought him a respect that forbade any invasion of his attitude; his excellent English and the care he exercised to use the language correctly, and his command of a half-dozen other languages, established him as a scholar; and the first batch of his alternating-current inventions created for him in the mind of the public a reputation for outstanding scientific accomplishment. The fact that he always spoke of the value of his inventions to the world, and not of the greatness of his own accomplishment, endeared him to all who met him.

When Tesla was riding a tidal wave of popularity during the nineties, he was averse to publicity; but frequently well-known writers for the newspapers were able to break through the barriers and secure "feature" articles. An excellent description of him, keyed to the manner of the period, is contained in an article written by Franklin Chester, in the

Citizen of August 22, 1897. The portion referring to his personal appearance and activities follows:

So far as personal appearance goes no one can look upon him without feeling his force. He is more than six feet tall and very slender. Yet he possesses great physical power. His hands are large, his thumbs abnormally long, and this is a sign of great intelligence. His hair is black and straight, a deep shining black. He brushes it sharply from over his ears, so that it makes a ridge with serrated edges.

His cheekbones are high and prominent, the mark of the Slav: his skin is like marble that age has given the first searing of yellow. His eyes are blue, deeply set, and they burn like balls of fire. Those weird flashes of light he makes with his instruments seem also to shoot from them. His head is wedge shaped. His chin is almost a point.

Never was a human being filled with loftier ideals. Never did a man labor so unceasingly, so earnestly, so unselfishly for the benefft of the race. Tesla is not rich. He does not trouble himself about money. Had he chosen to follow in the footsteps of Edison he could be, perhaps, the richest man in the world, and Tesla is just 40 years old.

Tesla is, above all things, a serious man, undoubtedly the most serious man in New York. Yet he has a keen sense of humor and the most beautiful manners. He is the most genuinely modest of men. He knows no jealousy. He has never decried the accomplishments of another, never refused credit.

When he talks you listen. You do not know what he is saying, but it enthralls you. You feel the importance without understanding the meaning. He speaks the perfect English of a highly educated foreigner, without accent and with precision. He speaks eight languages equally well.

The daily life of this man has been the same, practically, ever since he has been in New York. He lives in the Gerlach, a very quiet family hotel, in 27th street, between Broadway and Sixth avenue. He starts for his laboratory before 9 o'clock in the morning, all day long he lives in his weird, uncanny world, reaching forth to capture new power to gain fresh knowledge.

No stranger ever sees him at his work. No one knows of his assistants. At rare intervals he presents some experiments in his laboratory, and there is no sacrifice that thousands of people would not make to gain admission to these.

Usually he works until 6 o'clock, but he may stay later. The absence of natural light does not trouble him. Tesla makes sunlight in his workshop.

At exactly 8 o'clock he enters the Waldorf. He is attired in irreproachable evening clothes. In the winter time he never wears an evening jacket, but always the coat with tails.

He finishes his dinner at exactly 10 o'clock, and leaves his hotel, either to go to his rooms to study or to return to his laboratory to work through the night.

Arthur Brisbane, who later became Hearst's famous editor, interviewed Tesla and published in The World, August 22, 1894, the longest story he had written on a famous person. He declared Tesla "Our Foremost Electrician--Greater Even than Edison," and included the following description of him:

He has eyes set very far back in his head. They are rather light. I asked him how he could have such light eyes and be a Slav. He told me that his eyes were once much darker, but that using his mind a great deal had made them many shades lighter. I have often heard it said that using the brain makes the eyes lighter in color. Tesla's confirmation of the theory through his personal experience is important.

He is very thin, is more than six feet tall, and weighs less than a hundred and forty pounds. He has very big hands. His thumbs are remarkably big, even for such big hands. They are extraordinarily big. This is a good sign. The thumb is the intellectual part of the hand. The apes have very small thumbs. Study them and you will notice this.

Nikola Tesla has a head that spreads out at the top like a fan. His head is shaped like a wedge. His chin is as pointed as an ice-pick. His mouth is too small. His chin, though not weak, is not strong enough. His face cannot be studied and judged like the faces of other men, for he is not a worker in practical fields. He lives his life up in

the top of his head, where ideas are born, and up there he has plenty of room. His hair is jet black and curly. He stoops--most men do when they have no peacock blood in them. He lives inside of himself. He takes a profound interest in his own work. He has that supply of self-love and self-confidence which usually goes with success. And he differs from most of the men who are written and talked about in the fact that he has something to tell.

Tesla had, to be sure, a sense of humor and enjoyed putting over a subtle joke. Before the period in which he became a regular diner at the Waldorf-Astoria, he dined nightly at Delmonico's, then the smartest hostelry in the city, and a gathering place for "The 400." Tesla was the most famous and spectacular figure among the famous patrons of the famous place, but he always dined alone. He could never be induced to join other groups and never had a guest of his own. After dining he would always return to work at his laboratory.

One evening some of his friends, believing that he was working too hard and should get some relaxation, induced him to join them in a game of billiards. They assumed he had neglected to learn how to play games, so, on arriving at the billiard room, they explained to him how to hold the cue, strike the balls, and other elements of the game. Tesla had not played billiards in a dozen years; but during his second year at Graumltz, when he was a year ahead in his studies and spent his evenings in the cafe's, he had become an expert billiardist. When the experts at Delmonico's gave him preparatory instruction, he asked some "dumb" questions, and made some intentional miscues. Taking on one of the players and still asking silly questions, he tried the most diffcult way of making shots--to demonstrate his purely amateur status--and made them, to the amazement of the experts. Several of them took him on that evening, and he defeated all of them with badly unbalanced scores. He declared the new game give him a wonderful opportunity to practice very abstract mathematical theories; and the experts at Delmonico's spread stories about the wonderful accomplishment of Scientist Tesla in mastering the game in a single evening and defeating the best players in the city. The story got into the newspapers. Tesla refused to play any more, declaring he was in danger of becoming so enthusiastic over the game that it would interfere with his researches.

This same man magnificent who graced the Waldorf-Astoria and Delmonico's was not averse, however, to visiting the Bowery, which was but a block away from his Houston Street laboratory. He repaired to a thirst-quenching emporium on that thoroughfare one afternoon shortly after a denizen of the Bowery, Steve Brodie, had achieved fame by jumping, or at least claiming to have jumped, off the Brooklyn Bridge. As Tesla raised his glass of whiskey he said to the bartender: "You know what Steve said as he was about to jump off the bridge--`Down he goes"'; and with that he downed his liquor in a gulp.

A near-by drinker, a little the worse for several, misunderstood Tesla's remark and got the impression he had heard Steve Brodie telling the final episode of his feat. He rushed up to Tesla to buy him a drink, and was joined by his friends. Tesla with a laugh shook them off and dashed out of the bar, while the misguided drinker started after him yelling, "Stop him, that's Steve." On the street the pedestrians misunderstood the thick-tongued drinker's shout and joined him in the chase, calling "Stop, thief!" Tesla's long legs rendered him a valuable service and he got a lead on the crowd, dashed into an alley, over a fence and climbed a fire escape on the back of his own building, reached his laboratory through a window, quickly donned a blacksmith's apron and started hammering a bar of metal. His pursuers, however, failed to trace him.

Tesla was idolized by the Serbians in New York. A great many of them could claim to be distant relatives through either the Tesla or Mandich side of the family, and those who could not claim this distinction revered him none the less, despite the fact he never accepted invitations to take part in their social or other functions.

One day an excited Serbian, a laborer, came to his apartment at the Waldorf-Astoria to beg his aid. He had gotten into a fight and pummeled a fellow Serbian, who had sworn out a warrant for his arrest. The visitor did not have any money but wanted to go to Chicago to escape arrest. Would Tesla please lend him the money for his railroad fare?

"So you assaulted a man and now want to run away to escape punishment," said Tesla. "You may run away from the law but you are not going to escape punishment; you are going to get it right now!" Seizing a cane and grasping the man by

the back of the neck, he ran him around the room, beating the dust out of the seat of his trousers until the man cried for mercy.

"Do you think you can be a better man in Chicago and keep out of fights?" Tesla asked him. The man was sure he could. He received the money for his railroad fare and a few dollars more.

So great was Tesla's popularity in the nineties that many persons came to dine in the Palm Room at the Waldorf just to catch a glimpse of the famous inventor. He arranged to leave his offce at six, but just before leaving he would telephone the order for his dinner to the headwaiter, always insisting that none less could serve him. The meal was required to be ready at eight o'clock. In the meantime he would go to his room and array himself in formal evening attire--white tie and tails. He dined alone, except on the rare occasions when he would give a dinner to a group to meet his social obligations.

Money was always a nuisance detail to Tesla. For about fifteen years, following 1888, he always had all he needed to meet his obligations; and he lived well. After about 1902 his financial road became quite rocky--but his fame was greater than ever, and likewise the need for maintaining his standard of living if he was to recoup his fortune. He continued to stage frequent large dinners at the Waldorf to repay his social obligations, and had diffculty in accustoming himself to a money deffciency. On one occasion, when a large party was assembled in a private dining room, the headwaiter whispered to him that a most excellent dinner was prepared and ready to serve as he had ordered it, but that the credit department insisted it could not be served until he paid for it in advance. "Get Mr. Morgan on the telephone in the manager's offce and I will be down there immediately," Tesla fumed. In a short time a more-than-adequate check was delivered to Tesla by a messenger. Many such occasions are reported to have arisen, but were always straightened out in the manager's offce, usually without any outside intervention.

The closest approach to home life which Tesla enjoyed came to him through Robert Underwood Johnson diplomat and poet, and one of the editors of the Century Magazine, whose home was in Madison Avenue in the fashionable Murray Hill district. Tesla and Johnson were very close friends. A love

of poetry was one of the several interests they had in common. Johnson wrote, and published in the Century, in April, 1895, a short poem on his visit to Tesla's laboratory. This led to a cooperative enterprise in which he paraphrased many pieces of Serbian poetry from literal translations made by Tesla, who could recite many thousands of lines of such material from memory. About forty pages of these translations, with an introductory note by Tesla, appeared in the next edition of Poems by Johnson.

Persons famous in all fields of activity were frequent guests in the Johnson home, and formal dinners were constantly being held for brilliant assemblages of personalities. Tesla was present as frequently as he could be induced to come, but he preferred to avoid all formal dinners as much as possible. He was, however, a very frequent informal visitor, arriving unexpected, and often at most unusual hours. It was not uncommon for Tesla to arrive at the Johnson home after midnight, after the family had retired, and for "Bob" and "Nick" to sit up for hours reveling in the exchange of a magnificent array of ideas. (Johnson and "Willie" K. Vanderbilt, were, as has been noted, the only individuals who rated the exchange of first names with Tesla.)

Tesla's visits to the Johnson home were always many hours long. He would arrive in a hansom cab, which he always required to wait for him to return to his hotel only a few blocks distant. The Johnson children learned to take advantage of this, and when he arrived early in the evening they would get his permission to use the cab for a drive through Central Park while he chatted at home.

Tesla enjoyed the opera and at one time attended the performances quite frequently. William K. Vanderbilt's box was always available to him, as likewise were those of many other patrons of the Metropolitan. He occasionally attended the theatre. His favorite actress was Elsie Ferguson who, he declared, knew how to dress and was the most graceful woman he had ever seen on the stage. He gradually dropped both the theatre and opera in favor of the movies, but was an infrequent attendant even at those. He would not witness a tragedy but enjoyed comedy and the lighter aspects of entertainment.

One of his close friends was Rear Admiral Richmond Pearson Hobson, the Spanish American War hero. In later years,

Hobson was the only person who was able to cajole Tesla into breaking a long vigil at his intellectual pursuits for a session at the movies.

Tesla did not subscribe to any religion. Early in life he severed his relations with the Church and did not accept its doctrines. At his seventy-fifth birthday dinner he declared that that which is called the soul is merely one of the functions of the body, and that when the activities of the body cease, the soul ceases to exist.

It is difficult for a man to appear as a hero to his secretary, but to Miss Dorothy F. Skerritt, who served Tesla in this capacity for many years until he closed his offce when he was seventy, he remained a saintly superman. Her description of Tesla, at this age, records him as possessing the same magnetic personality that so impressed writers thirty years earlier. She wrote:

As one approached Mr. Tesla he beheld a tall, gaunt man. He appeared to be an almost divine being. When about 70 he stood erect, his extremely thin body immaculately and simply attired in clothing of a subdued coloring. Neither scarf pin nor ring adorned him. His bushy black hair was parted in the middle and brushed back briskly from his high broad forehead, deeply lined by his close concentration on scientific problems that stimulated and fascinated him. From under protruding eyebrows his deepset, steel gray, soft, yet piercing eyes, seemed to read your innermost thoughts. As he waxed enthusiastic about fields to conquer and achievements to attain his face glowed with almost ethereal radiance, and his listeners were transported from the commonplaces of today to imaginative realms of the future. His genial smile and nobility of bearing always denoted the gentlemanly characteristics that were so ingrained in his soul.

Until the last, Tesla was meticulously careful about his clothes. He knew how to dress well and did so. He declared to a secretary, in 1910, that he was the best-dressed man on Fifth Avenue and intended to maintain that standard. This was not because of personal vanity. Neatness and fastidiousness in clothes were entirely in harmony with every other phase of his personality. He did not maintain a large wardrobe and he wore no jewelry of any kind. Good clothes fitted in very nicely with his courtly bearing. He observed, however, that in the matter of clothes the world

takes a man at his own valuation, as expressed in his appearance, and frequently eases his way to his objective through small courtesies not extended to less prepossessing individuals.

He was partial to the waisted coat. No matter what he wore, however, it carried an air of quiet elegance. The only type of hat he wore was the black derby. He carried a cane and wore, usually, gray suede gloves.

Tesla paid $2.50 a pair for his gloves, wore them for a week and then discarded them even though they still appeared as fresh as when they came from the maker. He standardized his style of ties and always wore the four-in-hand. The design motive was of minor importance but the colors were limited to a combination of red and black. He purchased a new tie every week, paying always one dollar.

Silk shirts, plain white, were the only kind Tesla would wear. As with other articles of his clothing, such as pajamas, his initials were always embroidered on the left chest.

Handkerchiefs he purchased in large numbers because he never sent them to the laundry. After their first use they were discarded. He liked a good quality of linen and purchased a standard package brand. His collars were never laundered, either. He never wore one more than once.

Tesla always wore high-laced shoes, except on formal occasions. He required a long narrow shoe and insisted on a last that had a neatly tapered square-toe effect. His shoes were undoubtedly made to order, for the tops extended halfway up his calf, a style that could not be purchased in merchant shoe stores. His tallness in all probability made this additional support at the ankles desirable.

The single use of articles, such as handkerchiefs and collars, extended to napkins. Tesla had a germ phobia, and it acted like so much sand in the social machinery of his life. He required that the table he used in the dining room of his hotel be not used by others. A fresh table cloth was required for every meal. He also required that a stack of two dozen napkins be placed on the left side of the table. As each item of silverware and each dish was brought to him--and he required that they be sterilized by heat before leaving the kitchen--he would pick each one up, interposing

a napkin between his hand and the utensil, and use another napkin to clean it. He could then drop both napkins on the floor. Even for a simple meal, he usually ran through the full stock of napkins. Flies were his pet abomination. A fly alighting on his table was adequate cause for removing everything from the table and making an entirely new start with the meal.

Tesla was fortunate in that the headwaiter at the Waldorf-Astoria, during the period he was living there, Mr. Peterson, was afterward headwaiter at the Hotel Pennsylvania, where he later lived for several years. A story was in circulation to the effect that both at the Waldorf and at the Pennsylvania a special chef was employed to prepare Tesla's meals, but Mr. Peterson states that this story was untrue.

In his earlier years, for dinner, he greatly enjoyed fine thick steaks, preferably the filet mignon, and it was not unusual for him to consume two or three at a sitting. Later his preference turned to lamb, and he would frequently order a roast saddle of it. While the saddle was usually large enough to serve a party of several persons, as a rule he ate of it only the central portion of the tenderloin. A crown of baby lamb chops was another favorite dish. He also relished roast squab with nut stuffng. In fowl, however, his choice was roast duck. He required that it be roasted under a smothering of celery stalks. This method of preparing the duck was of his own devising. He very often made it the central motif around which a dinner was designed when entertaining friends, and on such occasions he would go to the kitchen to superintend its preparation. Duck so prepared was nevertheless delicious. Of the duck he ate only the meat on either side of the breast bone.

With the passing decades, Tesla shifted away from a meat diet. He substituted fish, always boiled, and finally eliminated the meat entirely. He later almost entirely eliminated the fish and lived on a vegetarian diet. Milk was his main standby, and toward the end of his life it was the principal item of diet, served warm.

As a youth he drank a great deal of coffee, and, while he gradually became aware that he suffered unfavorable influences from it, he found it a diffcult habit to break. When he finally made the decision to drink no more of it, he adhered to his good intentions but was forced to

recognize the fact that the desire for it remained. He combated this by ordering with each meal a pot of his favorite coffee, and having a cup of it poured so that he would get the aroma. It required ten years for the aroma of the coffee to transform itself into a nuisance so that he felt secure in no longer having it served. Tea and cocoa he also considered injurious.

He was a heavy smoker in his youth, mostly of cigars. A sister who seemed fatally ill, when he was in his early twenties, said she would try to get better if he would give up smoking. He did so immediately. His sister recovered, and he never smoked again.

Tesla drank whiskey, for this he considered a very beneffcial source of energy and an invaluable means for prolonging life. It was responsible, he believed, for the longevity enjoyed by many of his ancestors. It would enable him, he declared early in the century, to live to one hundred and fifty. When prohibition came along with the First World War, he denounced it as an intolerable interference with the rights of citizens. Nevertheless, he promptly gave up the use of whiskey and all other beverages except milk and water. He declared, however, that the elimination of whiskey would reduce his expectation of life to one hundred and thirty years.

Stimulants were not necessary to help him to think, Tesla said. A brisk walk he found much better as an aid for concentration. He seemed to be in a dream when walking. Even one whom he knew very well he would pass at close range and not see, though he might appear to be looking directly at him. His thoughts were usually miles away from where he was. It was this practice, apparently, which was responsible for the accident, in 1937, when he was struck and severely injured by a taxicab. As a matter of fact, he had stated in an interview two years earlier that he would probably be killed by a truck or taxicab while jaywalking.

Tesla's weight, stripped, was 142 pounds, and, except during brief periods of illness, hardly varied a pound from 1888 to about 1926, when he intentionally reduced his weight five pounds.

One of Tesla's indulgences, over many years, was scalp massages. He would visit a barbershop three times a week and have the barber rub his scalp for half an hour. He was

insistent upon the barber placing a clean towel on his chair but, strangely enough, he did not object to the use of the common shaving mug and brush.

Tesla always claimed that he never slept more than two hours a night. His retiring time, he said, was five am, and he would arise at ten am after spending only two hours in sleep, three hours being too much. Once a year, he admitted, he would sleep for five hours--and that would result in building up a tremendous reserve of energy. He never stopped working, he claimed,--even when asleep. Tesla laughed at Edison's claim that he slept only four hours a night. It was a regular practice with Edison, he said, to sit down in his laboratory and doze off into a three-hour nap about twice a day. It is possible that Tesla, too, obtained some sleep in a similar fashion, perhaps without being conscious of the fact. Hotel employees have related that it was quite common to see Tesla standing transfixed in his room for hours at a time, so oblivious to his surroundings that they were able to work around his room without his being, apparently, aware of their presence.

Tesla always provided his offce with a separate washroom which no one but himself was permitted to use. He would wash his hands on the slightest pretext. When he did so, he required that his secretary hand him a freshly laundered towel each time to dry them.

He went to extremes to avoid shaking hands. He usually placed his hands behind his back when anyone approached who he feared might make an effort to shake hands, and this frequently led to embarrassing moments. If by chance a visitor to his offce should catch him off guard and shake his hand, Tesla was so upset that he would be unable to pay attention to the visitor's mission and frequently would dismiss him before it was completely stated; and immediately he would rush to the washroom and scour his hands. Workmen eating their lunch with dirty hands almost nauseated him.

Pearls, too, were one of Tesla's phobias. If a woman guest at a dinner party to which he was invited wore pearls, he was unable to eat. Smooth round surfaces, in general, were an abomination to him; it had even taken him a long time to learn to tolerate billiard balls.

Tesla never knew the experience of having a headache. In spite of a number of cases of serious illness, in his independent years he was never attended by a doctor.

There were reasons for practically all of Tesla's phobias, not all of them generally known. His germ phobia can be traced back to his two serious illnesses early in life, both of which were probably cholera, a disease constantly prevalent in his native land, caused by a germ transmitted by impure drinking water and by contact between individuals.

Tesla was not oblivious of his idiosyncrasies; he was quite aware of them and of the friction which they caused in his daily life. They were an essential part of him, however, and he could no more have dispensed with them than he could his right arm. They were probably one of the consequences of his solitary mode of life or, possibly, a contributing cause of it.

6NINETEEN

Tesla's mind always seemed to be under an explosive pressure. An avalanche of ideas was forever straining for release. He seemed to be unable to keep up with the flood of his own thoughts. He never had suffcient facilities to keep his accomplishments equal to his projects. If he had an army of adequately trained assistants, he would still be insuffciently equipped. As a result, those associated with him always experienced a sense of "drive"; yet he was a most generous employer both in the matter of wages paid and the number of hours of work required. He frequently demanded overtime work but always paid generously for it.

Nevertheless, Tesla was not an easy man to work for. He was most meticulously neat in his personal affairs and required all workers to be the same. He was an excellent mechanic and set extremely high standards, by his own accomplishments, for all work done in his shops. He greatly admired cleverness in his assistants, frequently rewarding them with extra compensation for diffcult jobs well done,

but was extremely impatient with stupidity and carelessness.

Although Tesla maintained a staff of draughtsmen, he never used them in his own design work on machines, and tolerated them only because of unavoidable contacts with other organizations. When having machines constructed for his own use, he would give individual instruction on each part. The workman scheduled to do the machinework would be summoned to Tesla's desk, where the inventor would make an almost microscopically small sketch in the middle of a large sheet of paper. No matter how detailed the piece of work, or its size, the sketch was always less than one inch in its largest dimensions. If Tesla made the slightest slip of the pencil in drawing the sketch, he would not make an erasure but would start over on another sheet of paper. All dimensions were given verbally. When the drawing was finished, the workman was not permitted to take it with him to the shop to guide him in his work. Tesla would destroy the drawing and require the machinist to work from memory. Tesla depended entirely on his memory for all details, he never reduced his mentally completed plans to paper for guidance in construction--and he believed others could achieve this ability if they would make suffcient effort. So he sought to force them to try by insisting on their working without drawings.

All those who worked with Tesla greatly admired him for his remarkable ability to keep track of a vast number of finest details concerning every phase of the many projects he had under way simultaneously. No employee was ever given any more information than was absolutely essential for completing a project. No one was ever told the purposes for which a machine or article was to be used. Tesla claimed that Edison received more ideas from his associates than he contributed, so he himself bent over backward to avoid this situation. He felt that he was the richest man in the world in the matter of ideas and needed none from anyone else; and he intended to prevent all from contributing any.

Tesla was probably very unfair to Edison in this respect. The two men were entirely different and distinct types. Tesla was totally lacking in the university type of mind; that is, the mind which is adapted to cooperate with others in acquiring knowledge and conducting research. He could neither give nor receive, but was entirely adequate to his own requirements. Edison had more of the cooperative, or

executive, type of mind. He was able to attract brilliant associates and to delegate to them major portions of his inventive research projects. He had the ability to act as a catalyzer, to stimulate them to creative mental activities, and thus multiply his own creative abilities. If Tesla had possessed this ability, his record of accomplishment would have been tremendously magnified.

The inability to work with others, the inability to share his plans, was the greatest handicap from which Tesla suffered. It completely isolated him from the rest of the intellectual structure of his time and caused the world to lose a vast amount of creative thought which he was unable to translate into complete inventions. It is a duty of a master to train pupils who will carry on after him--but Tesla refused to accept this responsibility. Had Tesla, in his most active period, associated with him a half-dozen brilliant young scientists, they would have been in a position to link him with the engineering and scientific worlds from which, despite his eminence and his outstanding accomplishments, he was to a great extent isolated because of his unusual personal characteristics. His fame was so secure that the success of his assistants could not have detracted from it; but the master would have shone more brightly in the brilliant accomplishments of his pupils. He might well have attracted some practical young men who could have aided him by assuming the burden of making practical application of some of the minor but important inventions from which he could have earned suffcient profit to pay the cost of maintaining his laboratories. Many scores of important inventions have undoubtedly been lost to the world because of Tesla's intellectual hermit characteristics. Undoubtedly, he indirectly inspired many young men to become inventors.

Tesla responded powerfully to personal idiosyncrasies in individuals with whom he worked. When his reaction was unfavorable, he was unable to tolerate the presence of the person within eyeshot. When carrying on his experimental work at the Allis Chalmers plant in Milwaukee, for example, he did not increase his popularity by insisting that certain workers be dropped from the crew working on the turbine because he did not like their looks. Since, as noted earlier, he had already antagonized the engineers in that plant by going over their heads to the president and board of directors, the turbine job went forward in something less than a cooperative atmosphere.

Tesla was thoroughly impractical throughout, too, in handling money matters. When he was working on the Union Sulphur Company turbine project, a ship was made available for his use, free, during the day; but if he worked after six pm it would cost him $20 per hour. He never showed up at the ship until six o'clock. Every night, in addition, he had to hand out $10 for suppers for the crew. In the course of a year these costs totaled about $12,000, which must have cut heavily into the retainer he received. Nor were these his only additional expenses. Almost every night he handed a $5 tip to his principal assistants among the crew, and once a week to all members of the crew. These manifestations of generosity were not, of course, a total loss to Tesla; they might rather be classed as necessities, for he was very dictatorial in directing his assistants.

Inquiries among the employees at hotels where he lived revealed that he had a reputation for acting in a most cavalier manner toward the servants. He was almost cruel in the manner in which he ordered them around, but would make immediate compensation by the generous tips he bestowed.

He was always, however, very considerate of women, and even men, on his offce staff. If any one of them did an unusually fine piece of work, everyone on the staff was informed of it. Criticism was always delivered privately to the individual involved.

Tesla had a standing rule that every messenger boy who came to his offce was to receive a tip of twenty-five cents, and he set aside a fund of $10 a week for this purpose.

If necessity required that he keep his staff of young women secretaries and typists working overtime for several hours, he would provide them with a dinner at Delmonico's. He would hire a cab for the girls and would follow them in another cab. After making arrangements to pay the bill, and paying the tip in advance, he would leave.

Tesla timed his arrival at the offce so that he entered at the stroke of noon. He required that his secretary should be standing immediately inside the door to receive him and take his hat, cane and gloves. His offces were opened by nine o'clock each morning, so all routine matters would be handled before his arrival. Before Tesla arrived, all the shades in the offce had to be drawn so that no outdoor

light was admitted and night conditions were simulated. The inventor, as remarked, was a "sun dodger." He appeared to be at his best at night and at some kind of disadvantage in daylight; at any rate, he preferred the night for work and what he called his recreation.

The only time Tesla would permit the shades of his offce to be raised was when a lightning storm was raging. The various offces he leased faced on open spaces. The 8 West 40th Street offce was on the south side of Bryant Park, in the east end of which was the low-roofed structure that housed the New York Public Library. From his windows on the twentieth floor, he could look beyond the city roof scape below him and obtain a broad view of the sky.

When the rumbles of distant thunder announced that the fireworks of the sky would presently be flashing, it was not only permissible to raise the shades--it was obligatory. Tesla loved to watch lightning flash. The black mohair couch would be drawn close to the windows so that he could lie on it, completely relaxed, while his vision commanded a full view of the northern or the western sky. He was always talking to himself, but during a lightning storm he would become eloquent. His conversation on such occasions was never recorded. He wished to be a lone observer of this gorgeous spectacle, and his secretaries were quite willing that he should be so accommodated. By finger measurements and counting seconds he was able to calculate the distance, length and voltage of each flash.

How thrilled Tesla must have been by these tremendous sparks, many times longer than he had been able to produce in his Colorado Springs laboratory! He had successfully imitated Nature's electrical fireworks, but he had not as yet exceeded her performance.

The ancient Romans sublimated their frustrations by the forces of Nature by creating the mental concept of their mightiest god, Jupiter, as one endowed with the power of creating lightning and hurling his bolts at earth. Tesla had refused to accept frustration; but, like the ancient Romans, he too set up a mental concept, a superman not inferior to the Romans' ruling god, who would control the forces of Nature. Yes, Tesla thoroughly enjoyed a lightning storm. From his mohair couch, he used to applaud the lightning; he approved of it. He may even have been a little bit jealous.

Tesla never married; no woman, with the exception of his mother and his sisters, ever shared the smallest fraction of his life. He idolized his mother and admired his sisters for their intellectual accomplishments. One of his sisters, Marica, exhibited unusual ability as a mathematician and had greater ability than his own for memorizing long passages from books. He attributed to his mother most of his abilities as an inventor, and he continuously spoke in praise of her ability to contrive useful gadgets for the household, often regretting that she had not been born into an environment in which she would have been able to manifest to a larger world her many creative talents. He was not unaware of the values which a woman could bring into a man's life, for he had ever before him the vast contributions which his mother made to his father's welfare and happiness. However, he lived instead a blueprint life, one which he had planned in his early youth, one designed along engineering lines, with all of the time and energies available to be directed to invention and none to be dissipated on emotional projects.

From the romantic point of view, Tesla as a young man was not unattractive. He was too tall and slender to pose as the physical Adonis, but his other qualifications more than compensated for this possible defect. He was handsome of face, had a magnetic personality, but was quiet, almost shy; he was soft spoken, well educated and wore clothes well in spite of inadequate funds with which to keep up a wardrobe. However, he avoided romantic encounters, or any situations that would lead up to them, just as assiduously as other young men sought them. He would not permit his thoughts to wander into romantic channels, and with thoughts successfully controlled, action control became a problem of vanishing magnitude. He did not develop an antagonism to women; he solved the problem, instead, by idealizing them.

A typical instance of how he avoided romance is furnished by an incident that occurred in Paris when he returned to that city to give a lecture on his alternating-current system after he had become world famous. His wonderful discoveries were the principal topic of conversation of the day, and he was the cynosure of all eyes wherever he went. The situation was entirely pleasant to Tesla. Less than ten years before, the executives the Continental Edison Company, in that city, had not alone rejected the

alternating-current system he had offered them but had cheated him of his just earnings. Now he was returning to that city after receiving recognition and wealth in the United States and fame throughout the world. He was in Paris as a returned hero and the world was at his feet.

As he sat in an outdoor cafe; with a young male friend, amidst a chattering, fashionably dressed crowd, a graceful, gorgeously gowned young woman, with a stylishly coiffured crown of red hair, whom he instantly recognized as Sarah Bernhardt, the famous French actress--the "divine Sarah"--swung close to his table and when a few feet away very auspiciously dropped a tiny lace handkerchief.

Tesla was on his feet in an instant. He recovered the handkerchief, and with his hat in his other hand, bowing low from the waist, he handed the wisp of lace to the beautiful tragedienne, saying: "Mademoiselle, your handkerchief." Without even an upward glance at her graciously smiling face, he returned to his chair and resumed his conversation about his experiments on a world wireless system of power transmission.

When a newspaper reporter once asked Tesla why he had not married, his reply, as contained in the published interview was:

I have planned to devote my whole life to my work and for that reason I am denied the love and companionship of a good woman; and more, too.

I believe that a writer or a musician should marry. They gain inspiration that leads to finer achievement.

But an inventor has so intense a nature, with so much in it of wild, passionate quality that, in giving himself to a woman, he would give up everything, and so take everything from his chosen field: It is a pity, too; sometimes we feel so lonely.

In my student days I have known what it was to pass forty-eight hours at a stretch at a gaming table, undergoing intense emotion, that which most people believe is the strongest that can be known, but it is tame and insipid compared with that sublime moment when you see the labor of weeks fructify in a successful experiment that proves your theories. . . .

"Many times has Nikola Tesla known that supreme happiness," said the interviewer, "and he is likely to know it often again. It is impossible that his life work can be finished at forty. It would seem that his powers are only reaching their maturity."

Tesla was not unappreciative of the activities of the many women who showed a sincere interest in his welfare, and who tried to make life tolerable and pleasant for an obviously none-too-well-adjusted scientist projected into a social world from which he would have been only too willing to escape. He spoke glowingly of the first Mrs. Clarence Mackay (e Duer), Mrs. Jordan L. Mott, and of the beauty of Lady Ribblesdale (the former Mrs. John Jacob Astor). He admired the energetic idealism of Miss Anne Morgan; but never was the situation brightened by a single tint of romance.

He was impressed by the tall, graceful and charming Miss Marguerite Merington, a talented pianist and writer on musical subjects, who was a frequent dinner guest at the Johnson home.

"Why do you not wear diamonds and jewelry like other women?" Tesla undiplomatically asked Miss Merington, one evening.

"It is not a matter of choice with me," she replied, "but if I had enough money to load myself with diamonds I could think of better ways of spending it."

"What would you do with money if you had it?" the inventor continued.

"I would prefer to purchase a home in the country, except that I would not enjoy commuting to the suburbs," Miss Merington replied.

"Ah! Miss Merington, when I start getting my millions I will solve that problem. I will buy a square block here in New York and build a villa for you in the center and plant trees all around it. Then you will have your country home and will not have to leave the city."

Tesla was most generous in the distribution of his always still-to-be-gotten millions; none of his friends would ever

have lacked anything they desired if he had had suffcient funds with which to satisfy their wishes. His promises, however, were always to be fulfilled--"When I start getting my millions."

Tesla had, as might be expected, very definite ideas about how women should dress. He also had clear-cut ideas about the feminine figure. He disliked the big "hefty" type and utterly detested fat women. The super-upholstered type, flashily dressed and heavily jeweled, that wasted time in hotel lobbies, were his pet abomination. He liked women trim, slim, graceful and agile.

One of his secretaries, well proportioned and a graceful blonde, wore to the offce one day a dress that was in the very latest style. It was a summer dress made from a pretty print. The prevailing style called for an extremely low waist line, well down on the hips, several inches below its natural location. This gave a relatively short skirt and from the neck to the hips the dress was almost a plain cylinder. The style was very new, and was enjoying an intense but brief wave of popularity. The secretary was an excellent seamstress and had made the dress herself, an accomplishment of which she was justly proud.

Tesla summoned the secretary. She breezed into his sanctum not expecting, but hoping, that he would say something nice about her new dress.

"Miss," he said, "what is that you are wearing? You cannot wear that on this errand on which I wish you to go. I wished to have you take a note to a very important banker down town, and what would he think if someone from my offce should come to him wearing such a monstrosity of a gown? How can you be such a slave to fashion? Whatever the fashion designers say is the style you buy and wear. Miss, you have good sense and good taste, so why did you let the saleslady in the store force a dress like this on you? Now if you were also very clever like my sister who makes all her own dresses you would not be forced to wear any such abominable style as this, then you too could make your own clothes and you could wear sensible gowns. You should always follow nature in the design of your clothes. Do not let a style designer deform nature for you, for then you become hideous instead of attractive. Now, Miss, you get into a cab, so not many people will see you, and go to your

home and get into a sensible dress and return as soon as you can so you can take this letter down town for me."

Tesla never addressed any of his woman employees by either their Christian names or surnames. The only form of address he used to them was "Miss." As he spoke it, it sounded like "Meese," and he could make it very expressive. When he addressed the secretary wearing the gown of which he disapproved, it sounded like "Meeeeeeesssse." It could also be an abrupt, abbreviated expletive.

When a young woman on his office staff left his employ to get married, Tesla preached this sermonette to the remaining members:

"Do not marry too young. When you marry too young, men marry you mostly for your beauty and ten years later when your beauty is gone, they tire of you and become interested in someone else."

Tesla's attitude toward woman was paradoxical; he idealized woman--put her up on a pedestal--and yet he also viewed women in a purely objective and materialistic way, as if no spiritual concepts were involved in their make-up. This was undoubtedly an outward expression of the conflict that was taking place within his own life, between the normal healthy attitude toward female companionship, and the coldly objective planning of his life under which he refused to share the smallest fraction of his life with any woman.

Only the finest type of women could approach within friendship distance of Tesla, and such individuals were idealized by him without the least diffculty; he could desex them mentally so that the vector or emotional attraction was eliminated. To the remainder he did not bother to apply this process. They had no attraction for him.

Out of the welter of human affairs, however, he visioned the rising of a superior breed of human beings, few in number but of vastly elevated intellectual status, while the remainder of the race leveled itself on a merely productive and reproductive plane, which, however, could represent a considerable improvement over existing conditions. He sought to fashion an idealism out of purely materialistic concepts of human nature. This was a hold-

over from the materialistic, agnostic views which were fashionable and prevalent among scientists in the formative period of his youth. This phase of his attitude was not particularly hard to break down in his latter years; but the phase which represented an engineering approach to the solution of problems of the human race was more firmly held, although he was willing to admit that spiritual factors had a real existence and should be considered in such planning.

His views concerning women received their only expression in published form in the article written for Collier's, in 1924, by John B. Kennedy, from an interview with Tesla. On this occasion, he said:

The struggle of the human female toward sex equality will end up in a new sex order, with the females superior. The modern woman, who anticipates in merely superficial phenomenon the advancement of her sex, is but a surface symptom of something deeper and more potent fomenting in the bosom of the race.

It is not in the shallow physical imitation of the men that women will assert first their equality and later their superiority, but in the awakening of the intellect of women.

But the female mind has demonstrated a capacity for all the mental acquirements and achievements of men, and as generations ensue that capacity will be expanded; the average woman will be as well educated as the average man, and then better educated, for the dormant faculties of her brain will be stimulated into an activity that will be all the more intense because of centuries of repose

Women will ignore precedent and startle civilization with their progress.

The acquisition of new fields of endeavor by women, their gradual usurpation of leadership, will dull and finally dissipate feminine sensibilities, will choke the maternal instinct so that marriage and motherhood may become abhorrent and human civilization draw closer and closer to the perfect civilization of the bee.

The significance of this lies in the principle dominating the economy of the bee--the most highly organized and

intelligently coordinated system of any form of non-rational animal life--the all governing supremacy of the instinct for immortality which makes divinity out of motherhood.

The center of all bee life is the queen. She dominates the hive, not through hereditary right, for any egg may be hatched into a reigning queen, but because she is the womb of the insect race.

There are vast desexualized armies of workers whose sole aim and business in life is hard work. It is the perfection of communism, of socialized, cooperative life wherein all things, including the young, are the common property of all.

Then there are the virgin bees, the princess bees, the females which are selected from the eggs of the queen when they are hatched and preserved in case an unfruitful queen should bring disappointment to the hive. And there are the male bees, few in number, unclean in habit, tolerated only because they are necessary to mate with the queen. . . .

The queen returns to the hive, impregnated, carrying with her tens of thousands of eggs--a future city of bees, and then begins the cycle of reproduction, the concentration of the teeming life of the hive in unceasing work for the birth of the new generation.

Imagination falters at the prospect of a human analogy to this mysterious and superbly dedicated civilization of the bee; but when we consider how the human instinct for race perpetuation dominates life in all its normal and exaggerated and perverse manifestations, there is ironic justice in the possibility that this instinct, with the intellectual advance of women, may be finally expressed after the manner of the bee, though it will take centuries to break down the habits and customs of peoples that bar the way to such a simply and scientifically ordered civilization.

If Tesla had been even half as well informed in the biological sciences as he was in the physical sciences, he probably would not have seen a possible solution of human problems in the social structure adapted to the limitations of an insect species which can never hope to utilize tools, and draw upon natural forces vastly exceeding their own

energy sources, to work out their destiny. And more important is the fact that the bees can never hope to use advanced intellectual powers to improve their biological status, as can the human race. With a better knowledge of biological sciences he might have discovered that the physiological processes that control perpetuation of the individual are indissolubly linked to the processes that control the perpetuation of the race, and that by utilizing as much biological knowledge and spiritual insight, in designing a superman, as he utilized materialistic engineering principles, he might have designed himself as a more complete and potent superman, better adjusted to merging his intellectual creations into the current life of the race through a better understanding of human affairs.

Tesla tried to convince the world that he had succeeded in eliminating love and romance from his life; but he did not succeed. That failure (or perhaps from another aspect it was a success), is the story of the secret chapter of Tesla's life.

TWENTY

THE most obvious outward characteristic of Tesla's life was his proclivity for feeding pigeons in public places. His friends knew he did it but never knew why. To the pedestrians on Fifth Avenue he was a familiar figure on the plazas of the Public Library at 42nd Street and St. Patrick's Cathedral at 50th Street. When he appeared and sounded a low whistle, the blue- and brown- and white-feathered flocks would appear from all directions, carpet the walks in front of him and even perch upon him while he scattered bird seed or permitted them to feed from his hand.

During the last three decades of his life, it is probable that not one out of tens of thousands who saw him knew who he was. His fame had died down and the generation that knew him well had passed on. Even when the newspapers, once a year, would break out in headlines about Tesla and his latest predictions concerning scientific wonders to come, no one associated that name with the excessively tall, very lean man, wearing clothes of a bygone era, who almost daily appeared to feed his feathered friends. He was just one of the strange individuals of whom it takes a great many of varying types to make up a complete population of a great metropolis.

When he started the practice, and no one knows just when that was, he was always dressed in the height of fashion and some of the world's most famous figures could frequently be seen in his company and joining him in scattering the bird seed, but there came a time when he paid less attention to his clothes, and those he wore became more and more old fashioned.

Fifth Avenue after midnight is a far different thoroughfare than the busy artery of human and vehicular traffic it is during the day. It is deserted. One can walk for blocks and meet no one except a policeman. On several occasions the author, by chance, met Tesla on an after-midnight walk up Fifth Avenue, going toward the library. Usually Tesla was quite willing to have one walk with him and chat upon a street encounter during the day, but on these after-midnight occasions he was definite about his desire to be left alone. "You will leave me now," he would say, bringing an abrupt end to a conversation hardly begun. The natural assumption was that Tesla was engaged on a definite line of thought and did not wish his mind to be diverted from its concentration on some knotty scientific problem. How far this was from the truth! And, as I learned much later, what a sacred significance these midnight pilgrimages to feed the pigeons--which would come to his call, even from their nocturnal roost--had for him!

It was hard for almost everyone to understand why Tesla, engaged in momentous scientific developments, working twice as many hours as the average individual, could see his way clear to spend time scattering bird seed. The Herald Tribune, in an editorial, once stated: "He would leave his experiments for a time and feed the silly and inconsequential pigeons in Herald Square."

It was a routine procedure in Tesla's offce, however, for one of his secretaries to go down town on a given day each week and purchase three pounds each of rape, hemp and canary seed. This was mixed in his offce, and each day he took a small paper bag filled with the seed and started on his rounds.

If, on any day, he was unable to make his pigeon-feeding rounds, he would call a Western Union messenger boy, pay him his fee, plus a dollar tip, and send him to feed the birds.

In addition to feeding the birds in the streets, Tesla took care of pigeons in his rooms in the various hotels in which he made his home. He usually had basket nests for from one to four pigeons in his room and kept a cask of seed on hand to feed them. The window to the room in which he kept these nests was never closed.

Tesla became quite ill in his 40th Street offce, one day in 1921. He was unable to work and lay upon his couch. As the symptoms became more alarming and there was a possibility that he might not be able to return to his room in the Hotel St. Regis, he summoned his secretary to give her an "important" message. As he spoke the important message, he required the secretary to repeat each phrase after him to make sure that no errors would be made. This required repetition was a usual procedure with him; but in this case he was so ill, practically prostrate, that he seemed hardly to have energy enough to speak the message a single time.

"Miss," he whispered, "Call Hotel St. Regis--"

"Yes sir," she responded, "Call Hotel St. Regis--"

"Get the housekeeper on the fourteenth floor--"

"Get the housekeeper on the fourteenth floor--"

"Tell her to go to Mr. Tesla's room--"

"Tell her to go to Mr. Tesla's room--"

"And feed the pigeon today--"

"And feed the pigeon today--"

"The white female with touches of light gray in its wings--"

"The white female with touches of light gray in its wings--"

"And to continue doing this--"

"And to continue doing this--"

"Until she receives further orders from me--"

"Until she receives further orders from me--"

"There is plenty of feed in Mr. Tesla's room."

"There is plenty of feed in Mr. Tesla's room."

"Miss," he pleaded, "this is very important. Will you repeat the whole message to me so I can be sure you have it correct."

"Call Hotel St. Regis; get the housekeeper on the fourteenth floor. Tell her to go to Mr. Tesla's room and feed the pigeon today, the white female with touches of light gray on its wings, and continue doing this until she receives further orders from me. There is plenty of feed in Mr. Tesla's room."

"Ah, yes," said Tesla, his eyes brightening as he spoke, "the white one with touches of light gray in its wings. And if I am not here tomorrow, you will repeat that message then and every day until you get my further orders. Do it now, Miss--it is very important."

Tesla's orders were always carried out to the letter and this one particularly, since he had placed such unusual emphasis on it. His secretary and the members of his staff felt that his illness must be more serious than it seemed to be, since at a time when he had a great many very serious problems on his hands and he appeared to be on the verge of a siege of illness, the more pressing situations were completely forgotten and his only thought was of a pigeon. He must be delirious, so they thought.

Some months later Tesla failed one day to show up at his offce, and when his secretary telephoned to his hotel, the inventor informed her that he was all right, but that his pigeon was ill and he dared not leave the room for fear she would need him. He remained in his room for several days.

About a year later Tesla came to his offce earlier than usual one day, and apparently very much disturbed. He carried a small bundle in a tender manner on his bent arm. He telephoned to Julius Czito, a machinist on whom he frequently depended to perform unusual tasks, and asked him to come to the offce. Czito lived in the suburbs. He told him briefly that the bundle contained a pigeon that had

died in his room at the hotel, and that he desired to have it properly buried on Czito's property where the grave could be cared for. Czito, in relating the incident years afterward, said he was tempted, on leaving the offce, to drop the package in the first garbage can he found; but something caused him to desist and he took it to his home. Before he could perform the burial, Tesla telephoned to his home and asked him to return the package the next morning. How Tesla disposed of it is not known.

In 1924 Tesla's financial condition fell to a very low level. He was completely broke. He was unable to pay his rent and there were some judgments against him for other unpaid bills. A deputy sheriff appeared at his offce one afternoon to seize everything in the offce to satisfy a judgment. Tesla managed to talk the sheriff into delaying seizure. When the offcial had gone he took stock of his situation. He had not paid his secretaries' wages for two weeks and he now owed them for another fraction of a week. He was entirely without funds in the bank. A search of his safe disclosed that the only object of negotiable value was the heavy gold Edison Medal presented to him by the American Institute of Electrical Engineers in 1917.

"Miss, and Miss," he said, addressing the secretaries. "This medal contains about one hundred dollars' worth of gold. I will have it cut in half and give each of you one-half, or one of you can take all of it and I will later pay the other."

The two young women, Miss Dorothy F. Skerritt and Miss Muriel Arbus, refused to permit him either to damage or part with the medal, and offered instead to aid him with the meager amounts of cash they had in their purses, which offer he refused with thanks. (A few weeks later the girls received their back salaries, at $35 per week, and an additional two weeks' salary.)

A search of the cash drawer revealed a little over $5.00--all the money he possessed.

"Ah! Miss," he said, "that will be enough to buy the bird seed. I am all out of seed, so will you go down town in the morning and purchase some and deliver it to my hotel."

Again calling his trusted aide, Czito (whom he was forced to leave unpaid to the extent of $1,000), he put up to him

the problem of vacating the offce immediately. Within a few hours the entire contents of the offces were stored in a near-by offce building.

A short time later he was forced to leave his apartment in the Hotel St. Regis. His bill had been unpaid for some time, but the immediate cause was associated with pigeons. He had been spending more time in his hotel room, which also became his offce, and devoted more time to feeding pigeons. Great flocks of them would come to his windows and into the rooms, and their dirt on the outside of the building became a problem to the management and on the inside to the maids. He sought to solve the problem by putting the birds in a hamper and having George Scherff take them to his Westchester home. Three weeks later, when first given their freedom, they returned, one making the trip in half an hour. Tesla was given his choice of ceasing to feed the pigeons or leaving the hotel. He left.

He next made his home at the Hotel Pennsylvania. He remained there a few years and the same situation, both as to bills and pigeons, developed. He moved to the Hotel Governor Clinton--and in about a year went through the same experience. He next moved to the Hotel New Yorker, in 1933, where he spent the final ten years of his life.

After midnight one night in the fall of 1937, Tesla started out from the Hotel New Yorker to make his regular pilgrimage to the Cathedral and the Library to feed the pigeons. In crossing a street a couple of blocks from the hotel an accident happened, how is unknown. In spite of his agility, he was unable to avoid contact with a moving taxicab, and was thrown heavily to the ground. He raised no question as to who was at fault, refused medical aid, and asked merely to be taken to his hotel in another cab.

Arriving at the hotel, he went to bed and had scarcely got under the covers when he telephoned for his favorite messenger boy, Kerrigan, from a near-by Western Union offce, gave him the package of bird seed and directed him to complete the task which he had started and the accident interrupted.

The next day, when it was apparent that he would be unable to take his usual daily walks for some time to come, he hired the messenger for six months to feed the pigeons every day. Tesla's back had been severely wrenched in the

accident, and three ribs broken, but the full extent of his injuries will never be known for, in keeping with his almost lifelong custom, he refused to consult a doctor. Pneumonia developed but for this he also refused medical aid. He was bedridden for some months, and was unable to carry on his practice of feeding pigeons from his window; and soon they failed to come.

In the spring of 1938 he was able to get up. He at once resumed his pigeon-feeding walks on a much more limited scale, but frequently had a messenger act for him.

This devotion to his pigeon-feeding task seemed to everyone who knew him like nothing more than the hobby of an eccentric scientist, but if they could have looked into Tesla's heart, or read his mind, they would have discovered that they were witnessing the world's most fantastic, yet tender and pathetic love affair.

Tesla, as a self-made superman, suffered from the limitations of his maker. Endowed with an intelligence above the average in both quality and quantity, and with some supernormal faculties, he was able to erect a superman higher in stature than himself; but the greater height was attained by sacrificing other dimensions, and in this diminution of breadth and thickness existed a deffciency.

When he was a youth and his mind was in its most plastic and formative stage, he adopted, as we have seen, the then prevalent agnostic and materialistic view of life. Today science has emancipated itself from slavery to either an antagonistic mysticism or materialism, and is willing to consider both as harmonious parts of a comprehensive approach to the understanding of Nature, but is conscious that it has not yet learned how to manipulate or control the more intangible factors upon which the mystics have builded their structures of knowledge. Vast realms of human experience have been rejected in all ages by scientists, of whatever name, who failed to fit them in logical arrangement in their inadequate and too simplified natural philosophies. By rejecting the phenomena that lay beyond their intellectual abilities, the scientists and philosophers did not eliminate them nor prevent their manifestations. The phenomena so rejected, however, were given an academic home by the ecclesiasts, who accepted them without understanding, or hope of understanding, and thus incarcerated them in the foundation of the religious

mysteries where they served a useful purpose, for upon an unknown it is possible to build a greater unknown.

The mystical experiences of the saints, of whatever faith, are demonstrations of forces which are natural functions of the phenomenon of life, expressed in varying degree in step with the expanding unfoldment of the individual toward an advanced state of evolution.

Tesla was an individual in an advanced state of development, and there came to him experiences which he refused to accept as experiments; accepting the benefits which came to him but which transported them. This was true, for example, in the case of the burst of revelation which came to him revealing scores of tremendously valuable inventions--while he strolled in the park at Budapest, and which differed only in degree and type, but not in fundamental nature, from the blinding light which came to Saul on the road to Damascus, and to others to whom illumination has come by similar processes.

His materialistic concepts made him intellectually blind to the strange phenomenon by which revelation, or illumination, had come to him, but made him more keenly appreciative of the value of that which was revealed. It must not be understood that this revelation was a happenstance phenomenon of the moment, for Tesla, endowed by Nature with an intellect capable of vast unfoldment, had exerted almost superhuman efforts to achieve that which was revealed to him, and the effort was not unassociated with the result.

In a contrary direction, Tesla suppressed a tremendously large or important realm of his life by the planned elimination of love and romance from his thoughts and experience. Just as his efforts to discover the physical secrets of Nature built up forces that penetrated to the plane of revelation, so did his equally tremendous effort to suppress love and romance build up forces, beyond his control, that were operating to express themselves. There was a parallel situation in his philosophy of natural phenomena, in that he suppressed all spiritual aspects of Nature and confined himself to the purely materialistic aspects.

Two forces, one of love and romance in his personal nature, and the other the spiritual aspects of Nature in his

philosophy, as applied to his work, were incarcerated in a limbo of his personality, seeking an outlet into the paradise of expression and manifestation. And they obtained that outlet, expressing their nature by the form of the manifestation; but Tesla failed to recognize them. Tesla, rejecting the love of woman and thinking that he had engineered a complete elimination of the problem of love, failed to excise from his nature the capacity to love, and when this capacity expressed itself, it did so by directing its energies through a channel he left unguarded in planning the self-made superman.

The manifestation of these united forces of love and spirituality resulted in a fantastic situation, probably without parallel in human annals. Tesla told me the story; but if I did not have a witness who assured me that he heard exactly what I heard, I would have convinced myself that I had had nothing more tangible than a dream experience. It was the love story of Tesla's life. In the story of his strange romance, I saw instantly the reason for those unremitting daily journeys to feed the pigeons, and those midnight pilgrimages when he wished to be alone. I recalled those occasions when I had happened to meet him on deserted Fifth Avenue and, when I spoke to him, he replied, "You will now leave me." He told his story simply, briefly and without embellishments, but there was still a surging of emotion in his voice.

"I have been feeding pigeons, thousands of them, for years; thousands of them, for who can tell--

"But there was one pigeon, a beautiful bird, pure white with light gray tips on its wings; that one was different. It was a female. I would know that pigeon anywhere.

"No matter where I was that pigeon would find me; when I wanted her I had only to wish and call her and she would come flying to me. She understood me and I understood her.

"I loved that pigeon.

"Yes," he replied to an unasked question. "Yes, I loved that pigeon, I loved her as a man loves a woman, and she loved me. When she was ill I knew, and understood; she came to my room and I stayed beside her for days. I nursed her back to health. That pigeon was the joy of my life. If she

needed me, nothing else mattered. As long as I had her, there was a purpose in my life.

"Then one night as I was lying in my bed in the dark, solving problems, as usual, she flew in through the open window and stood on my desk. I knew she wanted me; she wanted to tell me something important so I got up and went to her.

"As I looked at her I knew she wanted to tell me--she was dying. And then, as I got her message, there came a light from her eyes--powerful beams of light.

"Yes," he continued, again answering an unasked question, "it was a real light, a powerful, dazzling, blinding light, a light more intense than I had ever produced by the most powerful lamps in my laboratory.

"When that pigeon died, something went out of my life. Up to that time I knew with a certainty that I would complete my work, no matter how ambitious my program, but when that something went out of my life I knew my life's work was finished.

"Yes, I have fed pigeons for years; I continue to feed them, thousands of them, for after all, who can tell--"

There was nothing more to say. We parted in silence. The talk took place in a corner of the mezzanine in the Hotel New Yorker. I was accompanied by William L. Laurence, science writer of the New York Times. We walked several blocks on Seventh Avenue before we spoke.

No longer was there any mystery to the midnight pilgrimages when he called the pigeons from their niches in the Gothic tracery of the Cathedral, or from under the eaves of the Greek temple that houses the Library--pursuing, among the thousands of them . . . "For after all, who can tell . . .?"

It is out of phenomena such as Tesla experienced when the dove flew out of the midnight darkness and into the blackness of his room and flooded it with blinding light, and the revelation that came to him out of the dazzling sun in the park at Budapest, that the mysteries of religion are built. But he comprehended them not; for, if he had not suppressed the rich mystical inheritance of his ancestors

that would have brought enlightenment, he would have understood the symbolism of the Dove.

ACKNOWLEDGMENTS

MUCH valuable aid has been received from many sources in the preparation of this volume. For this helpful co-operation my thanks are due to:

Sava N. Kosanovic, Minister of State of Yugoslavia, and Tesla's nephew, for making available books, family records, transcripts of records, pictures, and for correcting the manuscript of many chapters; and to his secretary, Miss Charlotte Muzar;

Miss Dorothy Skerritt and Miss Muriel Arbus, Tesla's secretaries; and George Scherff and Julius C. Czito, business associates;

Mrs. Margaret C. Behrend, for the privilege of reading correspondence between her husband and Tesla; and to Dr. W. B. Earle, Dean of Engineering, Clemson Agricultural College, for pictures and other material from the Behrend Collection in the college library;

Mrs. Agnes Holden, daughter of the late Robert Underwood Johnson, ambassador, and editor of the Century Magazine; Miss Marguerite Merington; Mrs. Grizelda M. Hobson, widow of the late Rear Admiral Hobson; Waldemar Kaempffert, Science Editor of the New York Times; Professor Emeritus Charles F. Scott, Department of Electrical Engineering, Yale University; Hans Dahlstrand, of the Allis Chalmers Manufacturing Co.; Leo Maloney, Manager of the Hotel New Yorker; and W. D. Crow, architect of the Tesla tower, for reminiscences, data, or helpful conversations concerning their contacts with Tesla;

Florence S. Hellman, Chief of the Bibliographic Division, Library of Congress; Olive E. Kennedy, Research Librarian of the Public Information Center, National Electric Manufacturers Association; A. P. Peck, Managing Editor of

the Scientific American; Myrta L. Mason, and Charles F. Pflaging, for bibliographic aid;

G. Edward Pendray and his associates in the Westinghouse Electric and Manufacturing Co., and C. D. Wagoner and his associates in the General Electric Co., for correcting, or reading and making helpful suggestions in connection with many chapters;

William L. Laurence, science writer of the New York Times, and Bloyce Fitzgerald, for exchange of data;

Randall Warden; William Spencer Bowen, President of the Bowen Research Corp.; G. H. Clark, of the Radio Corporation of America; Kenneth M. Swezey, of Popular Science; Mrs. Mabel Fleischer and Carl Payne Tobey, who have aided in a variety of ways;

Colliers--The National Weekly; The American Magazine; the New York World-Telegram and the General Electric Co., for permission to quote copyrighted material, for which credit is given where quoted; and

Peggy O'Neill Grayson, my daughter, for extended secretarial service.

To all the foregoing I extend my sincere thanks.

John J. O'Neill

Freeport, L. I.

New York

July 15, 1944

Project HAARP:
Dangerous Use of Tesla Technology

Before the turn of the century, Nikola Tesla had discovered and was utilizing a new type of electric wave. Tesla repeatedly stated his waves were non-Hertzian, and his wireless transmissions did not fall off as the square of the distance.

His discovery was apparently so fundamental (and his intent to provide free energy to all humankind was so clear) that it was responsible for the withdrawal of his financial backing, his deliberate isolation, and the gradual removal of his name from the history books.

By 1914 or so, Tesla had been successfully isolated and was already nearly a "nonperson." Thereafter Tesla lived in nearly total seclusion, occasionally surfacing (at his annual birthday party for members of the press) to announce the discovery of an enormous new source of free energy, the perfection of wireless transmission of energy without losses, fireball weapons to destroy whole armies and thousands of airplanes at hundreds of miles distance, and a weapon that could provide an impenetrable defense and thus render war obsolete.

It appears that the US Military is attempting to recreate this technology.

"Project HAARP", the High-frequency Active Auroral Research Program, is playing with the fate of all our lives and the very existance of the Earth. This program is conducted by the University of Alaska, Fairbanks. and funded by the US Air Force and Navy. In brief, it is the world largest RF transmitter capable of ELF (Extremely Low Frequency) and VHF (Very High Frequency) transmissions at incredible power levels.

From *"Angels Don't Play this HAARP: Advances in Tesla Technology"*

HAARP will zap the upper atmosphere with a focused and steerable electromagnetic beam. It is an advanced model of an 'ionospheric heater'. (The ionosphere is the electrically-charged sphere surrounding Earth's upper atmosphere. It ranges between about 40 to 600 miles above Earth's surface.)

Put simply, the apparatus for HAARP is a reversal of a radio telescope: antennas send out signals instead of receiving. HAARP is the test run for a super-powerful radio wave beaming technology that lifts areas of the ionosphere by focusing a beam and heating those areas. Electromagnetic waves then bounce back onto Earth and penetrate everything-living and dead. HAARP publicity gives the impression that the High-frequency Active Auroral Research Program is mainly an academic project with the goal of changing the ionosphere to improve communications for our own good. However, other US military documents put it more clearly: HAARP aims to learn how to "exploit the ionosphere for Department of Defense purposes". Communicating with submarines is only one of those purposes.

Press releases and other information from the military on HAARP continually downplay what it could do. Publicity documents insist that the HAARP project is no different than other ionospheric heaters operating safely throughout the world in places such as Arecibo, Puerto Rico; Tromsk, Norway; and the former Soviet Union. However, a 1990 government document indicates that the radio frequency (RF) power zap will drive the ionosphere to unnatural activities:

"at the highest HF powers available in the West, the instabilities commonly studied are approaching their maximum RF energy dissipative capability, beyond which the plasma processes will 'run away' until the next limiting factor is reached."

This project has hazards to our environment beyond anything a nuclear weapon can do. While nukes are devastating weapons, their effects are localised within a single geographic region. HAARP, on the other hand, is attempting to change the nature of the Earth's shield which protects us from the harmful effects of the ionised cosmic and stellar radiation which constantly bombards us. This must not happen.

To find out more, Earthlight Press has published a book detailing the technology, reasoning, and political background to this project. The book, *"Angels Don't Play this HAARP: Advances in Tesla Technology"* by Dr Nick Begich and Jeane Manning of Alaska describe this project and it's potential for disaster. There is an excellent review of this book on their website at:

Radiant Energy:

Unraveling Tesla's Greatest Secret

By Ken Adachi

June 1, 2001

[*The story you are about to read is derived from a carefully researched paper presented by Dr. Peter Lindemann before a private audience in Irvine, California on September 12, 2000. The lecture was titled "The Free Energy Secrets of Cold Electricity" . It detailed the story of Radiant Energy and its successful application by Edwin Gray in an over unity motor design which Gray debuted in 1973. The real detective work (& credit) in uncovering Tesla's discovery of Radiant energy came from author Gerry Vassilatos in his recent book, "Secrets of Cold War Technology" without which Lindemann could not have solved the enigma of Gray's Radiant circuit design. This lecture delivered the goods. The secret of Tesla's Radiant Energy has finally been revealed in manifold detail and only awaits the industry of those who care to study and understand it. Part1 presents a general overview of Tesla's discovery and the political, intrigues that led to its subsequent suppression. Part 2 will detail the nuts and bolts of how Tesla produced Radiant Energy with block diagrams, schematics, and drawings from Tesla's original patents to illustrate all of the necessary elements and parameters required. Additional details on Gray's modern adaptation of Tesla's Radiant circuitry and a brief look at Eric Dollard, the only man to successfully recreate Tesla's Colorado Springs Magnifying transmitter and reproduce the pure steaming white rays of Radiant energy in 1986 exactly as described by Tesla in his Colorado journals*. Ken Adachi]

Of all the great inventions and discoveries of Nikola Tesla, nothing stood out with greater potential benefit to the whole of humanity than his discovery of Radiant Energy in 1889. The series of observations that led to the discovery of Radiant energy initially grew out of experiments that Tesla had conducted in an attempt to duplicate the results that Heinrich Hertz had claimed to achieve in affirming the existence of electromagnetic waves, the discovery of which Hertz announced in 1887. While replicating Hertz's experiments, Tesla experimented with violently abrupt DC electrical discharges and discovered a new force in the process. Only after conducting exhaustive experimental trials for the next three years, did Tesla announce this stupendous discovery in a paper published in December, 1892, entitled "The Dissipation of Electricity". Incredibly, most academicians of the day completely missed the mark in understanding the true significance of his paper. Noted scientists such as Sir Oliver Lodge, mistakenly thought that Tesla was referring to high frequency AC electricity in the operation of the Tesla Transformer, a huge blunder that remains to this day in the misnaming and misinterpretation of the Tesla Coil. The transformer that Tesla referred to in the 1892 paper did not operate on magnetic/electric field induction created by alternating currents. It operated in an entirely new domain of physics based on abrupt discharges of electrostatic potentials and the subsequent release of kinetic Radiant Energy from the omnipresent ether. Tesla was now operating under entirely new rules which he referred to as "dynamic" electro-static forces and had, by now, completely abandoned any further interest in the AC waveform. The genesis of the Lodge misunderstanding, however, began a few years earlier with the publication of certain mathematical formulas by a brilliant Scotsman named James Clerk Maxwell.

Maxwell's Equations

Using mathematical models, James Clerk Maxwell had earlier suggested that two different types of electrical disturbances could possibly exist in Nature. One type was a longitudinal electric wave which required alternating concentrations of densified and rarefied pulsations of electrostatic fields that moved along a single vector (today, we refer to these as standing waves or scalar waves). Maxwell ultimately rejected this idea because he was convinced that this type of wave propagation was impossible to achieve, but his assumption was erroneous and would later portend formidable consequences for Tesla and the world at large.

Maxwell's second wave postulation was that of a transverse electromagnetic wave that exhibited a rapid alternation of electric fields along a fixed axis that radiated away from its point of origin at the speed of light and was detectable at great distances. Maxwell had more faith in the existence of this type of wave and encouraged experimenters to look in this direction. It was the discovery of this type of wave that Hertz had laid claim to, but Tesla was meticulous and fastidious in replicating Hertz's experimental parameters and he could not obtain the results claimed by Hertz.

Tesla discovered a fundamental flaw in Hertz's experiment: Hertz had failed to take into account he presence of air in his experiments. Hertz had mistakenly identified electrostatic inductions or electrified shockwaves as true electromagnetic waves. Tesla was saddened to bring this news to the distinguished academician, but felt scientific honesty was paramount if progress was to be achieved. Tesla visited Hertz in Germany and personally demonstrated the experimental error to him. Hertz agreed with Tesla and had planned to withdraw his claim, but reputations, political agendas, national pride, and above all, powerful financial interests, intervened in that decision and set the stage for a major rift in the 'accepted' theories that soon became transformed into the fundamental "laws" of the electric sciences that have held sway in industry and the halls of academia to the present day.

Tesla's introduction to the phenomena of Radiant Energy began with early observations by linesmen working for Thomas Edison, Tesla's former employer

DC Anomalies

Before Tesla's invention of the Polyphase AC generator became the industry standard and overtook Thomas Edison's use of DC generators, the DC electrical system was the only system available to deliver electricity to America's homes and factories. Due to the resistance offered by long transmission lines, Edison had to produce very high DC voltages from his generators in order to deliver enough voltage and current to its final destination. He also had to provide additional 'pumping' stations along the way to boost the sagging voltage which dwindled from line losses. A curious anomaly occurred in the very first instant of throwing the power switch at the generating station: Purple/blue colored spikes radiated in all directions along the axis of the power lines for just a moment. In addition, a stinging, ray-like shocking sensation was felt by those who stood near the transmission lines. In some cases, when very large DC voltages surged from the generators, the "stinging" sensation was so great that occasionally a blue spike jumped from the line and grounded itself through a workman, killing him in the process.

Tesla realized almost immediately that electrons were not responsible for such a phenomena because The blue spike phenomena ceased as soon as the current stated flowing in the lines. Something else was happening just before the electrons had a chance to move along the wire. At the time, no one seemed to be very interested in discovering why these dramatic elevations in static electrical potential were taking place, but rather, engineering design efforts were focused on eliminating and quenching this strange anomaly which was considered by everyone to be a nuisance-except Tesla. Tesla viewed it as a powerful, yet unknown form of energy which needed to be understood and harnessed if possible. The phenomena only exhibited itself in the first moment of switch closure, before the electrons could begin moving. There seemed to be a "bunching" or "choking" effect at play, but only briefly. Once the electrons began their movement within the wire, all would return to normal. What was this strange energy that was trying to liberate itself so forcefully at the moment of switch closure? .

Tesla, Genius Out of Time

In the later quarter of the 19th century, Tesla was alone in his opposition to the fundamental views of the nature of electrical forces as described by three of the biggest names in electric science: James Clerk Maxwell, Herman Von Helmholtz, and Heinrich Hertz. Tesla possessed a broader vision of the cosmos because his keen sense of awareness and especially his natural intuitive insights gave him a deeper understanding of the role that the ether (or aether) played in the manifestations of all electrical phenomena while his contemporaries focused their attention exclusively on the electromagnetic component (assuming that no other component could be involved). This lack of etheric insight by his contemporaries (with the exception of Sir William Crookes) and the heated controversy that the mere mention of the ether had engendered was to cause Tesla ridicule and sarcasm from men of inferior intellect for decades. The ether controversy largely dissipated in the academic arena after the publication of Eienstein's Theory of Relativity (1905) and the Michaelson-Morley Experiment which essentially declared that the ether 'theory' was dead, but Tesla's insights and deductions concerning the role of the ether were correct all along.

The ether existed then and it exists now, despite the lock step denials by mainstream science, past or present. Rudolf Steiner, another man of genius, affirmed that the ether was composed of four fractions which he described as 1) the Light Ether, 2) the Warmth Ether, 3) the Chemical Ether, and 4) the Life Ether, a combination of the first three. Tesla's New York and Colorado experiments confirmed for him that Radiant energy was bound up within the elusive ether, but could be made manifest by the creation of an abrupt disruption in the equilibrium of the ether fractions using one way, high magnitude pulses of short duration.
This was the key that unlocked Radiant Energy.

"See the excitement coming!"
These were the words that Tesla used at the end of his pivotal 1892 December lecture, "The Dissipation of Electricity". He was brimming over with buoyancy and optimism for the future In the 1890's, Tesla conducted a large number of experiments which confirmed his theory and refined his understanding of the special conditions required for Radiant energy to express itself. He later expanded his New York work with the large scale experimental trials conducted at Colorado Springs, Colorado in 1899. Tesla, the humanitarian, wanted more than anything to share this enormous discovery with his fellow man. Tesla spoke of practical applications of radiant energy that were so wide reaching that they could have created a profound and immense leap into the future for all of mankind in practically every sector of daily life:

Unlimited electricity could be made available anywhere and at any time, by merely pushing a rod into the ground and turning on the electrical appliance. Homes, farms, offices, factories, villages, libraries, museums, street lights, etc., could have all their lighting needs met by merely hanging ordinary light bulbs or fluorescent tubes anywhere desired- without the need for wiring -and produce brilliant white light 24 hours a day. Motor energy for any imagined use such as industrial applications, transportation, tractors, trucks, trains, boats, automobiles, air ships or planes could be powered freely-anywhere on the planet from a single Magnifying Transmitter. This new form of energy even had the ability to elevate human consciousness to levels of vastly improved comprehension and mental clarity. Undreamed of therapeutic applications to improve human health and to eliminate disease conditions could have been achieved fully 100 years ago had Tesla been allowed to complete his commercial development of Radiant Energy. But powerful barons of industry, chiefly in the person of John Pierpont Morgan, colluded to deny him the financial backing he needed and in doing so, effectively denied mankind one of Nature's most abundant and inexhaustible gifts of free energy.

The Magnifying Transmitter
The closest Tesla came to a world wide industrial application of his Radiant Energy dream was the construction of his huge Magnifying Transmitter at Shoreham, Long Island, a site which he named Wardenclyffe. Following his return to New York City from Colorado Springs in 1899, Tesla was jubilant and full of enthusiasm to implement his plan for the commercial application of Radiant energy. He turned to JP Morgan for a substantial portion of the funding to finance the huge project at Wardenclyffe. Morgan was chiefly concerned with turning a profit from overseas radio transmissions since Marconi was fast locking up the market and Morgan, ever the aggressor, wanted a share of the market. When Tesla told him that the transmitter could transmit "intelligence" to the world, Morgan assumed that he meant ordinary radio communications, but Tesla was not referring to ordinary radio transmissions. He was talking about something much bigger, but avoided revealing all to Morgan during this early phase of the Wardenclyffe project. Some considerable time later, Tesla eventually felt compelled to tell Morgan the larger possibilities offered by the Magnifying Transmitter when he needed more funding to complete the project. Tesla thought that Morgan would be overwhelmed by his expanded explanation of the true capacities of the transmitter and would be anxious to complete the work, but Tesla's assumption had backfired and Morgan refused to lay out any more money for the transmitter. Sadly, the enormous benefits that could have been made available to society by Tesla's Magnifying Transmitter project, died then and there.

Morgan & Westinghouse
Morgan had already orchestrated circumstances in Tesla's life in order to force Tesla to be dependent on him for financial backing. During an earlier period, when Tesla himself had millions from his Polyphase AC generator royalty payments and other earnings, Morgan wanted to woo Tesla with a deal that effectively gave Morgan majority control over his patent rights and projects, but Tesla turned him down, telling Morgan that he had enough money of his own to fund his projects. While returning to his hotel from that very meeting with Morgan, however, Tesla was told that his laboratory had been burned to the ground. It represented a tremendous loss to Tesla and it shook him deeply. Everyone, of course, felt convinced that Morgan was behind the arson. In order to save face, Morgan was embarrassed by Tesla into putting up the money to pay for the rebuilding of a new lab as an act of "philanthropy". From that time forward, however, other financial backers were not to be found. Morgan was powerful enough to black list Tesla among the Eastern Establishment elites that previously had hobnobbed and feted with Tesla as if he was one of their own. Black listing and ostracization by officialdom and financiers lifted somewhat after Morgan's death, but generally continued to haunt Tesla for the rest of his life.

Before the turn of the century, Tesla also willingly gave up millions, perhaps billions, in royalty earnings to George Westinghouse in an unprecedented act of friendship. Westinghouse had believed in the superiority of Tesla's AC system and provided the money to build Tesla's big AC generators at Niagra Falls, NY. Tesla was paid millions up front for his patents, but was also due to receive royalty earnings for every kilowatt of power produced. When Westinghouse ran into financial difficulties at a later date, Tesla tore up his royalty contract in order to save Westinghouse from financial ruin.

Had he not done that, Tesla would have had enough money from royalties to keep him ensconced in great wealth for the rest of his life.

The story is frequently told that when Morgan found out from Tesla that the true purpose of the Wardenclyffe transmitter was to provide free electricity to the world, he abruptly pulled the funding. That's not completely accurate. The economic conditions were recessionary at the time and the stock market had taken a considerable dip that year. Morgan wasn't interested in risking any more capital in perilous times on a project he couldn't fully fathom and wasn't completely convinced of. Tesla held land ownership of the Wardenclyffe site and tower, but no further work was done after 1910. In 1914, Tesla was deeply in debt and signed over the deed of Wardenclyffe Station to pay off years of back rent due to the owners of the New Yorker Hotel where he was living (he occupied two penthouse suites in the hotel). In 1917, the hotel owners had the tower demolished and its parts sold for salvage. Despite the loss of Wardenclyffe, Tesla continued to refine his understanding of Radiant Energy and miniaturize the equipment needed to produce it. He eventually was able to reduce the equipment down to the size of a suit case.

Copyright 2001 Ken Adachi & Educate-Yourself.org All Rights Reserved.
Reposting is only allowed without editing or abbreviation and placement of originating url and author's name at top of article.

Next time, Part 2: The nuts and bolts of producing Radiant Energy and Gray's Radiant design circuitry.

Australian and European readers interested in obtaining the video tape of Dr. Lindemann's 2 hour and 50 minute lecture, "The Free Energy Secrets of Cold Electricity" can send $29.95 (US$) for VHS or $33.95 for PAL plus $11 air shipping. A 150 page companion book of the same title which includes the complete narrative, enlarged views of the slides, diagrams, schematics, photographs and patents demonstrated during the lecture, along with complete copies of the Gray and Tesla patents and additional materials not included in the lecture is also available for $29.95 plus $11 air shipment. Book and video together, add $15 air shipping. Make US checks or money orders payable to:

USA readers, include $4 for Priority Flat Rate mail

K. Adachi
PO Box 3046
Costa Mesa, CA 92628

See our home page for more information: http://educate-yourself.org

http://educate-yourself.org/radiantenergystory.html

Where in the World is all the Free Energy?

The spread of working free-energy technologies has been prevented by wealthy elites governments, deluded inventors and con men, as well as a non-demanding public.

Extracted from Nexus Magazine, Volume 8, Number 4
PO Box 30, Mapleton Qld 4560 Australia. editor@nexusmagazine.com
Telephone: +61 (0)7 5442 9280; Fax: +61 (0)7 5442 9381
From our web page at: www.nexusmagazine.com

©2001 by Peter Lindemann, DSc
Clear Tech, Inc.
PO Box 37
Metaline Falls, WA 99153, USA
Telephone: (509) 446 2353
Email: support@free-energy.ws
Website: www.free-energy.cc

In the late 1880s, trade journals in the electrical sciences were predicting "free electricity" in the near future. Incredible discoveries about the nature of electricity were becoming commonplace. Nikola Tesla was demonstrating "wireless lighting" and other wonders associated with high-frequency currents. There was an excitement about the future like never before.

Within 20 years there would be automobiles, airplanes, movies, recorded music, telephones, radio and practical cameras. The Victorian age was giving way to something totally new. For the first time in history, common people were encouraged to envision a utopian future filled with abundant modern transportation and communication as well as jobs, housing and food for everyone. Disease would be conquered and so would poverty. Life was getting better, and this time everyone was going to get "a piece of the pie".

So what happened? In the midst of this technological explosion, where did the energy breakthroughs go? Was all of this excitement about "free electricity", which happened just before the beginning of the last century, just wishful thinking that "real science" eventually disproved?

CURRENT STATE OF TECHNOLOGY

Actually, the answer to that question is "No". In fact, the opposite is true. Spectacular energy technologies were developed right along with the other breakthroughs. Since that time, multiple methods for producing vast amounts of energy at extremely low cost have been developed. None of these technologies has made it to the "open" consumer market as an article of commerce, however. Exactly why this is true will be discussed shortly.
But first, I would like to describe to you a short list of "free energy" technologies that I am currently aware and that are proven beyond all reasonable doubt. The common feature connecting all of these discoveries is that they use a small amount of one form of energy to control or release a large amount of a different kind of energy. Many of them in some way tap the underlying aether field--a source of energy conveniently ignored by "modern" science.

1. Radiant Energy

Nikola Tesla's Magnifying Transmitter, T. Henry Moray's Radiant Energy Device, Edwin Gray's EMA Motor and Paul Baumann's Testatika Machine all run on "radiant energy". This natural energy form (mistakenly called "static" electricity) can be gathered directly from the environment or extracted from ordinary electricity by the method called "fractionation". Radiant energy can perform the same wonders as ordinary electricity, at less than 1% of the cost. It does not behave exactly like electricity, however, and this has contributed to the scientific community's misunderstanding of it.
The Methernitha Community in Switzerland currently has five or six working models of fuelless, self-running devices that tap this energy.

2. Permanent-Magnet-Powered Motors

Dr Robert Adams (New Zealand) has developed astounding designs of electric motors, generators and heaters that run on permanent magnets. One such device draws 100 watts of electricity from the source, generates 100 watts to recharge the source and produces over 140 BTUs of heat in two minutes!

Dr Tom Bearden (USA) has two working models of a permanent-magnet-powered electrical transformer. It uses a 6-watt electrical input to control the path of a magnetic field coming out of a permanent magnet. By channelling the magnetic field, first to one output coil and then to a second output coil, and by doing this repeatedly and rapidly in a "ping-pong" fashion, the device can produce a 96-watt electrical output with no moving parts. Bearden calls his device a Motionless Electromagnetic Generator, or MEG. Jean-Louis Naudin has duplicated Bearden's device in France. The principles for this type of device were first disclosed by Frank Richardson (USA) in 1978.

Troy Reed (USA) has working models of a special magnetised fan that heats up as it spins. It takes exactly the same amount of energy to spin the fan, whether it is generating heat or not.

Beyond these developments, multiple inventors have identified working mechanisms that produce motor torque from permanent magnets alone.

3. Mechanical Heaters

There are two classes of machines that transform a small amount of mechanical energy into a large amount of heat.

The best of these purely mechanical designs are the rotating cylinder systems designed by Frenette (USA) and Perkins (USA). In these machines, one cylinder is rotated within another cylinder with about an eighth of an inch of clearance between them. The space between the cylinders is filled with a liquid such as water or oil, and it is this "working fluid" that heats up as the inner cylinder spins.

Another method uses magnets mounted on a wheel to produce large eddy currents in a plate of aluminium, causing the aluminium to heat up rapidly. These magnetic heaters have been demonstrated by Muller (Canada), Adams (NZ) and Reed (USA).

All of these systems can produce 10 times more heat than standard methods using the same energy input.

4. Super-Efficient Electrolysis

Water can be broken into hydrogen and oxygen using electricity. Standard chemistry books claim that this process requires more energy than can be recovered when the gases are recombined. This is true only under the worst-case scenario.

When water is hit with its own molecular resonant frequency, using a system developed by Stan Meyer (USA) and again recently by Xogen Power, Inc., it collapses into hydrogen and oxygen gas with very little electrical input. Also, using different electrolytes (additives that make the water conduct electricity better) changes the efficiency of the process dramatically. It is also known that certain geometric structures and surface textures work better than others do. The implication is that unlimited amounts of hydrogen fuel can be made to drive engines (like in your car) for the cost of water.

Even more amazing is the fact that a special metal alloy was patented by Freedman (USA) in 1957, which spontaneously breaks water into hydrogen and oxygen with no outside electrical input and without causing any chemical changes in the metal itself. This means that this special metal alloy can make hydrogen from water, for free, forever.

5. Implosion/Vortex Engines

All major industrial engines use the release of heat to cause expansion and pressure to produce work, like in your car engine. Nature uses the opposite process of cooling to cause suction and vacuum to produce work, like in a tornado.

Viktor Schauberger (Austria) was the first to build working models of Implosion Engines in the 1930s and 1940s. Since that time, Callum Coats has written extensively on Schauberger's work in his book *Living Energies*, and subsequently a number of researchers have built working models of Implosion Turbine Engines. These are fuelless engines that produce mechanical work from energy accessed from a vacuum. There are also much simpler designs that use vortex motions to tap a combination of gravity and centrifugal force to produce a continuous motion in fluids.

6. Cold Fusion Technology

In March 1989, two chemists, Martin Fleischmann and Stanley Pons, from Brigham Young University, Utah (USA), announced that they had produced atomic fusion reactions in a simple tabletop device. The claims were "debunked" within six months and the public lost interest.

Nevertheless, cold fusion is very real. Not only has excess heat production been repeatedly documented, but also low-energy atomic element transmutation has been catalogued, involving dozens of different reactions! This technology definitely can produce low-cost energy and scores of other important industrial processes.

7. Solar-Assisted Heat Pumps

The refrigerator in your kitchen is the only "free energy machine" you currently own. It's an electrically operated heat pump. It uses one amount of energy (electricity) to move three amounts of energy (heat). This gives it a "co-efficient of performance" (COP) of about three. Your refrigerator uses one amount of electricity to pump three amounts of heat from the inside of the refrigerator to the outside of the refrigerator. This is its typical use, but it is the worst possible way to use the technology. Here's why.

A heat pump pumps heat from the "source" of heat to the "sink" or place that absorbs the heat. The "source" of heat should obviously be hot and the "sink" for heat should obviously be cold for this process to work the best. In your refrigerator, it's exactly the opposite. The "source" of heat is inside the box, which is cold, and the "sink" for heat is the room temperature air of your kitchen, which is warmer than the source. This is why the COP remains low for your kitchen refrigerator. But this is not true for all heat pumps.

COPs of 8 to 10 are easily attained with solar-assisted heat pumps. In such a device, a heat pump draws heat from a solar collector and dumps the heat into a large underground absorber, which remains at 55°F (12.78°C); mechanical energy is extracted in the transfer. This process is equivalent to that of a steam engine that extracts mechanical energy between the boiler and the condenser, except that it uses a fluid which "boils" at a much lower temperature than water.

One such system, tested in the 1970s, produced 350 hp, measured on a dynamometer, in a specially designed engine from just 100 square feet of solar collector. (This is not the system promoted by Dennis Lee.) The amount of energy it took to run the compressor (input) was less than 20 hp, so this system produced more than 17 times more energy than it took to keep it going! It could power a small neighbourhood from the roof of a hot-tub gazebo, using exactly the same technology that keeps the food cold in your kitchen.

Currently there is an industrial-scale heat pump system set up just north of Kona, Hawaii, which generates electricity from temperature differences in ocean water.

There are dozens of other systems that I have not mentioned, and many of them are as viable and well tested as the ones I have just recounted.

But this short list is sufficient to make my point: free energy technology is here, now. It offers the world pollution-free, energy abundance for everyone, everywhere.

It is now possible to stop the production of "greenhouse gases" and shut down all of the nuclear power plants. We can now desalinate unlimited amounts of seawater at an affordable price and bring adequate fresh water to even the most remote habitats. Transportation and production costs for just about everything can drop dramatically. Food can even be grown in heated greenhouses in the winter, anywhere.

All of these wonderful benefits that can make life on this planet so much easier and better for everyone have been postponed for decades. Why? Whose purposes are served by this postponement?

UNSEEN ENEMIES OF FREE ENERGY TECHNOLOGY

There are four gigantic forces that have worked together to create this situation. To say that there is and has been a "conspiracy" to suppress this technology only leads to a superficial understanding of the world and it places the blame for this completely outside of ourselves. Our willingness to remain ignorant and actionless in the face of this situation has always been interpreted by two of these forces as "implied consent".

So, besides "a non-demanding public", what are the other three forces impeding the availability of free energy technology?

1. The Money Monopoly

In standard economic theory, there are three classes of industry: capital, goods and services. Within the first class, capital, there are also three sub-classes: natural capital, currency and credit. Natural capital relates to raw materials (such as a gold mine) and sources of energy (such as an oil well or hydroelectric dam). Currency relates to the printing of paper "money" and the minting of coins; these functions are usually the job of government. Credit relates to the lending of money for interest and its extension of economic value through deposit loan accounts. From this, it is easy to see that energy functions in the economy in the same way as gold, the printing of money by the government or the issuing of credit by a bank.

In the United States, and in most other countries around the world, there is a "money monopoly" in place. I am "free" to earn as much "money" as I want, but I will only be paid in Federal Reserve notes. There is nothing I can do to be paid in gold certificates or some other form of "money". This money monopoly is solely in the hands of a small number of private stock banks, and these banks are owned by the wealthiest families in the world. Their plan is eventually to control 100 per cent of all the capital resources of the world and thereby control everyone's life through the availability (or non-availability) of all goods and services. An independent source of wealth (a free energy device) in the hands of each and every person in the world would ruin their plans for world domination, permanently. Why this is true is easy to see.

Currently, a nation's economy can be either slowed down or sped up by the raising or lowering of interest rates. But if an independent source of capital (energy) were present in the economy, and any business or person could raise more capital without borrowing it from a bank, this centralised throttling action on interest rates would simply not have the same effect. Free energy technology changes the value of money. The wealthiest families and the issuers of credit do not want any competition. It's that simple. They want to maintain their current monopoly control of the money supply. For them, free energy technology is not just something to suppress, it must be permanently forbidden!

So, the wealthiest families and their central banking institutions are the first force operating to postpone the public availability of free energy technology. Their motivations are the imagined "divine right to rule", greed and their insatiable need to control everything except themselves. The weapons they have used to enforce this postponement include intimidation, "expert" debunkers, buying and shelving of technology, murder and attempted murder of the inventors, character assassination, arson and a wide variety of financial incentives and disincentives to manipulate possible supporters. They have also promoted the general acceptance of a scientific theory that states that free energy is impossible (the laws of thermodynamics).

2. National Governments

The second force operating to postpone the public availability of free energy technology is national governments. The problem here is not so much related to competition in the printing of currency but the maintenance of "national security".

The fact is, the world out there is a jungle and humans can be counted upon to be very cruel, dishonest and sneaky. It is government's job to "provide for the common defence". For this, "police powers" are delegated by the executive branch of government to enforce "the rule of law". Most of us who consent to the rule of law do so because we believe it is the right thing to do, for our own benefit. However, there are always a few individuals who believe that their own benefit is best served by behaviour that does not voluntarily conform to the generally agreed upon social order. These people choose to operate outside of "the rule of law" and are considered outlaws, criminals, subversives, traitors, revolutionaries or terrorists.

Most national governments have discovered by trial and error that the only foreign policy that really works over time is a policy called "tit for tat". What this means to you and me is that governments treat each other the way they are being treated. There is a constant "jockeying" for position and influence in world affairs, and the "strongest" party wins! In economics it's called "the Golden Rule", which states that "the one with the gold makes the rules". So it is with politics, also, but its appearance is more Darwinian. It's simply "survival of the fittest".

In politics, however, the "fittest" has come to mean the strongest party that is also willing to fight the dirtiest. Absolutely every means available is used to maintain an advantage over the "adversary", and everyone else is the "adversary" regardless of whether they are considered friend or foe. This includes outrageous psychological posturing, lying, cheating, spying, stealing, assassination of world leaders, proxy wars, alliances and shifting alliances, treaties, foreign aid and the presence of military forces wherever possible.

Like it or not, this is the psychological and actual arena in which national governments operate. No national government will ever do anything that gives an adversary an advantage simply for free. Never! It's national suicide. Any activity by any individual, inside or outside the country, which is interpreted as giving an adversary an edge or advantage in any way, will be deemed a threat to "national security". Always!

Free energy technology is a national government's worst nightmare! Openly acknowledged, free energy technology sparks an unlimited arms race by all governments in a final attempt to gain absolute advantage and domination. Think about it. Do you think Japan will not feel intimidated if China gets free energy? Do you think Israel will sit by quietly as Iraq

acquires free energy? Do you think India will allow Pakistan to develop free energy? Do you think the USA would not try to stop Osama bin Laden from getting free energy?

Unlimited energy available in the current state of affairs on this planet will lead to an inevitable reshuffling of the "balance of power". This could become an all-out war to prevent "the other" from having the advantage of unlimited wealth and power. Everybody will want it, and at the same time will want to prevent everyone else from getting it.

So, national governments are the second force operating to postpone the public availability of free energy technology. Their motivation is "self-preservation". This self-preservation operates on three levels: first, by not giving undue advantage to an external enemy; second, by preventing individualised action (anarchy) capable of effectively challenging official police powers within the country; and third, by preserving income streams derived from taxing energy sources currently in use.

Their weapons include preventing the issuance of patents on national security grounds, and the legal and illegal harassment of inventors with criminal charges, tax audits, threats, phone taps, arrest, arson, theft of property during shipment, and a host of other intimidations which make the business of building and marketing a free energy machine impossible.

3. Delusion and Dishonesty in the FE Movement

The third force operating to postpone the public availability of free energy technology consists of the group of deluded inventors and outright charlatans and con men. On the periphery of the extraordinary scientific breakthroughs that constitute the real free energy technologies lies a shadow world of unexplained anomalies, marginal inventions and unscrupulous promoters. The first two forces have constantly used the media to promote the worst examples of this group, to distract the public's attention and to discredit the real breakthroughs by associating them with the obvious frauds.

Over the last 100 years, dozens of stories have surfaced about unusual inventions. Some of these ideas have so captivated the public's imagination that a mythology about these systems continues to this day. Names like Keely, Hubbard, Coler and Hendershot immediately come to mind. There may be real technologies behind these names, but there simply isn't enough technical data available in the public domain to make a determination. These names remain associated with a free energy mythology, however, and are cited by debunkers as examples of fraud. But the idea of free energy taps very deeply into the human subconscious mind.

However, a few inventors with marginal technologies that demonstrate useful anomalies have mistakenly exaggerated the importance of their invention. Some of these inventors also have mistakenly exaggerated the importance of themselves for having invented it. A combination of "gold fever" and/or a "Messiah complex" appears, wholly distorting any future contribution they may make. While the research thread they are following may hold great promise, they begin to trade enthusiasm for facts, and the value of the scientific work from that point on suffers greatly. There is a powerful yet subtle seduction that can warp a personality if they believe that "the world rests on their shoulders" or that they are the world's "saviour".

Strange things also happen to people when they think they are about to become extremely rich. It takes a tremendous spiritual discipline to remain objective and humble in the presence of a working free energy machine. Many inventors' psyches become unstable by the inventors' just believing they have a free energy machine. As the quality of the science deteriorates, some inventors also develop a "persecution complex" that makes them very defensive and unapproachable. This process precludes them from ever really developing a free energy machine, and fuels the fraud mythologies tremendously.

Then there are the outright con men. In the last 15 years, there is one person in the USA who has raised the free energy con to a professional art. He has raised more than US$100,000,000, has been barred from doing business in the state of Washington, has been jailed in California, and he's still at it. He always talks about a variation of one of the real free energy systems, sells people on the idea that they will get one of these systems soon, but ultimately sells them only promotional information that gives no real data about the energy system itself. He has mercilessly preyed upon the Christian and Patriot communities in the USA and is still going strong.

This person's current scam involves signing up hundreds of thousands of people for locations where he will install a free energy machine. In exchange for letting him put the FE generator in their home, they will get free electricity for life and his company will sell the excess energy back to the local utility company. After becoming convinced that they will receive free electricity for life, with no out-front expenses, they gladly buy a video--which helps draw their friends into the scam as well. Once you understand the power and motivations of the first two forces I have discussed, it is obvious that this person's current "business plan" cannot be implemented. This one person has probably done more harm to the free energy movement in the USA than any other force, by destroying people's trust in the technology.

So, the third force postponing the public availability of free energy technology is delusion and dishonesty within the movement itself. The motivations are self-aggrandisement, greed, want of power over others and a false sense of self-importance. The weapons used are lying, cheating, the "bait and switch" con, self-delusion and arrogance, combined with lousy science.

4. A Non-Demanding Public

The fourth force operating to postpone the public availability of free energy technology is all of the rest of us. It may be easy to see how narrow and despicable the motivations of the other forces are, but actually these motivations are still very much alive in each of us as well.

Like the wealthiest families, don't we each secretly harbour illusions of false superiority and the want to control others instead of ourselves? Also, wouldn't we "sell out" if the price were high enough--say, take $1 million dollars in cash, today? Or, like the governments, don't we each want to ensure our own survival? If caught in the middle of a full, burning theatre, do we panic and push all the weaker people out of the way in a mad scramble for the door? Or, like the deluded inventor, don't we trade a comfortable illusion once in a while for an uncomfortable fact? And don't we like to think more of ourselves than others give us credit for? Or don't we still fear the unknown, even if it promises a great reward?

You see, really, all four forces are just different aspects of the same process, operating at different levels in the society. There is really only one force preventing the public availability of free energy technology, and that is the unspiritually motivated behaviour of the human animal. In the last analysis, free energy technology is an outward manifestation of Divine Abundance. It is the engine of the economy of an enlightened society--where people voluntarily behave in a respectful and civil manner towards each other; where each member of the society has everything they need and does not covet what their neighbour has; where war and physical violence are socially unacceptable behaviours; and where people's differences are at least tolerated, if not enjoyed.

The appearance of free energy technology in the public domain is the dawning of a truly civilised age. It is an epochal event in human history. Nobody can "take credit" for it. Nobody can "get rich" on it. Nobody can "rule the world" with it. It is, simply, a gift from God. It forces us all to take responsibility for our own actions and for our own self-disciplined self-restraint when needed. The world as it is currently ordered cannot have free energy technology without being totally transformed by it into something else. This "civilisation" has reached the pinnacle of its development because it has birthed the seeds of its own transformation. The unspiritualised human animals cannot be trusted with free energy. They will only do what they have always done, which is take merciless advantage of each other or kill each other and themselves in the process.

If you go back and read Ayn Rand's Atlas Shrugged (1957) or the Club of Rome's report, The Limits To Growth (1972), it becomes obvious that the wealthiest families have understood this for decades. Their plan is to live in "the world of free energy" but permanently freeze the rest of us out. But this is not new. Royalty has usually always considered the general population (us) to be their subjects. What is new is that you and I can now communicate with each other better than at any time in the past. The Internet offers us, the fourth force, an opportunity to overcome the combined efforts of the other forces that are preventing the spread of free energy technology.

THE OPPORTUNITY FOR A JUST SOCIETY

What is starting to happen is that inventors are publishing their work instead of patenting it and keeping it secret. More and more, people are "giving away" information on these technologies in books, videos and websites. While there is still a great deal of useless information about free energy on the Internet, the availability of good information is rising rapidly. Check out the list of websites and other resources at the end of this article.

It is imperative that you begin to gather all the information you can on real free energy systems. The reason for this is simple. The first two forces will never allow an inventor or a company to build and sell a free energy machine to you! The only way you will ever get one is if you build it yourself (or get a friend to build it). This is exactly what thousands of people are already quietly starting to do. You may feel wholly inadequate to the task, but start gathering information now. You may be just a link in the chain of events for the benefit of others. Focus on what you can do now, not on how much is still to be done. Small private research groups are working out the details as you read this. Many are committed to publishing their results on the Internet.

All of us constitute the fourth force. If we stand up and refuse to remain ignorant and actionless, we can change the course of history. It is the aggregate of our combined action that can make a difference. Only the mass action that represents our consensus can create the world we want. The other three forces will not help us put a fuelless power plant in our basement. They will not help us be free from their manipulations.

Nevertheless, free energy technology is here. It is real, and it will change everything about the way we live, work and relate to each other. In the last analysis, free energy technology makes greed and the fear for survival obsolete. But like all exercises of spiritual faith, we must first manifest the generosity and trust in our own lives.

The source of free energy is inside of us. It is that excitement of expressing ourselves freely. It is our spiritually guided intuition expressing itself without distraction, intimidation or manipulation. It is our open-heartedness. Ideally, the free energy technologies underpin a just society where everyone has enough food, clothing, shelter, self-worth and the leisure time to contemplate the higher spiritual meanings of life. Do we not owe it to each other to face down our fears and take action to create this future for our children's children? Perhaps I am not the only one waiting to act on a greater Truth.

Free energy technology is here. It has been here for decades. Communications technology and the Internet have torn the veil of secrecy off this remarkable fact. People all over the world are starting to build free energy devices for their own use. The bankers and the governments do not want this to happen but cannot stop it. Tremendous economic instabilities and wars will be used in the near future to distract people from joining the free energy movement. There will essentially be no major media coverage of this aspect of what is going on. It will simply be reported as wars and civil wars erupting everywhere, leading to UN "peacekeeper" occupation in more and more countries.

Western society is spiralling down towards self-destruction due to the accumulated effects of long-term greed and corruption. The general availability of free energy technology cannot stop this trend. It can only reinforce it. However, if you have a free energy device, you may be better positioned to survive the political/social/economic transition that is underway. No national government will survive this process. The question is, who will ultimately control the emerging World Government: the first force or the fourth force?

The last Great War is almost upon us. The seeds are planted. After this will come the beginning of a real civilisation. Some of us who refuse to fight will survive to see the dawn of the world of free energy. I challenge you to be among the ones who try.

About the Author:
Peter Lindemann, DSc, became interested in Free Energy in 1973 when he was introduced to the work of Edwin Gray. By 1981 he had developed his own free energy systems based on variable reluctance generators and pulsed motor designs. During the 1980s he worked off and on with both Bruce DePalma and Eric Dollard. In 1988 he joined the board of Borderland Sciences Research Foundation and served until 1999. During this period he authored more than 20 articles for *The Journal of Borderland Research*.

Dr Lindemann is a leading authority on the practical applications of aether technology and cold electricity. Currently he is a Research Associate of Dr Robert Adams in New Zealand, as well as a close collaborator with Trevor James Constable in the USA. He is also Director of Research for Clear Tech, Inc. in the USA.

Dr Lindemann's book, *The Free Energy Secrets of Cold Electricity*, is reviewed in this issue; the companion video was reviewed last issue (8/03). Both are available from Clear Tech, Inc., www.free-energy.cc, and Adventures Unlimited, www.adventuresunlimitedpress.com, in the USA.

Resources: Books

€ Adams, Robert, DSc, *Applied Modern 20th Century Aether Science*, Aethmogen Technologies, Whakatane, New Zealand, special update 2001, 2nd edition.
€ Aspden, Harold, Dr, *Modern Aether Science*, Sabberton, UK, 1972.
€ Coats, Callum, *Living Energies*, Gateway Books, UK, 1996.
€ Lindemann, Peter, DSc, *The Free Energy Secrets of Cold Electricity*, Clear Tech, Inc., USA, 2001.
€ Manning, Jeane, *The Coming Energy Revolution: The Search for Free Energy*, Avery Publishing Group, USA, 1996.
€ Rand, Ayn, *Atlas Shrugged*, Random House, 1957.
€ Vassilatos, Gerry, *Secrets of Cold War Technology: Project HAARP and Beyond*, Adventures Unlimited Press, USA, 1999.

Resources: Websites

€ http://energy21.terrashare.com/
Developed by Geoff Egel in Australia. Best site on the Net!

€ www.free-energy.cc/
Developed by Clear Tech, Inc. and Dr Peter Lindemann.

€ http://jnaudin.free.fr/
Developed by JLN Labs in France.

€ www.1dove.com/fe/index.html
Jim's Free Energy Page in the USA.

€ www.keelynet.com/
Developed by Jerry Decker in the USA.

€ www.xogen.com
Site for super electrolysis technology.

€ www.rumormillnews.com
Excellent site for all kinds of alternative news, with many links.

Resources: Patents

Most of these patents can be viewed at www.delphion.com/. This is a sample of inventions that produce free energy:
€ Tesla: USP #685,957 (1901)
€ Freedman: USP #2,796,345 (1957)
€ Richardson: USP #4,077,001 (1978)
€ Frenette: USP #4,143,639 (1979)
€ Perkins: USP #4,424,797 (1984)
€ Gray: USP #4,595,975 (1986)
€ Meyer: USP #4,936,961 (1990)
€ Chambers (Xogen): USP #6,126,794 (1998).

Reproduced From *NEXUS MAGAZINE*

www.nexusmagazine.com

Renewable Energy Discussion on various alternative energy, renewable energy, & free energy technologies. Also any discussion about the environment, global warming, and other related topics are welcome here.

LinkBack (1) | Thread Tools

#1 (permalink)

05-11-2007, 08:44 PM

Aaron
Energetic Scientist

Join Date: Feb 2007
Location: Washington State
Posts: 646
My Profile

Radiant Energy

The purpose of this thread is to discuss what radiant energy is.

#2 (permalink)

05-12-2007, 02:34 AM

lighty
Junior Member

Join Date: Apr 2007
Location: Croatia
Posts: 19
My Profile

@Lindemann

I watched your DVD of lecture on radiant energy. Some of the requirements as I understand them are:

1. The mass of material of primary and secondary has to be equal as precisely as possible. That is the requirement proposed by Tesla regarding his high frequency coils and especially his flat archimedean spiral coils. I may be way of the track on this one but it seems to me that the amount of the dielectric charge (or rather the density of dielectric lines of force) are in some way proportional to the mass of the conductor or rather to the number of atoms available in order to resonate and produce radiant energy event. For example I've conducted a number of experiments in which I compared the highly saturated high quality ferrite core with small airgap (in order to increase the saturation point and to store more magnetic flux in the airgap- I'm talking about 0.1mm airgap and smaller number of turns of conductor. I compared it with the extremely heavy coils with smaller core (in this case Metglas ones- I used them for their high permeability and extremely narrow hysteresis curve) and open geometry (pretty much similar to the Bedini SG coil). Of course one can produce pretty much the same voltage spikes on both coils but the coil with the more conductor mass exhibit a somewhat different properties. For example the discharge of the capacitor filled with the Back-EMF from the ferrite core showed different properties compared to the discharge of the capacitors filled with the BEMF from the massive coil. I'm talking here mostly about visual and auditive quality of the discharge. My guess is that a mass of conductor definitely plays some role in the way coil produces BEMF.

2. The surface area of the conductors definitely plays a role in radiant energy release. The fact is that a Litz wire or a flat strip of conductor material shows much better properties dealing with sudden impulses. I also compared several types of wire in the pretty much similar conditions (same core, same number of ampere turns, same current and same saturation of core. The BEMF curve of the

Litz wire and flat strip wire are much more steeper (thus more sudden in time) and goes to the much higher voltage. I couldn't believe a geometry could make such a difference but it did. My guess is that a conductor tube would exhibit pretty much similar characteristics- in fact I used copper tubing for Tesla induction coils primaries and they definitely show more appropriate behavior and less loses than the full conductor profiles. Of course much of that behavior can be attributed to the lower impedance those kind of big surface conductor shows when dealing with sudden impulses. The other thing I observed is that Litz wire coils sometimes gain by separating of their turns somewhat. The flat strip conductors also benefit if one winds them in a way to be oriented edgewise to each other. It surely lower their inter-capacitance and probably contribute to the lowering of the impedance of coil itself. Skin effect also plays a role in that effect but I'm not sure to what extent.

3. For Tesla resonant system it's advisable to have secondary set to 1/4 wavelength of the resonant frequency. Tesla himself advise in that direction and although I never experimentally tried that rule I guess there must be some rationale behind it. I know that if some conditions are met a stationary wave can be produced and in energy transfer it plays significant role. To be honest I'm still learning about this stuff so please cope with me as much as you can.

4. When talking about BEMF as a kind of radiant event I've learned that inductance plays significant role. With higher inductance one usually gets more severe potential gradient change (measuring with an oscilloscope it means one gets higher voltage spikes). With lowering of capacitive component of impedance voltage spikes go even higher- it's probably why flat strip conductor (for one layer coils- I've never tried multilayer coils of this type) shows significant advantage over ordinary round- profile conductor. It's surface is also extremely large so it could also play a role regarding a skin effect.

So here it is- and although there is so much more I could say about the results I obtained for now I will reduce my ranting on refining my knowledge on the phenomena I talked about. I've based my conclusions on practical experiments but my interpretation oethe results might be wrong so feel free to correct me. I'm always glad if someone disprove my conclusions with solid arguments so that I can learn more about the topic in question.

Peter Lindemann
Member

Join Date: Apr 2007
Posts: 50
My Profile

Lighty, excellent!

Lighty,

Thank you for opening up such an intelligent conversation. The most important thing here is not to be "right" or "wrong", but that you are learning, experimenting, and thinking deeply about what you are seeing in your experiments! Congratulations.

There are two issues here. The first issue is the PRODUCTION of radiant energy and the second is the EFFICIENT TRANSFER of radiant energy.

The first issue is covered by Tesla in his work on the "Method of Conversion", that is, the conversion of "normal electricity" into "longitudinal waves of electrostatic force" otherwise known as Radiant Energy. As I show in my DVD, Tesla's Radiant Energy patents clearly state that Radiant Energy is defined as electrostatic charge CONVEYED by Radiant Matter. Radiant Matter is made up of neutral particles of mass at least 100 times smalled than electrons. The general "Method of Conversion" is to charge an inductor with intermittent DC current, and collect the inductive discharges in a capacitor. Then, discharge the capacitor into another inductor of high self-inductance and low impedance, to raise the voltage even higher for use in lighting systems or stepper type motors. When studying Tesla's "Method of Conversion" it becomes obvious that he was talking about a very broad phenomena. The original diagram shows SIX different processes, all of which produce variations on the Method.

The term "Radiant Energy" evolved from Tesla's friendship with and admiration of Sir William Crookes. Crookes invented the Radiometer, a device Tesla referred to as the most elegant motor ever devised. Crookes was studying the effects relating to the emissions from incandescent matter. The question was, when a piece of mass is heated to the point where it starts to emit light and heat, what EXACTLY is coming out of the matter that conveys these properties into the surrounding space? The Radiometer demonstrated that these emissions had MASS and could convey a PHYSICAL FORCE to another object. Tesla came to believe that ANY source of light and heat, such as the Sun, was emitting "whatever" is emitted when MATTER RADIATES! Whatever that was, was termed "Radiant Matter." Since it could go right through the glass enclosure of the Radiometer WITHOUT disrupting the vacuum inside, the determination was that the particle size was INFINITESIMALLY SMALL. Tesla's later experiments determined

that these Radiant Matter particles where the primary CONVEYOR of electrostatic charge.

When I can, I will discuss the second issue you bring up.

Peter

#4 (permalink)

05-12-2007, 06:51 AM

Aaron
Energetic Scientist

Join Date: Feb 2007
Location: Washington State
Posts: 646
My Profile

back emf vs. collapsed magnetic field

Quote:

> Originally Posted by **lighty**
> *For example the discharge of the capacitor filled with the Back-EMF from the ferrite core showed different properties compared to the discharge of the capacitors filled with the BEMF from the massive coil. I'm talking here mostly about visual and auditive quality of the discharge. My guess is that a mass of conductor definitely plays some role in the way coil produces BEMF.*

Hi Lighty,

To my understanding, back emf and the collapsed coil's voltage potential are two different things that happen at two different times.

The back emf is happening at the exact same time that a current is induced into a coil. There is the forward induction and then the back emf is counter induced and is explained by the Lenz law.

After the coil is charged and the back emf event happens and the coil power is turned off, the build up magnetic field collapses in reverse polarity and fills the capacitor with voltage potential free or mostly free of electron current and therefore no back emf in that event since it is for the most part, just voltage potential and not current.

So when Bedini's circuits for example are charging capacitors, it does so with radiant energy or the voltage potential free of current instead of charging a capacitor with back emf or electron current.

Someone else may be able to clarify the distinction between back emf/counter current and voltage potential/collapsed field

#5 (permalink)

05-12-2007, 11:11 AM

lighty
Junior Member

Join Date: Apr 2007
Location: Croatia
Posts: 19
My Profile

I think the main problem is the lack of proper terminology practice. I use the term to label the induced EMF of the higher value and reverse polarity than the voltage of the source inducing the original current flow (and thus magnetic field) that manifests itself when the conductance of the coil circuit goes suddenly to zero and the magnetic field collapses very fast. Now look at this very vague definition that is somewhat contradictory in itself Counter-electromotive force - Wikipedia, the free encyclopedia

When I think of it I cannot remember a proper term used in electronics. The phenomena is mostly labeled as detrimental as it might burn out the semiconductor devices (and thus all the protective snubber circuitry usually engineered in the circuitry) and simply calls it "transient phenomena". While that term is appropriate because it is transient phenomena it's at the same time very vague so no luck there. Just look at here Snubber - Wikipedia, the free encyclopedia In relation to the transil diodes it's only mentioned that they protect circuit from the "voltage spikes". Transient voltage suppression diode - Wikipedia, the free encyclopedia

So what would be the proper terminology for that fast transient phenomena?

Last edited by lighty : 05-12-2007 at 11:13 AM.

#6 (permalink)

05-12-2007, 05:10 PM

Peter Lindemann
Member

Join Date: Apr 2007
Posts: 50
My Profile

What is Back EMF?

Quote:

> Originally Posted by **lighty**
> *I think the main problem is the lack of proper terminology practice. I use the term to label the induced EMF of the higher value and reverse polarity than the voltage of the source inducing the original current flow (and thus magnetic field) that manifests itself when the conductance of the coil circuit goes suddenly to zero and the magnetic field collapses very fast. Now look at this very vague definition that is somewhat contradictory in itself Counter-electromotive force - Wikipedia, the free encyclopedia*
>
> *When I think of it I cannot remember a proper term used in electronics. The phenomena is mostly labeled as detrimental as it might burn out the semiconductor devices (and thus all the protective snubber circuitry usually engineered in the circuitry) and simply calls it "transient phenomena". While that term is appropriate because it is transient phenomena it's at the same time very vague so no luck there. Just look at here Snubber - Wikipedia, the free encyclopedia In relation to the transil diodes it's only mentioned that they protect circuit from the "voltage spikes". Transient voltage suppression diode - Wikipedia, the free encyclopedia*
>
> *So what would be the proper terminology for that fast transient phenomena?*

Lighty, Aaron, and anybody else who cares,

OK folks, here is the real answer. The Wikipedia definition for Counter Electromotive Force (CEMF) actually covers the territory pretty well. It is just a little short on detail. Technically, BACK EMF is the reverse voltage generated in an electric motor that is responsible for holding back the current when the motor speeds up. My DVD *Electric Motor Secrets* shows exactly what the BACK EMF is and how it works.

CEMF is any other reverse induction in an inductor that slows down the increase or decrease in the applied current. This process is described by Lenz Law, where ANY induced current opposes the movement of the magnetic field that induced it. So, when a DC square-wave pulse is applied to a coil of wire, the voltage reaches its maximum value nearly instantaneously, whereas the current rises to its maximum value on a ramp-wave with a specific time constant. The current cannot rise instantaneously, like the voltage, because the current in one turn of the coil is causing CEMF inductions in other turns of the coil nearby. So the current fights itself to reach its maximum value. These processes only happen when the current is CHANGING, either rising or dropping in value.

In the older books, the distinction between these two processes, or the names used to describe them was not made. Many names for electrical processes changed in the 1950's and 1960's. Cycles-per-second became Hertz, CEMF became Back EMF and lots of other things. It is no wonder that there is confusion about these things.

The most important thing to understand in all of this is that all of these phenomena follow ELECTROMAGNETIC INDUCTION LAWS. Currents are induced in relationship to the strength of the magnetic field and voltages are induced based on the rate-of-change of that flux. In standard transformer operations, voltages in the output winding (secondary) cannot exceed the voltage in the input winding (primary) times the turns ratio between the primary and the secondary.

The appearance of the very short duration, very high voltage transient, when the current powering an inductor on DC is shut OFF, does not follow these Laws, especially on CLOSE OBSERVATION. John Bedini has spent 30 years studying this situation and has articulated most accurately the conditions to maximize the production of this voltage spike. I refer to this situation as the energy of "the inductive collapse", since that distinguishes it from other varieties of CEMFs. The voltage producing phenomena produces a

different QUALITY of electricity, according to the "Method of Conversion" described by Tesla. In fact, charging and discharging an inductor is the FIRST STEP in Tesla's "Method of Conversion" and the first step in the process of producing PURE Radiant Energy.

According to Tesla, the "fast transient phenomena" is a Longitudinal Wave, a time compressed zone of electrostatic charge or pure voltage, traveling ahead of the electron current. It appears BEFORE the current starts moving and is separate and distinct from it.

I hope this helps.

Peter

Last edited by Peter Lindemann : 05-15-2007 at 05:33 AM.

#7 (permalink)

05-13-2007, 12:54 AM

lighty
Junior Member

Join Date: Apr 2007
Location: Croatia
Posts: 19
My Profile

Quote:

> Originally Posted by **Peter Lindemann**
> *Thank you for opening up such an intelligent conversation. The most important thing here is not to be "right" or "wrong", but that you are learning, experimenting, and thinking deeply about what you are seeing in your experiments! Congratulations.*

Well, thank you but I owe that fact mostly to you since it's been your article on MWO published by BSRF which interested me in this area of research in the first place. I really have nothing but respect for your research and for your skills as the talented popularizer of

hard to understand topics.

Quote:

> The general "Method of Conversion" is to charge an inductor with intermittent DC current, and collect the inductive discharges in a capacitor.

Indeed it's the basic principle used by Tesla as it's obvious simply by observing the designs of various Tesla oscillators (as he called them himself). There is one thing I observed that is not so obvious at the first look. The polarity of the "fast transient phenomena" of the induction discharge used will to some degree determine the behavior of the system. For example I discovered by experiment that the - polarity of the inductive discharge doesn't behave the same as the + polarity of the inductive discharge. One would think that they're the same because it's the same if you watch either polarity voltage on the oscilloscope but in reality there are some strange things going on with semiconductors when using - polarity of the inductive discharge as well as some very odd behavior of the oscilloscope probe itself. I suspect that grounding of the oscilloscope is interacting with the - polarity of inductive discharge and it causes some serious troubles during the measurement rendering them practically unusable. I alway wondered why Bedini uses handheld oscilloscope. The thing about handhelds is that they should behave much more stable because of their floating power supply is not connected to ground in any way.

Also, if one end of the inductive discharge coil is grounded the transient voltage effect is diminished to some extent or at least changed slightly in it's nature. My guess is that any ground path in the circuit will simply allow the excessive dielectric charge to be leveled out with the surrounding media and thus effectively neutralizing it to some extent. Maybe I'm mistaken but to me it seems only logical.

As I wrote earlier there are some rules that I find must be observed in order to get the better results but I was wondering if you could elaborate some more on the best design of the coils for inductive discharge and on the methods of achieving the highest inductance with least impedance. I mean one could lower the capacitive component of impedance the way I described before but is there some other things that should be observed in order to achieve optimal results?

Your input on this matter would be much appreciated.

#8 (permalink)

05-13-2007, 01:18 AM

lighty
Junior Member

Join Date: Apr 2007
Location: Croatia
Posts: 19
My Profile

Quote:

> Originally Posted by **Peter Lindemann**
> *I refer to this situation is the energy of "the inductive collapse", since that distinguishes it from other varieties of CEMFs.*

OK, now that is indeed a good description of what is going on and I choose to use that term in the future instead of the more vague

Back-EMF.

Quote:

> It appears BEFORE the current starts moving and is separate and distinct from it.

Indeed. Now, it would be most useful if one could limit the movement of the electrons during the charging of capacitors with the inductive collapse voltage or rather with the dielectric charge. One could of course try putting an inductor between inductive collapse inductor and the capacitor in order to limit the electron flow to capacitor. Now, if that capacitor is then discharged into next inductor and then the same electron move limiting inductor is used to limit the electron flow to the next stage capacitor one could maybe make a kind of cascade connection to purify the dielectric charge toward the end of such cascade. Do you have any ideas on how to do that?

In one experiment I used + polarity of the inductive collapse and I put an aircore inductor in series with it. Now, when the opposite end of the series inductor was slowly removed from the ground (to where it was connected in the first place) there was produced an extremely powerful continuous arc of the most peculiar nature (of course the inductive collapse coil was in the high frequency function all the time). First of all it was a rather constant arc without any interruptions and it could be drawn a few millimeters before becoming extinguished. The other peculiar thing was the fact that the arc produced a sound just like the high frequency plasma. The spectra of arc was green to blue and it produced extreme heat enough for me to weld two small pieces of steel together. And all of that exclusively by using the inductive discharge of very small magnitude and with rather low power used to power the inductive collapse coil with rather low voltages gained in the range of 95-120V but I must again accentuate the fact that I used the + polarity of the inductive collapse. My guess is that a kind of positive plasma was induced that showed some rather peculiar phenomena. Now, I tried doing the same with the - polarity of the inductive collapse but I was simply unable to make anything work because the system had common ground and it rendered extraction of the - polarity practically impossible.

Quote:

> I hope this helps.

You're being most helpful indeed!

#9 (permalink)

05-13-2007, 10:43 AM

Mario
Junior Member

Join Date: Apr 2007
Posts: 4
My Profile

Hi Lighty,

Have you tried a caduceus coil? It's supposed to have no impedance at all and a very narrow induction field in that, if you want to get two coils in resonance you have to align them with the precision of a laser beam.
Here you can download a doc.:

http://www.stealthskater.com/Documen...E/Caduceus.doc

regards

Mario

#10 (permalink)

05-13-2007, 12:02 PM

lighty
Junior Member

Join Date: Apr 2007
Location: Croatia
Posts: 19
My Profile

@Mario

No, I didn't try using Caduceus coil for the purpose of inductive discharge. I could try it in the next time period in order to discern the truth from myth. Lindemann got it right- there is a lot of theoretical work out there but much less practical experiments to prove or disprove those theories.

But you gave me an incentive to try it- at least to see if the claims about extremely low impedance are correct.

#11 (permalink)

05-13-2007, 12:16 PM

Mario
Junior Member

Join Date: Apr 2007
Posts: 4
My Profile

Hi Lighty,

I'm experimenting myself working on John's solid state circuits. I will try a caduceus coil soon, but first I have a lot of different options to test. Let me know how it works out if you get a chance to play with it!

regards

Mario

#12 (permalink)

05-13-2007, 06:24 PM

Peter Lindemann
Member

Join Date: Apr 2007
Posts: 50
My Profile

Lighty, two answers.....

Lighty,

You are really learning this material, and it is very gratifying to see.

OK, how do you separate the electron flow (current) from the neutral particle flow (voltage)? Believe it or not, Tesla's simple method does it. So does John Bedini's methods. When an inductor is charged with DC current, the intensity of its magnetic field is described by the "ampere-turns" of the coil. When the magnetic field discharges, the voltage it produces is described by the "rate-of-change" of the flux. The flux changes are resisted by themselves, as we have discussed, due to Lenz Law effects.

So, if you discharge your inductive collapse energy into a capacitor, here is what happens. If the capacitor starts at ZERO volts, the first few inductive collapses deliver CURRENT pulses to bring the capacitor up to the voltage level of the source powering the coil. As this process continues, once the voltage in the capacitor gets ABOVE the power source charging the coil, the balance switches, and the coil must start generating more voltage to keep getting above the voltage already in the capacitor. If you have a current probe on your oscilloscope, watch the current pulses going into the cap. The energy of the inductive collapse constantly adjusts to produce more and more voltage and less and less current to keep the capacitor charging up.

Now it gets interesting. IF your inductor has a magnetic field that is completely closed down, like a standard transformer, the voltage level you can charge your capacitor to is only a few times higher than your power source. But, as John Bedini has shown, if the inductor is totally OPEN to the environment, (no closed magnetic field) the voltage produced by the inductive collapse can easily attain 30 times the level of your power supply. With really good air-core coils, I have seem some of John's oscillators produce voltages 50 times higher than the supply.

The question is why? The answer is LENZ LAW! As the capacitor charges up above the supply voltage, current CANNOT be pushed into the capacitor by standard ELECTROMAGNETIC INDUCTION LAWS. There is NO turns ratio gain for voltage production, so all voltage gain is by Tesla's ELECTROSTATIC INDUCTION LAWS. As the current in the discharge drops, the magnetic field can collapse faster and faster because the Back EMF caused by current is diminishing. This INCREASES the "rate-of-change" of flux and the voltage can rise to higher values.

At a certain point, there is no current left, at which point the voltage can rise to VERY HIGH VALUES. This is what Tesla discovered as he scaled these systems up.

So, the coil design suitable to receive the discharge of this capacitor is the primary coil of Tesla's flat spiral or conical coil "TRANSFORMER". That primary coil is always described as "a few turns of stout wire or copper strap." Look at the designs of the coils built by Eric Dollard in the old Borderlands videos. Why? The capacitor can take all of the VOLTAGE you put in it and discharge it in less than a microsecond, creating a HUGE CHANGE of dielectric flux, the quality of which is very low on electron movement. This is the time compressed electrostatic wave. The time-compression is all the time it took to charge the cap is given back in an instant.

The other thing you are seeing is the truth that "electricity is electricity" is a false theory. Electricity can and does appear as a wide variety of different QUALITIES of energy, depending on how the circuit is set up. Only experimental work will show you this. So, again, congratulations.

Keep up the great work.

Peter

lighty
Junior Member

Join Date: Apr 2007
Location: Croatia
Posts: 19
My Profile

Quote:

Originally Posted by **Peter Lindemann**
If the capacitor starts at ZERO volts, the first few inductive collapses deliver CURRENT pulses to bring the capacitor up to the voltage level of the source powering the coil. As this process continues, once the voltage in the capacitor gets ABOVE the power source charging the coil, the balance switches, and the coil must start generating more voltage to keep getting above the voltage

> *already in the capacitor. If you have a current probe on your oscilloscope, watch the current pulses going into the cap. The energy of the inductive collapse constantly adjusts to produce more and more voltage and less and less current to keep the capacitor charging up.*

Indeed you're right- the effects you're describing are exactly what I was referring to in one of my earlier posts. I called it a "transformer effect" because in those first few pulses when the electron flow is charging the capacitor one can observe that there is anomalous current consumption going on in the "primary". I suspected that it also has something to do with the fact that Bedini is using a full bridge rectifier in his "secondary" and that such configuration is allowing for inductive coupling to transfer energy to the capacitor. I then used only a single diode in order to reduce that effect caused by inductive transfer from "primary" to "secondary". Indeed, a single diode did reduce the anomalous current consumption on the "primary" during the "charging phase" prior to inductive collapse. It's easily seen with the current clamp and fast DSO. It was then that by chance I observed that the negative and positive polarity of the inductive collapse charge doesn't behave the same way. I won't go further into that because I already wrote about that.

Quote:

> But, as John Bedini has shown, if the inductor is totally OPEN to the environment, (no closed magnetic field) the voltage produced by the inductive collapse can easily attain 30 times the level of your power supply. With really good air-core coils, I have seem some of John's oscillators produce voltages 50 times higher than the supply.

In fact 50 times higher voltage is easily achieved if a proper geometry, a proper core material and electronics are used. I can normally achieve a 18V/900V ratio and more is possible but for some reasons of design I have to use the semiconductors in the capacitive discharge circuit and I have to reduce voltage to remain <1kV to prevent a possible semiconductor voltage breakthrough. As I discovered several requirements have to be observed to achieve higher voltage impulses to capacitor and among them is the speed of diode (I use special extremely fast diodes), a semiconductor used to energize the coil should be chosen and driven in a way that would allow for extremely fast shutdown of current through coil and low leakage current after, a high-permeability narrow hysteresis material should be used (I use one form of material similar to Metglas), a precise control of the saturation point of core in order to shut down energizing semiconductor device in the exact moment of highest saturation in order to prevent losses and excessive heating of the components, and finally one should use as high frequency as possible (the coil in configuration I'm using is going up to 6kHz and is limited solely by the inductance of the coil and the time necessary to fully saturate the core). It took me quite some time to get a necessary understanding and control of the processes involved in order to meet all those requirements and still I learn something new every time I try some new approach.

Quote:

> The capacitor can take all of the VOLTAGE you put in it and discharge it in less than a microsecond, creating a HUGE CHANGE of dielectric flux, the quality of which is very low on electron movement. This is the time compressed electrostatic wave.

Exactly! A sudden change of the dielectric flux is what's Tesla was lecturing about and the thing that usually perplexes people is the fact that there is almost no electron movement involved but rather an electrostatic impulse of great magnitude able to produce a some sort of dielectric avalanche in the secondary. Of course that's the underlying principle but several things have to be observed in order for everything to work as described by Tesla such as the proper impulse control, the appropriate sparkgap, the position of the sparkgap in the system etc. I'm just getting into this field and I plan to do several experiments of my own in the near future.

Quote:

> Keep up the great work.

I'm doing the best I can and I can thank you for getting me interested in these topics several years back when I read your articles on MWO published by BSRF and especially with your book The Secrets of Cold Electricity. That was my primer in this field of research so I thank you for writing all down so eloquently and concise.

#**14** (**permalink**)

05-14-2007, 09:19 AM

Shad
Junior Member

Join Date: May 2007
Location: Croatia
Posts: 9
My Profile

question to Dr. Lindemann

Dear Dr. Lindemann

As I understand to create the time compressed electrostatic wave and HUGE CHANGE of dielectric flux in the flat spiral or conical coil "TRANSFORMER" the spark gap is an important medium.

From the personal writings of Nikola Tesla, as well as from your lectures I understand that dialectrica used in a spark gap is very important.

Above you discussed the first step of radiant energy conversion, please allow me to scrutinize and analyze the second step.

In one of your lectures you said that the spike must be created in a way in the spark gap, that it will crack only once.

Tesla in in his personal notes says the same - the electric ark must be avoided. He describes that this electric ark is created in conductive gases, such as air, on the molecular level and the molecules are charged and discharged that quickly that thereby light is created. In this way light currents are caused and the energy is lost, therefore he made a magnetic spark gap to interrupt the electric ark. The best would be a dialectrica, such as vacuum, or something similar, that would lock up the spike, thus isolating it, while it 'bolts' through the spark gap.

The external appearance would be that 'is cracks only once', since no electric ark is created.

Could you give some suggestion on what dialectrica would be suitable for this kind of spark gap?

My greatest sympathies go towards vacuum tubes, but since they are very difficult to be manufactured, I would do a compromise and try liquid dialectrica, such as compressing transformer-oil, liquid hexane, or other liquid dialectrica in a spark gap.

What do you think about this? What kind of spark gaps did Dollard use?

Thank you very much and best of greetings,

Shad

Peter Lindemann
Member

Join Date: Apr 2007
Posts: 50
My Profile

Let's look at fundamentals..

Quote:

Originally Posted by **Shad**
Dear Dr. Lindemann

As I understand to create the time compressed electrostatic wave and HUGE CHANGE of dielectric flux in the flat spiral or conical coil "TRANSFORMER" the spark gap is an important medium.

From the personal writings of Nikola Tesla, as well as from your lectures I understand that dialectrica used in a spark gap is very important.

Above you discussed the first step of radiant energy conversion, please allow me to scrutinize and analyze the second step.

In one of your lectures you said that the spike must be created in a way in the spark gap, that it will crack only once.

Tesla in in his personal notes says the same - the electric ark must be avoided. He describes that this electric ark is created in conductive gases, such as air, on the molecular level and the molecules are charged and discharged that quickly that thereby light is created. In this way light currents are caused and the energy is lost, therefore he made a magnetic spark gap to interrupt the electric ark. The best would be a dialectrica, such as vacuum, or something similar, that would lock up the spike, thus isolating it, while it 'bolts' through the spark gap.

The external appearance would be that 'is cracks only once', since no electric ark is created.

Could you give some suggestion on what dialectrica would be suitable for this kind of spark gap?

My greatest sympathies go towards vacuum tubes, but since they are very difficult to be manufactured, I would do a compromise and try liquid dialectrica, such as compressing transformer-oil, liquid hexane, or other liquid dialectrica in a spark gap.

What do you think about this? What kind of spark gaps did Dollard use?

Thank you very much and best of greetings,
Shad

Shad,

Dollard used large vacuum triodes for his Magnifying Transmitter, and glass enclosed hydrogen spark arresters for the other BSRF demonstrations.

But let's start at the beginning. What was Tesla trying to do? He was trying to produce a simple DC square-wave pulse train. But he didn't have ANY electronic control devices. No 555 timer chips. No transistors. No vacuum tubes. He only had coils, capacitors, mechanical contacters, and spark gaps.

So, what does Tesla's longitudinal electrostatic wave-front look like? It looks like a DC square-wave pulse train where the pulse repetition rate is one million impulses per second, the duty-cycle is 10% On and 90% OFF, and the voltage in each impulse is 50,000 volts DC or more. This is what Tesla wants the circuit to do. This is what he wants to create by the discharge of his capacitor stage in the circuit.

So, if the spark gap is his "circuit controller" then he only wants a "single crack" each time the capacitor discharges. Just a single, unidirectional impulse of electrostatic charge to proceed forward before the circuit shuts off again. Then, the capacitor can charge up again for the 900 nanoseconds the spark gap is quiet and then discharge all of the stored energy again in 100 nanoseconds. Then repeat indefinitely.

It creates a "staccato of electrostatic bursts." Don't make this mysterious, because it is not. It is no more difficult to understand than the output of a 555 timer chip. Its just that we are talking about very high voltage DC, and very high pulse repetition rates. What is difficult is finding the circuit components that allow you to create these conditions without self-destructing!

In my *Tesla's Radiant Energy* DVD I go through all of Tesla's patents and discuss the various methods he used. They included spark gaps quenched by magnets, spark gaps quenched by blasts of hot air, spark gaps in insulating oil, spark gaps across rotating contacters. All of these methods work to one degree or another.

In the 1920's, as vacuum tubes started becoming available, John Bedini and I are convinced that Tesla went to Lee DeForest and had him build the first experimental Thyratrons. This is a family of circuit controlling devices specifically designed to conduct a unidirectional impulse, only when triggered, and then automatically shut off when the voltage drops to ZERO. This is most easily seen today in the function of the Thyrister, the simplest of which is the SCR. The problem with SCRs today is that they are not designed to shut OFF fast enough for the purposes of these circuits.

I hope this helps.

Peter

Shad
Junior Member

Join Date: May 2007
Location: Croatia
Posts: 9
My Profile

Thank you, Peter, for your detailed reply!

I am not a blind believer, but prefer to really understand things. Allow me to analyze some more this point.

I disagree with you, but this does not necessarily mean that I am right. It's not about my opinion, nor your opinion, but merely about the truth and scientific facts. Discussing with you, is meant to get there, to see the truth from the right angle. If I am wrong, please correct me!

[quote=Peter Lindemann;2397]Shad,

Quote:

> Originally Posted by **Peter Lindemann**
> *It creates a "staccato of electrostatic bursts." Don't make this mysterious, because it is not. It is no more difficult to understand than the output of a 555 timer chip. Its just that we are talking about very high voltage DC, and very high pulse repetition rates. What is difficult is finding the circuit components that allow you to create these conditions without self-destructing!*
>
> *Peter*

I think things are not that easy, that we can only talk about very high voltage DC, and very high pulse repetition rates. If it was that simple, we would not have to bother so much about inductive collapses, spark gaps, and could simply take a microwave oven and do the same

Tesla in his writing clearly says that this has nothing to do with AC or DC or very high pulse repetition rates. He describes the properties of dielectricity in neat details and I succeeded to reproduce some of these effects, to also practically convince myself that those were not merely some theories in Tesla's head, but they in fact function that way.

For example, Tesla says when a dielectric or electrostatic spark bolts in an air spark-gap it produces an ark, whereby even the air can heat up and light be caused. He described that light and heat are caused by 'molecular friction' of the air molecules, by charging and discharging. Frequencies with Millions of pulse repetition rates develop here.

My own experiment shows that really light and heat can be developed when an electrostatic spark bolts through the gap. No mystery for me here, rather easy to understand, although I was not really able to measure the frequencies, but I guess it must be quiet high. I even tried to move dielectric transformer oil or veggie oils by electrostatic discharge, as it is described in some of Tesla's experiments. And – it works. The oil started rotating similar to a tornado. The discharges had a very striking effect on magnetic materials, such as slightly magnetic stainless steel, whereby even the electrodes dissociated. If the electrodes was put into a dielectric liquid, nothing would happen. Especially fast was the dissociation at the weld-seam. A specific kind of non-magnetic stainless steel in these remained unimpaired. Iron wire by the discharge of these electrostatic discharges heated up that quickly, as Tesla described it, whereby the non-magnetic stainless steel conducted without heating up.
Plastic in air will be shot through, like bombed by the sparks, shaving wholes as done by a molecular machine-gun.

So, all this won't happen with AC or DC high voltage, as Tesla says in his writings – and I tried it, it really doesn't work.

So, for me it is nothing mysterious if Tesla says that conductive gases, such as air and other should be avoided, because they destroy the material, causing energy losses.

He depicts his air-magnetic spark-gap as a compromise, because there losses are caused. The air molecules are charged and discharged and energy is lost as of light and warmth. He explains that if a better dielectrica was used, which would not allow the energy being 'radiated away' as light and warmth they system would be more efficient, which makes sense to me.

Maybe I am wrong, but to simply say scalar waves simply are high-voltage staccato DC, in my understanding is wrong. As you said yourself in your lectures Tesla described that what we understand as electrons are made of much smaller particles. He didn't mystify and clearly said that current is made out of molecular electricity, positive and negative electrostatic charges. He claimed that if these two charges unite and cancel and if they are moved on, in the orbit a magnetic field will be caused. And this is the magnetic field in our current, AC or DC, or the magnetic field in permanent or electro-magnets.

My question now around these spark gaps was: how to reduce losses in a spark gap without unnecessarily waste dielectricity?

We saw the video from Dollard and it surely all works the way you described it, but I cannot accept that scalar-field are staccato very high pulse repetition rates.

Please don't take my challenging opinion personal, this merely is a scientific discussion and analyzing with a friendly mind. No

negative criticism.

Best of greetings,
Shad

#17 (permalink)

05-16-2007, 01:23 AM

lighty
Junior Member

Join Date: Apr 2007
Location: Croatia
Posts: 19
My Profile

@Shad

I must concur with you about the fundamental difference between dielectric field transfer impulse and the electrons current impulse. The most obvious difference is that an dielectric impulse should not produce a movement of electrons in any way or at least reduce them to a minimum. The moment the arc is formed the electron current flow starts and the dielectric field consisting of monopoles is transformed or rather the monopoles are recombined into a dipole electrons thus all the energy is dissipated in the form of heat and light.

The thyratron is but a triggered switch and while it's suitable for transfer of high currents hydrogen's conductivity is allowing the electrons current to form thus effectively transforming and dissipating dielectric impulse into light and heat.

The analogy about DC square wave with short duty cycle is rather awkward because in the case of what Tesla called "discharge crack" (or rather the spark instead of arc) the duty cycle duration should be much shorter than 10%. Ideally the duty cycle duration should be infinitesimally short in order to facilitate the potential transfer before the monopoles recombination and electron current flow starts.

One of the ways is to prevent any form of arc forming while allowing the spark to discharge. As Tesla said, any kind of pre-discharge corona or glow forming is a good sign that the arc is going to form and basically it makes it a bad sign. So, one of the solutions was to use some form of magnetic spark disruptor which original purpose was to allow the spark to jump over but as soon as any arc would start to form a strong magnetic field between electrodes would simply disrupt it. In that way a strong electron flow would get significantly reduced and most of the discharge waveform ringing would be prevented as well as the potential and current backlash back to the condenser. We're of course talking about ideal circumstances and however well constructed the magnetic disruptor will not yield ideal results. In fact the results are far from ideal but much better than those obtained with the ordinary sparkgap both stationary and rotating.

Another, simpler way to prevent forming of arc and allowing the spark to jump is the use of the oil filled sparkgap in which the oil is serving the purpose of the dielectric which disallow the forming of strong arc (if the distance between electrodes is set correctly) and which closes the ionized path behind spark. The disadvantage of using this form of sparkgap is the fact that it can be used only at lower frequency range and with limited success compared with the magnetic disruptor. The advantage of using oil as an dielectric is the fact that in specific circumstances and configuration the dielectric discharge is being magnified with the dielectric itself. It can be than observed that a spark can then jump at much further distance and it's color is changed from blue to white while there are no temperature changes present whatsoever.

Let me be clear on this one- the magnetic disruptor sparkgap is far from ideal and it requires a heavy dose of tweaking with several parameters before it works correctly but it's certainly a definite improvement over the ordinary sparkgap. Tesla talked about infinitesimally (ideally) short impulses where no electron current is made possible. That's certainly cannot be achieved with a thyratron no matter how short the duty cycle is. Of course some effects will be noticed but that's far from the things Tesla described in his lectures.

That's my educated guess and opinion based on reading of Tesla and some practical experiments. Of course that doesn't mean I'm correct in all of my assertions and conclusions.

#18 (permalink)

05-16-2007, 05:20 AM

Peter Lindemann
Member

Join Date: Apr 2007
Posts: 50
My Profile

To Shad and Lighty

Gentlemen,

I agree with both of you completely. Perhaps the simplicity of my example was too extreme. I was trying to create an image to convey an idea. A DC square-wave was what Tesla was trying to create. But you are both correct, a simple chopped DC electron current was not Tesla's goal. The intermittent timed release of packets of electrostatic charge was the goal. We all agree on this.

We all understand the situation quite well. That you are both able to get into a detailed description of these circuit functions and describe them in your own words is EXCELLENT. That you are both so clear and confident in your knowledge that you feel free to challenge me, a person you believe to be an expert, is even more IMPRESSIVE.

Tesla was the real expert. I do not consider myself an expert in this field. We are all just trying to understand what Tesla discovered. I am honored to be able to help you clarify your growing understanding. And that is the point. In the end, it will be YOUR UNDERSTANDING that you have. It is, in fact, impossible for me to convey my understanding to you. The real MEANING of things arises from within your own mind. It is not possible to transfer MEANING from person to person. There is no such thing as "teaching". There is only "learning" and the opportunity for it.

Personally, I do not believe that total agreement in these discussions is or should be the goal. Honest, intelligent men rarely agree on every detail of a scientific discussion. The goal is the free exchange of ideas and the ability to disagree in a civil manner, with mutual respect. In this regard, I am honored to share my thoughts with you.

Peter

#19 (permalink)

05-16-2007, 06:15 PM

Shad
Junior Member

Join Date: May 2007
Location: Croatia
Posts: 9
My Profile

Dear Peter

Thanks for your nice words!

The purpose of this forum is to exchange ideas and realization, and to individually or jointly try to assemble the radiant-energy-jigsaw-puzzle, how it works, and how to practically use it, for oneself, the community and well-being in common.

I cannot call myself an expert, for 15 years I have 'theoretically' occupied with this subject matter, and still study on, this is never-ending - and the last eight years I do intensive research and experiments and have innovations on the field of radiant energy.

The theory in the head usually is easy and logical, but to then practically apply it is often full of obstacles and problems, and really hard work, accompanied by high financial investments.

So, it is not easy, but feasible.

Radiant energy is not only some spook in some free-energy-freaks' brains but real energy! The fact that it is so hard to tap and convert this energy in my eyes only is a lack of knowledge, which in my case like a jigsaw-puzzle, which with the years gets more and more pieces and I receive a more and more clearer picture of the whole.

I think it is important that we, who have some slight clue of what radiant energy is, and also practically experiment with it, should also exchange and try to boot each other with this knowledge. We should also try to somehow spread the knowledge, because our environment is on the edge and we will leave a destroyed planet without solutions to our heirs.

Tom Bearden, John Bedini, Jeane Manning, Prof. Meyl, people like you, Peter, and some other researchers of this field who

contribute are in my eyes are very significant, as they do not only ignorantly watch how things go on, but try to change something. If nothing more, than at least spread the knowledge, which is one of the most important things.

To add something to my mail from yesterday - in my practical experiments I realized that with dielectricity also fields can be build up, which are similar to magnetic fields, but much more in interaction with our ambient. The first time I observed this was in my experiments with my Neutrino-egg. When I pumped the water with high velocity through my neutrino-egg a dielectric field built up, which even blocked the current in nearby light bulbs. The lamps went off with a loud blow, and the fuses burned out. The pump that ran the Neutrino-egg was powered by a 12V battery, and was not connected to that bulb which ran on 220V from the grid. We taped the experiment on video and when my wife brought the lamp closer to the Neutrino-egg, so I could see better, it simply blew off.

The first time we thought this was chance, but it happen very often, and only if the lamp was brought closer to the unit, while this one ran at high velocity.
Back then I did not have any real explanation, why this happened. I back then also reported this to my friend Dr. Patrick Flanagan, who at this time sponsored my work. Also he was quiet baffled and could not really explain the effect. And Dr. Patrick Flanagan back then and still today is THE expert on radiant energy. Later then I learned when a dielectrica charges, it builds up a field, which can even move magnetic fields.

So the field was that strong, that it blocked the current flow in that light-bulb. Dielectric materials have some kind of permeability for dielectricity, as I see. This would also explain the moving of oil in my experiments. From this it is evident to me that matter is full with these dielectric charges and if such charges are created one has influence on the matter through this energy, whereby the electric energy which we use in our everyday lives is limited only to conductive materials and electromagnetic devices that can receive it.

Dielectricity can influence everything, all matter without exception. The nicest about this is that our atmosphere and our Earth are charged from space with this kind of energy, and that we only have to find a profitable way to tap and apply it.

So please, if someone has ideas or wants to add something to this jigsaw puzzle, please stand up now and post it here, share it. If this is too public, also private exchange is possible. I know that there are many readers here that do not like to see this energy become applied for the broad masses…

Best regards,
Shad

lighty
Junior Member

Join Date: Apr 2007
Location: Croatia
Posts: 19
My Profile

Quote:

> Originally Posted by **Shad**
> *Dielectric materials have some kind of permeability for dielectricity, as I see. This would also explain the moving of oil in my experiments.*

While a strong whirling motion of liquid dielectric as well as it's movement in upward direction (against gravity) was interesting enough, even more impressive was the spark discharge magnification effect which proved that polarized and over-saturated dielectric produce a strong dielectric field in it's own vicinity which can significantly elongate the spark discharge in it's vicinity up to several hundred percent. The effect of such magnified discharge could be felt a meter and half away directly on the skin and hair as the sudden change of pressure of the surrounding media. The same device spark discharge without the dielectric magnification effect produced an effect that could hardly be felt even as close as several centimeters from the point of discharge.

The other effect that I observed only once was in the vicinity of such discharges when an ordinary incandescent lightbulb (with resistive filament and no high vacuum) started to grow it's intensity of light to a significant degree. Even a few days later and after the lightbulb was moved to another location it showed that same stronger light volume which had a different nature of it's visible spectrum much more like a neon or xenon lamp. Regrettably I was clumsy enough to break the bulb after only but a short measurement of it's resistive values (which was within the normal tolerances). To my great disappointment we were never able to

reproduce that effect again.

Anyway- I agree with both of you that a scientific discussion must be civilized and often people can only agree to disagree. In fact in science the worst enemy of the further advancement is superego of the scientists who neglect to see beyond their own theories while basking in it's own self-importance. The other enemy is the complacency and worshiping of such people by followers who accept everything the "authority" says without rationally questioning rationale behind their statements. I for one can accept somebody's point of view only if that person backs it up with well explained arguments. Anything other than that is a blind leap of faith.

That being said I think we should continue our discussion of radiant energy in hope that something constructive might come out of it.

#21 (permalink)

05-17-2007, 11:08 PM

Peter Lindemann
Member

Join Date: Apr 2007
Posts: 50
My Profile

Shad and Lighty

Gentlemen,

Thank you both for volunteering some of your original experimental findings. Most interesting! I had not heard of any of these effects before, and would like to learn more.

Shad, please tell us more about your "neutrino-egg" device. What is it? How do you run it? What is its primary purpose, since extinguishing light bulbs at a distance was an unexpected side-effect? Have you come to a deeper understanding of the effect at this point?

Lighty, have you discovered or theorized a reason for the light bulbs unusual behavior yet?

These are both important discoveries, only experimentation could uncover. No amount of brilliant logic could have predicted these events.

I salute you both!

Peter

#22 (permalink)

05-18-2007, 08:26 AM

Shad
Junior Member

Join Date: May 2007
Location: Croatia
Posts: 9
My Profile

Hi Peter et all

Please see my answers below.

Quote:

> Originally Posted by **Peter Lindemann**
> *Shad, please tell us more about your "neutrino-egg" device. What is it?*

It is a device in which a neutrino-diffusion-process occurs.
I gave it the name according to the theory of Prof. DDr. Meyl (www.k-meyl.de) who claims that neutrinos are scalar-waves, such as Dr. Tesla had described them.

It received the ‘nickname’ neutrino-egg from Stefan Hartmann from Berlin (www.overunity.com), after he viewed and published video-material of my experiment.
The first Neutrino-diffuser (ND) was egg-shaped.

In simple words, the dielectric charges in this device are converted to mechanical energy.

Quote:

> Originally Posted by **Peter Lindemann**
> *What is its primary purpose, since extinguishing light bulbs at a distance was an unexpected side-effect?*

The main purpose if my ND is to convert liquids from their liquid state of aggregation to gaseous.
You can see a very simple description on my (purposely simple) website:
http://www.geocities.com/waterpowers/FuelCracker.html

I cannot give any further technical data to this device as I am bound by contract I have with industry. But the physics I can reveal is much more important than the technical data.

Quote:

> Originally Posted by **Peter Lindemann**
> *How do you run it?*

With a pump. My toy model was run a windscreen-water-pump for cars, ca. 12V/10W.
Gasoline, kerosene, diesel or even water are converted to gas - the process is cold, no heating/warming effects. This process is highly efficient; to achieve the same results with heat or mechanical energy one would have to invest ca. 5x more energy.
Gas can be produce on demand.

Quote:

> Originally Posted by **Peter Lindemann**
> *Have you come to a deeper understanding of the effect at this point?*

Yes, and this is the important part of this message.

The atoms have a dielectric charge, not electromagnetic, as we all might have learned in school. The electromagnetic charge is produced by the manipulation or proper interaction of these dielectric charges. The atoms communicate among each other and are in constant exchange with this energy. They vibrate or oscillate and in this way become sender and receiver of this energy. They have a memory on how much energy they received and sent off. The atoms are a kind of ‘cosmic wind-mills’, which constantly absorb energy from vacuum, transform it and ‘radiate it off’. (forgive my funny English…)

If the atoms are artificially triggered, as an example here, in a mechanical way with molecular friction and fluid-dynamics, they will absorb a much higher amount of dielectric charges and ‘radiate it off’.

Water for example has a specific permeability and capacity on how much charge it can take, before it discharges. Thereby a very big dielectric field is created, composed of these charges, which absorbs water molecules from the ambient, in this special case from the air. The higher the frequency of the triggered molecules, the more charge will be absorbed by the water molecules.

You can even measure how much dielectric charge for example a water drop has got. A simple way here would be the Lord Kelvin water drop-experiment. This link shows a simple way to verify this: [ ]Lord Kelvin’s Water Drop Experiment Demonstrator - Science Kit.

One can measure how much dielectric energy a water drop has in its normal condition and after being artificially triggered. These dielectric charges or fields are a great resistance for electrons, current-flow, magnetic fields, etc. or vice versa. If the dielectric field is strong enough, it will repel or ban electromagnetic from its ambient.

The field in the ND was strong enough to block the current flow in the bulb.

The most important to understand is, that our Earth, our atmosphere are full of these dielectric charges, and that they can be tapped and be bundled to a field, which can be used for mechanical work, similar to magnetic fields we use now.

These dielectric charges are monopole (also called unipolar) charges and attract their opposite pole and same-poled charged repel one another. They act like tiny monopole magnets.

If one creates strong (unipolar) dielectric fields they will attract opposite-poled dielectric charges from the ambient, may it be earth or air, or will repel the charge if it same-poled.
These charges are able to transform matter from one element to the other, as for example water to air, whereby water would expands for ca. 2000x. Today we use nuclear power plants to generate heat and steam to produce pressure which runs steam turbines.

Dielectric charges can create the same pressure by converting the element water to air. But it is also possible, but I haven't tried this, to convert air in the same with dielectric charges to vacuum or gravity fields. I met the engineer of Viktor Schauberger, who still is alive, he was present when Schauberger made these levitation experiments. In the future when time, place and circumstances will allow me, I will try to replicate these experiments, since I already was able to do part of it.
As you can see the dielectric charges can be used for mechanical or practical work.

In my eyes and understanding the bolt of lighting hides the key to free energy. The one who will profoundly analyze this will find a way how to tap dielectric negative energy from the earth.

Best regards,
Shad

Last edited by Shad : 05-18-2007 at 09:06 PM. Reason: link missing

#23 (permalink)

05-18-2007, 02:37 PM

lighty
Junior Member

Join Date: Apr 2007
Location: Croatia
Posts: 19
My Profile

Quote:

> Originally Posted by **Peter Lindemann**
> *Lighty, have you discovered or theorized a reason for the light bulbs unusual behavior yet?*

As I said I have ran into a bit of a problem while trying to replicate the effect. I know that several conditions seems to be significant.

1. Lightbulb was turned on while exposed to the strong changing dielectric field. I tried exposing lightbulbs with no power supply connected but no luck so there.
2. The electrostatic machine and the lightbulb were connected to the same wall outlet so they shared mutual phase and ground.
3. The lightbulb was exposed to the strong changing dielectic field for prolonged length of time (15-20 minutes).
4. Since the lighbulb had an isolated metal shield around it (like in the normal table lamps) there could be that some kind of capacitive coupling occurred during the exposure to the strong changing dielectric field.

As I said previously- we had several similar lightbulbs to compare it with, no visible changes appeared on the glass and the resistance of the filament remained within normal tolerance compared to the other similar lightbulbs available to me.

The nature of light emitted was very much like the xenon lamps and the intensity of light was almost 50% stronger. In fact it was a 100W lightbulb that gave light as a 150W type.

The effect stayed consistent even when the lightbulb was moved to another location and even after a few days. The effect was so noticeable that a colleague of mine who didn't know the whole story asked me why did I replaced my table lamp lightbulb with such a bright and more powerful one.

Before I managed to accidentally break the lamp I haven't had time to measure it's temperature (I think it was as hot as a normal 100W lamp but I cannot be sure now) or spectrum of emitted light. What a shame!

It seems that as with the Shad's Neutrino Diffusor's resonator a several precise and very particular demands must be met before the effect can be reproduced. Shad spent years of his life perfecting the construction of ND and to be honest after the lightbulb broke I simply didn't spend much more time reconstructing the proper conditions needed to reproduce the lightbulb effect. My point is that as opposed to the ND which is fully understood and reproducible if one observe several seemingly unimportant and precise details in order to get it to work the lightbulb effect was a fluke yet to be understood. In fact at that time so many more interesting dielectricity effects presented themselves that the lightbulb incident was of minor interest to me.

However, my theory is that the vacuum dielectric in the lightbulb was excited with the heat and EM radiation from the AC current in a way that allowed for the strong changing dielectric field to polarize dielectric (vacuum or even glass although my bet lies with the former one) permanently in a way that would allow the heat or EM radiation from AC current to excite it even further. In fact I suspect that to a certain point the lightbulb started to behave like a discharge tube of low pressure but with a heat and EM radiation of AC current as the exciting agents.

That's all of course a wild speculation. Further experiments should be done in order to be able to reproduce the effect and the one could measure temperature, light spectrum, power consumption, EM field as well as dielectric field in order to determine what is really going on.

Last edited by lighty : 06-27-2007 at 12:20 PM.

#24 (permalink)

05-28-2007, 10:30 AM

Shad
Junior Member

Join Date: May 2007
Location: Croatia
Posts: 9
My Profile

one more though...

Dear Peter, Lighty, and all

I would like to add something to my last message and am curious to hear your opinion.
In my understanding the universe also is a universe of frequencies (broad band of frequencies). Each element is a frequency occupying a band width of space. Groups or combinations of elements can, as a unit, cover a broader band width of space.

The atom is a manifestation and is both positive and negative in character; therefore, space also has two basic properties that is, positive and negative.

Atom energy, or any other energy derived from changing the form or state of physical material, is energy taken from atomic structure.

With the right theory it is possible to tap energy in abundance from the driver of the atom (space energy) without taking it from atomic structure.

Atomic power with its penalty of contamination is not necessary, as the basic atomic energy can be tapped before it is material substance. Then there are no contaminations or harmful side effects, because nothing is destroyed and because the energy is only used, even as the wind is used by the windmill.

Radiant energy in my opinion is a result of distorted and nonlinear space and energy in common is a result of distorted space.

As example:
Magnetism is a distortion of space, a distortion within the atomic structure of the magnet material or copper coil which extends into the space surrounding it.

As an illustration, we consider an undistorted area of space before us. We move an activated magnet into this area of space and the result is that this previously undistorted and linear space is now. That is, two poles exist in relation to the magnet; an N pole and an S pole.

At the N pole we have a lack of S pole and at the S pole we have a lack of N pole. Or, at each end of the magnet, we have a lack of balanced space. In other words, distorted space, (a low pressure area) now exists at each pole.

Any non-polarized material within the band width of magnetism and electricity
(a paramagnetic material) will migrate to the low pressure area at either pole, while a polarized object (another magnet) will demonstrate the law of opposites attracting and similars repelling each other. The above theory of expansion and/or contraction holds true as cause of magnetism in all types of permanent magnets or electromagnets.

An inductive collapse of a coil, the so-called collapsing field could now be described as space returning back to linearity with a slap. That is the positive and the negative closing in from opposite directions and filling a rapidly diminishing area and then suddenly coming together; perhaps even bringing about a slight crossing of bands, or a short circuit of electric space which would be like a miniature bolt of lightning.
The collapsing field of an electromagnet is a distortion of ether/vacuum space which is elastic in his property and cause of the resulting mono-polar electrostatic charge.

In this way it is possible to tap energy in abundance from the driver of the atom (space energy) without taking it from atomic structure. This is why I like to describe the atom like a cosmic energy windmill.

Best of greetings,
Shad

« Previous Thread | Next Thread »

LinkBacks (?)
LinkBack to this Thread: http://www.energeticforum.com/renewable-energy/473-radiant-energy.html

Posted By	For	Type	Date
Renewable Energy	This thread	Refback	05-12-2007 08:12 PM

Posting Rules

You **may not** post new threads
You **may not** post replies
You **may not** post attachments
You **may not** edit your posts

vB code is **On**
Smilies are **On**
[IMG] code is **On**
HTML code is **Off**
Trackbacks are **On**
Pingbacks are **On**
Refbacks are **On**

All times are GMT. The time now is 10:46 PM.

Radiant Energy: Unraveling Tesla's Greatest Secret Part 1

By Ken Adachi <Editor@educate-yourself.org>
http://educate-yourself.org/fe/radiantenergystory.shtml
June 1, 2001

[*The story you are about to read is derived from a carefully researched paper presented by Dr. Peter Lindemann before a private audience in Irvine, California on September 12, 2000. The lecture was titled "The Free Energy Secrets of Cold Electricity" . It detailed the story of Radiant Energy and its successful application by Edwin Gray in an over unity motor design which Gray debuted in 1973. The real detective work (& credit) in uncovering Tesla's discovery of Radiant energy came from author Gerry Vassilatos in his recent book, "Secrets of Cold War Technology" without which Lindemann could not have solved the enigma of Gray's Radiant circuit design. This lecture delivered the goods. The secret of Tesla's Radiant Energy has finally been revealed in manifold detail and only awaits the industry of those who care to study and understand it. Part1 presents a general overview of Tesla's discovery and the political, intrigues that led to its subsequent suppression. Part 2 will detail the nuts and bolts of how Tesla produced Radiant Energy with block diagrams, schematics, and drawings from Tesla's original patents to illustrate all of the necessary elements and parameters required. Additional details on Gray's modern adaptation of Tesla's Radiant circuitry and a brief look at Eric Dollard, the only man to successfully recreate Tesla's Colorado Springs Magnifying transmitter and reproduce the pure steaming white rays of Radiant energy in 1986 exactly as described by Tesla in his Colorado journals*. Ken Adachi]

Of all the great inventions and discoveries of Nikola Tesla, nothing stood out with greater potential benefit to the whole of humanity than his discovery of **Radiant Energy** in 1889. The series of observations that led to the discovery of Radiant energy initially grew out of experiments that Tesla had conducted in an attempt to duplicate the results that Heinrich Hertz had claimed to achieve in affirming the existence of electromagnetic waves, the discovery of which Hertz announced in 1887. While replicating Hertz's experiments, Tesla experimented with violently abrupt DC electrical discharges and discovered a new force in the process. Only after conducting exhaustive experimental trials for the next three years, did Tesla announce this stupendous discovery in a paper published in December, 1892, entitled "The Dissipation of Electricity". Incredibly, most academicians of the day completely missed the mark in understanding the true significance of his paper. Noted scientists such as Sir Oliver Lodge, mistakenly thought that Tesla was referring to high frequency AC electricity in the operation of the Tesla Transformer, a huge blunder that remains to this day in the misnaming and misinterpretation of the Tesla Coil. The transformer that Tesla referred to in the 1892 paper did not operate on magnetic/electric field induction created by alternating currents. It operated in an entirely new domain of physics based on abrupt discharges of electrostatic potentials and the subsequent release of kinetic Radiant Energy from the omnipresent ether. Tesla was now operating under entirely new rules which he referred to as "dynamic" electro-static forces and had, by now, completely abandoned any further interest in the AC waveform. The genesis of the Lodge misunderstanding, however, began a few years earlier with the publication of certainmathematical formulas by a brilliant Scotsman named James Clerk Maxwell.

Maxwell's Equations

Using mathematical models, James Clerk Maxwell had earlier suggested that two different types of electrical disturbances could possibly exist in Nature. One type was a **longitudinal electric wave** which required alternating concentrations of densified and rarefied pulsations of electrostatic fields that moved along a single vector (today, we refer to these as standing waves or scalar waves). Maxwell ultimately rejected this idea because he was convinced that this type of wave propagation was impossible to achieve, but his assumption was erroneous and would later portend formidable consequences for Tesla and the world at large.

Maxwell's second wave postulation was that of a **transverse electromagnetic wave** that exhibited a rapid alternation of electric fields along a fixed axis that radiated away from its point of origin at the speed of light and was detectable at great distances. Maxwell had more faith in the existence of this type of wave and encouraged experimenters to look in this direction. It was the discovery of this

type of wave that Hertz had laid claim to, but Tesla was meticulous and fastidious in replicating Hertz's experimental parameters and he could not obtain the results claimed by Hertz.

Tesla discovered a fundamental flaw in Hertz's experiment: Hertz had failed to take into account he presence of air in his experiments. Hertz had mistakenly identified electrostatic inductions or electrified shockwaves as true electromagnetic waves. Tesla was saddened to bring this news to the distinguished academician, but felt scientific honesty was paramount if progress was to be achieved. Tesla visited Hertz in Germany and personally demonstrated the experimental error to him. Hertz agreed with Tesla and had planned to withdraw his claim, but reputations, political agendas, national pride, and above all, powerful financial interests, intervened in that decision and set the stage for a major rift in the 'accepted' theories that soon became transformed into the fundamental "laws" of the electric sciences that have held sway in industry and the halls of academia to the present day.

Tesla's introduction to the phenomena of Radiant Energy began with early observations by linesmen working for Thomas Edison, Tesla's former employer

DC Anomalies

Before Tesla's invention of the Polyphase AC generator became the industry standard and overtook Thomas Edison's use of DC generators, the DC electrical system was the only system available to deliver electricity to America's homes and factories. Due to the resistance offered by long transmission lines, Edison had to produce very high DC voltages from his generators in order to deliver enough voltage and current to its final destination. He also had to provide additional 'pumping' stations along the way to boost the sagging voltage which dwindled from line losses. A curious anomaly occurred in the very first instant of throwing the power switch at the generating station: Purple/blue colored spikes radiated in all directions along the axis of the power lines for just a moment. In addition, a stinging, ray-like shocking sensation was felt by those who stood near the transmission lines. In some cases, when very large DC voltages surged from the generators, the "stinging" sensation was so great that occasionally a blue spike jumped from the line and grounded itself through a workman, killing him in the process.

Tesla realized almost immediately that electrons were not responsible for such a phenomena because The blue spike phenomena ceased as soon as the current stated flowing in the lines. Something else was happening just before the electrons had a chance to move along the wire. At the time, no one seemed to be very interested in discovering why these dramatic elevations in static electrical potential were taking place, but rather, engineering design efforts were focused on eliminating and quenching this strange anomaly which was considered by everyone to be a nuisance-except Tesla. Tesla viewed it as a powerful, yet unknown form of energy which needed to be understood and harnessed if possible. The phenomena only exhibited itself in the first moment of switch closure, before the electrons could begin moving. There seemed to be a "bunching" or "choking" effect at play, but only briefly. Once the electrons began their movement within the wire, all would return to normal. What was this strange energy that was trying to liberate itself so forcefully at the moment of switch closure? .

Tesla, Genius Out of Time

In the later quarter of the 19th century, Tesla was alone in his opposition to the fundamental views of the nature of electrical forces as described by three of the biggest names in electric science: James Clerk Maxwell, Herman Von Helmholtz, and Heinrich Hertz. Tesla possessed a broader vision of the cosmos because his keen sense of awareness and especially his natural intuitive insights gave him a deeper understanding of the role that the **ether** (or **aether**) played in the manifestations of all electrical phenomena while his contemporaries focused their attention exclusively on the electromagnetic component (assuming that no other component could be involved). This lack of etheric insight by his contemporaries (with the exception of Sir William Crookes) and the heated controversy that the mere mention of the ether had engendered was to cause Tesla ridicule and sarcasm from men of inferior intellect for decades. The ether controversy largely dissipated in the academic arena after the publication of Eienstein's Theory of Relativity (1905) and the Michaelson-Morley Experiment which essentially declared that the ether 'theory' was dead, but Tesla's insights and deductions concerning the role of the ether were correct all along.

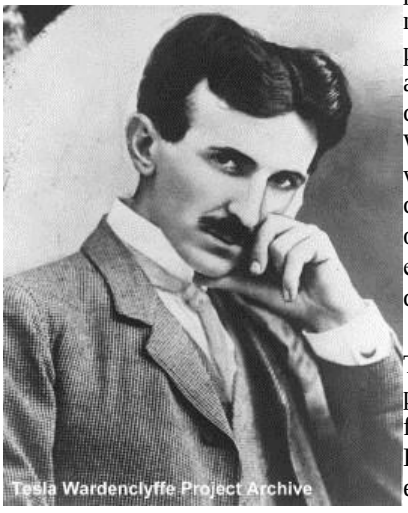

The ether existed then and it exists now, despite the lock step denials by mainstream science, past or present. Rudolf Steiner, another man of genius, affirmed that the ether was composed of four fractions which he described as 1) the Light Ether, 2) the Warmth Ether, 3) the Chemical Ether, and 4) the Life Ether, a combination of the first three. Tesla's New York and Colorado experiments confirmed for him that Radiant energy was bound up within the elusive ether, but could be made manifest by the creation of an abrupt disruption in the equilibrium of the ether fractions using one way, high magnitude pulses of short duration.
This was the key that unlocked Radiant Energy.

"See the excitement coming!"

These were the words that Tesla used at the end of his pivotal 1892 December lecture, "The Dissipation of Electricity". He was

brimming over with buoyancy and optimism for the future In the 1890's, Tesla conducted a large number of experiments which confirmed his theory and refined his understanding of the special conditions required for Radiant energy to express itself. He later expanded his New York work with the large scale experimental trials conducted at Colorado Springs, Colorado in 1899. Tesla, the humanitarian, wanted more than anything to share this enormous discovery with his fellow man. Tesla spoke of practical applications of radiant energy that were so wide reaching that they could have created a profound and immense leap into the future for all of mankind in practically every sector of daily life:

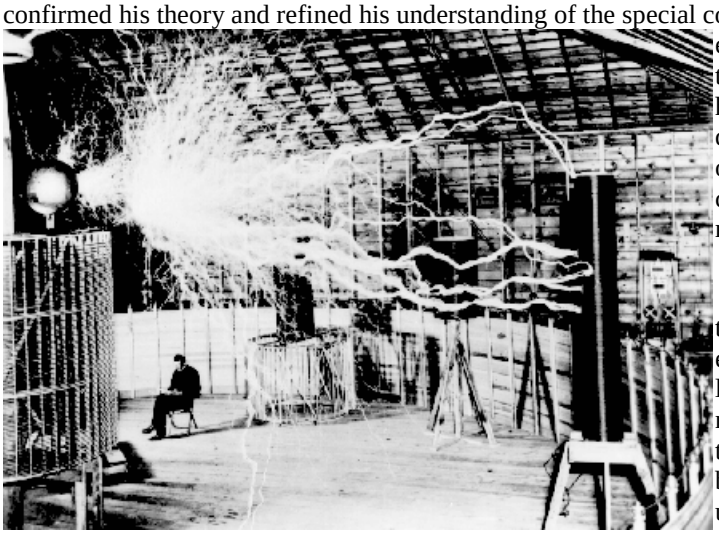

Unlimited electricity could be made available anywhere and at any time, by merely pushing a rod into the ground and turning on the electrical appliance. Homes, farms, offices, factories, villages, libraries, museums, street lights, etc., could have all their lighting needs met by merely hanging ordinary light bulbs or fluorescent tubes anywhere desired- without the need for wiring -and produce brilliant white light 24 hours a day. Motor energy for any imagined use such as industrial applications, transportation, tractors, trucks, trains, boats, automobiles, air ships or planes could be powered freely-anywhere on the planet from a single Magnifying Transmitter. This new form of energy even had the ability to elevate human consciousness to levels of vastly improved comprehension and mental clarity. Undreamed of therapeutic applications to improve human health and to eliminate disease conditions could have been achieved fully 100 years ago had Tesla been allowed to complete his commercial development of Radiant Energy. But powerful barons of industry, chiefly in the person of John Pierpont Morgan, colluded to deny him the financial backing he needed and in doing so, effectively denied mankind one of Nature's most abundant and inexhaustible gifts of free energy.

The Magnifying Transmitter

The closest Tesla came to a world wide industrial application of his Radiant Energy dream was the construction of his huge Magnifying Transmitter at Shoreham, Long Island, a site which he named Wardenclyffe. Following his return to New York City from Colorado Springs in 1899, Tesla was jubilant and full of enthusiasm to implement his plan for the commercial application of Radiant energy. He turned to JP Morgan for a substantial portion of the funding to finance the huge project at Wardenclyffe. Morgan was chiefly concerned with turning a profit from overseas radio transmissions since Marconi was fast locking up the market and Morgan, ever the aggressor, wanted a share of the market. When Tesla told him that the transmitter could transmit "intelligence" to the world, Morgan assumed that he meant ordinary radio communications, but Tesla was not referring to ordinary radio transmissions. He was talking about something much bigger, but avoided revealing all to Morgan during this early phase of the Wardenclyffe project. Some considerable time later, Tesla eventually felt compelled to tell Morgan the larger possibilities offered by the Magnifying Transmitter when he needed more funding to complete the project. Tesla thought that Morgan would be overwhelmed by his expanded explanation of the true capacities of the transmitter and would be anxious to complete the work, but Tesla's assumption had backfired and Morgan refused to lay out any more money for the transmitter. Sadly, the enormous benefits that could have been made available to society by Tesla's Magnifying Transmitter project, died then and there.

Morgan & Westinghouse

Morgan had already orchestrated circumstances in Tesla's life in order to force Tesla to be dependent on him for financial backing. During an earlier period, when Tesla himself had millions from his Polyphase AC generator royalty payments and other earnings, Morgan wanted to woo Tesla with a deal that effectively gave Morgan majority control over his patent rights and projects, but Tesla turned him down, telling Morgan that he had enough money of his own to fund his projects. While returning to his hotel from that very meeting with Morgan, however, Tesla was told that his laboratory had been burned to the ground. It represented a tremendous loss to Tesla and it shook him deeply. Everyone, of course, felt convinced that Morgan was behind the arson. In order to save face, Morgan was embarrassed by Tesla into putting up the money to pay for the rebuilding of a new lab as an act of "philanthropy". From that time forward, however, other financial backers were not to be found. Morgan was powerful enough to black list Tesla among the Eastern Establishment elites that previously had hobnobbed and feted with Tesla as if he was one of their own. Black listing and ostracization by officialdom and financiers lifted somewhat after Morgan's death, but generally continued to haunt Tesla for the rest of his life.

Before the turn of the century, Tesla also willingly gave up millions, perhaps billions, in royalty earnings to George Westinghouse in an unprecedented act of friendship. Westinghouse had believed in the superiority of Tesla's AC system and provided the money to build Tesla's big AC generators at Niagra Falls, NY. Tesla was paid millions up front for his patents, but was also due to receive

royalty earnings for every kilowatt of power produced. When Westinghouse ran into financial difficulties at a later date, Tesla tore up his royalty contract in order to save Westinghouse from financial ruin. Had he not done that, Tesla would have had enough money from royalties to keep him ensconced in great wealth for the rest of his life.

The story is frequently told that when Morgan found out from Tesla that the true purpose of the Wardenclyffe transmitter was to provide free electricity to the world, he abruptly pulled the funding. That's not completely accurate. The economic conditions were recessionary at the time and the stock market had taken a considerable dip that year. Morgan wasn't interested in risking any more capital in perilous times on a project he couldn't fully fathom and wasn't completely convinced of. Tesla held land ownership of the Wardenclyffe site and tower, but no further work was done after 1910. In 1914, Tesla was deeply in debt and signed over the deed of Wardenclyffe Station to pay off years of back rent due to the owners of the New Yorker Hotel where he was living (he occupied two penthouse suites in the hotel). In 1917, the hotel owners had the tower demolished and its parts sold for salvage. Despite the loss of Wardenclyffe, Tesla continued to refine his understanding of Radiant Energy and miniaturize the equipment needed to produce it. He eventually was able to reduce the equipment down to the size of a suit case.

Copyright 2001 Ken Adachi & Educate-Yourself.org All Rights Reserved.
Reposting is only allowed without editing or abbreviation and placement of originating url and author's name at top of article.

Next time, Part 2: The nuts and bolts of producing Radiant Energy and Gray's Radiant design circuitry.

Australian and European readers interested in obtaining the video tape of Dr. Lindemann's 2 hour and 50 minute lecture, "The Free Energy Secrets of Cold Electricity" can send $29.95 (US$) for VHS or $33.95 for PAL plus $11 air shipping. A 150 page companion book of the same title which includes the complete narrative, enlarged views of the slides, diagrams, schematics, photographs and patents demonstrated during the lecture, along with complete copies of the Gray and Tesla patents and additional materials not included in the lecture is also available for $29.95 plus $11 air shipment. Book and video together, add $15 air shipping. Make US checks or money orders payable to:

USA readers, include $4 for Priority Flat Rate mail

K. Adachi
PO Box 3046
Costa Mesa, CA 92628

See our home page for more information: http://educate-yourself.org

From ***Feed Line*** No. 5

REGENERATION REVISITED
The Tesla Connection
by Gary L. Peterson

Pick up nearly any book on the principles of radio, turn to the chapter on receivers and you will see it—the primary objectives to be achieved in detector design are sensitivity, selectivity and stability. Historically, some of the very first detectors consisted simply of a tuned circuit into which was incorporated a sensitive device known as a coherer. With the introduction of two and three element vacuum-tube circuits as a replacement for the earlier coherer based designs further important steps were taken towards the advanced receivers of today. One of the first improvements in the triode, or Audion, based circuit was dubbed the Regenerative Detector. In this configuration, conceived of by Edwin H. Armstrong in 1912, a portion of the signal from the plate circuit was coupled as positive feedback to the tuned antenna tank circuit. The result was greatly increased receiver sensitivity.

Focusing on receiver sensitivity or the ability to pick up weak signals, it is important to understand the antenna design concept of "effective area." This refers to the fact that a tuned antenna may have an effective area that is larger than its geometric area. The phenomenon was first explained by Reinhold Rudenberg in 1908 [1] and the description has been expanded upon over the years by many other writers. In the words of Dr. John F. Sutton from his recent active antenna patent, "Rudenberg teaches that the antenna interacts with the incoming field, which may be approximately a plane wave, causing a current to flow in the antenna by induction. The [antenna] current, in turn, produces a field in the vicinity of the antenna, which field, in turn, interacts with the incoming field in such a way that the incoming field lines are bent. The field lines are bent in such a way that the energy is caused to flow from a relatively large portion of the incoming wave front, having the effect of absorbing energy from the wave front into the antenna from a wave front which is much larger than the geometrical area of the antenna." One of the factors that limits antenna current is the ohmic resistance of the tuned detector tank circuit and the antenna wire itself. Regeneration is a means of increasing antenna current by counteracting the resistance of the entire antenna circuit. By the introduction of what might be called negative resistance through the addition of a feedback loop, antenna-field interaction is increased and energy is absorbed from a greater area of the incoming wave front.

How does Nikola Tesla fit into this picture? In a New York American article of Sept. 3, 1911 while speaking of his receiver design he said that it "concentrates the energy transmitted over a wide area into the device." This statement was made about one year prior to Armstrong's discovery related to RF feedback to the grid-antenna circuit. In fact, we can see that Tesla recognized the utility of the feedback technique to introduce negative resistance into antenna circuitry and had incorporated it in his designs as early as 1899. On August 3 of that year he recorded a number of receiver circuit arrangements in which RF currents were fed back from the secondary side of a resonant transformer to a coherer located on the transformer's primary side. In this form of receiver, which Tesla had described as using a "self-exciting process," the coherer was made significantly more sensitive to incoming signals. In his own words, "This method has been found excellent and will have besides telegraphy many valuable uses since by its means effects, too feeble to be recorded in other ways, may be rendered sufficiently strong to cause the operation of any suitable device." So it may be said that Tesla anticipated the technique of regenerative feedback to increase detector sensitivity.

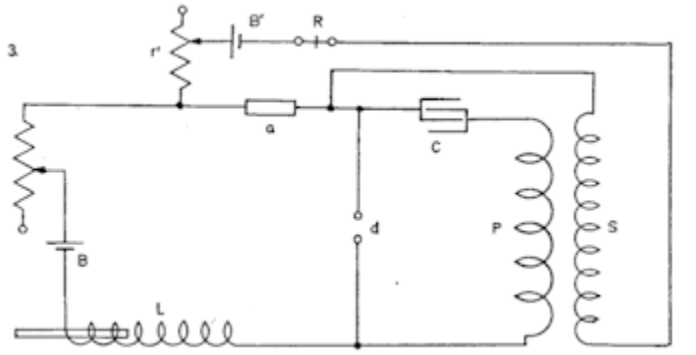

Figure 1. "In Diagram 3. the form of connections is illustrated which was found most convenient for experimentation. An independent sensitive relay is used and adjustable dead resistances r and r' in primary and secondary circuits. The inductance L is also made adjustable and so is also break device d though this is not indicated in the diagram."

The basic regenerative circuit is not often used in present day receiver front ends for a number of reasons, the most significant of these being an inherent form of instability. Maximum sensitivity is achieved at a point just before the detector breaks into oscillation and in the original configuration this could be initiated by something as simple as wind shifting the antenna. As the appearance of oscillating regenerative front ends on the broadcast bands became a more and more regular occurrence a decision was made to phase the regenerative detector out of general service. A related difficulty is the need to reset the degree of regeneration as the detector is

tuned. In spite of these problems the increases in sensitivity to be gained through the incorporation of this powerful technique have not been totally lost on the minds of the engineering community. Goaded on by this understanding, a few years ago Dr. Sutton set out to develop a positive feedback antenna circuit configuration that would be very sensitive to low level fields while at the same time being resistant to the influence of stray capacitive and inductive reactances. Figure 1 is a schematic diagram of a circuit that was developed which satisfies these requirements.

Typical values for the components shown are: R1=10k, R2=100k, R3=10 S, R4, R5, R6, R7=10k, R8=30k, and C1=1000 :fd. Amplifiers A1, A2 and A3 may be Precision Monolithics OP-27s. Electrostatic shielding is provided to reduce capacitive coupling between the two windings.

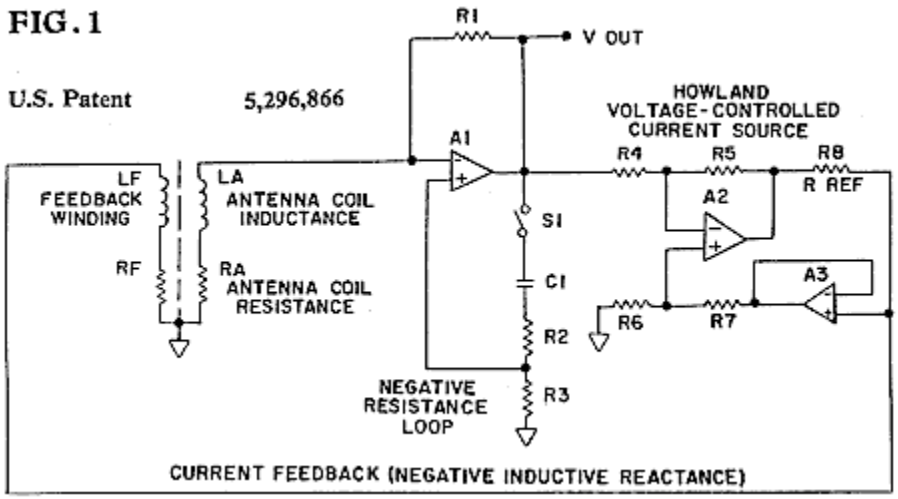

Figure 1. U.S. Patent No. 5,296,866

As the specific design problem was development of an optimized broadband ELF magnetic field sensor, an active antenna with a wide frequency response was also a criterion. This posed a design challenge as in a typical tuned antenna circuit significant antenna current, and thus maximum sensitivity, is only present with conditions of resonance. Under normal circumstances, peak resonance occurs at some very specific frequency where inductive reactance is canceled out by capacitive reactance. The innovative solution was to add a second feedback loop to the circuit which introduces negative inductive reactance that works in place of circuit capacitance to tune out inductive reactance. This results in an antenna circuit with a resonance that, under ideal conditions, would have an infinite bandwidth.

All in all, the same conditions which exist in a passive narrow band tuned antenna, vis-á-vis resonance, antenna current and effective area, are electronically created in the antenna coil. Furthermore, the active resonant antenna has a bandwidth which is in the order of four decades wider. The net result is a unique active antenna circuit that can be reliably adjusted in which total antenna circuit impedance is much smaller than appears to have been obtained with any other configuration to date.

A detailed description of how the negative resistance, negative inductance circuit works, including a differential form of the active antenna circuit and other pertinent information, can be found in U.S. Patent No. 5,296,866, Mar. 22, 1994, Active Antenna, GSC-13449. For data look at "An Active Antenna for ELF Magnetic Fields," J.F. Sutton and C. Spaniol, Proceedings of the 1990 International Tesla Symposium; and "Atmospheric Fields, Tesla's Receivers and Regenerative Detectors," K.L. Corum, J.F. Corum, Ph.D. and A.H. Aidinejad, Ph.D. Another useful reference is the Colorado Springs Notes -- 1899-1900, by Nikola Tesla.

[1] Rudenberg, Reinhold, "Der Empfang Elektrischer Wellen in der Drahtlosen Telegraphie" ("The Receipt of Electric Waves in the Wireless Telegraphy") Annalen der Physik IV, 25, 1908, p. 446-466.

See also Causality, EM Induction and Gravitation, Oleg Jefimenko)

SOME PERSONAL RECOLLECTIONS

by Nikola Tesla

Previous Article Next Article

Scientific American, June 5, 1915

I am glad to be accorded this opportunity for two reasons. In the first place I have long since desired to express my great appreciation of the Scientific American and to acknowledge my indebtedness for the timely and useful information which its columns are pouring out in a steady stream. It is a publication remarkable for the high quality of special articles as well as for the accurate review of technical advances. The knowledge it conveys is always reliable and rendered still more valuable through the scrupulous observance of literary courtesy in the quotation of the sources. The services it has rendered in helping invention and spreading enlightenment are inestimable. The Scientific American is a periodical ably and conscientiously conducted, measured and dignified in tone to the point of serving as a model, and in these features, as much as in the wealth and excellence of its contributions, it reflects great credit, not only on its staff and publishers, but on the whole country. This is not an idle compliment, but a genuine and well-deserved tribute to which I add my best wishes for continued success on this memorable occasion.

The second reason is one that concerns me personally. Many erroneous statements have appeared in print relative to my discovery of the rotating magnetic field and invention of the induction motor which I was compelled to pass in silence. Great interests have waged a long and bitter contest for my patent rights; commercial animosities and professional jealousies were aroused, and I was made to suffer in more than one way. But despite of all pressure and efforts of ingenious lawyers and experts, the rulings of the courts were in support of my claims for priority in every instance without exception. The battles have been fought and forgotten, the thirty or forty patents granted to me on the alternating system have expired, I have been released of burdensome obligations and am free to speak.

Every experience which I have lived through bearing on that early discovery is vividly present in my memory. I see the faces of the persons, the scenes and objects of my attention, with a sharpness and distinction and in a fullness of light which is astonishing, and is a measure of the intensity and depth of the original impressions. I have always been fortunate in ideas, but no other invention, however great, could be as dear to me as that first one. This will be understood if I dwell briefly on the circumstances surrounding it and some of the phases and incidents of my young life.

From my childhood I had been intended for the clergy. This prospect hung like a dark cloud on my mind. After passing eleven years at a public school and a higher institution, I obtained my certificate of maturity and found myself at the critical point of my career. Should I disobey my father, ignore the fondest wishes of my mother, or should I resign myself to fate. The thought oppressed me, and I looked to the future with dread.

Just at that time a terrible epidemic of cholera broke out in my native land. People knew nothing of the character of the disease and the means of sanitation were of the poorest kind. They burned huge piles of odorous shrubbery to purify the air, but drank freely of the infected water and died in crowds like sheep. Contrary to peremptory orders from my father I rushed home and was stricken down. Nine months in bed with scarcely the ability to move seemed to exhaust all my vitality, and I was given up by the physicians. It was an agonizing experience, not so much because of physical suffering as on account of my intense desire to live. On the occasion of one of the fainting spells my father cheered me by a promise to let me study engineering; but it would have remained unfulfilled had it nor been for a marvelous cure brought about by an old lady. There was no force of suggestion or mysterious influence about it. Such means would have had no effect whatever on me, for I was a firm believer in natural laws. The remedy was purely medicinal, heroic if not desperate; but it worked and in one year of mountain climbing and forest life I was fit for the most arduous bodily exertion. My father kept his word, and in 1877 I entered the Joanneum in Gratz, Styria, one of the oldest technical institutions of Europe. I proposed to show results which would repay my parents for their bitter disappointment due to my change of vocation. It was not a passing determination of a light-hearted youth; it was iron resolve. As some young reader of the Scientific American might draw profit from my example I will explain.

Three rotors used with the early induction motor shown below

When I was a boy of seven or eight I read a novel untitled "Abafi"—The Son of Aba—a Servian translation from the Hungarian of Josika, a writer of renown. The lessons it teaches are much like those of "Ben Hur," and in this respect it might be viewed as

anticipatory of the work of Wallace. The possibilities of will-power and self-control appealed tremendously to my vivid imagination, and I began to discipline myself. Had I a sweet cake or a juicy apple which I was dying to eat I would give it to another boy and go through the tortures of Tantalus, pained but satisfied. Had I some difficult task before me which was exhausting I would attack it again and again until it was done. So I practiced day by day from morning till night. At first it called for a vigorous mental effort directed against disposition and desire, but as years went by the conflict lessened and finally my will and wish became identical. They are so to-day, and in this lies the secret of whatever success I have achieved. These experiences are as intimately linked with my discovery of the rotating magnetic field as if they formed an essential part of it; but for them I would never have invented the induction motor.

In the first year of my studies at the Joanneum I rose regularly at three o'clock in the morning and worked till eleven at night; no Sundays or holidays excepted. My success was unusual and excited the interest of the professors. Among these was Dr. Allé, who lectured on differential equations and other branches of higher mathematics and whose addresses were unforgettable intellectual treats, and Prof. Poeschl, who held the chair of Physics, theoretical and experimental. These men I always remember with a sense of gratitude. Prof Poeschl was peculiar; it was said of him that he wore the same coat for twenty years. But what he lacked in personal magnetism he made up in the perfection of his exposition. I never saw him miss a word or gesture, and his demonstrations and experiments always went off with clocklike precision. Some time in the winter of 1878 a new apparatus was installed in the lecture room. It was a dynamo with a laminated permanent magnet and a Gramme armature. Prof. Poeschi had wound some wire around the field to show the principle of self-excitation, and provided a battery for running the machine as a motor. As he was illustrating this latter feature there was lively sparking at the commutator and brushes, and I ventured to remark that these devices might be eliminated. He said that it was quite impossible and likened my proposal to a perpetual motion scheme, which amused my fellow students and embarrassed me greatly. For a time I hesitated, impressed by his authority, but my conviction grew stronger and I decided to work out the solution. At that time my resolve meant more to me than the most solemn vow.

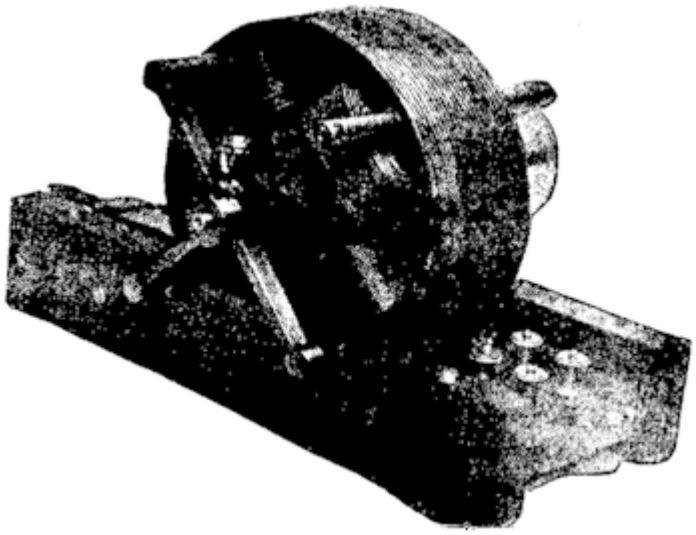

One of the earliest of induction motors. Although it weighed only a little over 20 pounds, it developed 1/4 horse-power at a speed of 1,800 revolutions, a performance considered remarkable at the time.

I undertook the task with all the fire and boundless confidence of youth. To my mind it was simply a test of will-power. I knew nothing of the technical difficulties. All my remaining term in Gratz was passed in intense but fruitless effort, and I almost convinced myself that the problem was unsolvable. Indeed, I thought, was it possible to transform the steady pull of gravitation into a whirling force! The answer was an emphatic no. And was this not also true of magnetic attraction? The two propositions appeared very much the same.

In 1880 I went to Prague, Bohemia, carrying out my father's wish to complete my school education at a university. The atmosphere of that old and interesting city was favorable to invention. Hungry artists were plentiful and intelligent company could be found everywhere. Here I made the first distinct step in advance, by detaching the commutators from the machines and placing them on distant arbors. Every day I imagined arrangements on this plan without result, but feeling that I was nearing the solution. In the following year there was a sudden change in my views of life. I realized that my parents were making too great sacrifices for me and resolved to relieve them of the burden. The American telephone wave had reached the European continent, and the system was to be installed in Budapest. It appeared an ideal opportunity, and I took the train for that city. By an irony of fate my first employment was as a draughtsman. I hated drawing; it was for me the very worst of annoyances. Fortunately it was not long before I secured the position I sought, that of chief electrician to the telephone company. My duties brought me in contact with a number of young men in whom I became interested. One of these was Mr. Szigety, who was a remarkable specimen of humanity. A big head with an awful

lump on one side and a sallow complexion made him distinctly ugly, but from the neck own his body might have served for a statue of Apollo. His strength was phenomenal. At that time I had exhausted myself through hard work and incessant thinking. He impressed me with the necessity of systematic physical development, and I accepted his offer to train me in athletics. We exercised every day and I gained rapidly in strength. My mind also seemed to grow more vigorous and as my thoughts turned to the subject which absorbed me I was surprised at my confidence of success. On one occasion, ever present in my recollection, we were enjoying ourselves in the Varos-liget or City Park. I was reciting poetry, of which I was passionately fond. At that age I knew entire books by heart and could read them from memory word by word. One of these was Faust. It was late in the afternoon, the sun was setting, and I was reminded of the passage:

"Sie rückt und weich, der Tag ist überlebt,
Dort eilt sie bin und fördert neues Leben,
Oh, das kein Flügel mich vom Boden hebt
Ihr nach und immer nach zu streben!

Ach, zu des Geistes Flügeln wird so leicht
Kein körperlicher Flügel sich gesellen!"

"The glow retreats, done is the day of toil
It yonder hastes, new fields of life exploring;
Ah, that no wing can lift me from the soil
Upon its track to follow, follow soaring!

"Alas! the wings that lift the mind no aid
Of wings to lift the body can bequeath me."

As I spoke the last words, plunged in thought and marveling at the power of the poet, the idea came like a lightning flash. In an instant I saw it all, and I drew with a stick on the sand the diagrams which were illustrated in my fundamental patents of May, 1888, and which Szigety understood perfectly.

It is extremely difficult for me to put this experience before the reader in its true light and significance for it is so altogether extraordinary. When an idea presents itself it is, as a rule, crude and imperfect. Birth, growth and development are phases normal and natural. It was different with my invention. In the very moment I became conscious of it. I saw it fully developed and perfected. Then again, a theory, however plausible, must usually be confirmed by experiment. Not so the one I had formulated. It was being daily demonstrated every dynamo and motor was absolute proof of its soundness. The effect on me was indescribable. My imaginings were equivalent to realities. I had carried out what I had undertaken and pictured myself achieving wealth and fame. But more than all this was to me the revelation that I was an inventor. This was the one thing I wanted to be. Archimedes was my ideal. I admired the works of artists, but to my mind, they were only shadows and semblances. The inventor, I thought, gives to the world creations which are palpable, which live and work.

The telephone installation was now completed and in the spring of 1882 an offer was made me to go to Paris, which I accepted eagerly. Here I met a number of Americans whom I befriended and to whom I talked of my invention, and one of them, Mr. D. Cunningham, proposed to form a company for exploitation. This might have been done had not my duties called me to Strasburg, Alsace. It was in this city that I constructed my first motor. I had brought some material from Paris, and a disk of iron with bearings was made for me in a mechanical shop close to the railroad station in which I was installing the light and power plant. It was a crude apparatus, but afforded me the supreme satisfaction of seeing for the first time, rotation affected by alternating currents without commutator. I repeated the experiment with my assistant twice in the summer of 1883. My intercourse with Americans had directed my attention to the practical introduction and I endeavored to secure capital, but was unsuccessful in this attempt and returned to Paris early in 1884. Here, too, I made several ineffectual efforts, and finally resolved to go to America, where I arrived in the summer of 1884. By a previous understanding I entered the Edison Machine Works, where I undertook the design of dynamos and motors. For nine months my regular hours were from 10:30 A. M. till 5 A. M. the next day. All this time I was getting more and more anxious about the invention and was making up my mind to place it before Edison. I still remember an odd incident in this connection. One day in the latter part of 1884 Mr. Bachelor, the manager of the works, took me to Coney Island, where we met Edison in company with his former wife. The moment that I was waiting for was propitious, I was just about to speak when a horrible looking tramp took hold of Edison and drew him away, preventing me from carrying out my intention. Early in 1885 people approached me with a proposition to develope an arc light system and to form a company under my name. I signed the contract, and a year and a half later I was free and in a position to devote myself to the practical development of my discovery. I found financial support, and in April, 1887, a company was organized for the purpose, and what has followed since is well known.

A few words should be said in regard to the various claims for anticipation which were made upon the issuance of my patents in 1888, and in numerous suits conducted subsequently. There were three contestants for the honor, Ferraris, Schallenberger and

Cabanellas. All three succumbed to grief. The opponents of my patents advanced the Ferraris claim very strongly, but any one who will peruse his little Italian pamphlet, which appeared in the spring of 1888, and compare it with the patent record filed by me seven months before, and with my paper before the American Institute of Electrical Engineers, will have no difficulty in reaching a conclusion. Irrespective of being behind me in time, Prof. Ferraris's publication concerned only my split-phase motor, and in an application for a patent by him priority was awarded to me. He never suggested any of the essential practical features which constitute my system, and in regard to the split-phase motor he was very decided in his opinion that it was of no value. Both Ferraris and Schallenberger discovered the rotation accidentally while working with a Gullard and Gibbs transformer, and had difficulty in explaining the actions. Neither of them produced a rotating field motor like mine, nor were their theories the same as my own. As to Cabanellas, the only reason for his claim is an abandoned and defective technical document. Some over-zealous friends have interpreted a United States patent granted to Bradley as a contemporary record, but there is no foundation whatever for such a claim. The original application only described a generator with two circuits which were provided for the sole purpose of increasing the output. There was not much novelty in the idea, since a number of such machines existed at that time. To say that these machines were anticipations of my rotary transformer is wholly unjustified. They might have served as one of the elements in my system of transformation, but were nothing more than dynamos with two circuits constructed with other ends in view and in utter ignorance of the new and wonderful phenomena revealed through my discovery.

THE STRANGE LIFE OF NIKOLA TESLA

Editors Note, August 28, 1995

This text has been entered by John R.H. Penner from a small booklet found in a used bookstore for $2.50. The only form of date identification is the name of the original purchaser, Arthua Daine (?), dated April 29, 1978.

The book appears to be considerably older, made with typewriters, and then photocopied and stapled. The only other significant features of the booklet is that it contains four photocopied photographs of Tesla, and was originally forty pages long. I must apologise for the qualitty of the scans, but the originals were of very poor quality, and this is the best that could be obtained after touching-up in Photoshop.

The book has no Copyright identification, nor any means of contacting the publishers. As far as I am aware, this autobiography is no longer available in printed form anywhere.

In the interest of making this important text available to the wider public, I have retyped the entire text word-for-word as it originally appears into this electronic format. The only words which appear in this file, that are not in the original book are this Editors Note, and the Introduction. I have exactly maintained page numbers as they appear in the original – including the somewhat odd artifact of Chapter 1 starting on page two.

If anyone knows how to reach the original publisher, please contact me at the below address, so proper credit may be given where it is due.

John Roland Hans Penner
464 Scott Street
St. Catharines, Ontario
L2M 3W7, Canada
Phone: 905.646.3551
eMail: J.Penner@GEnie.GEIS.com

This file may be freely redistributed as long as it's content is not modified in any way. It may not be sold or published for profit unless specifically authorised prior to publication by the express permission of Kolmogorov- Smirnov Publishing, or John R.H. Penner. Unless otherwise notified, this work is Copyright ©1995 by John R.H. Penner.

Introduction

Nikola Tesla was born in Croatia (then part of Austria-Hungary) on July 9, 1856, and died January 7, 1943. He was the electrical engineer who invented the AC (alternating current) induction motor, which made the universal transmission and distribution of electricity possible. Tesla began his studies in physics and mathematics at Graz Polytechnic, and then took philosophy at the University of Prague. He worked as an electrical engineer in Budapest, Hungary, and subsequently in France and Germany. In 1888 his discovery that a magnetic field could be made to rotate if two coils at right angles are supplied with AC current 90° out of phase made possible the invention of the AC induction motor. The major advantage of this motor being its brushless operation, which many at the time believed impossible.

Tesla moved to the United States in 1884, where he worked for Thomas Edison who quickly became a rival – Edison being an advocate of the inferior DC power transmission system. During this time, Tesla was commissioned with the design of the AC generators installed at Niagara Falls. George Westinghouse purchased the patents to his induction motor, and made it the basis of the Westinghouse power system which still underlies the modern electrical power industry today.

He also did notable research on high-voltage electricity and wireless communication; at one point creating an earthquake which shook the ground for several miles around his New York laboratory. He also devised a system which anticipated world-wide wireless communications, fax machines, radar, radio-guided missiles and aircraft.

NIKOLA TESLA IS THE TRUE UNSUNG PROPHET OF THE ELECTRIC AGE!; without whom our radio, auto ignition, telephone, alternating current power generation and transmission, radio and television would all have been impossible.

Yet his life and times have vanished largely from public access.

This AUTOBIOGRAPHY is released to remedy this situation, and to fill this “BLACK HOLE” in information space.

©Kolmogorov- Smirnov Publishing.

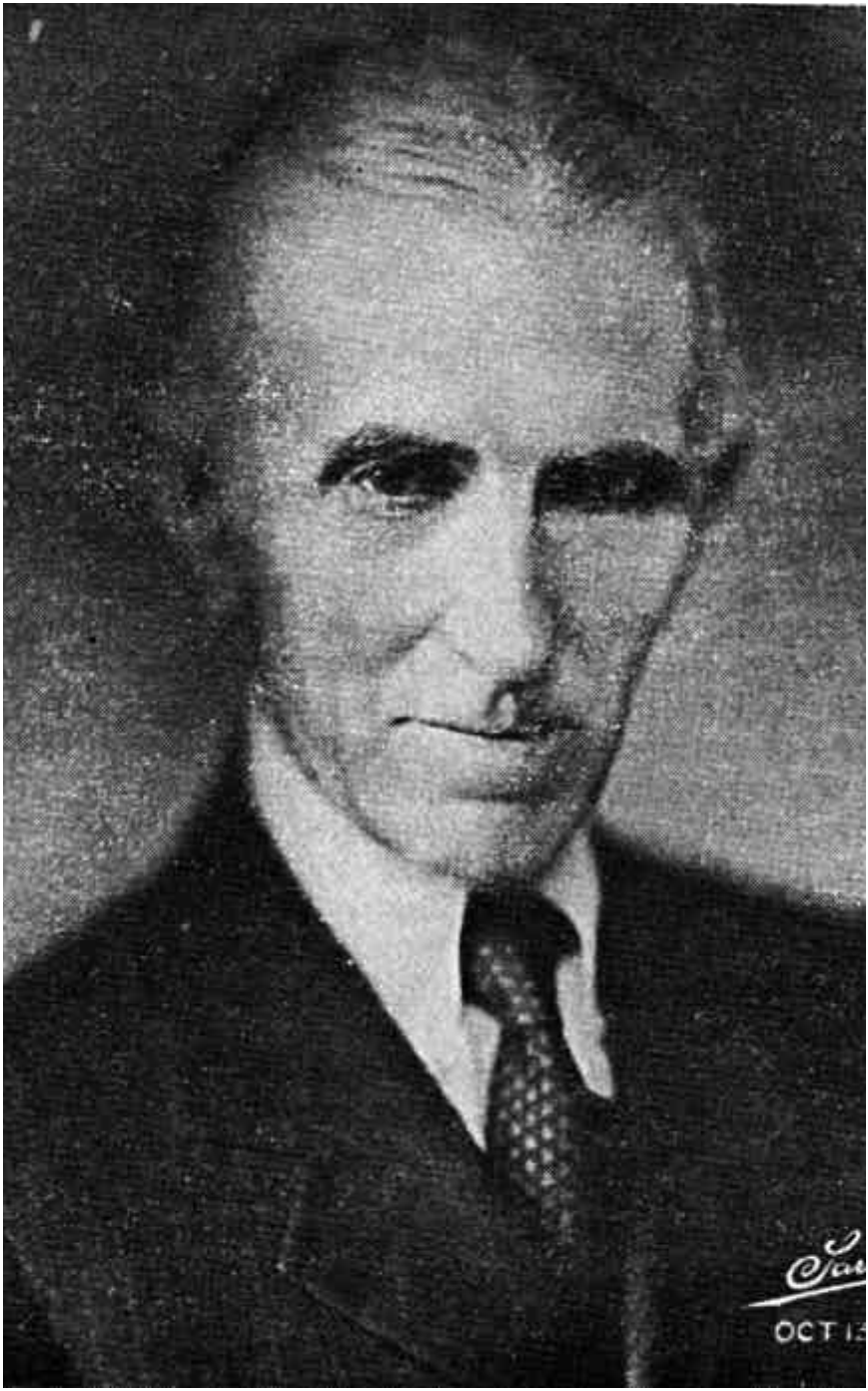

October 13, 1933

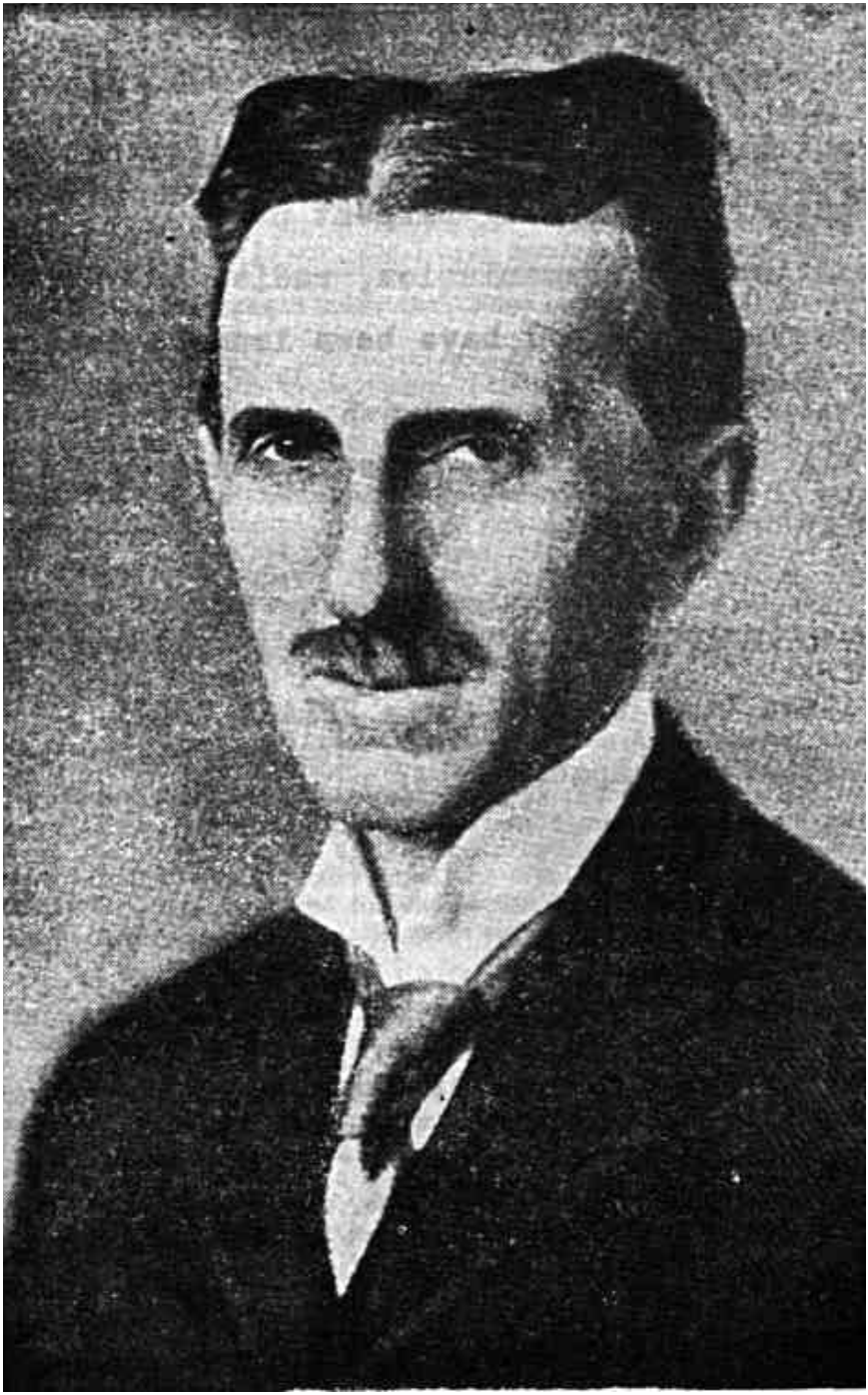

Chapter 1
My Early Life

By Nikola Tesla

The progressive development of man is vitally dependent on invention. It is the most important product of his creative brain. Its ultimate purpose is the complete mastery of mind over the material world, the harnessing of the forces of nature to human needs. This is the difficult task of the inventor who is often misunderstood and unrewarded. But he finds ample compensation in the pleasing exercises of his powers and in the knowledge of being one of that exceptionally privileged class without whom the race would have long ago perished in the bitter struggle against pitiless elements. Speaking for myself, I have already had more than my full measure of this exquisite enjoyment; so much, that for many years my life was little short of continuous rapture. I am credited with being one of the hardest workers and perhaps I am, if thought is the equivalent of labour, for I have devoted to it almost all of my waking hours. But if work is interpreted to be a definite performance in a specified time according to a rigid rule, then I may be the worst of idlers.

Every effort under compulsion demands a sacrifice of life-energy. I never paid such a price. On the contrary, I have thrived on my thoughts. In attempting to give a connected and faithful account of my activities in this story of my life, I must dwell, however reluctantly, on the impressions of my youth and the circumstances and events which have been instrumental in determining my career. Our first endeavours are purely instinctive promptings of an imagination vivid and undisciplined. As we grow older reason asserts itself and we become more and more systematic and designing. But those early impulses, though not immediately productive, are of the greatest moment and may shape our very destinies. Indeed, I feel now that had I understood and cultivated instead of suppressing them, I would have added substantial value to my bequest to the world. But not until I had attained manhood did I realise that I was an inventor.

This was due to a number of causes. In the first place I had a brother who was gifted to an extraordinary degree; one of those rare phenomena of mentality which biological investigation has failed to explain. His premature death left my earth parents disconsolate. (I will explain my remark about my “earth parents” later.) We owned a horse which had been presented to us by a dear friend. It was a magnificent animal of Arabian breed, possessed of almost human intelligence, and was cared for and petted by the whole family, having on one occasion saved my dear father’s life under remarkable circumstances.

My father had been called one winter night to perform an urgent duty and while crossing the mountains, infested by wolves, the horse became frightened and ran away, throwing him violently to the ground. It arrived home bleeding and exhausted, but after the alarm was sounded, immediately dashed off again, returning to the spot, and before the searching party were far on the way they were met by my father, who had recovered consciousness and remounted, not realising that he had been lying in the snow for several hours. This horse was responsible for my brother’s injuries from which he died. I witnessed the tragic scene and although so many years have elapsed since, my visual impression of it has lost none of its force. The recollection of his attainments made every effort of mine seem dull in comparison. Anything I did that was creditable merely caused my parents to feel their loss more keenly. So I grew up with little confidence in myself.

But I was far from being considered a stupid boy, if I am to judge from an incident of which I have still a strong remembrance. One day the Aldermen were passing through a street where I was playing with other boys. The oldest of these venerable gentlemen, a wealthy citizen, paused to give a silver piece to each of us. Coming to me, he suddenly stopped and commanded, "Look in my eyes." I met his gaze, my hand outstretched to receive the much valued coin, when to my dismay, he said, "No, not much; you can get nothing from me. You are too smart."

They used to tell a funny story about me. I had two old aunts with wrinkled faces, one of them having two teeth protruding like the tusks of an elephant, which she buried in my cheek every time she kissed me. Nothing would scare me more then the prospects of being by these affectionate, unattractive relatives. It happened that while being carried in my mother's arms, they asked who was the prettier of the two. After examining their faces intently, I answered thoughtfully, pointing to one of them, "This here is not as ugly as the other."

Then again, I was intended from my very birth, for the clerical profession and this thought constantly oppressed me. I longed to be an engineer, but my father was inflexible. He was the son of an officer who served in the army of the Great Napoleon and in common with his brother, professor of mathematics in a prominent institution, had received a military education; but, singularly enough, later embraced the clergy in which vocation he achieved eminence. He was a very erudite man, a veritable natural philosopher, poet and writer and his sermons were said to be as eloquent as those of Abraham a-Sancta-Clara. He had a prodigious memory and frequently recited at length from works in several languages. He often remarked playfully that if some of the classics were lost he could restore them. His style of writing was much admired. He penned sentences short and terse and full of wit and satire. The humorous remarks he made were always peculiar and characteristic. Just to illustrate, I may mention one or two instances.

Among the help, there was a cross-eyed man called Mane, employed to do work around the farm. He was chopping wood one day. As he swung the axe, my father, who stood nearby and felt very uncomfortable, cautioned him, "For God's sake, Mane, do not strike at what you are looking but at what you intend to hit."

On another occasion he was taking out for a drive, a friend who carelessly permitted his costly fur coat to rub on the carriage wheel. My father reminded him of it saying, "Pull in your coat; you are ruining my tire."

He had the odd habit of talking to himself and would often carry on an animated conversation and indulge in heated argument, changing the tone of his voice. A casual listener might have sworn that several people were in the room.

Although I must trace to my mother's influence whatever inventiveness I possess, the training he gave me must have been helpful. It comprised all sorts of exercises - as, guessing one another's thoughts, discovering the defects of some form of expression, repeating long sentences or performing mental calculations. These daily lessons were intended to strengthen memory and reason, and especially to develop the critical sense, and were undoubtedly very beneficial.

My mother descended from one of the oldest families in the country and a line of inventors. Both her father and grandfather originated numerous implements for household, agricultural and other uses. She was a truly great woman,

of rare skill, courage and fortitude, who had braved the storms of life and passed through many a trying experience. When she was sixteen, a virulent pestilence swept the country. Her father was called away to administer the last sacraments to the dying and during his absence she went alone to the assistance of a neighbouring family who were stricken by the dread disease. She bathed, clothed and laid out the bodies, decorating them with flowers according to the custom of the country and when her father returned he found everything ready for a Christian burial.

My mother was an inventor of the first order and would, I believe, have achieved great things had she not been so remote from modern life and its multifold opportunities. She invented and constructed all kinds of tools and devices and wove the finest designs from thread which was spun by her. She even planted seeds, raised the plants and separated the fibres herself. She worked indefatigably, from break of day till late at night, and most of the wearing apparel and furnishings of the home were the product of her hands. When she was past sixty, her fingers were still nimble enough to tie three knots in an eyelash.

There was another and still more important reason for my late awakening. In my boyhood I suffered from a peculiar affliction due to the appearance of images, often accompanied by strong flashes of light, which marred the sight of real objects and interfered with my thoughts and action. They were pictures of things and scenes which i had really seen, never of those imagined. When a word was spoken to me the image of the object it designated would present itself vividly to my vision and sometimes I was quite unable to distinguish weather what I saw was tangible or not. This caused me great discomfort and anxiety. None of the students of psychology or physiology whom i have consulted, could ever explain satisfactorily these phenomenon. They seem to have been unique although I was probably predisposed as I know that my brother experienced a similar trouble. The theory I have formulated is that the images were the result of a reflex action from the brain on the retina under great excitation. They certainly were not hallucinations such as are produced in diseased and anguished minds, for in other respects i was normal and composed. To give an idea of my distress, suppose that I had witnessed a funeral or some such nerve-wracking spectacle. The, inevitably, in the stillness of night, a vivid picture of the scene would thrust itself before my eyes and persist despite all my efforts to banish it. If my explanation is correct, it should be possible to project on a screen the image of any object one conceives and make it visible. Such an advance would revolutionise all human relations. I am convinced that this wonder can and will be accomplished in time to come. I may add that I have devoted much thought to the solution of the problem.

I have managed to reflect such a picture, which i have seen in my mind, to the mind of another person, in another room. To free myself of these tormenting appearances, I tried to concentrate my mind on something else I had seen, and in this way I would often obtain temporary relief; but in order to get it I had to conjure continuously new images. It was not long before I found that I had exhausted all of those at my command; my ‘reel’ had run out as it were, because I had seen little of the world — only objects in my home and the immediate surroundings. As I performed these mental operations for the second or third time, in order to chase the appearances from my vision, the remedy gradually lost all its force. Then I instinctively commenced to make excursions beyond the limits of the small world of which I had knowledge, and I saw new scenes. These were at first very blurred and indistinct, and would flit away when I tried to concentrate my attention upon them. They gained in strength

and distinctness and finally assumed the concreteness of real things. I soon discovered that my best comfort was attained if I simply went on in my vision further and further, getting new impressions all the time, and so I began to travel; of course, in my mind. Every night, (and sometimes during the day), when alone, I would start on my journeys — see new places, cities and countries; live there, meet people and make friendships and acquaintances and, however unbelievable, it is a fact that they were just as dear to me as those in actual life, and not a bit less intense in their manifestations.

This I did constantly until I was about seventeen, when my thoughts turned seriously to invention. Then I observed to my delight that i could visualise with the greatest facility. I needed no models, drawings or experiments. I could picture them all as real in my mind. Thus I have been led unconsciously to evolve what I consider a new method of materialising inventive concepts and ideas, which is radially opposite to the purely experimental and is in my opinion ever so much more expeditious and efficient.

The moment one constructs a device to carry into practice a crude idea, he finds himself unavoidably engrossed with the details of the apparatus. As he goes on improving and reconstructing, his force of concentration diminishes and he loses sight of the great underlying principle. Results may be obtained, but always at the sacrifice of quality. My method is different. I do not rush into actual work. When I get an idea, I start at once building it up in my imagination. I change the construction, make improvements and operate the device in my mind. It is absolutely immaterial to me whether I run my turbine in thought or test it in my shop. I even note if it is out of balance. There is no difference whatever; the results are the same. In this way I am able to rapidly develop and perfect a conception without touching anything. When I have gone so far as to embody in the invention every possible improvement I can think of and see no fault anywhere, I put into concrete form this final product of my brain. Invariably my device works as I conceived that it should, and the experiment comes out exactly as I planned it. In twenty years there has not been a single exception. Why should it be otherwise? Engineering, electrical and mechanical, is positive in results. There is scarcely a subject that cannot be examined beforehand, from the available theoretical and practical data. The carrying out into practice of a crude idea as is being generally done, is, I hold, nothing but a waste of energy, money, and time.

My early affliction had however, another compensation. The incessant mental exertion developed my powers of observation and enabled me to discover a truth of great importance. I had noted that the appearance of images was always preceded by actual vision of scenes under peculiar and generally very exceptional conditions, and I was impelled on each occasion to locate the original impulse. After a while this effort grew to be almost automatic and I gained great facility in connecting cause and effect. Soon I became aware, to my surprise, that every thought I conceived was suggested by an external impression. Not only this but all my actions were prompted in a similar way. In the course of time it became perfectly evident to me that I was merely an automation endowed with power OF MOVEMENT RESPONDING TO THE STIMULI OF THE SENSE ORGANS AND THINKING AND ACTING ACCORDINGLY. The practical result of this was the art of teleautomatics which has been so far carried out only in an imperfect manner. Its latent possibilities will, however be eventually shown. I have been years planning self-controlled automata and believe that mechanisms can be produced which will act as if possessed of reason, to a limited degree, and will create a revolution in many commercial and industrial departments. I was about twelve years of age when I first succeeded in banishing an image from my vision by wilful effort, but I never had any control over the flashes of light to which

I have referred. They were, perhaps, my strangest and [most] inexplicable experience. They usually occurred when I found myself in a dangerous or distressing situations or when i was greatly exhilarated. In some instances i have seen all the air around me filled with tongues of living flame. Their intensity, instead of diminishing, increased with time and seemingly attained a maximum when I was about twenty-five years old.

While in Paris in 1883, a prominent French manufacturer sent me an invitation to a shooting expedition which I accepted. I had been long confined to the factory and the fresh air had a wonderfully invigorating effect on me. On my return to the city that night, I felt a positive sensation that my brain had caught fire. I was a light as though a small sun was located in it and I passed the whole night applying cold compressions to my tortured head. Finally the flashes diminished in frequency and force but it took more than three weeks before they wholly subsided. When a second invitation was extended to me, my answer was an emphatic NO!

These luminous phenomena still manifest themselves from time to time, as when a new idea opening up possibilities strikes me, but they are no longer exciting, being of relatively small intensity. When I close my eyes I invariably observe first, a background of very dark and uniform blue, not unlike the sky on a clear but starless night. In a few seconds this field becomes animated with innumerable scintillating flakes of green, arranged in several layers and advancing towards me. Then there appears, to the right, a beautiful pattern of two systems of parallel and closely spaced lines, at right angles to one another, in all sorts of colours with yellow, green, and gold predominating. Immediately thereafter, the lines grow brighter and the whole is thickly sprinkled with dots of twinkling light. This picture moves slowly across the field of vision and in about ten seconds vanishes on the left, leaving behind a ground of rather unpleasant and inert grey until the second phase is reached. Every time, before falling asleep, images of persons or objects flit before my view. When I see them I know I am about to lose consciousness. If they are absent and refuse to come, it means a sleepless night. To what an extent imagination played in my early life, I may illustrate by another odd experience.

Like most children, I was fond of jumping and developed an intense desire to support myself in the air. Occasionally a strong wind richly charged with oxygen blew from the mountains, rendering my body light as cork and then I would leap and float in space for a long time. It was a delightful sensation and my disappointment was keen when later I undeceived myself. During that period I contracted many strange likes, dislikes and habits, some of which I can trace to external impressions while others are unaccountable. I had a violent aversion against the earing of women, but other ornaments, as bracelets, pleased me more or less according to design. The sight of a pearl would almost give me a fit, but I was fascinated with the glitter of crystals or objects with sharp edges and plane surfaces. I would not touch the hair of other people except, perhaps at the point of a revolver. I would get a fever by looking at a peach and if a piece of camphor was anywhere in the house it caused me the keenest discomfort. Even now I am not insensible to some of these upsetting impulses. When I drop little squares of paper in a dish filled with liquid, I always sense a peculiar and awful taste in my mouth. I counted the steps in my walks and calculated the cubical contents of soup plates, coffee cups and pieces of food, otherwise my meal was unenjoyable. All repeated acts or operations I performed had to be divisible by three and if I missed I felt impelled to do it all over again, even if it took hours. Up to the age of eight years, my

character was weak and vacillating. I had neither courage or strength to form a firm resolve. My feelings came in waves and surges and variated unceasingly between extremes. My wishes were of consuming force and like the heads of the hydra, they multiplied. I was oppressed by thoughts of pain in life and death and religious fear. I was swayed by superstitious belief and lived in constant dread of the spirit of evil, of ghosts and ogres and other unholy monsters of the dark. Then all at once, there came a tremendous change which altered the course of my whole existence.

Of all things I liked books best. My father had a large library and whenever I could manage I tried to satisfy my passion for reading. He did not permit it and would fly in a rage when he caught me in the act. He hid the candles when he found that I was reading in secret. He did not want me to spoil my eyes. But I obtained tallow, made the wicking and cast the sticks into tin forms, and every night I would bush the keyhole and the cracks and read, often till dawn, when all others slept and my mother started on her arduous daily task.

On one occasion I came across a novel entitled 'Aoafi,' (the son of Aba), a Serbian translation of a well known Hungarian writer, Josika. This work somehow awakened my dormant powers of will and I began to practice self-control. At first my resolutions faded like snow in April, but in a little while I conquered my weakness and felt a pleasure I never knew before — that of doing as I willed.

In the course of time this vigorous mental exercise became second to nature. At the outset my wishes had to be subdued but gradually desire and will grew to be identical. After years of such discipline I gained so complete a mastery over myself that I toyed with passions which have meant destruction to some of the strongest men. At a certain age I contracted a mania for gambling which greatly worried my parents. To sit down to a game of cards was for me the quintessence of pleasure. My father led an exemplary life and could not excuse the senseless waste of my time and money in which I indulged. I had a strong resolve, but my philosophy was bad. I would say to him, 'I can stop whenever I please, but it it worth while to give up that which I would purchase with the joys of paradise?' On frequent occasions he gave vent to his anger and contempt, but my mother was different. She understood the character of men and knew that one's salvation could only be brought about through his own efforts. One afternoon, I remember, when I had lost all my money and was craving for a game, she came to me with a roll of bills and said, 'Go and enjoy yourself. The sooner you lose all we possess, the better it will be. I know that you will get over it.' She was right. I conquered my passion then and there and only regretted that it had not been a hundred times as strong. I not only vanquished but tore it from my heart so as not to leave even a trace of desire.

Ever since that time I have been as indifferent to any form of gambling as to picking teeth. During another period I smoked excessively, threatening to ruin my health. Then my will asserted itself and I not only stopped but destroyed all inclination. Long ago I suffered from heart trouble until I discovered that it was due to the innocent cup of coffee I consumed every morning. I discontinued at once, though I confess it was not an easy task. In this way I checked and bridled other habits and passions, and have not only preserved my life but derived an immense amount of satisfaction from what most men would consider privation and sacrifice.

After finishing the studies at the Polytechnic Institute and University, I had a complete nervous breakdown and while the malady lasted I observed many phenomena, strange and unbelievable...

Chapter 2

I shall dwell briefly on these extraordinary experiences, on account of their possible interest to students of psychology and physiology and also because this period of agony was of the greatest consequence on my mental development and subsequent labours. But it is indispensable to first relate the circumstances and conditions which preceded them and in which might be found their partial explanation.

From childhood I was compelled to concentrate attention upon myself. This caused me much suffering, but to my present view, it was a blessing in disguise for it has taught me to appreciate the inestimable value of introspection in the preservation of life, as well as a means of achievement. The pressure of occupation and the incessant stream of impressions pouring into our consciousness through all the gateways of knowledge make modern existence hazardous in many ways. Most persons are so absorbed in the contemplation of the outside world that they are wholly oblivious to what is passing on within themselves. The premature death of millions is primarily traceable to this cause. Even among those who exercise care, it is a common mistake to avoid imaginary, and ignore the real dangers. And what is true of an individual also applies, more or less, to a people as a whole.

Abstinence was not always to my liking, but I find ample reward in the agreeable experiences I am now making. Just in the hope of converting some to my precepts and convictions I will recall one or two.

A short time ago I was returning to my hotel. It was a bitter cold night, the ground slippery, and no taxi to be had. Half a block behind me followed another man, evidently as anxious as myself to get under cover. Suddenly my legs went up in the air. At the same instant there was a flash in my brain. The nerves responded, the muscles contracted. I swung 180 degrees and landed on my hands. I resumed my walk as though nothing had happened when the stranger caught up with me. “How old are you?” he asked, surveying me critically.

“Oh, about fifty-nine,” I replied, “What of it?”

“Well,” said he, “I have seen a cat do this but never a man.” About a month ago I wanted to order new eye glasses and went to an oculist who put me through the usual tests. He looked at me incredulously as I read off with ease the smallest print at considerable distance. But when I told him I was past sixty he gasped in astonishment. Friends of mine often remark that my suits fit me like gloves but they do not know that all my clothing is made to measurements which were taken nearly fifteen years ago and never changed. During this same period my weight has not varied one pound. In this connection I may tell a funny story.

One evening, in the winter of 1885, Mr. Edison, Edward H. Johnson, the President of the Edison Illuminating Company, Mr. Batchellor, Manager of the works, and myself, entered a little place opposite 65 Firth Avenue, where the offices of the company were located. Someone suggested guessing weights and I was induced to step on a scale. Edison felt me all over and said: “Tesla weighs 152 lbs. to an ounce,” and he guessed it exactly. Stripped I weighed 142 pounds, and that is still my weight. I whispered to Mr. Johnson; “How is it possible that Edison could guess my weight so closely?”

“Well,” he said, lowering his voice. “I will tell you confidentially, but you must not say anything. He was employed for a long time in a Chicago slaughter-house where he weighed thousands of hogs every day. That’s why.”

My friend, the Hon. Chauncey M. Dupew, tells of an Englishman on whom he sprung one of his original anecdotes and who listened with a puzzled expression, but a year later, laughed out loud. I will frankly confess it took me longer than that to appreciate Johnson’s joke. Now, my well-being is simply the result of a careful and measured mode of living and perhaps the most astonishing thing is that three times in my youth I was rendered by illness a hopeless physical wreck and given up by physicians. MORE than this, through ignorance and lightheartedness, I got into all sorts of difficulties, dangers and scrapes from which I extricated myself as by enchantment. I was almost drowned, entombed, lost and frozen. I had hair-breadth escapes from mad dogs, hogs, and other wild animals. I passed through dreadful diseases and met with all kinds of odd mishaps and that I am whole and hearty today seems like a miracle. But as I recall these incidents to my mind I feel convinced that my preservation was not altogether accidental, but was indeed the work of divine power. An inventor’s endeavour is essentially life saving. Whether he harnesses forces, improves devices, or provides new comforts and conveniences, he is adding to the safety of our existence. He is also better qualified than the average individual to protect himself in peril, for he is observant and resourceful. If I had no other evidence that I was, in a measure, possessed of such qualities, I would find it in these personal experiences. The reader will be able to judge for himself if I mention one or two instances.

On one occasion, when about fourteen years old, I wanted to scare some friends who were bathing with me. My plan was to dive under a long floating structure and slip out quietly at the other end. Swimming and diving came to me as naturally as to a duck and I was confident that I could perform the feat. Accordingly I plunged into the water and, when out of view, turned around and proceeded rapidly towards the opposite side. Thinking that I was safely beyond the structure, I rose to the surface but to my dismay struck a beam. Of course, I quickly dived and forged ahead with rapid strokes until my breath was beginning to give out. Rising for the second time, my head came again in contact with a beam. Now I was becoming desperate. However, summoning all my energy, I made a third frantic attempt but the result was the same. The torture of suppressed breathing was getting unendurable, my brain was reeling and I felt myself sinking. At that moment, when my situation seemed absolutely hopeless, I experienced one of those flashes of light and the structure above me appeared before my vision. I either discerned or guessed that there was a little space between the surface of the water and the boards resting on the beams and, with consciousness nearly gone, I floated up, pressed my mouth close to the planks and managed to inhale a little air, unfortunately mingled with a spray of water which nearly choked me. Several times I repeated this procedure as in a dream until my heart, which was racing at a terrible rate, quieted down, and I gained composure. After that I made a number of unsuccessful dives, having completely lost the sense of direction, but finally succeeded in getting out of the trap when my friends had already given me up and were fishing for my body. That bathing season was spoiled for me through recklessness but I soon forgot the lesson and only two years later I fell into a worse predicament.

There was a large flour mill with a dam across the river near the city where I was studying at the time. As a rule the height of the water was only two or three inches above the dam and to swim to it was a sport not very dangerous in which I often indulged. One day I went alone to the river to enjoy

myself as usual. When I was a short distance from the masonry, however, I was horrified to observe that the water had risen and was carrying me along swiftly. I tried to get away but it was too late. Luckily, though, I saved myself from being swept over by taking hold of the wall with both hands. The pressure against my chest was great and I was barely able to keep my head above the surface. Not a soul was in sight and my voice was lost in the roar of the fall. Slowly and gradually I became exhausted and unable to withstand the strain longer. Just as I was about to let go, to be dashed against the rocks below, I saw in a flash of light a familiar diagram illustrating the hydraulic principle that the pressure of a fluid in motion is proportionate to the area exposed and automatically I turned on my left side. As if by magic, the pressure was reduced and I found it comparatively easy in that position to resist the force of the stream. But the danger still confronted me. I knew that sooner or later I would be carried down, as it was not possible for any help to reach me in time, even if I had attracted attention. I am ambidextrous now, but then I was left-handed and had comparatively little strength in my right arm. For this reason I did not dare to turn on the other side to rest and nothing remained but to slowly push my body along the dam. I had to get away from the mill towards which my face was turned, as the current there was much swifter and deeper. It was a long and painful ordeal and I came near to failing at its very end, for I was confronted with a depression in the masonry. I managed to get over with the last ounce of my strength and fell in a swoon when I reached the bank, where I was found. I had torn virtually all the skin from my left side and it took several weeks before the fever had subsided and I was well. These are only two of many instanced, but they may be sufficient to show that had it not been for the inventor's instinct, I would not have lived to tell the tale.

Interested people have often asked me how and when I began to invent. This I can only answer from my present recollection in the light of which, the first attempt I recall was rather ambitious for it involved the invention of an apparatus and a method. In the former I was anticipated, but the later was original. It happened in this way. One of my playmates had come into the possession of a hook and fishing tackle which created quite an excitement in the village, and the next morning all started out to catch frogs. I was left alone and deserted owing to a quarrel with this boy. I had never seen a real hook and pictured it as something wonderful, endowed with peculiar qualities, and was despairing not to be one of the party. Urged by necessity, I somehow got hold of a piece of soft iron wire, hammered the end to a sharp point between two stones, bent it into shape, and fastened it to a strong string. I then cut a rod, gathered some bait, and went down to the brook where there were frogs in abundance. But I could not catch any and was almost discouraged when it occurred to me dangle the empty hook in front of a frog sitting on a stump. At first he collapsed but by and by his eyes bulged out and became bloodshot, he swelled to twice his normal size and made a vicious snap at the hook. Immediately I pulled him up. I tried the same thing again and again and the method proved infallible. When my comrades, who in spite of their fine outfit had caught nothing, came to me, they were green with envy. For a long time I kept my secret and enjoyed the monopoly but finally yielded to the spirit of Christmas. Every boy could then do the same and the following summer brought disaster to the frogs.

In my next attempt, I seem to have acted under the first instinctive impulse which later dominated me, — to harness the energies of nature to the service of man. I did this through the medium of May bugs, or June bugs as they are called in America, which were a veritable pest in that country and sometimes broke the branches of trees by the sheer weight of their bodies. The

bushes were black with them. I would attach as many as four of them to a cross-piece, rotably arranged on a thin spindle, and transmit the motion of the same to a large disc and so derive considerable 'power.' These creatures were remarkably efficient, for once they were started, they had no sense to stop and continued whirling for hours and hours and the hotter it was, the harder they worked. All went well until a strange boy came to the place. He was the son of a retired officer in the Austrian army. That urchin ate May-bugs alive and enjoyed them as though they were the finest blue-point oysters. That disgusting sight terminated my endeavours in this promising field and I have never since been able to touch a May-bug or any other insect for that matter.

After that, I believe, I undertook to take apart and assemble the clocks of my grandfather. In the former operation I was always successful, but often failed in the latter. So it came that he brought my work to a sudden halt in a manner not too delicate and it took thirty years before I tackled another clockwork again.

Shortly thereafter, I went into the manufacture of a kind of pop-gun which comprised a hollow tube, a piston, and two plugs of hemp. When firing the gun, the piston was pressed against the stomach and the tube was pushed back quickly with both hands. the air between the plugs was compressed and raised to a high temperature and one of them was expelled with a loud report. The art consisted in selecting a tube of the proper taper from the hollow stalks which were found in our garden. I did very well with that gun, but my activities interfered with the window panes in our house and met with painful discouragement.

If I remember rightly, I then took to carving swords from pieces of furniture which I could conveniently obtain. At that time I was under the sway of the Serbian national poetry and full of admiration for the feats of the heroes. I used to spend hours in mowing down my enemies in the form of corn-stalks which ruined the crops and netted me several spankings from my mother. Moreover, these were not of the formal kind but the genuine article.

I had all this and more behind me before I was six years old and had passed through one year of elementary school in the village of Smiljan where my family lived. At this juncture we moved to the little city of Gospic nearby. This change of residence was like a calamity to me. It almost broke my heart to part from our pigeons, chickens and sheep, and our magnificent flock of geese which used to rise to the clouds in the morning and return from the feeding grounds at sundown in battle formation, so perfect that it would have put a squadron of the best aviators of the present day to shame. In our new house I was but a prisoner, watching the strange people I saw through my window blinds. My bashfulness was such that I would rather have faced a roaring lion than one of the city dudes who strolled about. But my hardest trial came on Sunday when I had to dress up and attend the service. There I met with an accident, the mere thought of which made my blood curdle like sour milk for years afterwards. It was my second adventure in a church. Not long before, I was entombed for a night in an old chapel on an inaccessible mountain which was visited only once a year. It was an awful experience, but this one was worse.

There was a wealthy lady in town, a good but pompous woman, who used to come to the church gorgeously painted up and attired with an enormous train and attendants. One Sunday I had just finished ringing the bell in the belfry and rushed downstairs, when this grand dame was sweeping out and I jumped on her train. It tore off with a ripping noise which sounded like a salvo of musketry

fired by raw recruits. My father was livid with rage. He gave me a gentle slap on the cheek, the only corporal punishment he ever administered to me, but I almost feel it now. The embarrassment and confusion that followed are indescribably. I was practically ostracised until something else happened which redeemed me in the estimation of the community.

An enterprising young merchant had organised a fire department. A new fire engine was purchased, uniforms provided and the men drilled for service and parade. The engine was beautifully painted red and black. One afternoon, the official trial was prepared for and the machine was transported to the river. The entire population turned out to witness the great spectacle. When all the speeches and ceremonies were concluded, the command was given to pump, but not a drop of water came from the nozzle. The professors and experts tried in vain to locate the trouble. The fizzle was complete when I arrived at the scene. My knowledge of of the mechanism was nil and I knew next to nothing of air pressure, but instinctively I felt for the suction hose in the water and found that it had collapsed. When I waded in the river and opened it up, the water rushed forth and not a few Sunday clothes were spoiled. Archimedes running naked through the streets of Syracuse and shouting Eureka at the top of his voice did not make a greater impression than myself. I was carried on the shoulders and was hero of the day.

Upon settling in the city I began a four years course in the so-called Normal School preparatory to my studies at the College or Real-Gymnasium. During this period my boyish efforts and exploits as well as troubles, continued.

Among other things, I attained the unique distinction of champion crow catcher in the country. My method of procedure was extremely simple. I would go into the forest, hide in the bushes, and imitate the call of the birds. Usually I would get several answers and in a short while a crow would flutter down into the shrubbery near me. After that, all I needed to do was to throw a piece of cardboard to detract its attention, jump up and grab it before it could extricate itself from the undergrowth. In this way I would capture as many as I desired. But on one occasion something occurred which made me respect them. I had caught a fine pair of birds and was returning home with a friend. When we left the forest, thousands of crows had gathered making a frightful racket. In a few minutes they rose in pursuit and soon enveloped us. The fun lasted until all of a sudden I received a blow on the back of my head which knocked me down. Then they attacked me viciously. I was compelled to release the two birds and was glad to join my friend who had taken refuge in a cave.

In the school room there were a few mechanical models which interested me and turned my attention to water turbines. I constructed many of these and found great pleasure in operating them. How extraordinary was my life an incident may illustrate. My uncle had no use for this kind of pastime and more than once rebuked me. I was fascinated by a description of Niagara Falls I had perused, and pictured in my imagination a big wheel run by the falls. I told my uncle that I would go to America and carry out this scheme. Thirty years later I was my ideas carried out at Niagara and marvelled at the unfathomable mystery of the mind.

I made all kinds of other contrivances and contraptions but among those, the arbalests I produced were the best. My arrows, when short, disappeared from sight and at close range traversed a plank of pine one inch thick. Through the continuous tightening of the bows I developed a skin on my stomach much like that of a crocodile and I am often wondering whether it is due to this exercise

that I am able even now to digest cobble-stones! Nor can I pass in silence my performances with the sling which would have enabled me to give a stunning exhibit at the Hippodrome. And now I will tell of one of my feats with this unique implement of war which will strain to the utmost the credulity of the reader.

I was practising while walking with my uncle along the river. The sun was setting, the trout were playful and from time to time one would shoot up into the air, its glistening body sharply defined against a projecting rock beyond. Of course any boy might have hit a fish under these propitious conditions but I undertook a much more difficult task and I foretold to my uncle, to the minutest detail, what I intended doing. I was to hurl a stone to meet the fish, press its body against the rock, and cut it in two. It was no sooner said than done. My uncle looked at me almost scared out of his wits and exclaimed "Vade retra Satanae!" and it was a few days before he spoke to me again. Other records, however great, will be eclipsed but I feel that I could peacefully rest on my laurels for a thousand years.

Chapter 3
How Tesla Conceived The Rotary Magnetic Field

At the age of ten I entered the Real gymnasium which was a new and fairly well equipped institution. In the department of physics were various models of classical scientific apparatus, electrical and mechanical. The demonstrations and experiments performed from time to time by the instructors fascinated me and were undoubtedly a powerful incentive to invention. I was also passionately fond of mathematical studies and often won the professor's praise for rapid calculation. This was due to my acquired facility of visualising the figures and performing the operation, not in the usual intuitive manner, but as in actual life. Up to a certain degree of complexity it was absolutely the same to me whether I wrote the symbols on the board or conjured them before my mental vision. But freehand drawing, to which many hours of the course were devoted, was an annoyance I could not endure. This was rather remarkable as most of the members of the family excelled in it. Perhaps my aversion was simply due to the predilection I found in undisturbed thought. Had it not been for a few exceptionally stupid boys, who could not do anything at all, my record would have been the worst.

It was a serious handicap as under the then existing educational regime drawing being obligatory, this deficiency threatened to spoil my whole career and my father had considerable trouble in rail-roading me from one class to another.

In the second year at that institution I became obsessed with the idea of producing continuous motion through steady air pressure. The pump incident, of which I have been told, had set afire my youthful imagination and impressed me with the boundless possibilities of a vacuum. I grew frantic in my desire to harness this inexhaustible energy but for a long time I was groping in the dark. Finally, however, my endeavours crystallised in an invention which was to enable me to achieve what no other mortal ever attempted. Imagine a cylinder freely rotatable on two bearings and partly surrounded by a rectangular trough which fits it perfectly. The open side of the trough is enclosed by a partition so that the cylindrical segment within the enclosure divides the latter into two compartments entirely separated from each other by air-tight sliding joints. One of these compartments being sealed and once for all exhausted, the other remaining open, a perpetual rotation of the cylinder would result. At least, so I thought.

A wooden model was constructed and fitted with infinite care and when I applied the pump on one side and actual observed that there was a tendency to turning, I was delirious with joy. Mechanical flight was the one thing I wanted to accomplish although still under the discouraging recollection of a bad fall I sustained by jumping with an umbrella from the top of a building. Every day I used to transport myself through the air to distant regions but could not understand just how I managed to do it. Now I had something concrete, a flying machine with nothing more than a rotating shaft, flapping wings, and; - a vacuum of unlimited power! From that time on I made my daily aerial excursions in a vehicle of comfort and luxury as might have befitted King Solomon. It took years before I understood that the atmospheric pressure acted at right angles to the surface of the cylinder and that the slight rotary effort I observed was due to a leak! Though this knowledge came gradually it gave me a painful shock.

I had hardly completed my course at the Real Gymnasium when I was prostrated with a dangerous illness or rather, a score of them, and my condition became so desperate that I was given up by physicians. During this period I was permitted to read constantly, obtaining books from the Public Library which had been neglected and entrusted to me for classification of the works and preparation of catalogues.

One day I was handed a few volumes of new literature unlike anything I had ever read before and so captivating as to make me utterly forget me hopeless state. They were the earlier works of Mark Twain and to them might have been due the miraculous recovery which followed. Twenty-five years later, when I met Mr. Clements and we formed a friendship between us, I told him of the experience and was amazed to see that great man of laughter burst into tears...

My studies were continued at the higher Real Gymnasium in Carlstadt, Croatia, where one of my aunts resided. She was a distinguished lady, the wife of a Colonel who was an old war-horse having participated in many battles, I can never forget the three years I passed at their home. No fortress in time of war was under a more rigid discipline. I was fed like a canary bird. All the meals were of the highest quality and deliciously prepared, but short in quantity by a thousand percent. The slices of ham cut by my aunt were like tissue paper. When the Colonel would put something substantial on my plate she would snatch it away and say excitedly to him; “Be careful. Niko is very delicate.”

I had a voracious appetite and suffered like Tantalus.

But I lived in an atmosphere of refinement and artistic taste quite unusual for those times and conditions. The land was low and marshy and malaria fever never left me while there despite the enormous amounts of qunine I consumed. Occasionally the river would rise and drive an army of rats into the buildings, devouring everything, even to the bundles of fierce paprika. These pests were to me a welcome diversion. I thinned their ranks by all sorts of means, which won me the unenviable distinction of rat-catcher in the community. At last, however, my course was completed, the misery ended, and I obtained the certificate of maturity which brought me to the cross-roads.

During all those years my parents never wavered in their resolve to make me embrace the clergy, the mere thought of which filled me with dread. I had become intensely interested in electricity under the stimulating influence of my Professor of Physics, who was an ingenious man and often demonstrated the principles by apparatus of his own invention. Among these I recall a device in the shape of a freely rotatable bulb, with tinfoil coating, which was made to spin rapidly when connected to a static machine. It is impossible for me to convey an adequate idea of the intensity of feeling I experienced in witnessing his exhibitions of these mysterious phenomena. Every impression produced a thousand echoes in my mind. I wanted to know more of this wonderful force; I longed for experiment and investigation and resigned myself to the inevitable with aching heart. Just as I was making ready for the long journey home I received word that my father wished me to go on a shooting expedition. It was a strange request as he had been always strenuously opposed to this kind of sport. But a few days later I learned that the cholera was raging in that district and, taking advantage of an opportunity, I returned to Gospic in disregard to my parent’s wishes. It is incredible how absolutely ignorant people were as to the causes of this scourge which visited the country in intervals of fifteen to twenty years. They thought that the deadly agents were transmitted through the air and filled it with pungent odours and smoke. In the meantime they drank infested water and died in heaps. I contracted the dreadful

disease on the very day of my arrival and although surviving the crisis, I was confined to bed for nine months with scarcely any ability to move. My energy was completely exhausted and for the second time I found myself at Death's door.

In one of the sinking spells which was thought to be the last, my father rushed into the room. I still see his pallid face as he tried to cheer me in tones belying his assurance. "Perhaps," I said, "I may get well if you will let me study engineering." "You will go to the best technical institution in the world," he solemnly replied, and I knew that he meant it. A heavy weight was lifted from my mind but the relief would have come too late had it not been for a marvellous cure brought through a bitter decoction of a peculiar bean. I came to life like Lazarus to the utter amazement of everybody.

My father insisted that I spend a year in healthful physical outdoor exercise to which I reluctantly consented. For most of this term I roamed in the mountains, loaded with a hunter's outfit and a bundle of books, and this contact with nature made me stronger in body as well as in mind. I thought and planned, and conceived many ideas almost as a rule delusive. The vision was clear enough but the knowledge of principles was very limited.

In one of my invention I proposed to convey letters and packages across the seas, through a submarine tube, in spherical containers of sufficient strength to resist the hydraulic pressure. The pumping plant, intended to force the water through the tube, was accurately figured and designed and all other particulars carefully worked out. Only one trifling detail, of no consequence, was lightly dismissed. I assumed an arbitrary velocity of the water and, what is more, took pleasure in making it high, thus arriving at a stupendous performance supported by faultless calculations. Subsequent reflections, however, on the resistance of pipes to fluid flow induced me to make this invention public property.

Another one of my projects was to construct a ring around the equator which would, of course, float freely and could be arrested in its spinning motion by reactionary forces, thus enabling travel at a rate of about one thousand miles an hour, impracticable by rail. The reader will smile. The plan was difficult of execution, I will admit, but not nearly so bad as that of a well known New York professor, who wanted to pump the air from the torrid to temperate zones, entirely forgetful of the fact that the Lord had provided a gigantic machine for this purpose.

Still another scheme, far more important and attractive, was to derive power from the rotational energy of terrestrial bodies. I had discovered that objects on the earth's surface owing to the diurnal rotation of the globe, are carried by the same alternately in and against the direction of translatory movement. From this results a great change in momentum which could be utilised in the simplest imaginable manner to furnish motive effort in any habitable region of the world. I cannot find words to describe my disappointment when later I realised that I was in the predicament of Archimedes, who vainly sought for a fixed point in the universe.

At the termination of my vacation I was sent to the Poly-Technic School in Gratz, Styria (Austria), which my father had chosen as one of the oldest and best reputed institutions. That was the moment I had eagerly awaited and I began my studies under good auspices and firmly resolved to succeed. My previous training was above average, due to my father's teaching and opportunities afforded. I had acquired the knowledge of a number of languages and waded through the books of several libraries, picking up information more or

less useful. Then again, for the first time, I could choose my subjects as I liked, and free-hand drawing was to bother me no more.

I had made up my mind to give my parents a surprise, and during the whole first year I regularly started my work at three o'clock in the morning and continued until eleven at night, no Sundays or holidays excepted. As most of my fellow-students took things easily, naturally I eclipsed all records. In the course of the year I passed through nine exams and the professors thought I deserved more than the highest qualifications. Armed with their flattering certificated, I went home for a short rest, expecting triumph, and was mortified when my father made light of these hard-won honours.

That almost killed my ambition; but later, after he had died, I was pained to find a package of letters which the professors had written to him to the effect that unless he took me away from the Institution I would be killed through overwork. Thereafter I devoted myself chiefly to physics, mechanics and mathematical studies, spending the hours of leisure in the libraries.

I had a veritable mania for finishing whatever I began, which often got me into difficulties. On one occasion I started to read the works of Voltaire, when I learned, to my dismay that there were close to one hundred large volumes in small print which that monster had written while drinking seventy-two cups of black coffee per diem. It had to be done, but when I laid aside that last book I was very glad, and said, "Never more!"

My first year's showing had won me the appreciation and friendship of several professors. Among these, Professor Rogner, who was teaching arithmetical subjects and geometry; Professor Poeschl, who held the chair of theoretical and experimental physics, and Dr. Alle, who taught integral calculus and specialised in differential equations. This scientist was the most brilliant lecturer to whom I ever listened. He took a special interest in my progress and would frequently remain for an hour or two in the lecture room, giving me problems to solve, in which I delighted. To him I explained a flying machine I had conceived, not an illusory invention, but one based on sound, scientific principles, which has become realisable through my turbine and will soon be given to the world. Both Professors Rogner and Poeschl were curious men. The former had peculiar ways of expressing himself and whenever he did so, there was a riot, followed by a long embarrassing pause. Professor Poeschl was a methodical and thoroughly grounded German. He had enormous feet, and hands like the paws of a bear, but all of his experiments were skilfully performed with clock-like precision and without a miss. It was in the second year of my studies that we received a Gramoe Dyname from Paris, having the horseshoe form of a laminated field magnet, and a wire wound armature with a commutator. It was connected up and various effects of the currents were shown. While Professor Poeschl was making demonstrations, running the machine was a motor, the brushes gave trouble, sparking badly, and I observed that it might be possible to operate a motor without these appliances. But he declared that it could not be done and did me the honour of delivering a lecture on the subject, at the conclusion he remarked, "Mr. Tesla may accomplish great things, but he certainly will never do this. It would be equivalent to converting a steadily pulling force, like that of gravity into a rotary effort. It is a perpetual motion scheme, an impossible idea." But instinct is something which transcends knowledge. We have, undoubtedly, certain finer fibres that enable us to perceive truths when logical deduction, or any other wilful effort of the brain, is futile.

For a time I wavered, impressed by the professor's authority, but soon

became convinced I was right and undertook the task with all the fire and boundless confidence of my youth. I started by first picturing in my mind a direct-current machine, running it and following the changing flow of the currents in the armature. Then I would imagine an alternator and investigate the progresses taking place in a similar manner. Next I would visualise systems comprising motors and generators and operate them in various ways.

The images I saw were to me perfectly real and tangible. All my remaining term in Gratz was passed in intense but fruitless efforts of this kind, and I almost came to the conclusion that the problem was insolvable.

In 1880 I went to Prague, Bohemia, carrying out my father's wish to complete my education at the University there. It was in that city that I made a decided advance, which consisted in detaching the commutator from the machine and studying the phenomena in this new aspect, but still without result. In the year following there was a sudden change in my views of life.

I realised that my parents had been making too great sacrifices on my account and resolved to relieve them of the burden. The wave of the American telephone had just reached the European continent and the system was to be installed in Budapest, Hungary. It appeared an ideal opportunity, all the more as a friend of our family was at the head of the enterprise.

It was here that I suffered the complete breakdown of the nerves to which I have referred. What I experienced during the period of the illness surpasses all belief. My sight and hearing were always extraordinary. I could clearly discern objects in the distance when others saw no trace of them. Several times in my boyhood I saved the houses of our neighbours from fire by hearing the faint crackling sounds which did not disturb their sleep, and calling for help. In 1899, when I was past forty and carrying on my experiments in Colorado, I could hear very distinctly thunderclaps at a distance of 550 miles. My ear was thus over thirteen times more sensitive, yet at that time I was, so to speak, stone deaf in comparison with the acuteness of my hearing while under the nervous strain.

In Budapest I could hear the ticking of a watch with three rooms between me and the time-piece. A fly alighting on a table in the room would cause a dull thud in my ear. A carriage passing at a distance of a few miles fairly shook my whole body. The whistle of a locomotive twenty or thirty miles away made the bench or chair on which I sat, vibrate so strongly that the pain was unbearable. The ground under my feet trembled continuously. I had to support my bed on rubber cushions to get any rest at all. The roaring noises from near and far often produced the effect of spoken words which would have frightened me had I not been able to resolve them into their accumulated components. The sun rays, when periodically intercepted, would cause blows of such force on my brain that they would stun me. I had to summon all my will power to pass under a bridge or other structure, as I experienced the crushing pressure on the skull. In the dark I had the sense of a bat, and could detect the presence of an object at a distance of twelve feet by a peculiar creepy sensation on the forehead. My pulse varied from a few to two hundred and sixty beats and all the tissues of my body with twitchings and tremors, which was perhaps hardest to bear. A renowned physician who have me daily large doses of Bromide of Potassium, pronounced my malady unique and incurable.

It is my eternal regret that I was not under the observation of experts in physiology and psychology at that time. I clung desperately to life, but

never expected to recover. Can anyone believe that so hopeless a physical wreck could ever be transformed into a man of astonishing strength and tenacity; able to work thirty-eight years almost without a day's interruption, and find himself still strong and fresh in body and mind? Such is my case. A powerful desire to live and to continue the work and the assistance of a devoted friend, an athlete, accomplished the wonder. My health returned and with it the vigour of mind.

In attacking the problem again, I almost regretted that the struggle was soon to end. I had so much energy to spare. When I understood the task, it was not with a resolve such as men often make. With me it was a sacred vow, a question of life and death. I knew that I would perish if I failed. Now I felt that the battle was won. Back in the deep recesses of the brain was the solution, but I could net yet give it outward expression.

One afternoon, which is ever present in my recollection, I was enjoying a walk with my friend in the City Park and reciting poetry. At that age, I knew entire books by heart, word for word. One of these was Goethe's "Faust." The sun was just setting and reminded me of the glorious passage, "Sie ruckt und weicht, der Tag ist uberlebt, Dort eilt sie hin und fordert neues Leben. Oh, daß kein Flugel mich vom Boden hebt Ihr nach und immer nach zu streben! Ein schöner Traum indessen sie entweicht, Ach, au des Geistes Flügein wird so leicht Kein korperlicher Flugel sich gesellen!" As I uttered these inspiring words the idea came like a flash of lightening and in an instant the truth was revealed. I drew with a stick on the sand, the diagram shown six years later in my address before the American Institute of Electrical Engineers, and my companion understood them perfectly. The images I saw were wonderfully sharp and clear and had the solidity of metal and stone, so much so that I told him, "See my motor here; watch me reverse it." I cannot begin to describe my emotions. Pygmalion seeing his statue come to life could not have been more deeply moved. A thousand secrets of nature which I might have stumbled upon accidentally, I would have given for that one which I had wrested from her against all odds and at the peril of my existence...

Chapter 4
The Discovery of the Tesla Coil and Transformer

(The Basic Part of Every Radio and T.V.)

For a while I gave myself up entirely to the intense enjoyment of picturing machines and devising new forms. It was a mental state of happiness about as complete as I have ever known in life. Ideas came in an uninterrupted stream and the only difficulty I had was to hold them fast. The pieces of apparatus I conceived were to me absolutely real and tangible in every detail, even to the minutest marks and signs of wear. I delighted in imagining the motors constantly running, for in this way they presented to the mind's eye a fascinating sight. When natural inclination develops into a passionate desire, one advances towards his goal in seven-league boots. In less than two months I evolved virtually all the types of motors and modifications of the system which are now identified with my name, and which are used under many other names all over the world. It was, perhaps, providential that the necessities of existence commanded a temporary halt to this consuming activity of the mind.

I came to Budapest prompted by a premature report concerning the telephone enterprise and, as irony of fate willed it, I had to accept a position as draughtsman in the Central Telegraph Office of the Hungarian Government at a salary which I deem it my privilege not to disclose. Fortunately, I soon won the interest of the Inspector-in-Chief and was thereafter employed on calculations, designs and estimates in connection with new installations, until the Telephone exchange started, when I took charge of the same. The knowledge and practical experience I gained in the course of this work, was most valuable and the employment gave me ample opportunities for the exercise of my inventive faculties. I made several improvements in the Central Station apparatus and perfected a telephone repeater or amplifier which was never patented or publicly described but would be creditable to me even today. In recognition of my efficient assistance the organiser of the undertaking, Mr. Puskas, upon disposing of his business in Budapest, offered me a position in Paris which I gladly accepted.

I never can forget the deep impression that magic city produced on my mind. For several days after my arrival, I roamed through the streets in utter bewilderment of the new spectacle. The attractions were many and irresistible, but, alas, the income was spent as soon as received. When Mr. Puskas asked me how I was getting along in the new sphere, I described the situation accurately in the statement that "The last twenty-nine days of the month are the toughest." I led a rather strenuous life in what would now be termed "Rooseveltian fashion." Every morning, regardless of the weather, I would go from the Boulevard St. Marcel, where I resided, to a bathing house on the Seine; plunge into the water, loop the circuit twenty-seven times and then walk an hour to reach Ivry, where the Company's factory was located. There I would have a wood-chopper's breakfast at half-past seven o'clock and then eagerly await the lunch hour, in the meanwhile cracking hard nuts for the Manager of the Works, Mr. Charles Batchellor, who was an intimate friend and assistant of Edison. Here I was thrown in contact with a few Americans who fairly fell in love with my because of my proficiency in Billiards! To these men I explained my invention and one of them, Mr. D. Cunningham, foreman of

the Mechanical Department, offered to form a stock company. The proposal seemed to me comical in the extreme. I did not have the faintest conception of what he meant, except that it was an American way of doing things. Nothing came of it, however, and during the next few months I had to travel from one place to another in France and Germany to cure the ills of the power plants.

On my return to Paris, I submitted to one of the administrators of the Company, Mr. Rau, a plan for improving their dynamos and was given an opportunity. My success was complete and the delighted directors accorded me the privilege of developing automatic regulators which were much desired. Shortly after, there was some trouble with the lighting plant which had been installed at the new railroad station in Straßburg, Alsace. The wiring was defective and on the occasion of the opening ceremonies, a large part of a wall was blown out through a short-circiut, right in the presence of old Emperor William I. The German Government refused to take the plant and the French Company was facing a serious loss. On account of my knowledge of the German language and past experience, I was entrusted with the difficult task of straightening out matters and early in 1883, I went to Straßburg on that mission.

Some of the incidents in that city have left an indelible record on my memory. By a curious coincidence, a number of the men who subsequently achieve fame, lived there about that time. In later life I used to say, “There were bacteria of greatness in that old town.” Others caught the disease, but I escaped!” The practical work, correspondence, and conferences with officials kept me preoccupied day and night, but as soon as I was able to manage, I undertook the construction of a simple motor in a mechanical shop opposite the rail-road station, having brought with me from Paris some material for that purpose. The consummation of the experiment was, however, delayed until the summer of that year, when I finally had the satisfaction of seeing the rotation effected by alternating currents of different phase, and without sliding contacts or commutator, as I had conceived a year before. It was an exquisite pleasure but not to compare with the delirium of joy following the first revelation.

Among my new friends was the former Mayor of the city, Mr. Sauzin, whom I had already, in a measure, acquainted with this and other inventions of mine and whose support I endeavoured to enlist. He was sincerely devoted to me and put my project before several wealthy persons, but to my mortification, found no response. He wanted to help me in every possible way and the approach of the first of July, 1917, happens to remind me of a form of “assistance” I received from that charming man, which was not financial, but none the less appreciated. In 1870, when the Germans invaded the country, Mr. Sauzin had buried a good sized allotment of St. Estephe of 1801 and he came to the conclusion that he knew no worthier person than myself, to consume that precious beverage. This, I may say, is one of the unforgettable incidents to which I have referred. My friend urged me to return to Paris as soon as possible and seek support there. This I was anxious to do, but my work and negotiations were protracted, owing to all sorts of petty obstacles I encountered, so that at times the situation seemed hopeless. Just to give an idea of German thoroughness and “efficiency,” I may mention here a rather funny experience.

An incandescent lamp of 16 c.p. was to be placed in a hallway, and upon selected the proper location, I ordered the “monteur” to run the wires. After working for a while, he concluded that the engineer had to be consulted and this was done. The latter made several objections but ultimately agreed that the lamp should be placed two inches from the spot I had assigned, whereupon the work proceeded. Then the engineer became worried and told me that Inspector Averdeck should be notified. That important person was called,

he investigated, debated, and decided that the lamp should be shifted back two inches, which was the placed I had marked! It was not long, however, before Averdeck got cold feet himself and advised me that he had informed Ober-Inspector Hieronimus of the matter and that I should await his decision. It was several days before the Ober-Inspector was able to free himself of other pressing duties, but at last he arrived and a two hour debate followed, when he decided to move the lamp two inches further. My hopes that this was the final act, were shattered when the Ober-Inspector returned and said to me, "Regierungsrath Funke is particular that I would not dare to give an order for placing this lamp without his explicit approval." Accordingly, arrangements for a visit from that great man were made. We started cleaning up and polishing early in the morning, and when Funke came with his retinue he was ceremoniously received. After two hours of deliberation, he suddenly exclaimed, "I must be going!," and pointing to a place on the ceiling, he ordered me to put the lamp there. It was the exact spot which I had originally chosen! So it went day after day with variations, but I was determined to achieve, at whatever cost, and in the end my efforts were rewarded.

By the spring of 1884, all the differences were adjusted, the plant formally accepted, and I returned to Paris with pleasing anticipation. One of the administrators had promised me a liberal compensation in case I succeeded, as well as a fair consideration of the improvements I had made to their dynamos and I hoped to realise a substantial sum. There were three administrators, whom I shall designate as A, B, and C for convenience. When I called on A, he told me that B had the say. This gentleman thought that only C could decide, and the latter was quite sure that A alone had the power to act. After several laps of this circulus viciousus, it dawned upon me that my reward was a castle in Spain.

The utter failure of my attempts to raise capital for development was another disappointment, and when Mr. Bachelor pressed me to go to America with a view of redesigning the Edison machines, I determined to try my fortunes in the Land of Golden Promise. But the chance was nearly missed. I liquefied my modest assets, secured accommodations and found myself at the railroad station as the train was pulling out. At that moment, I discovered that my money and tickets were gone. What to do was the question. Hercules had plenty of time to deliberate, but I had to decide while running alongside the train with opposite feeling surging in my brain like condenser oscillations. Resolve, helped by dexterity, won out in the nick of time and upon passing through the usual experience, as trivial and unpleasant, I managed to embark for New York with the remnants of my belongings, some poems and articles I had written, and a package of calculations relating to solutions of an unsolvable integral and my flying machine. During the voyage I sat most of the time at the stern of the ship watching for an opportunity to save somebody from a watery grave, without the slightest thought of danger. Later, when I had absorbed some of the practical American sense, I shivered at the recollection and marvelled at my former folly. The meeting with Edison was a memorable event in my life. I was amazed at this wonderful man who, without early advantages and scientific training, had accomplished so much. I had studied a dozen languages, delved in literature and art, and had spent my best years in libraries reading all sorts of stuff that fell into my hands, from Newton's "Principia" to the novels of Paul de Kock, and felt that most of my life had been squandered. But it did not take long before I recognised that it was the best thing I could have done. Within a few weeks I had won Edison's confidence, and it came about in this way.

The S.S. Oregon, the fastest passenger steamer at that time, had both of

its lighting machines disabled and its sailing was delayed. As the super-structure had been built after their installation, it was impossible to remove them from the hold. The predicament was a serious one and Edison was much annoyed. In the evening I took the necessary instruments with me and went aboard the vessel where I stayed for the night. The dynamos were in bad condition, having several short-circuits and breaks, but with the assistance of the crew, I succeeded in putting them in good shape. At five o'clock in the morning, when passing along Fifth Avenue on my way to the shop, I met Edison with Bachelor and a few others, as they were returning home to retire. "Here is our Parisian running around at night," he said. When I told him that I was coming from the Oregon and had repaired both machines, he looked at me in silence and walked away without another word. But when he had gone some distance I heard him remark, "Bachelor, this is a good man." And from that time on I had full freedom in directing the work. For nearly a year my regular hours were from 10:30 A.M. until 5 o'clock the next morning without a day's exception. Edison said to me, "I have had many hard working assistants, but you take the cake." During this period I designed twenty-four different types of standard machines with short cores and uniform pattern, which replaced the old ones. The Manager had promised me fifty thousand dollars on the completion of this task, but it turned out to be a practical joke. This gave me a painful shock and I resigned my position.

Immediately thereafter, some people approached me with the proposal of forming an arc light company under my name, to which I agreed. Here finally, was an opportunity to develop the motor, but when I broached the subject to my new associates they said, "No, we want the arc lamp. We don't care for this alternating current of yours." In 1886 my system of arc lighting was perfected and adopted for factory and municipal lighting, and I was free, but with no other possession than a beautifully engraved certificate of stock of hypothetical value. Then followed a period of struggle in the new medium for which I was not fitted, but the reward came in the end, and in April, 1887, the TESLA Electric Co. was organised, providing a laboratory and facilities. The motors I built there were exactly as I had imagined them. I made no attempt to improve the design, but merely reproduced the pictures as they appeared to my vision and the operation was always as I expected.

In the early part of 1888, an arrangement was made with the Westinghouse Company for the manufacture of the motors on a large scale. But great difficulties had still to be overcome. My system was based on the use of low frequency currents and the Westinghouse experts had adopted 133 cycles with the objects of securing advantages in transformation. They did not want to depart with their standard forms of apparatus and my efforts had to be concentrated upon adapting the motor to these conditions. Another necessity was to produce a motor capable of running efficiently at this frequency on two wire, which was not an easy accomplishment.

At the close of 1889, however, my services in Pittsburgh being no longer essential, I returned to New York and resumed experimental work in a Laboratory on Grand Street, where I began immediately the design of high-frequency machines. The problems of construction in this unexplored field were novel and quite peculiar, and I encountered many difficulties. I rejected the inductor type, fearing that it might not yield perfect sine waves, which were so important to resonant action. Had it not been for this, I could have saved myself a great deal of labour. Another discouraging feature of the high-frequency alternator seemed to be the inconstancy of speed which threatened to impose serious limitations to its use. I had already noted in my demonstrations before the American Institution of Electrical Engineers, that several times

the tune was lost, necessitating readjustment, and did not yet foresee what I discovered long afterwards, – a means of operating a machine of this kind at a speed constant to such a degree as not to vary more than a small fraction of one revolution between the extremes of load. From many other considerations, it appeared desirable to invent a simpler device for the production of electric oscillations.

In 1856, Lord Kelvin had exposed the theory of the condenser discharge, but no practical application of that important knowledge was made. I saw the possibilities and undertook the development of induction apparatus on this principle. My progress was so rapid as to enable me to exhibit at my lecture in 1891, a coil giving sparks of five inches. On that occasion I frankly told the engineers of a defect involved in the transformation by the new method, namely, the loss in the spark gap. Subsequent investigation showed that no matter what medium is employed, –be it air, hydrogen, mercury vapour, oil, or a stream of electrons, the efficiency is the same. It is a law very much like the governing of the conversion of mechanical energy. We may drop a weight from a certain height vertically down, or carry it to the lower level along any devious path; it is immaterial insofar as the amount of work is concerned. Fortunately however, this drawback is not fatal, as by proper proportioning of the resonant, circuits of an efficiency of 85 percent is attainable. Since my early announcement of the invention, it has come into universal use and wrought a revolution in many departments, but a still greater future awaits it.

When in 1900 I obtained powerful discharges of 1,000 feet and flashed a current around the globe, I was reminded of the first tiny spark I observed in my Grand Street laboratory and was thrilled by sensations akin to those I felt when I discovered the rotating magnetic field.

Chapter 5

As I review the events of my past life I realise how subtle are the influences that shape our destinies. An incident of my youth may serve to illustrate. One winter's day I managed to climb a steep mountain, in company with other boys. The snow was quite deep and a warm southerly wind made it just suitable for our purpose. We amused ourselves by throwing balls which would roll down a certain distance, gathering more or less snow, and we tried to out-do one another in this sport. Suddenly a ball was seen to go beyond the limit, swelling to enormous proportions until it became as big as a house and plunged thundering into the valley below with a force that made the ground tremble. I looked on spell-bound incapable of understanding what had happened. For weeks afterward the picture of the avalanche was before my eyes and I wondered how anything so small could grow to such an immense size.

Ever since that time the magnification of feeble actions fascinated me, and when, years later, I took up the experimental study of mechanical and electrical resonance, I was keenly interested from the very start. Possibly, had it not been for that early powerful impression I might not have followed up the little spark I obtained with my coil and never developed my best invention, the true history of which I will tell.

Many technical men, very able in their special departments, but dominated by a pedantic spirit and near-sighted, have asserted that excepting the induction motor, I have given the world little of practical use. This is a grievous mistake. A new idea must not be judged by its immediate results. My alternating system of power transmission came at a psychological moment, as a long sought answer to pressing industrial questions, and although considerable resistance had to be overcome and opposing interests reconciled, as usual, the commercial introduction could not be long delayed. Now, compare this situation with that confronting my turbines, for example. One should think that so simple and beautiful an invention, possessing many features of an ideal motor, should be adopted at once and, undoubtedly, it would under similar conditions. But the prospective effect of the rotating field was not to render worthless existing machinery; on the contrary, it was to give it additional value. The system lent itself to new enterprise as well as to improvement of the old. My turbine is an advance of a character entirely different. It is a radical departure in the sense that its success would mean the abandonment of the antiquated types of prime movers on which billions of dollars have been spent. Under such circumstances, the progress must needs be slow and perhaps the greatest impediment is encountered in the prejudicial opinions created in the minds of experts by organised opposition.

Only the other day, I had a disheartening experience when I met my friend and former assistant, Charles F. Scott, now professor of Electric Engineering at Yale. I had not seen him for a long time and was glad to have an opportunity for a little chat at my office. Our conversation, naturally enough, drifted on my turbine and I became heated to a high degree. "Scott," I exclaimed, carried away by the vision of a glorious future, "My turbine will scrap all the heat engines in the world." Scott stroked his chin and looked away thoughtfully, as though making a mental calculation. "That will make quite a pile of scrap," he said, and left without another word!

These and other inventions of mine, however, were nothing more than steps

forward in a certain directions. In evolving them, I simply followed the inborn instinct to improve the present devices without any special thought of our far more imperative necessities. The "Magnifying Transmitter" was the product of labours extending through years, having for their chief object, the solution of problems which are infinitely more important to mankind than mere industrial development.

If my memory serves me right, it was in November, 1890, that I performed a laboratory experiment which was one of the most extraordinary and spectacular ever recorded in the annal of Science. In investigating the behaviour of high frequency currents, I had satisfied myself that an electric field of sufficient intensity could be produced in a room to light up electrodeless vacuum tubes. Accordingly, a transformer was built to test the theory and the first trial proved a marvellous success. It is difficult to appreciate what those strange phenomena meant at the time. We crave for new sensations, but soon become indifferent to them. The wonders of yesterday are today common occurrences. When my tubes were first publicly exhibited, they were viewed with amazement impossible to describe. From all parts of the world, I received urgent invitations and numerous honours and other flattering inducements were offered to me, which I declined. But in 1892 the demand became irresistible and I went to London where I delivered a lecture before the institution of Electrical Engineers.

It has been my intention to leave immediately for Paris in compliance with a similar obligation, but Sir James Dewar insisted on my appearing before the Royal Institution. I was a man of firm resolve, but succumbed easily to the forceful arguments of the great Scotchman. He pushed me into a chair and poured out half a glass of a wonderful brown fluid which sparkled in all sorts of iridescent colours and tasted like nectar. "Now," said he, "you are sitting in Faraday's chair and you are enjoying whiskey he used to drink." (Which did not interest me very much, as I had altered my opinion concerning strong drink). The next evening I have a demonstration before the Royal Institution, at the termination of which, Lord Rayleigh addressed the audience and his generous words gave me the first start in these endeavours. I fled from London and later from Paris, to escape favours showered upon me, and journeyed to my home, where I passed through a most painful ordeal and illness.

Upon regaining my health, I began to formulate plans for the resumption of work in America. Up to that time I never realised that I possessed any particular gift of discovery, but Lord Rayleigh, whom I always considered as an ideal man of science, had said so and if that was the case, I felt that I should concentrate on some big idea.

At this time, as at many other times in the past, my thoughts turned towards my Mother's teaching. The gift of mental power comes from God, Divine Being, and if we concentrate our minds on that truth, we become in tune with this great power. My Mother had taught me to seek all truth in the Bible; therefore I devoted the next few months to the study of this work.

One day, as I was roaming the mountains, I sought shelter from an approaching storm. The sky became overhung with heavy clouds, but somehow the rain was delayed until, all of a sudden, there was a lightening flash and a few moments after, a deluge. This observation set me thinking. It was manifest that the two phenomena were closely related, as cause and effect, and a little reflection led me to the conclusion that the electrical energy involved in the precipitation of the water was inconsiderable, the function of the lightening being much like that of a sensitive trigger. Here was a stupendous possibility of

achievement. If we could produce electric effects of the required quality, this whole planet and the conditions of existence on it could be transformed. The sun raises the water of the oceans and winds drive it to distant regions where it remains in a state of most delicate balance. If it were in our power to upset it when and wherever desired, this might life sustaining stream could be at will controlled. We could irrigate arid deserts, create lakes and rivers, and provide motive power in unlimited amounts. This would be the most efficient way of harnessing the sun to the uses of man. The consummation depended on our ability to develop electric forces of the order of those in nature.

It seemed a hopeless undertaking, but I made up my mind to try it and immediately on my return to the United States in the summer of 1892, after a short visit to my friends in Watford, England; work was begun which was to me all the more attractive, because a means of the same kind was necessary for the successful transmission of energy without wires.

At this time I made a further careful study of the Bible, and discovered the key in Revelation. The first gratifying result was obtained in the spring of the succeeding year, when I reaching a tension of about 100,000,000 volts — one hundred million volts — with my conical coil, which I figured was the voltage of a flash of lightening. Steady progress was made until the destruction of my laboratory by fire, in 1895, as may be judged from an article by T.C. Martin which appeared in the April number of the Century Magazine. This calamity set me back in many ways and most of that year had to be devoted to planning and reconstruction. However, as soon as circumstances permitted, I returned to the task.

Although I knew that higher electric-motive forces were attainable with apparatus of larger dimensions, I had an instinctive perception that the object could be accomplished by the proper design of a comparatively small and compact transformer. In carrying on tests with a secondary in the form of flat spiral, as illustrated in my patents, the absence of streamers surprised me, and it was not long before I discovered that this was due to the position of the turns and their mutual action. Profiting from this observation, I resorted to the use of a high tension conductor with turns of considerable diameter, sufficiently separated to keep down the distributed capacity, while at the same time preventing undue accumulation of the charge at any point. The application of this principle enabled me to produce pressures of over 100,000,000 volts, which was about the limit obtainable without risk of accident. A photograph of my transmitter built in my laboratory at Houston Street, was published in the Electrical Review of November, 1898.

In order to advance further along this line, I had to go into the open, and in the spring of 1899, having completed preparations for the erection of a wireless plant, I went to Colorado where I remained for more than one year. Here I introduced other improvements and refinements which made it possible to generate currents of any tension that may be desired. Those who are interested will find some information in regard to the experiments I conducted there in my article, “The Problem of Increasing Human Energy,” in the Century Magazine of June 1900, to which I have referred on a previous occasion.

I will be quite explicit on the subject of my magnifying transformer so that it will be clearly understood. In the first place, it is a resonant transformer, with a secondary in which the parts, charged to a high potential, are of considerable area and arranged in space along ideal enveloping surfaces of very large radii of curvature, and at proper distances from one another, thereby

insuring a small electric surface density everywhere, so that no leak can occur even if the conductor is bare. It is suitable for any frequency, from a few to many thousands of cycles per second, and can be used in the production of currents of tremendous volume and moderate pressure, or of smaller amperage and immense electromotive force. The maximum electric tension is merely dependent on the curvature of the surfaces on which the charged elements are situated and the area of the latter. Judging from my past experience there is no limit to the possible voltage developed; any amount is practicable. On the other hand, currents of many thousands of amperes may be obtained in the antenna. A plant of but very moderate dimensions is required for such performances. Theoretically, a terminal of less than 90 feet in diameter is sufficient to develop an electromotive force of that magnitude, while for antenna currents of from 2,000-4,000 amperes at the usual frequencies, it need not be larger than 30 feet in diameter. In a more restricted meaning, this wireless transmitter is one in which the Hertzwave radiation is an entirely negligible quantity as compared with the whole energy, under which condition the damping factor is extremely small and an enormous charge is stored in the elevated capacity. Such a circuit may then be excited with impulses of any kind, even of low frequency and it will yield sinusoidal and continuous oscillations like those of an alternator. Taken in the narrowest significance of the term, however, it is a resonant transformer which, besides possessing these qualities, is accurately proportioned to fit the globe and its electrical constants and properties, by virtue of which design it becomes highly efficient and effective in the wireless transmission of energy. Distance is then ABSOLUTELY ELIMINATED, THERE BEING NO DIMINUATION IN THE INTENSITY of the transmitted impulses. It is even possible to make the actions increase with the distance from the plane, according to an exact mathematical law. This invention was one of a number comprised in my "World System" of wireless transmission which I undertook to commercialise on my return to New York in 1900.

As to the immediate purposes of my enterprise, they were clearly outlined in a technical statement of that period from which I quote, "The world system has resulted from a combination of several original discoveries made by the inventor in the course of long continued research and experimentation. It makes possible not only the instantaneous and precise wireless transmission of any kind of signals, messages or characters, to all parts of the world, but also the inter-connection of the existing telegraph, telephone, and other signal stations without any change in their present equipment. By its means, for instance, a telephone subscriber here may call up and talk to any other subscriber on the Earth. An inexpensive receiver, not bigger than a watch, will enable him to listen anywhere, on land or sea, to a speech delivered or music played in some other place, however distant."

These examples are cited merely to give an idea of the possibilities of this great scientific advance, which annihilates distance and makes that perfect natural conductor, the Earth, available for all the innumerable purposes which human ingenuity has found for a line-wire. One far-reaching result of this is that any device capable of being operated through one or more wires (at a distance obviously restricted) can likewise be actuated, without artificial conductors and with the same facility and accuracy, at distances to which there are no limits other than those imposed by the physical dimensions of the earth. Thus, not only will entirely new fields for commercial exploitation be opened up by this ideal method of transmission, but the old ones vastly extended. The World System is based on the application of the following import and inventions and discoveries:

1) The Tesla Transformer: This apparatus is in the production of elec-

trical vibrations as revolutionary as gunpowder was in warfare. Currents many times stronger than any ever generated in the usual ways and sparks over one hundred feet long, have been produced by the inventor with an instrument of this kind.

2) The Magnifying Transmitter: This is Tesla's best invention, a peculiar transformer specially adapted to excite the earth, which is in the transmission of electrical energy when the telescope is in astronomical observation. By the use of this marvellous device, he has already set up electrical movements of greater intensity than those of lightening and passed a current, sufficient to light more than two hundred incandescent lamps, around the Earth.

3) The Tesla Wireless System: This system comprises a number of improvements and is the only means known for transmitting economically electrical energy to a distance without wires. Careful tests and measurements in connection with an experimental station of great activity, erected by the inventor in Colorado, have demonstrated that power in any desired amount can be conveyed, clear across the Globe if necessary, with a loss not exceeding a few per cent.

4) The Art of Individualisation: This invention of Tesla is to primitive Tuning, what refined language is to unarticulated expression. It makes possible the transmission of signals or messages absolutely secret and exclusive both in the active and passive aspect, that is, non-interfering as well as non-interferable. Each signal is like an individual of unmistakable identity and there is virtually no limit to the number of stations or instruments which can be simultaneously operated without the slightest mutual disturbance.

5) The Terrestrial Stationary Waves: This wonderful discovery, popularly explained, means that the Earth is responsive to electrical vibrations of definite pitch, just as a tuning fork to certain waves of sound. These particular electrical vibrations, capable of powerfully exciting the Globe, lend themselves to innumerable uses of great importance commercially and in many other respects. The "first World System" power plant can be put in operation in nine months. With this power plant, it will be practicable to attain electrical activities up to ten million horse-power and it is designed to serve for as many technical achievements as are possible without due expense. Among these are the following:

1) The inter-connection of existing telegraph exchanges or offices all over the world;
2) The establishment of a secret and non-interferable government telegraph service;
3) The inter-connection of all present telephone exchanges or offices around the Globe;
4) The universal distribution of general news by telegraph or telephone, in conjunction with the Press;
5) The establishment of such a "World System" of intelligence transmission for exclusive private use;
6) The inter-connection and operation of all stock tickers of the world;
7) The establishment of a World system — of musical distribution, etc.;
8) The universal registration of time by cheap clocks indicating the hour with astronomical precision and requiring no attention whatever;
9) The world transmission of typed or hand-written characters, letters, checks, etc.;
10) The establishment of a universal marine service enabling the navigators of all ships to steer perfectly without compass, to determine the exact location, hour and speak; to prevent collisions and disasters, etc.;

11) The inauguration of a system of world printing on land and sea;
12) The world reproduction of photographic pictures and all kinds of drawings or records..."

I also proposed to make demonstration in the wireless transmission of power on a small scale, but sufficient to carry conviction. Besides these, I referred to other and incomparably more important applications of my discoveries which will be disclosed at some future date. A plant was built on Long Island with a tower 187 feet high, having a spherical terminal about 68 feet in diameter. These dimensions were adequate for the transmission of virtually any amount of energy. Originally, only from 200 to 300 K.W. were provided, but I intended to employ later several thousand horsepower. The transmitter was to emit a wave-complex of special characteristics and I had devised a unique method of telephonic control of any amount of energy. The tower was destroyed two years ago (1917) but my projects are being developed and another one, improved in some features will be constructed.

On this occasion I would contradict the widely circulated report that the structure was demolished by the Government, which owing to war conditions, might have created prejudice in the minds of those who may not know that the papers, which thirty years ago conferred upon me the honour of American citizenship, are always kept in a safe, while my orders, diplomas, degrees, gold medals and other distinctions are packed away in old trunks. If this report had a foundation, I would have been refunded a large sum of money which I expended in the construction of the tower. On the contrary, it was in the interest of the Government to preserver it, particularly as it would have made possible, to mention just one valuable result, the location of a submarine in any part of the world. My plant, services, and all my improvements have always been at the disposal of the officials and ever since the outbreak of the European conflict, I have been working at a sacrifice on several inventions of mine relating to aerial navigation, ship propulsion and wireless transmission, which are of the greatest importance to the country. Those who are well informed know that my ideas have revolutionised the industries of the United States and I am not aware that there lives an inventor who has been, in this respect, as fortunate as myself, — especially as regards the use of his improvements in the war.

I have refrained from publicly expressing myself on this subject before, as it seemed improper to dwell on personal matters while all the world was in dire trouble. I would add further, in view of various rumours which have reached me, that Mr. J. Pierpont Morgan did not interest himself with me in a business way, but in the same large spirit in which he has assisted many other pioneers. He carried out his generous promise to the letter and it would have been most unreasonable to expect from him anything more. He had the highest regard for my attainments and gave me every evidence of his complete faith in my ability to ultimately achieve what I had set out to do. I am unwilling to accord to some small-minded and jealous individuals the satisfaction of having thwarted my efforts. These men are to me nothing more than microbes of a nasty disease. My project was retarded by laws of nature. The world was not prepared for it. It was too far ahead of time, but the same laws will prevail in the end and make it a triumphal success.

Chapter 6

No subject to which I have ever devoted myself has called for such concentration of mind, and strained to so dangerous a degree the finest fibres of my brain, as the systems of which the Magnifying transmitter is the foundation. I put all the intensity and vigour of youth in the development of the rotating field discoveries, but those early labours were of a different character. Although strenuous in the extreme, they did not involve that keen and exhausting discernment which had to be exercised in attacking the many problems of the wireless.

Despite my rare physical endurance at that period, the abused nerves finally rebelled and I suffered a complete collapse, just as the consummation of the long and difficult task was almost in sight. Without doubt I would have paid a greater penalty later, and very likely my career would have been prematurely terminated, had not providence equipped me with a safety device, which seemed to improve with advancing years and unfailingly comes to play when my forces are at an end. So long as it operates I am safe from danger, due to overwork, which threatens other inventors, and incidentally, I need no vacations which are indispensable to most people. When I am all but used up, I simply do as the darkies who "naturally fall asleep while white folks worry."

To venture a theory out of my sphere, the body probably accumulates little by little a definite quantity of some toxic agent and I sink into a nearly lethargic state which lasts half an hour to the minute. Upon awakening I have the sensation as though the events immediately preceding had occurred very long ago, and if I attempt to continue the interrupted train of thought I feel veritable nausea. Involuntarily, I then turn to other and am surprised at the freshness of the mind and ease with which I overcome obstacles that had baffled me before. After weeks or months, my passion for the temporarily abandoned invention returns and I invariably find answers to all the vexing questions, with scarcely any effort. In this connection, I will tell of an extraordinary experience which may be of interest to students of psychology.

I had produced a striking phenomenon with my grounded transmitter and was endeavouring to ascertain its true significance in relation to the currents propagated through the earth. It seemed a hopeless undertaking, and for more than a year I worked unremittingly, but in vain. This profound study so entirely absorbed me, that I became forgetful of everything else, even of my undermined health. At last, as I was at the point of breaking down, nature applied the preservative inducing lethal sleep. Regaining my senses, I realised with consternation that I was unable to visualise scenes from my life except those of infancy, the very first ones that had entered my consciousness. Curiously enough, these appeared before my vision with startling distinctness and afforded me welcome relief. Night after night, when retiring, I would think of them and more and more of my previous existence was revealed. The image of my mother was always the principal figure in the spectacle that slowly unfolded, and a consuming desire to see her again gradually took possession of me. This feeling grew so strong that I resolved to drop all work and satisfy my longing, but I found it too hard to break away from the laboratory, and several months elapsed during which I had succeeded in reviving all the impressions of my past life, up to the spring of 1892. In the next picture that came out of the mist of oblivion, I saw myself at the Hotel de la Paix in Paris, just coming to from one of my peculiar sleeping spells, which had

been caused by prolonged exertion of the brain. Imagine the pain and distress I felt, when it flashed upon my mind that a dispatch was handed to me at that very moment, bearing the sad news that my mother was dying. I remembered how I made the long journey home without an hour of rest and how she passed away after weeks of agony.

It was especially remarkable that during all this period of partially obliterated memory, I was fully alive to everything touching on the subject of my research. I could recall the smallest detail and the least insignificant observations in my experiments and even recite pages of text and complex mathematical formulae.

My belief is firm in a law of compensation. The true rewards are ever in proportion to the labour and sacrifices made. This is one of the reasons why I feel certain that of all my inventions, the magnifying Transmitter will prove most important and valuable to future generations. I am prompted to this prediction, not so much by thoughts of the commercial and industrial revolution which it will surely bring about, but of the humanitation consequences of the many achievements it makes possible. Considerations of mere utility weigh little in the balance against the higher benefits of civilisation. We are confronted with portentous problems which can not be solved just by providing for our material existence, however abundantly. On the contrary, progress in this direction is fraught with hazards and perils not less menacing than those born from want and suffering. If we were to release the energy of atoms or discover some other way of developing cheap and unlimited power at any point on the globe, this accomplishment, instead of being a blessing, might bring disaster to mankind in giving rise to dissension and anarchy, which would ultimately result in the enthronement of the hated regime of force. The greatest good will come from technical improvements tending to unification and harmony, and my wireless transmitter is preeminently such. By its means, the human voice and likeness will be reproduced everywhere and factories driven thousands of miles from waterfalls furnishing power. Aerial machines will be propelled around the earth without a stop and the sun's energy controlled to create lakes and rivers for motive purposes and transformation of arid deserts into fertile land. Its introduction for telegraphic, telephonic and similar uses, will automatically cut out the statics and all other interferences which at present, impose narrow limits to the application of the wireless. This is a timely topic on which a few words might not be amiss.

During the past decade a number of people have arrogantly claimed that they had succeeded in doing away with this impediment. I have carefully examined all of the arrangements described and tested most of them long before they were publicly disclosed, but the finding was uniformly negative. Recent official statement from the U.S. Navy may, perhaps, have taught some beguilable news editors how to appraise these announcements at their real worth. As a rule, the attempts are based on theories so fallacious, that whenever they come to my notice, I can not help thinking in a light vein. Quite recently a new discovery was heralded, with a deafening flourish of trumpets, but it proved another case of a mountain bringing forth a mouse. This reminds me of an exciting incident which took place a year ago, when I was conducting my experiments with currents of high frequency.

Steve Brodie had just jumped off the Brooklyn Bridge. The feat has been vulgarised since by imitators, but the first report electrified New York. I was very impressionable then and frequently spoke of the daring printer. On a hot afternoon I felt the necessity of refreshing myself and stepped into

one of the popular thirty thousand institutions of this great city, where a delicious twelve per cent beverage was served, which can now be had only by making a trip to the poor and devastated countries of Europe. The attendance was large and not over-distinguished and a matter was discussed which gave me an admirable opening for the careless remark, "This is what I said when I jumped off the bridge." No sooner had I uttered these words, than I felt like the companion of Timothens, in the poem of Schiller. In an instant there was pandemonium and a dozen voices cried, "It is Brodie!" I threw a quarter on the counter and bolted for the door, but the crowd was at my heels with yells, – "Stop, Steeve!", which must have been misunderstood, for many persons tried to hold me up as I ran frantically for my haven of refuge. By darting around corners I fortunately managed, through the medium of a fire escape, to reach the laboratory, where I threw off my coat, camouflaged myself as a hard-working blacksmith and started the forge. But these precautions proved unnecessary, as I had eluded my pursuers. For many years afterward, at night, when imagination turns into spectres the trifling troubles of the day, I often thought, as I tossed on the bed, what my fate would have been, had the mob caught me and found out that I was not Steve Brodie!

Now the engineer who lately gave an account before a technical body of a novel remedy against statics based on a "heretofore unknown law of nature," seems to have been as reckless as myself when he contended that these disturbances propagate up and down, while those of a transmitter proceed along the earth. It would mean that a condenser as this globe, with its gaseous envelope, could be charged and discharged in a manner quite contrary to the fundamental teachings propounded in every elemental text book of physics. Such a supposition would have been condemned as erroneous, even in Franklin's time, for the facts bearing on this were then well known and the identity between atmospheric electricity and that developed by machines was fully established. Obviously, natural and artificial disturbances propagate through the earth and the air in exactly the same way, and both set up electromotive forces in the horizontal, as well as vertical sense. Interference can not be overcome by any such methods as were proposed. The truth is this: In the air the potential increases at the rate of about fifty volts per foot of elevation, owing to which there may be a difference of pressure amounting to twenty, or even forty thousand volts between the upper and lower ends of the antenna. The masses of the charged atmosphere are constantly in motion and give up electricity to the conductor, not continuously, but rather disruptively, this producing a grinding noise in a sensitive telephonic receiver. The higher the terminal and the greater the space encompast by the wires, the more pronounced is the effect, but it must be understood that it is purely local and has little to do with the real trouble.

In 1900, while perfecting my wireless system, one form of apparatus compressed four antennae. These were carefully calibrated in the same frequency and connected in multiple with the object of magnifying the action in receiving from any direction. When I desired to ascertain the origin of the transmitted impulse, each diagonally situated pair was put in series with a primary coil energising the detector circuit. In the former case, the sound was loud in the telephone; in the latter it ceased, as expected, – the two antennae neutralising each other, but the true statics manifested themselves in both instances and I had to devise special preventives embodying different principles. By employing receivers connected to two points of the ground, as suggested by me long ago, this trouble caused by the charged air, which is very serious in the structures as now built, is nullified and besides, the liability of all kinds of interference is reduced to about one-half because of the directional character of the circuit. This was perfectly self-evident, but

came as a revelation to some simple-minded wireless folks whose experience was confined to forms of apparatus that could have been improved with an axe, and they have been disposing of the bear's skin before killing him. If it were true that strays performed such antics, it would be easy to get rid of them by receiving without aerials. But, as a matter of fact, a wire buried in the ground which, conforming to this view, should be be absolutely immune, is more susceptible to certain extraneous impulses than one placed vertically in the air. To state it fairly, a slight progress has been made, but not by virtue of any particular method or device. It was achieved simply by discerning the enormous structures, which are bad enough for transmission but wholly unsuitable for reception and adopting a more appropriate type of receiver. As I have said before, to dispose of this difficulty for good, a radical change must be made in the system and the sooner this is done the better.

It would be calamitous, indeed, if at this time when the art is in its infancy and the vast majority, not excepting even experts, have no conception of its ultimate possibilities, a measure would be rushed through the legislature making it a government monopoly. This was proposed a few weeks ago by Secretary Daniels and no doubt that distinguished official has made his appeal to the Senate and House of Representatives with sincere conviction. But universal evidence unmistakably shows that the best results are always obtained in healthful commercial competition. there are, however, exceptional reasons why wireless should be given the fullest freedom of development. In the first place, it offers prospects immeasurably greater and more vital to betterment of human life than any other invention or discovery in the history of man. Then again, it must be understood that this wonderful art has been, in its entirety, evolved here and can be called "American" with more right and propriety than the telephone, the incandescent lamp or the aeroplane.

Enterprising press agents and stock jobbers have been so successful in spreading misinformation, that even so excellent a periodical as the *Scientific American*, accords the chief credit to a foreign country. The Germans, of course, gave us the Hertz waves and the Russian, English, French and Italian experts were quick in using them for signalling purposes. It was an obvious application of the new agent and accomplished with the old classical and unimproved induction coil, scarcely anything more than another kind of heliography. The radius of transmission was very limited, the result attained of little value, and the Hertz oscillations, as a means for conveying intelligence, could have been advantageously replaced by sound waves, which I advocated in 1891. Moreover, all of these attempts were made three years after the basic principles of the wireless system, which is universally employed today, and its potent instrumentalities had been clearly described and developed in America.

No trace of those Hertzian appliances and methods remains today. We have proceeded in the very opposite direction and what has been done is the product of the brains and efforts of citizens of this country. The fundamental patents have expired and the opportunities are open to all. The chief argument of the Secretary is based on interference. According to his statement, reported in the New York Herald of July 29th, signals from a powerful station can be intercepted in every village in the world. In view of this fact, which was demonstrated in my experiments in 1900, it would be of little use to impose restrictions in the United States.

As throwing light on this point, I may mention that only recently an odd looking gentleman called on me with the object of enlisting my services in the construction of world transmitters in some distant land. "We have no money,"

he said, “but carloads of solid gold, and we will give you a liberal amount.” I told him that I wanted to see first what will be done with my inventions in America, and this ended the interview. But I am satisfied that some dark forces are at work, and as time goes on the maintenance of continuous communication will be rendered more difficult. The only remedy is a system immune against interruption. It has been perfected, it exists, and all that is necessary is to put it in operation.

The terrible conflict is still uppermost in the minds and perhaps the greatest importance will be attached to the magnifying Transmitter as a machine for attack and defence, more particularly in connection with TELAUTAMATICS. This invention is a logical outcome of observations begun in my boyhood and continued throughout my life. When the first results were published, the Electrical Review stated editorially that it would become one of the “most potent factors in the advance of civilisation of mankind.” The time is not distant when this prediction will be fulfilled. In 1898 and 1900, it was offered by me to the Government and might have been adopted, were I one of those who would go to Alexander’s shepherd when they want a favour from Alexander!

At that time I really thought that it would abolish war, because of its unlimited destructiveness and exclusion of the personal element of combat. But while I have not lost faith in its potentialities, my views have changed since. War can not be avoided until the physical cause for its recurrence is removed and this, in the last analysis, is the vast extent of the planet on which we live. Only though annihilation of distance in every respect, as the conveyance of intelligence, transport of passengers and supplies and transmission of energy will conditions be brought about some day, insuring permanency of friendly relations. What we now want most is closer contact and better understanding between individuals and communities all over the earth and the elimination of that fanatic devotion to exalted ideals of national egoism and pride, which is always prone to plunge the world into primeval barbarism and strife. No league or parliamentary act of any kind will ever prevent such a calamity. These are only new devices for putting the weak at the mercy of the strong.

I have expressed myself in this regard fourteen years ago, when a combination of a few leading governments, a sort of Holy alliance, was advocated by the late Andrew Carnegie, who may be fairly considered as the father of this idea, having given to it more publicity and impetus than anybody else prior to the efforts of the President. While it can not be denied that such aspects might be of material advantage to some less fortunate peoples, it can not attain the chief objective sought. Peace can only come as a natural consequence of universal enlightenment and merging of races, and we are still far from this blissful realisation, because few indeed, will admit the reality – that God made man in His image – in which case all earth men are alike. There is in fact but one race, of many colours. Christ is but one person, yet he is of all people, so why do some people think themselves better than some other people?

As I view the world of today, in the light of the gigantic struggle we have witnessed, I am filled with conviction that the interests of humanity would be best served if the United States remained true to its traditions, true to God whom it pretends to believe, and kept out of “entangling alliances.” Situated as it is, geographically remote from the theatres of impending conflicts, without incentive to territorial aggrandisement, with inexhaustible resources and immense population thoroughly imbued with the spirit of liberty and right, this country is placed in a unique and privileged position. It is

thus able to exert, independently, its colossal strength and moral force to the benefit of all, more judiciously and effectively, than as a member of a league.

I have dwelt on the circumstances of my early life and told of an affliction which compelled me to unremitting exercise of imagination and self-observation. This mental activity, at first involuntary under the pressure of illness and suffering, gradually became second nature and led me finally to recognise that I was but an automaton devoid of free will in thought and action and merely responsible to the forces of the environment. Our bodies are of such complexity of structure, the motions we perform are so numerous and involved and the external impressions on our sense organs to such a degree delicate and elusive, that it is hard for the average person to grasp this fact. Yet nothing is more convincing to the trained investigator than the mechanistic theory of life which had been, in a measure, understood and propounded by Descartes three hundred years ago. In his time many important functions of our organisms were unknown and especially with respect to the nature of light and the construction and operation of the eye, philosophers were in the dark.

In recent years the progress of scientific research in these fields has been such as to leave no room for a doubt in regard to this view on which many works have been published. One of its ablest and most eloquent exponents is, perhaps, Felix le Dantec, formerly assistant of Pasteur. Professor Jacques Loeb has performed remarkable experiments in heliotropism, clearly establishing the controlling power of light in lower forms of organisms and his latest book, "Forced Movements," is revelatory. But while men of science accept this theory simply as any other that is recognised, to me it is a truth which I hourly demonstrate by every act and thought of mine. The consciousness of the external impression prompting me to any kind of exertion, – physical or mental, is ever present in my mind. Only on very rare occasions, when I was in a state of exceptional concentration, have I found difficulty in locating the original impulse. The by far greater number of human beings are never aware of what is passing around and within them and millions fall victims of disease and die prematurely just on this account. The commonest, every-day occurrences appear to them mysterious and inexplicable. One may feel a sudden wave of sadness and rack his brain for an explanation, when he might have noticed that it was caused by a cloud cutting off the rays of the sun. He may see the image of a friend dear to him under conditions which he construes as very peculiar, when only shortly before he has passed him in the street or seen his photograph somewhere. When he loses a collar button, he fusses and swears for an hour, being unable to visualise his previous actions and locate the object directly. Deficient observation is merely a form of ignorance and responsible for the many morbid notions and foolish ideas prevailing. There is not more than one out of every ten persons who does not believe in telepathy and other psychic manifestations, spiritualism and communion with the dead, and who would refuse to listen to willing or unwilling deceivers?

Just to illustrate how deeply rooted this tendency has become even among the clear-headed American population, I may mention a comical incident. Shortly before the war, when the exhibition of my turbines in this city elicited widespread comment in the technical papers, I anticipated that there would be a scramble among manufacturers to get hold of the invention and I had particular designs on that man from Detroit who has an uncanny faculty for accumulating millions. So confident was I, that he would turn up some day, that I declared this as certain to my secretary and assistants. Sure enough, one fine morning a body of engineers from the Ford Motor Company presented them-

selves with the request of discussing with me an important project. “Didn’t I tell you?,” I remarked triumphantly to my employees, and one of them said, “You are amazing, Mr. Tesla. Everything comes out exactly as you predict.”

As soon as these hard-headed men were seated, I of course, immediately began to extol the wonderful features of my turbine, when the spokesman interrupted me and said, “We know all about this, but we are on a special errand. We have formed a psychological society for the investigation of psychic phenomena and we want you to join us in this undertaking.” I suppose these engineers never knew how near they came to being fired out of my office.

Ever since I was told by some of the greatest men of the time, leaders in science whose names are immortal, that I am possessed of an unusual mind, I bent all my thinking faculties on the solution of great problems regardless of sacrifice. For many years I endeavoured to solve the enigma of death, and watched eagerly for every kind of spiritual indication. But only once in the course of my existence have I had an experience which momentarily impressed me as supernatural. It was at the time of my mother’s death.

I had become completely exhausted by pain and long vigilance, and one night was carried to a building about two blocks from our home. As I lay helpless there, I thought that if my mother died while I was away from her bedside, she would surely give me a sign. Two or three months before, I was in London in company with my late friend, Sir William Crookes, when spiritualism was discussed and I was under the full sway of these thoughts. I might not have paid attention to other men, but was susceptible to his arguments as it was his epochal work on radiant matter, which I had read as a student, that made me embrace the electrical career. I reflected that the conditions for a look into the beyond were most favourable, for my mother was a woman of genius and particularly excelling in the powers of intuition. During the whole night every fibre in my brain was strained in expectancy, but nothing happened until early in the morning, when I fell in a sleep, or perhaps a swoon, and saw a cloud carrying angelic figures of marvellous beauty, one of whom gazed upon me lovingly and gradually assumed the features of my mother. The appearance slowly floated across the room and vanished, and I was awakened by an indescribably sweet song of many voices. In that instant a certitude, which no words can express, came upon me that my mother had just died. And that was true. I was unable to understand the tremendous weight of the painful knowledge I received in advance, and wrote a letter to Sir William Crookes while still under the domination of these impressions and in poor bodily health. When I recovered, I sought for a long time the external cause of this strange manifestation and, to my great relief, I succeeded after many months of fruitless effort.

I had seen the painting of a celebrated artist, representing allegorically one of the seasons in the form of a cloud with a group of angels which seemed to actually float in the air, and this had struck me forcefully. It was exactly the same that appeared in my dream, with the exception of my mother’s likeness. The music came from the choir in the church nearby at the early mass of Easter morning, explaining everything satisfactorily in conformity with scientific facts.

This occurred long ago, and I have never had the faintest reason since to change my views on psychical and spiritual phenomena, for which there is no foundation. The belief in these is the natural outgrowth of intellectual development. Religious dogmas are no longer accepted in their orthodox meaning, but every individual clings to faith in a supreme power of some kind.

We all must have an ideal to govern our conduct and insure contentment, but it is immaterial whether it be one of creed, art, science, or anything else, so long as it fulfils the function of a dematerialising force. It is essential to the peaceful existence of humanity as a whole that one common conception should prevail. While I have failed to obtain any evidence in support of the contentions of psychologists and spiritualists, I have proved to my complete satisfaction the automatism of life, not only through continuous observations of individual actions, but even more conclusively through certain generalisations. these amount to a discovery which I consider of the greatest moment to human society, and on which I shall briefly dwell.

I got the first inkling of this astonishing truth when I was still a very young man, but for many years I interpreted what I noted simply as coincidences. Namely, whenever either myself or a person to whom I was attached, or a cause to which I was devoted, was hurt by others in a particular way, which might be best popularly characterised as the most unfair imaginable, I experienced a singular and undefinable pain which, for the want of a better term, I have qualified as "cosmic" and shortly thereafter, and invariably, those who had inflicted it came to grief. After many such cases I confided this to a number of friends, who had the opportunity to convince themselves of the theory of which I have gradually formulated and which may be stated in the following few words: Our bodies are of similar construction and exposed to the same external forces. This results in likeness of response and concordance of the general activities on which all our social and other rules and laws are based. We are automata entirely controlled by the forces of the medium, being tossed about like corks on the surface of the water, but mistaking the resultant of the impulses from the outside for the free will. The movements and other actions we perform are always life preservative and though seemingly quite independent from one another, we are connected by invisible links. So long as the organism is in perfect order, it responds accurately to the agents that prompt it, but the moment that there is some derangement in any individual, his self-preservative power is impaired.

Everybody understands, of course, that if one becomes deaf, has his eyes weakened, or his limbs injured, the chances for his continued existence are lessened. But this is also true, and perhaps more so, of certain defects in the brain which drive the automaton, more or less, of that vital quality and cause it to rush into destruction. A very sensitive and observant being, with his highly developed mechanism all intact, and acting with precision in obedience to the changing conditions of the environment, is endowed with a transcending mechanical sense, enabling him to evade perils too subtle to be directly perceived. When he comes in contact with others whose controlling organs are radically faulty, that sense asserts itself and he feels the "cosmic" pain.

The truth of this has been borne out in hundreds of instances and I am inviting other students of nature to devote attention to this subject, believing that through combined systematic effort, results of incalculable value to the world will be attained. The idea of constructing an automaton, to bear out my theory, presented itself to me early, but I did not begin active work until 1895, when I started my wireless investigations. During the succeeding two or three years, a number of automatic mechanisms, to be actuated from a distance, were constructed by me and exhibited to visitors in my laboratory.

In 1896, however, I designed a complete machine capable of a multitude of operations, but the consummation of my labours was delayed until late in 1897.

This machine was illustrated and described in my article in the Century Magazine of June, 1900; and other periodicals of that time and when first shown in the beginning of 1898, it created a sensation such as no other invention of mine has ever produced. In November, 1898, a basic patent on the novel art was granted to me, but only after the Examiner-in-Chief had come to New York and witnessed the performance, for what I claimed seemed unbelievable. I remember that when later I called on an official in Washington, with a view of offering the invention to the Government, he burst out in laughter upon my telling him what I had accomplished. Nobody thought then that there was the faintest prospect of perfecting such a device. It is unfortunate that in this patent, following the advice of my attorneys, I indicated the control as being affected through the medium of a single circuit and a well-known form of detector, for the reason that I had not yet secured protection on my methods and apparatus for individualisation. As a matter of fact, my boats were controlled through the joint action of several circuits and interference of every kind was excluded.

Most generally, I employed receiving circuits in the form of loops, including condensers, because the discharges of my high-tension transmitter ionised the air in the (laboratory) so that even a very small aerial would draw electricity from the surrounding atmosphere for hours.

Just to give an idea, I found, for instance, that a bulb twelve inches in diameter, highly exhausted, and with one single terminal to which a short wire was attached, would deliver well on to one thousand successive flashes before all charge of the air in the laboratory was neutralised. The loop form of receiver was not sensitive to such a disturbance and it is curious to note that it is becoming popular at this late date. In reality, it collects much less energy than the aerials or a long grounded wire, but it so happens that it does away with a number of defects inherent to the present wireless devices.

In demonstrating my invention before audiences, the visitors were requested to ask questions, however involved, and the automaton would answer them by signs. This was considered magic at the time, but was extremely simple, for it was myself who gave the replies by means of the device.

At the same period, another larger telautomatic boat was constructed, a photograph of which was shown in the October 1919 number of the Electrical Experimenter. It was controlled by loops, having several turns placed in the hull, which was made entirely water-tight and capable of submergence. The apparatus was similar to that used in the first with the exception of certain special features I introduced as, for example, incandescent lamps which afforded a visible evidence of the proper functioning of the machine. These automata, controlled within the range of vision of the operator, were, however, the first and rather crude steps in the evolution of the art of Telautomatics as I had conceived it.

The next logical improvement was its application to automatic mechanisms beyond the limits of vision and at great distances from the centre of control, and I have ever since advocated their employment as instruments of warfare in preference to guns. The importance of this now seems to be recognised, if I am to judge from casual announcements through the press, of achievements which are said to be extraordinary but contain no merit of novelty, whatever. In an imperfect manner it is practicable, with the existing wireless plants, to launch an aeroplane, have it follow a certain approximate course, and perform some operation at a distance of many hundreds of miles. A machine of this kind can also be mechanically controlled in several ways and I have no doubt

that it may prove of some usefulness in war. But there are to my best knowledge, no instrumentalities in existence today with which such an object could be accomplished in a precise manner. I have devoted years of study to this matter and have evolved means, making such and greater wonders easily realisable.

As stated on a previous occasion, when I was a student at college I conceived a flying machine quite unlike the present ones. The underlying principle was sound, but could not be carried into practice for want of a prime-mover of sufficiently great activity. In recent years, I have successfully solved this problem and am now planning aerial machines *devoid of sustaining planes, ailerons, propellers, and other external* attachments, which will be capable of immense speeds and are very likely to furnish powerful arguments for peace in the near future. Such a machine, sustained and propelled *entirely by reaction*, is shown on one of the pages of my lectures, and is supposed to be controlled either mechanically, or by wireless energy. By installing proper plants, it will be practicable to *project a missile of this kind into the air and drop it* almost on the very spot designated, which may be thousands of miles away.

But we are not going to stop at this. Telautomats will be ultimately produced, capable of acting as if possessed of their own intelligence, and their advent will create a revolution. As early as 1898, I proposed to representatives of a large manufacturing concern the construction and public exhibition of an automobile carriage which, left to itself, would perform a great variety of operations involving something akin to judgment. But my proposal was deemed chimerical at the time and nothing came of it.

At present, many of the ablest minds are trying to devise expedients for preventing a repetition of the awful conflict which is only theoretically ended and the duration and main issues of which I have correctly predicted in an article printed in the SUN of December 20, 1914. The proposed League is not a remedy but, on the contrary, in the opinion of a number of competent men, may bring about results just the opposite.

It is particularly regrettable that a punitive policy was adopted in framing the terms of peace, because a few years hence, it will be possible for nations to fight without armies, ships or guns, by weapons far more terrible, to the destructive action and range of which there is virtually no limit. Any city, at a distance, whatsoever, from the enemy, can be destroyed by him and no power on earth can stop him from doing so. If we want to avert an impending calamity and a state of things which may transform the globe into an inferno, we should push the development of flying machines and wireless transmission of energy without an instant's delay and with all the power and resources of the nation.

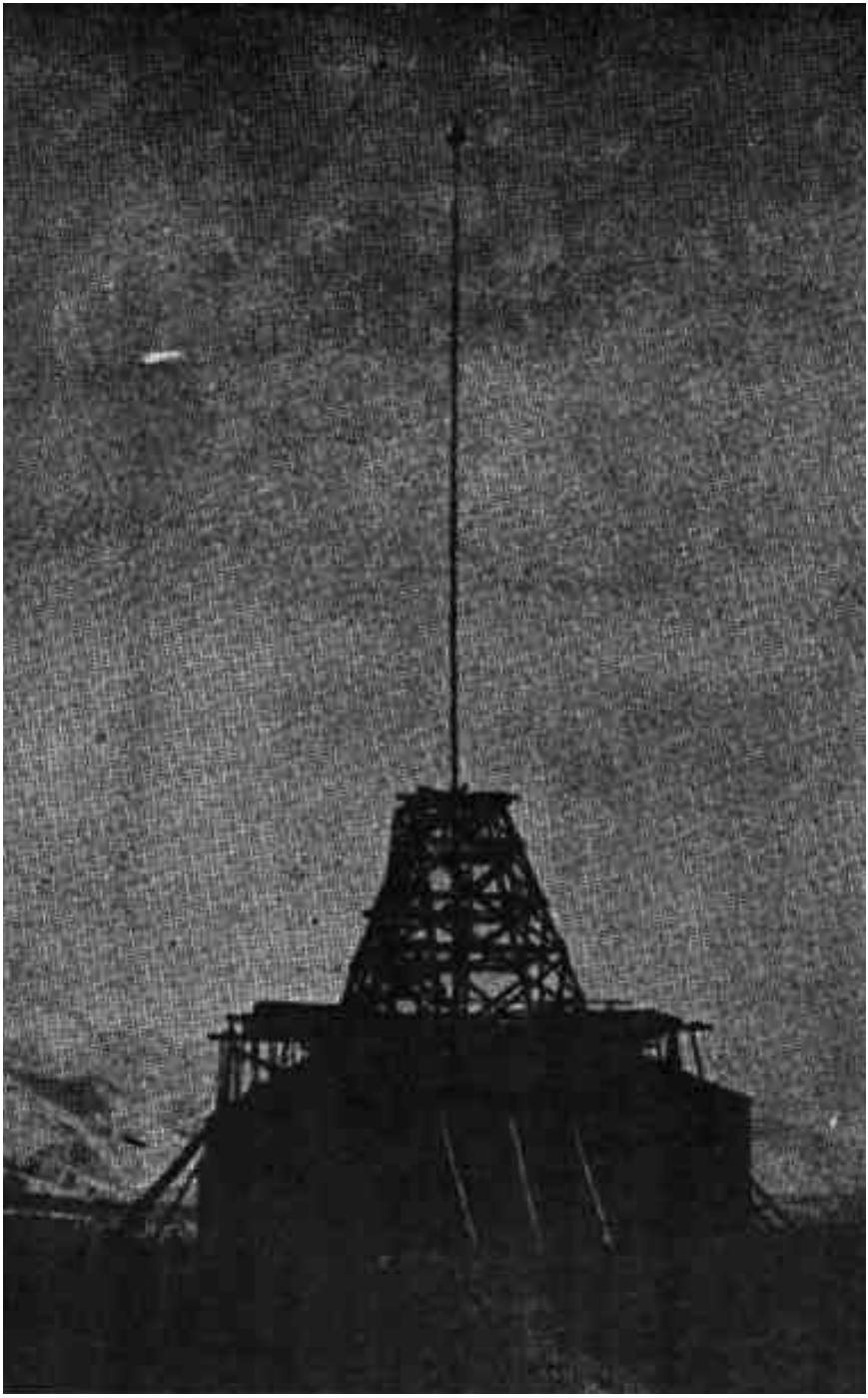

Summation of Tesla's Dynamic Theory of Gravity

An excerpt from: *Occult Ether Physics*

by William R. Lyne

From: Don Allen
dona@amigo.net

According to Tesla's lecture prepared for the Institute of Immigrant Welfare (May. 12, 1938), his "Dynamic Theory of Gravity" was one of two far reaching discoveries, which he "...worked out in all details", in the years 1893 and 1894. The 1938 lecture was less than five years before his death.

More complete statements concerning these discoveries can only be gleaned from scattered and sparse sources, because the papers of Tesla are concealed in government vaults for "national security" reasons. When I specifically asked for these papers at the "National Security Research Center" - now the "Robert J. Oppenheimer Research Center" - in 1979, I was denied access because they were classified, even though on that same day I discovered the plans for the hydrogen bomb on an open shelf, and told a Harvard graduate student about it later in the day at a Santa Fe restaurant. The guy went to Los Alamos, copied the plans, and wrote an expose at Harvard.

In his 1938 lecture, Tesla said he was progressing with the work, and hoped to give the theory to the world "very soon", so it was clearly his intent to "give it to the world", as soon as he had completed his secret developments.

The "two great discoveries" to which Tesla referred, were:

1. The Dynamic Theory of Gravity - which assumed a field of force which accounts for the motions of bodies in space; assumption of this field of force dispenses with the concept of space curvature (ala Einstein); the ether has an indispensable function in the phenomena (of universal gravity, inertia, momentum, and movement of heavenly bodies, as well as all atomic and molecular matter); and,

2. Environmental Energy - the Discovery of a new physical Truth: there is no energy in matter other than that received from the environment.

The usual Tesla birthday announcement - on his 79th birthday (1935) - Tesla made a brief reference to the theory saying it applies to molecules and atoms as well as to the largest heavenly bodies, and to "...all matter in the universe in any phase of its existence from its very formation to its ultimate disintegration".

Those imbued with relativist theory often refer to "pure energy" in some "form", but there is no such thing, since "energy" is an abstract "ability" which is always in the future. Who's to say what "form" is "pure", and what form is not?

My favorite philosopher, Ayn Rand, said. "In reality, there are no contradictions. Things are what they are irrespective as to whether we know it or not. Check your premises." If the term "energy" is only a convenient abstraction, then it does not exist in physical form, and really describes the potential to perform work as a by-product of matter and electromagnetic radiation in perpetual motion, some of the force of which has been diverted through a path where it performs the desired work, as it goes on its merry way through the universe. Every change of form of either matter or radiation involves the "work" which induces the change, or the "work" which is induced by the change. Without work there is no change, but all work is ultimately the product of the universe in perpetual, self-sustaining motion, as a rule and not an exception.

As for Tesla's theory, we have hints, such as, that the earth is the "star of human birth". In poetic expressions, he hid scientific meanings in statements such as, that using the "thunderbolt of Jove" (the Indo-European sky god), man "annihilates time and space", an allusion to the use of electro-propulsion ("thunderbolts"), to travel so fast, that time and space are "annihilated". Where the government has stolen his papers, we must search for meaning elsewhere. In an article, "Man's Greatest Achievement", Tesla outlined his Dynamic Theory of Gravity in poetic form (as paraphrased by me):

* That the luminiferous ether fills all space

* That the ether is acted upon by the life-giving creative force

* That the ether is thrown into "infinitesimal whirls" ("micro helices") at near the speed of light, becoming ponderable matter

* That when the force subsides and motion ceases, matter reverts to the ether (a form of "atomic decay")

That man can harness these processes, to:

-Precipitate matter from the ether
-Create whatever he wants with the matter and energy derived
-Alter the earth's size
-Control earth's seasons (weather control)
-Guide earth's path through the Universe, like a space ship
-Cause the collisions of planets to produce new suns and stars, heat, and light
-Originate and develop life in infinite forms

Tesla was referring to unlimited energy, derived from the environment. Several of his major free energy discoveries have been the exclusive stolen property of our Secret Government. The conversion of energy to a stronger force - electropulsion - used to control the much weaker gravity force, would accomplish more work in the same amount of time, and produce "over unity" results.

Some of Telsa's unusual conceptualization of the ether had been nonetheless expounded piecemeal, in his preceding 1890's lectures. He later railed against the limited and erroneous theories of Maxwell, Hertz, Lorentz, and Einstein.

Tesla's ether was neither the "solid" ether with the "tenuity of steel" of Maxwell and Hertz, nor the half-hearted, entrained, gaseous ether of Lorentz. Tesla's ether consisted of "carriers immersed in an insulating fluid", which filled all space. Its properties varied according to relative movement, the presence of mass, and the electric and magnetic environment.

Tesla's ether was rigidified by rapidly varying electrostatic forces, and was thereby involved in gravitational effects, inertia, and momentum, especially in the space near earth, since, as explained by Tesla, the earth is "...like a charged metal ball moving through space", which creates the enormous, rapidly varying electrostatic forces which diminish in intensity with the square of the distance from earth, just like gravity. Since the direction of propagation radiates from the earth, the so-called force of gravity is toward earth.

Tesla commenced to complete his Dynamic Theory of Gravity at the same approximate period of time that his experimental results and theories had been revealed in the three lectures, often illustrated with demonstrations using Tesla-invented equipment, as revealed in the following eight excerpts, in pertinent part (emphasis mine):

1. "The most probable medium filling the space is one consisting of independent carriers immersed in an insulating fluid".

2. "In his experiments he dwells first on some phenomena produced by electrostatic force, which he considers in the light of modern theories to be the most important force in nature for us to investigate."

3. "He illustrates how mechanical motions are produced by a varying electrostatic force acting through a gaseous medium."

4. "One of the most interesting results arrived at in pursuing these experiments, is the demonstration of the fact that a gaseous medium upon which vibration is impressed by rapid changes of electrostatic potential, is rigid".

5. "If through this medium enormous electrostatic stresses are assumed to act, which vary rapidly in intensity, it would allow the motion of a body through it, yet it would be rigid and elastic, although the fluid itself might be devoid of these properties".

6. "...on the assumption that the independent carriers are of any configuration such that the fluid resistance to motion in one direction is greater than in another, a stress of that nature would cause the carriers to arrange themselves in groups, since they would turn to each other their sides of the greatest electrical density, in which position the fluid resistance to approach would be smaller than to receding."

7. "If in a medium of the above characteristics a brush would be formed by a steady potential, an exchange of the carriers would go on continuously, and there would be less carriers per unit volume in the brush than in the space at some distance from the electrode, this corresponding to rarefaction".

8. "If the potentials were rapidly changing, the result would be very different; the higher the frequency of the pulses, the slower would be the exchange of carriers; finally, the motion of translation through measurable space would cease and, with a sufficiently high frequency and intensity of the stress, the carriers would be drawn towards the electrode, and compression would result."

The eight above excerpts are further reducible to the following four statements pertinent to electro-propulsion technology:

1. Mechanical motions can be produced by varying electrostatic force acting through a gaseous (ether) medium, which thereby becomes rigidifled, yet allows solid bodies to pass through.

2. Under influence of stress in one direction (under the polarizing influence of light or heat), the carriers may group together, forming tubes of force, creating greater ease of movement in that direction.

3. When a (D.C.) brush is created by a steady potential, a continuous exchange of carriers is created corresponding to ether rarefaction, as the tubes of force are drawn into the conductor.

4. With a sufficiently high frequency and stress intensity in the opposite direction, carrier exchange is blocked by ether compression, forcing the tubes of force to dissolve in the conductors of the ship, imparting electromagnetic momentum. The system, using the two kinds of potentials (D.C. and A.C.), is known as "p2".

The steady potential of the brush creates the required exchange of carriers, 'rarifying' (stretching) the elastic, rigidified medium (composed of the carriers immersed in the insulating fluid) in advance of the ship, as the high frequency A.C. to the rear compresses them, blocking exchange from the rear, dissolving the tubes of force (my "microhelices"), creating instant momentum, normal to the surface (which is at right angles to the electric and magnetic fields).

In 1884, John Henry Poynting's theorem had been that the flux of energy at any place is represented by the vector product of the electric and magnetic forces, multiplied by C/4(pi symbol) 3rd power. This implied that forces in a conductor could be transformed there into other forms. In 1893, J. J. Thomson stated practically the same thing, saying "...the aether is itself the vehicle of mechanical momentum, of amount (l/4 (pi symbol)C (D*B) per unit volume.

(Using e.-s. Units for D and E and e.-m. Units for B and H.)

E = electrical force
D = electrical displacement
H = magnetic force
B = magnetic induction

Heinrich Hertz's theory was that two systems of varying current should exert a ponderomotive force on each other due to the variations. Tesla's disagreement was apparently based on the fact that he proved that the "ponderomotive force" is due not to mere "varying currents"; but to rarefaction and compression of the ether carriers, respectively, produced by different kinds of currents (D.C., A.C., rapidly varying electrostatic).

J.J. Thomson had extensively developed the theory of the moving tubes of force, both magnetic and electric, saying that the magnetic effect was a secondary one created by the movement of electric tubes, and assumed:

* that tubes exist everywhere in space, either in closed circuits or terminating on atoms;

* that electric force becomes perceivable only when electric tubes have greater tendency to lie in one direction;

* that in a steady magnetic field, positive and negative tubes may move in opposite directions with equal velocity;

* that a beam of light is a group of electric tubes moving at C at right angles to their length (providing a good explanation for polarization of the plane of rotation).

Tesla said his "dirigible torpedo" would fly at a maximum 300 miles per second, perhaps since its forward velocity would be some maximum fraction of C. Thomson's later publishings on this subject followed Tesla's 1891 lectures before the Royal Society in London, and appear to shed light on Tesla's work, stating:

* that a ponderomotive force is exerted on a conductor carrying electric current, consisting of a transfer of mechanical momentum from the agent which exerts the force to the body which experiences it;

* that, if moving tubes entering a conductor are dissolved in it, mechanical momentum is given to the conductor;

* that such momentum must be at right angles to the tube and to the magnetic induction;

* that momentum stored in a unit volume of the field is proportional to the vector product of electric and magnetic vectors.

"Thomson's" "Electromagnetic Momentum" hypothesis was later developed by H. Poincare' and by M. Abraham.

By 1910, it was said that the consequence of these pronouncements left three alternatives:

1. Modify the theory to reduce to zero the resultant force on an element of free aether (as with Maxwell, Hertz, and Einstein);

2. Assume the force sets aether in motion (as with Helmholtz);

3. Accept the principle that aether is the vehicle of mechanical momentum of amount [D*B] per unit volume (as with Poynting and J. J. Thomson).

Whittaker's greatest error was in omitting Tesla's theory entirely. After Tesla's experiments verified it, right in front of the esteemed members of the "Royal Academy", the "three (later) alternatives" were moot, and a new law existed, that of Tesla.

Tesla's Secrecy

Due to his pacifist sympathies, Tesla originally contemplated giving his electric flying machine to the Geneva Convention or League of Nations, for use in 'policing the world' to prevent war. Later disillusioned after WWI with the collapse of the League, he said he'd "...underestimated man's combative capacity".

In 1919, his reason for increased secrecy emerged in an interview with Frederick M. Kerby, for "Resolution" magazine, while discussing a "three-hour" airplane between New York and London: "...we have here the appalling prospect of a war between nations at a distance of thousands of miles, with weapons so destructive and demoralizing that the world could not endure them. That is why there must be no more war." With the government's spurning of his defense suggestions, Tesla's only recourse was to withhold his secrets from the world, and to dissuade discovery in their direction.

In 1929, Tesla ridiculed Heinrich Hertz's 1887-89 experiments purportedly proving the Maxwellian "structureless" ether filling all space, "of inconceivable tenuity yet solid and possessed of rigidity incomparably greater than the hardest steel". Tesla's arguments were to the contrary, saying he had always believed in a "gaseous" ether in which he had observed waves more akin to sound waves. He recounted how he had developed a "new form of vacuum tube" in 1896 (which I call the "Tesla bulb"), "...capable of being charged to any desired potential, and operated it with effective pressures of about 4,000,000 volts." He described how purplish coronal discharges about the bulb when in use, verified the existence of "particles smaller than air", and a gas so light that an earth-sized volume would weigh only 1/20 pound. He further said sound waves moved at the velocity of light through this medium.

Tesla mentioned using his special tube to investigate cosmic rays, saying that when its emanations were impinged upon a target material, radioactive emissions resulted, and that radioactive bodies were simply "targets" continuously bombarded by "infinitesimal bullets projected from all parts of the universe", without which "all radioactivity would cease." His description of these "bullets" was similar to the ZPR.

On Apr. 15, 1932, Tesla said Einstein's theory regarding changing matter into force, and force into matter, was "absurd". He compared this to the difference between body and mind, saying force is a "...function of matter", and that, just as a mind could not exist without a body, "...without matter, there can be no force."

On Sept. 11, 1932 (New York Herald Tribune), Tesla derided the Maxwellian/Hertzian ether, while saying that higher frequency waves "...follow the curvature of the earth and bend around obstacles", yet in an Apr. 8, 1934 New York Times letter, said that short waves for "power purposes" of the 'wireless art', were inappropriate, and that power will travel in "long waves". His 1929 attack on the Maxwellian/Hertzian ether theory - 39 years afterward, during the advent of Relativism - seemed relevant only to his concealed theory, not to disclose it or promote it, but to conceal it.

THE NATURE OF ELECTRICITY

What were the old ether physicists referring to when they attempted to describe "an incompressible, perfect fluid"? What would a "perfect fluid" do? It would be able to "wet" everything it came into contact with, such as protons, and could flow everywhere without resistance. One "fluid" - the ether - could flow everywhere, and because of its density and ultra-fineness, nothing could stop it, and it felt no resistance, but only matter felt resistance, depending on the circumstances. Another fluid - electricity - could flow in certain places, and wet only certain things, but often met resistance.

In order to understand the ether, we must get to know electricity more intimately. Just like water, a proton will hold only so much electricity on its surface, but the 'surface' of the proton is probably similar to the outer area of a ball-shaped swarm of hovering mechanical bees, powered by the ZPR, with a denser agglomeration of "bees" toward the 'ball's' center. If this swarm of bees is subjected to a wave of rainy mist (the etheric 'wind'), the bees must all turn to face into the etheric wind to maintain their formation. The 'water' droplets - electric sub-charges carried by the etheric wind - tend to agglomerate around the front side. Each bee, as he flaps his wings, will get wet only so much, so that excess 'water' is thrown off and carried to the next bee,

or the next swarm of bees, by the etheric wind, and so forth, so that a 'current' of droplets continues to flow through the ball of bees due to its motion through the etheric wind, and transfers momentum between masses.

The 'water' tends to come off in larger drops, which have formed from smaller droplets accumulated on each bee. As in fluid mechanics, the 'drop' size is the result of cohesiveness of the electric 'fluid', the surface area of each 'bee', and the space between each bee, all of which influences the final size of each larger 'drop' (the "electron") which accumulates enough to form it. If one were to mathematically analyze the flow of "drops" (i.e., "quanta") per mass unit, they would have an average rate of the flow of charges/cm3 of etheric wind, for the momentum, as determined by the "current" flow rate.

Much like the bees, as a body (its many electrons, atoms, and molecules, with plenty of 'space' within and between) sits at rest on the earth, it moves at fantastic speed through the universal ether field, due to the earth's revolution, orbit, and other motions.

In his 1891 A.I.E.E. lecture at Columbia College, Tesla said in pertinent part (emphasis mine): "What is electricity, and what is magnetism? "...We are now confident that electric and magnetic phenomena are attributable to the ether, and we are perhaps justified in saying that the effects of static electricity are effects of ether in motion". "...we may speak of electricity or of an electric condition, state or effect". "...we must distinguish two such effects, opposite in character neutralizing each other". "...for in a medium of the properties of the ether, we cannot possibly exert a strain, or produce a displacement or motion of any kind, without causing in the surrounding medium an equivalent and opposite effect." "...its condition determines the positive and negative character." "We know that it acts like an incompressible fluid;" "...the electro-magnetic theory of light and all facts observed teach us that electric and ether phenomena are identical." "The puzzling behavior of the ether as a solid to waves of light and heat, and as a fluid to the motion of bodies through it, is certainly explained in the most natural and satisfactory manner by assuming it to be in motion, as Sir William Thomson has suggested." "Nor can anyone prove that there are transverse ether waves emitted from an alternate current machine; to such slow disturbances, the ether, if at rest, may behave as a true fluid."

In his statements, Tesla was balancing the various arguments in preparation for his decision: "...Electricity, therefore, cannot be called ether in the broad sense of the term; but nothing would seem to stand in the way of calling electricity ether associated with matter, or bound ether; or, in other words, that the so-called static charge of the molecule is ether associated in some way with the molecule."

"...It cannot differ in density, ether being incompressible: it must, therefore, be under some strain or in motion, and the latter is the most probable." Tesla therefore believed in an ether which was in motion relative to earth, because the earth is in motion.

The thing which Tesla had realized, was that ether possesses electric charges which are deposited on atoms. In supporting the "dynamic" ether concept, he was supporting the "stationary ether" concept, since the "motion" he referred to was "apparent" motion of the ether perceived by an observer on earth, relative to a stationary ether.

The importance of cosmic motion to the electromagnetic effects of static charges was brought up by Tesla in his lecture: "About fifteen years ago, Prof. Rowland demonstrated a most interesting and important fact, namely, that a static charge carried around produces the effects of an electric current." "...and conceiving the electrostatically charged molecules in motion, this experimental fact gives us a fair idea of magnetism. We can conceive lines or tubes of force which physically exist, being formed of rows of directed moving molecules; we can see that these lines must be closed, that they must tend to shorten and expand, etc. It likewise explains in a reasonable way, the most puzzling phenomenon of all, permanent magnetism, and, in general, has all the beauties of the Ampere theory without possessing the vital defect of the same, namely, the assumption of molecular currents. Without enlarging further upon the subject, I would say, that I look upon all electrostatic, current and magnetic phenomena as being due to electrostatic molecular forces."

In these statements, Tesla showed he was aware that any "stationary" locale on earth is actually in fantastic motion ("70,000 mph"). The electrostatic charges "carried around" are currents between atoms and the ether, which produce magnetism. The phenomena of 'permanent magnetism' or 'cosmically induced' magnetism are apparently due to electrostatic charges 'carried around' by cosmic motion, in the universal ether field.

Since no one can hold an atom or molecule perfectly still---because it is in fantastic motion---all atoms and molecules carry currents producing magnetic fields. Since a magnetic field is the product of a current, no one can produce a magnetic field without electricity, moving through or along a conductor, or as electrostatic charges in local or cosmic motion.

Tesla's Dynamic Theory of Gravity and MHD method of Spacial Electropulsion brought a cosmic crowning achievement to the works of Faraday, Wm. Thomson, J. J. Thomson, and Edmund Hall.

CONCLUSION

The ether is a universal medium, which fills all space. It appears to be "dynamic" relative to an earth moving thousands of miles

per hour through space. The ether is normally electrically neutral, ultra-fine, and penetrates all solid matter. There is also an ultra high frequency, ubiquitous radiation, normally in equilibrium, called Zero Point Radiation ("ZPR"), which interpenetrates the ether, and represents electromagnetic radiation in its finest, densest form, which, in conjunction with the ether, conserves universal perpetual motion.

The ether in conjunction with the ZPR, is the source of all matter and force. "Energy" does not exist in physical form, but is "the ability to do work", which is equal to "force over time". The word "energy" is a convenient fiction, like "time", which is an arbitrary measurement of the rate of motion of matter through ether-filled space. All events occur in the present, and the "past" and "future" are merely metaphors.

Electromagnetic disturbances in the ether extract "energy" from the ZPR, which is explainable only by an ether theory. This "free energy", which is virtually unlimited, is universally at work, created by the perpetual motion of matter, and the perpetual exchange of stronger and weaker forces, through which the equilibrium of the universe is maintained, the sum total of all processes equaling zero.

Since all solid matter is continually hurling through space, always in motion, it is always subjected to the "etheric wind" and ZPR interactions. These effects are not perceived except during changes in the orientation of mass or its velocity. All mass and space have dielectric properties. Differences in dielectric properties cause changes in the electromagnetic displacement within mass and the etheric wind. Earth's electric field creates dielectric displacement effects within ether and mass within earth's electric field. The difference between the dielectric displacement within a mass and the dielectric displacement outside the mass in the etheric wind, creates a down-force in the direction of the negative polarity, as the etheric wind 'blows' through a mass. This is called "gravity".

Since all mass is in motion, all mass has momentum, even when apparently "at rest" relative to earth. Momentum is a body's resistance to change in its state of motion. Since inertia is also the resistance of a body to changes in its momentum, inertia and momentum are due to the same thing, the resistance of electromagnetic micro helical tubules to changes in velocity (and relative "pitch"), direction, and lateral motions or orientation. Since all space and mass is composed only of "electric content", momentum/inertia is electromagnetic in nature, and can be electromagnetically synthesized.

All mass contains electrostatic charges, which when "carried around" in the ether/ZPR-filled space by celestial or 'local' movement, constitute currents. These currents actually flow between mass and the ether, and are integral to the mechanism by which momentum is imparted to mass in motion. The currents create magnetic fields as their equal-and-opposite counterparts, and give a rotatory motion to combined, bi-directional electric and magnetic fields and currents, around irrotational vacuous ether cores. This rotatory electromagnetic action creates momentum, as the force-free "screw-type" reaction within mass, creating its motion relative to the ether cores, from which the mechanical force is transferred to the atomic mass with which the electromagnetism is associated.

Since these phenomena are electromagnetic in nature, they are synthesized by recreation of the electromagnetic conditions which a body would exhibit due to a particular kinetic state. Just as electromagnetic waves of low frequency can penetrate a body, waves of higher frequencies - above I.R. and below U.V.- can cause the ether to "assert its inertia resistance".

The technology involves high voltage D.C. 'brush' currents, high frequency currents, rapidly varying electrostatic forces, and light/heat beams. The rapidly varying electrostatic forces "rarify" (stretch) the ether carriers, as the light/heat beams polarize the medium in the desired direction, as the D.C. brush currents induce the exchange of carriers, creating a vacuum in that direction, inducing motion. At the opposite end of the ship, high frequency currents draw the carriers through the ship, and creates a compression of the ether, as it penetrates the solid mass and synthesizes the rotatory micro helical tubules, which whirl around the ether cores along the polar axis, at a pitch corresponding to a particular rate of momentum. Since the strength of the electromagnetic interaction is 10/40 time greater than the gravitational interaction, that much more work can theoretically be done in the same time, using the same "energy".

Since "seeing is believing", and I have seen, I believe. The behavior of man-made flying saucers proves the existence of these "free energy" inventions of Nikola Tesla, which show that he was right in his opposition to Relativism, and that the prevalent theories taught in the scientific institutions of the world are patently _fraudulent_.

Consistent with the idea that "dynamite comes in small packages", this small book, along with my prior book, "Space Aliens From the Pentagon," initiates the rediscovery, reconstruction and publication of Nikola Tesla's Dynamic Theory of Gravity and related electropulsion technology, the greatest invention of mankind.

The Secret Government - a fraudulently concealed, unconstitutional, corporate-state entity - has heretofore controlled electropulsion technology by concealing it and other advanced free energy technology, on behalf of international, coercive, corporate-state monopolists. Electropulsive ships are concealed through "special effects", and "stealth technology" (also based on Nikola Tesla's inventions)- as they fly and hover in the sky, and by "psycho-political" means - the dissemination of false

"alien" and "extraterrestrial origin" propaganda - through "UFOlogy" groups led by covert government agents. While official government spokesmen deny the existence of flying saucers, covert government agents, posing as "skeptics", "UFOlogists", and "paranormalists", engage the public's attention in a phony debate. The "skeptics" ridicule the UFOlogists and paranormalists, lumping them together with rational witnesses, as if "...to see a flying saucer" is as ridiculous as "...to see a ghost or alien". This phony debate based on false logic fits nicely into the overall cover-up system, designed to conceal "advanced human technology", not "alien" technology.

The grip of this secret socio-economic dictatorship, depends on coercively extorted income, by forcing us to buy archaic fuel and power - which funds their control of our communications, political and monetary decisions, enforcement of unjust laws, regulations, and procedures expanding its powers, while limiting or excluding our individual human rights, and denying our access to information, materials, and technology which is ours because we paid for it with our taxes. Our access to the truth is necessary for our independence and survival as a free people.

Despite the confusion, concealment, BIG LIES, and judicial and socio-economic abuse by the corporate state, we can resurrect the TRUTH, determine the correct technology, circumvent obstructions, and use our creative ingenuity to build these ships for ourselves, to free our society from the Secret Fascist Corpocracy.

** end excerpt **

Tank Capacitor

The capacitor in the tank circuit has a very hard life indeed! Not only does it have to withstand high voltages (more than double the supply voltage!) but it has to cope with extremely high currents at high frequency (approx 100kHz to 300kHz).

Commercially available capacitors, capable of surviving Tesla coil use, are not off-the-shelf items. A common approach to aquiring a suitable capacitor is to build it yourself! This can work out a lot cheaper than buying a new one but can involve embarking on a whole new project of its own!

For your very first coil, you could make one of the cheapest high voltage capacitors available - a saltwater cap. All you need are some empty glass bottles (beer bottles are a favorite choice!), salt, water, some buckets and some wire! The performance is not great but they're certainly cheap to make, and easy. I decided not to use this type of cap. Initially, I planned to make a poly plate cap but half way through construction I changed my mind and built anMMC instead (Multi Mini Cap). It was quicker and easier to build but I still intend to finish the poly plate cap.

The Poly Plate Capacitor:

The poly plate cap consists of an alternating stack of metal plates and polyethylene dielectric sheets, with electrical connections made to the metal sheets, giving you the two capacitor terminals. The whole stack is placed in a suitable container and submerged in insulating oil (transformer oil), to improve insulation and eliminate/reduce corona losses.

Design Considerations:

The type of work a capacitor does determines what materials it can be made of. A small value of capacitance leads to a physically small capacitor. If you increase the voltage it is required to handle, it will need to be physically larger.

The speed at which energy is required to move in and out of the capacitor determines the type of dielectric material you can use. The higher the operating frequency, the more careful your choice of dielectric needs to be.

Voltage Rating:

Insulation: The two plates of a capacitor have to be sufficiently insulated from each other so that, at the operating voltage, a spark cannot jump the gap and generate a short. The dielectric between the plates provides this insulation. Different materials have different insulating ability, or **dielectric strength**s. A guide figure of 160V(RMS)* worth of insulation for every mil (0.001 inch) of poly used will give a longlife to your cap. This value applies to a dielectric built up from multiple sheets of thin polyethene (e.g. using 6mil sheeting).

Example: A single cap on a 10kV(RMS) NST will require a dielectric 62.5 mil thick.

As you increase the dielectric thickness, to a value where its insulation properties meet your voltage requirements, the value of capacitance will decrease accordingly (both properties are dependant on the dielectric thickness). To regain the lost capacitance you must increase the size of the plates.

Corona Trouble: As well as straight-forward failure due to insufficient insulation, corona dammage must be considered. Any high voltage conductor can generate corona. It appears as a hazy purple glow on the conductors surface. Placing the conductors in oil will reduce corona formation considerably but there is a limit to the oils ability. Corona can form in air bubbles between plates and cause localised heating. This can melt the polyethene and short out the cap, with explosive results! Corona can also eat away at the dielectric, weakening it.

A limit of 5kV(RMS)* per capacitor is advisable, to reduce the chance of cap failure.

*RMS is used to denote the average AC voltage of the power supply (the label rating) but the actual voltage can peak at 1.4 x VRMS

It is unlikely that you will be using a supply voltage for your coil as low as 5kV(RMS) so in order to limit the voltage accross any one capacitor, you can wire 2 or more in series. This has the effect of sharing the voltage equally between the caps, but only if all the series wired caps are identical in construction. Series wiring of different caps can give uneven voltage sharing and you may unexpectedly over-stress one of them (N.B. a short in one series cap will immediately overload the remaining ones!).

The Dielectric:

Our dielectric of choice is LDPE (low density polyethylene).

The most important component of any capacitor is the dielectric layer. For Tesla Coil use there are three specific requirements to be aware of. Firstly, we are dealing with very high voltages, so the **dielectric strength** needs to be adequate (see 'Voltage Rating' section above). The second, and less obvious, property to be aware of is the materials **dissipation factor**. The last property to consider is the **dielectric constant**.

Dissipation Factor: DF is a measure of how good the dielectric is at doing its job without absorbing energy by heating up. It is given as a value at a particular operating frequency. At the peak power levels (megawatts) and operating frequencies (100kHz to 300kHz) found in Tesla Coil tank circuits, heating up is a big problem and can destroy a cap by melting it! As the dielectric melts an arc can jump between the plates and discharge all the stored energy. With a poor DF rating, even if the cap does not fail, due to you only running it for short periods of time, it will still rob your system of energy and decrease your output. Bummer!

Dielectric Constant: The DC of a material indicates how good it will be for storing energy. The higher the DC value, the higher the capacitance value, for the same thickness of dielectric. The DC of a vacuum is 1, LDPE is about 2 and glass can be 5 to 10 (see the 'Material Properties' table in the 'Data Lists' section). Although a high DC value will make for a physically smaller capacitor, a low DF is what you should look for, then live with its DC value. Glass can give you 3 to 5 times more capacitance (for a given thickness) than LDPE, but its energy loss (at typical TC frequencies) could be 65 to 200 times worse than LDPE!

(The term 'dielectric constant' is more correctly refered to as 'relative permittivity', its value being relative to the permittivity of a vacuum).

Capacitor Calculations:

So far, I have not talked about capacitance or voltage rating, but now we will see how to determine their values.

Maximum Value of Capacitance:

The limiting factor for the size of capacitor is the power supply (PSU) you intend to use. Maximum power output from your coil requires the PSU to recharge the capacitor, fully, each mains half-cycle. This will occur when the impedance of the PSU matches that of the primary cap (at your line frequency, 50Hz or 60Hz). You can calculate your maximum capacitor value as follows:-

$$Z = \frac{E}{I}$$

PSU:
Z = impedance
E = output voltage
I = output current in amps

$$C = \frac{1}{6.2832 \times Z \times 0.00005}$$

Capacitor:
C = capacitance in uF (micro Farad)
Z = PSU impedance (from above equation)
(N.B. substitute 0.00005 with 0.00006 for 60Hz supply)

Example: For a 10Kv 100mA NST, Z = 100000, therefore C = 0.0318 uF

Series and Parallel wiring of capacitors:

Fig.1 Fig.2

Fig.3

Fig.4

The value of a single capacitor (Fig.1) is $C = C1$ (no surprise there!)

The value of series wired capacitors (Fig.2) is $\frac{1}{C} = \frac{1}{C1} + \frac{1}{C2} + \frac{1}{C3}$ or $C = \frac{1}{\left(\frac{1}{C1} + \frac{1}{C2} + \frac{1}{C3}\right)}$

The value of parallel wired capacitors (Fig.3) is $C = C1 + C2 + C3$

An example of series and parallel wired capacitors (Fig.4) $C = \frac{1}{\left(\frac{1}{C1} + \frac{1}{C2}\right)} + \frac{1}{\left(\frac{1}{C3} + \frac{1}{C4}\right)}$

(N.B. To calculate for more, or less, capacitors in series/parallel, add, or remove, 'Cn' or '1/Cn' terms, where 'n' is an integer).

Physical Capacitor Dimensions:

The value of capacitance of a capacitor is a product of its physical dimensions and the type of dielectric used. The simplest form of capacitor is an arrangement of two plates of area 'A', seperated by a dielectric of thickness 'D' (see Fig.1)

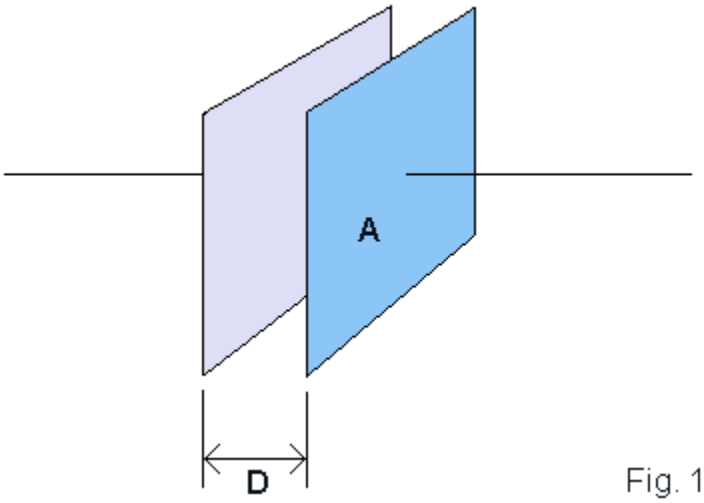

Fig. 1

The capacitance value of a two plate cap is calculated as follows:-

$$C = \frac{8.85 \times 10^{-12} \times DC \times A}{D}$$

C = capacitance in Farads
DC = dielectric constant
A = overlapping plate area in square metres
D = distance between plates in metres

(Take care to use the correct units when making calculations. A Farad is a million times bigger than a micro Farad).

Unlike the simple capacitor shown in Fig.1, real capacitors have their wire connections at the edges of the plates. Be careful with the area 'A' and include only the overlapping parts of the plates when working out its value (see Fig.2).

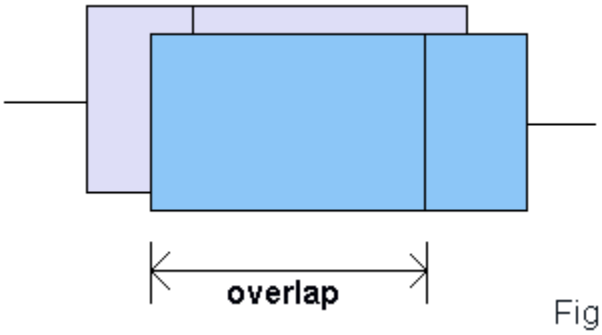

Fig. 2

A real capacitor will stack multiple plates and dielectric together. When this is done, you start to use both sides of all but the end two plates. A three plate cap has twice the capacitance of a two plate one (Fig.2 & Fig.3)

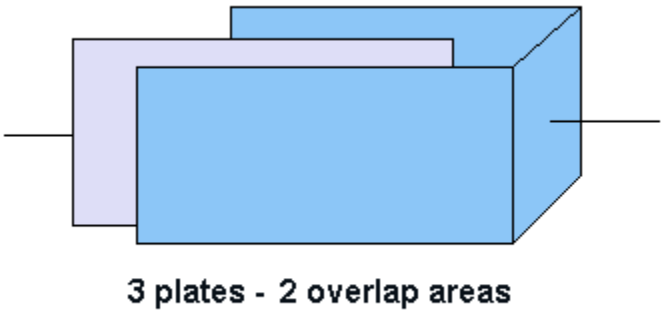

Fig. 3

The equation for calculating the value of a multi-plate cap is :-

$$C = \frac{8.85 \times 10^{-12} \times DC \times A}{D} \times (N-1)$$

C = capacitance in Farads
DC = dielectric constant
A = overlapping plate area in square metres
D = distance between plates in metres
N = number of plates

Use the capacitance calculator to work out your own parameters - >

(requires JavaScript enabled browser)

11

No. 158.495

DEPARTMENT OF AGRICULTURE

PATENT BRANCH

New York. N.Y.

November 22/24 1910

Nikola Tesla

PATENT No. 135174

N. Van Oldenneel
38 Park Row

APPLICATION FOR PATENT.

FOR Fluid Propulsion

COST OF COPIES.

PATENT & SPECIFICATION, $
SPECIFICATION 2.25
DRAWING .50
PETITION
OATH

$ 20.00 Receipt No. 189457

Action. Ack'd by Cir. Rmild spec. retd. Tiegs 26/11/10 Let & comments
Paper rec'd Dec 6/9/10
Ack'd by cir. 3 Dec. 13/10.
Letter, June 19/21/11
Ack'd by Cir. 6, July 20/11

Action continued

PATENT MAY ISSUE

W. J. Lynch

14 8 11 Chief Clerk

PATENT DATED AUG 22 1911

MAILED AUG 1911

Aug. 20, 1911

S P E C I F I C A T I O N.

TO ALL WHOM IT MAY CONCERN:

Be it known that I NIKOLA TESLA an engineer residing at The Waldorf Astoria, corner Fifth Avenue and Thirty Fourth Street, in the Borough of Manhattan, City and State of New York, United States of America, having invented certain new and useful improvements in FLUID PROPULSION, do hereby declare the following is a full, clear and exact description of the same.

In the practical application of mechanical power based on the use of a fluid as vehicle of energy it has been demonstrated that, in order to attain the highest economy, the changes in velocity and direction of movement of the fluid should be as gradual as possible. In the present forms of such apparatus more or less sudden changes, shocks and vibrations, are unavoidable. Besides the employment of the usual devices for imparting to, or deriving energy from a fluid, as pistons, paddles, vanes and blades, necessarily introduces numerous defects and limitations and adds to the complication, cost of production and maintenance of the machine.

The object of my invention is to overcome these deficiencies and to effect the transmission and transformation of mechanical energy through the agency of fluids in a more perfect manner, and by means simpler and more economical than those heretofore employed.

I accomplish this by causing the propelled or propelling fluid to move in natural paths or stream lines of least resistance, free from constraint and disturbance such as occasioned by vanes or kindred devices, and to change its velocity and direction of movement by imperceptible degrees, thus avoiding the losses due to sudden variations while the fluid is receiving or imparting energy.

It is well known that a fluid possesses, among others, two salient properties; adhesion and viscosity.

Owing to these a body propelled through such a medium encounters a peculiar impediment known as "lateral" or "skin resistance", which is two-fold; one arising from the shock of the fluid against the asperities of the solid substance, the other from internal forces opposing molecular separation. As an inevitable consequence a certain amount of the fluid is dragged along by the moving body. Conversely, if the body be placed in a fluid in motion, for the same reasons, it is impelled in the direction of movement.

These effects, in themselves, are of daily observation, but I believe that I am the first to apply them in a practical and economical manner of fluid propulsion. The nature of my discovery and the principles of construction of the apparatus which I have designed for carrying it out, I shall now proceed to describe by reference to the accompanying drawings which illustrate an operative and efficient embodiment of the same.

Fig. 1 is a partial end view, and Fig. 2 a vertical cross section of a pump or compressor, which Figs. 3 and 4 represent, respectively, in corresponding views, a rotary engine or turbine, both machines being constructed and adapted to be operated in accordance with my invention.

Figs. 1 and 2 show a runner composed of a plurality of flat rigid disks 1 of a suitable diameter, keyed to a shaft 2 and held in position by a threaded nut 3, a shoulder 4 and washers 5 of the requisite thickness. Each disk has a number of central openings 6, the solid portions between which form spokes 7 preferably curved, as shown, for the purpose of reducing the loss of energy due to the impact of the fluid.

This runner is mounted in a two-part volute casing 8 having stuffing boxes 9 and inlets 10 leading to its central portion. In addition a gradually widening and rounding outlet 11 is provided formed with a flange for connection to a pipe as usual. The casing 8 rests upon a base 12 shown only in part and supporting the bearings for the shaft 2, which being of ordinary construction are omitted from the drawings.

An understanding of the principle embodied in this device will be gained from the following description of its mode of operation.

Power being applied to the shaft and the runner set in rotation in the direction of the solid arrow, the fluid by reason of its properties of adherence and viscosity, upon entering through the inlets 10 and coming in contact with the disks 1 is taken hold of by the same and subjected to two forces, one acting tangentially in the direction of rotation, and the other radially outward. The combined effect of these tangential and centrifugal forces is to propel the fluid with continuously increasing velocity in a spiral path until it reaches the outlet 11 from which it is ejected. This spiral

movement, free and undisturbed and essentially dependent on these properties of the fluid, permitting it to adjust itself to natural paths or stream lines and to change its velocity and direction by insensible degrees, is characteristic of this method of propulsion and advantageous in its application.

While traversing the chamber enclosing the runner, the particles of the fluid may complete one or more turns, or but a part of one turn. In any given case their path can be closely calculated and graphically represented, but fairly accurate estimates of turns can be obtained simply by determining the number of revolutions required to renew the fluid passing through the chamber and multiplying it by the ratio between the mean speed of the fluid and that of the disks.

I have found that the quantity of fluid propelled in this manner is, other conditions being equal, approximately proportionate to the active surface of the runner and to its effective speed. For this reason, the performance of such machines augments at an exceedingly high rate with the increase of their size and speed of revolution.

The dimensions of the device as a whole, and the spacing of the disks in any given machine will be determined by the conditions and requirements of special cases. It may be stated that the intervening distance should be the greater, the larger the diameter of the disks, the longer the spiral path of the fluid and the greater its viscosity. In general the spacing should be such that the entire mass of the fluid, before leaving the runner, is accelerated to a nearly uniform velocity, not much below that of the periphery of the disks under normal working conditions and almost equal to it when the outlet is closed and the particles move in concentric circles.

It may also be pointed out that such a pump can be made without openings and spokes in the runner, as by using one or more solid disks, each in its own casing, in which form the machine will be eminently adapted for sewage, dredging and the like, when the water is charged with foreign bodies and spokes or vanes especially objectionable.

Another application of this principle which I have discovered to be not only feasible, but thoroughly practicable and efficient, is the utilization of machines such as above described for the compression or rarefaction of air, or gases in general. In such cases it will be found that most of the general considerations obtaining in the case of liquids, properly interpreted, hold true.

When, irrespective of the character of the fluid, considerable pressures are desired, staging or compounding may be resorted to in the usual way the individual runners being, preferably, mounted on the same shaft.

It should be added that the same end may be attained with one single runner by suitable deflection of the fluid through rotative or stationary passages.

The principles underlying the invention are capable of embodiment also in that field of mechanical engineering which is concerned in the use of fluids as motive agents, for while in some respects the actions in the latter case are directly opposite to those met with in the propulsion of fluids, the fundamental laws applicable in the two cases are the same. In other words, the operation above described is reversible, for if water or air under pressure be admitted to the opening 11 the runner is set in rotation in the direction of the dotted arrow by reason of the peculiar properties of the fluid which, travelling in a spiral path and with continuously diminishing velocity, reaches the orifices 6 and 10 through which it is discharged. If the runner be allowed to turn freely, in nearly frictionless bearings, its rim will attain a speed closely approximating the maximum of that of the fluid in the volute channel and the spiral path of the particles will be comparatively long, consisting of many almost circular turns. If load is put on and the runner slowed down, the motion of the fluid is retarded, the turns are reduced, and the path is shortened.

Owing to a number of causes affecting the performance, it is difficult to frame a precise rule which would be generally applicable, but it may be stated that within certain limits, and other conditions being the same, the torque is directly proportionate to the square of the velocity of the fluid relatively to the runner and to the effective area of the disks and, inversely, to the distance separating them. The machine will, generally, perform its maximum work when the effective speed of the runner is one half of that of the fluid. But to attain the highest economy the relative speed or slip, for any given performance, should be as small as possible. This condition may be to any desired degree approximated by increasing the active area and reducing the space between the disks.

When apparatus of the kind described is employed for the transmission of power certain departures from similarity between transmitter and reciver may be necessary for securing the best result. It is evident that, when transmitting power from one shaft to another by such machines, any desired ratio between the speeds of rotation may be obtained by proper selection of the diameters of the disks, or by suitably staging the transmitter, the receiver, or both. But it may be pointed out that in one respect, at least, the two machines are essentially different. In the pump, the radial or static pressure, due to centrifugal force, is added to the tangential or dynamic, thus increasing the effective head and assisting in the expulsion of the fluid. In

the motor, on the contrary, the first named pressure, being opposed to that of supply, reduces the effective head and the velocity of radial flow towards the center. Again, in the propelled machine a great torque is always desirable, this calling for an increased number of disks and smaller distance of separation, while in the propelling machine, for numerous economic reasons, the rotary effort should be the smallest and the speed the greatest practicable. Many other considerations, which will naturally suggest themselves, may affect the design and construction, but the preceding is thought to contain all necessary information in this regard.

The greatest value of this invention will be found in its use for the thermo-dynamic conversion of energy. Reference is now made to figs. 3 and 4, illustrative of the manner in which it is, or may be, so applied.

As in the previous figures, a runner is provided made up of disks 13 with openings 14 and spokes 15 which, in this case, may be straight. The disks are keyed to and held in position on a shaft 16, mounted to turn freely in suitable bearings, not shown, and are separated by washers 17 conforming in shape with the spokes and firmly united thereto by rivets 18. For the sake of clearness but a few disks, with comparatively wide intervening spaces, are indicated.

The runner is mounted in a casing comprising two end castings 19 with outlets 20 and stuffing boxes 21, and a central ring 22, which is bored out to a circle of a diameter slightly larger than that of the disks, and has flanged extensions 23 and inlets 24 into which finished ports, or nozzles, 25 are inserted. Circular grooves 26 and labyrinth packings 27 are provided on the sides of the runner. Supply pipes 28, with valves 29, are connected to the flanged extensions of the central ring one of the valves being, normally, closed.

With the exception of certain particulars, which will be hereinafter elucidated, the mode of operation will be understood from the preceding description. Steam or gas under pressure being allowed to pass through the valve at the side of the solid arrow, the runner is set in rotation in clockwise direction.

In order to bring out a distinctive feature assume, in the first place, that the motive medium is admitted to the disk chamber through a port, that is, a channel which it traverses with nearly uniform velocity. In this case, the machine will operate as a rotary engine, the fluid continuously expanding on its tortuous path to the central outlet. The expansion takes place chiefly along the spiral path, for the spread inward is opposed by the centrifugal force due to the velocity of whirl and by the great resistance to radial exhaust. It is to be observed that the resistance to the passage

of the fluid between the plates is, approximately proportionate to the square of the relative speed, which is maximum in the direction towards the center and equal to the full tangential velocity of the fluid. The path of least resistance, necessarily taken in obedience to a universal law of motion is, virtually, also that of least relative velocity.

Next, assume that the fluid is admitted to the disk chamber not through a port, but a diverging nozzle, a device converting, wholly or in part, the expansive into velocity-energy. The machine will then work rather like a turbine, absorbing the energy of kinetic momentum of the particles as they whirl, with continuously decreasing speed, to the exhaust.

The above description of the operation, I may add, is suggested by experience and observation, and is advanced merely for the purpose of explanation. The undeniable fact is that the machine does operate, both expansively and impulsively. When the expansion in the nozzle is complete, or nearly so, the fluid pressure in the peripheral clearance space is small; as the nozzle is made less divergent and its section enlarged, the pressure rises, finally approximating that of the supply. But the transition from purely impulsive to expansive action may not be continuous throughout, on account of critical states and conditions and comparatively great variations of pressure may be caused by small changes of nozzle velocity.

In the preceding it has been assumed that the pressure of supply is constant or continuous, but it will be understood that the operation will be, essentially, the same if the pressure be fluctuating or intermittent, as that due to explosions occurring in more or less rapid succession.

A very desirable feature, characteristic of machines constructed and operated in accordance with this invention, is their capability of reversal of rotation. Fig. 3, while illustrative of a special case, may be regarded as typical in this respect. If the right hand valve be shut off and the fluid supplied through the second pipe, the runner is rotated in the direction of the dotted arrow the operation, and also the performance, remaining the same as before, the central ring being bored to a circle with this purpose in view. The same result may be obtained in many other ways by specially designed valves, ports or nozzles for reversing the flow, the description of which is omitted here in the interest of simplicity and clearness. For the same reasons but one operative port or nozzle is illustrated which might be adapted to a volute but does not fit best a circular bore. It will be understood that a number of suitable inlets may be provided around the periphery of the runner to improve the action and that the construction of the machine may

be modified in many ways.

Still another valuable and probably unique quality of such motors or prime movers may be described. By proper construction and observance of working conditions the centrifugal pressure, opposing the passage of the fluid, may, as already indicated, be made nearly equal to the pressure of supply when the machine is running idle. If the inlet section be large, small changes in the speed of revolution will produce great differences of flow which are further enhanced by the concommittant variations in the length of the spiral path. A self-regulating machine is thus obtained bearing a striking resemblance to a direct-current electric motor in this respect that, with great differences of impressed pressure in a wide open channel the flow of the fluid through the same is prevented by virtue of rotation. Since the centrifugal head increases as the square of the revolutions, or even more rapidly, and with modern high grade steel great peripheral velocities are practicable, it is possible to attain that condition in a single stage machine, more readily if the runner be of large diameter. Obviously this problem is facilitated by compounding, as will be understood by those skilled in the art. Irrespective of its bearing on economy, this tendency which is, to a degree, common to motors of the above description, is of special advantage in the operation of large units, as it affords a safeguard against running away and destruction.

Besides these, such a prime mover possesses many other advantages, both constructive and operative. It is simple, light and compact, subject to but little wear, cheap and exceptionally easy to manufacture as small clearances and accurate milling work are not essential to good performance. In operation it is reliable, there being no valves, sliding contacts or troublesome vanes. It is almost free of windage, largely independent of nozzle efficiency and suitable for high as well as for low fluid velocities and speeds of revolution.

It will be understood that the principles of construction and operation above generally set forth, are capable of embodiment in machines of the most widely different forms, and adapted for the greatest variety of purposes. In my present application I have sought to describe and explain only the general and typical applications of the principle which I believe I am the first to realize and turn to useful account.

Having now particularly described and ascertained the nature of this said invention, and in what manner the same is to be performed, I declare that what I claim is:

1. The method of imparting energy to or deriving it from a fluid, based on adhesive and viscous action, which consists in admitting the fluid to the central or peripheral portion of a rotatably arranged system and causing it to flow, under the combined action of radial and tangential forces, in a spiral path towards the periphery, or the axis, of the rotating system, as set forth.

2. As an improvement in the transmission of power the method of imparting energy to or deriving it from a fluid, based on adhesive and viscous action, which consists in causing the fluid to flow, under the combined action of radial and tangential forces, in curved paths away from, or towards the axis of a rotatably arranged rigid system, as set forth.

3. The method of imparting energy to or deriving it from a fluid, based on adhesive and viscous action, which consists in admitting the fluid to the central or peripheral portion of a rotably arranged system and causing it to flow, under the combined action of radial and tangential forces, in a spiral path with gradually increasing or diminishing velocity towards the periphery, or the axis, of the rotating system, as set forth.

4. The method of deriving energy from a moving fluid, based on adhesive and viscous action, which consists in admitting the fluid to the peripheral portion of a runner and causing it to give up its energy of movement while flowing with continuously diminishing velocity in a spiral path towards the axis of the runner, as set forth.

5. The method of imparting energy to a fluid, based on adhesive and viscous action, which consists in admitting the fluid to the central portion of a runner and causing it to flow, by the combined effect of the tangential and radial forces, in a spiral path with continuously increasing velocity towards the periphery of the runner, as set forth.

6. A fluid propelling or fluid propelled machine consisting in the combination of a shaft, a plurality of disks spaced apart and mounted on the same, and ports or passages of inlet and outlet adjacent to the center and periphery of said disks, as set forth.

7. A fluid motor or engine comprising in combination a plurality of spaced plane rotably mounted disks, and means for admitting or discharging the fluid at the center and periphery of said disks, as set forth.

8. A fluid propelled machine comprising in combination a plurality of spaced plane rotably mounted disks, an enclosing casing and ports or passages of inlet and outlet at the center and periphery of the casing, as set forth.

9. A fluid motor or engine comprising in combination a runner composed of a plurality of disks rotably mounted with intervening spaces, and a casing enclosing the runner provided with ports or passages of inlet and outlet at the axis and periphery of the runner respectively, as set forth.

10. A fluid motor or engine comprising in combination a runner composed of a plurality of disks mounted at intervals and formed with openings near their centers, and means for admitting a liquid to or discharging it from the spaces between the disks and located respectively at the center and periphery of the same.

11. A thermo-dynamic converter comprising a shaft, a plurality of disks spaced thereon, an inlet for the motive fluid at the periphery of the disks and tangential thereto, and an outlet at the central portions of the same, as set forth.

Fig 1

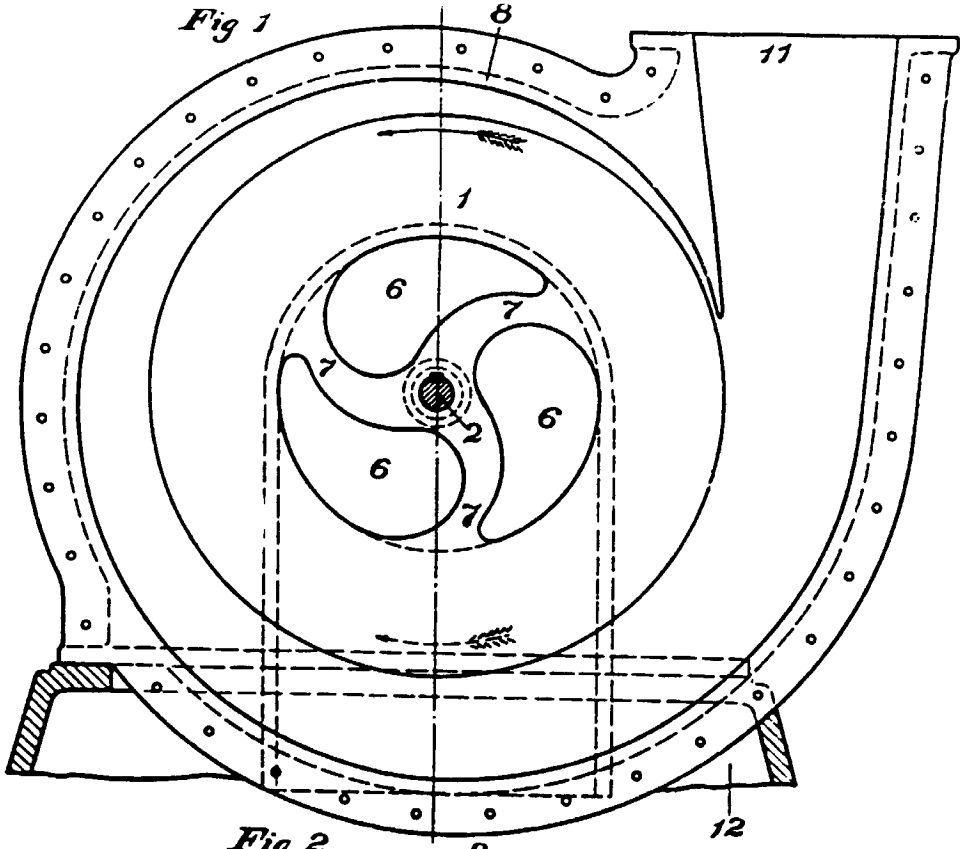

Fig 2

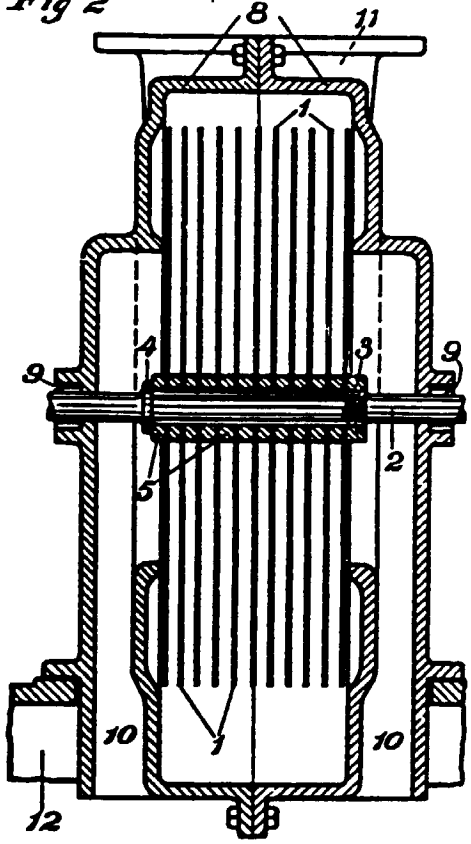

Certified to be the drawing referred to in the specification hereunto annexed.

New York, Nov. 21st 1910.

INVENTOR

NIKOLA TESLA

by Frank Lemmel

Attorney

WITNESSES:

H. J. Corrigan

John A. Horning

Fig 3

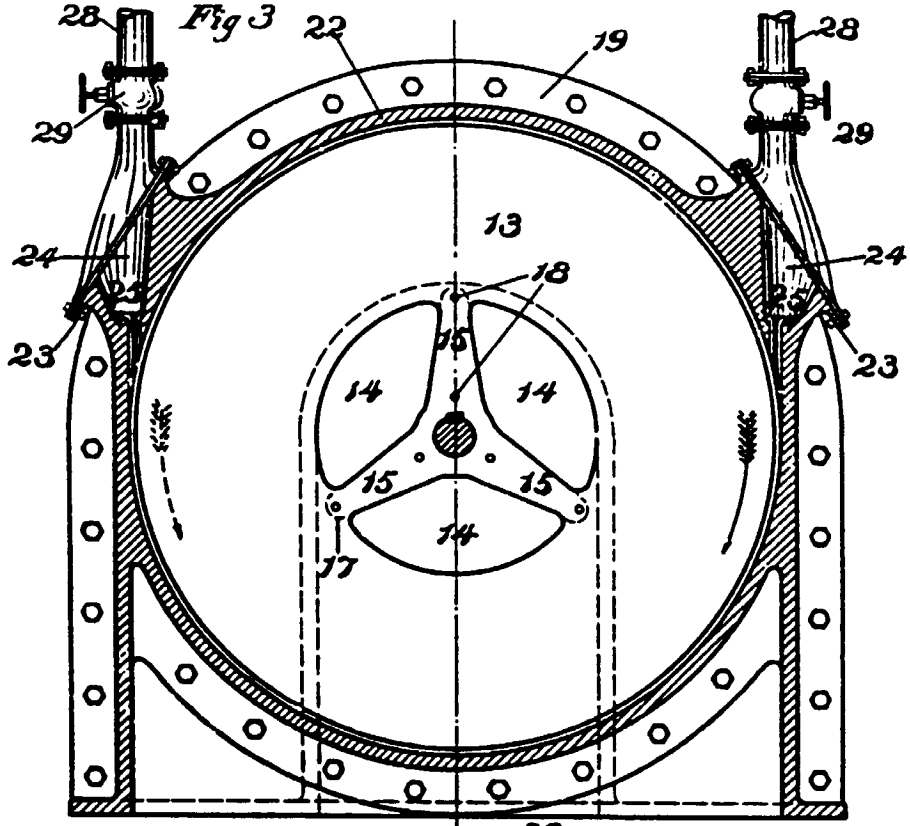

Fig 4

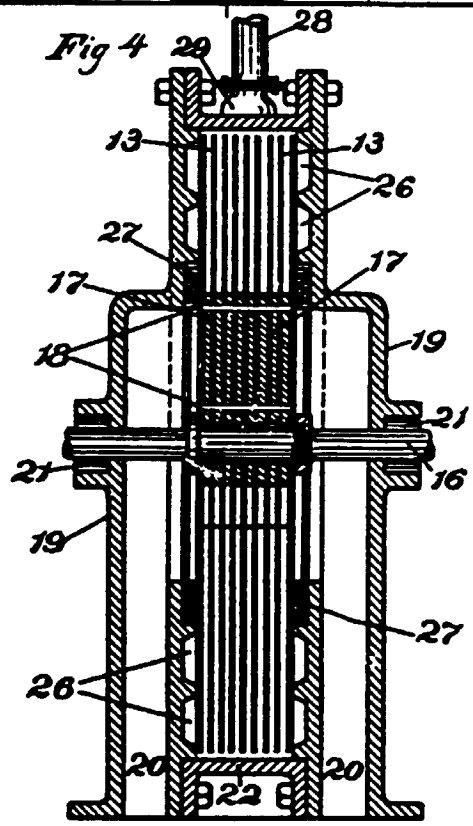

Certified to be the drawing referred to in the specification hereunto annexed.

New York, Nov. 21st 1910

WITNESSES:
[signature]
John H. Hoving

INVENTOR
NIKOLA TESLA
by [signature]
Attorney

NIKOLA TESLA

MASTER OF IMAGINATION

Submitted to
Ray Russell, Course Instructor
EE 155

Prepared by
Thomas Penick, Student

October 14, 1998

TABLE OF CONTENTS

EARLY EXPERIENCES 1

THE ALTERNATING CURRENT SYSTEM 2

TESLA'S GIFTS TO ENGINEERING 4

REFERENCES 5

NIKOLA TESLA

Nikola Tesla was born on July 9/10 (midnight), 1856 in Smiljam, Croatia, to a Serbian family. His father was an orthodox priest. His mother was unschooled but quite intelligent. Nikola was a dreamer who loved poetry. He was self-disciplined and compulsive. His principle contribution to the field of electromagnetic engineering is the discovery of the rotating magnetic field and the development of the polyphase electrical system [1 p. 161]. Historians credit Tesla with being a genius because he not only made unique discoveries in electromagnetic engineering but developed these discoveries into working systems in an area of science that had almost no existing body of knowledge other than what he himself had uncovered. Pioneering experiments were also conducted in fluorescent lighting, vacuum tube, radio, robotics, and X-ray technologies [3 pp. 9-13].

EARLY EXPERIENCES

Circumstances in Nikola's early life resulted in his imagination being exercised to the extreme. In his mind, Nikola would see flashes of light and vivid images. These images were not of imagined subjects, but were familiar scenes. The effect was so intense that it affected his ability to see. Interestingly, his brother exhibited similar difficulties. To gain relief, Nikola would take control of his hallucinations by conjuring up his own images—creating his own imaginary world. He would take imaginary journeys to strange places. These experiences were intense and made as strong an impression on young Nikola as his real life experiences. He played this game constantly from early childhood until the age of 17 when he began channeling his thoughts toward invention [2 p. 11-12].

As an inventor, he was able to eliminate a lot of models, drawings, and experiments by using the imagination he had developed in childhood to work through the development and trials of a new idea. He would conduct his first experiments in his imaginary world, noting problems and making adjustments, thus completing much of the preliminary work before conducting physical experiments [2 p. 12].

The first commercially generated power was direct current. Although alternating current could be more efficiently transmitted, it was not used because no satisfactory alternating current motor had been developed. Tesla pondered this problem for many years. Finally, while walking through a park in Budapest, the idea came to him in a flash. He conceived of a rotating magnetic field, created by multiple phases of AC power. This concept would eventually permit him to develop the first successful AC motor [2 p. 22, 23].

In 1882, Tesla worked at a telegraph office. He invented a telephone amplifier, which he didn't bother to patent. In the fall of 1882, he went to Paris to work for an Edison subsidiary. He worked as a troubleshooter at power plants in France and Germany. He wanted to sell Mr. Edison on his AC power ideas, but was told that Edison was solidly in favor of DC current over AC. On his own time, he built his first AC motor [2 p. 24, 25].

In 1884, Tesla immigrated to America, bringing a letter of recommendation addressed to Thomas Edison. He happened to catch Edison at a time when the inventor desperately needed help maintaining his many DC electrical systems. Edison sent Tesla immediately to repair dynamos aboard the SS Oregon. Tesla worked through the night to complete the repairs [2 p. 30-31].

Tesla informed Edison that he could make major improvements in Edison's DC dynamos. Edison said if he did, there would be $50,000 in it for him. Tesla worked long hours for almost a year to complete the redesign. He visited Edison and asked about his $50,000. Edison replied, "Tesla, you don't understand our American humor." Tesla resigned [2 p. 33-34]. America was entering an economic depression and Nikola Tesla found himself working on a New York street gang from 1886 to 1887 [2 p. 36].

THE ALTERNATING CURRENT SYSTEM

Finally, Tesla's foreman took him to meet A. K. Brown, manager of Western Union Telegraph Co. With Brown's help, Tesla Electric Co. was formed in April 1887. Tesla patented single-phase, two-phase, and three-phase AC systems, and two AC motors. In the first four years of

operation, he was granted 40 patents. The patents were processed quickly since there was nothing like them at the patent office. Both scientific and business interests took note of the patent office activity and Tesla was soon receiving invitations to lecture. He turned out to be a natural speaker [2 p. 36-39].

George Westinghouse had more than 30 AC power systems in operation at the time (under a different patent) and was interested in Tesla's motor. Westinghouse paid Tesla a visit at his lab. Tesla went to work for Westinghouse and moved to Pittsburgh. Tesla's motors ran at 60 Hz AC and could not be adapted to the 133 Hz Westinghouse system. Westinghouse was forced to switch to 60 Hz and this has become the standard electrical power frequency in the U.S. After several months in Pittsburgh, Tesla returned to New York [2 p.40]. He became a U.S. citizen on July 30, 1891, a status which he valued above all scientific honors. In September 1891 he went to Paris to lecture at the International Exposition and also visited his family in Croatia [2 p. 41].

Edison was outraged when he learned of Tesla's alliance with Westinghouse. He issued propaganda about the dangers of AC current. Edison conducted weekly demonstrations in which dogs and cats were electrocuted. Through a third party, he bought rights to Tesla's AC patents and worked a deal with New York prison authorities to carry out the first execution by electrocution on 8/6/1890. The convict failed to die after the first shock and the ordeal had to be repeated. It was reported as "an awful spectacle, far worse than hanging [2 p, 41-45]."

George Westinghouse became worn down financially by Edison's anti-alternating current initiatives. A major obstacle to the ability of Westinghouse to get new funding was his contract with Tesla to pay him $2.50 for each horsepower manufactured. George Westinghouse appealed to Tesla to relinquish his claim to the patents. Tesla, interested in seeing his inventions put to use, agreed and settled for a cash sum [2 p. 48-49].

Tesla proved to be quite a showman on the lecture circuit. He had glass tubes that glowed without electrical connections. This was the forerunner of the florescent bulb, another invention he didn't bother to patent. He wore insulated shoes and allowed high-voltage, high-frequency electric current to flow across his body. His purpose in doing this was, in part, to counter

Edison's propaganda about the danger of AC current. At high frequencies and voltages, electricity would run across the surface of the skin without penetrating. He demonstrated a motor run on one wire, with the return path through air. He spoke of the possibility of transmitting power long distances through the upper atmosphere. One dazzling display was his "carbon-button lamp," a partially evacuated glass globe with a piece of carborundum in one end connected to a single wire terminal. When high-frequency current was applied, "The central 'button' of material electrostatically propelled the surrounding gas molecules toward the glass globe. They were then repelled back toward the button, striking it and heating it to incandescence [2 p. 54]." The bulb was 20 times as efficient as the Edison bulb. Since a technical language had not yet evolved to describe these phenomena, Tesla described them poetically. For example, a static discharge he called a *brush* or a *luminous stream* [2 p. 54-55].

George Westinghouse won the contract for electrifying the Chicago World's Fair of 1893—the first electrical fair. He invited Tesla to speak. 25 million Americans visited the fair, which was one-third of the population at the time. Tesla had blown tubes to spell "Welcome Electricians," as well as the names of many famous scientists. He dazzled audiences with numerous demonstrations of high frequency, high-voltage current.

TESLA'S GIFTS TO ENGINEERING

Tesla's discovery of the rotating magnetic field and his inventions of the transformer and induction motor were valuable advancements that are still the means for the production, transmission and use of electrical power today. Less tangible but important contributions were his inspiring lectures and the ideas he left unpatented. In his dazzling demonstrations, he not only amazed his audiences but also sparked the interest of many contemporary and future inventors. It has taken decades for scientists to reproduce some of the experiments he demonstrated publicly. How Tesla was able to electrically produce a ball of flame and hold it in his hands remains a mystery. He energized a wave of invention during the late 19th and early 20th centuries and continues to inspire engineers today.

REFERENCES

[1] "Tesla, Nikola," *Encyclopaedia Britannica,* 1976 ed.

[2] Cheney, Margaret, *Tesla, Man Out of Time*, New York: Barnes & Noble Books, 1993.

[3] O'Neill, John J., *Prodigal Genius, The Life of Nikola Tesla*, Albuquerque: Brotherhood of Life, Inc., 1996.

NIKOLA TESLA

MASTER OF IMAGINATION

Submitted to
Ray Russell, Course Instructor
EE 155

Prepared by
Thomas Penick, Student

October 14, 1998

TABLE OF CONTENTS

EARLY EXPERIENCES 1

THE ALTERNATING CURRENT SYSTEM 2

TESLA'S GIFTS TO ENGINEERING 4

REFERENCES 5

NIKOLA TESLA

Nikola Tesla was born on July 9/10 (midnight), 1856 in Smiljam, Croatia, to a Serbian family. His father was an orthodox priest. His mother was unschooled but quite intelligent. Nikola was a dreamer who loved poetry. He was self-disciplined and compulsive. His principle contribution to the field of electromagnetic engineering is the discovery of the rotating magnetic field and the development of the polyphase electrical system [1 p. 161]. Historians credit Tesla with being a genius because he not only made unique discoveries in electromagnetic engineering but developed these discoveries into working systems in an area of science that had almost no existing body of knowledge other than what he himself had uncovered. Pioneering experiments were also conducted in fluorescent lighting, vacuum tube, radio, robotics, and X-ray technologies [3 pp. 9-13].

EARLY EXPERIENCES

Circumstances in Nikola's early life resulted in his imagination being exercised to the extreme. In his mind, Nikola would see flashes of light and vivid images. These images were not of imagined subjects, but were familiar scenes. The effect was so intense that it affected his ability to see. Interestingly, his brother exhibited similar difficulties. To gain relief, Nikola would take control of his hallucinations by conjuring up his own images—creating his own imaginary world. He would take imaginary journeys to strange places. These experiences were intense and made as strong an impression on young Nikola as his real life experiences. He played this game constantly from early childhood until the age of 17 when he began channeling his thoughts toward invention [2 p. 11-12].

As an inventor, he was able to eliminate a lot of models, drawings, and experiments by using the imagination he had developed in childhood to work through the development and trials of a new idea. He would conduct his first experiments in his imaginary world, noting problems and making adjustments, thus completing much of the preliminary work before conducting physical experiments [2 p. 12].

The first commercially generated power was direct current. Although alternating current could be more efficiently transmitted, it was not used because no satisfactory alternating current motor had been developed. Tesla pondered this problem for many years. Finally, while walking through a park in Budapest, the idea came to him in a flash. He conceived of a rotating magnetic field, created by multiple phases of AC power. This concept would eventually permit him to develop the first successful AC motor [2 p. 22, 23].

In 1882, Tesla worked at a telegraph office. He invented a telephone amplifier, which he didn't bother to patent. In the fall of 1882, he went to Paris to work for an Edison subsidiary. He worked as a troubleshooter at power plants in France and Germany. He wanted to sell Mr. Edison on his AC power ideas, but was told that Edison was solidly in favor of DC current over AC. On his own time, he built his first AC motor [2 p. 24, 25].

In 1884, Tesla immigrated to America, bringing a letter of recommendation addressed to Thomas Edison. He happened to catch Edison at a time when the inventor desperately needed help maintaining his many DC electrical systems. Edison sent Tesla immediately to repair dynamos aboard the SS Oregon. Tesla worked through the night to complete the repairs [2 p. 30-31].

Tesla informed Edison that he could make major improvements in Edison's DC dynamos. Edison said if he did, there would be $50,000 in it for him. Tesla worked long hours for almost a year to complete the redesign. He visited Edison and asked about his $50,000. Edison replied, "Tesla, you don't understand our American humor." Tesla resigned [2 p. 33-34]. America was entering an economic depression and Nikola Tesla found himself working on a New York street gang from 1886 to 1887 [2 p. 36].

THE ALTERNATING CURRENT SYSTEM

Finally, Tesla's foreman took him to meet A. K. Brown, manager of Western Union Telegraph Co. With Brown's help, Tesla Electric Co. was formed in April 1887. Tesla patented single-phase, two-phase, and three-phase AC systems, and two AC motors. In the first four years of

operation, he was granted 40 patents. The patents were processed quickly since there was nothing like them at the patent office. Both scientific and business interests took note of the patent office activity and Tesla was soon receiving invitations to lecture. He turned out to be a natural speaker [2 p. 36-39].

George Westinghouse had more than 30 AC power systems in operation at the time (under a different patent) and was interested in Tesla's motor. Westinghouse paid Tesla a visit at his lab. Tesla went to work for Westinghouse and moved to Pittsburgh. Tesla's motors ran at 60 Hz AC and could not be adapted to the 133 Hz Westinghouse system. Westinghouse was forced to switch to 60 Hz and this has become the standard electrical power frequency in the U.S. After several months in Pittsburgh, Tesla returned to New York [2 p.40]. He became a U.S. citizen on July 30, 1891, a status which he valued above all scientific honors. In September 1891 he went to Paris to lecture at the International Exposition and also visited his family in Croatia [2 p. 41].

Edison was outraged when he learned of Tesla's alliance with Westinghouse. He issued propaganda about the dangers of AC current. Edison conducted weekly demonstrations in which dogs and cats were electrocuted. Through a third party, he bought rights to Tesla's AC patents and worked a deal with New York prison authorities to carry out the first execution by electrocution on 8/6/1890. The convict failed to die after the first shock and the ordeal had to be repeated. It was reported as "an awful spectacle, far worse than hanging [2 p, 41-45]."

George Westinghouse became worn down financially by Edison's anti-alternating current initiatives. A major obstacle to the ability of Westinghouse to get new funding was his contract with Tesla to pay him $2.50 for each horsepower manufactured. George Westinghouse appealed to Tesla to relinquish his claim to the patents. Tesla, interested in seeing his inventions put to use, agreed and settled for a cash sum [2 p. 48-49].

Tesla proved to be quite a showman on the lecture circuit. He had glass tubes that glowed without electrical connections. This was the forerunner of the florescent bulb, another invention he didn't bother to patent. He wore insulated shoes and allowed high-voltage, high-frequency electric current to flow across his body. His purpose in doing this was, in part, to counter

Edison's propaganda about the danger of AC current. At high frequencies and voltages, electricity would run across the surface of the skin without penetrating. He demonstrated a motor run on one wire, with the return path through air. He spoke of the possibility of transmitting power long distances through the upper atmosphere. One dazzling display was his "carbon-button lamp," a partially evacuated glass globe with a piece of carborundum in one end connected to a single wire terminal. When high-frequency current was applied, "The central 'button' of material electrostatically propelled the surrounding gas molecules toward the glass globe. They were then repelled back toward the button, striking it and heating it to incandescence [2 p. 54]." The bulb was 20 times as efficient as the Edison bulb. Since a technical language had not yet evolved to describe these phenomena, Tesla described them poetically. For example, a static discharge he called a *brush* or a *luminous stream* [2 p. 54-55].

George Westinghouse won the contract for electrifying the Chicago World's Fair of 1893—the first electrical fair. He invited Tesla to speak. 25 million Americans visited the fair, which was one-third of the population at the time. Tesla had blown tubes to spell "Welcome Electricians," as well as the names of many famous scientists. He dazzled audiences with numerous demonstrations of high frequency, high-voltage current.

TESLA'S GIFTS TO ENGINEERING

Tesla's discovery of the rotating magnetic field and his inventions of the transformer and induction motor were valuable advancements that are still the means for the production, transmission and use of electrical power today. Less tangible but important contributions were his inspiring lectures and the ideas he left unpatented. In his dazzling demonstrations, he not only amazed his audiences but also sparked the interest of many contemporary and future inventors. It has taken decades for scientists to reproduce some of the experiments he demonstrated publicly. How Tesla was able to electrically produce a ball of flame and hold it in his hands remains a mystery. He energized a wave of invention during the late 19th and early 20th centuries and continues to inspire engineers today.

REFERENCES

[1] "Tesla, Nikola," *Encyclopaedia Britannica,* 1976 ed.

[2] Cheney, Margaret, *Tesla, Man Out of Time*, New York: Barnes & Noble Books, 1993.

[3] O'Neill, John J., *Prodigal Genius, The Life of Nikola Tesla*, Albuquerque: Brotherhood of Life, Inc., 1996.

MODERN PHYSICS FOR ENGINEERS PHY355

INDEX

3D infinite potential box .13
allowed transitions
  1-electron atoms.....16
  many-electron atoms ...17
Angstrom 21
angular frequency.....10
appendix 21
atomic mass 2
average momentum 11
Avogadro's number....18, 21
binding energy 5
binomial expansion 21
blackbody..... 6
Bohr magneton.....21
Bohr model 8
Bohr radius 7
Boltzmann constant.....21
Bose-Einstein distribution19
boson 19
Bragg's law 9
bremsstrahlung..... 6
classical physics 1
classical wave equation ...10
Compton effect..... 7
conservation laws..... 1
constants.....21
coordinate systems 22
coordinate transformations22
de Broglie wavelength.....10
degenerate energy levels..13
density of energy states ...19
density of occupied states 20
doppler effect..... 5
Duane-Hunt rule 6
electron
  acceleration..... 8
  angular momentum 7
  filling.....16
  orbit radius 8
  scattering..... 9
  velocity..... 8
energy
  binding..... 5
  density of states 19
  Fermi.....19
  kinetic 5
  relation to momentum .. 5
  relativistic kinetic 5
  rest 5
  splitting 16, 17, 18
  states 19
  total 5
  zero-point 12
energy distribution 18
expectation value 11
  radial 15
Fermi energy.....19
Fermi speed 19
Fermi temperature.....19
Fermi-Dirac distribution..19
fermion 19
frequency
  angular 10
fundamental forces..... 2
geometry.....22
Greek alphabet.....21
group velocity 10
harmonic motion 12
Heisenberg limit 12
Heisenberg uncertainty
  principle 12
Hermite functions.....12
impact parameter 7
infinite square well 12
intensity of light..... 6
inverse photoelectric effect6
kinetic energy 2, 5, 9, 12, 13
Landé factor.....17
lattice planes..... 9
laws of thermodynamics ... 2
length contraction..... 3
light wavefront..... 3
lightlike 4
line spectra 5
Lorentz force law 2
Lorentz transformation 3
magnetic moment.....16
Maxwell speed distribution
 18
Maxwell's equations 2
Maxwell-Boltzmann factor18
mean speed 18
Michelson-Morley
  experiment..... 3
minimum angle 17
molecular speeds.....18
momentum..... 4
  relativistic..... 4
momentum operator 11
momentum-energy relation 5
momentum-temperature
  relation 9
Moseley's equation 9
most probable speed.....18
Newton's laws 2
normalization 11
normalization constant 14
normalizing functions.....14
orbital angular momentum15
order of electron filling....16
particle in a box 12, 13
phase constant.....10
phase space 2, 19
phase velocity 10
photoelectric effect..... 6
photon..... 6
  momentum..... 4
Planck's constant 21
Planck's radiation law..... 6
positron..... 6
potential barrier 13
probability 11
  radial 15
probability density
  radial 15
probability of location 11
proper length..... 3
proper time 3
quantum numbers.....15
radial acceleration 8
radial probability.....15
radial probability density.15
radial wave functions 14
radiation power 6
relativity 3
rest energy 5
root mean square speed ...18
Rutherform scattering..... 8
Rydberg constant.....9, 21
scattering 7, 8
  electron..... 9
  head-on..... 7
  x-ray..... 9
Schrödinger wave equation
  .....11, 12
  3D rectangular coord...13
  3D spherical coord. 14
simple harmonic motion ..12
spacelike..... 4
spacetime diagram 4
spacetime distance 3
spacetime interval 4
spectral lines..... 9
spectroscopic symbols 16
speed of light 3
spherical coordinates.....22
spin angular momentum ..16
spin-orbit splitting.....17
splitting due to spin.....17
spring harmonics.....12
statistical physics 18
Stefan-Boltzman law..... 6
temperature
  Fermi.....19
temperature and momentum9
thermodynamics 2
time dilation..... 3
timelike 4
total angular momentum..16
total energy 5
trig identities.....22
tunneling.....13
uncertainty of waves.....10
uncertainty principle 12
units.....21
velocity addition..... 3
wave functions 10
wave number.....10, 11
wave uncertainties.....10
wavelength.....3, 10
  spectrum.....21
waves
  envelope 10
  sum.....10
Wien's constant 6
work function..... 6
x-ray
  L-alpha waves..... 9
  scattering..... 9
Young's double slit
  experiment..... 5
Zeeman splitting 16, 18
zero-point energy.....12

CLASSICAL PHYSICS

CLASSICAL CONSERVATION LAWS

Conservation of Energy: The total sum of energy (in all its forms) is conserved in all interactions.

Conservation of Linear Momentum: In the absence of external force, linear momentum is conserved in all interactions (vector relation). naustalgic

Conservation of Angular Momentum: In the absence of external torque, angular momentum is conserved in all interactions (vector relation).

Conservation of Charge: Electric charge is conserved in all interactions.

Conservation of Mass: (not valid)

MAXWELL'S EQUATIONS

Gauss's law for electricity	$\oint \mathbf{E} \cdot d\mathbf{A} = \frac{q}{\varepsilon_0}$
Gauss's law for magnetism	$\oint \mathbf{B} \cdot d\mathbf{A} = 0$
Faraday's law	$\oint \mathbf{E} \cdot d\mathbf{s} = -\frac{d\Phi_B}{dt}$
Generalized Ampere's law	$\oint \mathbf{B} \cdot d\mathbf{s} = \mu_0 \varepsilon_0 \frac{d\Phi_E}{dt} + \mu_0 I$

LORENTZ FORCE LAW

Lorentz force law: $\mathbf{F} = q\mathbf{E} + q\mathbf{v} \times \mathbf{B}$

NEWTON'S LAWS

Newton's first law: *Law of Inertia* An object in motion with a constant velocity will continue in motion unless acted upon by some net external force.

Newton's second law: The acceleration **a** of a body is proportional to the net external force **F** and inversely proportional to the mass *m* of the body. $\mathbf{F} = m\mathbf{a}$

Newton's third law: *law of action and reaction* The force exerted by body 1 on body 2 is equal and opposite to the force that body 2 exerts on body 1.

LAWS OF THERMODYNAMICS

First law of thermodynamics: The change in the internal energy ΔU of a system is equal to the heat Q added to the system minus the work W done by the system.

Second law of thermodynamics: It is not possible to convert heat completely into work without some other change taking place.

Third law of thermodynamics: It is not possible to achieve an absolute zero temperature.

Zeroth law of thermodynamics: If two thermal systems are in thermodynamic equilibrium with a third system, they are in equilibrium with each other.

FUNDAMENTAL FORCES

FORCE	RELATIVE STRENGTH	RANGE
Strong	1	Short, ~10^{-15}m
Electroweak		
Electromagnetic	10^{-2}	Long, $1/r^2$
Weak	10^{-9}	Short, ~10^{-15}m
Gravitational	10^{-39}	Long, $1/r^2$

ATOMIC MASS

The mass of an atom is it's atomic number divided by the product of 1000 times Avogadro's number.

$$\frac{\text{atomic number}}{1000 \times N_a}$$

KINETIC ENERGY

The kinetic energy of a particle (ideal gas) in equilibrium with its surroundings is:

$$K = \frac{3kT}{2}$$

PHASE SPACE

A six-dimensional pseudospace populated by particles described by six position and velocity parameters:

position: (x, y, z) **velocity:** (v_x, v_y, v_z)

WAVELENGTH l

$$c = \frac{1}{\sqrt{\mu_0 \varepsilon_0}} = \lambda \nu$$

$1Å = 10^{-10}m$

c = speed of light 2.998×10^8 m/s
λ = wavelength [m]
ν = (nu) radiation frequency [Hz]
Å = (angstrom) unit of wavelength equal to 10^{-10} m
m = (meters)

Michelson-Morley Experiment indicated that light was not influenced by the "flow of ether".

LORENTZ TRANSFORMATION

Compares position and time in two coordinate systems moving with respect to each other along axis x.

$$x' = \frac{x - vt}{\sqrt{1 - v^2/c^2}} \qquad t' = \frac{t - vx/c^2}{\sqrt{1 - v^2/c^2}}$$

v = velocity of (x',y',z') system along the x-axis. [m/s]
t = time [s]
c = speed of light 2.998×10^8 m/s

or with $\beta = \frac{v}{c}$ and $\gamma = \frac{1}{\sqrt{1 - v^2/c^2}}$

so that $x' = \gamma(x - vt)$ and $t' = \gamma(t - \beta x/c)$

LIGHT WAVEFRONT

Position of the wavefront of a light source located at the origin, also called the **spacetime distance**.

$$x^2 + y^2 + z^2 = c^2 t^2$$

Proper time T_0 The elapsed time between two events occurring at the same position in a system as recorded by a stationary clock in the system (shorter duration than other times). Objects moving at high speed age less.

Proper length L_0 a length that is not moving with respect to the observer. The proper length is longer than the length as observed outside the system. Objects moving at high speed become longer in the direction of motion.

TIME DILATION

Given two systems moving at great speed relative to each other; the time interval between two events occurring at the same location as measured within the same system is the **proper time** and is shorter than the time interval as measured outside the system.

$$T = \frac{T_0'}{\sqrt{1 - v^2/c^2}} \quad \text{or} \quad T' = \frac{T_0}{\sqrt{1 - v^2/c^2}} \quad \text{where:}$$

T'_0, T_0 = the proper time (shorter). [s]
T, T' = time measured in the other system [m]
v = velocity of (x',y',z') system along the x-axis. [m/s]
c = speed of light 2.998×10^8 m/s

LENGTH CONTRACTION

Given an object moving with great speed, the distance traveled as seen by a stationary observer is L_0 and the distance seen by the object is L', which is contracted.

$$L_0 = \frac{L'}{\sqrt{1 - v^2/c^2}} \quad \text{where:}$$

L_0 = the **proper length** (longer). [m]
L' = contracted length [m]
v = velocity of (x',y',z') system along the x-axis. [m/s]
c = speed of light 2.998×10^8 m/s

RELATIVISTIC VELOCITY ADDITION

Where frame K' moves along the x-axis of K with velocity v, and an object moves along the x-axis with velocity u_x' with respect of K', the velocity of the object with respect to K is u_x.

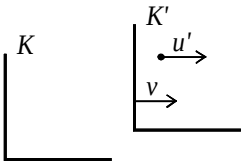

$$u_x = \frac{u_x' + v}{1 + (v/c^2)u_x'}$$

If there is u_y' or u_z' within the K' frame then

$$u_y = \frac{u_y'}{\gamma\left[1 - (v/c^2)u_x'\right]} \quad \text{and} \quad u_z = \frac{u_z'}{\gamma\left[1 - (v/c^2)u_x'\right]}$$

u_x = velocity of an object in the x direction [m/s]
v = velocity of (x',y',z') system along the x-axis. [m/s]
c = speed of light 2.998×10^8 m/s
$\gamma = 1/\sqrt{1 - v^2/c^2}$

For the situation where the velocity u with respect to the K frame is known, the relation may be rewritten exchanging the primes and changing the sign of v.

SPACETIME DIAGRAM

The diagram is a means of representing events in two systems. The horizontal x axis represents distance in the K system and the vertical ct axis represents time multiplied by the speed of light so that it is in units of distance as well. A point on the diagram represents an event in terms of its location in the x direction and the time it takes place. So points that are equidistant from the x axis represent simultaneous events.

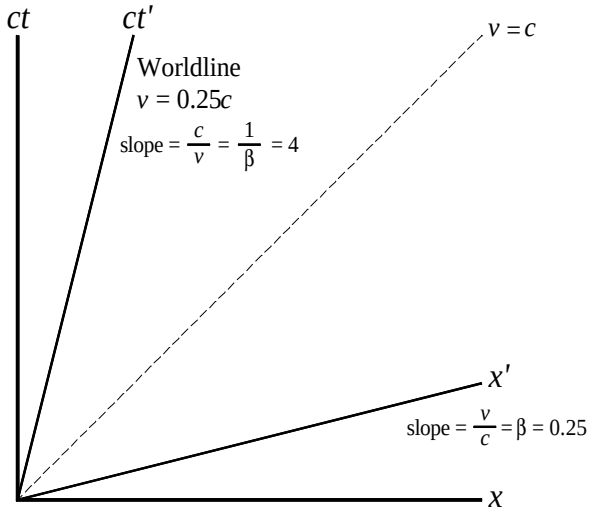

A system K' traveling in the x direction at ¼the speed of light is represented by the line ct' in this example, and is called a *worldline*. The line represents travel from one location to another over a period of time. The slope of the line is proportional to the velocity. A line with a slope of 1 (dashed line in illustration) indicates travel at the speed of light, so no worldline can have a slope less than 1. A straight line indicates zero acceleration. Simultaneous events occurring at $t = t' = 0$ in the K' system may be represented by points along the x' axis. Other simultaneous events in the K' system will be found on lines parallel to the x' axis.

SPACETIME INTERVAL Ds

The quantity Δs^2 is invariant between two frames of reference with relative movement along the x-axis.

$$s^2 = x^2 - (ct)^2 = x'^2 - (ct')^2$$

Two events occurring at different times and locations in the K-frame may be characterized by their Δs^2 quantity.

$$\Delta s^2 = \Delta x^2 - (c\Delta t)^2$$

lightlike - Ds^2 = 0: In this case, $\Delta x^2 = c^2\Delta t^2$, and the two events can only be connected by a light signal.

spacelike - Ds^2 > 0: In this case, $\Delta x^2 > c^2\Delta t^2$, and there exists a K'-frame in which the two events occur simultaneously but at different locations.

timelike - Ds^2 < 0: In this case, $\Delta x^2 < c^2\Delta t^2$, and there exists a K'-frame in which the two events occur at the same position but at different times. Events can be *causally* connected.

MOMENTUM **p**

$$\mathbf{p} = m\mathbf{v} \qquad \text{for a photon: } \mathbf{p} = \frac{h\nu}{c}$$

p = momentum [kg-m/s], convertible to [eV/c] by multiplying by c/q.

m = mass of the object in motion [kg]

v = velocity of object [m/s]

n = (nu) the frequency of photon light [Hz]

c = speed of light 2.998 × 10^8 m/s

RELATIVISTIC MOMENTUM **p**

$$\boxed{\mathbf{p} = \gamma m\mathbf{u}} \quad \text{where:}$$

p = relativistic momentum [kg-m/s], convertible to [eV/c] by multiplying by c/q.

$\gamma = 1/\sqrt{1-u^2/c^2}$

m = mass [kg]

u = velocity of object [m/s]

DOPPLER EFFECT

Given two systems approaching each other at velocity v, light emitted by one system at frequency n_0 (nu, proper) will be perceived at the higher frequency of n (nu) in the other system.

$$\nu = \frac{\sqrt{1+\beta}}{\sqrt{1-\beta}}\nu_0$$

For two systems receeding from each other, reverse the signs.

n = (nu) the frequency of emitted light as perceived in the other system [Hz]

n_0 = (nu) the **proper frequency** of the emitted light (lower for approaching systems) [Hz]. Frequency is related to wavelength by $c = \lambda\nu$.

β = v/c where v is the closing velocity of the systems (Use a negative number for diverging systems.) and c is the speed of light 2.998×10^8 m/s

v = velocity of (x',y',z') system along the x-axis. [m/s]

RELATIVISTIC KINETIC ENERGY K

Relativistic kinetic energy is the total energy minus the rest energy. When the textbook speaks of a 50 Mev particle, it is talking about the particle's **kinetic energy**.

$$K = \gamma mc^2 - mc^2$$ where:

K = relativistic kinetic energy [J], convertible to [eV] by dividing by q.

$\gamma = 1/\sqrt{1-v^2/c^2}$

m = mass [kg]

c = speed of light 2.998×10^8 m/s

REST ENERGY E_0

Rest energy is the energy an object has due to its mass.

$$E_0 = mc^2$$

TOTAL ENERGY E

Total energy is the kinetic energy plus the rest energy. When the textbook speaks of a 50 Mev particle, it is talking about the particle's **kinetic energy**.

$$E = K + E_0 \text{ or } E = \gamma mc^2$$ where:

E = total energy [J], convertible to [eV] by dividing by q.

K = kinetic energy [J], convertible to [eV] by dividing by q.

E_0 = rest energy [J], convertible to [eV] by dividing by q.

$\gamma = 1/\sqrt{1-v^2/c^2}$

m = mass [kg]

c = speed of light 2.998×10^8 m/s

MOMENTUM-ENERGY RELATION

$(\text{energy})^2 = (\text{kinetic energy})^2 + (\text{rest energy})^2$

$$E^2 = p^2c^2 + m^2c^4$$ where:

E = total energy (Kinetic + Rest energies) [J]

p = momentum [kg-m/s]

m = mass [kg]

c = speed of light 2.998×10^8 m/s

BINDING ENERGY

- the potential energy associated with holding a system together, such as the coulomb force between a hydrogen proton and its electron
- the difference between the rest energies of the individual particles of a system and the rest energy of a the bound system
- the work required to pull particles out of a bound system into free particles at rest.

$$E_B = \sum_i m_i c^2 - M_{\text{bound system}} c^2$$

for hydrogen and single-electron ions, the binding energy of the electron in the ground state is

$$E_B = \frac{mZ^2e^4}{2\hbar^2\left(4\pi\varepsilon_0\right)^2}$$

E_B = binding energy (can be negative or positive) [J]

m = mass [kg]

Z = atomic number of the element

$e = q$ = electron charge [c]

$\hbar$ = Planck's constant divided by 2π [J-s]

ε_0 = permittivity of free space 8.85×10^{-12} F/m

c = speed of light 2.998×10^8 m/s

LINE SPECTRA

Light passing through a diffraction grating with thousands of ruling lines per centimeter is diffracted by an angle θ.

$$d\sin\theta = n\lambda$$

The equation also applies to **Young's double slit experiment**, where for every integer n, there is a lighting maxima. The off-center distance of the maxima is $y = l\tan\theta$

d = distance between rulings [m]

θ = angle of diffraction [degrees]

n = the order number (integer)

λ = wavelength [m]

l = distance from slits to screen [m]

WIEN'S CONSTANT

The product of the wavelength of peak intensity λ [m] and the temperature T [K] of a blackbody. A **blackbody** is an ideal device that absorbs all radiation falling on it.

$$\lambda_{max} T = 2.898 \times 10^{-3} \ \text{m} \cdot \text{K}$$

STEFAN-BOLTZMANN LAW

May be applied to a **blackbody** or any material for which the emissivity is known.

$$R(T) = \varepsilon \sigma T^4$$ where:

$R(T)$ = power per unit area radiated at temperature T [W/m^2]

ε = emissivity (ε = 1 for ideal **blackbody**)

σ = constant 5.6705×10^{-8} W/(m$^2 \cdot$ K^4)

T = temperature (K)

PLANCK'S RADIATION LAW

$$I(\lambda, T) = \frac{2\pi c^2 h}{\lambda^5} \frac{1}{e^{hc/\lambda kT} - 1}$$ where:

$I(\lambda, T)$ = light intensity [W/(m$^2 \cdot$ λ)]

λ = wavelength [m]

T = temperature [K]

c = speed of light 2.998×10^8 m/s

h = Planck's constant $6.6260755 \times 10^{-34}$ J-s

k = Boltzmann's constant 1.380658×10^{-23} J/K

positron – A particle having the same mass as an electron but with a positive charge

bremsstrahlung – from the German word for *braking radiation*, the process of an electron slowing down and giving up energy in photons as it passes through matter.

PHOTON

A photon is a massless particle that travels at the speed of light. A photon is generated when an electron moves to a lower energy state (orbit).

Photon energy: $E = h\nu = pc$ [Joules]

Momentum: $p = \frac{h\nu}{c}$ [kg-m/s], convertible to [eV/c] by multiplying by c/q.

Wavelength: $\lambda = \frac{c}{\nu}$ [meters]

h = Planck's constant $6.6260755 \times 10^{-34}$ J-s

n = (nu) frequency of the electromagnetic wave associated with the light given off by the photon [Hz]

c = speed of light 2.998×10^8 m/s

PHOTOELECTRIC EFFECT

This is the way the book shows the formula, but it is a units nightmare.

$$\frac{1}{2} m v_{max}^2 = eV_0 = h\upsilon - \phi$$ where:

$\frac{1}{2} m v_{max}^2$ = energy in Joules, but convert to eV for the formula by dividing by q.

eV_0 = potential required to stop electrons from leaving the metal [V]

$h\nu$ = Planck's constant [$6.6260755 \times 10^{-34}$ J-s] multiplied by the frequency of light [Hz]. This term will need to be divided by q to obtain eV.

ϕ = work function, minimum energy required to get an electron to leave the metal [eV]

INVERSE PHOTOELECTRIC EFFECT

$$eV_0 = h\upsilon_{max} = \frac{hc}{\lambda_{min}}$$ where:

eV_0 = the kinetic energy of an electron accelerated through a voltage V_0 [eV]

$h\nu$ = Planck's constant [$6.6260755 \times 10^{-34}$ J-s] multiplied by the frequency of light [Hz]. This term will need to be divided by q to obtain eV.

λ_{min} = the minimum wavelength of light created when an electron gives up one **photon** of light energy [m]

DUANE-HUNT RULE

$$\lambda_{min} = \frac{1.2398 \times 10^{-6}}{V_0}$$

ELECTRON ANGULAR MOMENTUM

from the **Bohr** model:

$$L = mvr = n\hbar$$ where:

L = angular momentum [kg-m^2/s?]
m = mass [kg]
v = velocity [m/s]
r = radius [m]
n = principle quantum number
$\hbar$ = Planck's constant divided by 2π [J-s]

a_0 BOHR RADIUS [m]

The Bohr radius is the radius of the orbit of the hydrogen electron in the ground state (n=1):

$$a_0 = \frac{4\pi\varepsilon_0\hbar^2}{m_e e^2}$$ and for higher states (n>1): $$r_n = a_0 n^2$$

a_0, r_n = Bohr radius 5.29177×10^{-11} m, quantized radius [m]
ε_0 = permittivity of free space 8.85×10^{-12} F/m
m_e = electron mass 9.1093897×10^{-31} [kg]
$e = q$ = electron charge [c]
n = principle quantum number
$\hbar$ = Planck's constant divided by 2π [J-s]

IMPACT PARAMETER b

The impact parameter b is the distance that a bombarding particle deviates from the direct-hit approach path, and is related to the angle θ at which it will be deflected by the target particle.

$$b = \frac{Z_1 Z_2 e^2}{8\pi\varepsilon_0 K}\cot\frac{\theta}{2}$$

b = direct path deviation [m]
Z_1 = atomic number of the incident particle
Z_2 = atomic number of the target particle
$e = q$ = electron charge [c]
ε_0 = permittivity of free space 8.85×10^{-12} F/m
K = kinetic energy of the incident particle Z_1
θ = angle of particle Z_1 deflection or **scattering**

HEAD-ON SCATTERING

When a particle of kinetic energy K and atomic number Z_1 is fired directly at the nucleus, it approaches to r_{min} before reversing direction. The entire kinetic energy is converted to Coulomb potential energy. Since r_{min} is measured to the center of the particles, they will just touch when r_{min} is the sum of their radii.

$$r_{min} = \frac{Z_1 Z_2 e^2}{4\pi\varepsilon_0 K}$$

r_{min} = particle separation (measured center to center) at the time that the bombarding particle reverses direction [m]
other variables are previously defined

COMPTON EFFECT

The scattering of a photon due to collision with a single electron results in a new wavelength λ' and a directional change of $\angle\theta$ and is described by the following relation:

$$\Delta\lambda = \lambda' - \lambda = \frac{h}{mc}(1-\cos\theta)$$

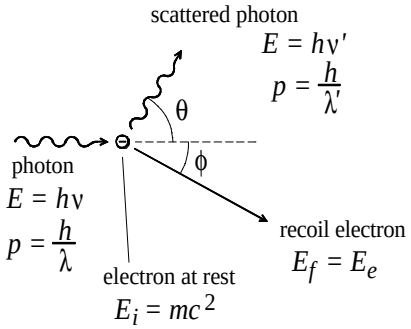

The ϕ relations come from the conservation of momentum:

$$p_x: \quad \frac{h}{\lambda} = \frac{h}{\lambda'}\cos\theta + p_e\cos\phi$$

$$p_y: \quad \frac{h}{\lambda'}\sin\theta = p_e\sin\phi$$

RUTHERFORD SCATTERING

A particle of kinetic energy K and atomic number Z_1 when fired at a target film of thickness t and atomic number Z_2, will be deflected by an angle θ.

$$N(\theta) = \frac{N_i n t}{16}\left(\frac{e^2}{4\pi\varepsilon_0}\right)^2 \frac{{Z_1}^2 {Z_2}^2}{r^2 K^2 \sin^4(\theta/2)}$$

$N(\theta)$ = number of particles scattered per unit area [m^{-2}]

θ = angle of particle Z_1 deflection or **scattering**

N_i = total number of incident particles [kg]

n = number of atoms per unit volume [m^{-3}] $n = \frac{\rho N_A N_M}{M_g}$

where ρ is density [g/m^3], N_A is Avogadro's number, N_M is the number of atoms per molecule, and M_G is the gram-molecular weight [g/mole].

t = thickness of the target material [m]

$e = q$ = electron charge [c]

ε_0 = permittivity of free space 8.85×10^{-12} F/m

Z_1 = atomic number of the incident particle

Z_2 = atomic number of the target particle

r = the radius at which the angle θ is measured [m]

K = kinetic energy of the incident particle Z_1

PROBABILITY OF A PARTICLE SCATTERING BY AN ANGLE GREATER THAN q

$$f = \pi n t\left(\frac{Z_1 Z_2 e^2}{8\pi\varepsilon_0 K}\right)^2 \cot^2\frac{\theta}{2}$$

f = the probability (a value between 0 and 1)

n = number of atoms per unit volume [m^{-3}] $n = \frac{\rho N_A N_M}{M_g}$

where ρ is density [g/m^3], N_A is Avogadro's number, N_M is the number of atoms per molecule, and M_G is the gram-molecular weight [g/mole].

t = thickness of the target material [m]

Z_1 = atomic number of the incident particle

Z_2 = atomic number of the target particle

$e = q$ = electron charge [c]

ε_0 = permittivity of free space 8.85×10^{-12} F/m

K = kinetic energy of the incident particle Z_1

θ = angle of particle Z_1 deflection or **scattering**

Alpha particle: Z=2
Proton: Z=1

ELECTRON VELOCITY

This comes from the **Bohr model** and only applies to atoms and ions having a single electron.

$$v_n = \underbrace{\frac{1}{n}\frac{Ze^2}{4\pi\varepsilon_0\hbar}}_{n\text{-dependent}} = \underbrace{\frac{e\sqrt{Z}}{2\sqrt{\pi\varepsilon_0 m_e r}}}_{r\text{-dependent}}$$

v = electron velocity [m/s]

Z = atomic number or number of protons in the nucleus

$e = q$ = electron charge [c]

n = the electron orbit or shell

ε_0 = permittivity of free space 8.85×10^{-12} F/m

m_e = mass of an electron 9.1093897×10^{-31} kg

$\hbar$ = Planck's constant divided by 2π [J-s]

r = the radius of the electron's orbit [m]

ELECTRON ORBIT RADIUS

This comes from the **Bohr model** and only applies to atoms and ions having a single electron.

$$r_n = \frac{4\pi\varepsilon_0 n^2 \hbar^2}{m_e Z e^2}$$

r_n = electron orbit radius in the n shell [m]

other variables are previously defined

a_r RADIAL ACCELERATION

a_r = the radial acceleration of an orbiting electron [m/s^2]

v = tangential velocity of the electron [m/s]

r = electron orbit radius [m]

$$a_r = \frac{v^2}{r}$$

R_∞ RYDBERG CONSTANT

R_∞ is used in the **Bohr model** and is a close approximation assuming an infinite nuclear mass. R is the adjusted value. These values are appropriate for hydrogen and single-electron ions.

$$R = \frac{\mu_e Z^2 e^4}{4\pi c\hbar^3 (4\pi\varepsilon_0)^2} \quad \text{where} \quad \mu_e = \frac{m_e M}{m_e + M}$$

R_∞ = Rydberg constant 1.09678×10^7 m^{-1} (1.096776×10^7 m^{-1} for hydrogen)

μ_e = adjusted electron mass

Z = atomic number, or number of protons in the nucleus

ε_0 = permittivity of free space 8.85×10^{-12} F/m

c = speed of light 2.998×10^8 m/s

$\hbar$ = Planck's constant divided by 2π [J-s]

m_e = mass of an electron 9.1093897×10^{-31} kg

M = mass of the nucleus (essentially the same as the mass of the atom $\Rightarrow$ atomic number $\times$ 1.6605×10^{-27}) [kg]

L_a MOSELEY'S EQUATION

British physicist, Henry Moseley determined this equation experimentally for the frequency of L_α ***x*-rays**. L_a **waves** are produced by an electron decaying from the n=3 orbit to the n=2 or L orbit.

$$\nu_{L_\alpha} = \frac{5}{36} cR(Z - 7.4)^2$$

n = (nu) frequency [Hz]

c = speed of light 2.998×10^8 m/s

R = Adjusted Rydberg constant (see above) [m^{-1}]

Z = atomic number or number of protons in the nucleus

SPECTRAL LINES

This formula gives the wavelength of light emitted when an electron in a single-electron atom or ion decays from orbit n_u to n_l.

$$\frac{1}{\lambda} = Z^2 R\left(\frac{1}{n_l^2} - \frac{1}{n_u^2}\right)$$

λ = wavelength [m]

Z = atomic number or number of protons in the nucleus

R = Rydberg constant (1.096776×10^7 m^{-1} for hydrogen)

n_l = the lower electron orbit number

n_u = the upper electron orbit number

BRAGG'S LAW

X-ray Scattering - X-rays reflected from a crystal experience interference effects since rays reflecting from the interior of the material take a longer path than those reflecting from the surface. Compare to ELECTRON SCATTERING below.

$$n\lambda = 2d\sin\theta$$

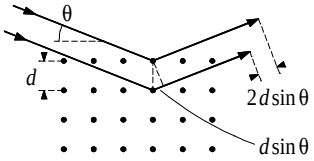

n = order of reflection (number of lattice planes in depth)

λ = wavelength of the incident wave [m]

d = distance between **lattice planes** (interatomic spacing in this case) [m]

θ = angle of incidence; the angle between the incident wave and the surface of the material

ELECTRON SCATTERING

Electrons directed into a crystalline material are scattered (reflected) at various angles depending on the arrangement of **lattice planes**. There is more than one set of lattice planes in a crystal. The technique can be used to explore the characteristics of a material. Compare to BRAGG'S LAW above.

$$n\lambda = D\sin\phi$$

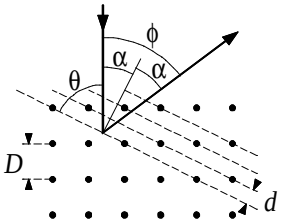

n = order of reflection (number of lattice planes in depth)

λ = wavelength of the incident wave [m]

D = interatomic spacing [m]

d = distance between lattice planes [m]

ϕ = angle between the incident and reflected waves

K CLASSICAL KINETIC ENERGY

Two expressions for kinetic energy:

$$\frac{p^2}{2m} = K = \frac{3}{2}kT$$

lead to a **momentum-temperature relation** for particles:

$$p^2 = 3mkT$$

p = momentum [kg-m/s]

m = particle mass [kg]

K = kinetic energy [J]

k = Boltzmann's constant 1.380658×10^{-23} J/K

T = temperature in Kelvin (273.15K = 0°C, ΔK = ΔC)

(see page 5 for RELATIVISTIC KINETIC ENERGY)

WAVES

Y WAVE FUNCTIONS

Classical Wave Equation
We did not use this equation: $$\frac{\partial^2\Psi}{\partial x^2} = \frac{1}{v^2}\frac{\partial^2\Psi}{\partial t^2}$$

This **wave function** fits the classical form, but is not a solution to the Schröedinger equation:

$$\Psi(x,t) = A\sin(kx - \omega t + \phi)$$

wave, time, wave number, angular frequency, phase constant

distance, amplitude, distance, time

The negative sign denotes wave motion in the positive x direction, assuming omega is positive.

More **general wave functions** which are solutions to the Schröedinger equation are:

$$\Psi(x,t) = Ae^{i(kx-\omega t)} = A[\cos(kx - \omega t) + i\sin(kx - \omega t)]$$

wave, time, wave number, angular frequency

distance, amplitude, distance, time

The negative sign denotes wave motion in the positive x direction, assuming omega is positive.

k WAVE NUMBER

A component of a wave function representing the **wave density** relative to distance, in units of radians per unit distance [rad/m].

$$k = \frac{2\pi}{\lambda}$$

w ANGULAR FREQUENCY

A component of a wave function representing the **wave density** relative to time (better known as frequency), in units of radians per second [rad/s].

$$\omega = \frac{2\pi}{T}$$

v_{ph} PHASE VELOCITY

The velocity of a point on a wave, e.g. the velocity of a wave peak [m/s].

$$v_{ph} = \frac{\lambda}{T} = \frac{\omega}{k}$$

f PHASE CONSTANT

The angle by which the wave is offset from zero, i.e. the angle by which the wave's zero amplitude point is offset from t=0. [radians or degrees].

Y SUM OF TWO WAVES

(see also WaveSummingExample.pdf)

$$\Psi_1 + \Psi_2 = 2A\underbrace{\cos\left(\frac{\Delta k}{2}x - \frac{\Delta\omega}{2}t\right)}_{\text{envelope}}\underbrace{\cos\left(k_{av}x - \omega_{av}t\right)}_{\text{internal wave}}$$

A = harmonic amplitude [various units?]

Δk = difference in wave numbers $k_1 - k_2$ [rad/m]

k_{av} = average wave number $(k_1 + k_2)/2$ [rad/m]

$\Delta\omega$ = difference in angular frequencies $\omega_1 - \omega_2$ [rad/s]

ω_{av} = average angular frequency $(\omega_1 + \omega_2)/2$ [rad/s]

x = distance [m]

t = time [s]

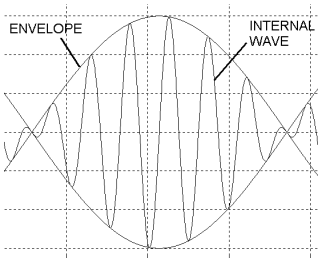

Phase Velocity:

$$v_{ph} = \omega_{av} / k_{av}$$

[m/s] velocity of a point on a wave

Group Velocity:

$$u_{gr} = \Delta\omega / \Delta k$$

[m/s] speed of the envelope

l de BROGLIE WAVELENGTH

De Broglie extended the concept of waves to all matter.

$$\lambda = \frac{h}{p}$$

λ = wavelength [m]

h = Planck's constant 6.6260755×10^{-34} J-s

p = momentum [kg-m/s], convertible to [eV/c] by multiplying by c/q.

WAVE UNCERTAINTIES

This has to do with the effects of combining different waves. In order to know precisely the position of the wave packet envelope (Δx small), we must have a large range of wave numbers (Δk large). In order to know precisely when the wave is at a given point (Δt small), we must have a large range of frequencies ($\Delta\omega$ large). Another result of this relationship, is that an electronic component must have a large bandwidth $\Delta\omega$ in order for its signal to respond in a short time Δt.

$$\Delta k\,\Delta x = 2\pi \qquad \Delta\omega\Delta t = 2\pi$$

Δk = the range of wave numbers, see WAVE NUMBER

Δx = the width of the wave envelope

$\Delta\omega$ = the range of wave frequencies

Δt = a time interval

SCHRÖDINGER'S WAVE EQUATION

time-dependent form:

$$K \quad + \quad U \quad = \quad E$$

$$-\frac{\hbar^2}{2m}\frac{\partial^2\Psi(x,t)}{\partial x^2}+V\Psi(x,t)=i\hbar\frac{\partial\Psi(x,t)}{\partial t}$$

time-independent form:

$$\boxed{-\frac{\hbar^2}{2m}\frac{d^2\psi(x)}{dx^2}+V(x)\psi(x)=E\psi(x)}$$

or $$-\frac{\hbar^2}{2m\psi(x)}\frac{d^2\psi(x)}{dx^2}=E-V(x)$$

$\hbar$ = Planck's constant divided by 2π [J-s]
$\Psi(x,t)$ = wave function
V = voltage; can be a function of space and time (x,t)
m = mass [kg]

Two separate solutions to the time-independent equation have the form:

$\boxed{Ae^{ikx}+Be^{-ikx}}$ where $k=\sqrt{2m(E-V)}/\hbar$

or $\boxed{A\sin(kx)+B\cos(kx)}$

Note that the **wave number *k*** is consistent in both solutions, but that the constants A and B are **not** consistent from one solution to the other. The values of constants A and B will be determined from **boundary conditions** and will also depend on which solution is chosen.

PROBABILITY

A probability is a value from zero to one. The probability may be found by the following steps:

Multiply the function by its complex conjugate and take the integral from negative infinity to positive infinity with respect to the variable in question, multiply all this by the square of a constant c and set equal to one.

$$c^2\int_{-\infty}^{\infty}F^*F\,dx=1$$

Solve for the probability constant ***c***.

The probability from x_1 to x_1 is: $P=c^2\int_{x_1}^{x_2}F^*F\,dx$

PROBABILITY OF LOCATION

Given the wave function: $\psi(x,t)$

find the probability that a particle is located between x_1 and x_2.

Normalize the wave function: $2\int_0^{\infty}A^2\psi^2dx=1$

with *A* known, find the probability: $P=\int_{x_1}^{x_2}A^2\psi^2dx$

á*x*ñ, áx^2ñ EXPECTATION VALUES

average value:

$$\langle x\rangle=\int_{-\infty}^{\infty}\psi^*(x)\,x\,\psi(x)\,dx$$

average x^2 value:

$$\langle x^2\rangle=\int_{-\infty}^{\infty}\psi^*(x)\,x^2\,\psi(x)\,dx$$

$\hat{p}$ MOMENTUM OPERATOR

An **operator** transforms one function into another function. The momentum operator is:

$$\hat{p}=-i\hbar\frac{d}{dx}$$

For example, to find the average momentum of a particle described by wave function ψ:

$$\langle p\rangle=\int_{-\infty}^{\infty}\psi^*\,\hat{p}\,\psi\,dx=\int_{-\infty}^{\infty}\psi^*\left(-i\hbar\frac{d}{dx}\psi\right)dx$$

SIMPLE HARMONIC MOTION

Examples of simple harmonic motion include a mass on a spring and a pendulum. The average potential energy equals the average kinetic energy equals half of the total energy. In simple harmonic motion, k is the spring constant, not the wave number.

spring constant k: $\omega = \sqrt{\frac{k}{m}}$ force: $F = kx$

potential energy V: $V = \frac{1}{2}kx^2$

Schrödinger Wave Equation for simple harmonic motion: $\frac{d^2\psi}{dx^2} = \left(\alpha^2 x^2 - \beta\right)\psi$

where $\alpha^2 = \frac{mk}{\hbar^2}$ and $\beta = \frac{2mE}{\hbar^2}$

The wave equation solutions are: $\boxed{\psi_n = H_n(x)e^{-\alpha x^2/2}}$

where $H_n(x)$ are polynomials of order n, where $n = 0,1,2,\cdots$ and x is the variable taken to the power of n. The functions $H_n(x)$ are related by a constant to the *Hermite polynomial functions*.

$$\psi_0 = \left(\frac{\alpha}{\pi}\right)^{1/4} e^{-\alpha x^2/2} \qquad \psi_1 = \left(\frac{\alpha}{\pi}\right)^{1/4} \sqrt{2\alpha}\, x e^{-\alpha x^2/2}$$

$$\psi_2 = \left(\frac{\alpha}{\pi}\right)^{1/4} \frac{1}{\sqrt{2}}\left(2\alpha x^2 - 1\right)e^{-\alpha x^2/2}$$

$$\psi_3 = \left(\frac{\alpha}{\pi}\right)^{1/4} \frac{1}{\sqrt{3}}\left(x\sqrt{\alpha}\right)\left(2\alpha x^2 - 3\right)e^{-\alpha x^2/2}$$

…and they call this simple!

quantized energy levels: $\boxed{E_n = \left(n + \frac{1}{2}\right)\hbar\omega}$

The **zero-point energy**, or **Heisenberg limit** is the minimum energy allowed by the uncertainty principle; the energy at n=0: $E_0 = \frac{1}{2}\hbar\omega$

HEISENBERG UNCERTAINTY PRINCIPLE

These relations apply to **Gaussian wave packets**. They describe the limits in determining the factors below.

$$\Delta p_x \, \Delta x \geq \hbar/2 \qquad \Delta E \, \Delta t \geq \hbar/2$$

Δp_x = the uncertainty in the momentum along the x-axis

Δx = the uncertainty of location along the x-axis

ΔE = the uncertainty of the energy

Δt = the uncertainty of time. This also happens to be the particle lifetime. Particles you can measure the mass of ($E=mc^2$) have a long lifetime.

INFINITE SQUARE-WELL POTENTIAL
or "Particle in a Box"

This is a concept that applies to many physical situations. Consider a two-dimensional box in which a particle may be trapped by an infinite voltage potential on either side. The problem is an application of the **Schrödinger Wave Equation**.

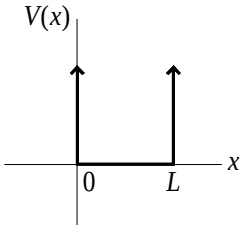

The particle may have various energies represented by waves that must have an amplitude of zero at each boundary 0 and L. Thus, the energies are quantized. The probability of the particle's location is also expressed by a wave function with zero values at the boundaries.

Wave function: $\psi_n(x) = A\sin\left(\frac{n\pi x}{L}\right)$

Energy levels: $E_n = n^2 \frac{\pi^2\hbar^2}{2mL^2}$

Probability of a particle being found between x_1 and x_2: $P = \int_{x=x_1}^{x_2} \Psi^* \Psi \, dx$

$A = \sqrt{\frac{2}{L}}$ normalization constant

a useful identity: $\sin^2\theta = \frac{1}{2}(1 - \cos 2\theta)$

POTENTIAL BARRIER

When a particle of energy E encounters a barrier of potential V_0, there is a possibility of either a reflected wave or a transmitted wave.

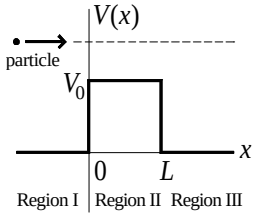

for $E > V_0$:

kinetic energy: $K = E - V_0$

wave number: $k_I = k_{III} = \sqrt{2mE}/\hbar$

$k_{II} = \sqrt{2m(E - V_0)}/\hbar$

incident wave: $\varphi_I = Ae^{ik_I x}$

reflected wave: $\varphi_I = Be^{-ik_I x}$

transmitted wave: $\varphi_{III} = Fe^{k_I x}$

trans. probability: $$T = \left(1 + \frac{{V_0}^2 \sin^2(k_{II} L)}{4E(E - V_0)}\right)^{-1}$$

reflection probability: $R = 1 - T$

for $E < V_0$: Classically, it is not possible for a particle of energy E to cross a greater potential V_0, but there is a quantum mechanical possibility for this to happen called **tunneling**.

kinetic energy: $K = V_0 - E$

wave #, region II: $\kappa = \sqrt{2m(V_0 - E)}/\hbar$

trans. probability: $$T = \left(1 + \frac{{V_0}^2 \sinh^2(\kappa L)}{4E(V_0 - E)}\right)^{-1}$$

when $\kappa L \gg 1$: $T = 16\frac{E}{V_0}\left(1 - \frac{E}{V_0}\right)e^{-2\kappa L}$

3D INFINITE POTENTIAL BOX

Consider a three-dimensional box with zero voltage potential inside the box and infinite voltage outside. A particle trapped in the box is described by a wave function and has quantized energy levels.

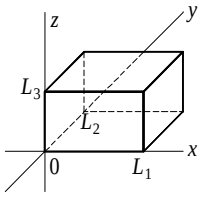

Time-independent Schrödinger Wave Equation in three dimensions:

$$-\frac{\hbar^2}{2m}\left(\frac{\partial^2\psi}{\partial x^2} + \frac{\partial^2\psi}{\partial y^2} + \frac{\partial^2\psi}{\partial z^2}\right) + V\psi = E\psi$$

Wave equation for the 3D infinite potential box:

$$\psi_{n_1 n_2 n_3} = A\sin\left(\frac{n_1 \pi x}{L_1}\right)\sin\left(\frac{n_2 \pi y}{L_2}\right)\sin\left(\frac{n_3 \pi z}{L_3}\right)$$

Energy levels: $$E_{n_1 n_2 n_3} = \frac{\pi^2 \hbar^2}{2m}\left(\frac{n_1^2}{L_1^2} + \frac{n_2^2}{L_2^2} + \frac{n_3^2}{L_3^2}\right)$$

Degenerate energy levels may exist—that is, different combinations of *n*-values may produce equal energy values.

SCHRÖDINGER'S EQUATION – 3D SPHERICAL

spherical coordinate form:

$$\frac{1}{r^2}\frac{\partial}{\partial r}\left(r^2\frac{\partial\psi}{\partial r}\right)+\frac{1}{r^2\sin\theta}\frac{\partial}{\partial\theta}\left(\sin\theta\frac{\partial\psi}{\partial\theta}\right)+\frac{1}{r^2\sin^2\theta}\frac{\partial^2\psi}{\partial\theta^2}+\frac{2m}{\hbar^2}(E-V)\psi=0$$

separation of variables using: $\Psi(r,\theta,\phi)=R(r)\,f(\theta)\,g(\phi)$

We can obtain a form with terms of g on one side and terms of R and f on the other. These are set equal to the constant m_l^2. m_l turns out to be an integer. Another seperation is performed for R and f and the constant is $l(l+1)$, where l is an integer. The three equations are:

Azimuthal equation:

$$\frac{1}{g}\frac{d^2g}{d\phi^2}+m_l^{\,2}=0 \quad\Rightarrow\quad g=Ae^{im_l\phi}$$

Radial equation:

$$\frac{1}{r^2}\frac{d}{dr}\left(r^2\frac{dR}{dr}\right)+\frac{2m}{\hbar^2}(E-V)R-\frac{l(l+1)}{r^2}R=0$$

Angular Equation:

$$\frac{1}{\sin\theta}\frac{d}{d\theta}\left(\sin\theta\frac{df}{d\theta}\right)+\left[l(l+1)-\frac{m_l^{\,2}}{\sin^2\theta}\right]f=0$$

m_l = magnetic quantum number; integers ranging from $-l$ to $+l$

l = orbital angular momentum quantum number

$\hbar$ = Planck's constant divided by 2π [J-s]

E = energy

V = voltage; can be a function of space and time (x,t)

m = mass [kg]

NORMALIZING WAVE FUNCTIONS

To normalize a function, multiply the function by its complex conjugate and by the square of the **normalization constant** A. Integrate the result from -∞ to ∞ and set equal to 1 to find the value of A. The normalized function is the original function multiplied by A.

To normalize the **wave function** $\Psi(x)$:

$$\int_{-\infty}^{\infty}\left|A\Psi\right|^2dx \quad\rightarrow\quad A^2\int_{-\infty}^{\infty}\Psi^2dx$$

Where Ψ is an even function, we can simplify to:

$2A^2\int_0^{\infty}\Psi^2dx$ and find A: $2A^2\int_0^{\infty}\Psi^2dx=1$

Some relations for definite integrals will be useful in solving this equation; see CalculusSummary.pdf page 3.

To normalize the **wave function** $\Psi(r)$, where r is the radius in spherical coordinates:

$$\int_0^{\infty}r^2\left|A\Psi\right|^2dr \quad\rightarrow\quad A^2\int_0^{\infty}r^2\Psi^2dr=1$$

Note that we integrate from 0 to ∞ since r has no negative values.

To normalize the **wave function** $\Psi(r,\theta,\phi)$:

$$A^2\int_0^{\infty}dr\,r^2\left|A\Psi\right|^2\int_0^{\pi}d\theta\sin\theta\int_0^{2\pi}d\phi=1$$

Note that dr, $d\theta$, and $d\phi$ are moved to the front of their respective integrals for clarity.

$R_{nl}(r)$ RADIAL WAVE FUNCTIONS for the hydrogen atom

n	l	$R_{nl}(r)$
1	0	$\frac{2}{a_0^{3/2}}e^{-r/a_0}$
2	0	$\left(w-\frac{r}{a_0}\right)\frac{e^{-r/2a_0}}{(2a_0)^{3/2}}$
2	1	$\frac{r}{a_0}\frac{e^{-r/2a_0}}{\sqrt{3}(2a_0)^{3/2}}$
3	0	$\frac{1}{(a_0)^{3/2}}\frac{2}{81\sqrt{3}}\left(27-18\frac{r}{a_0}+2\frac{r^2}{a_0^{\,2}}\right)e^{-r/3a_0}$
3	1	$\frac{1}{(a_0)^{3/2}}\frac{4}{81\sqrt{6}}\left(6-\frac{r}{a_0}\right)\frac{r}{a_0}e^{-r/3a_0}$
3	2	$\frac{1}{(a_0)^{3/2}}\frac{4}{81\sqrt{30}}\frac{r^2}{a_0^{\,2}}e^{-r/3a_0}$

a_0 = Bohr radius 5.29177×10^{-11} m

ATOMS

$P(r)dr$ RADIAL PROBABILITY

The radial probability is a value from 0 to 1 indicating the probability of a particle occupying a certain area radially distant from the center of orbit. The value is found by integrating the right-hand side of the expression over the interval in question:

$$P(r)\,dr = r^2\left|R(r)\right|^2\,dr$$

r = orbit radius

$R(r)$ = radial wave function, normalized to unity

$P(r)$ RADIAL PROBABILITY DENSITY

The radial probability density depends only on n and l.

$$P(r) = r^2\left|R(r)\right|^2$$

r = orbit radius

$R(r)$ = radial wave function, normalized to unity

árñ RADIAL EXPECTATION VALUE

average radius (radial wave function):

$$\langle r\rangle = \int_{r=0}^{\infty} r\,P(r)\,dr = \int_{r=0}^{\infty} r^3 R(r)\,dr$$

$P(r)$ = probability distribution function $P(r) = r^2\left|R(r)\right|^2\,dr$

$R(r)$ = radial wave function, normalized to unity

QUANTUM NUMBERS

n = **principal quantum number**, shell number, may have values of 1, 2, 3, …

l = **orbital angular momentum quantum number**, subshell number, may have values of 0 to n-1. These values are sometimes expressed as letters: s=0, p=1, d=2, f=3, g=4, h=5, …

m_l = **magnetic quantum number**, may have integer values from $-l$ to $+l$ for each l. (p251)

m_s = **magnetic spin quantum number**, may have values of +½or -½

Then we introduce these new ones:

s = **intrinsic quantum number**, s =1/2 (p238)

j = **total angular momentum quantum number**, $j = l \pm s$, but j is not less than 0. (p257)

m_j = **magnetic angular momentum quantum number**, may have values from $-j$ to $+j$ (p257)

Example, for n = 3:

l =	0	1			2				
j =	1/2	1/2		3/2	3/2			5/2	
m_j =	-1/2 +1/2	-1/2 +1/2		-3/2 -1/2 +1/2 +3/2	-3/2 -1/2 +1/2 +3/2			-5/2 -3/2 -1/2 +1/2 +3/2 +5/2	
m_l =	0	-1	0	+1	-2	-1	0	+1	+2
m_s =	-1/2 +1/2	-1/2 +1/2	-1/2 +1/2	-1/2 +1/2	-1/2 +1/2	-1/2 +1/2	-1/2 +1/2	-1/2 +1/2	-1/2 +1/2

L ORBITAL ANGULAR MOMENTUM

Classically, orbital angular momentum is **r*r*** or ***mvr***. The orbital angular momentum **L** is a vector quantity. It components are as follows:

Magnitude: $L = \hbar\sqrt{l(l+1)}$

Z-axis value: $L_z = m_l\hbar$

The values of L_x and L_y cannot be determined exactly but obey the following relation:

$$L^2 = L_x^2 + L_y^2 + L_z^2$$

$\hbar$ = Planck's constant divided by 2π [J-s]

l = orbital angular momentum quantum number

m_l = magnetic quantum number; integers ranging from $-l$ to $+l$

The orbital angular momentum quantum number was originally given letter values resulting from early visual observations: **s**harp, **p**rincipal, **d**iffuse, **f**undamental

l = 0 1 2 3 4 5
s p d f g h

S SPIN ANGULAR MOMENTUM

The spin angular momentum is (insert some illuminating explanation here).

Magnitude:

$$|\mathbf{S}| = \hbar\sqrt{s(s+1)} = \hbar\sqrt{3/4}$$

z component:

$$S_z = m_s\hbar = \pm\hbar/2$$

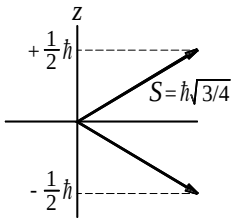

J TOTAL ANGULAR MOMENTUM

The vector sum of the orbital angular momentum and the spin angular momentum. This applies to 1-electron and many-electron atoms.

$$\mathbf{J} = \mathbf{L} + \mathbf{S}$$

J (the magnitude?) is an integer value from |*L*-*S*| to *L*+*S*.

ALLOWED TRANSITIONS

The allowed energy level transitions for 1-electron atoms are

Δn: any Δl: ±1 Δm_j: 0, ±1 Δj: 0, ±1

ZEEMAN SPLITTING ("ZAY· mahn")

When a single-electron atom is under the influence of an external magnetic field (taken to be in the *z*-axis direction), each energy level (n=1,2,3,…) is split into multiple levels, one for each quantum number m_l. The difference in energy is:

$$\Delta E = \mu_B B m_l$$

ΔE = difference in energy between two energy levels [J]

μ_B = Bohr magneton 9.274078×10^{-24} J/T

B = magnetic field [T]

m_l = magnetic quantum number; integers ranging from $-l$ to $+l$

m MAGNETIC MOMENT

Both the magnetic moment **m** and the orbital angular momentum **L** are vectors:

$$\boldsymbol{\mu} = -\frac{e}{2m}\mathbf{L}$$

m = mass of the orbiting particle [kg]

MANY-ELECTRON ATOMS

SPECTROSCOPIC SYMBOLS

The energy state of an atom having 1 or 2 electrons in its outer shell can be represented in the form

$$n^{2S+1}L_j$$

n = shell number

S = intrinsic spin angular momentum quantum number; ½ for a single-electron shell, 0 or 1 ($S_1 + S_2$) for the 2-electron shell

L = angular momentum quantum number; *l* for single-electron shell, $L_1 + L_2$ for a 2-electron shell, expressed as a capital letter: *S*=0, *P*=1, *D*=2, *F*=3, *G*=4, *H*=5, *I*=6.

j = total angular momentum quantum number $j = l \pm s$. I'm not sure how to tell whether it's plus or minus, but I think it has to be the lower value of *j* to be in the ground state. *j* is positive only.

ORDER OF ELECTRON FILLING

Here's a way to remember the order in which the outer shells of atoms are filled by electrons:

Form groups of *l*-numbers like this. The first group is just the lowest value for *l*: *s*. The next value of l is p; form a new group of p with s. The third value of l is d; form the third group with d, p, and s. You get a list of groups like this:

s
p s
d p s
f d p s
g f d p s
h g f d p s

Now, in a column, write each group twice beginning with the single s that is the first group.

Next number each s beginning with 1, placing the number in front of the s. This is as far as I have gone with the list at right.

The next step is to number each p beginning with the number 2.

Then number each d beginning with the number 3.

Number each f beginning with 4, and so on.

The result will be the order of filling (there are a few exceptions) and will look like this:

1s 2s 2p 3s 3p 4s 3d 4p 5s 4d 5p 6s 4f 5d and so on.

1s
2s
p
3s
p
4s
d
p
5s
f
d
p
6s
f
d
p
7s
and so on.

g LANDÉ *g* FACTOR

A dimensionless number that helps make physics complicated. Used in ANOMALOUS ZEEMAN SPLITTING

$$g = 1 + \frac{J(J+1) + S(S+1) - L(L+1)}{2J(J+1)}$$

ALLOWED PHOTON TRANSITIONS

The allowed photon energy level transitions for many-electron atoms are

ΔL: ± 1 ΔJ: $0, \pm 1$, but J can't transition from 0 to 0.

ΔS: 0 Δm_j: $0, \pm 1$, but can't transition from 0 to 0 when $\Delta J = 0$.

Other transitions are possible—just not likely.

q MINIMUM ANGLE BETWEEN *J* AND THE *Z*-AXIS

There were exercises where we had to calculate this. I don't know what the significance is. This is done similarly for L and S as well.

Example: $j = \frac{5}{2}$

$$\cos\theta = \frac{j \times \hbar}{\hbar\sqrt{j(j+1)}} \rightarrow$$

$$\cos^2\theta = \frac{j^2}{j(j+1)} \rightarrow \cos^2\theta = \frac{j}{(j+1)}$$

$$\cos\theta = \sqrt{\frac{j}{j+1}}$$

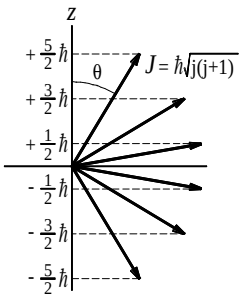

SPLITTING DUE TO SPIN

For each state described by quantum numbers n, l, m_l, there are two states defined by the magnetic spin numbers $m_s = \pm 1/2$. These two levels have the same energy except when the atom is influenced by an **external magnetic field**.

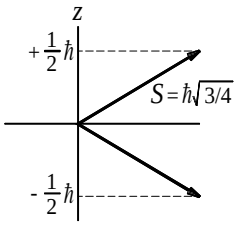

The **lower** of the two energy levels is **aligned** with the magnetic field.

$$\boxed{|\Delta E| = \frac{hc}{\lambda^2}|\Delta\lambda|}$$

ΔE = difference in energy between two (split) energy levels $m_s = \pm 1/2$ [J]

$\Delta\lambda$ = difference in wavelengths for the transitions to the ground state for each energy level [m]

λ = wavelength for the transitions to the ground state for the lower of the two energy levels (the greater of the two wavelengths) [m]

h = Planck's constant 6.6260755×10^{-34} J-s

c = speed of light 2.998×10^8 m/s

SPIN-ORBIT ENERGY SPLITTING

Spin-orbit energy splitting is the splitting of energy levels caused by an **internal magnetic field** due to spin. This produces a greater ΔE than the spin splitting described above. p265

P.E. due to spin $V = -\boldsymbol{\mu}_s \cdot \mathbf{B}$

z-component $\mu_z = -g_s\left(\frac{e\hbar}{2m_e}\right)\frac{J_z}{\hbar}$

energy level difference $\boxed{\Delta E = g_s \frac{e\hbar}{m_e} B}$

$e = q$ = electron charge 1.6022×10^{-19} C

$\hbar$ = Planck's constant divided by 2π [J-s]

j_z = z-component of the total angular momentum

ΔE = difference in energy between two (split) energy levels $m_s = \pm 1/2$ [J]

$g_s = 2$, the gyromagnetic ratio

m_e = mass of an electron 9.1093897×10^{-31} kg

B = internal magnetic field [T]

ANOMALOUS ZEEMAN SPLITTING

("ZAY· mahn")

In addition to the Zeeman splitting of the m_l energy levels described previously, and the spin-orbit energy splitting described above, there is a splitting of the m_j levels when an external magnetic field is present. The difference in energy between levels is:

$$V = \mu_B B_{\text{ext}} g m_j$$

V = difference in energy between two energy levels [J]

μ_B = Bohr magneton 9.274078×10^{-24} J/T

B_{ext} = external magnetic field [T]

g = Landé factor [no units]

m_j = magnetic angular momentum quantum number; half-integers ranging from $-j$ to $+j$

STATISTICAL PHYSICS

v^*, $\bar{v}$, v_{rms} MOLECULAR SPEEDS [m/s]

Maxwell speed distribution:

$$F(v)\,dv = 4\pi C e^{-\frac{1}{2}\beta m v^2} v^2\,dv$$

v^* most probable speed:

$$v^* = \sqrt{\frac{2}{\beta m}} = \sqrt{\frac{2kT}{m}}$$

$\bar{v}$ mean speed:

$$\bar{v} = \frac{4}{\sqrt{2\pi}}\sqrt{\frac{kT}{m}}$$

v_{rms} root mean square speed:

$$v_{rms} = \left[\overline{v^2}\right]^{1/2} = \sqrt{\frac{3kT}{m}}$$

v = velocity [m/s]

C = normalization constant

k = Boltzmann's constant 1.380658×10^{-23} J/K

T = temperature [K]

m = mass of the molecule [kg]

β = the parameter $1/kT$ [J^{-1}]

ENERGY DISTRIBUTION

Derived from Maxwell's speed distribution:

$$F(E) = \frac{8\pi C}{\sqrt{2}m^{3/2}} e^{-\beta E} E^{1/2}$$

F_{MB} MAXWELL-BOLTZMANN FACTOR

The Maxwell-Boltzmann factor is a value between 0 and 1 representing the probability that an energy level E is occupied by an electron (at temperature T). This is for **classical systems, such as ideal gases**. One way to determine if Maxwell-Boltzmann statistics are valid is to compare the de Broglie wavelength $\lambda = h/p$ of a typical particle with the average interparticle spacing d. If $\lambda << d$ then Maxwell-Boltzmann statistics are generally acceptable.

$$F_{MB} = Ae^{-\beta E} \qquad d = \left(\frac{V}{N}\right)^{1/3}$$

A = normalization constant

β = the parameter $1/kT$ [J^{-1}]

d = space between atoms [m]

N = number of particles in volume V. Note that **Avogadro's number**, 6.022×10^{23}, is the number of gas molecules in 22.4 liters, or 22.4×10^{-3} m^3, at 0°C and 1 atmosphere. Also, gas volume is proportional to temperature: $V_1/T_1 = V_2/T_2$.

F_{FD} FERMI-DIRAC DISTRIBUTION

A value between 0 and 1 indicating the probability than an energy state is occupied by an electron. The Fermi-Dirac distribution is valid for **fermions**, particles with **half-integer spins** that obey the Pauli principle. Atoms and molecules consisting of an even number of fermions must be considered bosons when taken as a whole because their total spin will be zero or an integer.

$$F_{FD} = \frac{1}{B_1 e^{\beta E} + 1}$$

B_1 = normalization constant

β = the parameter $1/kT$ [J^{-1}]

F_{BE} BOSE-EINSTEIN DISTRIBUTION

The Bose-Einstein distribution is valid for **bosons**, particles with **zero or integer spins** that do no obey the Pauli principle. Photons, pions, and liquid ^{4}He are bosons.

$$F_{BE} = \frac{1}{B_2 e^{\beta E} - 1}$$

B_2 = normalization constant

β = the parameter $1/kT$ [J^{-1}]

E_F FERMI ENERGY [eV]

The Fermi energy depends on the density of electrons in the material. The Fermi-Dirac distribution is modified to include the Fermi energy:

$$F_{FD} = \frac{1}{e^{\left[\beta(E-E_F)\right]} + 1}$$

The relationship between the Fermi energy and the number density of particles is:

$$E_F = \frac{h^2}{8m}\left(\frac{3N}{\pi L^3}\right)^{2/3}$$

F_{FD} = Fermi-Dirac distribution, a value from 0 to 1 indicating the probability that an energy state is occupied

β = the parameter $1/kT$ [J^{-1}]

h = Planck's constant 6.6260755×10^{-34} J-s

m = mass of the particle [kg]

N/L^3 = number density of the particles [m^{-3}]

T_F FERMI TEMPERATURE

The Fermi temperature may be quite high, 80,000 K for copper.

$$T_F = \frac{E_F}{k}$$

E_F = Fermi Energy [eV]

k = Boltzmann's constant 1.380658×10^{-23} J/K

u_F FERMI SPEED

The Fermi speed, $u_F = \sqrt{\frac{2E_F}{m}}$

comes from the definition: $E_F = \frac{1}{2} m u_F^{\,2}$

E_F = Fermi Energy [eV]

m = mass (probably of the electron) [kg]

ENERGY STATES IN "PHASE SPACE"

The points in the 1/8 sphere represent the energy states of a particle in a cube, see 3D INFINITE POTENTIAL BOX p13.

Energy level at radius r

$$E = r^2 E_1$$

where $E_1 = h^2/8mL^2$

(a constant equal to 1/3 of the ground state energy)

and $r = \sqrt{n_1^{\,2} + n_2^{\,2} + n_3^{\,2}}$

and E is whatever energy the problem is concerned with.

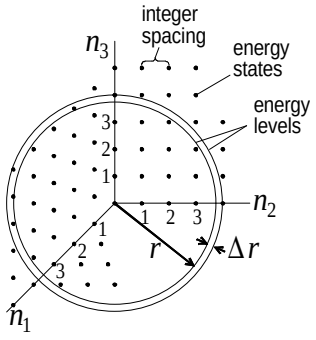

N_r **Number of energy states** in a sphere of radius r, i.e. the number of energy states there are with energy less than E:

$$N_r = 2\left(\frac{1}{8}\right)\left(\frac{4}{3}\pi r^3\right) \quad \text{or} \quad N_r = \frac{\pi}{3}\left(\frac{E}{E_1}\right)^{3/2}$$

where the factor of 2 is due to spin degeneracy, and the factor of 1/8 is because the energy states only occupy 1/8 of the sphere where n_1, n_2, n_3 are all positive.

$g(E)$ DENSITY OF ENERGY STATES

Number of states per unit energy

$$g(E) = \frac{\pi}{2} E_1^{-3/2} E^{1/2} \qquad g(E) = \frac{\Delta N_r}{\Delta E} = \frac{dN_r}{dE}$$

N_r = number of energy states in a sphere of radius r

E_1 = a constant equal to 1/3 of the ground state energy

$n(E)$ DENSITY OF OCCUPIED STATES

Number of occupied states per unit energy

$$\boxed{n(E) = F_{FD} \cdot g(E)}$$

at T=0, $n(E) = \begin{cases} g(E), & \text{for } E < E_F \\ 0, & \text{for } E > E_F \end{cases}$

F_{FD} = Fermi-Dirac distribution, a value from 0 to 1 indicating the probability that an energy state is occupied

APPENDIX

CONSTANTS

Avogadro's number [molecules/mole]	$N_A = 6.0221367\times10^{23}$
Bohr magneton	$\mu_B = \frac{q\hbar}{2m_e} = 9.27407836\times10^{-24}$ J/T
Boltzmann's constant	$k = 1.380658\times10^{-23}$ J/K
or	$K = 8.62\times10^{-5}$ eV/K
Earth to Moon distance	$\approx 384\times10^{6}$ m
Elementary charge	$q = 1.60\times10^{-19}$ C
Electron mass	$m_e = 9.1093897\times10^{-31}$ kg
	$m_e = 0.51100$ MeV/c^2
Neutron mass	$m_{neutron} = 1.6749\times10^{-27}$ kg
	$m_{neutron} = 939.57$ MeV/c^2
Proton mass	$m_p = 1.6726231\times10^{-27}$ kg
	$m_p = 938.27$ MeV/c^2
Permittivity of free space	$\varepsilon_0 = 8.8541878\times10^{-12}$ F/m
Planck's constant	$h = 6.6260755\times10^{-34}$ J-s
	$= 4.14\times10^{-15}$ eV-s
Rydberg constant	$R = 1.097373\times10^{7}$ m^{-1}
kT @ room temperature	$kT = 0.0259$ eV
Speed of light	$c = 2.998\times10^{8}$ m/s
Speed of sound (air 0°C)	$v_s = 331.29$ m/s
1 Å (angstrom)	10^{-8} cm = 10^{-10} M
1 μm (micron)	10^{-4} cm
1 nm = 10Å = 10^{-7} cm	273.15K = 0°C
1 eV = 1.6 × 10^{-19} J	1 W = 1 J/S = 1 VA
1 V = 1 J/C	1 N/C = 1 V/m 1 J = 1 N· m = 1 C· V

UNITS

Energy: Joules × $\boxed{\frac{1}{q}}$ = eV

Mass: Kg × $\boxed{\frac{c^2}{q}}$ = eV/c^2

Momentum: $\frac{\text{kg}\cdot\text{m}}{\text{s}} \times \boxed{\frac{c}{q}} = \frac{\text{eV}}{\text{c}}$

BINOMIAL EXPANSION

For $|x| < 1$:

$$(1\pm x)^n = 1 \pm nx + \frac{n(n-1)}{2!}x^2 \pm \frac{n(n-1)(n-2)}{3!}x^3 + \cdots$$

When x is much less than 1: $\boxed{(1\pm x)^n = 1 \pm nx}$

WAVELENGTH SPECTRUM

BAND	METERS	ANGSTROMS
Longwave radio	1 - 100 km	10^{13} - 10^{15}
Standard Broadcast	100 - 1000 m	10^{12} - 10^{13}
Shortwave radio	10 - 100 m	10^{11} - 10^{12}
TV, FM	0.1 - 10 m	10^{9} - 10^{11}
Microwave	1 - 100 mm	10^{7} - 10^{9}
Infrared light	0.8 - 1000 μm	8000 - 10^{7}
Visible light	360 - 690 nm	3600 - 6900
violet	360 nm	3600
blue	430 nm	4300
green	490 nm	4900
yellow	560 nm	5600
orange	600 nm	6000
Red	690 nm	6900
Ultraviolet light	10 - 390 nm	100 - 3900
X-rays	5 - 10,000 pm	0.05 - 100
Gamma rays	100 - 5000 fm	0.001 - 0.05
Cosmic rays	< 100 fm	< 0.001

GREEK ALPHABET

A	α	alpha	I	ι	iota	P	ρ	rho
B	β	beta	K	κ	kappa	Σ	σ	sigma
X	χ	chi	Λ	λ	lambda	T	τ	tau
Δ	δ	delta	M	μ	mu	Y	υ	upsilon
E	ε	epsilon	N	ν	nu	Ω	ω	omega
Φ	ϕ	phi	O	ο	omicron	Ξ	ξ	xi
Γ	γ	gamma	Π	π	pi	Ψ	ψ	psi
H	η	eta	Θ	θ	theta	Z	ζ	zeta

TRIG IDENTITIES

$i2\sin x = e^{ix} - e^{-ix}$ $\qquad 2\sinh x = e^{x} - e^{-x}$

$2\cos x = e^{ix} + e^{-ix}$ $\qquad 2\cosh x = e^{x} + e^{-x}$

$e^{ix} = \cos x + i\sin x$

$\sin(A \pm B) = \sin A\cos B \pm \cos A\sin B$

$\cos(A \pm B) = \cos A\cos B \mp \sin A\sin B$

$$\sin A + \sin B = 2\sin\left(\frac{A+B}{2}\right)\cos\left(\frac{A-B}{2}\right)$$

$$\cos A + \cos B = 2\cos\left(\frac{A+B}{2}\right)\cos\left(\frac{A-B}{2}\right)$$

GEOMETRY

SPHERE

Area $A = 4\pi r^2$

Volume $V = \frac{4}{3}\pi r^3$

ELLIPSE

Area $A = \pi AB$

Circumference

$$L \approx 2\pi\sqrt{\frac{a^2 + b^2}{2}}$$

COORDINATE SYSTEMS

Cartesian or Rectangular Coordinates:

$\mathbf{r}(x, y, z) = x\hat{\mathbf{x}} + y\hat{\mathbf{y}} + z\hat{\mathbf{z}}$ $\qquad \hat{\mathbf{x}}$ is a unit vector

$$|\mathbf{r}| = \sqrt{x^2 + y^2 + z^2}$$

Spherical Coordinates:

$\mathbf{P}(r, \theta, \phi)$ $\quad r$ is distance from center

θ is angle from vertical

ϕ is the CCW angle from the x-axis

$\hat{\mathbf{r}}$, $\hat{\boldsymbol{\theta}}$, and $\hat{\boldsymbol{\phi}}$ are functions of position—their orientation depends on where they are located.

Cylindrical Coordinates:

$\mathbf{C}(r, \phi, z)$ $\quad r$ is distance from the vertical (z) axis

ϕ is the CCW angle from the x-axis

z is the vertical distance from origin

COORDINATE TRANSFORMATIONS

Rectangular to Cylindrical:

To obtain: $\mathbf{A}(r, \phi, z) = \hat{\mathbf{r}}A_r + \hat{\boldsymbol{\phi}}A_\phi + \hat{\mathbf{z}}A_z$

$A_r = \sqrt{x^2 + y^2}$ $\qquad \hat{\mathbf{r}} = \hat{\mathbf{x}}\cos\phi + \hat{\mathbf{y}}\sin\phi$

$\phi = \tan^{-1}\frac{y}{x}$ $\qquad \hat{\boldsymbol{\phi}} = -\hat{\mathbf{x}}\sin\phi + \hat{\mathbf{y}}\cos\phi$

$z = z$ $\qquad \hat{\mathbf{z}} = \hat{\mathbf{z}}$

Cylindrical to Rectangular:

To obtain: $\mathbf{r}(x, y, z) = x\hat{\mathbf{x}} + y\hat{\mathbf{y}} + z\hat{\mathbf{z}}$

$x = r\cos\phi$ $\qquad \hat{\mathbf{x}} = \hat{\mathbf{r}}\cos\phi - \hat{\boldsymbol{\phi}}\cos\phi$

$y = r\sin\phi$ $\qquad \hat{\boldsymbol{\phi}} = \hat{\mathbf{r}}\sin\phi + \hat{\mathbf{y}}\cos\phi$

$z = z$ $\qquad \hat{\mathbf{z}} = \hat{\mathbf{z}}$

Rectangular to Spherical:

To obtain: $\mathbf{A}(r, \theta, \phi) = \hat{\mathbf{r}}A_r + \hat{\boldsymbol{\theta}}A_\theta + \hat{\boldsymbol{\phi}}A_\phi$

$A_r = \sqrt{x^2 + y^2 + z^2}$

$\hat{\mathbf{r}} = \hat{\mathbf{x}}\sin\theta\cos\phi + \hat{\mathbf{y}}\sin\theta\sin\phi + \hat{\mathbf{z}}\cos\theta$

$\theta = \frac{z\cos^{-1}}{\sqrt{x^2 + y^2 + z^2}}$

$\hat{\boldsymbol{\theta}} = \hat{\mathbf{x}}\cos\theta\cos\phi + \hat{\mathbf{y}}\cos\theta\sin\phi - \hat{\mathbf{z}}\sin\theta$

$\phi = \tan^{-1}\frac{y}{x}$ $\qquad \hat{\boldsymbol{\phi}} = -\hat{\mathbf{x}}\sin\phi + \hat{\mathbf{y}}\cos\phi$

Spherical to Rectangular:

To obtain: $\mathbf{r}(x, y, z) = x\hat{\mathbf{x}} + y\hat{\mathbf{y}} + z\hat{\mathbf{z}}$

$x = r\sin\theta\cos\phi$

$\hat{\mathbf{x}} = \hat{\mathbf{r}}\sin\theta\cos\phi - \hat{\boldsymbol{\theta}}\cos\theta\cos\phi - \hat{\boldsymbol{\phi}}\sin\phi$

$y = r\sin\theta\sin\phi$

$\hat{\mathbf{y}} = \hat{\mathbf{r}}\sin\theta\sin\phi + \hat{\boldsymbol{\theta}}\cos\theta\sin\phi + \hat{\boldsymbol{\phi}}\cos\phi$

$z = r\cos\theta$ $\qquad \hat{z} = \hat{\mathbf{r}}\cos\theta - \hat{\boldsymbol{\theta}}\sin\theta$

MODERN PHYSICS FOR ENGINEERS PHY355

INDEX

3D infinite potential box .13
allowed transitions
  1-electron atoms.....16
  many-electron atoms ...17
Angstrom 21
angular frequency.....10
appendix 21
atomic mass 2
average momentum 11
Avogadro's number....18, 21
binding energy 5
binomial expansion 21
blackbody..... 6
Bohr magneton.....21
Bohr model 8
Bohr radius 7
Boltzmann constant.....21
Bose-Einstein distribution19
boson 19
Bragg's law 9
bremsstrahlung..... 6
classical physics 1
classical wave equation ...10
Compton effect..... 7
conservation laws..... 1
constants.....21
coordinate systems 22
coordinate transformations22
de Broglie wavelength.....10
degenerate energy levels..13
density of energy states ...19
density of occupied states 20
doppler effect..... 5
Duane-Hunt rule 6
electron
  acceleration..... 8
  angular momentum 7
  filling.....16
  orbit radius 8
  scattering..... 9
  velocity..... 8
energy
  binding..... 5
  density of states 19
  Fermi.....19
  kinetic 5
  relation to momentum .. 5
  relativistic kinetic 5
  rest 5
  splitting 16, 17, 18
  states 19
  total 5
  zero-point 12
energy distribution 18
expectation value 11
  radial 15
Fermi energy.....19
Fermi speed 19
Fermi temperature.....19
Fermi-Dirac distribution..19
fermion 19
frequency
  angular 10
fundamental forces..... 2
geometry.....22
Greek alphabet.....21
group velocity 10
harmonic motion 12
Heisenberg limit 12
Heisenberg uncertainty
  principle 12
Hermite functions.....12
impact parameter 7
infinite square well 12
intensity of light..... 6
inverse photoelectric effect6
kinetic energy 2, 5, 9, 12, 13
Landé factor.....17
lattice planes..... 9
laws of thermodynamics ... 2
length contraction..... 3
light wavefront..... 3
lightlike 4
line spectra 5
Lorentz force law 2
Lorentz transformation 3
magnetic moment.....16
Maxwell speed distribution
 18
Maxwell's equations 2
Maxwell-Boltzmann factor18
mean speed 18
Michelson-Morley
  experiment..... 3
minimum angle 17
molecular speeds.....18
momentum..... 4
  relativistic..... 4
momentum operator 11
momentum-energy relation 5
momentum-temperature
  relation 9
Moseley's equation 9
most probable speed.....18
Newton's laws 2
normalization 11
normalization constant 14
normalizing functions.....14
orbital angular momentum15
order of electron filling....16
particle in a box 12, 13
phase constant.....10
phase space 2, 19
phase velocity 10
photoelectric effect..... 6
photon..... 6
  momentum..... 4
Planck's constant 21
Planck's radiation law..... 6
positron..... 6
potential barrier 13
probability 11
  radial 15
probability density
  radial 15
probability of location 11
proper length..... 3
proper time 3
quantum numbers.....15
radial acceleration 8
radial probability.....15
radial probability density.15
radial wave functions 14
radiation power 6
relativity 3
rest energy 5
root mean square speed ...18
Rutherform scattering..... 8
Rydberg constant.....9, 21
scattering 7, 8
  electron..... 9
  head-on..... 7
  x-ray..... 9
Schrödinger wave equation
  .....11, 12
  3D rectangular coord...13
  3D spherical coord. 14
simple harmonic motion ..12
spacelike..... 4
spacetime diagram 4
spacetime distance 3
spacetime interval 4
spectral lines..... 9
spectroscopic symbols 16
speed of light 3
spherical coordinates.....22
spin angular momentum ..16
spin-orbit splitting.....17
splitting due to spin.....17
spring harmonics.....12
statistical physics 18
Stefan-Boltzman law..... 6
temperature
  Fermi.....19
temperature and momentum9
thermodynamics 2
time dilation..... 3
timelike 4
total angular momentum..16
total energy 5
trig identities.....22
tunneling.....13
uncertainty of waves.....10
uncertainty principle 12
units.....21
velocity addition..... 3
wave functions 10
wave number.....10, 11
wave uncertainties.....10
wavelength.....3, 10
  spectrum.....21
waves
  envelope 10
  sum.....10
Wien's constant 6
work function..... 6
x-ray
  L-alpha waves..... 9
  scattering..... 9
Young's double slit
  experiment..... 5
Zeeman splitting 16, 18
zero-point energy.....12

CLASSICAL PHYSICS

CLASSICAL CONSERVATION LAWS

Conservation of Energy: The total sum of energy (in all its forms) is conserved in all interactions.

Conservation of Linear Momentum: In the absence of external force, linear momentum is conserved in all interactions (vector relation). naustalgic

Conservation of Angular Momentum: In the absence of external torque, angular momentum is conserved in all interactions (vector relation).

Conservation of Charge: Electric charge is conserved in all interactions.

Conservation of Mass: (not valid)

MAXWELL'S EQUATIONS

Gauss's law for electricity	$\oint \mathbf{E} \cdot d\mathbf{A} = \frac{q}{\varepsilon_0}$
Gauss's law for magnetism	$\oint \mathbf{B} \cdot d\mathbf{A} = 0$
Faraday's law	$\oint \mathbf{E} \cdot d\mathbf{s} = -\frac{d\Phi_B}{dt}$
Generalized Ampere's law	$\oint \mathbf{B} \cdot d\mathbf{s} = \mu_0 \varepsilon_0 \frac{d\Phi_E}{dt} + \mu_0 I$

LORENTZ FORCE LAW

Lorentz force law: $\mathbf{F} = q\mathbf{E} + q\mathbf{v} \times \mathbf{B}$

NEWTON'S LAWS

Newton's first law: *Law of Inertia* An object in motion with a constant velocity will continue in motion unless acted upon by some net external force.

Newton's second law: The acceleration **a** of a body is proportional to the net external force **F** and inversely proportional to the mass *m* of the body. $\mathbf{F} = m\mathbf{a}$

Newton's third law: *law of action and reaction* The force exerted by body 1 on body 2 is equal and opposite to the force that body 2 exerts on body 1.

LAWS OF THERMODYNAMICS

First law of thermodynamics: The change in the internal energy ΔU of a system is equal to the heat Q added to the system minus the work W done by the system.

Second law of thermodynamics: It is not possible to convert heat completely into work without some other change taking place.

Third law of thermodynamics: It is not possible to achieve an absolute zero temperature.

Zeroth law of thermodynamics: If two thermal systems are in thermodynamic equilibrium with a third system, they are in equilibrium with each other.

FUNDAMENTAL FORCES

FORCE	RELATIVE STRENGTH	RANGE
Strong	1	Short, ~10^{-15}m
Electroweak		
Electromagnetic	10^{-2}	Long, $1/r^2$
Weak	10^{-9}	Short, ~10^{-15}m
Gravitational	10^{-39}	Long, $1/r^2$

ATOMIC MASS

The mass of an atom is it's atomic number divided by the product of 1000 times Avogadro's number.

$$\frac{\text{atomic number}}{1000 \times N_a}$$

KINETIC ENERGY

The kinetic energy of a particle (ideal gas) in equilibrium with its surroundings is:

$$K = \frac{3kT}{2}$$

PHASE SPACE

A six-dimensional pseudospace populated by particles described by six position and velocity parameters:

position: (x, y, z) **velocity:** (v_x, v_y, v_z)

WAVELENGTH l

$$c = \frac{1}{\sqrt{\mu_0 \varepsilon_0}} = \lambda \nu$$

$1Å = 10^{-10}m$

c = speed of light 2.998×10^8 m/s
λ = wavelength [m]
ν = (nu) radiation frequency [Hz]
Å = (angstrom) unit of wavelength equal to 10^{-10} m
m = (meters)

Michelson-Morley Experiment indicated that light was not influenced by the "flow of ether".

LORENTZ TRANSFORMATION

Compares position and time in two coordinate systems moving with respect to each other along axis x.

$$x' = \frac{x - vt}{\sqrt{1 - v^2/c^2}} \qquad t' = \frac{t - vx/c^2}{\sqrt{1 - v^2/c^2}}$$

v = velocity of (x',y',z') system along the x-axis. [m/s]
t = time [s]
c = speed of light 2.998×10^8 m/s

or with $\beta = \frac{v}{c}$ and $\gamma = \frac{1}{\sqrt{1 - v^2/c^2}}$

so that $x' = \gamma(x - vt)$ and $t' = \gamma(t - \beta x/c)$

LIGHT WAVEFRONT

Position of the wavefront of a light source located at the origin, also called the **spacetime distance**.

$$x^2 + y^2 + z^2 = c^2 t^2$$

Proper time T_0 The elapsed time between two events occurring at the same position in a system as recorded by a stationary clock in the system (shorter duration than other times). Objects moving at high speed age less.

Proper length L_0 a length that is not moving with respect to the observer. The proper length is longer than the length as observed outside the system. Objects moving at high speed become longer in the direction of motion.

TIME DILATION

Given two systems moving at great speed relative to each other; the time interval between two events occurring at the same location as measured within the same system is the **proper time** and is shorter than the time interval as measured outside the system.

$$T = \frac{T_0'}{\sqrt{1 - v^2/c^2}} \quad \text{or} \quad T' = \frac{T_0}{\sqrt{1 - v^2/c^2}} \quad \text{where:}$$

T'_0, T_0 = the proper time (shorter). [s]
T, T' = time measured in the other system [m]
v = velocity of (x',y',z') system along the x-axis. [m/s]
c = speed of light 2.998×10^8 m/s

LENGTH CONTRACTION

Given an object moving with great speed, the distance traveled as seen by a stationary observer is L_0 and the distance seen by the object is L', which is contracted.

$$L_0 = \frac{L'}{\sqrt{1 - v^2/c^2}} \quad \text{where:}$$

L_0 = the **proper length** (longer). [m]
L' = contracted length [m]
v = velocity of (x',y',z') system along the x-axis. [m/s]
c = speed of light 2.998×10^8 m/s

RELATIVISTIC VELOCITY ADDITION

Where frame K' moves along the x-axis of K with velocity v, and an object moves along the x-axis with velocity u_x' with respect of K', the velocity of the object with respect to K is u_x.

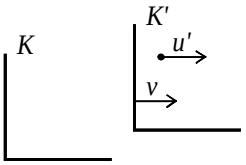

$$u_x = \frac{u_x' + v}{1 + (v/c^2)u_x'}$$

If there is u_y' or u_z' within the K' frame then

$$u_y = \frac{u_y'}{\gamma\left[1 - (v/c^2)u_x'\right]} \quad \text{and} \quad u_z = \frac{u_z'}{\gamma\left[1 - (v/c^2)u_x'\right]}$$

u_x = velocity of an object in the x direction [m/s]
v = velocity of (x',y',z') system along the x-axis. [m/s]
c = speed of light 2.998×10^8 m/s
$\gamma = 1/\sqrt{1 - v^2/c^2}$

For the situation where the velocity u with respect to the K frame is known, the relation may be rewritten exchanging the primes and changing the sign of v.

SPACETIME DIAGRAM

The diagram is a means of representing events in two systems. The horizontal x axis represents distance in the K system and the vertical ct axis represents time multiplied by the speed of light so that it is in units of distance as well. A point on the diagram represents an event in terms of its location in the x direction and the time it takes place. So points that are equidistant from the x axis represent simultaneous events.

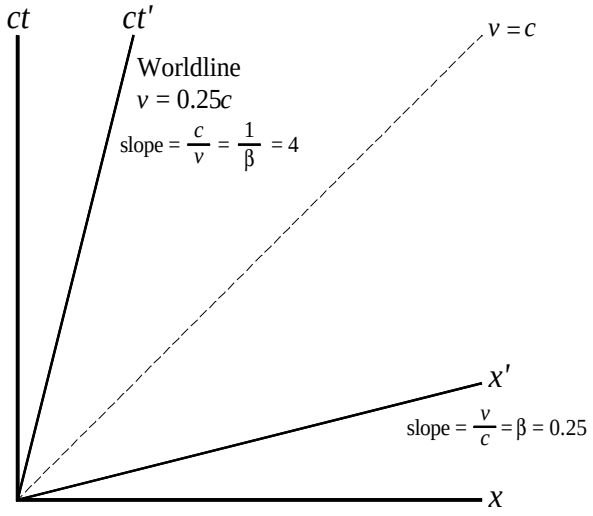

A system K' traveling in the x direction at ¼the speed of light is represented by the line ct' in this example, and is called a *worldline*. The line represents travel from one location to another over a period of time. The slope of the line is proportional to the velocity. A line with a slope of 1 (dashed line in illustration) indicates travel at the speed of light, so no worldline can have a slope less than 1. A straight line indicates zero acceleration. Simultaneous events occurring at $t = t' = 0$ in the K' system may be represented by points along the x' axis. Other simultaneous events in the K' system will be found on lines parallel to the x' axis.

SPACETIME INTERVAL Ds

The quantity Δs^2 is invariant between two frames of reference with relative movement along the x-axis.

$$s^2 = x^2 - (ct)^2 = x'^2 - (ct')^2$$

Two events occurring at different times and locations in the K-frame may be characterized by their Δs^2 quantity.

$$\Delta s^2 = \Delta x^2 - (c\Delta t)^2$$

lightlike - Ds^2 = 0: In this case, $\Delta x^2 = c^2\Delta t^2$, and the two events can only be connected by a light signal.

spacelike - Ds^2 > 0: In this case, $\Delta x^2 > c^2\Delta t^2$, and there exists a K'-frame in which the two events occur simultaneously but at different locations.

timelike - Ds^2 < 0: In this case, $\Delta x^2 < c^2\Delta t^2$, and there exists a K'-frame in which the two events occur at the same position but at different times. Events can be *causally* connected.

MOMENTUM **p**

$$\mathbf{p} = m\mathbf{v} \qquad \text{for a photon: } \mathbf{p} = \frac{h\nu}{c}$$

p = momentum [kg-m/s], convertible to [eV/c] by multiplying by c/q.

m = mass of the object in motion [kg]

v = velocity of object [m/s]

n = (nu) the frequency of photon light [Hz]

c = speed of light 2.998 × 10^8 m/s

RELATIVISTIC MOMENTUM **p**

$$\boxed{\mathbf{p} = \gamma m\mathbf{u}} \quad \text{where:}$$

p = relativistic momentum [kg-m/s], convertible to [eV/c] by multiplying by c/q.

$\gamma = 1/\sqrt{1-u^2/c^2}$

m = mass [kg]

u = velocity of object [m/s]

DOPPLER EFFECT

Given two systems approaching each other at velocity v, light emitted by one system at frequency n_0 (nu, proper) will be perceived at the higher frequency of n (nu) in the other system.

$$\nu = \frac{\sqrt{1+\beta}}{\sqrt{1-\beta}}\nu_0$$

For two systems receeding from each other, reverse the signs.

n = (nu) the frequency of emitted light as perceived in the other system [Hz]

n_0 = (nu) the **proper frequency** of the emitted light (lower for approaching systems) [Hz]. Frequency is related to wavelength by $c = \lambda\nu$.

β = v/c where v is the closing velocity of the systems (Use a negative number for diverging systems.) and c is the speed of light 2.998×10^8 m/s

v = velocity of (x',y',z') system along the x-axis. [m/s]

RELATIVISTIC KINETIC ENERGY K

Relativistic kinetic energy is the total energy minus the rest energy. When the textbook speaks of a 50 Mev particle, it is talking about the particle's **kinetic energy**.

$$K = \gamma mc^2 - mc^2$$ where:

K = relativistic kinetic energy [J], convertible to [eV] by dividing by q.

$\gamma = 1/\sqrt{1-v^2/c^2}$

m = mass [kg]

c = speed of light 2.998×10^8 m/s

REST ENERGY E_0

Rest energy is the energy an object has due to its mass.

$$E_0 = mc^2$$

TOTAL ENERGY E

Total energy is the kinetic energy plus the rest energy. When the textbook speaks of a 50 Mev particle, it is talking about the particle's **kinetic energy**.

$$E = K + E_0 \text{ or } E = \gamma mc^2$$ where:

E = total energy [J], convertible to [eV] by dividing by q.

K = kinetic energy [J], convertible to [eV] by dividing by q.

E_0 = rest energy [J], convertible to [eV] by dividing by q.

$\gamma = 1/\sqrt{1-v^2/c^2}$

m = mass [kg]

c = speed of light 2.998×10^8 m/s

MOMENTUM-ENERGY RELATION

$(\text{energy})^2 = (\text{kinetic energy})^2 + (\text{rest energy})^2$

$$E^2 = p^2c^2 + m^2c^4$$ where:

E = total energy (Kinetic + Rest energies) [J]

p = momentum [kg-m/s]

m = mass [kg]

c = speed of light 2.998×10^8 m/s

BINDING ENERGY

- the potential energy associated with holding a system together, such as the coulomb force between a hydrogen proton and its electron
- the difference between the rest energies of the individual particles of a system and the rest energy of a the bound system
- the work required to pull particles out of a bound system into free particles at rest.

$$E_B = \sum_i m_i c^2 - M_{\text{bound system}} c^2$$

for hydrogen and single-electron ions, the binding energy of the electron in the ground state is

$$E_B = \frac{mZ^2e^4}{2\hbar^2\left(4\pi\varepsilon_0\right)^2}$$

E_B = binding energy (can be negative or positive) [J]

m = mass [kg]

Z = atomic number of the element

$e = q$ = electron charge [c]

$\hbar$ = Planck's constant divided by 2π [J-s]

ε_0 = permittivity of free space 8.85×10^{-12} F/m

c = speed of light 2.998×10^8 m/s

LINE SPECTRA

Light passing through a diffraction grating with thousands of ruling lines per centimeter is diffracted by an angle θ.

$$d\sin\theta = n\lambda$$

The equation also applies to **Young's double slit experiment**, where for every integer n, there is a lighting maxima. The off-center distance of the maxima is $y = l\tan\theta$

d = distance between rulings [m]

θ = angle of diffraction [degrees]

n = the order number (integer)

λ = wavelength [m]

l = distance from slits to screen [m]

WIEN'S CONSTANT

The product of the wavelength of peak intensity λ [m] and the temperature T [K] of a blackbody. A **blackbody** is an ideal device that absorbs all radiation falling on it.

$$\lambda_{max} T = 2.898 \times 10^{-3} \ \text{m} \cdot \text{K}$$

STEFAN-BOLTZMANN LAW

May be applied to a **blackbody** or any material for which the emissivity is known.

$$R(T) = \varepsilon \sigma T^4$$ where:

$R(T)$ = power per unit area radiated at temperature T [W/m^2]

ε = emissivity (ε = 1 for ideal **blackbody**)

σ = constant 5.6705×10^{-8} W/(m$^2 \cdot$ K^4)

T = temperature (K)

PLANCK'S RADIATION LAW

$$I(\lambda, T) = \frac{2\pi c^2 h}{\lambda^5} \frac{1}{e^{hc/\lambda kT} - 1}$$ where:

$I(\lambda, T)$ = light intensity [W/(m$^2 \cdot$ λ)]

λ = wavelength [m]

T = temperature [K]

c = speed of light 2.998×10^8 m/s

h = Planck's constant $6.6260755 \times 10^{-34}$ J-s

k = Boltzmann's constant 1.380658×10^{-23} J/K

positron – A particle having the same mass as an electron but with a positive charge

bremsstrahlung – from the German word for *braking radiation*, the process of an electron slowing down and giving up energy in photons as it passes through matter.

PHOTON

A photon is a massless particle that travels at the speed of light. A photon is generated when an electron moves to a lower energy state (orbit).

Photon energy: $E = h\nu = pc$ [Joules]

Momentum: $p = \frac{h\nu}{c}$ [kg-m/s], convertible to [eV/c] by multiplying by c/q.

Wavelength: $\lambda = \frac{c}{\nu}$ [meters]

h = Planck's constant $6.6260755 \times 10^{-34}$ J-s

n = (nu) frequency of the electromagnetic wave associated with the light given off by the photon [Hz]

c = speed of light 2.998×10^8 m/s

PHOTOELECTRIC EFFECT

This is the way the book shows the formula, but it is a units nightmare.

$$\frac{1}{2} m v_{max}^2 = eV_0 = h\upsilon - \phi$$ where:

$\frac{1}{2} m v_{max}^2$ = energy in Joules, but convert to eV for the formula by dividing by q.

eV_0 = potential required to stop electrons from leaving the metal [V]

$h\nu$ = Planck's constant [$6.6260755 \times 10^{-34}$ J-s] multiplied by the frequency of light [Hz]. This term will need to be divided by q to obtain eV.

ϕ = work function, minimum energy required to get an electron to leave the metal [eV]

INVERSE PHOTOELECTRIC EFFECT

$$eV_0 = h\upsilon_{max} = \frac{hc}{\lambda_{min}}$$ where:

eV_0 = the kinetic energy of an electron accelerated through a voltage V_0 [eV]

$h\nu$ = Planck's constant [$6.6260755 \times 10^{-34}$ J-s] multiplied by the frequency of light [Hz]. This term will need to be divided by q to obtain eV.

λ_{min} = the minimum wavelength of light created when an electron gives up one **photon** of light energy [m]

DUANE-HUNT RULE

$$\lambda_{min} = \frac{1.2398 \times 10^{-6}}{V_0}$$

ELECTRON ANGULAR MOMENTUM

from the **Bohr** model:

$$L = mvr = n\hbar$$ where:

L = angular momentum [kg-m^2/s?]
m = mass [kg]
v = velocity [m/s]
r = radius [m]
n = principle quantum number
$\hbar$ = Planck's constant divided by 2π [J-s]

a_0 BOHR RADIUS [m]

The Bohr radius is the radius of the orbit of the hydrogen electron in the ground state (n=1):

$$a_0 = \frac{4\pi\varepsilon_0\hbar^2}{m_e e^2}$$ and for higher states (n>1): $$r_n = a_0 n^2$$

a_0, r_n = Bohr radius 5.29177×10^{-11} m, quantized radius [m]
ε_0 = permittivity of free space 8.85×10^{-12} F/m
m_e = electron mass 9.1093897×10^{-31} [kg]
$e = q$ = electron charge [c]
n = principle quantum number
$\hbar$ = Planck's constant divided by 2π [J-s]

IMPACT PARAMETER b

The impact parameter b is the distance that a bombarding particle deviates from the direct-hit approach path, and is related to the angle θ at which it will be deflected by the target particle.

$$b = \frac{Z_1 Z_2 e^2}{8\pi\varepsilon_0 K}\cot\frac{\theta}{2}$$

b = direct path deviation [m]
Z_1 = atomic number of the incident particle
Z_2 = atomic number of the target particle
$e = q$ = electron charge [c]
ε_0 = permittivity of free space 8.85×10^{-12} F/m
K = kinetic energy of the incident particle Z_1
θ = angle of particle Z_1 deflection or **scattering**

HEAD-ON SCATTERING

When a particle of kinetic energy K and atomic number Z_1 is fired directly at the nucleus, it approaches to r_{min} before reversing direction. The entire kinetic energy is converted to Coulomb potential energy. Since r_{min} is measured to the center of the particles, they will just touch when r_{min} is the sum of their radii.

$$r_{min} = \frac{Z_1 Z_2 e^2}{4\pi\varepsilon_0 K}$$

r_{min} = particle separation (measured center to center) at the time that the bombarding particle reverses direction [m]
other variables are previously defined

COMPTON EFFECT

The scattering of a photon due to collision with a single electron results in a new wavelength λ' and a directional change of $\angle\theta$ and is described by the following relation:

$$\Delta\lambda = \lambda' - \lambda = \frac{h}{mc}(1-\cos\theta)$$

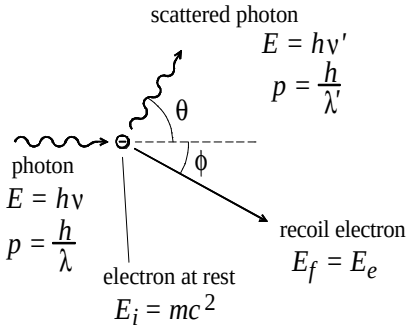

The ϕ relations come from the conservation of momentum:

$$p_x: \quad \frac{h}{\lambda} = \frac{h}{\lambda'}\cos\theta + p_e\cos\phi$$

$$p_y: \quad \frac{h}{\lambda'}\sin\theta = p_e\sin\phi$$

RUTHERFORD SCATTERING

A particle of kinetic energy K and atomic number Z_1 when fired at a target film of thickness t and atomic number Z_2, will be deflected by an angle θ.

$$N(\theta) = \frac{N_i n t}{16}\left(\frac{e^2}{4\pi\varepsilon_0}\right)^2 \frac{{Z_1}^2 {Z_2}^2}{r^2 K^2 \sin^4(\theta/2)}$$

$N(\theta)$ = number of particles scattered per unit area [m^{-2}]

θ = angle of particle Z_1 deflection or **scattering**

N_i = total number of incident particles [kg]

n = number of atoms per unit volume [m^{-3}] $n = \frac{\rho N_A N_M}{M_g}$

where ρ is density [g/m^3], N_A is Avogadro's number, N_M is the number of atoms per molecule, and M_G is the gram-molecular weight [g/mole].

t = thickness of the target material [m]

$e = q$ = electron charge [c]

ε_0 = permittivity of free space 8.85×10^{-12} F/m

Z_1 = atomic number of the incident particle

Z_2 = atomic number of the target particle

r = the radius at which the angle θ is measured [m]

K = kinetic energy of the incident particle Z_1

PROBABILITY OF A PARTICLE SCATTERING BY AN ANGLE GREATER THAN q

$$f = \pi n t\left(\frac{Z_1 Z_2 e^2}{8\pi\varepsilon_0 K}\right)^2 \cot^2\frac{\theta}{2}$$

f = the probability (a value between 0 and 1)

n = number of atoms per unit volume [m^{-3}] $n = \frac{\rho N_A N_M}{M_g}$

where ρ is density [g/m^3], N_A is Avogadro's number, N_M is the number of atoms per molecule, and M_G is the gram-molecular weight [g/mole].

t = thickness of the target material [m]

Z_1 = atomic number of the incident particle

Z_2 = atomic number of the target particle

$e = q$ = electron charge [c]

ε_0 = permittivity of free space 8.85×10^{-12} F/m

K = kinetic energy of the incident particle Z_1

θ = angle of particle Z_1 deflection or **scattering**

Alpha particle: Z=2
Proton: Z=1

ELECTRON VELOCITY

This comes from the **Bohr model** and only applies to atoms and ions having a single electron.

$$v_n = \underbrace{\frac{1}{n}\frac{Ze^2}{4\pi\varepsilon_0\hbar}}_{n\text{-dependent}} = \underbrace{\frac{e\sqrt{Z}}{2\sqrt{\pi\varepsilon_0 m_e r}}}_{r\text{-dependent}}$$

v = electron velocity [m/s]

Z = atomic number or number of protons in the nucleus

$e = q$ = electron charge [c]

n = the electron orbit or shell

ε_0 = permittivity of free space 8.85×10^{-12} F/m

m_e = mass of an electron 9.1093897×10^{-31} kg

$\hbar$ = Planck's constant divided by 2π [J-s]

r = the radius of the electron's orbit [m]

ELECTRON ORBIT RADIUS

This comes from the **Bohr model** and only applies to atoms and ions having a single electron.

$$r_n = \frac{4\pi\varepsilon_0 n^2 \hbar^2}{m_e Z e^2}$$

r_n = electron orbit radius in the n shell [m]

other variables are previously defined

a_r RADIAL ACCELERATION

a_r = the radial acceleration of an orbiting electron [m/s^2]

v = tangential velocity of the electron [m/s]

r = electron orbit radius [m]

$$a_r = \frac{v^2}{r}$$

R_∞ RYDBERG CONSTANT

R_∞ is used in the **Bohr model** and is a close approximation assuming an infinite nuclear mass. R is the adjusted value. These values are appropriate for hydrogen and single-electron ions.

$$R = \frac{\mu_e Z^2 e^4}{4\pi c\hbar^3 (4\pi\varepsilon_0)^2} \quad \text{where} \quad \mu_e = \frac{m_e M}{m_e + M}$$

R_∞ = Rydberg constant 1.09678×10^7 m^{-1} (1.096776×10^7 m^{-1} for hydrogen)

μ_e = adjusted electron mass

Z = atomic number, or number of protons in the nucleus

ε_0 = permittivity of free space 8.85×10^{-12} F/m

c = speed of light 2.998×10^8 m/s

$\hbar$ = Planck's constant divided by 2π [J-s]

m_e = mass of an electron 9.1093897×10^{-31} kg

M = mass of the nucleus (essentially the same as the mass of the atom $\Rightarrow$ atomic number $\times$ 1.6605×10^{-27}) [kg]

L_a MOSELEY'S EQUATION

British physicist, Henry Moseley determined this equation experimentally for the frequency of L_α ***x*-rays**. L_a **waves** are produced by an electron decaying from the n=3 orbit to the n=2 or L orbit.

$$\nu_{L_\alpha} = \frac{5}{36} cR(Z - 7.4)^2$$

n = (nu) frequency [Hz]

c = speed of light 2.998×10^8 m/s

R = Adjusted Rydberg constant (see above) [m^{-1}]

Z = atomic number or number of protons in the nucleus

SPECTRAL LINES

This formula gives the wavelength of light emitted when an electron in a single-electron atom or ion decays from orbit n_u to n_l.

$$\frac{1}{\lambda} = Z^2 R\left(\frac{1}{n_l^2} - \frac{1}{n_u^2}\right)$$

λ = wavelength [m]

Z = atomic number or number of protons in the nucleus

R = Rydberg constant (1.096776×10^7 m^{-1} for hydrogen)

n_l = the lower electron orbit number

n_u = the upper electron orbit number

BRAGG'S LAW

X-ray Scattering - X-rays reflected from a crystal experience interference effects since rays reflecting from the interior of the material take a longer path than those reflecting from the surface. Compare to ELECTRON SCATTERING below.

$$n\lambda = 2d\sin\theta$$

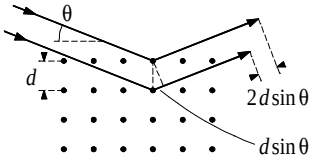

n = order of reflection (number of lattice planes in depth)

λ = wavelength of the incident wave [m]

d = distance between **lattice planes** (interatomic spacing in this case) [m]

θ = angle of incidence; the angle between the incident wave and the surface of the material

ELECTRON SCATTERING

Electrons directed into a crystalline material are scattered (reflected) at various angles depending on the arrangement of **lattice planes**. There is more than one set of lattice planes in a crystal. The technique can be used to explore the characteristics of a material. Compare to BRAGG'S LAW above.

$$n\lambda = D\sin\phi$$

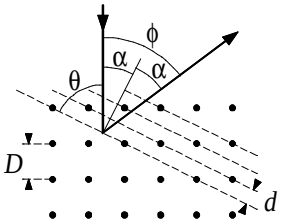

n = order of reflection (number of lattice planes in depth)

λ = wavelength of the incident wave [m]

D = interatomic spacing [m]

d = distance between lattice planes [m]

ϕ = angle between the incident and reflected waves

K CLASSICAL KINETIC ENERGY

Two expressions for kinetic energy:

$$\frac{p^2}{2m} = K = \frac{3}{2}kT$$

lead to a **momentum-temperature relation** for particles:

$$p^2 = 3mkT$$

p = momentum [kg-m/s]

m = particle mass [kg]

K = kinetic energy [J]

k = Boltzmann's constant 1.380658×10^{-23} J/K

T = temperature in Kelvin (273.15K = 0°C, ΔK = ΔC)

(see page 5 for RELATIVISTIC KINETIC ENERGY)

WAVES

Y WAVE FUNCTIONS

Classical Wave Equation
We did not use this equation: $$\frac{\partial^2\Psi}{\partial x^2} = \frac{1}{v^2}\frac{\partial^2\Psi}{\partial t^2}$$

This **wave function** fits the classical form, but is not a solution to the Schröedinger equation:

$$\Psi(x,t) = A\sin(kx - \omega t + \phi)$$

wave, time, wave number, angular frequency, phase constant

distance, amplitude, distance, time

The negative sign denotes wave motion in the positive x direction, assuming omega is positive.

More **general wave functions** which are solutions to the Schröedinger equation are:

$$\Psi(x,t) = Ae^{i(kx-\omega t)} = A[\cos(kx - \omega t) + i\sin(kx - \omega t)]$$

wave, time, wave number, angular frequency

distance, amplitude, distance, time

The negative sign denotes wave motion in the positive x direction, assuming omega is positive.

k WAVE NUMBER

A component of a wave function representing the **wave density** relative to distance, in units of radians per unit distance [rad/m].

$$k = \frac{2\pi}{\lambda}$$

w ANGULAR FREQUENCY

A component of a wave function representing the **wave density** relative to time (better known as frequency), in units of radians per second [rad/s].

$$\omega = \frac{2\pi}{T}$$

v_{ph} PHASE VELOCITY

The velocity of a point on a wave, e.g. the velocity of a wave peak [m/s].

$$v_{ph} = \frac{\lambda}{T} = \frac{\omega}{k}$$

f PHASE CONSTANT

The angle by which the wave is offset from zero, i.e. the angle by which the wave's zero amplitude point is offset from t=0. [radians or degrees].

Y SUM OF TWO WAVES

(see also WaveSummingExample.pdf)

$$\Psi_1 + \Psi_2 = 2A\underbrace{\cos\left(\frac{\Delta k}{2}x - \frac{\Delta\omega}{2}t\right)}_{\text{envelope}}\underbrace{\cos\left(k_{av}x - \omega_{av}t\right)}_{\text{internal wave}}$$

A = harmonic amplitude [various units?]

Δk = difference in wave numbers $k_1 - k_2$ [rad/m]

k_{av} = average wave number $(k_1 + k_2)/2$ [rad/m]

$\Delta\omega$ = difference in angular frequencies $\omega_1 - \omega_2$ [rad/s]

ω_{av} = average angular frequency $(\omega_1 + \omega_2)/2$ [rad/s]

x = distance [m]

t = time [s]

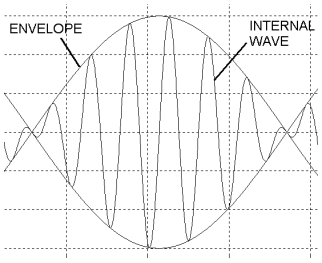

Phase Velocity:

$$v_{ph} = \omega_{av} / k_{av}$$

[m/s] velocity of a point on a wave

Group Velocity:

$$u_{gr} = \Delta\omega / \Delta k$$

[m/s] speed of the envelope

l de BROGLIE WAVELENGTH

De Broglie extended the concept of waves to all matter.

$$\lambda = \frac{h}{p}$$

λ = wavelength [m]

h = Planck's constant 6.6260755×10^{-34} J-s

p = momentum [kg-m/s], convertible to [eV/c] by multiplying by c/q.

WAVE UNCERTAINTIES

This has to do with the effects of combining different waves. In order to know precisely the position of the wave packet envelope (Δx small), we must have a large range of wave numbers (Δk large). In order to know precisely when the wave is at a given point (Δt small), we must have a large range of frequencies ($\Delta\omega$ large). Another result of this relationship, is that an electronic component must have a large bandwidth $\Delta\omega$ in order for its signal to respond in a short time Δt.

$$\Delta k\,\Delta x = 2\pi \qquad \Delta\omega\Delta t = 2\pi$$

Δk = the range of wave numbers, see WAVE NUMBER

Δx = the width of the wave envelope

$\Delta\omega$ = the range of wave frequencies

Δt = a time interval

SCHRÖDINGER'S WAVE EQUATION

time-dependent form:

$$K \quad + \quad U \quad = \quad E$$

$$-\frac{\hbar^2}{2m}\frac{\partial^2\Psi(x,t)}{\partial x^2}+V\Psi(x,t)=i\hbar\frac{\partial\Psi(x,t)}{\partial t}$$

time-independent form:

$$\boxed{-\frac{\hbar^2}{2m}\frac{d^2\psi(x)}{dx^2}+V(x)\psi(x)=E\psi(x)}$$

or $$-\frac{\hbar^2}{2m\psi(x)}\frac{d^2\psi(x)}{dx^2}=E-V(x)$$

$\hbar$ = Planck's constant divided by 2π [J-s]
$\Psi(x,t)$ = wave function
V = voltage; can be a function of space and time (x,t)
m = mass [kg]

Two separate solutions to the time-independent equation have the form:

$\boxed{Ae^{ikx}+Be^{-ikx}}$ where $k=\sqrt{2m(E-V)}/\hbar$

or $\boxed{A\sin(kx)+B\cos(kx)}$

Note that the **wave number *k*** is consistent in both solutions, but that the constants A and B are **not** consistent from one solution to the other. The values of constants A and B will be determined from **boundary conditions** and will also depend on which solution is chosen.

PROBABILITY

A probability is a value from zero to one. The probability may be found by the following steps:

Multiply the function by its complex conjugate and take the integral from negative infinity to positive infinity with respect to the variable in question, multiply all this by the square of a constant c and set equal to one.

$$c^2\int_{-\infty}^{\infty}F^*F\,dx=1$$

Solve for the probability constant ***c***.

The probability from x_1 to x_1 is: $P=c^2\int_{x_1}^{x_2}F^*F\,dx$

PROBABILITY OF LOCATION

Given the wave function: $\psi(x,t)$

find the probability that a particle is located between x_1 and x_2.

Normalize the wave function: $2\int_0^{\infty}A^2\psi^2dx=1$

with *A* known, find the probability: $P=\int_{x_1}^{x_2}A^2\psi^2dx$

á*x*ñ, áx^2ñ EXPECTATION VALUES

average value:

$$\langle x\rangle=\int_{-\infty}^{\infty}\psi^*(x)\,x\,\psi(x)\,dx$$

average x^2 value:

$$\langle x^2\rangle=\int_{-\infty}^{\infty}\psi^*(x)\,x^2\,\psi(x)\,dx$$

$\hat{p}$ MOMENTUM OPERATOR

An **operator** transforms one function into another function. The momentum operator is:

$$\hat{p}=-i\hbar\frac{d}{dx}$$

For example, to find the average momentum of a particle described by wave function ψ:

$$\langle p\rangle=\int_{-\infty}^{\infty}\psi^*\,\hat{p}\,\psi\,dx=\int_{-\infty}^{\infty}\psi^*\left(-i\hbar\frac{d}{dx}\psi\right)dx$$

SIMPLE HARMONIC MOTION

Examples of simple harmonic motion include a mass on a spring and a pendulum. The average potential energy equals the average kinetic energy equals half of the total energy. In simple harmonic motion, k is the spring constant, not the wave number.

spring constant k: $\omega = \sqrt{\frac{k}{m}}$ force: $F = kx$

potential energy V: $V = \frac{1}{2}kx^2$

Schrödinger Wave Equation for simple harmonic motion: $\frac{d^2\psi}{dx^2} = \left(\alpha^2 x^2 - \beta\right)\psi$

where $\alpha^2 = \frac{mk}{\hbar^2}$ and $\beta = \frac{2mE}{\hbar^2}$

The wave equation solutions are: $\boxed{\psi_n = H_n(x)e^{-\alpha x^2/2}}$

where $H_n(x)$ are polynomials of order n, where $n = 0,1,2,\cdots$ and x is the variable taken to the power of n. The functions $H_n(x)$ are related by a constant to the *Hermite polynomial functions*.

$$\psi_0 = \left(\frac{\alpha}{\pi}\right)^{1/4} e^{-\alpha x^2/2} \qquad \psi_1 = \left(\frac{\alpha}{\pi}\right)^{1/4} \sqrt{2\alpha}\, x e^{-\alpha x^2/2}$$

$$\psi_2 = \left(\frac{\alpha}{\pi}\right)^{1/4} \frac{1}{\sqrt{2}}\left(2\alpha x^2 - 1\right)e^{-\alpha x^2/2}$$

$$\psi_3 = \left(\frac{\alpha}{\pi}\right)^{1/4} \frac{1}{\sqrt{3}}\left(x\sqrt{\alpha}\right)\left(2\alpha x^2 - 3\right)e^{-\alpha x^2/2}$$

…and they call this simple!

quantized energy levels: $\boxed{E_n = \left(n + \frac{1}{2}\right)\hbar\omega}$

The **zero-point energy**, or **Heisenberg limit** is the minimum energy allowed by the uncertainty principle; the energy at n=0: $E_0 = \frac{1}{2}\hbar\omega$

HEISENBERG UNCERTAINTY PRINCIPLE

These relations apply to **Gaussian wave packets**. They describe the limits in determining the factors below.

$$\Delta p_x \, \Delta x \geq \hbar/2 \qquad \Delta E \, \Delta t \geq \hbar/2$$

Δp_x = the uncertainty in the momentum along the x-axis

Δx = the uncertainty of location along the x-axis

ΔE = the uncertainty of the energy

Δt = the uncertainty of time. This also happens to be the particle lifetime. Particles you can measure the mass of ($E=mc^2$) have a long lifetime.

INFINITE SQUARE-WELL POTENTIAL
or "Particle in a Box"

This is a concept that applies to many physical situations. Consider a two-dimensional box in which a particle may be trapped by an infinite voltage potential on either side. The problem is an application of the **Schrödinger Wave Equation**.

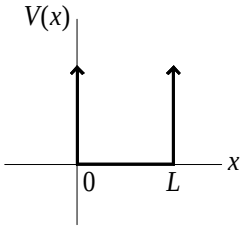

The particle may have various energies represented by waves that must have an amplitude of zero at each boundary 0 and L. Thus, the energies are quantized. The probability of the particle's location is also expressed by a wave function with zero values at the boundaries.

Wave function: $\psi_n(x) = A\sin\left(\frac{n\pi x}{L}\right)$

Energy levels: $E_n = n^2 \frac{\pi^2\hbar^2}{2mL^2}$

Probability of a particle being found between x_1 and x_2: $P = \int_{x=x_1}^{x_2} \Psi^* \Psi \, dx$

$A = \sqrt{\frac{2}{L}}$ normalization constant

a useful identity: $\sin^2\theta = \frac{1}{2}(1 - \cos 2\theta)$

POTENTIAL BARRIER

When a particle of energy E encounters a barrier of potential V_0, there is a possibility of either a reflected wave or a transmitted wave.

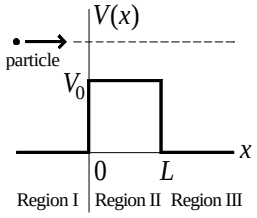

for $E > V_0$:

kinetic energy: $K = E - V_0$

wave number: $k_I = k_{III} = \sqrt{2mE}/\hbar$

$k_{II} = \sqrt{2m(E - V_0)}/\hbar$

incident wave: $\varphi_I = Ae^{ik_I x}$

reflected wave: $\varphi_I = Be^{-ik_I x}$

transmitted wave: $\varphi_{III} = Fe^{k_I x}$

trans. probability: $$T = \left(1 + \frac{{V_0}^2 \sin^2(k_{II} L)}{4E(E - V_0)}\right)^{-1}$$

reflection probability: $R = 1 - T$

for $E < V_0$: Classically, it is not possible for a particle of energy E to cross a greater potential V_0, but there is a quantum mechanical possibility for this to happen called **tunneling**.

kinetic energy: $K = V_0 - E$

wave #, region II: $\kappa = \sqrt{2m(V_0 - E)}/\hbar$

trans. probability: $$T = \left(1 + \frac{{V_0}^2 \sinh^2(\kappa L)}{4E(V_0 - E)}\right)^{-1}$$

when $\kappa L \gg 1$: $T = 16\frac{E}{V_0}\left(1 - \frac{E}{V_0}\right)e^{-2\kappa L}$

3D INFINITE POTENTIAL BOX

Consider a three-dimensional box with zero voltage potential inside the box and infinite voltage outside. A particle trapped in the box is described by a wave function and has quantized energy levels.

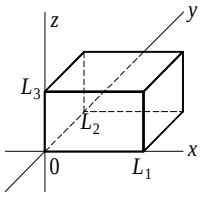

Time-independent Schrödinger Wave Equation in three dimensions:

$$-\frac{\hbar^2}{2m}\left(\frac{\partial^2\psi}{\partial x^2} + \frac{\partial^2\psi}{\partial y^2} + \frac{\partial^2\psi}{\partial z^2}\right) + V\psi = E\psi$$

Wave equation for the 3D infinite potential box:

$$\psi_{n_1 n_2 n_3} = A\sin\left(\frac{n_1 \pi x}{L_1}\right)\sin\left(\frac{n_2 \pi y}{L_2}\right)\sin\left(\frac{n_3 \pi z}{L_3}\right)$$

Energy levels: $$E_{n_1 n_2 n_3} = \frac{\pi^2 \hbar^2}{2m}\left(\frac{n_1^2}{L_1^2} + \frac{n_2^2}{L_2^2} + \frac{n_3^2}{L_3^2}\right)$$

Degenerate energy levels may exist—that is, different combinations of *n*-values may produce equal energy values.

SCHRÖDINGER'S EQUATION – 3D SPHERICAL

spherical coordinate form:

$$\frac{1}{r^2}\frac{\partial}{\partial r}\left(r^2\frac{\partial\psi}{\partial r}\right)+\frac{1}{r^2\sin\theta}\frac{\partial}{\partial\theta}\left(\sin\theta\frac{\partial\psi}{\partial\theta}\right)+\frac{1}{r^2\sin^2\theta}\frac{\partial^2\psi}{\partial\theta^2}+\frac{2m}{\hbar^2}(E-V)\psi=0$$

separation of variables using: $\Psi(r,\theta,\phi)=R(r)\,f(\theta)\,g(\phi)$

We can obtain a form with terms of g on one side and terms of R and f on the other. These are set equal to the constant m_l^2. m_l turns out to be an integer. Another seperation is performed for R and f and the constant is $l(l+1)$, where l is an integer. The three equations are:

Azimuthal equation:

$$\frac{1}{g}\frac{d^2g}{d\phi^2}+m_l^{\,2}=0 \quad\Rightarrow\quad g=Ae^{im_l\phi}$$

Radial equation:

$$\frac{1}{r^2}\frac{d}{dr}\left(r^2\frac{dR}{dr}\right)+\frac{2m}{\hbar^2}(E-V)R-\frac{l(l+1)}{r^2}R=0$$

Angular Equation:

$$\frac{1}{\sin\theta}\frac{d}{d\theta}\left(\sin\theta\frac{df}{d\theta}\right)+\left[l(l+1)-\frac{m_l^{\,2}}{\sin^2\theta}\right]f=0$$

m_l = magnetic quantum number; integers ranging from $-l$ to $+l$

l = orbital angular momentum quantum number

$\hbar$ = Planck's constant divided by 2π [J-s]

E = energy

V = voltage; can be a function of space and time (x,t)

m = mass [kg]

NORMALIZING WAVE FUNCTIONS

To normalize a function, multiply the function by its complex conjugate and by the square of the **normalization constant** A. Integrate the result from -∞ to ∞ and set equal to 1 to find the value of A. The normalized function is the original function multiplied by A.

To normalize the **wave function** $\Psi(x)$:

$$\int_{-\infty}^{\infty}\left|A\Psi\right|^2dx \quad\rightarrow\quad A^2\int_{-\infty}^{\infty}\Psi^2dx$$

Where Ψ is an even function, we can simplify to:

$2A^2\int_0^{\infty}\Psi^2dx$ and find A: $2A^2\int_0^{\infty}\Psi^2dx=1$

Some relations for definite integrals will be useful in solving this equation; see CalculusSummary.pdf page 3.

To normalize the **wave function** $\Psi(r)$, where r is the radius in spherical coordinates:

$$\int_0^{\infty}r^2\left|A\Psi\right|^2dr \quad\rightarrow\quad A^2\int_0^{\infty}r^2\Psi^2dr=1$$

Note that we integrate from 0 to ∞ since r has no negative values.

To normalize the **wave function** $\Psi(r,\theta,\phi)$:

$$A^2\int_0^{\infty}dr\,r^2\left|A\Psi\right|^2\int_0^{\pi}d\theta\sin\theta\int_0^{2\pi}d\phi=1$$

Note that dr, $d\theta$, and $d\phi$ are moved to the front of their respective integrals for clarity.

$R_{nl}(r)$ RADIAL WAVE FUNCTIONS for the hydrogen atom

n	l	$R_{nl}(r)$
1	0	$\frac{2}{a_0^{3/2}}e^{-r/a_0}$
2	0	$\left(w-\frac{r}{a_0}\right)\frac{e^{-r/2a_0}}{(2a_0)^{3/2}}$
2	1	$\frac{r}{a_0}\frac{e^{-r/2a_0}}{\sqrt{3}(2a_0)^{3/2}}$
3	0	$\frac{1}{(a_0)^{3/2}}\frac{2}{81\sqrt{3}}\left(27-18\frac{r}{a_0}+2\frac{r^2}{a_0^{\,2}}\right)e^{-r/3a_0}$
3	1	$\frac{1}{(a_0)^{3/2}}\frac{4}{81\sqrt{6}}\left(6-\frac{r}{a_0}\right)\frac{r}{a_0}e^{-r/3a_0}$
3	2	$\frac{1}{(a_0)^{3/2}}\frac{4}{81\sqrt{30}}\frac{r^2}{a_0^{\,2}}e^{-r/3a_0}$

a_0 = Bohr radius 5.29177×10^{-11} m

ATOMS

$P(r)dr$ RADIAL PROBABILITY

The radial probability is a value from 0 to 1 indicating the probability of a particle occupying a certain area radially distant from the center of orbit. The value is found by integrating the right-hand side of the expression over the interval in question:

$$P(r)\,dr = r^2\left|R(r)\right|^2\,dr$$

r = orbit radius

$R(r)$ = radial wave function, normalized to unity

$P(r)$ RADIAL PROBABILITY DENSITY

The radial probability density depends only on n and l.

$$P(r) = r^2\left|R(r)\right|^2$$

r = orbit radius

$R(r)$ = radial wave function, normalized to unity

árñ RADIAL EXPECTATION VALUE

average radius (radial wave function):

$$\langle r\rangle = \int_{r=0}^{\infty} r\,P(r)\,dr = \int_{r=0}^{\infty} r^3 R(r)\,dr$$

$P(r)$ = probability distribution function $P(r) = r^2\left|R(r)\right|^2\,dr$

$R(r)$ = radial wave function, normalized to unity

QUANTUM NUMBERS

n = **principal quantum number**, shell number, may have values of 1, 2, 3, …

l = **orbital angular momentum quantum number**, subshell number, may have values of 0 to n-1. These values are sometimes expressed as letters: s=0, p=1, d=2, f=3, g=4, h=5, …

m_l = **magnetic quantum number**, may have integer values from $-l$ to $+l$ for each l. (p251)

m_s = **magnetic spin quantum number**, may have values of +½or -½

Then we introduce these new ones:

s = **intrinsic quantum number**, s =1/2 (p238)

j = **total angular momentum quantum number**, $j = l \pm s$, but j is not less than 0. (p257)

m_j = **magnetic angular momentum quantum number**, may have values from $-j$ to $+j$ (p257)

Example, for n = 3:

l =	0	1			2				
j =	1/2	1/2		3/2	3/2			5/2	
m_j =	-1/2 +1/2	-1/2 +1/2		-3/2 -1/2 +1/2 +3/2	-3/2 -1/2 +1/2 +3/2			-5/2 -3/2 -1/2 +1/2 +3/2 +5/2	
m_l =	0	-1	0	+1	-2	-1	0	+1	+2
m_s =	-1/2 +1/2	-1/2 +1/2	-1/2 +1/2	-1/2 +1/2	-1/2 +1/2	-1/2 +1/2	-1/2 +1/2	-1/2 +1/2	-1/2 +1/2

L ORBITAL ANGULAR MOMENTUM

Classically, orbital angular momentum is **r*r*** or ***mvr***. The orbital angular momentum **L** is a vector quantity. It components are as follows:

Magnitude: $L = \hbar\sqrt{l(l+1)}$

Z-axis value: $L_z = m_l\hbar$

The values of L_x and L_y cannot be determined exactly but obey the following relation:

$$L^2 = L_x^2 + L_y^2 + L_z^2$$

$\hbar$ = Planck's constant divided by 2π [J-s]

l = orbital angular momentum quantum number

m_l = magnetic quantum number; integers ranging from $-l$ to $+l$

The orbital angular momentum quantum number was originally given letter values resulting from early visual observations: **s**harp, **p**rincipal, **d**iffuse, **f**undamental

l = 0 1 2 3 4 5
s p d f g h

S SPIN ANGULAR MOMENTUM

The spin angular momentum is (insert some illuminating explanation here).

Magnitude:

$$|\mathbf{S}| = \hbar\sqrt{s(s+1)} = \hbar\sqrt{3/4}$$

z component:

$$S_z = m_s\hbar = \pm\hbar/2$$

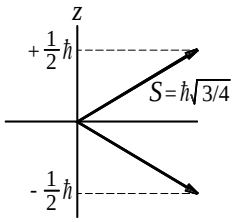

J TOTAL ANGULAR MOMENTUM

The vector sum of the orbital angular momentum and the spin angular momentum. This applies to 1-electron and many-electron atoms.

$$\mathbf{J} = \mathbf{L} + \mathbf{S}$$

J (the magnitude?) is an integer value from |*L*-*S*| to *L*+*S*.

ALLOWED TRANSITIONS

The allowed energy level transitions for 1-electron atoms are

Δn: any Δl: ±1 Δm_j: 0, ±1 Δj: 0, ±1

ZEEMAN SPLITTING ("ZAY· mahn")

When a single-electron atom is under the influence of an external magnetic field (taken to be in the *z*-axis direction), each energy level (n=1,2,3,…) is split into multiple levels, one for each quantum number m_l. The difference in energy is:

$$\Delta E = \mu_B B m_l$$

ΔE = difference in energy between two energy levels [J]

μ_B = Bohr magneton 9.274078×10^{-24} J/T

B = magnetic field [T]

m_l = magnetic quantum number; integers ranging from $-l$ to $+l$

m MAGNETIC MOMENT

Both the magnetic moment **m** and the orbital angular momentum **L** are vectors:

$$\boldsymbol{\mu} = -\frac{e}{2m}\mathbf{L}$$

m = mass of the orbiting particle [kg]

MANY-ELECTRON ATOMS

SPECTROSCOPIC SYMBOLS

The energy state of an atom having 1 or 2 electrons in its outer shell can be represented in the form

$$n^{2S+1}L_j$$

n = shell number

S = intrinsic spin angular momentum quantum number; ½ for a single-electron shell, 0 or 1 ($S_1 + S_2$) for the 2-electron shell

L = angular momentum quantum number; *l* for single-electron shell, $L_1 + L_2$ for a 2-electron shell, expressed as a capital letter: *S*=0, *P*=1, *D*=2, *F*=3, *G*=4, *H*=5, *I*=6.

j = total angular momentum quantum number $j = l \pm s$. I'm not sure how to tell whether it's plus or minus, but I think it has to be the lower value of *j* to be in the ground state. *j* is positive only.

ORDER OF ELECTRON FILLING

Here's a way to remember the order in which the outer shells of atoms are filled by electrons:

Form groups of *l*-numbers like this. The first group is just the lowest value for *l*: *s*. The next value of l is p; form a new group of p with s. The third value of l is d; form the third group with d, p, and s. You get a list of groups like this:

s
p s
d p s
f d p s
g f d p s
h g f d p s

Now, in a column, write each group twice beginning with the single s that is the first group.

Next number each s beginning with 1, placing the number in front of the s. This is as far as I have gone with the list at right.

The next step is to number each p beginning with the number 2.

Then number each d beginning with the number 3.

Number each f beginning with 4, and so on.

The result will be the order of filling (there are a few exceptions) and will look like this:

1s 2s 2p 3s 3p 4s 3d 4p 5s 4d 5p 6s 4f 5d and so on.

1s
2s
p
3s
p
4s
d
p
5s
f
d
p
6s
f
d
p
7s
and so on.

g LANDÉ *g* FACTOR

A dimensionless number that helps make physics complicated. Used in ANOMALOUS ZEEMAN SPLITTING

$$g = 1 + \frac{J(J+1) + S(S+1) - L(L+1)}{2J(J+1)}$$

ALLOWED PHOTON TRANSITIONS

The allowed photon energy level transitions for many-electron atoms are

ΔL: ± 1 ΔJ: $0, \pm 1$, but J can't transition from 0 to 0.

ΔS: 0 Δm_j: $0, \pm 1$, but can't transition from 0 to 0 when $\Delta J = 0$.

Other transitions are possible—just not likely.

q MINIMUM ANGLE BETWEEN *J* AND THE *Z*-AXIS

There were exercises where we had to calculate this. I don't know what the significance is. This is done similarly for L and S as well.

Example: $j = \frac{5}{2}$

$$\cos\theta = \frac{j \times \hbar}{\hbar\sqrt{j(j+1)}} \rightarrow$$

$$\cos^2\theta = \frac{j^2}{j(j+1)} \rightarrow \cos^2\theta = \frac{j}{(j+1)}$$

$$\cos\theta = \sqrt{\frac{j}{j+1}}$$

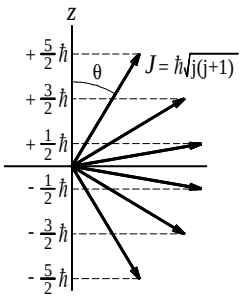

SPLITTING DUE TO SPIN

For each state described by quantum numbers n, l, m_l, there are two states defined by the magnetic spin numbers $m_s = \pm 1/2$. These two levels have the same energy except when the atom is influenced by an **external magnetic field**.

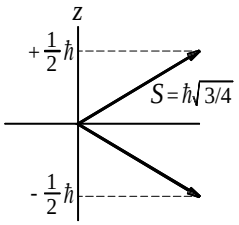

The **lower** of the two energy levels is **aligned** with the magnetic field.

$$\boxed{|\Delta E| = \frac{hc}{\lambda^2}|\Delta\lambda|}$$

ΔE = difference in energy between two (split) energy levels $m_s = \pm 1/2$ [J]

$\Delta\lambda$ = difference in wavelengths for the transitions to the ground state for each energy level [m]

λ = wavelength for the transitions to the ground state for the lower of the two energy levels (the greater of the two wavelengths) [m]

h = Planck's constant 6.6260755×10^{-34} J-s

c = speed of light 2.998×10^8 m/s

SPIN-ORBIT ENERGY SPLITTING

Spin-orbit energy splitting is the splitting of energy levels caused by an **internal magnetic field** due to spin. This produces a greater ΔE than the spin splitting described above. p265

P.E. due to spin $V = -\boldsymbol{\mu}_s \cdot \mathbf{B}$

z-component $\mu_z = -g_s\left(\frac{e\hbar}{2m_e}\right)\frac{J_z}{\hbar}$

energy level difference $\boxed{\Delta E = g_s \frac{e\hbar}{m_e} B}$

$e = q$ = electron charge 1.6022×10^{-19} C

$\hbar$ = Planck's constant divided by 2π [J-s]

j_z = z-component of the total angular momentum

ΔE = difference in energy between two (split) energy levels $m_s = \pm 1/2$ [J]

$g_s = 2$, the gyromagnetic ratio

m_e = mass of an electron 9.1093897×10^{-31} kg

B = internal magnetic field [T]

ANOMALOUS ZEEMAN SPLITTING

("ZAY· mahn")

In addition to the Zeeman splitting of the m_l energy levels described previously, and the spin-orbit energy splitting described above, there is a splitting of the m_j levels when an external magnetic field is present. The difference in energy between levels is:

$$V = \mu_B B_{\text{ext}} g m_j$$

V = difference in energy between two energy levels [J]

μ_B = Bohr magneton 9.274078×10^{-24} J/T

B_{ext} = external magnetic field [T]

g = Landé factor [no units]

m_j = magnetic angular momentum quantum number; half-integers ranging from $-j$ to $+j$

STATISTICAL PHYSICS

v^*, $\bar{v}$, v_{rms} MOLECULAR SPEEDS [m/s]

Maxwell speed distribution:

$$F(v)\,dv = 4\pi C e^{-\frac{1}{2}\beta m v^2} v^2\,dv$$

v^* most probable speed:

$$v^* = \sqrt{\frac{2}{\beta m}} = \sqrt{\frac{2kT}{m}}$$

$\bar{v}$ mean speed:

$$\bar{v} = \frac{4}{\sqrt{2\pi}}\sqrt{\frac{kT}{m}}$$

v_{rms} root mean square speed:

$$v_{rms} = \left[\overline{v^2}\right]^{1/2} = \sqrt{\frac{3kT}{m}}$$

v = velocity [m/s]

C = normalization constant

k = Boltzmann's constant 1.380658×10^{-23} J/K

T = temperature [K]

m = mass of the molecule [kg]

β = the parameter $1/kT$ [J^{-1}]

ENERGY DISTRIBUTION

Derived from Maxwell's speed distribution:

$$F(E) = \frac{8\pi C}{\sqrt{2}m^{3/2}} e^{-\beta E} E^{1/2}$$

F_{MB} MAXWELL-BOLTZMANN FACTOR

The Maxwell-Boltzmann factor is a value between 0 and 1 representing the probability that an energy level E is occupied by an electron (at temperature T). This is for **classical systems, such as ideal gases**. One way to determine if Maxwell-Boltzmann statistics are valid is to compare the de Broglie wavelength $\lambda = h/p$ of a typical particle with the average interparticle spacing d. If $\lambda << d$ then Maxwell-Boltzmann statistics are generally acceptable.

$$F_{MB} = Ae^{-\beta E} \qquad d = \left(\frac{V}{N}\right)^{1/3}$$

A = normalization constant

β = the parameter $1/kT$ [J^{-1}]

d = space between atoms [m]

N = number of particles in volume V. Note that **Avogadro's number**, 6.022×10^{23}, is the number of gas molecules in 22.4 liters, or 22.4×10^{-3} m^3, at 0°C and 1 atmosphere. Also, gas volume is proportional to temperature: $V_1/T_1 = V_2/T_2$.

F_{FD} FERMI-DIRAC DISTRIBUTION

A value between 0 and 1 indicating the probability than an energy state is occupied by an electron. The Fermi-Dirac distribution is valid for **fermions**, particles with **half-integer spins** that obey the Pauli principle. Atoms and molecules consisting of an even number of fermions must be considered bosons when taken as a whole because their total spin will be zero or an integer.

$$F_{FD} = \frac{1}{B_1 e^{\beta E} + 1}$$

B_1 = normalization constant

β = the parameter $1/kT$ [J^{-1}]

F_{BE} BOSE-EINSTEIN DISTRIBUTION

The Bose-Einstein distribution is valid for **bosons**, particles with **zero or integer spins** that do no obey the Pauli principle. Photons, pions, and liquid ^{4}He are bosons.

$$F_{BE} = \frac{1}{B_2 e^{\beta E} - 1}$$

B_2 = normalization constant

β = the parameter $1/kT$ [J^{-1}]

E_F FERMI ENERGY [eV]

The Fermi energy depends on the density of electrons in the material. The Fermi-Dirac distribution is modified to include the Fermi energy:

$$F_{FD} = \frac{1}{e^{\left[\beta(E-E_F)\right]} + 1}$$

The relationship between the Fermi energy and the number density of particles is:

$$E_F = \frac{h^2}{8m}\left(\frac{3N}{\pi L^3}\right)^{2/3}$$

F_{FD} = Fermi-Dirac distribution, a value from 0 to 1 indicating the probability that an energy state is occupied

β = the parameter $1/kT$ [J^{-1}]

h = Planck's constant 6.6260755×10^{-34} J-s

m = mass of the particle [kg]

N/L^3 = number density of the particles [m^{-3}]

T_F FERMI TEMPERATURE

The Fermi temperature may be quite high, 80,000 K for copper.

$$T_F = \frac{E_F}{k}$$

E_F = Fermi Energy [eV]

k = Boltzmann's constant 1.380658×10^{-23} J/K

u_F FERMI SPEED

The Fermi speed, $u_F = \sqrt{\frac{2E_F}{m}}$

comes from the definition: $E_F = \frac{1}{2} m u_F^{\,2}$

E_F = Fermi Energy [eV]

m = mass (probably of the electron) [kg]

ENERGY STATES IN "PHASE SPACE"

The points in the 1/8 sphere represent the energy states of a particle in a cube, see 3D INFINITE POTENTIAL BOX p13.

Energy level at radius r

$$E = r^2 E_1$$

where $E_1 = h^2/8mL^2$

(a constant equal to 1/3 of the ground state energy)

and $r = \sqrt{n_1^{\,2} + n_2^{\,2} + n_3^{\,2}}$

and E is whatever energy the problem is concerned with.

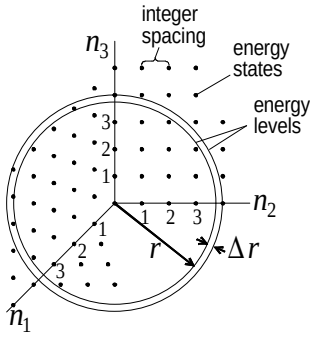

N_r **Number of energy states** in a sphere of radius r, i.e. the number of energy states there are with energy less than E:

$$N_r = 2\left(\frac{1}{8}\right)\left(\frac{4}{3}\pi r^3\right) \quad \text{or} \quad N_r = \frac{\pi}{3}\left(\frac{E}{E_1}\right)^{3/2}$$

where the factor of 2 is due to spin degeneracy, and the factor of 1/8 is because the energy states only occupy 1/8 of the sphere where n_1, n_2, n_3 are all positive.

$g(E)$ DENSITY OF ENERGY STATES

Number of states per unit energy

$$g(E) = \frac{\pi}{2} E_1^{-3/2} E^{1/2} \qquad g(E) = \frac{\Delta N_r}{\Delta E} = \frac{dN_r}{dE}$$

N_r = number of energy states in a sphere of radius r

E_1 = a constant equal to 1/3 of the ground state energy

$n(E)$ DENSITY OF OCCUPIED STATES

Number of occupied states per unit energy

$$\boxed{n(E) = F_{FD} \cdot g(E)}$$

at T=0, $n(E) = \begin{cases} g(E), & \text{for } E < E_F \\ 0, & \text{for } E > E_F \end{cases}$

F_{FD} = Fermi-Dirac distribution, a value from 0 to 1 indicating the probability that an energy state is occupied

APPENDIX

CONSTANTS

Avogadro's number [molecules/mole]	$N_A = 6.0221367\times10^{23}$
Bohr magneton	$\mu_B = \frac{q\hbar}{2m_e} = 9.27407836\times10^{-24}$ J/T
Boltzmann's constant	$k = 1.380658\times10^{-23}$ J/K
or	$K = 8.62\times10^{-5}$ eV/K
Earth to Moon distance	$\approx 384\times10^{6}$ m
Elementary charge	$q = 1.60\times10^{-19}$ C
Electron mass	$m_e = 9.1093897\times10^{-31}$ kg
	$m_e = 0.51100$ MeV/c^2
Neutron mass	$m_{neutron} = 1.6749\times10^{-27}$ kg
	$m_{neutron} = 939.57$ MeV/c^2
Proton mass	$m_p = 1.6726231\times10^{-27}$ kg
	$m_p = 938.27$ MeV/c^2
Permittivity of free space	$\varepsilon_0 = 8.8541878\times10^{-12}$ F/m
Planck's constant	$h = 6.6260755\times10^{-34}$ J-s
	$= 4.14\times10^{-15}$ eV-s
Rydberg constant	$R = 1.097373\times10^{7}$ m^{-1}
kT @ room temperature	$kT = 0.0259$ eV
Speed of light	$c = 2.998\times10^{8}$ m/s
Speed of sound (air 0°C)	$v_s = 331.29$ m/s
1 Å (angstrom)	10^{-8} cm = 10^{-10} M
1 μm (micron)	10^{-4} cm
1 nm = 10Å = 10^{-7} cm	273.15K = 0°C
1 eV = 1.6 × 10^{-19} J	1 W = 1 J/S = 1 VA
1 V = 1 J/C	1 N/C = 1 V/m 1 J = 1 N· m = 1 C· V

UNITS

Energy: Joules × $\boxed{\frac{1}{q}}$ = eV

Mass: Kg × $\boxed{\frac{c^2}{q}}$ = eV/c^2

Momentum: $\frac{\text{kg}\cdot\text{m}}{\text{s}} \times \boxed{\frac{c}{q}} = \frac{\text{eV}}{\text{c}}$

BINOMIAL EXPANSION

For $|x| < 1$:

$$(1\pm x)^n = 1 \pm nx + \frac{n(n-1)}{2!}x^2 \pm \frac{n(n-1)(n-2)}{3!}x^3 + \cdots$$

When x is much less than 1: $\boxed{(1\pm x)^n = 1 \pm nx}$

WAVELENGTH SPECTRUM

BAND	METERS	ANGSTROMS
Longwave radio	1 - 100 km	10^{13} - 10^{15}
Standard Broadcast	100 - 1000 m	10^{12} - 10^{13}
Shortwave radio	10 - 100 m	10^{11} - 10^{12}
TV, FM	0.1 - 10 m	10^{9} - 10^{11}
Microwave	1 - 100 mm	10^{7} - 10^{9}
Infrared light	0.8 - 1000 μm	8000 - 10^{7}
Visible light	360 - 690 nm	3600 - 6900
violet	360 nm	3600
blue	430 nm	4300
green	490 nm	4900
yellow	560 nm	5600
orange	600 nm	6000
Red	690 nm	6900
Ultraviolet light	10 - 390 nm	100 - 3900
X-rays	5 - 10,000 pm	0.05 - 100
Gamma rays	100 - 5000 fm	0.001 - 0.05
Cosmic rays	< 100 fm	< 0.001

GREEK ALPHABET

A	α	alpha	I	ι	iota	P	ρ	rho
B	β	beta	K	κ	kappa	Σ	σ	sigma
X	χ	chi	Λ	λ	lambda	T	τ	tau
Δ	δ	delta	M	μ	mu	Y	υ	upsilon
E	ε	epsilon	N	ν	nu	Ω	ω	omega
Φ	ϕ	phi	O	ο	omicron	Ξ	ξ	xi
Γ	γ	gamma	Π	π	pi	Ψ	ψ	psi
H	η	eta	Θ	θ	theta	Z	ζ	zeta

TRIG IDENTITIES

$i2\sin x = e^{ix} - e^{-ix}$ $\qquad 2\sinh x = e^{x} - e^{-x}$

$2\cos x = e^{ix} + e^{-ix}$ $\qquad 2\cosh x = e^{x} + e^{-x}$

$e^{ix} = \cos x + i\sin x$

$\sin(A \pm B) = \sin A\cos B \pm \cos A\sin B$

$\cos(A \pm B) = \cos A\cos B \mp \sin A\sin B$

$$\sin A + \sin B = 2\sin\left(\frac{A+B}{2}\right)\cos\left(\frac{A-B}{2}\right)$$

$$\cos A + \cos B = 2\cos\left(\frac{A+B}{2}\right)\cos\left(\frac{A-B}{2}\right)$$

GEOMETRY

SPHERE

Area $A = 4\pi r^2$

Volume $V = \frac{4}{3}\pi r^3$

ELLIPSE

Area $A = \pi AB$

Circumference

$$L \approx 2\pi\sqrt{\frac{a^2 + b^2}{2}}$$

COORDINATE SYSTEMS

Cartesian or Rectangular Coordinates:

$\mathbf{r}(x, y, z) = x\hat{\mathbf{x}} + y\hat{\mathbf{y}} + z\hat{\mathbf{z}}$ $\qquad \hat{\mathbf{x}}$ is a unit vector

$$|\mathbf{r}| = \sqrt{x^2 + y^2 + z^2}$$

Spherical Coordinates:

$\mathbf{P}(r, \theta, \phi)$ $\quad r$ is distance from center

θ is angle from vertical

ϕ is the CCW angle from the x-axis

$\hat{\mathbf{r}}$, $\hat{\boldsymbol{\theta}}$, and $\hat{\boldsymbol{\phi}}$ are functions of position—their orientation depends on where they are located.

Cylindrical Coordinates:

$\mathbf{C}(r, \phi, z)$ $\quad r$ is distance from the vertical (z) axis

ϕ is the CCW angle from the x-axis

z is the vertical distance from origin

COORDINATE TRANSFORMATIONS

Rectangular to Cylindrical:

To obtain: $\mathbf{A}(r, \phi, z) = \hat{\mathbf{r}}A_r + \hat{\boldsymbol{\phi}}A_\phi + \hat{\mathbf{z}}A_z$

$A_r = \sqrt{x^2 + y^2}$ $\qquad \hat{\mathbf{r}} = \hat{\mathbf{x}}\cos\phi + \hat{\mathbf{y}}\sin\phi$

$\phi = \tan^{-1}\frac{y}{x}$ $\qquad \hat{\boldsymbol{\phi}} = -\hat{\mathbf{x}}\sin\phi + \hat{\mathbf{y}}\cos\phi$

$z = z$ $\qquad \hat{\mathbf{z}} = \hat{\mathbf{z}}$

Cylindrical to Rectangular:

To obtain: $\mathbf{r}(x, y, z) = x\hat{\mathbf{x}} + y\hat{\mathbf{y}} + z\hat{\mathbf{z}}$

$x = r\cos\phi$ $\qquad \hat{\mathbf{x}} = \hat{\mathbf{r}}\cos\phi - \hat{\boldsymbol{\phi}}\cos\phi$

$y = r\sin\phi$ $\qquad \hat{\boldsymbol{\phi}} = \hat{\mathbf{r}}\sin\phi + \hat{\mathbf{y}}\cos\phi$

$z = z$ $\qquad \hat{\mathbf{z}} = \hat{\mathbf{z}}$

Rectangular to Spherical:

To obtain: $\mathbf{A}(r, \theta, \phi) = \hat{\mathbf{r}}A_r + \hat{\boldsymbol{\theta}}A_\theta + \hat{\boldsymbol{\phi}}A_\phi$

$A_r = \sqrt{x^2 + y^2 + z^2}$

$\hat{\mathbf{r}} = \hat{\mathbf{x}}\sin\theta\cos\phi + \hat{\mathbf{y}}\sin\theta\sin\phi + \hat{\mathbf{z}}\cos\theta$

$\theta = \frac{z\cos^{-1}}{\sqrt{x^2 + y^2 + z^2}}$

$\hat{\boldsymbol{\theta}} = \hat{\mathbf{x}}\cos\theta\cos\phi + \hat{\mathbf{y}}\cos\theta\sin\phi - \hat{\mathbf{z}}\sin\theta$

$\phi = \tan^{-1}\frac{y}{x}$ $\qquad \hat{\boldsymbol{\phi}} = -\hat{\mathbf{x}}\sin\phi + \hat{\mathbf{y}}\cos\phi$

Spherical to Rectangular:

To obtain: $\mathbf{r}(x, y, z) = x\hat{\mathbf{x}} + y\hat{\mathbf{y}} + z\hat{\mathbf{z}}$

$x = r\sin\theta\cos\phi$

$\hat{\mathbf{x}} = \hat{\mathbf{r}}\sin\theta\cos\phi - \hat{\boldsymbol{\theta}}\cos\theta\cos\phi - \hat{\boldsymbol{\phi}}\sin\phi$

$y = r\sin\theta\sin\phi$

$\hat{\mathbf{y}} = \hat{\mathbf{r}}\sin\theta\sin\phi + \hat{\boldsymbol{\theta}}\cos\theta\sin\phi + \hat{\boldsymbol{\phi}}\cos\phi$

$z = r\cos\theta$ $\qquad \hat{z} = \hat{\mathbf{r}}\cos\theta - \hat{\boldsymbol{\theta}}\sin\theta$

THE STRANGE LIFE OF NIKOLA TESLA.

The Strange Life of Nikola Tesla

Editors Note, August 28, 1995

This text has been entered by John R.H. Penner from a small booklet found in a used bookstore for $2.50. The only form of date identification is the name of the original purchaser, Arthua Daine (?), dated April 29, 1978.
The book appears to be considerably older, made with typewriters, and then photocopied and stapled. The only other significant features of the booklet is that it contains four photocopied photographs of Tesla, and was originally forty pages long. I must apologise for the qualitty of the scans, but the originals were of very poor quality, and this is the best that could be obtained after touching-up in Photoshop.

The book has no Copyright identification, nor any means of contacting the publishers. As far as I am aware, this autobiography is no longer available in printed form anywhere.

In the interest of making this important text available to the wider public, I have retyped the entire text word-for-word as it originally appears into this electronic format. The only words which appear in this file, that are not in the original book are this Editors Note, and the Introduction. I have exactly maintained page numbers as they appear in the original – including the somewhat odd artifact of Chapter 1 starting on page two.

If anyone knows how to reach the original publisher, please contact me at the below address, so proper credit may be given where it is due.

John Roland Hans Penner
464 Scott Street
St. Catharines, Ontario
L2M 3W7, Canada
Phone: 905.646.3551
eMail: J.Penner@GEnie.GEIS.com

This file may be freely redistributed as long as it's content is not modified in any way. It may not be sold or published for profit unless specifically authorised prior to publication by the express permission of Kolmogorov- Smirnov Publishing, or John R.H. Penner. Unless otherwise notified, this work is Copyright ©1995 by John R.H. Penner

Introduction

Nikola Tesla was born in Croatia (then part of Austria-Hungary) on July 9, 1856, and died January 7, 1943. He was the electrical engineer who invented the AC (alternating current) induction motor, which made the universal transmission and distribution of electricity possible. Tesla began his studies in physics and mathematics at Graz Polytechnic, and then took philosophy at the University of Prague. He worked as an electrical engineer in Budapest, Hungary, and subsequently in France and Germany. In 1888 his discovery that a magnetic field could be made to rotate if two coils at right angles are supplied with AC current

90° out of phase made possible the invention of the AC induction motor. The major advantage of this motor being its brushless operation, which many at the time believed impossible.

Tesla moved to the United States in 1884, where he worked for Thomas Edison who quickly became a rival – Edison being an advocate of the inferior DC power transmission system. During this time, Tesla was commissioned with the design of the AC generators installed at Niagara Falls. George Westinghouse purchased the patents to his induction motor, and made it the basis of the Westinghouse power system which still underlies the modern electrical power industry today.
He also did notable research on high-voltage electricity and wireless communication; at one point creating an earthquake which shook the ground for several miles around his New York laboratory. He also devised a system which anticipated world-wide wireless communications, fax machines, radar, radio-guided missiles and aircraft.

NIKOLA TESLA IS THE TRUE UNSUNG PROPHET OF THE ELECTRIC AGE!;
without whom our radio, auto ignition, hone, alternating current power generation and transmission, radio and television would all have been impossible.
Yet his life and times have vanished largely from public access.

This AUTOBIOGRAPHY is released to remedy this situation, and to fill this "BLACK HOLE" in information space.

©Kolmogorov- Smirnov Publishing. v vi
October 13, 1933 1
Chapter 1

My Early Life

By Nikola Tesla

The progressive development of man is vitally dependent on invention. It is the most important product of his creative brain. Its ultimate purpose is the complete mastery of mind over the material world, the harnessing of the forces of nature to human needs. This is the difficult task of the inventor who is often misunderstood and unrewarded. But he finds ample compensation in the pleasing exercises of his powers and in the knowledge of being one of that exceptionally privileged class without whom the race would have long ago perished in the bitter struggle against pitiless elements. Speaking for myself, I have already had more than my full measure of this exquisite enjoyment; so much, that for many years my life was little short of continuous rapture. I am credited with being one of the hardest workers and perhaps I am, if thought is the equivalent of labour, for I have devoted to it almost all of my waking hours. But if work is interpreted to be a definite performance in a specified time according to a rigid rule, then I may be the worst of idlers.
Every effort under compulsion demands a sacrifice of life-energy. I never paid such a price. On the contrary, I have thrived on my thoughts. In attempting to give a connected and faithful account of my activities in this story of my life, I must dwell, however reluctantly, on the impressions of my youth and the circumstances and events which have been instrumental in determining my career. Our first endeavours are purely instinctive promptings of an imagination vivid and undisciplined. As we grow older reason asserts itself and we become more and more systematic and designing. But those early impulses, though not immediately productive, are of the greatest moment and may shape our very destinies. Indeed, I feel now that had I understood and cultivated instead of suppressing them, I would have added substantial value to my bequest to the world. But not until I had attained manhood did I realise that I was an inventor.

This was due to a number of causes. In the first place I had a brother who was gifted to an extraordinary degree; one of those rare phenomena of mentality which biological investigation has failed to explain. His premature death left my earth parents disconsolate. (I will explain my remark about my "earth parents" later.) We owned a horse which had been presented to us by a dear friend. It was a magnificent animal of Arabian breed, possessed of almost human intelligence, and was cared for and petted by the whole family, having on one occasion saved my dear father's life under remarkable circumstances.

My father had been called one winter night to perform an urgent duty and while crossing the mountains, infested by wolves, the horse became frightened and ran away, throwing him violently to the ground. It arrived home bleeding and exhausted, but after the alarm was sounded, immediately dashed off again, returning

to the spot, and before the searching party were far on the way they were met by my father, who had recovered consciousness and remounted, not realising that he had been lying in the snow for several hours. This horse was responsible for my brother's injuries from which he died. I witnessed the tragic scene and although so many years have elapsed since, my visual impression of it has lost none of its force. The recollection of his attainments made every effort of mine seem dull in comparison. Anything I did that was creditable merely caused my parents to feel their loss more keenly. So I grew up with little confidence in myself.

But I was far from being considered a stupid boy, if I am to judge from an incident of which I have still a strong remembrance. One day the Aldermen were passing through a street where I was playing with other boys. The oldest of these venerable gentlemen, a wealthy citizen, paused to give a silver piece to each of us. Coming to me, he suddenly stopped and commanded, "Look in my eyes." I met his gaze, my hand outstretched to receive the much valued coin, when to my dismay, he said, "No, not much; you can get nothing from me. You are too smart."

They used to tell a funny story about me. I had two old aunts with wrinkled faces, one of them having two teeth protruding like the tusks of an elephant, which she buried in my cheek every time she kissed me. Nothing would scare me more then the prospects of being by these affectionate, unattractive relatives. It happened that while being carried in my mother's arms, they asked who was the prettier of the two. After examining their faces intently, I answered thoughtfully, pointing to one of them, "This here is not as ugly as the other."

Then again, I was intended from my very birth, for the clerical profession and this thought constantly oppressed me. I longed to be an engineer, but my father was inflexible. He was the son of an officer who served in the army of the Great Napoleon and in common with his brother, professor of mathematics in a prominent institution, had received a military education; but, singularly enough, later embraced the clergy in which vocation he achieved eminence. He was a very erudite man, a veritable natural philosopher, poet and writer and his sermons were said to be as eloquent as those of Abraham a-Sancta-Clara. He had a prodigious memory and frequently recited at length from works in several languages. He often remarked playfully that if some of the classics were lost he could restore them. His style of writing was much admired. He penned sentences short and terse and full of wit and satire. The humorous remarks he made were always peculiar and characteristic. Just to illustrate, I may mention one or two instances.
Among the help, there was a cross-eyed man called Mane, employed to do work around the farm. He was chopping wood one day. As he swung the axe, my father, who stood nearby and felt very uncomfortable, cautioned him, "For God's sake, Mane, do not strike at what you are looking but at what you intend to hit."
On another occasion he was taking out for a drive, a friend who carelessly permitted his costly fur coat to rub on the carriage wheel. My father reminded him of it saying, "Pull in your coat; you are ruining my tire."

He had the odd habit of talking to himself and would often carry on an animated conversation and indulge in heated argument, changing the tone of his voice. A casual listener might have sworn that several people were in the room.
Although I must trace to my mother's influence whatever inventiveness I possess, the training he gave me must have been helpful. It comprised all sorts of exercises - as,
guessing one another's thoughts, discovering the defects of some form of

expression, repeating long sentences or performing mental calculations. These daily lessons were intended to strengthen memory and reason, and especially to develop the critical sense, and were undoubtedly very beneficial.

My mother descended from one of the oldest families in the country and a line of inventors. Both her father and grandfather originated numerous implements for household, agricultural and other uses. She was a truly great woman,

of rare skill, courage and fortitude, who had braved the storms of life and passed through many a trying experience. When she was sixteen, a virulent pestilence swept the country. Her father was called away to administer the last sacraments to the dying and during his absence she went alone to the assistance of a neighbouring family who were stricken by the dread disease. She bathed, clothed and laid out the bodies, decorating them with flowers according to the custom of the country and when her father returned he found everything ready for a Christian burial.
My mother was an inventor of the first order and would, I believe, have achieved great things had she not been so remote from modern life and its multifold opportunities. She invented and constructed all kinds of tools and devices and wove the finest designs from thread which was spun by her. She even planted seeds, raised the plants and separated the fibres herself. She worked indefatigably, from break of day till late at night, and most of the wearing apparel and furnishings of the home were the product of her hands. When she was past sixty, her fingers were still nimble enough to tie three knots in an eyelash.

There was another and still more important reason for my late awakening. In my boyhood I suffered from a peculiar affliction due to the appearance of images, often accompanied by strong flashes of light, which marred the sight of real objects and interfered with my thoughts and action. They were pictures of things and scenes which i had really seen, never of those imagined. When a word was spoken to me the image of the object it designated would present itself vividly to my vision and sometimes I was quite unable to distinguish weather what I saw was tangible or not. This caused me great discomfort and anxiety. None of the students of psychology or physiology whom i have consulted, could ever explain satisfactorily these phenomenon. They seem to have been unique although I was probably predisposed as I know that my brother experienced a similar trouble. The theory I have formulated is that the images were the result of a reflex action from the brain on the retina under great excitation. They certainly were not hallucinations such as are produced in diseased and anguished minds, for in other respects i was normal and composed. To give an idea of my distress, suppose that I had witnessed a funeral or some such nerve-wracking spectacle. The, inevitably, in the stillness of night, a vivid picture of the scene would thrust itself before my eyes and persist despite all my efforts to banish it. If my explanation is correct, it should be possible to project on a screen the image of any object one conceives and make it visible. Such an advance would revolutionise all human relations. I am convinced that this wonder can and will be accomplished in time to come. I may add that I have devoted much thought to the solution of the problem.

I have managed to reflect such a picture, which i have seen in my mind, to the mind of another person, in another room. To free myself of these tormenting appearances, I tried to concentrate my mind on something else I had seen, and in this way I would often obtain temporary relief; but in order to get it I had to conjure continuously new images. It was not long before I found that I had exhausted all of those at my command; my 'reel' had run out as it were, because I had seen little of

the world — only objects in my home and the immediate surroundings. As I performed these mental operations for the second or third time, in order to chase the appearances from my vision, the remedy gradually lost all its force. Then I instinctively commenced to make excursions beyond the limits of the small world of which I had knowledge, and I saw new scenes. These were at first very blurred and indistinct, and would flit away when I tried to concentrate my attention upon them. They gained in strength

and distinctness and finally assumed the concreteness of real things. I soon discovered that my best comfort was attained if I simply went on in my vision further and further, getting new impressions all the time, and so I began to travel; of course, in my mind. Every night, (and sometimes during the day), when alone, I would start on my journeys — see new places, cities and countries; live there, meet people and make friendships and acquaintances and, however unbelievable, it is a fact that they were just as dear to me as those in actual life, and not a bit less intense in their manifestations.

This I did constantly until I was about seventeen, when my thoughts turned seriously to invention. Then I observed to my delight that i could visualise with the greatest facility. I needed no models, drawings or experiments. I could picture them all as real in my mind. Thus I have been led unconsciously to evolve what I consider a new method of materialising inventive concepts and ideas, which is radially opposite to the purely experimental and is in my opinion ever so much more expeditious and efficient.

The moment one constructs a device to carry into practice a crude idea, he finds himself unavoidably engrossed with the details of the apparatus. As he goes on improving and reconstructing, his force of concentration diminishes and he loses sight of the great underlying principle. Results may be obtained, but always at the sacrifice of quality. My method is different. I do not rush into actual work. When I get an idea, I start at once building it up in my imagination. I change the construction, make improvements and operate the device in my mind. It is absolutely immaterial to me whether I run my turbine in thought or test it in my shop. I even note if it is out of balance. There is no difference whatever; the results are the same. In this way I am able to rapidly develop and perfect a conception without touching anything. When I have gone so far as to embody in the invention every possible improvement I can think of and see no fault anywhere, I put into concrete form this final product of my brain. Invariably my device works as I conceived that it should, and the experiment comes out exactly as I planned it. In twenty years there has not been a single exception. Why should it be otherwise? Engineering, electrical and mechanical, is positive in results. There is scarcely a subject that cannot be examined beforehand, from the available theoretical and practical data. The carrying out into practice of a crude idea as is being generally done, is, I hold, nothing but a waste of energy, money, and time.

My early affliction had however, another compensation. The incessant mental exertion developed my powers of observation and enabled me to discover a truth of great importance. I had noted that the appearance of images was always preceded by actual vision of scenes under peculiar and generally very exceptional conditions, and I was impelled on each occasion to locate the original impulse. After a while this effort grew to be almost automatic and I gained great facility in connecting cause and effect. Soon I became aware, to my surprise, that every thought I conceived was suggested by an external impression. Not only this but all my actions

were prompted in a similar way. In the course of time it became perfectly evident to me that I was merely an automation endowed with power OF MOVEMENT

RESPONDING TO THE STIMULI OF THE SENSE ORGANS AND THINKING

AND ACTING ACCORDINGLY. The practical result of this was the art of

teleautomatics which has been so far carried out only in an imperfect manner. Its latent possibilities will, however be eventually shown. I have been years planning self-controlled automata and believe that mechanisms can be produced which will act as if possessed of reason, to a limited degree, and will create a revolution in many commercial and industrial departments. I was about twelve years of age when I first succeeded in banishing an image from my vision by wilful effort, but I never had any control over the flashes of light to which

I have referred. They were, perhaps, my strangest and [most] inexplicable experience. They usually occurred when I found myself in a dangerous or distressing situations or when i was greatly exhilarated. In some instances i have seen all the air around me filled with tongues of living flame. Their intensity, instead of diminishing, increased with time and seemingly attained a maximum when I was about twenty-five years old.

While in Paris in 1883, a prominent French manufacturer sent me an invitation to a shooting expedition which I accepted. I had been long confined to the factory and the fresh air had a wonderfully invigorating effect on me. On my return to the city that night, I felt a positive sensation that my brain had caught fire. I was a light as though a small sun was located in it and I passed the whole night applying cold compressions to my tortured head. Finally the flashes diminished in frequency and force but it took more than three weeks before they wholly subsided. When a second invitation was extended to me, my answer was an emphatic NO!

These luminous phenomena still manifest themselves from time to time, as when a new idea opening up possibilities strikes me, but they are no longer exciting, being of relatively small intensity. When I close my eyes I invariably observe first, a background of very dark and uniform blue, not unlike the sky on a clear but starless night. In a few seconds this field becomes animated with innumerable scintillating flakes of green, arranged in several layers and advancing towards me. Then there appears, to the right, a beautiful pattern of two systems of parallel and closely spaced lines, at right angles to one another, in all sorts of colours with yellow, green, and gold predominating. Immediately thereafter, the lines grow brighter and the whole is thickly sprinkled with dots of twinkling light. This picture moves slowly across the field of vision and in about ten seconds vanishes on the left, leaving behind a ground of rather unpleasant and inert grey until the second phase is reached. Every time, before falling asleep, images of persons or objects flit before my view. When I see them I know I am about to lose consciousness. If they are absent and refuse to come, it means a sleepless night. To what an extent imagination played in my early life, I may illustrate by another odd experience.

Like most children, I was fond of jumping and developed an intense desire to support myself in the air. Occasionally a strong wind richly charged with oxygen blew from the mountains, rendering my body light as cork and then I would leap and float in space for a long time. It was a delightful sensation and my disappointment was keen when later I undeceived myself. During that period I

contracted many strange likes, dislikes and habits, some of which I can trace to external impressions while others are unaccountable. I had a violent aversion against the earing of women, but other ornaments, as bracelets, pleased me more or less according to design. The sight of a pearl would almost give me a fit, but I was fascinated with the glitter of crystals or objects with sharp edges and plane surfaces. I would not touch the hair of other people except, perhaps at the point of a revolver. I would get a fever by looking at a peach and if a piece of camphor was anywhere in the house it caused me the keenest discomfort. Even now I am not insensible to some of these upsetting impulses. When I drop little squares of paper in a dish filled with liquid, I always sense a peculiar and awful taste in my mouth. I counted the steps in my walks and calculated the cubical contents of soup plates, coffee cups and pieces of food, otherwise my meal was unenjoyable. All repeated acts or operations I performed had to be divisible by three and if I missed I felt impelled to do it all over again, even if it took hours. Up to the age of eight years, my

character was weak and vacillating. I had neither courage or strength to form a firm resolve. My feelings came in waves and surges and variated unceasingly between extremes. My wishes were of consuming force and like the heads of the hydra, they multiplied. I was oppressed by thoughts of pain in life and death and religious fear. I was swayed by superstitious belief and lived in constant dread of the spirit of evil, of ghosts and ogres and other unholy monsters of the dark. Then all at once, there came a tremendous change which altered the course of my whole existence.
Of all things I liked books best. My father had a large library and whenever I could manage I tried to satisfy my passion for reading. He did not permit it and would fly in a rage when he caught me in the act. He hid the candles when he found that I was reading in secret. He did not want me to spoil my eyes. But I obtained tallow, made the wicking and cast the sticks into tin forms, and every night I would bush the keyhole and the cracks and read, often till dawn, when all others slept and my mother started on her arduous daily task.

On one occasion I came across a novel entitled 'Aoafi,' (the son of Aba), a Serbian translation of a well known Hungarian writer, Josika. This work somehow awakened my dormant powers of will and I began to practice self-control. At first my resolutions faded like snow in April, but in a little while I conquered my weakness and felt a pleasure I never knew before — that of doing as I willed.
In the course of time this vigorous mental exercise became second to nature. At the outset my wishes had to be subdued but gradually desire and will grew to be identical. After years of such discipline I gained so complete a mastery over myself that I toyed with passions which have meant destruction to some of the strongest men. At a certain age I contracted a mania for gambling which greatly worried my parents. To sit down to a game of cards was for me the quintessence of pleasure. My father led an exemplary life and could not excuse the senseless waste of my time and money in which I indulged. I had a strong resolve, but my philosophy was bad. I would say to him, 'I can stop whenever I please, but it it worth while to give up that which I would purchase with the joys of paradise?' On frequent occasions he gave vent to his anger and contempt, but my mother was different. She understood the character of men and knew that one's salvation could only be brought about through his own efforts. One afternoon, I remember, when I had lost all my money and was craving for a game, she came to me with a roll of bills and said, 'Go and enjoy yourself. The sooner you lose all we possess, the better it will be. I know that you will get over it.' She was right. I conquered my passion then and there and only regretted that it had not been a hundred times as strong. I not only vanquished but tore it from my heart so as not to leave even a trace of desire.

Ever since that time I have been as indifferent to any form of gambling as to picking teeth. During another period I smoked excessively, threatening to ruin my health. Then my will asserted itself and I not only stopped but destroyed all inclination. Long ago I suffered from heart trouble until I discovered that it was due to the innocent cup of coffee I consumed every morning. I discontinued at once, though I confess it was not an easy task. In this way I checked and bridled other habits and passions, and have not only preserved my life but derived an immense amount of satisfaction from what most men would consider privation and sacrifice.
After finishing the studies at the Polytechnic Institute and University, I had a complete nervous breakdown and while the malady lasted I observed many phenomena, strange and unbelievable...

Chapter 2

I shall dwell briefly on these extraordinary experiences, on account of their possible interest to students of psychology and physiology and also because this period of agony was of the greatest consequence on my mental development and subsequent labours. But it is indispensable to first relate the circumstances and conditions which preceded them and in which might be found their partial explanation.
From childhood I was compelled to concentrate attention upon myself. This caused me much suffering, but to my present view, it was a blessing in disguise for it has taught me to appreciate the inestimable value of introspection in the preservation of life, as well as a means of achievement. The pressure of occupation and the incessant stream of impressions pouring into our consciousness through all the gateways of knowledge make modern existence hazardous in many ways. Most persons are so absorbed in the contemplation of the outside world that they are wholly oblivious to what is passing on within themselves. The premature death of millions is primarily traceable to this cause. Even among those who exercise care, it is a common mistake to avoid imaginary, and ignore the real dangers. And what is true of an individual also applies, more or less, to a people as a whole.
Abstinence was not always to my liking, but I find ample reward in the agreeable experiences I am now making. Just in the hope of converting some to my precepts and convictions I will recall one or two.

A short time ago I was returning to my hotel. It was a bitter cold night, the ground slippery, and no taxi to be had. Half a block behind me followed another man, evidently as anxious as myself to get under cover. Suddenly my legs went up in the air. At the same instant there was a flash in my brain. The nerves responded, the muscles contracted. I swung 180 degrees and landed on my hands. I resumed my walk as though nothing had happened when the stranger caught up with me. "How old are you?" he asked, surveying me critically.

"Oh, about fifty-nine," I replied, "What of it?"

"Well," said he, "I have seen a cat do this but never a man." About a month ago I wanted to order new eye glasses and went to an oculist who put me through the usual tests. He looked at me incredulously as I read off with ease the smallest print at considerable distance. But when I told him I was past sixty he gasped in astonishment. Friends of mine often remark that my suits fit me like gloves but they do not know that all my clothing is made to measurements which were taken nearly fifteen years ago and never changed. During this same period my weight has not varied one pound. In this connection I may tell a funny story.

One evening, in the winter of 1885, Mr. Edison, Edward H. Johnson, the President of the Edison Illuminating Company, Mr. Batchellor, Manager of the works, and myself, entered a little place opposite 65 Firth Avenue, where the offices of the company were located. Someone suggested guessing weights and I was induced to step on a scale. Edison felt me all over and said: "Tesla weighs 152 lbs. to an ounce," and he guessed it exactly. Stripped I weighed 142 pounds, and that is still my weight. I whispered to Mr. Johnson; "How is it possible that Edison could guess my weight so closely?"

"Well," he said, lowering his voice. "I will tell you confidentially, but you must not say anything. He was employed for a long time in a Chicago slaughter-house where he weighed thousands of hogs every day. That's why."

My friend, the Hon. Chauncey M. Dupew, tells of an Englishman on whom he sprung one of his original anecdotes and who listened with a puzzled expression, but a year later, laughed out loud. I will frankly confess it took me longer than that to appreciate Johnson's joke. Now, my well-being is simply the result of a careful and measured mode of living and perhaps the most astonishing thing is that three times in my youth I was rendered by illness a hopeless physical wreck and given up by physicians. MORE than this, through ignorance and lightheartedness, I got into all sorts of difficulties, dangers and scrapes from which I extricated myself as by enchantment. I was almost drowned, entombed, lost and frozen. I had hair-breadth escapes from mad dogs, hogs, and other wild animals. I passed through dreadful diseases and met with all kinds of odd mishaps and that I am whole and hearty today seems like a miracle. But as I recall these incidents to my mind I feel convinced that my preservation was not altogether accidental, but was indeed the work of divine power. An inventor's endeavour is essentially life saving. Whether he harnesses forces, improves devices, or provides new comforts and conveniences, he is adding to the safety of our existence. He is also better qualified than the average individual to protect himself in peril, for he is observant and resourceful. If I had no other evidence that I was, in a measure, possessed of such qualities, I would find it in these personal experiences. The reader will be able to judge for himself if I mention one or two instances.

On one occasion, when about fourteen years old, I wanted to scare some friends who were bathing with me. My plan was to dive under a long floating structure and slip out quietly at the other end. Swimming and diving came to me as naturally as to a duck and I was confident that I could perform the feat. Accordingly I plunged into the water and, when out of view, turned around and proceeded rapidly towards the opposite side. Thinking that I was safely beyond the structure, I rose to the surface but to my dismay struck a beam. Of course, I quickly dived and forged ahead with rapid strokes until my breath was beginning to give out. Rising for the second time, my head came again in contact with a beam. Now I was becoming desperate. However, summoning all my energy, I made a third frantic attempt but the result was the same. The torture of suppressed breathing was getting unendurable, my brain was reeling and I felt myself sinking. At that moment, when my situation seemed absolutely hopeless, I experienced one of those flashes of light and the structure above me appeared before my vision. I either discerned or guessed that there was a little space between the surface of the water and the boards resting on the beams and, with consciousness nearly gone, I floated up, pressed my mouth close to the planks and managed to inhale a little air, unfortunately mingled with a spray of water which nearly choked me. Several times I repeated this procedure as in a dream until my heart, which was racing at a terrible rate, quieted down, and I

gained composure. After that I made a number of unsuccessful dives, having completely lost the sense of direction, but finally succeeded in getting out of the trap when my friends had already given me up and were fishing for my body. That bathing season was spoiled for me through recklessness but I soon forgot the lesson and only two years later I fell into a worse predicament.

There was a large flour mill with a dam across the river near the city where I was studying at the time. As a rule the height of the water was only two or three inches above the dam and to swim to it was a sport not very dangerous in which I often indulged. One day I went alone to the river to enjoy

myself as usual. When I was a short distance from the masonry, however, I was horrified to observe that the water had risen and was carrying me along swiftly. I tried to get away but it was too late. Luckily, though, I saved myself from being swept over by taking hold of the wall with both hands. The pressure against my chest was great and I was barely able to keep my head above the surface. Not a soul was in sight and my voice was lost in the roar of the fall. Slowly and gradually I became exhausted and unable to withstand the strain longer. Just as I was about to let go, to be dashed against the rocks below, I saw in a flash of light a familiar diagram illustrating the hydraulic principle that the pressure of a fluid in motion is proportionate to the area exposed and automatically I turned on my left side. As if by magic, the pressure was reduced and I found it comparatively easy in that position to resist the force of the stream. But the danger still confronted me. I knew that sooner or later I would be carried down, as it was not possible for any help to reach me in time, even if I had attracted attention. I am ambidextrous now, but then I was left-handed and had comparatively little strength in my right arm. For this reason I did not dare to turn on the other side to rest and nothing remained but to slowly push my body along the dam. I had to get away from the mill towards which my face was turned, as the current there was much swifter and deeper. It was a long and painful ordeal and I came near to failing at its very end, for I was confronted with a depression in the masonry. I managed to get over with the last ounce of my strength and fell in a swoon when I reached the bank, where I was found. I had torn virtually all the skin from my left side and it took several weeks before the fever had subsided and I was well. These are only two of many instanced, but they may be sufficient to show that had it not been for the inventor's instinct, I would not have lived to tell the tale.

Interested people have often asked me how and when I began to invent. This I can only answer from my present recollection in the light of which, the first attempt I recall was rather ambitious for it involved the invention of an apparatus and a method. In the former I was anticipated, but the later was original. It happened in this way. One of my playmates had come into the possession of a hook and fishing tackle which created quite an excitement in the village, and the next morning all started out to catch frogs. I was left alone and deserted owing to a quarrel with this boy. I had never seen a real hook and pictured it as something wonderful, endowed with peculiar qualities, and was despairing not to be one of the party. Urged by necessity, I somehow got hold of a piece of soft iron wire, hammered the end to a sharp point between two stones, bent it into shape, and fastened it to a strong string. I then cut a rod, gathered some bait, and went down to the brook where there were frogs in abundance. But I could not catch any and was almost discouraged when it occurred to me dangle the empty hook in front of a frog sitting on a stump. At first he collapsed but by and by his eyes bulged out and became bloodshot, he swelled to twice his normal size and made a vicious snap at the hook. Immediately I pulled

him up. I tried the same thing again and again and the method proved infallible. When my comrades, who in spite of their fine outfit had caught nothing, came to me, they were green with envy. For a long time I kept my secret and enjoyed the monopoly but finally yielded to the spirit of Christmas. Every boy could then do the same and the following summer brought disaster to the frogs.

In my next attempt, I seem to have acted under the first instinctive impulse which later dominated me, — to harness the energies of nature to the service of man. I did this through the medium of May bugs, or June bugs as they are called in America, which were a veritable pest in that country and sometimes broke the branches of trees by the sheer weight of their bodies. The

bushes were black with them. I would attach as many as four of them to a cross-piece,
rotably arranged on a thin spindle, and transmit the motion of the same to a large disc and so derive considerable 'power.' These creatures were remarkably efficient, for once they were started, they had no sense to stop and continued whirling for hours and hours and the hotter it was, the harder they worked. All went well until a strange boy came to the place. He was the son of a retired officer in the Austrian army. That urchin ate May-bugs alive and enjoyed them as though they were the finest blue-point oysters. That disgusting sight terminated my endeavours in this promising field and I have never since been able to touch a May-bug or any other insect for that matter.

After that, I believe, I undertook to take apart and assemble the clocks of my grandfather. In the former operation I was always successful, but often failed in the latter. So it came that he brought my work to a sudden halt in a manner not too delicate and it took thirty years before I tackled another clockwork again.
Shortly thereafter, I went into the manufacture of a kind of pop-gun which comprised a hollow tube, a piston, and two plugs of hemp. When firing the gun, the piston was pressed against the stomach and the tube was pushed back quickly with both hands. the air between the plugs was compressed and raised to a high temperature and one of them was expelled with a loud report. The art consisted in selecting a tube of the proper taper from the hollow stalks which were found in our garden. I did very well with that gun, but my activities interfered with the window panes in our house and met with painful discouragement.

If I remember rightly, I then took to carving swords from pieces of furniture which I could conveniently obtain. At that time I was under the sway of the Serbian national poetry and full of admiration for the feats of the heroes. I used to spend hours in mowing down my enemies in the form of corn-stalks which ruined the crops and netted me several spankings from my mother. Moreover, these were not of the formal kind but the genuine article.

I had all this and more behind me before I was six years old and had passed through one year of elementary school in the village of Smiljan where my family lived. At this juncture we moved to the little city of Gospic nearby. This change of residence was like a calamity to me. It almost broke my heart to part from our pigeons, chickens and sheep, and our magnificent flock of geese which used to rise to the clouds in the morning and return from the feeding grounds at sundown in battle formation, so perfect that it would have put a squadron of the best aviators of the present day to shame. In our new house I was but a prisoner, watching the strange people I saw through my window blinds. My bashfulness was such that I would

rather have faced a roaring lion than one of the city dudes who strolled about. But my hardest trial came on Sunday when I had to dress up and attend the service. There I met with an accident, the mere thought of which made my blood curdle like sour milk for years afterwards. It was my second adventure in a church. Not long before, I was entombed for a night in an old chapel on an inaccessible mountain which was visited only once a year. It was an awful experience, but this one was worse.

There was a wealthy lady in town, a good but pompous woman, who used to come to the church gorgeously painted up and attired with an enormous train and attendants. One Sunday I had just finished ringing the bell in the belfry and rushed downstairs, when this grand dame was sweeping out and I jumped on her train. It tore off with a ripping noise which sounded like a salvo of musketry

fired by raw recruits. My father was livid with rage. He gave me a gentle slap on the cheek, the only corporal punishment he ever administered to me, but I almost feel it now. The embarrassment and confusion that followed are indescribably. I was practically ostracised until something else happened which redeemed me in the estimation of the community.

An enterprising young merchant had organised a fire department. A new fire engine was purchased, uniforms provided and the men drilled for service and parade. The engine was beautifully painted red and black. One afternoon, the official trial was prepared for and the machine was transported to the river. The entire population turned out to witness the great spectacle. When all the speeches and ceremonies were concluded, the command was given to pump, but not a drop of water came from the nozzle. The professors and experts tried in vain to locate the trouble. The fizzle was complete when I arrived at the scene. My knowledge of of the mechanism was nil and I knew next to nothing of air pressure, but instinctively I felt for the suction hose in the water and found that it had collapsed. When I waded in the river and opened it up, the water rushed forth and not a few Sunday clothes were spoiled. Archimedes running naked through the streets of Syracuse and shouting Eureka at the top of his voice did not make a greater impression than myself. I was carried on the shoulders and was hero of the day.

Upon settling in the city I began a four years course in the so-called Normal School preparatory to my studies at the College or Real-Gymnasium. During this period my boyish efforts and exploits as well as troubles, continued.

Among other things, I attained the unique distinction of champion crow catcher in the country. My method of procedure was extremely simple. I would go into the forest, hide in the bushes, and imitate the call of the birds. Usually I would get several answers and in a short while a crow would flutter down into the shrubbery near me. After that, all I needed to do was to throw a piece of cardboard to detract its attention, jump up and grab it before it could extricate itself from the undergrowth. In this way I would capture as many as I desired. But on one occasion something occurred which made me respect them. I had caught a fine pair of birds and was returning home with a friend. When we left the forest, thousands of crows had gathered making a frightful racket. In a few minutes they rose in pursuit and soon enveloped us. The fun lasted until all of a sudden I received a blow on the back of my head which knocked me down. Then they attacked me viciously. I was compelled to release the two birds and was glad to join my friend who had taken refuge in a cave.

In the school room there were a few mechanical models which interested me and turned my attention to water turbines. I constructed many of these and found great pleasure in operating them. How extraordinary was my life an incident may illustrate. My uncle had no use for this kind of pastime and more than once rebuked me. I was fascinated by a description of Niagara Falls I had perused, and pictured in my imagination a big wheel run by the falls. I told my uncle that I would go to America and carry out this scheme. Thirty years later I was my ideas carried out at Niagara and marvelled at the unfathomable mystery of the mind.

I made all kinds of other contrivances and contraptions but among those, the arbalests I produced were the best. My arrows, when short, disappeared from sight and at close range traversed a plank of pine one inch thick. Through the continuous tightening of the bows I developed a skin on my stomach much like that of a crocodile and I am often wondering whether it is due to this exercise

that I am able even now to digest cobble-stones! Nor can I pass in silence my performances with the sling which would have enabled me to give a stunning exhibit at the Hippodrome. And now I will tell of one of my feats with this unique implement of war which will strain to the utmost the credulity of the reader.
I was practising while walking with my uncle along the river. The sun was setting, the trout were playful and from time to time one would shoot up into the air, its glistening body sharply defined against a projecting rock beyond. Of course any boy might have hit a fish under these propitious conditions but I undertook a much more difficult task and I foretold to my uncle, to the minutest detail, what I intended doing. I was to hurl a stone to meet the fish, press its body against the rock, and cut it in two. It was no sooner said than done. My uncle looked at me almost scared out of his wits and exclaimed "Vade retra Satanae!" and it was a few days before he spoke to me again. Other records, however great, will be eclipsed but I feel that I could peacefully rest on my laurels for a thousand years.

Chapter 3

How Tesla Conceived

The Rotary Magnetic Field

At the age of ten I entered the Real gymnasium which was a new and fairly well equipped institution. In the department of physics were various models of classical scientific apparatus, electrical and mechanical. The demonstrations and experiments performed from time to time by the instructors fascinated me and were undoubtedly a powerful incentive to invention. I was also passionately fond of mathematical studies and often won the professor's praise for rapid calculation. This was due to my acquired facility of visualising the figures and performing the operation, not in the usual intuitive manner, but as in actual life. Up to a certain degree of complexity it was absolutely the same to me whether I wrote the symbols on the board or conjured them before my mental vision. But freehand drawing, to which many hours of the course were devoted, was an annoyance I could not endure. This was rather remarkable as most of the members of the family excelled in it. Perhaps my aversion was simply due to the predilection I found in undisturbed thought. Had it not been for a few exceptionally stupid boys, who could not do anything at all, my record would have been the worst.

It was a serious handicap as under the then existing educational regime drawing being obligatory, this deficiency threatened to spoil my whole career and my father had considerable trouble in rail-roading me from one class to another.
In the second year at that institution I became obsessed with the idea of producing continuous motion through steady air pressure. The pump incident, of which I have been told, had set afire my youthful imagination and impressed me with the boundless possibilities of a vacuum. I grew frantic in my desire to harness this inexhaustible energy but for a long time I was groping in the dark. Finally, however, my endeavours crystallised in an invention which was to enable me to achieve what no other mortal ever attempted. Imagine a cylinder freely rotatable on two bearings and partly surrounded by a rectangular trough which fits it perfectly. The open side of the trough is enclosed by a partition so that the cylindrical segment within the enclosure divides the latter into two compartments entirely separated from each other by air-tight sliding joints. One of these compartments being sealed and once for all exhausted, the other remaining open, a perpetual rotation of the cylinder would result. At least, so I thought.

A wooden model was constructed and fitted with infinite care and when I applied the pump on one side and actual observed that there was a tendency to turning, I was delirious with joy. Mechanical flight was the one thing I wanted to accomplish although still under the discouraging recollection of a bad fall I sustained by jumping with an umbrella from the top of a building. Every day I used to transport myself through the air to distant regions but could not understand just how I managed to do it. Now I had something concrete, a flying machine with nothing more than a rotating shaft, flapping wings, and; - a vacuum of unlimited power! From that time on I made my daily aerial excursions in a vehicle of comfort and luxury as might have befitted King Solomon. It took years before I understood that the atmospheric pressure acted at right angles to the surface of the cylinder and that the slight rotary effort I observed was due to a leak! Though this knowledge came gradually it gave me a painful shock.

I had hardly completed my course at the Real Gymnasium when I was prostrated with a dangerous illness or rather, a score of them, and my condition became so desperate that I was given up by physicians. During this period I was permitted to read constantly, obtaining books from the Public Library which had been neglected and entrusted to me for classification of the works and preparation of catalogues. One day I was handed a few volumes of new literature unlike anything I had ever read before and so captivating as to make me utterly forget me hopeless state. They were the earlier works of Mark Twain and to them might have been due the miraculous recovery which followed. Twenty-five years later, when I met Mr. Clements and we formed a friendship between us, I told him of the experience and was amazed to see that great man of laughter burst into tears...

My studies were continued at the higher Real Gymnasium in Carlstadt, Croatia, where one of my aunts resided. She was a distinguished lady, the wife of a Colonel who was an old war-horse having participated in many battles, I can never forget the three years I passed at their home. No fortress in time of war was under a more rigid discipline. I was fed like a canary bird. All the meals were of the highest quality and deliciously prepared, but short in quantity by a thousand percent. The slices of ham cut by my aunt were like tissue paper. When the Colonel would put something substantial on my plate she would snatch it away and say excitedly to him; "Be careful. Niko is very delicate."

I had a voracious appetite and suffered like Tantalus.

But I lived in an atmosphere of refinement and artistic taste quite unusual for those times and conditions. The land was low and marshy and malaria fever never left me while there despite the enormous amounts of qunine I consumed. Occasionally the river would rise and drive an army of rats into the buildings, devouring everything, even to the bundles of fierce paprika. These pests were to me a welcome diversion. I thinned their ranks by all sorts of means, which won me the unenviable distinction of rat-catcher in the community. At last, however, my course was completed, the misery ended, and I obtained the certificate of maturity which brought me to the cross-roads.

During all those years my parents never wavered in their resolve to make me embrace the clergy, the mere thought of which filled me with dread. I had become intensely interested in electricity under the stimulating influence of my Professor of Physics, who was an ingenious man and often demonstrated the principles by apparatus of his own invention. Among these I recall a device in the shape of a freely rotatable bulb, with tinfoil coating, which was made to spin rapidly when connected to a static machine. It is impossible for me to convey an adequate idea of the intensity of feeling I experienced in witnessing his exhibitions of these mysterious phenomena. Every impression produced a thousand echoes in my mind. I wanted to know more of this wonderful force; I longed for experiment and investigation and resigned myself to the inevitable with aching heart. Just as I was making ready for the long journey home I received word that my father wished me to go on a shooting expedition. It was a strange request as he had been always strenuously opposed to this kind of sport. But a few days later I learned that the cholera was raging in that district and, taking advantage of an opportunity, I returned to Gospic in disregard to my parent's wishes. It is incredible how absolutely ignorant people were as to the causes of this scourge which visited the country in intervals of fifteen to twenty years. They thought that the deadly agents were transmitted through the air and filled it with pungent odours and smoke. In the meantime they drank infested water and died in heaps. I contracted the dreadful

disease on the very day of my arrival and although surviving the crisis, I was confined to bed for nine months with scarcely any ability to move. My energy was completely exhausted and for the second time I found myself at Death's door. In one of the sinking spells which was thought to be the last, my father rushed into the room. I still see his pallid face as he tried to cheer me in tones belying his assurance. "Perhaps," I said, "I may get well if you will let me study engineering." "You will go to the best technical institution in the world," he solemnly replied, and I knew that he meant it. A heavy weight was lifted from my mind but the relief would have come too late had it not been for a marvellous cure brought through a bitter decoction of a peculiar bean. I came to life like Lazarus to the utter amazement of everybody.

My father insisted that I spend a year in healthful physical outdoor exercise to which I reluctantly consented. For most of this term I roamed in the mountains, loaded with a hunter's outfit and a bundle of books, and this contact with nature made me stronger in body as well as in mind. I thought and planned, and conceived many ideas almost as a rule delusive. The vision was clear enough but the knowledge of principles was very limited.

In one of my invention I proposed to convey letters and packages across the seas,

through a submarine tube, in spherical containers of sufficient strength to resist the hydraulic pressure. The pumping plant, intended to force the water through the tube, was accurately figured and designed and all other particulars carefully worked out. Only one trifling detail, of no consequence, was lightly dismissed. I assumed an arbitrary velocity of the water and, what is more, took pleasure in making it high, thus arriving at a stupendous performance supported by faultless calculations. Subsequent reflections, however, on the resistance of pipes to fluid flow induced me to make this invention public property.

Another one of my projects was to construct a ring around the equator which would, of course, float freely and could be arrested in its spinning motion by reactionary forces, thus enabling travel at a rate of about one thousand miles an hour, impracticable by rail. The reader will smile. The plan was difficult of execution, I will admit, but not nearly so bad as that of a well known New York professor, who wanted to pump the air from the torrid to temperate zones, entirely forgetful of the fact that the Lord had provided a gigantic machine for this purpose.

Still another scheme, far more important and attractive, was to derive power from the rotational energy of terrestrial bodies. I had discovered that objects on the earth's surface owing to the diurnal rotation of the globe, are carried by the same alternately in and against the direction of translatory movement. From this results a great change in momentum which could be utilised in the simplest imaginable manner to furnish motive effort in any habitable region of the world. I cannot find words to describe my disappointment when later I realised that I was in the predicament of Archimedes, who vainly sought for a fixed point in the universe.
At the termination of my vacation I was sent to the Poly-Technic School in Gratz, Styria (Austria), which my father had chosen as one of the oldest and best reputed institutions. That was the moment I had eagerly awaited and I began my studies under good auspices and firmly resolved to succeed. My previous training was above average, due to my father's teaching and opportunities afforded. I had acquired the knowledge of a number of languages and waded through the books of several libraries, picking up information more or

less useful. Then again, for the first time, I could choose my subjects as I liked, and free-hand drawing was to bother me no more.

I had made up my mind to give my parents a surprise, and during the whole first year I regularly started my work at three o'clock in the morning and continued until eleven at night, no Sundays or holidays excepted. As most of my fellow-students took things easily, naturally I eclipsed all records. In the course of the year I passed through nine exams and the professors thought I deserved more than the highest qualifications. Armed with their flattering certificated, I went home for a short rest, expecting triumph, and was mortified when my father made light of these hard-won honours.

That almost killed my ambition; but later, after he had died, I was pained to find a package of letters which the professors had written to him to the effect that unless he took me away from the Institution I would be killed through overwork. Thereafter I devoted myself chiefly to physics, mechanics and mathematical studies, spending the hours of leisure in the libraries.

I had a veritable mania for finishing whatever I began, which often got me into difficulties. On one occasion I started to read the works of Voltaire, when I learned,

to my dismay that there were close to one hundred large volumes in small print which that monster had written while drinking seventy-two cups of black coffee per diem. It had to be done, but when I laid aside that last book I was very glad, and said, "Never more!"

My first year's showing had won me the appreciation and friendship of several professors. Among these, Professor Rogner, who was teaching arithmetical subjects and geometry; Professor Poeschl, who held the chair of theoretical and experimental physics, and Dr. Alle, who taught integral calculus and specialised in differential equations. This scientist was the most brilliant lecturer to whom I ever listened. He took a special interest in my progress and would frequently remain for an hour or two in the lecture room, giving me problems to solve, in which I delighted. To him I explained a flying machine I had conceived, not an illusory invention, but one based on sound, scientific principles, which has become realisable through my turbine and will soon be given to the world. Both Professors Rogner and Poeschl were curious men. The former had peculiar ways of expressing himself and whenever he did so, there was a riot, followed by a long embarrassing pause. Professor Poeschl was a methodical and thoroughly grounded German. He had enormous feet, and hands like the paws of a bear, but all of his experiments were skilfully performed with clock-like precision and without a miss. It was in the second year of my studies that we received a Gramoe Dyname from Paris, having the horseshoe form of a laminated field magnet, and a wire wound armature with a commutator. It was connected up and various effects of the currents were shown. While Professor Poeschl was making demonstrations, running the machine was a motor, the brushes gave trouble, sparking badly, and I observed that it might be possible to operate a motor without these appliances. But he declared that it could not be done and did me the honour of delivering a lecture on the subject, at the conclusion he remarked, "Mr. Tesla may accomplish great things, but he certainly will never do this. It would be equivalent to converting a steadily pulling force, like that of gravity into a rotary effort. It is a perpetual motion scheme, an impossible idea." But instinct is something which transcends knowledge. We have, undoubtedly, certain finer fibres that enable us to perceive truths when logical deduction, or any other wilful effort of the brain, is futile.

For a time I wavered, impressed by the professor's authority, but soon

became convinced I was right and undertook the task with all the fire and boundless confidence of my youth. I started by first picturing in my mind a direct-current machine, running it and following the changing flow of the currents in the armature. Then I would imagine an alternator and investigate the progresses taking place in a similar manner. Next I would visualise systems comprising motors and generators and operate them in various ways.

The images I saw were to me perfectly real and tangible. All my remaining term in Gratz was passed in intense but fruitless efforts of this kind, and I almost came to the conclusion that the problem was insolvable.

In 1880 I went to Prague, Bohemia, carrying out my father's wish to complete my education at the University there. It was in that city that I made a decided advance, which consisted in detaching the commutator from the machine and studying the phenomena in this new aspect, but still without result. In the year following there was a sudden change in my views of life.

I realised that my parents had been making too great sacrifices on my account and resolved to relieve them of the burden. The wave of the American telephone had just reached the European continent and the system was to be installed in Budapest, Hungary. It appeared an ideal opportunity, all the more as a friend of our family was at the head of the enterprise.

It was here that I suffered the complete breakdown of the nerves to which I have referred. What I experienced during the period of the illness surpasses all belief. My sight and hearing were always extraordinary. I could clearly discern objects in the distance when others saw no trace of them. Several times in my boyhood I saved the houses of our neighbours from fire by hearing the faint crackling sounds which did not disturb their sleep, and calling for help. In 1899, when I was past forty and carrying on my experiments in Colorado, I could hear very distinctly thunderclaps at a distance of 550 miles. My ear was thus over thirteen times more sensitive, yet at that time I was, so to speak, stone deaf in comparison with the acuteness of my hearing while under the nervous strain.

In Budapest I could hear the ticking of a watch with three rooms between me and the time-piece. A fly alighting on a table in the room would cause a dull thud in my ear. A carriage passing at a distance of a few miles fairly shook my whole body. The whistle of a locomotive twenty or thirty miles away made the bench or chair on which I sat, vibrate so strongly that the pain was unbearable. The ground under my feet trembled continuously. I had to support my bed on rubber cushions to get any rest at all. The roaring noises from near and far often produced the effect of spoken words which would have frightened me had I not been able to resolve them into their accumulated components. The sun rays, when periodically intercepted, would cause blows of such force on my brain that they would stun me. I had to summon all my will power to pass under a bridge or other structure, as I experienced the crushing pressure on the skull. In the dark I had the sense of a bat, and could detect the presence of an object at a distance of twelve feet by a peculiar creepy sensation on the forehead. My pulse varied from a few to two hundred and sixty beats and all the tissues of my body with twitchings and tremors, which was perhaps hardest to bear. A renowned physician who have me daily large doses of Bromide of Potassium, pronounced my malady unique and incurable.

It is my eternal regret that I was not under the observation of experts in physiology and psychology at that time. I clung desperately to life, but

never expected to recover. Can anyone believe that so hopeless a physical wreck could ever be transformed into a man of astonishing strength and tenacity; able to work thirty-eight years almost without a day's interruption, and find himself still strong and fresh in body and mind? Such is my case. A powerful desire to live and to continue the work and the assistance of a devoted friend, an athlete, accomplished the wonder. My health returned and with it the vigour of mind. In attacking the problem again, I almost regretted that the struggle was soon to end. I had so much energy to spare. When I understood the task, it was not with a resolve such as men often make. With me it was a sacred vow, a question of life and death. I knew that I would perish if I failed. Now I felt that the battle was won. Back in the deep recesses of the brain was the solution, but I could net yet give it outward expression.

One afternoon, which is ever present in my recollection, I was enjoying a walk with my friend in the City Park and reciting poetry. At that age, I knew entire books by

heart, word for word. One of these was Goethe's "Faust." The sun was just setting and reminded me of the glorious passage, "Sie ruckt und weicht, der Tag ist uberlebt, Dort eilt sie hin und fordert neues Leben. Oh, daß kein Flugel mich vom Boden hebt Ihr nach und immer nach zu streben! Ein schöner Traum indessen sie entweicht, Ach, au des Geistes Flügein wird so leicht Kein korperlicher Flugel sich gesellen!" As I uttered these inspiring words the idea came like a flash of lightening and in an instant the truth was revealed. I drew with a stick on the sand, the diagram shown six years later in my address before the American Institute of Electrical Engineers, and my companion understood them perfectly. The images I saw were wonderfully sharp and clear and had the solidity of metal and stone, so much so that I told him, "See my motor here; watch me reverse it." I cannot begin to describe my emotions. Pygmalion seeing his statue come to life could not have been more deeply moved. A thousand secrets of nature which I might have stumbled upon accidentally, I would have given for that one which I had wrested from her against all odds and at the peril of my existence...

Chapter 4

The Discovery of the

Tesla Coil and Transformer

(The Basic Part of Every Radio and T.V.)

For a while I gave myself up entirely to the intense enjoyment of picturing machines and devising new forms. It was a mental state of happiness about as complete as I have ever known in life. Ideas came in an uninterrupted stream and the only difficulty I had was to hold them fast. The pieces of apparatus I conceived were to me absolutely real and tangible in every detail, even to the minutest marks and signs of wear. I delighted in imagining the motors constantly running, for in this way they presented to the mind's eye a fascinating sight. When natural inclination develops into a passionate desire, one advances towards his goal in seven-league boots. In less than two months I evolved virtually all the types of motors and modifications of the system which are now identified with my name, and which are used under many other names all over the world. It was, perhaps, providential that the necessities of existence commanded a temporary halt to this consuming activity of the mind.

I came to Budapest prompted by a premature report concerning the telephone enterprise and, as irony of fate willed it, I had to accept a position as draughtsman in the Central Telegraph Office of the Hungarian Government at a salary which I deem it my privilege not to disclose. Fortunately, I soon won the interest of the Inspector-in-
Chief and was thereafter employed on calculations, designs and estimates in connection with new installations, until the Telephone exchange started, when I took charge of the same. The knowledge and practical experience I gained in the course of this work, was most valuable and the employment gave me ample opportunities for the exercise of my inventive faculties. I made several improvements in the Central Station apparatus and perfected a telephone repeater or amplifier which was never patented or publicly described but would be creditable to me even today. In recognition of my efficient assistance the organiser of the undertaking, Mr. Puskas, upon disposing of his business in Budapest, offered me a position in Paris which I gladly accepted.

I never can forget the deep impression that magic city produced on my mind. For several days after my arrival, I roamed through the streets in utter bewilderment of the new spectacle. The attractions were many and irresistible, but, alas, the income was spent as soon as received. When Mr. Puskas asked me how I was getting along in the new sphere, I described the situation accurately in the statement that "The last twenty-nine days of the month are the toughest." I led a rather strenuous life in what would now be termed "Rooseveltian fashion." Every morning, regardless of the weather, I would go from the Boulevard St. Marcel, where I resided, to a bathing house on the Seine; plunge into the water, loop the circuit twenty-seven times and then walk an hour to reach Ivry, where the Company's factory was located. There I would have a wood-chopper's breakfast at half-past seven o'clock and then eagerly await the lunch hour, in the meanwhile cracking hard nuts for the Manager of the Works, Mr. Charles Batchellor, who was an intimate friend and assistant of Edison. Here I was thrown in contact with a few Americans who fairly fell in love with my because of my proficiency in Billiards! To these men I explained my invention and one of them, Mr. D. Cunningham, foreman of

the Mechanical Department, offered to form a stock company. The proposal seemed to me comical in the extreme. I did not have the faintest conception of what he meant, except that it was an American way of doing things. Nothing came of it, however, and during the next few months I had to travel from one place to another in France and Germany to cure the ills of the power plants.

On my return to Paris, I submitted to one of the administrators of the Company, Mr. Rau, a plan for improving their dynamos and was given an opportunity. My success was complete and the delighted directors accorded me the privilege of developing automatic regulators which were much desired. Shortly after, there was some trouble with the lighting plant which had been installed at the new railroad station in Straßburg, Alsace. The wiring was defective and on the occasion of the opening ceremonies, a large part of a wall was blown out through a short-circiut, right in the presence of old Emperor William I. The German Government refused to take the plant and the French Company was facing a serious loss. On account of my knowledge of the German language and past experience, I was entrusted with the difficult task of straightening out matters and early in 1883, I went to Straßburg on that mission.

Some of the incidents in that city have left an indelible record on my memory. By a curious coincidence, a number of the men who subsequently achieve fame, lived there about that time. In later life I used to say, "There were bacteria of greatness in that old town." Others caught the disease, but I escaped!" The practical work, correspondence, and conferences with officials kept me preoccupied day and night, but as soon as I was able to manage, I undertook the construction of a simple motor in a mechanical shop opposite the rail-road station, having brought with me from Paris some material for that purpose. The consummation of the experiment was, however, delayed until the summer of that year, when I finally had the satisfaction of seeing the rotation effected by alternating currents of different phase, and without sliding contacts or commutator, as I had conceived a year before. It was an exquisite pleasure but not to compare with the delirium of joy following the first revelation. Among my new friends was the former Mayor of the city, Mr. Sauzin, whom I had already, in a measure, acquainted with this and other inventions of mine and whose support I endeavoured to enlist. He was sincerely devoted to me and put my project before several wealthy persons, but to my mortification, found no response. He

wanted to help me in every possible way and the approach of the first of July, 1917, happens to remind me of a form of "assistance" I received from that charming man, which was not financial, but none the less appreciated. In 1870, when the Germans invaded the country, Mr. Sauzin had buried a good sized allotment of St. Estephe of 1801 and he came to the conclusion that he knew no worthier person than myself, to consume that precious beverage. This, I may say, is one of the unforgettable incidents to which I have referred. My friend urged me to return to Paris as soon as possible and seek support there. This I was anxious to do, but my work and negotiations were protracted, owing to all sorts of petty obstacles I encountered, so that at times the situation seemed hopeless. Just to give an idea of German thoroughness and "efficiency," I may mention here a rather funny experience. An incandescent lamp of 16 c.p. was to be placed in a hallway, and upon selected the proper location, I ordered the "monteur" to run the wires. After working for a while, he concluded that the engineer had to be consulted and this was done. The latter made several objections but ultimately agreed that the lamp should be placed two inches from the spot I had assigned, whereupon the work proceeded. Then the engineer became worried and told me that Inspector Averdeck should be notified. That important person was called,

he investigated, debated, and decided that the lamp should be shifted back two inches, which was the placed I had marked! It was not long, however, before Averdeck got cold feet himself and advised me that he had informed Ober-Inspector Hieronimus of the matter and that I should await his decision. It was several days before the Ober-Inspector was able to free himself of other pressing duties, but at last he arrived and a two hour debate followed, when he decided to move the lamp two inches further. My hopes that this was the final act, were shattered when the Ober-Inspector returned and said to me, "Regierungsrath Funke is particular that I would not dare to give an order for placing this lamp without his explicit approval." Accordingly, arrangements for a visit from that great man were made. We started cleaning up and polishing early in the morning, and when Funke came with his retinue he was ceremoniously received. After two hours of deliberation, he suddenly exclaimed, "I must be going!," and pointing to a place on the ceiling, he ordered me to put the lamp there. It was the exact spot which I had originally chosen! So it went day after day with variations, but I was determined to achieve, at whatever cost, and in the end my efforts were rewarded.

By the spring of 1884, all the differences were adjusted, the plant formally accepted, and I returned to Paris with pleasing anticipation. One of the administrators had promised me a liberal compensation in case I succeeded, as well as a fair consideration of the improvements I had made to their dynamos and I hoped to realise a substantial sum. There were three administrators, whom I shall designate as A, B, and C for convenience. When I called on A, he told me that B had the say. This gentleman thought that only C could decide, and the latter was quite sure that A alone had the power to act. After several laps of this circulus viciousus, it dawned upon me that my reward was a castle in Spain.

The utter failure of my attempts to raise capital for development was another disappointment, and when Mr. Bachelor pressed me to go to America with a view of redesigning the Edison machines, I determined to try my fortunes in the Land of Golden Promise. But the chance was nearly missed. I liquefied my modest assets, secured accommodations and found myself at the railroad station as the train was pulling out. At that moment, I discovered that my money and tickets were gone. What to do was the question. Hercules had plenty of time to deliberate, but I had to

decide while running alongside the train with opposite feeling surging in my brain like condenser oscillations. Resolve, helped by dexterity, won out in the nick of time and upon passing through the usual experience, as trivial and unpleasant, I managed to embark for New York with the remnants of my belongings, some poems and articles I had written, and a package of calculations relating to solutions of an unsolvable integral and my flying machine. During the voyage I sat most of the time at the stern of the ship watching for an opportunity to save somebody from a watery grave, without the slightest thought of danger. Later, when I had absorbed some of the practical American sense, I shivered at the recollection and marvelled at my former folly. The meeting with Edison was a memorable event in my life. I was amazed at this wonderful man who, without early advantages and scientific training, had accomplished so much. I had studied a dozen languages, delved in literature and art, and had spent my best years in libraries reading all sorts of stuff that fell into my hands, from Newton's "Principia" to the novels of Paul de Kock, and felt that most of my life had been squandered. But it did not take long before I recognised that it was the best thing I could have done. Within a few weeks I had won Edison's confidence, and it came about in this way.

The S.S. Oregon, the fastest passenger steamer at that time, had both of

its lighting machines disabled and its sailing was delayed. As the super-structure had been built after their installation, it was impossible to remove them from the hold. The predicament was a serious one and Edison was much annoyed. In the evening I took the necessary instruments with me and went aboard the vessel where I stayed for the night. The dynamos were in bad condition, having several short-circuits
and breaks, but with the assistance of the crew, I succeeded in putting them in good shape. At five o'clock in the morning, when passing along Fifth Avenue on my way to the shop, I met Edison with Bachelor and a few others, as they were returning home to retire. "Here is our Parisian running around at night," he said. When I told him that I was coming from the Oregon and had repaired both machines, he looked at me in silence and walked away without another word. But when he had gone some distance I heard him remark, "Bachelor, this is a good man." And from that time on I had full freedom in directing the work. For nearly a year my regular hours were from 10:30 A.M. until 5 o'clock the next morning without a day's exception. Edison said to me, "I have had many hard working assistants, but you take the cake." During this period I designed twenty-four different types of standard machines with short cores and uniform pattern, which replaced the old ones. The Manager had promised me fifty thousand dollars on the completion of this task, but it turned out to be a practical joke. This gave me a painful shock and I resigned my position.

Immediately thereafter, some people approached me with the proposal of forming an arc light company under my name, to which I agreed. Here finally, was an opportunity to develop the motor, but when I broached the subject to my new associates they said, "No, we want the arc lamp. We don't care for this alternating current of yours." In 1886 my system of arc lighting was perfected and adopted for factory and municipal lighting, and I was free, but with no other possession than a beautifully engraved certificate of stock of hypothetical value. Then followed a period of struggle in the new medium for which I was not fitted, but the reward came in the end, and in April, 1887, the TESLA Electric Co. was organised, providing a laboratory and facilities. The motors I built there were exactly as I had imagined them. I made no attempt to improve the design, but merely reproduced the

pictures as they appeared to my vision and the operation was always as I expected. In the early part of 1888, an arrangement was made with the Westinghouse Company for the manufacture of the motors on a large scale. But great difficulties had still to be overcome. My system was based on the use of low frequency currents and the Westinghouse experts had adopted 133 cycles with the objects of securing advantages in transformation. They did not want to depart with their standard forms of apparatus and my efforts had to be concentrated upon adapting the motor to these conditions. Another necessity was to produce a motor capable of running efficiently at this frequency on two wire, which was not an easy accomplishment.

At the close of 1889, however, my services in Pittsburgh being no longer essential, I returned to New York and resumed experimental work in a Laboratory on Grand Street, where I began immediately the design of high-frequency machines. The problems of construction in this unexplored field were novel and quite peculiar, and I encountered many difficulties. I rejected the inductor type, fearing that it might not yield perfect sine waves, which were so important to resonant action. Had it not been for this, I could have saved myself a great deal of labour. Another discouraging feature of the high-frequency alternator seemed to be the inconstancy of speed which threatened to impose serious limitations to its use. I had already noted in my demonstrations before the American Institution of Electrical Engineers, that several times

the tune was lost, necessitating readjustment, and did not yet foresee what I discovered long afterwards, – a means of operating a machine of this kind at a speed constant to such a degree as not to vary more than a small fraction of one revolution between the extremes of load. From many other considerations, it appeared desirable to invent a simpler device for the production of electric oscillations.
In 1856, Lord Kelvin had exposed the theory of the condenser discharge, but no practical application of that important knowledge was made. I saw the possibilities and undertook the development of induction apparatus on this principle. My progress was so rapid as to enable me to exhibit at my lecture in 1891, a coil giving sparks of five inches. On that occasion I frankly told the engineers of a defect involved in the transformation by the new method, namely, the loss in the spark gap. Subsequent investigation showed that no matter what medium is employed, –be it air, hydrogen, mercury vapour, oil, or a stream of electrons, the efficiency is the same. It is a law very much like the governing of the conversion of mechanical energy. We may drop a weight from a certain height vertically down, or carry it to the lower level along any devious path; it is immaterial insofar as the amount of work is concerned. Fortunately however, this drawback is not fatal, as by proper proportioning of the resonant, circuits of an efficiency of 85 percent is attainable. Since my early announcement of the invention, it has come into universal use and wrought a revolution in many departments, but a still greater future awaits it. When in 1900 I obtained powerful discharges of 1,000 feet and flashed a current around the globe, I was reminded of the first tiny spark I observed in my Grand Street laboratory and was thrilled by sensations akin to those I felt when I discovered the rotating magnetic field.

Chapter 5

As I review the events of my past life I realise how subtle are the influences that shape our destinies. An incident of my youth may serve to illustrate. One winter's day I managed to climb a steep mountain, in company with other boys. The snow was quite deep and a warm southerly wind made it just suitable for our purpose. We

amused ourselves by throwing balls which would roll down a certain distance, gathering more or less snow, and we tried to out-do one another in this sport. Suddenly a ball was seen to go beyond the limit, swelling to enormous proportions until it became as big as a house and plunged thundering into the valley below with a force that made the ground tremble. I looked on spell-bound incapable of understanding what had happened. For weeks afterward the picture of the avalanche was before my eyes and I wondered how anything so small could grow to such an immense size.

Ever since that time the magnification of feeble actions fascinated me, and when, years later, I took up the experimental study of mechanical and electrical resonance, I was keenly interested from the very start. Possibly, had it not been for that early powerful impression I might not have followed up the little spark I obtained with my coil and never developed my best invention, the true history of which I will tell. Many technical men, very able in their special departments, but dominated by a pedantic spirit and near-sighted, have asserted that excepting the induction motor, I have given the world little of practical use. This is a grievous mistake. A new idea must not be judged by its immediate results. My alternating system of power transmission came at a psychological moment, as a long sought answer to pressing industrial questions, and although considerable resistance had to be overcome and opposing interests reconciled, as usual, the commercial introduction could not be long delayed. Now, compare this situation with that confronting my turbines, for example. One should think that so simple and beautiful an invention, possessing many features of an ideal motor, should be adopted at once and, undoubtedly, it would under similar conditions. But the prospective effect of the rotating field was not to render worthless existing machinery; on the contrary, it was to give it additional value. The system lent itself to new enterprise as well as to improvement of the old. My turbine is an advance of a character entirely different. It is a radical departure in the sense that its success would mean the abandonment of the antiquated types of prime movers on which billions of dollars have been spent. Under such circumstances, the progress must needs be slow and perhaps the greatest impediment is encountered in the prejudicial opinions created in the minds of experts by organised opposition.

Only the other day, I had a disheartening experience when I met my friend and former assistant, Charles F. Scott, now professor of Electric Engineering at Yale. I had not seen him for a long time and was glad to have an opportunity for a little chat at my office. Our conversation, naturally enough, drifted on my turbine and I became heated to a high degree. "Scott," I exclaimed, carried away by the vision of a glorious future, "My turbine will scrap all the heat engines in the world." Scott stroked his chin and looked away thoughtfully, as though making a mental calculation. "That will make quite a pile of scrap," he said, and left without another word!

These and other inventions of mine, however, were nothing more than steps

forward in a certain directions. In evolving them, I simply followed the inborn instinct to improve the present devices without any special thought of our far more imperative necessities. The "Magnifying Transmitter" was the product of labours extending through years, having for their chief object, the solution of problems which are infinitely more important to mankind than mere industrial development. If my memory serves me right, it was in November, 1890, that I performed a laboratory experiment which was one of the most extraordinary and spectacular

ever recorded in the annal of Science. In investigating the behaviour of high frequency currents, I had satisfied myself that an electric field of sufficient intensity could be produced in a room to light up electrodeless vacuum tubes. Accordingly, a transformer was built to test the theory and the first trial proved a marvellous success. It is difficult to appreciate what those strange phenomena meant at the time. We crave for new sensations, but soon become indifferent to them. The wonders of yesterday are today common occurrences. When my tubes were first publicly exhibited, they were viewed with amazement impossible to describe. From all parts of the world, I received urgent invitations and numerous honours and other flattering inducements were offered to me, which I declined. But in 1892 the demand became irresistible and I went to London where I delivered a lecture before the institution of Electrical Engineers.

It has been my intention to leave immediately for Paris in compliance with a similar obligation, but Sir James Dewar insisted on my appearing before the Royal Institution. I was a man of firm resolve, but succumbed easily to the forceful arguments of the great Scotchman. He pushed me into a chair and poured out half a glass of a wonderful brown fluid which sparkled in all sorts of iridescent colours and tasted like nectar. "Now," said he, "you are sitting in Faraday's chair and you are enjoying whiskey he used to drink." (Which did not interest me very much, as I had altered my opinion concerning strong drink). The next evening I have a demonstration before the Royal Institution, at the termination of which, Lord Rayleigh addressed the audience and his generous words gave me the first start in these endeavours. I fled from London and later from Paris, to escape favours showered upon me, and journeyed to my home, where I passed through a most painful ordeal and illness.

Upon regaining my health, I began to formulate plans for the resumption of work in America. Up to that time I never realised that I possessed any particular gift of discovery, but Lord Rayleigh, whom I always considered as an ideal man of science, had said so and if that was the case, I felt that I should concentrate on some big idea.

At this time, as at many other times in the past, my thoughts turned towards my Mother's teaching. The gift of mental power comes from God, Divine Being, and if we concentrate our minds on that truth, we become in tune with this great power. My Mother had taught me to seek all truth in the Bible; therefore I devoted the next few months to the study of this work.

One day, as I was roaming the mountains, I sought shelter from an approaching storm. The sky became overhung with heavy clouds, but somehow the rain was delayed until, all of a sudden, there was a lightening flash and a few moments after, a deluge. This observation set me thinking. It was manifest that the two phenomena were closely related, as cause and effect, and a little reflection led me to the conclusion that the electrical energy involved in the precipitation of the water was inconsiderable, the function of the lightening being much like that of a sensitive trigger. Here was a stupendous possibility of

achievement. If we could produce electric effects of the required quality, this whole planet and the conditions of existence on it could be transformed. The sun raises the water of the oceans and winds drive it to distant regions where it remains in a state of most delicate balance. If it were in our power to upset it when and wherever desired, this might life sustaining stream could be at will controlled. We could

irrigate arid deserts, create lakes and rivers, and provide motive power in unlimited amounts. This would be the most efficient way of harnessing the sun to the uses of man. The consummation depended on our ability to develop electric forces of the order of those in nature.

It seemed a hopeless undertaking, but I made up my mind to try it and immediately on my return to the United States in the summer of 1892, after a short visit to my friends in Watford, England; work was begun which was to me all the more attractive, because a means of the same kind was necessary for the successful transmission of energy without wires.

At this time I made a further careful study of the Bible, and discovered the key in Revelation. The first gratifying result was obtained in the spring of the succeeding year, when I reaching a tension of about 100,000,000 volts — one hundred million volts — with my conical coil, which I figured was the voltage of a flash of lightening. Steady progress was made until the destruction of my laboratory by fire, in 1895, as may be judged from an article by T.C. Martin which appeared in the April number of the Century Magazine. This calamity set me back in many ways and most of that year had to be devoted to planning and reconstruction. However, as soon as circumstances permitted, I returned to the task.

Although I knew that higher electric-motive forces were attainable with apparatus of larger dimensions, I had an instinctive perception that the object could be accomplished by the proper design of a comparatively small and compact transformer. In carrying on tests with a secondary in the form of flat spiral, as illustrated in my patents, the absence of streamers surprised me, and it was not long before I discovered that this was due to the position of the turns and their mutual action. Profiting from this observation, I resorted to the use of a high tension conductor with turns of considerable diameter, sufficiently separated to keep down the distributed capacity, while at the same time preventing undue accumulation of the charge at any point. The application of this principle enabled me to produce pressures of over 100,000,000 volts, which was about the limit obtainable without risk of accident. A photograph of my transmitter built in my laboratory at Houston Street, was published in the Electrical Review of November, 1898.

In order to advance further along this line, I had to go into the open, and in the spring of 1899, having completed preparations for the erection of a wireless plant, I went to Colorado where I remained for more than one year. Here I introduced other improvements and refinements which made it possible to generate currents of any tension that may be desired. Those who are interested will find some information in regard to the experiments I conducted there in my article, "The Problem of Increasing Human Energy," in the Century Magazine of June 1900, to which I have referred on a previous occasion.

I will be quite explicit on the subject of my magnifying transformer so that it will be clearly understood. In the first place, it is a resonant transformer, with a secondary in which the parts, charged to a high potential, are of considerable area and arranged in space along ideal enveloping surfaces of very large radii of curvature, and at proper distances from one another, thereby

insuring a small electric surface density everywhere, so that no leak can occur even if the conductor is bare. It is suitable for any frequency, from a few to many thousands of cycles per second, and can be used in the production of currents of

tremendous volume and moderate pressure, or of smaller amperage and immense electromotive force. The maximum electric tension is merely dependent on the curvature of the surfaces on which the charged elements are situated and the area of the latter. Judging from my past experience there is no limit to the possible voltage developed; any amount is practicable. On the other hand, currents of many thousands of amperes may be obtained in the antenna. A plant of but very moderate dimensions is required for such performances. Theoretically, a terminal of less than 90 feet in diameter is sufficient to develop an electromotive force of that magnitude, while for antenna currents of from 2,000-4,000 amperes at the usual frequencies, it need not be larger than 30 feet in diameter. In a more restricted meaning, this wireless transmitter is one in which the Hertzwave radiation is an entirely negligible quantity as compared with the whole energy, under which condition the damping factor is extremely small and an enormous charge is stored in the elevated capacity. Such a circuit may then be excited with impulses of any kind, even of low frequency and it will yield sinusoidal and continuous oscillations like those of an alternator. Taken in the narrowest significance of the term, however, it is a resonant transformer which, besides possessing these qualities, is accurately proportioned to fit the globe and its electrical constants and properties, by virtue of which design it becomes highly efficient and effective in the wireless transmission of energy. Distance is then ABSOLUTELY ELIMINATED, THERE BEING NO

DIMINUATION IN THE INTENSITY of the transmitted impulses. It is even

possible to make the actions increase with the distance from the plane, according to an exact mathematical law. This invention was one of a number comprised in my "World System" of wireless transmission which I undertook to commercialise on my return to New York in 1900.

As to the immediate purposes of my enterprise, they were clearly outlined in a technical statement of that period from which I quote, "The world system has resulted from a combination of several original discoveries made by the inventor in the course of long continued research and experimentation. It makes possible not only the instantaneous and precise wireless transmission of any kind of signals, messages or characters, to all parts of the world, but also the inter-connection of the existing telegraph, telephone, and other signal stations without any change in their present equipment. By its means, for instance, a telephone subscriber here may call up and talk to any other subscriber on the Earth. An inexpensive receiver, not bigger than a watch, will enable him to listen anywhere, on land or sea, to a speech delivered or music played in some other place, however distant."

These examples are cited merely to give an idea of the possibilities of this great scientific advance, which annihilates distance and makes that perfect natural conductor, the Earth, available for all the innumerable purposes which human ingenuity has found for a line-wire. One far-reaching result of this is that any device capable of being operated through one or more wires (at a distance obviously restricted) can likewise be actuated, without artificial conductors and with the same facility and accuracy, at distances to which there are no limits other than those imposed by the physical dimensions of the earth. Thus, not only will entirely new fields for commercial exploitation be opened up by this ideal method of transmission, but the old ones vastly extended. The World System is based on the application of the following import and inventions and discoveries:

1) The Tesla Transformer: This apparatus is in the production of elec-28

trical vibrations as revolutionary as gunpowder was in warfare. Currents many times stronger than any ever generated in the usual ways and sparks over one hundred feet long, have been produced by the inventor with an instrument of this kind.

2) The Magnifying Transmitter: This is Tesla's best invention, a peculiar transformer specially adapted to excite the earth, which is in the transmission of electrical energy when the telescope is in astronomical observation. By the use of this marvellous device, he has already set up electrical movements of greater intensity than those of lightening and passed a current, sufficient to light more than two hundred incandescent lamps, around the Earth.

3) The Tesla Wireless System: This system comprises a number of improvements and is the only means known for transmitting economically electrical energy to a distance without wires. Careful tests and measurements in connection with an experimental station of great activity, erected by the inventor in Colorado, have demonstrated that power in any desired amount can be conveyed, clear across the Globe if necessary, with a loss not exceeding a few per cent.

4) The Art of Individualisation: This invention of Tesla is to primitive Tuning, what refined language is to unarticulated expression. It makes possible the transmission of signals or messages absolutely secret and exclusive both in the active and passive aspect, that is, non-interfering as well as non-interferable. Each signal is like an individual of unmistakable identity and there is virtually no limit to the number of stations or instruments which can be simultaneously operated without the slightest mutual disturbance.

5) The Terrestrial Stationary Waves: This wonderful discovery, popularly explained, means that the Earth is responsive to electrical vibrations of definite pitch, just as a tuning fork to certain waves of sound. These particular electrical vibrations, capable of powerfully exciting the Globe, lend themselves to innumerable uses of great importance commercially and in many other respects. The "first World System" power plant can be put in operation in nine months. With this power plant, it will be practicable to attain electrical activities up to ten million horse-power and it is designed to serve for as many technical achievements as are possible without due expense. Among these are the following:

1) The inter-connection of existing telegraph exchanges or offices all over the world;

2) The establishment of a secret and non-interferable government telegraph service;
3) The inter-connection of all present telephone exchanges or offices around the Globe;

4) The universal distribution of general news by telegraph or telephone, in conjunction with the Press;

5) The establishment of such a "World System" of intelligence transmission for exclusive private use;

6) The inter-connection and operation of all stock tickers of the world;
7) The establishment of a World system — of musical distribution, etc.;
8) The universal registration of time by cheap clocks indicating the hour with

astronomical precision and requiring no attention whatever;

9) The world transmission of typed or hand-written characters, letters, checks, etc.;
10) The establishment of a universal marine service enabling the navigators of all ships to steer perfectly without compass, to determine the exact location, hour and speak; to prevent collisions and disasters, etc.;

11) The inauguration of a system of world printing on land and sea;

12) The world reproduction of photographic pictures and all kinds of drawings or records...”

I also proposed to make demonstration in the wireless transmission of power on a small scale, but sufficient to carry conviction. Besides these, I referred to other and incomparably more important applications of my discoveries which will be disclosed at some future date. A plant was built on Long Island with a tower 187 feet high, having a spherical terminal about 68 feet in diameter. These dimensions were adequate for the transmission of virtually any amount of energy. Originally, only from 200 to 300 K.W. were provided, but I intended to employ later several thousand horsepower. The transmitter was to emit a wave-complex of special characteristics and I had devised a unique method of telephonic control of any amount of energy. The tower was destroyed two years ago (1917) but my projects are being developed and another one, improved in some features will be constructed.

On this occasion I would contradict the widely circulated report that the structure was demolished by the Government, which owing to war conditions, might have created prejudice in the minds of those who may not know that the papers, which thirty years ago conferred upon me the honour of American citizenship, are always kept in a safe, while my orders, diplomas, degrees, gold medals and other distinctions are packed away in old trunks. If this report had a foundation, I would have been refunded a large sum of money which I expended in the construction of the tower. On the contrary, it was in the interest of the Government to preserver it, particularly as it would have made possible, to mention just one valuable result, the location of a submarine in any part of the world. My plant, services, and all my improvements have always been at the disposal of the officials and ever since the outbreak of the European conflict, I have been working at a sacrifice on several inventions of mine relating to aerial navigation, ship propulsion and wireless transmission, which are of the greatest importance to the country. Those who are well informed know that my ideas have revolutionised the industries of the United States and I am not aware that there lives an inventor who has been, in this respect, as fortunate as myself, — especially as regards the use of his improvements in the war.

I have refrained from publicly expressing myself on this subject before, as it seemed improper to dwell on personal matters while all the world was in dire trouble. I would add further, in view of various rumours which have reached me, that Mr. J. Pierpont Morgan did not interest himself with me in a business way, but in the same large spirit in which he has assisted many other pioneers. He carried out his generous promise to the letter and it would have been most unreasonable to expect from him anything more. He had the highest regard for my attainments and gave me every evidence of his complete faith in my ability to ultimately achieve what I had set out to do. I am unwilling to accord to some small-minded and jealous

individuals the satisfaction of having thwarted my efforts. These men are to me nothing more than microbes of a nasty disease. My project was retarded by laws of nature. The world was not prepared for it. It was too far ahead of time, but the same laws will prevail in the end and make it a triumphal success.

Chapter 6

No subject to which I have ever devoted myself has called for such concentration of mind, and strained to so dangerous a degree the finest fibres of my brain, as the systems of which the Magnifying transmitter is the foundation. I put all the intensity and vigour of youth in the development of the rotating field discoveries, but those early labours were of a different character. Although strenuous in the extreme, they did not involve that keen and exhausting discernment which had to be exercised in attacking the many problems of the wireless.

Despite my rare physical endurance at that period, the abused nerves finally rebelled and I suffered a complete collapse, just as the consummation of the long and difficult task was almost in sight. Without doubt I would have paid a greater penalty later, and very likely my career would have been prematurely terminated, had not providence equipped me with a safety device, which seemed to improve with advancing years and unfailingly comes to play when my forces are at an end. So long as it operates I am safe from danger, due to overwork, which threatens other inventors, and incidentally, I need no vacations which are indispensable to most people. When I am all but used up, I simply do as the darkies who "naturally fall asleep while white folks worry."

To venture a theory out of my sphere, the body probably accumulates little by little a definite quantity of some toxic agent and I sink into a nearly lethargic state which lasts half an hour to the minute. Upon awakening I have the sensation as though the events immediately preceding had occurred very long ago, and if I attempt to continue the interrupted train of thought I feel veritable nausea. Involuntarily, I then turn to other and am surprised at the freshness of the mind and ease with which I overcome obstacles that had baffled me before. After weeks or months, my passion for the temporarily abandoned invention returns and I invariably find answers to all the vexing questions, with scarcely any effort. In this connection, I will tell of an extraordinary experience which may be of interest to students of psychology.
I had produced a striking phenomenon with my grounded transmitter and was endeavouring to ascertain its true significance in relation to the currents propagated through the earth. It seemed a hopeless undertaking, and for more than a year I worked unremittingly, but in vain. This profound study so entirely absorbed me, that I became forgetful of everything else, even of my undermined health. At last, as I was at the point of breaking down, nature applied the preservative inducing lethal sleep. Regaining my senses, I realised with consternation that I was unable to visualise scenes from my life except those of infancy, the very first ones that had entered my consciousness. Curiously enough, these appeared before my vision with startling distinctness and afforded me welcome relief. Night after night, when retiring, I would think of them and more and more of my previous existence was revealed. The image of my mother was always the principal figure in the spectacle that slowly unfolded, and a consuming desire to see her again gradually took possession of me. This feeling grew so strong that I resolved to drop all work and satisfy my longing, but I found it too hard to break away from the laboratory, and several months elapsed during which I had succeeded in reviving all the impressions of my past life, up to the spring of 1892. In the next picture that came

out of the mist of oblivion, I saw myself at the Hotel de la Paix in Paris, just coming to from one of my peculiar sleeping spells, which had

been caused by prolonged exertion of the brain. Imagine the pain and distress I felt, when it flashed upon my mind that a dispatch was handed to me at that very moment, bearing the sad news that my mother was dying. I remembered how I made the long journey home without an hour of rest and how she passed away after weeks of agony.

It was especially remarkable that during all this period of partially obliterated memory, I was fully alive to everything touching on the subject of my research. I could recall the smallest detail and the least insignificant observations in my experiments and even recite pages of text and complex mathematical formulae.
My belief is firm in a law of compensation. The true rewards are ever in proportion to the labour and sacrifices made. This is one of the reasons why I feel certain that of all my inventions, the magnifying Transmitter will prove most important and valuable to future generations. I am prompted to this prediction, not so much by thoughts of the commercial and industrial revolution which it will surely bring about, but of the humanitation consequences of the many achievements it makes possible. Considerations of mere utility weigh little in the balance against the higher benefits of civilisation. We are confronted with portentous problems which can not be solved just by providing for our material existence, however abundantly. On the contrary, progress in this direction is fraught with hazards and perils not less menacing than those born from want and suffering. If we were to release the energy of atoms or discover some other way of developing cheap and unlimited power at any point on the globe, this accomplishment, instead of being a blessing, might bring disaster to mankind in giving rise to dissension and anarchy, which would ultimately result in the enthronement of the hated regime of force. The greatest good will come from technical improvements tending to unification and harmony, and my wireless transmitter is preeminently such. By its means, the human voice and likeness will be reproduced everywhere and factories driven thousands of miles from waterfalls furnishing power. Aerial machines will be propelled around the earth without a stop and the sun's energy controlled to create lakes and rivers for motive purposes and transformation of arid deserts into fertile land. Its introduction for telegraphic, telephonic and similar uses, will automatically cut out the statics and all other interferences which at present, impose narrow limits to the application of the wireless. This is a timely topic on which a few words might not be amiss. During the past decade a number of people have arrogantly claimed that they had succeeded in doing away with this impediment. I have carefully examined all of the arrangements described and tested most of them long before they were publicly disclosed, but the finding was uniformly negative. Recent official statement from the U.S. Navy may, perhaps, have taught some beguilable news editors how to appraise these announcements at their real worth. As a rule, the attempts are based on theories so fallacious, that whenever they come to my notice, I can not help thinking in a light vein. Quite recently a new discovery was heralded, with a deafening flourish of trumpets, but it proved another case of a mountain bringing forth a mouse. This reminds me of an exciting incident which took place a year ago, when I was conducting my experiments with currents of high frequency.
Steve Brodie had just jumped off the Brooklyn Bridge. The feat has been vulgarised since by imitators, but the first report electrified New York. I was very impressionable then and frequently spoke of the daring printer. On a hot afternoon I felt the necessity of refreshing myself and stepped into

one of the popular thirty thousand institutions of this great city, where a delicious twelve per cent beverage was served, which can now be had only by making a trip to the poor and devastated countries of Europe. The attendance was large and not over-distinguished and a matter was discussed which gave me an admirable opening for the careless remark, "This is what I said when I jumped off the bridge." No sooner had I uttered these words, than I felt like the companion of Timothens, in the poem of Schiller. In an instant there was pandemonium and a dozen voices cried, "It is Brodie!" I threw a quarter on the counter and bolted for the door, but the crowd was at my heels with yells, – "Stop, Steeve!", which must have been

misunderstood, for many persons tried to hold me up as I ran frantically for my haven of refuge. By darting around corners I fortunately managed, through the medium of a fire escape, to reach the laboratory, where I threw off my coat, camouflaged myself as a hard-working blacksmith and started the forge. But these precautions proved unnecessary, as I had eluded my pursuers. For many years afterward, at night, when imagination turns into spectres the trifling troubles of the day, I often thought, as I tossed on the bed, what my fate would have been, had the mob caught me and found out that I was not Steve Brodie!

Now the engineer who lately gave an account before a technical body of a novel remedy against statics based on a "heretofore unknown law of nature," seems to have been as reckless as myself when he contended that these disturbances propagate up and down, while those of a transmitter proceed along the earth. It would mean that a condenser as this globe, with its gaseous envelope, could be charged and discharged in a manner quite contrary to the fundamental teachings propounded in every elemental text book of physics. Such a supposition would have been condemned as erroneous, even in Franklin's time, for the facts bearing on this were then well known and the identity between atmospheric electricity and that developed by machines was fully established. Obviously, natural and artificial disturbances propagate through the earth and the air in exactly the same way, and both set up electromotive forces in the horizontal, as well as vertical sense. Interference can not be overcome by any such methods as were proposed. The truth is this: In the air the potential increases at the rate of about fifty volts per foot of elevation, owing to which there may be a difference of pressure amounting to twenty, or even forty thousand volts between the upper and lower ends of the antenna. The masses of the charged atmosphere are constantly in motion and give up electricity to the conductor, not continuously, but rather disruptively, this producing a grinding noise in a sensitive telephonic receiver. The higher the terminal and the greater the space encompast by the wires, the more pronounced is the effect, but it must be understood that it is purely local and has little to do with the real trouble.

In 1900, while perfecting my wireless system, one form of apparatus compressed four antennae. These were carefully calibrated in the same frequency and connected in multiple with the object of magnifying the action in receiving from any direction. When I desired to ascertain the origin of the transmitted impulse, each diagonally situated pair was put in series with a primary coil energising the detector circuit. In the former case, the sound was loud in the telephone; in the latter it ceased, as expected, – the two antennae neutralising each other, but the true statics manifested themselves in both instances and I had to devise special preventives embodying different principles. By employing receivers connected to two points of the ground, as suggested by me long ago, this trouble caused by the charged air, which is very serious in the structures as now built, is nullified and besides, the liability of all

kinds of interference is reduced to about one-half because of the directional character of the circuit. This was perfectly self-evident, but

came as a revelation to some simple-minded wireless folks whose experience was confined to forms of apparatus that could have been improved with an axe, and they have been disposing of the bear's skin before killing him. If it were true that strays performed such antics, it would be easy to get rid of them by receiving without aerials. But, as a matter of fact, a wire buried in the ground which, conforming to this view, should be be absolutely immune, is more susceptible to certain extraneous impulses than one placed vertically in the air. To state it fairly, a slight progress has been made, but not by virtue of any particular method or device. It was achieved simply by discerning the enormous structures, which are bad enough for transmission but wholly unsuitable for reception and adopting a more appropriate type of receiver. As I have said before, to dispose of this difficulty for good, a radical change must be made in the system and the sooner this is done the better. It would be calamitous, indeed, if at this time when the art is in its infancy and the vast majority, not excepting even experts, have no conception of its ultimate possibilities, a measure would be rushed through the legislature making it a government monopoly. This was proposed a few weeks ago by Secretary Daniels and no doubt that distinguished official has made his appeal to the Senate and House of Representatives with sincere conviction. But universal evidence unmistakably shows that the best results are always obtained in healthful commercial competition. there are, however, exceptional reasons why wireless should be given the fullest freedom of development. In the first place, it offers prospects immeasurably greater and more vital to betterment of human life than any other invention or discovery in the history of man. Then again, it must be understood that this wonderful art has been, in its entirety, evolved here and can be called "American" with more right and propriety than the telephone, the incandescent lamp or the aeroplane.

Enterprising press agents and stock jobbers have been so successful in spreading misinformation, that even so excellent a periodical as the *Scientific American*, accords the chief credit to a foreign country. The Germans, of course, gave us the Hertz waves and the Russian, English, French and Italian experts were quick in using them for signalling purposes. It was an obvious application of the new agent and accomplished with the old classical and unimproved induction coil, scarcely anything more than another kind of heliography. The radius of transmission was very limited, the result attained of little value, and the Hertz oscillations, as a means for conveying intelligence, could have been advantageously replaced by sound waves, which I advocated in 1891. Moreover, all of these attempts were made three years after the basic principles of the wireless system, which is universally employed today, and its potent instrumentalities had been clearly described and developed in America.

No trace of those Hertzian appliances and methods remains today. We have proceeded in the very opposite direction and what has been done is the product of the brains and efforts of citizens of this country. The fundamental patents have expired and the opportunities are open to all. The chief argument of the Secretary is based on interference. According to his statement, reported in the New York Herald of July 29th, signals from a powerful station can be intercepted in every village in the world. In view of this fact, which was demonstrated in my experiments in 1900, it would be of little use to impose restrictions in the United States.
As throwing light on this point, I may mention that only recently an odd looking

gentleman called on me with the object of enlisting my services in the construction of world transmitters in some distant land. "We have no money,"

he said, "but carloads of solid gold, and we will give you a liberal amount." I told him that I wanted to see first what will be done with my inventions in America, and this ended the interview. But I am satisfied that some dark forces are at work, and as time goes on the maintenance of continuous communication will be rendered more difficult. The only remedy is a system immune against interruption. It has been perfected, it exists, and all that is necessary is to put it in operation.
The terrible conflict is still uppermost in the minds and perhaps the greatest importance will be attached to the magnifying Transmitter as a machine for attack and defence, more particularly in connection with TELAUTAMATICS. This invention is a logical outcome of observations begun in my boyhood and continued throughout my life. When the first results were published, the Electrical Review stated editorially that it would become one of the "most potent factors in the advance of civilisation of mankind." The time is not distant when this prediction will be fulfilled. In 1898 and 1900, it was offered by me to the Government and might have been adopted, were I one of those who would go to Alexander's shepherd when they want a favour from Alexander!

At that time I really thought that it would abolish war, because of its unlimited destructiveness and exclusion of the personal element of combat. But while I have not lost faith in its potentialities, my views have changed since. War can not be avoided until the physical cause for its recurrence is removed and this, in the last analysis, is the vast extent of the planet on which we live. Only though annihilation of distance in every respect, as the conveyance of intelligence, transport of passengers and supplies and transmission of energy will conditions be brought about some day, insuring permanency of friendly relations. What we now want most is closer contact and better understanding between individuals and communities all over the earth and the elimination of that fanatic devotion to exalted ideals of national egoism and pride, which is always prone to plunge the world into primeval barbarism and strife. No league or parliamentary act of any kind will ever prevent such a calamity. These are only new devices for putting the weak at the mercy of the strong.

I have expressed myself in this regard fourteen years ago, when a combination of a few leading governments, a sort of Holy alliance, was advocated by the late Andrew Carnegie, who may be fairly considered as the father of this idea, having given to it more publicity and impetus than anybody else prior to the efforts of the President. While it can not be denied that such aspects might be of material advantage to some less fortunate peoples, it can not attain the chief objective sought. Peace can only come as a natural consequence of universal enlightenment and merging of races, and we are still far from this blissful realisation, because few indeed, will admit the reality – that God made man in His image – in which case all earth men are alike. There is in fact but one race, of many colours. Christ is but one person, yet he is of all people, so why do some people think themselves better than some other people? As I view the world of today, in the light of the gigantic struggle we have witnessed, I am filled with conviction that the interests of humanity would be best served if the United States remained true to its traditions, true to God whom it pretends to believe, and kept out of "entangling alliances." Situated as it is, geographically remote from the theatres of impending conflicts, without incentive to territorial aggrandisement, with inexhaustible resources and immense population thoroughly imbued with the spirit of liberty and right, this country is placed in a

unique and privileged position. It is

thus able to exert, independently, its colossal strength and moral force to the benefit of all, more judiciously and effectively, than as a member of a league.
I have dwelt on the circumstances of my early life and told of an affliction which compelled me to unremitting exercise of imagination and self-observation. This mental activity, at first involuntary under the pressure of illness and suffering, gradually became second nature and led me finally to recognise that I was but an automaton devoid of free will in thought and action and merely responsible to the forces of the environment. Our bodies are of such complexity of structure, the motions we perform are so numerous and involved and the external impressions on our sense organs to such a degree delicate and elusive, that it is hard for the average person to grasp this fact. Yet nothing is more convincing to the trained investigator than the mechanistic theory of life which had been, in a measure, understood and propounded by Descartes three hundred years ago. In his time many important functions of our organisms were unknown and especially with respect to the nature of light and the construction and operation of the eye, philosophers were in the dark. In recent years the progress of scientific research in these fields has been such as to leave no room for a doubt in regard to this view on which many works have been published. One of its ablest and most eloquent exponents is, perhaps, Felix le Dantec, formerly assistant of Pasteur. Professor Jacques Loeb has performed remarkable experiments in heliotropism, clearly establishing the controlling power of light in lower forms of organisms and his latest book, "Forced Movements," is revelatory. But while men of science accept this theory simply as any other that is recognised, to me it is a truth which I hourly demonstrate by every act and thought of mine. The consciousness of the external impression prompting me to any kind of exertion, – physical or mental, is ever present in my mind. Only on very rare occasions, when I was in a state of exceptional concentration, have I found difficulty in locating the original impulse. The by far greater number of human beings are never aware of what is passing around and within them and millions fall victims of disease and die prematurely just on this account. The commonest, every-day
occurrences appear to them mysterious and inexplicable. One may feel a sudden wave of sadness and rack his brain for an explanation, when he might have noticed that it was caused by a cloud cutting off the rays of the sun. He may see the image of a friend dear to him under conditions which he construes as very peculiar, when only shortly before he has passed him in the street or seen his photograph somewhere. When he loses a collar button, he fusses and swears for an hour, being unable to visualise his previous actions and locate the object directly. Deficient observation is merely a form of ignorance and responsible for the many morbid notions and foolish ideas prevailing. There is not more than one out of every ten persons who does not believe in telepathy and other psychic manifestations, spiritualism and communion with the dead, and who would refuse to listen to willing or unwilling deceivers?

Just to illustrate how deeply rooted this tendency has become even among the clear-headed
American population, I may mention a comical incident. Shortly before the war, when the exhibition of my turbines in this city elicited widespread comment in the technical papers, I anticipated that there would be a scramble among manufacturers to get hold of the invention and I had particular designs on that man from Detroit who has an uncanny faculty for accumulating millions. So confident was I, that he would turn up some day, that I declared this as certain to my secretary

and assistants. Sure enough, one fine morning a body of engineers from the Ford Motor Company presented them-36

selves with the request of discussing with me an important project. "Didn't I tell you?," I remarked triumphantly to my employees, and one of them said, "You are amazing, Mr. Tesla. Everything comes out exactly as you predict."

As soon as these hard-headed men were seated, I of course, immediately began to extol the wonderful features of my turbine, when the spokesman interrupted me and said, "We know all about this, but we are on a special errand. We have formed a psychological society for the investigation of psychic phenomena and we want you to join us in this undertaking." I suppose these engineers never knew how near they came to being fired out of my office.

Ever since I was told by some of the greatest men of the time, leaders in science whose names are immortal, that I am possessed of an unusual mind, I bent all my thinking faculties on the solution of great problems regardless of sacrifice. For many years I endeavoured to solve the enigma of death, and watched eagerly for every kind of spiritual indication. But only once in the course of my existence have I had an experience which momentarily impressed me as supernatural. It was at the time of my mother's death.

I had become completely exhausted by pain and long vigilance, and one night was carried to a building about two blocks from our home. As I lay helpless there, I thought that if my mother died while I was away from her bedside, she would surely give me a sign. Two or three months before, I was in London in company with my late friend, Sir William Crookes, when spiritualism was discussed and I was under the full sway of these thoughts. I might not have paid attention to other men, but was susceptible to his arguments as it was his epochal work on radiant matter, which I had read as a student, that made me embrace the electrical career. I reflected
that the conditions for a look into the beyond were most favourable, for my mother was a woman of genius and particularly excelling in the powers of intuition. During the whole night every fibre in my brain was strained in expectancy, but nothing happened until early in the morning, when I fell in a sleep, or perhaps a swoon, and saw a cloud carrying angelic figures of marvellous beauty, one of whom gazed upon me lovingly and gradually assumed the features of my mother. The appearance slowly floated across the room and vanished, and I was awakened by an indescribably sweet song of many voices. In that instant a certitude, which no words can express, came upon me that my mother had just died. And that was true. I was unable to understand the tremendous weight of the painful knowledge I received in advance, and wrote a letter to Sir William Crookes while still under the domination of these impressions and in poor bodily health. When I recovered, I sought for a long time the external cause of this strange manifestation and, to my great relief, I succeeded after many months of fruitless effort.

I had seen the painting of a celebrated artist, representing allegorically one of the seasons in the form of a cloud with a group of angels which seemed to actually float in the air, and this had struck me forcefully. It was exactly the same that appeared in my dream, with the exception of my mother's likeness. The music came from the choir in the church nearby at the early mass of Easter morning, explaining everything satisfactorily in conformity with scientific facts.

This occurred long ago, and I have never had the faintest reason since to change my views on psychical and spiritual phenomena, for which there is no foundation. The belief in these is the natural outgrowth of intellectual development. Religious dogmas are no longer accepted in their orthodox meaning, but every individual clings to faith in a supreme power of some kind.

We all must have an ideal to govern our conduct and insure contentment, but it is immaterial whether it be one of creed, art, science, or anything else, so long as it fulfils the function of a dematerialising force. It is essential to the peaceful existence of humanity as a whole that one common conception should prevail. While I have failed to obtain any evidence in support of the contentions of psychologists and spiritualists, I have proved to my complete satisfaction the automatism of life, not only through continuous observations of individual actions, but even more conclusively through certain generalisations. these amount to a discovery which I consider of the greatest moment to human society, and on which I shall briefly dwell.

I got the first inkling of this astonishing truth when I was still a very young man, but for many years I interpreted what I noted simply as coincidences. Namely, whenever either myself or a person to whom I was attached, or a cause to which I was devoted, was hurt by others in a particular way, which might be best popularly characterised as the most unfair imaginable, I experienced a singular and undefinable pain which, for the want of a better term, I have qualified as "cosmic" and shortly thereafter, and invariably, those who had inflicted it came to grief. After many such cases I confided this to a number of friends, who had the opportunity to convince themselves of the theory of which I have gradually formulated and which may be stated in the following few words: Our bodies are of similar construction and exposed to the same external forces. This results in likeness of response and concordance of the general activities on which all our social and other rules and laws are based. We are automata entirely controlled by the forces of the medium, being tossed about like corks on the surface of the water, but mistaking the resultant of the impulses from the outside for the free will. The movements and other actions we perform are always life preservative and though seemingly quite independent from one another, we are connected by invisible links. So long as the organism is in perfect order, it responds accurately to the agents that prompt it, but the moment that there is some derangement in any individual, his self-preservative power is impaired.

Everybody understands, of course, that if one becomes deaf, has his eyes weakened, or his limbs injured, the chances for his continued existence are lessened. But this is also true, and perhaps more so, of certain defects in the brain which drive the automaton, more or less, of that vital quality and cause it to rush into destruction. A very sensitive and observant being, with his highly developed mechanism all intact, and acting with precision in obedience to the changing conditions of the environment, is endowed with a transcending mechanical sense, enabling him to evade perils too subtle to be directly perceived. When he comes in contact with others whose controlling organs are radically faulty, that sense asserts itself and he feels the "cosmic" pain.

The truth of this has been borne out in hundreds of instances and I am inviting other students of nature to devote attention to this subject, believing that through combined systematic effort, results of incalculable value to the world will be attained. The idea of constructing an automaton, to bear out my theory, presented

itself to me early, but I did not begin active work until 1895, when I started my wireless investigations. During the succeeding two or three years, a number of automatic mechanisms, to be actuated from a distance, were constructed by me and exhibited to visitors in my laboratory.

In 1896, however, I designed a complete machine capable of a multitude of operations, but the consummation of my labours was delayed until late in 1897.

This machine was illustrated and described in my article in the Century Magazine of June, 1900; and other periodicals of that time and when first shown in the beginning of 1898, it created a sensation such as no other invention of mine has ever produced. In November, 1898, a basic patent on the novel art was granted to me, but only after the Examiner-in-Chief had come to New York and witnessed the performance, for what I claimed seemed unbelievable. I remember that when later I called on an official in Washington, with a view of offering the invention to the Government, he burst out in laughter upon my telling him what I had accomplished. Nobody thought then that there was the faintest prospect of perfecting such a device. It is unfortunate that in this patent, following the advice of my attorneys, I indicated the control as being affected through the medium of a single circuit and a well-known form of detector, for the reason that I had not yet secured protection on my methods and apparatus for individualisation. As a matter of fact, my boats were controlled through the joint action of several circuits and interference of every kind was excluded.

Most generally, I employed receiving circuits in the form of loops, including condensers, because the discharges of my high-tension transmitter ionised the air in the (laboratory) so that even a very small aerial would draw electricity from the surrounding atmosphere for hours.

Just to give an idea, I found, for instance, that a bulb twelve inches in diameter, highly exhausted, and with one single terminal to which a short wire was attached, would deliver well on to one thousand successive flashes before all charge of the air in the laboratory was neutralised. The loop form of receiver was not sensitive to such a disturbance and it is curious to note that it is becoming popular at this late date. In reality, it collects much less energy than the aerials or a long grounded wire, but it so happens that it does away with a number of defects inherent to the present wireless devices.

In demonstrating my invention before audiences, the visitors were requested to ask questions, however involved, and the automaton would answer them by signs. This was considered magic at the time, but was extremely simple, for it was myself who gave the replies by means of the device.

At the same period, another larger telautomatic boat was constructed, a photograph of which was shown in the October 1919 number of the Electrical Experimenter. It was controlled by loops, having several turns placed in the hull, which was made entirely water-tight and capable of submergence. The apparatus was similar to that used in the first with the exception of certain special features I introduced as, for example, incandescent lamps which afforded a visible evidence of the proper functioning of the machine. These automata, controlled within the range of vision of the operator, were, however, the first and rather crude steps in the evolution of the art of Telautomatics as I had conceived it.

The next logical improvement was its application to automatic mechanisms beyond the limits of vision and at great distances from the centre of control, and I have ever since advocated their employment as instruments of warfare in preference to guns. The importance of this now seems to be recognised, if I am to judge from casual announcements through the press, of achievements which are said to be extraordinary but contain no merit of novelty, whatever. In an imperfect manner it is practicable, with the existing wireless plants, to launch an aeroplane, have it follow a certain approximate course, and perform some operation at a distance of many hundreds of miles. A machine of this kind can also be mechanically controlled in several ways and I have no doubt

that it may prove of some usefulness in war. But there are to my best knowledge, no instrumentalities in existence today with which such an object could be accomplished in a precise manner. I have devoted years of study to this matter and have evolved means, making such and greater wonders easily realisable.
As stated on a previous occasion, when I was a student at college I conceived a flying machine quite unlike the present ones. The underlying principle was sound, but could not be carried into practice for want of a prime-mover of sufficiently great activity. In recent years, I have successfully solved this problem and am now planning aerial machines *devoid of sustaining planes, ailerons, propellers, and other external* attachments, which will be capable of immense speeds and are very likely to furnish powerful arguments for peace in the near future. Such a machine, sustained and propelled *entirely by reaction*, is shown on one of the pages of my lectures, and is supposed to be controlled either mechanically, or by wireless energy. By installing proper plants, it will be practicable to *project a missile of this kind into the air and drop it* almost on the very spot designated, which may be thousands of miles away.

But we are not going to stop at this. Telautomats will be ultimately produced, capable of acting as if possessed of their own intelligence, and their advent will create a revolution. As early as 1898, I proposed to representatives of a large manufacturing concern the construction and public exhibition of an automobile carriage which, left to itself, would perform a great variety of operations involving something akin to judgment. But my proposal was deemed chimerical at the time and nothing came of it.

At present, many of the ablest minds are trying to devise expedients for preventing a repetition of the awful conflict which is only theoretically ended and the duration and main issues of which I have correctly predicted in an article printed in the SUN of December 20, 1914. The proposed League is not a remedy but, on the contrary, in the opinion of a number of competent men, may bring about results just the opposite.

It is particularly regrettable that a punitive policy was adopted in framing the terms of peace, because a few years hence, it will be possible for nations to fight without armies, ships or guns, by weapons far more terrible, to the destructive action and range of which there is virtually no limit. Any city, at a distance, whatsoever, from the enemy, can be destroyed by him and no power on earth can stop him from doing so. If we want to avert an impending calamity and a state of things which may transform the globe into an inferno, we should push the development of flying machines and wireless transmission of energy without an instant's delay and with all the power and resources of the nation.

40.

pressure than the boiler pressure. Two stop valves are coupled to the cylinders from the duplicate main range. The normal load of the engine is 2,500 I.H.P., but it is capable

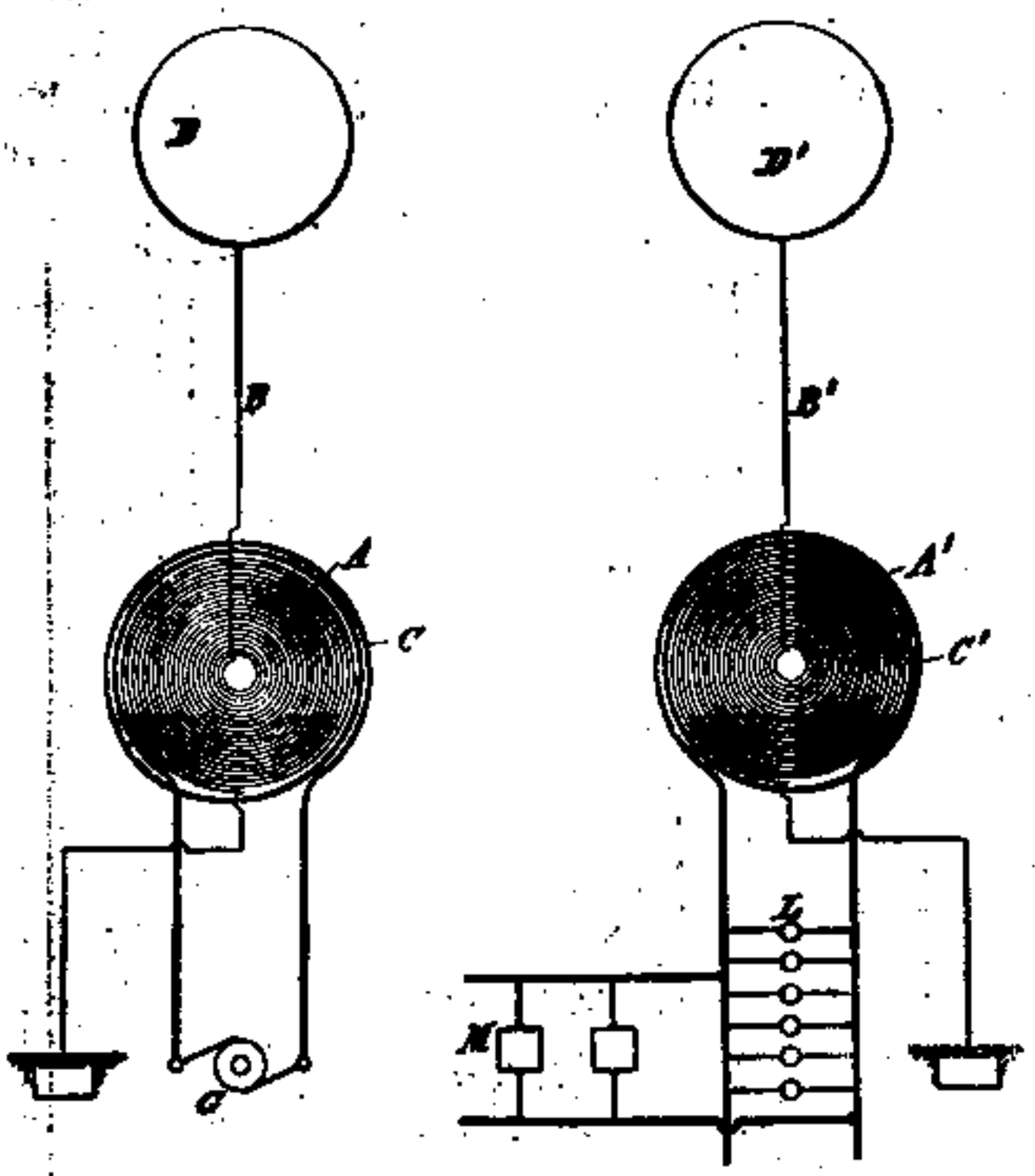

Tesla's High Potential and High Frequency Work.—Fig. 1.

of giving out fully 25 per cent. above this load. A heavy fly-wheel is keyed to the crankshaft, and the wheel boss is also prepared to fasten to the dynamo. The sides of the engine are entirely enclosed, and forced lubrication is adopted. Two ram pumps are fixed on this engine for this purpose, and pump the oil under pressure (which can be regulated at will) to the main bearings under and over, also to the crank pins, cross-head pins and slide blocks. A gauge is fixed in the pipes showing the pressure of oil supplied. The engines are very massive in appearance, and work noiselessly, and no vibration is discernible. The moving parts of the engines are balanced in the cranks. White anti-friction metal is used in all the bearings. The engine is also supplied with a large platform surrounding both cylinders, and an intermediate platform to enable the attendant to get at the cross-head, slides, and indicating apparatus.

The engine is made to work condensing and non-condensing, the condenser being on Korting's principle, and is supplied by water from a large tank over the boiler house.

The generator has been made by the Electric Construction Company, Limited. The normal output is 3,500 amperes at 410 volts, the range of voltage extending to 430 with 4,750 amperes as an emergency load, or with normal output up to 500 volts when required for tramway work. The somewhat high speed of revolution had the effect of limiting the number of poles, which was fixed at 12, each of which is energised by a double-coned shunt coil. The yoke frame, on account of its magnitude, and to facilitate erection and accessibility, is divided into six parts, and measures overall 20 feet 6 inches. The total weight of the machine is, approximately 120 tons. The armature core is carried by a balanced centre, provided with a double set of arms of oval section. The armature is tunnel wound, and the coils are formed in one piece, *i.e.*, without joint between one commutator segment and another, the commutator itself being 9 feet 10 inches in diameter. The brush gear includes an endless rack operated by worm gear and double hand wheels, so that when standing on the brush platform the attendant may replace old brushes by having the whole of the brush holders successively rotated past him. The current is taken off to the main terminals from the circular positive and negative brush bus bars by special terminal brushes, the current being too large to permit the use of flexible leads. Notwithstanding the magnitude of the machine, the number of parts involved and the difficulty of erection, it was started under load without incident, and was at once put on to Corporation supply mains, and has been in use almost daily from the end of December until recently, when the exigencies of the load no longer demanded it. The electrical efficiency of the set is over 98 per cent. The commercial efficiency has not yet been determined, owing to the machine having been required for service.

TESLA'S HIGH POTENTIAL AND HIGH FREQUENCY WORK.

Few inventors, in this last decade of a century of invention, have made a greater impression on the popular imagination than Nikola Tesla. Though by race a Southern Slav, he has now been settled for many years in the United States of America. From his race, it is to be presumed, he inherits his soaring scientific imagination, while from his environment he no doubt receives an extra stimulus to carry his fancies into practical effect.

Tesla, in the early part of his career, did some good work in connection with polyphase currents, but some 10 years ago he turned his attention to a comparatively new and unexplored field, namely, the production and utilisation of alternating currents of high frequency and high potential. Tesla's labours in this field have up to date revealed many new and startling phenomena, which, though they have as yet not found much practical application, may yet lead to the most astounding social and industrial revolutions.

A letter from Tesla, giving a sketch of his work and describing some recent experiments, appears in the *Electrical Review* (N.Y.), March 29th, 1899. From this and other sources we have derived the material for the following account of Tesla's investigations on the production of currents of extremely high potential:—

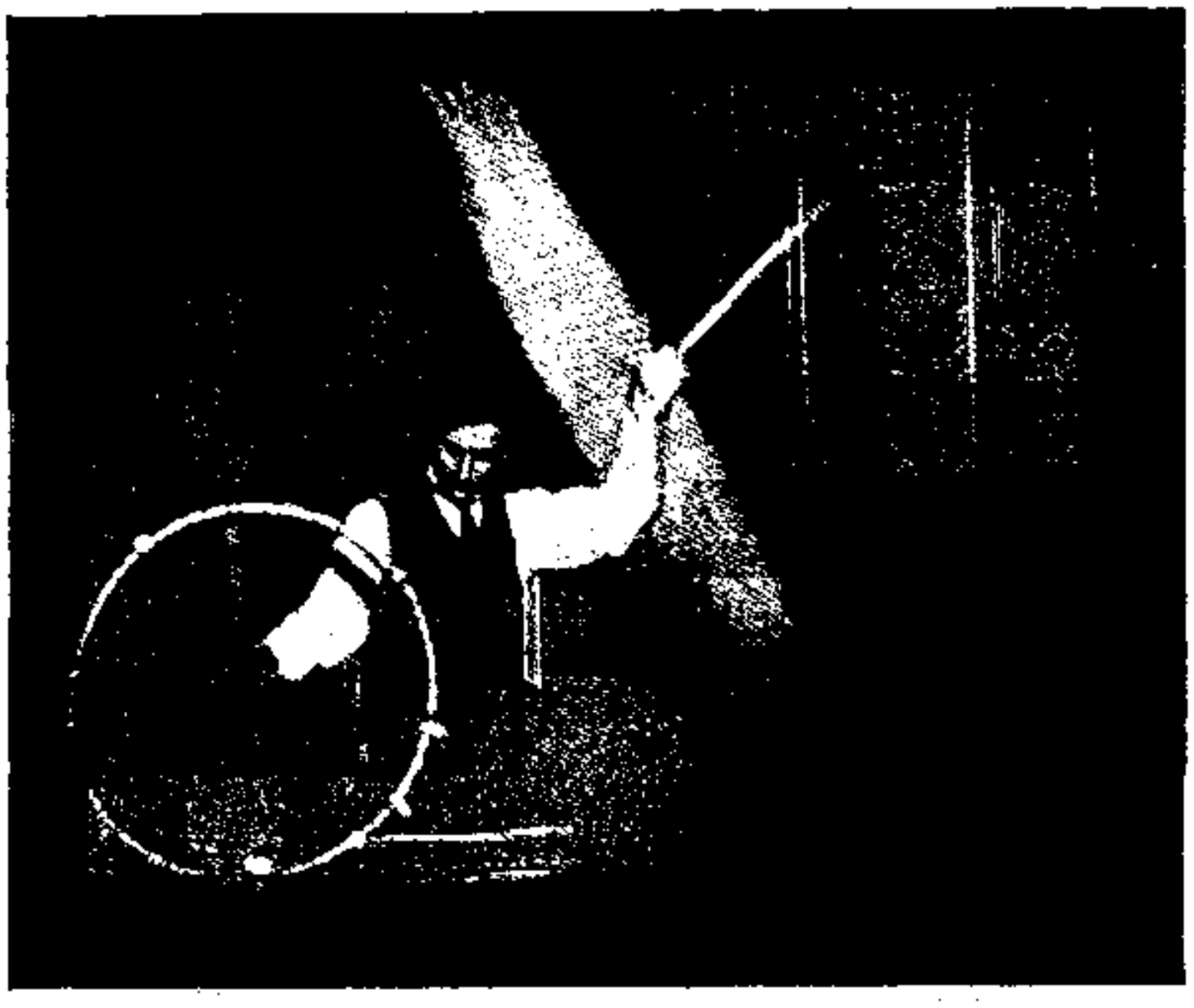

Fig. 4.—"Some Experiments in Tesla's Laboratory with Currents of High Potential and High Frequency."

The operator's body, in this experiment, is charged to a high potential by means of a coil responsive to the waves transmitted to it from a distant oscillator, and a long glass tube waved in the hand is lighted to great brilliancy by the electrical charges conveyed to it through the body.

At the beginning of his work Tesla found himself con-

fronted by three attractive lines of investigation; "there were the excessive electrical pressures of millions of volts, which opened up wonderful possibilities, if producible, in practical ways; there were the currents of many hundreds of thousands of amperes which appealed to the imagination by their astonishing effects; and, most interesting and inviting of all, there were the powerful electrical vibrations with their mysterious actions at a distance."

The production of high electrical pressures was finally chosen as, necessarily, the first step in the exploration of the whole field. Some attention was given to static electricity with the experiments of Franklin as a starting point. Various generators of static electricity were tried, and some new ones were designed. Tesla has not as yet published any account of these static generators which he has designed; it is to be hoped he will do so soon. The most valuable outcome of these experiments was the discovery of a method of operating any kind of low tension devices from such high pressure sources with perfect ease and safety.

Tesla, however, soon convinced himself that his object was not to be attained by the use of the steady pressures produced by static machines. "It was exactly," he says, "as if one attempted to drive piles into the ground by the application of continuous pressure. This would require cumbersome and powerful machinery, and would be very inconvenient. An incomparably better way of developing high pressure is by delivering violent blows as with a hammer." The kinetic energy of a hammer, when suddenly arrested, develops very high pressures, proportional to the rigidity of the body struck. In the same way, reasoned Tesla, enormously high potentials will be developed in the most convenient way by the electro-magnetic energy of a suddenly arrested current. This turned Tesla's attention to the use of transformers and induction coils for obtaining his high pressures. Those already in existence were evidently not adequate for the end in view, so Tesla set about improving them. First he tried the closed core transformer. This type was soon found to have several drawbacks; the insulation could not be made very high, and a very high frequency was impossible. Nevertheless, an arrangement of several of these transformers in series was devised, by which a pressure of 200,000 volts was attained. The secondary coils of several ring transformers were connected in series, while the primaries of all, except the first, were excited by insulated dynamos. This, however, was found to be practically a very inconvenient arrangement.

The straight open core type was then tried; several improvements in the insulation and arrangement of coils were tried, which appear to have been much the same as what has long been known to the makers of induction coils, such as winding in compartments, making the insulation thicker where a greater D.P. existed between adjacent parts of the coil, and so on. The first real advance made by Tesla appears to be his coil with a unipolar secondary. One terminal of the secondary wire is connected to the primary, the free terminal, as far distant as possible from the primary, being used for the discharge. A curious discovery made by Tesla in connection with this type of coil, was that the best results were got when the secondary wire was equal to a quarter of the wave length, as calculated from the frequency and velocity of light. This discovery Tesla has utilised in his most recent induction apparatus, with which he proposes to transmit electric currents through the air. It is difficult to explain this result; it appears as if something of the nature of a stationary wave of potential, with anode at the earthed terminal, was generated in the secondary wire.

Fig. 2.—"Some Experiments in Tesla's Laboratory with Currents of High Potential and High Frequency."

Lighting a disconnected vacuum bulb of 1,500 C.P. by high-frequency currents—photograph taken by the light of the bulb itself, exposure about two seconds.

During these experiments Tesla discovered that air played an important part in the breaking down of insulation, and by the exclusion of air, and the use of insulating liquids, he was able to increase the potential to 10 times the amount, without breaking down the insulation of the secondary. Tesla complains that the industrial world does not appear to have profited by the recognition of this discovery, since no attempt has been made to utilise it in cables for high potential transmission, to prevent streamers. It is a fact that the liquid insulation is less in favour in practice than when attention was first called to it by Tesla's experiments. It appears to have many practical inconveniences, and it is doubtful whether it is really superior to the solid insulation except for the high frequencies employed in the Tesla apparatus. An induction coil with viscous insulation was brought out a short time ago by Rochefort and Wydts,* and was said to be

* Electrical Review, 42, p. 165.

a great advance in efficiency, but it, like all the rest of such apparatus, has apparently dropped into disuse.

The final result of Tesla experiments with high tension generators was the coil or transformer illustrated in adjacent figure. In this coil the secondary coil is wound in a spiral lying practically in one plane perpendicular to its axis; its external terminal is earthed, and its length is made equal to a quarter wave length. The primary consists of a few turns of thick wire wound outside the secondary, lying thus adjacent (to the part of the secondary whose potential is zero. It is with this apparatus that Tesla has made his experiments in the transmission of power through the atmosphere. The figure shows two transformers, a transmitter, and a receiver. The central terminals are connected to elevated plates, D, D', which require to be supported at a considerable height on a kite or a balloon. Tesla thinks a height of four miles will be sufficient. The air at such a height is supposed to break down under the enormous potentials developed, and become dissociated into a good conductor. This system of Tesla's has yet only appeared on paper, or, at least, no experiments on a large scale have been carried out in public. The criticisms with which this scheme was received when announced last November were by no means favourable. But Tesla is a pioneer in this field, and probably knows more about it than his critics. It is to be hoped that we shall soon see such a practical trial of his system as will finally determine its true value.

Tesla hints at a fearful catastrophe which might result from the introduction of his system of wireless transmission of power. The discharges of his coil when of an electromotive force of a few million volts, excite powerful affinities in the atmospheric nitrogen, causing it to combine readily with the oxygen and other elements, particularly in the presence of aqueous vapour. So energetic are these actions, and so strangely do such powerful discharges behave, that, says Tesla, "I have often experienced a fear that the atmosphere might be ignited." Can Tesla seriously believe in the possibility of such a calamity and yet go on with his experiments? Evidently the Tesla transformer is what Sir William Crookes wants to increase our supply of nitrates, and keep the wheat crop up to the demands of the world's increasing population; it is to be hoped Tesla's experiments will not solve the food problem in another way by reducing the population to zero.

The large size illustrations we publish show some remarkable results obtained in Tesla's laboratory by this coil. Fig. 2 shows a vacuum tube giving 1,500 C.P. illuminated by electric waves from a Tesla oscillator. Fig. 3 is a photograph showing a part of the laboratory with a disconnected resonating coil supported on an insulating stand, and illuminated by the streamers produced, other coils remaining unaffected. The pressure developed in the resonating coil is over half a million volts. In a similar experiment Tesla grasped, without danger, a nodal point in a coil developing half a million volts. Fig. 4 shows a receiving coil illuminating a vacuum tube through the human body.

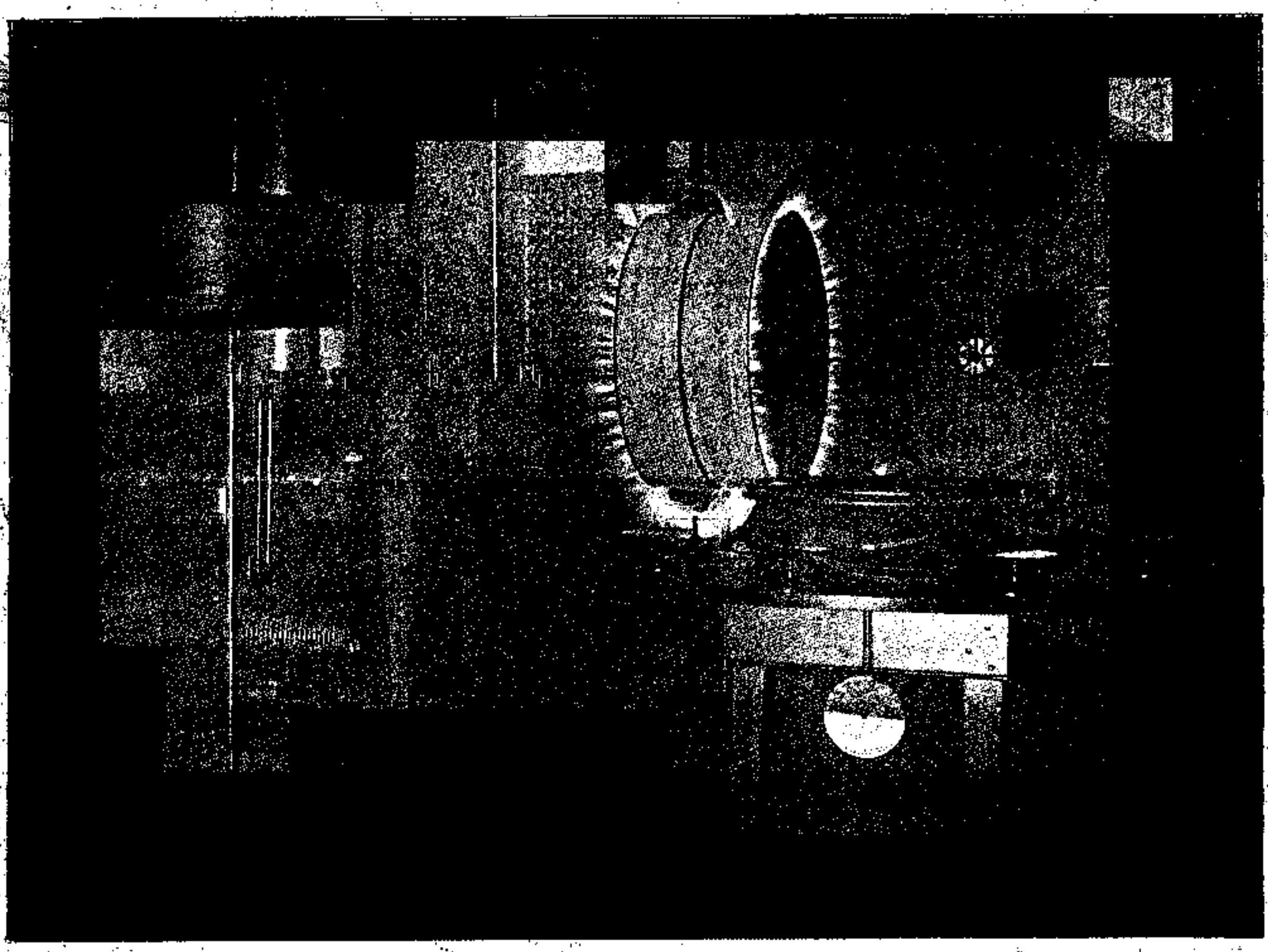

Fig. 3.—"Some Experiments in Tesla's Laboratory with Currents of High Potential and High Frequency."
Photograph showing a part of the laboratory, with a disconnected resonating coil supported on an insulating stand, and illuminated by the streamers produced, other coils remaining unaffected—the pressure developed in the resonating coil is over half a million volts.

Very few details of the construction and operation of these latest fruits of Tesla's inventive genius have yet been published. For instance, we are left in the dark as to whether Tesla excites his high tension transformer by an alternating dynamo, or by a continuous current and a contact breaker. It is evident that lately he has been giving considerable attention to the latter device, in connection with an induction coil which has been exhibited in this country, and is generally known as Tesla's oscillator.

In 1891 Tesla patented a method of producing high frequency and high potential currents, in which an alternating generator sends currents through a primary, the secondary of which is in circuit with a condenser. This condenser lies also in a shunt circuit containing the primary of a second coil and a spark gap. The discharge of the condenser across this spark gap produces high frequency oscillations in the shunt circuit, and these oscillations are raised to an exceedingly high potential in a secondary coil wound round the

second primary. It was with an arrangement such as this that Tesla obtained the marvellous results which he showed before the Institution of Electrical Engineers at the Royal Institution in 1892. The discharge from his apparatus appear to penetrate with ease the best insulators; electrodeless vacuum tubes were illuminated at a distance of several yards from the poles of his coil; unipolar lamps gave out a light of dazzling whiteness, but unfortunately of very small candle-power. It appears to be one of these unipolar lamps that is held in Tesla's hand in fig. 2. If so, very considerable progress has been made since the Royal Institution lecture in 1892.

It is a coil of the above type that is generally used for producing Tesla currents for electro-medical purposes. Their use for certain purposes in electro-therapeutics is said to have been highly successful. It is a curious fact that such discharges of a potential of tens of thousands of volts can be passed through the body without any injury. A satisfactory explanation of this strange phenomenon has not yet been given; it has been suggested that it is because these rapidly varying currents must be purely superficial; it may, perhaps, be due to the fact that such currents are almost completely wattless, owing to the displacement of phase between the current and the electromotive force being almost a maximum.

In 1896 Tesla patented an improved generator of high frequency currents, which is known in this country, at least, as Tesla's oscillator. The spark gap in his first type of generator was replaced by a mechanical contact breaker, and the arrangement of the circuits was somewhat different. A condenser is connected in shunt in a circuit containing a continuous current generator, choking coils, the primary of the coil, and a contact breaker. When the circuit is closed by the contact breaker a direct current flows through the circuit. The circuit is then suddenly broken, and the condenser is charged to a very high potential by the self-induction of the choking coils. The contact breaker again closes the circuit, and the condenser discharges through the primary, which, being of few turns, has a comparatively small self-induction. The result is, that the frequency is considerably higher than in the ordinary induction coil where the choking coils would form part of the primary coil. This oscillator has been shown more than once in this country; it can be worked from lighting mains, and its working appears to be highly satisfactory.

It is apparently in connection with this oscillator that Tesla has devoted himself to the improvement of the mechanical contact breaker. In his original patent for the oscillator (No. 20,981, A.D. 1896) he describes a rotary contact breaker, which creates by its motion a current of air about the contact points, with the view apparently of removing the dissociated air, and improving the insulation of the spark gap. It is in a more recent patent (No. 12,866, A.D. 1898) on electric circuit controllers that we find embodied Tesla's latest discoveries in this field. The contact breakers there described are mechanical, of a very elaborate construction; too elaborate, we should think, for general use with induction coils, unless their superiority to the present simpler forms is very great. Two new ideas appear to be embodied in these interrupters; first, the break takes place in compressed air or other suitable gas, and second, a jet of mercury discharged against a metal plate, or another jet of mercury is used to complete the circuit. The metal plate is rotated by an electro-motor, and is notched on the periphery where the jet of mercury impinges, so that contact is broken when the jet passes through one of the notches between the teeth. Tesla has expressed a somewhat ungenerous contempt for the Wehnelt break, which has recently given such remarkable results in the hands of experimenters here and abroad. Its inferiority to Tesla's break appears to be known as yet only to Tesla; in simplicity, at least, it is certainly superior.

We, however, wish Tesla success in the working out of his grandly conceived, and if realised in practice, undoubtedly epoch-making ideas.

The Royal Society.—Among the papers down for reading yesterday afternoon was one by Mr. A. E. Tutton, "The Thermal Expansion of Pure Nickel and Cobalt."

TELEGRAPH AND TELEPHONE NOTES.

(*Continued from page* 728.)

Glasgow Telephones.—The Glasgow Chamber of Commerce last week considered the Government Telephone Bill. The chairman said that the Bill which Mr. Hanbury had introduced had disappointed those who desired to see the telephones of the country handled by a department of the Civil Service, Post Office, or otherwise. This Bill was in some measure a retrograde step. It seemed that the Treasury desired not to go through with the matter at the present time, or it might be that the Bill might lead pretty directly to what they desired, because the very production of this measure had lowered the value of the National Telephone Company's shares so much that it was a very much easier thing for the Government to buy up the Telephone Company than it was three months ago. If there had been no such thing as a National Telephone Company in existence, he quite believed that the great Corporations might have gone into this business and done it very well. It was arranged to send a deputation to Mr. Hanbury on Wednesday.

Glasgow Corporation Sub-Committee on the Opening of Streets has decided to appeal to the Railway Commissioners against Sheriff Berry's decision that the Postmaster-General is entitled to lay wires under the public streets, and that the municipality cannot attach the condition that they shall not be allotted to a licensee. The appeal will probably be heard by the Commissioners along with a somewhat similar appeal taken by the Corporation of Edinburgh.

International Complications in British Telegraph Offices in the Far East.—The following correspondence has recently appeared in the *Times* (previous to the semi-official announcement regarding the Pacific cable agreement):—

Sir,—Mr. Hanbury's courage in grappling with the telephone difficulty is of happy augury for the Government's action in a kindred department—that which has to deal with the Imperial cable question. In that problem, too, a similar solution is obviously demanded, namely, State ownership and State exploitation. No half-and-half arrangement of subsidy and partial control will be satisfactory for two reasons—it will be more expensive and the control will prove illusory and inefficient. Owing to the conditions surrounding cable work it is exceedingly difficult to exercise sufficiently close supervision on "the man in possession"; indeed, everything points to the necessity for tightening the grip of the State in this direction, and it is to be hoped that the Government will not seek to make a devolution of its Imperial responsibilities upon any company or corporation whatsoever.

Rumour has been busy with this subject lately, and it is confidently affirmed in certain quarters that the working of the projected all-British cables is about to be entrusted to the companies known as the Pender group. The supposed inertia of officialdom—an idea which has been somewhat rudely dispelled by Mr. Hanbury—gave an air of probability to the rumour. It is true that the course foreshadowed would save the Government a world of trouble, but there are considerations which do most effectually put that group out of court. This is not the place to enter on a review of their treatment of the public and the Press—that is another story; I refer to a matter of more importance than either.

Some years ago the Pender group effected an amalgamation of office in Hong Kong with the Great Northern Telegraph Company of Copenhagen, whose cable connects with the Russian Government Telegraph Administration. It would seem that the Danish company handed over its rights in that agreement to Russia, inasmuch as the company's representative in London declared in an interview some months ago that the cable worked from the joint office and introduced as a Danish cable is now Russian property. Consequently the Pender group are responsible for the existence of this dangerous anomaly—that Russian officials are admitted to an important telegraph office in an outpost of the empire, through which all telegraphic communications with our Government, public, and Press must necessarily pass! There, at any rate, the door is wide open. It will not do for the Pender group to plead ignorance of the intimate relations existing between the Danish company and the Russian Government; that was a matter of common knowledge in China long before the amalgamation.

But apart from considerations of public safety, it may well be doubted whether any great cable service should be left to the mercy of City vicissitudes and the ebb and flow of City morality. There is a period in the history of many companies when the Board know nothing, and the wirepullers respect nothing. The public have never realised what golden opportunities a cable service presents to the latter; they can favour certain clients at the expense of others; they can run rivalry with clients in their legitimate business, and they can appropriate the clients' property. We do not suppose that cable companies differ greatly from others as regards their management, but this we do know, that no other conditions offer such temptations, nor render detection so difficult.

These being some of the abuses to which telegraph services are liable, it will be seen that there are weighty arguments in favour of State ownership and State exploitation.

The colonies, I understand, are ready to provide five-ninths of the subsidy for the projected cables. To the Government I say, with all respect, "Do not put our money on the wrong horse."

Your obedient servant,

COLONIAL.

Sir,—The letter in your issue of Saturday, April 1st, under the above heading, signed "Colonial," states that the Great Northern Telegraph Company's "representative in London" declared in an interview some months ago that the cable worked from the joint office (in Hong Kong), and introduced as a Danish cable, is now Russian property.

Permit me to point out—first, that I am not aware of having had any "interview" with anybody on the subject referred to for a whole year, or not since April, 1898 and the gist of my observations on that occasion to a representative of the *Westminster Gazette*, as quoted in that paper of April 27th, 1898, was quite the reverse of the statement attributed to me by "Colonial;" secondly, that I never made, nor could have made, any such statement—(1) because, as pointed out at the said interview, one of the very objects of the joint working arrangement of the two companies in the Far East was to leave the leadership and control of the Hong Kong station to the British company (the Eastern Extension Telegraph Company); (2) because the cable from Hong Kong to Amoy and further to Shanghai, Japan, and Siberia is, and always has been, the property of the Danish company, the Great Northern Telegraph Company, in whose service there is not a single Russian, but a number of Englishmen, and whose shares are more largely held in this than in any other country, while not a single share is held in Russia.

As to the relations of the company with foreign Governments, they are, happily, as intimate with the British as with the Russian and other Governments on whose territories our cables are landed.

The other invidious insinuations of "Colonial" I may safely leave unanswered; they are beneath notice.

I am, Sir, your obedient servant,

F. C. C. NIELSEN, the company's representative in England.

Great Northern Telegraph Company,
8, St. Helen's Place, E.C., April 10th.

The Philadelphia Experiment

Project Rainbow

The Philadelphia Experiment, otherwise known as Project Rainbow, has been a subject of long controversy and debate. It was an attempt by the Navy to create a ship that could not be detected by magnetic mines and or radar. However, its results were far different and much more dangerous than the Navy ever expected. Although the story itself seems too bizarre to be true, far too many coincidences have occurred for it to not be based upon some small iota of truth. The technical data that has also been presented upon the subject hold far too much credence to be ignored. Many of the stories associated with this infamous experiment are wild: whispers of men 'freezing' in time for months, rumors of men traveling through time, and horror stories of men becoming stuck in bulkheads or even the floor of the ship itself. Naturally, the first questions one would want to ask would deal with the specifics of the experiment: who, what, when, where, and how.

History

In the early 1930's, the University of Chicago investigated the possibility of invisibility through the use of electricity. This project was later moved to Princeton's Institute of Advanced Studies. The research went unnoticed and continued on until the 1940's. The ship that was eventually used for the experiment, the USS Eldridge, was commissioned at the New York Navy Yard on August 27, 1943 (Department of the Navy). According to Al Bielek, a man who claims to have been a crew member, the first tests done were in July of 1943 and the final test was on August 12, 1943. However, others claim that the experiment took place on October 28, 1943. Substantial evidence points to the October date as being more accurate. The Navy has released the Eldridge's deck log and war diary and at no time was the Eldridge in Philadelphia. However, the records could have easily been changed. The Eldridge's war diary reads as such: The Eldridge remained in New York and the Long Island Sound until September 16, when it left for Bermuda. From September 18 to October 15, it underwent training and sea trials. On October 18, it left in a convoy for New York and remained there until November 1. From November 1 to the 2, it went on a convoy to Norfolk and on November 3 left in a convoy for Casablanca. The Eldridge arrived in Casablanca on November 22 and stayed there until November 29, when it left for New York again in another convoy. The Eldridge arrived in New York on December 17. From December 17 to December 31, it traveled to Norfolk with four other ships (Department of the Navy). Although this is not the entire war log, it is the log of the ship during the suspected time the experiment took place (October 28, as mentioned above). It would seem that the Navy never did experiments on the Eldridge at any time, but the government has been known to cover up because of national security before. An example of such a situation would be the Manhattan project. This secret project was the building of the atomic bomb and no word was ever said about it until it was obvious that we had an atomic bomb.

The Navy, in a search for a plausible answer, has suggested that perhaps the Philadelphia Experiment was confused with experiments done attempting invisibility to magnetic mines. This was a process known as degaussing. The Navy defines degaussing as:

"...a process in which a system of electrical cables are installed around the circumference of the ship's hull, running from bow to stern on both sides. A measured electrical current is passed through these cables to cancel out the ship's magnetic field. Degaussing equipment was installed in the hull of Navy ships and could be turned on whenever the ship was in waters that might contain magnetic mines..."

(-Department of the Navy)

The Navy performed another experiment on the USS Timmerman's generating plant in the 1950's. The experiment tried to obtain 1,000 Hz instead of the standard 400 Hz from the generator (Department of the Navy). It resulted in light discharges. These light discharges may have been witnessed by Carlos Miguele Allende and caused him to start writing letters to prominent men in the scientific community. The Navy believes that Allende mistook the experiment on the Timmerman for the Philadelphia Experiment.

Witnesses

Carlos Miguele Allende, also known as Carl Allen, was an odd man. He was born on May 31, 1925 in a small town outside of Pennsylvania. On July 14, 1942, Allende joined the Marine Corps and was discharged on May 21, 1943 (Taken from the book titled The Philadelphia Experiment, pg 99). He then joined the Merchant Marine and was assigned to the SS Andrew Furuseth. It was upon this ship that he claimed to see the Eldridge in action.

Allende's story was bizarre; he stated that he had witnessed the Eldridge being transported instantaneously to Norfolk from Philadelphia and back again in a matter of minutes. Upon researching the matter further, he learned of extremely odd occurrences associated with the project and wrote a basic summation of his newly learned knowledge in a letter to Dr. Morris K. Jessup. Dr. Jessup was an astronomer and Allende had been in the audience of one of Dr. Jessup's lectures. Apparently having some respect for the man, he decided to entrust Dr. Jessup with his knowledge. The letters were written oddly: with capitalization, punctuation, and underlines located in various places. The letters were also written in several colors. In his letters, Allende revealed horrifying details of the Philadelphia Experiment to Dr. Jessup. Because Dr. Jessup was something of a believer in odd phenomenon he did not entirely dismiss the ideas presented to him. He wrote back to Allende and requested new information. The return address upon the letter never existed according to the mail service, yet Allende still received Dr. Jessup's reply. Allende responded with more detailed letters but the correspondence eventually discontinued because Dr. Jessup dismissed it as a hoax. During the time of Dr. Jessup's and Allende's correspondence, Dr. Jessup had just recently published his book titled The Case for UFO's. After Allende had written to Dr. Jessup, this book was sent to the Navy and had hand-written notes inside the book. The notes were in the same writing as in the letters sent to Dr. Jessup and eventually Dr. Jessup was asked by the Navy to view the notes.

Dr. Jessup recognized the writing immediately, but he was somewhat astonished, as he had concluded earlier that it was merely a hoax to trick him. The notes in the book were more detailed than in the letters and were highly insightful, so Dr. Jessup eventually believed them and researched the matter. Unfortunately, Dr. Jessup could not find any new leads. Only one antalizing clue had shown up. Two crewmen had been walking in a park when a haggard looking man approached them. The man told them a fantastic story about an experiment done in which most of the crew died or suffered terrible side effects. He said that the government then claimed the entire crew was insane so that when they came forward, they would merely be dismissed as a group of crazy people who had merely concocted some fantastic story. After the conversation, one crew member was convinced while the other was not. Eventually, the member that had been convinced contacted Dr. Jessup and told him the story. Although this was a substantial lead, Dr. Jessup was not getting very far and he found that his reputation in the scientific community was worsening. Faced with overwhelming odds, Dr. Jessup eventually committed suicide on April 20, 1959, believing "another existence of universe being better than this miserable world." (The Philadelphia Experiment, 79). Some believe that his suicide was actually an assassination

by government agencies to keep the experiment quiet.

Unfortunately for Dr. Jessup, a major clue in the puzzle turned up shortly after his death. This clue was a man by the name of Alfred D. Bielek.

Bielek's story is even more bizarre than Allende's. He claims that he was transported in time to the future and that here in the future he was brainwashed by the Navy. This brainwashing led him to believe that his name was Alfred Bielek, rather than his true name, Edward Cameron. Upon discovering his true identity, he tracked down his brother who had also participated in the experiment. Bielek claims that his brother time traveled to 1983 and lost his 'time-lock'. As a result, his brother aged one year every hour and eventually died. Bielek then claims that his brother was reborn. Needless to say, only a small group of people believe Bielek and nearly everyone thinks that his stories are based on some truth, but he's exaggerating the truth for personal reasons. This popular opinion seems to be reinforced when Bielek starts remembering things only after having seen the movie "The Philadelphia Experiment". Bielek has a Ph.D. in Physics, so he does have some technical experience. He is also a retired electrical engineer with thirty years of experience. Because of his obvious intelligence and skill, he cannot be discounted entirely. Bielek stated that the technology used in the Philadelphia Experiment was given to us by aliens. However, the germanium transistor, which was what Bielek said had been used, was invented by Thomas Henry Moray.

Bielek also stated that Dr. Albert Einstein, Dr. John von Neumann, and Dr. Nikola Tesla were involved in the project. Some controversy has arisen as to the participation of Tesla because he died in New York city on January 7, 1943, which was only a two month period of time after the project took place. Einstein, on the other hand, suggested such a project as this to the Navy on several occasions. Because of this, he was probably involved in the project. As for von Neumann, there is no evidence to refute or promote his active participation in the matter. There is evidence that supports the fact that he later continued on the experiment at a different time.

The principle that lay behind the Philadelphia Experiment was the Unified Field Theory. This theory states that gravity and magnetism are connected, just as mass and energy are connected through the formula E=mc2. Einstein never solved the Unified Field Theory, but the very nature of the Philadelphia Experiment suggests otherwise. It is probably that this theory has become a government secret because it is capable of doing many things, possibly even space travel without the assistance of rockets.

Evidence

In a search for actual technical data on the experiment, not much information can be found that isn't tainted with doubt and speculation. The basic design has two large Tesla coils (electromagnets) placed on each hull of the ship. The coils are turned on in a special sequence and their magnetic force is so powerful that they warp gravity itself. Bielek also says that on August 12 every twenty years, the magnetic field of the Earth reaches a peak and allows the synchronization between the Tesla coils. The oscillator which Bielek claims to have run the coils in a special pattern looks more like an Army field kitchen refrigeration unit than anything else. Many believe that's exactly what it is and Bielek's story is just a hoax. Bielek gave it a technical name however: the "Zero Time Reference Generator". The oscillators would synchronize with the adjustable phase angle and created a scalar type wave (Anderson). Several scientists today have attacked Bielek's testimony on this, as they believe a vector wave would have been more efficient and probable. Bielek also does not make clear if the power used is AC or DC, pulsed or rotating, and what the Microwave and Radar frequencies are. In other words, Bielek

provides almost no accurate technical information that can be used.

Rick Anderson however, may be able to shed some light upon the subject. He states that four RF transmitters were phased to produce a rotating field. This field was pulsed at a 10% duty cycle. Instead of two coils, he says that four coils would have been set upon the deck of the ship and would be run by two generators that were pulsed in a counter-clockwise motion. Anderson states that the Tesla coils use a total of 7,500 feet, or 1.42 miles of #16 magnet wire. Because of this enormous quantity, no one has privately undertaken the experiment; the wire would be too expensive and also must to be wound in a special way (Anderson). Other scientists believe that Nuclear Magnetic Resonance and the science of the Philadelphia Experiment are connected.

Nuclear Magnetic Resonance is also known as Magnetic Resonance Imaging, or MRI. Yet another scientist named Alexander S. Fraser believes that everyone is wrong about the electromagnetic qualities of the experiment. He believes that it was never done with electromagnetism, but with thermal fields. This thermal field could have caused the optical mirage effect which several witnesses reported. Fraser says that Allende had spoken of a 'scorch' field, fire, and optical wavering, all of which are products of a thermal field. As for the part about the Eldridge disappearing in front of their very eyes, certain weather conditions have been known in the ocean to cause islands to disappear as well. These weather conditions were taking place the day of the experiment. Yet another scientist believes that sonic and ultrasonic waves were used. The sonic waves could have been used to create an 'air blanket' around the ship, which is consistent with reports. There were many experiments done in the 1940's with high power ultrasonic waves, which indicates a high probability of the Philadelphia Experiment being one of them. Strong sonic fields are known for having bad side effects upon humans, which is also consistent with reports. The green haze which was presumably around the ship was caused by *"exciting the surrounding sea water with powerful ultrasonics -- 'sonoluminescense' and related phenomena." (Anderson) The ultrasonic field would have caused the crew to pass out and make the journey from Philadelphia to Norfolk seem to last only a couple minutes. Needless to say, the technicalities of the Philadelphia Experiment are a matter of hot debate among scientists and no one seems to be able to provide any solid evidence. As Rick Anderson aptly puts it: "An electronics person knows that, without a DETAILED, comprehensive THEORY behind bench set-up, he is not going to know how to set up voltages and currents, power levels, frequencies, wave forms, pulse widths or duty cycles. If there's a chance a circuit won't work, Murphy's Law dictates that it WON'T more often than not."*

(-Anderson)

More Details

If the technicalities of the experiment are vague and a matter of controversy, the results of the experiment are just as foggy. One fact which everyone seem to agree on is that a field was extended many yards, up to perhaps one hundred, outside of the ship and into the water (Anonymous). Everything inside of this sphere was vague in form and the only visible shape was the hull of the Eldridge in the water. This field seemed to have a greenish color and was misty. Another fact everyone agrees was that the Eldridge did not function properly after the experiment and became a source of trouble. The last item everyone believes is that terrible side effects were manifested upon the crew members. However, when one delves deeper into that particular subject, no one agrees on what the specific details are. Some witnesses, Allende and Bielek in particular, state that matter itself was changed and that men were able

to walk through physical objects. When the field was shut off, some crew members were found stuck in bulkheads, others in the floor. Some were found with the railings of the ship stuck through their bodies. It was a horrendous sight. The sailors supposedly went crazy after this and raided a bar. They told the bar maid their story and completely terrified her. According to Allende, a newspaper article was written upon the raid, but no specific date was named, so the article cannot be found. Most crew members went insane, but a few retained their sanity, only to be thrust into worse situations. One man sat down to dinner with his wife and child, but then got up from the table, walked through the wall, and was never seen again. Two others simply disappeared into thin air and were also never seen again. Another crew member vanished in the middle of a fight, much to his opponent's astonishment. All three incidents had several witnesses. Yet the worse side effects were when men got 'stuck'. Getting stuck consisted of becoming invisible and being unable to move, speak, or interact with other people for a period of time. This was told of by Allende in his letters to Dr. Jessup. Getting stuck by the crew members was known as "Hell Incorporated". (The Philadelphia Experiment, 42). It was also known as the Freeze. A common freeze would last minutes to hours and was damaging psychologically, but did not cause madness. A man would only come out of the Freeze if other crew members laid their hands upon him to give him strength. Unfortunately, in one instance of the "Laying of Hands," two men who attempted to lay hands upon the man burst into flames and burned for eighteen days (The Philadelphia Experiment, 44). The fires could not be stopped, despite multiple attempts to quench the flames. Needless to say, the Laying of Hands was discontinued from that point on. Then, men started going into the Deep Freeze, when a man would be frozen for several days to several months. During this time, the man is completely aware of others and their actions but was unable to communicate to them or interact with them. Men in the Deep Freeze can only be seen by other crew members. It only takes two days for a man to go completely crazy in the Deep Freeze. The first deep freeze took six months and five million dollars worth of research and equipment to correct (The Philadelphia Experiment, 43). The man who was stuck for six went completely insane by the time he got out. Carlos Allende wrote: "Usually a A Deep Freeze Man goes Mad, Stark raving, Gibbering, Running MAD, if His freeze is far More than a Day in our time." (The Philadelphia Experiment, 42) Rick Anderson uncovered research that states this disappearance or freezing of people is the Zeeman Effect. "Zeemanising - the Zeeman Effect is defined as spreading out of the spectral lines of atoms under the influence of a strong magnetic field." (Anderson) The few remaining sailors have a high PSI factor which is intensified by fear or hypnosis. Unfortunately, they have all been discharged from the Navy as mentally unfit.

Beyond Imagination

The Philadelphia Experiment has become a saga of strange occurrences and peculiar coincidences. It should be noted that Allende firmly believes the Navy was completely unaware of the side effects the Philadelphia Experiment would produce on the crew members. Allende is also quoted as saying: "I believe that further experiments would naturally have produced controlled transport of great tonnages at ultra-fast speeds to a desired point the instant it is desired. "(Allende). A full report of the Experiment was given to Congress and the members were so horrified that they disbanded the project immediately. However, research continued at the Montauk Project, a.k.a. the Phoenix Project, which was headed by Dr. John von Neumann, who also directed the Philadelphia Experiment. The Montauk Project centered mostly on how the mind reacts to interdimensional travel. It took place at the Brookhaven National Laboratories. Von Neumann attempted to link computers with minds and was apparently successful beyond his wildest dreams. Using this computer-human link, Von Neumann could affect others minds and was eventually able to open a time vortex back to 1943 to the Philadelphia Experiment. He even

made claims that the mind could created matter at any point in time. He also claimed to have sent a man named Preston B. Nichols through two times lines, a fact which was actually confirmed by Duncan Cameron in 1985 (Montauk). Cameron was trained by the National Security Agency, so his testimony is valid. Many people believe that the Montauk Project is continuing to this day, although much of the information available about it is only rumor.

The Philadelphia Experiment was a key part of American history because it demonstrates what a government is willing to do to have an advantage in war.

- Mark Bean

END OF FILE

The Strange Life of Nikola Tesla

Nikola Tesla

Table of Contents

The Strange Life of Nikola Tesla **1**
Nikola Tesla 1
Chapter 1: My Early Life 1
Chapter 2 6
Chapter 3 10
Chapter 4: The Discovery of the Tesla Coil and Transformer 15
Chapter 5 19
Chapter 6 24

The Strange Life of Nikola Tesla

Nikola Tesla

- Chapter I
- Chapter II
- Chapter III
- Chapter IV
- Chapter V
- Chapter VI

This page copyright © 2000 Blackmask Online.

http://www.blackmask.com by Nikola Tesla

Chapter 1: My Early Life

The progressive development of man is vitally dependent on invention. It is the most important product of his creative brain. Its ultimate purpose is the complete mastery of mind over the material world, the harnessing of the forces of nature to human needs. This is the difficult task of the inventor who is often misunderstood and unrewarded. But he finds ample compensation in the pleasing exercises of his powers and in the knowledge of being one of that exceptionally privileged class without whom the race would have long ago perished in the bitter struggle against pitiless elements. Speaking for myself, I have already had more than my full measure of this exquisite enjoyment; so much, that for many years my life was little short of continuous rapture. I am credited with being one of the hardest workers and perhaps I am, if thought is the equivalent of labor, for I have devoted to it almost all of my waking hours. But if work is interpreted to be a definite performance in a specified time according to a rigid rule, then I may be the worst of idlers.

Every effort under compulsion demands a sacrifice of life−energy. I never paid such a price. On the contrary, I have thrived on my thoughts. In attempting to give a connected and faithful account of my activities in this story of my life, I must dwell, however reluctantly, on the impressions of my youth and the circumstances and events which have been instrumental in determining my career. Our first endeavors are purely instinctive promptings of an imagination vivid and undisciplined. As we grow older, reason asserts itself and we become more and more systematic and designing. But those early impulses, though not immediately productive, are of the greatest moment and may shape our very destinies. Indeed, I feel now that had I understood and cultivated instead of suppressing them, I would have added substantial value to my bequest to the world. But not until I had attained manhood did I realize that I was an inventor.

This was due to a number of causes. In the first place I had a brother who was gifted to an extraordinary degree; one of those rare phenomena of mentality which biological investigation has failed to explain. His premature death left my earth parents disconsolate. (I will explain my remark about my "earth parents" later.) We owned a horse which had been presented to us by a dear friend. It was a magnificent animal of Arabian breed, possessed of almost human intelligence, and was cared for and petted by the whole family, having on one occasion saved my dear father's life under remarkable circumstances.

My father had been called one winter night to perform an urgent duty and while crossing the mountains, infested by wolves, the horse became frightened and ran away, throwing him violently to the ground. It arrived home bleeding and exhausted, but after the alarm was sounded, immediately dashed off again, returning to the spot, and before the searching party were far on the way they were met by my father, who had recovered consciousness and remounted, not realizing that he had been lying in the snow for several

hours. This horse was responsible for my brother's injuries from which he died. I witnessed the tragic scene and although so many years have elapsed since, my visual impression of it has lost none of its force. The recollection of his attainments made every effort of mine seem dull in comparison. Anything I did that was creditable merely caused my parents to feel their loss more keenly. So I grew up with little confidence in myself.

But I was far from being considered a stupid boy, if I am to judge from an incident of which I have still a strong remembrance. One day the Aldermen were passing through a street where I was playing with other boys. The oldest of these venerable gentlemen, a wealthy citizen, paused to give a silver piece to each of us. Coming to me, he suddenly stopped and commanded, "Look in my eyes." I met his gaze, my hand outstretched to receive the much valued coin, when to my dismay, he said, "No, not much; you can get nothing from me. You are too smart."

They used to tell a funny story about me. I had two old aunts with wrinkled faces, one of them having two teeth protruding like the tusks of an elephant, which she buried in my cheek every time she kissed me. Nothing would scare me more then the prospects of being kissed by these affectionate, unattractive relatives. It happened that while being carried in my mother's arms, they asked who was the prettier of the two. After examining their faces intently, I answered thoughtfully, pointing to one of them, "This here is not as ugly as the other."

Then again, I was intended from my very birth for the clerical profession and this thought constantly oppressed me. I longed to be an engineer, but my father was inflexible. He was the son of an officer who served in the army of the Great Napoleon and in common with his brother, professor of mathematics in a prominent institution, had received a military education; but, singularly enough, later embraced the clergy in which vocation he achieved eminence. He was a very erudite man, a veritable natural philosopher, poet and writer and his sermons were said to be as eloquent as those of Abraham a−Sancta−Clara. He had a prodigious memory and frequently recited at length from works in several languages. He often remarked playfully that if some of the classics were lost he could restore them. His style of writing was much admired. He penned sentences short and terse and full of wit and satire. The humorous remarks he made were always peculiar and characteristic. Just to illustrate, I may mention one or two instances.

Among the help, there was a cross−eyed man called Mane, employed to do work around the farm. He was chopping wood one day. As he swung the ax, my father, who stood nearby and felt very uncomfortable, cautioned him, "For God's sake, Mane, do not strike at what you are looking but at what you intend to hit."

On another occasion he was taking out for a drive a friend who carelessly permitted his costly fur coat to rub on the carriage wheel. My father reminded him of it saying, "Pull in your coat; you are ruining my tire."

He had the odd habit of talking to himself and would often carry on an animated conversation and indulge in heated argument, changing the tone of his voice. A casual listener might have sworn that several people were in the room.

Although I must trace to my mother's influence whatever inventiveness I possess, the training he gave me must have been helpful. It comprised all sorts of exercises − as, guessing one another's thoughts, discovering the defects of some form of expression, repeating long sentences or performing mental calculations. These daily lessons were intended to strengthen memory and reason, and especially to develop the critical sense, and were undoubtedly very beneficial.

My mother descended from one of the oldest families in the country and a line of inventors. Both her father and grandfather originated numerous implements for household, agricultural and other uses. She was a truly great woman, of rare skill, courage and fortitude, who had braved the storms of life and passed through many

a trying experience. When she was sixteen, a virulent pestilence swept the country. Her father was called away to administer the last sacraments to the dying and during his absence she went alone to the assistance of a neighboring family who were stricken by the dread disease. She bathed, clothed and laid out the bodies, decorating them with flowers according to the custom of the country and when her father returned he found everything ready for a Christian burial.

My mother was an inventor of the first order and would, I believe, have achieved great things had she not been so remote from modern life and its multifold opportunities. She invented and constructed all kinds of tools and devices and wove the finest designs from thread which was spun by her. She even planted the seeds, raised the plants and separated the fibers herself. She worked indefatigably, from break of day till late at night, and most of the wearing apparel and furnishings of the home were the product of her hands. When she was past sixty, her fingers were still nimble enough to tie three knots in an eyelash.

There was another and still more important reason for my late awakening. In my boyhood I suffered from a peculiar affliction due to the appearance of images, often accompanied by strong flashes of light, which marred the sight of real objects and interfered with my thoughts and action. They were pictures of things and scenes which I had really seen, never of those imagined. When a word was spoken to me the image of the object it designated would present itself vividly to my vision and sometimes I was quite unable to distinguish whether what I saw was tangible or not. This caused me great discomfort and anxiety. None of the students of psychology or physiology whom I have consulted, could ever explain satisfactorily these phenomenon. They seem to have been unique although I was probably predisposed as I know that my brother experienced a similar trouble. The theory I have formulated is that the images were the result of a reflex action from the brain on the retina under great excitation. They certainly were not hallucinations such as are produced in diseased and anguished minds, for in other respects I was normal and composed. To give an idea of my distress, suppose that I had witnessed a funeral or some such nerve−wracking spectacle. Then, inevitably, in the stillness of night, a vivid picture of the scene would thrust itself before my eyes and persist despite all my efforts to banish it. If my explanation is correct, it should be possible to project on a screen the image of any object one conceives and make it visible. Such an advance would revolutionize all human relations. I am convinced that this wonder can and will be accomplished in time to come. I may add that I have devoted much thought to the solution of the problem.

I have managed to reflect such a picture, which I have seen in my mind, to the mind of another person, in another room. To free myself of these tormenting appearances, I tried to concentrate my mind on something else I had seen, and in this way I would often obtain temporary relief; but in order to get it I had to conjure continuously new images. It was not long before I found that I had exhausted all of those at my command; my 'reel' had run out as it were, because I had seen little of the world − only objects in my home and the immediate surroundings. As I performed these mental operations for the second or third time, in order to chase the appearances from my vision, the remedy gradually lost all its force. Then I instinctively commenced to make excursions beyond the limits of the small world of which I had knowledge, and I saw new scenes. These were at first very blurred and indistinct, and would flit away when I tried to concentrate my attention upon them. They gained in strength and distinctness and finally assumed the concreteness of real things. I soon discovered that my best comfort was attained if I simply went on in my vision further and further, getting new impressions all the time, and so I began to travel; of course, in my mind. Every night, (and sometimes during the day), when alone, I would start on my journeys − see new places, cities and countries; live there, meet people and make friendships and acquaintances and, however unbelievable, it is a fact that they were just as dear to me as those in actual life, and not a bit less intense in their manifestations.

This I did constantly until I was about seventeen, when my thoughts turned seriously to invention. Then I observed to my delight that I could visualize with the greatest facility. I needed no models, drawings or experiments. I could picture them all as real in my mind. Thus I have been led unconsciously to evolve what I consider a new method of materializing inventive concepts and ideas, which is radially opposite to the purely

experimental and is in my opinion ever so much more expeditious and efficient.

The moment one constructs a device to carry into practice a crude idea, he finds himself unavoidably engrossed with the details of the apparatus. As he goes on improving and reconstructing, his force of concentration diminishes and he loses sight of the great underlying principle. Results may be obtained, but always at the sacrifice of quality. My method is different. I do not rush into actual work. When I get an idea, I start at once building it up in my imagination. I change the construction, make improvements and operate the device in my mind. It is absolutely immaterial to me whether I run my turbine in thought or test it in my shop. I even note if it is out of balance. There is no difference whatever; the results are the same. In this way I am able to rapidly develop and perfect a conception without touching anything. When I have gone so far as to embody in the invention every possible improvement I can think of and see no fault anywhere, I put into concrete form this final product of my brain. Invariably my device works as I conceived that it should, and the experiment comes out exactly as I planned it. In twenty years there has not been a single exception. Why should it be otherwise? Engineering, electrical and mechanical, is positive in results. There is scarcely a subject that cannot be examined beforehand, from the available theoretical and practical data. The carrying out into practice of a crude idea as is being generally done, is, I hold, nothing but a waste of energy, money, and time.

My early affliction had however, another compensation. The incessant mental exertion developed my powers of observation and enabled me to discover a truth of great importance. I had noted that the appearance of images was always preceded by actual vision of scenes under peculiar and generally very exceptional conditions, and I was impelled on each occasion to locate the original impulse. After a while this effort grew to be almost automatic and I gained great facility in connecting cause and effect. Soon I became aware, to my surprise, that every thought I conceived was suggested by an external impression. Not only this but all my actions were prompted in a similar way. In the course of time it became perfectly evident to me that I was merely an automation endowed with power of movement responding to the stimuli of the sense organs and thinking and acting accordingly. The practical result of this was the art of teleautomatics which has been so far carried out only in an imperfect manner. Its latent possibilities will, however be eventually shown. I have been years planning self−controlled automata and believe that mechanisms can be produced which will act as if possessed of reason, to a limited degree, and will create a revolution in many commercial and industrial departments. I was about twelve years of age when I first succeeded in banishing an image from my vision by willful effort, but I never had any control over the flashes of light to which I have referred. They were, perhaps, my strangest and [most] inexplicable experience. They usually occurred when I found myself in a dangerous or distressing situations or when I was greatly exhilarated. In some instances I have seen all the air around me filled with tongues of living flame. Their intensity, instead of diminishing, increased with time and seemingly attained a maximum when I was about twenty−five years old.

While in Paris in 1883, a prominent French manufacturer sent me an invitation to a shooting expedition which I accepted. I had been long confined to the factory and the fresh air had a wonderfully invigorating effect on me. On my return to the city that night, I felt a positive sensation that my brain had caught fire. I was a light as though a small sun was located in it and I passed the whole night applying cold compressions to my tortured head. Finally the flashes diminished in frequency and force but it took more than three weeks before they wholly subsided. When a second invitation was extended to me, my answer was an emphatic NO!

These luminous phenomena still manifest themselves from time to time, as when a new idea opening up possibilities strikes me, but they are no longer exciting, being of relatively small intensity. When I close my eyes I invariably observe first, a background of very dark and uniform blue, not unlike the sky on a clear but starless night. In a few seconds this field becomes animated with innumerable scintillating flakes of green, arranged in several layers and advancing towards me. Then there appears, to the right, a beautiful pattern of two systems of parallel and closely spaced lines, at right angles to one another, in all sorts of colors with yellow, green, and gold predominating. Immediately thereafter, the lines grow brighter and the whole is

thickly sprinkled with dots of twinkling light. This picture moves slowly across the field of vision and in about ten seconds vanishes on the left, leaving behind a ground of rather unpleasant and inert gray until the second phase is reached. Every time, before falling asleep, images of persons or objects flit before my view. When I see them I know I am about to lose consciousness. If they are absent and refuse to come, it means a sleepless night. To what an extent imagination played in my early life, I may illustrate by another odd experience.

Like most children, I was fond of jumping and developed an intense desire to support myself in the air. Occasionally a strong wind richly charged with oxygen blew from the mountains, rendering my body light as cork and then I would leap and float in space for a long time. It was a delightful sensation and my disappointment was keen when later I undeceived myself. During that period I contracted many strange likes, dislikes and habits, some of which I can trace to external impressions while others are unaccountable. I had a violent aversion against the earrings of women, but other ornaments, as bracelets, pleased me more or less according to design. The sight of a pearl would almost give me a fit, but I was fascinated with the glitter of crystals or objects with sharp edges and plane surfaces. I would not touch the hair of other people except, perhaps at the point of a revolver. I would get a fever by looking at a peach and if a piece of camphor was anywhere in the house it caused me the keenest discomfort. Even now I am not insensible to some of these upsetting impulses. When I drop little squares of paper in a dish filled with liquid, I always sense a peculiar and awful taste in my mouth. I counted the steps in my walks and calculated the cubical contents of soup plates, coffee cups and pieces of food, otherwise my meal was unenjoyable. All repeated acts or operations I performed had to be divisible by three and if I missed I felt impelled to do it all over again, even if it took hours. Up to the age of eight years, my character was weak and vacillating. I had neither courage or strength to form a firm resolve. My feelings came in waves and surges and variated unceasingly between extremes. My wishes were of consuming force and like the heads of the hydra, they multiplied. I was oppressed by thoughts of pain in life and death and religious fear. I was swayed by superstitious belief and lived in constant dread of the spirit of evil, of ghosts and ogres and other unholy monsters of the dark. Then all at once, there came a tremendous change which altered the course of my whole existence.

Of all things I liked books best. My father had a large library and whenever I could manage I tried to satisfy my passion for reading. He did not permit it and would fly in a rage when he caught me in the act. He hid the candles when he found that I was reading in secret. He did not want me to spoil my eyes. But I obtained tallow, made the wicking and cast the sticks into tin forms, and every night I would bush the keyhole and the cracks and read, often till dawn, when all others slept and my mother started on her arduous daily task.

On one occasion I came across a novel entitled Aoafi, (the son of Aba), a Serbian translation of a well known Hungarian writer, Josika. This work somehow awakened my dormant powers of will and I began to practice self−control. At first my resolutions faded like snow in April, but in a little while I conquered my weakness and felt a pleasure I never knew before − that of doing as I willed.

In the course of time this vigorous mental exercise became second to nature. At the outset my wishes had to be subdued but gradually desire and will grew to be identical. After years of such discipline I gained so complete a mastery over myself that I toyed with passions which have meant destruction to some of the strongest men. At a certain age I contracted a mania for gambling which greatly worried my parents. To sit down to a game of cards was for me the quintessence of pleasure. My father led an exemplary life and could not excuse the senseless waste of my time and money in which I indulged. I had a strong resolve, but my philosophy was bad. I would say to him, "I can stop whenever I please, but is it worth while to give up that which I would purchase with the joys of paradise?" On frequent occasions he gave vent to his anger and contempt, but my mother was different. She understood the character of men and knew that one's salvation could only be brought about through his own efforts. One afternoon, I remember, when I had lost all my money and was craving for a game, she came to me with a roll of bills and said, "Go and enjoy yourself. The sooner you lose all we possess, the better it will be. I know that you will get over it." She was right. I

conquered my passion then and there and only regretted that it had not been a hundred times as strong. I not only vanquished but tore it from my heart so as not to leave even a trace of desire.

Ever since that time I have been as indifferent to any form of gambling as to picking teeth. During another period I smoked excessively, threatening to ruin my health. Then my will asserted itself and I not only stopped but destroyed all inclination. Long ago I suffered from heart trouble until I discovered that it was due to the innocent cup of coffee I consumed every morning. I discontinued at once, though I confess it was not an easy task. In this way I checked and bridled other habits and passions, and have not only preserved my life but derived an immense amount of satisfaction from what most men would consider privation and sacrifice.

After finishing the studies at the Polytechnic Institute and University, I had a complete nervous breakdown and, while the malady lasted, I observed many phenomena, strange and unbelievable...

The Strange Life of Nikola Tesla

Chapter 2

I shall dwell briefly on these extraordinary experiences, on account of their possible interest to students of psychology and physiology and also because this period of agony was of the greatest consequence on my mental development and subsequent labors. But it is indispensable to first relate the circumstances and conditions which preceded them and in which might be found their partial explanation.

From childhood I was compelled to concentrate attention upon myself. This caused me much suffering, but to my present view, it was a blessing in disguise for it has taught me to appreciate the inestimable value of introspection in the preservation of life, as well as a means of achievement. The pressure of occupation and the incessant stream of impressions pouring into our consciousness through all the gateways of knowledge make modern existence hazardous in many ways. Most persons are so absorbed in the contemplation of the outside world that they are wholly oblivious to what is passing on within themselves. The premature death of millions is primarily traceable to this cause. Even among those who exercise care, it is a common mistake to avoid imaginary, and ignore the real dangers. And what is true of an individual also applies, more or less, to a people as a whole.

Abstinence was not always to my liking, but I find ample reward in the agreeable experiences I am now making. Just in the hope of converting some to my precepts and convictions I will recall one or two.

A short time ago I was returning to my hotel. It was a bitter cold night, the ground slippery, and no taxi to be had. Half a block behind me followed another man, evidently as anxious as myself to get under cover. Suddenly my legs went up in the air. At the same instant there was a flash in my brain. The nerves responded, the muscles contracted. I swung 180 degrees and landed on my hands. I resumed my walk as though nothing had happened when the stranger caught up with me. "How old are you?" he asked, surveying me critically.

"Oh, about fifty−nine," I replied, "What of it?"

"Well," said he, "I have seen a cat do this but never a man." About a month ago I wanted to order new eye glasses and went to an oculist who put me through the usual tests. He looked at me incredulously as I read off with ease the smallest print at considerable distance. But when I told him I was past sixty he gasped in astonishment. Friends of mine often remark that my suits fit me like gloves but they do not know that all my clothing is made to measurements which were taken nearly fifteen years ago and never changed. During this same period my weight has not varied one pound. In this connection I may tell a funny story.

One evening, in the winter of 1885, Mr. Edison, Edward H. Johnson, the President of the Edison Illuminating Company, Mr. Batchellor, Manager of the works, and myself, entered a little place opposite 65 Firth Avenue, where the offices of the company were located. Someone suggested guessing weights and I was induced to step on a scale. Edison felt me all over and said: "Tesla weighs 152 lbs. to an ounce," and he guessed it exactly. Stripped I weighed 142 pounds, and that is still my weight. I whispered to Mr. Johnson; "How is it possible that Edison could guess my weight so closely?"

"Well," he said, lowering his voice. "I will tell you confidentially, but you must not say anything. He was employed for a long time in a Chicago slaughter−house where he weighed thousands of hogs every day. That's why."

My friend, the Hon. Chauncey M. Dupew, tells of an Englishman on whom he sprung one of his original anecdotes and who listened with a puzzled expression, but a year later, laughed out loud. I will frankly confess it took me longer than that to appreciate Johnson's joke. Now, my well−being is simply the result of a careful and measured mode of living and perhaps the most astonishing thing is that three times in my youth I was rendered by illness a hopeless physical wreck and given up by physicians. More than this, through ignorance and lightheartedness, I got into all sorts of difficulties, dangers and scrapes from which I extricated myself as by enchantment. I was almost drowned, entombed, lost and frozen. I had hair−breadth escapes from mad dogs, hogs, and other wild animals. I passed through dreadful diseases and met with all kinds of odd mishaps and that I am whole and hearty today seems like a miracle. But as I recall these incidents to my mind I feel convinced that my preservation was not altogether accidental, but was indeed the work of divine power. An inventor's endeavor is essentially life saving. Whether he harnesses forces, improves devices, or provides new comforts and conveniences, he is adding to the safety of our existence. He is also better qualified than the average individual to protect himself in peril, for he is observant and resourceful. If I had no other evidence that I was, in a measure, possessed of such qualities, I would find it in these personal experiences. The reader will be able to judge for himself if I mention one or two instances.

On one occasion, when about fourteen years old, I wanted to scare some friends who were bathing with me. My plan was to dive under a long floating structure and slip out quietly at the other end. Swimming and diving came to me as naturally as to a duck and I was confident that I could perform the feat. Accordingly I plunged into the water and, when out of view, turned around and proceeded rapidly towards the opposite side. Thinking that I was safely beyond the structure, I rose to the surface but to my dismay struck a beam. Of course, I quickly dived and forged ahead with rapid strokes until my breath was beginning to give out. Rising for the second time, my head came again in contact with a beam. Now I was becoming desperate. However, summoning all my energy, I made a third frantic attempt but the result was the same. The torture of suppressed breathing was getting unendurable, my brain was reeling and I felt myself sinking. At that moment, when my situation seemed absolutely hopeless, I experienced one of those flashes of light and the structure above me appeared before my vision. I either discerned or guessed that there was a little space between the surface of the water and the boards resting on the beams and, with consciousness nearly gone, I floated up, pressed my mouth close to the planks and managed to inhale a little air, unfortunately mingled with a spray of water which nearly choked me. Several times I repeated this procedure as in a dream until my heart, which was racing at a terrible rate, quieted down, and I gained composure. After that I made a number of unsuccessful dives, having completely lost the sense of direction, but finally succeeded in getting out of the trap when my friends had already given me up and were fishing for my body. That bathing season was spoiled for me through recklessness but I soon forgot the lesson and only two years later I fell into a worse predicament.

There was a large flour mill with a dam across the river near the city where I was studying at the time. As a rule the height of the water was only two or three inches above the dam and to swim to it was a sport not very dangerous in which I often indulged. One day I went alone to the river to enjoy myself as usual. When I was a short distance from the masonry, however, I was horrified to observe that the water had risen and was

carrying me along swiftly. I tried to get away but it was too late. Luckily, though, I saved myself from being swept over by taking hold of the wall with both hands. The pressure against my chest was great and I was barely able to keep my head above the surface. Not a soul was in sight and my voice was lost in the roar of the fall. Slowly and gradually I became exhausted and unable to withstand the strain longer. Just as I was about to let go, to be dashed against the rocks below, I saw in a flash of light a familiar diagram illustrating the hydraulic principle that the pressure of a fluid in motion is proportionate to the area exposed and automatically I turned on my left side. As if by magic, the pressure was reduced and I found it comparatively easy in that position to resist the force of the stream. But the danger still confronted me. I knew that sooner or later I would be carried down, as it was not possible for any help to reach me in time, even if I had attracted attention. I am ambidextrous now, but then I was left−handed and had comparatively little strength in my right arm. For this reason I did not dare to turn on the other side to rest and nothing remained but to slowly push my body along the dam. I had to get away from the mill towards which my face was turned, as the current there was much swifter and deeper. It was a long and painful ordeal and I came near to failing at its very end, for I was confronted with a depression in the masonry. I managed to get over with the last ounce of my strength and fell in a swoon when I reached the bank, where I was found. I had torn virtually all the skin from my left side and it took several weeks before the fever had subsided and I was well. These are only two of many instances, but they may be sufficient to show that had it not been for the inventor's instinct, I would not have lived to tell the tale.

Interested people have often asked me how and when I began to invent. This I can only answer from my present recollection in the light of which, the first attempt I recall was rather ambitious for it involved the invention of an apparatus and a method. In the former it was anticipated, but the later was original. It happened in this way. One of my playmates had come into the possession of a hook and fishing tackle which created quite an excitement in the village, and the next morning all started out to catch frogs. I was left alone and deserted owing to a quarrel with this boy. I had never seen a real hook and pictured it as something wonderful, endowed with peculiar qualities, and was despairing not to be one of the party. Urged by necessity, I somehow got hold of a piece of soft iron wire, hammered the end to a sharp point between two stones, bent it into shape, and fastened it to a strong string. I then cut a rod, gathered some bait, and went down to the brook where there were frogs in abundance. But I could not catch any and was almost discouraged when it occurred to me dangle the empty hook in front of a frog sitting on a stump. At first he collapsed but by and by his eyes bulged out and became bloodshot, he swelled to twice his normal size and made a vicious snap at the hook. Immediately I pulled him up. I tried the same thing again and again and the method proved infallible. When my comrades, who in spite of their fine outfit had caught nothing, came to me, they were green with envy. For a long time I kept my secret and enjoyed the monopoly but finally yielded to the spirit of Christmas. Every boy could then do the same and the following summer brought disaster to the frogs.

In my next attempt, I seem to have acted under the first instinctive impulse which later dominated me − to harness the energies of nature to the service of man. I did this through the medium of May bugs, or June bugs as they are called in America, which were a veritable pest in that country and sometimes broke the branches of trees by the sheer weight of their bodies. The bushes were black with them. I would attach as many as four of them to a cross−piece, rotably arranged on a thin spindle, and transmit the motion of the same to a large disc and so derive considerable "power." These creatures were remarkably efficient, for once they were started, they had no sense to stop and continued whirling for hours and hours and the hotter it was, the harder they worked. All went well until a strange boy came to the place. He was the son of a retired officer in the Austrian army. That urchin ate May bugs alive and enjoyed them as though they were the finest blue point oysters. That disgusting sight terminated my endeavors in this promising field and I have never since been able to touch a May bug or any other insect for that matter.

After that, I believe, I undertook to take apart and assemble the clocks of my grandfather. In the former operation I was always successful, but often failed in the latter. So it came that he brought my work to a

sudden halt in a manner not too delicate and it took thirty years before I tackled another clockwork again.

Shortly thereafter, I went into the manufacture of a kind of pop−gun which comprised a hollow tube, a piston, and two plugs of hemp. When firing the gun, the piston was pressed against the stomach and the tube was pushed back quickly with both hands. the air between the plugs was compressed and raised to a high temperature and one of them was expelled with a loud report. The art consisted in selecting a tube of the proper taper from the hollow stalks which were found in our garden. I did very well with that gun, but my activities interfered with the window panes in our house and met with painful discouragement.

If I remember rightly, I then took to carving swords from pieces of furniture which I could conveniently obtain. At that time I was under the sway of the Serbian national poetry and full of admiration for the feats of the heroes. I used to spend hours in mowing down my enemies in the form of cornstalks which ruined the crops and netted me several spankings from my mother. Moreover, these were not of the formal kind but the genuine article.

I had all this and more behind me before I was six years old and had passed through one year of elementary school in the village of Smiljan where my family lived. At this juncture we moved to the little city of Gospic nearby. This change of residence was like a calamity to me. It almost broke my heart to part from our pigeons, chickens and sheep, and our magnificent flock of geese which used to rise to the clouds in the morning and return from the feeding grounds at sundown in battle formation, so perfect that it would have put a squadron of the best aviators of the present day to shame. In our new house I was but a prisoner, watching the strange people I saw through my window blinds. My bashfulness was such that I would rather have faced a roaring lion than one of the city dudes who strolled about. But my hardest trial came on Sunday when I had to dress up and attend the service. There I met with an accident, the mere thought of which made my blood curdle like sour milk for years afterwards. It was my second adventure in a church. Not long before, I was entombed for a night in an old chapel on an inaccessible mountain which was visited only once a year. It was an awful experience, but this one was worse.

There was a wealthy lady in town, a good but pompous woman, who used to come to the church gorgeously painted up and attired with an enormous train and attendants. One Sunday I had just finished ringing the bell in the belfry and rushed downstairs, when this grand dame was sweeping out and I jumped on her train. It tore off with a ripping noise which sounded like a salvo of musketry fired by raw recruits. My father was livid with rage. He gave me a gentle slap on the cheek, the only corporal punishment he ever administered to me, but I almost feel it now. The embarrassment and confusion that followed are indescribable. I was practically ostracized until something else happened which redeemed me in the estimation of the community.

An enterprising young merchant had organized a fire department. A new fire engine was purchased, uniforms provided and the men drilled for service and parade. The engine was beautifully painted red and black. One afternoon, the official trial was prepared for and the machine was transported to the river. The entire population turned out to witness the great spectacle. When all the speeches and ceremonies were concluded, the command was given to pump, but not a drop of water came from the nozzle. The professors and experts tried in vain to locate the trouble. The fizzle was complete when I arrived at the scene. My knowledge of the mechanism was nil and I knew next to nothing of air pressure, but instinctively I felt for the suction hose in the water and found that it had collapsed. When I waded in the river and opened it up, the water rushed forth and not a few Sunday clothes were spoiled. Archimedes running naked through the streets of Syracuse and shouting Eureka at the top of his voice did not make a greater impression than myself. I was carried on the shoulders and was hero of the day.

Upon settling in the city I began a four years course in the so−called Normal School preparatory to my studies at the College or Real−Gymnasium. During this period my boyish efforts and exploits as well as troubles, continued.

Among other things, I attained the unique distinction of champion crow catcher in the country. My method of procedure was extremely simple. I would go into the forest, hide in the bushes, and imitate the call of the birds. Usually I would get several answers and in a short while a crow would flutter down into the shrubbery near me. After that, all I needed to do was to throw a piece of cardboard to detract its attention, jump up and grab it before it could extricate itself from the undergrowth. In this way I would capture as many as I desired. But on one occasion something occurred which made me respect them. I had caught a fine pair of birds and was returning home with a friend. When we left the forest, thousands of crows had gathered making a frightful racket. In a few minutes they rose in pursuit and soon enveloped us. The fun lasted until all of a sudden I received a blow on the back of my head which knocked me down. Then they attacked me viciously. I was compelled to release the two birds and was glad to join my friend who had taken refuge in a cave.

In the school room there were a few mechanical models which interested me and turned my attention to water turbines. I constructed many of these and found great pleasure in operating them. How extraordinary was my life an incident may illustrate. My uncle had no use for this kind of pastime and more than once rebuked me. I was fascinated by a description of Niagara Falls I had perused, and pictured in my imagination a big wheel run by the falls. I told my uncle that I would go to America and carry out this scheme. Thirty years later I was able to see my ideas carried out at Niagara and marveled at the unfathomable mystery of the mind.

I made all kinds of other contrivances and contraptions but among those, the arbalests I produced were the best. My arrows, when short, disappeared from sight and at close range traversed a plank of pine one inch thick. Through the continuous tightening of the bows I developed a skin on my stomach much like that of a crocodile and I am often wondering whether it is due to this exercise that I am able even now to digest cobble−stones! Nor can I pass in silence my performances with the sling which would have enabled me to give a stunning exhibit at the Hippodrome. And now I will tell of one of my feats with this unique implement of war which will strain to the utmost the credulity of the reader.

I was practicing while walking with my uncle along the river. The sun was setting, the trout were playful and from time to time one would shoot up into the air, its glistening body sharply defined against a projecting rock beyond. Of course any boy might have hit a fish under these propitious conditions but I undertook a much more difficult task and I foretold to my uncle, to the minutest detail, what I intended doing. I was to hurl a stone to meet the fish, press its body against the rock, and cut it in two. It was no sooner said than done. My uncle looked at me almost scared out of his wits and exclaimed "Vade retra Satanae!" and it was a few days before he spoke to me again. Other records, however great, will be eclipsed but I feel that I could peacefully rest on my laurels for a thousand years.

The Strange Life of Nikola Tesla

Chapter 3

At the age of ten I entered the Real Gymnasium which was a new and fairly well equipped institution. In the department of physics were various models of classical scientific apparatus, electrical and mechanical. The demonstrations and experiments performed from time to time by the instructors fascinated me and were undoubtedly a powerful incentive to invention. I was also passionately fond of mathematical studies and often won the professor's praise for rapid calculation. This was due to my acquired facility of visualizing the figures and performing the operation, not in the usual intuitive manner, but as in actual life. Up to a certain degree of complexity it was absolutely the same to me whether I wrote the symbols on the board or conjured them before my mental vision. But freehand drawing, to which many hours of the course were devoted, was an annoyance I could not endure. This was rather remarkable as most of the members of the family excelled in it. Perhaps my aversion was simply due to the predilection I found in undisturbed thought. Had it not been for a few exceptionally stupid boys, who could not do anything at all, my record would have been the worst.

It was a serious handicap, as under the then existing educational regime drawing being obligatory, this deficiency threatened to spoil my whole career and my father had considerable trouble in railroading me from one class to another.

In the second year at that institution I became obsessed with the idea of producing continuous motion through steady air pressure. The pump incident, of which I have been told, had set afire my youthful imagination and impressed me with the boundless possibilities of a vacuum. I grew frantic in my desire to harness this inexhaustible energy but for a long time I was groping in the dark. Finally, however, my endeavors crystallized in an invention which was to enable me to achieve what no other mortal ever attempted. Imagine a cylinder freely rotatable on two bearings and partly surrounded by a rectangular trough which fits it perfectly. The open side of the trough is enclosed by a partition so that the cylindrical segment within the enclosure divides the latter into two compartments entirely separated from each other by air−tight sliding joints. One of these compartments being sealed and once for all exhausted, the other remaining open, a perpetual rotation of the cylinder would result. At least, so I thought.

A wooden model was constructed and fitted with infinite care and when I applied the pump on one side and actually observed that there was a tendency to turning, I was delirious with joy. Mechanical flight was the one thing I wanted to accomplish although still under the discouraging recollection of a bad fall I sustained by jumping with an umbrella from the top of a building. Every day I used to transport myself through the air to distant regions but could not understand just how I managed to do it. Now I had something concrete, a flying machine with nothing more than a rotating shaft, flapping wings, and − a vacuum of unlimited power! From that time on I made my daily aerial excursions in a vehicle of comfort and luxury as might have befitted King Solomon. It took years before I understood that the atmospheric pressure acted at right angles to the surface of the cylinder and that the slight rotary effort I observed was due to a leak! Though this knowledge came gradually it gave me a painful shock.

I had hardly completed my course at the Real Gymnasium when I was prostrated with a dangerous illness or rather, a score of them, and my condition became so desperate that I was given up by physicians. During this period I was permitted to read constantly, obtaining books from the public library which had been neglected and entrusted to me for classification of the works and preparation of catalogues.

One day I was handed a few volumes of new literature unlike anything I had ever read before and so captivating as to make me utterly forget my hopeless state. They were the earlier works of Mark Twain and to them might have been due the miraculous recovery which followed. Twenty−five years later, when I met Mr. Clements and we formed a friendship between us, I told him of the experience and was amazed to see that great man of laughter burst into tears...

My studies were continued at the higher Real Gymnasium in Carlstadt, Croatia, where one of my aunts resided. She was a distinguished lady, the wife of a colonel who was an old war−horse having participated in many battles, I can never forget the three years I passed at their home. No fortress in time of war was under a more rigid discipline. I was fed like a canary bird. All the meals were of the highest quality and deliciously prepared, but short in quantity by a thousand percent. The slices of ham cut by my aunt were like tissue paper. When the colonel would put something substantial on my plate she would snatch it away and say excitedly to him; "Be careful. Niko is very delicate."

I had a voracious appetite and suffered like Tantalus.

But I lived in an atmosphere of refinement and artistic taste quite unusual for those times and conditions. The land was low and marshy and malaria fever never left me while there despite the enormous amounts of quinine I consumed. Occasionally the river would rise and drive an army of rats into the buildings, devouring everything, even to the bundles of fierce paprika. These pests were to me a welcome diversion. I thinned their

ranks by all sorts of means, which won me the unenviable distinction of rat−catcher in the community. At last, however, my course was completed, the misery ended, and I obtained the certificate of maturity which brought me to the crossroads.

During all those years my parents never wavered in their resolve to make me embrace the clergy, the mere thought of which filled me with dread. I had become intensely interested in electricity under the stimulating influence of my professor of physics, who was an ingenious man and often demonstrated the principles by apparatus of his own invention. Among these I recall a device in the shape of a freely rotatable bulb, with tinfoil coating, which was made to spin rapidly when connected to a static machine. It is impossible for me to convey an adequate idea of the intensity of feeling I experienced in witnessing his exhibitions of these mysterious phenomena. Every impression produced a thousand echoes in my mind. I wanted to know more of this wonderful force; I longed for experiment and investigation and resigned myself to the inevitable with aching heart. Just as I was making ready for the long journey home I received word that my father wished me to go on a shooting expedition. It was a strange request as he had been always strenuously opposed to this kind of sport. But a few days later I learned that the cholera was raging in that district and, taking advantage of an opportunity, I returned to Gospic in disregard to my parent's wishes. It is incredible how absolutely ignorant people were as to the causes of this scourge which visited the country in intervals of fifteen to twenty years. They thought that the deadly agents were transmitted through the air and filled it with pungent odors and smoke. In the meantime they drank infested water and died in heaps. I contracted the dreadful disease on the very day of my arrival and although surviving the crisis, I was confined to bed for nine months with scarcely any ability to move. My energy was completely exhausted and for the second time I found myself at Death's door.

In one of the sinking spells which was thought to be the last, my father rushed into the room. I still see his pallid face as he tried to cheer me in tones belying his assurance. "Perhaps," I said, "I may get well if you will let me study engineering." "You will go to the best technical institution in the world," he solemnly replied, and I knew that he meant it. A heavy weight was lifted from my mind but the relief would have come too late had it not been for a marvelous cure brought through a bitter decoction of a peculiar bean. I came to life like Lazarus to the utter amazement of everybody.

My father insisted that I spend a year in healthful physical outdoor exercise to which I reluctantly consented. For most of this term I roamed in the mountains, loaded with a hunter's outfit and a bundle of books, and this contact with nature made me stronger in body as well as in mind. I thought and planned, and conceived many ideas almost as a rule delusive. The vision was clear enough but the knowledge of principles was very limited.

In one of my inventions, I proposed to convey letters and packages across the seas, through a submarine tube, in spherical containers of sufficient strength to resist the hydraulic pressure. The pumping plant, intended to force the water through the tube, was accurately figured and designed and all other particulars carefully worked out. Only one trifling detail, of no consequence, was lightly dismissed. I assumed an arbitrary velocity of the water and, what is more, took pleasure in making it high, thus arriving at a stupendous performance supported by faultless calculations. Subsequent reflections, however, on the resistance of pipes to fluid flow induced me to make this invention public property.

Another one of my projects was to construct a ring around the equator which would, of course, float freely and could be arrested in its spinning motion by reactionary forces, thus enabling travel at a rate of about one thousand miles an hour, impracticable by rail. The reader will smile. The plan was difficult of execution, I will admit, but not nearly so bad as that of a well known New York professor, who wanted to pump the air from the torrid to temperate zones, entirely forgetful of the fact that the Lord had provided a gigantic machine for this purpose.

Still another scheme, far more important and attractive, was to derive power from the rotational energy of terrestrial bodies. I had discovered that objects on the earth's surface owing to the diurnal rotation of the globe, are carried by the same alternately in and against the direction of translatory movement. From this results a great change in momentum which could be utilized in the simplest imaginable manner to furnish motive effort in any habitable region of the world. I cannot find words to describe my disappointment when later I realized that I was in the predicament of Archimedes, who vainly sought for a fixed point in the universe.

At the termination of my vacation I was sent to the polytechnic school in Gratz, Styria (Austria), which my father had chosen as one of the oldest and best reputed institutions. That was the moment I had eagerly awaited and I began my studies under good auspices and firmly resolved to succeed. My previous training was above average, due to my father's teaching and opportunities afforded. I had acquired the knowledge of a number of languages and waded through the books of several libraries, picking up information more or less useful. Then again, for the first time, I could choose my subjects as I liked, and free−hand drawing was to bother me no more.

I had made up my mind to give my parents a surprise, and during the whole first year I regularly started my work at three o'clock in the morning and continued until eleven at night, no Sundays or holidays excepted. As most of my fellow−students took things easily, naturally I eclipsed all records. In the course of the year I passed through nine exams and the professors thought I deserved more than the highest qualifications. Armed with their flattering certificates, I went home for a short rest, expecting triumph, and was mortified when my father made light of these hard−won honors.

That almost killed my ambition; but later, after he had died, I was pained to find a package of letters which the professors had written to him to the effect that unless he took me away from the institution I would be killed through overwork. Thereafter I devoted myself chiefly to physics, mechanics and mathematical studies, spending the hours of leisure in the libraries.

I had a veritable mania for finishing whatever I began, which often got me into difficulties. On one occasion I started to read the works of Voltaire, when I learned, to my dismay that there were close to one hundred large volumes in small print which that monster had written while drinking seventy−two cups of black coffee per diem. It had to be done, but when I laid aside that last book I was very glad, and said, "Never more!"

My first year's showing had won me the appreciation and friendship of several professors. Among these, Professor Rogner, who was teaching arithmetical subjects and geometry; Professor Poeschl, who held the chair of theoretical and experimental physics, and Dr. Alle, who taught integral calculus and specialized in differential equations. This scientist was the most brilliant lecturer to whom I ever listened. He took a special interest in my progress and would frequently remain for an hour or two in the lecture room, giving me problems to solve, in which I delighted. To him I explained a flying machine I had conceived, not an illusory invention, but one based on sound, scientific principles, which has become realizable through my turbine and will soon be given to the world. Both Professors Rogner and Poeschl were curious men. The former had peculiar ways of expressing himself and whenever he did so, there was a riot, followed by a long embarrassing pause. Professor Poeschl was a methodical and thoroughly grounded German. He had enormous feet, and hands like the paws of a bear, but all of his experiments were skillfully performed with clock−like precision and without a miss. It was in the second year of my studies that we received a Gramoe Dyname from Paris, having the horseshoe form of a laminated field magnet, and a wire wound armature with a commutator. It was connected up and various effects of the currents were shown. While Professor Poeschl was making demonstrations, running the machine was a motor, the brushes gave trouble, sparking badly, and I observed that it might be possible to operate a motor without these appliances. But he declared that it could not be done and did me the honor of delivering a lecture on the subject, at the conclusion he remarked, "Mr. Tesla may accomplish great things, but he certainly will never do this. It would be equivalent to converting a

steadily pulling force, like that of gravity into a rotary effort. It is a perpetual motion scheme, an impossible idea." But instinct is something which transcends knowledge. We have, undoubtedly, certain finer fibers that enable us to perceive truths when logical deduction, or any other willful effort of the brain, is futile.

For a time I wavered, impressed by the professor's authority, but soon became convinced I was right and undertook the task with all the fire and boundless confidence of my youth. I started by first picturing in my mind a direct−current machine, running it and following the changing flow of the currents in the armature. Then I would imagine an alternator and investigate the progresses taking place in a similar manner. Next I would visualize systems comprising motors and generators and operate them in various ways.

The images I saw were to me perfectly real and tangible. All my remaining term in Gratz was passed in intense but fruitless efforts of this kind, and I almost came to the conclusion that the problem was insolvable.

In 1880 I went to Prague, Bohemia, carrying out my father's wish to complete my education at the University there. It was in that city that I made a decided advance, which consisted in detaching the commutator from the machine and studying the phenomena in this new aspect, but still without result. In the year following there was a sudden change in my views of life.

I realized that my parents had been making too great sacrifices on my account and resolved to relieve them of the burden. The wave of the American telephone had just reached the European continent and the system was to be installed in Budapest, Hungary. It appeared an ideal opportunity, all the more as a friend of our family was at the head of the enterprise.

It was here that I suffered the complete breakdown of the nerves to which I have referred. What I experienced during the period of the illness surpasses all belief. My sight and hearing were always extraordinary. I could clearly discern objects in the distance when others saw no trace of them. Several times in my boyhood I saved the houses of our neighbors from fire by hearing the faint crackling sounds which did not disturb their sleep, and calling for help. In 1899, when I was past forty and carrying on my experiments in Colorado, I could hear very distinctly thunderclaps at a distance of 550 miles. My ear was thus over thirteen times more sensitive, yet at that time I was, so to speak, stone deaf in comparison with the acuteness of my hearing while under the nervous strain.

In Budapest I could hear the ticking of a watch with three rooms between me and the time−piece. A fly alighting on a table in the room would cause a dull thud in my ear. A carriage passing at a distance of a few miles fairly shook my whole body. The whistle of a locomotive twenty or thirty miles away made the bench or chair on which I sat, vibrate so strongly that the pain was unbearable. The ground under my feet trembled continuously. I had to support my bed on rubber cushions to get any rest at all. The roaring noises from near and far often produced the effect of spoken words which would have frightened me had I not been able to resolve them into their accumulated components. The sun rays, when periodically intercepted, would cause blows of such force on my brain that they would stun me. I had to summon all my will power to pass under a bridge or other structure, as I experienced the crushing pressure on the skull. In the dark I had the sense of a bat, and could detect the presence of an object at a distance of twelve feet by a peculiar creepy sensation on the forehead. My pulse varied from a few to two hundred and sixty beats and all the tissues of my body with twitchings and tremors, which was perhaps hardest to bear. A renowned physician who have me daily large doses of bromide of potassium, pronounced my malady unique and incurable.

It is my eternal regret that I was not under the observation of experts in physiology and psychology at that time. I clung desperately to life, but never expected to recover. Can anyone believe that so hopeless a physical wreck could ever be transformed into a man of astonishing strength and tenacity; able to work thirty−eight years almost without a day's interruption, and find himself still strong and fresh in body and mind? Such is my case. A powerful desire to live and to continue the work and the assistance of a devoted

friend, an athlete, accomplished the wonder. My health returned and with it the vigor of mind.

In attacking the problem again, I almost regretted that the struggle was soon to end. I had so much energy to spare. When I understood the task, it was not with a resolve such as men often make. With me it was a sacred vow, a question of life and death. I knew that I would perish if I failed. Now I felt that the battle was won. Back in the deep recesses of the brain was the solution, but I could net yet give it outward expression.

One afternoon, which is ever present in my recollection, I was enjoying a walk with my friend in the City Park and reciting poetry. At that age, I knew entire books by heart, word for word. One of these was Goethe's Faust. The sun was just setting and reminded me of the glorious passage, "Sie ruckt und weicht, der Tag ist uberlebt, Dort eilt sie hin und fordert neues Leben. Oh, das kein Flugel mich vom Boden hebt Ihr nach und immer nach zu streben! Ein schšner Traum indessen sie entweicht, Ach, au des Geistes FlŸgein wird so leicht Kein korperlicher Flugel sich gesellen!" As I uttered these inspiring words the idea came like a flash of lightening and in an instant the truth was revealed. I drew with a stick on the sand, the diagram shown six years later in my address before the American Institute of Electrical Engineers, and my companion understood them perfectly. The images I saw were wonderfully sharp and clear and had the solidity of metal and stone, so much so that I told him, "See my motor here; watch me reverse it." I cannot begin to describe my emotions. Pygmalion seeing his statue come to life could not have been more deeply moved. A thousand secrets of nature which I might have stumbled upon accidentally, I would have given for that one which I had wrested from her against all odds and at the peril of my existence...

Chapter 4: The Discovery of the Tesla Coil and Transformer

For a while I gave myself up entirely to the intense enjoyment of picturing machines and devising new forms. It was a mental state of happiness about as complete as I have ever known in life. Ideas came in an uninterrupted stream and the only difficulty I had was to hold them fast. The pieces of apparatus I conceived were to me absolutely real and tangible in every detail, even to the minutest marks and signs of wear. I delighted in imagining the motors constantly running, for in this way they presented to the mind's eye a fascinating sight. When natural inclination develops into a passionate desire, one advances towards his goal in seven−league boots. In less than two months I evolved virtually all the types of motors and modifications of the system which are now identified with my name, and which are used under many other names all over the world. It was, perhaps, providential that the necessities of existence commanded a temporary halt to this consuming activity of the mind.

I came to Budapest prompted by a premature report concerning the telephone enterprise and, as irony of fate willed it, I had to accept a position as draughtsman in the Central Telegraph Office of the Hungarian government at a salary which I deem it my privilege not to disclose. Fortunately, I soon won the interest of the inspector−in−chief and was thereafter employed on calculations, designs and estimates in connection with new installations, until the telephone exchange started, when I took charge of the same. The knowledge and practical experience I gained in the course of this work, was most valuable and the employment gave me ample opportunities for the exercise of my inventive faculties. I made several improvements in the central station apparatus and perfected a telephone repeater or amplifier which was never patented or publicly described but would be creditable to me even today. In recognition of my efficient assistance the organizer of the undertaking, Mr. Puskas, upon disposing of his business in Budapest, offered me a position in Paris which I gladly accepted.

I never can forget the deep impression that magic city produced on my mind. For several days after my arrival, I roamed through the streets in utter bewilderment of the new spectacle. The attractions were many and irresistible, but, alas, the income was spent as soon as received. When Mr. Puskas asked me how I was getting along in the new sphere, I described the situation accurately in the statement that "The last twenty−nine days of the month are the toughest." I led a rather strenuous life in what would now be termed

"Rooseveltian fashion." Every morning, regardless of the weather, I would go from the boulevard St−Marcel, where I resided, to a bathing house on the Seine; plunge into the water, loop the circuit twenty−seven times and then walk an hour to reach Ivry, where the company's factory was located. There I would have a wood−chopper's breakfast at half−past seven o'clock and then eagerly await the lunch hour, in the meanwhile cracking hard nuts for the manager−of−the−works, Mr. Charles Batchellor, who was an intimate friend and assistant of Edison. Here I was thrown in contact with a few Americans who fairly fell in love with my because of my proficiency in Billiards! To these men I explained my invention and one of them, Mr. D. Cunningham, foreman of the mechanical department, offered to form a stock company. The proposal seemed to me comical in the extreme. I did not have the faintest conception of what he meant, except that it was an American way of doing things. Nothing came of it, however, and during the next few months I had to travel from one place to another in France and Germany to cure the ills of the power plants.

On my return to Paris, I submitted to one of the administrators of the company, Mr. Rau, a plan for improving their dynamos and was given an opportunity. My success was complete and the delighted directors accorded me the privilege of developing automatic regulators which were much desired. Shortly after, there was some trouble with the lighting plant which had been installed at the new railroad station in Strasbourg, Alsace. The wiring was defective and on the occasion of the opening ceremonies, a large part of a wall was blown out through a short−circuit, right in the presence of old Emperor William I. The German government refused to take the plant and the French company was facing a serious loss. On account of my knowledge of the German language and past experience, I was entrusted with the difficult task of straightening out matters and early in 1883, I went to Strasbourg on that mission.

Some of the incidents in that city have left an indelible record on my memory. By a curious coincidence, a number of the men who subsequently achieved fame, lived there about that time. In later life I used to say, "There were bacteria of greatness in that old town." Others caught the disease, but I escaped!" The practical work, correspondence, and conferences with officials kept me preoccupied day and night, but as soon as I was able to manage, I undertook the construction of a simple motor in a mechanical shop opposite the railroad station, having brought with me from Paris some material for that purpose. The consummation of the experiment was, however, delayed until the summer of that year, when I finally had the satisfaction of seeing the rotation effected by alternating currents of different phase, and without sliding contacts or commutator, as I had conceived a year before. It was an exquisite pleasure but not to compare with the delirium of joy following the first revelation.

Among my new friends was the former mayor of the city, Mr. Sauzin, whom I had already, in a measure, acquainted with this and other inventions of mine and whose support I endeavored to enlist. He was sincerely devoted to me and put my project before several wealthy persons, but to my mortification, found no response. He wanted to help me in every possible way and the approach of the first of July, 1917, happens to remind me of a form of "assistance" I received from that charming man, which was not financial, but none the less appreciated. In 1870, when the Germans invaded the country, Mr. Sauzin had buried a good sized allotment of St. Estephe of 1801 and he came to the conclusion that he knew no worthier person than myself to consume that precious beverage. This, I may say, is one of the unforgettable incidents to which I have referred. My friend urged me to return to Paris as soon as possible and seek support there. This I was anxious to do, but my work and negotiations were protracted, owing to all sorts of petty obstacles I encountered, so that at times the situation seemed hopeless. Just to give an idea of German thoroughness and "efficiency," I may mention here a rather funny experience.

An incandescent lamp of 16 c.p. was to be placed in a hallway, and upon selecting the proper location, I ordered the "monteur" to run the wires. After working for a while, he concluded that the engineer had to be consulted and this was done. The latter made several objections but ultimately agreed that the lamp should be placed two inches from the spot I had assigned, whereupon the work proceeded. Then the engineer became worried and told me that Inspector Averdeck should be notified. That important person was called, he

investigated, debated, and decided that the lamp should be shifted back two inches, which was the place I had marked! It was not long, however, before Averdeck got cold feet himself and advised me that he had informed Ober−Inspector Hieronimus of the matter and that I should await his decision. It was several days before the ober−inspector was able to free himself of other pressing duties, but at last he arrived and a two hour debate followed, when he decided to move the lamp two inches further. My hopes that this was the final act, were shattered when the ober−inspector returned and said to me, "Regierungsrath Funke is particular that I would not dare to give an order for placing this lamp without his explicit approval." Accordingly, arrangements for a visit from that great man were made. We started cleaning up and polishing early in the morning, and when Funke came with his retinue he was ceremoniously received. After two hours of deliberation, he suddenly exclaimed, "I must be going!," and pointing to a place on the ceiling, he ordered me to put the lamp there. It was the exact spot which I had originally chosen! So it went day after day with variations, but I was determined to achieve, at whatever cost, and in the end my efforts were rewarded.

By the spring of 1884, all the differences were adjusted, the plant formally accepted, and I returned to Paris with pleasing anticipation. One of the administrators had promised me a liberal compensation in case I succeeded, as well as a fair consideration of the improvements I had made to their dynamos and I hoped to realize a substantial sum. There were three administrators, whom I shall designate as A, B, and C for convenience. When I called on A, he told me what B had the say. This gentleman thought that only C could decide, and the latter was quite sure that A alone had the power to act. After several laps of this circulus viciousus, it dawned upon me that my reward was a castle in Spain.

The utter failure of my attempts to raise capital for development was another disappointment, and when Mr. Bachelor pressed me to go to America with a view of redesigning the Edison machines, I determined to try my fortunes in the Land of Golden Promise. But the chance was nearly missed. I liquefied my modest assets, secured accommodations and found myself at the railroad station as the train was pulling out. At that moment, I discovered that my money and tickets were gone. What to do was the question. Hercules had plenty of time to deliberate, but I had to decide while running alongside the train with opposite feeling surging in my brain like condenser oscillations. Resolve, helped by dexterity, won out in the nick of time and upon passing through the usual experience, as trivial and unpleasant, I managed to embark for New York with the remnants of my belongings, some poems and articles I had written, and a package of calculations relating to solutions of an unsolvable integral and my flying machine. During the voyage I sat most of the time at the stern of the ship watching for an opportunity to save somebody from a watery grave, without the slightest thought of danger. Later, when I had absorbed some of the practical American sense, I shivered at the recollection and marveled at my former folly. The meeting with Edison was a memorable event in my life. I was amazed at this wonderful man who, without early advantages and scientific training, had accomplished so much. I had studied a dozen languages, delved in literature and art, and had spent my best years in libraries reading all sorts of stuff that fell into my hands, from Newton's Principia to the novels of Paul de Kock, and felt that most of my life had been squandered. But it did not take long before I recognized that it was the best thing I could have done. Within a few weeks I had won Edison's confidence, and it came about in this way.

The S.S. Oregon, the fastest passenger steamer at that time, had both of its lighting machines disabled and its sailing was delayed. As the superstructure had been built after their installation, it was impossible to remove them from the hold. The predicament was a serious one and Edison was much annoyed. In the evening I took the necessary instruments with me and went aboard the vessel where I stayed for the night. The dynamos were in bad condition, having several short−circuits and breaks, but with the assistance of the crew, I succeeded in putting them in good shape. At five o'clock in the morning, when passing along Fifth Avenue on my way to the shop, I met Edison with Bachelor and a few others, as they were returning home to retire. "Here is our Parisian running around at night," he said. When I told him that I was coming from the Oregon and had repaired both machines, he looked at me in silence and walked away without another word. But when he had gone some distance I heard him remark, "Bachelor, this is a good man." And from that time on I

had full freedom in directing the work. For nearly a year my regular hours were from 10:30 A.M. until 5 o'clock the next morning without a day's exception. Edison said to me, "I have had many hard working assistants, but you take the cake." During this period I designed twenty−four different types of standard machines with short cores and uniform pattern, which replaced the old ones. The manager had promised me fifty thousand dollars on the completion of this task, but it turned out to be a practical joke. This gave me a painful shock and I resigned my position.

Immediately thereafter, some people approached me with the proposal of forming an arc light company under my name, to which I agreed. Here finally, was an opportunity to develop the motor, but when I broached the subject to my new associates they said, "No, we want the arc lamp. We don't care for this alternating current of yours." In 1886, my system of arc lighting was perfected and adopted for factory and municipal lighting, and I was free, but with no other possession than a beautifully engraved certificate of stock of hypothetical value. Then followed a period of struggle in the new medium for which I was not fitted, but the reward came in the end, and in April, 1887, the Tesla Electric Co. was organized, providing a laboratory and facilities. The motors I built there were exactly as I had imagined them. I made no attempt to improve the design, but merely reproduced the pictures as they appeared to my vision and the operation was always as I expected.

In the early part of 1888, an arrangement was made with the Westinghouse Company for the manufacture of the motors on a large scale. But great difficulties had still to be overcome. My system was based on the use of low frequency currents and the Westinghouse experts had adopted 133 cycles with the objects of securing advantages in transformation. They did not want to depart with their standard forms of apparatus and my efforts had to be concentrated upon adapting the motor to these conditions. Another necessity was to produce a motor capable of running efficiently at this frequency on two wires, which was not an easy accomplishment.

At the close of 1889, however, my services in Pittsburgh being no longer essential, I returned to New York and resumed experimental work in a Laboratory on Grand Street, where I began immediately the design of high−frequency machines. The problems of construction in this unexplored field were novel and quite peculiar, and I encountered many difficulties. I rejected the inductor type, fearing that it might not yield perfect sine waves, which were so important to resonant action. Had it not been for this, I could have saved myself a great deal of labor. Another discouraging feature of the high−frequency alternator seemed to be the inconstancy of speed which threatened to impose serious limitations to its use. I had already noted in my demonstrations before the American Institution of Electrical Engineers, that several times the tune was lost, necessitating readjustment, and did not yet foresee what I discovered long afterwards, a means of operating a machine of this kind at a speed constant to such a degree as not to vary more than a small fraction of one revolution between the extremes of load. From many other considerations, it appeared desirable to invent a simpler device for the production of electric oscillations.

In 1856, Lord Kelvin had exposed the theory of the condenser discharge, but no practical application of that important knowledge was made. I saw the possibilities and undertook the development of induction apparatus on this principle. My progress was so rapid as to enable me to exhibit at my lecture in 1891 a coil giving sparks of five inches. On that occasion I frankly told the engineers of a defect involved in the transformation by the new method, namely, the loss in the spark gap. Subsequent investigation showed that no matter what medium is employed, be it air, hydrogen, mercury vapor, oil, or a stream of electrons, the efficiency is the same. It is a law very much like the governing of the conversion of mechanical energy. We may drop a weight from a certain height vertically down, or carry it to the lower level along any devious path; it is immaterial insofar as the amount of work is concerned. Fortunately however, this drawback is not fatal, as by proper proportioning of the resonant, circuits of an efficiency of 85 percent is attainable. Since my early announcement of the invention, it has come into universal use and wrought a revolution in many departments, but a still greater future awaits it.

When in 1900 I obtained powerful discharges of 1,000 feet and flashed a current around the globe, I was reminded of the first tiny spark I observed in my Grand Street laboratory and was thrilled by sensations akin to those I felt when I discovered the rotating magnetic field.

The Strange Life of Nikola Tesla

Chapter 5

As I review the events of my past life I realize how subtle are the influences that shape our destinies. An incident of my youth may serve to illustrate. One winter's day I managed to climb a steep mountain, in company with other boys. The snow was quite deep and a warm southerly wind made it just suitable for our purpose. We amused ourselves by throwing balls which would roll down a certain distance, gathering more or less snow, and we tried to out−do one another in this sport. Suddenly a ball was seen to go beyond the limit, swelling to enormous proportions until it became as big as a house and plunged thundering into the valley below with a force that made the ground tremble. I looked on spellbound incapable of understanding what had happened. For weeks afterward the picture of the avalanche was before my eyes and I wondered how anything so small could grow to such an immense size.

Ever since that time the magnification of feeble actions fascinated me, and when, years later, I took up the experimental study of mechanical and electrical resonance, I was keenly interested from the very start. Possibly, had it not been for that early powerful impression I might not have followed up the little spark I obtained with my coil and never developed my best invention, the true history of which I will tell.

Many technical men, very able in their special departments, but dominated by a pedantic spirit and nearsighted, have asserted that excepting the induction motor, I have given the world little of practical use. This is a grievous mistake. A new idea must not be judged by its immediate results. My alternating system of power transmission came at a psychological moment, as a long sought answer to pressing industrial questions, and although considerable resistance had to be overcome and opposing interests reconciled, as usual, the commercial introduction could not be long delayed. Now, compare this situation with that confronting my turbines, for example. One should think that so simple and beautiful an invention, possessing many features of an ideal motor, should be adopted at once and, undoubtedly, it would under similar conditions. But the prospective effect of the rotating field was not to render worthless existing machinery; on the contrary, it was to give it additional value. The system lent itself to new enterprise as well as to improvement of the old. My turbine is an advance of a character entirely different. It is a radical departure in the sense that its success would mean the abandonment of the antiquated types of prime movers on which billions of dollars have been spent. Under such circumstances, the progress must need be slow and perhaps the greatest impediment is encountered in the prejudicial opinions created in the minds of experts by organized opposition.

Only the other day, I had a disheartening experience when I met my friend and former assistant, Charles F. Scott, now professor of Electric Engineering at Yale. I had not seen him for a long time and was glad to have an opportunity for a little chat at my office. Our conversation, naturally enough, drifted onto my turbine and I became heated to a high degree. "Scott," I exclaimed, carried away by the vision of a glorious future, "My turbine will scrap all the heat engines in the world." Scott stroked his chin and looked away thoughtfully, as though making a mental calculation. "That will make quite a pile of scrap," he said, and left without another word!

These and other inventions of mine, however, were nothing more than steps forward in a certain directions. In evolving them, I simply followed the inborn instinct to improve the present devices without any special thought of our far more imperative necessities. The "Magnifying Transmitter" was the product of labors extending through years, having for their chief object, the solution of problems which are infinitely more

important to mankind than mere industrial development.

If my memory serves me right, it was in November, 1890, that I performed a laboratory experiment which was one of the most extraordinary and spectacular ever recorded in the annal of Science. In investigating the behavior of high frequency currents, I had satisfied myself that an electric field of sufficient intensity could be produced in a room to light up electrodeless vacuum tubes. Accordingly, a transformer was built to test the theory and the first trial proved a marvelous success. It is difficult to appreciate what those strange phenomena meant at the time. We crave for new sensations, but soon become indifferent to them. The wonders of yesterday are today common occurrences. When my tubes were first publicly exhibited, they were viewed with amazement impossible to describe. From all parts of the world, I received urgent invitations and numerous honors and other flattering inducements were offered to me, which I declined. But in 1892 the demand became irresistible and I went to London where I delivered a lecture before the Institution of Electrical Engineers.

It has been my intention to leave immediately for Paris in compliance with a similar obligation, but Sir James Dewar insisted on my appearing before the Royal Institution. I was a man of firm resolve, but succumbed easily to the forceful arguments of the great Scotchman. He pushed me into a chair and poured out half a glass of a wonderful brown fluid which sparkled in all sorts of iridescent colors and tasted like nectar. "Now," said he, "you are sitting in Faraday's chair and you are enjoying whiskey he used to drink." (Which did not interest me very much, as I had altered my opinion concerning strong drink). The next evening I have a demonstration before the Royal Institution, at the termination of which, Lord Rayleigh addressed the audience and his generous words gave me the first start in these endeavors. I fled from London and later from Paris, to escape favors showered upon me, and journeyed to my home, where I passed through a most painful ordeal and illness.

Upon regaining my health, I began to formulate plans for the resumption of work in America. Up to that time I never realized that I possessed any particular gift of discovery, but Lord Rayleigh, whom I always considered as an ideal man of science, had said so and if that was the case, I felt that I should concentrate on some big idea.

At this time, as at many other times in the past, my thoughts turned towards my Mother's teaching. The gift of mental power comes from God, Divine Being, and if we concentrate our minds on that truth, we become in tune with this great power. My Mother had taught me to seek all truth in the Bible; therefore I devoted the next few months to the study of this work.

One day, as I was roaming the mountains, I sought shelter from an approaching storm. The sky became overhung with heavy clouds, but somehow the rain was delayed until, all of a sudden, there was a lightening flash and a few moments after, a deluge. This observation set me thinking. It was manifest that the two phenomena were closely related, as cause and effect, and a little reflection led me to the conclusion that the electrical energy involved in the precipitation of the water was inconsiderable, the function of the lightening being much like that of a sensitive trigger. Here was a stupendous possibility of achievement. If we could produce electric effects of the required quality, this whole planet and the conditions of existence on it could be transformed. The sun raises the water of the oceans and winds drive it to distant regions where it remains in a state of most delicate balance. If it were in our power to upset it when and wherever desired, this mighty life sustaining stream could be at will controlled. We could irrigate arid deserts, create lakes and rivers, and provide motive power in unlimited amounts. This would be the most efficient way of harnessing the sun to the uses of man. The consummation depended on our ability to develop electric forces of the order of those in nature.

It seemed a hopeless undertaking, but I made up my mind to try it and immediately on my return to the United States in the summer of 1892, after a short visit to my friends in Watford, England; work was begun

which was to me all the more attractive, because a means of the same kind was necessary for the successful transmission of energy without wires.

At this time I made a further careful study of the Bible, and discovered the key in Revelation. The first gratifying result was obtained in the spring of the succeeding year, when I reaching a tension of about 100,000,000 volts − one hundred million volts − with my conical coil, which I figured was the voltage of a flash of lightening. Steady progress was made until the destruction of my laboratory by fire, in 1895, as may be judged from an article by T.C. Martin which appeared in the April number of the Century Magazine. This calamity set me back in many ways and most of that year had to be devoted to planning and reconstruction. However, as soon as circumstances permitted, I returned to the task.

Although I knew that higher electric−motive forces were attainable with apparatus of larger dimensions, I had an instinctive perception that the object could be accomplished by the proper design of a comparatively small and compact transformer. In carrying on tests with a secondary in the form of flat spiral, as illustrated in my patents, the absence of streamers surprised me, and it was not long before I discovered that this was due to the position of the turns and their mutual action. Profiting from this observation, I resorted to the use of a high tension conductor with turns of considerable diameter, sufficiently separated to keep down the distributed capacity, while at the same time preventing undue accumulation of the charge at any point. The application of this principle enabled me to produce pressures of over 100,000,000 volts, which was about the limit obtainable without risk of accident. A photograph of my transmitter built in my laboratory at Houston Street, was published in the Electrical Review of November, 1898.

In order to advance further along this line, I had to go into the open, and in the spring of 1899, having completed preparations for the erection of a wireless plant, I went to Colorado where I remained for more than one year. Here I introduced other improvements and refinements which made it possible to generate currents of any tension that may be desired. Those who are interested will find some information in regard to the experiments I conducted there in my article, "The Problem of Increasing Human Energy," in the Century Magazine of June 1900, to which I have referred on a previous occasion.

I will be quite explicit on the subject of my magnifying transformer so that it will be clearly understood. In the first place, it is a resonant transformer, with a secondary in which the parts, charged to a high potential, are of considerable area and arranged in space along ideal enveloping surfaces of very large radii of curvature, and at proper distances from one another, thereby insuring a small electric surface density everywhere, so that no leak can occur even if the conductor is bare. It is suitable for any frequency, from a few to many thousands of cycles per second, and can be used in the production of currents of tremendous volume and moderate pressure, or of smaller amperage and immense electromotive force. The maximum electric tension is merely dependent on the curvature of the surfaces on which the charged elements are situated and the area of the latter. Judging from my past experience there is no limit to the possible voltage developed; any amount is practicable. On the other hand, currents of many thousands of amperes may be obtained in the antenna. A plant of but very moderate dimensions is required for such performances. Theoretically, a terminal of less than 90 feet in diameter is sufficient to develop an electromotive force of that magnitude, while for antenna currents of from 2,000−4,000 amperes at the usual frequencies, it need not be larger than 30 feet in diameter. In a more restricted meaning, this wireless transmitter is one in which the Hertzwave radiation is an entirely negligible quantity as compared with the whole energy, under which condition the damping factor is extremely small and an enormous charge is stored in the elevated capacity. Such a circuit may then be excited with impulses of any kind, even of low frequency and it will yield sinusoidal and continuous oscillations like those of an alternator. Taken in the narrowest significance of the term, however, it is a resonant transformer which, besides possessing these qualities, is accurately proportioned to fit the globe and its electrical constants and properties, by virtue of which design it becomes highly efficient and effective in the wireless transmission of energy. Distance is then absolutely eliminated, there being no diminuation in the intensity of the transmitted impulses. It is even possible to make the actions

increase with the distance from the plane, according to an exact mathematical law. This invention was one of a number comprised in my "World System" of wireless transmission which I undertook to commercialize on my return to New York in 1900.

As to the immediate purposes of my enterprise, they were clearly outlined in a technical statement of that period from which I quote, "The world system has resulted from a combination of several original discoveries made by the inventor in the course of long continued research and experimentation. It makes possible not only the instantaneous and precise wireless transmission of any kind of signals, messages or characters, to all parts of the world, but also the inter−connection of the existing telegraph, telephone, and other signal stations without any change in their present equipment. By its means, for instance, a telephone subscriber here may call up and talk to any other subscriber on the Earth. An inexpensive receiver, not bigger than a watch, will enable him to listen anywhere, on land or sea, to a speech delivered or music played in some other place, however distant."

These examples are cited merely to give an idea of the possibilities of this great scientific advance, which annihilates distance and makes that perfect natural conductor, the Earth, available for all the innumerable purposes which human ingenuity has found for a line−wire. One far−reaching result of this is that any device capable of being operated through one or more wires (at a distance obviously restricted) can likewise be actuated, without artificial conductors and with the same facility and accuracy, at distances to which there are no limits other than those imposed by the physical dimensions of the earth. Thus, not only will entirely new fields for commercial exploitation be opened up by this ideal method of transmission, but the old ones vastly extended. The World System is based on the application of the following import and inventions and discoveries:

1. The Tesla Transformer: This apparatus is in the production of electrical vibrations as revolutionary as gunpowder was in warfare. Currents many times stronger than any ever generated in the usual ways and sparks over one hundred feet long, have been produced by the inventor with an instrument of this kind.

2. The Magnifying Transmitter: This is Tesla's best invention, a peculiar transformer specially adapted to excite the earth, which is in the transmission of electrical energy when the telescope is in astronomical observation. By the use of this marvelous device, he has already set up electrical movements of greater intensity than those of lightening and passed a current, sufficient to light more than two hundred incandescent lamps, around the Earth.

3. The Tesla Wireless System: This system comprises a number of improvements and is the only means known for transmitting economically electrical energy to a distance without wires. Careful tests and measurements in connection with an experimental station of great activity, erected by the inventor in Colorado, have demonstrated that power in any desired amount can be conveyed, clear across the globe if necessary, with a loss not exceeding a few per cent.

4. The Art of Individualization: This invention of Tesla is to primitive tuning, what refined language is to unarticulated expression. It makes possible the transmission of signals or messages absolutely secret and exclusive both in the active and passive aspect, that is, non−interfering as well as non−interferable. Each signal is like an individual of unmistakable identity and there is virtually no limit to the number of stations or instruments which can be simultaneously operated without the slightest mutual disturbance.

5. The Terrestrial Stationary Waves: This wonderful discovery, popularly explained, means that the Earth is responsive to electrical vibrations of definite pitch, just as a tuning fork to certain waves of sound. These particular electrical vibrations, capable of powerfully exciting the globe, lend themselves to innumerable uses of great importance commercially and in many other respects. The first "World System" power plant can be put in operation in nine months. With this power plant, it will be practicable to attain electrical activities up to

ten million horse−power and it is designed to serve for as many technical achievements as are possible without due expense. Among these are the following:

1.The inter−connection of existing telegraph exchanges or offices all over the world; 2.The establishment of a secret and non−interferable government telegraph service; 3.The inter−connection of all present telephone exchanges or offices around the globe; 4.The universal distribution of general news by telegraph or telephone, in conjunction with the press; 5.The establishment of such a "World System" of intelligence transmission for exclusive private use; 6.The inter−connection and operation of all stock tickers of the world; 7.The establishment of a "World System" − of musical distribution, etc.; 8.The universal registration of time by cheap clocks indicating the hour with astronomical precision and requiring no attention whatever; 9.The world transmission of typed or handwritten characters, letters, checks, etc.; 10.The establishment of a universal marine service enabling the navigators of all ships to steer perfectly without compass, to determine the exact location, hour and speak; to prevent collisions and disasters, etc.; 11.The inauguration of a system of world printing on land and sea; 12.The world reproduction of photographic pictures and all kinds of drawings or records..." I also proposed to make demonstration in the wireless transmission of power on a small scale, but sufficient to carry conviction. Besides these, I referred to other and incomparably more important applications of my discoveries which will be disclosed at some future date. A plant was built on Long Island with a tower 187 feet high, having a spherical terminal about 68 feet in diameter. These dimensions were adequate for the transmission of virtually any amount of energy. Originally, only from 200 to 300 K.W. were provided, but I intended to employ later several thousand horsepower. The transmitter was to emit a wave−complex of special characteristics and I had devised a unique method of telephonic control of any amount of energy. The tower was destroyed two years ago (1917) but my projects are being developed and another one, improved in some features, will be constructed.

On this occasion I would contradict the widely circulated report that the structure was demolished by the government, which owing to war conditions, might have created prejudice in the minds of those who may not know that the papers, which thirty years ago conferred upon me the honor of American citizenship, are always kept in a safe, while my orders, diplomas, degrees, gold medals and other distinctions are packed away in old trunks. If this report had a foundation, I would have been refunded a large sum of money which I expended in the construction of the tower. On the contrary, it was in the interest of the government to preserve it, particularly as it would have made possible, to mention just one valuable result, the location of a submarine in any part of the world. My plant, services, and all my improvements have always been at the disposal of the officials and ever since the outbreak of the European conflict, I have been working at a sacrifice on several inventions of mine relating to aerial navigation, ship propulsion and wireless transmission, which are of the greatest importance to the country. Those who are well informed know that my ideas have revolutionized the industries of the United States and I am not aware that there lives an inventor who has been, in this respect, as fortunate as myself − especially as regards the use of his improvements in the war.

I have refrained from publicly expressing myself on this subject before, as it seemed improper to dwell on personal matters while all the world was in dire trouble. I would add further, in view of various rumors which have reached me, that Mr. J. Pierpont Morgan did not interest himself with me in a business way, but in the same large spirit in which he has assisted many other pioneers. He carried out his generous promise to the letter and it would have been most unreasonable to expect from him anything more. He had the highest regard for my attainments and gave me every evidence of his complete faith in my ability to ultimately achieve what I had set out to do. I am unwilling to accord to some small−minded and jealous individuals the satisfaction of having thwarted my efforts. These men are to me nothing more than microbes of a nasty disease. My project was retarded by laws of nature. The world was not prepared for it. It was too far ahead of time, but the same laws will prevail in the end and make it a triumphal success.

Chapter 6

No subject to which I have ever devoted myself has called for such concentration of mind, and strained to so dangerous a degree the finest fibers of my brain, as the systems of which the "Magnifying Transmitter" is the foundation. I put all the intensity and vigor of youth in the development of the rotating field discoveries, but those early labors were of a different character. Although strenuous in the extreme, they did not involve that keen and exhausting discernment which had to be exercised in attacking the many problems of the wireless.

Despite my rare physical endurance at that period, the abused nerves finally rebelled and I suffered a complete collapse, just as the consummation of the long and difficult task was almost in sight. Without doubt I would have paid a greater penalty later, and very likely my career would have been prematurely terminated, had not providence equipped me with a safety device, which seemed to improve with advancing years and unfailingly comes to play when my forces are at an end. So long as it operates I am safe from danger, due to overwork, which threatens other inventors, and incidentally, I need no vacations which are indispensable to most people. When I am all but used up, I simply do as the darkies who "naturally fall asleep while white folks worry."

To venture a theory out of my sphere, the body probably accumulates little by little a definite quantity of some toxic agent and I sink into a nearly lethargic state which lasts half an hour to the minute. Upon awakening I have the sensation as though the events immediately preceding had occurred very long ago, and if I attempt to continue the interrupted train of thought I feel veritable nausea. Involuntarily, I then turn to other tasks and am surprised at the freshness of the mind and ease with which I overcome obstacles that had baffled me before. After weeks or months, my passion for the temporarily abandoned invention returns and I invariably find answers to all the vexing questions, with scarcely any effort. In this connection, I will tell of an extraordinary experience which may be of interest to students of psychology.

I had produced a striking phenomenon with my grounded transmitter and was endeavoring to ascertain its true significance in relation to the currents propagated through the earth. It seemed a hopeless undertaking, and for more than a year I worked unremittingly, but in vain. This profound study so entirely absorbed me, that I became forgetful of everything else, even of my undermined health. At last, as I was at the point of breaking down, nature applied the preservative inducing lethal sleep. Regaining my senses, I realized with consternation that I was unable to visualize scenes from my life except those of infancy, the very first ones that had entered my consciousness. Curiously enough, these appeared before my vision with startling distinctness and afforded me welcome relief. Night after night, when retiring, I would think of them, and more and more of my previous existence was revealed. The image of my mother was always the principal figure in the spectacle that slowly unfolded, and a consuming desire to see her again gradually took possession of me. This feeling grew so strong that I resolved to drop all work and satisfy my longing, but I found it too hard to break away from the laboratory, and several months elapsed during which I had succeeded in reviving all the impressions of my past life, up to the spring of 1892. In the next picture that came out of the mist of oblivion, I saw myself at the Hotel de la Paix in Paris, just coming to from one of my peculiar sleeping spells, which had been caused by prolonged exertion of the brain. Imagine the pain and distress I felt, when it flashed upon my mind that a dispatch was handed to me at that very moment, bearing the sad news that my mother was dying. I remembered how I made the long journey home without an hour of rest and how she passed away after weeks of agony.

It was especially remarkable that during all this period of partially obliterated memory, I was fully alive to everything touching on the subject of my research. I could recall the smallest detail and the least insignificant observations in my experiments and even recite pages of text and complex mathematical formulae.

My belief is firm in a law of compensation. The true rewards are ever in proportion to the labor and sacrifices made. This is one of the reasons why I feel certain that of all my inventions, the magnifying transmitter will

prove most important and valuable to future generations. I am prompted to this prediction, not so much by thoughts of the commercial and industrial revolution which it will surely bring about, but of the humanitarian consequences of the many achievements it makes possible. Considerations of mere utility weigh little in the balance against the higher benefits of civilization. We are confronted with portentous problems which can not be solved just by providing for our material existence, however abundantly. On the contrary, progress in this direction is fraught with hazards and perils not less menacing than those born from want and suffering. If we were to release the energy of atoms or discover some other way of developing cheap and unlimited power at any point on the globe, this accomplishment, instead of being a blessing, might bring disaster to mankind in giving rise to dissension and anarchy, which would ultimately result in the enthronement of the hated regime of force. The greatest good will come from technical improvements tending to unification and harmony, and my wireless transmitter is preeminently such. By its means, the human voice and likeness will be reproduced everywhere, and factories driven from thousands of miles away by waterfalls furnishing power. Aerial machines will be propelled around the earth without a stop and the sun's energy controlled to create lakes and rivers for motive purposes and transformation of arid deserts into fertile land. Its introduction for telegraphic, telephonic and similar uses will automatically cut out the static and all other interferences which at present, impose narrow limits to the application of the wireless. This is a timely topic on which a few words might not be amiss.

During the past decade a number of people have arrogantly claimed that they had succeeded in doing away with this impediment. I have carefully examined all of the arrangements described and tested most of them long before they were publicly disclosed, but the finding was uniformly negative. Recent official statement from the U.S. Navy may, perhaps, have taught some beguilable news editors how to appraise these announcements at their real worth. As a rule, the attempts are based on theories so fallacious, that whenever they come to my notice, I can not help thinking in a light vein. Quite recently a new discovery was heralded, with a deafening flourish of trumpets, but it proved another case of a mountain bringing forth a mouse. This reminds me of an exciting incident which took place a year ago, when I was conducting my experiments with currents of high frequency.

Steve Brodie had just jumped off the Brooklyn Bridge. The feat has been vulgarized since by imitators, but the first report electrified New York. I was very impressionable then and frequently spoke of the daring printer. On a hot afternoon I felt the necessity of refreshing myself and stepped into one of the popular thirty thousand institutions of this great city, where a delicious twelve per cent beverage was served, which can now be had only by making a trip to the poor and devastated countries of Europe. The attendance was large and not over−distinguished and a matter was discussed which gave me an admirable opening for the careless remark, "This is what I said when I jumped off the bridge." No sooner had I uttered these words, than I felt like the companion of Timothens in the poem of Schiller. In an instant there was pandemonium and a dozen voices cried, "It is Brodie!" I threw a quarter on the counter and bolted for the door, but the crowd was at my heels with yells, "Stop, Steeve!", which must have been misunderstood, for many persons tried to hold me up as I ran frantically for my haven of refuge. By darting around corners, I fortunately managed, through the medium of a fire escape, to reach the laboratory, where I threw off my coat, camouflaged myself as a hard−working blacksmith and started the forge. But these precautions proved unnecessary, as I had eluded my pursuers. For many years afterward, at night, when imagination turns into specters the trifling troubles of the day, I often thought, as I tossed on the bed, what my fate would have been, had the mob caught me and found out that I was not Steve Brodie!

Now the engineer who lately gave an account before a technical body of a novel remedy against static based on a "heretofore unknown law of nature," seems to have been as reckless as myself when he contended that these disturbances propagate up and down, while those of a transmitter proceed along the earth. It would mean that a condenser as this globe, with its gaseous envelope, could be charged and discharged in a manner quite contrary to the fundamental teachings propounded in every elemental text book of physics. Such a supposition would have been condemned as erroneous, even in Franklin's time, for the facts bearing on this

were then well known and the identity between atmospheric electricity and that developed by machines was fully established. Obviously, natural and artificial disturbances propagate through the earth and the air in exactly the same way, and both set up electromotive forces in the horizontal as well as vertical sense. Interference can not be overcome by any such methods as were proposed. The truth is this: In the air, the potential increases at the rate of about fifty volts per foot of elevation, owing to which there may be a difference of pressure amounting to twenty, or even forty thousand volts between the upper and lower ends of the antenna. The masses of the charged atmosphere are constantly in motion and give up electricity to the conductor, not continuously, but rather disruptively, this producing a grinding noise in a sensitive telephonic receiver. The higher the terminal and the greater the space encompassed by the wires, the more pronounced is the effect, but it must be understood that it is purely local and has little to do with the real trouble.

In 1900, while perfecting my wireless system, one form of apparatus compressed four antennae. These were carefully calibrated in the same frequency and connected in multiple with the object of magnifying the action in receiving from any direction. When I desired to ascertain the origin of the transmitted impulse, each diagonally situated pair was put in series with a primary coil energizing the detector circuit. In the former case, the sound was loud in the telephone; in the latter it ceased, as expected, the two antennae neutralizing each other, but the true statics manifested themselves in both instances and I had to devise special preventives embodying different principles. By employing receivers connected to two points of the ground, as suggested by me long ago, this trouble caused by the charged air, which is very serious in the structures as now built, is nullified and besides, the liability of all kinds of interference is reduced to about one−half because of the directional character of the circuit. This was perfectly self−evident, but came as a revelation to some simple−minded wireless folks whose experience was confined to forms of apparatus that could have been improved with an ax, and they have been disposing of the bear's skin before killing him. If it were true that strays performed such antics, it would be easy to get rid of them by receiving without aerials. But, as a matter of fact, a wire buried in the ground which, conforming to this view, should be absolutely immune, is more susceptible to certain extraneous impulses than one placed vertically in the air. To state it fairly, a slight progress has been made, but not by virtue of any particular method or device. It was achieved simply by discerning the enormous structures, which are bad enough for transmission but wholly unsuitable for reception and adopting a more appropriate type of receiver. As I have said before, to dispose of this difficulty for good, a radical change must be made in the system and the sooner this is done the better.

It would be calamitous, indeed, if at this time when the art is in its infancy and the vast majority, not excepting even experts, have no conception of its ultimate possibilities, a measure would be rushed through the legislature making it a government monopoly. This was proposed a few weeks ago by Secretary Daniels and no doubt that distinguished official has made his appeal to the Senate and House of Representatives with sincere conviction. But universal evidence unmistakably shows that the best results are always obtained in healthful commercial competition. There are, however, exceptional reasons why wireless should be given the fullest freedom of development. In the first place, it offers prospects immeasurably greater and more vital to betterment of human life than any other invention or discovery in the history of man. Then again, it must be understood that this wonderful art has been, in its entirety, evolved here and can be called "American" with more right and propriety than the telephone, the incandescent lamp or the aeroplane.

Enterprising press agents and stock jobbers have been so successful in spreading misinformation, that even so excellent a periodical as the Scientific American, accords the chief credit to a foreign country. The Germans, of course, gave us the Hertz waves and the Russian, English, French and Italian experts were quick in using them for signaling purposes. It was an obvious application of the new agent and accomplished with the old classical and unimproved induction coil, scarcely anything more than another kind of heliography. The radius of transmission was very limited, the result attained of little value, and the Hertz oscillations, as a means for conveying intelligence, could have been advantageously replaced by sound waves, which I advocated in 1891. Moreover, all of these attempts were made three years after the basic principles of the wireless system, which is universally employed today, and its potent instrumentalities had been clearly described and

developed in America.

No trace of those Hertzian appliances and methods remains today. We have proceeded in the very opposite direction and what has been done is the product of the brains and efforts of citizens of this country. The fundamental patents have expired and the opportunities are open to all. The chief argument of the secretary is based on interference. According to his statement, reported in the New York Herald of July 29th, signals from a powerful station can be intercepted in every village in the world. In view of this fact, which was demonstrated in my experiments in 1900, it would be of little use to impose restrictions in the United States.

As throwing light on this point, I may mention that only recently an odd looking gentleman called on me with the object of enlisting my services in the construction of world transmitters in some distant land. "We have no money," he said, "but carloads of solid gold, and we will give you a liberal amount." I told him that I wanted to see first what will be done with my inventions in America, and this ended the interview. But I am satisfied that some dark forces are at work, and as time goes on the maintenance of continuous communication will be rendered more difficult. The only remedy is a system immune against interruption. It has been perfected, it exists, and all that is necessary is to put it in operation.

The terrible conflict is still uppermost in the minds and perhaps the greatest importance will be attached to the magnifying transmitter as a machine for attack and defense, more particularly in connection with telautamatics. This invention is a logical outcome of observations begun in my boyhood and continued throughout my life. When the first results were published, the Electrical Review stated editorially that it would become one of the "most potent factors in the advance of civilization of mankind." The time is not distant when this prediction will be fulfilled. In 1898 and 1900, it was offered by me to the government and might have been adopted, were I one of those who would go to Alexander's shepherd when they want a favor from Alexander!

At that time I really thought that it would abolish war, because of its unlimited destructiveness and exclusion of the personal element of combat. But while I have not lost faith in its potentialities, my views have changed since. War can not be avoided until the physical cause for its recurrence is removed and this, in the last analysis, is the vast extent of the planet on which we live. Only though annihilation of distance in every respect, as the conveyance of intelligence, transport of passengers and supplies and transmission of energy will conditions be brought about some day, insuring permanency of friendly relations. What we now want most is closer contact and better understanding between individuals and communities all over the earth and the elimination of that fanatic devotion to exalted ideals of national egoism and pride, which is always prone to plunge the world into primeval barbarism and strife. No league or parliamentary act of any kind will ever prevent such a calamity. These are only new devices for putting the weak at the mercy of the strong.

I have expressed myself in this regard fourteen years ago, when a combination of a few leading governments, a sort of Holy alliance, was advocated by the late Andrew Carnegie, who may be fairly considered as the father of this idea, having given to it more publicity and impetus than anybody else prior to the efforts of the President. While it can not be denied that such aspects might be of material advantage to some less fortunate peoples, it can not attain the chief objective sought. Peace can only come as a natural consequence of universal enlightenment and merging of races, and we are still far from this blissful realization, because few indeed, will admit the reality As I view the world of today, in the light of the gigantic struggle we have witnessed, I am filled with conviction that the interests of humanity would be best served if the United States remained true to its traditions, true to God whom it pretends to believe, and kept out of "entangling alliances." Situated as it is, geographically remote from the theaters of impending conflicts, without incentive to territorial aggrandizement, with inexhaustible resources and immense population thoroughly imbued with the spirit of liberty and right, this country is placed in a unique and privileged position. It is thus able to exert, independently, its colossal strength and moral force to the benefit of all, more judiciously and effectively, than as a member of a league.

I have dwelt on the circumstances of my early life and told of an affliction which compelled me to unremitting exercise of imagination and self−observation. This mental activity, at first involuntary under the pressure of illness and suffering, gradually became second nature and led me finally to recognize that I was but an automaton devoid of free will in thought and action and merely responsible to the forces of the environment. Our bodies are of such complexity of structure, the motions we perform are so numerous and involved and the external impressions on our sense organs to such a degree delicate and elusive, that it is hard for the average person to grasp this fact. Yet nothing is more convincing to the trained investigator than the mechanistic theory of life which had been, in a measure, understood and propounded by Descartes three hundred years ago. In his time many important functions of our organisms were unknown and especially with respect to the nature of light and the construction and operation of the eye, philosophers were in the dark.

In recent years the progress of scientific research in these fields has been such as to leave no room for a doubt in regard to this view on which many works have been published. One of its ablest and most eloquent exponents is, perhaps, Felix le Dantec, formerly assistant of Pasteur. Professor Jacques Loeb has performed remarkable experiments in heliotropism, clearly establishing the controlling power of light in lower forms of organisms and his latest book, Forced Movements, is revelatory. But while men of science accept this theory simply as any other that is recognized, to me it is a truth which I hourly demonstrate by every act and thought of mine. The consciousness of the external impression prompting me to any kind of exertion, physical or mental, is ever present in my mind. Only on very rare occasions, when I was in a state of exceptional concentration, have I found difficulty in locating the original impulse. The by far greater number of human beings are never aware of what is passing around and within them and millions fall victims of disease and die prematurely just on this account. The commonest, every−day occurrences appear to them mysterious and inexplicable. One may feel a sudden wave of sadness and rack his brain for an explanation, when he might have noticed that it was caused by a cloud cutting off the rays of the sun. He may see the image of a friend dear to him under conditions which he construes as very peculiar, when only shortly before he has passed him in the street or seen his photograph somewhere. When he loses a collar button, he fusses and swears for an hour, being unable to visualize his previous actions and locate the object directly. Deficient observation is merely a form of ignorance and responsible for the many morbid notions and foolish ideas prevailing. There is not more than one out of every ten persons who does not believe in telepathy and other psychic manifestations, spiritualism and communion with the dead, and who would refuse to listen to willing or unwilling deceivers?

Just to illustrate how deeply rooted this tendency has become even among the clear−headed American population, I may mention a comical incident. Shortly before the war, when the exhibition of my turbines in this city elicited widespread comment in the technical papers, I anticipated that there would be a scramble among manufacturers to get hold of the invention and I had particular designs on that man from Detroit who has an uncanny faculty for accumulating millions. So confident was I, that he would turn up some day, that I declared this as certain to my secretary and assistants. Sure enough, one fine morning a body of engineers from the Ford Motor Company presented themselves with the request of discussing with me an important project. "Didn't I tell you?," I remarked triumphantly to my employees, and one of them said, "You are amazing, Mr. Tesla. Everything comes out exactly as you predict."

As soon as these hard−headed men were seated, I of course, immediately began to extol the wonderful features of my turbine, when the spokesman interrupted me and said, "We know all about this, but we are on a special errand. We have formed a psychological society for the investigation of psychic phenomena and we want you to join us in this undertaking." I suppose these engineers never knew how near they came to being fired out of my office.

Ever since I was told by some of the greatest men of the time, leaders in science whose names are immortal, that I am possessed of an unusual mind, I bent all my thinking faculties on the solution of great problems regardless of sacrifice. For many years I endeavored to solve the enigma of death, and watched eagerly for

every kind of spiritual indication. But only once in the course of my existence have I had an experience which momentarily impressed me as supernatural. It was at the time of my mother's death.

I had become completely exhausted by pain and long vigilance, and one night was carried to a building about two blocks from our home. As I lay helpless there, I thought that if my mother died while I was away from her bedside, she would surely give me a sign. Two or three months before, I was in London in company with my late friend, Sir William Crookes, when spiritualism was discussed and I was under the full sway of these thoughts. I might not have paid attention to other men, but was susceptible to his arguments as it was his epochal work on radiant matter, which I had read as a student, that made me embrace the electrical career. I reflected that the conditions for a look into the beyond were most favorable, for my mother was a woman of genius and particularly excelling in the powers of intuition. During the whole night every fiber in my brain was strained in expectancy, but nothing happened until early in the morning, when I fell in a sleep, or perhaps a swoon, and saw a cloud carrying angelic figures of marvelous beauty, one of whom gazed upon me lovingly and gradually assumed the features of my mother. The appearance slowly floated across the room and vanished, and I was awakened by an indescribably sweet song of many voices. In that instant a certitude, which no words can express, came upon me that my mother had just died. And that was true. I was unable to understand the tremendous weight of the painful knowledge I received in advance, and wrote a letter to Sir William Crookes while still under the domination of these impressions and in poor bodily health. When I recovered, I sought for a long time the external cause of this strange manifestation and, to my great relief, I succeeded after many months of fruitless effort.

I had seen the painting of a celebrated artist, representing allegorically one of the seasons in the form of a cloud with a group of angels which seemed to actually float in the air, and this had struck me forcefully. It was exactly the same that appeared in my dream, with the exception of my mother's likeness. The music came from the choir in the church nearby at the early mass of Easter morning, explaining everything satisfactorily in conformity with scientific facts.

This occurred long ago, and I have never had the faintest reason since to change my views on psychical and spiritual phenomena, for which there is no foundation. The belief in these is the natural outgrowth of intellectual development. Religious dogmas are no longer accepted in their orthodox meaning, but every individual clings to faith in a supreme power of some kind.

We all must have an ideal to govern our conduct and insure contentment, but it is immaterial whether it be one of creed, art, science, or anything else, so long as it fulfills the function of a dematerializing force. It is essential to the peaceful existence of humanity as a whole that one common conception should prevail. While I have failed to obtain any evidence in support of the contentions of psychologists and spiritualists, I have proved to my complete satisfaction the automatism of life, not only through continuous observations of individual actions, but even more conclusively through certain generalizations. these amount to a discovery which I consider of the greatest moment to human society, and on which I shall briefly dwell.

I got the first inkling of this astonishing truth when I was still a very young man, but for many years I interpreted what I noted simply as coincidences. Namely, whenever either myself or a person to whom I was attached, or a cause to which I was devoted, was hurt by others in a particular way, which might be best popularly characterized as the most unfair imaginable, I experienced a singular and undefinable pain which, for the want of a better term, I have qualified as "cosmic" and shortly thereafter, and invariably, those who had inflicted it came to grief. After many such cases I confided this to a number of friends, who had the opportunity to convince themselves of the theory of which I have gradually formulated and which may be stated in the following few words: Our bodies are of similar construction and exposed to the same external forces. This results in likeness of response and concordance of the general activities on which all our social and other rules and laws are based. We are automata entirely controlled by the forces of the medium, being tossed about like corks on the surface of the water, but mistaking the resultant of the impulses from the

outside for the free will. The movements and other actions we perform are always life preservative and though seemingly quite independent from one another, we are connected by invisible links. So long as the organism is in perfect order, it responds accurately to the agents that prompt it, but the moment that there is some derangement in any individual, his self−preservative power is impaired.

Everybody understands, of course, that if one becomes deaf, has his eyes weakened, or his limbs injured, the chances for his continued existence are lessened. But this is also true, and perhaps more so, of certain defects in the brain which drive the automaton, more or less, of that vital quality and cause it to rush into destruction. A very sensitive and observant being, with his highly developed mechanism all intact, and acting with precision in obedience to the changing conditions of the environment, is endowed with a transcending mechanical sense, enabling him to evade perils too subtle to be directly perceived. When he comes in contact with others whose controlling organs are radically faulty, that sense asserts itself and he feels the "cosmic" pain.

The truth of this has been borne out in hundreds of instances and I am inviting other students of nature to devote attention to this subject, believing that through combined systematic effort, results of incalculable value to the world will be attained. The idea of constructing an automaton, to bear out my theory, presented itself to me early, but I did not begin active work until 1895, when I started my wireless investigations. During the succeeding two or three years, a number of automatic mechanisms, to be actuated from a distance, were constructed by me and exhibited to visitors in my laboratory.

In 1896, however, I designed a complete machine capable of a multitude of operations, but the consummation of my labors was delayed until late in 1897.

This machine was illustrated and described in my article in the Century Magazine of June, 1900; and other periodicals of that time and when first shown in the beginning of 1898, it created a sensation such as no other invention of mine has ever produced. In November, 1898, a basic patent on the novel art was granted to me, but only after the examiner−in−chief had come to New York and witnessed the performance, for what I claimed seemed unbelievable. I remember that when later I called on an official in Washington, with a view of offering the invention to the Government, he burst out in laughter upon my telling him what I had accomplished. Nobody thought then that there was the faintest prospect of perfecting such a device. It is unfortunate that in this patent, following the advice of my attorneys, I indicated the control as being affected through the medium of a single circuit and a well−known form of detector, for the reason that I had not yet secured protection on my methods and apparatus for individualization. As a matter of fact, my boats were controlled through the joint action of several circuits and interference of every kind was excluded.

Most generally, I employed receiving circuits in the form of loops, including condensers, because the discharges of my high−tension transmitter ionized the air in the (laboratory) so that even a very small aerial would draw electricity from the surrounding atmosphere for hours.

Just to give an idea, I found, for instance, that a bulb twelve inches in diameter, highly exhausted, and with one single terminal to which a short wire was attached, would deliver well on to one thousand successive flashes before all charge of the air in the laboratory was neutralized. The loop form of receiver was not sensitive to such a disturbance and it is curious to note that it is becoming popular at this late date. In reality, it collects much less energy than the aerials or a long grounded wire, but it so happens that it does away with a number of defects inherent to the present wireless devices.

In demonstrating my invention before audiences, the visitors were requested to ask questions, however involved, and the automaton would answer them by signs. This was considered magic at the time, but was extremely simple, for it was myself who gave the replies by means of the device.

At the same period, another larger telautomatic boat was constructed, a photograph of which was shown in the October 1919 number of the Electrical Experimenter. It was controlled by loops, having several turns placed in the hull, which was made entirely water−tight and capable of submergence. The apparatus was similar to that used in the first with the exception of certain special features I introduced as, for example, incandescent lamps which afforded a visible evidence of the proper functioning of the machine. These automata, controlled within the range of vision of the operator, were, however, the first and rather crude steps in the evolution of the art of Telautomatics as I had conceived it.

The next logical improvement was its application to automatic mechanisms beyond the limits of vision and at great distances from the center of control, and I have ever since advocated their employment as instruments of warfare in preference to guns. The importance of this now seems to be recognized, if I am to judge from casual announcements through the press, of achievements which are said to be extraordinary but contain no merit of novelty, whatever. In an imperfect manner it is practicable, with the existing wireless plants, to launch an aeroplane, have it follow a certain approximate course, and perform some operation at a distance of many hundreds of miles. A machine of this kind can also be mechanically controlled in several ways and I have no doubt that it may prove of some usefulness in war. But there are to my best knowledge, no instrumentalities in existence today with which such an object could be accomplished in a precise manner. I have devoted years of study to this matter and have evolved means, making such and greater wonders easily realizable.

As stated on a previous occasion, when I was a student at college I conceived a flying machine quite unlike the present ones. The underlying principle was sound, but could not be carried into practice for want of a prime−mover of sufficiently great activity. In recent years, I have successfully solved this problem and am now planning aerial machines *devoid of sustaining planes, ailerons, propellers, and other external* attachments, which will be capable of immense speeds and are very likely to furnish powerful arguments for peace in the near future. Such a machine, sustained and propelled *entirely by reaction*, is shown on one of the pages of my lectures, and is supposed to be controlled either mechanically, or by wireless energy. By installing proper plants, it will be practicable to *project a missile of this kind into the air and drop it* almost on the very spot designated, which may be thousands of miles away.

But we are not going to stop at this. Telautomats will be ultimately produced, capable of acting as if possessed of their own intelligence, and their advent will create a revolution. As early as 1898, I proposed to representatives of a large manufacturing concern the construction and public exhibition of an automobile carriage which, left to itself, would perform a great variety of operations involving something akin to judgment. But my proposal was deemed chimerical at the time and nothing came of it.

At present, many of the ablest minds are trying to devise expedients for preventing a repetition of the awful conflict which is only theoretically ended and the duration and main issues of which I have correctly predicted in an article printed in the Sun of December 20, 1914. The proposed League is not a remedy but, on the contrary, in the opinion of a number of competent men, may bring about results just the opposite.

It is particularly regrettable that a punitive policy was adopted in framing the terms of peace, because a few years hence, it will be possible for nations to fight without armies, ships or guns, by weapons far more terrible, to the destructive action and range of which there is virtually no limit. Any city, at a distance, whatsoever, from the enemy, can be destroyed by him and no power on earth can stop him from doing so. If we want to avert an impending calamity and a state of things which may transform the globe into an inferno, we should push the development of flying machines and wireless transmission of energy without an instant's delay and with all the power and resources of the nation.

Prodigal Genius

BIOGRAPHY OF NIKOLA TESLA

1994 Brotherhood of Life, Inc.,
110 Dartmouth, SE, Albuquerque,
New Mexico 87106 USA

"SPECTACULAR" is a mild word for describing the strange experiment with life that comprises the story of Nikola Tesla, and "amazing" fails to do adequate justice to the results that burst from his experiences like an exploding rocket. It is the story of the dazzling scintillations of a superman who created a new world; it is a story that condemns woman as an anchor of the flesh which retards the development of man and limits his accomplishment--and, paradoxically, proves that even the most successful life, if it does not include a woman, is a dismal failure.

Even the gods of old, in the wildest imaginings of their worshipers, never undertook such gigantic tasks of world-wide dimension as those which Tesla attempted and accomplished. On the basis of his hopes, his dreams, and his achievements he rated the status of the Olympian gods, and the Greeks would have so enshrined him. Little is the wonder that so-called practical men, with their noses stuck in profit-and-loss statements, did not understand him and thought him strange.

The light of human progress is not a dim glow that gradually becomes more luminous with time. The panorama of human evolution is illumined by sudden bursts of dazzling brilliance in intellectual accomplishments that throw their beams far ahead to give us a glimpse of the distant future, that we may more correctly guide our wavering steps today. Tesla, by virtue of the amazing discoveries and inventions which he showered on the world, becomes one of the most resplendent flashes that has ever brightened the scroll of human advancement.

Tesla created the modern era; he was unquestionably one of the world's greatest geniuses, but he leaves no offspring, no legatees of his brilliant mind, who might aid in administering that world; he created fortunes for multitudes of others but himself died penniless, spurning wealth that might be gained from his discoveries. Even as he walked among the teeming millions of New York he became a fabled individual who seemed to belong to the far-distant

future or to have come to us from the mystical realm of the gods, for he seemed to be an admixture of a Jupiter or a Thor who hurled the shafts of lightning; an Ajax who defied the Jovian bolts; a Prometheus who transmuted energy into electricity to spread over the earth; an Aurora who would light the skies as a terrestrial electric lamp; a Mazda who created a sun in a tube; a Hercules who shook the earth with his mechanical vibrators; a Mercury who bridged the ambient realms of space with his wireless waves--and a Hermes who gave birth to an electrical soul in the earth that set it pulsating from pole to pole.

This spark of intellectual incandescence, in the form of a rare creative genius, shot like a meteor into the midst of human society in the latter decades of the past century; and he lived almost until today. His name became synonymous with magic in the intellectual, scientific, engineering and social worlds, and he was recognized as an inventor and discoverer of unrivaled greatness. He made the electric current his slave. At a time when electricity was considered almost an occult force, and was looked upon with terror-stricken awe and respect, Tesla penetrated deeply into its mysteries and performed so many marvelous feats with it that, to the world, he became a master magician with an unlimited repertoire of scientific legerdemain so spectacular that it made the accomplishments of most of the inventors of his day seem like the work of toy-tinkers.

Tesla was an inventor, but he was much more than a producer of new devices: he was a discoverer of new principles, opening many new empires of knowledge which even today have been only partly explored. In a single mighty burst of invention he created the world of power of today; he brought into being our electrical power era, the rock-bottom foundation on which the industrial system of the entire world is builded; he gave us our mass-production system, for without his motors and currents it could not exist; he created the race of robots, the electrical mechanical men that are replacing human labor; he gave us every essential of modern radio; he invented the radar forty years before its use in World War II; he gave us our modern neon and other forms of gaseous-tube lighting; he gave us our fluorescent lighting; he gave us the high-frequency currents which are performing their electronic wonders throughout the industrial and medical worlds; he gave us remote control by wireless; he helped give us World War II, much against his will--for the misuse of his

superpower system and his robot controls in industry made it possible for politicians to have available a tremendous surplus of power, production facilities, labor and materials, with which to indulge in the most frightful devastating war that the maniacal mind could conceive. And these discoveries are merely the inventions made by the master mind of Tesla which have thus far been utilized--scores of others remain still unused.

Yet Tesla lived and labored to bring peace to the world. He dedicated his life to lifting the burdens from the shoulders of mankind; to bringing a new era of peace, plenty and happiness to the human race. Seeing the coming of World War II, implemented and powered by his discoveries, he sought to prevent it; offered the world a device which he maintained would make any country, no matter how small, safe within its borders--and his offer was rejected.

More important by far, however, than all his stupendously significant electrical discoveries is that supreme invention--Nikola Tesla the Superman--the human instrument which shoved the world forward with an accelerating lunge like an airplane cast into the sky from a catapult. Tesla, the scientist and inventor, was himself an invention, just as much as was his alternating-current system that put the world on a superpower basis.

Tesla was a superman, a self-made superman, invented and designed specifically to perform wonders; and he achieved them in a volume far beyond the capacity of the world to absorb. His life he designed on engineering principles to enable him to serve as an automaton, with utmost efficiency, for the discovery and application of the forces of Nature to human welfare. To this end he sacrificed love and pleasure, seeking satisfaction only in his accomplishments, and limiting his body solely to serving as a tool of his technically creative mind.

With our modern craze for division of labor and specialization of effort to gain efficiency of production in our industrial machine, one hesitates to think of a future in which Tesla's invention of the superman might be applied to the entire human race, with specialization designed for every individual from birth.

The superman that Tesla designed was a scientific saint. The inventions that this scientific martyr produced were designed for the peace, happiness and security of the human race, but they have been applied to create scarcity, depressions and devastating war. Suppose the superman invention were also developed and prostituted to the purposes of war-mongering politicians? Tesla glimpsed the possibilities and suggested the community life of the bee as a threat to our social structure unless the elements of individual and community lives are properly directed and personal freedom protected.

Tesla's superman was a marvelously successful invention--for Tesla--which seemed, as far as the world could observe, to function satisfactorily. He eliminated love from his life; eliminated women even from his thoughts. He went beyond Plato, who conceived of a spiritual companionship between man and woman free from sexual desires; he eliminated even the spiritual companionship. He designed the isolated life into which no woman and no man could enter; the self-suficient individuality from which all sex considerations were completely eliminated; the genius who would live entirely as a thinking and a working machine.

Tesla's superman invention was a producer of marvels, and he thought that he had, by scientific methods, succeeded in eliminating love from his life. That abnormal life makes a fascinating experiment for the consideration of the philosopher and psychologist, for he did not succeed in eliminating love. It manifested itself despite his conscientious efforts at suppression; and when it did so it came in the most fantastic form, providing a romance the like of which is not recorded in the annals of human history.

Tesla's whole life seems unreal, as if he were a fabled creature of some Olympian world. A reporter, after writing a story of his discoveries and inventions, concluded, "His accomplishments seem like the dream of an intoxicated god." It was Tesla's invention of the polyphase alternating-current system that was directly responsible for harnessing Niagara Falls and opened the modern electrical superpower era in which electricity is transported for hundred of miles, to operate the tens of thousands of mass-production factories of industrial systems. Every one of the tall Martian-like towers of the electrical transmission lines that stalk across the earth, and whose wires carry

electricity to distant cities, is a monument to Tesla; every powerhouse, every dynamo and every motor that drives every machine in the country is a monument to him.

Superseding himself, he discovered the secret of transmitting electrical power to the utmost ends of the earth without wires, and demonstrated his system by which useful amounts of power could be drawn from the earth anywhere merely by making a connection to the ground; he set the entire earth in electrical vibration with a generator which spouted lightning that rivaled the fiery artillery of the heavens. It was as a minor portion of this discovery that he created the modern radio system; he planned our broadcasting methods of today, forty years ago when others saw in wireless only the dot-dash messages that might save ships in distress.

He produced lamps of greater brilliance and economy than those in common use today; he invented the tube, fluorescent and wireless lamps which we now consider such up-to-the-minute developments; and he essayed to set the entire atmosphere of the earth aglow with his electric currents, to change our world into a single terrestrial lamp and to make the skies at night shine as does the sun by day.

If other first-magnitude inventors and discoverers may be considered torches of progress, Tesla was a conflagration. He was the vehicle through which the blazing suns of a brighter tomorrow focused their incandescent beams on a world that was not prepared to receive their light. Nor is it remarkable that this radiant personality should have led a strange and isolated life. The value of his contributions to society cannot be overrated. we can now analyze, to some extent, the personality that produced them. He stands as a synthetic genius, a self-made superman, the greatest invention of the greatest inventor of all times. But when we consider Tesla as a human being, apart from his charming and captivating social manners, it is hard to imagine a worse nightmare than a world inhabited entirely by geniuses.

When Nature makes an experiment and achieves an improvement it is necessary that it be accomplished in such a way that the progress will not be lost with the individual but will be passed on to future generations. In man, this requires a utilization of the social values of the race, cooperation

of the individual with his kind, that the improved status may be propagated and become a legacy of all. Tesla intentionally engineered love and women out of his life, and while he achieved gigantic intellectual stature, he failed to achieve its perpetuation either through his own progeny or through disciples. The superman he constructed was not great enough to embrace a wife and continue to exist as such. The love he sought to suppress in his life, and which he thought was associated only with women, is a force which, in its various aspects, links together all members of the human race.

In seeking to suppress this force entirely Tesla severed the bonds which might have brought to him the disciples who would, through other channels, have perpetuated the force of his prodigal genius. As a result, he succeeded in imparting to the world only the smallest fraction of the creative products of his synthetic superman.

The creation of a superman as demonstrated by Tesla was a grand experiment in human evolution, well worthy of the giant intellect that grew out of it, but it did not come up to Nature's standards; and the experiment will have to be made many times more before we learn how to create a super race with the minds of Teslas that can tap the hidden treasury of Nature's store of knowledge, yet endowed too with the vital power of love that will unlock forces, more powerful than any which we now glimpse, for advancing the status of the human race.

There was no evidence whatever that a superman was being born

when the stroke of midnight between July 9 and 10, in the year 1856, brought a son, Nikola, to the home of the Rev. Milutin Tesla and Djouka, his wife, in the hamlet of Smiljan, in the Austro-Hungarian border province of Lika, now a part of Yugoslavia. The father of the new arrival, pastor of the village church, was a former student in an oficers' training school who had rebelled against the restrictions of Army life and turned to the ministry as the field in which he could more satisfactorily express himself. The mother, although totally unable to read or write, was nevertheless an intellectually brilliant woman, who without the help of literal aids became really well educated.

Both father and mother contributed to the child a valuable heritage of culture developed and passed on by ancestral families that had been community leaders for many generations. The father came from a family that contributed sons in equal numbers to the Church and to the Army. The mother was a member of the Mandich family whose sons, for generations without number, had, with very few exceptions, become ministers of the Serbian Orthodox Church, and whose daughters were chosen as wives by ministers.

Djouka, the mother of Nikola Tesla (her given name in English translation would be Georgina), was the eldest daughter in a family of seven children. Her father, like her husband, was a minister of the Serbian Orthodox Church, Her mother, after a period of failing eyesight, had become blind shortly after the seventh child was born; so Djouka, the eldest daughter, at a tender age was compelled to take over the major share of her mother's duties. This not alone prevented her from attending school: her work at home so completely consumed her time that she was unable to acquire even the rudiments of reading and writing through home study. This was a strange situation in the cultured family of which she was a member. Tesla, however, always credited his unlettered mother rather than his erudite father with being the source from which he inherited his inventive ability. She devised many household labor-saving instruments. She was, in addition, a very practical individual, and her well-educated husband wisely left in her hands all business matters involving both the church and his household.

An unusually retentive memory served this remarkable woman as a good substitute for literacy. As the family moved in cultured circles she absorbed by ear much of the cultural riches of the community. She could repeat, without error or omission, thousands of verses of the national poetry of her country--the sagas of the Serbs--and could recite long passages from the Bible. She could narrate from memory the entire poetical- philosophical work Gorski ffenac (Mountain fireath), written by Bishop Petrovich Njegosh. She also possessed artistic talent and a versatile dexterity in her fingers for expressing it. She earned wide fame throughout the countryside for her beautiful needlework. According to Tesla, so great were her dexterity and her patience that she could, when over sixty, using only her fingers, tie three knots in an eyelash.

The remarkable abilities of this clever woman who had no formal education were transmitted to her five children. The elder son, Dane Tesla, born seven years before Nikola, was the family favorite because of the promise of an outstanding career which his youthful cleverness indicated was in store for him. He foreshadowed in his early years the strange manifestations which in his surviving brother were a prelude to greatness.

Tesla's father started his career in the military service, a likely choice for the son of an oficer; but he apparently did not inherit his father's liking for Army life. So slight an incident as criticism for failure to keep his brass buttons brightly polished caused him to leave military school. He was probably more of a poet and philosopher than a soldier. He wrote poetry which was published in contemporary papers. He also wrote articles on current problems which he signed with a pseudonym, "Srbin Pravicich." This, in Serb, means "Man of Justice." He spoke, read and wrote Serbo-Croat, German and Italian. It was probably his interest in poetry and philosophy that caused him to be attracted to Djouka Mandich. She was twenty-five and Milutin was two years older. He married her in 1847. His attraction to the daughter of a pastor probably influenced his next choice of a career, for he then entered the ministry and was soon ordained a priest.

He was made pastor of the church at Senj, an important seaport with facilities for a cultural life. He gave satisfaction, but apparently he achieved success among his parishioners on the basis of a pleasing personality and an understanding of problems rather than by using any great erudition in theological and ecclesiastical matters.

A few years after he was placed in charge of this parish, a new archbishop, elevated to head of the diocese, wished to survey the capabilities of the priests in his charge and offered a prize for the best sermon preached on his oficial visit. The Rev. Milutin Tesla was bubbling over, at the time, with interest in labor as a major factor in social and economic problems. To preach a sermon on this topic was, from the viewpoint of expediency, a totally impractical thing to do. Nobody, however, had ever accused the Rev. Mr. Tesla of being practical, so doing the impractical thing was quite in harmony with his nature. He chose the subject which held his greatest interest; and

when the archbishop arrived, he listened to a sermon on "Labor."

Months later Senj was surprised by an unanticipated visit from the archbishop, who announced that the Rev. Mr. Tesla had preached the best sermon, and awarded him a red sash which he was privileged to wear on all occasions. Shortly afterward he was made pastor at Smiljan, where his parish then embraced forty homes. He was later placed in charge of the much larger parish in the nearby city of Gospic. His first three children, Milka, Dane and Angelina, were born at Senj. Nikola and his younger sister, Marica, were born at Smiljan.

Tesla's early environment, then, was that of an agricultural community in a high plateau region near the eastern shore of the Adriatic Sea in the Velebit Mountains, a part of the Alps, a mountain chain stretching from Switzerland to Greece. He did not see his first steam locomotive until he was in his `teens, so his aptitude for mechanical matters did not grow out of his environment.

Tesla's homeland is today called Yugoslavia, a country whose name means "Land of the Southern Slavs." It embraces several former separate countries, Serbia, Bosnia, Croatia, Montenegro, Dalmatia and also Slovenia. The Tesla and Mandich families originally came from the western part of Serbia near Montenegro. Smiljan, the village where Tesla was born, is in the province of Lika, and at the time of his birth this was a dependent province held by the Austro-Hungarian Empire as part of Croatia and Slovenia.

Tesla's surname dates back more than two and a half centuries. Before that time the family name was Draganic (pronounced as if spelled Drag'-a-nitch). The name Tesla (pronounced as spelled, with equal emphasis on both syllables), in a purely literal sense, is a trade name like Smith, firight or Carpenter. As a common noun it describes a woodworking tool which, in English, is called an adz. This is an axe with a broad cutting blade at right angles to the handle, instead of parallel as in the more familiar form. It is used in cutting large tree trunks into squared timbers. In the Serbo-Croat language, the name of the tool is tesla. There is a tradition in the Draganic family that the members of one branch were given the nickname "Tesla" because of an inherited trait which caused practically all of them to have very large, broad and protruding front

teeth which greatly resembled the triangular blade of the adz.

The name Draganic and derivatives of it appear frequently in other branches of the Tesla family as a given name. When used as a given name it is frequently translated "Charlotte," but as a generic term it holds the meaning "dear" and as a surname is translated "Darling."

The majority of Tesla's ancestors for whom age records are available lived well beyond the average span of life for their times, but no definite record has been found of the ancestor who, Tesla claimed, lived to be one hundred and forty years of age. (His father died at the age of fifty-nine, and his mother at seventy-one.)

Although many of Tesla's ancestors were dark eyed, his eyes were a gray-blue. He claimed his eyes were originally darker, but that as a result of the excessive use of his brain their color changed. His mother's eyes, however, were gray and so are those of some of his nephews. It is probable, therefore, that his gray eyes were inherited, rather than faded by excessive use of the brain.

Tesla grew to be very tall and very slender--tallness was a family and a national trait. When he attained full growth he was exactly two meters, or six feet two and one-quarter inches tall. while his body was slender, it was built within normal proportions. His hands, however, and particularly his thumbs, seemed unusually long.

Nikola's older brother Dane was a brilliant boy and his parents gloried in their good fortune in being blessed with such a fine son. There was, however, a difference of seven years in the two boys' ages, and since the elder brother died as the result of an accident at the age of twelve, when Nikola was but five years old, a fair comparison of the two seems hardly possible. The loss of their first-born son was a great blow to his mother and father; the grief and regrets of the family were manifest in idealizing his talents and predicting possibilities of greatness he might have realized, and this situation was a challenge to Nikola in his youth.

The superman Tesla developed out of the superboy Nikola. Forced to rise above the normal level by an urge to carry on for his dearly beloved departed brother, and also on his

own account to exceed the great accomplishment his brother might have attained had he lived, he unconsciously drew upon strange resources within. The existence of these resources might have remained unsuspected for a lifetime, as happens with the run of individuals, if Nikola had not felt the necessity for creating a larger sphere of life for himself.

He was aware as a boy that he was not like other boys in his thoughts, in his amusements and in his hobbies. He could do the things that other lads his age usually do, and many things that they could not do. It was these latter things that interested him most, and he could find no companions who would share his enthusiasms for them. This situation caused him to isolate himself from contemporaries, and made him aware that he was destined for an unusual place if not great accomplishments in life. His boyish mind was continually exploring realms which his years had not reached, and his boyhood attainments frequently were worthy of men of mature age.

He had, of course, the usual experience of unusual incidents that fall to the lot of a small boy. One of the earliest events which Tesla recalled was a fall into a tank of hot milk that was being scalded in the process used by the natives of that region as a hygienic measure, anticipating the modern process of pasteurizing.

Shortly afterward he was accidentally locked in a remote mountain chapel which was visited only at widely separated intervals. He spent the night in the small building before his absence was discovered and his possible hiding place determined.

Living close to Nature, with ample opportunity for observing the flight of birds, which has ever filled men with envy, he did what many another boy has done with the same results. An umbrella, plus imagination, offered to him a certain solution of the problem of free flight through the air. The roof of a barn was his launching platform. The umbrella was large, but its condition was much the worse for many years of service; it turned inside out before the flight was well started. No bones were broken, but he was badly shaken up and spent the next six weeks in bed. Probably, though, he had better reason for making this experiment than most of the others who have tried it. He revealed that practically all his life he experienced a

peculiar reaction when breathing deeply. When he breathed deeply he was overcome by a feeling of lightness, as if his body had lost all weight; and he should, he concluded, be able to fly through the air merely by his will to do so. He did not learn, in boyhood, that he was unusual in this respect.

One day when he was in his fifth year, one of his chums received a gift of a fishing line, and all the boys in the group planned a fishing trip. On that day he was on the outs with his chums for some unremembered reason. As a result, he was informed he could not join them. He was not permitted even to see the fishing line at close range. He had glimpsed, however, the general idea of a hook on the end of a string. In a short time he had fashioned his own interpretation of a hook. The refinement of a barb had not occurred to him and he also failed to evolve the theory of using bait when he went off on his own fishing expedition. The baitless hook failed to attract any fish but, while dangling in the air, much to Tesla's surprise and satisfaction it snared a frog that leaped at it. He came home with a bag of nearly two dozen frogs. It may have been a day on which the fish were not biting, but at any rate his chums came home from the use of their new hook and line without any fish. His triumph was complete. When he later revealed his technique, all the boys in the neighborhood copied his hook and method, and in a short time the frog population of the region was greatly depleted.

The contents of birds' nests always excited Tesla's curiosity. He rarely disturbed their contents or occupants. On one occasion, however, he climbed a rocky crag to investigate an eagle's nest and took from it a baby eagle which he kept locked in a barn. A bird on the wing he considered fair prey for his sling shot, with which he was a star performer.

About this time he became intrigued with a piece of hollow tube cut from a cane growing in the neighborhood. This he played with until he had evolved a blow gun and later, by making a plunger and plugging one end of the tube with a wad of wet hemp, a pop gun. He then undertook the making of larger pop guns, and contrived one in which the end of the plunger was held against the chest and the tube pulled energetically toward the body. He engaged in the manufacture of this article for his chums, as a five-year-old businessman. When a number of window panes happened to

get broken accidentally by getting in the way of his hemp wad, his inventive proclivities in this field were quickly curbed by the destruction of the pop guns and the administration of the parental rod.

Tesla started his formal education by attending the village school in Smiljan before he reached his fifth birthday. A few years later his father received his appointment as pastor of a church in the nearby city of Gospic, so the family moved there. This was a sad day for young Tesla. He had lived close to Nature, and loved the open country and the high mountains among which he had thus far spent all of his life. The sudden transition to the artificialities of the city was a very definite shock to him. He was out of harmony with his new surroundings.

His advent into the city life of Gospic, at the age of seven, got off to an unfortunate start. As the new minister in town, his father was anxious to have everything move smoothly. Tesla was required to dress in his best clothes and attend the Sunday services. Naturally, he dreaded this ordeal and was very happy when assigned the task of ringing the bell summoning the worshipers to the service and announcing the close of the ceremonies. This gave him an opportunity to remain unseen in the belfry while the parishioners, their daughters and dude sons were arriving and departing.

Thinking he had waited long enough after the close of the service for the church to be cleared on this first Sunday, he came downstairs three steps at a time. A wealthy woman parishioner wearing a skirt with a long train that fashionably dragged along the ground, and who had come to the service with a retinue of servants, remained after the other parishioners to have a talk with the new pastor. She was just making an impressive exit when Tesla's final jump down the stairs landed him on the train, ripping this dignity-preserving appendage from the woman's dress. Her mortification and rage and his father's anger came upon him simultaneously. Parishioners loitering outside rushed back to revel in the spectacle. Thereafter no one dared be pleasant to this youngster who had enraged the wealthy dowager who domineered it over the social community. He was practically ostracized by the parishioners, and continued so until he redeemed himself in a spectacular manner.

Tesla felt strange and defeated in his ignorance of city ways. He met the situation first by avoidance. He did not care to leave his home. The boys of his age were neatly dressed every day. They were dudes and he did not belong. Even as a child Tesla was meticulously careful in dress. At the earliest moment, however, he would slip work clothes over his dress clothes and go wandering in the woods or engage in mechanical work. He could not enjoy life if limited to the activities in which he could engage while dressed up. Tesla, however, possessed ingenuity, and there was rarely a situation in which he was not able to use it. He also possessed knowledge of the ways of Nature. These gave him a distinct superiority over the city boys.

About a year after the family moved to Gospic a new fire company was organized. It was to be supplied with a pump which would replace the useful but inadequate bucket brigade. The members of the new organization obtained brightly colored uniforms and practiced marching for parades. Eventually the new pump arrived. It was a man-power pump to be operated by sixteen men. A parade and demonstration of the new apparatus was arranged. Almost everyone in Gospic turned out for the event and followed to the river front for the pump demonstration. Tesla was among them. He paid no attention to the speeches but was all eyes for the brightly painted apparatus. He did not know how it worked but would have loved to take it apart and investigate the insides.

The time for the demonstration came when the last speaker, finishing his dedicatory address, gave the order to start the pumping operation that would send a stream of water shooting skyward from the nozzle. The eight men regimented on either side of the pump bowed and rose in alternate unison as they raised and lowered the bars that operated the pistons of the pump. But nothing else happened, not a drop of water came from the nozzle!

Oficials of the fire company started feverishly to make adjustments and, after each attempt, set the sixteen men oscillating up and down at the pump handles, but each time without results. The lines of hose between the pump and the nozzle were straightened out, they were disconnected from the pump and connected again. But no water came from the far end of the hose to reward the efforts of the perspiring firemen.

Tesla was among the usual group of urchins that always manages to get inside the lines on such occasions. He tried to see everything that was going on from the closest possible vantage point and undoubtedly got on the nerves of the vexed oficials when their repeated efforts were frustrated by continuous failures. As one of the oficials turned for the tenth time to vent his frustration on the urchins and order them away from his range of action, Tesla grabbed him by the arm.

"I know what to do, Mister," said Tesla. "you keep pumping."

Dashing for the river, Tesla peeled his clothes off quickly and dove into the water. He swam to the suction hose that was supposed to draw the water supply from the river. He found it kinked, so that no water could flow into it, and flattened by the vacuum created by the pumping. When he straightened out the kink, the water rushed into the line. The nozzlemen had stood at their post for a long time, receiving a continuous repetition of warnings to be prepared each time an adjustment was made, but, as nothing happened on these successive occasions, they had gradually relaxed their attention and were giving little thought to the direction in which the nozzle was pointed. When the stream of water did shoot skyward, down it came on the assembled oficials and townspeople. This item of unexpected drama excited the crowd at the other end of the line near the pump, and to give vent to their joy they seized the scantily dressed Tesla, boosted him to the shoulders of a couple of the firemen, and led a procession around the town. The seven-year-old Tesla was the hero of the day.

Later on Tesla, in explaining the incident, said that he had had not the faintest idea of how the pump worked; but as he watched the men struggle with it, he got an intuitive flash of knowledge that told him to go to the hose in the river. On looking back to that event, he said, he knew how Archimedes must have felt when, after discovering the law of the displacement of water by floating objects, he ran naked through the streets of Syracuse shouting "Eureka!

At the age of seven Tesla had tasted the pleasures of public acclaim

for his ingenuity. And further, he had done something which the dudes, the boys of his age in the city, could not do

and which even their fathers could not do. He had found himself. He was now a hero, and it could be forgotten that he had jumped on a woman's skirt and ripped the train off.

Tesla never lost an opportunity to hike through the nearby mountains where he could again enjoy the pleasures of his earlier years spent so close to Nature. On these occasions he would often wonder if there was still operating a crude water wheel which he made and installed, when he was less than five years old, across the mountain brook near his home in Smiljan.

The wheel consisted of a not too well-smoothed disk cut from a tree trunk in some lumbering operations. Through its center he was able to cut a hole and force into it a somewhat straight branch of a tree, the ends of which he rested in two sticks with crotches which he forced into the rock on either bank of the brook. This arrangement permitted the lower part of the disk to dip in the water and the current caused it to rotate. To the lad there was a great deal of originality employed in making this ancient device. The wheel wobbled a bit but to him it was a marvelous piece of construction, and he got no end of pleasure out of watching his water wheel obtain power from the brook.

This experiment undoubtedly made a life-long impression on his young plastic mind and endowed him with the desire, ever afterward manifested in his work, of obtaining power from Nature's sources which are always being dissipated and always being replenished.

In this smooth-disk water wheel we find an early clue to his later invention of the smooth-disk turbine. In his later experience he discovered that all water wheels have paddles--but his little water wheel had operated without paddles.

Tesla's first experiment in original methods of power production was made when he was nine years old. It demonstrated his ingenuity and originality, if nothing else. It was a sixteen-bug-power engine. He took two thin slivers of wood, as thick as a toothpick and several times as long, and glued them together in the form of a cross, so they looked like the arms of a windmill. At the point of intersection they were glued to a spindle made of another thin sliver of wood. On this he slipped a very small pulley

with about the diameter of a pea. A piece of thread acting as a driving belt was slipped over this and also around the circumference of a much larger but light pulley which was also mounted on a thin spindle. The power for this machine was furnished by sixteen May bugs (June bugs in the United States). He had collected a jar full of the insects, which were very much of a pest in the neighborhood. With a little dab of glue four bugs were afixed, heading in the same direction, to each of the four arms of the windmill arrangement. The bugs beat their wings, and if they had been free would have flown away at high speed. They were, however, attached to the cross arms, so instead they pulled them around at high speed. These, being connected by the thread belt to the large pulley, caused the latter to turn at low speed; but it developed, Tesla reports, a surprisingly large torque, or turning power.

Proud of his bug-power motor and its continuous operation--the bugs did not cease flying for hours--he called in one of the boys in the neighborhood to admire it. The lad was a son of an Army oficer. The visitor was amused for a short time by the bug motor, until he spied the jar of still unused May bugs. Without hesitation he opened the jar, fished out the bugs--and ate them. This so nauseated Tesla that he chased the boy out of the house and destroyed the bug motor. For years he could not tolerate the sight of May bugs without a return of this unpleasant reaction.

This event greatly annoyed Tesla because he had planned to add more spindles to the shaft and stick on more fliers until he had more than a one-hundred-bug-power motor.

TESLA'S years in school were more important for the activities in which he engaged in after-school hours than for what he learned in the classroom. At the age of ten, having finished his elementary studies in the Normal School, Tesla entered the college, called the Real Gymnasium, at Gospic. This was not an unusually early age to enter the Real Gymnasium, as that school corresponds more to our grammar school and junior high school than to our college.

One of the requirements, and one to which an unusually large percentage of the class time was devoted throughout the four years, was freehand drawing. Tesla detested the subject almost to the point of open rebellion, and his marks were accordingly very low, but not entirely owing to a lack of ability.

Tesla was left-handed as a boy, but later became ambidextrous. Left-handedness was a definite handicap in the freehand-drawing studies, but he could have done much better work than he actually produced and would have gotten higher marks if it were not for a piece of altruism in which he engaged. A student whom he could excel in drawing was striving hard for a scholarship. Were he to receive the lowest marks in freehand drawing, he would be unable to obtain the scholarship. Tesla sought to help his fellow student by intentionally getting the lowest rating in the small class.

Mathematics was his favorite subject and he distinguished himself in that study. His unusual proficiency in this field was not considered a counterbalancing virtue to make amends for his lack of enthusiasm for freehand drawing. A strange power permitted him to perform unusual feats in mathematics. He possessed it from early boyhood, but had considered it a nuisance and tried to be rid of it because it seemed beyond his control.

If he thought of an object it would appear before him exhibiting the appearance of solidity and massiveness. So greatly did these visions possess the attributes of actual objects that it was usually dificult for him to distinguish between vision and reality. This abnormal faculty functioned in a very useful fashion in his school work with mathematics.

If he was given a problem in arithmetic or algebra, it was immaterial to him whether he went to the blackboard to work it out or whether he remained in his seat. His strange faculty permitted him to see a visioned blackboard on which the problem was written, and there appeared on this blackboard all of the operations and symbols required in working out the solution. Each step appeared much more rapidly than he could work it out by hand on the actual slate. As a result, he could give the solution almost as quickly as the whole problem was stated.

His teachers, at first, had some doubts about his honesty, thinking he had worked out some clever deceit for getting the right answers. In due time their skepticism was dispelled and they accepted him as a student who was unusually apt at mental arithmetic. He would not reveal this power to anyone and would discuss it only with his mother, who in the past had encouraged him in his efforts to banish it. Now that the power had demonstrated some definite usefulness, though, he was not so anxious to be completely rid of it, but desired to bring it under his complete control.

Work that Tesla did outside school hours interested him much more than his school work. He was a rapid reader and had a memory that was retentive to the point, almost, of infallibility. He found it easy to acquire foreign languages. In addition to his native Serbo-Croat language he became proficient in the use of German, French and Italian. This opened to him great stores of knowledge to which other students did not have access, yet this knowledge, apparently, was of little use to him in his school work. He was interested in things mechanical but the school provided no manual training course. Nevertheless, he became proficient in the working of wood and metals with tools and methods of his own contriving.

In the classroom of one of the upper grades of the Real Gymnasium models of water wheels were on exhibition. They were not working models but nevertheless they aroused Tesla's enthusiasm. They recalled to him the crude wheel he had constructed in the hills of Smiljan. He had seen pictures of the magnificent Niagara Falls. Coupling the power possibilities presented by the majestic waterfalls and the intriguing possibilities he saw in the models of the water wheels, he aroused in himself a passion to accomplish a grand achievement. Waxing eloquent on the subject, he told his father, "Some day I am going to America and harness Niagara Falls to produce power." Thirty years later he was to see this prediction fulfilled.

There were many books in his father's library. The knowledge in those books interested him more than that which he received in school and he wished to spend his evenings reading them. As in other matters, he carried this to an extreme, so his father forbade him to read them, fearing that he would ruin his eyes in the poor light of tallow candles then used for illumination. Nikola sought to

circumvent this ruling by taking candles to his room and reading after he was sent to bed, but his violation of orders was soon discovered and the family candle supply was hidden. Next he fashioned a candle mould out of a piece of tin and made his own candles. Then, by plugging the keyhole and the chinks around the door, he was able to spend the night hours reading volumes purloined from his father's bookshelves. Frequently, he said, he would read through the entire night and feel none the worse for the loss of sleep. Eventual discovery, however, brought paternal discipline of a vigorous nature. He was about eleven years old at this time.

Like other boys of his age he played with bows and arrows. He made bigger bows, and better, straighter shooting arrows, and his marksmanship was excellent. He was not willing to stop at that point. He started building arbalists. These could be described as bow-and-arrow guns. The bow is mounted on a frame and the string pulled back and caught on a peg from which it is released by a trigger. The arrow is laid on the midpoint of the bow, its end against the taut string. The bow lies horizontal on the frame whereas in ordinary manual shooting the bow is held in vertical position. For this reason the device is sometimes called the crossbow. In setting an arbalist the beam is placed against the abdomen and the string pulled back with all possible force. Tesla did this so often, he said, that his skin at the point of pressure became calloused until it was more like a crocodile's hide. When shot into the air the arrows from his arbalist were never recovered, for they went far out of sight. At close range they would pass through a pine board an inch thick.

Tesla got a thrill out of archery not experienced by other boys. He was, in imagination, riding those arrows which he shot out of sight into the blue vault of the heavens. That sense of exhilaration he experienced when breathing deeply gave him such a feeling of lightness he convinced himself that in this state it would be relatively easy for him to fly through the air if he only could devise some mechanical aid that would launch him and enable him to overcome what he thought was only a slight remaining weight in his body. His earlier disastrous jump from the barn roof had not disillusioned him. His conclusions were in keeping with his sensations; but a twelve-year-old lad exploring this dificult field alone cannot be condemned too severely for not discovering that our senses sometimes deceive us, or

rather that we sometimes deceive ourselves in interpreting what our senses tell us.

In breathing deeply he was overventilating his lungs, taking out some of the residual carbon dioxide which is chemical "ashes," and largely inert, and replacing it with air containing a mixture of equally inert nitrogen and very active oxygen. The latter being present in more than normal proportions immediately began to upset chemical balances throughout the body. The reaction on the brain produces a result which does not differ greatly from alcohol intoxication. A number of cults use this procedure to induce "mystical" or "occult" experiences. How was a twelve-year-old boy to know all these things? He could see that birds did an excellent job in flying. He was convinced that some day man would fly, and he wanted to produce the machine that would get him off the ground and into the air.

The big idea came to him when he learned about the vacuum--a space within a container from which all air had been exhausted. He learned that every object exposed to the air was under a pressure of about fourteen pounds per square inch, while in a vacuum objects were free of such pressure. He figured that a pressure of fourteen pounds should turn a cylinder at high speed and he could arrange to get advantage of such pressure by surrounding one half of a cylinder with a vacuum and having the remaining half of its surface exposed to air pressure. He carefully built a box of wood. At one end was an opening into which a cylinder was fitted with a very high order of accuracy, so that the box would be airtight; and on one side of the cylinder the edge of the box made a right-angle contact. On the cylinder's other side the box made a tangent, or flat, contact. This arrangement was made because he wanted the air pressure to be exerted at a tangent to the surface of the cylinder--a situation that he knew would be required in order to produce rotation. If he could get that cylinder to rotate, all he would have to do in order to fly would be to attach a propeller to a shaft from the cylinder, strap the box to his body and obtain continuous power from his vacuum box that would lift him through the air. His theory of course was fallacious, but he had no means of knowing that at the time.

The workmanship on this box was undoubtedly of a very high order, considering it was made by a self-instructed twelve-year-old mechanic. When he connected his vacuum pump, an

ordinary air pump with its valves reversed, he found the box was airtight, so he pulled out all the air, watching the cylinder intently while doing so. Nothing happened for many strokes of the pump except that it made his back lame to pull the pump handle upward while he created the most "powerful" possible vacuum. He rested for a moment. He was breathing deeply from exertion, overventilating his lungs, and getting that joyous, dizzy, light-as-air feeling which was a highly satisfactory mental environment for his experiment.

Suddenly the cylinder started to turn--slowly! His experiment was a success! His vacuum-power box was working! He would fly!

Tesla was delirious with joy. He went into a state of ecstasy. There was no one with whom he could share this joy, as he had taken no one into his confidence. It was his secret and he was forced to endure its joys alone. The cylinder continued to turn slowly. It was no hallucination. It was real. It did not speed up, however, and this was disappointing. He had visualized it turning at a tremendous speed but it was actually turning extremely slowly. His idea, at least, he figured, was correct. With a little better workmanship, perhaps he could make the cylinder turn faster. He stood spellbound watching it turn at a snail's pace for less than half a minute--and then the cylinder stopped. That broke the spell and ended for the time his mental air flights.

He hunted for the trouble and quickly located what he was sure was the cause of the dificulty. Since the vacuum, he theorized, is the source of power, then, if the power stops, it must be because the vacuum is gone. His pump, he felt sure, must be leaking air. He pulled up the handle. It came up easily and that meant very definitely he had lost the vacuum in the box. He again pumped out the air--and again when he reached a high vacuum the cylinder started to turn slowly and continued to do so for a fraction of a minute. When it stopped he again pumped a vacuum and again the cylinder turned. This time he continued to operate the pump and the cylinder continued to turn. He could keep it turning as long as he desired by continuing to pump the vacuum.

There was nothing wrong with his theory, as far as he could see. He went over the pump very carefully, making

improvements which would give him a high vacuum, and studied the valve to make that a better guard of the vacuum in the box. He worked on the project for weeks but despite his best efforts he could get no better results than the slow movement of the cylinder.

Finally the truth came to him in a flash--he was losing the vacuum in the box because the air was leaking in around the cylinder on that side where the flat board was tangent to the surface of the cylinder. As the air flowed into the box it pulled the cylinder around with it very slowly. When the air stopped flowing into the box the cylinder stopped turning. He knew now his theory was wrong. He had supposed that even with the vacuum being maintained, and no air leaking in, the air pressure would be exerted at a tangent to the surface of the cylinder and the pressure would produce motion in the same way as pushing on the rim of a wheel will cause it to turn. He discovered later, however, that the air pressure is exerted at right angles to the surface of the cylinder at all points, like the direction of the spokes of a wheel, and therefore it could not be used to produce rotation in the way he planned.

This experiment, nevertheless, was not a total loss, even though it greatly disheartened him. The knowledge that the air leaking into a vacuum had actually produced even a small amount of rotation in a cylinder remained with him and led directly, many years later, to his invention of the "Tesla turbine," the steam engine that broke all records for horsepower developed per pound of weight--what he called "a power house in a hat."

Nature seemed to be constantly engaged in staging spectacular demonstrations for young Tesla, revealing to him samples of the secret of her mighty forces.

Tesla was roaming in the mountains with some chums one winter day after a storm in which the snow fell moist and sticky. A small snowball rolled on the ground quickly gathered more snow to itself and soon became a big one that was not too easy to move. Tiring of making snowmen and snow houses on level stretches of ground, the boys took to throwing snowballs down the sloping ground of the mountain. Most of them were duds--that is, they got stalled in the soft snow before they accumulated additional volume. A few rolled a distance, grew larger and then bogged down and stopped. One, however, found just the right conditions; it

rolled until it was a large ball and then spread out, rolling up the snow at the sides as if it were rolling up a giant carpet, and then suddenly it turned into an avalanche. Soon an irresistible mass of snow was moving down the steep slope. It stripped the mountainside clean of snow, trees, soil and everything else it could carry before it and with it. The great mass landed in the valley below with a thud that shook the mountain. The boys were frightened because there was snow above them on the mountain that might have been shaken into a downward slide, carrying them along buried in it.

This event made a profound impression on Tesla and it dominated a great deal of his thinking in later life. He had witnessed a snowball weighing a few ounces starting an irresistible, devastating movement of thousands of tons of inert matter. It convinced him that there are tremendous forces locked up in Nature that can be released in gigantic amounts, for useful as well as destructive purposes, by the employment of small trigger forces. He was always on the lookout for such triggers in his later experiments.

Tesla even as a boy was an original thinker and he never hesitated to think thoughts on a grand scale, always carrying everything to its largest ultimate dimension as a means of exploring the cosmos. This is demonstrated by another event that took place the following summer. He was wandering alone in the mountains when storm clouds started to fill the sky. There was a flash of lightning and almost immediately a deluge of rain descended on him.

There was implanted in his thirteen-year-old mind on that occasion a thought which he carried with him practically all his life. He saw the lightning flash and then saw the rain come down in torrents, so he reasoned that the lightning flash produced the downpour. The idea become firmly fixed in his mind that electricity controlled the rain, and that if one could produce lightning at will, the weather would be brought under control. Then there would be no dry periods in which crops would be ruined; deserts could be turned into vineyards, the food supply of the world would be greatly increased, and there would be no lack of food anywhere on the globe. why could he not produce lightning?

The observation and the conclusions drawn from it by young Tesla were worthy of a more mature mind, and it would

require a genius among the adults to have evolved the project of controlling the world's weather through such means. There was, however, a flaw in his observation. He saw the lightning come first and the rain afterward. Further investigation would have revealed to him that the order of events was reversed higher in the air. It was the rain that came first and the lightning afterward up in the cloud. The lightning, however, arrived first because it made the trip from the cloud in less than 1/100,000 of a second, while the raindrops required several seconds to fall to the ground.

At this time there was planted in Tesla's mind the seed of a project which matured more than thirty years later when, in the mountains of Colorado, he actually produced bolts of lightning, and planned later to use them to bring rain. He never succeeded in convincing the U.S. Patent Ofice of the practicability of the rain-making plan.

Tesla, as a boy, knew no limits to the universe of his thinking; and as a result he built an intellectual realm suficiently large to provide ample space in which his more mature mind could operate without encountering retarding barriers.

Tesla finished his course at the Real Gymnasium in Gospic in 1870,

at the age of fourteen. He had distinguished himself as a scholar. In one grade, however, his mathematics professor gave him less than a passing mark for his year's work. Tesla felt an injustice had been done him, so he went to the director of the school and demanded that he be given the strictest kind of examination in the subject. This was done in the presence of the director and the professor, and Tesla passed it with an almost perfect mark.

His fine work at school and the recognition by the towns-people that he possessed a broader scope of knowledge than any other youth in town led the trustees of the public library to ask him to classify the books in their possession and make a catalogue. He had already read most of the books in his father's extensive library, so he was pleased to have close access to a still larger collection and undertook the task with considerable enthusiasm. He had scarcely begun work on this project when it was interrupted by a long intermittent illness. When he felt too depressed

to go to the library he had quantities of the books brought to his home, and these he read while confined to his bed. His illness reached a critical stage and physicians gave up hope of saving his life.

Tesla's father knew that he was a delicate child and, having lost his other son, tried to throw every possible safeguard around this one. He was greatly pleased over his son's brilliant accomplishments in almost every activity in which he engaged, but he recognized as a danger to Nikola's health the great intensity with which he tackled projects. Nikola's trend toward engineering was to him a dangerous development, as he thought work in that field would make too heavy demands upon him, not only because of the nature of the work but in the extended years of study in which he would have to engage. If, however, the boy entered the ministry, it would not be necessary for him to extend his studies beyond the Real Gymnasium which he had just completed. For this reason his father favored a career for him in the Church.

Illness threw everything into a somber aspect. When the critical stage of his illness was reached and his strength was at its lowest ebb, Nikola manifested no inclination to help himself get better by developing an enthusiasm for anything. It was in this stage of his illness that he glanced listlessly at one of the library books. It was a volume by Mark Twain. The book held his interest and then aroused his enthusiasm for life, enabling him to pass a crisis, and his health gradually returned to normal. Tesla credited the Mark Twain book with saving his life, and when, years later, he met Twain, they became very close friends.

At the age of fifteen Tesla, in 1870, continued his studies at the Higher Real Gymnasium, corresponding to our college, at Karlovac (Carlstadt) in Croatia. His attendance at this school was made possible by an invitation from a cousin of his father's, married to a Col. Brankovic, whose home was in Karlovac, to come and live with her and her husband, a retired Army oficer, while attending school. His life there was none too happy. Scarcely had he arrived when he contracted malaria from the mosquitoes in the Karlovac lowlands, and he was never free from the malady for years afterward.

Tesla relates that he was hungry all during the three years he spent at Karlovac. There was plenty of deliciously prepared food in the home, but his aunt held the theory that because his health seemed none too rugged he should not eat heavy meals. Her husband, a gruff and rugged individual, when carving a second helping for himself, would sometimes try to slip a healthy slice of meat onto Tesla's plate; but the Colonel was always overruled by his wife, who would take back the slice and carve one to the thinness of a sheet of paper, warning her husband, "Niko is delicate and we must be very careful not to overload his stomach."

His studies at Karlovac interested him, however, and he completed the four-year course in three years, tackling the school work with a dangerous enthusiasm, partly as an escape mechanism to divert his attention from the none too pleasing conditions where he was living. The lasting favorable impression which Tesla carried away from Karlovac concerned his professor of physics, a clever and original experimenter, who amazed him with the feats he performed with laboratory apparatus. He could not get enough of this course. He wanted to devote his whole time henceforth to electrical experimenting. He knew he would not be satisfied in any other field. His mind was made up; he had selected his career.

His father wrote to him shortly before his graduation advising him not to return home when school was closed but to go on a long hunting trip. Tesla, however, was anxious to get home--to surprise his parents with the good news that he had completed his work at the Higher Real Gymnasium a year ahead of schedule, and to announce his decision to make the study of electricity his life work. Greatly worried, his parents, who at that moment were making strenuous efforts to protect his health, were doubly alarmed. first, there was his violation of the instruction sent him not to return to Gospic. The reason for this advice they had not disclosed--an epidemic of cholera was raging. And second, there was his decision to enter on a career which they feared would make dangerous demands on his delicate health. On returning home, he found his plan definitely opposed. This made him very unhappy. In addition, he would shortly have to face a situation which was even more repugnant than entering upon a career in the Church, and that was the compulsory three-years' service in the Army. Those two powerful factors were operating against

him and seeking to thwart him in his burning desire to start immediately unraveling the mystery and harnessing the great power of electricity.

Nothing, he thought, could exceed the dificulty of the predicament in which he found himself. In this, however, he was mistaken, for he was soon to face a much more serious problem. On the very day after his arrival home, while these issues were still red hot, he became ill with cholera. He had come home malnourished because of the inadequate amount of food to which he had been limited and the strain of his intense application to his studies. Besides, he was still suffering from malaria. Then came the cholera. Now all other problems became secondary to the immediate one of maintaining life itself against the deadly scourge. His physical condition made the doctors despair of saving him. Nevertheless, he survived the crisis, but it left him in a thoroughly weakened and run-down condition. For nine months he lay in bed almost a physical wreck. He had frequent sinking spells and from each successive one it seemed harder to rally him.

Life held no incentive for him. If he survived he would be forced to enter the Army and, if nothing happened to prevent him from finishing that term of something worse than slavery, he would be forced to study for the ministry. He did not care whether he survived or not. Left to his own decision, he would not have rallied from earlier sinking spells; but the decision was not left to him. Some force stronger than his own consciousness carried him through, but it had to succeed in spite of him and not because of any assistance he was giving. The sinking spells came on with startling regularity, each one with increasing depth. It seemed a miracle that he had come out of the last one, and now with less reserve strength he was sinking into another and edging rapidly into unconsciousness. His father entered his room and tried desperately to rouse him and stir him to a more cheerful and hopeful attitude in which he could help himself and do more than the doctors could do for him, but without results.

"I could--get well--if you--would let me--study electrical--engineering," said the prostrate young man in a hardly audible whisper. He had scarcely enough energy left for even this effort; and having made the speech, he seemed to be dropping over the edge of nothingness. His father,

bending intently over him and fearing the end had come, seized him.

"Nikola," he commanded, "you cannot go. you must stay. you will be an engineer. Do you hear me? you will go to the best engineering school in the world and you will be a great engineer. Nikola, you must come back, you must come back and become a great engineer."

The eyes of the prostrate figure opened slowly. Now there was a light shining in the eyes where before they presented a death-like glaze. The face moved a little, very little, but the slight change this movement made seemed to be in the direction of a smile. It was a smile, a weak one, and he was able to keep his eyes open although it was very apparently a struggle for him to do so.

"Thank God" said his father. "you heard me, Nikola. you will go to an engineering school and become a great engineer. Do you understand me?"

There was not enough energy for voice but the smile became a little more definite.

Another crisis in which he had escaped death by the narrowest margin had been passed. His rise out of this situation seemed almost miraculous. It seemed to him, Tesla later related, that from that instant he felt as if he were drawing vital energy from his loved ones who surrounded him; and this he used to rally himself out of the shadow.

He was again able to whisper. "I will get well," he said weakly. He breathed deeply, as deep as his frail tired frame would permit, of the oxygen which he had found so stimulating in the past. It was the first time he had done so in the nine months since he became ill. With each breath he felt reinvigorated. He seemed to get stronger by the minute.

In a very short time he was taking nourishment and within a week he was able to sit up. In a few days more he was on his feet. Life now would be glorious. He would be an electrical engineer. Everything he dreamed of would come true. As the days passed he recovered his strength at a remarkably rapid rate and his hearty appetite returned. It was now early summer. He would prepare himself to enter the fall term at an engineering school.

But there was something he had forgotten, everyone in the family had forgotten, in the stress of his months of illness. It was now brought sharply to his and their attention. An Army summons--he must face three years' military servitude! was his remarkable recovery to be ruined by this catastrophe, which seemed all the worse now that his chosen career seemed otherwise nearer? Failure to respond to a military summons meant jail--and after that the service in addition. How would he solve this problem?

There is no record of what took place. This spot in his career Tesla glossed over with the statement that his father considered it advisable for him to go off on a year's hunting expedition to recover his health. At any rate, Nikola disappeared. He left with a hunting outfit and some books and paper. where he spent the year, no one knows--probably at some hideaway in the mountains. In the meantime, he was a fugitive from Army service.

For any ordinary individual this situation would be a most serious one. For Tesla it had all the gravity associated with ordinary cases, plus the complication that his family on his father's side was a traditional military family whose members had won high rank and honors in Army activities, and many of whom were now in the service of Austria-Hungary. For a member of that family to become equivalent to a "draft dodger" and a "conscientious objector," both, was a serious blow to its prestige, and could provoke a scandal if word of the situation got into circulation. Tesla's father used this circumstance and the fact of NikoIa's delicate health as talking points to induce his relatives in Army positions to use their influence to enable his son to escape conscription and avoid punishment for failing to respond to the Army call. In this he was successful, apparently, but required considerable time in which to make the arrangements.

Hiding in the mountains and with a year's time to kill, on this enforced vacation Tesla was able to indulge in working out totally fantastic plans for some gigantic projects. One of the plans was for the construction and operation of an under-ocean tube, connecting Europe and the United States, by which mail could be transported in spherical containers moved through the tube by water pressure. He discovered early in his calculations that the friction of the water on the walls of the tube would require such a tremendous

amount of power to overcome it that it made the project totally impracticable. Since, however, he was working on the project entirely for his own amusement, he eliminated friction from the calculations and was then able to design a very interesting system of high-speed intercontinental mail delivery. The factor which made this interesting project impracticable--the drag of the water on the sides of the tube--Tesla was later to utilize when he invented his novel steam turbine.

The other project with which he amused himself was drawn upon an even larger scale and required a still higher order of imagination. He conceived the project of building a ring around the earth at the Equator, somewhat resembling the rings around the planet Saturn. The earth ring, however, was to be a solid structure whereas Saturn's rings are made up of dust particles.

Tesla loved to work with mathematics, and this project gave him an excellent opportunity to use all of the mathematical techniques available to him. The ring which Tesla planned was to be a rigid structure constructed on a gigantic system of scaffolding extending completely around the earth. Once the ring was complete, the scaffolding was to be removed and the ring would stay suspended in space and rotating at the same speed as the earth.

Some use might be found for the project, Tesla said, if someone could find a means of providing reactionary forces that could make the ring stand still with respect to the earth while the latter whirled underneath it at a speed of 1,000 miles per hour. This would provide a high-speed "moving" platform system of transportation which would make it possible for a person to travel around the earth in a single day.

In this project, he admitted, he encountered the same problem as did Archimedes, who said "Give me a fulcrum and a lever long enough and I will move the earth." "The fulcrum in space on which to rest the lever was no more attainable than was the reactionary force needed to halt the spinning of the hypothetical ring around the earth," said Tesla. There were a number of other factors which he found necessary to ignore in this project, but ignore them he did so that they would not interfere with his mathematical practice and his cosmical engineering plans.

With his health regained, and the danger of punishment by the Army removed, Tesla returned to his home in Gospic to remain a short time before going to Graumltz, where he was to study electrical engineering as his father had promised he could do. This marked the turning point in his life. Finished with boyhood dreams and play, he was now ready to settle down to his serious life work. He had played at being a god, not hesitating to plan refashioning the earth as a planet. His life work was to produce accomplishments hardly less fantastic than his boyhood dreams.

TESLA entered manhood with a definite knowledge that nameless forces were shaping for him an unrevealed destiny. It was a situation he had to feel rather than be able to identify and describe in words. His goal he could not see and the course leading to it he could not discern. He knew very definitely the field in which he intended to spend his life, and using such physical laws as he knew he decided to plan a life which, as an engineering project, would be operated under principles that would yield the highest index of efficiency. He did not, at this time, have a complete plan of life drawn up, but there were certain elements which he knew intuitively he would not include in his operations, so he avoided all activities and interests that would bring them in as complications. It was to be a single-purpose life, devoted entirely to science with no provisions whatever for play or romance.

It was with this philosophy of life that Tesla in 1875, at the age of 19, went to Graumltz, in Austria, to study electrical engineering at the Polytechnic Institute. He intended henceforth to devote all his energies to mastering that strange, almost occult force, electricity, and to harness it for human welfare.

His first effort to put this philosophy to a practical test almost resulted in disaster despite the fact that it worked successfully. Tesla completely eliminated recreation and plunged into his studies with such enthusiastic devotion that he allowed himself only four hours' rest, not all of which he spent in slumber. He would go to bed at eleven o'clock and read himself to sleep. He was up again in the small hours of the morning, tackling his studies.

Under such a schedule he was able to pass, at the end of the first term, his examinations in nine subjects--nearly twice as many as were required. His diligence greatly impressed the members of the faculty. The dean of the technical faculty wrote to Tesla's father, "your son is a star of first rank." The strain, however, was affecting his health. He desired to make a spectacular showing to demonstrate to his father in a practical way his appreciation of the permission he gave to study engineering. When he returned to his home at the end of the school term with the highest marks that could be awarded in all the subjects passed, he expected to be joyfully received by his father and praised for his good work. Instead, his parent showed only the slightest enthusiasm for his accomplishment but a great deal of interest in his health, and criticized Nikola for endangering it after his earlier narrow escape from death. Unknown to Tesla until several years afterward, the professor at the Polytechnic Institute had written to his father early in the term, asking him to take his son out of the school, as he was in danger of killing himself through overwork.

On his return to the Institute for the second year he decided to limit his studies to physics, mechanics and mathematics. This was fortunate because it gave him more time in which to handle a situation that arose later in his studies, and was to lead to his first and perhaps greatest invention.

Early in his second year at the Institute there was received from Paris a piece of electrical equipment, a Gramme machine, that could be used as either a dynamo or motor. If turned by mechanical power it would generate electricity, and if supplied with electricity it would operate as a motor and produce mechanical power. It was a direct-current machine.

When Prof. Poeschl demonstrated the machine, Tesla was greatly impressed by its performance except in one respect--a great deal of sparking took place at the commutator. Tesla stated his objections to this defect.

"It is inherent in the nature of the machine," replied Prof. Poeschl. "It may be reduced to a great extent, but as long as we use commutators it will always be present to some degree. As long as electricity flows in one direction,

and as long as a magnet has two poles each of which acts oppositely on the current, we will have to use a commutator to change, at the right moment, the direction of the current in the rotating armature."

"That is obvious," Tesla countered. "The machine is limited by the current used. I am suggesting that we get rid of the commutator entirely by using alternating current."

Long before the machine was received, Tesla had studied the theory of the dynamo and motor, and he was convinced that the whole system could be simplified in some way. The solution of the problem, however, evaded his grasp, nor was he at all sure the problem could be solved--until Prof. Poeschl gave his demonstration. The assurance then came to him like a commanding flash.

The first sources of current were batteries which produced a small steady flow. When man sought to produce electricity from mechanical power, he sought to make the same kind the batteries produced: a steady flow in one direction. The kind of current a dynamo would produce when coils of wire were whirled in a magnetic field was not this kind of current--it flowed first in one direction and then in the other. The commutator was invented as a clever device for circumventing this seeming handicap of artificial electricity and making the current come out in a one-directional flow.

The flash that came to Tesla was to let the current come out of the dynamo with its alternating directions of flow, thus eliminating the commutator, and feed this kind of current to the motors, thus eliminating the need in them for commutators. Many another scientist had played with that idea long before it occurred to Tesla, but in his case it came to him as such a vivid, illuminating flash of understanding that he knew his visualization contained the correct and practical answer. He saw both the motors and dynamos operating without commutators, and doing so very efficiently. He did not, however, see the extremely important and essential details of how this desirable result could be accomplished, but he felt an overpowering assurance that he could solve the problem. It was for this reason that he stated his objections to the Gramme machine with a great deal of confidence to his professor. what he did not expect was to draw a storm of criticism.

Prof. Poeschl, however, deviated from his set program of lectures and devoted the next one to Tesla's objections. With methodical thoroughness he picked Tesla's proposal apart and, disposing of one point after another, demonstrated its impractical nature so convincingly that he silenced even Tesla. He ended his lecture with the statement: "Mr. Tesla will accomplish great things, but he certainly never will do this. It would be equivalent to converting a steady pulling force like gravity into rotary effort. It is a perpetual motion scheme, an impossible idea."

Tesla, although silenced temporarily, was not convinced. The professor had paid him a nice compliment in devoting a whole lecture to his observation, but, as is so often the case, the compliment was loaded with what was expected by the professor to be a crushing defeat for the one whom he complimented. Tesla was nevertheless greatly impressed by his authority; and for a while he weakened in his belief that he had correctly understood his vision. It was as clear-cut and definite as the visualizations that came to him of the solutions of mathematical problems which he was always able to prove correct. But perhaps, after all, he was in this case a victim of a self-induced hallucination. All other things Prof. Poeschl taught were solidly founded on demonstrable fact, so perhaps his teacher was right in his objections to the alternating-current idea.

Deep down in his innermost being, however, Tesla held firmly to the conviction that his idea was a correct one. Criticism only temporarily submerged it, and soon it came bobbing back to the surface of his thinking. He gradually convinced himself that, contrary to his usual procedure, Prof. Poeschl had in this case demonstrated merely that he did not know how to accomplish a given result, a defficiency which he shared with everyone else in the world, and therefore could not speak with authority on this subject. And, in addition, Tesla reasoned, the closing remark with which Prof. Poeschl believed he had clinched his argument--"It would be equivalent to converting a steady pulling force like gravity into a rotary effort--was contradicted by Nature, for was not the steady pulling force of gravity making the moon revolve around the earth and the earth revolve around the sun?

"I could not demonstrate my belief at that time," said Tesla, "but it came to me through what I might call

instinct, for lack of a better name. But instinct is something which transcends knowledge. we undoubtedly have in our brains some finer fibers which enable us to perceive truths which we could not attain through logical deductions, and which it would be futile to attempt to achieve through any wilful effort of thinking."

His enthusiasm and confidence in himself restored, Tesla tackled the problem with renewed vigor. His power of visualization--the ability to see as solid objects before him the things that he conceived in his mind, and which he had considered such a great annoyance in childhood--now proved to be of great aid to him in trying to unravel this problem. He made an elastic rebound from the intellectual trouncing administered by his Professor and was tackling the problem in methodical fashion.

In his mind he constructed one machine after another, and as he visioned them before him he could trace out with his finger the various circuits through armature and field coils, and follow the course of the rapidly changing currents. But in no case did he produce the desired rotation. Practically all the remainder of the term he spent on this problem. He had passed so many examinations during the first term that he had plenty of time to spend on this problem during the second.

It seemed, however, that he was doomed to fail in this project, for at the term's end he was no nearer the solution than he was when he started. His pride had been injured and he was fighting on the defensive side. He did not know that those seeming failures in his mental and laboratory experiments were to serve later as the raw material out of which yet another vision was to be created.

A radical change had taken place in Tesla's mode of life while at Graumltz. The first year he had acted like an intellectual glutton, overloading his mind and nearly wrecking his health in the process. In the second year he allowed more time for digesting the mental food of which he was partaking, and permitted himself more recreation. About this time Tesla took to card-playing as a means of relaxation. His keen mental processes and highly developed powers of deduction enabled him to win more frequently than he lost. He never retained the money he won but returned it to the losers at the end of the game. When he lost, however, this procedure was not reciprocated by the other

players. He also developed a passion for billiards and chess, in both of which he became remarkably proficient.

The fondness for card-playing which Tesla developed at Graumltz got him into an embarrassing situation. Toward the end of the term his father sent him money to pay for his trip to Prague and for the expenses incident to enrolling as a student at the university. Instead of going directly to Prague, Tesla returned to Gospic for a visit to the family. Sitting in at a card game with some youths of the city, Tesla found his usual luck had deserted him, and he lost the money set aside for his university expenses. He confessed to his mother what he had done. She did not criticize him. Perhaps the fates were using this method for protecting him from overwork that might ruin his health, she reasoned, since he needed rest and relaxation. Losses of money were much easier to handle than loss of health. Borrowing some money from a friend, she gave it to Tesla with the words, "Here you are. Satisfy yourself." Returning to the game, he experienced a change in luck and came out of it not only with the money his mother had given him but practically all of the university expense money he had previously lost. These winnings he did not return to the losers as was his previous custom. He returned home, gave his mother the money she had advanced him, and announced that he would never again indulge in card-playing.

Instead of going to the University of Prague in the fall of 1878 as he had planned, Tesla accepted a lucrative position that was offered him in a technical establishment at Maribor, near Graumltz. He was paid sixty florins a month and a separate bonus for the completed work, a very generous compensation compared with the prevailing wages. During this year Tesla lived very modestly and saved his earnings.

The money he had saved at Maribor enabled him to pay his way through a year at the University of Prague, where he extended his studies in mathematics and physics. He continued experimenting with the one big challenging alternating-current idea that was occupying his mind. He had explored, unsuccessfully, a large number of methods and, though his failures gave support to Prof. Poeschl's contention that he would never succeed, he was unwilling to give up his theory. He still had faith that he would find the solution of his problem. He knew electrical science was young and growing, and felt deep within his consciousness

that he would make the important discovery that would greatly expand the infant science to the powerful giant of the future.

It would have been a pleasure to Tesla to have continued his studies, but it now was necessary for him to make his own living. His father's death, following Tesla's graduation from the University at Prague, made it necessary for him to be self-supporting. Now he needed a job. Europe was extending an enthusiastic reception to Alexander Graham Bell's new American invention, the telephone, and Tesla heard that a central station was to be installed in Budapest. The head of the enterprise was a friend of the family. The situation seemed a promising one.

Without waiting to ascertain the situation in Budapest, Tesla, full of youthful hope and the self-assurance which is typical of the untried graduate, traveled to that city, expecting to walk into an engineering position in the new telephone project. He quickly discovered, on his arrival, that there was no position open; nor could one be created for him, as the project was still in the discussion stage.

It was, however, urgently necessary for financial reasons, that he secure immediately a job of some kind. The best he could obtain was a much more modest one than he had anticipated. The salary was so microscopically small he would never name the amount, but it was suficient to enable him to avoid starvation. He was employed as draftsman by the Hungarian Government in its Central Telegraph Ofice, which included the newly developing telephone in its jurisdiction.

It was not long before Tesla's outstanding ability attracted the attention of the Inspector in Chief. Soon he was transferred to a more responsible position in which he was engaged in designing and in making calculations and estimates in connection with new telephone installations. When the new telephone exchange was finally started in Budapest in 1881, he was placed in charge of it.

Tesla was very happy in his new position. At the age of twenty-five he was in full charge of an engineering enterprise. His inventive faculty was fully occupied and he made many improvements in telephone central-station apparatus. Here he made his first invention, then called a telephone repeater, or amplifier, but which today would be

more descriptively called a loud speaker--an ancestor of the sound producer now so common in the home radio set. This invention was never patented and was never publicly described, but, Tesla later declared, in its originality, design, performance and ingenuity it would make a creditable showing alongside his better-known creations that followed. His chief interest, however, was still the alternating-current motor problem whose solution continued to elude him.

Always an indefatigable worker, always using up his available energy with the greatest number of activities he could crowd into a day, always rebelling because the days had too few hours in them and the hours too few minutes, and the seconds that composed them were of too short duration, and always holding himself down to a five-hour period of rest with only two hours of that devoted to sleep, he continually used up his vital reserves and eventually had to balance accounts with Nature. He was forced finally to discontinue work.

The peculiar malady that now affected him was never diagnosed by the doctors who attended him. It was, however, an experience that nearly cost him his life. To doctors he appeared to be at death's door. The strange manifestations he exhibited attracted the attention of a renowned physician, who declared medical science could do nothing to aid him. One of the symptoms of the illness was an acute sensitivity of all of the sense organs. His senses had always been extremely keen, but this sensitivity was now so tremendously exaggerated that the effects were a form of torture. The ticking of a watch three rooms away sounded like the beat of hammers on an anvil. The vibration of ordinary city trafic, when transmitted through a chair or bench, pounded through his body. It was necessary to place the legs of his bed on rubber pads to eliminate the vibrations. Ordinary speech sounded like thunderous pandemonium. The slightest touch had the mental effect of a tremendous blow. A beam of sunlight shining on him produced the effect of an internal explosion. In the dark he could sense an object at a distance of a dozen feet by a peculiar creepy sensation in his forehead. His whole body was constantly wracked by twitches and tremors. His pulse, he said, would vary from a few feeble throbs per minute to more than one hundred and fifty.

Throughout this mysterious illness he was fighting with powerful desire to recover his normal condition. He had before him a task he must accomplish--he must attain the solution of the alternating-current motor problem. He felt intuitively during his months of torment that the solution was coming ever nearer, and that he must live in order to be there when it crystallized out of his unconscious mind. During this period he was unable to concentrate on this or any other subject.

Once the crisis was past and the symptoms diminished, improvement came rapidly and with it the old urge to tackle problems. He could not give up his big problem. It had become a part of him. working on it was no longer a matter of choice. He knew that if he stopped he would die, and he knew equally well that if he failed he would perish. He was enmeshed in an invisible web of intangible structure that was tightening around him. The feeling that it was bringing the solution nearer to him--just beyond his finger tips--was cause for both regret and rejoicing. That problem when solved would leave a tremendous vacancy in his life, he feared.

yet in spite of his feeling of optimism it was still a tremendous problem without a solution.

When the acute sensitivity reduced to normal, permitting him to resume work, he took a walk in the city park of Budapest with a former classmate, named Szigeti, one late afternoon in February, 1882. while a glorious sunset overspread the sky with a flamboyant splash of throbbing colors, Tesla engaged in one of his favorite hobbies--reciting poetry. As a youth he had memorized many volumes, and he was now pleased to note that the terrific punishment his brain had experienced had not diminished his memory. One of the works which he could recite from beginning to end was Goethe's Faust.

The prismatic panorama which the sinking sun was painting in the sky reminded him of some of Goethe's beautiful lines:

"The glow retreats, done is the day of toil"

"It yonder hastes, new fields of life exploring"

"Ah, that no wing can lift me from the soil"

"Upon its track to follow, follow soaring"

Tesla, tall, lean and gaunt, but with a fire in his eye that matched the flaming clouds of the heavens, waved his arms in the air and swayed his body as he voiced the undulating lines. He faced the color drama of the sky as if addressing the red-glowing orb as it flung its amorphous masses of hue, tint and chrome across the domed vault of heaven.

Suddenly the animated figure of Tesla snapped into a rigid pose as if he had fallen into a trance. Szigeti spoke to him but got no answer. Again his words were ignored. The friend was about to seize the towering motionless figure and shake him into consciousness when instead Tesla spoke.

"Watch me!" said Tesla, blurting out the words like a child bubbling over with emotion: "Watch me reverse it." He was still gazing into the sun as if that incandescent ball had thrown him into a hypnotic trance.

Szigeti recalled the image from Goethe that Tesla had been reciting: "The glow retreats . . . It yonder hastes, new fields of life exploring" a poetic description of the setting sun, and then his next words-- "watch me! watch me reverse it." Did Tesla mean the sun? Did he mean that he could arrest the motion of the sun about to sink below the horizon, reverse its action and start it rising again toward the zenith?

"Let us sit and rest for a while," said Szigeti. He turned him toward a bench, but Tesla was not to be moved.

"Don't you see it?" expostulated the excited Tesla. "See how smoothly it is running? Now I throw this switch--and I reverse it. See! It goes just as smoothly in the opposite direction. watch! I stop it. I start it. There is no sparking. There is nothing on it to spark."

"But I see nothing," said Szigeti. "The sun is not sparking. Are you ill?"

"you do not understand," beamed the still excited Tesla, turning as if to bestow a benediction on his companion. "It is my alternating-current motor I am talking about. I have solved the problem. Can't you see it right here in front of

me, running almost silently? It is the rotating magnetic field that does it. See how the magnetic field rotates and drags the armature around with it? Isn't it beautiful? Isn't it sublime? Isn't it simple? I have solved the problem. Now I can die happy. But I must live, I must return to work and build the motor so I can give it to the world. No more will men be slaves to hard tasks. My motor will set them free, it will do the work of the world."

Szigeti now understood. Tesla had previously told him about his attempt to solve the problem of an alternating-current motor, and he grasped the full meaning of the scientist's words. Tesla had never told him, however, about his ability to visualize objects which he conceived in his mind, so it was necessary to explain the vision he saw, and that the solution had come to him suddenly while they were admiring the sunset.

Tesla was now a little more composed, but he was floating on air in a frenzy of almost religious ecstasy. He had been breathing deeply in his excitement, and the overventilation of his lungs had produced a state of exhilaration.

Picking up a twig, he used it as a scribe to draw a diagram on the dusty surface of the dirt walk. As he explained the technical principles of his discovery, his friend quickly grasped the beauty of his conception, and far into the night they remained together discussing its possibilities.

The conception of a rotating magnetic field was a majestically beautiful one. It introduced to the scientific world a new principle of sublime grandeur whose simplicity and utility opened a vast new empire of useful applications. In it Tesla had achieved the solution which his professor had declared was impossible of attainment.

Alternating-current motors had heretofore presented what seemed an insoluble problem because the magnetic field produced by alternating currents changed as rapidly as the current. Instead of producing a turning force they churned up useless vibration.

Up to this time everyone who tried to make an alternating-current motor used a single circuit, just as was in direct current. As a result the projected motor proved to be like a single-cylinder steam engine, stalled at dead center, at the top or bottom of the stroke.

what Tesla did was to use two circuits, each one carrying the same frequency of alternating-current, but in which the current waves were out of step with each other. This was equivalent to adding to an engine a second cylinder. The pistons in the two cylinders were connected to the shaft so that their cranks were at in angle to each other which caused them to reach the top or bottom of the stroke at different times. The two could never be on dead center at the same time. If one were on dead center, the other would be off and ready to start the engine turning with a power stroke.

This analogy oversimplifies the situation, of course, for Tesla's discovery was much more far-reaching and fundamental. what Tesla had discovered was a means of creating a rotating magnetic field, a magnetic whirlwind in space which possessed fantastically new and intriguing properties. It was an utterly new conception. In direct-current motors a fixed magnetic field was tricked by mechanical means into producing rotation in an armature by connecting successively through a commutator each of a series of coils arranged around the circumference of a cylindrical armature. Tesla produced a field of force which rotated in space at high speed and was able to lock tightly into its embrace an armature which required no electrical connections. The rotating field possessed the property of transferring wirelessly through space, by means of its lines of force, energy to the simple closed circuit coils on the isolated armature which enabled it to build up its own magnetic field that locked itself into the rotating magnetic whirlwind produced by the field coils. The need for a commutator was completely eliminated.

Now that this magnificent solution of his most dificult scientific problem was achieved, Tesla's troubles were not over; they were just beginning; but, during the next two months, he was in a state of ecstatic pleasure playing with his new toy. It was not necessary for him to construct models of copper and iron: in his mental workshop he constructed them in wide variety. A constant stream of new ideas was continuously rushing through his mind. They came so fast, he said, that he could neither utilize nor record them all. In this short period he evolved every type of motor which was later associated with his name.

He worked out the design of dynamos, motors, transformers and all other devices for a complete alternating-current system. He multiplied the effectiveness of the two-phase system by making it operate on three or more alternating currents simultaneously. This was his famous polyphase power system.

The mental constructs were built with meticulous care as concerned size, strength, design and material; and they were tested mentally, he maintained, by having them run for weeks--after which time he would examine them thoroughly for signs of wear. Here was a most unusual mind being utilized in a most unusual way. If he at any time built a "mental machine," his memory ever afterward retained all of the details, even to the finest dimensions.

The state of supreme happiness which Tesla was enjoying was destined soon, however, to end. The telephone central station by which he was employed, and which was controlled by Puskas, that friend of the family, was sold. When Puskas returned to Paris, he recommended Tesla for a job in the Paris establishment with which he was associated, and Tesla gladly followed up his opportunity. Paris, he reasoned, would be a wonderful springboard from which to catapult his great invention on the world.

The budding superman Tesla came to Paris light in baggage but with his head filled to bursting with his wonderful discovery of the rotating magnetic field and scores of significant inventions based on it. If he had been a typical inventor, he would have gone among people wearing a look indicating that he knew something important, but maintaining absolute secrecy concerning the nature of his inventions. He would be fearful that someone would steal his secret. But Tesla's attitude was just the reverse of this. He had something to give to the world and he wanted the world to know about it, the whole fascinating story with all the revealing technical details. He had not then learned, and never did learn, the craft of being shrewd and cunning. His life plan was on a secular basis. He cared less for the advantages of the passing moment, more for the ultimate goal; and he wanted to give his newly discovered polyphase system of alternating-current to the human race that all men could benefit from it. He knew there was a fortune in his invention. How he could extract this fortune he did not know. He knew that there was a higher law of compensation under which he would derive adequate benefits

from the gift to the world of his discovery. The method by which this would work out did not interest him nearly so much as the necessity for getting someone to listen to the details of his fascinating invention.

Six feet two inches tall, slender, quiet of demeanor, meticulously neat in dress, full of self-confidence, he carried himself with an air that shouted, "I defy you to show me an electrical problem I can't solve"--an attitude that was consistent with his twenty-five years, but also matched by his ability.

Through Puskas's letter of recommendation he obtained a position with the Continental Edison Company, a French company organized to make dynamos, motors and install lighting systems under the Edison patents.

He obtained quarters on the Boulevard St. Michel, but in the evenings visited and dined at the best cafes as long as his salary lasted. He made contact with many Americans engaged in electrical enterprises. wherever he could get a patient ear, among those who had an understanding of electrical matters, he described his alternating-current system of dynamos and motors.

Did someone steal his invention? Not the slightest danger. He could not even give it away. No one was even slightly interested. The closest approach to a nibble was when Dr. Cunningham, an American, a foreman in the plant where Tesla was employed, suggested formation of a stock company.

With his great alternating-current-system invention pounding at his brain and demanding some way in which it could be developed, it was a hardship for him to be forced to work all day on direct-current machines. Nowadays, though, his health was robust. He would arise shortly after five o'clock in the morning, walk to the Seine, swim for half an hour, and then walk to Ivry, near the gates of Paris, where he was employed, a trip that required an hour of lively stepping. It was then half-past seven. The next hour he spent in eating a very substantial breakfast which never seemed suficient to keep his appetite from developing into a disturbing factor long before noon.

The work to which he was assigned at the Continental Edison Company factory was of a variegated character, largely that of a junior engineer. In a short time he was given a

traveling assignment as a "trouble shooter" which required him to visit electrical installations in various parts of France and Germany. Tesla did not relish "trouble shooting" but he did a conscientious job and studied intensely the dificulties he encountered at each powerhouse. He was soon able to present a definite plan for improving the dynamos manufactured by his company. He presented his suggestions and received permission to apply them to some machines. When tested they were a complete success. He was then asked to design automatic regulators, for which there was a great need. These too gave an excellent performance.

The company had been placed in an embarrassing position and was threatened with heavy loss through an accident at the railroad station in Strassburg in Alsace, then in Germany, where a powerhouse and electric lights had been installed. At the opening ceremony, at which Emperor fiilliam I was present, a short circuit in the wiring caused an explosion that blew out one of the walls. The German government refused to accept the installation. Tesla was sent, early in 1883, to put the plant in working order and straighten out the situation. The technical problem presented no dificulties but he found it necessary to use a great deal of tact and good judgment in handling the mass of red tape extruded by the German government as precaution against further mishaps.

Once he got the job well under way he gave some time to constructing an actual two-phase alternating-current motor embodying his rotary-magnetic-field discovery. He had constructed so many in his mind since that never-to-be-forgotten day in Budapest when he made his great invention. He had brought materials with him from Paris for this purpose and found a machine shop near the Strassburg station where he could do some of the work. He did not have as much time available as he had expected, and, while he was a clever amateur machinist, nevertheless the work took time. He was very fussy, making every piece of metal exact in dimensions to better than the thousandth of an inch and then carefully polishing it.

Eventually there was a miscellaneous collection of parts in that Strassburg machine shop. They had been constructed without the aid of working drawings. Tesla could project before his eyes a picture, complete in every detail, of every part of the machine. These pictures were more vivid than any blueprint and he remembered exact dimensions which

he had calculated mentally for each item. He did not have to test parts through partial assembly. He knew they would fit.

From these parts Tesla quickly assembled a dynamo, to generate the two-phase alternating current which he needed to operate his alternating-current motor, and finally his new induction motor. There was no difference between the motor he built and the one which he visualized. So real was the visualized one that it had all the appearance of solidity. The one he built in the machine shop presented no elements of novelty to him. It was exactly as he had visualized it a year before. He had mentally experimented with its exact counterpart and with many variations of it during the months that had passed since the great vision came to him while rhapsodizing the sunset sky in Budapest.

The assembly completed, he started up his power generator. The time for the great final test of the validity of his theory had arrived. He would close a switch and if the motor turned his theory would be proven correct. If nothing happened, if the armature of his motor just stood still, but vibrated, his theory was not correct and he had been feeding his mind on hallucinations, based on fantasy not on fact.

He closed the switch. Instantly the armature turned, built up to full speed in a flash and then continued to operate in almost complete silence. He closed the reversing switch and the armature instantly stopped and as quickly started turning in the opposite direction. This was complete vindication of his theory.

In this experiment he had tested only his two-phase system; but he needed no laboratory demonstration to convince him that his three-phase systems for generating electricity and for using this current for transmission and power production would work even better, and that his single-phase system would work almost as well. With this working model he would now be able to convey to the minds of others the visions he had been treasuring for so long.

This test meant much more to Tesla than just the successful completion of an invention; it meant a triumph for his method of discovering new truths through the unique mental processes he used of visualizing constructs long before they were produced from materials. From these results he

drew an unbounded sense of self-confidence; he could think and work his way to any goal he set.

There was good reason for Tesla's self-assurance. He had just passed his twenty-seventh birthday. It seemed to him only yesterday that Prof. Poeschl had seemingly so completely vanquished him for saying that he could operate a motor by alternating current. Now he had demonstrably accomplished what the learned professor said could never be done.

Tesla now had available a completely novel type of electrical system utilizing alternating current, which was much more flexible and vastly more efficient than the direct-current system. But now that he had it, what could he do with it? The executives of the Continental Edison Company by whom he was employed had continually refused to listen to his alternating-current theories. He felt it would be useless to try to interest them in even the working model. He had made many friends during his stay in Strassburg, among them the Mayor of the city, M. Bauzin, who shared his enthusiasm about the commercial possibilities of the new system and hoped it would result in the establishment of a new industry that would bring fame and prosperity to his city.

The Mayor brought together a number of wealthy Strassburgers. To them the new motor was shown in operation, and the new system and its possibilities described, by both Tesla and the Mayor. The demonstration was a success from the technical viewpoint but otherwise a total loss. Not one member of the group showed the slightest interest. Tesla was dejected. It was beyond his comprehension that the greatest invention in electrical science, with unlimited commercial possibilities, should be rejected so completely.

M. Bauzin assured him that he would undoubtedly receive a more satisfactory reception for his invention in Paris. Delays of oficialdom in finally accepting the completed installation at the Strassburg station, however, postponed his return to Paris until the spring of 1884. Meanwhile, Tesla looked forward with pleasurable expectancy to a triumphant return to Paris. He had been promised a substantial compensation if he was successful in handling the Strassburg assignment; also, that he would be similarly compensated for the improvements in design of motors and

dynamos, and for the automatic regulators for dynamos. It was possible that this would supply him with enough cash to build a full-size demonstration set for his polyphase alternating-current system, so that the tremendous advantages of his system over direct current could be shown in operation. Then he would have no trouble raising the needed capital.

When he got back to the company's ofices in Paris and asked for a settlement of his Strassburg and automatic-regulator accounts, he was given what in modern terminology is called the "runaround." To use fictitious names, as Tesla told the story, the executive, Mr. Smith, who gave him the assignments, now told him he had no jurisdiction over financial arrangements; that was all in the hands of the executive, Mr. Brown. Mr. Brown explained that he administered financial matters but had no authority to initiate projects or to make payments other than those directed by the chief executive, Mr. Jones. Mr. Jones explained that such matters were in the hands of his department executives, and that he never interfered with their decisions, so Tesla must see the executive in charge of technical matters, Mr. Smith. Tesla traveled this vicious circle several times with the same result and finally gave up in disgust. He decided not to renew his offer of the alternating-current system nor to show his motor in operation, and resigned his position immediately.

Tesla was undoubtedly entitled to an amount in excess of $25,000 for the regulators he designed and for his services in Strassburg. Had the executives been endowed with even a smattering of horse sense, or the ordinary garden variety of honesty, they would have made an attempt to settle for $5,000, at the least. Tesla, hard pressed for cash, would undoubtedly have accepted such an amount, although with a feeling that he was being cheated in a large way.

Such an offer would probably have held Tesla on the payroll of the company and preserved for it the possession of the world's greatest inventor and one who at the time had definitely demonstrated he was an extremely valuable employee.

For a paltry few thousand dollars they lost not only a man who would have saved them many times that amount every year, but they also lost an opportunity to obtain world

control of the greatest and most profitable electrical invention ever made.

One of the administrators of the company, Mr. Charles Batchellor, Manager of the works, who was a former assistant and close personal friend of Thomas A. Edison, urged Tesla to go to the United States and work with Edison. There he would have a chance to work on improvements to the Edison dynamos and motors. Tesla decided to follow Mr. Batchellor's suggestion. He sold his books and all other personal possessions except a few articles which he expected to take with him. He assembled his very limited financial resources, purchased tickets for his railroad trip and transatlantic journey to New York. His baggage consisted of a small bundle of clothes carried under his arm and some other items stuffed into his pockets.

The final hours were busy ones and, as he was about to board the train, just as it was ready to pull out of the station, he discovered his package of baggage was missing. Reaching quickly for his wallet, which contained his railroad and steamship tickets and all his money, he was horrified to discover that that too was missing. There was some loose change in his pocket, how much he did not know--he did not have time to count it. His train was pulling out. what should he do? If he missed this train, he would also miss the boat--but he could not ride on either without tickets. He ran alongside the moving train, trying to make up his mind. His long legs enabled him to keep up with it without dificulty at first, but now it was gaining speed. He finally decided to jump aboard. The loose change he discovered was suficient to take care of the railroad fare, with a negligible remainder. He explained his situation to the skeptical steamship oficials and, when no one else showed up to claim his reservations on the ship up to the time of sailing, he was permitted to embark.

To one as fastidious as Tesla, a long steamship journey without adequate clothing was a trying experience. He had expected to encounter annoyances when getting along with the minimum amount of clothing which he planned carrying with him, but when even that limited layout was lost the annoyance became hardship. Coupled with this was the memory of disappointment and resentment over his recent experiences.

The ship offered little to interest him. He explored it thoroughly and in doing so made some contacts with members of the ship's company. There was unrest among the crew. There was unrest in Tesla also. He extended sympathy to members of the crew in their claimed unjust treatment. The grievances affecting the crew had built up one of those situations in which a small spark can cause a large explosion. The spark flew somewhere on the ship while Tesla was below decks in the crew's quarters. The captain and oficers got tough and, with some loyal members of the crew, decided to settle the trouble with belaying pins as clubs. It quickly became a battle royal. Tesla found himself in the middle of a fight which when anyone saw a head he hit it.

Had Tesla not been young as well as tall and strong, his useful career might have ended at this point. He had long arms in proportion to his six feet two inches of height. The fist at the end of his arm could reach as far as a club in the hands of an adversary, and his height enabled him to tower over the other fighters so his head was not easy to reach. He struck hard and often, never knowing for or against which side he was fighting. He was on his feet when the fight was over, something which could not be said of a score of the crew members. The oficers had subdued what they called a mutiny, but they too carried indications that they had been through a battle. Tesla was definitely not invited to sit at the captain's table during the voyage.

He spent the remainder of his journey nursing scores of bruises and sitting in meditation at the stern of the ship, which too slowly made its way to New York. Soon he would set foot on the "land of golden promise" and meet the famous Mr. Edison. He was destined to learn that it was really a "land of golden promise"--but also to discover something that would open his eyes about the fulfillment of promises.

when Tesla stepped out of the Immigration Ofice at Castle Garden, Manhattan, in the summer of 1884, his possessions consisted of four cents, a book of his own poems, a couple

of technical articles he had written, calculations for designing a flying machine, and some mathematical work done in an effort to solve an extremely dificult integral. He had Mr. Batchellor's letter introducing him to Mr. Edison, and the address of a friend. In this letter to Edison, Batchellor wrote: "I know two great men and you are one of them; the other is this young man."

Lacking carfare, Tesla had to walk the several miles to his friend's home. The first person he spoke to, seeking traveling directions, was a policeman, a gruff individual. The way he supplied the information suggested to Tesla that he was willing to start a fight on the subject. Although Tesla spoke English very well, all he understood of the policeman's lingo was the direction in which he pointed his club.

while walking in what he believed was the right direction, wondering how he would be able to contrive a meal and lodgings out of four cents should he be unable to locate his friend, he passed a shop in which he could see a man working on an electrical machine that seemed to him familiar. He entered just as the man was about to give up as impossible the task of repairing the device.

"Let me do it," said Tesla, "I will make it operate." And without more ado he tackled the job. It proved to be a dificult task but eventually the machine was working again.

"I need a man like you to handle these blankety-blank foreign machines," said the man. "Do you want a job?"

Tesla thanked him and told him he was on his way to another job, whereupon the man handed him twenty dollars. Tesla had expected no compensation for doing what he considered a slight favor, and said so, but the man insisted his work was worth that much, and he was glad to pay it. Never was Tesla more thankful for a windfall. He was now assured of food and lodgings for the time being. With the aid of walking directions, this time more graciously given, he located his friend and was a guest at his home overnight. The next day he went to Edison's New York headquarters, then on South Fifth Avenue (now West Broadway).

The introduction by Mr. Batchellor gave him ready access to Mr. Edison, who was busily engaged in problems in connection with his new generating station and electric-

light system--the former located in downtown Pearl Street and serving a relatively small radius of territory.

Tesla was favorably impressed by Edison on their first meeting. He marveled that a man so limited in education could accomplish so much in so technical a field as electricity. It caused Tesla to wonder if all the time he had spent in gaining an education of very broad scope had not been wasted. would he have been further ahead if he had started his practical work on the basis of experience, as Edison had done? He definitely decided, however, before many days had passed, that the time and effort he had spent on his education constituted the wisest kind of an investment.

Edison, for his part, was none too favorably impressed by Tesla. Edison was an inventor who got his results by trial-and-error methods. Tesla calculated everything mentally and solved his problems before doing any "work" on them. As a result, the two great men spoke an entirely different technical language. There was one more very important difference. Edison belonged to the direct-current and Tesla to the alternating-current school of thought. The electricians of that day could, and did, become highly emotional over their differences of opinion on this subject. Discussions roused all the fervor of a religious or political debate, and everything unpleasant was associated with the adherents on the other side of the discussion. The least unpleasant thought applied to an opponent was that he was of a low order of mentality. When Tesla enthusiastically described his polyphase system and told Edison he believed alternating-current was the only practical kind of current to use in a power-and-lighting system, Edison laughed. Edison was using direct current in his system. He told Tesla very bluntly he was not interested in alternating-current; there was no future to it and anyone who dabbled in that field was wasting his time; and besides, it was a deadly current whereas direct current was safe. Tesla did not yield any ground in the discussion--nor could he make any progress in his effort to get Edison to listen to a presentation of his polyphase power system. On technical grounds, they were worlds apart.

Nevertheless, because of Batchellor's statement on the valuable work he had done on the Edison direct-current machines in Europe, Tesla was, without much formality, given a job on Edison's staff--doing minor routine work. A

few weeks later he had an opportunity to demonstrate his ability. Edison had installed one of his electric-light plants on the steamship Oregon, the fastest and most up-to-date passenger ship of that time. The installation worked well for many months but finally both dynamos went out of commission. It was impossible to remove the dynamos and install new ones, so it was necessary to repair the old ones in some way--but this, Edison had been told, was impossible without taking them to the shop. The scheduled sailing date of the ship had passed and Edison was being placed in an embarrassing position over the accumulating days of delay caused by his machines.

Edison asked Tesla if he would go to the ship and see what could be done about the situation. This was in the afternoon. Taking such instruments as he thought he would need, Tesla went aboard the Oregon. He found that short circuits had caused some of the armature coils to be burned out; and open circuits had developed elsewhere on the machines.

Calling on members of the crew to assist him, Tesla worked through the night and by 4 am had both machines running as well as they did the day they were newly installed. walking back to the shop on lower Fifth Avenue at 5 am, in the dim early dawn he met a group of men just leaving. In it were Edison, Batchellor, who had returned from Paris in the meantime, and several others who had finished their night's work and were returning to their homes.

"Here is our Parisian running around nights," said Edison.

"Am just coming back from the Oregon," Tesla replied. "Both machines are operating."

Edison, amazed, shook his head and turned away without another word. On rejoining the group he said to Batchellor, loud enough for the keen-eared Tesla to hear him, "Batchellor, this is a damn good man."

Thereafter Tesla's status on the staff was raised several levels and he was given closer contact with design and operating problems. He found the work interesting and applied himself to it more than eighteen hours a day, from 10:30 am until 5 am, every day including Sundays. Edison, observing his industry, told him, "I have had many hard-working assistants but you take the cake." Tesla observed

many ways in which the dynamos could be improved in design to operate more efficiently. He outlined his plan to Edison, and stressed the increased output and lower cost of operating that would result from the changes he suggested. Edison, quick to appreciate the value of increased efficiency, replied, "There's fifty thousand dollars in it for you if you can do it."

Tesla designed twenty-four types of dynamos, eliminating the long-core field magnets then in use and substituting the more efficient short cores, and provided some automatic controls, on which patents were taken out. Months later, when the task was finished, and some of the new machines built and tested and found measuring up to his promises, Tesla asked to be paid the $50,000. Edison replied, "Tesla, you don't understand our American humor." Tesla was shocked to discover that what he thought was a specific promise was being tossed aside merely as a standard practical joke of the day. He received not a penny of compensation from the new designs and inventions, or for the tremendous amount of overtime, beyond the none too generous weekly pay. He resigned his job immediately. This was in the spring of 1885.

In the period of less than a year which he spent with Edison, Tesla had developed a good reputation in electrical circles; so when he was free he was offered an opportunity to capitalize on it. A group of promoters offered to form a company under his name. This looked like a possible chance to bring out his alternating-current system, and he eagerly entered into the project. But when he urged his plan, the promoters informed him they were not interested in alternating-current. what they wanted him to develop was a practical arc light for street and factory illumination. In about a year he developed the desired lamp, took out several patents on his invention, and its manufacture and use were under way.

From a technical point of view the venture was a success, but Tesla himself suffered another painful financial experience in connection with it. He had been paid a comparatively small salary during the period of development. According to the agreement, he was to receive his principal compensation in the form of shares of stock in the company. He received a beautifully engraved stock certificate, and then, by some manipulations he did not understand, he was forced out of the company and aspersions

were cast upon his ability as an engineer and an inventor. When he sought to convert the certificate into cash, he found that the shares of newly organized companies of undemonstrated power to earn dividends possess very slight value. His opinion of financial men in both the Old World and the New was taking on a decidedly uncomplimentary bias.

Now came the most unpleasant experience of Tesla's life. He was without a source of income, and from the spring of 1886 to the spring of 1887 he was forced to work as a day laborer. "I lived," he said, "through a year of terrible heartaches and bitter tears, my suffering being intensified by material want." Business conditions were none too good in the country. Not only did he have difficulty in getting anyone to listen to his alternating-current project, but even in his effort to earn room and board as a laborer he had tremendous competition, and found it none too easy to secure the most menial tasks at almost starvation wages. He would never discuss this period of his life, probably because it was so unpleasant that he banished all thoughts of it from his memory. Some electrical repair work and even ditch digging at $2 a day were among the jobs he tackled. He resented the utter waste of his abilities more than the personal degradation involved. His education, he said, seemed a mockery.

During the winter of early 1887, while engaged in ditch digging, he attracted the attention of the foreman of the gang who, too, was being forced by circumstances to work below his accustomed level. The foreman was impressed by Tesla's story of his inventions and his great hopes for his alternating-current system. Through this foreman, Tesla said, he was introduced to Mr. A. K. Brown of the Western Union Telegraph Company who put up some of his own money and interested a friend in joining him in Tesla's project.

These two gentlemen organized and financed the Tesla Electric Company, and in April, 1887, established a laboratory at 33-35 South Fifth Avenue (now West Broadway), near Bleecker Street, not far from the shop of the Edison Company. Edison had turned down Tesla's alternating-current idea--and now Tesla was his neighbor with a laboratory of his own, starting to develop the competing idea. Within this small area was to be fought the great battle of the electrical industry over the question of whether direct or alternating current should be used. Edison, already famous, was wholeheartedly committed to direct current; his

powerhouses were operating in several cities and, in addition, he had the support of the famous financier, J. P. Morgan. Tesla, on the other hand, was unknown and had only very modest financial support. The direct current was technically simple, whereas alternating-current was technically complex. Tesla knew, however, that in these complexities were unlimited possibilities for usefulness.

Tesla's dark days were over. yet he was soon to discover that the acceptance or rejection of the alternating-current system was not based on technical facts but upon financial considerations, emotional reactions and prejudices, and that human nature was a bigger factor than scientific truths. Nevertheless, in a short time, he would see some of his greatest hopes and dreams realized, and success in large measure reward his efforts.

Once he had achieved something resembling fair conditions under which to carry on his work, the rising star of Tesla's genius shot across the electrical heavens like a meteor. As soon as the newly organized Tesla Electric Company opened its South Fifth Avenue laboratories he started the construction of a variety of pieces of dynamo electric machinery. It was not necessary for him to do any calculating, or work out blueprints. Everything was crystal clear in his mind down to the finest detail of each piece of apparatus. As a result he very quickly produced the working units with which he demonstrated the principles of his polyphase alternating-current system. The single piece of apparatus he had built while in Strassburg, the first model of the induction motor, supplied the physical proof he needed that all the remainder of his calculations were correct.

The apparatuses built in his new laboratory were identical with those which he conceived during the two months in Budapest following the remarkable revelation of the principle of the revolving magnetic field. He did not make the slightest change, he said, in the machines he had mentally constructed at that time. When the machines were physically constructed not one of them failed to operate as he had anticipated. Five years had elapsed since he evolved the designs. In the meantime he had not committed a line to paper--yet he had remembered perfectly every last detail.

Tesla produced as rapidly as the machines could be constructed three complete systems of alternating-current

machinery--for single-phase, two-phase and three-phase currents--and made experiments with four- and six-phase currents. In each of the three principal systems he produced the dynamos for generating the currents, the motors for producing power from them and transformers for raising and reducing the voltages, as well as a variety of devices for automatically controlling the machinery. He not only produced the three systems but provided methods by which they could be interconnected, and modifications providing a variety of means of using each of the systems. A few months after opening the laboratory he submitted his two-phase motor to Prof. fi. A. Anthony, of Cornell University, for testing. Prof. Anthony reported that it had an efficiency equal to that of the best direct-current motors.

Tesla now not only constructed the machines which he visualized but he worked out the basic mathematical theory underlying all of the apparatus. The mathematical theory was so basic that it covered not only the principles applying to machinery for operation at 60 cycles per second, which is the frequency now in standard use, but applied equally well to the whole range of low- and high-frequency currents. With Edison direct current, it had not been found practicable to work with potentials higher than 220 volts on distribution systems; but with alternating-current it was possible to produce and transmit currents of many thousands of volts, thus permitting economical distribution, and these could be reduced to the lower voltages for customer use.

Tesla sought to obtain a single patent covering the entire system and all of its constituent dynamos, transformers, distribution systems and motors. His patent attorneys, Duncan, Curtis&Page, filed the application for this patent October 12, 1887, six months after the laboratory opened and five and a half years after Tesla had made his rotary magnetic-field invention.

The Patent Ofice, however, objected to considering such an "omnibus" application and insisted it be broken down to seven separate inventions, with individual applications filed on each. Two groups of separate applications were filed, on November 30 and December 23 respectively. These inventions were so original and covered such a virgin field of electrical science that they encountered practically no dificulties in the Patent Ofice and within about six months

the patents were issued. (They were numbered 381,968; 381,969; 381,970; 382,279; 382,280; 382,281 and 382,282. These covered his single and polyphase motors, his distribution system and polyphase transformers. In April of the following year, 1888, he applied for and was later granted five more patents, which included the four-and three-wire three-phase systems. These were numbered 390,413; 390,414; 390,415; 390,721; and 390,820. Within the year he applied for and was granted eighteen more: 401,520; 405,858; 405,859; 416,191; 416,192; 416,193; 416,194; 416,195; 418,248; 424,036; 433,700; 433.701; 433,702; 433,703; 445,207; 445,067; 459,772 and 464,666.)

As a succession of fundamental patents started to issue from the Patent Ofice to Tesla, the attention of the electrical engineering profession was drawn to this practically unknown inventor. The significance of his epoch-making discoveries was quickly grasped and he was invited to deliver a lecture before the American Institute of Electrical Engineers on May 16, 1888. This invitation was evidence that he had "arrived." Tesla accepted the invitation and put his whole heart into preparing the lecture which, he felt, would enable him to tell the electrical world the magnificent story of his complete alternating-current system and the tremendous advantages it possessed over direct-current.

This lecture became a classic of the electrical engineering field. In it Tesla presented the theory and practical application of alternating-current to power engineering. This, with his patents, described the foundation, in the matter of circuits, machines and operation, and theory, upon which almost the entire electrical system of the country was established and is still operating today. No new development of anything even slightly approaching comparable magnitude has been made in the field of electrical engineering down to the present time.

Tesla's lecture, and the inventions and discoveries which he included in it, established him before the electrical engineering profession as the father of the whole field of alternating-current power system, and the outstanding inventor in the electrical field.

It is not easy to visualize the tremendous burst of electrical development and progress that came out of Tesla's laboratory in the few months after he established

it. He produced a tidal wave of advancement which carried the electrical world into the opening of the new power age in one grand surge--although it took several years, naturally, for the commercial exploitation to get under way. The world of electrical engineering was amazed, bewildered and mystified by the host of discoveries thrown into its midst in rapid succession from the Tesla laboratory, and was filled with admiration for the prodigious new genius who had flared up within its ranks.

Tesla's power system, employing high voltage for transmission, released electrical powerhouses using direct current from functioning as purely local enterprises, capable of serving an area within a radius of one mile at the very most. His motors used alternating-current that could be economically transmitted hundreds of miles, and he provided an economical two- and three-phase system for transmission lines.

The stupendous changes which the Tesla alternating-current inventions and discoveries brought about in the electrical industry can be realized by considering the handicap under which the direct-current powerhouses of the Edison system had operated up to that time. Electricity was generated in powerhouses by relatively small-size dynamos, and the current then distributed to customers over copper conductors laid in conduits under the streets. Some of the electrical energy fed into these conductors at the powerhouse did not arrive as electricity at the far end of the line but was converted along the route to useless heat by the resistance of the conductors.

Electrical energy is composed of two factors, the current, or amount of electricity, and the voltage, or the pressure under which the current is moved. Resistance losses were undergone by the current regardless of the voltage. One ampere of current experienced a definite loss caused by resistance and this loss was the same whether the pressure was 100, or 1,000 or 100,000 volts. If the current value remained fixed, then the amount of energy transported over a wire varied with the voltage. There is, for example, 100,000 times as much energy transported over a wire carrying a current of one ampere at 100,000 volts as there is when the current is one ampere and the pressure is one volt.

If the amount of current carried by a wire is doubled, the heat losses are increased four fold; if the current is tripled, these losses are increased nine fold, and if the current is increased four fold, the losses rise sixteen fold. This situation put definite limits to the amount of current which could be loaded on to conductors.

In addition there is an accompanying drop in pressure. In a half-mile-long conductor, of the size adopted and under the average currents carried, there would be a drop of about 30 volts. To compensate for this, to some extent, the dynamos were designed to generate 120 volts instead of the standard 110 volts for which lamps were designed. Near the powerhouse the customers would get excess voltage--and a half-mile away their current would be delivered at 90 volts. The early Edison carbon lamps were none too brilliant at 110 volts and gave much less than satisfactory illumination at 90 volts.

As a result of this situation the generation and distribution of direct-electric current became very much of a localized matter. The Edison powerhouse could serve an area less than a mile in diameter. In order to give service to a large city it would be necessary to have a powerhouse in every square mile, or even closer if a uniformly satisfactory current were to be supplied. Outside large cities the situation became even more dificult. This was a severe handicap if electricity was to become the universal power source.

Tesla's alternating-current power system, which Edison so emphatically rejected when it was offered to him, freed electricity from its bondage to local isolation. Not alone were his alternating-current motors more simple and flexible than the direct-current machines, but it was possible by a highly efficient method of using transformers, which consisted of two coils of wire around an iron core, to step up the voltage and simultaneously step down the current in a proportionate amount, or use the process in reverse. The amount of energy involved, however, would remain practically unchanged.

Copper wire entails a heavy investment when it is bought by the mile. The diameter of the wire sets the limit to the amount of current it will carry. With the Edison direct-current system there was no practical way for transforming an electric current. The voltage remained fixed and when

the current was increased to the carrying capacity of the wire no further expansion was possible on that circuit.

With the Tesla system the amount of energy a wire would transport would be increased tremendously by increasing the voltage and letting the current remain fixed below the carrying limit of the circuit. A very small wire could carry a thousand or more times as much electrical energy in the Tesla polyphase alternating system as it could in the Edison direct-current system.

By using Tesla's alternating-current system electricity could be delivered economically at vast distances from the powerhouse. It would be possible, if desired, to burn coal at the mouth of a mine for generating electricity, and deliver the current cheaply at distant cities, or to generate electricity where water power was available and transmit it to distant points where it could be used.

Tesla rescued the electrical giant from the apron strings of the powerhouse and gave it geographical freedom, the opportunity to expand into the wide-open spaces and work its magic. He laid the foundation for our present superpower system. A development of such magnitude was bound to be loaded with dynamite, and action was sure to follow as soon as someone set a match to the fuse.

TESLA'S spectacular lecture and demonstration before the American Institute of Electrical Engineers in New York focused on his work the attention of the electrical fraternity throughout the world. There was no doubt in the mind of the vast majority of electrical engineers that Tesla's discoveries created a new epoch in the electrical industry. But what could be done about it? There were few manufacturers who could take advantage of it. His discoveries were in the same predicament as a ten-pound diamond. No one would question the value of the stone but who would be in a position to purchase it or make any use of it?

Tesla had given no specific thought to commercializing his work at this time. He was in the midst of a program of experimental work which was far from complete and he desired to finish it before engaging in another line of activity. He expected that there would be no alternative to establishing his own company and engaging in the manufacture of his dynamos, motors and transformers. Such a course would take him away from the original experimental work which greatly fascinated him, and which he did not wish to interrupt. Commercializing his inventions, therefore, was a problem that could be postponed, as far as he was concerned, at least as long as the present financing of his work continued.

George Westinghouse, head of the Westinghouse Electric Company in Pittsburgh, was a man of vision. He was already famous as an inventor of numerous electrical devices but principally for his air brake for trains, and had made a fortune out of the exploitation of his own inventions. He recognized the tremendous commercial possibilities presented by Tesla's discoveries and the vast superiority of the alternating- over the direct- current system. He was a practical man of business and was not limited in his choice between the two systems.

Edison, head of the Edison General Electric Company, on the other hand, was under a limitation. Edison's invention was the incandescent electric lamp. Having developed this project, he was faced with finding some way to use it commercially. In order to sell his lamps to the public it was necessary to make the electricity available for lighting them. This necessitated the building of powerhouses and distribution systems. Another kind of electric lamp was already available--the arc lamp--in which he was but slightly interested. The Edison system powerhouses were standardized on low-voltage direct current. At that time direct-current motors were in use, and most technical men believed it was not at all likely there would ever be a practical alternating-current motor. The direct-current system, therefore, offered a number of advantages of a practical nature from Edison's viewpoint.

Westinghouse had no pet project comparable to the incandescent lamp around which he had to throw protecting conditions such as direct-current limitations, so he could look at the Tesla alternating-current discoveries from an unbiased and purely objective point of view. He reached his

decision a month after Tesla's lecture. Having done this, he forwarded a brief note to Tesla, making an engagement to see him in the latter's laboratory.

The two inventors had not previously met but each of them was well acquainted with the other's work. Westinghouse, born in 1846, was ten years older than Tesla. He was a short, stout, bearded, impressive-looking individual, and had a habit of directness in conducting his affairs that amounted almost to bluntness. Tesla, thirty-two years old, was tall, dark, handsome, slender and suave. They made a strongly contrasting pair as they stood in Tesla's laboratory, but they had three things in common: they both were inventors, engineers and loved electricity. Tesla had in his laboratory dynamos, transformers, and motors with which he could demonstrate his discoveries and models in actual operating conditions. Here Westinghouse was right at home and quickly became completely sold on the inventor and his inventions.

So favorably impressed was Westinghouse that he decided to act quickly. The story was related to the author by Tesla.

"I will give you one million dollars cash for your alternating-current patents, plus royalty," Westinghouse blurted at the startled Tesla. This tall, suave gentleman, however, gave no outward sign that he had almost been bowled over by surprise.

"If you will make the royalty one dollar per horsepower, I will accept the offer," Tesla replied.

"A million cash, a dollar a horsepower royalty," Westinghouse repeated.

"That is acceptable," said Tesla.

"Sold," said Westinghouse. "you will receive a check and a contract in a few days."

Here was a case of two great men, each possessed with the power of seeing visions of the future on a gigantic panorama, and each with complete faith in the other, arranging a tremendous transaction with utter disregard of details.

The amount involved was unquestionably a record one, for that time, for an invention. while Tesla liked to think of his complete polyphase system as a single invention, he was, nevertheless, selling about twenty inventions on which patents were already issued, and about as many more still to issue. With a total of forty patents involved in the transaction, most of them strongly basic in nature, he received, therefore, about $25,000 per patent. Westinghouse thereby obtained a record-breaking bargain by buying the patents in wholesale quantities.

Westinghouse arranged with Tesla to come to Pittsburgh "at a high salary" for a year, to act as consultant in the commercial application of his inventions. The generous offer made by the Pittsburgh magnate for the purchase of his patents made it unnecessary for Tesla to have any more worries about having to devote a major portion of his time to exploiting his inventions commercially through his own company. He could afford, therefore, to give this year of his time.

The apparatus which Tesla demonstrated to Westinghouse when the latter visited his laboratory, and which worked so beautifully, was designed for operation with a current of 60 cycles. Tesla's investigation had demonstrated that this was the frequency at which the greatest efficiency of operation could be achieved. At higher frequencies there was a saving in the amount of iron required; but the drop in efficiency, and design dificulties that developed, were not compensated for by the very small saving in cost of metal. At lower frequencies the amount of iron required increased, and the apparatus grew in size faster than increased efficiency justified.

Tesla went to Pittsburgh and expected to clear up all problems in less than a year. Here, though, he encountered engineers who faced the problem of producing a motor with a design that would insure, first, certainty of smooth and reliable operation; second, economy of operation; third, economy in use of materials; fourth, ease of manufacture; as well as other problems. Tesla had these problems in mind but not with the urgency with which the engineers faced them. In addition he was quite adamant in the choice of 60 cycles as the standard frequency for alternating current while engineers, who had experience on 133 cycles, were not so sure that the lower frequency would be best for the Tesla motors. At any rate there was conflict between the

inventor, interested mainly in principles, and engineers interested in practical design problems. Very definite problems were encountered in making the Tesla motor work on a single-phase current in small sizes. In this type of design, artifices had to be incorporated in the motor to achieve some of the characteristics of a two-phase current from the single-phase current that was supplied to operate it.

Tesla was thoroughly disgusted with the situation. He felt his advice concerning his own invention was not being accepted, so he quit Pittsburgh. Westinghouse was sure the situation would work itself out. Seeking to persuade Tesla to remain, he offered him, Tesla revealed many years later, twenty-four thousand dollars a year, one third of the net income of the company and his own laboratory, if he would stay on and direct the development of his system. Tesla, now wealthy and anxious to return to original research, rejected the offer.

Development work proceeded after Tesla left, and soon practical designs were produced for all sizes of motors and dynamos, and their manufacture started. Tesla was happy to note that the 60-cycle standard, his emphatic choice, but which had been questioned on the ground it was less practical in small units, had been adopted as the standard frequency.

On returning to his New York laboratory, Tesla declared that he had not made a single worth-while contribution to electrical science during the year he spent at Pittsburgh. "I was not free at Pittsburgh," he explained; "I was dependent and could not work. To do creative work I must be completely free. When I became free of that situation ideas and inventions rushed through my brain like a Niagara." During the following four years he devoted a large fraction of his time to further developments of his polyphase power system, and applied for, and was granted, forty-five patents. Those granted in foreign countries would bring the total to several times this number.

The ideas of the two giants among inventors--Edison and Tesla--were meeting in head-on battle. Out of the laboratories of the two geniuses, within sight of each other in South Fifth Avenue in New York, had come world-shaking developments.

There had been considerable conflict between Edison, who adhered strictly to direct current, and those who supported the claims for alternating current. The Thomson-Houston Company and the Westinghouse Electric Company had extensively developed this field for series electric lighting and arc lighting before the Tesla power system was developed. Edison had engaged in many tilts at these competitors, attacking alternating-current as unsafe because of the high voltages used. The advent of the Tesla system added fuel to the fire.

It was Tesla's belief that when the New York State Prison authorities adopted high-voltage alternating current for electrocution of condemned prisoners, the Edison interests had engineered the project to discredit alternating current. There is no doubt about the aid the prison authorities' choice gave the direct-current group; but their decision was undoubtedly based on the fact that direct current could not, by any practical means, be produced at the high voltages required, whereas alternating-current potentials could be very easily increased. Direct current is just as deadly, at the same voltage and amperage, as alternating current. In this "war of the currents," however, as in other wars, appeal to the emotions, instead of to simple facts, were the governing influences.

The task of putting the United States on an electrical power basis--which is what George Westinghouse undertook when he began to exploit the Tesla patent--was a gigantic one requiring not only engineering talent but capital. The Westinghouse Electric Company experienced a tremendous expansion in the volume of its business, but the upward surge came at a time when the country was going into a stage of commercial and financial depression; and Westinghouse soon found himself in dificulties.

This was, in addition, an era in which competing giant financial interests were battling for control of the industrial structure of the country through control of capital. It was a time of mergers, a period when the financial interests were building larger units of production by uniting smaller companies in related fields, frequently forcing these combinations without regard to what the owners of the companies desired.

One merger, internally initiated and arranged by mutual consent, brought together the Thomson-Houston Company and the Edison General Electric Company, the two biggest competitors of Westinghouse Electric, to form the present General Electric Company. This was a challenge to competing financial interests.

Westinghouse had expanded his business at a very rapid rate in exploiting the Tesla patents. Because his financial structure thereby lost a certain amount of flexibility, he became vulnerable to financial operators and soon found himself in the toils of a merger that involved uniting several other small companies with his organization. Financial interests that had stepped into the situation demanded that the Westinghouse Electric Company be reorganized as a step toward bringing about a merger with it of the U. S. Electric Company and the Consolidated Electric Light Company, the new unit to be known as the Westinghouse Electric and Manufacturing Company.

Before this reorganization would be consummated the financial advisers, in strategic positions, insisted that Westinghouse jettison some of his plans and projects which they considered inadvisable or a detriment to getting the new company onto a new foundation that would be sounder from a financial point of view.

One of the requirements was that Westinghouse get rid of the contract with Tesla calling for royalty payments of $1 per horsepower on all alternating-current articles sold under his patents. (No documentary evidence exists concerning this contract. The author located two sources of information. One was in complete agreement with the story here related. The other states that the million-dollar payment was advance royalties and Tesla so described it to him, declaring no further royalties were paid.) The financial advisers pointed out that if the business which Westinghouse expected the company would do under the Tesla patents in the ensuing year was anywhere near as great as estimated, the amount to be paid out under this contract would be tremendous, totaling millions of dollars; and this, at the time of reorganization, appeared a dangerous burden, imperiling the stability which they were trying to attain for the new organization.

Westinghouse strenuously objected to the procedure. This patent-royalty payment, he insisted, was in accordance with

usual procedures and would not be a burden on the company, as it was included in costs of production, was paid for by the customers, and did not come out of the company's earnings. Westinghouse, himself an inventor of first magnitude, had a strong sense of justice in his dealings with inventors.

The financial advisers, however, were not to be overruled. They nailed Westinghouse on the spot by insisting that the million dollars he had paid Tesla was more than adequate compensation for an invention, and that by making such an exorbitant payment he had imperiled the financial structure of his company and jeopardized his bankers' interest. Any further imperiling of the reorganization by any effort to retain the royalty contract would, it was argued, result in the withdrawing of support that would save the company.

The situation boiled down to the common "Either-Or" technique.

Westinghouse was required to handle the negotiations with Tesla. No situation could be more embarrassing to him. Nevertheless, Westinghouse was a realist among realists. He never hesitated to face facts squarely and with a blunt directness. "I will give you one million dollars cash for your alternating-current patents, plus royalty": he had been both brief and blunt when he purchased the patents from Tesla. Now he was faced with the problem of undoing the situation into which he had entered with such brevity. Then money talked and he held the money. Now Tesla held the dominant position; he held a perfectly valid contract worth many millions, and he could go to court to force compliance with its terms. Edison's successful suit against infringers of his electric-light patent, bringing disaster to many companies that violated his patent property rights, had caused the whole industrial world to hold a new and wholesome respect for patent rights.

Westinghouse had no reason for believing that Tesla would show the slightest inclination to relinquish his contract or permit its terms to be changed to provide a smaller rate of royalty. He knew that Tesla's pride had been hurt by the disagreement with the Pittsburgh engineers, and that he might not now be in a conciliatory mood. On the other hand, Westinghouse knew that he had succeeded in having Tesla's ideas adopted. His greatest comfort came from the fact that he had entered into the contract with good faith--and with

the same good faith he was trying to handle a much less satisfactory situation. Perhaps he could offer Tesla an executive position in the company in lieu of the contract. There would be mutual advantages in such an arrangement.

There is no means of fixing the definite value of the contract Tesla held. His patents covered every department of the new alternating-current power system, and royalties could be collected on powerhouse equipment and motors. At that time the electric power industry had barely started; no one could look into the future and see the tremendous volume of business that would be developed. (The latest data available indicate that in 1941 there was 162,000,000 horsepower of electrical generating machinery in operation in the United States, practically all of it for alternating current. Assuming a uniform growth from 1891 to 1941, the installed horsepower in 1905, when the first Tesla patents would have expired, would have been about twenty million. This figure is, apparently, too high.

According to a census of central stations in the United States conducted by T. Commerford Martin (Electrical World, March 14, 1914) the horsepower of generators in operation in 1902 was 1,620,000 and in 1907 the figure had risen to 6,900,000. On a pro rata, per-year basis, this would make the figure for 1905, the year when Tesla's first patents expired, 5,000,000. During this period many manufacturers who had been using steam power installed dynamos in their factories and operated isolated plants. These would not be included in the central-station figures and, if added, would bring the total horsepower to perhaps 7,000,000. Tesla would have been entitled to $7,000,000 royalties on this equipment, on the basis of his $1-per-horsepower arrangement. In addition he would have been entitled to royalties on motors that used the power generated by these dynamos. If only three quarters of the current generated were used for power, this would have entitled him to additional royalties of $5,000,000, or a total of $12,000,000.)

It would be a tough job for any executive, no matter how shrewd or clever, to talk a man out of a contract that would net him many millions of dollars, or induce him to accept a reduction in rates amounting to millions.

Westinghouse called on Tesla, meeting him in the same South Fifth Avenue laboratory where he had purchased the patents

four years before. Without preliminaries or apologies Westinghouse explained the situation.

"your decision," said the Pittsburgh magnate, "determines the fate of the Westinghouse Company."

"Suppose I should refuse to give up my contract; what would you do then?" asked Tesla.

"In that event you would have to deal with the bankers, for I would no longer have any power in the situation," Westinghouse replied.

"And if I give up the contract you will save your company and retain control so you can proceed with your plans to give my polyphase system to the world?" Tesla continued.

"I believe your polyphase system is the greatest discovery in the field of electricity," Westinghouse explained. "It was my efforts to give it to the world that brought on the present difficulty, but I intend to continue, no matter what happens, to proceed with my original plans to put the country on an alternating-current basis."

"Mr. Westinghouse," said Tesla, drawing himself up to his full height of six feet two inches and beaming down on the Pittsburgh magnate who was himself a big man, "you have been my friend, you believed in me when others had no faith; you were brave enough to go ahead and pay me a million dollars when others lacked courage; you supported me when even your own engineers lacked vision to see the big things ahead that you and I saw; you have stood by me as a friend. The benefits that will come to civilization from my polyphase system mean more to me than the money involved. Mr. Westinghouse, you will save your company so that you can develop my inventions. Here is your contract and here is my contract--I will tear both of them to pieces and you will no longer have any troubles from my royalties. Is that suficient?"

Matching his actions to his words Tesla tore up the contract and threw it in the waste basket; and Westinghouse, thanks to Tesla's magnificent gesture, was able to return to Pittsburgh and use the facilities of the reorganized company, which became the present Westinghouse Electric and Manufacturing Company, to make good his

promise to Tesla to make his alternating-current system available to the world.

Probably nowhere in history is there recorded so magnificent a sacrifice to friendship as that involved in Tesla's stupendous gift to Westinghouse of $12,000,000 in unpaid royalties, although Westinghouse personally received only indirect benefits from it.

It is also probable that the failure to pay Tesla these royalties resulted in one of the greatest handicaps to scientific and industrial progress which the human race has experienced. A few years later Tesla, still an intellectual giant far from the peak of his greatest growth, still pouring forth a profusion of inventions and discoveries of first magnitude, equal in importance to his first efforts which put the world on an electrical power basis, found himself without funds with which to develop his discoveries, with the result that many of them have been lost.

Nearly fifty years after this majestic relinquishment of wealth on the altar of friendship, during which time Tesla had had opportunity to see the United States and the world as a whole wax wealthy out of the power he had made available, he was called on to respond, with a speech, to honorary citation by the Institute of Immigrant Welfare. Tesla, then about eighty, was unable to appear in person. He had experienced decades of poverty in which he faced ridicule for his failure to develop inventions which he declared he had made, and had been forced to move frequently from hotel to hotel, owing to inability to pay his bills. In spite of these experiences he developed no rancor toward Westinghouse in whose behalf he sacrificed his $12,000,000 in royalties. Instead, he retained his original warm friendship. This is indicated by a statement in the speech he sent to the Institute to be read at its dinner held in the Hotel Biltmore, May 12, 1938:

"George Westinghouse was, in my opinion, the only man on this globe who could take my alternating-current system under the circumstances then existing and win the battle against prejudice and money power. He was a pioneer of imposing stature, one of the world's true noblemen of whom America may well be proud and to whom humanity owes an immense debt of gratitude."

when Tesla left the Westinghouse plant at Pittsburgh in 1889 to return to his laboratory in New York, he entered a new world. The magnificent polyphase system which he had already produced was but a small sample of the greater wonders that still remained to be revealed, and he was anxious to start exploring the new realm.

He was not approaching an entirely unknown realm in which he would have to feel his way in darkness in the hope of stumbling upon something of value, although anyone else at that time would have been in that position. On that fateful afternoon in February in Budapest in 1882, when he was given the vision of the rotating magnetic field, there had come with it an illumination that revealed to him the whole cosmos, in its infinite variations and its myriad of forms of manifestations, as a symphony of alternating currents. For him, the harmonies of the universe were played on a scale of electrical vibrations of a vast range in octaves. In one of the lower octaves was a single note, the 60-cycle-per second alternating current, and in one of the higher octaves was visible light with its frequency of billions of cycles per second.

Tesla had in mind a course of experimentation in which he would explore this region of electrical vibration between his alternating current and light waves. He would increase the frequency of the alternating current through the unknown intervening regions. If one note in a lower octave produced such a magnificent invention as the rotating magnetic field and the polyphase system, who could imagine the glorious possibilities that lay hidden on other notes in higher octaves? And there were thousands of octaves to be explored. He would construct an electrical harmonium by producing electrical vibrations in all frequencies, and study their characteristics. He would then, he hoped, be able to understand the motif of the cosmic symphony of electrical vibrations that pervaded the entire universe.

Tesla, at the age of thirty-three, was now wealthy. He had received $1,000,000 from the Westinghouse Company for his first crop of inventions. Of this, $500,000 went to A. K. Brown and his associate who had financed his experiments. Still greater inventions were to follow. He would never

need money. He would, he then believed, have royalties in the millions from his alternating-current patents. He could spend as freely as he wished, penetrating the secrets of Nature and applying his discoveries to human welfare. It was his responsibility to be so engaged. He knew he was gifted as no other man had been blessed with vision, talent and ability; and he in turn would endow the world with supernal treasures of scientific knowledge which he would extract from the secret recesses of the universe and, through the activities of his mighty mind, transform into agencies to brighten the lives, lighten the labors and increase the happiness of the human race.

was he a superegoist in his attitude? If so, he was not activated by selfish motives. To him it mattered not what he thought, so long as he remained objective in his thinking and his thoughts could be translated into demonstrable facts. what if he did consider himself greater than other men: did not this viewpoint conform to the facts? Suppose he did consider himself a man of destiny. Could he not bring evidence to support the contention? It was not necessary for Tesla actually to see an event occur in order to enjoy its realization. Had he not as a youth declared that he would make a practical alternating-current motor, only to be told by his professor that the goal was impossible of attainment--and had he not already accomplished this "impossibility"? Had he not taken the direct-current dynamos of Edison, whom all the world looked upon as a great genius, and had he not greatly improved their design and operation; and in addition, had he not produced a vastly superior system for producing, distributing and using electricity? To all of these inquiries Tesla could answer in the afirmative without going beyond the bounds of modesty concerning his achievements.

His attitude was not that of an egoist. It was an attitude of supreme faith in himself and in the vision that had been given him. To a man of ability, with such supreme faith in himself, and necessary financial resources to advance his purposes, the world of accomplishments is without limits. This was the picture of Tesla as he returned to his laboratory in lower Fifth Avenue, New York, in the latter part of 1889.

Tesla had studied a wide range of frequencies of alternating current in order to select the frequency at

which his polyphase system would operate most efficiently. His calculations indicated important changes in characteristics and effects as the frequency of the current was increased; and his observations with the electrical machinery he built confirmed his calculations. He noted that ever smaller quantities of iron were required as the frequencies were increased, and he now wished to explore the very high frequencies at which unusual effects should be produced without any iron in the magnetic circuit.

When, back in Budapest following his rotating magnetic-field discovery, he had played with mental calculations of the properties of alternating currents all the way from the very lowest frequency up to that of light, no one had yet explored this region. James Clerk Maxwell, at Cambridge University, England, had, however, nine years before, in 1873, published his beautiful presentation on an electromagnetic theory of light, and his equations indicated that there was a vast range of electro-magnetic vibrations above and below visible light--vibrations of much longer and much shorter wavelengths. while Tesla was engaged in making models of his polyphase system in 1887, too, Professor Heinrich Hertz, in Germany, put the Maxwell theory to test in the range of waves a few meters long. He was able to produce such waves by the spark discharge of an induction coil, and was able to absorb such waves from space and change them back to a small spark at some distance from the coil.

Hertz's work gave support to Tesla's theory that there was an interesting discovery to be made on almost every note of the whole gamut of vibrations between the known ones of the electrical current and those of light. Tesla felt sure that if he could continually increase the frequency of electrical vibrations until they equaled that of light, he would be able to produce light by a direct and highly efficient process instead of the extremely wasteful process used in the Edison incandescent lamp, in which the useful light waves were a very small fraction of the wasted heat waves emitted in the process, and only five per cent of the electrical energy was effectively utilized.

Tesla started his investigations by building rotary alternating-current dynamos with up to 384 magnetic poles, and with these devices he was able to generate currents up to 10,000 cycles per second. He found that these high-frequency currents presented many fascinating possibilities

for even more efficient power transmission than his very practical 60-cycle polyphase system. He therefore carried on a parallel line of research into transformers for raising and lowering the voltage of such currents.

High-frequency alternating-current dynamos, similar to those designed by Tesla in 1890, were subsequently developed by F. W. Alexanderson into the high-power wireless transmitters which put transatlantic wireless transmission, more than two decades later, on such a sound practical basis that the Government would not permit control of it to go to a foreign country and preserved for the United States its predominant position in world wireless.

The high-frequency current transformers which Tesla developed proved to be spectacular performers. They contained not a trace of iron; as a matter of fact, the presence of iron was found to interfere with their operation. They were air-core transformers and consisted merely of concentric primary and secondary coils. The voltages he was able to produce with these transformers, which became known as Tesla coils, were very high. In the early experiments he attained potentials that would spark across a couple of inches of air, but in a short time he made tremendous progress and was producing flaming discharges. In working with these voltages he encountered dificulties in insulating his apparatus, and so he developed the technique that is now in universal use in high-tension apparatus: that of immersing the apparatus in oil and excluding all air from the coils, a discovery of great commercial importance.

There was a limit, however, above which the use of rotary generators of high-frequency currents was not practicable, so Tesla set about the task of developing a different type of generator. There was nothing novel about the basic idea he employed. In rotary dynamos, current is generated by moving a wire in a circle past a number of magnetic poles in succession. The same effect can be attained by moving the wire back and forth with an oscillating motion in front of one magnetic pole. No one, however, had as yet produced a practical reciprocating dynamo. Tesla produced one that was extremely practical for his particular purpose; but otherwise it had little utility, and he later felt that he could have employed much better the time he spent on it. It was an ingenious single-cylinder engine without valves, and

could be operated by compressed air or steam. It was supplied with ports like a small two-cycle marine engine. A rod extended from the piston through the cylinder head at either end, and at each end of the rods was attached a flat coil of wire which, by the reciprocating action of the piston, was caused to move back and forth through the field of an electromagnet. The magnetic field through its cushioning effect served as a flywheel.

Tesla was able to obtain a speed of 20,000 oscillations per minute, and to maintain such a remarkable degree of constancy in operation that he proposed the maintenance of equally constant speed of operation for his 60-cycle polyphase system and the use of synchronous motors, geared down to the proper extent, as clocks which would furnish correct time wherever alternating current was available. This proposal furnished the foundation for our modern electric clocks. As with many another of his practical and useful suggestions, he did not take out a patent on the idea, and gained no financial advantage from it.

In working with his polyphase system, Tesla gained a thorough understanding of the part played by the two factors, capacity and inductance, in alternating-current circuits; the former acting like a spring and the latter like a storage tank. His calculations indicated that with currents of suficiently high frequency it would be possible to produce resonance with relatively small values of inductance and capacity. Producing resonance is tuning a circuit electrically. The mechanical effects analogous to electrical resonance are the causing of a pendulum to swing through a wide arc by giving it a series of very light but equally timed touches, or the destruction of a bridge by soldiers marching in unison over it. Each small vibration re-enforces its predecessors until tremendous effects are built up.

In a tuned electrical circuit a condenser supplies the capacity and a coil of wire supplies the inductance. A condenser ordinarily consists of two parallel metal plates separated from each other a short distance by an insulating material. Each plate is connected to either end of the inductance coil. The size of the condenser and the coil is determined by the frequency of the current. The coil-condenser combination and the current are tuned to each other. The current can be pictured as flowing into the condenser until it is fully charged. It then flows

elastically into the inductance coil, which stores the energy by building up its magnetic field. When the current ceases to flow in the coil, the magnetic field collapses and gives back to the coil the energy previously used in building up the magnetic field, thus causing a current to flow back into the condenser to charge it up to overflowing again, so that it is ready to repeat the process. This flow back and forth between the condenser and coil takes place in step with the periodic reversal of the alternating current which supplies the energy when resonance is established. Each time it takes place, the charging current comes along at the right instant to give it a boost, so that the oscillations build up to tremendous values.

Tesla, in discussing this plan of electrical tuning of circuits in a lecture, given several years later, said:

The first question to answer then is whether pure resonance effects are producible. Theory and experiment show that such is impossible in nature for, as the oscillations become more vigorous, the losses in vibrating bodies and environing media rapidly increase, and necessarily check the vibrations, which would otherwise go on increasing forever. It is a fortunate circumstance that pure resonance is not producible for, if it were, there is no telling what dangers might lie in wait for the innocent experimenter. But, to a certain degree, resonance is producible, the magnitude of the effects being limited by the imperfect conductivity and imperfect elasticity of the media, or, generally stated, frictional losses. The smaller these losses the more striking are the effects.

Tesla applied the electrical tuning principles to his coils and discovered that he was able to produce tremendous resonance effects and build up very high voltages. The tuning principles he developed in 1890 are those which have made our modern radio, and the development of the earlier art, "wireless," possible. He had been working with, and demonstrating, these principles before others who received credit had begun to learn the first lessons in electricity.

Seeking a new source of high-frequency currents, higher than could be produced by any mechanical apparatus, Tesla made use of a discovery that had been made the year in which he was born, by Lord Kelvin, in England, in 1856, and for which no use had thus far been found. Up to the time of Kelvin's discovery it had been believed that when a

condenser was discharged the electricity flowed out of one plate into the other, like water being poured from a glass, thus establishing equilibrium. Kelvin showed that the process was far more interesting and complex; that its action was like the bobbing up and down that takes place when a weighted stretched spring is released. The electricity, he showed, rushes from one plate into the other and then back again, the process continuing until all of the stored up energy is used up in overcoming frictional losses. The back-and-forth surges take place at a tremendously high frequency, hundreds of millions a second.

The combination of condenser discharges and tuned circuits opened a new realm in electrical science as significant and as important as Tesla's polyphase system. He worked out remarkably simple and automatic methods for charging the condensers by low voltage (direct and alternating currents), and discharging them through his new air-core transformers, or Tesla coils, to produce currents of enormously high voltages that oscillated at the tremendously high frequency of the condenser discharge. The properties of these currents were unlike anything that had been seen before. He was again pioneering in an entirely new field, with tremendous possibilities. He labored feverishly in his laboratory; and as he lay in bed at night for his five-hours' rest, which included two hours of sleep, he formulated new experiments.

Tesla announced the heating effect of high-frequency currents on the body in 1890 and proposed their use as a therapeutic device. In this he was a pioneer, but soon had many imitators here and abroad who claimed to be originators. He made no effort to protect his discovery or prevent the pirating of his invention. When the same observation was made thirty-five years later in laboratories using vacuum-tube oscillators as the source of the high-frequency currents, it was hailed as a new discovery and developed as a modern wonder. Tesla's original discovery is, however, the basis of a vast array of very recent electronic applications in which high-frequency currents are used to produce heat for industrial purposes.

When he gave his first lecture on the subject before the American Institute of Electrical Engineers at Columbia College, in May, 1891, he was able to produce spark discharges five inches long, indicating a potential of

about 100,000 volts, but, more important, he was able to produce phenomena which included, electrical sheets of flame, and a variety of new forms of illumination--electric lamps the like of which had never been seen before, nor dreamed of in the wildest imagination of any experimenter.

This lecture produced a sensation in engineering circles. He was already famous in this field for the astounding revelations he had made before the same organization on that earlier occasion when he described his discovery of the polyphase alternating current system. That discovery was an intellectual accomplishment of bewildering brilliance, made impressive by the tremendous commercial importance of the discovery. The experiments with the high-frequency and high-potential currents, however, were spectacular; the crackling of the high-voltage sparks, the flashing of the high-potential sheets of electrical flame; the brilliant bulbs and tubes of electrical fire, the amazing physical effects he produced with the new currents, made a profound emotional appeal to the startled beholders.

The man who could produce these two pioneering developments within two years must be more than a genius! The news of his new accomplishment flashed quickly throughout the world, and Tesla's fame now rested on a double foundation.

The world-wide fame that came to him at this time was unfortunate. Tesla would have been entirely superhuman had he not derived a great deal of satisfaction out of the hero-worshiping adulation that now came to him. It was only five years ago that he had been hungry and penniless in the streets of New York, competing with equally hungry hordes of unemployed for the few existent jobs calling for brute labor, while his head bulged with important inventions which he was anxious to give to the world. No one would listen to him then--and now the intellectual elite of the nation were honoring him as an unrivaled genius.

Tesla was a spectacular figure in New York in 1891. A tall, dark, handsome, well-built individual who had a flair for wearing clothes that gave him an air of magnificence, who spoke perfect English but carried an atmosphere of European culture which was worshiped at that time, he was an outstanding personality to all who beheld him. Hidden behind his quiet, self-effacing demeanor, and an extreme modesty that manifested itself as an exaggerated shyness, was the mind of a genius which had worked electrical

wonders that fired the imagination of all and exceeded the understanding of the vast majority of the population. In addition Tesla was a young man, not yet thirty-five, who had recently received a million dollars and was a bachelor.

A bachelor with a million dollars, culture and fame, could not avoid being a shining mark in New York in the early years of the gay nineties. Many were the designing matrons with marriageable daughters who cast envious eyes in the direction of this eligible young man. The social leaders looked upon him as a fascinating decoration for their salons. The big men of business looked upon him as a good man to know. The intellectuals of the day found his almost unbelievable accomplishments a source of inspiration.

Except at formal dinners Tesla always dined alone, and never under any circumstances would he dine with a woman at a two-some dinner. No matter how much a woman might gush over him or strive to gain his favor, Tesla, in most adamant fashion, maintained a thoroughly impersonal attitude. At the Waldorf-Astoria and at Delmonico's he had particular tables which were always reserved for him. They occupied secluded positions in the dining rooms because when he entered either room he was the cynosure of all eyes and did not enjoy being on exhibition.

In spite of all of the adulation that was heaped upon him, Tesla had but one desire--to continue his laboratory experiments undisturbed by outside distractions. There was a tremendous empire of new knowledge to be explored. He was fired with a potential of enthusiasm for the work that was as high as the voltage of the currents with which he was working, and new ideas were coming to him with almost the rapidity of the cycles in his high-frequency current.

There were three broad fields in which he wished to develop applications which were now clearly outlined in his mind: a system of wireless power transmission that would excel his own polyphase system, a new type of illumination, and the wireless transmission of intelligence. He wished to work on them all simultaneously. They were not separate and isolated subjects but all closely intermeshed, all notes on that vast cosmic scale of vibration represented by his beloved alternating currents. He did not wish to play on one note at a time, as would a violinist; he preferred to play as a pianist, striking many notes at once and weaving them into beautiful chords. Where it possible to occupy the

position of leader and simultaneously play all of the instruments in a great symphony orchestra, he would have been still better pleased. The instruments in his orchestra, however, would be electrical devices oscillating in tune with their energizing currents or with their environment. To the extent that he was unable to realize his most expansive desires, he was under mental pressure that drove him to a working pace which no individual of ordinary strength could withstand without a resulting complete physical breakdown.

The spectacular lecture and demonstration on high-frequency and high-potential currents which he gave before the American Institute of Electrical Engineers in February, 1891, at Columbia College, created as profound a sensation as did his earlier one. Each opened an entirely new realm of scientific investigation and practical discoveries. The discoveries contained in either lecture would have been suficient to stand as the fruit of a lifetime's work and bring lasting fame. Two such events in rapid succession seemed almost unbelievable--yet Tesla seemed to be scarcely well launched on his career, with more important work still to come.

Requests that he give lectures came from learned societies throughout this country and Europe, but he begged to be excused because of the tremendous pressure on his time which his work entailed. Equally insistent were the social demands that were being made upon him. Social groups sought in every way to honor him, and incidentally to shine in his reflected glory. Tesla was not vulnerable to the importunings of the socialites who sought him merely as a scintillating satellite, but the clever "lion hunters" of that day soon discovered his Achilles' heel--an intelligent interest in his accomplishments and a sympathetic ear for his dreams of wonders still to come.

With this technique in successful operation, Tesla was captured and soon completely lionized. He was guest of honor at a continuous round of functions and he met the social obligations involved in them by staging, in return, elaborate dinners at the Waldorf-Astoria followed by demonstration parties at his laboratory on South Fifth Avenue. Tesla never did a halfway job on anything. When he staged a dinner he left nothing to chance in the matter of cuisine, service and decorations. He sought rare fish and fowl, meats of surpassing excellence, and choicest liquors

and exquisite wines of the best vintages. His dinners were the talk of the town and having been a guest at a Tesla dinner was a mark of social distinction, proof of membership in the inner group of the elite within Ward MacAllister's "400." At these dinners Tesla presided as a most meticulous host, or more accurately, as an old-world absolute monarch, for he would sample all food brought to the dining room; and rarely did an event pass without the grandiose host sending back some sauce or wine of unquestioned excellence as unworthy of his guests.

Following each of these meals Tesla would escort his guests to his laboratory below Washington Square; and here his demonstrations were even more spectacular than his dinners. He had a flair for the dramatic; and the strange-looking devices with which his laboratory was furnished provided a grotesque and bizarre background for the fantastic displays of seemingly unearthly forces that with invisible fingers set objects whirling, caused globes and tubes of various shapes to glow resplendently in unfamiliar colors as if a section of a distant sun were suddenly transplanted into the darkened room, and crackling of fire and hissing sheets of flame to issue from monster coils to the accompaniment of sulfurous fumes of ozone produced by the electrical discharges that suggested this magician's chamber was connected directly with the seething vaults of hell. Nor was this illusion dispelled when Tesla would permit hundreds of thousands of volts of electricity to pass through his body and light a lamp or melt a wire which he held.

The amazing feat of harmlessly passing through his body currents of tremendously high voltage and high frequency was one which Tesla evolved by his mental experiments long before he had an opportunity to test them in his laboratory. The low-frequency alternating currents, such as are now used on home-lighting circuits, would, he knew from unpleasant experiences, produce a painful shock if passed through the body. When light waves impinged on the body, however, no such painful sensation was produced. The only difference between the electric currents and light waves, he reasoned, was a matter of frequency, the electric currents oscillating at the rate of 60 per second and the light waves at billions per second.

Somewhere between these two extremes the shock-producing property of electromagnetic vibrations must disappear; and

he surmised the point would be near the lower end of the gap. Damage done to the body by electric shock he divided into two factors, one--the destruction of tissues by the heating effect which increased or diminished as the amperage of the current was raised or lowered; and two--the sensation of acute pain which varied with the number of alternations of the current, each alternation producing a single stimulus which was transmitted by the nerves as a pain.

Nerves, he knew, could respond to stimuli up to a rate of about 700 per second, but were unable to transmit impulses received at a more rapid rate. In this respect they acted very much like the ear, which is unable to hear air vibrations above a frequency of about 15,000 per second, and the eye, which is blind to color vibrations of a frequency higher than that in violet light.

When he constructed his high-frequency alternating-current dynamos, he had frequencies up to 20,000 per second with which to test his theory; and by finger tests across the terminals he was able to demonstrate that the nerves were unable to perceive the individual vibrations at this rapid rate. The amperage, which carried the tissue-destroying power, was still too high in the output of these machines to pass safely through his body, even though the sensation of pain was lacking.

By passing these currents through his newly invented air-core transformers, he could increase their voltage ten-thousand fold and reduce the amperage proportionately. The current density would thereby be reduced below the point at which it would injure tissues. He would then have a current which would not produce sensation and would not harm the tissues. He cautiously tested the theory by passing the currents through two fingers, then his arm, next from hand to hand through his body and finally from his head to his feet. If a spark jumped to or from his body, there was a pin-prick sensation at the point of contact, but this could be eliminated by holding a piece of metal to and from which the spark could jump while the current passed through the tissues without producing any sensation.

The energy content of these currents, which is proportionate to the current multiplied by the voltage, could be very high and produce spectacular effects such as melting metal rods, exploding lead disks, and lighting

incandescent or vacuum-tube lamps after passing painlessly through his body.

The European scientific societies were persistent in their efforts to induce Tesla to accept their invitations to lecture before them, and finally he acceded. He set extravagantly high standards for the contents of his lectures, and their preparation entailed a tremendous amount of labor. All of the material had to be entirely new. He would never repeat an experiment previously presented. Every technical statement had to be tested at least twenty times to insure complete accuracy. His lectures would last two or three hours; and every minute of the time was crowded with new and awe-inspiring demonstrations of his constant stream of discoveries. He used a great array of devices fashioned by himself and built in his own laboratories to illustrate his talks. A Tesla lecture, therefore, was an extremely important event in the scientific world and a most impressive occasion to those who were fortunate enough to be able to attend.

Tesla arranged to give a lecture before the Institution of Electrical Engineers in London on February 3, 1892, and one before the International Society of Engineers in Paris on February nineteenth. His decision to give the European lectures was influenced to some extent by the fact that they would afford him an opportunity to visit his home in Gospic, for recent letters had indicated that his mother's health was failing.

The lecture before the Institution of Electrical Engineers was a great success. English engineering journals, as will be seen, had been niggardly in extending recognition to Tesla for priority in the discovery of the rotating magnetic field, and had belittled the practical value of his polyphase alternating-current system, but in this attitude they were not representative of the great body of engineers, who were most generous in their praise and enthusiasm; and the attitude of the engineers was shared by the English scientists.

When Tesla arrived in London he was entertained at many places by famous men. At the Royal Institution, where the immortal Michael Faraday had carried on his fundamental researches in magnetism and electricity, Sir James Dewar, and a committee of equally famous scientists, sought to prevail upon Tesla to repeat his lecture before that

organization. Tesla could be plain stubborn in sticking to his plans, and in this case was exhibiting his usual firmness. The famous Scottish scientist matched Tesla's stubbornness with an equal persuasive persistence. He escorted Tesla to Faraday's chair, an almost sacred relic to English science, seated him in this throne, and then brought out an almost equally precious heirloom, a portion of a bottle of whiskey, the remainder of Faraday's personal supply, untouched for nearly a quarter of a century. Out of this he poured a generous half glass for Tesla. Sir James won. Tesla relented and gave the lecture the following evening.

Lord Rayleigh, the eminent English physicist, was chairman of the meeting at the Royal Institution, which was attended by the elite of the scientific world and a generous representation of the nobility of the realm. Rayleigh, after witnessing the performance of Tesla's experiments, which were none the less awe inspiring to scientists than to laymen, showered words of praise on the inventor.

Rayleigh declared that Tesla possessed a great gift for the discovery of fundamental scientific principles, and urged that he concentrate his efforts on some one big idea.

Tesla, in his conversation after the meeting, disclaimed ability as a great discoverer; but in this he was merely being modest, for he knew that he was unique among men in his ability to discover fundamental truths. He did, however, give very serious consideration to Rayleigh's suggestion that he concentrate on some one big idea. It is doubtful, however, whether Rayleigh's suggestion was good advice. Tesla's mind had a range that was cosmic in magnitude and adjusted to broad slashing advances through unknown regions. Rayleigh's advice was like suggesting to an explorer who had unique ability for penetrating an unknown continent and opening it to civilization that he settle down and cultivate a homestead, since that would give more definite and specific returns for efforts expended.

Two weeks later Tesla gave his scheduled lecture before the Physical Society in Paris and repeated it before the International Society of Electrical Engineers. This was his second visit to Paris since he had quit his job with the Continental Edison Company in that city eight years before. Immediately after leaving the Westinghouse Company in the

autumn of 1889--at which time, too, he completed his U.S. citizenship requirements--he had made a brief visit to Paris to attend the International Exposition. In the meantime, the fame of his polyphase system had spread to Europe; and to this was added the glory for his spectacular work with the new high-frequency currents. He was given a hero's reception in Paris, as well as in London.

It would be interesting to know what thoughts passed through the minds of the executives of the Continental Edison Company as they observed the tremendous contributions to science and industry by the engineer whose services they had lost through their penny-wise tactics when they were offered in 1883, and could undoubtedly have purchased for a relatively small amount, the polyphase system for which Westinghouse paid Tesla $1,000,000 five years later.

A tesla lecture was an avalanche of new and fascinating electrical knowledge. He completely overwhelmed his listeners with a wealth of spectacular original experiments, and as a result almost every individual contribution lost its identity in the dazzling concentration of the whole galaxy of startling developments.

In the 1892 lectures, entitled "Experiments with Alternating Currents of High Potential and High Frequency," Tesla described many of his discoveries which are only coming into general use today and are being hailed as modern inventions. Among these are the "neon" and other gas-filled lamps, and phosphorescent lamps. Many of the discoveries described are still unutilized, including, as will be seen, the carbon or metallic-button incandescent lamp, requiring but a single wire connection; and still others, which he later discovered, were rich producers of the mysterious X-rays.

The transcript of these lectures runs to 40,000 words. Scores of pieces of apparatus were used and usually several experiments were performed with each. He described "wireless" lamps, glowing glass tubes that required no wire connection for their operation. He described motors which operated on one wire, and "wireless" or "no wire" motors. But perhaps the most important development he described was the sensitive electronic tube--the original of all our modern radio and other electronic tubes--which, he

predicted, was the device that would permit receiving wireless telegraph messages across the Atlantic. Of all these discoveries we shall presently have more to say in detail.

It had been Tesla's intention to make a short visit to his early home in Gospic when his lectures were out of the way, but circumstances forced him to make the trip sooner than he expected. Returning to his hotel after delivering the second Paris lecture, he received word that his mother was gravely ill. He rushed to the railroad station, arriving in time to board a train just about to pull out. He telegraphed ahead for special transportation facilities to shorten his trip, and succeeded in reaching Gospic in time to see his mother alive. He arrived in the afternoon and she died that night.

The great anxiety from which Tesla suffered during his sleepless rush from Paris to Gospic caused a patch of hair on the right side of his head to turn white over night. Within a month its jet black color was restored naturally.

Almost immediately after his mother's death, Tesla contracted an illness which incapacitated him for many weeks. When he recovered, he visited his sister Marica, in Plaski, for two weeks. From there he went to Belgrade, the capital of Serbia, where he arrived in May and was received as a national hero.

During the weeks of enforced physical inactivity imposed on him by his illness, Tesla took stock of himself and became thoroughly dissatisfied with the manner in which he had been conducting his life. No human being could feel anything but a pleasurable reaction in response to the adulation that had been heaped upon him during the past two years. Tesla, however, prided himself upon his wisdom in having so designed his life that he would not become a victim of human frailties, but would function far above the normal human level of physical limitations and intellectual activities. Now Tesla saw, in retrospect, that insofar as he had adhered to his superman plan of life, he had succeeded in achieving his goal of producing the works of a superman at a rate which astounded the world. When, however, he submitted to the first blandishments of the lion hunters after his New York lecture in May, 1891, he observed, social activities had cut into his available time and had interfered with his creative activities. He had let

the "man magnificent" supersede his "superman," and two years of valuable time had been largely lost. In addition, he had spent that totally unproductive year at the Westinghouse plant. At the close of that period, he had vowed he would never again work for anyone. He now vowed that he would put an end to the vacuous social activities into which he had been inveigled.

It was not easy for Tesla to live up to his good resolutions, for his European trip had greatly enhanced his fame and triumphant celebrations were scheduled on his reappearance in New York. Nevertheless, he rejected all invitations. He returned to the Hotel Gerlach, where he lived a solitary existence. With a pent-up reserve of physical energy owing to his long abstinence from his heavy daily routine of work, he plunged with great vigor into his new program which was to open up new and enchanting realms of scientific wonders.

THE first public application of Tesla's polyphase alternating-current system was made at the Chicago World's Fair, the Columbian Exposition, which opened in 1893 to celebrate the four-hundredth anniversary of the discovery of America. This was the first world's fair for which electric lighting was a possibility, and the architects availed themselves of the opportunities it afforded for obtaining spectacular effects in illuminating the grounds and buildings at night, as well as for interior lighting during the day. The Westinghouse Electric Company secured the contract for installing all power and lighting equipment at the Fair, and took full advantage of this opportunity to use the Tesla system and demonstrate its great versatility. It supplied all the current used for lighting and power.

while the Chicago World's Fair was in reality a monument to Tesla, he had, in addition, a personal exhibition in which he demonstrated his most recent inventions. One of his exhibits was a spinning egg, made of metal. The egg was shown lying on top of a small velvet-covered circular platform. When Tesla closed a switch the egg stood on its small end and rotated at a high speed as if by magic. The "magic" phase of this feat appealed to a public which, however, grasped little of the explanation that it

illustrated the principle of the rotating magnetic field produced by the polyphase alternating currents. In other of his exhibits, glass tubes suspended in space or held in his hands lighted up in an equally "magical" fashion.

But his most spectacular feat was to let 1,000,000 volts pass through his body. This was alternating current of very high frequency as well as high voltage. He had discovered means of producing such currents. Eight years had passed since Edison, attacking high-voltage alternating current as deadly, had refused to become interested in Tesla's polyphase system. Now the Tesla system was providing the electricity for the great world's fair and the Edison direct-current system was ignored. The final gesture of victory was for Tesla to answer Edison's charge that alternating current was deadly by passing the highest voltage of it ever produced through his own body for many minutes without the slightest sign of harm. This bit of showmanship endeared Tesla to the public and brought him a tremendous burst of world-wide fame. Unfortunately, however, it obscured his more important work with polyphase currents.

The next great achievement to be attained by his polyphase system was the harnessing of Niagara Falls. (Before this was done, and even before the opening of the Chicago fair, the practicability of his system was demonstrated in Europe; but this had been undertaken without his knowledge. A practical test of the transmission of polyphase alternating current at 30,000 volts was made between a hydroelectric station at Lauffen and the City of Frankfurt, the current being used to furnish electricity at a fair held at the latter city. This installation was built in 1891. The current was used to light incandescent and arc lamps and also to operate a Tesla motor.) In 1886 a charter had been granted for developing power at the Falls. The project made slow progress and was taken over by a New York group which organized the Cataract Construction Company, of which Edward Dean Adams was made president. Mr. Adams' company desired to develop power on the largest scale possible. The total energy supply available in the Falls had been variously estimated from 4,000,000 to 9,000,000 horsepower. Mr. Adams organized the International Niagara Commission for the purpose of ascertaining the best means of harnessing the Falls, and made Lord Kelvin, the famous English scientist, its chairman. A prize of $3,000 was offered for the most practical plan submitted.

Tesla had predicted nearly thirty years before, as a boy, that he would someday harness Niagara Falls. Here was the opportunity. In the meantime, he had made it possible to fulfil his boyhood boast by completing the series of inventions which made it possible to change the hydraulic power of the Falls into electrical energy.

The prize-offer plan adopted by Mr. Adams did not, however, set well with Mr. Westinghouse when he was urged to submit a proposal. He replied, "These people are trying to get one hundred thousand dollars' worth of information for three thousand dollars. When they are ready to talk business we will submit our plans." This adamant attitude of Westinghouse was one handicap for the Tesla alternating-current plan. The second big handicap was the fact that Lord Kelvin had declared himself in favor of the use of direct current.

About twenty plans were submitted in the contest but none of them was accepted by the commission, and no prize was awarded. The big electrical companies, Westinghouse, Edison General Electric and Thomson-Houston, did not submit plans. This took place in 1890.

Original developers of the Falls planned to use locally the mechanical power provided by water wheels; but the only practical plan was, clearly, the generation of electricity by dynamos driven by water wheels, and the distribution of the current throughout the district. There was a good additional market for it at Buffalo, a large industrial city about twenty-two miles distant. There was always the hope, too, that the current could be transmitted to New York City and serve the rich intervening territory. If direct current were used, its transmission twenty-two miles to Buffalo was totally unfeasible. The Tesla alternating-current system, however, made the transmission to Buffalo extremely practicable and the delivery of the current to New York City a possibility.

In due time the Cataract Construction Company decided that the hydroelectric system was the only feasible one, and proposals and bids were asked on a power system consisting of three generating units, each of 5,000 horsepower, from the Westinghouse Electric Company and the General Electric Company. Each one submitted a proposal to install a Tesla polyphase generating system. The General Electric Company,

successor to the Edison General Electric Company, having in the meantime secured a license to use the Tesla patents, proposed to install a three-phase system, and Westinghouse a two-phase system. The first proposal concerned the building of the powerhouse. A second proposal on which bids were asked concerned the transmission line between Niagara Falls and Buffalo and a distribution system in the latter city.

Bids were asked for early in 1893, and in October of that year Mr. Adams announced that the Westinghouse plan for the powerhouse and the General Electric plan for the transmission line were accepted. The latter included a transformation of the two-phase current from the generators into three-phase current to be transmitted to Buffalo. This change indicated the flexibility of the Tesla polyphase system.

Westinghouse completed the powerhouse and in 1895 it stood ready to deliver 15,000 horsepower; the most gigantic piece of electrical engineering conceived or accomplished up to that time. In 1896 General Electric completed the transmission and distribution system, and electrical power extracted from Niagara Falls, without in any way impairing the beauty of the spectacle they presented, was delivered to industries through the Falls and Buffalo areas. So successful was this installation that the Westinghouse Company installed seven additional generating units, bringing the output to 50,000 horsepower. A second equivalent powerhouse, also using alternating current, was later built by the General Electric Company. Today, the powerhouses at Niagara Falls are linked directly with the electric power system in New York City, all using the Tesla system.

Dr. Charles F. Scott, Professor Emeritus of Electrical Engineering at wale University, and former president of the American Institute of Electrical Engineers, who was a Westinghouse engineer when that company was developing the Tesla system, in a memorial review of Tesla's accomplishments, (Published in Electrical Engineering, August 1943, pp. 351-555.) describes the Niagara development and its results:

The simultaneous development of the Niagara project and the Tesla system was a fortuitous coincidence. No adequate method of handling large power was available in 1890; but

while the hydraulic tunnel was under construction, the development of polyphase apparatus justified the oficial decision of May 6, 1893, five years and five days after the issuing of Tesla's patents, to use his system. The Polyphase method brought success to the Niagara project; and reciprocally Niagara brought immediate prestige to the new electric system.

Power was delivered in August 1895 to the first customer, the Pittsburgh Reduction Company (now Aluminum Company of America) for producing aluminum by the Hall process, patented in the eventful year 1886. . . .

In 1896 transmission from Niagara Falls to Buffalo, 22 miles, was inaugurated. Compare this gigantic and universal system capable of uniting many power sources in a superpower system, with the multiplicity of Lilliputian "systems" which previously supplied electrical service. As Mr. Adams aptly explained: "Formerly the various kinds of current required by different kinds of lamps and motors were generated locally; by the Niagara-Tesla system only one kind of current is generated, to be transmitted to places of use and then changed to the desired form."

The Niagara demonstration of current for all purposes from large generators led immediately to similar power systems in New York City--for the elevated and street railways and for the subway; for steam railway electrification; and for the Edison systems, either by operating substations for converting alternating current to direct current or by changing completely to A.C. service.

The culminating year 1896 inaugurated two far reaching developments for the extension of polyphase power, one commercial and one engineering. By exchange of patent rights, the General Electric Company obtained license rights under Tesla patents, later made impregnable by nearly a score of court decisions. Also the Parsons turbine, accompanied by its foremost engineer, was transplanted to America and enabled George Westinghouse to bring to fruition by a new method the ideal of his first patent, a "rotary steam engine." The acme of the reciprocating engine came in the early 1900's; a century's development produced the great engines that drove 5,000 to 7,500 kilowatt alternators for New York's elevated and subway. But the rapidly growing steam turbine of different types soon doomed the engine to obsolescence; single units

with the capacity of a score of the largest engines are now supplying power to the metropolis. Single powerhouses now supply more power than all of the thousands of central stations and isolated plants of 1890.

Prof. Scott concludes: "The evolution of electric power from the discovery of Faraday in 1831 to the initial great installation of the Tesla polyphase system in 1896 is undoubtedly the most tremendous event in all engineering history."

Lord Kelvin, who had originally favored direct current for Niagara, later conceded, but only after the system was in operation, that alternating current had many more advantages for long-distance distribution systems, and declared, "Tesla has contributed more to electrical science than any man up to his time."

There should never have been the slightest shadow of doubt concerning the credit due to Tesla not only for discovering the rotating magnetic field but also for inventing the first practical alternating-current motor, the polyphase system of alternating currents, dynamos for generating them, a variety of motors for converting the currents into power, a system of polyphase transformers for raising and lowering voltages, and economical methods for transmitting electrical power for long distances. Nevertheless, credit for priority has unjustly been given to and taken by others. Tesla succeeded in establishing his claims; but in the meantime, however, damage was done by raising these unfair claims, and to this day the electrical engineering profession, and public service and major electrical industries, have never extended to Tesla the credit to which he is entitled. If they had done so, the name of Tesla would carry at least as much fame as the names Edison and Westinghouse.

Tesla, as we have seen, made his rotating magnetic field invention in 1882, and within two months evolved the complete power system, including all the apparatus which he later patented. In 1883 he described his invention to oficials of the Continental Edison Company. In 1884 he demonstrated his motor to the mayor of Strassburg and others. In this same year he described the invention to Thomas A. Edison. In 1885 he sought to have the promoters of the Tesla Arc Light Company develop his system. In 1887 he secured financial backing and built a series of the

dynamos and motors which were tested by Prof. Anthony of Cornell University. On October 12, 1887, the first patent applications covering his basic inventions were revealed to the Patent Ofice. The patents were granted on various dates in the early months of 1888. On May 16, 1888, he presented a demonstration and description of his basic inventions before the American Institute of Electrical Engineers in New York. So much for the record.

The first complication arose when Prof. Galileo Ferraris, a physicist in the University of Turin, presented a paper on "Rotazioni elettrodynamiche" (Electrodynamic Rotation) before the Turin Academy in March, 1888. This was six years after Tesla made his discovery, five years after he demonstrated his motor and six months after he had applied for patents on his system. Prof. Ferraris had been carrying on researches in the field of optics. The problem that particularly interested him was polarized light. In this period it was considered necessary to build mechanical models to demonstrate all scientific principles. It was not very dificult to devise models to demonstrate the nature of plane-polarized light, but circularly polarized light presented a more dificult problem.

Prof. Ferraris gave some thought to this problem in 1885, but made no progress until 1888 when he turned to alternating currents for a solution. In that period light was erroneously thought of as a continuously undulating wave in the ether. Prof. Ferraris took the continuously alternating current as an analogue of the plane-polarized light wave. For a mechanical analogue of the circularly polarized light wave he visualized a second train of waves 90 degrees out of step with the first, giving a right-angle vector to the component that should manifest itself by rotation. This paralleled the solution at which Tesla had arrived six years earlier.

In arranging a laboratory demonstration Prof. Ferraris used a copper cylinder suspended on a thread to represent the light waves, and caused two magnetic fields to operate on it at right angles to each other. When the currents were turned on, the cylinder rotated, wound up the thread on which it was suspended and raised itself. This was an excellent model of rotary polarized light waves. The model bore no resemblance to a motor, nor did the Turin scientist have any intention that it should be so considered. It was

a laboratory demonstration in optics, using an electrical analogy.

Prof. Ferraris' next experiment mounted the copper cylinder on a shaft and divided each of his two coils into two parts, placing one on either side of the copper cylinder. The device worked up to a speed of 900 revolutions per minute--and beyond this point lost power so rapidly it ceased to operate entirely. He tried iron cylinders but they did not work nearly so well as the copper ones. Prof. Ferraris predicted no future for the device as a power source, but he did predict it would find usefulness as the operating principle for a meter for measuring current.

Prof. Ferraris thus demonstrated that he failed by a wide margin to grasp the principle which Tesla developed. The Italian scientist found that the use of the magnetic iron cylinder interfered with the operations of his device, whereas Tesla, following the correct theory, utilized iron cores for the magnetic field of his motor, used an iron armature, and obtained an efficiency of about 95 per cent in his first motor, which had a rating of about a quarter horsepower. The efficiency of Ferraris' device was less than 25 per cent.

It was Prof. Ferraris' belief that he had performed an important service to science by demonstrating that the rotating magnetic field could not be used on any practical basis for producing mechanical power from alternating current. He never deviated from this conclusion, nor did he ever claim that he had anticipated Tesla's discovery of a practical means for utilizing the rotating field for producing power. Knowing that his process was entirely different from Tesla's, he never advanced a claim to independent discovery of the alternating-current motor. He even conceded that Tesla had arrived at his discovery of the rotating magnetic field entirely independently of him, and that Tesla could not in any way have known of his work before publication.

A description of Prof. Ferraris' experiments, however, was published in The Electrician, in London, May 25, 1888 (page 86). This was accompanied by the statement:

Whether the apparatus devised by Prof. Ferraris will lead to the discovery of an alternating current motor is a question we do not pretend to prophesy, but as the

principle involved may also have other applications, notably in the construction of meters for measuring the supply of electricity . . .

A year before this time Prof. Anthony had already tested Tesla's alternating-current motors in the United States and reported that they attained an order of efficiency equal to that of direct-current motors; and Tesla's U.S. patents had been publicly announced several months previously.

It was obvious that the editors of this London publication were not keeping up to date on developments in the United States.

Tesla responded quickly, informing the editors of their oversight and submitting an article describing his motors and the results obtained with them.

No great enthusiasm was exhibited by the editors of The Electrician. They receded to only the least possible extent from their stand in favor of Ferraris by publishing an editorial note:

Our issue of the 25th of May contained an abstract of a paper by Prof. Galileo Ferraris describing a method of producing a revolving resultant magnetic field by means of a pair of coils with the axes at right angles and traversed by alternating currents, and we drew attention to the possibility that the principle of the apparatus might be applied to the construction of an alternating current motor. The paper by Mr. Nikola Tesla, which appears in our columns this week, contains a description of such a motor, founded on exactly the same principle. (VoI. XX, p. 165, June 15, 1888.)

No attention was drawn to the fact that Ferraris had reached the conclusion that the principle could never be used for making a practical motor, whereas Tesla had produced such a motor.

This attitude toward the American development did not disappear from the London engineering journals. Later the Electrical Review (London: Vol. XXVIII, p. 291, March 6, 1891) published an editorial which opened with the statement:

For several years past, from the days of Prof. Ferraris' investigations, which were followed by those of Tesla and Zipernowski and a host of imitators, we have periodically heard of the question of alternating current motors being solved.

At this time the Westinghouse Company was already commercially exploiting the successful and practical Tesla polyphase system in the United States. Not one word of credit to Tesla appeared in the London engineering press.

A letter of protest dated March 17, 1891, was forwarded by Tesla, and this was published some weeks later (p. 446) by the Review. He said in part:

In all civilized countries patents have been obtained almost without a single reference to anything which would have in the least degree rendered questionable the novelty of the invention. The first published essay--an account of some laboratory experiments by Prof. Ferraris--was published in Italy six or seven months after the date of filing my application for the foundation patents. . . . yet in your issue of March 6, I read: "For several years past, from the days of Prof. Ferraris' investigations, which were followed by those of Tesla and Zipernowski and a host of imitators, we have periodically heard of the question of alternating current motors being solved.

No one can say that I have not been free in acknowledging the merit of Prof. Ferraris, and I hope that my statement of facts will not be misinterpreted. Even if Prof. Ferraris' essay would have anticipated the date of filing of my application, yet, in the opinion of all fair minded men, I would have been entitled to the credit of having been the first to produce a practical motor; for Prof. Ferraris denies in his essay the value of the invention for the transmission of power. . . .

Thus in the most essential features of the system--the generators with two or three currents of differing phase, the three wire system, the closed coil armature, the motors with direct current in the field, etc.,--I would stand alone, even had Prof. Ferraris' essay been published many years ago. . . .

Most of these facts, if not all, are perfectly well known in England; yet according to some papers, one of the

leading English electricians does not hesitate to say that I have worked in the direction indicated by Prof. Ferraris, and in your issue above referred to it seems I am called an imitator.

Now, I ask you where is that well known English fairness. I am a pioneer and I am called an imitator. I am not an imitator. I produce original work or none at all.

This letter was published; but the Electrical Review neither expressed regret for the misstatement nor extended recognition to Tesla.

Charles Proteus Steinmetz, later to achieve fame as the electrical wizard of the General Electric Company, came to the support of Tesla. In a paper presented before the American Institute of Electrical Engineers, he said: "Ferraris built only a little toy, and his magnetic circuits, so far as I know, were completed in air, not in iron, though that hardly makes any difference."(Transactions, A.I.E.E., VoI. VIII, p. 591, 1891.)

Other American engineers likewise rallied to Tesla's support.

An industrial exposition, as already mentioned, was held at Frankfurt, Germany, in 1891. The United States Navy sent Carl Hering, an electrical engineer who had done much writing for technical journals, as observer to report on any developments that would be of interest to the Navy. Hering, unfortunately, had not informed himself of the inventions embodied in the Tesla patents before going abroad.

The outstanding new development at the Frankfurt exposition was the first public application of Tesla's system. The grounds and building were lighted by electricity brought to the city by a long-distance transmission line over which electricity was carried from the hydroelectric station at Lauffen by three-phase alternating current carried at 30,000 volts. There was exhibited a two-horsepower motor operated by the three-phase current.

Hering recognized the significance of the new development, and sent back enthusiastic reports describing it as of German origin. In his article in the Electrical World

(N.Y.), he waxed enthusiastic about the work of Dolivo Dobrowolsky in designing the three-phase motor and its associated system, hailing it as an outstanding scientific discovery and of tremendous commercial importance. The impression was given that all other inventors had missed the main point, and that Dobrowolsky had achieved the grand broad accomplishment that would set the pace for future power developments. Nor was Hering the only one to whom this impression was communicated.

Ludwig Gutman, an American electrical engineer, a delegate to the Frankfurt Electrical Congress, in a paper on "The Inventor of the Rotary field System," delivered before that body, slammed back at Dobrowolsky. He stated:

As we have enjoyed in America several years' experience with this system represented by the Tesla motors I must oppose the assertion lately made by Herr von Dobrowolsky at a meeting of the Electrotechnische Zesellschaft held here in Frankfurt. The gentleman said: "I believe I am able to assert that the motor problem for large and small works has been by this completely solved." This assertion goes most likely too far. The problem was already solved, theoretically and electrically, in 1889. (Electrical World, N.Y.: Oct. 17, 1891)

Dobrowolsky, in a paper published in the Electrotechnische Zeitschrift (p. 149-150; 1891), reduced his claim to that of having produced the first practical alternating-current motor; and he asserted that in the Tesla two-phase motor there were field pulsations amounting to 40 per cent, while in his three-phase motor, in operation at the Frankfurt exposition, these were greatly reduced.

Even this reduced claim of Dobrowolsky's was quickly smashed. It drew fire from an American and an English source, and also from the chief engineer of the project of which his motor was a part.

Dr. Michael I. Pupin, of the Department of Engineering, Columbia University, analyzing Dobrowolsky's claim, (Ibid., Dec. 26, 1891) demonstrated that he had failed to comprehend the basic principles of the Tesla system, and that the three-phase system which he claimed as his own was included in Tesla's inventions.

C. E. L. Brown, the engineer in charge of the pioneering Lauffen-Frankfurt 30,000-volt transmission system and its three-phase generating system, including the Dobrowolsky motor, settled definitely and completely the question of credit for the whole system. In a letter published in the Electrical World (Nov. 7, 1891), he concluded with the statement: "The three phase current as applied at Frankfurt is due to the labors of Mr. Tesla and will be found clearly specified in his patents."

Mr. Brown wrote letters to other technical publications to this same effect, and in them criticized Mr. Hering for failing to give Tesla his due credit, and for diverting it to Dobrowolsky.

These criticisms finally brought a response from Mr. Hering. This appeared in the Electrical World, Feb. 6, 1892:

As Mr. C. E. L. Brown, in communications to the Electrical World and other journals, seems determined to insist that I have neglected the work of Mr. Tesla on rotary current I wish to state there is no one more willing than myself to give Mr. Tesla due credit for his work, and I have always considered him to be an original inventor of the rotary field system and first to reduce it to practice, and I believe I so stated in my articles. If I have at any time failed to give him credit for the extent to which he developed it, it has been because Mr. Tesla has been too modest (or perhaps prudent) to let the world know what he has accomplished. When the articles which have caused this discussion were being written Mr. Tesla's patents were not accessible to me. Just where Mr. Dobrowolsky's improvements begin I have not been able to ascertain. . . .

Dobrowolsky, though he may have been an independent inventor, admits Tesla's work is prior to his . . . The modesty of both of these gentlemen would, I feel sure, lead to a clear understanding. Regarding the subject of priority it may be of interest here to say that in a conversation with Prof. Ferraris last summer that gentleman told me with very becoming modesty that, although he had experimented with the rotary field several years before Tesla's work was published he did not think it was possible that Tesla could have known of his work and he therefore believed Tesla invented it entirely independently. He also stated that Tesla developed it much further than he (Ferraris) did.

Thus the scientists and engineers in the United States, Germany and Italy gave Tesla clear and unquestioned credit for being the sole inventor of the magnificent polyphase electrical system in all of its details. French and British journals then fell in line.

Thus, by 1892, there was universal acclaim for Tesla as the unquestioned inventor of the alternating-current motor and the polyphase system in engineering circles. There was none, therefore, to dispute his claim or to seek to rob him of credit when his fame reached the public through the operation of his system at the World's Fair in Chicago in 1893, and later when his system made possible the harnessing of Niagara Falls.

In due time, however, there came many who claimed to have made improvements on Tesla's inventions; and widespread efforts were made to exploit these "improvements." The Westinghouse Company, now owners of the Tesla patents, undertook to defend the patents and to prosecute infringers. As a result about twenty suits were carried to the courts, and, in every one of them, decisions gave a decisive victory to Tesla.

A sample of the sweeping decisions that were handed down is that of Judge Townsend in the United States Circuit Court of Connecticut in September, 1900, when, passing judgment on the first group of basic patents, he said in part:

It remained to the genius of Tesla to capture the unruly, unrestrained and hitherto opposing elements in the field of nature and art and to harness them to draw the machines of man. It was he who first showed how to transform the toy of Arago into an engine of power; the "laboratory experiment" of Bailey into a practically successful motor; the indicator into a driver; he first conceived the idea that the very impediments of reversal in direction, the contra-indications of alternations might be transformed into power-producing rotations, a whirling field of force.

what others looked upon as only invincible barriers, impassable currents and contradictory forces he seized, and by harmonizing their directions utilized in practical motors in distant cities the power of Niagara.

The resentments and antagonisms engendered by the unvarying series of successful decisions caused individuals who were adversely affected to vent their antagonisms on Tesla although he had not in ten years held any personal interests in the patents.

The situation that developed is well described by B. A. Behrend, later vice-president of the American Institute of Electrical Engineers:

It is a peculiar trait of ignorant men to go always from one extreme to another, and those who were once the blind admirers of Mr. Tesla, exalting him to an extent which can be likened only to the infatuated praise bestowed on victims of popular admiration, are now eagerly engaged in his derision. There is something deeply melancholy in the prospect, and I can never think of Nikola Tesla without warming up to my subject and condemning the injustice and ingratitude which he has received alike at the hands of the public and of the engineering profession. (Western Electrician, Sept., 1907)

With the scientific and engineering worlds, and the courts, extending to him a clear title to the honor of being the great pioneer discoverer and inventor of the principles and machines that created the modern electrical system, Tesla stands without a rival as the genius who gave the world the electrical power age that made our mass-production industrial system possible. The name Tesla should, therefore, in all right and justice, be the most famous name in the engineering world today.

RETURNING to his laboratory in March, 1893, after his European and American lectures, Tesla banished all social activities from his life program, and, bursting with energy, pitched headlong into experimental work in connection with his wireless system. He made repeated experiments in working out the refinement of his principle of tuning circuits to resonance with each other. He built more than one hundred coils covering a wide range of electrical tuning characteristics. He also built numerous oscillators for producing high-frequency currents, and condensers and inductances for tuning both sending and receiving coils to any desired frequency or wavelength.

He demonstrated that he could cause any one of hundreds of coils to respond selectively and powerfully to its particular wavelength emitted by an oscillator while all others remained inert; but he discovered that tuned electrical coils have, to a further extent, the same properties as tuned musical string, in that they vibrate not only to the fundamental note but also to a wide range of upper, and particularly lower, harmonics. This characteristic could be usefully employed in connection with the design of sending- and receiving-station antennas, but it militated against the sharp, exclusive response tuning of coils. At close range, and with the powerful currents Tesla used in his laboratory, the harmonics were a handicap--when greater distance separated sending and receiving coils, this trouble became a minor one.

It became obvious to Tesla that it was going to be dificult to arrange an early demonstration of his worldwide system of intelligence and of power, so he planned a compromise system in which he would use a smaller central transmitter and smaller relay stations at certain distances.

In an interview with Arthur Brisbane, the famous editor, Tesla announced in The world of July 22, 1894, the certainty of his plans. He said:

you would think me a dreamer and very far gone if I should tell you what I really hope for. But I can tell you that I look forward with absolute confidence to sending messages through the earth without any wires. I have also great hopes of transmitting electric force in the same way without waste. Concerning the transmission of messages through the earth I have no hesitation in predicting success. I must first ascertain exactly how many vibrations to the second are caused by disturbing the mass of electricity which the earth contains. My machine for transmitting must vibrate as often to put itself in accord with the electricity in the earth.

During the following winter he designed and built his transmitting station and a receiving station for this purpose. It worked well within the close range of the laboratory and between points in the city. Like the artist who is never willing to declare a picture finished but must continue to apply an unending series of slight improvements, Tesla continued to add refinements so that he would be assured of a perfect test in the spring, when he

planned to take his receiving set up the Hudson River on a small boat to test its response at extended distances.

with Tesla, as with Caesar, though, came tragedy on the Ides of March. For Tesla it was the unlucky 13th of March, 1895, when fire broke out during the night in the lower part of the building in which his laboratory was located and swept through the entire structure. The two floors on which his equipment was located dropped to the basement, their entire contents destroyed. Not a single article was saved. The major portion of Tesla's fortune was invested in the apparatus in that building. He carried no insurance on it. The loss was total.

The monetary loss was the least important factor in the shock which Tesla sustained. The apparatus and the countless experiments in scores of subjects with which they were associated were part of Tesla's self. His work of a lifetime was swept away. All of his records, papers, mementos, his famous world's Fair exhibit were gone. His laboratory, in which he had demonstrated his wonders to the elite and intelligentsia of New York, to the most famous men and women of the country and the world, was no more. And this tragedy had come just when he was ready to make his first distance demonstration of his wireless system.

Tesla was in a tough spot financially. The laboratory was the property of the Tesla Electric Company, owned by Tesla and A. K. Brown who had, with an associate, put up the funds to finance Tesla's demonstration of his polyphase alternating-current system prior to its sale to Westinghouse for $1,000,000. Some of that money was divided as cash among the associates, as stated; and the remainder had gone into the laboratory for further developments. The resources of the company were now wiped out and Tesla's individual resources were almost at the vanishing point. He was receiving some patent royalties from Germany on his polyphase motors and dynamos. This income would be adequate to take care of his living expenses but not suficient to enable him to maintain an experimental laboratory.

Mr. Adams, active head of the Morgan group that had developed the hydroelectric station at Niagara Falls, using Tesla's polyphase system, now came to the inventor's rescue. He proposed and arranged for the formation of a new company which would finance the continuation of Tesla's experiments, and he offered to subscribe one hundred

thousand dollars of the proposed half-million dollars of capital stock of the company.

with this support Tesla proceeded to set up a new laboratory. He secured quarters at 46 East Houston Street, and started operations there in July, 1895, four months after his South Fifth Avenue laboratory had been destroyed.

Adams paid forty thousand dollars as the first installment of his subscription. He took an active personal interest in Tesla's work, and spent a great deal of time in the laboratory. Knowing from the successful operation of the Niagara Falls plant that Tesla, technically, was extremely practical, Adams was deeply impressed by the plans for wireless transmission of intelligence and of power. He declared he was willing to go still further than his original plan of financial support, and he proposed that the plan include the taking in of his son as an active partner in Tesla's work.

Such an arrangement would amount to an alliance for Tesla with the powerful Morgan financial group. It was the support of J. P. Morgan that gave financial guidance to the formation of the General Electric Company and made possible the building of the fiaterside Station, the first big Edison powerhouse in New York, and it was a Morgan group that, by making possible the development of Niagara, had given the Tesla system a tremendous boost. The prestige that would come from a Morgan association would probably be even more potent than the actual monetary aid involved. with this alliance Tesla's financial future was assured. There would come to his aid, through it, the support of the world's greatest organizational genius and practical promotion powers. The tragedy of the fire that brought about this situation could yet prove a great blessing.

Tesla made his decision. what influenced him to reach the determination that guided him, no one ever learned. He rejected Mr. Adams' offer. From a practical point of view there is no way of explaining his action. But no one could ever successfully demonstrate that Tesla was practical in a commercial and financial sense.

with the forty thousand dollars that Adams subscribed, Tesla was able to keep actively engaged in research for about three years. He probably could have secured subscriptions of many times that amount if he had been

willing to put forth even a slight effort in that direction, but he was interested mainly in getting his experiments well under way rather than worrying about future financial needs. He had full faith that the future would bring him many millions of dollars as a token of the many billions of value he would give it through his inventions.

It took Tesla about a year to get his laboratory equipped and to build an array of experimental apparatus. Almost nothing that he used could be purchased in the market; everything had to be specially made by his workmen under his direction. In the spring of 1897 he was ready to make, on his wireless transmitter and receiver, the distance tests which had been interrupted by the fire two years before.

The success of these tests were announced by Tesla in an interview with a representative of the Electrical Review which was published in the issue of July 9, 1897, of that journal. It stated:

Nearly every telegraphic inventor has for years dreamed in his waking hours of the possibility of communicating without wires. From time to time there has appeared in the technical journals a reference to the experiments showing the almost universal belief among electricians that, some day, wires will be done away with. Experiments have been made attempting to prove the possibilities, but it has remained for Mr. Nikola Tesla to advance a theory, and experimentally prove it, that wireless communication is a possibility and by no means a distant possibility. Indeed, after six years of careful and conscientious work, Mr. Tesla has arrived at a stage where some insight into the future is possible.

A representative of the Electrical Review receives the assurance personally from Mr. Tesla who, by the way, is nothing if not conservative, that electrical communication without wires is an accomplished fact and that the method employed and the principles involved have nothing in them to prevent messages being transmitted and intelligibly received between distant points. Already he has constructed both a transmitting apparatus and an electrical receiver which at distant points is sensitive to the signals of the transmitter, regardless of earth currents or points of the

compass. And this has been done with a surprisingly small expenditure of energy.

Naturally, Mr. Tesla is averse to explaining all details of his invention, but allows it to be understood that he avails himself of what, for the present, may be termed the electrostatic equilibrium; that if this be disturbed at any point on the earth the disturbance can with proper apparatus be distinguished at a distant point and thus the means of signalling and reading signals becomes practicable once the concrete instruments are available. Mr. Tesla announced his belief in the possibilities, but he did so after having satisfied himself by actual test of apparatus designed by him. Much work has yet to be done, and he has since then given close attention and study to the problem.

Details are not yet available, for obvious reasons, and we now merely chronicle Mr. Tesla's statement that he has really accomplished wireless communication over reasonably long distances with small expenditure of energy and has only to perfect apparatus to go to any extent. Morse's 40 mile experiment in the old days was on a far less certain basis than the wireless possibilities of today.

Tesla's work with high frequency and high potential currents has been notable. As long ago as 1891 he foretold the present results, both as to vacuum tube lighting and intercommunication without wires. The former has in his hands assumed a condition capable of a public demonstration of the phenomena of the electrostatic molecular forces. Numberless experiments were carried out, and from what then was a startling frequency of 10,000 per second Mr. Tesla has advanced to what now is a moderate rate at 2,000,000 oscillations per second

This announcement recorded the birth of modern radio--radio as it is in use today--born on a boat traveling up the Hudson River, carrying the receiving set twenty-five miles from the Houston Street laboratory, a distance which was a small fraction of the range of the set but enough to demonstrate its capabilities. Such an accomplishment was worthy of a flamboyant smash announcement instead of Tesla's very modest statement and the even more conservative manner in which the Electrical Review treated the news. Tesla had to protect not only his patent rights, which would be jeopardized by premature disclosure, but also had to be on guard against invention invaders and

patent pirates, with whom he had previously had unpleasant experiences. The Electrical Review, naturally enough, was fearful of the consequences of "sticking its neck out" by too enthusiastic a reception before full details were available.

The fundamental patents on Tesla's system were issued on September 2, 1897, just two months after his announcement. They are numbered 645,576 and 649,621. In these patents he describes all the fundamental features of the radio broadcasting and receiving circuits in use today. Once patent protection was secured, Tesla did not long delay in letting the public in on his discoveries. His presentation took the form of a spectacular demonstration at Madison Square Garden.

wireless transmission of intelligence is a modern satisfaction of one of the oldest cravings of man, who has always sought the annihilation of distance by communication through space without material linkage over the intervening expanse. Early experimenters with the telephone, particularly, were enthusiastic seekers of a method of wireless electrical communication that would convey the voice through space in the manner in which the air conducted sound. David Edward Hughes had noted, in 1879, that when an electric spark was produced anywhere in his house he heard a noise in his telephone receiver. He traced the effect to the action of the carbon granules in contact with a metal disk in his telephone transmitter which acted as a detector of the space waves by sticking together slightly, reducing the resistance of the mass, and producing a click in the receiver.

Prof. A. E. Dolbear, of Tufts College, amplified this observation and set up, in 1882, a demonstration set using the principle but eliminating the telephone set. He used a spark coil for creating waves and a mass of carbon granules for detecting them. This is exactly the "wireless" system which Marconi "discovered" fourteen years later.

Edison, engaged by the Western Union Telegraph Company to break the monopoly which Bell held by his invention of the telephone, had succeeded, in 1885, in sending a message from a moving train by "wireless." A wire strung on the train paralleling a telegraph wire strung on poles along the track made it possible to bridge the intervening few feet by an inductive effect--the same effect which causes

annoyance by creating "cross talk," or a mixing of conversations over two telephone circuits located close to each other. fi. M. Preece, in England, made a similar experiment about the same time. The extremely short distances over which such systems worked prevented them from having any practical usefulness.

An entirely different type of wireless communication had been developed by Alexander Graham Bell in 1880 and 1881. This was given the name radiophone, but Bell insisted on calling it the photophone. The photophone transmitted the voice over a beam of light. The transmitter consisted of a very thin glass or mica mirror, which could be vibrated by the voice. This reflected a beam of light, usually sunlight, to a distant receiving device. The simple receiver consisted of a chemist's test tube, into which a selected material was placed. The top of the tube was closed by a cork through which two small rubber tubes were inserted, the other ends being placed in the ears. A very great variety of materials could be placed in the test tube as detectors. when the beam of light, vibrated by the voice, impinged on the material in the tube, an absorption of heat took place which set the air in the tube in vibration, thus reproducing the voice that was carried by the light beam. Bell also used selenium as a detector. It responded to the visible rays and produced an electrical effect. The experiments, obviously, were of little practical value as the basis for a system of wireless communication.

Michael Faraday, in London, had described in 1845 his theory of the relationship between light and the electromagnetic lines of force; and in 1862 James Clerk Maxwell published an analysis of Faraday's work which gave a mathematical basis for the theory that light waves were electromagnetic in nature, and that it was possible for such waves to exist very much shorter and very much longer than the known wavelength of visible light. This was a challenge to scientists to prove the existence of such waves.

Prof. Heinrich Hertz, at Bonn, Germany, from 1886 to 1888, undertook the search for the waves longer than light or heat. He produced them by the spark discharge of an induction coil and recaptured them from space, at short distances, in the form of a tiny spark that jumped the gap in a slotted ring of wire. Sir Oliver Lodge, in England,

was simultaneously seeking to measure equally small electrical waves in wire circuits.

This, then, had been the situation in the scientific world when Tesla began his work in 1889. The plan for wireless communication which he presented in 1892 and 1893, as will be described in a moment, shows how his magnificent concept and tremendously advanced knowledge towered mountain high over all contemporaries.

when Tesla left the Westinghouse plant in the fall of 1889, he had immediately turned to the next phase of his development of the alternating-current Weld--a new system of distributing energy by means of high-frequency alternating currents which would be a far more magnificent discovery than his polyphase system. within the next two years he had explored the principles by which energy could be distributed broadcast without the use of wires, and these he had demonstrated with powerful coils in his laboratory. The distribution of intelligence, later called "wireless," was but a single phase of the larger project.

Tesla described, in 1892, the first electronic tube designed for use as a detector in a radio system, and demonstrated its characteristics in his lectures in London and Paris in February and March of that year. (The tube, however, had been developed in 1890.) He described in February and March of the following year, 1893, his system of radio broadcasting, presenting its principles in detail, in lectures before the Franklin Institute in Philadelphia and at the convention of the National Electric Light Association held in St. Louis.

Tesla's electronic tube, his 1890 invention, was the ancestor of the detecting and amplifying tubes in use today. His demonstration of this tube is a matter of record in the archives of four societies before which he exhibited it in February and March of 1892--the Institute of Electrical Engineers and the Royal Society of London and the Physical Society of France and the International Society of Electrical Engineers in Paris. He stated in these lectures:

If there is any motion which is measurable going on in space, such a brush ought to reveal it. It is, so to speak, a beam of light, frictionless, devoid of inertia.

I think it may find practical applications in telegraphy. with such a brush it would be possible to send dispatches across the Atlantic, for instance, with any speed, since its sensitiveness may be so great the slightest changes will affect it.

The "brush" in Tesla's tube was a beam of electrons. The electron, however, had not yet been discovered. Nevertheless, Tesla gave an accurate description of its nature, demonstrating the remarkable accuracy of his interpretation of strange phenomena. So sensitive was this electronic beam that a small horseshoe magnet an inch wide at a distance of six feet caused movement of the electron beam in either direction, depending on the position in which the magnet was held.

If anyone approached the tube from a distance of many feet the beam, or brush, would swing to the opposite side of the tube. If one walked around the tube even at a distance of ten feet, the beam would move likewise, keeping its center end always pointed at the moving object. The slightest movement of a finger, or even the tensing of muscle, would bring a swinging response from the beam.

In the same 1892 lecture in which he described this first electronic tube, Tesla demonstrated lamps which were lighted without wire connections (wireless light) and also a motor which operated without wire connections to the energizing coils (wireless power); and he had again presented these developments at his exhibition at the Chicago Columbian Exposition early in 1893.

It was with all this experience behind him, giving him full assurance that his system was entirely practical and operative, that Tesla presented at the Franklin Institute and at the convention of the National Electric Light Association in February and March, 1893, a very cautious and conservative statement concerning his plan. Even at these 1893 lectures, Tesla could have staged a demonstration of wireless transmission of intelligence by placing one of his resonant coils, surmounted by one of his electronic "brush" tubes, or one of his low-pressure air lamps, in the lecture hall and causing it to respond to signals sent out by an energized coil of similar wavelength but located at a considerable distance from the building. The experiment was a standard procedure in his laboratory.

This, however, would be a purely local effect, whereas his radio transmission system was one planned on a world-wide basis requiring much more powerful apparatus than he had thus far built. To pass off a purely local effect as a demonstration of a world-wide system, even though the observed results would have been identical, would have been a case of intellectual dishonesty to which Tesla would not stoop; yet this demonstration of wireless would have been more spectacular and powerful than any staged by any other inventor in more than a half-dozen years following.

Describing his world-wide system at the 1893 National Electric Light Association meeting, he said:

In connection with resonance effects and the problems of transmission of energy over a single conductor, which was previously considered, I would say a few words on a subject which constantly fills my thoughts, and which concerns the welfare of all. I mean the transmission of intelligible signals, or, perhaps, even power, to any distance without the use of wires. I am becoming more convinced of the practicability of the scheme; and though I know full well that the great majority of scientific men will not believe that such results can be practically and immediately realized, yet I think that all consider the developments in recent years by a number of workers to have been such as to encourage thought and experiment in this direction. My conviction has grown so strong that I no longer look upon the plan of energy or intelligence transmission as a mere theoretical possibility, but as a serious problem in electrical engineering, which must be carried out some day.

The idea of transmitting intelligence without wires is the natural outcome of the most recent results of electrical investigations. Some enthusiasts have expressed their belief that telephony to any distance by induction through air is possible. I cannot stretch my imagination so far, but I do firmly believe that it is practical to disturb, by means of powerful machines, the electrostatic conditions of the earth, and thus transmit intelligible signals, and, perhaps, power. In fact, what is there against carrying out such a scheme?

We now know that electrical vibrations may be transmitted through a single conductor. why then not try to avail ourselves of the earth for this purpose? We need not be frightened by the idea of distance. To the weary wanderer

counting the mileposts, the earth may appear very large; but to the happiest of all men, the astronomer, who gazes at the heavens, and by their standards judges the magnitude of our globe, it appears very small. And so I think it must seem to the electrician; for when he considers the speed with which an electrical disturbance is propagated through the earth, all his ideas of distance must completely vanish.

A point of great importance would be first to know what is the capacity of the earth, and what charge does it contain if electrified. Though we have no positive evidence of a charged body existing in space without other oppositely electrified bodies being near, there is a fair probability that the earth is such a body, for by whatever process it was separated--and this is the accepted view of its origin--it must have retained a charge, as occurs in all processes of mechanical separation. . . .

If we can ever ascertain at what period the earth's charge, when disturbed, oscillates, with respect to an oppositely charged system or known circuit, we shall know a fact possibly of the greatest importance to the welfare of the human race. I propose to seek for the period by means of an electrical oscillator or a source of alternating currents.

One of the terminals of this source would be connected to the earth, as, for instance, to the city water mains, the other to an insulated body of large surface. It is possible that the outer conducting air strata or free space contains an opposite charge, and that, together with the earth, they form a condenser of large capacity. In such case the period of vibration may be very low and an alternating dynamo machine might serve for the purpose of the experiment. I would then transform the current to a potential as high as it would be found possible, and connect the ends of the high tension secondary to the ground and to the insulated body. By varying the frequency of the currents and carefully observing the potential of the insulated body, and watching for the disturbance at various neighboring points of the earth's surface, resonance might be detected.

Should, as the majority of scientific men in all probability believe, the period be extremely small, then a dynamo machine would not do, and a proper electrical oscillator would have to be produced, and perhaps it might not be possible to obtain such rapid vibrations. But

whether this be possible or not, and whether the earth contains a charge or not, and whatever may be its period of vibration, it is certainly possible--for of this we have daily evidence--to produce some electrical disturbance suficiently powerful to be perceptible by suitable instruments at any point on the earth's surface. . . .

Theoretically, then, it could not require a great amount of energy to produce a disturbance perceptible at a great distance, or even all over the surface of the globe. Now, it is quite certain that at any point within a certain radius of the sources, a properly adjusted self induction and capacity device can be set in action by resonance. But not only this can be done, but another source, s 1, similar to s, or any number of such sources, can be set to work in synchronism with the latter, and the vibration thus intensified and spread over a large area, or a flow of electricity produced to or from source s 1, if the same or of opposite phase to the source s.

I think that, beyond doubt, it is possible to operate electrical devices in a city, through the ground or pipe system, by resonance from an electrical oscillator located at a central point. But the practical solution of this problem would be of incomparably smaller benefit to man than the realization of the scheme of transmitting intelligence, or, perhaps, power, to any distance through the earth or environing medium. If this is at all possible, distance does not mean anything. Proper apparatus must first be produced, by means of which the problem can be attacked, and I have devoted much thought to this subject. I am firmly convinced it can be done, and I hope we shall live to see it done.

The lecture before the Franklin Institute contained a similar statement. An additional paragraph from it can be quoted:

If by means of powerful machinery, rapid variations of the earth's potential were produced, a grounded wire reaching up to some height would be traversed by a current which could be increased by connecting the free end of the wire to a body of some size. . . . The experiment, which would be of great scientific interest, would probably best succeed on a ship at sea. In this manner, even if it were not possible to operate machinery, intelligence might be transmitted quite certainly.

Tesla thus presented in these lectures the principles which he had learned in his laboratory experiments, during the previous three years, were necessary for successful wireless communication.

Several fundamental requirements were presented which will be understood by any non-technical person who has had even slight experience with radio receiving sets: 1. An antenna, or &aerial wire; 2. A ground connection; 3. An &aerial-ground circuit containing inductance and capacity; 4. Adjustable inductance and capacity (for tuning); 5. Sending and receiving sets tuned to resonance with each other; and 6. Electronic tube detectors. He had still earlier invented a loud speaker.

These embody the fundamental principles of radio, and are used in every sending and receiving set today.

Radio as it exists today is, therefore, the product of the genius of Nikola Tesla. He is the original inventor of the system as a whole and of all the principal electrical components. The man who, next to Tesla, is entitled to the greatest amount of credit is Sir Oliver Lodge, the great English scientist. Even Lodge, however, failed to grasp the fundamental picture that Tesla presented.

Lodge, early in 1894, had put a Hertz spark gap in a copper cylinder open at one end; and in this way he produced a beam of ultra-short-wave oscillations which could be transmitted in any direction. He did the same for the receiving set. Since the incoming waves could be received from only one direction, this receiving set was able to locate the direction from which the transmitted waves came. with this set he completely anticipated Marconi by two years. In the summer of that year, in a demonstration before the British Association for the Advancement of Science at Oxford, he sent Morse signals, with an improved set, between two buildings separated by several hundred feet.

It is little wonder, then, that Marconi, who started his studies of wireless in 1895, created no stir in the scientific circles in England when he came from Italy to London in 1896 with a wireless set that in every essential feature was the same as that demonstrated by Lodge in 1894. He used a parabolic reflector, so his set was little more

than an electrical searchlight. He did, however, bring an alternative feature to replace the parabolic beam reflector. This was a ground connection and antenna, or &aerial wire, for both sending and receiving set. This was exactly what Tesla had described in his plan published three years before.

when Hertz made his experiments to demonstrate the identical nature of light and longer electromagnetic waves, he intentionally sought to use the shortest waves it was practicable to produce. They were measured in inches--much less than a yard long. They were entirely satisfactory for his experiment. when the wireless experimenters copied his methods they took over the short-wave plan without ever asking a question as to what wavelength should be used for wireless communication; the thought seems not to have dawned on them that there were other wavelengths that could be produced and used--all except Tesla.

Tesla took the trouble, with the spirit of a real scientist to repeat exactly the experiments of Hertz; and he published his results, stating that he found a number of important differences and calling attention to the inadequacies of Hertz's experimental methods.

Having experimented with a wide gamut of wavelengths of high-frequency currents and studied the properties of each section of the spectrum, he knew that the short wavelengths were totally unsuitable for communication purposes. He knew that the useful wavelengths ranged from 100 meters to many thousands of meters. He knew that the combination of induction coil and Hertz ball-type spark-gap oscillator could never have any practical usefulness in producing the kind of electrical pulsations required. Even with the highly efficient apparatus available today, scientists have been unable to use in communication (except for special purposes) the ultra-short waves which Tesla in his wisdom condemned and Marconi, owing to his inexperience, tried to use.

The history of the succeeding years in wireless is the story of the failure of the short waves of Lodge and Marconi and their followers, and the shifting over to the longer waves described by Tesla; and the dropping of their crash method of signaling and its replacement by the refined and highly efficient method of tuning to each other the sending and receiving stations by the methods

discovered by Tesla; and adoption of Tesla's continuous waves.

In addition, these groping workers saw in wireless only a point-to-point or station-to-station method of signaling. None of them foresaw the broadcasting system which Tesla described in 1893. The system invented and discovered by Tesla is the one in use today; but who ever heard anyone giving Tesla the slightest credit?

NINE

TESLA was prolific in opening up vast new empires of knowledge. He showered his discoveries on the world at such a rapid rate and in such a nonchalant manner that he seems to have benumbed the minds of the scientists of his age. He was too busy to spend time developing the technical or commercial applications of each new discovery--there were too many other new and important revelations within his vision that must be brought to light. Discoveries were not happenstance events to him. He visualized them far in advance of their unfolding in the laboratory. He had a definite program of pioneering research in virgin fields of investigation; and when this was accomplished he would, he felt, have a long lifetime still ahead of him in which he could return to the practical utilization of those already revealed.

Meanwhile, he had found a whole new world of interesting effects in the discharges produced by his coils when energized with the currents of extremely high frequency. He built larger and larger coils and experimented with a variety of shapes as constructions. From the common cylindrical type of coil he developed the cone-shaped coil, and this development he carried still further by designing the flat helix, or pancake-shaped coil.

The extremely high-frequency currents furnished a mathematical paradise in which Tesla could develop his equations to his heart's content. Through his mathematical abilities and his strange power of visualization he could frequently make, very quickly, whole series of discoveries that it took a long time to catch up with in actual laboratory constructions. This was true of the phenomena of resonance, or tuned circuits.

Because of their relatively short wavelength, it was comparatively easy to build condensers for tuning the circuits. when a circuit is tuned the electric current that flows in it oscillates rhythmically, just as does a musical string which, when struck or plucked, vibrates and builds up loops of even lengths with motionless points between them. There may be only one of these loops, or there can be many.

Tesla did not invent the idea of electrical resonance. It was inherent in the mathematical description of the condenser discharge as developed by Lord Kelvin, and in the physical nature of alternating currents; but Tesla changed it from a buried mathematical equation to sparking physical reality. It is the analogy of acoustical resonance which is a natural property of matter. However, there were no practical circuits in which resonance could manifest itself until Tesla developed alternating currents, particularly the high-frequency currents. He put the master's touch to the research in this field by developing the principle of resonance in individual circuits through adjustment of capacity and inductance; the amplification of effects by inductive coupling of two tuned circuits, and the peculiar manifestations of resonance in a circuit tuned to a quarter of the wavelength of the energizing current. This latter development was a stroke of pure genius.

In the vibrating string, two loops measure a complete wavelength and one loop measures half a wavelength, since one of the loops is up when the other is down. Between the two loops is a nodal point which does not move. From the nodal point to the top of a loop is a quarter wavelength. Taking the quarter wavelength as a unit, one end is motionless and the other end swings through the greatest amplitude of vibration.

By tuning his coils to quarter wavelengths, one end of the coil, Tesla found, would be entirely inactive while the other end would swing through tremendous electrical activity. Here was a unique situation, one end of a small coil inert and the other end spouting a flood of sparks of hundreds of thousands or even millions of volts. In a physical analogy it seemed like the Niagara River reaching the edge of the precipice--and then its waters shooting mountain high in a gigantic fountain instead of falling into the chasm.

The quarter-wavelength coil is the electrical counterpart of the vibrating tine of the tuning fork, the ordinary clock pendulum, or the vibrating reed. Once accomplished, it was a simple thing--but its discovery was a work of genius. It was a development that could have come with certainty to a master mind working on broad principles, as Tesla was doing all his life, and only by the most improbable chance to those who without illumination were tinkering with gadgets and hoping to stumble on something out of which they could make a fortune.

A high-voltage coil with one dead end greatly simplified many problems. One of Tesla's big problems had been the finding of means to insulate the high-voltage secondary coil of transformers from the low-voltage primary which energized it. Tesla's discovery eliminated the voltage entirely from one end of the secondary so it could be connected directly to the primary or to the ground, while the other end continued to spout its lightning. It was for utilizing this situation that he developed the conical and pancake-shaped coils.

Tesla's laboratory was filled with a variety of coils. He discovered early in his researches that while operating a coil of a given wavelength, other coils in the laboratory, tuned either to this wavelength or one of its harmonics, would respond sympathetically by spouting a crown of sparks although not connected in any way to the operating coil.

Here was an example of transmission of energy to a distance through space. It was not necessary for Tesla to make a series of experiments to understand the implications of this situation. He was never lost in a new territory which he opened. His mind rose to such heights of understanding that he could survey a revealed world in a glance.

Tesla planned a spectacular demonstration of the new principle. He had his workmen string a wire on insulating supports on all four walls near the ceiling of the largest room in his laboratory. The wire was connected to one of his oscillators.

It was late at night when the installation was ready for the experiment. In order to make the test, Tesla prepared two tubes of glass about three feet long and a half-inch in

diameter. He sealed one end of each, slightly evacuated the air from the tubes and then sealed the other ends.

Tesla told the workmen he wanted the room completely darkened for the test, all lights out; and when he gave the signal he wanted the switch of his oscillator closed. "If my theory is correct," he explained, "when you close the switch these tubes will become swords of fire."

walking to the middle of the room Tesla gave orders to turn out all lights. The laboratory was in pitch darkness. A workman stood with his hand on the switch of the oscillator.

"Now!" shouted Tesla.

Instantly the great room was flooded with brilliant but weird blue-white light and the workmen beheld the tall, slim figure of Tesla in the middle of the room waving vigorously what looked like two flaming swords. The two glass tubes glowed with an unearthly radiance, and he would parry and thrust with them as if he were in a double fencing match.

To the workmen in the laboratory, it was a common experience for Tesla to perform spectacular feats; but this went beyond all limits. He had previously lighted his electric vacuum lamps but they were always connected to coils that supplied them with electricity. Now they lighted without being connected to any source of electricity.

This demonstration, made in 1890, led to Tesla's adopting the technique as the permanent method of lighting his laboratories. The loop around the ceiling was always energized; and if anyone wished a light at any position, it was only necessary to take a glass tube and place it in any convenient location.

when tesla undertook the development of a new kind of electric light, he went to the sun for his model. He saw in the photo- sphere, or outer gaseous layer of the sun, light being created by the vibration of molecules. That was the theory then prevalent; and he sought to use the same method.

In the tremendous burst of revelation which he received in the park at Budapest as he gazed into the flaming orb of

the setting sun, there had flashed into his mind, as we have seen, not only the marvelous invention of the rotary magnetic field and the many uses of multiple alternating currents, but also the grand generalization that everything in Nature operated on the principle of vibrations that corresponded to alternating currents. The host of inventions and discoveries which he made in all succeeding years had their roots, too, in that sublime experience.

In the sun, it was believed, light was created when the molecules were vibrated by heat. Tesla sought to improve on this method by vibrating the molecules by electrical forces. The sparks and electrical flames created by his high-voltage coils were associated, he believed, with molecular vibrations in the air. If he could bottle the gases of the air and set them in vibration electrically, they should produce light without heat, since the energy was supplied by cold electric currents.

Sir fiilliam Crookes, who, long before Edison, produced an incandescent electric light by sealing an electrically heated wire in a vacuum tube, had carried out an extended series of experiments in conducting electricity through the gases in glass vessels under a variety of conditions ranging from atmospheric pressure to the highest vacuum obtainable, and had produced some strange effects. Crookes used the high-voltage current produced by the old-fashioned induction coil.

Tesla expected that when he bottled the strange effects he had observed with his currents of extremely high frequency, he would produce manifestations radically different from those found by Crookes, or Geissler, who also worked in this field. In this he was not disappointed.

Four types of an entirely new kind of electric light were produced by Tesla, using electrically activated molecules of gas: 1. Tubes in which a solid body was rendered incandescent; 2. Tubes in which phosphorescent and fluorescent materials were caused to luminesce; 3. Tubes in which rarefied gases became luminous, and 4. Tubes in which luminosity was produced in gases at ordinary pressures.

Like Crookes, Tesla passed his high-frequency currents through gases at all pressures, from lowest-pressure vacuum to normal atmospheric pressure, and obtained brilliant luminous effects exceeding anything previously attained. He

substituted for air in his tubes other gases, including mercury vapor, and observed the peculiar color and other effects they yielded.

Noting the variety of colors the various gases, and even air, showed under different pressures, Tesla suspected that not all of the energy radiated was given off as visible light, but that some of it emanated as black light. Testing this hypothesis, he placed sulphide of zinc and other phosphorescent and fluorescent materials in his tubes and caused them to glow. In these experiments (they were made in 1889) Tesla laid the foundation for our most recently developed type of highly efficient lamps used in fluorescent lighting which are generally believed to have been invented in recent years. This system of utilizing the wasted ultra-violet or invisible black light by changing it to visible light by means of phosphorescent substances is Tesla's invention. Roentgen was using similar tubes, but of plain glass and the fluorescent substance on a table in his laboratory when, a half-dozen years later, he discovered X-rays. Tesla invented, also, the neon-tube type of lamp, and even bent his tubes to form letters and geometrical shapes, as is done in neon-tube signs. This is true in spite of some antecedent and concurrent laboratory experiments by Crookes and J. J. Thompson, neither of whom developed any lamps or practical applications.

Tesla had discovered early in 1890 that his high-frequency currents had properties so different from the ordinary induction-coil, or spark-coil, currents, that he was able to light his tubes just as well, and sometimes even better, with only one wire connecting them with the high-tension transformer, the return circuit being effected wirelessly through space.

In working with types of lamps consisting of tubes in the center of which there was a conducting wire, and with the tube filled with air under a partial vacuum, Tesla discovered that the gas would serve as a better conductor of the high-frequency current than the wire. From this observation he was able to develop many spectacular experiments which appeared to violate the most fundamental laws of electricity. He was able to short circuit lamps and other apparatus with heavy bars of metal which, with ordinary currents, would completely deprive the devices of electricity so they would be unable to operate. However, with his high-frequency currents, the lamps would light and

the devices operate just as if the short-circuiting bar were not present.

One of his startling experiments consisted of placing a long glass tube partially evacuated of its air inside a slightly longer copper tube with a closed end. A slit was cut in the copper tube in its central section so the tube inside would be seen. when the copper tube was connected in the high-frequency circuit, the air in the tube was brilliantly illuminated; but no evidence could be found of any current flowing through the short-circuiting copper shell. The electricity preferred to pass through the glass tube, by induction, to the enclosed partially evacuated air, pass through the low-pressure air for the full length of the tube, and then pass out the other end by induction, rather than traverse the complete metal path in the surrounding metal tube.

we have then, [said Tesla], as far as we can now see, in the gas a conductor which is capable of transmitting electric impulses of any frequency which we may be able to produce. Could the frequency be brought high enough, then a queer system of distribution, which would be likely to interest gas companies, might be realized; metal pipes filled with gas--the metal being the insulator and the gas the conductor--supplying phosphorescent bulbs, or perhaps devices not yet invented.

This remarkable conductivity of gases, including the air, at low pressures, later led Tesla to suggest, in a published statement in 1914, a system of lighting on a terrestrial scale in which he proposed to treat the whole earth, with its surrounding atmosphere, as if it were a single lamp.

The atmosphere is under the greatest pressure at the surface of the earth, owing to the weight of the overlying air. As we go higher in the air there are increasing amounts below us and less above, so, the greater the elevation, the lower is the pressure of the air.

At higher altitudes the gases in the atmosphere are in the same condition as the air in the partially evacuated tubes he prepared in his laboratory, Tesla explained, and therefore it would serve as an excellent conductor of high-frequency currents. The aurora borealis is a natural example of the effect Tesla sought, and it is produced by

Nature as Tesla planned; but this was not known when he evolved his idea.

The flow of a suficient amount of the electricity in the right form through the upper regions of the atmosphere would cause the air to become luminous. The whole earth would be transformed into a giant lamp, with the night sky completely illuminated. It would be unnecessary, he pointed out, to use any lamps along streets, roads or other outdoor areas, except during periods in which storms or low clouds prevailed. Ocean travel would be made safer and more pleasant, for the sky over the whole ocean would be illuminated, making the night as bright as day.

The methods by which Tesla intended to conduct his high-frequency currents to the upper air have not been published. when he outlined the project, he stated that the plan did not present any dificulties that could not be handled in a practical way. This meant that he had definite means for accomplishing his purpose.

The air, he stated, possesses a high degree of conductivity for high-frequency currents at an altitude of 35,000 feet, but could be used effectively at lower altitudes. The accuracy of Tesla's prediction with respect to the conductivity of the upper air is attested by one of the problems encountered today in the operation of airplanes at altitudes even lower than 25,000 feet. The ignition system, carrying high-voltage currents to the spark plugs in the airplane engines, which explodes the gas in the cylinders, has been giving trouble at the higher altitudes because the electricity escapes with a great deal of freedom into the surrounding air. At lower altitudes the air is an excellent insulator, especially for direct current and low-frequency currents, but, as Tesla discovered, at the higher altitudes where low pressures prevail it becomes an excellent conductor for the high-frequency currents. The wires leading to spark plugs become surrounded by a corona, or electrical halo, which indicates the escape of the current. This interferes with the efficiency, if it does not entirely prevent the operation, of devices employing high-frequency or high-potential currents, such as radio apparatus. (Since Tesla discovered that metal wires and rods which act as excellent conductors for direct and low-frequency currents can act as excellent insulators for his high-frequency currents, it is obvious that the common suggestion made for delivering a current to the upper air

by means of metal cables suspended from balloons is entirely impractical.)

This proposal by Tesla to transform the earth into a giant lamp was again referred to by him in the twenties. At this time he was without funds for carrying on experimental work, and, as he never announced details until after he had tested them in practice, he withheld a disclosure of his methods. He was hopeful, however, that he would soon secure money enough to permit him to test his plan.

The author bombarded Tesla with questions in an effort to learn the general plan he had in mind. Tesla was adamant.

"If I should answer three more of your questions you would know as much about my plan as I do," he replied.

"Nevertheless, Dr. Tesla," I replied, "I am going to outline in my article the only plan that appears to me to be feasible under our known physical laws, and you can deny or afirm it. your molecular bombardment tubes are prolific producers of ultra-violet and X-rays and could produce a powerful beam of this radiation which would ionize the air through great distances. when these rays pass through the air they ionize it, making it a good conductor of electricity of all kinds at suficiently high voltages. By producing such a beam on a high mountain and directing it upward this would provide a conducting path through the air to any height desired. you could then send your high-frequency currents to the upper air without leaving the ground."

"If you publish that," said Tesla, "it must appear as your plan, not mine."

The article was published with the foregoing speculation in it; but neither afirmation nor denial was forthcoming from the inventor, and nothing more can be said in its favor. Tesla may have had a simpler and more practical plan in mind. (Since completing this volume the author has learned that Tesla planned to install a bank of powerful ultra-violet lamps on top of his tower at wardencliff (cf. p. 207), and had the upper Platform designed to receive them.)

There was one other plan which Tesla discussed on a number of occasions when considering terrestrial electrical conditions, and which he may have had in mind in this

connection. He pointed out that the earth is a good conductor of electricity and the upper air is also a good conductor, while the intervening lower stratum of air is an insulator for many kinds of current. This combination provides what is known as a condenser, a device which will store and discharge electricity. By charging the earth, the upper air would become charged by induction. when our spinning earth was so transformed into a terrestrial Leyden jar, it could be alternately charged and discharged, so that a current would flow both in the upper air and in the ground, producing the electrical flow which would cause the upper air to become self-luminous. Tesla, however, never became quite so specific in applying the condenser plan to this problem as the preceding sentence indicates. His plan may still exist in his papers, which, at the present writing, are sealed against inspection except by Government oficials.

Out of the almost empty space in a six-inch vacuum tube Tesla succeeded in extracting at least five epoch-making discoveries. Tesla's lamp was more prolific in producing wonders than the Aladdin's lamp of the Arabian Nights. He gave his "magic" lamp to science fifty years ago. This magic talisman was Tesla's carbon-button lamp which, apart from the other discoveries that came of it, was in itself, just as a lamp, a brilliant scientific discovery--and still remains unused. Edison developed the practical incandescent filament electric lamp and was entitled to, and receives, a tremendous amount of credit for his accomplishment. Tesla invented an absolutely original type of lamp, the incandescent-button lamp, which gives twenty times as much light for the same amount of current consumed; and his contribution remains practically unknown.

The carbon-button type of lamp was described by Tesla in his lecture before the American Institute of Engineers in New York in May, 1891, and further developments were presented in the lectures which he gave in England and France in February and March, 1892. In his New York lecture he said:

Electrostatic effects are in many ways available for the production of light. For instance, we may place a body of some refractory material in a closed, and preferably in a more or less air exhausted, globe, connect it to a source of high, rapidly alternating potential, causing the molecules of the gas to strike it many times a second at

enormous speeds, and in this way, with trillions of invisible hammers, pound it until it gets incandescent. Or we may place a body in a very highly exhausted globe, and by employing very high frequencies and potentials maintain it at any desired degree of incandescence.

He made a vast number of experiments with this carbon-button lamp and gave a description of the most significant ones in his lecture before the English and French scientific societies in the spring of 1892. It was, however, only one of the many new types of lamps and other important developments which he included in this spectacular presentation of his work.

The carbon-button lamps were of very simple construction. Basically they consisted of a spherical glass globe three to six inches in diameter, in the center of which was a piece of solid refractory material mounted on the end of a wire which protruded through the globe and served as a single-wire connection with the source of high-frequency currents. The globe contained rarefied air.

when the high-frequency current was connected with the lamp, molecules of the air in the globe, coming in contact with the central button, became charged and were repelled at high velocity to the glass globe where they lost their charge and were then repelled back at equally high velocity, striking the button. Millions of millions of such processes each second caused the button to become heated to incandescence.

In these simple glass globes Tesla was able to produce extremely high temperatures, the upper limit of which seemed to be determined by the amount of current used. He was able to vaporize carbon directly into a gas, observing that the liquid state was so unstable it could not exist. Zirconia, the most heat-resistant substance known, could be melted instantly. He tried diamonds and rubies as buttons--and they too were vaporized. when using the device as a lamp it was not his desire to melt the substances; but he always carried experiments to their upper and lower limits. Carborundum, he observed, was so refractory that it was possible when using buttons made of this material (calcium carbide) to run the lamps at higher current densities than was possible with other substances. Carborundum did not vaporize so readily, nor did it make deposits on the inside of the globe.

Tesla thus evolved a technique in operating the lamps whereby the incandescent button transferred its heat energy to the molecules of the very small amount of gas in the tube so that they became a source of light, thus causing the lamps to function like the sun, the button being the massive body of the sun and the surrounding gas like the photosphere, or atmospheric light-emitting layer, of that body.

Tesla had a keen sense of dramatic values, but quite apart from this he undoubtedly enjoyed a unique satisfaction when he was able to light this miniature sun in the currents that he passed through his body--high-frequency currents of hundreds of thousands of volts. with one hand grasping a terminal of his high-frequency transformer and the other holding aloft this bulb containing an incandescent miniature sun which he had created--posing like the Statue of Liberty--he was able to make his new lamp radiate its brilliant illumination. Here, you might say, was the superman manifesting his ultramundane accomplishments. In addition, there was a satisfaction which was associated purely with the plane of ordinary mortals. Edison had laughed at his plan for developing the alternating-current system, and had declared that these currents were not only useless but deadly. Surely, this was an adequate answer; Tesla would let Nature make his replies.

Observing this working model of the incandescent sun which he could hold in his hand, Tesla was quick to see many of the implications of its phenomena. Every electrical wave that surged through the tiny central bead caused a shower of particles to radiate from it at tremendous velocity and strike the surrounding glass globe, only to be reflected back to the bead. The sun, Tesla reasoned, is an incandescent body that carries a high electrical charge and it, too, will emit vast showers of tiny particles, each carrying great energy because of its extremely high velocity. In the case of the sun, and other stars like it, there was no glass globe to act as a barrier, so the showers of particles continued out into the vast realms of surrounding space.

All space was filled with these particles and they were continually bombarding the earth, blasting matter wherever they struck, just as they did in his globes. He had seen this process take place in his globes, where the most

refractory carbon beads could be shattered into atomic dust by the bombardment of the electrified particles.

He sought to detect these particles striking the earth: one of the manifestations of this bombardment, he declared, was the aurora borealis. The records of the experimental methods by which he detected these rays are not available; but he published an announcement that he had detected them, measured their energy, and found that they moved with tremendously high velocities imparted to them by the hundreds of millions of volts potential of the sun.

Neither the scientists nor the general public in the early nineties were in a mood for such fantastic figures, or for any claim that the earth was bombarded by such destructive rays. It would be describing the situation in very conservative fashion to state that Tesla's report was not taken seriously.

when, however, the French physicist, Henri Becquerel, in 1896, discovered the mysterious rays emitted by uranium, and subsequent investigations, culminating with the discovery by Pierre and Marie Curie, in Paris, of radium, whose atoms were exploding spontaneously without apparent cause, Tesla was able to point to his cosmic rays as the simple cause of the radioactivity of radium, thorium, uranium and other substances. And he predicted that other substances would also be found to be made radioactive by bombardment with these rays. The victory for Tesla, however, was only temporary, for the scientific world did not accept his theory. Nevertheless, Tesla was a better prophet than he knew, or anyone else suspected.

Thirty years later Dr. Robert A. Millikan rediscovered these rays, believing them to be vibratory in character like light, and was followed by Dr. Arthur H. Compton, who proved the existence of cosmic rays consisting of high-velocity particles of matter, just as Tesla described them. They started by finding energies of ten million volts; and today the energies are far up in the billions and even trillions of electron volts. And these and other investigators describe these rays as shattering atoms of matter producing showers of debris--just as Tesla predicted.

In 1934, Frederick Joliot, son-in-law of the Curies, discovered that artificial radioactivity was produced in

ordinary materials by bombarding them with particles in just the manner which Tesla described. Joliot received the Nobel Prize for his discovery; no one gives any credit to Tesla.

Tesla's molecular-bombardment lamp was the ancestor of another very modern development--the atom-smashing cyclotron. The cyclotron, developed by E. O. Lawrence, of the University of California, during the past twenty years, is a device in which electrified particles are whirled in a magnetic field in a circular chamber until they reach a very high velocity, and are then led out of the chamber in a narrow stream. The giant machine, with a magnet as high as a house, partially completed at present writing, will emit so powerful a beam of charged particles that, according to Prof. Lawrence, if allowed to impinge on a building brick they will totally disintegrate it. The smaller models were used to bombard a variety of substances to render them radioactive, to disintegrate them or transmute their atoms into those of other elements.

The small glass globe, six inches or less in diameter, holding Tesla's molecular-bombardment lamp produced exactly this same disintegrating effect on solid matter, probably with a more intensified effect than any atom-smashing cyclotron now in existence despite their tremendous size. (Even small ones weigh twenty tons.)

In describing one of the experiments with his lamp, one in which a ruby was mounted in a carbon button, Tesla said:

It was found, among other things, that in such cases, no matter where the bombardment began, just as soon as a high temperature was reached there was generally one of the bodies which seemed to take most of the bombardment upon itself, the other, or others, being thereby relieved. This quality appeared to depend principally on the point of fusion, and on the facility with which the body was "evaporated," or, generally speaking, disintegrated--meaning by the latter term not only the throwing off of atoms, but likewise of larger lumps. The observation made was in accordance with generally accepted notions. In a highly exhausted bulb electricity is carried off from the electrode by independent carriers, which are partly atoms, or molecules, of the residual atmosphere, and partly the atoms, molecules, or lumps thrown off from the electrode. If the electrode is composed of bodies of different

character, and if one of these is more easily disintegrated than the others, most of the electricity supplied is carried off from that body, which is then brought to a higher temperature than the others, and this the more, as upon an increase of the temperature the body is still more easily disintegrated.

Substances which resisted melting in temperatures attainable in laboratory furnaces of that day were easily disintegrated in Tesla's simple-lamp disintegrator, which provided a powerful beam of disintegrating particles by having them concentrated from all directions by a spherical reflector (the globe of his lamp), a kind a three-dimension burning glass, but operating with electrified particles instead of heat rays. It accomplished the same effect as the heavy atom disintegrators of today, but much more efficiently in a globe so light in weight it almost floated off in air. Its simplicity and efficiency is further increased by the fact that it causes the substance that is being disintegrated to supply the particles by which the disintegration is effected.

There is one more very modern discovery of great importance embodied in Tesla's molecular-bombardment lamp--the point electron miscroscope, which provides magnifications of a million diameters, or ten to twenty times more powerful than the better known electron microscope which in turn is capable of magnifications up to fifty times greater than the optical microscope.

In the point electron microscope, electrified particles shoot out in straight lines from a tiny active spot on a piece of substance kept at a high potential, and reproduce on the spherical surface of a glass globe the pattern of the microscopically small area from which the particles are issuing. The size of the glass sphere furnishes the only limit to the degree of magnification that can be obtained; the greater the radius, the greater the magnification. Since electrons are smaller than light waves, objects too small to be seen by light waves can be tremendously enlarged by the patterns produced by the emitted electrons.

Tesla produced on the surface of the spherical globe of his lamp phosphorescent images of what was taking place on the disintegrating button when he used extremely high vacuum. He described this effect in his lectures in the spring of 1892, and his description will stand with hardly a change

in a word for a description of the million-magnification point electron microscope. Quoting from his lecture:

To the eye the electrode appears uniformly brilliant, but there are upon it points constantly shifting and wandering about, of a temperature far above the mean, and this materially hastens the process of deterioration. . . . Exhaust a bulb to a very high degree, so that with a fairly high potential the discharge cannot pass--that is, not a luminous one, for a weak invisible discharge occurs always, in all probability. Now raise slowly and carefully the potential, leaving the primary current no more than for an instant. At a certain point, two, three or half a dozen phosphorescent spots will appear on the globe. These places of the glass are evidently more violently bombarded than the others, this being due to the unevenly distributed electric density, necessitated, of course, by sharp projections, or, generally speaking, irregularities of the electrode. But the luminous patches are constantly changing in position, which is especially well observed if one manages to produce very few, and this indicates that the configuration of the electrode is rapidly changing.

It would be an act of simple justice if in the future scientists would extend credit to Tesla for being the one who discovered the electron microscope. There is no reduction in the glory due him because he did not specifically describe the electron, then unknown, in its operations, but assumed the effect was due to electrically charged atoms.

when Tesla studied the performance of various models of this and his other gaseous lamps, he observed that the output of visible light changed under various operating conditions. He knew they gave off both visible and invisible rays. He used a variety of phosphorescent and fluorescent substances for detecting the ultra-violet or black light. Usually, the changes in the visible and ultra-violet light about balanced each other; as one increased the other decreased, with the remainder of the energy accounted for by heat losses. In his molecular-bombardment lamp he found, he reported in his 1892 lectures, "visible black light and a very special radiation." He was experimenting with this radiation which, he reported, produced shadowgraph pictures on plates in metal containers, in his laboratory when it was destroyed by fire in March, 1895.

This "very special radiation" was not further described at that time in published articles; but when Prof. fiilhelm Konrad Roentgen, in Germany, in December, 1895, announced the discovery of X-rays, Tesla was able immediately to reproduce the same results by means of his "very special radiation," indicating that these and X-rays had very similar properties although produced in somewhat different ways. Immediately upon reading Roentgen's announcement, Tesla forwarded to the German scientist shadowgraph pictures produced by his "very special radiation." Roentgen replied: "The pictures are very interesting. If you would only be so kind as to disclose the manner in which you obtained them."

Tesla did not consider that this situation gave him any priority in the discovery of X-rays, nor did he ever advance any claims; but he immediately started an extensive series of investigations into their nature. while others were trying to coax out of the type of tube used by Roentgen enough X-rays to take shadow photographs through such thin structures as the hands and feet held very close to the bulb, Tesla was taking photographs through the skull at a distance of forty feet from the tube. He elsewhere described at this time an unidentified type of radiation coming from a spark gap, when a heavy current was passed, that was not a transverse wave like light, or Hertzian waves, and could not be stopped by interposing metal plates.

Tesla, thus, in one lecture reporting his investigations covering a period of two years, offered to the world--in addition to his new electric vacuum lamps, his highly efficient incandescent lamp, and his high-frequency and high-potential currents and apparatus--at least five outstanding scientific discoveries: 1. Cosmic rays; 2. Artificial radioactivity; 3. Disintegrating beam of electrified particles, or atom smasher; 4. Electron microscope; and 5. "Very special radiation" (X-rays).

At least four of these innovations, when "rediscovered" up to forty years later, won Nobel Prizes for others; and Tesla's name is never mentioned in connection with them.

Yet Tesla's lifetime work was hardly well started!

TEN

TESLA had a remarkable ability for carrying on simultaneously a number of widely different lines of scientific research. while pursuing his studies of high-frequency electrical oscillations with all of their ramifications from vacuum lamps to radio, he was also investigating mechanical vibrations; and he had a rare foresight into the many useful applications to which they could be put, and which have since been realized.

Tesla never did things by halves. Almost everything he attempted went off like a flash of lightning with a very satisfactory resounding clap of thunder following. Even when he did not so plan events, they appeared to fashion themselves into spectacular climaxes. In 1896 while his fame was still on the ascendant he planned a nice quiet little vibration experiment in his Houston Street laboratory. Since he had moved into these quarters in 1895, the place had established a reputation for itself because of the peculiar noises and lights that emanated from it at all hours of the day and night, and because it was constantly being visited by the most famous people in the country.

The quiet little vibration experiment produced an earthquake, a real earthquake in which people and buildings and everything in them got a more tremendous shaking than they did in any of the natural earthquakes that have visited the metropolis. In an area of a dozen square city blocks, occupied by hundreds of buildings housing tens of thousands of persons, there was a sudden roaring and shaking, shattering of panes of glass, breaking of steam, gas and water pipes. Pandemonium reigned as small objects danced around rooms, plaster descended from walls and ceilings, and pieces of machinery weighing tons were moved from their bolted anchorages and shifted to awkward spots in factory lofts.

"It was all caused, quite unexpectedly, by a little piece of apparatus you could slip in your pocket," said Tesla.

The device that precipitated the sudden crisis had been used for a long time by Tesla as a toy to amuse his

friends. It was a mechanical oscillator, and was used to produce vibrations. The motor-driven device that the barber straps on his hand to give a patron an "electric massage" is a descendant of Tesla's mechanical oscillator. There is, of course, nothing electric about an "electric massage" except the power used to produce vibrations which are transmitted through the barber's fingers to the scalp.

Tesla developed in the early nineties a mechanical-electrical oscillator for the generation of high-frequency alternating currents. The driving engine produced on a shaft simple reciprocating motion that was not changed to rotary motion. Mounted on either end of the shaft was a coil of many turns of wire that moved back and forth with high frequency between the poles of electromagnets, and in this way generated high-frequency alternating currents.

The engine was claimed by Tesla to have a very high efficiency compared to the common type of engine, which changed reciprocating to rotary motion by means of a crank shaft. It had no valves or other moving parts, except the reciprocating piston with its attached shaft and coils, so that mechanical losses were very low. It maintained such an extremely high order of constancy of speed, he stated, that the alternating current generated by the oscillator could be used to drive clocks, without any pendulum or balance-wheel control mechanisms, and they would keep time more accurately than the sun.

This engine may have had industrial possibilities but Tesla was not interested in them. To him it was just a convenient way of producing a high-frequency alternating current constant in frequency and voltage, or mechanical vibrations, if used without the electrical parts. He operated the engine on compressed air and also by steam at 320 pounds and also at 80 pounds pressure.

while perfecting this device, he had opportunity to observe interesting effects produced by vibration. These were objectionable in the engine when it was used as a dynamo, so he adopted suitable measures to eliminate or suppress them. The vibrations as such, however, interested him. Although they were detrimental to the machine, he found their physiological effects were, at times, quite pleasant. Later he built a small mechanical oscillator driven by compressed air which was designed for no other purpose than to produce vibrations. He built a platform insulated from

the floor by rubber and cork. He then mounted the oscillator on the under side of the platform. The purpose of the rubber and cork under the platform was to keep the vibrations from leaking into the building and thereby reducing the effect on the platform. Visitors found this vibrating platform one of the most interesting of the great array of fascinating and fantastic exhibits with which he dazzled the society folk who flocked to his laboratory.

Great hopes were entertained by Tesla of applying these vibrations for therapeutic and health-improving effects. He had opportunity to observe, through his own experience and that of his employees, that they produce some very definite physiological actions.

Samuel Clemens, better known to the public as "Mark Twain," and Tesla were close friends. Clemens was a frequent visitor to the Tesla laboratory. Tesla had been playing with his vibratory mechanism for some time, and had learned a good deal about the results that followed from varying doses of vibration, when one evening Clemens dropped in.

Clemens, on learning about the new mechanism, wanted to experience its vitalizing vibrations. He stood on the platform while the oscillator set it into operation. He was thrilled by the new experience. He was full of adjectives. "This gives you vigor and vitality," he exclaimed. After he had been on the platform for a while Tesla advised him: "you have had enough, Mr. Clemens. you had better come down now."

"Not by a jugfull," replied Clemens. "I am enjoying myself."

"But you had better come down, Mr. Clemens. It is best that you do so," insisted Tesla.

"you couldn't get me off this with a derrick," laughed Clemens.

"Remember, I am advising you, Mr. Clemens."

"I'm having the time of my life. I'm going to stay right up here and enjoy myself. Look here, Tesla, you don't appreciate what a wonderful device you have here to give a lift to tired humanity. . . . Clemens continued along this line for several minutes. Suddenly he stopped talking, bit

his lower lip, straightened his body and stalked stiffy but suddenly from the platform.

"Quick, Tesla! Where is it?" snapped Clemens, half begging, half demanding.

"Right over here, through that little door in the corner," said Tesla. "And remember, Mr. Clemens, I advised you to come down some time ago," he called after the rapidly moving figure.

The laxative effect of the vibrator was an old story to the members of the laboratory staff.

Tesla pursued his studies of mechanical vibrations in many directions. This was almost a virgin field for scientific research. Scarcely any fundamental research had been done in the field since Pythagoras, twenty-five hundred years before, had established the science of music through his study of vibrating strings; and many of the wonders with which Tesla had startled the world in the field of high-frequency and high-potential currents had grown out of his simple secret for tuning electrical circuits so that the electricity vibrated in resonance with its circuit. He now visualized mechanical vibrations building up resonance conditions in the same way, to produce effects of tremendous magnitude on physical objects.

In order to carry out what he expected to be some minor and very small-scale experiments, he screwed the base of one of his small mechanical oscillators to an iron supporting pillar in the middle of his laboratory and set it into oscillation. It had been his observation that it took some time to build up its maximum speed of vibration. The longer it operated the faster the tempo it attained. He had noticed that all objects did not respond in the same way to vibrations. One of the many objects around the laboratory would suddenly go into violent vibration as it came into resonance with the fundamental vibration of the oscillator or some harmonic of it. As the period of the oscillator changed, the first object would stop and some other object in resonance with the new rate would start vibrating. The reason for this selective response was very clear to Tesla, but he had never previously had the opportunity to observe the phenomenon on a really large scale.

Tesla's laboratory was on an upper floor of a loft building. It was on the north side of Houston Street, and the second house east of Mulberry Street. About three hundred feet south of Houston Street on the east side of Mulberry Street was the long, four-story red-brick building famous as Police Headquarters. Throughout the neighborhood there were many loft buildings ranging from five to ten stories in height, occupied by factories of all kinds. Sandwiched between them were the small narrow tenement houses of a densely packed Italian population. A few blocks to the south was Chinatown, a few blocks to the west was the garment-trades area, a short distance to the east was a densely crowded tenement-house district.

It was in this highly variegated neighborhood that Tesla unexpectedly staged a spectacular demonstration of the properties of sustained powerful vibrations. The surrounding population knew about Tesla's laboratory, knew that it was a place where strange, magical, mysterious events took place and where an equally strange man was doing fearful and wonderful things with that tremendously dangerous secret agent known as electricity. Tesla, they knew, was a man who was to be both venerated and feared, and they did a much better job of fearing than of venerating him.

Quite unmindful of what anyone thought about him, Tesla carried on his vibration and all other experiments. Just what experiment he had in mind on this particular morning will never be known. He busied himself with preparations for it while his oscillator on the supporting iron pillar of the structure kept building up an ever higher frequency of vibrations. He noted that every now and then some heavy piece of apparatus would vibrate sharply, the floor under him would rumble for a second or two--that a window pane would sing audibly, and other similar transient events would happen--all of which was quite familiar to him. These observations told him that his oscillator was tuning up nicely, and he probably wondered why he had not tried it firmly attached to a solid building support before.

Things were not going so well in the neighborhood, however. Down in Police Headquarters in Mulberry Street the "cops" were quite familiar with strange sounds and lights coming from the Tesla laboratory. They could hear clearly the sharp snapping of the lightnings created by his coils. If

anything queer was happening in the neighborhood, they knew that Tesla was in back of it in some way or other.

On this particular morning the cops were surprised to feel the building rumbling under their feet. Chairs moved across floors with no one near them. Objects on the oficers' desks danced about and the desks themselves moved. It must be an earthquake! It grew stronger. Chunks of plaster fell from the ceilings. A flood of water ran down one of the stairs from a broken pipe. The windows started to vibrate with a shrill note that grew more intense. Some of the windows shattered.

"That isn't an earthquake," shouted one of the oficers, "it's that blankety-blank Tesla. Get up there quickly," he called to a squad of men, "and stop him. Use force if you have to, but stop him. He'll wreck the city."

The officers started on a run for the building around the corner. Pouring into the streets were many scores of people excitedly leaving near-by tenement and factory buildings, believing an earthquake had caused the smashing of windows, breaking of pipes, moving of furniture and the strange vibrations.

without waiting for the slow-pokey elevator, the cops rushed up the stairs--and as they did so they felt the building vibrate even more strongly than did police headquarters. There was a sense of impending doom--that the whole building would disintegrate--and their fears were not relieved by the sound of smashing glass and the queer roars and screams that came from the walls and floors.

Could they reach Tesla's laboratory in time to stop him? Or would the building tumble down on their heads and everyone in it be buried in the ruins, and probably every building in the neighborhood? Maybe he was making the whole earth shake in this way! would this madman be destroying the world? It was destroyed once before by water. Maybe this time it would be destroyed by that agent of the devil that they call electricity!

Just as the cops rushed into Tesla's laboratory to tackle--they knew not what--the vibrations stopped and they beheld a strange sight. They arrived just in time to see the tall gaunt figure of the inventor swing a heavy sledge hammer and shatter a small iron contraption mounted on the post in

the middle of the room. Pandemonium gave way to a deep, heavy silence.

Tesla was the first to break the silence. Resting his sledge hammer against the pillar, he turned his tall, lean, coatless figure to the cops. He was always selfpossessed, always a commanding presence--an effect that could in no way be attributed to his slender build, but seemed more to emanate from his eyes. Bowing from the waist in his courtly manner, he addressed the policemen, who were too out of breath to speak, and probably overawed into silence by their fantastic experience.

"Gentlemen," he said, "I am sorry, but you are just a trifle too late to witness my experiment. I found it necessary to stop it suddenly and unexpectedly and in an unusual way just as you entered. If you will come around this evening I will have another oscillator attached to this platform and each of you can stand on it. you will, I am sure, find it a most interesting and pleasurable experience. Now you must leave, for I have many things to do. Good day, gentlemen."

George Scherff, Tesla's secretary, was standing nearby when Tesla so dramatically smashed his earthquake maker. Tesla never told the story beyond this point, and Mr. Scherff declares he does not recall what the response of the cops was. Imagination must finish the finale to the story.

At the moment, though, Tesla was quite sincere in his attitude. He had no idea of what had happened elsewhere in the neighborhood as a result of his experiment, but the effect on his own laboratory had been sufficiently threatening to cause him to halt it suddenly. when he learned the details, however, he was convinced that he was correct in his belief that the field of mechanical vibrations was rich with opportunities for scientific investigation. we have no records available of any further major experiments with vibration in that laboratory. Perhaps the Police and Building Departments had offered some emphatic suggestions to him concerning experiments of this nature.

Tesla's observations in this experiment were limited to what took place on the floor of the building in which his laboratory was located, but apparently very little happened there until a great deal had happened elsewhere. The

oscillator was firmly fixed to a supporting column and there were similar supporting columns directly under it on each floor down to the foundations. The vibrations were transmitted through the columns to the ground. This section of the city is built on deep sand that extends down some hundreds of feet before bed rock is reached. It is well known to seismologists that earthquake vibrations are transmitted by sand with much greater intensity than they are by rock. The ground under the building and around it was, therefore, an excellent transmitter of mechanical vibrations, which spread out in all directions. They may have reached a mile or more. They were more intense, of course, near their source and became weaker as the distance increased. However, even weak vibrations that are sustained can build up surprisingly large effects when they are absorbed by an object with which they are in resonance. A distant object in resonance can be thrown into strong vibration whereas a much nearer object not in resonance will be left unaffected.

It was this selective resonance that was, apparently, operating in Tesla's experiment. Buildings other than his own came into resonance with the increasing tempo of his oscillator long before his own building was affected. After the pandemonium was under way for some time elsewhere and the higher frequencies were reached, his immediate surroundings started to come into resonance.

when resonance is reached the effects follow instantly and powerfully. Tesla knew this, so when he observed dangerous resonance effects developing in his building he realized he had to act fast. The oscillator was being operated by compressed air supplied by a motor-driven compressor that fed the air into a tank, where it was stored under pressure. Even if the motor were shut off, there was plenty of air in the tank to keep the oscillator going for many minutes--and in that time the building could be completely wrecked and reduced to a pile of debris. with the vibrations reaching this dangerous amplitude, there was no time to try to disconnect the vibrator from the air line or to do anything about releasing the air from the tank. There was time for only one thing, and Tesla did that. He grabbed the near-by sledge hammer and took a mighty swing at the oscillator in hopes of putting it out of operation. He succeeded in his first attempt.

The device was made of cast iron and was of rugged construction. There were no delicate parts that could be easily damaged. Tesla has never published a description of the device, but its construction was principally that of a piston which moved back and forth inside a cast-iron cylinder. The only way to stop it from operating was to smash the outer cylinder. Fortunately, that is what happened from the first blow.

As Tesla turned around after delivering this lucky blow and beheld the visiting policemen, he could not understand the reason for their visit. The dangerous vibrations had developed in his building only within the preceding minute, and the policemen would not have had time to plan a visit in connection with them, he figured, so they must have come for some other less critical purpose, and therefore he proposed to dismiss them until a more opportune moment.

Tesla related this experience to me when I asked the inventor's opinion of a plan that I had suggested some time previously to Elmer Sperry, Jr., son of the famous inventor of many gyroscope devices. when a heavy gyroscope, such as is used in stabilizing ships, is forced to turn on its axis, it transmits a powerful downward thrust through the bearings in which the supporting gimbal is mounted. If a battery of such gyroscopes were mounted in regions where severe earthquakes take place it would transmit thrusts to the ground at equally timed intervals and build up resonance vibrations in the strata of the earth that would cause earthquake strains to be released while they were of small magnitude, thus producing very small earthquakes instead of letting the strains build up to large magnitudes which, when they let go, would cause devastating earthquakes.

The idea made a strong appeal to Tesla; and in his discussion, after telling me of the experience here related, he further declared that he had so far developed his study of vibrations that he could establish a new science of "telegeodynamics" which would deal not only with the transmission of powerful impulses through the earth to distant points to produce effects of large magnitude--in addition, he could use the same principles to detect distant objects. In the later thirties, before the outbreak of the war, he declared that he could apply these principles for the detection of submarines or other ships

at a distance, even though they were lying at anchor and no engines operating on them.

His system of telegeodynamics, using mechanical vibrations, Tesla declared, would make it possible to determine the physical constant of the earth and to locate ore deposits far beneath the surface. This latter prediction has since been fulfilled, for many oil fields have been discovered by studying the vibrations reflected from sub-surface strata.

"So powerful are the effects of the telegeodynamic oscillator," said Tesla in reviewing the subject in the thirties, "that I could now go over to the Empire State Building and reduce it to a tangled mass of wreckage in a very short time. I could accomplish this result with utmost certainty and without any dificulty whatever. I would use a small mechanical vibrating device, an engine so small you could slip it in your pocket. I could attach it to any part of the building, start it in operation, allow it twelve to thirteen minutes to come to full resonance. The building would first respond with gentle tremors, and the vibrations would then become so powerful that the whole structure would go into resonant oscillations of such great amplitude and power that rivets in the steel beams would be loosened and sheared. The outer stone coating would be thrown off and then the skeleton steel structure would collapse in all its parts. It would take about 2.5 (This figure may have been .25 or 2.5 horsepower. The notes are old and somewhat indistinct. Memory favors the latter figure.) horsepower to drive the oscillator to produce this effect"

Tesla developed his inventions to the point at which they were spectacular performers before they were demonstrated to the public. when presented, the performance always greatly exceeded the promise. This was the case with his first public demonstration of "wireless," but he complicated the situation by coupling with his radio invention another new idea--the robot.

Tesla staged his demonstration in the great auditorium of Madison Square Garden, then on the north side of Madison Square, in September, 1898, as part of the first annual Electrical Exhibition. He had a large tank built in the center of the arena and in this he placed an iron-hulled boat a few feet long, shaped like an ark, which he operated by remote control by means of his wireless system.

Extending upward from the center of the roof of the boat was a slender metal rod a few feet high which served as an antenna, or &aerial, for receiving the wireless wave. Near the bow and stern were two small metal tubes about a foot high surmounted by small electric lamps. The interior of the hull was packed with a radio receiving set and a variety of motor-driven mechanisms which put into effect the operating orders sent to the boat by wireless waves. There was a motor for propelling the boat and another motor for operating the servo-mechanism, or mechanical brain, that interpreted the orders coming from the wireless receiving set and translated them into mechanical motions, which included steering the boat in any direction, making it stop, start, go forward or backward, or light either lamp. The boat could thus be put through the most complicated maneuvers.

Anyone attending the exhibition could call the maneuver for the boat, and Tesla, with a few touches on a telegraph key, would cause the boat to respond. His control point was at the far end of the great arena.

The demonstration created a sensation and Tesla again was the popular hero. It was a front-page story in the newspapers. Everyone knew the accomplishment was a wonderful one, but few grasped the significance of the event or the importance of the fundamental discovery which it demonstrated. The basic aspects of the invention were obscured by the glamor of the demonstration.

The Spanish American war was under way. The success of the U.S. Navy in destroying the Spanish fleets was the leading topic of conversation. There was resentment over the blowing up of the U.S.S. Maine in Havana Harbor. Tesla's demonstration fired the imagination of everyone because of its possibilities as a weapon in naval warfare.

waldemar Kaempffert, then a student in City College and now Science Editor of the New York Times, discussed its use as a weapon with Tesla.

"I see," said Kaempffert, "how you could load an even larger boat with a cargo of dynamite, cause it to ride submerged, and explode the dynamite whenever you wished by pressing the key just as easily as you can cause the light on the bow to shine, and blow up from a distance by wireless even the largest of battleships." (Edison had

earlier designed an electric torpedo which received its power by a cable that remained connected with the mother ship.)

Tesla was patriotic, and was proud of his status, which he had acquired in 1889, as a citizen of the United States. He had offered his invention to the Government as a naval weapon, but at heart he was opposed to war.

"you do not see there a wireless torpedo," snapped back Tesla with fire flashing in his eyes, "you see there the first of a race of robots, mechanical men which will do the laborious work of the human race.

The "race of robots" was another of Tesla's original and important contributions to human welfare. It was one of the items of his colossal project for increasing human energy and improving the efficiency of its utilization. He visualized the application of the robot idea to warfare as well as to peaceful pursuits; and out of the broad principles enunciated, he developed an accurate picture of warfare as it is being carried on today with the use of giant machines as weapons--the robots he described.

"This evolution," he stated in an article in the Century Magazine of June, 1900, "will bring more and more into prominence a machine or mechanism with the fewest individuals as an element of warfare. . . . Greatest possible speed and maximum rate of energy delivery by the war apparatus will be the main object. The loss of life will become smaller. . . ."

Outlining the experiences that led him to design the robots, or automatons, as he called them, Tesla stated:

I have by every thought and act of mine, demonstrated, and do so daily, to my absolute satisfaction that I am an automaton endowed with power of movement, which merely responds to external stimuli beating upon my sense organs, and thinks and moves accordingly. . . .

with these experiences it was only natural that, long ago, I conceived the idea of constructing an automaton which would mechanically represent me, and which would respond, as I do myself, but, of course, in a much more primitive manner, to external influences. Such an automaton evidently had to have motive power, organs for locomotion, directive

organs, and one or more sensitive organs so adapted as to be excited by external stimuli.

This machine would, I reasoned, perform its movements in the manner of a living being, for it would have all of the chief elements of the same. There was still the capacity for growth, propagation, and, above all, the mind which would be wanting to make the model complete. But growth was not necessary in this case since a machine could be manufactured full-grown, so to speak. As to capacity for propagation, it could likewise be left out of consideration, for in the mechanical model it merely signified a process of manufacture.

whether the automaton be of flesh and bone, or of wood and steel, mattered little, provided it could perform all the duties required of it like an intelligent being. To do so it would have to have an element corresponding to the mind, which would effect the control of its movements and operations, and cause it to act, in any unforeseen case that might present itself, with knowledge, reason, judgement and experience. But this element I could easily embody in it by conveying to it my own intelligence, my own understanding. So this invention was evolved, and so a new art came into existence, for which the name "telautomatics" has been suggested, which means the art of controlling the movements and operations of distant automatons.

In order to give the automaton an individual identity it would be provided with a particular electrical tuning, Tesla explained, to which it alone would respond when waves of that particular frequency were sent from a control transmitting station; and other automatons would remain inactive until their frequency was transmitted. This was Tesla's fundamental radio tuning invention, the need for which other radio inventors had not yet glimpsed although Tesla had described it publicly a half-dozen years earlier.

Tesla not only used in the control of his automaton the long waves now used in broadcasting--which are very different from the short waves used by Marconi and all others; for those could be interfered with by the imposition of an intervening object--but he was explaining the use, through his system of tuning, of the spectrum of allocations for individual stations that now appears on the dials of radio receiving sets. He continued:

By the simple means described the knowledge, experience, judgement--the mind, so to speak--of the distant operator were embodied in that machine, which was thus enabled to move and perform all of its operations with reason and intelligence. It behaved just like a blindfolded person obeying directions received through the ear.

The automatons so far constructed had "borrowed minds," so to speak, as each formed merely part of the distant operator who conveyed to it his intelligent orders; but this art is only in the beginning.

I purpose to show that, however impossible it may now seem, an automaton may be contrived which will have its "own mind," and by this I mean that it will be able, independently of any operator, left entirely to itself, to perform, in response to external influences affecting its sensitive organs, a great variety of acts and operations as if it had intelligence.

It will be able to follow a course laid out or to obey orders given far in advance; it will be capable of distinguishing between what it ought and ought not to do, and of making experiences or, otherwise stated, of recording impressions which will deffinitely affect its subsequent actions. In fact I have already conceived such a plan.

Although I evolved this invention many years ago and explained it to my visitors very frequently in my laboratory demonstrations, it was not until much later, long after I had perfected it, that it became known, when, naturally enough, it gave rise to much discussion and to sensational reports.

But the true significance of this new art was not grasped by the majority, nor was the great force of the underlying principle recognized. As nearly as I could judge from the numerous comments which then appeared, the results I had obtained were considered as entirely impossible. Even the few who were disposed to admit the practicability of the invention saw in it merely an automobile torpedo, which was to be used for the purpose of blowing up battleships, with doubtful success. . . .

But the art I have evolved does not contemplate merely the change of direction of a moving vessel; it affords means of

absolutely controlling in every respect, all the innumerable translatory movements, as well as the operations of all the internal organs, no matter how many, of an individualized automaton.

Tesla, in an unpublished statement, prepared fifteen years later, recorded his experience in developing automata, and his unsuccessful effort to interest the war Department, and likewise commercial concerns, in his wirelessly controlled devices.

The idea of constructing an automaton, to bear out my theory, presented itself to me early but I did not begin active work until 1893, when I started my wireless investigations. During the succeeding two or three years, a number of automatic mechanisms, actuated from a distance by wireless control, were constructed by me and exhibited to visitors in my laboratory.

In 1896, however, I designed a complete machine capable of a multitude of operations, but the consummation of my labors was delayed until later in 1897. This machine was illustrated and described in my article in the Century Magazine of June 1900, and other periodicals of that time and, when first shown in the beginning of 1898, it created a sensation such as no other invention of mine has ever produced.

In November 1898, a basic patent on the novel art was granted to me, but only after the Examiner-in-Chief had come to New York and witnessed the performance, for what I claimed seemed unbelievable. I remember that when later I called on an oficial in Washington, with a view of offering the invention to the Government, he burst out in laughter upon my telling him what I had accomplished. Nobody thought then that there was the faintest prospect of perfecting such a device.

It is unfortunate that in this patent, following the advice of my attorneys, I indicated the control as being effected through the medium of a single circuit and a well-known form of detector, for the reason that I had not yet secured protection on my methods and apparatus for individualization. As a matter of fact, my boats were controlled through the joint action of several circuits and interference of every kind was excluded. Most generally I employed receiving circuits in the form of loops, including

condensers, because the discharges of my high tension transmitter ionized the air in the hall so that even a very small &aerial would draw electricity from the surrounding atmosphere for hours.

Just to give an idea, I found, for instance, that a bulb 12" in diamater, highly exhausted, and with one single terminal to which a short wire was attached, would deliver well on to one thousand successive flashes before all charge of the air in the laboratory was neutralized. The loop form of receiver was not sensitive to such a disturbance and it is curious to note that it is becoming popular at this late date. In reality it collects much less energy than the aerials or a long grounded wire, but it so happens that it does away with a number of defects inherent to the present wireless devices.

In demonstrating my invention before audiences, the visitors were requested to ask any questions, however involved, and the automaton could answer them by signs. This was considered magic at that time but was extremely simple, for it was myself who gave the replies by means of the device.

At the same period another larger telautomatic boat was constructed. It was controlled by loops having several turns placed in the hull, which was made entirely water tight and capable of submergence. The apparatus was similar to that used in the first with the exception of certain special features I introduced as, for example, incandescent lamps which afforded a visible evidence of the proper functioning of the machine and served for other purposes.

These automata, controlled within the range of vision of the operator, were, however, the first and rather crude steps in the evolution of the Art of Telautomatics as I had conceived it. The next logical improvement was its application to automatic mechanisms beyond the limits of vision and at great distances from the center of control, and I have ever since advocated their employments as instruments of warfare in preference to guns. The importance of this now seems to be recognized, if I am to judge from casual announcements through the press of achievements which are said to be extraordinary but contain no merit of novelty whatever.

In an imperfect manner it is practicable, with the existing wireless plants, to launch an aeroplane, have it follow a certain approximate course, and perform some operation at a distance of many hundreds of miles. A machine of this kind can also be mechanically controlled in several ways and I have no doubt that it may prove of some usefulness in war. But there are, to my best knowledge, no instrumentalities in existence today with which such an object could be accomplished in a precise manner. I have devoted years of study to this matter and have evolved means, making such and greater wonders easily realizable.

As stated on a previous occasion, when I was a student at college I conceived a flying machine quite unlike the present ones. The underlying principle was sound but could not be carried into practice for want of a prime-mover of suficiently great activity. In recent years I have successfully solved this problem and am now planning aerial machines devoid of sustaining planes, ailerons, propellers and other external attachments, which will be capable of immense speeds and are very likely to furnish powerful arguments for peace in the near future. Such a machine, sustained and propelled entirely by reaction, can be controlled either mechanically or by wireless energy. By installing proper plants it will be practicable to project a missile of this kind into the air and drop it almost on the very spot designated which may be thousands of miles away. But we are not going to stop at this.

Tesla is here describing--nearly fifty years ago--the radio-controlled rocket, which is still a confidential development of world war II, and the rocket bombs used by the Germans to attack England. The rocket-type airship is a secret which probably died with Tesla, unless it is contained in his papers sealed by the Government at the time of his death. This, however, is unlikely, as Tesla, in order to protect his secrets, did not commit his major inventions to paper, but depended on an almost infallible memory for their preservation.

"Telautomata," he concluded, "will be ultimately produced, capable of acting as if possessed of their own intelligence and their advent will create a revolution. As early as 1898 I proposed to representatives of a large manufacturing concern the construction and public exhibition of an automobile carriage which, left to itself, would perform a great variety of operations involving something akin to

judgment. But my proposal was deemed chimerical at that time and nothing came from it."

Tesla, at the Madison Square Garden demonstration in 1898 which lasted for a week, presented to the world, then, two stupendous developments, either of which alone would have been too gigantic to have been satisfactorily assimilated by the public in a single presentation. Either one of the ideas dimmed the glory of the other.

This first public demonstration of wireless, the forerunner of modern radio, in the amazing stage of development to which Tesla carried it, at this early date, was too tremendous a project to be encompassed within a single dramatization. In the hands of a competent public-relations councillor, or publicity man, as he was called in those days (but the employment of one was utterly abhorrent to Tesla), this demonstration would have been limited to the wireless aspect alone, and would have included just a simple two-way sending-and-receiving set for the transmission of messages by the Morse dots and dashes. Suitably dramatized, this would have been a suficient thrill for one show. At a subsequent show he could have brought in the tuning demonstration which would have shown the selective response of each of a series of coils, indicated by his strange-looking vacuum-tube lamps. The whole story of just the tuning of wireless circuits and stations to each other was too big for any one demonstration. An indication of its possibilities was all the public could absorb.

The robot, or automaton, idea was a new and an equally stupendous concept, the possibilities of which were not lost, however, on clever inventors; for it brought in the era of the modern labor-saving device--the mechanization of industry on a mass-production basis.

Using the Tesla principles, John Hays Hammond, Jr. developed an electric dog, on wheels, that followed him like a live pup. It was motor operated and controlled by a light beam through selenium cells placed behind lenses used for eyes. He also operated a yacht, entirely without a crew, which was sent out to sea from Boston harbor and brought back to its wharf by wireless control.

A manless airplane was developed toward the close of the First world war. It rose from the ground, flew one hundred

miles to a selected target, dropped its bombs, and returned to its home airport, all by wireless control. It was also developed so that on a signal from a distant radio station the plane would rise into the air, choose the proper direction, fly to a city hundreds of miles away and set itself down in the airport at that city. This Tesla-type robot was developed in the plant of the Sperry Gyroscope Company, where Elmer Sperry invented a host of amazing mechanical robots controlled by gyroscopes, such as the automatic pilots for airplanes and for ships.

All of the modern control devices using electronic tubes and electric eyes that make machines seem almost human and enable them to perform with superhuman activity, dependability, accuracy and low cost, are children of Tesla's robot, or automaton. The most recent development, in personalized form, was the mechanical man, a metal human monster giant, that walked, talked, smoked a cigarette, and obeyed spoken orders, in the exhibit of the Westinghouse Electric and Manufacturing Company at the New York world's Fair. Robots have been used, as well, to operate hydroelectric powerhouses and isolated substations of powerhouses.

In presenting this superabundance of scientific discovery in a single demonstration, Tesla was manifesting the superman in an additional role that pleased him greatly--that of the man magnificent. He would astound the world with a superlative demonstration not only of the profundity of the accomplishments of the superman, but, in addition, of the prolific nature of the mind of the man magnificent who could shower on the world a superabundance of scientific discoveries.

ELEVEN

TESLA was now ready for new worlds to conquer. After presenting to the public his discoveries relating to wireless signaling or the transmission of intelligence, as he called it, Tesla was anxious to get busy on the power phase: his projected world-wide distribution of power by wireless methods.

Again Tesla was faced with a financial problem or, to state the matter simply, he was broke. The $40,000 which was paid for the stock of the Nikola Tesla Company by Adams had been spent. The company had no cash on hand; but it held patents worth many millions if they had been handled in a practical way. A gift of $10,000 from John Hays Hammond, the famous mining engineer, had financed the work leading up to the Madison Square Garden wireless and robot demonstration.

Tesla had built ever larger and more powerful oscillators in his Houston Street laboratory. when he constructed one that produced 4,000,000 volts he reached beyond the limits in which high voltage could be handled within a city building. The sparks jumped to the walls, floors and ceilings. He needed a larger open space. He wanted to build vastly larger coils. He dreamed of a tremendous structure he would like to build somewhere in the open country spaces. He felt certain his wireless patents would prove tremendously valuable in a short time, and he would then have all the money he needed to build his laboratory. But he had already progressed to the point at which further advancement demanded the use of such a building--and he was broke. A loan of $10,000 offered by his friend Crawford, of the dry goods firm of Simpson and Crawford, took care of immediate needs.

Leonard E. Curtis, of the Colorado Springs Electric Company, a great admirer of Tesla, when he heard of Tesla's plan to conduct experiments on a gigantic scale, invited him to locate his laboratory at Colorado Springs, where he would provide him with the necessary land and all the electric power he needed for his work.

Col. John Jacob Astor, owner of the waldorf-Astoria, held his famous dining-room guest in the highest esteem as a personal friend, and kept in close touch with the progress of his investigations. when he heard that his researches were being halted through lack of funds, he made available to Tesla the $30,000 he needed in order to take advantage of Curtis' offer and build a temporary plant at Colorado Springs. Tesla arrived in Colorado in May, 1899, bringing with him some of his laboratory workers, and accompanied by an engineering associate, Fritz Lowenstein.

while Tesla was making experiments on natural lightning and other subjects in his mountain laboratory, the construction work on his high-power transmitting apparatus was being

rushed. He gave his personal supervision to even the finest details of every piece of apparatus. He was working in a virgin field. None had gone before him to pave the way or gain experience that would be helpful to him in designing his experiments or his machines. He was entirely on his own, working without human guidance of any kind, exploring a field of knowledge far beyond that which anyone else had reached. He had previously astonished the world in developing a system of power transmission in which pressures of tens of thousands of volts were used; now he was working with millions of volts, and no one knew what would happen when such tremendous potentials were produced. He believed, however, that he would make his own magnificent polyphase system obsolete by creating a better one.

In about three months after his arrival at Colorado Springs the building with its fantastic shapes, towers and masts was completed, and the giant oscillator with which the principal experiment was to be made was ready for operation.

The wild, rugged, mountainous terrain of Colorado, in which Tesla set up his laboratory, is a natural generator of tremendous electrical activity, producing lightning discharges of a magnitude and intensity probably not equaled anywhere else on earth. Overwhelming bolts from both earth and sky flashed with frightening frequency during the almost daily lightning storms. Tesla made a very detailed study of natural lightning while his apparatus, which would imitate it, was being constructed. He learned a great deal about the characteristics of the various kinds of discharges.

The gods of the natural lightning may have become a bit jealous of this individual who was undertaking to steal their thunder, as Prometheus had stolen fire, and sought to punish him by wrecking his fantastic looking structure. It was badly damaged, and narrowly escaped destruction, by a bolt of lightning, not one that made a direct hit but one that struck ten miles away.

The blast hit the laboratory at the exact time, to the split second, that Tesla predicted it would. It was caused by a tidal wave of air coming from a particular type of lightning discharge. Tesla tells the story in an unpublished report. He stated:

I have had many opportunities for checking this value by observation of explosions and lightning discharges. An ideal case of this kind presented itself at Colorado Springs in July 1899 while I was carrying on tests with my broadcasting power station which was the only wireless plant in existence at that time.

A heavy cloud had gathered over Pikes Peak range and suddenly lightning struck at a point just ten miles away. I timed the flash instantly and upon making a quick computation told my assistants that the tidal wave would arrive in 48.5 seconds. Exactly with the lapse of this time interval a terrific blow struck the building which might have been thrown off the foundation had it not been strongly braced. All the windows on one side and a door were demolished and much damage done in the interior.

Taking into account the energy of the electric discharge and its duration, as well as that of an explosion, I estimated that the concussion was about equivalent to that which might have been produced at that distance by the ignition of twelve tons of dynamite.

The experimental station which Tesla erected was an almost square barnlike structure nearly one hundred feet on each side. The sides were twenty-five feet high, and from them the roof sloped upward toward the center. From the middle of the roof rose a skeleton pyramidal tower made of wood. The top of this tower was nearly eighty feet above the ground. Extensions of the slanting roof beams extended outward to the ground to serve as flying buttresses to reinforce the tower. Through the center of the tower extended a mast nearly two hundred feet high, at the top of which was mounted a copper ball about three feet in diameter. The mast carried a heavy wire connecting the ball with the apparatus in the laboratory. The mast was arranged in sections so that it could be disjointed and lowered.

There were many pieces of apparatus in the building, and many forms and sizes of his Tesla coils, or high-frequency current transformers. The principal device was his "magnifying transmitter." This was merely a very large Tesla coil. A circular fence-like wall seventy-five feet in diameter was built in the large central room of the structure, and on this were wound the turns of the giant primary coil of the magnifying transmitter. The secondary

was a coil about ten feet in diameter, of about seventy-five turns of wire wound on a cylindrical skeletonized framework of wood. It had a vertical length of about ten feet and was mounted in the center of the room several feet above the floor. In the center of this coil was the bottom part of the mast. The roof above this portion of the room could be slid outward in two sections, so that no material came within a long distance of the mast and its wire conductor within the lower third of the distance above the ground.

One of the first problems Tesla sought to solve when he began his researches in the mountains of Colorado was whether the earth was an electrically charged body. Nature is usually very generous in her response when scientists ask her, in their experiments, questions of first magnitude. Tesla not only received a very satisfactory answer to his question but in addition a revelation of tremendous importance, an unveiling of a secret of Nature's operations which places in the hands of man a means of manipulating electrical forces on a terrestrial scale.

It was desirable for Tesla to learn whether the earth was electrically charged for the same reason that a violinist would want to know whether the strings of his instrument lay loose and inert across the bridge or whether they were tense and taut so that they would produce a musical note if plucked, or a football player would want to know if the pigskin were inflated or limp.

If the earth were uncharged, it would act as a vast sink into which electricity would have to be flowed in tremendous amounts to bring it to the state in which it could be made to vibrate electrically. An uncharged earth would somewhat complicate Tesla's plans. He quickly discovered that the earth is charged to an extremely high potential and is provided with some kind of a mechanism for maintaining its voltage. It was while determining this fact that he made his second big discovery.

Tesla made the first announcement of his discovery shortly after his return to New York in an amazing article in the Century of June, 1900, but the story is best told by Tesla in an article in the Electrical world and Engineer, May 5, 1904:

In the middle of June, while preparations for other work were going on, I arranged one of my receiving transformers with the view of determining in a novel manner, experimentally, the electrical potential of the globe and studying its periodic and casual fluctuations. This formed part of a plan carefully mapped out in advance

A highly sensitive, self restorative device, controlling a recording instrument, was included in the secondary circuit, while the primary was connected to the ground and the secondary to an elevated terminal of adjustable capacity. The variations of electrical potential gave rise to electrical surgings in the primary; these generated secondary currents, which in turn affected the sensitive device and recorder in proportion to their intensity.

The earth was found to be, literally, alive with electrical vibrations, and soon I was deeply absorbed in this interesting investigation. No better opportunity for such observations as I intended to make could be found anywhere.

Colorado is a country famous for the natural displays of electric force. In that dry and rarefied atmosphere the sun's rays beat on objects with fierce intensity. I raised steam to a dangerous pressure, in barrels filled with concentrated salt solution and the tinfoil coating of some of my elevated terminals shrivelled in the fiery blaze. An experimental high tension transformer, carelessly exposed to the rays of the setting sun, had most of its insulating compound melted and was rendered useless.

Aided by the dryness and rarefaction of the air, the water evaporates as in a boiler, and static electricity is generated in abundance. Lightning discharges are, accordingly, very frequent and sometimes of inconceivable violence. On one occasion approximately 12,000 discharges occurred within two hours, and all in the radius of certainly less than 50 kilometers [about 30 miles] from the laboratory. Many of them resembled gigantic trees of fire with the trunks up or down. I never saw fireballs, but as a compensation for my disappointment I succeeded later in determining the mode of their formation and producing them artificially.

In the latter part of the same month I noticed several times that my instruments were affected stronger by discharges taking place at great distances than by those

near by. This puzzled me very much. what was the cause? A number of observations proved that it could not be due to differences in the intensity of individual discharges and I readily ascertained that the phenomenon was not the result of a varying relation between the periods of my receiving circuits and those of the terrestrial disturbances.

One night as I was walking home with an assistant, meditating over these experiences, I was suddenly staggered by a thought. Years ago when I wrote a chapter of my lecture before the Franklin Institute and the National Electric Light Association, it had presented itself to me, but I dismissed it as absurd and impossible. I banished it again. Nevertheless, my instinct was aroused and somehow I felt that I was nearing a great revelation.

It was on the 3rd of July [1899]--the date I shall never forget--when I obtained the first decisive experimental evidence of a truth of overwhelming importance for the advancement of humanity.

A dense mass of strongly charged clouds gathered in the west and toward evening a violent storm broke loose which, after spending much of its fury in the mountains, was driven away with great velocity over the plains. Heavy and long persistent arcs formed almost in regular time intervals. My observations were now greatly facilitated and rendered more accurate by the experiences already gained. I was able to handle my instruments quickly and I was prepared. The recording apparatus being properly adjusted, its indications became fainter and fainter with increasing distance of the storm, until they ceased altogether.

I was watching in eager expectation. Surely enough, in a little while the indications again began, grew stronger and stronger, and, after passing through a maximum, gradually decreased and ceased once more. Many times, in regularly recurring intervals, the same actions were repeated until the storm which, as evident from simple computations, was moving with nearly constant speed, had retreated to a distance of about 300 kilometers [about 180 miles]. Nor did these strange actions stop then, but continued to manifest themselves with undiminished force.

Subsequently similar observations were also made by my assistant, Mr. Fritz Lowenstein, and shortly afterward several admirable opportunities presented themselves which

brought out, still more forcibly and unmistakably, the true nature of the wonderful phenomenon. No doubt whatever remained: I was observing stationary waves.

As the source of the disturbances moved away the receiving circuit came successively upon their nodes and loops. Impossible as it seemed, this planet, despite its vast extent, behaved like a conductor of limited dimensions. The tremendous significance of this fact in the transmission of energy by my system had already become quite clear to me.

Not only was it practicable to send telegraphic messages to any distance without wires, as I recognized long ago, but also to impress upon the entire globe the faint modulations of the human voice, far more still, to transmit power, in unlimited amounts to any terrestrial distance and almost without loss.

To get a more familiar picture of the problem that Tesla tackled in seeking to determine if the earth were charged and if it could be set into electrical vibration, one can visualize the difference between a bath tub that is empty and one that contains water. The uncharged earth would be like an empty tub; the charged earth like one containing water. It is easy to produce waves in the tub containing the water. By placing one's hand in the water and moving it back and forth, lengthwise, a short distance at the right rhythm, the water is soon rushing back and forth in a wave whose amplitude grows at a tremendously rapid rate until, if the hand motion is continued, the water may splash as high as the ceiling.

The earth can be visualized as an extremely large container holding a fluid; and in the center is a small plunger arrangement which can be moved tip and down a short distance in the proper rhythm. The waves travel to the edge of the container and are reflected back to the center, from which they again go outward re-enforced by the movement of the plunger.

The reaction between the outgoing and incoming waves, both in resonance with the medium in which they are traveling, causes stationary waves to be produced on the water, the surface having the appearance of a single series of waves frozen in a fixed position.

In Tesla's experiments the lightning discharges that played the part of the plunger causing the waves were moving rapidly to the eastward, and they carried the whole series of fixed, or stationary, waves with them. The measuring device remained fixed so the wave series, with its loops and nodes, moved past it, causing the measured potentials to rise and fall.

The experiment not only demonstrated that the earth was filled with electricity, but that this electricity could be disturbed so that rhythmic vibrations could be struck, resonance could be produced, causing effects of tremendous magnitude. Soldiers marching in unison across a bridge and wrecking it by the resulting vibration would again be a case in point.

Tesla produced the spectacular effects of extremely high potentials and high frequency by producing electrical resonance in his circuits--by tuning the electricity--and now he had discovered that he would be able to produce, easily, the same effect in the earth as if it were a single condenser and coil combined, a pure electrical resonating unit, by charging and discharging it rhythmically with his high-frequency, high-potential oscillations.

In this magnificent experiment Tesla the superman was at his best; the boldness of his undertaking fired the imagination, and the success he achieved should have earned for him undying fame.

Eventually, the giant coils with their banks of condensers and other apparatus in, the Colorado laboratory were ready for use in full-scale experiments. Every piece of equipment was thoroughly inspected and tested by Tesla and the moment had finally arrived for the critical test of the highest voltage experiment that had ever been made. He expected to top his own earlier records one hundred times over, and to produce tens of thousands of times higher voltages than ever had been produced in the high-voltage transmission lines at Niagara Falls.

There was not the faintest shadow of doubt in Tesla's mind as to whether his giant oscillator would work. He knew it would work, but he also knew that he was going to produce millions of volts and tremendously heavy currents; and neither he nor anyone else knew how these terrific explosions of electrical energy would act. He knew that he

had planned the experiment so that the first bolts of man-made lightning ever created would shoot from the top of the 200-foot-tall mast.

Tesla asked Kolman Czito, who had worked with him for many years in his laboratories in New York, to preside at the switch-board through which current was brought into the laboratory from the powerhouse of the Colorado Springs Electric Company by an overhead transmission line two miles long.

"when I give you the word," said Tesla to Czito, "you close the switch for one second--not longer."

The inventor took a position near the door of the laboratory from which he could view the giant coil in the center of the great barnlike room--but not too close to it, for a stray bolt of his own lightning might inflict a painful burn. From the point where he stood he could look upward toward the open roof and see the three-foot copper ball on top of the slender 200-foot mast that had its base in the center of the cagelike secondary coil. A quick visual survey of the situation, and Tesla gave the signal--"Now."

Czito jammed home the switch and as quickly pulled it out. In that brief interval the secondary coil was crowned with a mass of hairlike electrical fire, there was a crackling sound in various parts of the room and a sharp snap far overhead.

"Fine," said Tesla, "the experiment is working beautifully. we will try it again in exactly the same way. Now!"

Again Czito jammed home the switch for a second and opened it. Again the plumes of electrical fire came from the coil, minor sparks crackled in all parts of the laboratory and the very sharp snap came through the open roof from far overhead.

"This time," said Tesla, "I am going to watch the top of the mast from the outside. when I give you the signal I want you to close the switch and leave it closed until I give you the signal to open it." So saying, he started for the near-by open door.

Reaching a point outside from which he could see the copper ball on top of the needlelike mast, Tesla called through the door, "Czito, close the switch--Now!"

Czito again jammed the switch closed and jumped back--but held his arm extended to yank open the blades quickly should he receive an emergency signal. Nothing much had happened on the quick-contact closing, but now the apparatus would be given an opportunity to build up its full strength and no one knew what to expect. He knew that the apparatus would draw a very heavy current through a primary coil that looked like a "short circuit," and he knew that short circuits could be very destructive if the current was allowed to continue to flow. The switchboard could become a scene of interesting activity if any thing let go. Czito expected the quick flash and explosive blast of a short circuit a second or two after the switch was closed. Several seconds passed with no short circuit.

As soon as the switch was closed there came again the same crackling sound, the same snap high in the air that he had heard before. Now it was followed by a tremendous upsurge of sound. The crackling from the coil swelled into a crescendo of vicious snaps. From above the roof the original staccato snap was followed by a sharper one--and by another that was like the report of a rifle. The next was still louder. They came closer together like the rattle of a machine gun. The bang high in the air became tremendously louder; it was now the roar of a cannon, with the discharges rapidly following each other as if a gigantic artillery battle was taking place over the building. The sound was terrifying and the thunder shook the building in most threatening fashion.

There was a strange ghostly blue light in the great barnlike structure. The coils were flaming with masses of fiery hair. Everything in the building was spouting needles of flame, and the place filled with the sulphurous odor of ozone, fumes of the sparks, which was all that was needed to complete the conviction that hell was breaking loose and belching into the building.

As Czito stood near the switch he could feel and see the sparks jump from his fingers, each pricking like a needle stuck into his flesh. He wondered if he would be able to reach for the switch and turn off the power that was creating this electrical pandemonium--would the sparks

become longer and more powerful if he approached the switch? Must this head-splitting racket go on forever? It's getting worse, that tremendous ear-wrecking bang, bang, bang overhead. why doesn't Tesla stop it before it shakes down the building? Should he open the switch of his own accord? Maybe Tesla has been hit, perhaps killed, and can't give orders to open the switch!

It seemed to Czito that the demonstration had been going on for an hour but as a matter of fact it had lasted thus far for only a minute; nevertheless, a tremendous amount of activity had been crowded into that short space of time.

Outside stood Tesla, properly attired in cutaway coat and black derby hat for the auspicious occasion, his slender six-foot-two figure bearing signs of close relationship to the mastlike rod sticking out of his bizarre barnlike structure. His height was increased by a one-inch-thick layer of rubber on the soles and heels of his shoes, used as electrical insulation.

As he gave the switch-closing "Now" signal to Czito, he turned his eyes heavenward to the ball on top of the mast. He had hardly spoken when he saw a short hairlike spark dart from the ball. It was only about ten feet long, and thin. Before he had time to be pleased, there was a second and a third and a fourth spark, each longer, brighter and bluer than its predecessor.

"Ah!" ejaculated Tesla, forgetting to close his mouth that was widely opened for a shout. He clenched his hands for joy and raised them skyward toward the top of the mast.

More sparks! Longer and longer! Ten, twenty, thirty, forty, fifty, sixty, seventy, eighty feet. Brighter and bluer! Not thread-like sparks now but fingers of fire. Wriggling rods of flame that lashed viciously into the heavens. The sparks were now as thick as his arm as they left the ball.

Tesla's eyes almost popped out of his head as he saw full-fledged bolts of lightning darting into the air, accompanied by a barrage of tremendous crashes of thunder. Those lightning bolts were now half again the length of the building, more than 135 feet long, and the thunder was being heard in Cripple Creek fifteen miles away.

Suddenly--silence!

Tesla rushed into the building.

"Czito! Czito! Czito! why did you do that? I did not tell you to open the switch. Close it again quickly!"

Czito pointed at the switch. It was still closed. He then pointed at the voltmeter and ammeter on the switchboard. The needles of both of them registered zero.

Tesla sized up the situation instantly. The incoming wires carrying power to the laboratory were "dead."

"Czito," he snapped, "call up the powerhouse quickly. They must not do that. They have cut off my power".

The telephone call was put through to the powerhouse. Tesla grabbed the phone and shouted into it:

"This is Nikola Tesla. you have cut off my power! you must give me back power immediately! you must not cut off my power."

"Cut off your power, nothing," came the gruff reply from the other end of the line. "you've thrown a short circuit on our line with your blankety-blank-blank experiments and wrecked our station. you've knocked our generator off the line and she's now on fire. you won't get any more power!"

Tesla had built his apparatus substantially, so that it would be able to carry the tremendously heavy currents he expected to draw off the line. while his own equipment was able to stand what amounted to a heavy short circuit, he had overloaded the generator at the Colorado Springs Electric Company powerhouse, which tried manfully to carry the added burden--but the heavy surge of current was too much for the dynamo that was not designed to stand such heavy overloads. Its wires became hotter and hotter, and finally the insulation took fire and the copper wire in the armature coils melted like wax, opening its circuits so that it ceased to generate electricity.

The powerhouse had a second, standby, generator which was started up in a short time. Tesla was insistent that he be supplied with current from this machine as soon as it was running, but his demand was refused. In the future, he was told, he would be supplied with current from a dynamo

operated independently from the one supplying the Company's regular customers. The independent dynamo, he was told, would be the one that was already burned out--and he would get no service until it was repaired. Tesla offered to pay the cost of an extra-special rush job on the repairs if he were permitted to handle the work. Alternating-current dynamos were no mystery to him. Taking his workers from the laboratory to the powerhouse he soon had the repair job under way, and in less than a week the dynamo was again operating.

A lightning stroke produces its spectacular pyrotechnics and earthvibrating effects with less than a nickel's worth of electricity--at a five-cent-a-kilowatt hour rate, which is somewhat less than the average household rate for current. It consists of tremendously heavy currents, many thousands of amperes at millions of volts, but it lasts only a few millionths of a second. If supplied with this "nickel's worth" of current continuously, the lightning flash would last indefinitely.

Tesla, in his Colorado Springs laboratory, was pumping a steady flow of current worth, at the above rate, about $15.00 an hour into the earth. In an hour he charged the earth with several hundred times as much electrical energy as is contained in a single lightning stroke. Owing to resonance phenomena, he could build up electrical effects in the earth greatly exceeding those of lightning since it was only necessary, once resonance was established, to supply energy equal to frictional losses, in order to maintain this condition.

In describing his work with the giant oscillator, Tesla, using conservative estimates of his results, stated in his article in the Century Magazine of June, 1900:

However extraordinary the results shown may appear, they are but trifling compared with those attainable by apparatus designed on these same principles. I have produced electrical discharges the actual path of which, from end to end, was probably more than 100 feet long; but it would not be dificult to reach lengths 100 times as great.

I have produced electrical movements occurring at the rate of approximately 100,000 horsepower, but rates of one, five or ten million horsepower are easily practicable. In these

experiments effects were developed incomparably greater than ever produced by any human agencies, and yet these results are but an embryo of what is to be.

The method used by Tesla to set the earth in electrical oscillation is the electrical counterpart of the mechanical device previously described, the plunger bobbing up and down at the right rhythm that created the stationary waves in the water.

Tesla used a stream of electrons which were pumped into and drawn out of the earth at a rapid rhythmic rate. At the time the experiments were made, the electron still was not known to be the fundamental atom of electricity, so the operation was spoken of simply as the flow of electricity.

The pumping operation was carried on at a rate of 150,000 oscillations per second. These would produce electrical pulsations with a wavelength of 2,000 meters (about 6,600 feet).

when the moving waves expanded outward from Colorado Springs, they traveled in all directions in ever increasing circles until they passed over the bulge of the earth, and then in ever smaller circles and with increasing intensity converged on the diametrically opposite point of the earth, a trifle to the west of the two French Islands, Amsterdam and St. Paul, in the area between the Indian and Antarctic Oceans midway between the southern tip of Africa and the southwest corner of Australia. Here a tremendous electrical south pole was built up, marked by a wave of great amplitude that rose and fell in unison with Tesla's apparatus at its north pole in Colorado Springs. As this wave fell, it sent back an electrical echo which produced the same effect at Colorado Springs. Just as it arrived back at Colorado Springs, the oscillator was working to build up a wave that would re-enforce it and send it back more powerfully than before to the antipode to repeat the performance.

If there were no losses in this operation--if the earth were a perfect electrical conductor, and there were no other sources of resistance--this resonance phenomenon would build up to a destructive action of gigantic proportions, even with the charging source of only about 300 horsepower which Tesla used. Voltages of gigantic magnitudes would be built up. Charged particles of matter

would be hurled outward from the earth with vast energies, and eventually even the solid matter of the earth would be affected and the whole planet disintegrated. Pure resonance, however, is not attainable. Tesla frequently stressed the fortunate nature of this fact; for otherwise disastrous results could be produced by small amounts of energy. The electrical resistance of the globe would prevent the attainment of pure resonance; but practical resonance can be attained with safety by supplying continuously the amount of energy lost in resistance--and this supplies perfect control of the situation.

with the earth set in electrical oscillation, a source of energy is provided at all spots on the earth. This could be drawn off and made available for use by a suitable simple apparatus which would contain the same elements as the tuning unit in a radio set, but larger (a coil and a condenser), a ground connection and metal rod as high as a cottage. Such a combination would absorb, at any point on the earth's surface, energy from the waves rushing back and forth between the electrical north and south poles created by the Tesla oscillators. No other equipment would be needed to supply light to the home, provided with Tesla's simple vacuum-tube lamps, or to produce heating effects. (For the operation of ordinary-type motors, a frequency changer would be needed. Tesla, indeed, developed ironless motors that would operate on high-frequency currents, but they could not compete in efficiency with motors operated on low-frequency currents. Frequency transformation, however, is now a very practical operation.)

The apparatus that Tesla used to charge the earth is very simple in principle. In its elementary form it consists of a circuit containing a large coil and condenser of the correct electrical dimensions to give it the desired frequency of oscillation, a source of electric current for energizing the circuit, and a step-up transformer, also tuned, for increasing the voltage.

The current of a few hundred volts obtained from the powerhouse was stepped up by an ordinary iron box transformer to more than 30,000 volts and at this potential was fed into a condenser which, when filled, discharged into the coil connected across its terminals. The rate of the back-and-forth surge of current from condenser into coil and coil back to condenser, in endless repetition, is determined by the capacity of the condenser for holding

current and the length, or inductance, of the coil through which the discharge must travel. An arc between the joint terminals of condenser and coil completed the free oscillating path of the high-frequency current.

In an oscillating circuit the current is at zero value at the start of each cycle, rises to a high value and drops to zero again at the end of each half cycle. The voltage does the same. Both build up to high values at the midpoint of each half cycle.

The coil through which the current flows is surrounded by a magnetic field produced by the current. with heavy current flows, these fields can become very extensive and of high intensity, particularly at the midpoint in each half cycle.

The primary coil, or energizing circuit of Tesla's oscillator, consisted of a number of turns of heavy wire mounted on a circular fence eighty feet in diameter in the great hall of his laboratory. In the space within this fenced enclosure the magnetic field built up to a crescendo of intensity with each half cycle of the current in the primary coil. As the magnetic circles of force moved to the center of the enclosure, they became more concentrated and built up a high density of energy in space in this region.

Centered in this area was another coil perfectly tuned to vibrate electrically in resonance with the crescendo of energy in which it was immersed 300,000 times per second. This coil--about ten feet in diameter, consisting of nearly one hundred turns on a cagelike frame about ten feet high--in responding resonantly, built up potentials with maximum values of more than 100,000,000 volts. No scientist has ever succeeded in building up currents with even one tenth of this potential since that time.

when the first surge of magnetic energy crashed into this coil, it caused a downward avalanche of electrons from the coil into the earth, thereby inflating the earth electrically and raising its potential. The next surge of magnetic energy was of the opposite polarity and caused a tidal wave of electrons from the earth to rush through the coil and upward to the terminal of the coil, which was the metal ball mounted on the mast 200 feet high.

The downward flood of electrons was spread over the wide area of the earth but the return upward flood was

concentrated on a small metal ball on top of the mast, upon which tremendously high potentials developed. The electrons on the ball were under explosive electrical pressure and were forced to escape. They made a spearpoint of attack on the surrounding air, broke a small opening, and through this rushed uncounted billions of billions of electrons, their mad stampede rendering their path through the air incandescent for a distance of scores of feet--in other words, producing a flash of lightning.

Having thus succeeded in making the earth oscillate as if it were a piece of laboratory apparatus, Tesla would now proceed to test the practical applications of his unique method of worldwide power transmission. (In describing the mode of transmission of his oscillating currents through the earth, Tesla claimed the path of the discharge was from his station directly through the center of the earth and in a straight line to the antipode, the return being by the same route, and that the current on this straight-line path traveled at its normal velocity--the speed of light. This flow, he declared, produced an accompanying surface flow of current, which was in step at the starting point and when they rejoined at the antipode; and this necessitated higher velocities in flowing over the surface of the earth. The surface velocities would be infinite at each of the antipodes, and would decrease rapidly until at the equatorial region of this axis it would travel at the normal velocity of the currents.)

The full story of Tesla's accomplishments at Colorado Springs has never been told and never will be told. He carried the records, engraved on his almost infallible memory, with him when he died. Fritz Lowenstein, a competent electrical engineer, interested in high-frequency currents, was his assistant at Colorado Springs. Tesla, however, took neither Lowenstein nor anyone else into his confidence.

It was not necessary for Tesla to write the detailed records of experiments which scientists and engineers make, as routine, of their laboratory tests. He possessed a most remarkable memory, supplemented by his strange power of visualizing again, in their full aspects of reality, any past events. He needed no reference books, for he could quickly derive any desired formula from basic concepts; and he even carried a table of logarithms in his head. For these reasons there is a great lack of written records on

his experiments, and what is recorded is mostly of a minor nature.

Fundamental facts of great importance that he intended to develop later in a practical manner were stored in the archives of his mind to await the time when he would be able to present a practical working model of the inventions based on his discoveries. He had no fear that he would be anticipated by others because he was so far in advance of his contemporaries that he could safely bide his time for developing his ideas.

It was Tesla's intention to make the development of his discoveries a one-man job. He was completely confident, at this time, of his ability to live a century and a quarter, and to be actively engaged in creative experimental work up to at least his one-hundredth birthday, at which time he would give serious thought to the task of writing his biography and a complete record of his experimental work. Up to almost his eightieth year he adhered to this plan without doubt as to its ultimate consummation.

As a result of this most unfortunate design, technical details are lacking concerning the principal discoveries made at Colorado Springs. By piecing together the fragmentary material published in a number of publications, however, it appears evident that Tesla, in addition to experiments with his gigantic current movements, as a means of establishing world-wide broadcasts and making a number of detectors for such use, tested his power transmission system at a distance of twenty-six miles from his laboratory and was able to light two hundred incandescent lamps, of the Edison type, with electrical energy extracted from the earth while his oscillator was operating. These lamps consumed about fifty watts each; and if two hundred were used in the test bank, the energy consumed would be 10,000 watts, or approximately thirteen horsepower.

Transmission of thirteen horsepower wirelessly through the earth for a distance of twenty-six miles can be accepted as a very adequate demonstration of the practicability of Tesla's plan. He claimed an efficiency of higher than 95 per cent for this method of energy transmission; so he could, undoubtedly, with a 300 horsepower oscillator, operate more than a dozen such test demonstrations simultaneously anywhere on the globe. with respect to the latter point he stated, "In this new system it matters

little--in fact, almost nothing--whether the transmission is effected at a distance of a few miles, or of a few thousand miles."

"while I have not as yet," he stated in the Century article of June, 1900, "actually effected a transmission of a considerable amount of energy, such as would be of industrial importance, to a great distance by this new method, I have operated several model plants under exactly the same conditions which will exist in a large plant of this kind, and the practicability of the system is thoroughly demonstrated."

Tesla was insistent, in his latter decades, on the existence, the actuality, the importance and availability of many undisclosed discoveries which he made at Colorado Springs. The author urged upon Tesla two or three times the desirability of making a disclosure, against the ever present danger of an accident that might cause them to be lost to the world; and when the inventor was unimpressed by this possibility, he was asked to permit the author to do something that would bring about their practical development. Tesla was courteously appreciative of the interest manifested, but he was very emphatic in his insistence that he would handle his own affairs as he saw fit, and that he expected shortly to have adequate funds to develop his inventions.

Tesla returned to New York, in the fall of 1899, broke once more, but with the knowledge that his efforts had greatly enriched humanity with important scientific discoveries. yet even more important was the new attitude his work had made possible: man had achieved a method through which he could control his gigantic planet, could look upon this heavenly body from the godlike vantage point in which he could view it as a piece of laboratory apparatus to be manipulated as he willed.

The pictures which Tesla brought back to New York showing the gigantic electrical discharges from his oscillator, and the stories he related of his experiences, created a tremendous impression in his circle of friends. It was then that Robert Underwood Johnson, one of the editors of the Century Magazine, at whose home in Madison Avenue, in the exclusive Murray Hill section, Tesla was a frequent and informal visitor, requested the inventor to write an article telling of his accomplishments.

when the article was written, Johnson returned it, telling Tesla he had served a mess of cold philosophical stones instead of a dish of hot throbbing facts. The inventor had made but scant reference to his recent astounding accomplishments, but developed instead a philosophical system in which the progress of humanity was viewed as purely a mechanical process, activated by the sources of energy available. Three times the article went back to Tesla and was as many times rewritten, despite the high literary quality of the work on each occasion.

The article, which carried the title "The Problem of Increasing Human Energy," created a sensation. Among those whose interest it aroused was J. Pierpont Morgan--a most fortunate circumstance for Tesla. The great financier had a soft spot for geniuses, and Tesla was a perfect example of the species.

Morgan the financier was famous, but Morgan the philanthropist, a greater personality, was to the general public non-existent, so carefully guarded against publicity were his benefactions. In this he was not always completely successful for there are, of necessity, two parties to a benefficence, the giver and the receiver; and the pride and gratitude of the latter can develop into a weak spot in the shell of secrecy.

Tesla was invited to Morgan's home and quickly became a favorite with the family. His record of accomplishment which promised still greater achievements in the future, his pleasant personality, his high moral standards of conduct, his celibate manner of life and his manner of subordinating himself to his work, his boylike enthusiasm, were factors that caused him to be admired not only by Morgan but by all others who knew him well.

Morgan made inquiries of Tesla concerning his financial structure. There were, in those days, a limited number of strong financial groups who were playing a terrestrial game of chess with the world's economic resources; the discoveries of a genius like Tesla might well have a profound effect on the destinies of one or more of these groups, and it would be well for an operator in this field to know more of the inventor's commitments. Undoubtedly, it was a source of surprise and satisfaction to Morgan when he

learned that Tesla was a lone operator and now entirely without funds needed to carry on his researches.

Morgan knew well the inestimable value of Tesla's polyphase alternating-current system. The Niagara development was a Morgan enterprise, and gigantic plans were being builded on its already proven success. The man who laid the scientific and engineering foundation for this new and profitable industrial electrical era was broke and engaged in developing a new source of power distribution. He had supplanted Edison's half-mile power pygmy with a giant having a thousand-mile range, and now he was working on a system which experiments had shown could distribute power wirelessly to the ends of the earth with but a small fraction of the losses of the Edison system in distributing power by wire for half a mile, and could even send current around the earth cheaper than his own alternating-current system could distribute it at a distance of one hundred miles. The economic implications of this development staggered the imagination. what effect would it have on the chess game being played by the world's financial groups?

would the new wireless-distribution-of-power system fit into the existing economic and financial structure? Could it be usefully applied without derangements of greater magnitude than the benefits it would produce? If it were adopted for development, who would be best suited to control it? Could it be controlled in a practical way when any spot on earth would be an outlet for an unlimited reservoir of power for anyone who cared to tap it with a simple device? How could compensation be collected for the service rendered?

These were some of the most obvious aspects of Tesla's world power system that would instantly present themselves to the practical mind of Morgan. In addition, Tesla was proposing a world-wide broadcasting system for distributing news, entertainment, knowledge, and a host of other interesting items. Morgan could well understand the practical aspects of wireless communication in which a charge could be made for transmitting messages from point to point, which was a part of the Tesla system--but, to the inventor's way of thinking, only a minor part compared to the more important broadcasting and power-distribution systems.

A Morgan would understand that ingenious minds could work out some method for placing such world-wide services on a practical profit-paying basis; but this whole new Tesla development had a fantastical aspect that was upsetting to so-called "practical" minds not accustomed to thinking first-magnitude thoughts. The new system might prove more important than the polyphase system which went as a record-breaking bargain to Westinghouse for $1,000,000. Westinghouse was then the most powerful competitor of the Edison system which Morgan had backed, and particularly of the General Electric Company whose financing Morgan had arranged. Although Westinghouse secured a monopoly, means were found for causing him to share it, by a license agreement, with the General Electric Company, so the Morgan company had equal opportunities to exploit the rich market.

History might now be repeating itself with the same inventor, who now had a hypersuperpower system to supplant his own superpower system. In this case Morgan could place himself in a position to seize the monopoly of world power.

The group holding a monopoly control over such a system could develop it, or not develop it, as it saw fit; it could be developed to produce a profit by supplanting or supplementing the satisfactory wire distribution system, or it could be put on the shelf to prevent it from interfering with the existing system. A monopoly of it could prevent any other group from securing it and using it as a club to force concessions from those controlling existing enterprises. Ownership of the Tesla world-power and world-broadcasting patents might well prove an extremely profitable investment even if a very high price were paid for them.

But there was also a more subtle viewpoint. without a strong backing by a powerful source of capital, a world-wide system such as Tesla proposed could never be brought into operating existence. If a powerful group had an opportunity to get in on the ground floor and secure monopoly control and failed to do so, and let it become apparent that this was done intentionally, the effect of such a decision could easily result in scaring off any other groups and effectually preventing anyone from ever backing the system.

Morgan, however, in his contacts with Tesla, brought no commercial or practical aspects into the situation. His

interest was entirely that of a patron seeking to aid a genius to express his creative talents. He made gifts to Tesla to which there were no strings attached. The inventor could use the money as he saw fit. No definite information is available as to the amount of those contributions, but an authoritative source, close to Tesla, fixes the amount which he received within a very short period at $150,000. Later contributions, spread over a long period of years, are believed to have brought the total to double this amount.

Tesla made no secret of Morgan's support. He stated, in the article in the Electrical world and Engineer, published March 5, 1904, describing his wireless power work up to that time:

"For a large part of the work which I have done so far I am indebted to the noble generosity of Mr. J. Pierpont Morgan, which was all the more welcome and stimulating, as it was extended at a time when those, who have since promised most, were the greatest of doubters."

when Morgan made his first contribution, the rumor got into circulation that he was financially interested in the enterprise upon which Tesla now embarked. The resulting situation contained some elements of usefulness for Tesla because of the tremendous prestige of the financier. when, however, Tesla later found himself critically in need of funds, and it became apparent that Morgan was not financially involved in the project and apparently was not coming to the rescue of the inventor, then the reaction set in and the situation became distinctly and definitely unsatisfactory.

In 1900, however, Tesla had $150,000 on hand and a gigantic idea to be put into operation. The world-shaking superman, riding his tidal wave of fame and popularity, set to work.

THE year 1900 marked to Tesla not only the opening of a new century but also the beginning of the world-superpower and radio-broadcasting era. With the encouragement of J. P. Morgan to spur him on--if he could accommodate any more spurring than his own inner drive furnished--and with $150,000 in cash from the same source, he was set to embark

upon a gigantic venture, the building of a world wireless-power and a world broadcasting station.

The cash on hand would be totally inadequate to finance the project to completion, but this did not deter him from making a start. He needed a laboratory both to replace the Houston Street establishment, which had become entirely inadequate, and to include equipment of the type employed at Colorado Springs, but designed for use in the actual world-broadcasting process. The location was determined as the result of an arrangement he made with James S. Warden, manager and director of the Suffolk County Land Company, a lawyer and banker from the West who had acquired two thousand acres of land at Shoreham, in Suffolk County, Long Island, about sixty miles from New York. The land was made the basis of a real-estate development under the name Wardencliff.

Tesla visualized a power-and-broadcasting station which would employ thousands of persons. He undertook the establishment, eventually, of a Radio City, something far more ambitious than the enterprise in Rockefeller Center in New York which bears this name today. Tesla planned to have all wavelength channels broadcast from a single station, a project which would have given him a complete monopoly of the radio-broadcasting business. What an opportunity near-sighted businessmen of his day overlooked in not getting in on his project! But in that day Tesla was about the only one who visualized modern broadcasting. Everyone else visualized wireless as being useful only for sending telegraphic communications between ship and shore and across the ocean.

Mr. Warden saw possibilities of a sort in Tesla's plan, however, and offered him a tract of two hundred acres, of which twenty acres were cleared, for his power station, with the expectation that the two thousand men who would shortly be employed in the station would build homes on convenient sites in the remainder of the 2,000-acre tract. Tesla accepted.

Stanford White, the famous designer of many churches and other architectural monuments throughout the country, was one of Tesla's friends. He now disclosed to the famous architect his vision of an industrial "city beautiful" and sought his co-operation in realizing his dream. Mr. White was enthusiastic about the idea and, as his contribution to

Tesla's work, offered to underwrite the cost of designing the strange tower the inventor sketched, and all of the architectural work involved in the general plan for the city. The actual work was done by W. D. Crow, of East Orange, N. J., one of Mr. White's associates, who later became famous as a designer of hospitals and other institutional buildings.

It was a fantastic-looking tower, with strange structural limitations, which Mr. Crow found himself designing. Tesla required a tower, about 154 feet high, to support at its peak a giant copper electrode 100 feet in diameter and shaped like a gargantuan doughnut with a tubular diameter of twenty feet. (This was later changed to a hemispherical electrode.)

The tower would have to be a skeletonized structure, built almost entirely of wood, metal to be reduced to an utter minimum and any metal fixtures employed to be of copper. No engineering data were available on wood structures of this height and type.

The structure Tesla required had a large amount of "sail area," or surface exposed to wind, concentrated at the top, creating stresses that had to be provided for in a tower that itself possessed only limited stability. Mr. Crow solved the engineering problems and then the equally diffcult task of incorporating esthetic qualities in such an edifice.

When the design was completed another diffculty was encountered. None of the well-known builders could be induced to undertake the task of erecting the tower. A competent framer, associated with Norcross Bros., who were a large contracting firm in those days, finally took over the contract, although he, too, expressed fears that the winter gales might overturn the structure. (It stood, however, for a dozen years. When the Government, for military reasons decided it was necessary to remove this conspicuous landmark during the First World War, heavy charges of dynamite were necessary in order to topple it, and even then it remained intact on the ground like a fallen Martian invader out of Wells' War of the Worlds.) The tower was completed in 1902, and with it a large low brick building more than 100 feet square which would provide quarters for the powerhouse and laboratory. While the structures were being built, Tesla commuted every day

from the Waldorf-Astoria to Wardencliff, arriving at the near-by Shoreham station shortly after eleven am and remaining until three-thirty. He was always accompanied by a man servant, a Serbian, who carried a heavy hamper filled with food. When the laboratory transferred from Houston Street was in full operation at Wardencliff, Tesla rented the Bailey cottage near the Long Island Sound shore and there made his home for a year.

The heavy equipment, the dynamos and motors, that Tesla desired for his plant were of an unusual design not produced by manufacturers, and he encountered many vexatious delays in securing such material. He was able to carry on a wide range of high-frequency current and other experiments in his new laboratory, but the principal project, that of setting up the worldwide broadcasting station, lagged. Meanwhile, he had a number of glass blowers making tubes for use in transmitting and receiving his broadcast programs. This was a dozen years before De Forest invented the form of radio tube now in general use. The secret of Tesla's tubes died with him.

Tesla seemed to be entirely fearless of his high-frequency currents of millions of volts. He had, nevertheless, the greatest respect for the electric current in all forms, and was extremely careful in working on his apparatus. When working on circuits that might come "alive," he always worked with one hand in his pocket, using the other to manipulate tools. He insisted that all of his workers do likewise when working on the 60-cycle low-frequency alternating-current circuits, whether the potential was 50,000 or 110 volts. This safeguard reduced the possibility of a dangerous current finding a circuit through the arms across the body, where there was chance that it might stop the action of the heart.

In spite of the great care which he manifested in all of his experimental work, he had a narrow escape from losing his life at the Wardencliff plant. He was making experiments on the properties of small-diameter jets of water moving at high velocity and under very high pressures, of the order of 10,000 pounds per square inch. Such a stream could be struck by a heavy iron bar without the stream being disrupted. The impinging bar would bounce back as if it had struck another solid iron bar--a strange property for a mechanically weak substance like water. The cylinder holding the water under high pressure was a heavy

one made of wrought iron. Tesla was unable to secure a wrought-iron cap for the upper surface, so he used a heavier one of cast iron, a more brittle metal. One day when he raised the pressure to a point higher than he had previously used, the cylinder exploded. The cast-iron cap broke and a large fragment shot within a few inches of his face as it went on a slanting path upward and finally crashed through the roof. The high-pressure stream of water had peculiar destructive effects on anything with which it came in contact, even tough, strong metals. Tesla never revealed the purpose or the results of these high-pressure experiments.

Tesla's insistence on the utmost neatness in his laboratory almost resulted in a tragedy through a case of thoughtlessness on the part of an assistant. Arrangements were being made for installing a heavy piece of machinery which was to be lag bolted to the thick concrete floor. Holes had been drilled in the concrete. The plan called for pouring molten lead into these holes and screwing the heavy bolts into the metal when it cooled. As soon as the holes were drilled, a young assistant starting cleaning up the debris. He not only swept up the stone chips and dust: he got a mop and thoroughly washed that area of the floor, thoughtlessly letting some of the water get into the holes. He then dried the floor. In the meantime Tesla and George Scherff, who was his financial secretary but also served in any way in which he could be helpful, were melting the lead which would hold the lag screws in the holes in the floor. Scherff took the first large ladleful of lead from the furnace and started across the laboratory to where the holes had been drilled, followed shortly by Tesla bearing another ladle.

Scherff bent down--and as he poured the hot liquid metal into one of the holes an explosion followed instantly. The molten lead was blown upward into his face in a shower of searing hot drops of liquid metal. The water which the assistant used to swab the floor had settled into the holes and, when the melted lead come in contact with it, it was changed to steam which shot the lead out of the hole like a bullet out of the barrel of a rifle. Both men were showered with drops of hot metal and dropped their ladles. Tesla, being several feet away, was only slightly injured; but Scherff was very seriously burned about the face and hands. Drops of the metal had struck his eyes and so severely

burned them that it was feared for a while that his sight could not be saved.

However, despite the almost unlimited possibilities for accidents in connection with the vast variety of experiments which Tesla conducted in totally unexplored fields, using high voltages, high amperages, high pressures, high velocities and high temperatures, he went through his entire career with only one accident in which he suffered injury. In that a sharp instrument slipped, entered his palm and penetrated through the hand. The accident to Scherff was the only one in which a member of his staff was injured, with the exception of a young assistant who developed X-ray burns. He had probably been exposed to the rays from one of Tesla's tubes which, unknown to Tesla and everyone else, had been producing them even before Roentgen announced their discovery. Tesla had given them another name and had not fully investigated their properties. This was probably the first case of X-ray burns on record.

Tesla was an indefatigable worker, and it was hard for him to understand why others were incapable of such feats of endurance as he was able to accomplish. He was willing to pay unusually high wages to workers who were willing to stick with him on protracted tasks but never demanded that anyone work beyond a reasonable day's labor. On one occasion a piece of long-awaited equipment arrived and Tesla was anxious to get it installed and operating as quickly as possible. The electricians worked through twenty-four hours, stopping only for meals, and then for another twenty-four hours. The workers then dropped out, one by one, picking out nooks in the building in which to sleep. While they took from eight to twelve hours' sleep, Tesla continued to work; and when they came back to the job Tesla was still going strong and worked with them through his third sleepless twenty-four-hour period. The men were then given several days off in which to rest up; but Tesla, apparently none the worse for his seventy-two hours of toil, went through his next day of experiments, accomplishing a total of eighty-four hours without sleep or rest.

The plant at Wardencliff was intended primarily for demonstrating the radio-broadcasting phase of his "World System"; the power-distribution station was to be built at Niagara Falls.

Tesla at this time published a brochure on his "World System" which indicates the remarkable state of advancement he had projected in the wireless art, now called radio, while other experimenters were struggling to acquire familiarity with rudimentary devices. At that time, however, his promises seemed fantastic. The brochure contained the following description of his system and his objectives:

The World System has resulted from a combination of several original discoveries made by the inventor in the course of long continued research and experimentation. It makes possible not only the instantaneous and precise wireless transmission of any kind of signals, messages or characters, to all parts of the world, but also the interconnection of the existing telegraph, telephone, and other signal stations without any change in their present equipment. By its means, for instance, a telephone subscriber here many call up any other subscriber on the Globe. An inexpensive receiver, not bigger than a watch, will enable him to listen anywhere, on land or sea, to a speech delivered, or music played in some other place, however distant. These examples are cited merely to give an idea of the possibilities of this great scientific advance, which annihilates distance and makes that perfect conductor, the Earth, available for all the innumerable purposes which human ingenuity has found for a line wire. One far reaching result of this is that any device capable of being operated through one or more wires (at a distance obviously restricted) can likewise be actuated, without artificial conductors and with the same facility and accuracy, at distances to which there are no limits other than those imposed by the physical dimensions of the Globe. Thus, not only will entirely new fields for commercial exploitation be opened up by this ideal method of transmission, but the old ones vastly extended.

The World System is based on the application of the following important inventions and discoveries:

1. The Tesla Transformer. This apparatus is, in the production of electrical vibrations, as revolutionary as gunpowder was in warfare. Currents many times stronger than any ever generated in the usual ways, and sparks over 100 feet long have been produced by the inventor with an instrument of this kind.

2. The Magnifying Transmitter. This is Tesla's best invention--a peculiar transformer specially adapted to excite the Earth, which is in the transmission of electrical energy what the telescope is in astronomical observation. By the use of this marvelous device he has already set up electrical movements of greater intensity than those of lightning and passed a current, suffcient to light more than 200 incandescent lamps, around the Globe.

3. The Tesla Wireless System. This system comprises a number of improvements and is the only means known for transmitting economically electrical energy to a distance without wires. Careful tests and measurements in connection with an experimental station of great activity, erected by the inventor in Colorado, have demonstrated that power in any desired amount can be conveyed clear across the Globe if necessary, with a loss not exceeding a few per cent.

4. The Art of Individualization. This invention of Tesla is to primitive tuning what refined language is to unarticulated expression. It makes possible the transmission of signals or messages absolutely secret and exclusive both in active and passive aspect, that is, non-interfering as well as non-interferable. Each signal is like an individual of unmistakable identity and there is virtually no limit to the number of stations or instruments that can be simultaneously operated without the slightest mutual disturbance.

5. The Terrestrial Stationary Waves. This wonderful discovery, popularly explained, means that the Earth is responsive to electrical vibrations of definite pitch just as a tuning fork to certain waves of sound. These particular electrical vibrations, capable of powerfully exciting the Globe, lend themselves to innumerable uses of great importance commercially and in many other respects.

The first World System power plant can be put in operation in nine months. With this power plant it will be practical to attain electrical activities up to ten million horsepower and it is designed to serve for as many technical achievements as are possible without undue expense. Among these the following may be mentioned:

1. Interconnection of the existing telegraph exchanges of offces all over the World;

2. Establishment of a secret and non-interferable government telegraph service;

3. Interconnection of all the present telephone exchanges or offces all over the Globe;

4. Universal distribution of general news, by telegraph or telephone, in connection with the Press;

5. Establishment of a World System of intelligence transmission for exclusive private use;

6. Interconnection and operation of all stock tickers of the world;

7. Establishment of a world system of musical distribution, etc.;

8. Universal registration of time by cheap clocks indicating the time with astronomical precision and requiring no attention whatever;

9. Facsimile transmission of typed or handwritten characters, letters, checks, etc.;

10. Establishment of a universal marine service enabling navigators of all ships to steer perfectly without compass, to determine the exact location, hour and speed, to prevent collisions and disasters, etc.;

11. Inauguration of a system of world printing on land and sea;

12. Reproduction anywhere in the world of photographic pictures and all kinds of drawings or records.

Thus, more than forty years ago, Tesla planned to inaugurate every feature of modern radio, and several facilities which have not yet been developed. He was to continue, for another twenty years, to be the only "wireless" inventor who had yet visualized a broadcasting service.

While at work on his Wardencliff radio-broadcasting plant, Tesla was also evolving plans for establishing his world power station at Niagara Falls. So sure was he of the

successful outcome of his efforts that he stated in a newspaper interview in 1903 that he would light the lamps of the coming international exposition in Paris with power wirelessly transmitted from the Falls. Circumstances, however, prevented him from making good this promise. His diffculties and his plans were outlined in a statement published in the Electrical World and Engineer, March 5, 1904:

The first of these central plants would have been already completed had it not been for unforeseen delays which, fortunately, have nothing to do with its purely technical features. But this loss of time, while vexatious, may, after all, prove to be a blessing in disguise. The best design of which I know has been adopted, and the transmitter will emit a wave complex of a total maximum activity of 10,000,000 horsepower, one percent of which is amply suffcient to "girdle the globe." This enormous rate of energy delivery, approximately twice that of the combined falls of Niagara, is obtainable only by the use of certain artifices, which I shall make known in due course.

For a large part of the work which I have done so far I am indebted to the noble generosity of Mr. J. Pierpont Morgan, which was all the more welcome and stimulating, as it was extended at a time when those, who have since promised most, were the greatest of doubters. I have also to thank my friend Stanford White, for much unselfish and valuable assistance. This work is now far advanced, and though the results may be tardy, they are sure to come.

Meanwhile, the transmission of energy on an industrial scale is not being neglected. The Canadian Niagara Power Company have offered me a splendid inducement, and next to achieving success for the sake of the art, it will give me the greatest satisfaction to make their concession financially profitable to them. In this first power plant, which I have been designing for a long time, I propose to distribute 10,000 horsepower under a tension of 10,000,000 volts, which I am now able to produce and handle with safety.

This energy will be collected all over the globe preferably in small amounts, ranging from a fraction of one to a few horsepower. One of the chief uses will be the illumination of isolated homes. It takes very little power to light a dwelling with vacuum tubes operated by high frequency

currents and in each instance a terminal a little above the roof will be suffcient. Another valuable application will be the driving of clocks and other such apparatus. These clocks will be exceedingly simple, will require absolutely no attention and will indicate rigorously correct time. The idea of impressing upon the earth American time is fascinating and very likely to become popular. There are innumerable devices of all kinds which are either now employed or can be supplied and by operating them in this manner I may be able to offer a great convenience to the whole world with a plant of no more than 10,000 horsepower. The introduction of this system will give opportunities for invention and manufacture such as have never presented themselves before.

Knowing the far reaching importance of this first attempt and its effect upon future development, I shall proceed slowly and carefully. Experience has taught me not to assign a term to enterprises the consummation of which is not wholly dependent on my own abilities and exertions. But I am hopeful that these great realizations are not far off and I know that when this first work is completed they will follow with mathematical certitude.

When the great truth accidentally revealed and experimentally confirmed is fully recognized, that this planet, with all its appalling immensity, is to electric current virtually no more than a small metal ball and that by this fact many possibilities, each baffling the imagination and of incalculable consequence, are rendered absolutely sure of accomplishment; when the first plant is inaugurated, and it is shown that a telegraphic message, almost as secret and non-interferable as a thought, can be transmitted to any terrestrial distance, the sound of the human voice, with all its intonations and inflections, faithfully and instantly reproduced at any point of the globe, the energy of a waterfall made available for supplying light, heat or motive power, anywhere on sea, or land, or high in the air--humanity will be like an ant heap stirred up with a stick: See the excitement coming.

The Niagara Falls plant was never built; and diffculties, soon enough, were encountered at the Wardencliff plant not only in securing desired equipment but also finances.

Tesla's greatest oversight was that he neglected to invent, so to speak, a device for making the unlimited quantities

of money that were necessary to develop his other inventions. As we have seen, he was utterly lacking in the phase of personality that made possible the securing of financial returns directly from his inventions. An individual with his ability could have made millions out of each of a number of Tesla's minor inventions. If he had taken the trouble, for example, to collect annual royalties on twenty or more different kinds of devices put out by as many manufacturers employing his Tesla coil for medical treatments, he would have had ample income to finance his World Wireless System.

His mind, however, was too fully occupied with fascinating scientific problems. He had, at times, nearly a score of highly skilled workmen constantly employed in his laboratory developing the electrical inventions he was continuing to make at a rapid rate. Armed guards were always stationed around the laboratory to prevent spying on his inventions. His payroll was heavy, his bank balance became dangerously low, but he was so immersed in his experimental work that he continuously put off the task of making an effort to repair his finances. He soon found himself facing judgments obtained by creditors on accounts upon which he could not make payments. He was forced, in 1905, to close the Wardencliff laboratory.

The fantastic tower in front of the laboratory was never completed. The doughnut-shaped copper electrode was never built because Tesla changed his mind and decided to have a copper hemisphere 100 feet in diameter and 50 feet high built on top of the 154-foot cone-shaped tower. A skeleton framework for holding the hemispherical plates was built, but the copper sheeting was never applied to it. The 300-horsepower dynamos and the apparatus for operating the broadcasting station were left intact, but they were eventually removed by the engineering firm that installed them and had not been paid.

Tesla opened an offce at 165 Broadway, in New York, where for a while he tried to contrive some means for reviving his project. Thomas Fortune Ryan, the well-known financier, and H. O. Havemeyer, the leading sugar refiner, aided him with contributions of $10,000 and $5,000 respectively. Instead of using these to open another laboratory, he applied them to paying off the debts on his now defunct World Wireless System. He paid off every penny due to every creditor.

When it became apparent that Tesla was in financial diffculties, many who had assumed that Morgan was financially involved as an investor in his project were disillusioned. When specific inquiries revealed that the great financier held no interest whatever in the enterprise, the rumor got into circulation that Morgan had withdrawn his support; and when no reason for such action could be learned the rumor expanded to carry the story that Tesla's system was impracticable. As a matter of fact, Morgan continued to make generous personal contributions to Tesla almost up to the time of his own death; and his son did so to a lesser extent for a short time.

Tesla made no effort to combat the growing rumors.

If Tesla could have tolerated a business manager, and had placed the development of his patents in the hands of a businessman, he could have established as early as 1896 a practical ship-to-shore, and probably a trans-oceanic wireless service; and these would have given him a monopoly in this field. He was asked to rig up a wireless set on a boat to report the progress of the international yacht race for Lloyds of London in 1896, but he refused the offer, which was a lucrative one, on the grounds that he would not demonstrate his system publicly on less than a world-wide basis because it could be confused with the amateurish efforts being made by other experimenters. If he had accepted this offer--and he could have met the requirements without the least technical diffculty--he undoubtedly would have found his interests diverted to some extent into a profitable commercial channel that might have made a vast, and favorable, change in the second half of his life.

Tesla, however, could not be bothered with minor, even though profitable projects. The superman, the man magnificent, was too strong in him. The man who had put industry on an electrical power basis, the man who had set the whole earth in vibration, could not fill a minor role of carrying messages for hire. He would function in his major capacity or not at all; he would be a Jupiter, never a Mercury.

George Scherff, who was engaged by Tesla as bookkeeper and secretary when he opened his Houston Street laboratory, was a practical individual. He managed, as far as was humanly possible, to keep the inventor disentangled in his contacts

with the business world. The more he knew Tesla, the better he liked him; and the more respect he had for his genius and his ability as an inventor, the more he became conscious of the fact that this genius was totally lacking in business ability.

Scherff was understandably distressed by a situation in which an enterprise was continuously spending money but never receiving any. He sought to protect as far as possible the $40,000 which Tesla received from Adams as an investment in the enterprise; and it was stretched to cover more than three years of great activity. Scherff wanted Tesla to work out plans for deriving an income from his inventions. Each new development which Tesla produced was studied by Scherff and made the basis for a plan for manufacture and sale of a device. Tesla uniformly rejected all the suggestions. "This is all small-time stuff," he would reply. "I cannot be bothered with it."

Even when it was pointed out to him that many manufacturers were using his Tesla coils, selling great numbers of them and making plenty of money out of them, his interest could not be aroused to enter this profitable field, nor to permit Scherff to arrange to have a sideline set-up which could be conducted without interfering with his research work. Nor could he be induced to bring suits to protect his invention and seek to make the manufacturers pay him royalties. He admitted, however, "If the manufacturers paid me twenty-five cents on each coil they sold I would be a wealthy man."

When Lloyds of London made their request that he set up a wireless outfit on a boat and report the international yacht races of 1896, by his new wireless system, and offered a generous honorarium, Scherff became insistent that the offer be accepted; and he urged Tesla to drop all other work temporarily and use the publicity he would get from the exploit as a means of floating a commercial company for transmitting wireless messages between ship and shore and across the ocean, pointing out that money would be made both in manufacturing the apparatus and in transmitting messages. The company, Scherff suggested, could be operated by managers to produce an income and Tesla could return to his work of making inventions and always have plenty of money to pay for the cost of his researches.

Scherff can look back today, as he sits on the porch of his Westchester home, and decide, through a retrospect of fifty years, that his plan was basically sound, with the Radio Corporation of America, its extensive manufacturing facilities and its worldwide communication system, its tremendous capital system and earnings, as evidence in support of the claim.

Tesla's reply to the proposal was, as usual, "Mr. Scherff, that is small-time stuff. I cannot be bothered with it. Just wait until you see the magnificent inventions I am going to produce, and then we will all make millions."

Tesla's millions never came. Scherff remained with him until the Wardencliff laboratory closed, owing to the lack of income, which he had been trying to circumvent. Scherff then established a lucrative connection with the Union Sulphur Co. but he still continued, without taking compensation, to give Tesla one day a week of his time and keep his business affairs disentangled as far as possible. Tesla was meticulously careful about paying everyone who performed any service for him, but this was counterbalanced by an active faculty for contracting bills without waiting to see if he had funds on hand to meet them. Money was an annoying anchor that always seemed to be dragging and hindering his research activities--something that was too mundane to merit the time and attention he should be giving to more important things.

Scherff, tight-lipped and businesslike, cannot be induced to talk of Tesla's affairs. If he were, instead, a loquacious philosopher, he might be induced to smile over the frailties of human nature, and the strange pranks which fate can play on individuals, as he thinks of Tesla, who, on the basis of a single invention, might have become an individual Radio Corporation of America and failed to do so, and who passed up equal chances on two hundred other inventions, any one of which could have produced a fortune. And for contrast, he can recall occasions in recent decades when it was necessary to make modest loans to the great Tesla to permit him to meet the need for current personal necessities. But Scherff refuses to permit any close questions or discussion about these incidents.

THIRTEEN

WHEN his World Wireless System project crashed, Tesla turned again to a project to which he had given considerable thought at the time he was developing his polyphase alternating-current system: that of developing a rotary engine which would be as far in advance of existing steam engines as his alternating-current system was ahead of the direct-current system, and which could be used for driving his dynamos.

All of the steam engines in use in powerhouses at that time were of the reciprocating type; essentially the same as those developed by Newcomer and Watt, but larger in size, better in construction and more effcient in operation.

Tesla's engine was of a different type--a turbine in which jets of steam injected between a series of disks produced rotary motion at high velocity in the cylinder on which these disks were mounted. The steam entered at the outer edge of the disks, pursued a spiral path of a dozen or more convolutions, and left the engine near the central shaft.

When Tesla informed a friend in 1902 that he was working on an engine project, he declared he would produce an engine so small, simple and powerful that it would be a "powerhouse in a hat." The first model, which he made about 1906, fulfilled this promise. It was small enough to fit into the dome of a derby hat, measured a little more than six inches in its largest dimension, and developed thirty horsepower. The power-producing performance of this little engine vastly exceeded that of every known kind of prime mover in use at that time. The engine weighed a little less than ten pounds. Its output was therefore three horsepower per pound. The rotor weighed only a pound and a half, and its light weight and high power yield gave Tesla a slogan which he used on his letterheads and envelopes--"Twenty horsepower per pound."

There was nothing new, of course, in the basic idea of obtaining circular motion directly from a stream of moving fluid. Windmills and water wheels, devices as old as history, performed this feat. Hero, the Alexandrian writer, about 200 bc, described, but he did not invent, the first turbine. It consisted of a hollow sphere of metal mounted on an axle, with two tubes sticking out of the sphere at a tangent to its surface. When water was placed in the sphere

and the device was suspended in a fire, the reaction of the steam coming out of the tubes caused the device to rotate.

Tesla's ingenious and original development of the turbine idea probably had its origin in that amusing and unsuccessful experiment he made when, as a boy, he tried to build a vacuum motor and observed its wooden cylinder turn slightly by the drag of the air leaking into the vacuum chamber. Later, too, when as a youth he fled to the mountains to escape military service and played with the idea of transporting mail across the ocean through an underwater tube, through which a hollow sphere was to be carried by a rapidly moving stream of water, he had discovered that the friction of the water on the walls of the tube made the idea impracticable. The friction would slow down the velocity of the stream of water so that excessive amounts of power would be required to move the water at a desired speed and pressure. Conversely, if the water moved at this speed, the friction caused it to try to drag the enclosing tube along with it.

It was this friction which Tesla now utilized in his turbine. A jet of steam rushing at high velocity between disks with a very small distance separating them was slowed down by the friction--but the disks, being capable of rotation, moved with increasing velocity until it was almost equal to that of the steam. In addition to the friction factor, there exists a peculiar attraction between gases and metal surfaces; and this made it possible for the moving steam to grip the metal of the disks more effectively and drag them around at high velocities. The first model which Tesla made in 1906 had twelve disks five inches in diameter. It was operated by compressed air, instead of steam, and attained a speed of 20,000 revolutions per minute. It was Tesla's intention eventually to use oil as fuel, burning it in a nozzle and taking advantage of the tremendous increase in volume, in the change from a liquid to burned highly expanded gases, to turn the rotor. This would eliminate the use of boilers for generating steam and give the direct process proportional increased effciency.

Had Tesla proceeded with the development of his turbine in 1889 when he returned from the Westinghouse plant, his turbine might perhaps have been the one eventually developed to replace the slow, big, lumbering reciprocating engines then in use. The fifteen years, however, which he

devoted to the development of currents of high potential and high frequency, had entailed a delay which gave opportunity for developers of other turbine ideas to advance their work to a stage which now was effective in putting Tesla in the status of a very late starter. In the meantime, turbines had been developed which were virtually windmills in a box. They consisted of rotors with small buckets or vanes around the circumference which were struck by the incoming steam jet. They lacked the simplicity of the Tesla turbine; but by the time Tesla introduced his type, the others were well entrenched in the development stage.

Tesla's first tiny motor was built in 1906 by Julius C. Czito, who operated at Astoria, Long Island, a machine shop for making inventor's models. He also built the subsequent 1911 and 1925 models of the turbine, and many other devices on which Tesla worked up to 1929. Mr. Czito's father had been a member of Tesla's staff in the Houston Street laboratories, from 1892 to 1899, and at Colorado Springs.

Mr. Czito's description of the first model is as follows:

The rotor consisted of a stack of very thin disks six inches in diameter, made of German silver. The disks were one thirty-second of an inch thick and were separated by spacers of the same metal and same thickness but of much smaller diameter which were cut in the form of a cross with a circular center section. The extended arms served as ribs to brace the disks.

There were eight disks and the edgewise face of the stack was only one-half inch across. They were mounted on the center of a shaft about six inches long. The shaft was nearly an inch in diameter in the mid section and was tapered in steps to less than half an inch at the ends. The rotor was set in a casing made in four parts bolted together.

The circular chamber where the rotor turned was accurately machined to allow a clearance of one sixty-fourth of an inch between the casing and the face of the rotor. Mr. Tesla desired an almost touching fit between the rotor face and the casing when the latter was turning. The large clearance was necessary because the rotor attained tremendously high speeds, averaging 35,000 revolutions per minute. At this speed the centrifugal force generated by

the turning movement was so great it appreciably stretched the metal in the rotating disks. Their diameter when turning at top speed was one thirty-second of an inch greater than when they were standing still.

A larger model was built by Tesla in 1910. It had disks twelve inches in diameter, and with a speed of 10,000 revolutions per minute it developed 100 horsepower, indicating a greatly improved effciency over the first model. It developed more than three times as much power at half the speed.

During the following year, 1911, still further improvements were made. The disks were reduced to a diameter of 9.75 inches and the speed of operation was cut down by ten per cent, to 9,000 revolutions per minute--and the power output increased by ten per cent, to 110 horsepower!

Following this test, Tesla issued a statement in which he declared:

I have developed 110 horsepower with disks nine and three quarter inches in diameter and making a thickness of about two inches. Under proper conditions the performance might have been as much as 1,000 horsepower. In fact there is almost no limit to the mechanical performance of such a machine. This engine will work with gas, as in the usual type of explosion engine used in automobiles and airplanes, even better than it did with steam. Tests which I have conducted have shown that the rotary effort with gas is greater than with steam.

Enthusiastic over the success of his smaller models of the turbine, operated on compressed air, and to a more limited extent by direct combustion of gasoline, Tesla designed and built a larger, double unit, which he planned to test with steam in the Waterside Station, the main powerhouse of the New York Edison Company.

This was a station which had originally been designed to operate on the direct-current system developed by Edison--but it was now operating throughout on Tesla's polyphase alternating-current system.

Now Tesla, invading the Edison sanctum to test a new type of turbine which he hoped would replace the types in use, was definitely in enemy territory. The fact that he had

Morgan backing, and that the Edison Company was a "Morgan company," had no nullifying effect on the Edison-Tesla feud.

This situation was not softened in any way by Tesla's method of carrying on his tests. Tesla was a confirmed "sun dodger"; he preferred to work at night rather than in the daytime. Powerhouses, not from choice but from necessity, have their heaviest demands for current after sunset. The day load would be relatively light; but as darkness approached, the dynamos started to groan under the increasing night load. The services of the workers at the Waterside Station were made available to Tesla for the setting up and tests of his turbine with the expectation that the work would be done during the day when the tasks of the workers were easiest.

Tesla, however, would rarely show up until five o'clock in the afternoon, or later, and would turn a deaf ear to the pleas of workers that he arrive earlier. He insisted that certain of the workers whom he favored remain after their five-o'clock quitting time on the day shift to work with him on an overtime basis. Nor did he maintain a conciliatory attitude toward the engineering staff or the offcials of the company. The attitudes, naturally, were mutual.

The turbine Tesla built for this test had a rotor 18 inches in diameter which turned at a speed of 9,000 revolutions per minute. It developed 200 horsepower. The overall dimensions of the engine were--three feet long, two feet wide and two feet high. It weighed 400 pounds.

Two such turbines were built and installed in a line on a single base. The shafts of both were connected to a torque rod. Steam was fed to both engines so that, if they were free to rotate, they would turn in opposite directions. The power developed was measured by the torque rod connected to the two opposing shafts.

At a formal test, to which Tesla invited a great many guests, he issued a statement in which he said, as reported, in part:

It should be noted that although the experimental plant develops 200 horsepower with 125 pounds at the supply pipe and free exhaust it could show an output of 300 horsepower

with full pressure of the supply circuit. If the turbine were compounded and the exhaust were led to a low pressure unit carrying about three times the number of disks contained in the high pressure element, with connection to a condenser affording 28.5 to 29.0 inches of vacuum the results obtained in the present high pressure machine indicate that the compounded unit would give an output of 600 horsepower without great increase of dimensions. This estimate is very conservative.

Tests have shown that when the turbine is running at 9,000 revolutions per minute under an inlet pressure of 125 pounds to the square inch and with free exhaust 200 brake horsepower are developed. The consumption under these conditions of maximum output is 38 pounds of saturated steam per horsepower per hour, a very high effciency when we consider that the heat drop, measured by thermometers, is only 130 B.T.U. and that the energy transformation is effected in one stage. Since three times the number of heat units are available in a modern plant with superheat and high vacuum the utilization of these facilities would mean a consumption of less than 12 pounds per horsepower hour in such turbines adapted to take the full drop.

Under certain conditions very high thermal effciencies have been obtained which demonstrate that in large machines based on this principle steam consumption will be much lower and should approximate the theoretical minimum thus resulting in the nearly frictionless turbine transmitting almost the entire expansive energy of the steam to the shaft.

It should be kept in mind that all of the turbines which Tesla built and tested were single-stage engines, using about one-third of the energy of the steam. In practical use, they were intended to be installed with a second stage which would employ the remaining energy and increase the power output about two or three fold. (The two types of turbines in common use each have a dozen and more stages within a single shell.)

Some of the Edison electric camp, observing the torque-rod tests and apparently not understanding that in such a test the two rotors remain stationary--their opposed pressures staging a tug of war measured as torque--circulated the story that the turbine was a complete failure; that this turbine would not be practical if its effciency had been

increased a thousand fold. It was stories such as these that contributed to the imputation that Tesla was an impractical visionary. The Tesla turbine, however, used as a single-stage engine, functioning as a pygmy power producer, in the form in which it was actually tested, anticipated by more than twenty-five years a type of turbine which has been installed in recent years in the Waterside Station. This is a very small engine, with blades on its rotor, known as a "topping turbine," which is inserted in the steam line between the boilers and the ordinary turbines. Steam of increased pressure is supplied, and the topping turbine skims this "cream" from the steam and exhausts steam that runs the other turbines in their normal way.

The General Electric Company was developing the Curtis turbine at that time, and the Westinghouse Electric and Manufacturing Company was developing the Parsons turbine; and neither company showed the slightest interest in Tesla's demonstration.

Further development of his turbine on a larger scale would have required a large amount of money--and Tesla did not possess even a small amount.

Finally he succeeded in interesting the Allis Chalmers Manufac-

turing Company of Milwaukee, builders of reciprocating engines and turbines, and other heavy machinery. In typical Tesla fashion, though, he manifested in his negotiations such a lack of diplomacy and insight into human nature that he would have been better off if he had completely failed to make any arrangements for exploiting the turbine.

Tesla, an engineer, ignored the engineers on the Allis Chalmers staff and went directly to the president. While an engineering report was being prepared on his proposal, he went to the Board of Directors and "sold" that body on his project before the engineers had a chance to be heard. Three turbines were built. Two of them had twenty disks eighteen inches in diameter and were tested with steam at eighty pounds pressure. They developed at speeds of 12,000 and 10,000 revolutions per minute, respectively, 200 horsepower. This was exactly the same power output as had been achieved by Tesla's 1911 model, which had disks of half this diameter and was operated at 9,000 revolutions

under 125 pounds pressure. A much larger engine was tackled next. It had fifteen disks sixty inches in diameter, was designed to operate at 3,600 revolutions per minute, and was rated at 500 kilowatts capacity, or about 675 horsepower.

Hans Dahlstrand, Consulting Engineer of the Steam Turbine Department, reports, in part:

We also built a 500 kw steam turbine to operate at 3,600 revolutions. The turbine rotor consisted of fifteen disks 60 inches in diameter and one eighth inch thick. The disks were placed approximately one eighth inch apart. The unit was tested by connecting to a generator. The maximum mechanical effciency obtained on this unit was approximately 38 per cent when operating at steam pressure of approximately 80 pounds absolute and a back pressure of approximately 3 pounds absolute and 100 degrees F superheat at the inlet.

When the steam pressure was increased above that given the mechanical effciency dropped, consequently the design of these turbines was of such a nature that in order to obtain maximum effciency at high pressure, it would have been necessary to have more than one turbine in series.

The effciency of the small turbine units compares with the effciency obtainable on small impulse turbines running at speeds where they can be directly connected to pumps and other machinery. It is obvious, therefore, that the small unit in order to obtain the same effciency had to operate at from 10,000 to 12,000 revolutions and it would have been necessary to provide reduction gears between the steam turbine and the driven unit.

Furthermore, the design of the Tesla turbine could not compete as far as manufacturing costs with the smaller type of impulse units. It is also questionable whether the rotor disks, because of light construction and high stress, would have lasted any length of time if operating continuously.

The above remarks apply equally to the large turbine running at 3,600 revolutions. It was found when this unit was dismantled that the disks had distorted to a great extent and the opinion was that these disks would ultimately have failed if the unit had been operated for any length of time.

The gas turbine was never constructed for the reason that the company was unable to obtain suffcient engineering information from Mr. Tesla indicating even an approximate design that he had in mind.

Tesla appears to have walked out on the tests at this stage. In Milwaukee, however, there was no George Westinghouse to save the situation. Later, during the twenties, the author asked Tesla why he had terminated his work with the Allis Chalmers Company. He replied: "They would not build the turbines as I wished"; and he would not amplify the statement further.

The Allis Chalmers Company later became the pioneer manufacturers of another type of gas turbine that has been in successful operation for years.

While the Dahlstrand report may appear to be severely critical of the Tesla turbine and to reveal fundamental weaknesses in it not found in other turbines, such is not the case. The report is, in general, a fair presentation of the results; and the description of apparent weaknesses merely offers from another viewpoint the facts which Tesla himself stated about the turbine in his earlier test--that when employed as a single-stage engine it uses only about a third of the energy of the steam, and that to utilize the remainder, it would have to be compounded with a second turbine.

The reference to a centrifugal force of 70,000 pounds resulting from the high speed of rotation of the rotor, causing damage to the disks, refers to a common experience with all types of turbines. This is made clear in a booklet on "The Story of the Turbine," issued during the past year by the General Electric Company, in which it is stated:

It [the turbine] had to wait until engineers and scientists could develop materials to withstand these pressures and speeds. For example, a single bucket in a modern turbine travelling at 600 miles per hour has a centrifugal force of 90,000 pounds trying to pull it from its attachment on the bucket wheel and shaft. . . .

In this raging inferno the high pressure buckets at one end of the turbine run red hot while a few feet away the large buckets in the last stages run at 600 miles per hour

through a storm of tepid rain--so fast that the drops of condensed steam cut like a sand blast.

Dahlstrand reported that diffculties were encountered in the Tesla turbine from vibration, making it necessary to re-enforce the disks. That this diffculty is common to all turbines is further indicated by the General Electric booklet, which states:

Vibration cracked buckets and wheels and wrecked turbines, sometimes within a few hours and sometimes after years of operation. This vibration was caused by taking such terrific amounts of power from relatively light machinery--it some cases as much as 400 horsepower out of a bucket weighing but a pound or two. . . .

The major problems of the turbine are four--high temperatures, high pressures, high speeds and internal vibration. And their solution lies in engineering, research and manufacturing skill.

These problems are still awaiting their final solution, even with the manufacturers who have been building turbines for forty years; and the fact that they were encountered in the Tesla turbine, and so reported, is not a final criticism of Tesla's invention in the earliest stages of its development.

There have been whisperings in engineering circles during the past year or two to indicate a revival of interest in the Tesla turbine and the possibility that the makers of the Curtis and Parsons types may extend their lines to include the Tesla type for joint operation with the others. The development of new alloys, which can now almost be made to order with desired qualities of mechanical stability under conditions of high temperature and great stresses, is largely responsible for this turn of events.

It is a possibility that if the Tesla turbine were constructed with the benefft of two or more stages, thus giving it the full operating range of either the Curtis or the Parsons turbine, and were built with the same beneffts of engineering skill and modern metallurgical developments as have been lavished on these two turbines, the vastly greater simplicity of the Tesla turbine would enable it to manifest greater effciencies of operation and economies of construction.

FOURTEEN

THE highest honor which the world can confer upon its scholars is the Nobel Prize founded by Alfred B. Nobel, the Swedish scientist who gained his wealth through the invention of dynamite. Five awards are made annually, and each carries an honorarium of about $40,000 in normal times.

An announcement came from Sweden, in 1912, that Nikola Tesla and Thomas A. Edison had been chosen to share the 1912 award in physics. The awards, however, were never made; and the prize went instead to Gustav Dalen, a Swedish scientist.

The full story of what took place is not known. The correspondence on the subject is not available. It is definitely established that Tesla refused to accept the award. Tesla was very much in need of money at this time and the $20,000, which would have been his share of the divided award, would have aided him to continue his work. Other factors, however, had a more potent influence.

Tesla made a very definite distinction between the inventor of useful appliances and the discoverer of new principles. The discoverer of new principles, he stated in conversation with the author, is a pioneer who opens up new fields of knowledge into which thousands of inventors flock to make commercial applications of the newly revealed information. Tesla declared himself a discoverer and Edison an inventor; and he held the view that placing the two in the same category would completely destroy all sense of the relative value of the two accomplishments.

It is quite probable that Tesla was also influenced by the fact that the Nobel Prize in physics had been awarded to Marconi three years earlier, a situation that greatly disappointed him. To have the award go first to Marconi, and then to be asked to share the award with Edison, was too great a derogation of the relative value of his work to the world for Tesla to bear without rebelling.

Tesla was the first, and probably the only, scientist to refuse this famous prize.

One of the highest honors in the engineering world, too, is the Edison Medal, founded by unnamed friends of Thomas A. Edison, and awarded each year by the American Institute of Electrical Engineers, at its annual convention, for outstanding contribution to electrical art and science. Usually, the recipients are very happy to receive the award; but in 1917, when the committee voted to present the medal to Tesla, a different situation developed.

The chairman of the Edison Medal committee was B. A. Behrend, who had been one of the first electrical engineers to grasp the tremendous significance of Tesla's alternating-current discoveries and their far-reaching importance to every department of the electrical industry. A few outstanding engineers were able, at the beginning, to understand the intricacies of new alternating-current procedures which Tesla's discoveries made of immediate practical importance; but it was Behrend who developed a beautiful, simple mathematical technique, known as the "circle diagram," which made it possible to work out problems of designing alternating-current machinery with great ease, and also to understand the complex phenomena that were taking place within such devices. He published innumerable articles on the subject in the technical journals and wrote the standard textbook on the subject, The Induction Motor. Fame and fortune came to Behrend. He achieved recognition as one of the outstanding electrical engineers, and was later elected vice-president of the American Institute of Electrical Engineers. So important was his work to the commercial world that he was considered a probable recipient of the Edison Medal.

Behrend had started publishing articles on his circle diagram discovery in 1896 but he did not meet Tesla until 1901, when Tesla required a particular type of motor for his World Wireless plant being built at Wardencliff, L. I., and the task of designing it was assigned to the engineering department of a manufacturing company of which Behrend was in charge. After Tesla and Behrend met, a very close personal friendship developed between the two men. Behrend was one of the few who thoroughly understood Tesla's work; and the inventor, lonely in the absence of individuals with minds of his own caliber, greatly appreciated Behrend's friendship.

Behrend believed, therefore, that he was rendering Tesla a token of his highest appreciation when he managed to maneuver the award of the Edison Medal to him; and he was quite happy to carry out the mission of bearing the good news to the inventor. The announcement, however, did not make Tesla happy. He did not want the Edison Medal, he would not receive it!

Behrend, greatly surprised at Tesla's rebuff, asked him if he would not explain the situation that caused it.

"Let us forget the whole matter, Mr. Behrend. I appreciate your good will and your friendship but I desire you to return to the committee and request it to make another selection for a recipient. It is nearly thirty years since I announced my rotating magnetic field and alternating-current system before the Institute. I do not need its honors and someone else may find them useful."

It would have been impossible for Behrend to deny that the Institute had indeed failed, over this long period, to honor the man whose discoveries were responsible for creating the jobs held by probably more than three quarters of the members of the Institute, while honors had been distributed to many others for relatively minor accomplishments. Still, using the privilege of friendship, Behrend pressed for a further explanation.

"You propose," Tesla replied, "to honor me with a medal which I could pin upon my coat and strut for a vain hour before the members and guests of your Institute. You would bestow an outward semblance of honoring me but you would decorate my body and continue to let starve, for failure to supply recognition, my mind and its creative products which have supplied the foundation upon which the major portion of your Institute exists. And when you would go through the vacuous pantomime of honoring Tesla you would not be honoring Tesla but Edison who has previously shared unearned glory from every previous recipient of this medal."

Behrend, however, after several visits, finally prevailed upon Tesla to accept the medal.

Custom requires that the recipient of a medal deliver a formal address. On the occasions, a quarter of a century

earlier, when Tesla was invited to address the Institute, he had had ample laboratory facilities, and had invested a great deal of time, effort, thought and money in the preparation of his lectures. For them, however, he was awarded no honors. Now he was without laboratory facilities and without adequate financial resources, although his more mature mind was as filled with ideas and unborn inventions as it had ever been. He was not required to present a demonstration lecture. In this matter, however, Tesla was a victim of his own past performances; and there was an expectancy that he would emerge from the comparative oblivion which had enshrouded him for more than a decade, and come, like a master magician, bearing some wondrous new gifts of invention to the world.

Tesla attended some of the meetings of the convention, and Behrend, none too certain about what the medalist might do, took him in tow following the afternoon session and escorted him to the Hotel St. Regis, where Tesla now made his home, and where both donned their formal dress for the evening's ceremonies.

The first event on the evening's program was a private dinner at the Engineers' Club, tendered by the Institute to the medalist, who was the guest of honor, and attended by previous recipients of the Edison Medal, as well as members of the committee and the offcers of the Institute. It was a gala occasion and represented an unusual concentration of the world's greatest electrical engineering talent. Tesla could be relied upon to lend brilliance to any such occasion, but, while his sparkling conversation added to the gayety of the group, he was distinctly ill at ease.

The Engineers' Club, on the south side of 40th Street, between Fifth and Sixth Avenues, faces Bryant Park, the eastern third of which is occupied by the classical building of the New York Public Library, facing Fifth Avenue from 40th to 42nd Streets. The United Engineering Societies Building, an imposing structure on the north side of 39th, stands almost back-to-back with the Engineers' Club. By stepping a few feet across an alley, it is possible to go from one building to the other.

Following the dinner in the Engineers' Club, the brilliant group at the medalist's dinner made their way across the alley and proceeded through the crowded lobby of the Engineering Societies Building, which was abuzz with the

multitudinous activities associated with a convention. The party entered the elevators which carried them to the large auditorium on the fifth floor where the medal presentations were to take place.

The auditorium was crowded with an audience that had come largely from formal dinners held as part of the convention program. The floor and gallery were filled to capacity. The buzz of animated conversation died down as there filed onto the stage the outstanding figures of the electrical world, in "tails" and white ties, who were to serve as the "wax works" of the ceremonies and to take some part in the presentation.

As the wax works took their previously assigned chairs, the stage was set for the opening of the ceremonies. But the opening did not take place according to schedule. There was consternation in the group as it was discovered that the chair reserved for the chief participant in the event was empty.

Tesla was missing!

The side hall, leading off the stage, and the anterooms were searched, but there was no sign of him. Members of the committee slipped out to retrace their steps through the lobby and back to the Club dining room. A man as tall as Tesla could not be hidden in any group, yet there was not a sign of him in either building.

The delay in opening the meeting in the auditorium was embarrassing--but the ceremonies could not be started without Tesla, and where was he?

It seemed hardly possible that an imposing figure like Tesla, his height exaggerated by the streamlined contours of his swallow-tailed formal evening dress, and in the almost worshipful custody of a score of outstanding intellects, could vanish without any of them observing his going.

Behrend rushed back from the Club to the auditorium, hopeful that Tesla had preceded him; but he found that such was not the case. All the washrooms in both buildings had been searched; he was concealed in none of them. No one could offer a theory to account for his disappearance.

None but Behrend knew of Tesla's aversion to accepting the Edison Medal, yet even he had not the slightest knowledge of what had become of the famous inventor. He recalled noting the shadowy walks of Bryant Park opposite the Club as he and Tesla stepped from the taxicab earlier in the evening, and he wondered if Tesla had retreated there for some quiet meditation before the ceremony. He hurried out of the Club.

As Behrend stepped into Bryant Park, the last faint glimmerings of dusk were visible in the high sky; but in the park the shades of night were gathering and here and there could be heard the faint twitterings of birds. The twittering of the birds brought, like a flash, to Behrend's mind the scene he had observed in Tesla's apartment at the Hotel St. Regis. In the room which Tesla had arranged as a reading room and offce was a roll-top desk, and on top of this were four neat circular baskets, in two of which pigeons were nestled. Before they left the apartment Tesla went to the window, which was kept open at all times, whistled softly, and two more pigeons quickly flew into the room. Just before leaving for the dinner Tesla fed the pigeons, and having done so slipped a paper bag filled with something into his pocket. The possible significance of this latter act did not occur to Behrend until he heard the twittering of the birds in the park.

With all possible speed Behrend rushed out of the park, down 40th Street toward Fifth Avenue, and up the steps to the plaza of the Library. Here he beheld a sight that amazed him almost beyond belief in what his eyes told him. Here was the missing man. He had recalled that Tesla regularly visited the Library, St. Patrick's Cathedral, or other places to feed the pigeons.

In the center of a large thin circle of observers stood the imposing figure of Tesla, wearing a crown of two pigeons on his head, his shoulders and arms festooned with a dozen more, their white or pale-blue bodies making strong contrast with his black suit and black hair, even in the dusk. On either of his outstretched hands was another bird, while seemingly hundreds more made a living carpet on the ground in front of him, hopping about and pecking at the bird seed he had been scattering.

It was Behrend's impulse to rush in, shoo the birds away and, seizing the missing man, rush him back to the

auditorium. Something caused him to halt. Such an abrupt action seemed almost sacrilegious. As he hesitated momentarily, Tesla caught sight of him and slowly shifted the position of one hand to raise a warning finger. As he did so, however, he moved slowly toward Behrend; and as he came close, some of the birds flew from Tesla's shoulders to Behrend's. Apparently sensing a disturbing situation, though, all the birds flew to the ground.

Appealing to Tesla not to let him down, nor to embarrass those who were waiting at the meeting, Behrend prevailed upon the inventor to return to the auditorium. Little did Behrend know how much more the pigeons meant to Tesla than did the Edison Medal; and little could anyone have suspected the fantastic secret in Tesla's life, of which the outer manifestation was his faithful feeding of his feathered friends. To Behrend it was just another, and in this case very embarrassing, manifestation of the nonconformity of genius. Of this, more later.

Returning to the auditorium, Behrend explained in a quick aside to the president that Tesla had been temporarily ill, but that his condition was now quite satisfactory. The opening of the meeting had been delayed about twenty minutes.

In his presentation speech, Behrend pointed out that by an extraordinary coincidence, it was exactly 29 years ago, to the very day and hour, that Nikola Tesla presented his original description of his polyphase alternating-current system. He added:

Not since the appearance of Faraday's "Experimental Researches in Electricity" has a great experimental truth been voiced so simply and so clearly as this description of Mr. Tesla's great discovery of the generation and utilization of polyphase alternating currents. He left nothing to be done by those who followed him. His paper contained the skeleton even of the mathematical theory.

Three years later, in 1891, there was given the first great demonstration, by Swiss engineers, of the transmission of power at 30,000 volts from Lauffen to Frankfort by means of Mr. Tesla's system. A few years later this was followed by the development of the Cataract Construction Company, under the presidency of our member, Mr. Edward D. Adams, and with the aid of the engineers of the Westinghouse Company. It is

interesting to recall here tonight that in Lord Kelvin's support to Mr. Adams, Lord Kelvin recommended the use of direct current for the development of power at Niagara Falls and for its transmission to Buffalo.

The due appreciation or even enumeration of the results of Mr. Tesla's invention is neither practicable nor desirable at this moment. There is a time for all things. Suffce it to say that, were we to seize and eliminate from our industrial world the results of Mr. Tesla's work, the wheels of industry would cease to turn, our electric cars and trains would stop, our towns would be dark, our mills would be dead and idle. Yes, so far reaching is this work, that it has become the warp and woof of industry. . . . His name marks an epoch in the advance of electrical science. From that work has sprung a revolution in the electrical art.

We asked Mr. Tesla to accept this medal. We did not do this for the mere sake of conferring a distinction, or of perpetuating a name; for so long as men occupy themselves with our industry, his work will be incorporated in the common thought of our art, and the name of Tesla runs no more risk of oblivion than does that of Faraday, or that of Edison.

Nor indeed does this Institute give this medal as evidence that Mr. Tesla's work has its offcial sanction. His work stands in no need of such sanction.

No, Mr. Tesla, we beg you to cherish this medal as a symbol of our gratitude for a new creative thought, the powerful impetus, akin to revolution, which you have given to our art and to our science. You have lived to see the work of your genius established. What shall a man desire more than this? There rings out to us a paraphrase of Pope's lines on Newton:

"Nature and Nature's laws lay hid in night:

"God said, Let Tesla be, and all was light."

No record remains of Tesla's acceptance speech. He did not prepare a formal address. He had intended to make but a brief response, but instead he became involved in anecdotal narration and a preview of the future of electrical science

which, in the absence of the limiting influence of a written copy, became quite lengthy.

It is doubtful if anyone in the audience, or on the stage, grasped the full significance of Behrend's words when he said, "We asked Mr. Tesla to accept this medal." And fewer still were the members of the Institute who had any conception of the extent or importance of Tesla's contribution to their science. His major inventions had been announced thirty years before. The majority of the engineers present belonged to the younger generation; and they had been taught from textbooks that almost completely omitted mention of Tesla's work.

FIFTEEN

THE announcement by Tesla in his latter years that attracted the greatest amount of attention concerned his discovery of what has briefly, but not too accurately, been termed a death ray. Earlier reports had come from Europe of the invention of death rays, beams of radiation that would cause airships on which they impinged to burst into flame, the steel bodies of tanks to melt and the machinery of ships to stop operating, but all gave indications of being part of the game of diplomatic buncombe.

The prelude to Tesla's death-ray announcement came several years in advance, in the form of a declaration that he had made discoveries concerning a new form of power generation which, when applied, would make the largest existing turbine-dynamo units in the powerhouses look like pygmies. He made this announcement in interviews with the press in 1933, and declared that he was also working on a new kind of generator for the production of radiation of all kinds and in the greatest intensities. He made similar announcements the following year.

Both of these announcements were entitled to receive the most serious consideration, even though they were not accompanied by experimental evidence, and revealed no technical details.

When Tesla was talking as a scientist he was opposed to wars on moral, economic and all practical and theoretical grounds. But, like most scientists, when he stopped thinking as a scientist and let his emotions rule his thoughts, he found exceptions in which he felt some wars and situations were justifiable. As a scientist he was unwilling to have the discoveries of scientists applied to the purposes of war makers, but when the emotional phase of his nature took the ruling position he was willing to apply his genius to devising measures that would prevent wars by supplying protective devices.

This attitude is exemplified in the following statement, which he had prepared in the twenties but did not publish:

At present many of the ablest minds are trying to devise expedients for preventing a repetition of the awful conflict which is only theoretically ended and the duration and main issues of which I correctly predicted in an article printed in the Sun of December 20, 1914. The League is not a remedy but, on the contrary, in the opinion of a number of competent men, may bring about results just the opposite. It is particularly regrettable that a punitive policy was adopted in framing the terms of peace because a few years hence it will be possible for nations to fight without armies, ships or guns, by weapons far more terrible, to the destructive action and range of which there is virtually no limit. Any city at any distance whatever from the enemy can be destroyed by him and no power on earth can stop him from doing so. If we want to avert an impending calamity and a state of things which may transform this globe into an inferno, we should push the development of flying machines and wireless transmission of energy without an instant's delay and with all the power and resources of the nation.

Tesla saw preventive possibilities in his new invention which embodied "death-ray" characteristics, and which was made several years after the foregoing statement was written. He saw it providing a curtain of protection which any country, no matter how small, could use as a defense against invasion. While he might offer it as a defensive weapon, however, there would be nothing to stop military men from using it as a weapon of offense.

Tesla never gave the slightest hint concerning the principles under which his device operated.

There are indications, at any rate, that Tesla was working on a high-potential direct-current system for generating and transmitting electricity to long distances. Direct current at very high voltages can be transmitted much more effciently than alternating current. There has been no practical way of generating direct current at high voltages. It was because of this that Tesla's polyphase alternating-current system was adopted for our present nationwide superpower system, since it made the use of high voltages practicable. But, despite its effciencies, it entailed certain losses which could be eliminated if direct current of suffciently high voltage could be obtained. Such a system would supersede his alternating-current system but not displace it.

Direct current, perhaps at several million volts potential, would be used to transmit current for long distances, perhaps clear across the continent, providing a kind of express transmission system, to which the existing alternating-current system would be tied for local distribution. In addition to the direct-current transmission system, he appears to have worked out a high-voltage direct-current generator and a new type of direct-current motor which would operate without a commutator.

The inventions were starting to dam up in Tesla's mind like water in a reservoir to which there was no outlet.

Just as he developed his alternating-current system into the high-frequency, high-potential field of power distribution by wireless, which he demonstrated at Colorado Springs, so he appears to have carried his direct-current system forward and linked it with his alternating-current wireless distribution system, so that he could use both in a super-interlocking system. As this remained unapplied, he further evolved it and produced a plan for operating with it what appears to be a beam system of wireless transmission of energy which might involve the use of a stream of particles such as are used in the atom-smashing cyclotron.

As time passed from the latter twenties, through the latter thirties, the hints which Tesla would drop about his work became more complicated, and so ambiguous that they aroused skepticism rather than respect. He would not reveal the nature of his discoveries until he had secured patents, and

he would not apply for patents until he had made actual working models, and he could not make the working models because he had no money. Samuel Insull, the public utilities magnate, had for many years made frequent and generous contributions to Tesla. They were usually applied to outstanding debts and were not large enough to enable him to engage in laboratory research work.

Tesla, however, never exhibited the slightest outward sign of bitterness over the situation. Instead, he always appeared in the rle of confirmed optimist, always maintaining a spirit of hopefulness that he would achieve by his own efforts the money he needed to carry out his elaborated plans. This is indicated in a letter he wrote to B. A. Behrend, who had induced him to accept the Edison Medal, and who was probably in his confidence to a greater extent than anyone else:

"I am hard at work on those discoveries of mine, I told you about, from which I hope to derive a sum in eight figures (not counting the cents, of course) enabling me to erect that wireless power plant at my own expense. And what I shall accomplish by that other invention I came specially to see you about, I do not dare to tell you. This is stated in all seriousness."

The invention about which he dared not speak was probably his direct-current generating and transmitting system.

In an interview given in 1933, he said his power generator was of the simplest kind--just a big mass of steel, copper and aluminum, comprising a stationary and a rotating part, peculiarly assembled. He was planning, he said, to generate electricity and transmit it to a distance by his alternating system; but the direct-current system could also be employed if the heretofore insuperable diffculties of insulating the transmission line could be overcome.

A year later he had developed the beam-transmission plan; and he made an ambiguous statement concerning it which was reported in the press as news of a "death ray" since the description seemed to fit into the same mold as those wild and improbable statements that had come out of Europe some years before. A writer in the New York World-Telegram described Tesla's plan as "nebulous." This drew a reply from Tesla July 24, 1934) in which the following paragraphs appeared:

Still another item which has interested me is a report from Washington in the World Telegram of July 13, 1934, to the effect that scientists doubt the death ray effects. I am quite in agreement with these doubters and probably more pessimistic in this respect than anybody else, for I speak from long experience.

Rays of the requisite energy cannot be produced, and, then again, their intensity diminishes with the square of the distance. Not so the agent I employ, which will enable us to transmit to a distant point more energy than is possible by any other kind of ray.

We are all fallible, but as I examine the subject in the light of my present theoretical and experimental knowledge I am filled with deep convictions that I am giving to the world something far beyond the wildest dreams of inventors of all time.

This is the first written statement by Tesla in which he mentions his "ray"; but I had, as already noted, obtained some confidential statements from him, during the preceding year or so, concerning results he hoped to achieve through his new discovery, the nature of which he kept as a well-protected secret. Three years later, in 1937, Tesla permitted me to write a news story for the New York Herald Tribune on his new power-and-ray discovery. In it I stressed the usefulness of the discovery for delivering power to ships for travel across the ocean, thus eliminating the need for carrying fuel supplies, rather than its use as a weapon for defense or offense.

On this occasion I tried to get him to reveal some technical details, but he successfully parried every question and gave no information beyond the statement that the transmitting plant on shore was one which he would be able to erect at a cost of about $2,000,000, and the energy would be transmitted by a ray or beam of infinitesimally small cross section, one hundred thousandth of a centimeter in diameter. To other newspapers which copied my story he gave the figure as one millionth of a square centimeter.

Later, I wrote a somewhat critical review of his plan and sought to draw him out by reviewing the properties of electro-magnetic radiation in all parts of the spectrum. Finding none that possessed any known characteristics

needed to make his ray practical, I also reviewed the properties of all known particles of matter, and stated that none of these would serve his purpose with the possible exception of the unelectrified particle, the neutron. He made no revealing response to the article.

At his birthday dinner in 1938, at the Hotel New Yorker, Tesla described briefly his combination wireless-power transmission and death ray, adding little to what has already been stated; and in a later part of his speech he declared that he had developed a method for interplanetary communication, in which he would be able to transmit not only communication signals of small strength but energies involving thousands of horsepower.

On this occasion I asked him if he would be specific concerning the effects produced, and whether they would be visible from the earth; for example--could he produce an effect on the moon suffciently large to be seen by an astronomer watching the moon through a high-power telescope? To this he replied that he would be able to produce in the dark region of the thin crescent new moon an incandescent spot that would glow like a bright star so that it could be seen without the aid of a telescope.

It would appear probable that Tesla proposed to use for this purpose the beam he described in connection with his wirelesspower "death ray." The limitation of the destructive effects of the beam, which he visualized as two hundred miles, was due to the fact that the beam had a straight-line trajectory. Tesla stated that the curvature of the earth set a limit on the distance of operation, so the two-hundred-mile span of operation gave an indication of the greatest practical height of a tower from which the beam could be directed. He expected to use potentials of about 50,000,000 volts in his system, but whether of direct or alternating current is unknown.

The only written statement by Tesla on this subject is in his manuscript of the talk which was delivered, in absentia, some months later before the Institute of Immigrant Welfare in response to its honorary citation. In this was included the following paragraph:

"To go to another subject: I have devoted much of my time during the year past to perfecting of a new small and compact apparatus by which energy in considerable amounts

can now be flashed through interstellar space to any distance without the slightest dispersion. I had in mind to confer with my friend, George E. Hale, the great astronomer and solar expert, regarding the possible use of this invention in connection with his own researches. In the meantime, however, I am expecting to put before the Institute of France an accurate description of the device with data and calculations and claim the Pierre Gutzman Prize of 100,000 francs for means of communication with other worlds, feeling perfectly sure that it will be awarded to me. The money, of course, is a trifling consideration, but for the great historical honor of being the first to achieve this miracle I would be almost willing to give my life."

SELF-MADE SUPERMAN

SIXTEEN

IT WAS during a period when he was most busily occupied with his experiments with high-frequency and high-potential currents, from 1892 to 1894, that Tesla had found time to give serious thought to yet another type of problem, matter and energy; and from it he derived what he described as a new physical principle. This he developed to the point at which he was able to propound a new dynamic theory of gravity.

While this principle guided much of his thinking, he did not make any announcements concerning it until close to the end of his life. Such disclosures as have been made, however, leave this much obvious: Tesla considered his theory wholly inconsistent with the theory of relativity, and with the modern theory concerning the structure of the atom and the mutual interconversion of matter and energy. Tesla continuously attacked the validity of Einstein's work; and until two or three years before his death, he ridiculed the belief that energy could be obtained from matter.

These antagonisms were most unfortunate, as they placed Tesla in conflict with modern experimental physics. This was totally unnecessary, for Tesla could undoubtedly have adhered to his principle and interpreted it so that it was

not inconsistent with the modern theories. The antagonism was probably attributable to psychological factors rather than scientific inconsistencies.

The only statement Tesla has made concerning his principle and his theory is that contained in the lecture he prepared for delivery before the Institute of Immigrant Welfare (May 12, 1938). In this he stated:

During the succeeding two years [1893 and 1894] of intense concentration I was fortunate enough to make two far reaching discoveries. The first was a dynamic theory of gravity, which I have worked out in all details and hope to give to the world very soon. It explains the causes of this force and the motions of heavenly bodies under its influence so satisfactorily that it will put an end to idle speculation and false conceptions, as that of curved space. . . .

Only the existence of a field of force can account for the motions of the bodies as observed, and its assumption dispenses with space curvature. All literature on this subject is futile and destined to oblivion. So are all attempts to explain the workings of the universe without recognizing the existence of the ether and the indispensable function it plays in the phenomena.

My second discovery was of a physical truth of the greatest importance. As I have searched the entire scientific records in more than a half dozen languages for a long time without finding the least anticipation, I consider myself the original discoverer of this truth, which can be expressed by the statement: There is no energy in matter other than that received from the environment.

On my 79th birthday I made a brief reference to it, but its meaning and significance have become clearer to me since then. It applies rigorously to molecules and atoms as well as to the largest heavenly bodies, and to all matter in the universe in any phase of its existence from its very formation to its ultimate disintegration

Tesla's mind was inflexible in the matter of his attitude toward relativity and the modern theories. Had he published his principle and theory of gravity at the beginning of the century it would, without doubt, have then received very serious consideration and perhaps general acceptance,

although it is diffcult to make an intelligent surmise without knowledge of his postulates. If published, it might have had some influence on Einstein's thinking. The field of force which Tesla mentions as being necessary to explain the movements of the planets might have been his contribution to eliminating the need for the ether which was accomplished by Einstein's theory. The two theories might have been merged, in which case there probably would have resulted a harmonious development of the thinking of the two geniuses.

In this latter case Tesla could very well have shaped his thinking to see a consistency between his theory that there is no energy in matter other than that received from its environment, and the modern viewpoint that all matter consists of energy into which it is convertible; for when matter is converted to energy, the energy returns to the environment from whence it came when the particles were formed.

There appears to be a frustration involved in Tesla's attitude which could have been resolved by early publication of his theory. If this had taken place, Tesla's powerful intellect and his strange ability to solve problems would have been brought to bear on the problems of atomic physics and he, in turn, would have received tremendous benefits from the application of the newer knowledge in the fields in which he was supreme.

Tesla's ability to generate tremendously high voltages would have been of great assistance in the task of "smashing the atom." Other scientists, even today, are struggling to produce currents with a potential of 5,000,000 volts, whereas Tesla, forty years ago, had generated potentials of 135,000,000 volts.

The inconsistency between Tesla's principle and the picture of the atom consisting of a small complex nucleus surrounded by planetary electrons--which inconsistency was more existent in Tesla's mind than in Nature--caused him to develop an antagonism to all scientific developments which called for a picture that differed from the billiard-ball type of atom in vogue in the eighteen-eighties. To him, a smashed atom was like a smashed billiard ball.

The electron, however, had a real existence to Tesla. He accepted it as a kind of sub-atom, a fourth state of

matter, as described by Sir William Crookes, who discovered it. Tesla visualized it as associated with but not a part of the atom. The electric charge it carried was entirely distinct from the electron. Electricity, to him, was a fluid much more highly attenuated than any known form of matter, and with highly specific properties of its own for which it was not dependent upon matter. The charge on the electron was due to a surface layer of electricity covering it, and it could receive many layers, giving it multiple charges, all of which could be dissipated. These statements were similar to those which he had published a half-century before.

According to the modern theory, on the other hand, the electrical nature of the electron, described as its charge, is a characteristic inherent in the nature of the energy crystallized about a point which gives the electron its existence, and the electron is one of the particles, or units of energy, of which the atom is composed.

In discussing articles by scientists in the field of atomic physics, Tesla would register his protests that their theories were untenable and the claims unfounded; and he was particularly emphatic when experiments in which energy emissions from atoms were recorded.

"Atomic power is an illusion," he frequently declared. He furnished several written statements in which he said that with his currents of several million volts he had, countless times, smashed uncounted billions of atoms--and he knew that no emission of energy accompanied the process.

On one occasion Tesla took me to task rather severely for my failure to publish his statements. I replied: "I withheld them in order to protect your reputation. You are making too great a virtue of consistency. It is not necessary that you adhere to the theories you held as a youth, and I am convinced that deep down in your heart you hold newer theories that are in harmony with scientific developments in other fields, but because you have disagreed with, and attacked some modern theories, you feel you must be consistent and attack them all. I am convinced that in the development of your death-ray device your thinking was along the lines of the modern theory of the structure of the atom and the nature of matter and energy."

Tesla thereupon let me know in no uncertain terms that he held very definite ideas concerning efforts on the part of others to do his thinking for him. This conversation took place about 1935; and I did not hear from him for many months. I observed, however, that in his later conversations he was much less dogmatic concerning modern theories, and a few years later he stated that he was planning an apparatus which would make possible a definite testing of the modern theory of atomic structure, with the expectation that his new power system and energy beam would release atomic energy more effectively than any device then in use by physicists.

Having endorsed, finally, the belief that man will be able to smash, transmute, create or destroy atoms, and control vast amounts of energy, he waxed poetic on the subject. He extended man's control over atoms and energy to a cosmic scale, and saw him shaping the universe according to our desires. In an unpublished article, entitled "Man's Greatest Achievement," he wrote:

There manifests itself in the fully developed being--Man--a desire mysterious, inscrutable and irresistible: to imitate nature, to create, to work himself the wonders he perceives. Inspired to this task he searches, discovers and invents, designs and constructs, and covers with monuments of beauty, grandeur and awe, the star of his birth. He descends into the bowels of the globe to bring forth its hidden treasures and to unlock its immense imprisoned energies for his use. He invades the dark depths of the ocean and the azure regions of the sky. He peers into the innermost nooks and recesses of molecular structure and lays bare to his gaze worlds infinitely remote. He subdues and puts to his service the Werce, devastating spark of Prometheus, the titanic forces of the waterfall, the wind and the tide. He tames the thundering bolt of Jove and annihilates time and space. He makes the great Sun itself his obedient toiling slave. Such is his power and might that the heavens reverberate and the whole earth trembles by the mere sound of his voice.

What has the future in store for this strange being, born of a breath, of perishable tissue, yet immortal, with his powers fearful and divine? What magic will be wrought by him in the end? What is to be his greatest deed, his crowning achievement?

Long ago he recognized that all perceptible matter comes from a primary substance, or a tenuity beyond conception, filling all space, the Akasa or luminiferous ether, which is acted upon by the life-giving Prana or creative force, calling into existence, in never ending cycles, all things and phenomena. The primary substance, thrown into infinitesimal whirls of prodigious velocity, becomes gross matter; the force subsiding, the motion ceases and matter disappears, reverting to the primary substance.

Can Man control this grandest, most awe-inspiring of all processes in nature? Can he harness her inexhaustible energies to perform all their functions at his bidding, more still cause them to operate simply by the force of his will?

If he could do this, he would have powers almost unlimited and supernatural. At his command, with but a slight effort on his part, old worlds would disappear and new ones of his planning would spring into being. He could fix, solidify and preserve the ethereal shapes of his imagining, the fleeting visions of his dreams. He could express all the creations of his mind on any scale, in forms concrete and imperishable. He could alter the size of this planet, control its seasons, guide it along any path he might choose through the depths of the Universe. He could cause planets to collide and produce his suns and stars, his heat and light. He could originate and develop life in all its infinite forms.

To create and to annihilate material substance, cause it to aggregate in forms according to his desire, would be the supreme manifestation of the power of Man's mind, his most complete triumph over the physical world, his crowning achievement, which would place him beside his Creator, make him fulfill his ultimate destiny.

Tesla, in his eighties, was still manifesting the superman complex, and on even more elaborate a scale than when in his twenties. In his earlier dreams his visions were terrestrial, but in later life they were extended to embrace the entire universe.

Even on the cosmic scale, however, Tesla spoke in terms of matter and energy. These two entities, according to his reasoning, were suffcient to explain all observed

phenomena, a situation which militated against the discovery of any new agencies.

The civilizations of the ancient world knew nothing of electricity and magnetism; the controlled manifestations of these two phases of a single force-entity have provided us with a new civilization and a new cultural outlook on life, as well as broadened horizons within the life sphere. There is no reason why we should not look forward to the discovery of new forces which are as different from electricity as electricity is from the winds of the air and the waves of the ocean. If inadequate explanations of vital phenomena are accepted as satisfactory, embracing extravagant extensions of known forces, the way is closed to the discovery of unknown forces and the opening of any new realms of knowledge. This was the limitation which the science of the last quarter of the past century placed upon itself; and Tesla's philosophy was a product of that period. It was diffcult for him to reshape it in his later years.

The memory departments of most individuals' brains are like offce filing systems, an excellent dumping ground for everything that comes along--but try to find a filed item later. Tesla's powers of memorizing were prodigious. A quick reading of a page gave him a permanent record of it; he could always recall before his eyes a photographic record of it to be read, and could study at his convenience. Study, for Tesla, was a far different process than for the average person. He had no need for a reference library; he could consult in his mind any page of any textbook he had read, any formula, equation, or item in a table of logarithms, and it would flash before his eyes. He could recite scores of books, complete from memory. The saving in time which this made possible in research work was tremendous.

This strange faculty of vision was supernormal but entirely natural and was due, probably, to a structural characteristic in his brain which provided a direct channel between the memory and the visual areas of his cerebral hemispheres. It provided him with a very useful new sense.

The human brain is made up of two sections, the right and left sides, each of which, in some of its phases, is a complete brain; and both halves function together as a single unit. There are many layers in the brain parallel

with its surface, each connected to the others by complex nerve fibers, like threads sewing together the layers of an onion. The outer layer seems to be directly associated with our consciousness. The surface is divided into specialized areas, There is a band across the mid-section of each hemisphere from ear to ear over the top of the brain, devoted to the senses, and here are separate areas for the sensory faculties--sight, hearing, taste, smell--while near by are regions for the motor or muscular activities of the various parts of the body. The back lobe of the brain appears to be the home of the memory and the front lobe of some higher faculties of integration, the nature of which we do not as yet understand.

In normal processes of seeing, the eye forms a picture of an object on the retina, a screen on the back of the eyeball. The retina is supplied with thousands of nerve endings all packed together like stalks of asparagus in a bunch. The tip ends are provided with photosensitive processes, and when light strikes any one of them it transmits over the optic nerve a signal to the brain which is recorded as a visual response in the sight area of each half of the brain. By cooperation of all the nerve endings, the complete picture seen is transmitted. The actual seeing, then, is done in the brain and not in the eye. When an object is seen by the brain, a record of that visual experience is transmitted from the sight area of the brain to the memory center in the back part of the brain; and similar records are sent by all other sensory centers. Ordinarily this is a one-way process, the stimuli going in the direction of the memory and nothing coming back to the sensory area. If this were not so, our sense areas of the brain would be continuously reenacting old experiences and mixing them with the new, incoming experiences, causing annoying confusion.

The memory area contains a complete record of all sensory experiences we have had. In our thinking processes we use some little-understood mechanism for connecting together items stored in the memory area to produce useful combinations or relationships, or, in other words, new ideas. The memory appears to function on a subconscious level but we seem to be able to activate fibers that reach down to the desired strata at the right point to connect the memory level with the consciousness level. In this way we can recall experiences, but this experience of memory is

far different from the original experience of sight out of which the original memory record was made.

If, however, in this process of recollection, the nerve fiber linking the sight area of the brain and the memory area were to be activated, then we would see again by the sharp processes of vision the object which caused the memory record we are trying to recollect.

The act of creative thinking seems to consist of assembling two or more memory records of sensory experiences into a combination which possesses entirely new characteristics that were not apparent in the component parts. If the nerve linkage just referred to were to operate in a two-way process with the visual area, then we would be able to see the new creation as if it were a really existing object seen by the eye, although the whole operation was limited to the brain.

This process is hypothetically the one which took place in Tesla's brain and gave him tremendously greater powers of creative work than are possible to the ordinary individual. Was this conceivably a new in-vention made by Mother Nature and tried out by her on Tesla?

Tesla himself never understood the neurological, or physiological, processes underlying this strange faculty. To him it was an absolutely real experience to see in front of him as solid objects the subjects of his creative thoughts. He believed that the image of the thing he saw was sent back from the brain along the optic nerve to the eye, and that it existed as a picture on the retina where, by some suitable means, it could be seen by others--or that by means of adequate amplifying devices, such as are used in television, it could be projected on a screen. He even proposed such devices. (The apparent flaw in his reasoning followed on his mistake in thinking that he was doing this supernormal seeing with his eye, whereas the process was confined to his brain; and the reflex action from the memory centers stopped at the visual centers instead of, as he believed, being continued forward through the optical nerve to the retina.)

Tesla described his experience with this strange faculty in an interview with M. K. Wisehart, published under the title "Making Your Imagination Work for You" in the American Magazine, April, 1921. He stated:

During my boyhood I had suffered from a peculiar affliction due to the appearance of images, which were often accompanied by strong flashes of light. When a word was spoken, the image of the object designated would present itself so vividly to my vision that I could not tell whether what I saw was real or not. . . . Even though I reached out and passed my hand through it, the image would remain fixed in space.

In trying to free myself from these tormenting appearances, I tried to concentrate my thoughts on some peaceful, quieting scene I had witnessed. This would give me momentary relief; but when I had done it two or three times the remedy would begin to lose its force. Then I began to take mental excursions beyond the small world of my actual knowledge. Day and night, in imagination, I went on journeys--saw new places, cities, countries, and all the time I tried hard to make these imaginary things very sharp and clear in my mind. I imagined myself living in countries I had never seen, and I made imaginary friends, who were very dear to me and really seemed alive.

This I did constantly until I was seventeen, when my thoughts turned seriously to invention. Then, to my delight, I found I could visualize with the greatest facility. I needed no models, drawings, or experiments. I could picture them all in my mind. . . .

By that faculty of visualizing, which I learned in my boyish efforts to rid myself of annoying images, I have evolved what is, I believe, a new method of materializing inventive ideas and conceptions. It is a method which may be of great usefulness to any imaginative man, whether he is an inventor, businessman or artist.

Some people, the moment they have a device to construct or any piece of work to perform, rush at it without adequate preparation, and immediately become engrossed in details, instead of the central idea. They may get results, but they sacrifice quality.

Here, in brief, is my own method: After experiencing a desire to invent a particular thing, I may go on for months or years with the idea in the back of my head. Whenever I feel like it, I roam around in my imagination and think

about the problem without any deliberate concentration. This is a period of incubation.

Then follows a period of direct effort. I choose carefully the possible solutions of the problem. I am considering, and gradually center my mind on a narrowed field of investigation. Now, when I am deliberately thinking of the problem in its specific features, I may begin to feel that I am going to get the solution. And the wonderful thing is, that if I do feel this way, then I know I have really solved the problem and shall get what I am after.

The feeling is as convincing to me as though I already had solved it. I have come to the conclusion that at this stage the actual solution is in my mind subconsciously, though it may be a long time before I am aware of it consciously.

Before I put a sketch on paper, the whole idea is worked out mentally. In my mind I change the construction, make improvements, and even operate the device. Without ever having drawn a sketch I can give the measurements of all parts to workmen, and when completed all these parts will fit, just as certainly as though I had made the actual drawings. It is immaterial to me whether I run my machine in my mind or test it in my shop.

The inventions I have conceived in this way have always worked. In thirty years there has not been a single exception. My first electric motor, the vacuum tube wireless light, my turbine engine and many other devices have all been developed in exactly this way.

That Tesla believed his mental visualizations brought images from his brain to the back of his eye is indicated by some statements he made in his famous lecture before the National Electric Light Association convention at St. Louis, in March, 1893, when announcing his discovery of radio. These statements about vision had no relationship to the subject of the lecture, and the fact that he interjected them indicated that his experiences with this strange power had a powerful influence on his inventive thinking. He said:

It can be taken as a fact, which the theory of the action of the eye implies, that for each external impression, that is for each image produced on the retina, the ends of the visual nerves, concerned in the conveyance of the

impressions to the mind, must be under a peculiar stress or in a vibratory state. It now does not seem improbable that, when by the power of thought an image is evoked, a distinct reflex action, no matter how weak, is exerted upon certain ends of the visual nerves, and therefore upon the retina. Will it ever be within human power to analyze the condition of the retina, when disturbed by thought or reflex action, by the help of some optical or other means of such sensitiveness that a clear idea of its state might be obtained? If this were possible, then the problem of reading one's thoughts with precision, like the characters of an open book, might be much easier to solve than many problems belonging to the domain of positive physical science, in the solution of which many, if not the majority, of scientific men implicitly believe.

Helmholtz has shown that the fundi of the eye are themselves luminous, and he was able to see in total darkness the movements of his arm by the light of his own eyes. This is one of the most remarkable experiments recorded in the history of science, and probably only a few men could satisfactorily repeat it, for it is very likely that the luminosity of the eyes is associated with uncommon activity of the brain and great imaginative power. It is fluorescence of brain action, as it were.

Another fact having a bearing on this subject, which has probably been noted by many, since it is stated in popular expressions, but which I cannot recollect to have found chronicled as a positive result of observation is that, at times, when a sudden idea or image presents itself to the intellect, there is a painful sensation of luminosity produced in the eye observed even in broad daylight.

Forty years later Tesla was still interested in the possibility of capturing a photographic record of thoughts. He stated in interviews that if his theory were correct--that thoughts are recorded on the retina--it should be possible to photograph what is revealed on this screen in the eye, and project enlarged images of it.

There is nothing illogical about Tesla's reasoning concerning his strange faculty of visualizing and the possibility of finding a corresponding image on the retina. There is a bare possibility that in an extreme case, as was his, a reflex arc may have extended from the brain to the retina; but the probability that it did not is stronger. If

he had possessed the ability to take others into his confidence in his experiments, he would have been able to stage some simple tests in the laboratory of an ophthalmologist which would have given him some definite experimental evidence to support or dispose of his theories, as far as photographic thought images were concerned.

About 1920 tesla had prepared, although he never published, an announcement of what he declared was "An Astounding Discovery." It involved factors which he called "cosmic"; but it likewise presented situations which the practicers of voodoo in Haiti, and other intellectually unveneered portions of the human race, would receive with perfect understanding. Since Tesla, one of the most highly civilized individuals, could evolve this conception, it is probable that other supercultured individuals or groups could find it in harmony with their ideas and experiences.

It involves, however, a situation in which the soulless "matter and energy" automaton (to which status we have seen Tesla relegate human beings) is able to judge ethical values, and, like a pontiff presiding over a court of morals, inflict punishment for transgressions.

Here is Tesla's description of his "astounding discovery":

While I have failed to obtain any evidence in support of the contentions of psychologists and spiritualists, I have proved to my complete satisfaction the automatism of life, not only through continuous observation of individual actions, but even more conclusively, through certain generalizations. These amount to a discovery which I consider of the greatest moment to human society and on which I shall briefly dwell.

I got the first inkling of this astounding truth when I was still a very young man, but for many years I interpreted what I noted simply as coincidences. Namely, whenever either myself or a person to whom I was attached, or a cause to which I was devoted, was hurt by others in a particular way, which might be best popularly characterized as the most unfair imaginable, I experienced a singular and undefinable pain which, for want of a better term, I have qualified as "cosmic," and shortly thereafter, and invariably, those who have inflicted it came to grief. After many such cases I confided this to a number of

friends, who had the opportunity to convince themselves of the truth of the theory which I have gradually formulated and which may be stated in the following words.

Our bodies are of similar construction and exposed to the same external influences. This results in likeness of response and concordance of the general activities on which all our social and other rules and laws are based. We are automata entirely controlled by the forces of the medium, being tossed about like corks on the surface of the water, but mistaking the resultant of the impulses from the outside for free will.

The movements and other actions we perform are always life-preservative and though seemingly quite independent from one another, we are connected by invisible links. So long as the organism is in perfect order it responds accurately to the agents that prompt it, but the moment there is some derangement in any individual, his self-preservative power is impaired.

Everybody understands, of course, that if one becomes deaf, has his eyesight weakened, or his limbs injured, the chances for his continued existence are lessened. But this is also true, and perhaps more so, of certain defects in the brain which deprive the automaton, more or less, of that vital quality and cause it to rush into destruction.

A very sensitive and observant being, with his highly developed mechanism all intact, and acting with precision in obedience to the changing conditions of the environment, is endowed with a transcending mechanical sense, enabling him to evade perils too subtle to be directly perceived. When he comes in contact with others whose controlling organs are radically faulty, the sense asserts itself and he feels the "cosmic" pain.

The truth of this has been borne out in hundreds of instances and I am inviting other students of nature to devote attention to this subject, believing that, through combined and systematic effort, results of incalculable value to the world will be attained.

Tesla's uncommunicative nature concerning his own intimate experiences has undoubtedly deprived the world of many interesting stories. He was unquestionably an abnormal individual, and of a type that does have what are known as

"psychic experiences." He was emphatic in his denial that he ever had experiences of that sort; yet he has related incidents that clearly belong in the psychic category. He seemed to be fearful that an admission of psychic experiences would cause him to be misunderstood as supporting spiritualism, or theories that something operates in life other than matter and energy.

Whenever he was asked for his philosophy of life, he would elaborate a theory that the human body is a meat machine which responds to external forces.

One evening in New York, as Tesla and the author sat in the lobby of the Hotel Governor Clinton, the inventor discussed his meat-machine theory. It was a materialistic philosophy typical of the Victorian era. We are, he held, composed of only those things which are identified in the test tube and weighed in the balance. We have only those properties which we receive from the atoms of which our bodies are constructed. Our experiences, which we call life, are a complex mixture of the responses of our component atoms to the external forces of our environment.

Such a philosophy has the virtue of simplicity and brevity of presentation; and it lends itself readily to being propounded with a positiveness that reacts on the propounder, and transforms his attitude into one of dogmatism in which emphatically expressed opinion is often confused with and substituted for factual evidence.

"I don't believe a word of your theory," I replied to Tesla's exposition, "and, thank God, I am convinced you don't believe a word of it either. The strongest proof I have that your theory is totally inadequate is that Tesla exists. Under your theory we could not have a Tesla. Tesla possesses a creative mind and, in his accomplishments, stands high above all other men. If your theory were correct, we would either all be geniuses like Tesla or we would all be mental mediocrities living in these meat machines you describe, all responding in the same way to the uniform, inanimate and uncreative external forces."

"But we are all meat machines," replied Tesla, "and it happens that I am a much more sensitive machine than other people and I receive impressions to which they are inert, and I can both understand and interpret these impressions. I am simply a finer automaton than others," he insisted.

"This difference, which you admit between yourself and others, Dr. Tesla, completely disproves your theory, from my viewpoint," I responded. "Your sensitiveness would be a purely random incident. In the integration of this randomness, with respect to all individuals, all of us would probably once, possibly very much more frequently, rise to the height of manifesting genius as you have done all your life. Even though the strokes of genius would manifest intermittently, all such individuals would receive the permanent rating as geniuses. Genius does not manifest, even intermittently, in all of us, so your meat-machine theory appears, to me, untenable, If you were really frank with me, you would tell me of many experiences you have had, strange experiences, that you could not explain, that do not fit into your meat-machine theory, and which you have been afraid to discuss with anyone for fear they would misunderstand you and perhaps ridicule you. I, however, will not find these experiences strange and beyond understanding, and one of these days you will open up and tell me about them."

As happened whenever I disagreed with him, after that evening I did not see Tesla for a while. In due time, however, I had a great many telephone conversations with him. Our discussion seemed to have brought about a change in his attitude toward me; and the next time I saw him he confided, "Mr. O'Neill, you understand me better than anyone else in the world." I mention this to indicate the correctness of my belief that there was another Tesla hidden within that synthetic individual, the superman, which Tesla sought to pass off on the public as his real self.

I did not, at this time, know about Tesla's "astounding discovery," or of some of his experiences about which I later learned. Had I known of these, my discussion with him could have been more specific.

SEVENTEEN

ALTHOUGH Tesla thoroughly disbelieved in psychical phenomena, as previously indicated, he had many experiences which belong in this category; and he neither discredited nor disavowed their reality. Such paradoxes were common in all matters concerning him.

Tesla, for example, completely rejected telepathy as a phase of psychical phenomena, but he was firmly convinced that mind could communicate directly with mind. When asked about his belief in telepathy by a newspaper reporter in the early nineties, Tesla replied: "What is usually taken as evidence of the existence of telepathy is mere coincidence. But the working of the human mind through observation and reason interests and amazes me. And then he added the paradoxical statement: "Suppose I make up my mind to murder you. In an instant you would know it. Now, isn't that wonderful enough? By what process does the mind get at all this?"

Reduced to its simplest terms, this interview states: Psychical telepathy does not exist as a reality; but the transmission of thought from mind directly to mind is a wonderful phenomenon, worthy of scientific study.

The paradox here is due to the fact that, at the period in which Tesla was speaking, all psychical phenomena were supposed to be mediated by the intervention of spirits, or souls of the departed. Such a theory had no place in Tesla's philosophy, since he did not believe in immortality and felt that he could explain all phenomena in terms of matter and energy; and the spirit was supposed to lie beyond both of these categories. Thinking, however, was, according to Tesla's theories, something which resulted from the interaction of matter and energy in the brain; and as this process probably produced waves in the ether, there was no reason why the waves sent out by one mind should not be received by another, with resulting transfer of thought.

Tesla would not discuss anything bordering on psychical experiences outside the circle of his relatives, however. On one occasion, though, he probably saved the lives of three of his friends through a premonition; and he related the incident to his nephew, Sava N. Kosanovich, who thus retells it:

"I heard from Tesla that he had premonitions. He explained his in a mechanical way, saying he was a sensitive receiver

that registers any disturbance. He declared that each man is like an automaton which reacts to external impressions.

"He told me of one instance in which he had held a big party here in New York for some of his friends who planned to take a certain train for Philadelphia. He felt a powerful urge not to let the friends depart as planned and forcibly detained them so that they missed the train on which they had planned to travel. This train met with an accident in which there were a large number of casualties. This happened sometime in the 90's.

"When his sister Angelina was ill, and died, he sent a telegram in which he said: "I had a vision that Angelina was arising and disappearing. I sensed all is not well."

Tesla himself tells a most remarkable story of two supernormal events, in an unpublished manuscript. It records a situation in which, owing to overwork, his strange phenomenon of visualization disappeared, or died, and was reborn. In coming back, it grew up quickly by repeating the visualization of events of earliest childhood and successively re-enacting later events, until it brought him to the actual moment and capped the climax by then presenting a visualization of an event that had not yet taken place.

The story of this experience, as told by Tesla:

I will tell of an extraordinary experience which may be of interest to students of psychology. I had produced a striking phenomenon with my grounded transmitter and was endeavoring to ascertain its true significance in relation to the currents propagated through the earth. It seemed a hopeless undertaking and for more than a year I worked unremittingly but in vain. This profound study so entirely absorbed me that I became forgetful of everything else, even of my undermined health. At last, as I was on the point of breaking down, nature applied the preservative, inducing lethal sleep.

Regaining my senses, I realized with consternation that I was unable to visualize scenes from my life except those of infancy, the very first ones that had entered my consciousness. Curiously enough, these appeared before my vision with startling distinctness and afforded me welcome relief. Night after night, when retiring, I would think of

them and more and more of my previous existence was revealed. The image of my mother was always the principal figure in the spectacle that slowly unfolded, and a consuming desire to see her again gradually took possession of me.

This feeling grew so strong that I resolved to drop all work and satisfy my longing. But I found it too hard to break away from the laboratory and several months elapsed during which I succeeded in reviving all the impressions of my past life up to the spring of 1892.

In the next picture that came out of the mist of oblivion, I saw myself at the Hotel de la Paix in Paris just coming to from one of my peculiar sleeping spells caused by prolonged exertion of the brain. Imagine the pain and distress I felt when it flashed upon my mind that a dispatch was handed to me at that very moment bearing the sad news that my mother was dying.

It was especially remarkable that all during this period of partially obliterated memory I was fully alive to everything touching on the subject of my research. I could recall the smallest details and the least insignificant observations in my experiments and even recite pages of texts and complex mathematical formulae.

This was a prevision of the event which took place immediately after his Paris lecture, as described in an earlier chapter, in which he rushed home in time to see his mother just before she died.

The second incident also concerns the death of his mother, and is told in another connection in the same manuscript. He states:

For many years I have endeavored to solve the enigma of death and watched eagerly for every kind of spiritual indication. But only once in the course of my existence have I had an experience which, momentarily, impressed me as supernatural. It was at the time of my mother's death.

I had become completely exhausted by pain and long vigilance and one night was carried to a building about two blocks from our home. As I lay helpless there, I thought that if my mother died while I was away from her bedside she would surely give me a sign.

Two or three months before I was in London in company with my late friend, Sir William Crookes, when spiritualism was discussed and I was under full sway of these thoughts. I might not have paid attention to other men but was susceptible to his arguments as it was his epochal work on radiant matter, which I had read as a student, that made me embrace the electrical career.

I reflected that the conditions for a look into the beyond were most favorable, for my mother was a woman of genius and particularly excelling in the powers of intuition. During the whole night every fiber of my brain was strained in expectancy, but nothing happened until early in the morning when I fell into a sleep or perhaps a swoon, and saw a cloud carrying angelic figures of marvelous beauty, one of whom gazed upon me lovingly and gradually assumed the features of my mother. The apparition slowly floated across the room and vanished and I was awakened by an indescribably sweet song of many voices. In that instant a certitude, which no words can express, came upon me that my mother had just died. And that was true.

I was unable to understand the tremendous weight of the painful knowledge I received in advance and wrote a letter to Sir William Crookes while still under the domination of these impressions and in poor bodily health.

When I recovered I sought for a long time the external cause of this strange manifestation and to my great relief, I succeeded after many months of fruitless effort. I had seen the painting of a celebrated artist, representing allegorically one of the seasons in the form of a cloud with a group of angels which seem to actually float in the air, and this had struck me forcibly. It was exactly the same that appeared in my dream with the exception of my mother's likeness. The music came from the choir in the church nearby at the early mass of Easter morning, explaining everything satisfactorily in conformity to scientific facts.

This "scientific" explanation by Tesla is, of course, totally unscientific. It ignores the three principal facts: one, that he had what he identified at the time as a supernormal experience that brought with it a certitude that words could not describe; two, that this experience conveyed a revelation of his mother's death, which he

understood as such; and, three, that the event took place at the exact time of her death. The mechanism by which the phenomenon was produced utilized the memories stored in Tesla's mind (of the painting, for example) as the vehicle by which the information could be presented to him in understandable, though symbolic, form. In addition, there was the premonition given several months previously as the climax of an extended phenomenon involving his mother.

Tesla's efforts to explain away "scientifically" everything of a psychical or spiritual nature, and the inadequate explanations which were satisfactory to him for this purpose, are an indication of a conflict that was taking place within him in an effort to reconcile the purely materialistic "matter and energy" superman, into which he fashioned himself, with the underlying individual into which was born a great capacity for manifesting a deep spiritual insight into life, but which he suppressed.

One of the strangest luncheon parties Tesla ever staged was that given by him to a prize fighter, Fritzie Zivic. It was served in one of the private dining rooms of the Hotel New Yorker in 1940. Fritzie Zivic was scheduled to take part in a prize fight at Madison Square Garden for the welterweight championship, and the luncheon was held at noon on the day of the battle.

Fritzie was one of six brothers, all of whom were either professional prize fighters or wrestlers. They lived at Pittsburgh where their father conducted a beer saloon. They were all born in Pittsburgh, but were the sons of parents, natives of Yugoslavia, whose diffcult-to-pronounce Slavonic name was shortened to Zivic by the brothers for their professional activities.

Tesla had all six of the brothers as his guests. The only other guests were William L. Laurence, science writer of the New York Times, and the author.

Three very different types of individuals were gathered around the table. The six fighting brothers were all fine physical specimens. They averaged medium height but their powerful, chunky bodies, deep chests and broad shoulders made them seem rather short. All were clear eyed, had clear complexions and clean-cut features, were conservatively dressed in sack suits, and wore white linen collars. The two newspapermen presented an appearance in strong contrast

with the fighters, and in contrast with all the others was Tesla. Laurence, with his great mop of jet black hair combed straight back, looked more like a musician.

Tesla was seated at the head of the table. At his right sat Fritzie and next to him ranged three of his brothers. Opposite them sat two other brothers and Mr. Laurence. The author sat at the far end of the table.

Tesla did not arrange one of his famous duck dinners for this occasion--he had other plans. As soon as the party was seated, Tesla stood up. The broad, stocky Fritzie looked like a pygmy by comparison. Tesla was attired in a light-weight, tight-fitting, black, single-breasted sack suit which made him look more slender than usual. He had lost considerable weight in the preceding year, and this accentuated the sharp, bony contour which his face had taken on in his latter years. His face, of the ascetic type, now was crowned with thinning locks of silvery white hair. His long slender hands, delicately shaped, started to wave over the seated prize fighter, who smiled up at the strange figure towering above him.

"I am ordering for you a nice thick beefsteak, two inches thick, so that you will have plenty of strength tonight to win the championship by a . . . "

The fighter had both hands up, trying to interrupt the gesticulating figure of the scientist.

"No," protested Fritzie, "I am in training and I cannot eat a steak today."

"You listen to me," shouted the insistent voice of Tesla, whose swinging arms and swaying body made him appear to be going through the antics of a cheer leader at a football game. "I'll tell you how to train. You will train on beefsteak. I am going to get you a beefsteak two inches thick and dripping with blood so that you will be able to . . ."

The five brothers now joined Fritzie in his protest.

"He can't eat beefsteak today. He would lose the fight, Dr. Tesla," they chorused.

"No, he won't lose the fight," shot back Tesla. "You must think of the heroes of our national Serbian poetry. They were redblooded men and mighty fighters. You too must fight for the glory of Serbia, and you need beefsteak dripping in blood to do it!"

Tesla had worked himself into a fine frenzy and was waving his arms and punching his palms as if he were at the ringside at an exciting moment in the battle. His frenzy was lost on Fritzie and his brother pugilists. They were unmoved. Fritzie replied:

"I will win, Dr. Tesla. I will fight for the glory of Yugoslavia and when the referee gives me the decision and I speak into the microphone I will also say I fought for Dr. Tesla--but no beefsteak today, Dr. Tesla, please."

"All right, Fritzie, you can have whatever you want," Tesla agreed, "but your brothers will have their beefsteak."

"No, Dr. Tesla," replied the eldest brother, "if Fritzie cannot have beefsteak neither will we. We will eat whatever he eats."

Fritzie ordered scrambled eggs on toast, with bacon, and a glass of milk. The five brothers gave duplicate orders and the two newspapermen did likewise.

Tesla laughed heartily. "So that is what you do your fighting on today," he said between chuckles.

For himself, the blood-thirsty 83-year-old scientist ordered "A dish of hot milk"; and on this diet he managed to summon a tremendous amount of energy during the meal which he directed toward urging Fritzie to give his opponent "everything you've got" and "make it a knockout in the first round."

It was a strange dinner. Despite the greatly outnumbering pugilists with their hard set faces and chunky powerful bodies, the thin, bony faced, sharp featured, almost emaciated scientist with his sunken eyes, and his thin, silky silver hair, easily dominated the scene. Everyone was at ease despite the brothers' anticipation of Fritzie's impending battle and Tesla's enthusiasm. Yet, in spite of the fact that everyone was relaxed, there was an eerie kind of tenseness linking the peculiar assemblage. Once I became

conscious of the situation, I watched developments with interest. I had experienced such conditions previously but never under such circumstances as these.

Mr. Laurence, of the Times, was seated at my right. He began to act a bit restless while only halfway through the meal. Several times he looked under the table. He in turn rubbed his ankle, his knee, his calf. He shifted his position. He rubbed his elbow and later his forearm. I managed to catch his eye.

"Anything bothering you, Bill?" I asked, knowing full well what was happening.

"There is something strange going on here," he replied.

A couple of minutes later he again reached, and looked under the table.

"Feel anything?" I asked.

"Yes," he replied, seemingly a bit worried. "Something hot is touching me at different spots. I can feel the heat but I can't see anything that is doing it. Do you feel it, too?" he asked.

"Don't worry about it," I assured him. "I know what it is, and will tell you all about it later. Just make as close observations as you can now."

The phenomenon continued until the party broke up. On our way back to our offces, I explained to Mr. Laurence.

"You have often laughed at me for my gullibility in accepting the reality of the so-called psychic experiences," I said. "Now you have had one. As soon as that luncheon got well under way, after Dr. Tesla's fiery outburst had quieted down, I sensed a peculiar tenseness in the air around me. At times the atmosphere seemed webby to my face and hands, so I suspected something unusual might happen.

"That gathering was a perfect set-up for a psychic seance, and if it was held in the dark there is no telling what we might have observed. Here were six powerfully built men, closely in rapport with each other, all filled to the bursting point with vital energy waiting for an event that

would release an emotional outburst. In addition, we had Dr. Tesla staging an emotional outburst the like of which he probably never before exhibited throughout his life. He was supercharged with a different kind of vital energy. Just visualize Dr. Tesla as a medium acting as a co-ordinator, in some unknown way, to release these pent-up stores of vital energy which, again in an unknown manner, organized channels of conduction through which this energy was transferred from levels of high potential to levels of lower potential.

"In this case we were the levels of lower potential, for I had exactly the same experiences you had, with these energy-transfer channels in space making contact with various parts of my body and producing areas in which I, too, experienced a sensation of intense heat.

"You have read reports of seances in which the sitters reported that they experienced cool breezes. In these situations the action is the reverse of what we experienced, for in the seances energy was being drawn from the sitters to be organized by the so-called medium for the production of phenomena.

"Some kind of highly attenuated energy-bearing fluid was, in our experience today, drawn from the bodies of the fighters and fed into our bodies--and in the seances it is drawn from the bodies of the sitters and fed into that of the medium, or to a central collecting point. In a report which I have written on my seance observations, I have called this substance psynovial fluid, which is merely a convenient abbreviation for new psychic fluid.

"Now that you have had today's experience, you will understand why a few years ago I risked having Dr. Tesla figuratively massacre me when I told him he was using his meat-machine philosophy of human life to cover up a lot of strange experiences he has had, and about which he was afraid to talk. . . ."

Another strange supernormal experience came to Tesla a few days before he died, but he was probably totally unaware that the situation had any unusual aspects.

Early one morning he called his favorite messenger boy, Kerrigan, gave him a sealed envelope, and ordered him to

deliver it as quickly as possible. It was addressed to "Mr. Samuel Clemens, 35 South Fifth Ave., New York City."

Kerrigan returned in a short time with the statement that he could not deliver the message because the address was incorrect. There is no such street as South Fifth Ave., the boy reported; and in the neighborhood of that number on Fifth Ave. no one by the name of Clemens could be located.

Tesla became annoyed. He told Kerrigan: "Mr. Clemens is a very famous author who writes under the name Mark Twain, and you should have no trouble locating him at the address I gave you. He lives there."

Kerrigan reported to the manager of his office and told him of his diffculty. The manager told him: "Of course you couldn't find South Fifth Avenue. Its name was changed to West Broadway years ago, and you won't be able to deliver a message to Mark Twain because he has been dead for twenty-five years."

Armed with this information, Kerrigan returned to Tesla, and the reception accorded his announcements left him still further confused.

"Don't you dare to tell me that Mark Twain is dead," said Tesla. "He was in my room, here, last night. He sat in that chair and talked to me for an hour. He is having financial diffculties and needs my help. So you go right back to that address and deliver that envelope--and don't come back until you have done so." (The address to which he sent the messenger was that of Tesla's first laboratory!)

Kerrigan returned to his offce. The envelope, not too well sealed, was opened in the hope it would give some clue as to how the message could be delivered, The envelope contained a blank sheet of paper wrapped around twenty $5 bills! When Kerrigan tried to return the money, Tesla told him, with great annoyance, either to deliver the money or keep it.

The last two decades of Tesla's life were filled with many embarrassing situations concerning unpaid hotel bills, and it would seem that by some process of transference this situation was shifted to his perception of Mark Twain.

In view of Tesla's highly intensified abilities to see the subjects of his thoughts as materialized objects, the simpler theory would be that by his usual process he had summoned the vision of Mark Twain, Tesla and Mark Twain were very good friends, and the inventor had every reason for knowing that the heavy-thinking humorist was dead, Such being the case, how was he able to forget his death? An objective theory can be offered which may, or may not, contain the correct explanation.

Tesla's memory was filled with many recollections of Mark Twain, dating back to his early youth when he credited the reading of one of the humorist's books with having brought him out of a critical illness. Twenty years later, when Tesla related this incident, the humorist was so deeply affected he wept. A close friendship followed, filled with many pleasant incidents. Every incident concerning Mark Twain was laid down in Tesla's memory. How these records are filed in the brain we do not know, but we might assume, for the moment, that the arrangement is orderly enough, with the system based on a time sequence in which each successive incident is filed on an earlier one, the latest ones being on top. When Tesla started the process of visualizing Mark Twain in his room (and it probably operated on a subconscious level), he penetrated through the stack of memory records until he reached one that was satisfactory, and then concentrated so heavy a flow of vital energy in carrying this to the visualization center of his brain that it burned out, and destroyed, or narcotized, all later memory records that lay above it. As a result, after the visualization process was over, there was no record in Tesla's memory files of anything that happened in his relations with Mark Twain, following the pleasant record he had so strangely relived. All subsequent memory records were wiped out, including his memory of Mark Twain's death. It would then be perfectly logical for him to reach the conclusion that Mark Twain was still alive!

Several versions of this story are in circulation. They all have in common Tesla's belief that Mark Twain was still alive; that he himself had very recently been in communication with him, and sought to send him money to meet a diffcult situation.

Pirated, lied about, ignored, (Dr. W. H. Eccles concludes an obituary memorial, in Nature (London), February 13, 1943:--"Throughout his long life of 85 years Tesla seldom

directed attention to his own successes, never wrote up again his old work, and rarely claimed priority though continually pirated. Such reserve is particularly striking in a mind so rich in creative thought, so competent in practical achievement.") Tesla carried on his work during the latter decades, always hoping that he would be able to arrange matters so that he would be able to finance all the inventions he was treasuring in his mind. His pride would not permit him to admit financial embarrassment. He was forced frequently to leave hotels because of unpaid bills. His friend, B. A. Behrend, author of the book, The Induction Motor, which had clarified Tesla's theory for engineers, when visiting New York and finding the inventor moved from the hotel where he last found him, in each instance paid his bills, and caused Tesla's held baggage to be forwarded to him.

In the early thirties, when it seemed as if financial discouragements would "have him down," Tesla, however, appeared as optimistic as ever. He declared: "It is impossible for anyone to gain any idea of the inspiration I gain from my applied inventions which have become a matter of history, and of the force it supplies to urge me forward to greater achievements. I continually experience an inexpressible satisfaction from the knowledge that my polyphase system is used throughout the world to lighten the burdens of mankind and increase comfort and happiness, and that my wireless system, in all of its essential features, is employed to render a service to and bring pleasure to people in all parts of the earth."

When his wireless-power system was mentioned, he exhibited no sign of resentment over the collapse of his project but replied philosophically: "Perhaps I was a little premature. We can get along without it as long as my polyphase system continues to meet our needs. Just as soon as the need arises, however, I have the system ready to be used with complete success."

On his eightieth birthday he was asked if he expected actually to construct and operate his recently announced inventions, and in reply he quoted, in German, a stanza from Goethe's Faust:

"The God that in my bosom lives"

"Can move my deepest inmost soul,"

"Power to all my thought he gives"

"But outside he has no control."

It had been Tesla's intention to write his autobiography. He desired to have the story of his work recorded with a most meticulous regard for accuracy; and this, he felt, no one but himself could bring to it. He declared that he had no intention of starting work on this project until he had accomplished the application of all of his major discoveries. Several persons who proposed writing his biography received only a refusal of the requested co-operation. Kenneth Swezey, a writer on scientific subjects, maintained close contact with Tesla for a number of years, and it was expected that Tesla would co-operate with him in such a project. Swezey assembled seventy letters from leading scientists and engineers in all parts of the world as a surprise for Tesla on his seventy-fifth birthday, at which time the letters, bound in a memorial volume, were presented to him. These letters, reprinted in Yugoslavia, led to the establishment of the Tesla Institute in that country. Swezey was engaged in war work and expected, at the time of Tesla's death, to enter the Navy; otherwise he might have undertaken the task of writing Tesla's biography. Tesla, even up to his eighty-fourth year, expected to recover more robust health and to live beyond the century mark. It is probable, therefore, that he had not started work on his autobiography. Whether or not any parts of it have been written is impossible to ascertain at the present time. All Tesla's records were sealed by the Custodian of Alien Property, although Tesla was a citizen of the United States.

During the last half-dozen years of his life, Tesla, happily, was supplied with enough money to meet his immediate needs, thanks to the payment to him of an honorarium of $7,200 a year, by the Yugoslav government, as patron of the Tesla Institute, established in Belgrade. (The Society for the Foundation of the Tesla Institute at Belgrade was organized as Tesla neared his eightieth year. It enlisted support from the scholars, the government, commercial interests and the people as a whole. From the government and private sources an endowment was subscribed which was adequate to erect and equip a research laboratory and maintain it in operation as an institute. The Institute was opened in 1936, in commemoration of Tesla's eightieth

anniversary. A week of observance was held throughout Yugoslavia and formal celebrations were held at Belgrade on May 26, 27 and 28, at Zagreb on May 30, and at his native village, Smiljan, on June 2 and also on July 12.) Even with this income, however, and with a very limited range of activity (being confined largely to his room), during the last two years Tesla still managed to fall behind in his hotel bill. This was owing to his unlimited generosity. He was very generous in bestowing tips on all who performed the slightest service for him, and in responding to the slightest suggestion that anyone was in need of assistance.

During the latter part of 1942 he spent most of the time in bed, mentally active but physically weak. He permitted no visitors to come to his room, not even close associates of earlier years. He insisted to hotel employees that he was not ill and refused to listen to questions that he have a doctor visit him. He gave orders that even hotel employees were not to enter his room unless he summoned them.

On January 5, Tuesday morning, he permitted the maid to come to his room, and then gave orders to guard his room closely so that he would not be disturbed. This was done. It was not unusual for Tesla to give orders that he was not to be disturbed for protracted periods. Early Friday morning (January 8) a maid with a premonition, risking his displeasure, entered Tesla's room and found him dead. He looked peaceful, as if resting, with a suggestion of a smile on his gaunt bony face. The superman died as he had lived--alone.

The police were notified that Tesla had died alone and without medical attendance. The coroner declared his death due to natural causes incident to senility; and that he had died on the night of Thursday, January 7, 1943, some hours before the maid entered the room. Operatives from the Federal Bureau of Investigation came and opened the safe in his room and took the papers it contained, to examine them for a reported important secret invention of possible use in the war. The body was removed to Campbell's Funeral Parlors at Madison Avenue and 81st Street.

Funeral services were held at the Cathedral of St. John the Divine, on Tuesday, January 12, at 4 pm. Bishop Manning offered the opening sentences of the Burial Offce and Final Prayer. Following the services, the body was removed to

Ferncliff Cemetery at Ardsley, N. Y., and was later cremated.

AFTERGLOW

EIGHTEEN

DESPITE his celibate life, and his almost hermitlike existence in his own intellectual sphere, Tesla was, in his social contacts, a charming individual. The year he had spent digging ditches and doing hard manual labor, when he could get a job of any kind, and his experience during that time of sleeping in any shelter he could obtain and eating any kind of food he could manage to secure, undoubtedly made a tremendous and lasting, impression on him. The fact that he could never be induced to discuss this period would so indicate. Yet it probably softened him in a beneffcial way--by a going-through-the-mill process. But it had been a grievous insult to his personality to be valued only for the brute strength in his muscles; and this rankled ever after.

Once he had obtained funds through the founding of his laboratory and the sale of his patents to Westinghouse, he thereafter maintained an almost princely status. He knew how to wear clothes to increase the impressiveness of his appearance; his tallness gave him something of an advantage over others; his obvious physical strength brought him a respect that forbade any invasion of his attitude; his excellent English and the care he exercised to use the language correctly, and his command of a half-dozen other languages, established him as a scholar; and the first batch of his alternating-current inventions created for him in the mind of the public a reputation for outstanding scientific accomplishment. The fact that he always spoke of the value of his inventions to the world, and not of the greatness of his own accomplishment, endeared him to all who met him.

When Tesla was riding a tidal wave of popularity during the nineties, he was averse to publicity; but frequently well-known writers for the newspapers were able to break through the barriers and secure "feature" articles. An excellent description of him, keyed to the manner of the period, is contained in an article written by Franklin Chester, in the

Citizen of August 22, 1897. The portion referring to his personal appearance and activities follows:

So far as personal appearance goes no one can look upon him without feeling his force. He is more than six feet tall and very slender. Yet he possesses great physical power. His hands are large, his thumbs abnormally long, and this is a sign of great intelligence. His hair is black and straight, a deep shining black. He brushes it sharply from over his ears, so that it makes a ridge with serrated edges.

His cheekbones are high and prominent, the mark of the Slav: his skin is like marble that age has given the first searing of yellow. His eyes are blue, deeply set, and they burn like balls of fire. Those weird flashes of light he makes with his instruments seem also to shoot from them. His head is wedge shaped. His chin is almost a point.

Never was a human being filled with loftier ideals. Never did a man labor so unceasingly, so earnestly, so unselfishly for the benefft of the race. Tesla is not rich. He does not trouble himself about money. Had he chosen to follow in the footsteps of Edison he could be, perhaps, the richest man in the world, and Tesla is just 40 years old.

Tesla is, above all things, a serious man, undoubtedly the most serious man in New York. Yet he has a keen sense of humor and the most beautiful manners. He is the most genuinely modest of men. He knows no jealousy. He has never decried the accomplishments of another, never refused credit.

When he talks you listen. You do not know what he is saying, but it enthralls you. You feel the importance without understanding the meaning. He speaks the perfect English of a highly educated foreigner, without accent and with precision. He speaks eight languages equally well.

The daily life of this man has been the same, practically, ever since he has been in New York. He lives in the Gerlach, a very quiet family hotel, in 27th street, between Broadway and Sixth avenue. He starts for his laboratory before 9 o'clock in the morning, all day long he lives in his weird, uncanny world, reaching forth to capture new power to gain fresh knowledge.

No stranger ever sees him at his work. No one knows of his assistants. At rare intervals he presents some experiments in his laboratory, and there is no sacrifice that thousands of people would not make to gain admission to these.

Usually he works until 6 o'clock, but he may stay later. The absence of natural light does not trouble him. Tesla makes sunlight in his workshop.

At exactly 8 o'clock he enters the Waldorf. He is attired in irreproachable evening clothes. In the winter time he never wears an evening jacket, but always the coat with tails.

He finishes his dinner at exactly 10 o'clock, and leaves his hotel, either to go to his rooms to study or to return to his laboratory to work through the night.

Arthur Brisbane, who later became Hearst's famous editor, interviewed Tesla and published in The World, August 22, 1894, the longest story he had written on a famous person. He declared Tesla "Our Foremost Electrician--Greater Even than Edison," and included the following description of him:

He has eyes set very far back in his head. They are rather light. I asked him how he could have such light eyes and be a Slav. He told me that his eyes were once much darker, but that using his mind a great deal had made them many shades lighter. I have often heard it said that using the brain makes the eyes lighter in color. Tesla's confirmation of the theory through his personal experience is important.

He is very thin, is more than six feet tall, and weighs less than a hundred and forty pounds. He has very big hands. His thumbs are remarkably big, even for such big hands. They are extraordinarily big. This is a good sign. The thumb is the intellectual part of the hand. The apes have very small thumbs. Study them and you will notice this.

Nikola Tesla has a head that spreads out at the top like a fan. His head is shaped like a wedge. His chin is as pointed as an ice-pick. His mouth is too small. His chin, though not weak, is not strong enough. His face cannot be studied and judged like the faces of other men, for he is not a worker in practical fields. He lives his life up in

the top of his head, where ideas are born, and up there he has plenty of room. His hair is jet black and curly. He stoops--most men do when they have no peacock blood in them. He lives inside of himself. He takes a profound interest in his own work. He has that supply of self-love and self-confidence which usually goes with success. And he differs from most of the men who are written and talked about in the fact that he has something to tell.

Tesla had, to be sure, a sense of humor and enjoyed putting over a subtle joke. Before the period in which he became a regular diner at the Waldorf-Astoria, he dined nightly at Delmonico's, then the smartest hostelry in the city, and a gathering place for "The 400." Tesla was the most famous and spectacular figure among the famous patrons of the famous place, but he always dined alone. He could never be induced to join other groups and never had a guest of his own. After dining he would always return to work at his laboratory.

One evening some of his friends, believing that he was working too hard and should get some relaxation, induced him to join them in a game of billiards. They assumed he had neglected to learn how to play games, so, on arriving at the billiard room, they explained to him how to hold the cue, strike the balls, and other elements of the game. Tesla had not played billiards in a dozen years; but during his second year at Graumltz, when he was a year ahead in his studies and spent his evenings in the cafe's, he had become an expert billiardist. When the experts at Delmonico's gave him preparatory instruction, he asked some "dumb" questions, and made some intentional miscues. Taking on one of the players and still asking silly questions, he tried the most diffcult way of making shots--to demonstrate his purely amateur status--and made them, to the amazement of the experts. Several of them took him on that evening, and he defeated all of them with badly unbalanced scores. He declared the new game give him a wonderful opportunity to practice very abstract mathematical theories; and the experts at Delmonico's spread stories about the wonderful accomplishment of Scientist Tesla in mastering the game in a single evening and defeating the best players in the city. The story got into the newspapers. Tesla refused to play any more, declaring he was in danger of becoming so enthusiastic over the game that it would interfere with his researches.

This same man magnificent who graced the Waldorf-Astoria and Delmonico's was not averse, however, to visiting the Bowery, which was but a block away from his Houston Street laboratory. He repaired to a thirst-quenching emporium on that thoroughfare one afternoon shortly after a denizen of the Bowery, Steve Brodie, had achieved fame by jumping, or at least claiming to have jumped, off the Brooklyn Bridge. As Tesla raised his glass of whiskey he said to the bartender: "You know what Steve said as he was about to jump off the bridge--`Down he goes"'; and with that he downed his liquor in a gulp.

A near-by drinker, a little the worse for several, misunderstood Tesla's remark and got the impression he had heard Steve Brodie telling the final episode of his feat. He rushed up to Tesla to buy him a drink, and was joined by his friends. Tesla with a laugh shook them off and dashed out of the bar, while the misguided drinker started after him yelling, "Stop him, that's Steve." On the street the pedestrians misunderstood the thick-tongued drinker's shout and joined him in the chase, calling "Stop, thief!" Tesla's long legs rendered him a valuable service and he got a lead on the crowd, dashed into an alley, over a fence and climbed a fire escape on the back of his own building, reached his laboratory through a window, quickly donned a blacksmith's apron and started hammering a bar of metal. His pursuers, however, failed to trace him.

Tesla was idolized by the Serbians in New York. A great many of them could claim to be distant relatives through either the Tesla or Mandich side of the family, and those who could not claim this distinction revered him none the less, despite the fact he never accepted invitations to take part in their social or other functions.

One day an excited Serbian, a laborer, came to his apartment at the Waldorf-Astoria to beg his aid. He had gotten into a fight and pummeled a fellow Serbian, who had sworn out a warrant for his arrest. The visitor did not have any money but wanted to go to Chicago to escape arrest. Would Tesla please lend him the money for his railroad fare?

"So you assaulted a man and now want to run away to escape punishment," said Tesla. "You may run away from the law but you are not going to escape punishment; you are going to get it right now!" Seizing a cane and grasping the man by

the back of the neck, he ran him around the room, beating the dust out of the seat of his trousers until the man cried for mercy.

"Do you think you can be a better man in Chicago and keep out of fights?" Tesla asked him. The man was sure he could. He received the money for his railroad fare and a few dollars more.

So great was Tesla's popularity in the nineties that many persons came to dine in the Palm Room at the Waldorf just to catch a glimpse of the famous inventor. He arranged to leave his offce at six, but just before leaving he would telephone the order for his dinner to the headwaiter, always insisting that none less could serve him. The meal was required to be ready at eight o'clock. In the meantime he would go to his room and array himself in formal evening attire--white tie and tails. He dined alone, except on the rare occasions when he would give a dinner to a group to meet his social obligations.

Money was always a nuisance detail to Tesla. For about fifteen years, following 1888, he always had all he needed to meet his obligations; and he lived well. After about 1902 his financial road became quite rocky--but his fame was greater than ever, and likewise the need for maintaining his standard of living if he was to recoup his fortune. He continued to stage frequent large dinners at the Waldorf to repay his social obligations, and had diffculty in accustoming himself to a money deffciency. On one occasion, when a large party was assembled in a private dining room, the headwaiter whispered to him that a most excellent dinner was prepared and ready to serve as he had ordered it, but that the credit department insisted it could not be served until he paid for it in advance. "Get Mr. Morgan on the telephone in the manager's offce and I will be down there immediately," Tesla fumed. In a short time a more-than-adequate check was delivered to Tesla by a messenger. Many such occasions are reported to have arisen, but were always straightened out in the manager's offce, usually without any outside intervention.

The closest approach to home life which Tesla enjoyed came to him through Robert Underwood Johnson diplomat and poet, and one of the editors of the Century Magazine, whose home was in Madison Avenue in the fashionable Murray Hill district. Tesla and Johnson were very close friends. A love

of poetry was one of the several interests they had in common. Johnson wrote, and published in the Century, in April, 1895, a short poem on his visit to Tesla's laboratory. This led to a cooperative enterprise in which he paraphrased many pieces of Serbian poetry from literal translations made by Tesla, who could recite many thousands of lines of such material from memory. About forty pages of these translations, with an introductory note by Tesla, appeared in the next edition of Poems by Johnson.

Persons famous in all fields of activity were frequent guests in the Johnson home, and formal dinners were constantly being held for brilliant assemblages of personalities. Tesla was present as frequently as he could be induced to come, but he preferred to avoid all formal dinners as much as possible. He was, however, a very frequent informal visitor, arriving unexpected, and often at most unusual hours. It was not uncommon for Tesla to arrive at the Johnson home after midnight, after the family had retired, and for "Bob" and "Nick" to sit up for hours reveling in the exchange of a magnificent array of ideas. (Johnson and "Willie" K. Vanderbilt, were, as has been noted, the only individuals who rated the exchange of first names with Tesla.)

Tesla's visits to the Johnson home were always many hours long. He would arrive in a hansom cab, which he always required to wait for him to return to his hotel only a few blocks distant. The Johnson children learned to take advantage of this, and when he arrived early in the evening they would get his permission to use the cab for a drive through Central Park while he chatted at home.

Tesla enjoyed the opera and at one time attended the performances quite frequently. William K. Vanderbilt's box was always available to him, as likewise were those of many other patrons of the Metropolitan. He occasionally attended the theatre. His favorite actress was Elsie Ferguson who, he declared, knew how to dress and was the most graceful woman he had ever seen on the stage. He gradually dropped both the theatre and opera in favor of the movies, but was an infrequent attendant even at those. He would not witness a tragedy but enjoyed comedy and the lighter aspects of entertainment.

One of his close friends was Rear Admiral Richmond Pearson Hobson, the Spanish American War hero. In later years,

Hobson was the only person who was able to cajole Tesla into breaking a long vigil at his intellectual pursuits for a session at the movies.

Tesla did not subscribe to any religion. Early in life he severed his relations with the Church and did not accept its doctrines. At his seventy-fifth birthday dinner he declared that that which is called the soul is merely one of the functions of the body, and that when the activities of the body cease, the soul ceases to exist.

It is difficult for a man to appear as a hero to his secretary, but to Miss Dorothy F. Skerritt, who served Tesla in this capacity for many years until he closed his offce when he was seventy, he remained a saintly superman. Her description of Tesla, at this age, records him as possessing the same magnetic personality that so impressed writers thirty years earlier. She wrote:

As one approached Mr. Tesla he beheld a tall, gaunt man. He appeared to be an almost divine being. When about 70 he stood erect, his extremely thin body immaculately and simply attired in clothing of a subdued coloring. Neither scarf pin nor ring adorned him. His bushy black hair was parted in the middle and brushed back briskly from his high broad forehead, deeply lined by his close concentration on scientific problems that stimulated and fascinated him. From under protruding eyebrows his deepset, steel gray, soft, yet piercing eyes, seemed to read your innermost thoughts. As he waxed enthusiastic about fields to conquer and achievements to attain his face glowed with almost ethereal radiance, and his listeners were transported from the commonplaces of today to imaginative realms of the future. His genial smile and nobility of bearing always denoted the gentlemanly characteristics that were so ingrained in his soul.

Until the last, Tesla was meticulously careful about his clothes. He knew how to dress well and did so. He declared to a secretary, in 1910, that he was the best-dressed man on Fifth Avenue and intended to maintain that standard. This was not because of personal vanity. Neatness and fastidiousness in clothes were entirely in harmony with every other phase of his personality. He did not maintain a large wardrobe and he wore no jewelry of any kind. Good clothes fitted in very nicely with his courtly bearing. He observed, however, that in the matter of clothes the world

takes a man at his own valuation, as expressed in his appearance, and frequently eases his way to his objective through small courtesies not extended to less prepossessing individuals.

He was partial to the waisted coat. No matter what he wore, however, it carried an air of quiet elegance. The only type of hat he wore was the black derby. He carried a cane and wore, usually, gray suede gloves.

Tesla paid $2.50 a pair for his gloves, wore them for a week and then discarded them even though they still appeared as fresh as when they came from the maker. He standardized his style of ties and always wore the four-in-hand. The design motive was of minor importance but the colors were limited to a combination of red and black. He purchased a new tie every week, paying always one dollar.

Silk shirts, plain white, were the only kind Tesla would wear. As with other articles of his clothing, such as pajamas, his initials were always embroidered on the left chest.

Handkerchiefs he purchased in large numbers because he never sent them to the laundry. After their first use they were discarded. He liked a good quality of linen and purchased a standard package brand. His collars were never laundered, either. He never wore one more than once.

Tesla always wore high-laced shoes, except on formal occasions. He required a long narrow shoe and insisted on a last that had a neatly tapered square-toe effect. His shoes were undoubtedly made to order, for the tops extended halfway up his calf, a style that could not be purchased in merchant shoe stores. His tallness in all probability made this additional support at the ankles desirable.

The single use of articles, such as handkerchiefs and collars, extended to napkins. Tesla had a germ phobia, and it acted like so much sand in the social machinery of his life. He required that the table he used in the dining room of his hotel be not used by others. A fresh table cloth was required for every meal. He also required that a stack of two dozen napkins be placed on the left side of the table. As each item of silverware and each dish was brought to him--and he required that they be sterilized by heat before leaving the kitchen--he would pick each one up, interposing

a napkin between his hand and the utensil, and use another napkin to clean it. He could then drop both napkins on the floor. Even for a simple meal, he usually ran through the full stock of napkins. Flies were his pet abomination. A fly alighting on his table was adequate cause for removing everything from the table and making an entirely new start with the meal.

Tesla was fortunate in that the headwaiter at the Waldorf-Astoria, during the period he was living there, Mr. Peterson, was afterward headwaiter at the Hotel Pennsylvania, where he later lived for several years. A story was in circulation to the effect that both at the Waldorf and at the Pennsylvania a special chef was employed to prepare Tesla's meals, but Mr. Peterson states that this story was untrue.

In his earlier years, for dinner, he greatly enjoyed fine thick steaks, preferably the filet mignon, and it was not unusual for him to consume two or three at a sitting. Later his preference turned to lamb, and he would frequently order a roast saddle of it. While the saddle was usually large enough to serve a party of several persons, as a rule he ate of it only the central portion of the tenderloin. A crown of baby lamb chops was another favorite dish. He also relished roast squab with nut stuffng. In fowl, however, his choice was roast duck. He required that it be roasted under a smothering of celery stalks. This method of preparing the duck was of his own devising. He very often made it the central motif around which a dinner was designed when entertaining friends, and on such occasions he would go to the kitchen to superintend its preparation. Duck so prepared was nevertheless delicious. Of the duck he ate only the meat on either side of the breast bone.

With the passing decades, Tesla shifted away from a meat diet. He substituted fish, always boiled, and finally eliminated the meat entirely. He later almost entirely eliminated the fish and lived on a vegetarian diet. Milk was his main standby, and toward the end of his life it was the principal item of diet, served warm.

As a youth he drank a great deal of coffee, and, while he gradually became aware that he suffered unfavorable influences from it, he found it a diffcult habit to break. When he finally made the decision to drink no more of it, he adhered to his good intentions but was forced to

recognize the fact that the desire for it remained. He combated this by ordering with each meal a pot of his favorite coffee, and having a cup of it poured so that he would get the aroma. It required ten years for the aroma of the coffee to transform itself into a nuisance so that he felt secure in no longer having it served. Tea and cocoa he also considered injurious.

He was a heavy smoker in his youth, mostly of cigars. A sister who seemed fatally ill, when he was in his early twenties, said she would try to get better if he would give up smoking. He did so immediately. His sister recovered, and he never smoked again.

Tesla drank whiskey, for this he considered a very beneffcial source of energy and an invaluable means for prolonging life. It was responsible, he believed, for the longevity enjoyed by many of his ancestors. It would enable him, he declared early in the century, to live to one hundred and fifty. When prohibition came along with the First World War, he denounced it as an intolerable interference with the rights of citizens. Nevertheless, he promptly gave up the use of whiskey and all other beverages except milk and water. He declared, however, that the elimination of whiskey would reduce his expectation of life to one hundred and thirty years.

Stimulants were not necessary to help him to think, Tesla said. A brisk walk he found much better as an aid for concentration. He seemed to be in a dream when walking. Even one whom he knew very well he would pass at close range and not see, though he might appear to be looking directly at him. His thoughts were usually miles away from where he was. It was this practice, apparently, which was responsible for the accident, in 1937, when he was struck and severely injured by a taxicab. As a matter of fact, he had stated in an interview two years earlier that he would probably be killed by a truck or taxicab while jaywalking.

Tesla's weight, stripped, was 142 pounds, and, except during brief periods of illness, hardly varied a pound from 1888 to about 1926, when he intentionally reduced his weight five pounds.

One of Tesla's indulgences, over many years, was scalp massages. He would visit a barbershop three times a week and have the barber rub his scalp for half an hour. He was

insistent upon the barber placing a clean towel on his chair but, strangely enough, he did not object to the use of the common shaving mug and brush.

Tesla always claimed that he never slept more than two hours a night. His retiring time, he said, was five am, and he would arise at ten am after spending only two hours in sleep, three hours being too much. Once a year, he admitted, he would sleep for five hours--and that would result in building up a tremendous reserve of energy. He never stopped working, he claimed,--even when asleep. Tesla laughed at Edison's claim that he slept only four hours a night. It was a regular practice with Edison, he said, to sit down in his laboratory and doze off into a three-hour nap about twice a day. It is possible that Tesla, too, obtained some sleep in a similar fashion, perhaps without being conscious of the fact. Hotel employees have related that it was quite common to see Tesla standing transfixed in his room for hours at a time, so oblivious to his surroundings that they were able to work around his room without his being, apparently, aware of their presence.

Tesla always provided his offce with a separate washroom which no one but himself was permitted to use. He would wash his hands on the slightest pretext. When he did so, he required that his secretary hand him a freshly laundered towel each time to dry them.

He went to extremes to avoid shaking hands. He usually placed his hands behind his back when anyone approached who he feared might make an effort to shake hands, and this frequently led to embarrassing moments. If by chance a visitor to his offce should catch him off guard and shake his hand, Tesla was so upset that he would be unable to pay attention to the visitor's mission and frequently would dismiss him before it was completely stated; and immediately he would rush to the washroom and scour his hands. Workmen eating their lunch with dirty hands almost nauseated him.

Pearls, too, were one of Tesla's phobias. If a woman guest at a dinner party to which he was invited wore pearls, he was unable to eat. Smooth round surfaces, in general, were an abomination to him; it had even taken him a long time to learn to tolerate billiard balls.

Tesla never knew the experience of having a headache. In spite of a number of cases of serious illness, in his independent years he was never attended by a doctor.

There were reasons for practically all of Tesla's phobias, not all of them generally known. His germ phobia can be traced back to his two serious illnesses early in life, both of which were probably cholera, a disease constantly prevalent in his native land, caused by a germ transmitted by impure drinking water and by contact between individuals.

Tesla was not oblivious of his idiosyncrasies; he was quite aware of them and of the friction which they caused in his daily life. They were an essential part of him, however, and he could no more have dispensed with them than he could his right arm. They were probably one of the consequences of his solitary mode of life or, possibly, a contributing cause of it.

6NINETEEN

Tesla's mind always seemed to be under an explosive pressure. An avalanche of ideas was forever straining for release. He seemed to be unable to keep up with the flood of his own thoughts. He never had suffcient facilities to keep his accomplishments equal to his projects. If he had an army of adequately trained assistants, he would still be insuffciently equipped. As a result, those associated with him always experienced a sense of "drive"; yet he was a most generous employer both in the matter of wages paid and the number of hours of work required. He frequently demanded overtime work but always paid generously for it.

Nevertheless, Tesla was not an easy man to work for. He was most meticulously neat in his personal affairs and required all workers to be the same. He was an excellent mechanic and set extremely high standards, by his own accomplishments, for all work done in his shops. He greatly admired cleverness in his assistants, frequently rewarding them with extra compensation for diffcult jobs well done,

but was extremely impatient with stupidity and carelessness.

Although Tesla maintained a staff of draughtsmen, he never used them in his own design work on machines, and tolerated them only because of unavoidable contacts with other organizations. When having machines constructed for his own use, he would give individual instruction on each part. The workman scheduled to do the machinework would be summoned to Tesla's desk, where the inventor would make an almost microscopically small sketch in the middle of a large sheet of paper. No matter how detailed the piece of work, or its size, the sketch was always less than one inch in its largest dimensions. If Tesla made the slightest slip of the pencil in drawing the sketch, he would not make an erasure but would start over on another sheet of paper. All dimensions were given verbally. When the drawing was finished, the workman was not permitted to take it with him to the shop to guide him in his work. Tesla would destroy the drawing and require the machinist to work from memory. Tesla depended entirely on his memory for all details, he never reduced his mentally completed plans to paper for guidance in construction--and he believed others could achieve this ability if they would make suffcient effort. So he sought to force them to try by insisting on their working without drawings.

All those who worked with Tesla greatly admired him for his remarkable ability to keep track of a vast number of finest details concerning every phase of the many projects he had under way simultaneously. No employee was ever given any more information than was absolutely essential for completing a project. No one was ever told the purposes for which a machine or article was to be used. Tesla claimed that Edison received more ideas from his associates than he contributed, so he himself bent over backward to avoid this situation. He felt that he was the richest man in the world in the matter of ideas and needed none from anyone else; and he intended to prevent all from contributing any.

Tesla was probably very unfair to Edison in this respect. The two men were entirely different and distinct types. Tesla was totally lacking in the university type of mind; that is, the mind which is adapted to cooperate with others in acquiring knowledge and conducting research. He could neither give nor receive, but was entirely adequate to his own requirements. Edison had more of the cooperative, or

executive, type of mind. He was able to attract brilliant associates and to delegate to them major portions of his inventive research projects. He had the ability to act as a catalyzer, to stimulate them to creative mental activities, and thus multiply his own creative abilities. If Tesla had possessed this ability, his record of accomplishment would have been tremendously magnified.

The inability to work with others, the inability to share his plans, was the greatest handicap from which Tesla suffered. It completely isolated him from the rest of the intellectual structure of his time and caused the world to lose a vast amount of creative thought which he was unable to translate into complete inventions. It is a duty of a master to train pupils who will carry on after him--but Tesla refused to accept this responsibility. Had Tesla, in his most active period, associated with him a half-dozen brilliant young scientists, they would have been in a position to link him with the engineering and scientific worlds from which, despite his eminence and his outstanding accomplishments, he was to a great extent isolated because of his unusual personal characteristics. His fame was so secure that the success of his assistants could not have detracted from it; but the master would have shone more brightly in the brilliant accomplishments of his pupils. He might well have attracted some practical young men who could have aided him by assuming the burden of making practical application of some of the minor but important inventions from which he could have earned suffcient profit to pay the cost of maintaining his laboratories. Many scores of important inventions have undoubtedly been lost to the world because of Tesla's intellectual hermit characteristics. Undoubtedly, he indirectly inspired many young men to become inventors.

Tesla responded powerfully to personal idiosyncrasies in individuals with whom he worked. When his reaction was unfavorable, he was unable to tolerate the presence of the person within eyeshot. When carrying on his experimental work at the Allis Chalmers plant in Milwaukee, for example, he did not increase his popularity by insisting that certain workers be dropped from the crew working on the turbine because he did not like their looks. Since, as noted earlier, he had already antagonized the engineers in that plant by going over their heads to the president and board of directors, the turbine job went forward in something less than a cooperative atmosphere.

Tesla was thoroughly impractical throughout, too, in handling money matters. When he was working on the Union Sulphur Company turbine project, a ship was made available for his use, free, during the day; but if he worked after six pm it would cost him $20 per hour. He never showed up at the ship until six o'clock. Every night, in addition, he had to hand out $10 for suppers for the crew. In the course of a year these costs totaled about $12,000, which must have cut heavily into the retainer he received. Nor were these his only additional expenses. Almost every night he handed a $5 tip to his principal assistants among the crew, and once a week to all members of the crew. These manifestations of generosity were not, of course, a total loss to Tesla; they might rather be classed as necessities, for he was very dictatorial in directing his assistants.

Inquiries among the employees at hotels where he lived revealed that he had a reputation for acting in a most cavalier manner toward the servants. He was almost cruel in the manner in which he ordered them around, but would make immediate compensation by the generous tips he bestowed.

He was always, however, very considerate of women, and even men, on his offce staff. If any one of them did an unusually fine piece of work, everyone on the staff was informed of it. Criticism was always delivered privately to the individual involved.

Tesla had a standing rule that every messenger boy who came to his offce was to receive a tip of twenty-five cents, and he set aside a fund of $10 a week for this purpose.

If necessity required that he keep his staff of young women secretaries and typists working overtime for several hours, he would provide them with a dinner at Delmonico's. He would hire a cab for the girls and would follow them in another cab. After making arrangements to pay the bill, and paying the tip in advance, he would leave.

Tesla timed his arrival at the offce so that he entered at the stroke of noon. He required that his secretary should be standing immediately inside the door to receive him and take his hat, cane and gloves. His offces were opened by nine o'clock each morning, so all routine matters would be handled before his arrival. Before Tesla arrived, all the shades in the offce had to be drawn so that no outdoor

light was admitted and night conditions were simulated. The inventor, as remarked, was a "sun dodger." He appeared to be at his best at night and at some kind of disadvantage in daylight; at any rate, he preferred the night for work and what he called his recreation.

The only time Tesla would permit the shades of his offce to be raised was when a lightning storm was raging. The various offces he leased faced on open spaces. The 8 West 40th Street offce was on the south side of Bryant Park, in the east end of which was the low-roofed structure that housed the New York Public Library. From his windows on the twentieth floor, he could look beyond the city roof scape below him and obtain a broad view of the sky.

When the rumbles of distant thunder announced that the fireworks of the sky would presently be flashing, it was not only permissible to raise the shades--it was obligatory. Tesla loved to watch lightning flash. The black mohair couch would be drawn close to the windows so that he could lie on it, completely relaxed, while his vision commanded a full view of the northern or the western sky. He was always talking to himself, but during a lightning storm he would become eloquent. His conversation on such occasions was never recorded. He wished to be a lone observer of this gorgeous spectacle, and his secretaries were quite willing that he should be so accommodated. By finger measurements and counting seconds he was able to calculate the distance, length and voltage of each flash.

How thrilled Tesla must have been by these tremendous sparks, many times longer than he had been able to produce in his Colorado Springs laboratory! He had successfully imitated Nature's electrical fireworks, but he had not as yet exceeded her performance.

The ancient Romans sublimated their frustrations by the forces of Nature by creating the mental concept of their mightiest god, Jupiter, as one endowed with the power of creating lightning and hurling his bolts at earth. Tesla had refused to accept frustration; but, like the ancient Romans, he too set up a mental concept, a superman not inferior to the Romans' ruling god, who would control the forces of Nature. Yes, Tesla thoroughly enjoyed a lightning storm. From his mohair couch, he used to applaud the lightning; he approved of it. He may even have been a little bit jealous.

Tesla never married; no woman, with the exception of his mother and his sisters, ever shared the smallest fraction of his life. He idolized his mother and admired his sisters for their intellectual accomplishments. One of his sisters, Marica, exhibited unusual ability as a mathematician and had greater ability than his own for memorizing long passages from books. He attributed to his mother most of his abilities as an inventor, and he continuously spoke in praise of her ability to contrive useful gadgets for the household, often regretting that she had not been born into an environment in which she would have been able to manifest to a larger world her many creative talents. He was not unaware of the values which a woman could bring into a man's life, for he had ever before him the vast contributions which his mother made to his father's welfare and happiness. However, he lived instead a blueprint life, one which he had planned in his early youth, one designed along engineering lines, with all of the time and energies available to be directed to invention and none to be dissipated on emotional projects.

From the romantic point of view, Tesla as a young man was not unattractive. He was too tall and slender to pose as the physical Adonis, but his other qualifications more than compensated for this possible defect. He was handsome of face, had a magnetic personality, but was quiet, almost shy; he was soft spoken, well educated and wore clothes well in spite of inadequate funds with which to keep up a wardrobe. However, he avoided romantic encounters, or any situations that would lead up to them, just as assiduously as other young men sought them. He would not permit his thoughts to wander into romantic channels, and with thoughts successfully controlled, action control became a problem of vanishing magnitude. He did not develop an antagonism to women; he solved the problem, instead, by idealizing them.

A typical instance of how he avoided romance is furnished by an incident that occurred in Paris when he returned to that city to give a lecture on his alternating-current system after he had become world famous. His wonderful discoveries were the principal topic of conversation of the day, and he was the cynosure of all eyes wherever he went. The situation was entirely pleasant to Tesla. Less than ten years before, the executives the Continental Edison Company, in that city, had not alone rejected the

alternating-current system he had offered them but had cheated him of his just earnings. Now he was returning to that city after receiving recognition and wealth in the United States and fame throughout the world. He was in Paris as a returned hero and the world was at his feet.

As he sat in an outdoor cafe; with a young male friend, amidst a chattering, fashionably dressed crowd, a graceful, gorgeously gowned young woman, with a stylishly coiffured crown of red hair, whom he instantly recognized as Sarah Bernhardt, the famous French actress--the "divine Sarah"--swung close to his table and when a few feet away very auspiciously dropped a tiny lace handkerchief.

Tesla was on his feet in an instant. He recovered the handkerchief, and with his hat in his other hand, bowing low from the waist, he handed the wisp of lace to the beautiful tragedienne, saying: "Mademoiselle, your handkerchief." Without even an upward glance at her graciously smiling face, he returned to his chair and resumed his conversation about his experiments on a world wireless system of power transmission.

When a newspaper reporter once asked Tesla why he had not married, his reply, as contained in the published interview was:

I have planned to devote my whole life to my work and for that reason I am denied the love and companionship of a good woman; and more, too.

I believe that a writer or a musician should marry. They gain inspiration that leads to finer achievement.

But an inventor has so intense a nature, with so much in it of wild, passionate quality that, in giving himself to a woman, he would give up everything, and so take everything from his chosen field: It is a pity, too; sometimes we feel so lonely.

In my student days I have known what it was to pass forty-eight hours at a stretch at a gaming table, undergoing intense emotion, that which most people believe is the strongest that can be known, but it is tame and insipid compared with that sublime moment when you see the labor of weeks fructify in a successful experiment that proves your theories. . . .

"Many times has Nikola Tesla known that supreme happiness," said the interviewer, "and he is likely to know it often again. It is impossible that his life work can be finished at forty. It would seem that his powers are only reaching their maturity."

Tesla was not unappreciative of the activities of the many women who showed a sincere interest in his welfare, and who tried to make life tolerable and pleasant for an obviously none-too-well-adjusted scientist projected into a social world from which he would have been only too willing to escape. He spoke glowingly of the first Mrs. Clarence Mackay (e Duer), Mrs. Jordan L. Mott, and of the beauty of Lady Ribblesdale (the former Mrs. John Jacob Astor). He admired the energetic idealism of Miss Anne Morgan; but never was the situation brightened by a single tint of romance.

He was impressed by the tall, graceful and charming Miss Marguerite Merington, a talented pianist and writer on musical subjects, who was a frequent dinner guest at the Johnson home.

"Why do you not wear diamonds and jewelry like other women?" Tesla undiplomatically asked Miss Merington, one evening.

"It is not a matter of choice with me," she replied, "but if I had enough money to load myself with diamonds I could think of better ways of spending it."

"What would you do with money if you had it?" the inventor continued.

"I would prefer to purchase a home in the country, except that I would not enjoy commuting to the suburbs," Miss Merington replied.

"Ah! Miss Merington, when I start getting my millions I will solve that problem. I will buy a square block here in New York and build a villa for you in the center and plant trees all around it. Then you will have your country home and will not have to leave the city."

Tesla was most generous in the distribution of his always still-to-be-gotten millions; none of his friends would ever

have lacked anything they desired if he had had suffcient funds with which to satisfy their wishes. His promises, however, were always to be fulfilled--"When I start getting my millions."

Tesla had, as might be expected, very definite ideas about how women should dress. He also had clear-cut ideas about the feminine figure. He disliked the big "hefty" type and utterly detested fat women. The super-upholstered type, flashily dressed and heavily jeweled, that wasted time in hotel lobbies, were his pet abomination. He liked women trim, slim, graceful and agile.

One of his secretaries, well proportioned and a graceful blonde, wore to the offce one day a dress that was in the very latest style. It was a summer dress made from a pretty print. The prevailing style called for an extremely low waist line, well down on the hips, several inches below its natural location. This gave a relatively short skirt and from the neck to the hips the dress was almost a plain cylinder. The style was very new, and was enjoying an intense but brief wave of popularity. The secretary was an excellent seamstress and had made the dress herself, an accomplishment of which she was justly proud.

Tesla summoned the secretary. She breezed into his sanctum not expecting, but hoping, that he would say something nice about her new dress.

"Miss," he said, "what is that you are wearing? You cannot wear that on this errand on which I wish you to go. I wished to have you take a note to a very important banker down town, and what would he think if someone from my offce should come to him wearing such a monstrosity of a gown? How can you be such a slave to fashion? Whatever the fashion designers say is the style you buy and wear. Miss, you have good sense and good taste, so why did you let the saleslady in the store force a dress like this on you? Now if you were also very clever like my sister who makes all her own dresses you would not be forced to wear any such abominable style as this, then you too could make your own clothes and you could wear sensible gowns. You should always follow nature in the design of your clothes. Do not let a style designer deform nature for you, for then you become hideous instead of attractive. Now, Miss, you get into a cab, so not many people will see you, and go to your

home and get into a sensible dress and return as soon as you can so you can take this letter down town for me."

Tesla never addressed any of his woman employees by either their Christian names or surnames. The only form of address he used to them was "Miss." As he spoke it, it sounded like "Meese," and he could make it very expressive. When he addressed the secretary wearing the gown of which he disapproved, it sounded like "Meeeeeeesssse." It could also be an abrupt, abbreviated expletive.

When a young woman on his office staff left his employ to get married, Tesla preached this sermonette to the remaining members:

"Do not marry too young. When you marry too young, men marry you mostly for your beauty and ten years later when your beauty is gone, they tire of you and become interested in someone else."

Tesla's attitude toward woman was paradoxical; he idealized woman--put her up on a pedestal--and yet he also viewed women in a purely objective and materialistic way, as if no spiritual concepts were involved in their make-up. This was undoubtedly an outward expression of the conflict that was taking place within his own life, between the normal healthy attitude toward female companionship, and the coldly objective planning of his life under which he refused to share the smallest fraction of his life with any woman.

Only the finest type of women could approach within friendship distance of Tesla, and such individuals were idealized by him without the least diffculty; he could desex them mentally so that the vector or emotional attraction was eliminated. To the remainder he did not bother to apply this process. They had no attraction for him.

Out of the welter of human affairs, however, he visioned the rising of a superior breed of human beings, few in number but of vastly elevated intellectual status, while the remainder of the race leveled itself on a merely productive and reproductive plane, which, however, could represent a considerable improvement over existing conditions. He sought to fashion an idealism out of purely materialistic concepts of human nature. This was a hold-

over from the materialistic, agnostic views which were fashionable and prevalent among scientists in the formative period of his youth. This phase of his attitude was not particularly hard to break down in his latter years; but the phase which represented an engineering approach to the solution of problems of the human race was more firmly held, although he was willing to admit that spiritual factors had a real existence and should be considered in such planning.

His views concerning women received their only expression in published form in the article written for Collier's, in 1924, by John B. Kennedy, from an interview with Tesla. On this occasion, he said:

The struggle of the human female toward sex equality will end up in a new sex order, with the females superior. The modern woman, who anticipates in merely superficial phenomenon the advancement of her sex, is but a surface symptom of something deeper and more potent fomenting in the bosom of the race.

It is not in the shallow physical imitation of the men that women will assert first their equality and later their superiority, but in the awakening of the intellect of women.

But the female mind has demonstrated a capacity for all the mental acquirements and achievements of men, and as generations ensue that capacity will be expanded; the average woman will be as well educated as the average man, and then better educated, for the dormant faculties of her brain will be stimulated into an activity that will be all the more intense because of centuries of repose

Women will ignore precedent and startle civilization with their progress.

The acquisition of new fields of endeavor by women, their gradual usurpation of leadership, will dull and finally dissipate feminine sensibilities, will choke the maternal instinct so that marriage and motherhood may become abhorrent and human civilization draw closer and closer to the perfect civilization of the bee.

The significance of this lies in the principle dominating the economy of the bee--the most highly organized and

intelligently coordinated system of any form of non-rational animal life--the all governing supremacy of the instinct for immortality which makes divinity out of motherhood.

The center of all bee life is the queen. She dominates the hive, not through hereditary right, for any egg may be hatched into a reigning queen, but because she is the womb of the insect race.

There are vast desexualized armies of workers whose sole aim and business in life is hard work. It is the perfection of communism, of socialized, cooperative life wherein all things, including the young, are the common property of all.

Then there are the virgin bees, the princess bees, the females which are selected from the eggs of the queen when they are hatched and preserved in case an unfruitful queen should bring disappointment to the hive. And there are the male bees, few in number, unclean in habit, tolerated only because they are necessary to mate with the queen. . . .

The queen returns to the hive, impregnated, carrying with her tens of thousands of eggs--a future city of bees, and then begins the cycle of reproduction, the concentration of the teeming life of the hive in unceasing work for the birth of the new generation.

Imagination falters at the prospect of a human analogy to this mysterious and superbly dedicated civilization of the bee; but when we consider how the human instinct for race perpetuation dominates life in all its normal and exaggerated and perverse manifestations, there is ironic justice in the possibility that this instinct, with the intellectual advance of women, may be finally expressed after the manner of the bee, though it will take centuries to break down the habits and customs of peoples that bar the way to such a simply and scientifically ordered civilization.

If Tesla had been even half as well informed in the biological sciences as he was in the physical sciences, he probably would not have seen a possible solution of human problems in the social structure adapted to the limitations of an insect species which can never hope to utilize tools, and draw upon natural forces vastly exceeding their own

energy sources, to work out their destiny. And more important is the fact that the bees can never hope to use advanced intellectual powers to improve their biological status, as can the human race. With a better knowledge of biological sciences he might have discovered that the physiological processes that control perpetuation of the individual are indissolubly linked to the processes that control the perpetuation of the race, and that by utilizing as much biological knowledge and spiritual insight, in designing a superman, as he utilized materialistic engineering principles, he might have designed himself as a more complete and potent superman, better adjusted to merging his intellectual creations into the current life of the race through a better understanding of human affairs.

Tesla tried to convince the world that he had succeeded in eliminating love and romance from his life; but he did not succeed. That failure (or perhaps from another aspect it was a success), is the story of the secret chapter of Tesla's life.

TWENTY

THE most obvious outward characteristic of Tesla's life was his proclivity for feeding pigeons in public places. His friends knew he did it but never knew why. To the pedestrians on Fifth Avenue he was a familiar figure on the plazas of the Public Library at 42nd Street and St. Patrick's Cathedral at 50th Street. When he appeared and sounded a low whistle, the blue- and brown- and white-feathered flocks would appear from all directions, carpet the walks in front of him and even perch upon him while he scattered bird seed or permitted them to feed from his hand.

During the last three decades of his life, it is probable that not one out of tens of thousands who saw him knew who he was. His fame had died down and the generation that knew him well had passed on. Even when the newspapers, once a year, would break out in headlines about Tesla and his latest predictions concerning scientific wonders to come, no one associated that name with the excessively tall, very lean man, wearing clothes of a bygone era, who almost daily appeared to feed his feathered friends. He was just one of the strange individuals of whom it takes a great many of varying types to make up a complete population of a great metropolis.

When he started the practice, and no one knows just when that was, he was always dressed in the height of fashion and some of the world's most famous figures could frequently be seen in his company and joining him in scattering the bird seed, but there came a time when he paid less attention to his clothes, and those he wore became more and more old fashioned.

Fifth Avenue after midnight is a far different thoroughfare than the busy artery of human and vehicular traffic it is during the day. It is deserted. One can walk for blocks and meet no one except a policeman. On several occasions the author, by chance, met Tesla on an after-midnight walk up Fifth Avenue, going toward the library. Usually Tesla was quite willing to have one walk with him and chat upon a street encounter during the day, but on these after-midnight occasions he was definite about his desire to be left alone. "You will leave me now," he would say, bringing an abrupt end to a conversation hardly begun. The natural assumption was that Tesla was engaged on a definite line of thought and did not wish his mind to be diverted from its concentration on some knotty scientific problem. How far this was from the truth! And, as I learned much later, what a sacred significance these midnight pilgrimages to feed the pigeons--which would come to his call, even from their nocturnal roost--had for him!

It was hard for almost everyone to understand why Tesla, engaged in momentous scientific developments, working twice as many hours as the average individual, could see his way clear to spend time scattering bird seed. The Herald Tribune, in an editorial, once stated: "He would leave his experiments for a time and feed the silly and inconsequential pigeons in Herald Square."

It was a routine procedure in Tesla's offce, however, for one of his secretaries to go down town on a given day each week and purchase three pounds each of rape, hemp and canary seed. This was mixed in his offce, and each day he took a small paper bag filled with the seed and started on his rounds.

If, on any day, he was unable to make his pigeon-feeding rounds, he would call a Western Union messenger boy, pay him his fee, plus a dollar tip, and send him to feed the birds.

In addition to feeding the birds in the streets, Tesla took care of pigeons in his rooms in the various hotels in which he made his home. He usually had basket nests for from one to four pigeons in his room and kept a cask of seed on hand to feed them. The window to the room in which he kept these nests was never closed.

Tesla became quite ill in his 40th Street offce, one day in 1921. He was unable to work and lay upon his couch. As the symptoms became more alarming and there was a possibility that he might not be able to return to his room in the Hotel St. Regis, he summoned his secretary to give her an "important" message. As he spoke the important message, he required the secretary to repeat each phrase after him to make sure that no errors would be made. This required repetition was a usual procedure with him; but in this case he was so ill, practically prostrate, that he seemed hardly to have energy enough to speak the message a single time.

"Miss," he whispered, "Call Hotel St. Regis--"

"Yes sir," she responded, "Call Hotel St. Regis--"

"Get the housekeeper on the fourteenth floor--"

"Get the housekeeper on the fourteenth floor--"

"Tell her to go to Mr. Tesla's room--"

"Tell her to go to Mr. Tesla's room--"

"And feed the pigeon today--"

"And feed the pigeon today--"

"The white female with touches of light gray in its wings--"

"The white female with touches of light gray in its wings--"

"And to continue doing this--"

"And to continue doing this--"

"Until she receives further orders from me--"

"Until she receives further orders from me--"

"There is plenty of feed in Mr. Tesla's room."

"There is plenty of feed in Mr. Tesla's room."

"Miss," he pleaded, "this is very important. Will you repeat the whole message to me so I can be sure you have it correct."

"Call Hotel St. Regis; get the housekeeper on the fourteenth floor. Tell her to go to Mr. Tesla's room and feed the pigeon today, the white female with touches of light gray on its wings, and continue doing this until she receives further orders from me. There is plenty of feed in Mr. Tesla's room."

"Ah, yes," said Tesla, his eyes brightening as he spoke, "the white one with touches of light gray in its wings. And if I am not here tomorrow, you will repeat that message then and every day until you get my further orders. Do it now, Miss--it is very important."

Tesla's orders were always carried out to the letter and this one particularly, since he had placed such unusual emphasis on it. His secretary and the members of his staff felt that his illness must be more serious than it seemed to be, since at a time when he had a great many very serious problems on his hands and he appeared to be on the verge of a siege of illness, the more pressing situations were completely forgotten and his only thought was of a pigeon. He must be delirious, so they thought.

Some months later Tesla failed one day to show up at his offce, and when his secretary telephoned to his hotel, the inventor informed her that he was all right, but that his pigeon was ill and he dared not leave the room for fear she would need him. He remained in his room for several days.

About a year later Tesla came to his offce earlier than usual one day, and apparently very much disturbed. He carried a small bundle in a tender manner on his bent arm. He telephoned to Julius Czito, a machinist on whom he frequently depended to perform unusual tasks, and asked him to come to the offce. Czito lived in the suburbs. He told him briefly that the bundle contained a pigeon that had

died in his room at the hotel, and that he desired to have it properly buried on Czito's property where the grave could be cared for. Czito, in relating the incident years afterward, said he was tempted, on leaving the offce, to drop the package in the first garbage can he found; but something caused him to desist and he took it to his home. Before he could perform the burial, Tesla telephoned to his home and asked him to return the package the next morning. How Tesla disposed of it is not known.

In 1924 Tesla's financial condition fell to a very low level. He was completely broke. He was unable to pay his rent and there were some judgments against him for other unpaid bills. A deputy sheriff appeared at his offce one afternoon to seize everything in the offce to satisfy a judgment. Tesla managed to talk the sheriff into delaying seizure. When the offcial had gone he took stock of his situation. He had not paid his secretaries' wages for two weeks and he now owed them for another fraction of a week. He was entirely without funds in the bank. A search of his safe disclosed that the only object of negotiable value was the heavy gold Edison Medal presented to him by the American Institute of Electrical Engineers in 1917.

"Miss, and Miss," he said, addressing the secretaries. "This medal contains about one hundred dollars' worth of gold. I will have it cut in half and give each of you one-half, or one of you can take all of it and I will later pay the other."

The two young women, Miss Dorothy F. Skerritt and Miss Muriel Arbus, refused to permit him either to damage or part with the medal, and offered instead to aid him with the meager amounts of cash they had in their purses, which offer he refused with thanks. (A few weeks later the girls received their back salaries, at $35 per week, and an additional two weeks' salary.)

A search of the cash drawer revealed a little over $5.00--all the money he possessed.

"Ah! Miss," he said, "that will be enough to buy the bird seed. I am all out of seed, so will you go down town in the morning and purchase some and deliver it to my hotel."

Again calling his trusted aide, Czito (whom he was forced to leave unpaid to the extent of $1,000), he put up to him

the problem of vacating the offce immediately. Within a few hours the entire contents of the offces were stored in a near-by offce building.

A short time later he was forced to leave his apartment in the Hotel St. Regis. His bill had been unpaid for some time, but the immediate cause was associated with pigeons. He had been spending more time in his hotel room, which also became his offce, and devoted more time to feeding pigeons. Great flocks of them would come to his windows and into the rooms, and their dirt on the outside of the building became a problem to the management and on the inside to the maids. He sought to solve the problem by putting the birds in a hamper and having George Scherff take them to his Westchester home. Three weeks later, when first given their freedom, they returned, one making the trip in half an hour. Tesla was given his choice of ceasing to feed the pigeons or leaving the hotel. He left.

He next made his home at the Hotel Pennsylvania. He remained there a few years and the same situation, both as to bills and pigeons, developed. He moved to the Hotel Governor Clinton--and in about a year went through the same experience. He next moved to the Hotel New Yorker, in 1933, where he spent the final ten years of his life.

After midnight one night in the fall of 1937, Tesla started out from the Hotel New Yorker to make his regular pilgrimage to the Cathedral and the Library to feed the pigeons. In crossing a street a couple of blocks from the hotel an accident happened, how is unknown. In spite of his agility, he was unable to avoid contact with a moving taxicab, and was thrown heavily to the ground. He raised no question as to who was at fault, refused medical aid, and asked merely to be taken to his hotel in another cab.

Arriving at the hotel, he went to bed and had scarcely got under the covers when he telephoned for his favorite messenger boy, Kerrigan, from a near-by Western Union offce, gave him the package of bird seed and directed him to complete the task which he had started and the accident interrupted.

The next day, when it was apparent that he would be unable to take his usual daily walks for some time to come, he hired the messenger for six months to feed the pigeons every day. Tesla's back had been severely wrenched in the

accident, and three ribs broken, but the full extent of his injuries will never be known for, in keeping with his almost lifelong custom, he refused to consult a doctor. Pneumonia developed but for this he also refused medical aid. He was bedridden for some months, and was unable to carry on his practice of feeding pigeons from his window; and soon they failed to come.

In the spring of 1938 he was able to get up. He at once resumed his pigeon-feeding walks on a much more limited scale, but frequently had a messenger act for him.

This devotion to his pigeon-feeding task seemed to everyone who knew him like nothing more than the hobby of an eccentric scientist, but if they could have looked into Tesla's heart, or read his mind, they would have discovered that they were witnessing the world's most fantastic, yet tender and pathetic love affair.

Tesla, as a self-made superman, suffered from the limitations of his maker. Endowed with an intelligence above the average in both quality and quantity, and with some supernormal faculties, he was able to erect a superman higher in stature than himself; but the greater height was attained by sacrificing other dimensions, and in this diminution of breadth and thickness existed a deffciency.

When he was a youth and his mind was in its most plastic and formative stage, he adopted, as we have seen, the then prevalent agnostic and materialistic view of life. Today science has emancipated itself from slavery to either an antagonistic mysticism or materialism, and is willing to consider both as harmonious parts of a comprehensive approach to the understanding of Nature, but is conscious that it has not yet learned how to manipulate or control the more intangible factors upon which the mystics have builded their structures of knowledge. Vast realms of human experience have been rejected in all ages by scientists, of whatever name, who failed to fit them in logical arrangement in their inadequate and too simplified natural philosophies. By rejecting the phenomena that lay beyond their intellectual abilities, the scientists and philosophers did not eliminate them nor prevent their manifestations. The phenomena so rejected, however, were given an academic home by the ecclesiasts, who accepted them without understanding, or hope of understanding, and thus incarcerated them in the foundation of the religious

mysteries where they served a useful purpose, for upon an unknown it is possible to build a greater unknown.

The mystical experiences of the saints, of whatever faith, are demonstrations of forces which are natural functions of the phenomenon of life, expressed in varying degree in step with the expanding unfoldment of the individual toward an advanced state of evolution.

Tesla was an individual in an advanced state of development, and there came to him experiences which he refused to accept as experiments; accepting the benefits which came to him but which transported them. This was true, for example, in the case of the burst of revelation which came to him revealing scores of tremendously valuable inventions--while he strolled in the park at Budapest, and which differed only in degree and type, but not in fundamental nature, from the blinding light which came to Saul on the road to Damascus, and to others to whom illumination has come by similar processes.

His materialistic concepts made him intellectually blind to the strange phenomenon by which revelation, or illumination, had come to him, but made him more keenly appreciative of the value of that which was revealed. It must not be understood that this revelation was a happenstance phenomenon of the moment, for Tesla, endowed by Nature with an intellect capable of vast unfoldment, had exerted almost superhuman efforts to achieve that which was revealed to him, and the effort was not unassociated with the result.

In a contrary direction, Tesla suppressed a tremendously large or important realm of his life by the planned elimination of love and romance from his thoughts and experience. Just as his efforts to discover the physical secrets of Nature built up forces that penetrated to the plane of revelation, so did his equally tremendous effort to suppress love and romance build up forces, beyond his control, that were operating to express themselves. There was a parallel situation in his philosophy of natural phenomena, in that he suppressed all spiritual aspects of Nature and confined himself to the purely materialistic aspects.

Two forces, one of love and romance in his personal nature, and the other the spiritual aspects of Nature in his

philosophy, as applied to his work, were incarcerated in a limbo of his personality, seeking an outlet into the paradise of expression and manifestation. And they obtained that outlet, expressing their nature by the form of the manifestation; but Tesla failed to recognize them. Tesla, rejecting the love of woman and thinking that he had engineered a complete elimination of the problem of love, failed to excise from his nature the capacity to love, and when this capacity expressed itself, it did so by directing its energies through a channel he left unguarded in planning the self-made superman.

The manifestation of these united forces of love and spirituality resulted in a fantastic situation, probably without parallel in human annals. Tesla told me the story; but if I did not have a witness who assured me that he heard exactly what I heard, I would have convinced myself that I had had nothing more tangible than a dream experience. It was the love story of Tesla's life. In the story of his strange romance, I saw instantly the reason for those unremitting daily journeys to feed the pigeons, and those midnight pilgrimages when he wished to be alone. I recalled those occasions when I had happened to meet him on deserted Fifth Avenue and, when I spoke to him, he replied, "You will now leave me." He told his story simply, briefly and without embellishments, but there was still a surging of emotion in his voice.

"I have been feeding pigeons, thousands of them, for years; thousands of them, for who can tell--

"But there was one pigeon, a beautiful bird, pure white with light gray tips on its wings; that one was different. It was a female. I would know that pigeon anywhere.

"No matter where I was that pigeon would find me; when I wanted her I had only to wish and call her and she would come flying to me. She understood me and I understood her.

"I loved that pigeon.

"Yes," he replied to an unasked question. "Yes, I loved that pigeon, I loved her as a man loves a woman, and she loved me. When she was ill I knew, and understood; she came to my room and I stayed beside her for days. I nursed her back to health. That pigeon was the joy of my life. If she

needed me, nothing else mattered. As long as I had her, there was a purpose in my life.

"Then one night as I was lying in my bed in the dark, solving problems, as usual, she flew in through the open window and stood on my desk. I knew she wanted me; she wanted to tell me something important so I got up and went to her.

"As I looked at her I knew she wanted to tell me--she was dying. And then, as I got her message, there came a light from her eyes--powerful beams of light.

"Yes," he continued, again answering an unasked question, "it was a real light, a powerful, dazzling, blinding light, a light more intense than I had ever produced by the most powerful lamps in my laboratory.

"When that pigeon died, something went out of my life. Up to that time I knew with a certainty that I would complete my work, no matter how ambitious my program, but when that something went out of my life I knew my life's work was finished.

"Yes, I have fed pigeons for years; I continue to feed them, thousands of them, for after all, who can tell--"

There was nothing more to say. We parted in silence. The talk took place in a corner of the mezzanine in the Hotel New Yorker. I was accompanied by William L. Laurence, science writer of the New York Times. We walked several blocks on Seventh Avenue before we spoke.

No longer was there any mystery to the midnight pilgrimages when he called the pigeons from their niches in the Gothic tracery of the Cathedral, or from under the eaves of the Greek temple that houses the Library--pursuing, among the thousands of them . . . "For after all, who can tell . . .?"

It is out of phenomena such as Tesla experienced when the dove flew out of the midnight darkness and into the blackness of his room and flooded it with blinding light, and the revelation that came to him out of the dazzling sun in the park at Budapest, that the mysteries of religion are built. But he comprehended them not; for, if he had not suppressed the rich mystical inheritance of his ancestors

that would have brought enlightenment, he would have understood the symbolism of the Dove.

ACKNOWLEDGMENTS

MUCH valuable aid has been received from many sources in the preparation of this volume. For this helpful co-operation my thanks are due to:

Sava N. Kosanovic, Minister of State of Yugoslavia, and Tesla's nephew, for making available books, family records, transcripts of records, pictures, and for correcting the manuscript of many chapters; and to his secretary, Miss Charlotte Muzar;

Miss Dorothy Skerritt and Miss Muriel Arbus, Tesla's secretaries; and George Scherff and Julius C. Czito, business associates;

Mrs. Margaret C. Behrend, for the privilege of reading correspondence between her husband and Tesla; and to Dr. W. B. Earle, Dean of Engineering, Clemson Agricultural College, for pictures and other material from the Behrend Collection in the college library;

Mrs. Agnes Holden, daughter of the late Robert Underwood Johnson, ambassador, and editor of the Century Magazine; Miss Marguerite Merington; Mrs. Grizelda M. Hobson, widow of the late Rear Admiral Hobson; Waldemar Kaempffert, Science Editor of the New York Times; Professor Emeritus Charles F. Scott, Department of Electrical Engineering, Yale University; Hans Dahlstrand, of the Allis Chalmers Manufacturing Co.; Leo Maloney, Manager of the Hotel New Yorker; and W. D. Crow, architect of the Tesla tower, for reminiscences, data, or helpful conversations concerning their contacts with Tesla;

Florence S. Hellman, Chief of the Bibliographic Division, Library of Congress; Olive E. Kennedy, Research Librarian of the Public Information Center, National Electric Manufacturers Association; A. P. Peck, Managing Editor of

the Scientific American; Myrta L. Mason, and Charles F. Pflaging, for bibliographic aid;

G. Edward Pendray and his associates in the Westinghouse Electric and Manufacturing Co., and C. D. Wagoner and his associates in the General Electric Co., for correcting, or reading and making helpful suggestions in connection with many chapters;

William L. Laurence, science writer of the New York Times, and Bloyce Fitzgerald, for exchange of data;

Randall Warden; William Spencer Bowen, President of the Bowen Research Corp.; G. H. Clark, of the Radio Corporation of America; Kenneth M. Swezey, of Popular Science; Mrs. Mabel Fleischer and Carl Payne Tobey, who have aided in a variety of ways;

Colliers--The National Weekly; The American Magazine; the New York World-Telegram and the General Electric Co., for permission to quote copyrighted material, for which credit is given where quoted; and

Peggy O'Neill Grayson, my daughter, for extended secretarial service.

To all the foregoing I extend my sincere thanks.

John J. O'Neill

Freeport, L. I.

New York

July 15, 1944

NIKOLA TESLA ON HIS WORK WITH ALTERNATING CURRENTS
and Their Application to Wireless Telegraphy, Telephony and Transmission of Power : An Extended Interview
Leland I. Anderson, Editor

CONTENTS

Preface

Introduction

Organization of Interview

Section
I. High Frequency Alternators
II. Experiments with Wireless Telegraphy and Telephony
III. Mechanical and Electrical Oscillators
IV. Apparatus for Transformation by Condenser Discharges; Damped Waves
V. Apparatus for Transformation by Condenser Discharges; Continuous Waves
VI. Colorado Experiments
VII. Theory and Technique of Energy Transmission
VIII. Long Island Plant
IX. Arrangements for Receiving
X. Rediscussion/Clarification of Selected Remarks

Appendix
I. Fig. 1. Photograph of Tesla with alternator in offices of The Westinghouse Electric & Manufacturing Co., May 10, 1938.
Fig. 2. Photograph of 1915 shipboard transmitter employing the Tesla spiral form of antenna transformer coil.
II. Tesla's description of Long Island plant and inventory of the installation as reported in 1922 foreclosure appeal proceedings.

Index

Figures
1 Diagrammatic illustration of first high frequency alternator with 384 poles.
2 Photographic view of alternator [shown in Fig. 1].
3 Light and motive devices operated from this alternator in novel manner.
4 Vacuum tubes lighted in alternating electrostatic field.
5 Illustrating various ways of using a high frequency alternator.
6 Diagram of the second machine built with no wire on the rotating part.
7 Photograph of machine covered by U.S. Patent No. 447,921.
8 Diagrammatic drawing of the third and larger machine with 480 poles.
9 Photographic view of alternator covered by U.S. Patent No. 447,921.
10 Small alternator of very high frequency built for purposes of investigation (receivers).
11 Small high-frequency alternator of different construction, for the same purposes.
12 Diagrammatic illustration of machine with rotating magnetic field excitation.
13 Instrument to receive radio waves of 1896-1899 structure.
14 Electrical condenser described in U.S. Patent No. 464,667.
15 Electrical condenser described in U.S. Patent No. 567,818.
16 Improved form of electrolyte condenser as used in N.Y.C. laboratories.
17 Form of condenser with air under great pressure as dielectric.
18 Apparatus for manufacture of condensers and coils to exclude air.
19 Simple mechanical oscillator used in first experiments.
20 Mechanical oscillator with air spring combined with electric generator.
21 Another mechanical oscillator with controlling electromagnetic system.
22 Another type of small mechanical electromagnetically controlled oscillator.
23 Large electro-mechanical oscillator for generating isochronous oscillations.
24 Diagram of electro-mechanical oscillator for generating isochronous oscillations.
25 Double compound electro-mechanical isochronous oscillator.
26 Diagram of double compound electro-mechanical isochronous oscillator.
27 Large mechanical and electrical isochronous oscillator with four vibrating parts.
28 Diagram showing length of section of large mechanical and electrical oscillator.
29 Small high frequency mechanical and electrical oscillator used in many investigations.

30 Diagram of small high frequency electro-mechanical and electrical oscillator.
31 Method of transformation of electrical energy by oscillatory condenser discharges.
32 Series quenched spark gap.
33 Discharger working in hydrogen rich atmosphere, still further weakened by heat.
34 Oscillatory apparatus with interrupter in oil.
35 Apparatus with mechanical break as installed on a large scale in the N.Y.C. labs.
36 Isochronous mechanical break used in 35 So. Fifth Avenue laboratory.
37 Mechanical break with two oppositely rotating discs.
38 Use of multi-phase generator with mechanical break.
39 Apparatus furnishing direct currents of high tension.
40 Apparatus and method of conversion by condenser discharges (both AD and DC).
41 Illustrating one of the early experiments with a tuned transformer.
42 Another illustration of an early experiment with a tuned transformer.
43 Apparatus illustrating the first step in the evolution of the magnifying transmitter.
44 One of many forms of mercury circuit controllers described in various U.S. Patents.
45 Hermetically sealed mercury circuit controller with compact oscillatory transformer.
46 Diagrammatic illustrations of hermetically enclosed mercury break.
47 Large mercury circuit controller of high frequency (communications experiments).
48 Interior arrangement of large mercury circuit controller of very high frequency.
49 Special type of high frequency transformer.
50 Illustrating forms of vacuum tubes.
51 Resonant wireless transmitting circuit.
52 Experiments illustrating transmission and transformation of energy through one wire.
53 Some of the most striking experiments with vacuum tubes and lamps.
54 The lighting of incandescent lamps by energy transmitted through one wire.
55 Experiment with the same apparatus in which a lamp is lighted at the end of a coil.
56 Another experiment with same apparatus in which the coil is not directly connected.
57 Oscillating apparatus on large scale with which the preceding experiments were made.
58 Experiment with coils tuned to harmonics.
59 Transmission of energy with tuned system by induction.
60 Application of the one-wire principle to the transmission of messages.
61 Illustrating an experiment with high frequency alternator and tuned circuit.
62 Wireless transmission demonstrated, mechanically elucidated.
63 Striking experiment in the transmission of energy by electromagnetic waves.
64 An important experiment in the transmission of energy performed in 1899.
65 Perfected system of wireless transmission with four tuned circuits.
66 Diagrams illustrating system of four-tuned circuits for wireless transmission.
67 Differences between Tesla apparatus and typical Hertz wave arrangements.
68 Powerful discharge from transmitter built following principles set forth. . . .
69 Experiment bearing upon design principles embodied in Tesla transmitter.
70 Experiment conveying idea of great quantity of electricity set in movement.
71 Wireless station at where experiments were performed.
72 Diagram showing general arrangement of transmitting and receiving circuits.
73 Experimental station at Colorado in a later phase of development.
74 Experimental station at Colorado showing investigative structure.
75 Discharge of a powerful transmitter under a pressure of 12 million volts.
76 Another discharge remarkable for symmetry at Colorado plant.
77 Diagram illustrating use of sectional circuits.
78 Experimental demonstration in the Houston Street laboratory.
79 Diagram explanatory of transmission of electrical energy.
80 Diagram illustrating one of many wireless fallacies, from a Marconi patent.
81 Diagram illustrating mode of propagation of current from the transmitter.
82 Diagram illustrating law governing passage of current from the transmitter.
83 Improved transmitter described in U.S. Patent No. 1,119,732.
84 Transmitter at Wardenclyffe, erected for purposes of “world telegraphy.”
85 Exterior view of the Long Island plant.
86 A view of some of the apparatus in the electrical part of the plant.
87 A view from a different direction.
88 Another interior view.
89 Another view showing some of the apparatus which has been described.
90 The first practical telautomaton, on principles in U.S. Patent No. 613,809.
91 Special clock, for purpose of measurements, especially useful in receiving.

92 Illustrating some of the attachments and mode of using same.
93 Devices for receiving as practiced in 1898-1900.
94 Other ways of receiving practiced in 1898-1900.
95 Illustrating bulbs made prior to 1900, many used in receiving apparatus.
96 Illustrating bulbs made prior to 1900, many used in receiving apparatus.
97 Illustrating bulbs made prior to 1900, many used in receiving apparatus.
98 Illustrating bulbs made prior to 1900, many used in receiving apparatus.
99 Illustrating bulbs made prior to 1900, many used in receiving apparatus.
100 Illustrating bulbs made prior to 1900, many used in receiving apparatus.
101 Static preventer.

Appendix Figures

A1-1 A high-frequency alternator found in Westinghouse Electric & Manufacturing Company storage identified as belonging to Tesla. —Westinghouse

A1-2 Shipboard quenched-spark transmitter, produced by the Lowenstein Radio Company and licensed under Nikola Tesla Company patents. —George Scherff

A2-1 Construction detail of Wardenclyffe plant tower. —Lillian McChesney
A2-2 Workshop on north side of Wardenclyffe plant building. —William Kolb
A2-3 Generating room of Wardenclyffe plant building. —Bruce Kelley

---

PREFACE

The surfacing of the transcript for this pre-hearing interview with Nikola Tesla by his legal counsel in 1916 resulted from an intensive search in archives of legal firms, some now defunct and others later acquired by contemporary interests. The interview was precipitated by numerous pending court cases as the fledgling radio industry entered a period of fierce competition. Tesla's counsel believed the interview necessary not only in order to prepare for the pressing of his own claims against the Marconi Company, but also to protect his own patent interests when called to give expert-witness testimony in the upcoming litigation foray pitting as adversaries a plethora of new communication companies and their captive radio pioneers.

A case prompting this interview, one of dozens to reach judicial review, was "Marconi Wireless Telegraph Company of America v. Atlantic Communication Company, *et al*." Atlantic owned and operated the large radio station at Sayville, Long Island. The proceedings opened in 1915 with the calling of expert witnesses including Ferdinand Braun and Nikola Tesla. The specter of war had cast its shadow over Europe, and Count George von Arco, who had also been called, was detained because of services to the German Army in the use of asphyxiating gases and other deadly inventions perfected by him.

The text of this interview was, of course, never intended for publication. Counsel, concerned primarily with the protection of Tesla's patent interests, ask questions almost exclusively relating to the priority of his patents and their application. Tesla candidly discusses his contenders while presenting a thorough history of his work with alternating currents as applied to wireless transmission. In this document, he describes experimental methods, techniques, and apparatus used in his laboratories at New York City, Colorado Springs, and Long Island.

Most of the photographs accompanying this interview are in good condition, but those of schematic and mechanical drawings have suffered some decay with time. These may be the only form of the drawings extant and are reproduced with as much fidelity as possible. For better clarity, five illustrations are reprinted from the February and May, 1913 issues of the Electrical Experimenter magazine, Copyright Gernsback Publications, where they subsequently appeared. These are Figures 66, 67, 79, 81 and 82.

Although the interview spanned several days, it is presented in this work as though it was given at one time; all references to interruptions and resumptions have been removed. The text is printed in standard typewriter pica type, unjustified, in the style of hearing proceedings of that period. No alterations have been made in Tesla's remarks except for 'clean-up' additions, typically references to photographs and diagrams, and fill-in words necessitated by occasional rambling and incomplete sentence structure. These additions are provided in brackets [ ]. Helpful notes ate also cued to the text in brackets.

L.I.A., 1992

INTRODUCTION

What I am going to show you, step by step, is how I proceeded until I finally realized my dream.

Nikola Tesla

You are holding in your hands one of the most remarkable documents in the history of electrical science. Seldom, in technical research, has such a treasure of descriptive commentary and historical documentation been discovered. This book is a veritable Rosetta stone for deciphering and tracing the technical thoughts of one of the world's most distinguished engineering scientists since Archimedes. It describes electrical experiments which took place nearly 100 years ago—but have yet to be replicated.

So astonishing are its contents that it takes one's breath away!

Here, in Tesla's own words, are interpretations (couched in the language of 19th century physics) for electrical phenomena which even today lack satisfactory explanations in the language of modern technical analysis. Oh, it won't tell you how to wire up "the magnifying transmitter" (that arcane instrument for global wireless power transmission),* but it will tell you what instruments Tesla was employing, what his thoughts were, how he conceptualized things, how he proceeded, where he performed his historic experiments, when key results were obtained, and how he reached his conclusions.

* It may just be that there is enough information present to solve the puzzle of the magnifying transmitter. The reader will have to dig for himself.

Tesla, himself, was awe-struck with the results of his scientific endeavor. He expressed astonishment then at what he later asserts is experimentally demonstrable. Listen to the words he uses in this interview to describe the electrical phenomena to his attorney: "magnificent," "it was a marvelous sight," "a wonderful thing," "practically the lamp of Aladdin," "a tremendous display," "glorious," "so marvelous that one would be almost afraid to talk about them. . . ." An Edmund Spencer or a John Milton could be no more eloquent. One of Shakespeare's characters once said, "Bid me discourse, and I will enchant thine ear." Tesla does no less, even in a legal briefing. He weaves the gossamer web of enchantment—which yet thrills our technical imagination and lures us in, nearly 80 years after a stenographer recorded these spoken words!

Who was Nikola Tesla?

In 1896, at the Franklin Institute in Philadelphia, Lord Kelvin said, "Tesla has contributed more to electrical science than any man up to his time." After showering words of praise upon the inventor before a meeting of the Royal Society in London in 1892, Lord Rayleigh declared that Tesla possessed a great gift for electrical discovery. Fortunately, the text of Tesla's speech has been preserved and republished.[1,2,3] He was one of the earliest scientists to understand the distinction between lumped and distributed resonance and the first to patent voltage magnification by standing waves.

The unit of magnetic induction is named in honor of Tesla. It is commonly understood by power engineers that he was the inventor of the induction motor utilizing the rotating magnetic field and the AC polyphase power distribution system currently used throughout the civilized world.* However, most electrical engineers are unaware that, as late as 1943, he (not Marconi**) was recognized by the U.S. Supreme Court as having priority in the invention of "radio." Even fewer computer scientists are aware that, when certain computer manufacturers attempted to patent digital logic gates after World War II, the U.S. Patent Office asserted Tesla's turn-of-the-century priority in the electrical implementation of logic gates for secure communications, control systems, and robotics. As a result, a monopoly on digital logic gates in general was unable to be secured in the 1950s.

* Charles E. Scott, past president of the AIEE has said, "The evolution of electric power from the discovery of Faraday in 1831 to the initial great installation of the Tesla polyphase system in 1896 [at Niagara Falls] is undoubtedly the most tremendous event in *all* engineering history. [*Electrical Engineering*, August, 1943 (Vol. 62, No. 8), pp. 351-355.]

** Although it took the courts several decades to figure this out, the facts were well understood by impartial technical men of the day. Robert H. Marriott, the first president of the IRE, once said that Marconi had ". . . played the part of a demonstrator and sales engineer. A money getting company was formed, which in attempting to obtain a monopoly, set out to advertise to everybody that Marconi was the inventor and that they owned that patent on wireless which entitled them to a monopoly." [*Radio Broadcast*, December, 1925 (Vol. 8, No. 2), pp. 159-162.]

Tesla served the electrical engineering profession in its highest offices. In the early 1890s, he was elected as vice-president of the American Institute of Electrical Engineers, now the Institute of Electrical and Electronics Engineers. At the time of his election, Alexander Graham Bell was its president. Tesla served two years as vice-president of the AIEE and, a decade later, one of his laboratory technicians at the Colorado Springs experiments served as the first vice-president of the Institute of Radio Engineers when it was formed in 1903. This was the now, famous consulting engineer Fritz Lowenstein. Lowenstein was the inventor of the grid biased Class A amplifier (for which he received the sum of $150,000 from AT&T in 1918),[4] the shaped plate capacitor, and other electrical and mechanical devices. His two IRE papers, with comments on the propagation of ground waves by Zenneck and sky waves by Austin, appeared in February and June issues of the IRE Proceedings, the year of this interview. It should also be noted that Tesla was a fellow of the AIEE, the American Association for the Advancement of Science, and a dozen other professional societies. He received over 13 honorary degrees from such diverse institutions as Columbia, Yale, and the Universities of Paris, Vienna, Prague, and Sofia.

Recently, another fascinating fact about Tesla has come to light. After all these years, it is now known that he was nominated for an *undivided* Nobel prize in physics in 1937.[5] Tesla's nominator, Felix Ehernhaft, of Vienna, had previously nominated Albert Einstein for the Nobel prize.

Tesla had the remarkable talent of charming and astonishing his admirers while at the same time enraging his enemies—the phenomenon continues to the present day. It is unfortunate that, despite several current popular biographies, there still exists no definitive technical authority, other than his own scattered publications, to consult on the scientific issues of his intriguing and colorful scientific career. Consider the adulation bestowed upon him by Lord Kelvin, Hermann von Helmholtz, Sir William Crookes, Lord Rayleigh, Sir James Dewer, Robert Millikan, Sir James Fleming, B.A. Behrend, A.E. Kennally, L.W. Austin, W.H. Bragg, Ferdinand Braun, Jonathan Zenneck, E.W.E Alexanderson, J.S. Stone, Vannevar Bush, W.H. Eccles, Edwin H. Armstrong (who served as a pallbearer at Tesla's funeral, as did Alexanderson), and notably Albert Einstein, Ernest Rutherford, Arthur Compton, and Neils Bohr. There are a number of Nobel laureates, Royal Society fellows, IEEE presidents and fellows, and university presidents in that collection. No one, since Franklin, had so stirred the scientific and engineering world.

In 1893, Thomas Commerford Martin, the third president of the AIEE (1888-1889), edited and published a remarkable collection of Tesla's contemporary lectures. It is in print today, and a century from now it will still be considered an unparalleled classic in scientific literature to be read along with Franklin's *letters*, Priestly's *history*, Faraday's *researches in electricity*, Maxwell's *treatise*, Hertz's *electric waves*, and Heaviside's *electrical papers*. In 1919, 26 years after publishing the work on Tesla, Martin wrote,

"Tesla's influence may truly be said to have marked an epoch in the progress of electrical science. Very little data, however, has been procurable that is descriptive of his later researches, and more is the pity from the historical standpoint. Tesla has not finished. The world waits expectantly for each fresh touch of his vitalizing thought upon the big electrical problem of the age." [6]

Unlike most of the aforementioned scientists, Dr. Tesla—for so it is appropriate to call him—had no financial support to fall back on from a faculty position or research institute. His ideas had to support themselves and him in the technical marketplace. It is not surprising, therefore, that he felt no compulsion to share further technical details in the open scientific literature of his day. For these you must dig (and dig, and dig) through the patent literature, where only enough is disclosed to make it clear to one "skilled in the art.

Readers will also be struck with Tesla's lighter side. His sense of humor and his quick wit shine through when he describes his 1893 RF demonstration before the public at the Sixteenth Convention of the National Electric Light Association in St. Louis, where he was distinguished as honorary member: "There was a stampede in the two upper galleries and they all rushed out. They thought it was some part of the devil's work." (p. 87) His humor is also evident in his description of the influence that his demonstrations had upon the Royal Institution in London in 1892: "The scientists simply did not know where they were when they saw it." (p. 95)

Tesla could also be sarcastic: "The greatest men of science have told me [the Tesla coil] was my best achievement. . . . For instance, a man fills this space with hydrogen; he employs all my instrumentalities, everything that is necessary, but calls it a new wireless system—*I cannot stop it*. Another man puts in here a kind of gap. *He gets a Nobel prize for it*. . . . The inventive effort involved is about the same as that of which a 30-year old mule is capable." (p. 48)

Electrical History

For those deeply active in the technical evaluation of historic electrical research, it is a source of intense frustration and shattering disappointment to find "a new book" (or even to have a TV "documentary") appear, only to discover that the authors (a) didn't penetrate the technical aspects of their subject sufficiently to understand what the real issues were, and (b) continue to perpetuate

unsubstantiated popularized assertions, myths, and historical errors 'generated at victory balls' and not at the scene of the battle. This is especially true of authors addressing topics in the realm of RF, antennas, and distributed circuits (i.e., radio) where merely an academic knowledge of electronics or Maxwell's theory is insufficient to guarantee professional livelihood in those disciplines. It leads one to conclude that no reliable history of this research can be written until those with adequate technical training and experience devote their time and effort to the subject.

But this document is a breath of fresh air. It sets straight a region of the radio history puzzle which has been incongruous for over nine decades. When we saw these pages, our first impulse was to start an immediate technical evaluation: replicate apparatus, search for partially disclosed concepts and missing pieces, clarify issues, and execute a technical analysis.

We believe that this document will initiate considerable activity along these lines, performed as well by a broad spectrum of investigators. This introduction is not an appropriate medium to discuss such pursuits. Instead, we invite the reader to consider the wonderful personal narrative which will be placed before him.

Feel the pathos in Tesla's voice as he describes the famous system of four-tuned circuits: Every wireless message that has ever been transmitted to any distance has been transmitted by this apparatus; there is no other way. Twenty-seven more years would pass before the highest courts of the land would echo in agreement. From those legal proceedings would emerge the acid test for any radio system. For this reason, Tesla, not Hertz, Marconi, or De Forest has been given the title inventor of radio. The courts clearly exercise a distinction between "innovated' and "invention." How strange that, even at this late date, there are those that still don't understand what happened.

Fresh Surprises from Tesla

Tesla has never lost the magical touch. Even today, exactly 100 years after his lecture at the Royal Institution (London), his careful engineering skill still has power to surprise and delight a technical audience. But what was unexpected from Tesla—today, in 1992, is a fresh glimpse of his life's work. Those of us that have toiled with RF technology, and electromagnetic radiation and propagation owe a great debt to Anderson, one of the world's leading authorities on Tesla, for publishing this remarkable document. It is absolutely unique. We have no doubt that it is destined to join *My Inventions*; *Lectures, Patents, and Articles*; *Und Sein Werk*; *Inventions, Researches and Writings*, and *Colorado Springs Notes* as a member of the historic "canonical Tesla publications." Anyone doing a serious technical evaluation of Tesla's research must turn to these works.

Return to 1916

It is important to grasp the pulse of society at the time of this interview. In your mind's eye, return to the era of 1916. A Princeton history professor named Woodrow Wilson, the same age as Tesla, will be re-elected to lead the country. War has been raging in Europe for the past 18 months. The Lusitania has been sunk. Within a year, the U.S. would declare war on Germany and more than 100,000 young Americans would go "over there" never to return home to their loved ones. Irving Berlin is writing songs, 24 states have voted-in prohibition, and Ford has produced his millionth automobile. Motorized taxies have just appeared on the streets of New York, and electricity has made possible the new skyscrapers that now begin to dominate the city's skyline.

On Mount Wilson, in California, the new 100-inch telescope is nearing completion. In Europe, Albert Einstein has just introduced the general theory of relativity, and astronomer Arthur Stanley Eddington is quietly preparing expeditions to islands off the coast of Africa and Brazil to test the theory during a solar eclipse. Consultant John Stone Stone has just completed his term as president of the IRE, and Harvard Professor A.E. Kennelly has stepped into the position—he had previously served as president of the AIEE in 1898. The IRE now has almost 1,000 members. Dr. Zenneck's treatise on wireless telegraphy has just appeared, and he will soon be held "under arrest" at Ellis Island for the duration of WWI. Zenneck would later serve as vice-president of the IRE during 1933.

At Bell Labs, John R. Carson has just shown that single-sideband transmission is mathematically possible. The first transcontinental telephone link has just been demonstrated between Alexander Graham Bell in New York and Thomas A. Watson in San Francisco, and wireless service between the U.S. and Japan has been inaugurated. In 1916 the electromagnetic spectrum is populated only by amateurs and commercial telegraph stations. There is yet no commercial AM broadcasting, although Frank Conrad, who would be vice-president of the IRE 11 years later, has just built an amateur station. It would become Westinghouse's KDKA in November, 1920.

Tesla has recently published "Some Personal Recollections" in the *Scientific American*. He has proposed that the Secretary of Defense create a Defense Science Board. Looking toward the future, he publishes an essay called, "The Wonder World to be Created by Electricity." E. Taylor Jones and W.M. Jones have published, in the *Philosophical Magazine* (London), erroneous lumped-circuit analyses of Tesla coils. Nineteen years later, one of E.O. Lawrence's proteges at Berkeley would declare, in pages of

the *Physical Review*, that Tesla coils "cannot be treated usefully by mathematics."

Tesla prophesies that radio-controlled torpedoes and missiles will soon expose the general population, not just the military, to the horrors of war. In 1916, the *Scientific American* discusses Tesla's new automobile speedometer, the tower at Shoreham (Long Island) will pass from his hands, and Hugo Gernsback's magazine, the *Electrical Experimenter* will contemplate his Colorado Springs experiments. Princes Lwoff-Parlaghy entertains Tesla among New York socialites, and her painting of Tesla appears in *The New York Times*. It will later appear on the cover of *Time* (July 20, 1931).

A Visit to a Law Office

As an unseen guest, you have been ushered into an oak-decorated law office in New York City. Before you sits Nikola Tesla, now 60 years old, still with bushy black hair, slight wrinkles beginning to form around his piercing light blue-grey eyes. He possesses a winning smile and a firm handshake. He wears no jewelry or watch fob. He has a somewhat high-pitched, reedy voice, and speaks quickly and convincingly. He is still very much the cosmopolitan New Yorker in his speech, manner, and demeanor. He has brought with him numerous drawings, papers, and photographs for reference.

Across a wooden table sits his attorney. His demeanor is professional and serious, his questions are penetrating, his manner is deliberate. He is well aware of the professional reputation and international regard of the esteemed gentleman that sits before him, and he is intent upon understanding every detail that he can turn to his client's advantage in the dramatic contests at law which will soon occur. Also present is a stenographer, intent upon providing the attorney with an accurate written transcription of every thought which will soon unfold. The formalities being over, the counselor begins to speak. . . .

K.L. Corum* and J.F. Corum, Ph.D.**
April 4, 1992

References:

(1) Martin, T.C., *Inventions, Researches and Writings of Nikola Tesla*, The Electrical Engineer, New York, 1893; ch. 27, pp. 123 and 198-293, "Experiments with Alternate Currents of High Potential and High Frequency" by Tesla, February, 1892. This book has been republished and is available from several sources.

(2) Popovic, V, Horvat, R., and Nikolik, N., eds., *Nikola Tesla: Lectures, Patents and Articles*, Nikola Tesla Museum, Beograd, Yugoslavia, 1956; ch. 3, "Experiments with Alternate Currents of High Potential and High Frequency" by Tesla, pp. L48-L106.

(3) Tesla, Nikola, *Experiments with Alternate Currents of High Potential and High Frequency*, McGraw Publishing Co., New York, 1304, 162 pp.

(4) Discussion of "A History of Some Foundations of Modern Radio-Electronic Technology," Comments by Lloyd Espenschied, *Proceedings of the IRE*, July, 1959 (Vol. 47, No. 7), pp. 1254, 1256.

(5) Crawford, E., Heilbron, J.L., and Ullrich, R., University of California, 1987.

(6) Martin, T.C., and Goles, S.L., *The Story of Electricity*, The Story of Electricity Co., Vol. 2, 1919, p. 107.

* Corum & Associates, Inc., Thornton, Hew Hampshire

** Battelle, Columbus, Ohio

IV. Apparatus for Transformation by Condenser Discharges; Damped Waves

Tesla

This work [Fig. 31] was begun already in 1889. This type of apparatus is identified with my name as certain as the law of gravitation is with that of Newton. I know that some have claimed that Professor Thomson also invented the so-called Tesla coil, but those feeble chirps ne'er went beyond Swampscott. Professor Thomson is an odd sort of man; very ingenious, but he never was a wireless expert; he never could be. Moreover, it is important to realize that this principle is universally employed everywhere. The greatest

men of science have told me that this was my best achievement and, in connection with this apparatus [referring to schematics of Fig. 31], I may say that a lot of liberties have been taken. For instance, a man fills this space [break D] with hydrogen; he employs all my instrumentalities, everything that is necessary, but calls it a new wireless system—the Poulsen arc. I cannot stop it. Another man puts in here [referring to space between self-inductive lines L L] a kind of gap—he gets a Nobel prize for doing it. My name is not mentioned. Still another man inserts here [conductor B] a mercury[-arc] rectifier. That is my friend Cooper Hewitt. But, as a matter of fact, those devices have nothing to do with the performance.

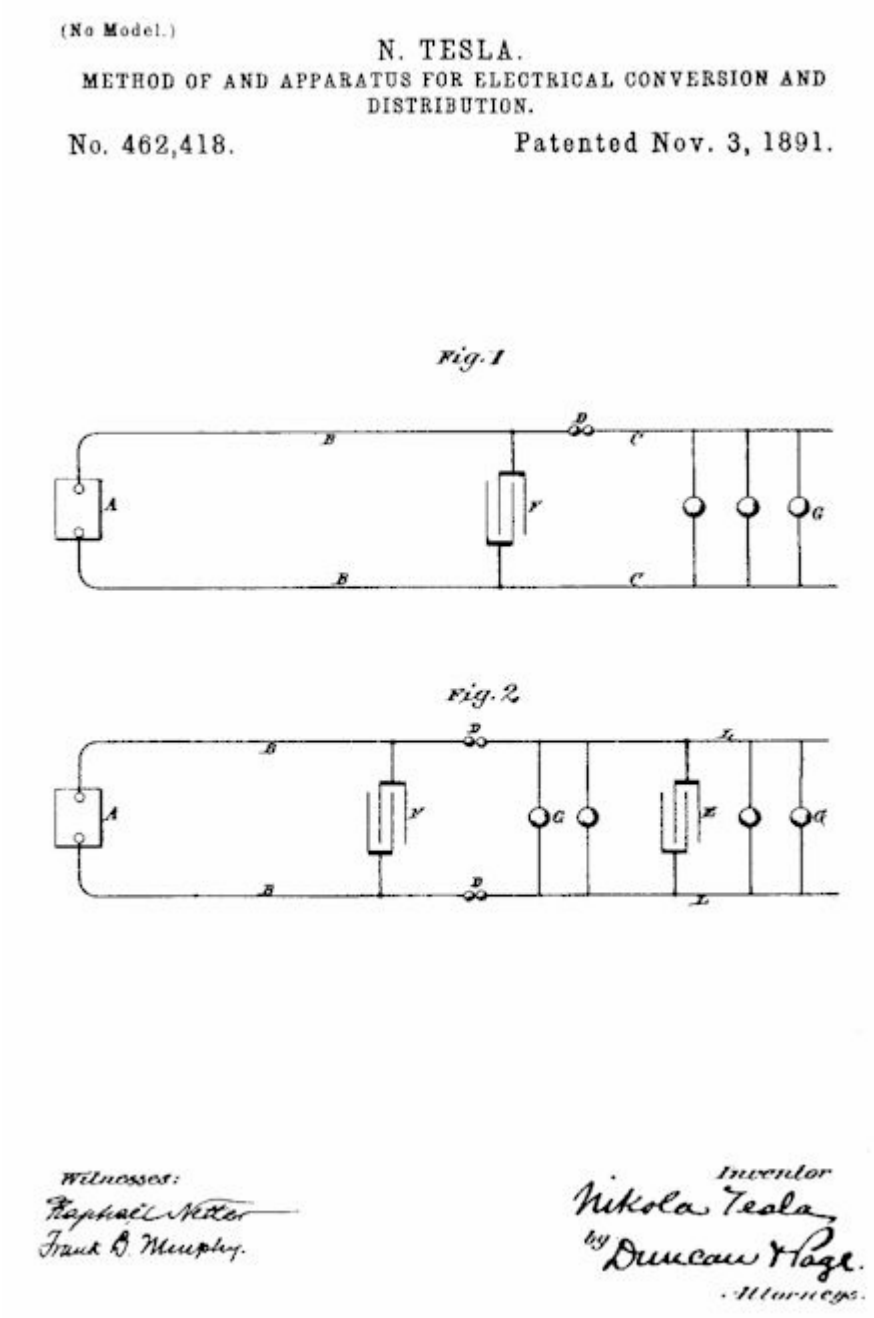
(No Model.)

N. TESLA.

METHOD OF AND APPARATUS FOR ELECTRICAL CONVERSION AND DISTRIBUTION.

No. 462,418. Patented Nov. 3, 1891.

Fig. 1

Fig. 2

Witnesses:
Raphael Netter
Frank D. Murphy.

Inventor
Nikola Tesla
by Duncan & Page.
Attorneys.

Figure 31.
Method of Transformation of electrical energy by oscillatory condenser discharges described in U.S. Patent No. 462,418 of November 3, 1891. Application filed February 4, 1891. Announcement of this invention was made in Tesla's lecture before the American Institute of Electrical Engineers at Columbia College, May 20, 1891, where it was predicted that this apparatus afforded vast possibilities and would play an important part in the future. Illustrated and described in T.C Martin book, Figs. 126 and 127, pp. 191-194.

If these men knew what I do, they would not touch my arrangements; they would leave my apparatus as it is. Marconi puts in here [break D] two wheels. I showed only one wheel; he shows two. And he says, "See what happens when the wheels are rotated; a

wonderful thing happens!" What is the wonderful thing? Why, when the teeth of the wheels pass one another, the currents are broken and interrupted. That is the wonderful thing that happens? The Lord himself could not make anything else happen unless he broke his own laws. So, in this way, invention has been degraded, debased, prostituted, more in connection with my apparatus than in anything else. Not a vestige of invention as a creative effort is in the thousands of arrangements that you see under the name of other people—not a vestige of invention. It is exactly like in car couplings on which 6,000 patents have been taken out; but all the couplings are constructed and operated exactly the same way. The inventive effort involved is about the same as that of which a 30-year-old mule is capable. This is a fact.

This is one of most beautiful things ever produced in the way of apparatus: I take a generator of any kind. With the generator I charge a condenser. Then I discharge the condenser under conditions which result in the production of vibrations. Now, it was known since Lord Kelvin that the condenser discharge would give this vibration, but I perfected my apparatus to such a degree that it became an instrument utilizable in the arts, in a much broader way than Lord Kelvin had contemplated as possible. In fact, years afterwards when Lord Kelvin honored me by presenting to the British Association one of my oscillators of a perfected form, he said that it was "a wonderful development and destined to be of great importance."

[Returning to a discussion of Fig. 31], [E] is supposed to be a condenser. That [A] is the generator. Now then, supposing that this is a generator of steady pressure. I can obtain oscillations of any frequency I desire. I can make them damped or undamped. I can make them of one direction or alternating in direction as I choose. At G are devices which operate—lamps, or anything else. Some experimenters who have gone after me have found a difficulty. They said,

"No, we cannot produce a constant train of oscillations."

Well, it is not my fault. I never have had the slightest difficulty. I produced constant oscillations and I have described how I produced them. Anyone who has no more than my own skill can do it.

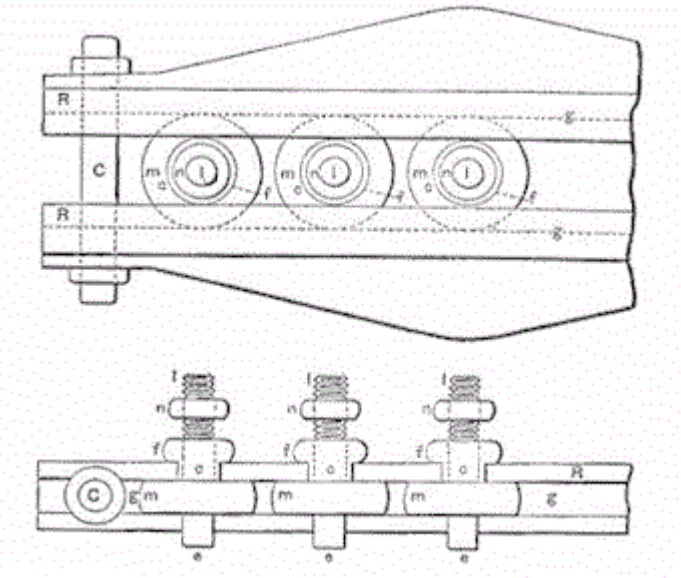

Figure 32.
Quenched spark gap. (Tesla at that time pointed out the future of quenching and showed that oscillations can be maintained without a spark being visible to the naked eye between the knobs.) Illustrated in T.C. Martin book, Figs. 135 and 136, p. 211.

This [Fig. 32] is another improvement in that particular device, which was the weakness of the invention and which I tried to eliminate. This device incorporated many spark gaps in series. It had a peculiar feature; namely, through the great number of gaps, I was able, as I have pointed out in my writings, to produce oscillations without even a spark being visible between the knobs. This device is now known in the art as the "quenched spark gap." Professor Wein has formulated a beautiful theory about it, which I understand has netted him the Nobel prize. Wein's theories are admirable. The only trouble is that he has overlooked one very important fact. It is this: If the apparatus is properly designed and operated, there is no use for the quenched gap, for the oscillations are continuous anyway. The radio men who came after me had the problem before them of making a bell sound, and they immersed it in mercury. Now, you know mercury is heavy. When they struck their bell, the mercury did not permit it to vibrate long because it took away all the energy. I put my bell in a vacuum and make it vibrate for hours. I have designed circuits in connection with an enterprise in 1898 for transmission of energy which, once started, would vibrate three years, and even after that the oscillations could

still be detected. Professor Wein's theory is very beautiful, but it really has no practical meaning. It will become useless as soon as the inefficient apparatus of the day, with antennae that radiate energy rapidly, [are] replaced by a scientifically designed oscillator which does not give out energy except when it gets up to a tremendous electromagnetic momentum.

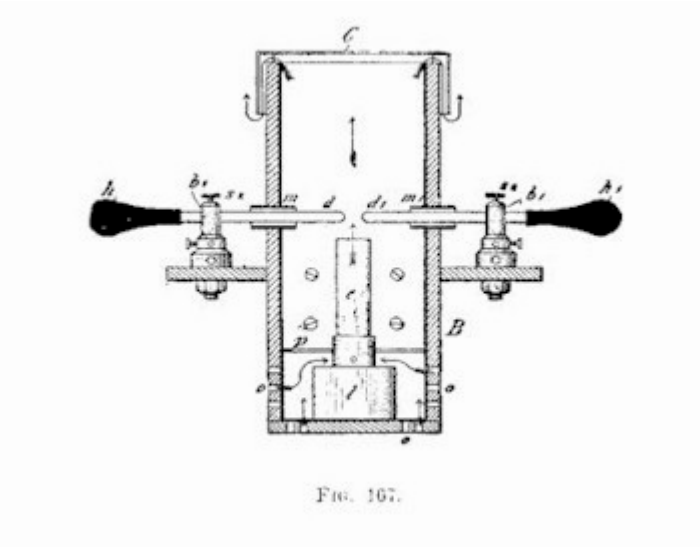

Figure 33.
The discharger working in an atmosphere, chiefly consisting of hydrogen, still further weakened by heat. The use of hydrogen in this connection has been claimed as a discovery and patented. Presented in TesIa's lectures before the Pranklin Institute and the National Electric Light Association. T.C. Martin book, Fig. 167. pp. 307-308.

In this form of break [Fig. 33], I changed the atmosphere in which the arc was operating. The atmosphere was mostly hydrogen, and with this device I performed my experiments before the Franklin Institute in Philadelphia and the National Electric Light Association in St. Louis. This has been used by Poulsen and it is now called the "Poulsen arc" and "Poulsen system." But, of course, there is no invention in it. I am on record with prior publications, and besides, the hydrogen does not have any other effect except that it lowers the tension under which the device can operate. It has the disadvantage of producing asymmetrical or distorted waves, and the impulses obtained are not best suited for tuning.

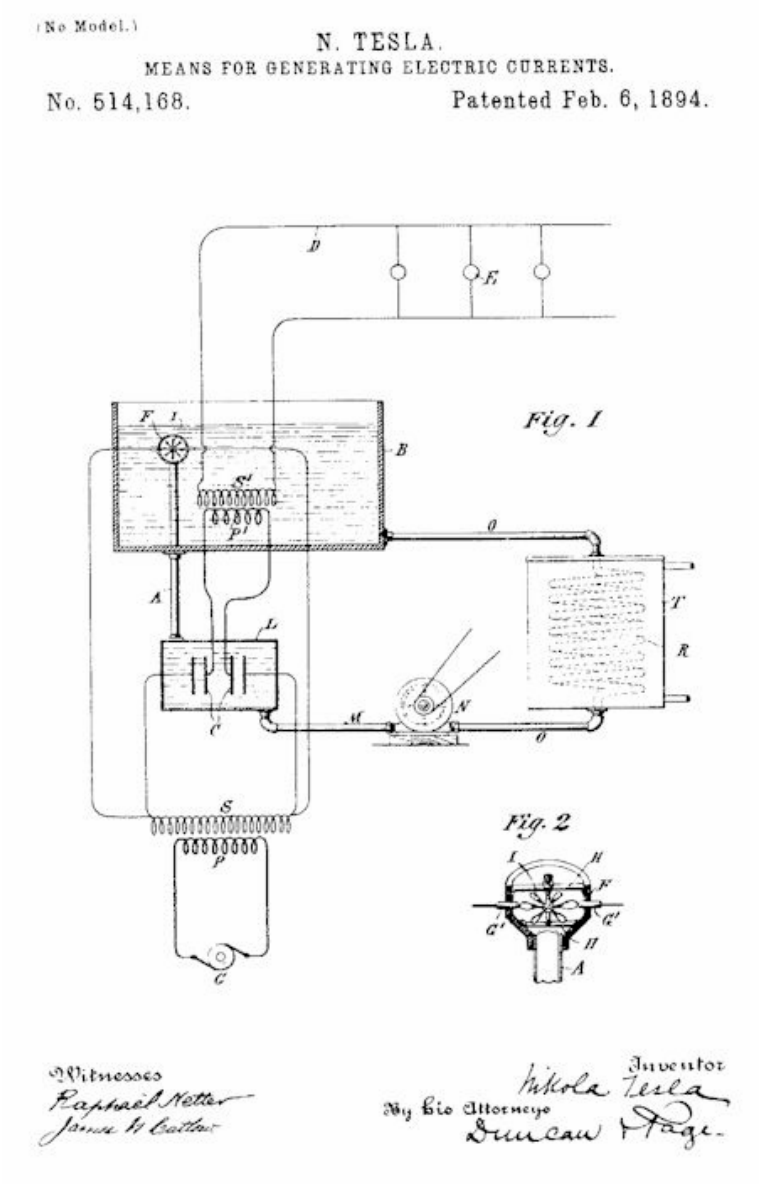
(No Model.)

N. TESLA.

MEANS FOR GENERATING ELECTRIC CURRENTS.

No. 514,168. Patented Feb. 6, 1894.

Fig. 1

Fig. 2

Witnesses
Raphael Netter
James W. Carter

Inventor
Nikola Tesla
By his Attorneys
Duncan Page

Figure 34.
Oscillatory apparatus with interrupter in oil. Exhibited in the Chicago Exposition of 1893 before Helmholtz. Described in U.S. Patent No. 514,168 of February 6. 1894. Application filed August 2, 1893.

This [Fig. 34] is the apparatus used in the Chicago Exposition of 1893, at which time I explained for the first time to Professor Helmholtz my plan for transmitting energy. After I had shown Professor Helmholtz and other scientific men there certain phenomena, he asked me,

"Now, what is all this intended for?"

I told him I was trying to develop an apparatus for transmitting energy without wire for telegraphy, telephony, and other purposes. When I explained to Professor Helmholtz the whole idea, I said,

"Excellency, do you think that my plan is realizable?"

He replied,

"Why, certainly it is, but first you must produce the apparatus."

I started then and there to produce the apparatus.

Counsel

Was that conversation at the the Chicago Exposition?

Tesla

Yes. It took place in a pavilion which was built especially for exhibiting my inventions and discoveries. I believe Professor Wedding was there and some other scientists whom I cannot remember now. I showed Professor Helmholtz my vacuum tubes and performed many other experiments.

Counsel

Will you describe this apparatus in a little more detail?

Tesla

The apparatus [Fig. 34], as you see, comprised primary and secondary coils immersed in a large tank of oil. The break was automatically effected by means of a turbine. The oil was circulated by a pump, and the current [i.e., stream flow] of oil drove the turbine which effected the make and break. Owing to the fact that the oil used was a very good insulator, rapidly flowing and of great dielectric strength, these make-and-break points were very close together, and the arcs extremely short. The effects were accordingly more intense. Here [T in Diag. 1 of Fig. 34] is a cooler through which the oil was circulated. The oil was forced through the gaps at great speed, and as it flowed out it was supplied again to the tank and the current driving the turbine.

Counsel

That device [Diag. 2 of Fig. 34] you call a turbine?

Tesla

Yes. It had vanes like those of a propeller and constituted a rotary break in the circuit.

Counsel

What was your prime source [of power]?

Tesla

The primary source was an alternator with a frequency of 133 cycles and, if I recollect rightly, the pressure [at the secondary] was about 20,000 volts. I may have had 10,000 volts. I am not sure what it was, but it must have been certainly from 10,000 to 20,000 volts—within that range.

Counsel

I notice you have two sets of transformers in there marked S and S', have you not?

Tesla

This [S'] is my oscillatory circuit. That [S] is the transformer from which the condenser was charged. Here [at S] we had 20,000 volts, or whatever it was, from the commercial transformer and here [at S'] is my secondary which generated the high frequency currents. The rotary gap is shown in detail [Diag. 2 of Fig. 34].

I had a special reason for showing this. To meet that great man Helmholtz and other scientific men, and to bring before them for the first time the results of years of previous labor, was an important moment in my life—particularly because Professor Helmholtz gave me the assurance himself that what I explained to him was realizable, provided that I could produce the apparatus. I was very much

encouraged.

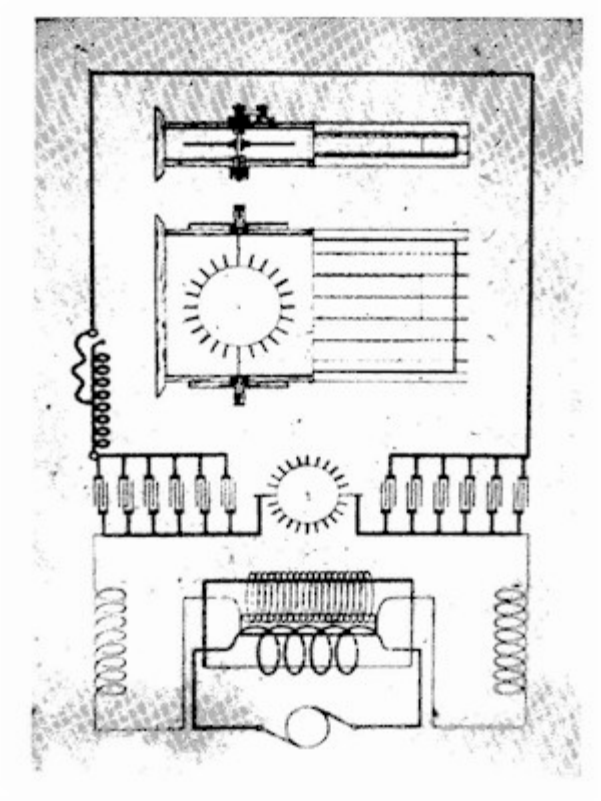

Figure 35.
Apparatus with mechanical break as installed on a large scale in the laboratory at South Fifth Avenue and subsequently at 46 East Houston Street. Described in U.S. Patent No. 645,576 of March 20, 1900. Application filed September 2, 1897.

This [Fig. 35] is the apparatus I had at 35 South Fifth Avenue and also Houston Street. It shows the whole arrangement as I had it for the demonstration of effects which I investigated.[*] This cable you see [square loop in top half of Fig. 35] is stretched around the hall. These are my condensers. There is the mechanically operated break, and that is a transformer charged from the generator. That is the way I had it for the production of current effects which were rather of damped character because, at that period, I used circuits of great activity which radiated rapidly. In the Houston Street laboratory, I could take in my hands a coil tuned to my body and collect 3/4 horsepower anywhere in the room without tangible connection, and I have often disillusioned my visitors in regard to such wonderful effects. Sometimes, I would produce flames shooting out from my head and run a motor in my hands, or light six or eight lamps. They could not understand these manifestations of energy and thought that it was a genuine transmission of power. I told them that these phenomena were wonderful, but that a system of transmission, based on the same principle, was absolutely worthless. It was a transmission by electromagnetic waves. The solution lay in a different direction. I am showing you this [diagram] simply as a typical form of apparatus of that period, and if you go over the literature of the present day you will find that the newest arrangements have nothing better to show.

Counsel

What was the make and break frequency that you got from that apparatus?

Tesla

It was 5,000, 6,000—sometimes higher still. I had two oppositely rotating discs which I will show you and with which I could have reached, probably, 15,000 or 18,000.

Counsel

What wave frequencies did you develop?

Tesla

I could operate from a few thousand up to a million per second, if I wanted.

Counsel

What did you actually use?

Tesla

In these demonstrations, which I showed these effects, these most powerful effects that were the sight of New York at that time, I operated with frequencies from 30,000 to 80,000. At that time I could pick up a wire, coil it up, and tell what the vibration would be, without any test, because I was experimenting day and night.

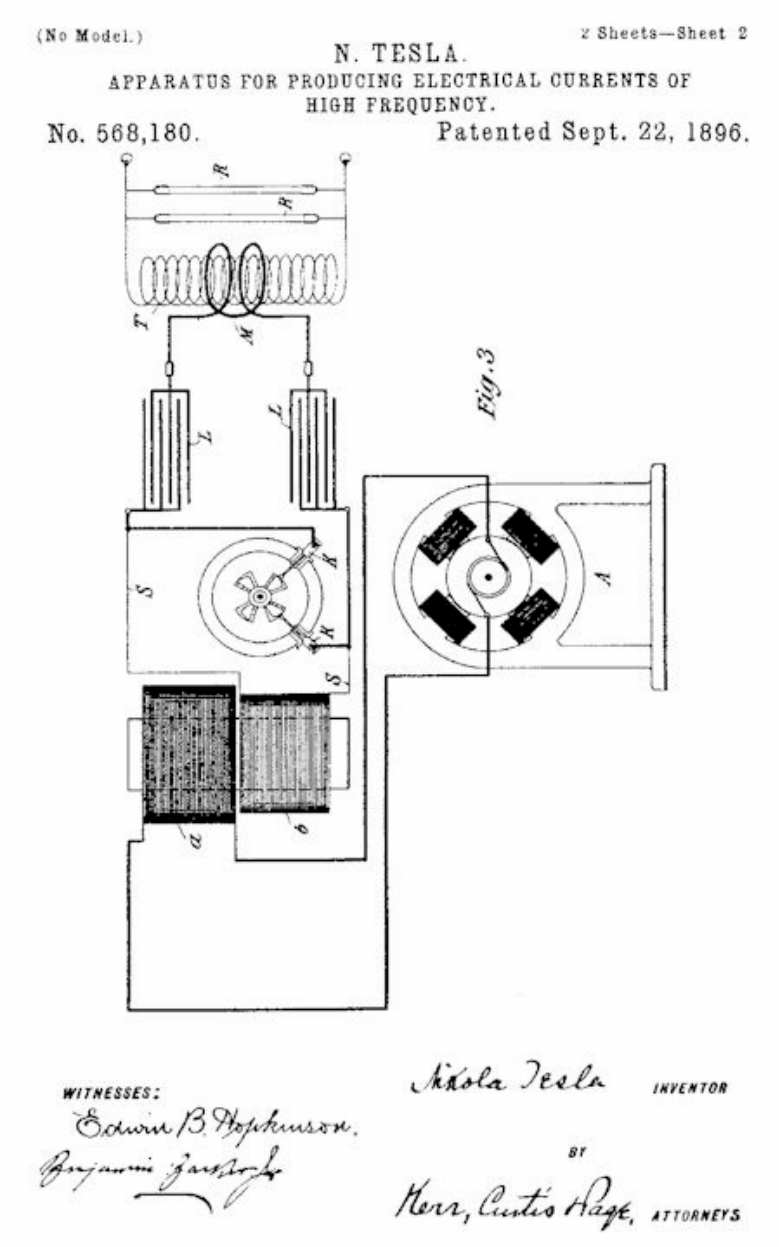

Figure 36.
Isochronous mechanical break used in the laboratory at 35 South Fifth Avenue. Described in U.S. Patent Nos. 568,179 and 568,180 of September 22, 1896. Applications filed July 6 and 9, 1896. (Diagram taken from Patent No. 568,180.)

This [Fig. 36] is a form of break which I developed in working with alternators. I recognized that it was of tremendous advantage to break at the peak of the wave. If I used just an ordinary break, it would make and break the current at low as well as high points of the wave. Of this apparatus I had two forms; one in which I drove the break right from the shaft of the dynamo and the other in which I drove it with an isochronous motor. Then, by a movement of these knobs (K K), I would make the adjustments so that the makes would occur exactly at the top of the wave. That is a form of break which is embodied in hundreds of patents and used now extensively.

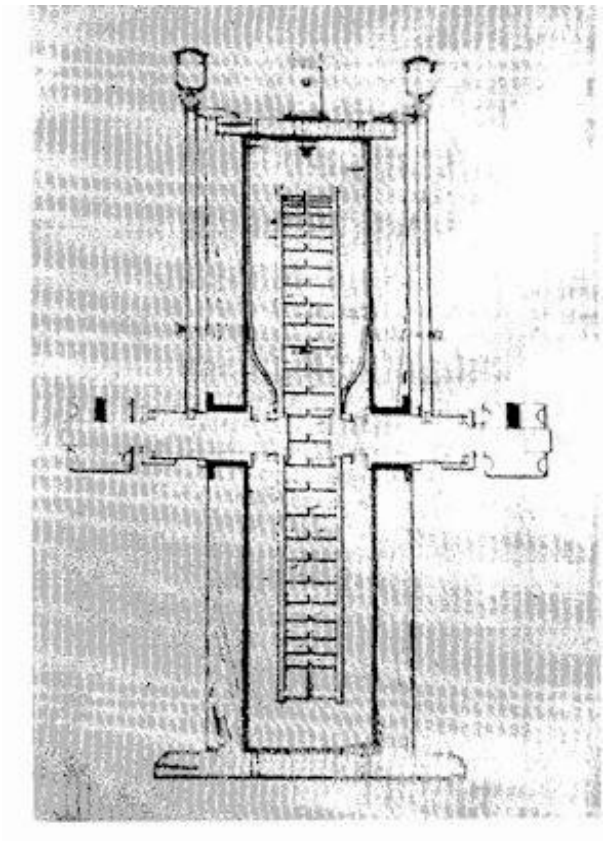

Figure 37.
Mechanical break with two oppositely rotating discs used for the purpose of increasing the number of breaks and alternating oscillations practically undamped. (Subsequently patented by others.)

Here [Fig. 37] I show an apparatus that was installed in the Houston Street laboratory prior to the other break because I wanted to get as high a number of impulses as possible. The drawing dates from the spring of 1896. It is a break with which I could reach from 15,000 to 18,000 interruptions per second. I used it very much until later I found it was not necessary. That is the innocent device which Marconi thought a great invention.

Counsel

This is also a rotary gap?

Tesla

Yes, and it consists of two discs of aluminum, with teeth of aluminum on the side. They were rotated by two motors in opposite directions, and as they rotated they alternately closed and opened the circuit. In some instances I used an uneven number of teeth on one and and even number on the other so that I could produce as many breaks as I desired. I will show you later an apparatus more perfect than this one, and of a different kind, in which I have 24 stationary contacts, and 25 rotating elements that established the contact and broke it, so that by one revolution I obtained 24 times 25, or 600 interruptions [per revolution].

Counsel

Whenever you say "the break", you mean "a spark gap"?

Tesla Yes; otherwise I use the term "circuit controller," preferably.

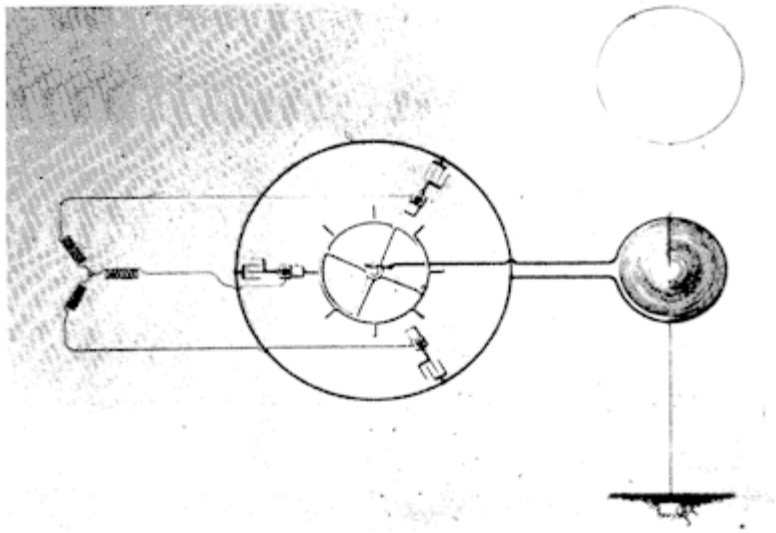

Figure 38.
Use of multi-phase generator with mechanical break. Experiments in the laboratory at 35 South Fifth Avenue and subsiquently.

This [Fig. 38] illustrates another development in a different direction. In order to increase the number of breaks, I employed currents of different phase. I had in my laboratory, permanently, a two-phase dynamo and could get phases between; that is, from two phases, 90 apart, I could obtain four phases, 45 apart. Here is an arrangement shown as I had it, working with three phases [60 apart, and could obtain six phases, 30 apart], and later on I had one with four phases [45 apart, and could obtain eight phases 22 1/2 apart]. You see, as I multiplied the number of the phases, I increased the number of the fundamental discharges.

Counsel

What is the date of this apparatus?

Tesla

This I employed already in the 35 South Fifth Avenue laboratory, because I remember that I gave entertainments to several scientific societies and it was then present there. I know on one occasion there was the Society of Architects, and another, the Electrotherapeutic Society, and then I had distinguished men like Mark Twain and Joseph Jefferson—I gave them a demonstration which was published in Martin's article in the Century Magazine of April 1895, and I know that on these occasions I used a two-phase arrangement. Later on I made it four phase. That apparatus existed, therefore, prior to the destruction of my laboratory in 1895.

Counsel

Do you recall any publication in which this diagram was illustrated?

Tesla

I made no publication, and I vividly remember that when I installed my apparatus on Long Island I had an arrangement with four transformers and four phases 45 apart. After I had been using this apparatus there, several years afterwards, I ran across a patent, I believe held by the General Electric Company, describing precisely the same arrangement.[*] It was a similar experience as with that patent of Fessenden on the compressed air condenser. Any time I want to use these improvements all I need to do is to produce my records and that will settle the patents.

Counsel

When was that drawing [Fig. 38]?

Tesla

This is from an old patent drawing which was made by Mr. Netter.

Counsel

But that did not go to patent?

Tesla

No. I have hundreds of inventions that were to be patented but side-stepped. The expense was too great and I could not do it. This form of apparatus with two and four phases was used prior to the destruction of my laboratory in 1895, and it was installed on a large scale with four phases in my plant on Long Island with which I was to telephone around the world, but that is a long story.

Counsel

In that use you made of it at your laboratory, was that connected up as shown there [Fig. 38], to an antenna?

Tesla

I used the apparatus, yes, in connection with the antenna too, but this is from a patent drawing in which an antenna is shown; I mean, I used it in every connection. [Fig. 38] illustrates an antenna with my transmitting circuit, but the apparatus was used in all my work, in all my investigations.

Counsel

And when this was connected in and used in an antenna, did you use it as in other instances—go off and listen to the notes which you received?

Tesla

Oh, certainly. But I remember that, besides this, I had different kinds of apparatus. Then I had a sensibly damped wave because at that time I still was laboring under the same difficulties as some do this day—I had not learned how to produce a circuit which would give me, with very few fundamental impulses, a perfectly continuous wave. That came with the perfection of the devices. When I came to my experiments in Colorado, I could take my apparatus like that and get a continuous or undamped wave, almost without exception, between individual discharges.

Counsel

Speaking of your not having perfectly undamped waves at that time, you were referring to that character of circuit?

Tesla

Yes, but with another kind of circuit I could, of course. The advantage of this apparatus was the delivering of energy at short intervals whereby one could increase activity, and with this scheme I was able to perform all of those wonderful experiments which have been reprinted from time to time in the technical papers. I would take energy out of a circuit at rates of hundreds or thousands of horsepower. In Colorado, I reached 18 million horsepower activities, but that was always by this device: Energy stored in the condenser and discharged in an inconceivably small interval of time. You could not produce that activity with an undamped wave. The damped wave is of advantage because it gives you, with a generator of 1 kilowatt, an activity of 2,000, 3,000, 4,000, or 5,000 kilowatts; whereas, if you have a continuous or undamped wave, 1 kilowatt gives you only wave energy at the rate of 1 kilowatt and nothing more. That is the reason why the system with a quenched gap has become popular.

I have refined this so that I have been able to take energy out of engines by drawing on their momentum. For instance, if the engine is

of 200 horsepower, I take the energy out for a minute interval of time, at a rate of 5,000 or 6,000 horsepower, then I store [it] in a condenser and discharge the same at the rate of several millions of horsepower. That is how these wonderful effects are produced. The condenser is the most wonderful instrument, as I have stated in my writings, because it enables us to attain greater activities than are practical with explosives. There is no limit to the energy which you can develop with a condenser. There is a limit to the energy which you can develop with an explosive.

A common experiment, for instance, in my laboratory on Houston Street, was to pass through a coil energy at a rate of several thousand horsepower, put a piece of thick tinfoil on a stick, and approach it to that coil. The tinfoil would melt, and would not only melt, but while it was still in that form, it would be evaporated and the whole process took place in so small an interval of time that it was like a cannon shot. Instantly I put it there, there was an explosion. That was a striking experiment. It simply showed the power of the condenser, and at that time I was so reckless that in order to demonstrate to my visitors that my theories were correct, I would stick my head into that coil and I was not hurt; but, I would not do it now.

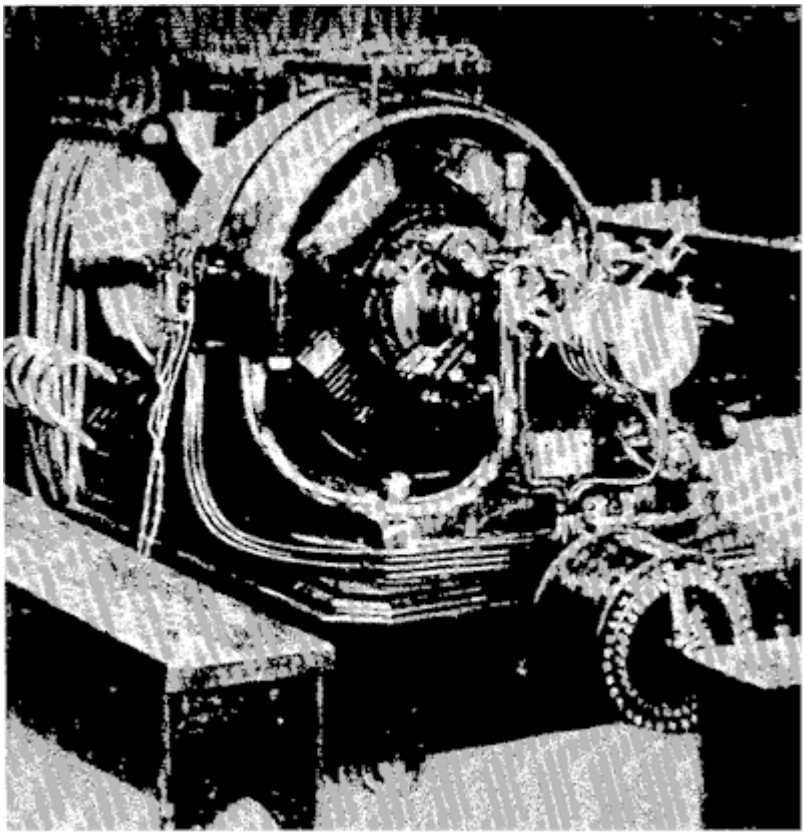

Figure 39
Apparatus furnishing direct currents of high tension, producing undamped electrical oscillations of high frequency. (This is also shown in [Fig. 27]). Apparatus built in 1895.

[Fig. 39] shows a four-phase machine which was furnished me by the Westinghouse Electric Company at the close of 1895. My laboratory burned out in May, and I urged my friend, Mr. Albert Schmidt, who was the Superintendent, to give me this alternator as soon as possible. He worked day and night until he got it out, and he certainly did notable work because while the machine was rated at 30 horsepower, I have run it at 150 horsepower.

By the way, and this is a painful reflection, it was Schmidt and I who developed this type of frame and this general arrangement which is universally adopted now—a base, with the magnets cast below, split at the center line, and a corresponding upper part. That is now used everywhere. I remember years ago, some of my friends, Messrs. Crocker and Wheeler, started with those long magnets and I told them, "The sooner you throw these away and adopt this construction, the better it will be for you." They have got it now; it is all right.

Counsel

How is this machine [Fig. 39] shown in connection with that?

Tesla

This dynamo [Fig. 39], you see, is a two-phase machine; that is, I develop from it currents of two-phase. Now, there are four transformers. You see them down here [lower left of Fig. 39] that furnish the primary energy. From these two phases I develop four phases. [However,] this involves something else which I have referred to before; namely, an arrangement which enables me to produce from these alternating currents direct currents and undamped—absolutely undamped—isochronous oscillations of any period I like.

This is accomplished in the following manner: The secondaries of the four transformers could each develop 44,000 volts. They were specially built for me by the Westinghouse Company. They could, however, be connected in such a way that each would give 11,000 volts, and then I would take these 11,000 volts and these four phases and commutate them by a commutator consisting of aluminum plates, or aluminum segments, which were rotated in synchronism with the alternator. Then I obtained a continuous pressure; that is, direct current of a tension of 44,000 volts, and with these 44,000 volts I charged my condensers. Then by discharging the condensers, either through a stationary gap or through a gap with a mechanical interrupter, I obtained any frequency I desired, and perfectly undamped waves. This arrangement was installed in 1901 in my wireless plant at Long Island, with which I was to telephone around the world.

Counsel

Who built that machine?

Tesla

The Westinghouse Company, [under direction of] Mr. Albert Schmidt, Superintendent. It was especially built for me and furnished to my laboratory on Houston Street.

While I was with the Westinghouse Company, I did two things in addition to bringing my motors to them. I had discovered that Bessemer steel was a much better material for transformers and motors than the soft iron which was previously used. When I came to Pittsburgh, my motors gave results which their motors could not at first produce, and I told them that I had used Bessemer steel. I discovered, in following up the analysis of the steels which were used, that the Bessemer was not steel but really soft iron. The Westinghouse people then adopted my suggestion. At first, Mr. Shallenberger and other electricians there objected very much, but I persuaded them and when the transformers were built we found that we could get 2 1/2 times the output we got before.

The Westinghouse people kept it a secret for a long time and no one understood how they could make such fine transformers, but all they did was to use the Bessemer steel, on my suggestion, instead of the soft iron the General Electric and other people used. Mr. Westinghouse especially requested me to join efforts with Mr. Schmidt and improve the design of his machines, and we did so. We evolved this design, introduced the ready-made coils, which are pressed on the armature, and other improvements. I took a couple of patents out with Mr. Schmidt, and Mr. Westinghouse was very nice about it. I think he compensated me with $10,000, or something like that, for my suggestions.

Counsel

You have spoken of the use of that machine at Houston Street. In what way was it used?

Tesla

I used this machine, as I said, either to produce alter- nating currents and then interrupt them with a mechanical break at the high peaks of the wave; or, I used alternating currents and interrupted them with an independent rotating break having a great number of teeth. Or, I generated continuous currents by commutating the high tension alternating currents of the transformer. At that time I had two transformers from which I obtained a constant pressure, charged the condenser, and produced undamped waves of any frequency I wanted. As to the machine here [Fig. 39], that is the way it was arranged. It was for the generation of continuous electromotive force and production of undamped waves—from 1895 and on.

Counsel

What sort of apparatus was it connected up to for the purpose of absorbing these waves?

Tesla

It was the same as shown here [Fig. 38]. It was connected to the condensers, and these condensers were discharged through a primary which excited the secondary; the antenna was included in the secondary. At other times we discharged the condensers directly so that I could use the antenna without the secondary.

Counsel

In the same way did you note the operation of these waves?

Tesla

We did, of course, only in most cases the instrument of reception was different. When I operated with these continuous, or undamped, waves, generated in this way, I usually went to high frequencies. I did operate [at] a very few thousand, but that gave me a smaller output. Such a machine you have to operate at high frequencies to get power.

Counsel

What do you mean by high frequencies?

Tesla

I mean frequencies of 30,000, 40,000, 50,000, or something like that.

Counsel

And by means of that machine, you put undamped waves of frequency about 50,000 into that antenna at Houston Street in 1895?

Tesla

No, not in 1895. Late in 1895 the machine was furnished and I began to operate in early 1896. That is when I began to operate.

Counsel

Then you did this, that I speak of, in 1896?

Tesla

Yes, from 1896 to 1899, right along.

Counsel

When you used frequencies like that in your antenna, was your antenna tuned or untuned?

Tesla

I could not use it untuned. That would be absurd.

Counsel

What form of device did you use, and where did you use it, for noting the generation of these oscillations or waves in the antenna?

Tesla

I suppose I had hundreds of devices, but the first device that I used, and it was very successful, was an improvement on the bolometer. I met Professor Langley in 1892 at the Royal Institution. He said to me, after I had delivered a lecture, that they were all

proud of me. I spoke to him of the bolometer, and remarked that it was a beautiful instrument. I then said,

"Professor Langley, I have a suggestion for making an improvement in the bolometer, if you will embody it in the principle."

I explained to him how the bolometer could be improved. Professor Langley was very much interested and wrote in his notebook what I suggested. I used what I have termed a small-mass resistance, but of much smaller mass than in the bolometer of Langley, and of much smaller mass than that of any of the devices which have been recorded in patents issued since. Those are clumsy things. I used masses that were not a millionth of the smallest mass described in any of the patents, or in the publications. With such an instrument, I operated, for instance, in West Point—I received signals from my laboratory on Houston Street in West Point.

Counsel

This was then the machine that you used when working with West Point?

Tesla

I operated once or twice with it at that distance, but usually as I was investigating in the city. My work at that time was to prepare for the development of a commercial plant, and with me the question was not to transmit signals, but to see what intensity I could get to put me in position to calculate out my apparatus, the dimensions and the forms, before I began the undertaking. It was nothing but preparatory work for the construction of a commercial plant, and I demonstrated its practicability through my experiments, a plant which was to accomplish much more than all others.

Counsel

What was the horsepower activity in the oscillating circuits when you used this machine?

Tesla

Usually something like 50 horsepower, and I would get, I should say, approximately 30 horsepower in the antenna; that is, I would get 30 horsepower in the oscillating circuit.

Counsel

I understood a little while ago when you made the statement of using several thousand horsepower put into a condenser, you could take out of the condenser a million horsepower. I wondered if you got the same condition with this machine.

Tesla

Yes; I charged the condenser with 40,000 volts. When it was charged full, I discharged it suddenly, through a short circuit which gave me a very rapid rate of oscillation. Let us suppose that I had stored in the condenser 10 watts. Then, for such a wave there is a flux of energy of $(4 \times 104)^2$, and this is multiplied by the frequency of 100,000. You see, it may go into thousands or millions of horsepower.

Counsel

What I wanted to get at was, did that depend upon the suddenness of the discharge?

Tesla

Yes. It is merely the electrical analogue of a pile driver or a hammer. You accumulate energy through a long distance and then you deliver it with a tremendous suddenness. The distance through which the mass moves is small—the pressure immense.

Counsel

Did you find that that was the best condition for transmitting energy without the use of wire?

Tesla

No, I did not use that method when I was transmitting energy. I used it only in the production of those freaks for which I have been called a magician. If I had used merely undamped waves, I would have been an ordinary electrician like everybody else.

Counsel

You have referred to some delicate receiving instruments. Did you have any trouble with those burning out on account of static?

Tesla

My dear sir, I burned out so many instruments before I discovered what was the matter with them! They burned out instantly until I learned how to make them so that they could not burn out. Yes, that was a great trouble in the beginning.

Counsel

Did you succeed in getting them so they would not burn out?

Tesla

Yes. If lightning struck close by, it would not burn out my instrument that has a millionth of the smallest mass used in the instruments of others.

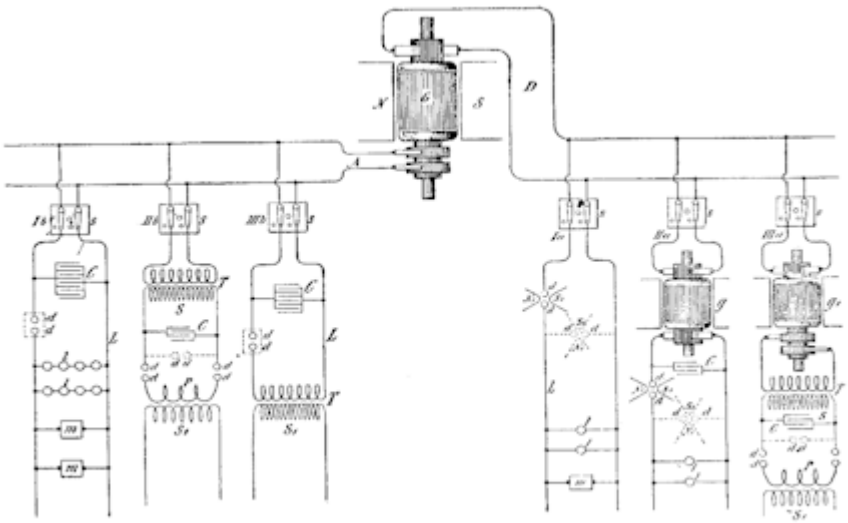

FIG. 165.

Figure 40.
Apparatus and method of conversion by condenser discharges applicable to both alternating and direct currents. Described in lectures before the Franklin Institute and the National Electric Light Association early in 1893. Illustrated in T.C. Martin book, Fig. 165, pp. 302-317.

This [Fig. 40] is a systematic representation of the various ways which I gave in my lecture before the Franklin Institute and the National Electric Light Association, embodying the general arrangements for the obtainment of continuous waves, undamped or damped waves, from direct and alternating current supply. On the one side [right] you have direct, on the other side alternating current supply. Some electricians have had difficulties in operating some of this apparatus. I had none. I can take an ordinary circuit of 50 volts and produce from it absolutely undamped oscillations and never have the slightest difficulty about it.

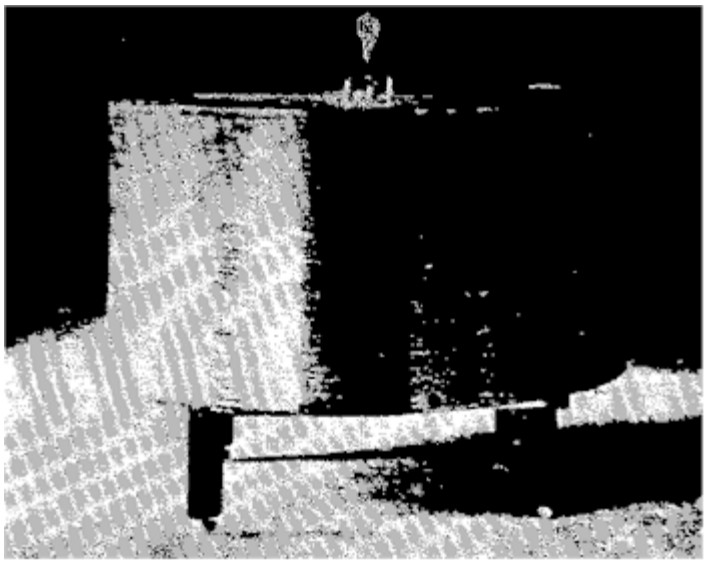

Figure 41.
Illustrating one of the early experiments with a tuned transformer in the laboratory at South Fifth Avenue.

Now I come to a few pieces of apparatus which I used in the Houston Street laboratory and the South Fifth Avenue laboratory. I have here [Fig. 41] what you might call a tuning coil. I employed usually another secondary and had my condensers on the table. You see one of the coils in action. This is a tuned circuit which responds to electromagnetic waves which are sent through the room.

Counsel

This is being used as a receiver of waves?

Tesla

Yes.

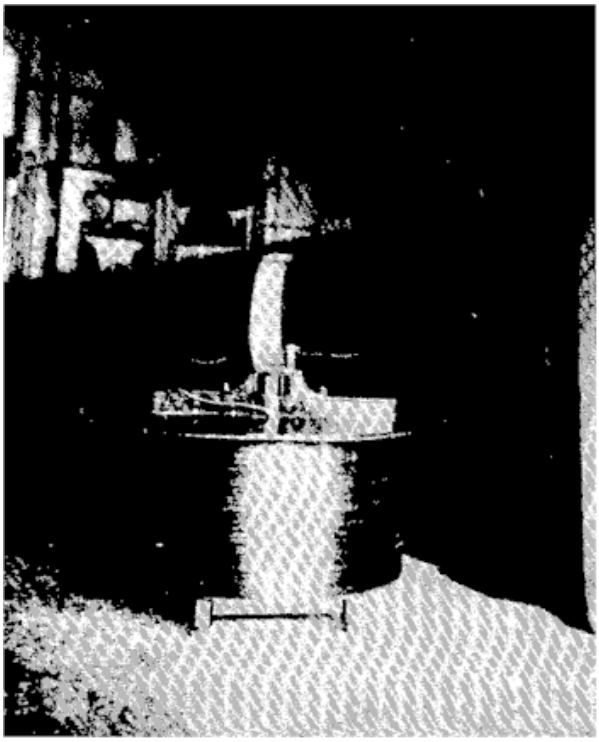

Figure 42.

Another illustration of one of the early experiments with a tuned transformer in the laboratory at South Fifth Avenue. (Article by T.C. Martin ["Tesla's Oscillator and Other Inventions"], Century Magazine, April 1895, Fig. 9, p. 926.)

This [instrument shown in Fig. 42] was used in the laboratory on South Fifth Avenue. Here [large circular disc lying on top of coil] is the tuning table with the condensers, a thick primary, and another secondary wire. Sometimes I would operate with two vibrations and I would tune the first circuit to one and the second to the other. Here [referring to cabinets in back of room] you see some of my historical apparatus. Professor Fairfield Osborn[*] came once to my laboratory and said to me, "Why on earth do you keep it in this laboratory?" I had all of this apparatus, 400 pieces, absolutely priceless, and he offered to take it over to the Museum. But I did not heed his advice, and it is gone.

Counsel

Where were the waves sent from?

Tesla

The whole room was energized by electromagnetic waves and the receiver responded at any place in the hall. The hall was bigger than this room [shown in Fig. 42], twice as long, and anywhere the intensity of action was the same. These discs [vertical, on top of tuning table] were, I think, about 14 or 15 inches in diameter, and you could see the streamers [shown as white between the discs] anywhere in the room. In a hall twice as long as this, wherever I placed the instrument, it would respond to the electromagnetic waves.

Counsel

In this particular instance you are speaking of, the waves were generated right there at 35 South Fifth Avenue?

Tesla

Yes.

Counsel

Was that the apparatus in which you had the primaries running entirely around the room?

Tesla

Yes. This was shown to many people and societies.

This [Fig. 43] shows the first single step I made toward the evolution of an apparatus which, given primary oscillations, will transform them into oscillations capable of penetrating the medium. That experiment, which was marvelous at the time it was performed, was shown for the first time in 1894. I remember the incident perfectly. I called Mr. Edward Adams, the banker, to come and see it, and he was the first man to observe it and to hear my explanation of what it meant.

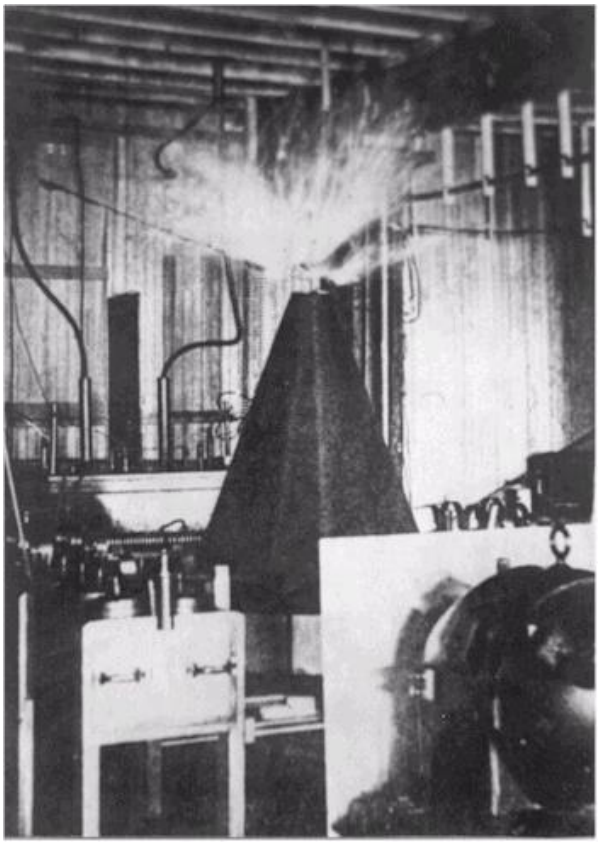

Figure 43.
Apparatus in action illustrating the first step in the evolution of the magnifying transmitter in the laboratory at 35 South Fifth Avenue. (Article by T.C. Martin ["Tesla's Oscillator and Other Inventions"], Century Magazine, April 1895, Fig. 15, p. 932.)

This coil, which I have subsequently shown in my patents Nos. 645,576 and 649,621, in the form of a spiral, was, as you see, [earlier] in the form of a cone. The idea was to put the coil, with reference to the primary, in an inductive connection which was not close—we call it now a loose coupling—but free to permit a great resonant rise. That was the first single step, as I say, toward the evolution of an invention which I have called my "magnifying transmitter." That means, a circuit connected to ground and to the antenna, of a tremendous electromagnetic momentum and small damping factor, with all the conditions so determined that an immense accumulation of electrical energy can take place.

It was along this line that I finally arrived at the results described in my article in the Century Magazine of June 1900. [Fig. 43] shows an alternator; not the alternator that was furnished for my laboratory on Houston Street—that was another one, [but] at 35 South Fifth Avenue [and] operated on the same principle. Here [lower left] are the condensers, primary, and all the rest. The discharge there was 5 or 6 feet, comparatively small to what I subsequently obtained. I have produced discharges of 100 feet, and could produce some of 1,000 feet if necessary, with the greatest facility.

Counsel

Mr. Tesla, at that point, what did you mean by electro-magnetic momentum?

Tesla

I mean that you have to have in the circuit, inertia. You have to have a large self-inductance in order that you may accomplish two things: First, a comparatively low frequency, which will reduce the radiation of the electromagnetic waves to a comparatively small value, and second, a great resonant effect. That is not possible in an antenna, for instance, of large capacity and small self-inductance. A large capacity and small self-inductance is the poorest kind of circuit which can be constructed; it gives a very small resonant effect. That was the reason why in my experiments in Colorado the energies were 1,000 times greater than in the present antennae.

Counsel

You say the energy was 1,000 times greater. Do you mean that the voltage was increased, or the current, or both?

Tesla

Yes [both]. To be more explicit, I take a very large self-inductance and a comparatively small capacity, which I have constructed in a certain way so that the electricity cannot leak out. I thus obtain a low frequency; but, as you know, the electromagnetic radiation is proportionate to the square root of the capacity divided by the self-induction. I do not permit the energy to go out; I accumulate in that circuit a tremendous energy. When the high potential is attained, if I want to give off electromagnetic waves, I do so, but I prefer to reduce those waves in quantity and pass a current into the earth, because electromagnetic wave energy is not recoverable while that [earth] current is entirely recoverable, being the energy stored in an elastic system.

Counsel

What elastic system do you refer to?

Tesla

I mean this: If you pass a current into a circuit with large self-induction, and no radiation takes place, and you have a low resistance, there is no possibility of this energy getting out into space; therefore, the impressed impulses accumulate.

Counsel

Let's see if I understand this correctly. If you have radiation or electromagnetic waves going from your system, the energy is wasted?

Tesla

Absolutely wasted. From my circuit you can get either electromagnetic waves, 90 percent of electromagnetic waves if you like, and 10 percent in the current energy that passes through the earth. Or, you can reverse the process and get 10 percent of the energy in electromagnetic waves and 90 percent in energy of the current that passes through the earth.

It is just like this: I have invented a knife. The knife can cut with the sharp edge. I tell the man who applies my invention, you must cut with the sharp edge. I know perfectly well you can cut butter with the blunt edge, but my knife is not intended for this. You must not make the antenna give off 90 percent in electromagnetic and 10 percent in current waves, because the electromagnetic waves are lost by the time you are a few arcs around the planet, while the current travels to the uttermost distance of the globe and can be recovered.

This view, by the way, is now confirmed. Note, for instance, the mathematical treatise of Sommerfeld,[*] who shows that my theory is correct, that I was right in my explanations of the phenomena, and that the profession was completely misled. This is the reason why these followers of mine in high frequency currents have made a mistake. They wanted to make high frequency alternators of 200,000 cycles with the idea that they would produce electromagnetic waves, 90 percent in electromagnetic waves and the rest in current energy. I only used low alternations, and I produced 90 percent in current energy and only 10 percent in electromagnetic waves, which are wasted, and that is why I got my results. . . .

You see, the apparatus which I have devised was an apparatus enabling one to produce tremendous differences of potential and currents in an antenna circuit. These requirements must be fulfilled, whether you transmit by currents of conduction, or whether you transmit by electromagnetic waves. You want high potential currents, you want a great amount of vibratory energy; but you can graduate this vibratory energy. By proper design and choice of wave lengths, you can arrange it so that you get, for instance, 5 percent in these electromagnetic waves and 95 percent in the current that goes through the earth. That is what I am doing. Or you can get, as these radio men, 95 percent in the energy of electromagnetic waves and only 5 percent in the energy of the current. . . . The apparatus is suitable for one or the other method. I am not producing radiation with my system; I am suppressing electromagnetic waves. . . . In my system, you should free yourself of the idea that there is radiation, that the energy is radiated. It is not radiated; it is conserved. . . .

UNITED STATES PATENT OFFICE.

NIKOLA TESLA, OF NEW YORK, N. Y.

METHOD OF UTILIZING RADIANT ENERGY.

SPECIFICATION forming part of Letters Patent No. 685,958, dated November 5, 1901.

Application filed March 21, 1901. Serial No. 52,154. (No model.)

To all whom it may concern:

Be it known that I, NIKOLA TESLA, a citizen of the United States, residing at the borough of Manhattan, in the city, county, and State of New York, have invented certain new and useful Improvements in Methods of Utilizing Radiant Energy, of which the following is a specification, reference being had to the drawings accompanying and forming a part of the same.

It is well known that certain radiations—such as those of ultra-violet light, cathodic, Roentgen rays, or the like—possess the property of charging and discharging conductors of electricity, the discharge being particularly noticeable when the conductor upon which the rays impinge is negatively electrified. These radiations are generally considered to be ether vibrations of extremely small wave lengths, and in explanation of the phenomena noted it has been assumed by some authorities that they ionize or render conducting the atmosphere through which they are propagated. My own experiments and observations, however, lead me to conclusions more in accord with the theory heretofore advanced by me that sources of such radiant energy throw off with great velocity minute particles of matter which are strongly electrified, and therefore capable of charging an electrical conductor, or even if not so may at any rate discharge an electrified conductor either by carrying off bodily its charge or otherwise.

My present application is based upon a discovery which I have made that when rays or radiations of the above kind are permitted to fall upon an insulated conducting body connected to one of the terminals of a condenser, while the other terminal of the same is made by independent means to receive or to carry away electricity, a current flows into the condenser so long as the insulated body is exposed to the rays, and under the conditions hereinafter specified an indefinite accumulation of electrical energy in the condenser takes place. This energy after a suitable time interval, during which the rays are allowed to act, may manifest itself in a powerful discharge, which may be utilized for the operation or control of mechanical or electrical devices or rendered useful in many other ways.

In applying my discovery I provide a condenser, preferably of considerable electrostatic capacity, and connect one of its terminals to an insulated metal plate or other conducting body exposed to the rays or streams of radiant matter. It is very important, particularly in view of the fact that electrical energy is generally supplied at a very slow rate to the condenser, to construct the same with the greatest care. I use by preference the best quality of mica as dielectric, taking every possible precaution in insulating the armatures, so that the instrument may withstand great electrical pressures without leaking and may leave no perceptible electrification when discharging instantaneously. In practice I have found that the best results are obtained with condensers treated in the manner described in a patent granted to me February 23, 1897, No. 577,671. Obviously the above precautions should be the more rigorously observed the slower the rate of charging and the smaller the time interval during which the energy is allowed to accumulate in the condenser. The insulated plate or conducting body should present as large a surface as practicable to the rays or streams of matter, I having ascertained that the amount of energy conveyed to it per unit of time is under otherwise identical conditions proportionate to the area exposed, or nearly so. Furthermore, the surface should be clean and preferably highly polished or amalgamated. The second terminal or armature of the condenser may be connected to one of the poles of a battery or other source of electricity or to any conducting body or object whatever of such properties or so conditioned that by its means electricity of the required sign will be supplied to the terminal. A simple way of supplying positive or negative electricity to the terminal is to connect the same either to an insulated conductor, supported at some height in the atmosphere, or to a grounded conductor, the former, as is well known, furnishing positive and the latter negative electricity. As the rays or supposed streams of matter generally convey a positive charge to the first condenser-terminal, which is connect-

ed to the plate or conductor above mentioned, I usually connect the second terminal of the condenser to the ground, this being the most convenient way of obtaining negative electricity, dispensing with the necessity of providing an artificial source. In order to utilize for any useful purpose the energy accumulated in the condenser, I furthermore connect to the terminals of the same a circuit including an instrument or apparatus which it is desired to operate and another instrument or device for alternately closing and opening the circuit. This latter may be any form of circuit-controller, with fixed or movable parts or electrodes, which may be actuated either by the stored energy or by independent means.

The rays or radiations which are to be utilized for the operation of the apparatus above described in general terms may be derived from a natural source, as the sun, or may be artificially produced by such means, for example, as an arc-lamp, a Roentgen tube, and the like, and they may be employed for a great variety of useful purposes.

My discovery will be more fully understood from the following detailed description and annexed drawings, to which reference is now made, and in which—

Figure 1 is a diagram showing typical forms of the devices or elements as arranged and connected in applying the method for the operation of a mechanical contrivance or instrument solely by the energy stored; and Fig. 2 is a diagrammatical representation of a modified arrangement suitable for special purposes, with a circuit-controller actuated by independent means.

Referring to Fig. 1, C is the condenser, P the insulated plate or conducting body, which is exposed to the rays, and P′ another plate or conductor, all being joined in series, as shown. The terminals T T′ of the condenser are also connected to a circuit including a receiver R, which is to be operated, and a circuit-controlling device *d*, which in this case is composed of two very thin conducting-plates *t t′*, placed in close proximity and very mobile, either by reason of extreme flexibility or owing to the charater of their support. To improve their action, they should be inclosed in a receptacle from which the air may be exhausted. The receiver R is shown as consisting of an electromagnet M, a movable armature *a*, a retractile spring *b*, and a ratchet-wheel *w*, provided with a spring-pawl *r*, which is pivoted to armature *a*, as illustrated. The apparatus being arranged as shown, it will be found that when the radiations of the sun or of any other source capable of producing the effects before described fall upon the plate P an accumulation of electrical energy in the condenser C will result. This phenomenon, I believe, is best explained as follows: The sun as well as other sources of radiant energy throw off minute particles of matter positively electrified, which, impinging upon the plate P, communicate an electrical charge to the same. The opposite terminal of the condenser being connected to the ground, which may be considered as a vast reservoir of negative electricity, a feeble current flows continuously into the condenser, and inasmuch as these supposed particles are of an inconceivably small radius or curvature, and consequently charged to a relatively very high potential, this charging of the condenser may continue, as I have found in practice, almost indefinitely, even to the point of rupturing the dielectric. Obviously whatever circuit-controller be employed it should operate to close the circuit in which it is included when the potential in the condenser has reached the desired magnitude. Thus in Fig. 2 when the electrical pressure at the terminals T T′ rises to a certain predetermined value the plates *t t′*, attracting each other, close the circuit connected to the terminals. This permits a flow of current which energizes the magnet M, causing it to draw down the armature *a* and impart a partial rotation to the ratchet-wheel *w*. As the current ceases the armature is retracted by the spring *b* without, however, moving the wheel *w*. With the stoppage of the current the plates *t t′* cease to be attracted and separate, thus restoring the circuit to its original condition.

Many useful applications of this method of utilizing the radiations emanating from the sun or other source and many ways of carrying out the same will at once suggest themselves from the above description. By way of illustration a modified arrangement is shown in Fig. 2, in which the source S of radiant energy is a special form of Roentgen tube devised by me having but one terminal *k*, generally of aluminium, in the form of half a sphere with a plain polished surface on the front side, from which the streams are thrown off. It may be excited by attaching it to one of the terminals of any generator of sufficiently-high electromotive force; but whatever apparatus be used it is important that the tube be exhausted to a high degree, as otherwise it might prove entirely ineffective. The working or discharge circuit connected to the terminals T T′ of the condenser includes in this case the primary *p* of a transformer and a circuit-controller comprising a fixed terminal or brush *t* and a movable terminal *t′* in the shape of a wheel with conducting and insulating segments which may be rotated at an arbitrary speed by any suitable means. In inductive relation to the primary wire or coil *p* is a secondary *s*, usually of a much greater number of turns, to the ends of which is connected a receiver R. The terminals of the condenser being connected as indicated, one to an insulated plate P and the other to a grounded plate P′, when the tube S is excited rays or streams of matter are emitted from the same, which convey a positive charge to the plate P and condenser-terminal T, while terminal T′ is continuously receiving negative electricity from the plate

P'. This, as before explained, results in an accumulation of electrical energy in the condenser, which goes on as long as the circuit including the primary p is interrupted. Whenever the circuit is closed, owing to the rotation of the terminal t', the stored energy is discharged through the primary p, this giving rise in the secondary s to induced currents which operate the receiver R.

It is clear from what has been stated above that if the terminal T' is connected to a plate supplying positive instead of negative electricity the rays should convey negative electricity to plate P. The source S may be any form of Roentgen or Lenard tube; but it is obvious from the theory of action that in order to be very effective the electrical impulses exciting it should be wholly or at least preponderatingly of one sign. If ordinary symmetrical alternating currents are employed, provision should be made for allowing the rays to fall upon the plate P only during those periods when they are productive of the desired result. Evidently if the radiations of the source be stopped or intercepted or their intensity varied in any manner, as by periodically interrupting or rythmically varying the current exciting the source, there will be corresponding changes in the action upon the receiver R, and thus signals may be transmitted and many other useful effects produced. Furthermore, it will be understood that any form of circuit-closer which will respond to or be set in operation when a predetermined amount of energy is stored in the condenser may be used in lieu of the device specifically described with reference to Fig. 1, and also that the special details of construction and arrangement of the several parts of the apparatus may be very greatly varied without departure from the invention.

Having described my invention, what I claim is—

1. The method of utilizing radiant energy, which consists in charging one of the armatures of a condenser by rays or radiations, and the other armature by independent means, and discharging the condenser through a suitable receiver, as set forth.

2. The method of utilizing radiant energy, which consists in simultaneously charging a condenser by means of rays or radiations and an independent source of electrical energy, and discharging the condenser through a suitable receiver, as set forth.

3. The method of utilizing radiant energy, which consists in charging one of the armatures of a condenser by rays or radiations, and the other by independent means, controlling the action or effect of said rays or radiations and discharging the condenser through a suitable receiver, as set forth.

4. The method of utilizing radiant energy, which consists in charging one of the armatures of a condenser by rays or radiations and the other by independent means, varying the intensity of the said rays or radiations and periodically discharging the condenser through a suitable receiver, as set forth.

5. The method of utilizing radiant energy, which consists in directing upon an elevated conductor, connected to one of the armatures of a condenser, rays or radiations capable of positively electrifying the same, carrying off electricity from the other armature by connecting the same with the ground, and discharging the accumulated energy through a suitable receiver, as set forth.

6. The method of utilizing radiant energy, which consists in charging one of the armatures of a condenser by rays or radiations, and the other by independent means, and effecting by the automatic discharge of the accumulated energy the operation or control of a suitable receiver, as set forth.

NIKOLA TESLA.

Witnesses:
M. LAWSON DYER,
RICHARD DONOVAN.

No. 685,958. Patented Nov. 5, 1901.

N. TESLA.

METHOD OF UTILIZING RADIANT ENERGY.

(Application filed Mar. 21, 1901.)

(No Model.)

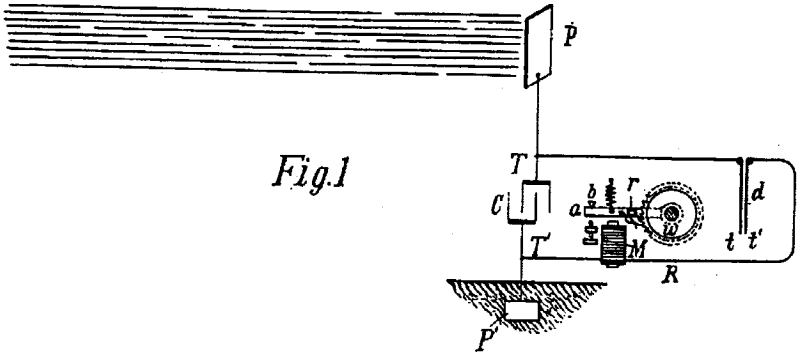

Fig. 1

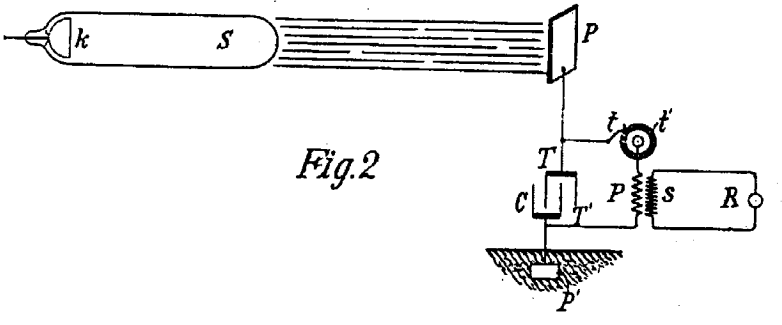

Fig. 2

Witnesses:
Raphael Netter
M. Lawson Dyer

Nikola Tesla, Inventor
by Kerr, Page & Cooper
Attys

THE HORRIS PETERS CO., PHOTO-LITHO., WASHINGTON, D. C.

Nikola Tesla's Patent Collection

(1/1)

kokomoj0:

AC Electro Magnetic Motor 433,700 August 5 1890
AC Motor 433,701 August 5 1890
AC Generator 447,921 March 10 1891
Alternating Motor 555,190 Feb 25 1896
Aerial Transportation 1,655,114 January 3 1928
Producing High Frequency 583,953 June 8 1897
Producing High Frequency 577,670 Feb 23 1897
Producing High Frequency
and Potential 568,176 Sep 22 1896
Producing High Frequency 568,180 Sep 22 1896
Producing Ozone 568,177 Sep 22 1896
Utilization of Radiant Energy 685,957 Nov 5 1901
Transmission of Electrical Energy 649,621 May 15 1900
Transmitting Electrical Energy 1,119,732 Dec 1 1914
Utilizing Effects Transmitted From a Distance to a Receiving Device Through Natural Media 685,955 Nov 5 1901
Utilizing Effects Transmitted Through Natural Media 685,956 Nov 5 1901
Armature for Electric Machine 417,794 Dec 24 1889
Art of Transmitting Electrical Energy Through the Natural Mediums 787,412 Apr 18 1905
Coil for Electro Magnets 512,340 Jan 9 1894
Commutator for Dynamo Electric Machines
334,823 Jan 26 1886
Commutator for Dynamo Electric Machines
382,845 May 15 1888
Dynamo Electric Machine 359,748 March 22 1887
Dynamo Electric Machine 390,414 Oct 2 1888
Dynamo Electric Machine 390,721 Oct 9 1888
Dynamo Electric Machine 25 406,968 July 16 1889
Dynamo Electric Machine or Motor 18 390,415 October 2 1888
Electric Arc Lamp 2 335,786 February 9 1886
Electric Arc Lamp 3 335,787 February 9 1886
Electric Circuit Controller 77 609,246 August 16 1898
Electric Circuit Controller 78 609,247 August 16 1898
Electric Circuit Controller 79 609,248 August 16 1898
Electric Circuit Controller 80 609,249 August 16 1898
Electric Circuit Controller 82 609,251 August 16 1898
Electric Circuit Controller 84 613,735 November 8 1898
Electric Generator 55 511,916 January 2 1894
Electric Incandescent Lamp 46 455,069 June 30 1891
Electric Motor 30 416,194 December 3 1889
Electric Railway System 61 514,972 February 20 1894
Electrical Circuit Controller 76 609,245 August 16 1898
Electrical Circuit Controller 83 611,719 October 4 1898
Electrical Condenser 50 464,667 December 8 1891
Electrical Condenser 66 567,818 September 15 1896
Electrical Conductor 57 514,167 February 6 1894
Electrical Igniter for Gas Engines 81 609,250 August 16 1898
Electrical Meter 45 455,068 June 30 1891
Electrical Meter 62 514,973 February 20 1894
Electrical Transformer 75 593,138 November 2 1897
Electrical Transformer or Induction Device 38 433,702 August 5 1890
Electrical Transmission of Power 12 382,280 May 1 1888

Electrical Transmission of Power 13 382,281 May 1 1888
Electrical Transmission of Power 52 511,559 December 26 1893
Electrical Transmission of Power 54 511,915 January 2 1894
Electro Magnetic Motor 8 381,968 May 1 1888
Electro Magnetic Motor 9 381,969 May 1 1888
Electro Magnetic Motor 11 382,279 May 1 1888
Electro Magnetic Motor 23 405,858 June 25 1889
Electro Magnetic Motor 27 416,191 December 3 1889
Electro Magnetic Motor 29 416,193 December 3 1889
Electro Magnetic Motor 31 416,195 December 3 1889
Electro Magnetic Motor 33 418,248 December 31 1889
Electro Magnetic Motor 34 424,036 March 25 1890
Electro Magnetic Motor 39 433,703 August 5 1890
Electro Magnetic Motor 40 445,207 January 27 1891
Electro Magnetic Motor 44 455,067 June 30 1891
Electro Magnetic Motor 47 459,772 September 22 1891
Electro Magnetic Motor 49 464,666 December 8 1891
Electromagnetic Motor 64 524,426 August 14 1894
Flow Meter 109 1,365,547 January 11 1921
Fluid Propulsion 100 1,061,142 April 29 1913
Fountain 102 1,113,716 October 13 1914
Frequency Meter 110 1,402,025 January 3 1922
Incandescent Electric Light 60 514,170 February 6 1894
Lightning Protector 105 1,266,175 May 14 1918
Manufacture of Electrical Condensers, Coils, &c 73 577,671 February 23 1897
Means for Generating Electric Currents 58 514,168 February 6 1894
Means for Increasing the Intensity of Electrical Oscillations 90 685,012 October 22 1901
Aerial Transportation 111 1,655,113 January 3 1928
and Controlling Mechansim of Moving Vessels or Vehicles 85 613,809 November 8 1898
and Electrical Conversion and Distribution 48 462,418 November 3 1891
and Producing Currents of High Frequency 70 568,179 September 22 1896
Converting and Distributing Electric Currents 14 382,282 May 1 1888
Electrical Power Transmission 24 405,859 June 25 1889
Insulating Electric Conductors 88 655,838 August 14 1900
Insulating Electric Conductors 89 11,865 October 23 1900
Intensifying and Utilizing Effects Transmitted Through Natural Media 91 685,953 November 5 1901
Obtaining Direct from AC s 26 413,353 October 22 1889
Operating Arc Lamps 41 447,920 March 10 1891
Operating Electro Magnetic Motors 22 401,520 April 16 1889
Operating Electro Magnetic Motors 28 416,192 December 3 1889
Regulating Producing Currents of High Frequency 69 568,178 September 22 1896
Signaling 97 723,188 March 17 1903
Utilizing Effects Transmitted Through Natural Media 92 685,954 November 5 1901
Utilizing Radiant Energy 96 685,958 November 5 1901
Pyromagneto Electric Generator 35 428,057 May 13 1890
Reciprocating Engine 59 514,169 February 6 1894
Regulator for Alternate Current Motors 20 390,820 October 9 1888
Regulator for Dynamo Elecric Machines 6 350,954 October 19 1886
Regulator for Dynamo Electric Machines 4 336,961 March 2 1886
Regulator for Dynamo Electric Machines 5 336,962 March 2 1886
Ship's Log 107 1,314,718 September 2 1919
Speed Indicator 104 1,209,359 December 19 1916
Speed Indicator 106 1,274,816 August 6 1918
Steam Engine 63 517,900 April 10 1894
System of Electric Lighting 43 454,622 June 23 1891
System of Electrical Distribution 10 381,970 May 1 1888

System of Electrical Distribution 16 390,413 October 2 1888
System of Electrical Power Transmission 53 511,560 December 26 1893
System of Electrical Transmission of Power 51 487,796 December 13 1892
System of Signaling 98 725,605 April 14 1903
System of Transmission of Electrical Energy 86 645,576 March 20 1900
Thermo Magnetic Motor 21 396,121 January 15 1889
Turbine 101 1,061,206 May 6 1913
Valvular Conduit 108 1,329,559 February 3 1920

Here is a link for searching patents

http://www.uspto.gov/patft/

pese:
Nice Collection.

Links to the above patents find in
http://ch.to/FE

here are they:

http://www.stormloader.com/members/pese/fe/tesla/Tesla_e_books.txt
also dirctly to "click-open"
http://www.overunity.com/index.php/topic,2027.0.html

G.Pese

kokomoj0:
If you guys want another handy site here is rex:

http://www.rexresearch.com/1index.htm

Free Energy / Over-Unity: ADAMS: Motor ** ALEXANDER: Dyna-Motor ** D'ANGELO: Interatomic Ion Motor ** BALDINELLI: Dual Relay Charger ** BARBAT: Self-Sustaining Electrical Generator ** BAUMANN: Testatika Generator ** BEDINI: Motor-Generator ** BRITTEN: Antenna ** CHRISTIE & BRITS: Controller ** COLER: Stromzeuger ** CORREA: Pulsed Abnormal Glow Discharge ** ** CRAIG: Hall Effect Generator ** ** DEPALMA: N-Machine ** ECCLES: Electrolytic Cell ** ECKLIN: Permanent Magnet Motor / Stationary Armature Generator ** FRENETTE & PERKINS: Friction Heater ** FE Generators #1 ** FE Generators #2 ** ** GARY: Magnet Motor ** ** ** GRAY: Motor ** ** ** GRITSKEVITCH: Over-Unity Hydro-Magnetic Generator ** ** GULLEY: Self-Sustaining Electric Motor ** HENDERSHOT: Generator ** HODOWANEC: Magnetic Resonance Amplifier ** HUBBARD: Generator ** IMRIS: Optical Electrostatic Generator ** JAMISON: Energizer ** The Joe Cell ** JOHNSON: Magnet Motor ** KANAREV: Plasma Water Electrolysis ** KELLOGG: Photon-Proton Electric Generator ** KINCHELOE: N-Machine ** KOLDOMASOV: Reactor ** LAMBERTSON: WIN Generator ** MARKOVICH: ATREE ** McCLAIN

& WOOTAN: MRA (#1) ** McCLAIN & WOOTAN: MRA (#2) ** McKIE: PODMOD ** MERKL: Chondriana & Life Crystals ** ** MEYERS: Absorber ** ** ** MILKOVIC: Two-Stage Mechanical Oscillator ** ** MINATO: Magnet Motor ** MOLLINET: Power Unit LE M3 ** MORAY: Generator ** MORAY: Beyond the Light Rays ** MORAY: Speech: Free Energy ** NELSON: Electron Trap ** NEWMAN: Motor ** PATRICK & BEARDEN: Motionless Electrical Generator ** PERRIGO: Generator ** PRENTICE: Antenna ** ** RAYLEIGH: Active Nitrogen ** ** REED: Magnetic Motor ** SCHAEFFER: Steam Generator ** SCHAPPELLER: Glowing Magnetism ** SCRAGG: HCl Motor ** SEARL: Generator ** SEARL (#3): Levity Disc Articles ** SEARL: Searl Effect Generator #4 ** SEIKE: G-Strain Amplifier/Monopolar Moebius Coil ** SEROGODSKY: Heat Engine ** SHOULDERS: Elektrum Validum ** STONEBURG: Self-Sustaining Electric Motor ** SWEET: Vacuum Triode Amplifier ** SZABO: Energy-by-Motion (EBM) Generator ** TEWARI: Space Power Generator ** TROMBLY: N-Machine ** YABLOTCHKOV: Over-Unity ES Amplifier ** YILDIZ: Electrical Generator ** ZINSSER: Kinetobaric Generator

kokomoj0:
TESLA DICTIONARY OF ADVANCED RESEARCH TERMINOLOGY

1996 EDITION

©1996 by Michael Riversong & J.W. McGinnis

NOTE: A printed copy of this document is available through the Catalog section of this web site.

Adiabatic

1. Any thermodynamic or magnetic process in which no heat or other energy is moving in or out of the process area.
2. When vapor is expanded or compressed without any transfer of heat either to the outside or from the environment to the vapor. (Wiseman)

Aether

Alternative spelling of Ether when used in the sense of a fundamental invisible substance permeating the entire Universe.

Alpha Particles

Radioactive emissions conceived as consisting of two protons and two neutrons travelling together. This could also be called a helium ion. These have a positive charge, travel slowly, and can damage physical matter by contact. They may draw electrons from the environment in order to balance charge. If the environment happens to be within a living body, that body will be weakened.

Alternating current (AC)

Electricity which reverses its direction of flow in a cyclic pattern according to its frequency. Tesla developed the first commercially used Alternating Current generators in 1893.

Amperage

Amount of electrons moving in an electrical flow. This is measured against time with an ammeter. One amp equals one coulomb of electrons moving past a point in one second.

Ball Lightning

1. Any electrical discharge in free space which appears to have a spherical form.
2. When a pseudosphere of magnetic field lines and a catenoid of a surface of associated electric field lines interact to form a toroid. (Kovac)

Beta Particles

Radioactive emissions consisting mostly of stray electrons. These have a negative charge. In large numbers they can cause some damage to physical matter, such as radiation burns. Usually, they dissipate into the atmosphere and become negative ions, which are beneficial to life processes.

Bifilar

Usually refers to wires folded back on themselves in a winding to increase efficiency. Can also mean the use of two wires in an assembly such as a transformer.

Bioelectromagnetics

Study of how living bodies respond to the presence of electromagnetic fields.

Brown's Gas

Highly efficient form of matter demonstrated by Bulgarian-American researcher Yul Brown. It may be an elemental form preceding hydrogen. It is made by a proprietary process for dissociating water. There are indications that use of this gas can transmute radioactive wastes into more benign substances.

Caduceus

In ancient times, a magical staff consisting of a golden rod with two serpents entwined around it. Now refers to any wire winding similar in form.

Capacitance

Holding back of electrical current by a thin nonconducting layer. The current can then be discharged under the control of a circuit or an operator.
The amount of capacitance is proportional to the relative strength of the non-conducting layer or area in comparison to the strength of the current.

Catalyst

Anything which facilitates a chemical reaction, which is not directly changed or consumed by the process. Catalytic

Catalysis

Any process which involves the facilitation of a chemical reaction by a substance not directly changed or consumed by the reaction itself.

Catenary, Catenoid

Shape formed by the curve of a loose string, under the influence of gravity, suspended by its two ends. A heated glass tube with the ends pulled apart will form a catenoid. (Kovac)

Ch'i

Chinese concept of a characteristic which pervades all the Universe, having no mass, energy, or existence in time, but is essential as a foundation for all material and life. It is best described in the Tao Te Ching by Lao Tze. Also written as Ki (Japanese) or Qi (People's Republic of China).

Chladni Plates

Special surfaces which transmit acoustic waves in such a way that sand or metal filings will form distinctive patterns

based on the character of vibrations passing through the area. Named after German physicist Ernst Florens Friedrich Chladni, 1756-1827.

Coherence

When waves have a continuous phase relationship with each other.

Cohesion

1. Something sticking to something else.
2. Sympathetic negative attraction, its degree corresponding to the character of molecular density. (Keely)

Cold Fusion

When atoms merge into a heavier element at temperatures typical of Earth's normal environment, thus generating energy. There are several possible chemical reactions in this class. Most of them involve some kind of catalysis.

Corona

Luminous electromagnetic discharge, either visible or detectable by instruments, which suffuses an area of the atmosphere around the origin point of the phenomenon.

Coulomb

Measure of the estimate of the number of electrons physically present at any point. One Coulomb equals about 6.25 billion billion electrons, which has been standardized as one ampere of electricity in one second.

Cosmic Rays

1. The highest possible frequencies of electromagnetism. These emanate from distant regions of space and can pass through all physical matter easily.
2. Unspecified waves of charged particles which come from outer space and hit the planet constantly, and can cause changes in physical matter on some level. In this sensed, these are not necessarily electromagnetic in nature.

Cryogenics

Study of physical matter and associated waveforms at extremely cold temperatures, approaching those of deep space. Under these conditions, many elements suddenly become superconductors. Therefore, part of this study focuses on how to induce superconductivity at higher temperatures.

Cymatics

Study of the response of physical substances to vibrations.

Dendritic

Literally means "tree-like", and can apply to anything which naturally branches out in this manner, including trees, rivers, lightning, and blood vessels.

Dimension

1. Distance from one point to another in space.
2. An area of reality.

Direct Current

Electricity consisting of a flow of electrons in one direction. Static electricity and chemical battery current are examples.

Drown, Ruth

Developer of a series of radionics instruments in the 1930's. These worked on a sympathetic vibratory principle, and were said to treat patients remotely by acting on blood samples, hair, or photographs. Sometimes similar machines are named after her.

DX

Amateur radio term meaning "distance". Usually refers to communications from far points.

Dyne

Metric standard measurement of force. An acceleration of one centimeter per second on one gram of mass.

Eidetic

Derived from Plato, who probably inherited the concept from Persians, who in turn probably inherited it from Egyptians. The ancient view of vision was very different from ours. It extended beyond mere objects. Ancient philosophers were well-versed in qualitative sciences, and had observed that matter in an ordinary state was radiant. Matter sends out its emanations in all directions, even in the dark. The human & animal eye is a special organ through which the aura is projected. When the mind is properly initiated and exercised, consciousness can actually leak through the eyes, and be projected. When that happens, a very special type of vision occurs. They gave a name to the radiance coming from the eye and from all objects: EIDOLA, which means literally "idea messages". What they're saying is, when the Eidola from your eyes and Eidola from objects meet, that creates perception. One can literally examine ideas which have no physical form, but which nevertheless radiate Eidola. Ideas can radiate Eidola. Descartes restored this idea in his discussions of "Ether". Eidolic vision is the ancient term; Eidetic is what the term became with the movement from qualitative to quantitative. Eidetic vision includes a special type of persistent afterimage, which has conscious qualities. This is all beyond neurology. It is an ability to process or reshape remembered forms and images. Memory is a reconnection with real things -- with eidetic or eidolic images.
Eidolic = qualitative
Eidetic = quantitative
Eidetic imagery is carried with a set of lines, as a living thing. (Vassilaitos) NOTE: A similar concept, using different terminology, is developed in the book Scientology 8-8008 by L. Ron Hubbard.

Eidolic

See definition for Eidetic.

Electricity

1. Any flow of electrons.
2. Low-frequency flow of electromagnetic energy, which under normal Earth conditions will tend to stay confined in wires or along set paths.

Electrochemical

Describes any reactions between chemical elements which involve electricity, either as a product or as a catalyst.

Electrolysis

Passage of electrical current through a fluid, in which the flow is accompanied by movement of ions. Electrolytic

Electromagnetic

See Electromagnetism

Electromagnetic Field

A region of space in which electrical and magnetic energy are charging the area. There are generally two components to the field: magnetic and electric, or space charge. These can be at widely varying levels relative to each other, which is an important consideration in environmental surveys.

Electromagnetic Spectrum

Range of frequencies of all energies which have been classified as electromagnetic. The slower the frequency of vibration relative to time, the longer the wavelength of the energy. In order from slowest to fastest, the frequency range encompasses the following energies:
Alternating Current (AC) Electricity
Very Low Frequency (VLF) Radio
Amplitude Modulation (AM) Radio
Shortwave (SW) Radio
High Frequency (HF) Radio
Microwave, Radar
Infrared (Heat)
Visible Light
Ultraviolet Light
X-Rays
Gamma Rays
Cosmic Rays
Electromagnetism

One of the fundamental forms of energy in the Universe. It changes characteristics radically depending on its frequency and wavelength, which tend to correlate closely with each other. Generated in relatively pure form by numerous natural processes such as solar fusion, electromagnetism normally interacts with other energy forms. As of this writing, it is generally thought to travel at a constant speed, known as the "speed of light", or 186,000 miles per second. Larry Spring has demonstrated that electromagnetic energy usually travels through space as an expanding sphere, and will tend to do so until it encounters an obstacle.

Electromechanical

Of or pertaining to mechanical devices or systems electrically actuated, such as a solenoid (magnetic actuator) or an electrometer (electrostatically actuated). (Nurnberger)

Electromotive

The potential of electrical force sufficient to create an obvious effect on matter, generally by moving it.

Electron

Small theoretical particle which is generally believed to normally orbit around the nucleus of an atom. It may under some conditions come loose from atoms in materials, such as metals, and create a flow of electrical current. Many physicists believe electrons are always composed of very small, unstable particles.

Electrophoresis

Movement of suspended particles through a fluid when stimulated by an electrical force. An example is a laboratory process used in medicine to determine differences in motion of protein molecules. This can be used to tell if someone has had a heart attack, by applying the process to a sample of protein molecules from the heart muscle.

Electrostatic

Stationary separation of electrical charges.

Element

1. Any fundamental frequency of matter, expressed materially as a unique atomic structure, with its own chemical properties, conventionally illustrated in a table of periodic characteristics depending on which octave of material coherence the atomic structure resides.

2. Term incorrectly applied to the Chinese conception of five natural forces. These forces are translated as Water, Wood, Fire, Earth, and Metal.

Eloptic

Type of radionic energy patterns observed and utilized by Dr. T. Galen Hieronymous.

Equipotential Surface

The surface of anything where the electrical or magnetic potential is the same throughout.

Erg

A measurement of applied energy and work within the metric system. Standardized as one dyne of force applied through the distance of one centimeter.

Ether

1. Fundamental medium of time and space, postulated by most 19th Century scientists but largely abandoned as a concept after 1900. This was originally used in attempts to explain how waves can propagate through an apparent vacuum.
2. A name for a specific chemical, also known as Chloroform. It was given this name because it evaporates easily and evenly permeates air. In medicine, it was one of the first generally used anesthetics, but was abandoned because of its extreme flammability.
3. A state of matter at plasma or above. (Pond)

Exciton

In a crystal, holes (vacancies) and electrons can become energetic, and move about the area. This phenomenon is key to the development of transistors and integrated circuits.

Faraday Cage

By setting up a room with grounded metal walls, it is possible to keep all electromagnetic waves from entering the area from outside. This is a good environment for research. Named for Michael Faraday, an early electrical researcher.

FEA

Abbreviation for Free Energy Accumulator. (Wiseman)

Fractals

Mathematical equations which describe the general natural sequence of evolution applicable to matter and energy. Most dendritic processes are best described this way.

Free Energy

Gaining power from an as yet unknown (or possibly unknowable) source.

Frequency

Rate of vibration of a force or wave, usually measured relative to local time.

Fusion

When atoms merge into a heavier element. This generates energy across the electromagnetic spectrum. Until 1987, it was generally thought that this could only occur at extremely high temperatures typical of plasmas. Thus, an atomic fission explosion was deemed necessary to generate sufficient heat to produce a fusion explosion in hydrogen bombs. Attempts to fully control high-temperature fusion reactions have, as of this writing, universally failed, primarily due to borderline phenomena related to containment of the reactions. See Cold Fusion.

Gamma Rays

Extremely high frequencies of electromagnetic radiation. These will pass through physical matter, and may alter its structure if possessing sufficient intensity.

Geobiology

The study of energies coming from the Earth and how they affect life.

Gauss

A measurement of magnetic force, named after Karl Friedrich Gauss, German physicist and mathematician, 1777-1855. See Magnetic Measurement Scale.

Giga-

One billion of any measurement.

Gravity

One of the fundamental forms of energy in the Universe. Its operation is not generally understood at this time. Gravity tends to be stable, although some researchers have found it forming into waves on occasion. As a force, it may be either a push, a pull, or both. According to conventional physics, it is the weakest of the four fundamental natural forces, but it operates over the greatest range. It is the observed tendency of material objects to be attracted to each other.

Grunge

Radio interference of either man-made or natural origin. See also QRM and QRN.

Ham

Slang term for an amateur radio operator.

Harmonic

1. Having to do with the resonance of one thing to another, through matching frequencies. A harmonic is a frequency that is a doubling or halving of another frequency.
2. In music, partial resonance between one frequency and another. (Pond) Certain intervals between tones may sound pleasant to the human ear, and thus are called harmonic. Partial resonance may also be a factor in chemistry and physics, but this area has not been explored as of this writing.

Hertz

The name of a German physicist applied to the measurement of frequency in cycles per second. Heinrich Hertz, 1857-1894.

Homopolar

When only one electromagnetic pole is present in a particular structure. All charge is equally distributed.

Impedance

A measure of resistance to electrical current flow.

Implosion

Sudden inward collapse of matter. In many natural processes, this occurs in the form of a rapid vortex. Several engineering possibilities for harvesting energy from controlled implosions have been proposed, beginning with the work of German researcher Viktor Schauberger in the 1920's.

Inert Gas

Any of the so-called "Noble Gases" from the Periodic Table of the Elements. These elements normally do not combine with other elements. They are useful as buffers against chemical interactions, and appear to have interesting properties related to scalar-field interactions. The gases and their atomic numbers are: Helium 2, Neon 10, Argon 18, Krypton 36, Xenon 54, and Radon 86.

Interferometer

1. Instrumentation which uses interference patterns between two waves to determine parameters of a wave. This can be used in optics, electronics, radio, astronomy, and acoustics.
2. An effect similar to an interference pattern. (Beardon)
3. Certain natural objects could be technically said to be interferometers, including planets, the human brain, and quartz crystals. What they have in common is a bipolar structure, which can serve simultaneously as a generator and background for detecting interference patterns. (Beardon)

Ion

An incomplete atom or a group of incomplete atoms, which thus has a charge. These can be simple, as in negative ions, which often consist of free electrons, or they can be fairly complex, as the nuclei of metal atoms with some or all electrons stripped off. Ions form because of dissociation (e.g. salt in water), strong radiation (UV, x-rays, radioactivity etc.), strong electrical forces (e.g. high voltage on a pointed electrode), radioactive decay, extreme heat, cold fusion and other processes. In general, negative ions have an excess of electrons, and positive ions lack electrons.

Isotropic

Everywhere the same. Can be applied to a geometric figure in space, or to a solution.

Keely, John Ernst Worrell

Inventor and scientist who lived 1837 - 1898, considered the founder of the field of Sympathetic Vibratory Physics. He was noted for having developed a technology of levitation, and motors which ran on acoustical energy. He assembled a remarkable set of laws which apply to chemistry and physics. Sometimes inventions similar to his are named after him. The primary source of information on his work in the 20th century has been Delta Spectrum Research, headed by Dale Pond.

Ki

See Ch'i.

LC Circuit

L stands for Inductance, and C stands for Capacitance. So this is any circuit in which inductance and capacitance are used in combination. This can create resonant phenomena.

Light

Intermediate frequencies of electromagnetic energy which happen to be visible to the sensory apparatus of our species.

Lightning

Large electrical discharge through the air. Can be generated by storms, Tesla coils, and atomic blasts.

Luminous

Emitting any kind of light.

Magnetic

1. Having a tendency to attract or repel iron, depending on polarity.
2. Anything which attracts or repels another thing by invisible force.

Magnetic Measurement Scale
Note that the items on this scale do not seem to precisely match in all cases. This is due to a current imperfect understanding of the nature of magnetism on the part of most, if not all, scientists.
Maxwell: 1 Gauss per square centimeter.
Gauss: one line of force per square centimeter during 1 second of time.
Milligauss: One thousandth of a Gauss; the most commonly used measurement of AC electromagnetic fields in residential and commercial inspections.
Weber: Enough magnetic force to induce 1 volt of electricity in a single-coil circuit during 1 second of time. 100,000,000 Maxwells.
Tesla: 1 Weber per square meter; equals 10,000 Gauss.

Magnetic Resonance Amplifier (MRA)

A class of over-unity device involving regeneration of magnetic fields.

Magneto Hydro Dynamics (MHD)

1. Treatment of plasma as a fluid in attempts to control high-temperature fusion reactions.
2. Process of applying magnetic fields to water and other fluids to modify their energy, and thus become effective agents for other purposes, such as medicine or industrial applications.

Magnifying Transmitter

Device under development by Tesla which was intended to allow electrical energy to manifest at will anywhere on this planet. This project was the primary experiment at Wardencliffe when funding was cut off by J.P. Morgan in 1907, and so was never completed.

Malillumination

When plants, animals, or humans have light which is missing essential frequencies, and disease results. (Dr. John Ott)

Mana

A root word for "power", usually spiritual. This word is associated with the Kahuna priesthood of Hawaii.

Maximum Usable Frequency

In radio transmission, the highest frequency at which a signal can be transmitted between two points under current conditions. Factors which affect this can change from one hour to the next, and include the distance to be covered, geography of the intervening area, solar events, local weather conditions, and man-made disturbances. Abbreviated as MUF.

Maya

1. Sanskrit term meaning illusion, referring to an ancient doctrine saying that all reality is illusory.
2. Name of a particular tribe whose home is in the Yucatan and Guatemala area of Central America. They created a remarkable civilization which suddenly disappeared. Their mathematical and calendar systems were the most accurate yet seen on this planet. About three hundred years after their disappearance, the Aztecs took much of their technology and used it to build their own civilization.

Mega-

One million of any measurement.

Metempsychosis

1. The wandering of the soul during dreams & at death. (Vassilaitos)
2. Any transmigration of souls.

MHD

Abbreviation for Magneto Hydro Dynamics.

Microvita

Most fundamental building block of atomic particles, which contains a universal life and intelligence. This term was developed by the Indian guru P.R. Sarkar, late founder of the Ananda Marga Yoga Society.

Milligauss

See Magnetic Measurement Scale.

Montauk

Town on the easternmost point of Long Island over 100 miles east of New York City. Experiments based on Tesla's technology were allegedly conducted in secret at an Air Force base there in the early 1980's.

MRA

Abbreviation for Magnetic Resonance Amplifier.

MUF

See Maximum Usable Frequency.

Multiple Wave Oscillator

A healing device using very wide bandwidth unmodulated radio waves, developed in France in the 1920's. Several

researchers have made versions of this device. (Georges Lakhovsky)

MWO

See Multiple Wave Oscillator.

N-Machine

One of many magnetic-ring motor types, which is designed to produce more energy than it uses. (DePalma; Tewari)

Nano-

One-billionth of any measurement.

Negative Charge

An area where there is an excess of electrons. This was misnamed by early electrical researchers due to a misunderstanding of the direction of current flow.

Neutral Center

All structures rest on a foundation of an indestructible and indivisible unit, which has no mass, time, or energy of its own. Descriptions of this concept resemble descriptions of the Chinese concept of Ch'i. (Keely)

Non-Hertzian

Any waveform which propagates in space, but does not conform to the standard model of electromagnetic waves.

Nuclear

1. Pertaining to the nucleus of an atom.
2. Energy which is generated as unstable atoms rapidly or slowly decay.

Orgone

Energy form first described by Dr. Wilhelm Reich. The term was derived from "orgasm", as Reich felt this energy is related to the phenomenon of human sexuality, and is also a primary motivating force of the Universe. Reich built several devices which collected orgone, and retransmitted it back to humans. He also used the energy to modify weather.

Oscillation

1. Rhythmic vibration. This can be mechanical or electric.
2. Rhythmically recurring translatory (of an object about itself) movement. Oscillation is thus external rhythmic motion. (Pond)

Oscilloclast

An early Radionic device using resonant frequencies for the treatment of disease, developed about 1920. (Dr. Albert Abrams)

Oscilloscope

Device which measures electrical energy waves and illustrates them on a screen.

Over-Unity

Any device which puts out more power than it consumes.

Ozone

Three oxygen atoms bound together. Normally, oxygen exists in Earth's atmosphere as two atoms bound together. Ozone has a distinctive set of characteristics and a smell which can be easily recognized. It can be formed by electric arcing in air, which is why it is often found in significant quantities on the trailing edges of thunderstorms. Ozone will react against parasitic bacteria, and can filter out several high frequencies of electromagnetic radiation.

Philadelphia Experiment

In October 1943, a US Navy ship was outfitted with electronic gear allegedly based on a design by Nikola Tesla. The object of the experiment was to render the ship invisible. According to most accounts, the experiment did make the ship invisible, and also suddenly transported it 200 miles away to Norfolk harbor, where it materialized briefly, and then re-materialized minutes later back in Philadelphia. When the crew came off the ship, they were all incurably insane. This experiment has spawned a great deal of literature.

Photon

1. Theoretical particle of light. Tremendous controversies exist over whether light is a pure electromagnetic waveform, or is made of particles. Those who feel it forms into particles are further divided as to the nature and charge of these

particles. As of this writing, photons have not yet been observed.

2. Quantized bundle of light. (Pond)

Photon Belt

Theoretical region of space where some kind of light energy is present in greater amounts than in the region of space which our planet has been travelling through during recorded history. It has been said by several prophetic sources that once Earth moves into this area, there will be radical shifts in climate and consciousness.

Piezoelectric

Some crystals, especially quartz, will produce an electric charge when squeezed. This charge will typically be high voltage and low amperage.

Piezoluminescence

Some crystals will emit light when squeezed. This will even happen with sugar crystals, which can be relatively entertaining if one looks in a mirror in a dark room while eating certain kinds of candy.

Planck's Constant

Any radiation has a constant ratio of energy relative to its frequency. In our part of the Universe, this is expressed as a number: 6.547 x 10-27 ergs per second. Named after a German physicist, Max Planck, 1858-1947.

Plasma

1. When matter is stripped of all electrons, and flows violently. This can occur at extremely high temperatures typical of stars. It is an energetic state higher than gas.
2. Liquid portion of blood in which cells are suspended.

Positive Charge

An area where there is a lack of electrons. This was misnamed by early electrical researchers due to a misunderstanding of

flow direction.

Potential

1. Any electrical voltage difference between two points.
2. Difference in energy level between two or more places.

Propagation

How an electromagnetic wave moves through space or any medium, including its response to any other waves or solid objects which may be obstacles at the wave's frequency.

Pseudosphere

1. To form a model of one, push the ends of a heated glass tube together.
2. When applied to gravity, a geometric object with the same properties as a sphere, but the equipotential surface of gravity is pushing rather than pulling. (Kovac)

Psychotronic

1. Any unclassified energy having an effect on the interface between mind, matter, and/or spirit. This is sometimes incorrectly used as a synonym for "Radionics". Derived from Greek "Psyche" which is both mind and spirit, and "Tronics", meaning instrumentation. The term was coined in France during the late '60's. The first Psychotronics Conference was in Prague in 1972.
2. Sometimes used as a slang term meaning unusual and awesome.

Pythagoras

Greek educator who lived in the 6th century B.C. He developed the sciences of mathematics, philosophy, music, and medicine simultaneously, as an integrated whole. Much of his work, especially in mathematics and music, is the foundation of modern methods. Pythagorean

Qi

See Ch'i.

QRM

Radio operator's term for man-made interference. SEE Grunge

QRN

Radio operator's term for natural interference. SEE Grunge

QSL

Radio operator's code for acknowledging the receipt of a transmission. Many amateur operators, government stations, and commercial stations will send special QSL postcards in exchange for written reception reports.

Quantum

1. Something which can be measured or counted.
2. This term has been applied to the theoretical fundamental constants of physics, as a specialized technical mathematical definition.
3. A given discrete quantity.

Radioactivity

Emanations from individual atoms of unstable isotopes of material elements. There are three generally recognized types of radioactivity: alpha particles, beta particles, and gamma rays. (See separate definitions for each.)

Radionics

Use of invisible, largely unclassified energies to create effects on biological entities. It can operate equally well at any distance, because it is using resonant forces which are inherently non-locational.

Reality

In society, reality is strictly an agreement among people as to what is being observed or inferred. The same applies in science, although new discoveries can change the understanding of the agreement at any time.

Regauging

Free change of magnetic scalar potential with little or no change in force fields. This phenomenon can be a way to make over-unity devices effective. (Beardon)

Resonance

Vibration of one thing or force in sympathy with another, because of a similarity or mutual harmonic characteristic.

RF

Abbreviation for Radio Frequency.

Rife, Dr. Royal R.

1888-1971. Developer of a type of electromagnetic resonant microscope and corresponding treatment equipment beginning in the mid-1920's. The treatment equipment pulsed precisely calibrated low-frequency electricity through the patient's body. Rife was harassed by the United States Government and his laboratories were closed. Most of his equipment was destroyed. Several diagnostic and treatment devices have been named after him, although not all of these specifically use his principles.

Scalar

1. Any quantity with magnitude which can be described by a number. Not associated with direction or location in space.
2. Same as Keely's Neutral Center, which is the full harmonic chord of the Universe. (Pond)

Scalar Wave

A wave form which is composed of compression and rarefaction, as sound waves. It does not necessarily move in any particular direction or have a specific location. (Beardon)

Schumann Resonance

There is a gap in the ionosphere of the Earth's atmosphere. It creates a massive electronic cavity in which a certain frequency can resonate constantly, as a sort of "signature" of this planet. That frequency is generally given as 7.83 cycles per second. According to some researchers, it may change over time. Several inventors have developed devices which are worn close to the body and constantly impart this frequency to a person, using the theory that having this "correction" in a person's biofield will create a defense against unnatural electromagnetic fields.

Soliton

A wave can propagate with no energy loss, and also retain its shape and speed after collision with another wave. In fact, it can absorb and feed on small waves.

Somatid

Small biological entity which goes through a life cycle of its own inside a plant, animal, or human. It can, due to stress factors, manifest as bacteria and viruses. In more benign stages, it appears to play a role in cell division. (Naessens)

Sonoluminescence

Light which is generated as a result of sound energy.

Strong Nuclear Force

One of the four forces of nature recognized by conventional physics. That which holds atomic nuclei together. Believed to be the strongest of all natural forces, although it operates over a very small range.

Subatomic

Any particle smaller than an atom. Because of their size, the existence of these particles cannot be directly observed, but only inferred from the results of various experiments.

Subtle Energy

A general term referring to any kind of waveform, emanation, or pattern which can have an effect and is difficult or impossible to quantify using present technology.

Synergetics

Type of geometry developed by Buckminster Fuller, in which all relationships between forms are accounted by whole numbers only. Once understood, it can be applied to material forms, chemistry, geobiology, and physics as a common ground.

Tachyon

1. Theoretical particle in physics usually connected with cosmic rays. Its name comes from an ancient Greek word for "speed", because it was thought to travel very fast. The particle has never been observed, and the name gradually fell out of favor in conventional physics. More recently, some researchers, inventors, and marketers have revived the term without defining it, which has led to some confusion.
2. Mutated particle, harmful to humans, which is created when a type of cosmic ray strikes the Earth and comes out the other side. Anyone who spends much time at a spot where these particles come out will have serious health problems. (Vince Wiberg)

Tensegrity

Structural integrity created through tension of structural members. This is the opposite of compression structures, which for most of human history have comprised the majority of buildings. (Buckminster Fuller)

Tesla

1. Nikola Tesla, who invented AC power generators, AC motors, radio transmitters, several mechanical turbines, and many other important items. He lived from 1857 - 1943. He was born and raised in Serbia, went to school in Hungary, and emigrated to the United States in 1884. For a brief time, he worked with Thomas Edison, and then broke away to form his own laboratory, where he produced his greatest inventions.
2. A measurement of magnetic force. (See Magnetic Measurement Scale)

Tesla coil

Electrical apparatus developed by Nikola Tesla. It is a type of transformer. In this, a current is raised in voltage and lowered in amperage. It has two coils, primary at the bottom and secondary at the top. At the top of the secondary coil, there may be a discharge of lightning. It has some use in radio, but during the period after Tesla's death was mostly used for demonstrations and decoration. Tesla had been using a giant version as a key component of his proposed universal energy transmission system during experiments at Wardencliffe and Colorado Springs.

Tetrahedron

Most fundamental form of space, with four sides and a triangular base. According to Buckminster Fuller, can also be applied to thought forms and conceptions of problems in the Universe.

Trexar

Specially constructed wire composed of silver, gold, and platinum. (Keely)

Topology

A branch of mathematics dealing in whole shapes and forms.

Toroid, Torroid

1. Anything having a donut-like shape, including visible objects and invisible fields.
2. The only self-sustaining electromagnetic wave shape in nature. (Kovac)

Ultrasonic

Sound vibrations above the range of human hearing, which for most people extends to about 20,000 cycles per second.

Unclassified Energy

Any pattern of energy or force which is not generally understood within the scope of modern physics or chemistry. This can apply to radionic, etheric, and subtle energies. The main point of this definition is that scientists are rarely in agreement as to the nomenclature for some observed energy.

Vacuum

Lack of matter in an area of space. So far, no pure vacuum has ever been observed anywhere, but this can be used as a relative descriptive term.

Vector

1. Direction of a force along time in space.
2. Applied to any force which apparently has a specific direction.

Vector Wave

Any waveform which appears to travel in a specific direction.

Vedic

Having to do with certain respected, ancient scriptures of India. Some of these scriptures contain hints at types of energy production using resonant forces which exist in all life.

Vibration

Rhythmical motion of a body within itself. (John Keely)

Vimana

A type of aircraft mentioned in the ancient Vedic scriptures of India.

Violet Ray

1. Medical appliance invented by Tesla, which transmits a broad range of electrical frequencies through a glass applicator which should be placed on the skin. Named because the electricity has a purple color as it passes through the glass.
2. Any purple- or violet- colored electrical discharge.

Vril

Fundamental resonant energy which is inherent to planetary structure. It can, with training, be perceived as a radiant black light. (Vassilaitos)

Voltage

Relative pressure at which electrons are moving through a medium, such as a wire. This is the push that electrons potentially have in electricity.

Vortex

Energy formed into a spiral pattern. A good example of a rapid vortex would be a tornado. A small vortex is formed whenever a sink drains. Recently, this term has been used to denote as yet undefined geobiological patterns at certain locations.

Vortices, Vortexian

Wardencliffe

Location of Tesla's main laboratory on the southern coast of Long Island, about 60 miles east of New York City. The laboratory was demolished in 1917.

Watt

Standard measurement of electrical power, named after James Watt, inventor of the steam engine. This is usually expressed as current (amperage) multiplied by voltage.

Wave

Matter or energy with periodic changes in intensity while flowing.

Waveform

Since humans normally can't directly observe invisible radiations such as electromagnetism, an agreement as to their structure is based on instrumentation applied to electrical circuits. From that, we see certain patterns form on instrument readouts, and we can refer to these patterns as the form of the wave being observed. In many cases, what we are seeing on the readout may only be a cross-section of part of the wave.
In cases where instrumentation is not available to provide a readout of a particular phenomenon, any illustration of the form of the waves involved must be regarded as a good guess.

Weak Nuclear Force

One of the four forces recognized by conventional physics. All explanations of this force are highly technical. In conventional physics, it has been observed only in the interactions of various subatomic particles, especially neutrinos.

Weber

See Magnetic Measurement Scale.

Winding

Refers to wire wrapped around a rod, framework, or motor armature, usually in a tight spiral pattern.

Yang

Fundamental male, active principle of nature. Derived from ancient Chinese doctrines.

Yin

Fundamental female, receptive principle of nature. Derived from ancient Chinese doctrines.

X-Ray

Electromagnetic energy at frequencies between ultraviolet light and Gamma Rays. These are used in medicine because they disturb matter to varying degrees as they pass through, and this disturbance can be recorded on photographic film.

Z-Ray

Theoretical non-electromagnetic wave which can be channelled into a seriously destructive force.

Zero-Point Energy

All empty space is filled with a fluctuating energy. The term "zero point" refers to the fact that these fluctuations even continue at a temperature of absolute zero. It is possible that this energy could be made coherent, and thus tapped as a power source. (Moray King)

http://home.earthlink.net/%7Erivedu/tesldic.html

NIKOLA TESLA'S ENERGY TRANSMITTER (...work in progress...)

TRANSFORMER SCHEMA:

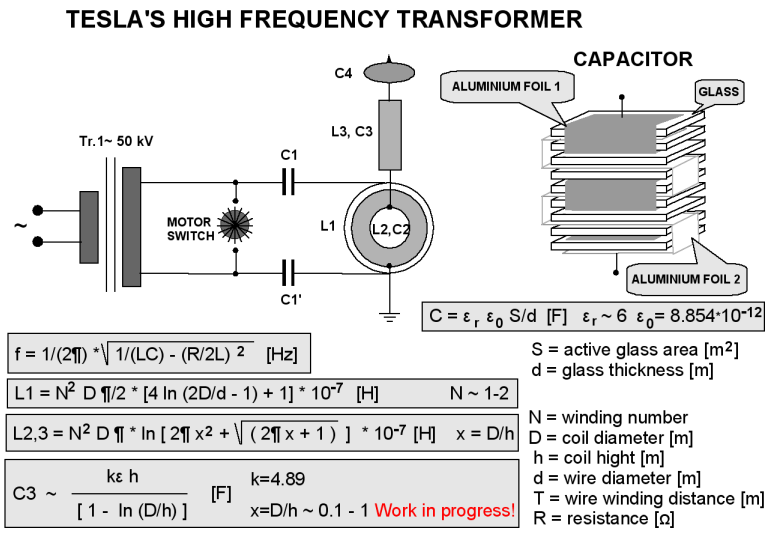

TRANSFORMER DESIGN:

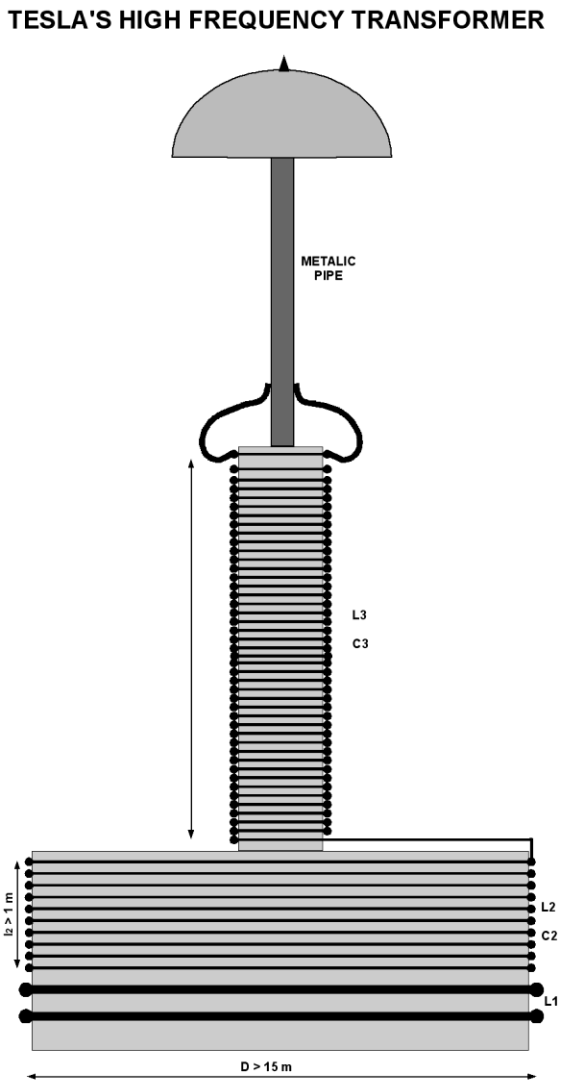

This are Tesla's patents for transmitter:

1: 645,576 'System of Transmission of Electrical Energy'.

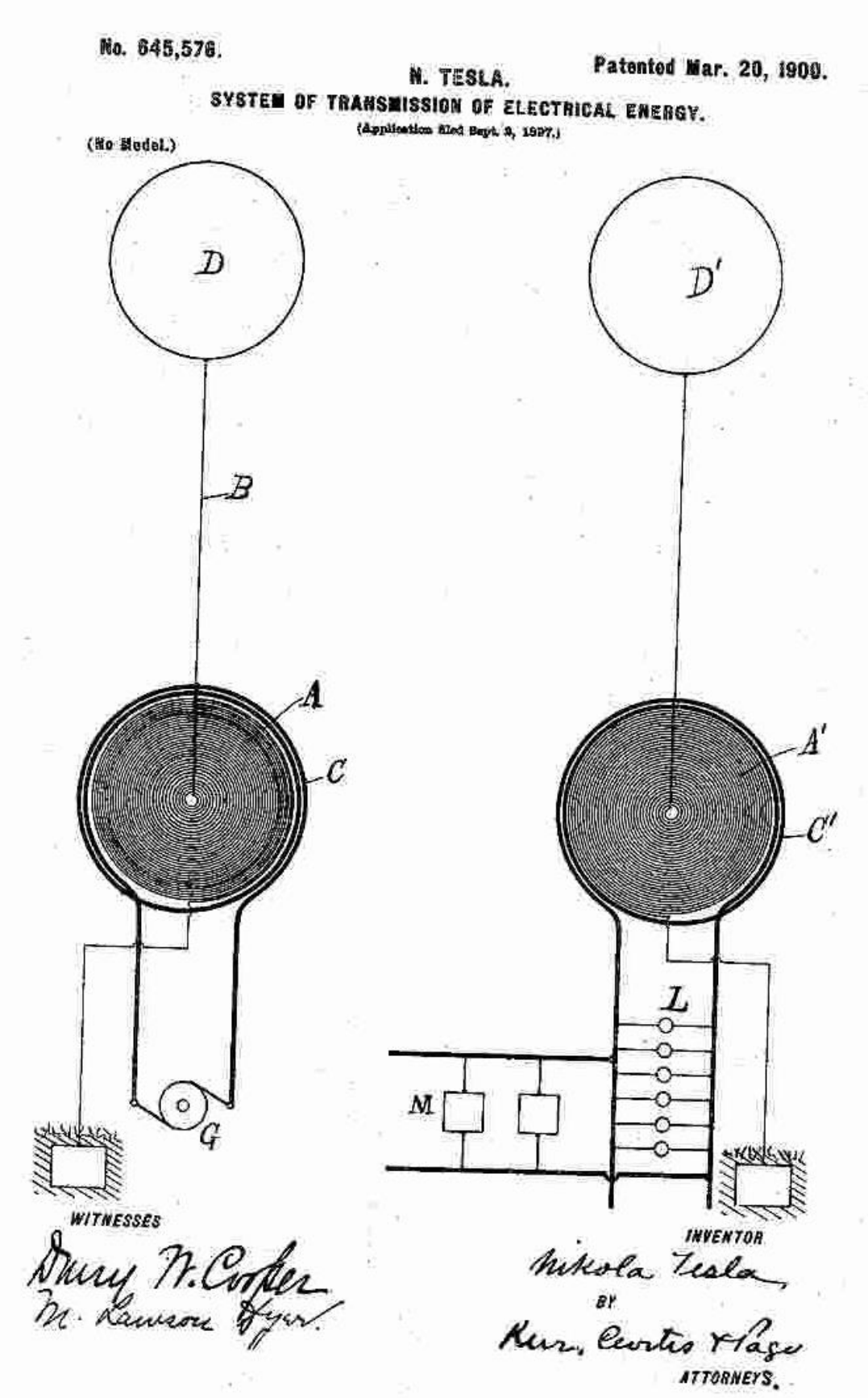

2: 649,621 'Apparatus for Transmitting Electrical Energy'.

No. 649,621. Patented May 15, 1900.

N. TESLA.

APPARATUS FOR TRANSMISSION OF ELECTRICAL ENERGY.

(Application filed Feb. 19, 1900.)

(No Model.)

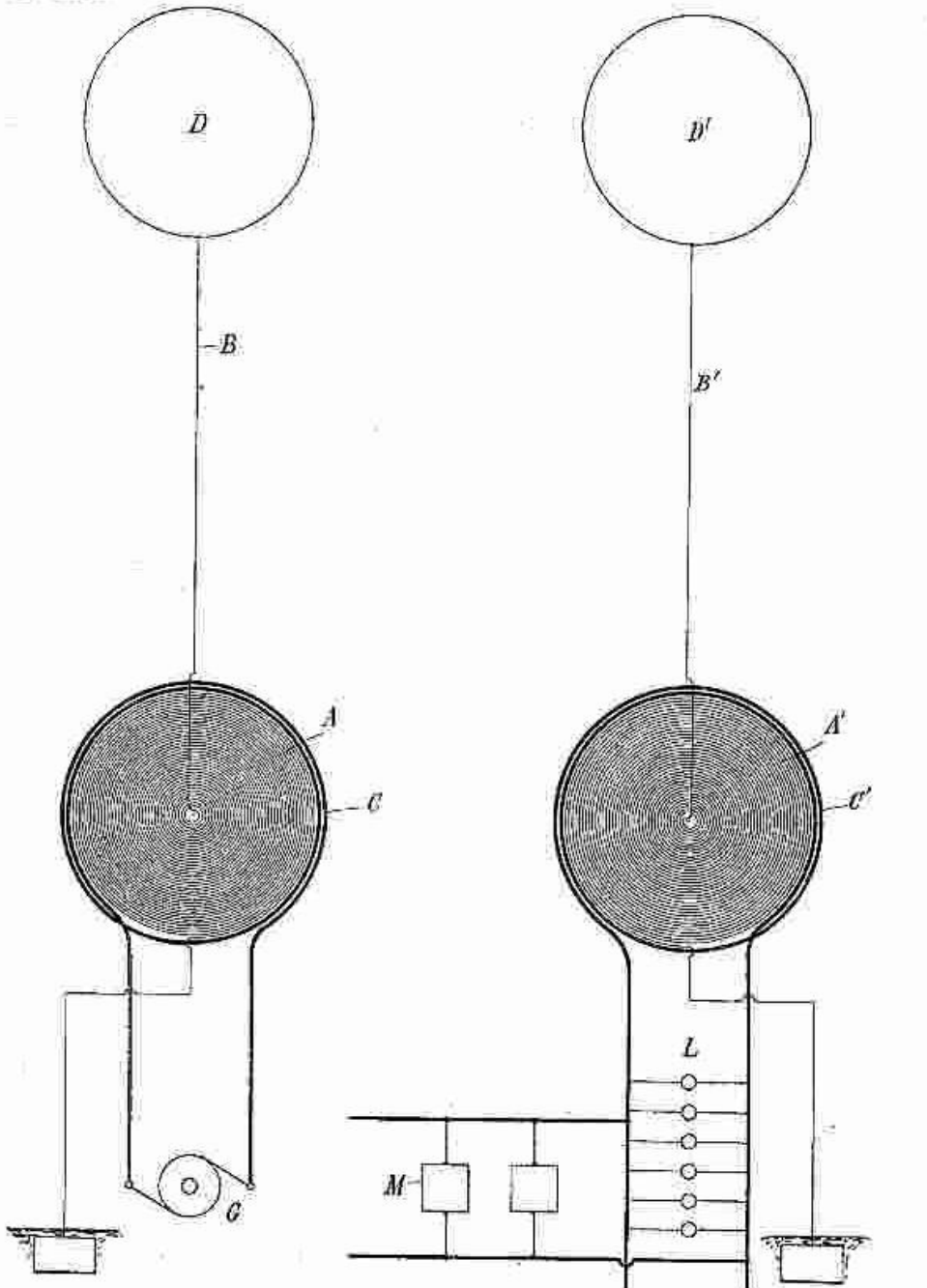

Witnesses:
Benjamin Miller.
G. W. Maerting

Nikola Tesla, Inventor
by Kerr, Page & Cooper
Attys

3: 1,119,732 'Apparatus for Transmitting Electrical Energy'.

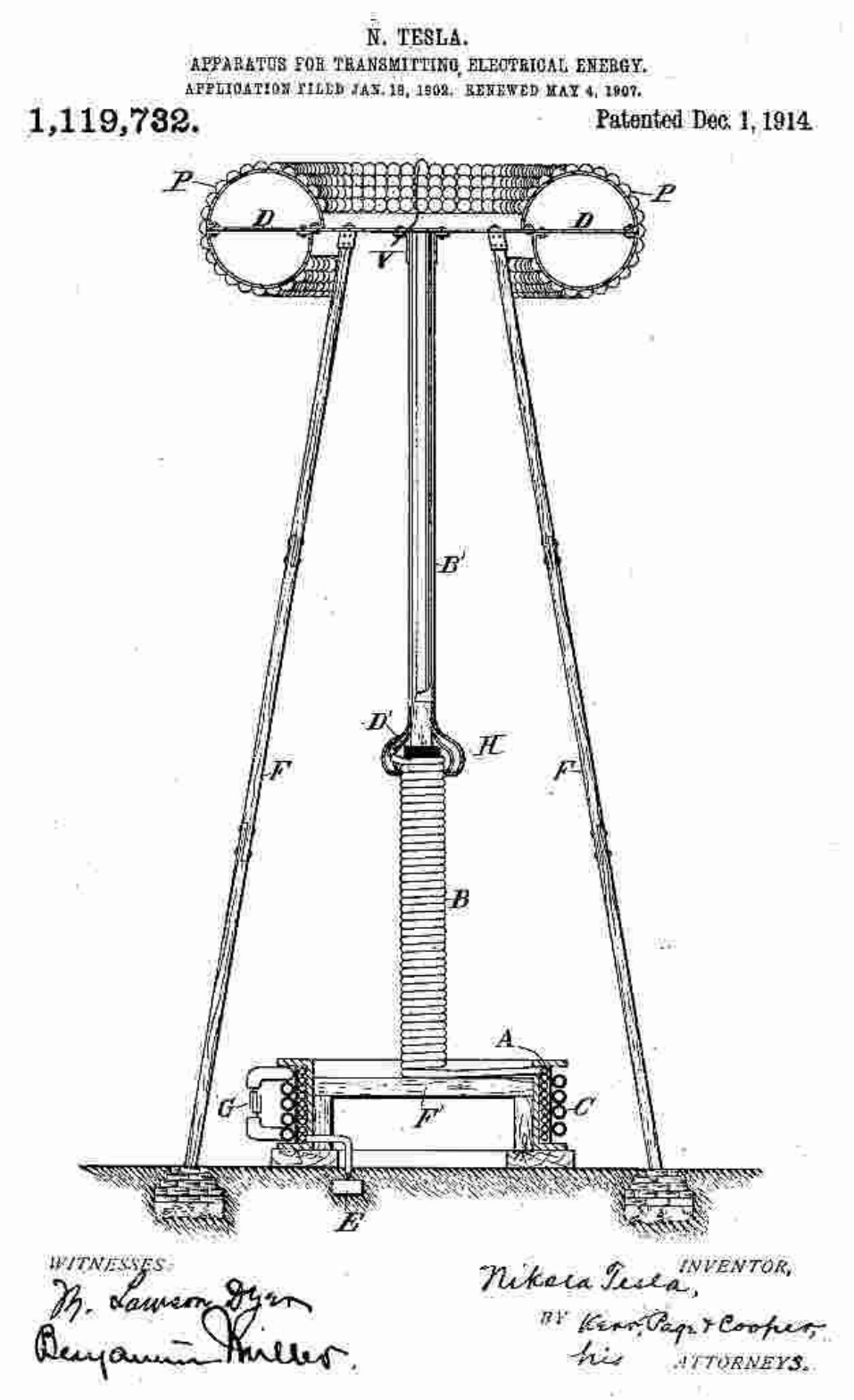

Principle of transmitting:

1. High elevation (~60 m)
2. High electromotive force make air discharge around top of transmitter (make more and more ionisation and heating in passing time of transmitting, and it create tunnel to low pressure air stratosphere).
3. High frequency current pass through ionized air to low pressure stratosphere (capacitance: 1/(2*PI*f*C) and conducting: R current).
4. Capacitance of Earth between ground and low pressure air stratosphere is all around the Earth conductor.

Tesla's stationary waves observation from Colorado Springs:

When thundering was ending, about 20 minutes after, instrument in his laboratory was start measure the same signal from Earth.
And again, and again, in that interval. All night, after thundering was gone.
Interesting stuff is lifetime of that phenomenon. High voltage thunders, transform Earth conduction in long lived oscilation system.
Tesla think, that it is of great important, and can be make with his transformer (need of high voltage).
Earth stationary waves. It need more investigation. Why about 20 minutes interval of repeating?

This are Tesla's patents for receiver:

1: 685,953 'Method of Intensifying and Utilizing Effects Transmitted through Natural Media' (like 685,955).

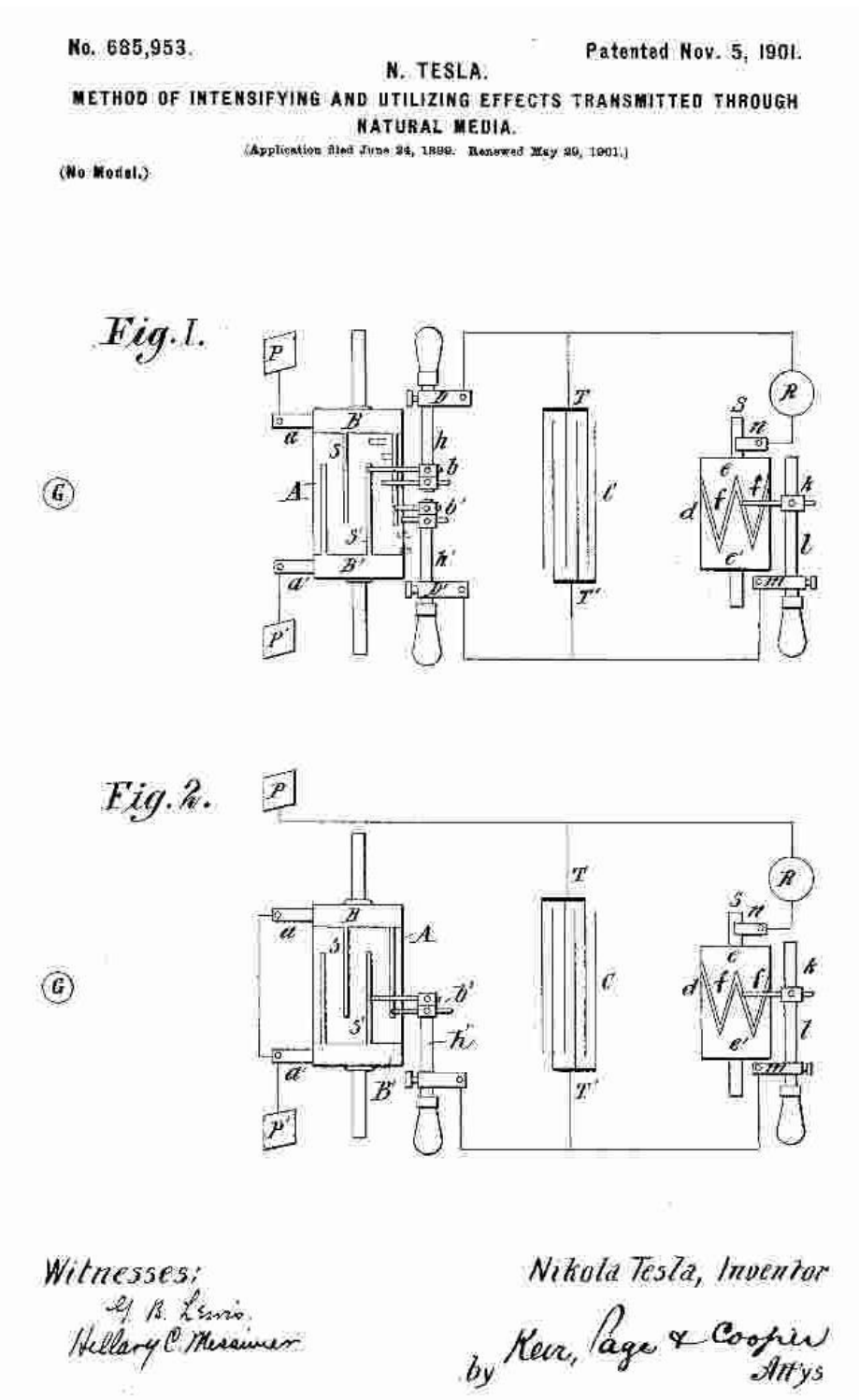
No. 685,953. Patented Nov. 5, 1901.

N. TESLA.

METHOD OF INTENSIFYING AND UTILIZING EFFECTS TRANSMITTED THROUGH NATURAL MEDIA.

(Application filed June 24, 1899. Renewed May 29, 1901.)

(No Model.)

Fig. 1.

Fig. 2.

Witnesses:
G. B. Lewis
Hillary C. Messimer

Nikola Tesla, Inventor
by Kerr, Page & Cooper
Att'ys

2: 685,955 'Apparatus for Utilizing Effects Transmitted from Distance to a Receiving Device Through Natural Media'.

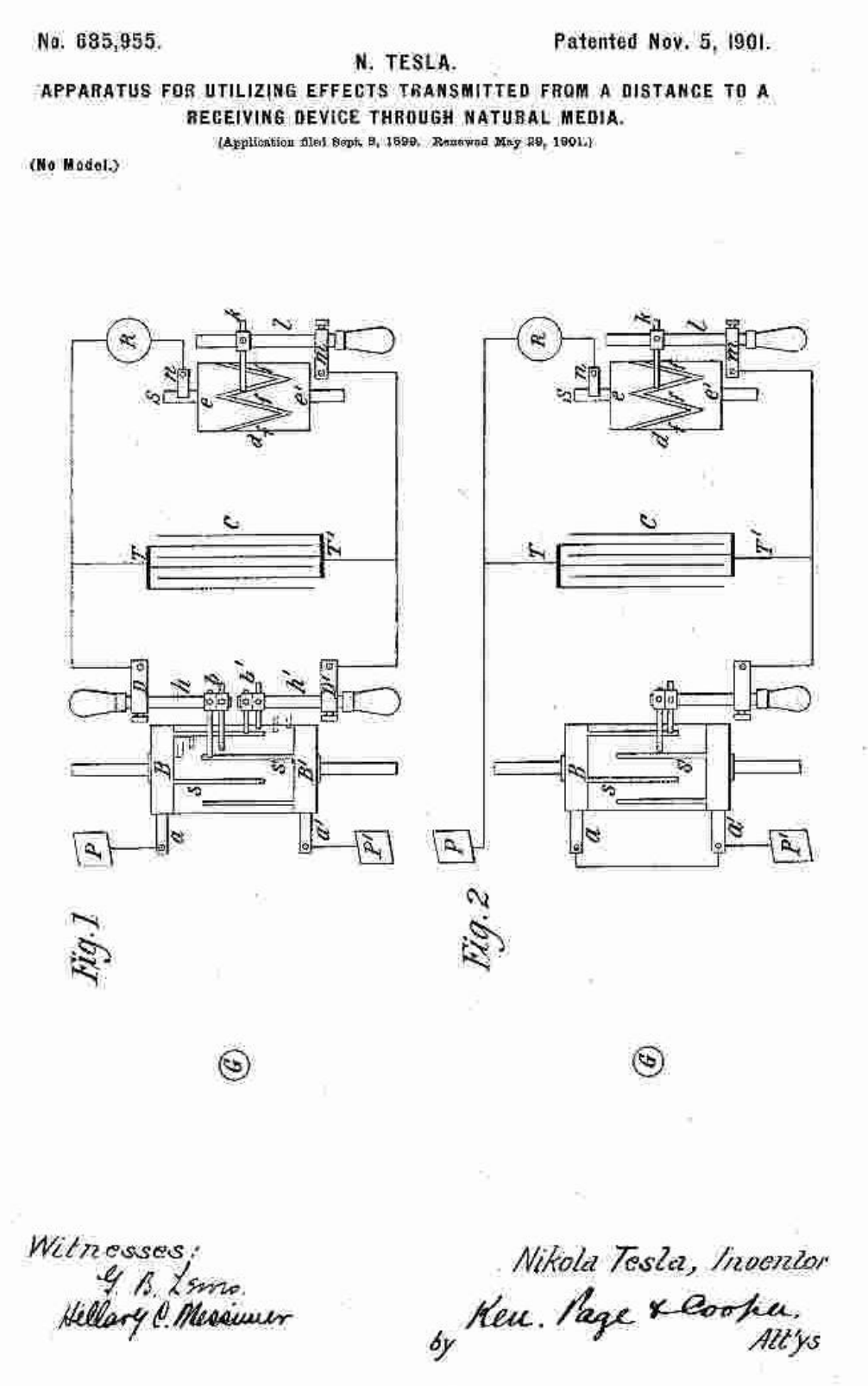

No. 685,955. Patented Nov. 5, 1901.

N. TESLA.

APPARATUS FOR UTILIZING EFFECTS TRANSMITTED FROM A DISTANCE TO A RECEIVING DEVICE THROUGH NATURAL MEDIA.

(Application filed Sept. 9, 1899. Renewed May 29, 1901.)

(No Model.)

Fig. 1

Fig. 2

Witnesses:
G. B. Lamo.
Hellary C. Messimer

Nikola Tesla, Inventor
by Kerr. Page & Cooper.
Att'ys

Principle of receiving:

1. Resonance circuit.
2. Two places grounding for different wave point using. Electrical wave has movement in ground. With two point it has electro potencial and can be use one wire connection.

Free energy from earth?

(look at patents picture)
This is important patents, and need experiments. Two plates in the ground. First rotating switch is like mechanical diode for resonant frequency.
Problem with diode is diode barriers. This mechanical switching device has not barriers, and can be mechanicaly synchronise with some frequency.
This is on input of device. Second rotating part is for descharge in right time.
My thoughts go on, and I ask myself: Is thundering from all over the Earth, source of lot of frequency? Solar bombarding on stratosphere?
Can be posible make lot of different radius switching device on the same shaft, which are for different frequency and charge more than one capacitor?
And how much energy can be get?
Is there a lot of energy? It need experiments...
Second rotating switch can be replace with diode, but first can't (barrier), if voltage on capacitor is greater than 0.6 volt (silicon diode).
This rotating swiching device is used in Tesla patents when he detect high radiant energy. One plates in the ground and one in the air, exposed to rays. And swithing device charge capacitor.
It need research. My or yours, who care?

COAXIAL CABLE PRINCIPLE OF TRANSMISSION:

SCHUMANN EARTH FREQUENCY:

n	real	equation
1	7.83	7.83
2	13.7	13.82
3	19.6	19.71
4	25.5	25.59
5	31.4	31.43
6	37.3	37.30
7	43.2	43.15

MY EQUATION:

$$f = 5.86 * \sqrt{n\ (n + \pi/4)}$$

$5.86 \sim c / (8Re)\quad Re = 6\ 378\ 137\ [m]$

COAXIAL CABLE TRANSMISSION:

Earth is great capacitor and has some inductance too. It is like great coaxial cable. With high electromotive force it can use for transmission of energy.
I put here my simplify equation for Earth Schumann frequencys. In standard equation my change is in (n+1) parameter with (n+PI/4). Constant is near c/(8R). 4R is path through Earth and back.
That resonant frequency is change it day/night time with little oscilation around that. If more X-ray come from Sun to the Earth, frequency go little up. If more protons come to the Earth from Sun, it going down.
This equation is middle aproximation for Schumann frequencys, and is good enough.
If solar energy can change that oscilation, Tesla's transformer can change that too.
Through coaxial cable can be send more high frequency, and can be generate stationar waves.
In my mind I use that model for understanding Tesla's style of transmission. It is not electromagnetic wave emissions. It is current transmission through Earth capacitance and inductance (like in coaxial cable).
And receiver can use differences of electromotive force on two different places of that transmission Earth line.
I think that Tesla will succeed, but the world was not ready.

Patents about receive radiant energy:

1: 685,957 'Apparatus for the Utilization of Radiant Energy'.

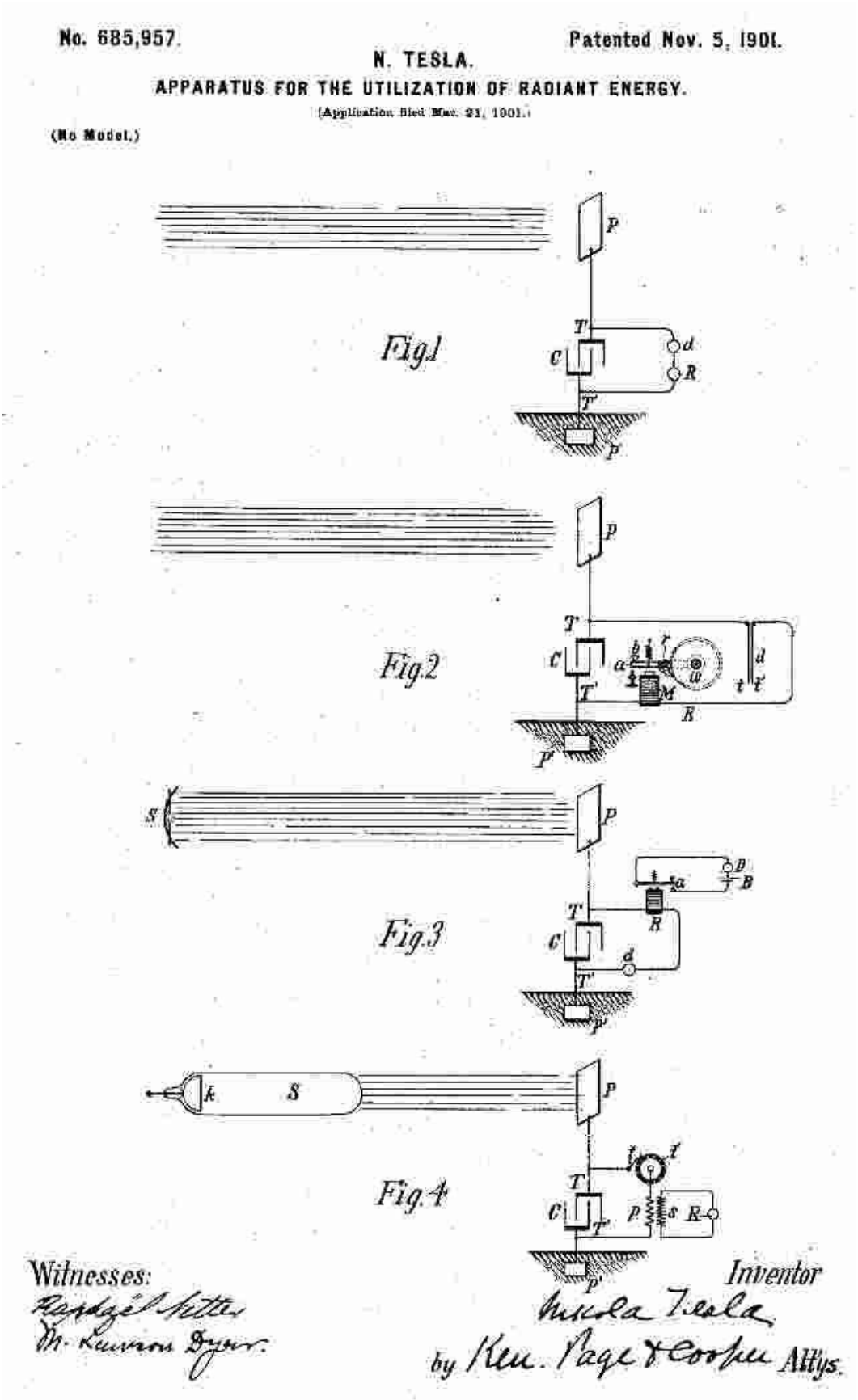

2: 685,958 'Method of Utilizing Radiant Energy'.

455-619 AU 233 EX
FIP8106 OR 685,958

No. 685,958. Patented Nov. 5, 1901.

N. TESLA.

METHOD OF UTILIZING RADIANT ENERGY.

(Application filed Mar. 21, 1901.)

(No Model.)

Electric stepping motor energized by corpuscular energy from sun

Fig.1

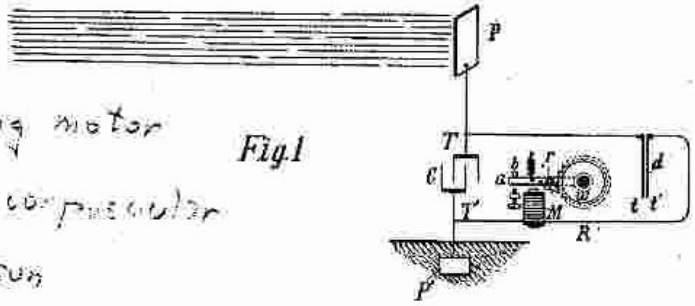

No rays.

Fig.2

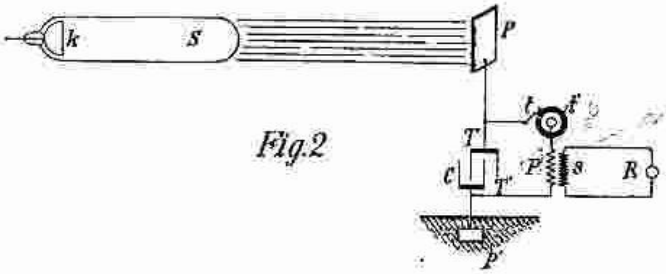

Witnesses:
Raphael Netter
M. Lawson Dyer

Nikola Tesla, Inventor
by Kerr, Page & Cooper Attys

This two patents are very important, and it can be put in part of 'Energy of space' on this web pages.
But because connection with upper Tesla's system, I will explain it here.
Principles for understanding in this patents are simple. When solar or other energy photons comes to plates elevating in air, it generate current in capacitor which is connecting to earth (grounded) plate.
Why? We have high potential between stratosphere and Earth. Some current are always here, because of that. High energy photons or particles ionize and plate became source of energy.
Capacitor must be the best, without self-discharge.
It looks like little source of energy.
But what will be if we virtual increase surface of plate with ionize air around plate with source of X-ray or UV-ray or other? Sun absorb UV waves when ozone is here.
Is Tesla thinking about using this system near his high voltage transmitter, which generate ionization around, and with this principle collect high Sun energy, with this virtual high surface solar panel?
It need more experiments, and maybe this low energy solar collector, can become high free energy source.
Just a thoughts!

Because of not understanding Tesla's principle, important thoughts from Nikola Tesla (pat. 649,621), if someone think it is radiant (wave) system:

"**It is to be noted that the phenomenom here involved in the transmission of electrical energy is one of true conduction and is not to be confounded with the phenomena of electrical radiation which from the very nature and mode of propagation would render practically impossible the transmission of any appreciable amount of energy to such distances as are of practical importance."**

Another one:

"To be more explicit, I take a very large self-inductance and a comparatively small capacity, which I have constructed in a certain way so that the electricity cannot leak out. I thus obtain a low frequency; but, as you know, the electromagnetic radiation is proportionate to the square root of the capacity divided by the self-induction. I do not permit the energy to go out; I accumulate in that circuit a tremendous energy. When the high potential is attained, if I want to give off electromagnetic waves, I do so, but I prefer to reduce these waves in quantity and pass a current into the earth, because electromagnetic wave energy is not recoverable while that [earth] current is entirely recoverable, being the energy stored in an elastic system. You see, the apparatus which I have devised was an apparatus enabling one to produce tremendous differences of potential and currents in an antenna circuit. These requirements must be fulfilled, whether you transmit by currents of conduction, or whether you transmit by electromagnetic waves. You want high potential currents, you want a great amount of vibratory energy; but you can graduate this vibratory energy. By proper design and choice of wave lengths, you can arrange it so that you get, for instance, 5 percent in these electromagnetic waves and 95 percent in the current that goes through the earth. That is what I am doing. Or you can get, as these radio men, 95 percent in the energy of electromagnetic waves and only 5 percent in the energy of the current. . . . The apparatus is suitable for one or the other method. I am not producing radiation with my system; I am suppressing electromagnetic waves. . . . In my system, you should free yourself of the idea that there is radiation, that the energy is radiated. It is not radiated; it is conserved.

Because of that earth currents, put horizontal or vertical antena position, has no changing in connection betwean transmitter and receiver. If mountain is between them, it is not important, because current go through earth.
It is one wire system, and capacity is for return path.
It is like water pipe with oscilating piston on one end, and commpression chamber on other end.
If we have 30 m of capacity disk on 60 m of high, and distance between ionosphere is more than 100 km, with 50 kHz frequency, this capacity will have about 100 Mohm.
Great energy can pass through this on 50 million volt. Ionisation around disk, virtualy increase capacity, and heating and ionisation of air, increase conducting path to ionosphere too.
Tesla's wireless system for transmittion of energy is simple and come from genius mind.
I write this, only for historical reason. If we have energy source everywhere (from heat around us), it will be the best approach, and could not be ignore or control like this wireless system.

(...Work in progress notes...)

My inductance equation is good, but problem is with self capacitance. I have in mind few equations, but sometimes work, sometimes don't. It is different for using input power, and voltage on coil.
It need lot of real mesurement. I have Tesla's from Colorado, but when try with little coil (from modern experiment), it is not good.
I will try to put thing together. I am not satisfied with equation which are in use. This fantastic machine need batter understanding.

Spark gap (rotary or not), can be replace with thiristors in series, with optical switching. It not need resonant frequency switching, and impulse discharge (like with motor switch) will be good approach. Thyristore need be good conductor for resonant frequency oscillation, and for low switching.
System with primar/secundar coil, withouth magnify coil, is bad approach, and I will go in Tesla's direction. It is way to reduce losses in conversion of power.
I like this part of teoretical investigation, based on real measurement.
This is 'Transmission line theory' way to go. Thanks all guy who are first thinkers in this direction. I think, it was Tesla's way too.
Explanation will come, with some new ideas for secondary coil.
I am add new equation for C in extra coil. It need more experiment testing, and improvement.
Inductance and parasitic capacitance are near experimental measurement (I collect data...). Basic resonant frequency is very close to real measurement, when put this two equations together. It is big step!
I like picture with bell ringing, which I found on web. Thanks all Tesla-guys from internet, because of their work and thoughts.
Bell clapper work on lower frequency, and bell ringing on his own (first secondary coil is 'clapper' for extra coil, and don't need resonant work, because work like classical transformer, and need hard connection with primar oscillator, for good energy transfer).
Frequency is (example) four time or more less than extra coil resonant 'ringing'. Best effect (need more investigation) will be if that 4 or more lower frequency is subharmonic of extra coil 'ringing'. This system with extra coil better than 2 coil system. Energy looses in 2 coil system are greater. This different style of work is important for understanding Tesla's extra-coil system.

Nikola Tesla's Long Range Weapon
Oliver Nichelson, 333N-760E, Am. Fork, Utah 84003, Copyright 1989

The French ship Iena blew up in 1907. Electrical experts were sought by the press for an explanation. Many thought the explosion was caused by an electrical spark and the discussion was about the origin of the ignition.

Lee De Forest, inventor of the Audion vacuum tube adopted by many radio broadcasters, pointed out that Nikola Tesla had experimented with a "dirigible torpedo" capable of delivering such destructive power to a ship through remote control. He noted, though, Tesla also claimed that the same technology used for remotely controlling vehicles also could project an electrical wave of "sufficient intensity to cause a spark in a ship's magazine and explode it."

It was Spring of 1924, however, that the time seemed best for "death rays," for that year many newspapers carried several stories about their invention in different parts of the world. Harry Grindell-Matthews of London lead the contenders in this early Star Wars race. The New York Times of May 21st had this report:

Paris, May 20 - If confidence of Grindell Mathew (sic), inventor of the so-called "diabolical ray," in his discovery is justified it may become possible to put the whole of an enemy army out of action, destroy any force of airplanes attacking a city or paralyze any fleet venturing within a certain distance of the coast by invisible rays.

Grindell-Matthews stated that his destructive rays would operate over a distance of four miles and that the maximum distance for this type of weapon would be seven or eight miles.

"Tests have been reported where the ray has been used to stop the operation of automobiles by arresting the action of the magnetos, and an quantity of gunpowder is said to have been exploded by playing the beams on it from a distance of thirty-six feet."

Grindell-Matthews was able, also, to electrocute mice, shrivel plants, and light the wick of an oil lamp from the same distance away.

Sensing something of importance the *"New York Times"* copyrighted its story on May 28th on a ray weapon developed by the Soviets. The story opened:
News has leaked out from the Communist circles in Moscow that behind Trotsky's recent war-like utterance lies an electromagnetic invention, by a Russian engineer named Grammachikoff for destroying airplanes.

Tests of the destructive ray, the Times continued, had began the previous August with the aid of German technical experts. A large scale demonstration at Podosinsky Aerodome near Moscow was so successful that the revolutionary Military Council and the Political Bureau decided to fund enough electronic anti-aircraft stations to protect sensitive areas of Russia. Similar, but more powerful, stations were to be constructed to disable the electrical mechanisms of warships.

The Commander of the Soviet Air Services, Rosenholtz, was so overwhelmed by the ray weapon demonstration that he proposed "to curtail the activity of the air fleet, because the invention rendered a large air fleet unnecessary for the purpose of defense."

Picking up the death ray stories on the wire services on the other side of the world, the *"Colorado Springs Gazette,"* ran a local interest item on May 30th. With the headline: "Tesla Discovered 'Death Ray' in Experiments He Made Here," the story recounted, with a feeling of local pride, the inventor's 1899 researches financed by John Jacob Astor.

Tesla's Colorado Springs tests were well remembered by local residents. With a 200 foot pole topped by a large copper sphere rising above his laboratory he generated potentials that discharged lightning bolts up to 135 feet long. Thunder from the released energy could be heard 15 miles away in Cripple Creek. People walking along the streets were amazed to see sparks jumping between their feet and the ground, and flames of electricity would spring from a tap when anyone turned them on for a drink of water. Light bulbs within 100 feet of the experimental tower glowed when they were turned off. Horses at the livery stable received shocks through their metal shoes and bolted from the stalls. Even insects were affected: Butterflies became electrified and "helplessly swirled in circles - their wings spouting blue halos of 'St. Elmo's Fire.'"

The most pronounced effect, and the one that captured the attention of death ray inventors, occurred at the Colorado Springs Electric Company generating station. One day while Tesla was conducting a high power test, the crackling from inside the laboratory suddenly stopped. Bursting into the lab Tesla demanded to know why his assistant had disconnected the coil. The assistant protested that had not touched anything. The power from the city's generator, the assistant said, must have quit. When the angry Tesla telephoned the power company he received an equally angry reply that the electric company had not cut the power, but that Tesla's experiment had destroyed the generator!

The inventor explained to *"The Electrical Experimenter,"* in August of 1917 what had happened. While running his transmitter at a power level of "several hundred kilowatts" high frequency currents were set up in the electric company's generators. These powerful currents "caused heavy sparks to jump thru the winds and destroy the insulation." When the insulation failed, the generator shorted out and was destroyed.

Some years later, 1935, he elaborated on the destructive potential of his transmitter in the February issue of *"Liberty"* magazine:

"My invention requires a large plant, but once it is established it will be possible to destroy anything, men or machines, approaching within a radius of 200 miles."

He went on to make a distinction between his invention and those brought forward by others. He claimed that his device did not use any so-called "death rays" because such radiation cannot be produced in large amounts and rapidly becomes weaker over distance. Here, he likely had in mind a Grindell-Matthews type of device which, according to contemporary reports, used a powerful ultra-violet beam to make the air conducting so that high energy current could be directed to the target. The range of an ultra-violet searchlight would be much less than what Tesla was claiming. As he put it: "all the energy of New York City (approximately two million horsepower [1.5 billion watts]) transformed into rays and projected twenty miles, would not kill a human being." On the contrary, he said:
My apparatus projects particles which may be relatively large or of microscopic dimensions, enabling us to convey to a small area at a great distance trillions of times more energy than is possible with rays of any kind. Many thousands of horsepower can be thus transmitted by a stream thinner than a hair, so that nothing can resist.

Apparently what Tesla had in mind with this defensive system was a large scale version of his Colorado Springs lightning bolt machine. As airplanes or ships entered the electric field of his charged tower, they would set up a conducting path for a stream of high energy particles that would destroy the intruder's electrical system.

A drawback to having giant Tesla transmitters poised to shoot bolts of lightning at an enemy approaching the coasts is that they would have to be located in an uninhabited area equal to its circle of protection. Anyone stepping into the defensive zone of the coils would be sensed as an intruder and struck down. Today, with the development of oil drilling platforms, this disadvantage might be overcome by locating the lightning defensive system at sea.

As ominous as death ray and beam weapon technology will be for the future, there is another, more destructive, weapon system alluded to in Tesla's writings.

When Tesla realized, as he pointed out in the 1900 Century article, "The Problem of Increasing Human Energy," that economic forces would not allow the development of a new type of electrical generator able to supply power without burning fuel he "was led to recognize [that] the transmission of electrical energy to any distance through the media as by far the best solution of the great problem of harnessing the sun's energy for the use of man." His idea was that a relatively few generating plants located near waterfalls would supply his very high energy transmitters which, in turn, would send power through the earth to be picked up wherever it was needed.

The plan would require several of his transmitters to rhythmically pump huge amounts of electricity into the earth at pressures on the order of 100 million volts. The earth would become like a huge ball inflated to a great electrical potential, but pulsing to Tesla's imposed beat.

Receiving energy from this high pressure reservoir only would require a person to put a rod into the ground and connect it to a receiver operating in unison with the earth's electrical motion.

As Tesla described it, "the entire apparatus for lighting the average country dwelling will contain no moving parts whatever, and could be readily carried about in a small valise."

However, the difference between a current that can be used to run, say, a sewing machine and a current used as a method of destruction, however, is a matter of timing. If the amount of electricity used to run a sewing machine for an hour is released in a millionth of a second, it would have a very different, and negative, effect on the sewing machine.

Tesla said his transmitter could produce 100 million volts of pressure with currents up to 1000 amperes which is a power level of 100 billion watts. If it was resonating at a radio frequency of 2 MHz, then the energy released during one period of its oscillation would be 100,000,000,000,000,000 (10^{16}) Joules of energy, or roughly the amount of energy released by the explosion of 10 megatons of TNT.

Such a transmitter, would be capable of projecting the energy of a nuclear warhead by radio. Any location in the world could be vaporized at the speed of light.

Not unexpectedly, many scientists doubted the technical feasibility of Tesla's wireless power transmission scheme whether for commercial or military purposes. The secret of how through-the-earth broadcast power was found not in the theories of electrical engineering, but in the realm of high energy physics.

Dr. Andrija Puharich, in 1976, was the first to point out that Tesla's power transmission system could not be explained by the laws of classical electrodynamics, but, rather, in terms of relativistic transformations in high energy fields. He noted that according to Dirac's theory of the electron, when one of those particles encountered its oppositely charged member, a positron, the two particles would annihilate each other. Because energy can neither be destroyed nor created the energy of the two former particles are transformed into an electromagnetic wave. The opposite, of course, holds true. If there is a strong enough electric field, two opposite charges of electricity are formed where there was originally no charge at all. This type of transformation usually takes place near the intense field near an atomic nucleus, but it can also manifest without the aid of a nuclear catalyst if an electric field has enough energy. Puharich's involved mathematical treatment demonstrated that power levels in a Tesla transmitter were strong enough to cause such pair production.

The mechanism of pair production offers a very attractive explanation for the ground transmission of power. Ordinary electrical currents do not travel far through the earth. Dirt has a high resistance to electricity and quickly turns currents into heat energy that is wasted. With the pair production method electricity can be moved from one point to another without really having to push the physical particle through the earth - the transmitting source would create a strong field, and a particle would be created at the receiver.

If the sending of currents through the earth is possible from the viewpoint of modern physics, the question remains of whether Tesla actually demonstrated the weapons application of his power transmitter or whether it remained an unrealized plan on the part of the inventor. Circumstantial evidence points to there having been a test of this weapon.

The clues are found in the chronology of Tesla's work and financial fortunes between 1900 and 1915.

1900:

- Tesla returned from Colorado Springs after a series of important tests of wireless power transmission. It was during these tests that his magnifying transmitter sent out waves of energy causing the destruction of the power company's generator.
- He received financial backing from J. Pierpont Morgan of $150,000 to build a radio transmitter for signaling Europe. With the first portion of the money he obtained 200 acres of land at Shoreham, Long Island and built an enormous tower 187 feet tall topped with a 55 ton, 68 foot metal dome. He called the research site "Wardenclyffe."
- As Tesla was just getting started, investors were rushing to buy stock offered by the Marconi company. Supporters of the Marconi Company include his old adversary Edison.
- On December 12th, Marconi sent the first transatlantic signal, the letter "S," from Cornwall, England to Newfoundland. He did this with, as the financiers noted, equipment much less costly than that envisioned by Tesla.

1902:

- Marconi is being hailed as a hero around the world while Tesla is seen as a shirker by the public for ignoring a call to jury duty in a murder case (he was excused from duty because of his opposition to the death penalty).

1903:

- When Morgan sent the balance of the $150,000, it would not cover the outstanding balance Tesla owed on the Wardenclyffe construction. To encourage a larger investment in the face of Marconi's success, Tesla revealed to Morgan his real purpose was not to just send radio signals but the wireless transmission of power to any point on the planet. Morgan was uninterested and declined further funding.
- A financial panic that Fall put an end to Tesla's hopes for financing by Morgan or other wealthy industrialists. This left Tesla without money even to buy the coal to fire the transmitter's electrical generators.

1904:

- Tesla writes for the *"Electrical World"*, "The Transmission of Electrical Energy Without Wires," noting that the globe, even with its great size, responds to electrical currents like a small metal ball. Tesla declares to the press the completion of Wardenclyffe.
- The Colorado Springs power company sues for electricity used at that experimental station. Tesla's Colorado laboratory is torn down and is sold for lumber to pay the $180 judgement; his electrical equipment is put in storage.

1905:

- Electrotherapeutic coils are manufactured at Wardenclyffe for hospitals and researchers to help pay bills. Tesla is sued by his lawyer for non-payment of a loan. In an article, Tesla comments on Peary's expedition to the North Pole and tells of his, Tesla's, plans for energy transmission to any central point on the ground. Tesla is sued by C.J. Duffner, a caretaker at the experimental station in Colorado Springs, for wages.

1906:

- "Left Property Here; Skips; Sheriff's Sale," was the headline in the *"Colorado Springs Gazette"* for March 6th. Tesla's electrical equipment is sold to pay judgement of $928.57. George Westinghouse, who bought Tesla's patents for alternating current motors and generators in the 1880's, turns down the inventor's power transmission proposal. Workers gradually stop coming to the Wardenclyffe laboratory when there are no funds to pay them.

1907:

- When commenting on the destruction of the French ship Iena, Tesla noted in a letter to the *"New York Times"* that he has built and tested remotely controlled torpedoes, but that electrical waves would be more destructive. "As to projecting wave energy to any particular region of the globe… this can be done by my devices," he wrote. Further, he claimed that "the spot at which the desired effect is to be produced can be calculated very closely, assuming the accepted terrestrial measurements to be correct."

1908:

- Tesla repeated the idea of destruction by electrical waves to the newspaper on April 21st. His letter to the editor stated, "When I spoke of future warfare I meant that it should be conducted by direct application of electrical waves without the use of aerial engines or other implements of destruction." He added: "This is not a dream. Even now wireless power plants could be constructed by which any region of the globe might be rendered uninhabitable without subjecting the population of other parts to serious danger or inconvenience."

1915:

- Again, in another letter to the editor, Tesla stated: "It is perfectly practical to transmit electrical energy without wires and produce destructive effects at a distance. I have already constructed a wireless transmitter which makes this possible… When unavoidable, the [transmitter] may be used to destroy property and life."

Important to this chronology is the state of Tesla's mental health. One researcher, Marc J. Seifer, a psychologist, believes Tesla suffered a nervous breakdown catalyzed by the death of one the partners in the Tesla Electric Company and the shooting of Stanford White, the noted architect, who had designed Wardenclyffe. Seifer places this in 1906 and cites as evidence a letter from George Scherff, Tesla's secretary:
Wardenclyffe, 4/10/1906
Dear Mr. Tesla:
I have received your letter and am very glad to know you are vanquishing your illness. I have scarcely ever seen you so out of sorts as last Sunday; and I was frightened.

In the period from 1900 to 1910 Tesla's creative thrust was to establish his plan for wireless transmission of energy. Undercut by Marconi's accomplishment, beset by financial problems, and spurned by the scientific establishment, Tesla was in a desperate situation by mid-decade. The strain became too great by 1906 and he suffered an emotional collapse. In order to make a final effort to have his grand scheme recognized, he may have tried one high power test of his transmitter to show off its destructive potential. This would have been in 1908.

The Tunguska event took place on the morning of June 30th, 1908.

An explosion estimated to be equivalent to 10-15 megatons of TNT flattened 500,000 acres of pine forest near the Stony Tunguska River in central Siberia. Whole herds of reindeer were destroyed. The explosion was heard over a radius of 620 miles. When an expedition was made to the area in 1927 to find evidence of the meteorite presumed to have caused the blast, no impact crater was found. When the ground was drilled for pieces of nickel, iron, or stone, the main constituents of meteorites, none were found down to a depth of 118 feet.

Many explanations have been given for the Tunguska event. The officially accepted version is that a 100,000 ton fragment of Encke's Comet, composed mainly of dust and ice, entered the atmosphere at 62,000 mph, heated up, and exploded over the earth's surface creating a fireball and shock wave but no crater. Alternative versions of the disaster see a renegade mini-black hole or an alien space ship crashing into the earth with the resulting release of energy.

Associating Tesla with the Tunguska event comes close to putting the inventor's power transmission idea in the same speculative category as ancient astronauts. However, by looking at the above chronology, it can be seen that real historical facts point to the possibility that this event was caused by a test firing of Tesla's energy weapon.

In 1907 and 1908, Tesla wrote about the destructive effects of his energy transmitter. His Wardenclyffe transmitter was much larger than the Colorado Springs device that destroyed the power station's generator. His new transmitter would be capable of effects many orders of magnitude greater than the Colorado device. In 1915, he said he had already built a transmitter that "when unavoidable… may be used to destroy property and life." Finally, a 1934 letter from Tesla to J.P. Morgan, uncovered by Tesla biographer Margaret Cheney, seems to conclusively point to an energy weapon test. In an effort to raise money for his defensive system he wrote:

The flying machine has completely demoralized the world, so much so that in some cities, as London and Paris, people are in mortal fear from aerial bombing. The new means I have perfected affords absolute protection against this and other forms of attack... These new discoveries I have carried out experimentally on a limited scale, created a profound impression (emphasis added).

Again, the evidence is circumstantial but, to use the language of criminal investigation, Tesla had motive and means to be the cause of the Tunguska event. He also seems to confess to such a test having taken place before 1915. His transmitter could generate energy levels and frequencies that would release the destructive force of 10 megatons, or more, of TNT. And the overlooked genius was desperate.

The nature of the Tunguska event, also, is not inconsistent with what would happen during the sudden release of wireless power. No fiery object was reported in the skies at that time by professional or amateur astronomers as would be expected when a 200,000,000 pound object enters the atmosphere. The sky glow in the region, mentioned by some witnesses, just before the explosion may have come from the ground, as geological researchers discovered in the 1970's. Just before an earthquake the stressed rock beneath the ground creates an electrical effect causing the air to illuminate. If the explosion was caused by wireless energy transmission, either the geological stressing or the current itself would cause an air glow. Finally, there is the absence of an impact crater. Because there is no material object to impact, an explosion caused by broadcast power would not leave a crater.

Given Tesla's general pacifistic nature it is hard to understand why he would carry out a test harmful to both animals and the people who herded the animals even when he was in the grip of financial desperation. The answer is that he probably intended no harm, but was aiming for a publicity coup and, literally, missed his target.

At the end of 1908, the whole world was following the daring attempt of Peary to reach the North Pole. Peary claimed the Pole in the Spring of 1909, but the winter before he had returned to the base at Ellesmere Island, about 700 miles from the Pole. If Tesla wanted the attention of the international press, few things would have been more impressive than the Peary expedition sending out word of a cataclysmic explosion on the ice in the direction of the North Pole. Tesla, then, if he could not be hailed as the master creator that he was, could be seen as the master of a mysterious new force of destruction.

The test, it seems, was not a complete success. It must have been difficult controlling the vast amount of power in transmitter and guiding it to the exact spot Tesla wanted. Alert, Canada on Ellesmere Island and the Tunguska region are all on the same great circle line from Shoreham, Long Island. Both are on a compass bearing of a little more than 2 degrees along a polar path. The destructive electrical wave overshot its target.

Whoever was privy to Tesla's energy weapon demonstration must have been dismayed either because it missed the intended target and would be a threat to inhabited regions of the planet, or because it worked too well in devastating such a large area at the mere throwing of a switch thousands of miles away. Whichever was the case, Tesla never received the notoriety he sought for his power transmitter.

In 1915, the Wardenclyffe laboratory was deeded over to Waldorf-Astoria, Inc. in lieu of payment for Tesla's hotel bills. In 1917, Wardenclyffe was dynamited on orders of the new owners to recover some money from the scrap.

The evidence is only circumstantial. Perhaps Tesla never did achieve wireless power transmission through the earth. Maybe he made a mistake in interpreting the results of his radio tests in Colorado Springs and did not produce an effect engineers, then and now, know is a scientific impossibility. Perhaps the mental stress he suffered caused him to retreat completely to a fantasy world from which he would send out preposterous claims to reporters who gathered for his yearly, copy-making pronouncements on his birthday. Maybe the atomic bomb size explosion in Siberia near the turn of the century was the result of a meteorite no one saw fall.

Or, perhaps, Nikola Tesla did shake the world in a way that has been kept secret for over 80 years.

ON ELECTRICITY

by Nikola Tesla

Previous Article Next Article

(The Address On the Occasion of the Commemoration of the Introduction of Niagara Falls Power In Buffalo At the Ellicot Club, January 12, 1897)

Electrical Review, January 27, 1897

I have scarcely had courage enough to address an audience on a few unavoidable occasions, and the experience of this evening, even as disconnected from the cause of our meeting, is quite novel to me. Although in those few instances, of which I have retained agreeable memory, my words have met with a generous reception, I never deceived myself, and knew quite well that my success was not due to any excellency in the rhetorical or demonstrative art. Nevertheless, my sense of duty to respond to the request with which I was honored a few days ago was strong enough to overcome my very grave apprehensions in regard to my ability of doing justice to the topic assigned to me. It is true, at times—even now, as I speak—my mind feels full of the subject, but I know that, as soon as I shall attempt expression, the fugitive conceptions will vanish, and I shall experience certain well known sensations of abandonment, chill and silence. I can see already your disappointed countenances and can read in them the painful regret of the mistake in your choice.

These remarks, gentlemen, are not made with selfish desire of winning your kindness and indulgence on my shortcomings, but with the honest intention of offering you an apology for your disappointment. Nor are they made—as you might be disposed to think—in that playful spirit which, to the enjoyment of the listeners is often displayed by belated speakers. On the contrary, I am deeply earnest in my wish that I were capable of having the fire of eloquence kindled in me, that I might dwell in adequate terms on this fascinating science of electricity, on the marvelous development which electrical annals have recorded and which, as one of the speakers justly remarked, stamp this age as the Electrical Age, and particularly on the great event we are commemorating this day. Unfortunately, this my desire must remain unfulfilled, but I am hopeful that in my formless and incomplete statements, among the few ideas and facts I shall mention there may be something of interest and usefulness, something befitting this unique occasion.

Gentlemen, there are a number of features clearly discernible in, and characteristic of, human intellectual progress in more recent times—features which afford great comfort to the minds of all those who have really at heart the advancement and welfare of mankind.

First of all the inquiry, by the aid of the microscope and electrical instruments of precision, into the nature of our organs and senses, and particularly of those through which we commune directly with the outside world and through which knowledge is conveyed to our minds, has revealed their exact construction and mode of action, which is in conformity with simple and well established physical principles and laws. Hence the observations we make and the facts we ascertain by their help are *real* facts and observations, and our knowledge is *true* knowledge. To illustrate: Our knowledge of form, for instance, is dependent upon the positive fact that light propagates in straight lines, and, owing to this, the image formed by a lens is exactly similar to the object seen. Indeed, my thoughts in such fields and directions have led me to the conclusion that most all human knowledge is based on this simple truth, since practically every idea or conception—and therefore all knowledge—presupposes visual impressions. But if light would not propagate in accordance with the law mentioned, but in conformity with any other law which we might presently conceive, whereby not only the image might not bear any likeness to the object seen, but even the images of the same object at different times or distances might not resemble each other, then our knowledge of form would be very defective, for then we might see, for example, a three-cornered figure as a six or twelve-cornered one. With the clear understanding of the mechanism and mode of action of our organs, we remove all doubts as to the *reality* and *truth* of the impressions received from the outside, and thus we bar out—forever, we may hope—that unhealthy speculation and skepticism into which formerly even strong minds were apt to fall.

Let me tell you of another comforting feature. The progress in a measured time is nowadays more rapid and greater than it ever was before. This is quite in accordance with the fundamental law of motion, which commands acceleration and increase of momentum or accumulation of energy under the action of a continuously acting force and tendency, and is the more true as every advance weakens the elements tending to produce friction and retardation. For, after all, what *is* progress, or—more correctly—development, or evolution, if not a movement, infinitely complex and often unscrutinizable, it is true, but nevertheless exactly determined in quantity as well as in quality of motion by the physical conditions and laws governing? This feature of more recent development is best shown in the rapid merging together of the various arts and sciences by the obliteration of the hard and fast lines of separation, of borders, some of which only a few years ago seemed unsurpassable, and which, like veritable Chinese walls, surrounded every department of inquiry and barred progress. A sense of connectedness of the various apparently widely different forces and phenomena we observe is taking possession of our minds, a sense of deeper understanding of nature as a whole, which, though not yet quite clear and defined, is keen enough to inspire us with the confidence of vast realizations in the near future.

But these features chiefly interest the scientific man, the thinker and reasoner. There is another feature which affords us still more satisfaction and enjoyment, and which is of still more universal interest, chiefly because of its bearing upon the welfare of mankind. Gentlemen, there is an influence which is getting strong and stronger day by day, which shows itself more and more in all departments of human activity, and influence most fruitful and beneficial—the influence of the artist. It was a happy day for the mass of humanity when the artist felt the desire of becoming a physician, an electrician, an engineer or mechanician or—whatnot—a mathematician or a financier; for it was he who wrought all these wonders and grandeur we are witnessing. It was he who abolished that small, pedantic, narrow-grooved school teaching which made of an aspiring student a galley-slave, and he who allowed freedom in the choice of subject of study according to one's pleasure and inclination, and so facilitated development.

Some, who delight in the exercise of the powers of criticism, call this an asymmetrical development, a degeneration or departure from the normal, or even a degradation of the race. But they are mistaken. This is a welcome state of things, a blessing, a wise subdivision of labors, the establishment of conditions most favorable to progress. Let one concentrate all his energies in one single great effort, let him perceive a single truth, even though he be consumed by the sacred fire, then millions of less gifted men can easily follow. Therefore it is not as much quantity as quality of work which determines the magnitude of the progress.

It was the artist, too, who awakened that broad philanthropic spirit which, even in old ages, shone in the teachings of noble reformers and philosophers, that spirit which makes men in all departments and positions work not as much for any material benefit or compensation—though reason may command this also—but chiefly for the sake of success, for the pleasure there is in achieving it and for the good they might be able to do thereby to their fellow-men. Through his influence types of men are now pressing forward, impelled by a deep love for their study, men who are doing wonders in their respective branches, whose chief aim and enjoyment is the acquisition and spread of knowledge, men who look far above earthly things, whose banner is Excelsior! Gentlemen, let us honor the artist; let us thank him, let us drink his health!

Now, in all these enjoyable and elevating features which characterize modern intellectual development, electricity, the expansion of the science of electricity, has been a most potent factor. Electrical science has revealed to us the true nature of light, has provided us with innumerable appliances and instruments of precision, and has thereby vastly added to the exactness of our knowledge. Electrical science has disclosed to us the more intimate relation existing between widely different forces and phenomena and has thus led us to a more complete comprehension of Nature and its many manifestations to our senses. Electrical science, too, by its fascination, by its promises of immense realizations, of wonderful possibilities chiefly in humanitarian respects, has attracted the attention and enlisted the energies of the artist; for where is there a field in which his God-given powers would be of a greater benefit to his fellow-men than this unexplored, almost virgin, region, where, like in a silent forest, a thousand voices respond to every call?

With these comforting features, with these cheering prospects, we need not look with any feeling of incertitude or apprehension into the future. There are pessimistic men, who, with anxious faces, continuously whisper in your ear that the nations are secretly arming—arming to the teeth; that they are going to pounce upon each other at a given signal and destroy themselves; that they are all trying to outdo that victorious, great, wonderful German army, against which there is no resistance, for every German has the discipline in his very blood—every German is a soldier, But these men are in error. Look only at our recent experience with the British in that Venezuela difficulty. Two other nations might have crashed together, but not the Anglo-Saxons; they are too far ahead. The men who tell you this are ignoring forces which are continually at work, silently but resistlessly—forces which say Peace!

There is the genuine artist, who inspires us with higher and nobler sentiments, and makes us abhor strife and carnage. There is the engineer, who bridges gulfs and chasms, and facilitates contact and equalization of the heterogeneous masses of humanity. There is the mechanic, who comes with his beautiful time and energy-saving appliances, who perfects his flying machine, not to drop a bag of dynamite on a city or vessel, but to facilitate transport and travel. There, again, is the chemist, who opens new resources and makes existence more pleasant and secure; and there is the electrician, who sends his messages of peace to all parts of the globe. The time will not be long in coming when those men who are turning their ingenuity to inventing quick-firing guns, torpedoes and other implements of destruction—all the while assuring you that it is for the love and good of humanity—will find no takers for their odious tools, and will realize that, had they used their inventive talent in other directions; they might have reaped a far better reward than the sestertia received. And then, and none too soon the cry will be echoed everywhere. Brethren, stop these high-handed methods of the strong, these remnants of barbarism so inimical to progress! Give that valiant warrior opportunities for displaying a more commendable courage than that he shows when, intoxicated with victory, he rushes to the destruction of his fellow-men. Let him toil day and night with a small chance of achieving and yet be unflinching; let him challenge the dangers of exploring the heights of the air and the depths of the sea; let him brave the dread of the plague, the heat of the tropic desert and the ice of the polar region. Turn your energies to warding off the common enemies and danger, the perils that are all around you, that threaten you in the air you breathe, in the water you drink, in the food you consume. It is not strange, is it not shame, that we, beings in the highest state of development in this our world, beings with such immense powers of thought and action, we, the masters of the globe, should be absolutely at the mercy of our unseen foes, that we should not know whether a swallow of food or drink brings joy and life or pain and destruction to us! In this most modern and sensible warfare, in which the bacteriologist leads, the services electricity will render will prove invaluable. The economical production of high-frequency currents, which is now an accomplished fact, enables us to generate easily and in large quantities ozone for the disinfection of the water and the air, while certain novel radiations recently discovered give hope of finding effective remedies against ills of microbic origin, which have heretofore withstood all efforts of the

physician. But let me turn to a more pleasant theme.

I have referred to the merging together of the various sciences or departments of research, and to a certain perception of intimate connection between the manifold and apparently different forces and phenomena. Already we know, chiefly through the efforts of a bold pioneer, that light, radiant heat, electrical and magnetic actions are closely related, not to say identical. The chemist professes that the effects of combination and separation of bodies he observes are due to electrical forces, and the physician and physiologist will tell you that even life's progress is electrical. Thus electrical science has gained a universal meaning, and with right this age can claim the name "Age of Electricity."

I wish much to tell you on this occasion—I may say I actually burn for desire of telling you—what electricity really *is*, but I have very strong reasons, which my coworkers will best appreciate, to follow a precedent established by a great and venerable philosopher, and I shall not dwell on this purely scientific aspect of electricity.

There is another reason for the claim which I have before stated which is even more potent than the former, and that is the immense development in all electrical branches in more recent years and its influence upon other departments of science and industry. To illustrate this influence I only need to refer to the steam or gas engine. For more than half a century the steam engine has served the innumerable wants of man. The work it was called to perform was of such variety and the conditions in each case were so different that, of necessity, a great many types of engines have resulted. In the vast majority of cases the problem put before the engineer was not as it should have been, the broad one of converting the greatest possible amount of heat energy into mechanical power, but it was rather the specific problem of obtaining the mechanical power in such form as to be best suitable for general use. As the reciprocating motion of the piston was not convenient for practical purposes, except in very few instances, the piston was connected to a crank, and thus rotating motions was obtained, which was more suitable and preferable, though it involved numerous disadvantages incident to the crude and wasteful means employed. But until quite recently there were at the disposal of the engineer, for the transformation and transmission of the motion of the piston, no better means than rigid mechanical connections. The past few years have brought forcibly to the attention of the builder the electric motor, with its ideal features. Here was a mode of transmitting mechanical motion simpler by far, and also much more economical. Had this mode been perfected earlier, there can be no doubt that, of the many different types of engine, the majority would not exist, for just as soon as an engine was coupled with an electric generator a type was produced capable of almost universal use. From this moment on there was no necessity to endeavor to perfect engines of special designs capable of doing special kinds of work. The engineer's task became now to concentrate all his efforts upon one type, to perfect one kind of engine—the best; the universal, the engine of the immediate future; namely, the one which is best suitable for the generation of electricity. The first efforts in this direction gave a strong impetus to the development of the reciprocating high speed engine, and also to the turbine, which latter was a type of engine of very limited practical usefulness, but became, to a certain extent, valuable in connection with the electric generator and motor. Still, even the former engine, though improved in many particulars, is not radically changed, and even now has the same objectionable features and limitations. To do away with these as much as possible, a new type of engine is being perfected in which more favorable conditions for economy are maintained, which expands the working fluid with utmost rapidity and loses little heat on the walls, an engine stripped of all usual regulating mechanism—packings, oilers and other appendages—and forming part of an electric generator; and in this type, I may say, I have implicit faith.

The gas or explosive engine has been likewise profoundly affected by the commercial introduction of electric light and power, particularly in quite recent years. The engineer is turning his energies more and more in this direction, being attracted by the prospect of obtaining a higher thermodynamic efficiency. Much larger engines are now being built, the construction is constantly improved, and a novel type of engine, best suitable for the generation of electricity, is being rapidly evolved.

There are many other lines of manufacture and industry in which the influence of electrical development has been even more powerfully felt. So, for instance, the manufacture of a great variety of articles of metal, and especially of chemical products. The welding of metals by electricity, though involving a wasteful process, has, nevertheless, been accepted as a legitimate art, while the manufacture of metal sheet, seamless tubes and the like affords promise of much improvement. We are coming gradually, but surely, to the fusion of bodies and reduction of all kinds of ores—even of iron ores—by the use of electricity, and in each of these departments great realizations are probable. Again, the economical conversion of ordinary currents of supply into high-frequency currents opens up new possibilities, such as the combination of the atmospheric nitrogen and the production of its compounds; for instance, ammonia and nitric acid, and their salts, by novel processes.

The high-frequency currents also bring us to the realization of a more economical system of lighting; namely by means of phosphorescent bulbs or tubes, and enable us to produce with these appliances light of practically any candle-power. Following other developments in purely electrical lines, we have all rejoiced in observing the rapid strides made, which, in quite recent years, have been beyond our most sanguine expectations. To enumerate the many advances recorded is a subject for the reviewer, but I can not pass without mentioning the beautiful discoveries of Lenart and Roentgen, particularly the latter, which have found such a powerful response throughout the scientific world that they have made us forget, for a time, the great achievement of Linde in Germany, who has effected the liquefaction of air on an industrial scale by a process of continuous cooling: the discovery of argon by Lord Rayleigh

and Professor Ramsay, and the splendid pioneer work of Professor Dewar in the field of low temperature research. The fact that the United States have contributed a very liberal share to this prodigious progress must afford to all of us great satisfaction. While honoring the workers in other countries and all those who, by profession or inclination, are devoting themselves to strictly scientific pursuits, we have particular reasons to mention with gratitude the names of those who have so much contributed to this marvelous development of electrical industry in this country. Bell, who, by his admirable invention enabling us to transmit speech to great distances, has profoundly affected our commercial and social relations, and even our very mode of life; Edison, who, had he not done anything else beyond his early work in incandescent lighting, would have proved himself one of the greatest benefactors of the age; Westinghouse, the founder of the commercial alternating system; Brush, the great pioneer of arc lighting; Thomson, who gave us the first practical welding machine, and who, with keen sense, contributed very materially to the development of a number of scientific and industrial branches; Weston, who once led the world in dynamo design, and now leads in the construction of electric instruments; Sprague, who, with rare energy, mastered the problem and insured the success of practical electrical railroading; Acheson, Hall, Willson and others, who are creating new and revolutionizing industries here under our very eyes at Niagara. Nor is the work of these gifted men nearly finished at this hour. Much more is still to come, form fortunately, most of them are still full of enthusiasm and vigor. All of these men and many more are untiringly at work investigating new regions and opening up unsuspected and promising fields. Weekly, if not daily, we learn through the journals of a new advance into some unexplored region, where at every step success beckons friendly, and leads the toiler on to hard and harder tasks.

But among all these many departments of research, these many branches of industry, new and old, which are being rapidly expanded, there is one dominating all others in importance—one which is of the greatest significance for the comfort and welfare, not to say for the existence, of mankind, and that is the electrical transmission of power. And in this most important of all fields, gentlemen, long afterwards, when time will have placed the events in their proper perspective, and assigned men to their deserved places, the great event we are commemorating today will stand out as designating a new and glorious epoch in the history of humanity—an epoch grander than that marked by the advent of the steam engine. We have many a monument of past ages: we have the palaces and pyramids, the temples of the Greek and the cathedrals of Christendom. In them is exemplified the power of men, the greatness of nations, the love of art and religious devotion. But that monument at Niagara has something of its own, more in accord with our present thoughts and tendencies. It is a monument worthy of our scientific age, a true monument of enlightenment and of peace. It signifies the subjugation of natural forces to the service of man, the discontinuance of barbarous methods, the relieving of millions from want and suffering. No matter what we attempt to do, no matter to what fields we turn our efforts, we are dependent on power. Our economists may propose more economical systems of administration and utilization of resources, our legislators may make wiser laws and treaties, it matters little; that kind of help can be only temporary. If we want to reduce poverty and misery, if we want to give to every deserving individual what is needed for a safe existence of an intelligent being, we want to provide more machinery, more power. Power is our mainstay, the primary source of our many-sided energies. With sufficient power at our disposal we can satisfy most of our wants and offer a guaranty for safe and comfortable existence to all, except perhaps to those who are the greatest criminals of all—the voluntarily idle.

The development and wealth of a city, the success of a nation, the progress of the whole human race, is regulated by the power available. Think of the victorious march of the British, the like of which history has never recorded. Apart from the qualities of the race, which have been of great moment, they own the conquest of the world to—coal. For with coal they produce their iron; coal furnishes them light and heat; coal drives the wheels of their immense manufacturing establishments, and coal propels their conquering fleets. But the stores are being more and more exhausted; the labor is getting dearer and dearer, and the demand is continuously increasing. It must be clear to every one that soon some new source of power supply must be opened up, or that at least the present methods must be materially improved. A great deal is expected from a more economical utilization of the stored energy of the carbon in a battery; but while the attainment of such a result would be hailed as a great achievement; it would not be as much of an advance towards the ultimate and permanent method of obtaining power as some engineers seem to believe. By reasons both of economy and convenience we are driven to the general adoption of a system of energy supply from central stations, and for such purposes the beauties of the mechanical generation of electricity can not be exaggerated. The advantages of this universally accepted method are certainly so great that the probability of replacing the engine dynamos by batteries is, in my opinion, a remote one, the more so as the high-pressure steam engine and gas engine give promise of a considerably more economical thermodynamic conversion. Even if we had this day such an economical coal battery, its introduction in central stations would by no means be assured, as its use would entail many inconveniences and drawbacks. Very likely the carbon could not be burned in its natural form as in a boiler, but would have to be specially prepared to secure uniformity in the current generation. There would be a great many cells needed to make up the electro-motive force usually required. The process of cleaning and renewal, the handling of nasty fluids and gases and the great space necessary for so many batteries would make it difficult, if not commercially unprofitable, to operate such a plant in a city or densely populated district. Again if the station be erected in the outskirts, the conversion by rotating transformers or otherwise would be a serious and unavoidable drawback. Furthermore, the regulating appliances and other accessories which would have to be provided would probably make the plant fully as much, if not more, complicated than the present. We might, of course, place the batteries at or near the coal mine, and from there transmit the energy to distant points in the form of high-tension alternating currents obtained from rotating transformers, but even in this most favorable case the process would be a barbarous one, certainly more so than the present, as it would still involve the consumption of material, while at the same time it would restrict the engineer and mechanic in the exercise of their beautiful art. As to the energy supply in small isolated places as dwellings, I have placed my confidence in the development of a light storage battery, involving the use of chemicals manufactured

by cheap water power, such as some carbide or oxygen-hydrogen cell.

But we shall not satisfy ourselves simply with improving steam and explosive engines or inventing new batteries; we have something much better to work for, a greater task to fulfill. We have to evolve means for obtaining energy from stores which are forever inexhaustible, to perfect methods which do not imply consumption and waste of any material whatever. Upon this great possibility, which I have long ago recognized, upon this great problem, the practical solution of which means so much for humanity, I have myself concentrated my efforts since a number of years, and a few happy ideas which came to me have inspired me to attempt the most difficult, and given me strength and courage in adversity. Nearly six years ago my confidence had become strong enough to prompt me to an expression of hope in the ultimate solution of this all dominating problem. I have made progress since, and have passed the stage of mere conviction such as is derived from a diligent study of known facts, conclusions and calculations. I now feel sure that the realization of that idea is not far off. But precisely for this reason I feel impelled to point out here an important fact, which I hope will be remembered. Having examined for a long time the possibilities of the development I refer to, namely, that of the operation of engines on any point of the earth by the energy of the medium, I find that even under the theoretically best conditions such a method of obtaining power can not equal in economy, simplicity and many other features the present method, involving a conversion fo the mechanical energy of running water into electrical energy and the transmission of the latter in the form of currents of very high tension to great distances. Provided, therefore, that we can avail ourselves of currents of sufficiently high tension, a waterfall affords us the most advantageous means of getting power from the sun sufficient for all our wants, and this recognition has impressed me strongly with the future importance of the water power, not so much because of its commercial value, though it may be very great, but chiefly because of its bearing upon our safety and welfare. I am glad to say that also in this latter direction my efforts have not been unsuccessful, for I have devised means which will allow us the use in power transmission of electromotive forces much higher than those practicable with ordinary apparatus. In fact, progress in this field has given me fresh hope that I shall see the fulfillment of one of my fondest dreams; namely, the transmission of power from station to station without the employment of any connecting wire. Still, whatever method of transmission be ultimately adopted, nearness to the source of power will remain an important advantage.

Gentlemen, some of the ideas I have expressed may appear to many of you hardly realizable; nevertheless, they are the result of long-continued thought and work. You would judge them ore justly if you would have devoted your life to them, as I have done. With ideas it is like with dizzy heights you climb: At first they cause you discomfort and you are anxious to get down, distrustful of your own powers; but soon the remoteness of the turmoil of life and the inspiring influence of the altitude calm your blood; your step gets firm and sure and you begin to look—for dizzier heights. I have attempted to speak to you on "Electricity," its development and influence, but I fear that I have done it much like a boy who tries to draw a likeness with a few straight lines. But I have endeavored to bring out one feature, to speak to you in one strain which I felt sure would find response in the hearts of all of you, the only one worthy of this occasion—the humanitarian. In the great enterprise at Niagara we see not only a bold engineering and commercial feat, but far more, a giant stride in the right direction as indicated both by exact science and philanthropy. Its success is a signal for the utilization of water powers all over the world, and its influence upon industrial development is incalculable. We must all rejoice in the great achievement and congratulate the intrepid pioneers who have joined their efforts and means to bring it about. It is a pleasure to learn of the friendly attitude of the citizens of Buffalo and of the encouragement given to the enterprise by the Canadian authorities. We shall hope that other cities, like Rochester on this side and Hamilton and Toronto in Canada, will soon follow Buffalo's lead. This fortunate city herself is to be congratulated. With resources now unequaled, with commercial facilities and advantages such as few cities in the world possess, and with the enthusiasm and progressive spirit of its citizens, it is sure to become one of the greatest industrial centers of the globe.

(No Model.) 4 Sheets—Sheet 1.

N. TESLA.

ELECTRO MAGNETIC MOTOR.

No. 381,968. Patented May 1, 1888.

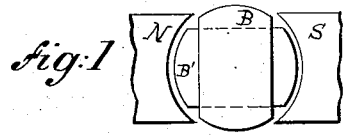

Fig: 1.

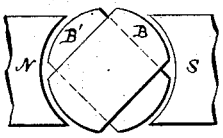

Fig: 2.

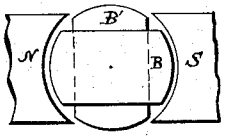

Fig: 3.

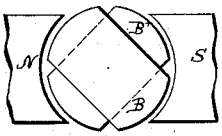

Fig: 4.

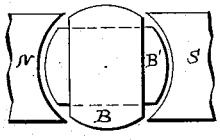

Fig: 5.

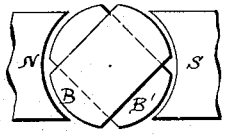

Fig: 6.

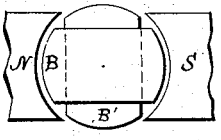

Fig: 7.

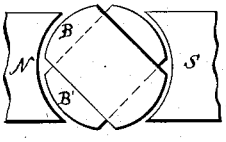

Fig: 8.

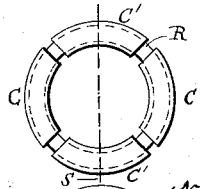

Fig: 1ª.

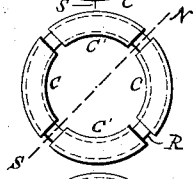

Fig: 2ª.

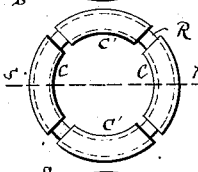

Fig: 3ª.

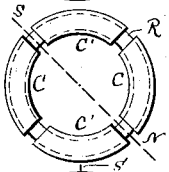

Fig: 4ª.

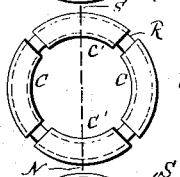

Fig: 5ª.

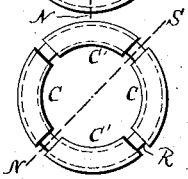

Fig: 6ª.

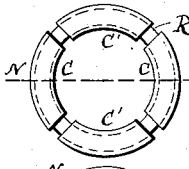

Fig: 7ª.

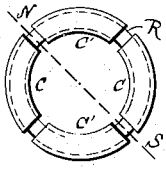

Fig: 8ª.

WITNESSES:

Frank E. Hartley
Frank B. Murphy.

INVENTOR.

Nikola Tesla,
BY
Duncan, Curtis & Page
ATTORNEYS.

(No Model.) 4 Sheets—Sheet 2.

N. TESLA.

ELECTRO MAGNETIC MOTOR.

No. 381,968. Patented May 1, 1888.

Fig. 9.

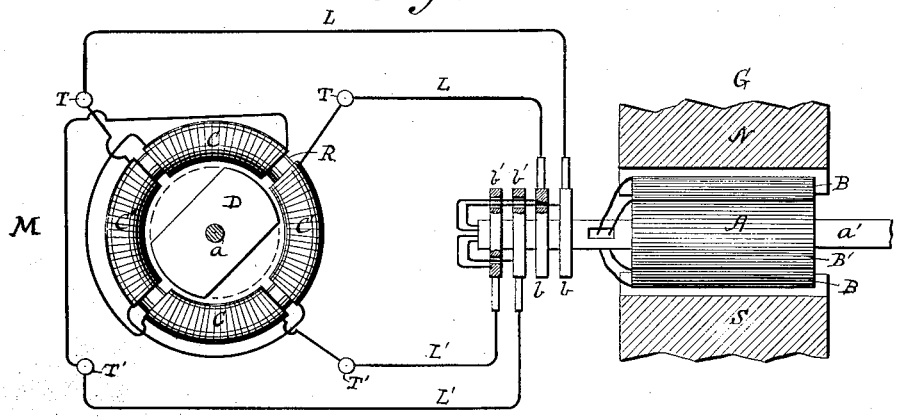

Fig. 10.

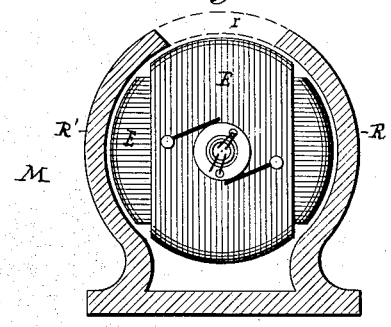

Fig. 11.

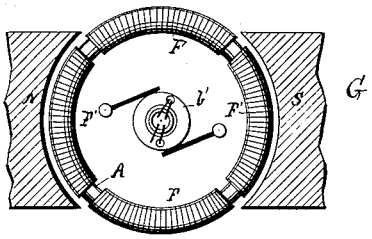

Fig. 12.

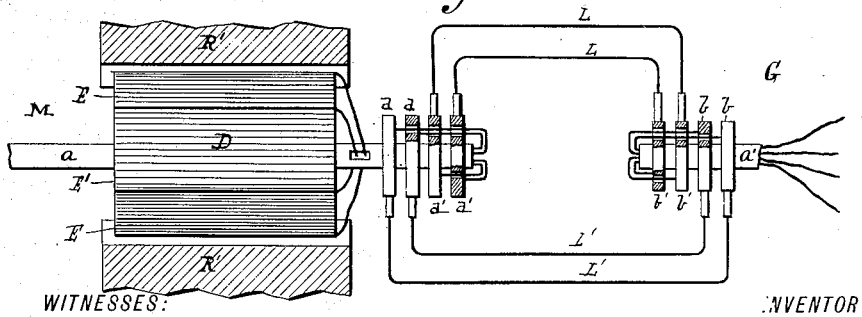

WITNESSES:

Frank C. Hartley.

Frank B. Murphy.

INVENTOR.

Nikola Tesla.

BY

Duncan, Curtis & Page

ATTORNEYS.

(No Model.) 4 Sheets—Sheet 3.

N. TESLA.

ELECTRO MAGNETIC MOTOR.

No. 381,968. Patented May 1, 1888.

Fig. 13.

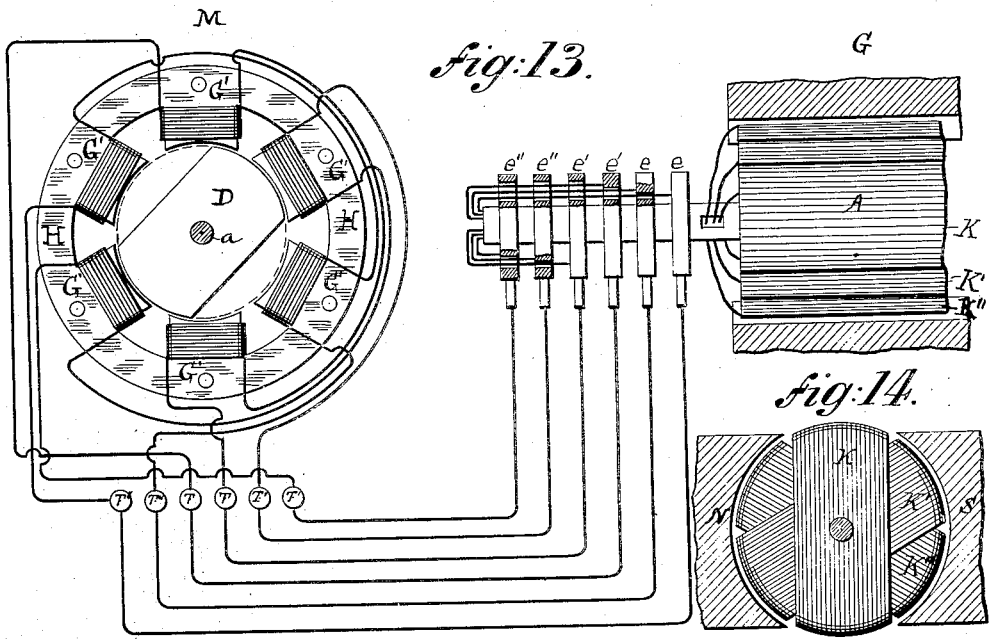

Fig. 14.

Fig. 15.

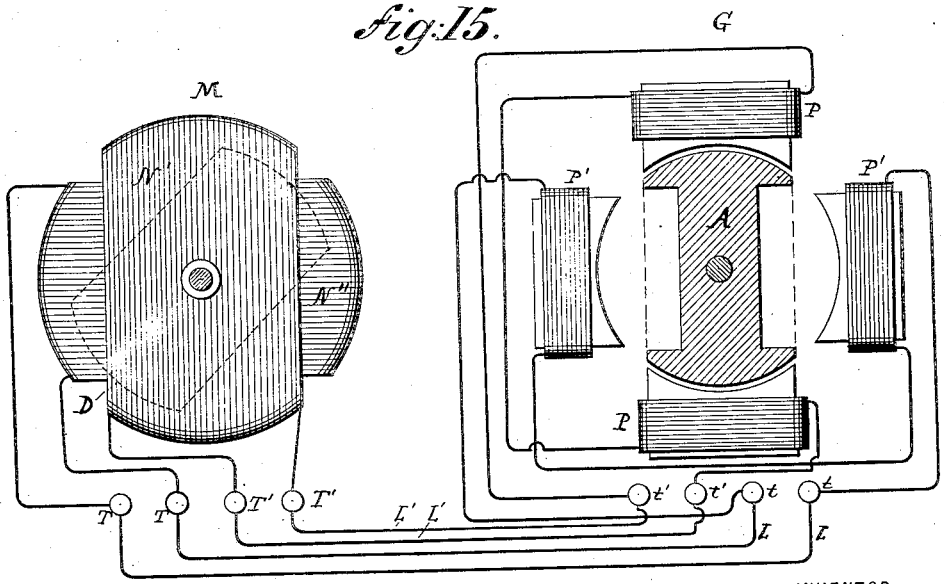

Fig. 16.

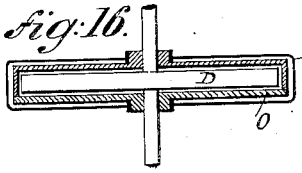

WITNESSES:

Frank E. Hartley.

Frank B. Murphy.

INVENTOR.

Nikola Tesla.

BY

Duncan, Curtis & Page

ATTORNEYS.

(No Model.) 4 Sheets—Sheet 4.

N. TESLA.

ELECTRO MAGNETIC MOTOR.

No. 381,968. Patented May 1, 1888.

Fig: 17.

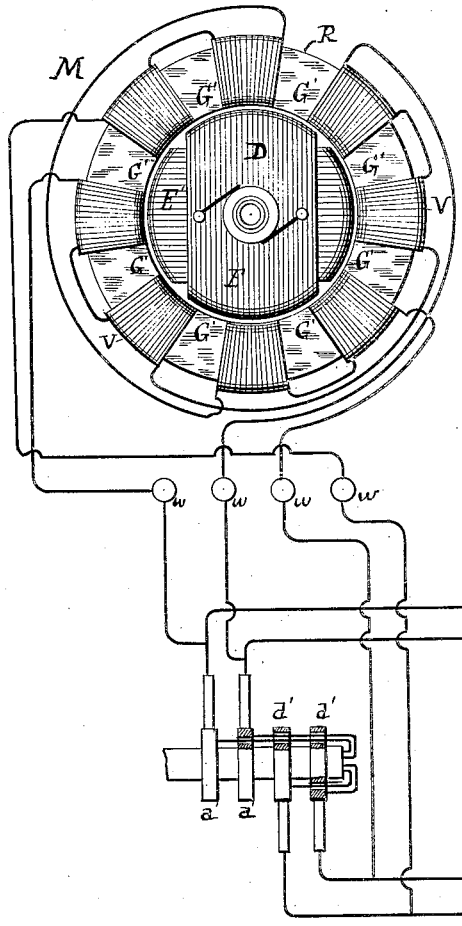

Fig: 18.

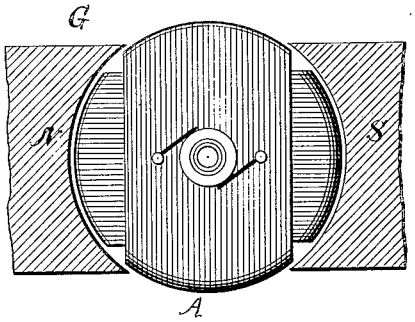

Fig: 19

WITNESSES:

Frank E. Hartley.
Frank B. Murphy.

INVENTOR.
Nikola Tesla,
BY
Duncan, Curtis & Page
ATTORNEYS.

UNITED STATES PATENT OFFICE.

NIKOLA TESLA, OF NEW YORK, N. Y., ASSIGNOR OF ONE-HALF TO CHARLES F. PECK, OF ENGLEWOOD, NEW JERSEY.

ELECTRO-MAGNETIC MOTOR.

SPECIFICATION forming part of Letters Patent No. 381,968, dated May 1, 1888.

Application filed October 12, 1887. Serial No. 252,132. (No model.)

To all whom it may concern:

Be it known that I, NIKOLA TESLA, from Smiljan Lika, border country of Austria-Hungary, residing at New York, N. Y., have invented certain new and useful Improvements in Electro-Magnetic Motors, of which the following is a specification, reference being had to the drawings accompanying and forming a part of the same.

The practical solution of the problem of the electrical conversion and transmission of mechanical energy involves certain requirements which the apparatus and systems heretofore employed have not been capable of fulfilling. Such a solution, primarily, demands a uniformity of speed in the motor irrespective of its load within its normal working limits. On the other hand, it is necessary, to attain a greater economy of conversion than has heretofore existed, to construct cheaper and more reliable and simple apparatus, and, lastly, the apparatus must be capable of easy management, and such that all danger from the use of currents of high tension, which are necessary to an economical transmission, may be avoided.

My present invention is directed to the production and improvement of apparatus capable of more nearly meeting these requirements than those heretofore available, and though I have described various means for the purpose, they involve the same main principles of construction and mode of operation, which may be described as follows: A motor is employed in which there are two or more independent circuits through which alternate currents are passed at proper intervals, in the manner hereinafter described, for the purpose of effecting a progressive shifting of the magnetism or of the "lines of force" in accordance with the well-known theory, and a consequent action of the motor. It is obvious that a proper progressive shifting of the lines of force may be utilized to set up a movement or rotation of either element of the motor, the armature, or the field-magnet, and that if the currents directed through the several circuits of the motor are in the proper direction no commutator for the motor will be required; but to avoid all the usual commutating appliances in the system I prefer to connect the motor-circuits directly with those of a suitable alternate-current generator. The practical results of such a system, its economical advantages, and the mode of its construction and operation will be described more in detail by reference to the accompanying diagrams and drawings.

Figures 1 to 8 and 1^a to 8^a, inclusive, are diagrams illustrating the principle of the action of my invention. The remaining figures are views of the apparatus in various forms by means of which the invention may be carried into effect, and which will be described in their order.

Referring first to Fig. 9, which is a diagrammatic representation of a motor, a generator, and connecting-circuits in accordance with my invention, M is the motor, and G the generator for driving it. The motor comprises a ring or annulus, R, preferably built up of thin insulated iron rings or annular plates, so as to be as susceptible as possible to variations in its magnetic condition. This ring is surrounded by four coils of insulated wire symmetrically placed, and designated by C C C′ C′. The diametrically-opposite coils are connected up so as to co-operate in pairs in producing free poles on diametrically-opposite parts of the ring. The four free ends thus left are connected to terminals T T T′ T′, as indicated. Near the ring, and preferably inside of it, there is mounted on an axis or shaft, *a*, a magnetic disk, D, generally circular in shape, but having two segments cut away, as shown. This disk is mounted so as to turn freely within the ring R. The generator G is of any ordinary type, that shown in the present instance having field-magnets N S and a cylindrical armature-core, A, wound with the two coils B B′. The free ends of each coil are carried through the shaft *a′* and connected, respectively, to insulated contact-rings *b b b′ b′*. Any convenient form of collector or brush bears on each ring and forms a terminal by which the current to and from a ring is conveyed. These terminals are connected to the terminals of the motor by the wires L and L′ in the manner indicated, whereby two complete circuits are formed—one including, say, the coils B of

the generator C′ C′ of the motor, and the other the remaining coils B′ and C C of the generator and the motor.

It remains now to explain the mode of operation of this system, and for this purpose I refer to the diagrams, Figs. 1 to 8, and 1ª to 8ª, for an illustration of the various phases through which the coils of the generator pass when in operation, and the corresponding and resultant magnetic changes produced in the motor. The revolution of the armature of the generator between the field-magnets N S obviously produces in the coils B B′ alternating currents, the intensity and direction of which depend upon well-known laws. In the position of the coils indicated in Fig. 1 the current in the coil B is practically *nil*, whereas the coil B′ at the same time is developing its maximum current, and by the means indicated in the description of Fig. 9 the circuit including this coil B′ may also include, say, the coils C C of the motor, Fig. 1ª. The result, with the proper connections, would be the magnetization of the ring R′, the poles being on the line N S. The same order of connections being observed between the coil B and the coils C′, the latter, when traversed by a current, tend to fix the poles at right angles to the line N S of Fig. 1ª. It results, therefore, that when the generator-coils have made one eighth of a revolution, reaching the position shown in Fig. 2, both pairs of coils C and C′ will be traversed by currents and act in opposition, in so far as the location of the poles is concerned. The position of the poles will therefore be the resultant of the magnetizing forces of the coils—that is to say, it will advance along the ring to a position corresponding to one-eighth of the revolution of the armature of the generator. In Fig. 3 the armature of the generator has progressed to one-quarter of a revolution. At the point indicated the current in the coil B is maximum, while in B′ it is *nil*, the latter coil being in its neutral position. The poles of the ring R in Fig. 3ª will, in consequence, be shifted to a position ninety degrees from that at the start, as shown. I have in like manner shown the conditions existing at each successive eighth of one revolution in the remaining figures. A short reference to these figures will suffice for an understanding of their significance. Figs. 4 and 4ª illustrate the conditions which exist when the generator-armature has completed three eighths of a revolution. Here both coils are generating current; but the coil B′, having now entered the opposite field, is generating a current in the opposite direction, having the opposite magnetizing effect; hence the resultant pole will be on the line N S, as shown. In Fig. 5 one-half of one revolution of the armature of the generator has been completed, and the resulting magnetic condition of the ring is shown in Fig. 5ª. In this phase coil B is in the neutral position while coil B′ is generating its maximum current, which is in the same direction as in Fig. 4. The poles will consequently be shifted through one half of the ring. In Fig. 6 the armature has completed five-eighths of a revolution. In this position coil B′ develops a less powerful current, but in the same direction as before. The coil B, on the other hand, having entered a field of opposite polarity, generates a current of opposite direction. The resultant poles will therefore be in the line N S, Fig. 6ª, or, in other words, the poles of the ring will be shifted along five-eighths of its periphery. Figs. 7 and 7ª in the same manner illustrate the phases of the generator and ring at three-quarters of a revolution, and Figs. 8 and 8ª the same at seven-eighths of a revolution of the generator-armature. These figures will be readily understood from the foregoing. When a complete revolution is accomplished, the conditions existing at the start are re-established and the same action is repeated for the next and all subsequent revolutions, and, in general, it will now be seen that every revolution of the armature of the generator produces a corresponding shifting of the poles or lines of force around the ring. This effect I utilize in producing the rotation of a body or armature in a variety of ways—for example, applying the principle above described to the apparatus shown in Fig. 9. The disk D, owing to its tendency to assume that position in which it embraces the greatest possible number of the magnetic lines, is set in rotation, following the motion of the lines or the points of greatest attraction.

The disk D in Fig. 9 is shown as cut away on opposite sides; but this, I have found, is not essential to effecting its rotation, as a circular disk, as indicated by dotted lines, is also set in rotation. This phenomenon I attribute to a certain inertia or resistance inherent in the metal to the rapid shifting of the lines of force through the same, which results in a continuous tangential pull upon the disk, causing its rotation. This seems to be confirmed by the fact that a circular disk of steel is more effectively rotated than one of soft iron, for the reason that the former is assumed to possess a greater resistance to the shifting of the magnetic lines.

In illustration of other forms of my invention, I shall now describe the remaining figures of the drawings.

Fig. 10 is a view in elevation and part vertical section of a motor. Fig. 12 is a top view of the same with the field in section and a diagram of connections. Fig. 11 is an end or side view of a generator with the fields in section. This form of motor may be used in place of that shown above. D is a cylindrical or drum-armature core, which, for obvious reasons, should be split up as far as practicable to prevent the circulation within it of currents of induction. The core is wound longitudinally with two coils, E and E′, the ends of which are respectively connected to insulated contact-rings *d d d′ d′*, carried by the shaft *a*, upon which the armature is mounted. The armature is set to revolve within an iron shell, R′,

which constitutes the field-magnet, or other element of the motor. This shell is preferably formed with a slot or opening, *r*, but it may be continuous, as shown by the dotted lines, and in this event it is preferably made of steel. It is also desirable that this shell should be divided up similarly to the armature and for similar reasons. As a generator for driving this motor I may use the device shown in Fig. 11. This represents an annular or ring armature, A, surrounded by four coils, F F F′ F′, of which those diametrically opposite are connected in series, so that four free ends are left, which are connected to the insulated contact-rings *b b b′ b′*. The ring is suitably mounted on a shaft, *a′*, between the poles N S. The contact-rings of each pair of generator-coils are connected to these of the motor, respectively, by means of contact-brushes and the two pairs of conductors L L and L′ L′, as indicated diagrammatically in Fig. 12. Now it is obvious from a consideration of the preceding figures that the rotation of the generator-ring produces currents in the coils F F′, which, being transmitted to the motor-coils, impart to the core of the latter magnetic poles constantly shifting or whirling around the core. This effect sets up a rotation of the armature owing to the attractive force between the shell and the poles of the armature, but inasmuch as the coils in this case move relative to the shell or field-magnet the movement of the coils is in the opposite direction to the progressive shifting of the poles.

Other arrangements of the coils of both generator and motor are possible, and a greater number of circuits may be used, as will be seen in the two succeeding figures.

Fig. 13 is a diagrammatic illustration of a motor and a generator constructed and connected in accordance with my invention. Fig. 14 is an end view of the generator with its field-magnets in section. The field of the motor M is produced by six magnetic poles, G′ G′, secured to or projecting from a ring or frame, H. These magnets or poles are wound with insulated coils, those diametrically opposite to each other being connected in pairs so as to produce opposite poles in each pair. This leaves six free ends, which are connected to the terminals T T T′ T′ T″ T″. The armature, which is mounted to rotate between the poles, is a cylinder or disk, D, of wrought-iron, mounted on the shaft *a*. Two segments of the same are cut away, as shown. The generator for this motor has in this instance an armature, A, wound with three coils, K K′ K″, at sixty degrees apart. The ends of these coils are connected, respectively, to insulated contact-rings *e e e′ e′ e″ e″*. These rings are connected to those of the motor in proper order by means of collecting-brushes and six wires, forming three independent circuits. The variations in the strength and direction of the currents transmitted through these circuits and traversing the coils of the motor produce a steadily-progressive shifting of the resultant attractive force exerted by the poles G′ upon the armature D, and consequently keep the armature rapidly rotating. The peculiar advantage of this disposition is in obtaining a more concentrated and powerful field. The application of this principle to systems involving multiple circuits generally will be understood from this apparatus.

Referring, now, to Figs. 15 and 16, Fig. 15 is a diagrammatic representation of a modified disposition of my invention. Fig. 16 is a horizontal cross-section of the motor. In this case a disk, D, of magnetic metal, preferably cut away at opposite edges, as shown in dotted lines in Fig. 15, is mounted so as to turn freely inside two stationary coils, N′ N″, placed at right angles to one another. The coils are preferably wound on a frame, O, of insulating material, and their ends are connected to the fixed terminals T T T′ T′. The generator G is a representative of that class of alternating-current machines in which a stationary induced element is employed. That shown consists of a revolving permanent or electro magnet, A, and four independent stationary magnets, P P′, wound with coils, those diametrically opposite to each other being connected in series and having their ends secured to the terminals *t t t′ t′*. From these terminals the currents are led to the terminals of the motor, as shown in the drawings. The mode of operation is substantially the same as in the previous cases, the currents traversing the coils of the motor having the effect to turn the disk D. This mode of carrying out the invention has the advantage of dispensing with the sliding contacts in the system.

In the forms of motor above described only one of the elements, the armature or the field-magnet, is provided with energizing-coils. It remains, then, to show how both elements may be wound with coils. Reference is therefore had to Figs. 17, 18, and 19. Fig. 17 is an end view of such a motor. Fig. 18 is a similar view of the generator with the field-magnets in section, and Fig. 19 is a diagram of the circuit-connections. In Fig. 17 the field-magnet of the motor consists of a ring, R, preferably of thin insulated iron sheets or bands with eight pole pieces, G′, and corresponding recesses, in which four pairs of coils, V, are wound. The diametrically-opposite pairs of coils are connected in series and the free ends connected to four terminals, *w*, the rule to be followed in connecting being the same as hereinbefore explained. An armature, D, with two coils, E E′, at right angles to each other, is mounted to rotate in side of the field-magnet R. The ends of the armature-coils are connected to two pairs of contact-rings, *d d d′ d′*, Fig. 19. The generator for this motor may be of any suitable kind to produce currents of the desired character. In the present instance it consists of a field-magnet, N S, and an armature, A, with two coils at right angles, the ends of which are connected to four contact-rings, *b b b′ b′*, carried by its shaft. The circuit-connections are es-

tablished between the rings on the generator-shaft and those on the motor-shaft by collecting brushes and wires, as previously explained. In order to properly energize the field-magnet of the motor, however, the connections are so made with the armature coils or wires leading thereto that while the points of greatest attraction or greatest density of magnetic lines of force upon the armature are shifted in one direction those upon the field-magnet are made to progress in an opposite direction. In other respects the operation is identically the same as in the other cases cited. This arrangement results in an increased speed of rotation. In Figs. 17 and 19, for example, the terminals of each set of field-coils are connected with the wires to the two armature-coils in such way that the field-coils will maintain opposite poles in advance of the poles of the armature.

In the drawings the field-coils are in shunts to the armature, but they may be in series or in independent circuits.

It is obvious that the same principle may be applied to the various typical forms of motor hereinbefore described.

Having now described the nature of my invention and some of the various ways in which it is or may be carried into effect, I would call attention to certain characteristics which the applications of the invention possess and the advantages which the invention secures.

In my motor, considering for convenience that represented in Fig. 9, it will be observed that since the disk D has a tendency to follow continuously the points of greatest attraction, and since these points are shifted around the ring once for each revolution of the armature of the generator, it follows that the movement of the disk D will be synchronous with that of the armature A. This feature by practical demonstrations I have found to exist in all other forms in which one revolution of the armature of the generator produces a shifting of the poles of the motor through three hundred and sixty degrees.

In the particular construction shown in Fig. 15, or in others constructed on a similar plan, the number of alternating impulses resulting from one revolution of the generator armature is double as compared with the preceding cases, and the polarities in the motor are shifted around twice by one revolution of the generator-armature. The speed of the motor will, therefore, be twice that of the generator. The same result is evidently obtained by such a disposition as that shown in Fig. 17, where the poles of both elements are shifted in opposite directions.

Again, considering the apparatus illustrated by Fig. 9 as typical of the invention, it is obvious that since the attractive effect upon the disk D is greatest when the disk is in its proper relative position to the poles developed in the ring R—that is to say, when its ends or poles immediately follow those of the ring—the speed of the motor for all the loads within the normal working limits of the motor will be practically constant. It is clearly apparent that the speed can never exceed the arbitrary limit as determined by the generator, and also that within certain limits at least the speed of the motor will be independent of the strength of the current.

It will now be more readily seen from the above description how far the requirements of a practical system of electrical transmission of power are realized in my invention. I secure, first, a uniform speed under all loads within the normal working limits of the motor without the use of any auxiliary regulator; second, synchronism between the motor and generator; third, greater efficiency by the more direct application of the current, no commutating devices being required on either the motor or generator; fourth, cheapness and simplicity of mechanical construction and economy in maintenance; fifth, the capability of being very easily managed or controlled; and, sixth, diminution of danger from injury to persons and apparatus.

These motors may be run in series, multiple arc or multiple series, under conditions well understood by those skilled in the art.

The means or devices for carrying out the principle may be varied to a far greater extent than I have been able to indicate; but I regard as within my invention, and I desire to secure by Letters Patent in general, motors containing two or more independent circuits through which the operating-currents are led in the manner described. By "independent" I do not mean to imply that the circuits are necessarily isolated from one another, for in some instances there might be electrical connections between them to regulate or modify the action of the motor without necessarily producing a new or different action.

I am aware that the rotation of the armature of a motor wound with two energizing-coils at right angles to each other has been effected by an intermittent shifting of the energizing effect of both coils through which a direct current by means of mechanical devices has been transmitted in alternately-opposite directions; but this method or plan I regard as absolutely impracticable for the purposes for which my invention is designed—at least on any extended scale—for the reasons, mainly, that a great waste of energy is necessarily involved unless the number of energizing-circuits is very great, and that the interruption and reversal of a current of any considerable strength by means of any known mechanical devices is a matter of the greatest difficulty and expense.

In this application I do not claim the method of operating motors which is herein involved, having made separate application for such method.

I therefore claim the following:

1. The combination, with a motor containing separate or independent circuits on the armature or field-magnet, or both, of an alternating-current generator containing induced

circuits connected independently to corresponding circuits in the motor, whereby a rotation of the generator produces a progressive shifting of the poles of the motor, as herein described.

2. In a system for the electrical transmission of power, the combination of a motor provided with two or more independent magnetizing-coils and an alternating-current generator containing induced coils corresponding to the motor-coils, and circuits connecting directly the motor and generator coils in such order that the currents developed by the generator will be passed through the corresponding motor-coils, and thereby produce a progressive shifting of the poles of the motor, as herein set forth.

3. The combination, with a motor having an annular or ring-shaped field-magnet and a cylindrical or equivalent armature, and independent coils on the field-magnet or armature, or both, of an alternating-current generator having correspondingly independent coils, and circuits including the generator-coils and corresponding motor-coils in such manner that the rotation of the generator causes a progressive shifting of the poles of the motor in the manner set forth.

4. In a system for the electrical transmission of power, the combination of the following instrumentalities, to wit: a motor composed of a disk or its equivalent mounted within a ring or annular field-magnet, which is provided with magnetizing-coils connected in diametrically-opposite pairs or groups to independent terminals, a generator having induced coils or groups of coils equal in number to the pairs or groups of motor-coils, and circuits connecting the terminals of said coils to the terminals of the motor, respectively, and in such order that the rotation of the generator and the consequent production of alternating currents in the respective circuits produces a progressive shifting of the poles of the motor, as hereinbefore described.

NIKOLA TESLA.

Witnesses:
FRANK E. HARTLEY,
FRANK B. MURPHY.

(No Model.) 2 Sheets—Sheet 1.

N. TESLA.

ELECTRO MAGNETIC MOTOR.

No. 381,969. Patented May 1, 1888.

Fig. 1.

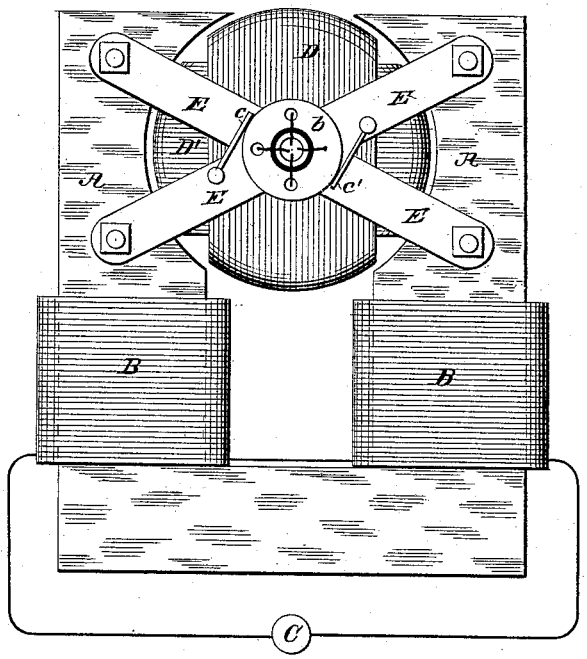

Fig. 2.

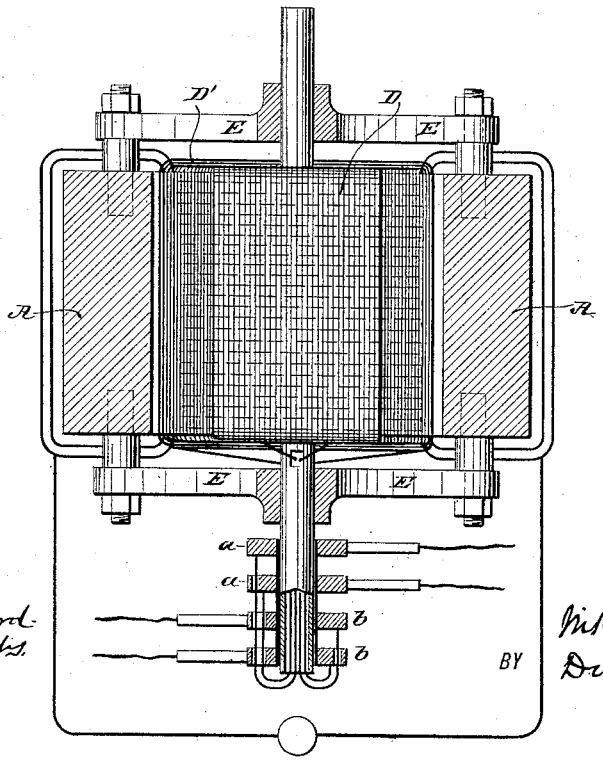

WITNESSES:

Robt. F. Gaylord.
Frank B. Mayhew.

INVENTOR.

Nikola Tesla.
Duncan, Curtis & Page
ATTORNEYS.

BY

N. PETERS, Photo-Lithographer, Washington, D. C.

(No Model.) 2 Sheets—Sheet 2.

N. TESLA.

ELECTRO MAGNETIC MOTOR.

No. 381,969. Patented May 1, 1888.

Fig: 3

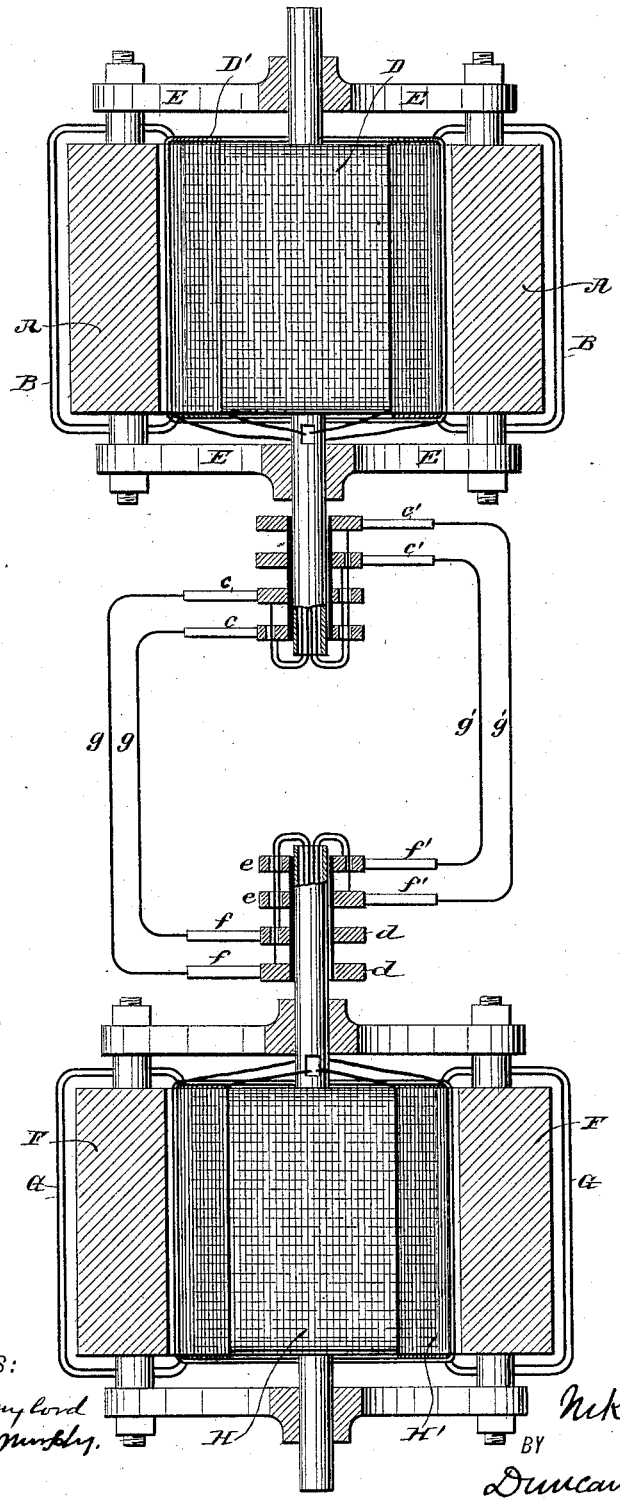

WITNESSES:
Robt. F. Gaylord
Frank B. Murphy.

INVENTOR.
Nikola Tesla
BY
Duncan, Curtis & Page
ATTORNEYS.

N. PETERS, Photo-Lithographer, Washington, D. C.

UNITED STATES PATENT OFFICE.

NIKOLA TESLA, OF NEW YORK, N. Y., ASSIGNOR OF ONE-HALF TO CHARLES F. PECK, OF ENGLEWOOD, NEW JERSEY.

ELECTRO-MAGNETIC MOTOR.

SPECIFICATION forming part of Letters Patent No. 381,969, dated May 1, 1888.

Application filed November 30, 1887. Serial No. 256,562. (No model.)

To all whom it may concern:

Be it known that I, NIKOLA TESLA, from Smiljan Lika, border country of Austria-Hungary, now residing in New York, in the county and State of New York, have invented certain new and useful Improvements in Electro-Magnetic Motors, of which the following is a specification, reference being had to the drawings accompanying and forming a part of the same.

In an application filed by me October 12, 1887, No. 252,132, I have shown and described a novel form of electro-magnetic motor and a mode of operating the same, which may be generally described as follows: The motor is wound with coils forming independent energizing-circuits on either the armature or field magnet, or both, (it is sufficient for present purposes to consider the case in which the coils are on the armature alone,) and these coils are connected up with corresponding circuits on an alternating-current generator. As the result of this, currents of alternately-opposite direction are sent through the energizing-coils of the motor in such manner as to produce a progressive shifting or rotation of the magnetic poles of the armature. This movement of the poles of the armature obviously tends to rotate the armature in the opposite direction to that in which the movement of the poles takes place, owing to the attractive force between said poles and the field-magnets, and the speed of rotation increases from the start until it equals that of the generator, supposing both motor and generator to be alike.

As the poles of the armature are shifted in a direction opposite to that in which the armature rotates, it will be apparent that when the normal speed is attained the poles of the armature will assume a fixed position relative to the field-magnet, and that in consequence the field-magnets will be energized by magnetic induction, exhibiting two distinct poles, one in each of the pole-pieces. In starting the motor, however, the speed of the armature being comparatively slow, the pole-pieces are subjected to rapid reversals of magnetic polarity; but as the speed increases these reversals become less and less frequent, and finally cease when the movement of the armature become synchronous with that of the generator. This being the case, the field-cores and the pole-pieces of the motor become a magnet, but by induction only.

I have found that advantageous results are secured by winding the field-magnets with a coil or coils and passing a continuous current through them, thus maintaining a permanent field, and in this feature my present invention consists.

I shall now describe the apparatus which I have devised for carrying out this invention and explain the mode of using or operating the same.

Figure 1 is an end view in elevation of my improved motor. Fig. 2 is a part horizontal central section, and Fig. 3 is a diagrammatic representation of the motor and generator combined and connected for operation.

Let A A in Fig. 1 represent the legs or pole-pieces of a field-magnet, around which are coils B B, included in the circuit of a continuous-current generator, C, which is adapted to impart magnetism to the said poles in the ordinary manner.

D D′ are two independent coils wound upon a suitable cylindrical or equivalent armature-core, which, like all others used in a similar manner, should be split or divided up into alternate magnetic and insulating parts in the usual way. This armature is mounted in non-magnetic cross-bars E E, secured to the poles of the field-magnet. The terminals of the armature-coils D D′ are connected to insulated sliding contact-rings *a a b b*, carried by the armature shaft, and brushes *c c′* bear upon these rings to convey to the coils the currents which operate the motor.

The generator for operating this motor is or may be of precisely identical construction; and for convenience of reference I have marked in Fig. 3 its parts, as follows: F F, the field-magnets, energized by a continuous current passing in its field-coils G G; H H′, the coils carried by the cylindrical armature; *d d e e*, the friction or collecting rings, carried by the armature-shaft and forming the terminals of the armature-coils; and *f f′*, the collecting-brushes which deliver the currents developed in the armature-coils to the two circuits *g g′*, which connect the generators with the motor.

The operation of this system will be understood from the foregoing. The action of the generator, by causing a progressive shifting of the poles in the motor-armature, sets up in the latter a rotation opposite in direction to that in which the poles move. If, now, the continuous current be directed through the field-coils, so as to strongly energize the magnet A A, the speed of the motor, which depends upon that of the generator, will not be increased, but the power which produces its rotation will be increased in proportion to the energy supplied through the coils B B.

It is characteristic of this motor that its direction of rotation is not reversed by reversing the direction of the current through its field-coils, for the direction of rotation depends not upon the polarity of the field, but upon the direction in which the poles of the armature are shifted. To reverse the motor, the connections of either of the circuits *g g'* must be reversed.

I have found that if the field-magnet of the motor be strongly energized by its coils B B and the circuits through the armature-coils closed, assuming the generator to be running at a certain speed, the motor will not start; but if the field be but slightly energized or in general in such condition that the magnetic influence of the armature preponderates in determining its magnetic condition the motor will start and, with sufficient current, will reach its maximum or normal speed. For this reason it is desirable to keep at the start and until the motor has attained its normal speed, or nearly so, the field-circuit open or to permit but little current to pass through it. I have found, however, if the fields of both the generator and motor be strongly energized that starting the generator starts the motor, and that the speed of the motor is increased in synchronism with the generator. Motors constructed and operated on this principle maintain almost absolutely the same speed for all loads within their normal working-limits; and in practice I have observed that if the motor be overloaded to such an extent as to check its speed the speed of the generator, if its motive power be not too great, is diminished synchronously with that of the motor.

I have in other applications shown how the construction of these or similar motors may be varied in certain well-known ways—as, for instance, by rotating the field about a stationary armature or rotating conductors within the field; but I do not illustrate these features further herein, as with the illustration which I have given I regard the rest as within the power of a person skilled in the art to construct.

The present form of motor is cheap, simple, reliable, and easy to maintain. It requires the simplest type of generator for its operation, and when properly constructed shows a high efficiency.

I do not claim herein the method of transmitting power which this system involves, having made it the subject of another application for patent.

What I claim is—

The combination, with a motor having independent energizing or armature circuits, of an alternating-current generator with corresponding induced circuits connected with the motor for effecting a progressive shifting of the poles of the motor-armature, and a source of continuous current for energizing the field of said motor, as set forth.

NIKOLA TESLA.

Witnesses:
FRANK B. MURPHY,
FRANK E. HARTLEY.

(No Model.) 2 Sheets—Sheet 1.

N. TESLA.

SYSTEM OF ELECTRICAL DISTRIBUTION.

No. 381,970. Patented May 1, 1888.

Fig. 1.

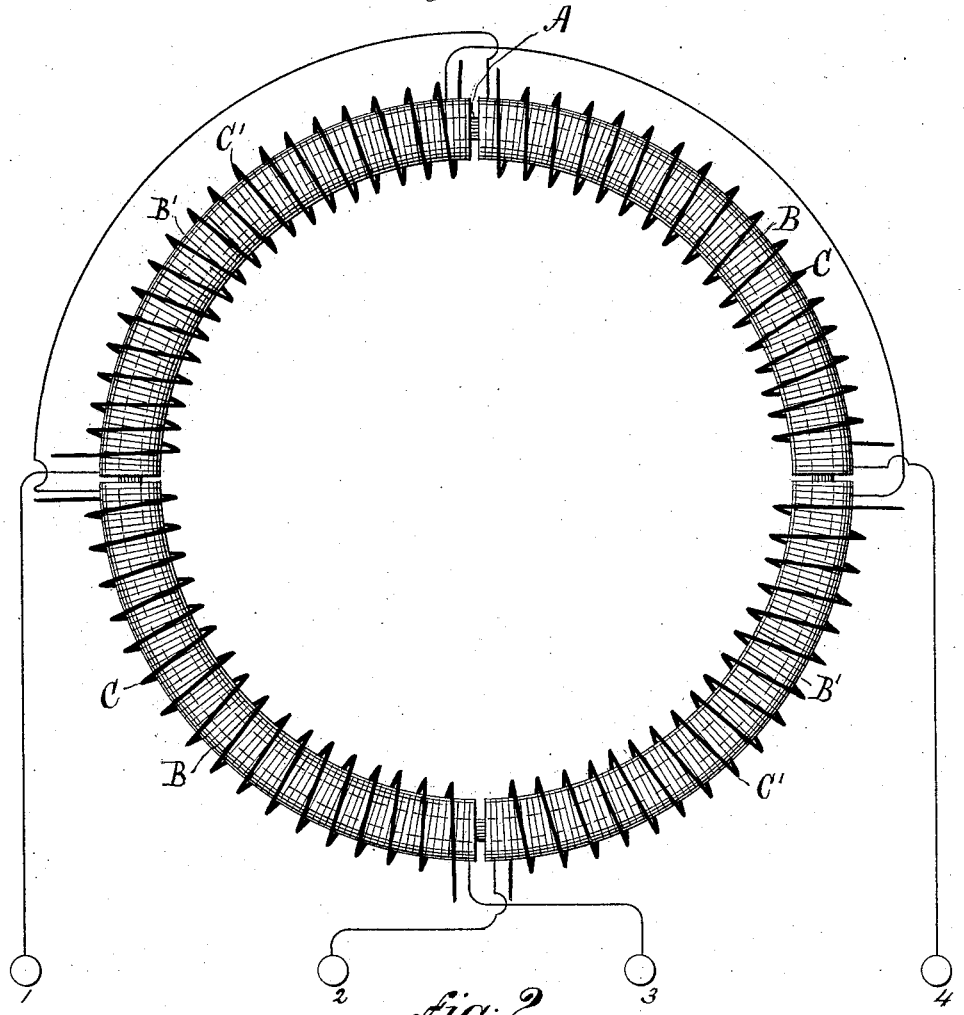

Fig. 2.

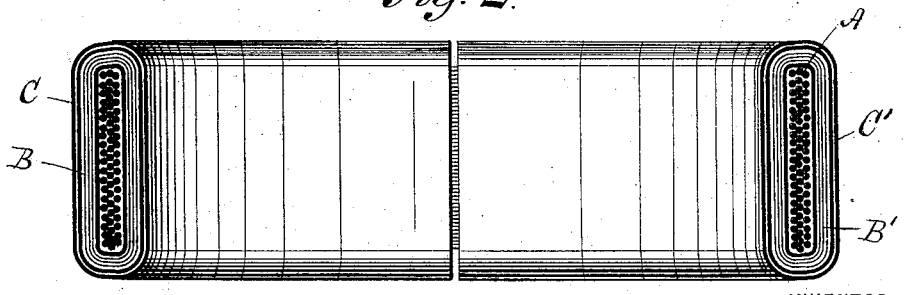

WITNESSES:

Robt. N. Duncan.

Robt. F. Gaylord.

INVENTOR.

Nikola Tesla.

BY

Duncan, Curtis & Page

his ATTORNEYS.

N. PETERS. Photo-Lithographer, Washington, D.C.

(No Model.) 2 Sheets—Sheet 2.

N. TESLA.

SYSTEM OF ELECTRICAL DISTRIBUTION.

No. 381,970. Patented May 1, 1888.

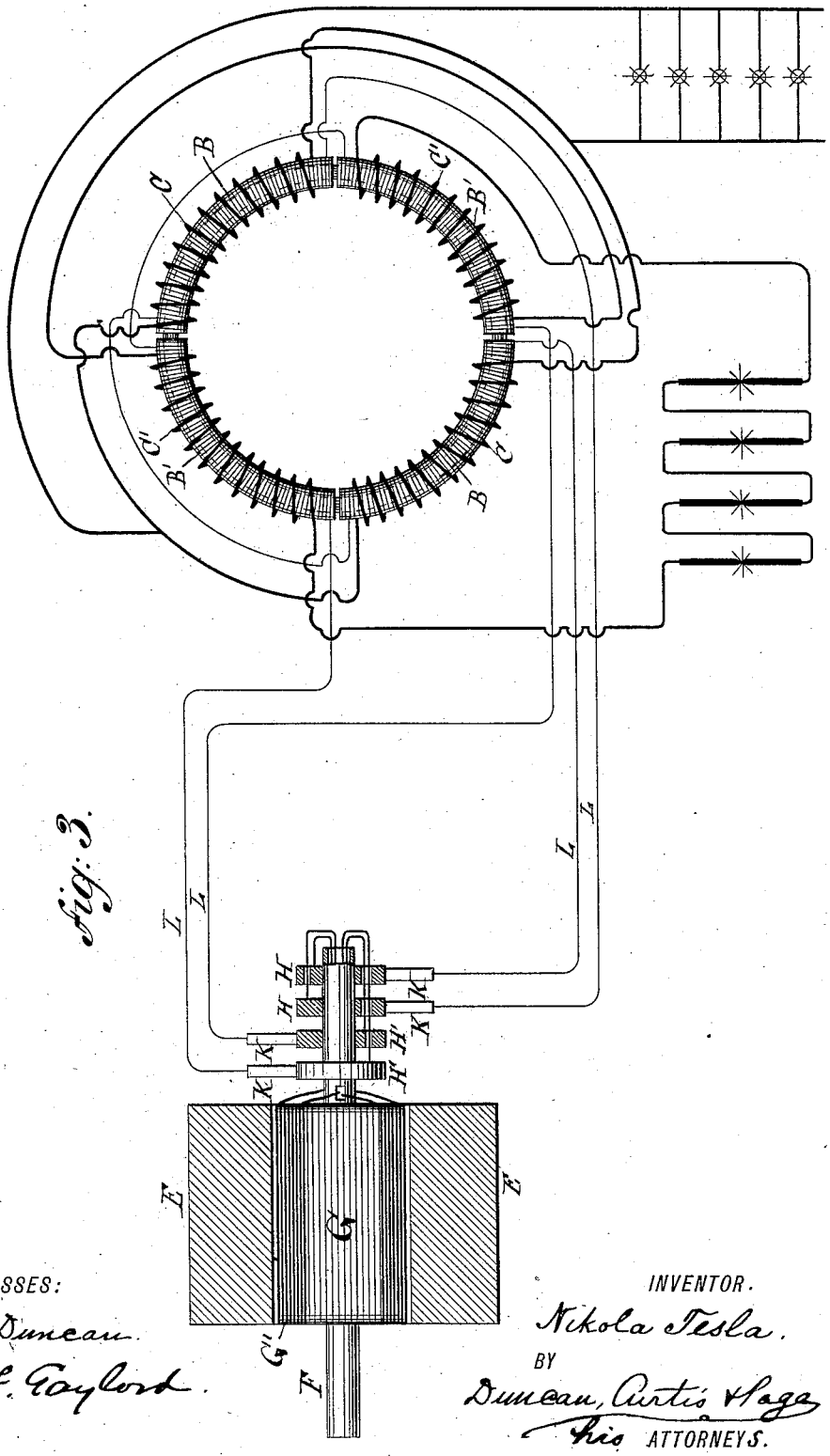

Fig. 3.

WITNESSES:

Robt. H. Duncan.

Robt. F. Gaylord.

INVENTOR.

Nikola Tesla.

BY

Duncan, Curtis & Page

His ATTORNEYS.

N. PETERS, Photo-Lithographer, Washington, D. C.

UNITED STATES PATENT OFFICE.

NIKOLA TESLA, OF NEW YORK, N. Y., ASSIGNOR OF ONE-HALF TO CHARLES F. PECK, OF ENGLEWOOD, NEW JERSEY.

SYSTEM OF ELECTRICAL DISTRIBUTION.

SPECIFICATION forming part of Letters Patent No. 381,970, dated May 1, 1888.

Application filed December 23, 1887. Serial No. 258,787. (No model.)

To all whom it may concern:

Be it known that I, NIKOLA TESLA, from Smiljan Lika, border country of Austria-Hungary, now residing at New York, in the county and State of New York, have invented certain new and useful Improvements in Systems of Electrical Distribution, of which the following is a specification, reference being had to the drawings accompanying and forming a part of the same.

This invention relates to those systems of electrical distribution in which a current from a single source of supply in a main or transmitting circuit is caused to induce by means of suitable induction apparatus a current or currents in an independent working circuit or circuits.

The main objects of the invention are the same as have been heretofore obtained by the use of these systems—viz., to divide the current from a single source, whereby a number of lamps, motors, or other translating devices may be independently controlled and operated by the same source of current, and in some cases to reduce a current of high potential in the main circuit to one of greater quantity and lower potential in the independent consumption or working circuit or circuits.

The general character of the devices employed in these systems is now well understood. An alternating-current magneto-machine is used as the source of supply. The current developed thereby is conducted through a transmission-circuit to one or more distant points at which the transformers are located. These consist of induction-machines of various kinds. In some cases ordinary forms of induction-coil have been used with one coil in the transmitting-circuit and the other in a local or consumption circuit, the coils being differently proportioned according to the work to be done in the consumption-circuit—that is to say, if the work requires a current of higher potential than that in the transmission-circuit the secondary or induced coil is of greater length and resistance than the primary, while, on the other hand, if a quantity current of lower potential is wanted the longer coil is made the primary. In lieu of these devices various forms of electro-dynamic induction-machines, including the combined motors and generators, have been devised. For instance, a motor is constructed in accordance with well-understood principles, and on the same armature are wound induced coils which constitute a generator. The motor-coils are generally of fine wire and the generator-coils of coarser wire, so as to produce a current of greater quantity and lower potential than the line-current, which is of relatively high potential, to avoid loss in long transmission. A similar arrangement is to wind coils corresponding to those described in a ring or similar core, and by means of a commutator of suitable kind to direct the current through the inducing-coils successively, so as to maintain a movement of the poles of the core and of the lines of force which set up the currents in the induced coils.

Without enumerating the objections to these systems in detail, it will suffice to say that the theory or the principle of the action or operation of these devices has apparently been so little understood that their proper construction and use have up to the present time been attended with various difficulties and great expense. The transformers are very liable to be injured and burned out, and the means resorted to for curing this and other defects have almost invariably been at the expense of efficiency.

The form of converter or transformer which I have devised appears to be largely free from the defects and objections to which I have alluded. While I do not herein advance any theory as to its mode of operation, I would state that, in so far as the principal of construction is concerned, it is analogous to those transformers which I have above described as electro-dynamic induction-machines, except that it involves no moving parts whatever, and is hence not liable to wear or other derangement, and requires no more attention than the other and more common induction-machines.

In carrying out my invention I provide a series of inducing-coils and corresponding induced coils, which, by preference, I wind upon a core closed upon itself—such as an annulus or ring subdivided in the usual manner. The

two sets of coils are wound side by side or superposed or otherwise placed in well-known ways to bring them into the most effective relations to one another and to the core. The inducing or primary coils wound on the core are divided into pairs or sets by the proper electrical connections, so that while the coils of one pair or set to co-operate in fixing the magnetic poles of the core at two given diametrically-opposite points, the coils of the other pair or set—assuming, for sake of illustration, that there are but two—tend to fix the poles ninety degrees from such points. With this induction device I use an alternating-current generator with coils or sets of coils to correspond with those of the converter, and by means of suitable conductors I connect up in independent circuits the corresponding coils of the generator and converter. It results from this that the different electrical phases in the generator are attended by corresponding magnetic changes in the converter; or, in other words, that as the generator-coils revolve the points of greatest magnetic intensity in the converter will be progressively shifted or whirled around. This principle I have applied under variously-modified conditions to the operation of electro-magnetic motors, and in previous applications, notably in those having Serial Nos. 252,132 and 256,561, I have described in detail the manner of constructing and using such motors. In the present application my object is to describe the best and most convenient manner of which I am at present aware of carrying out the invention as applied to a system of electrical distribution; but one skilled in the art will readily understand from the description by the modifications proposed in said applications, wherein the form of both the generator and converter in the present case may be modified.

In illustration therefore of the details of construction which my present invention involves, I now refer to the accompanying drawings.

Figure 1 is a diagrammatic illustration of the converter and the electrical connections of the same. Fig. 2 is a horizontal central cross-section of Fig. 1. Fig. 3 is a diagram of the circuits of the entire system, the generator being shown in section.

I use a core, A, which is closed upon itself—that is to say, of an annular cylindrical or equivalent form—and as the efficiency of the apparatus is largely increased by the subdivision of this core I make it of thin strips, plates, or wires of soft iron electrically insulated as far as practicable. Upon this core, by any well-known method, I wind, say, four coils, B B B′ B′, which I use as primary coils, and for which I use long lengths of comparatively fine wire. Over these coils I then wind shorter coils of coarser wire, C C C′ C′, to constitute the induced or secondary coils. The construction of this or any equivalent form of converter may be carried further, as above pointed out, by inclosing these coils with iron—as, for example, by winding over the coils a layer or layers of insulated iron wire.

The device is provided with suitable binding-posts, to which the ends of the coils are led. The diametrically-opposite coils B B and B′ B′ are connected, respectively, in series, and the four terminals are connected to the binding-posts 1 2 3 4. The induced coils are connected together in any desired manner. For example, as shown in Fig. 3, C C may be connected in multiple arc when a quantity current is desired—as for running a group of incandescent lamps, D—while C′ C′ may be independently connected in series in a circuit including arc lamps or the like. The generator in this system will be adapted to the converter in the manner illustrated. For example, in the present case I employ a pair of ordinary permanent or electro magnets, E E, between which is mounted a cylindrical armature on a shaft, F, and wound with two coils, G G′. The terminals of these coils are connected, respectively, to four insulated contact or collecting rings, H H H′ H′, and the four line circuit-wires L connect the brushes K, bearing on these rings, to the converter in the order shown. Noting the results of this combination, it will be observed that at a given point of time the coil G is in its neutral position and is generating little or no current, while the other coil, G′, is in a position where it exerts its maximum effect. Assuming coil G to be connected in circuit with coils B B of the converter, and coil G′ with coils B′ B′, it is evident that the poles of the ring A will be determined by coils B′ B′ alone; but as the armature of the generator revolves, coil G delops more current and coil G′ less, until G reaches its maximum and G′ its neutral position. The obvious result will be to shift the poles of the ring A through one-quarter of its periphery. The movement of the coils through the next quarter of a turn, during which coil G′ enters a field of opposite polarity and generates a current of opposite direction and increasing strength, while coil G, in passing from its maximum to its neutral position generates a current of decreasing strength and same direction as before, causes a further shifting of the poles through the second quarter of the ring. The second half-revolution will obviously be a repetition of the same action. By the shifting of the poles of the ring A a powerful dynamic inductive effect on the coils C C′ is produced. Besides the currents generated in the secondary coils by dynamo-magnetic induction other currents will be set up in the same coils in consequence of any variations in the intensity of the poles in the ring A. This should be avoided by maintaining the intensity of the poles constant, to accomplish which care should be taken in designing and proportioning the generator and in distributing the coils in the ring A and balancing their effect. When this is

done, the currents are produced by dynamo-magnetic induction only, the same result being obtained as though the poles were shifted by a commutator with an infinite number of segments.

The modifications which are applicable to other forms of converter are in many respects applicable to this. I refer more particularly to the form of the core, the relative lengths and resistances of the primary and secondary coils, and the arrangements for running or operating the same.

The new method of electrical conversion which this system involves I have made the subject of another application, and I do not claim it therefore herein.

Without limiting myself therefore to any specific form, what I claim is—

1. The combination, with a core closed upon itself, inducing or primary coils wound thereon and connected up in independent pairs or sets, and induced or secondary coils wound upon or near the primary coils, of a generator of alternating currents and independent connections to the primary coils, whereby by the operation of the generator a progressive shifting of the poles of the core is effected, as set forth.

2. The combination, with an annular or similar magnetic core and primary and secondary coils wound thereon, of an alternating-current generator having induced or armature coils corresponding to the primary coils, and independent circuits connecting the primary coils with the corresponding coils of the generator, as herein set forth.

3. The combination, with independent electric transmission-circuits, of transformers consisting of annular or similar cores wound with primary and secondary coils, the opposite primary coils of each transformer being connected to one of the transmission-circuits, an alternating-current generator with independent induced or armature coils connected with the transmission-circuits, whereby alternating currents may be directed through the primary coils of the transformers in the order and manner herein described.

NIKOLA TESLA.

Witnesses:
ROBT. H. DUNCAN,
ROBT. F. GAYLORD.

(No Model.) 2 Sheets—Sheet 1.

N. TESLA.

ELECTRO MAGNETIC MOTOR.

No. 382,279. Patented May 1, 1888.

Fig: 1.

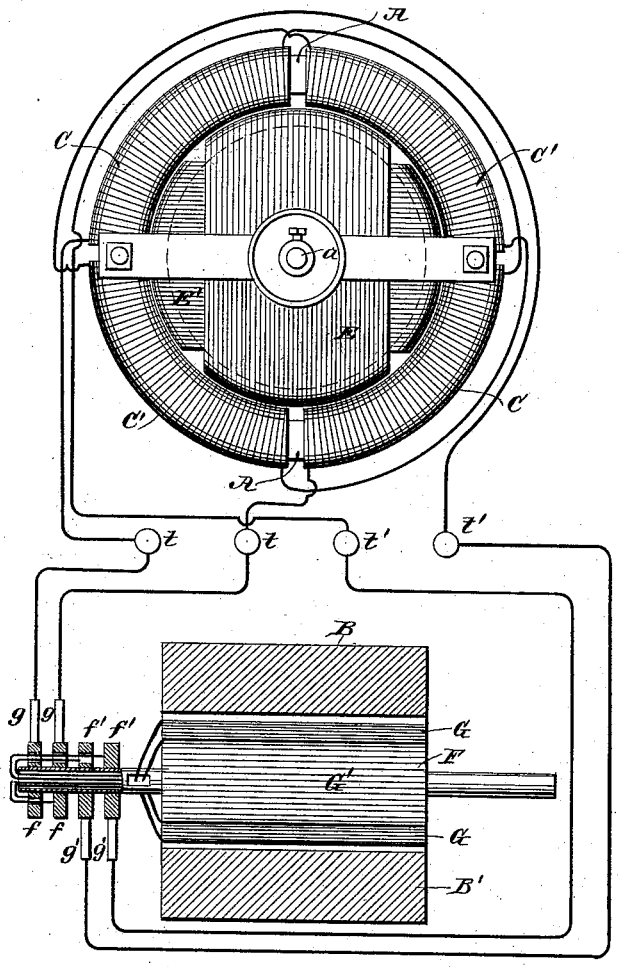

Fig: 2.

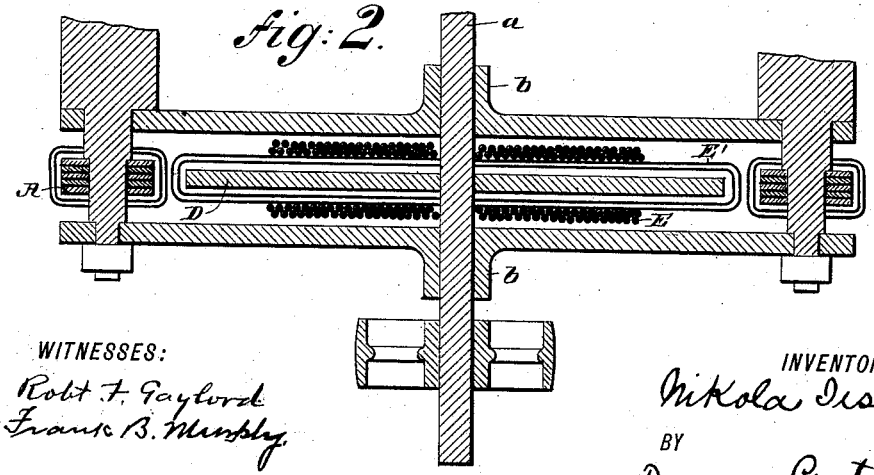

WITNESSES:
Robt F. Gaylord.
Francis B. Murphy.

INVENTOR.
Nikola Tesla.
BY
Duncan Curtis & Page.
ATTORNEYS.

N. PETERS. Photo-Lithographer, Washington, D. C.

(No Model.) 2 Sheets—Sheet 2.

N. TESLA.

ELECTRO MAGNETIC MOTOR.

No. 382,279. Patented May 1, 1888.

Fig. 3.

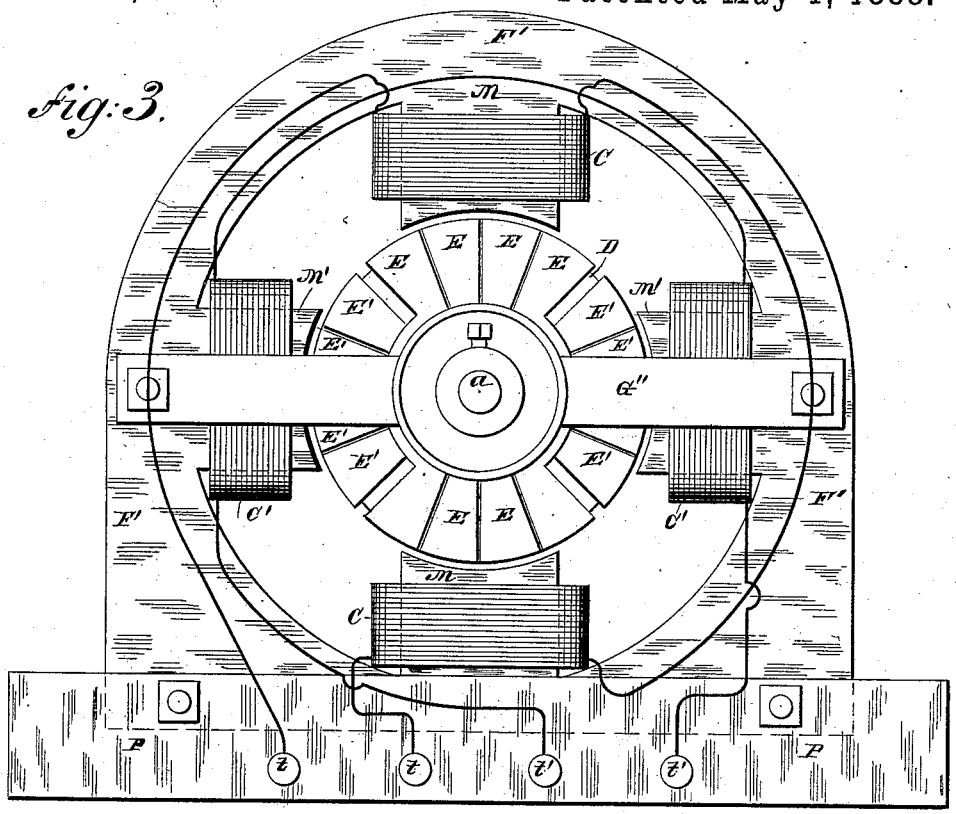

Fig. 4.

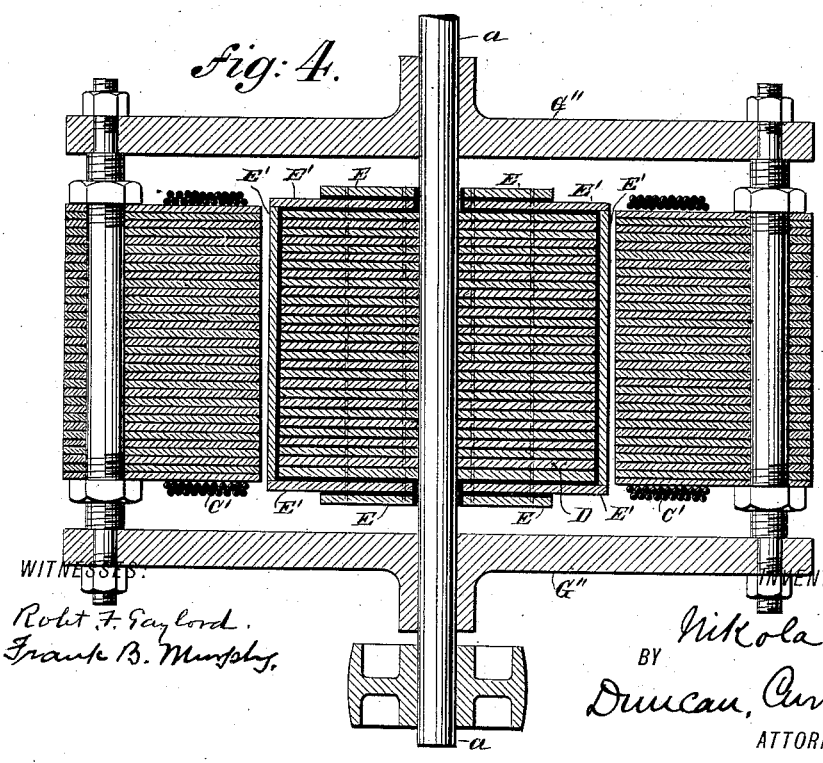

WITNESSES:
Robt. F. Gaylord.
Frank B. Murphy.

INVENTOR,
Nikola Tesla.
BY
Duncan, Curtis & Page
ATTORNEYS.

N. PETERS, Photo-Lithographer, Washington, D. C.

UNITED STATES PATENT OFFICE.

NIKOLA TESLA, OF NEW YORK, N. Y., ASSIGNOR OF ONE-HALF TO CHARLES F. PECK, OF ENGLEWOOD, NEW JERSEY.

ELECTRO-MAGNETIC MOTOR.

SPECIFICATION forming part of Letters Patent No. 382,279, dated May 1, 1888.

Application filed November 30, 1887. Serial No. 256,561. (No model.)

To all whom it may concern:

Be it known that I, NIKOLA TESLA, a subject of the Emperor of Austria, from Smiljan, Lika, border country of Austria-Hungary, now residing at New York, in the county and State of New York, have invented certain new and useful Improvements in Electro-Magnetic Motors, of which the following is a specification, reference being had to the drawings accompanying and forming a part of the same.

In a former application, filed October 12, 1887, No. 252,132, I have shown and described a mode or plan of operating electric motors by causing a progressive shifting of the poles of one or both of the parts or elements of a motor—that is to say, of either the field magnet or magnets or armature, or both. I accomplish this by constructing a motor with two or more independent energizing-circuits, on the field-magnets, for example, and I connect these up with corresponding induced or generating circuits in an alternating-current generator, so that alternating currents are caused to traverse the motor-circuits. By so doing the poles of the field-magnet of the motor are progressively shifted, and by their attraction upon a rotary armature set up a rotation in the latter in the direction of the movement of the poles. In this case, however, the rotation is produced and maintained by the direct attraction of the magnetic elements of the motor. I have discovered that advantageous results may be secured in this system by utilizing the shifting of the poles primarily to set up currents in a closed conductor located within the influence of the field of the motor, so that the rotation may result from the reaction of such currents upon the field.

To illustrate more fully the nature of the invention I refer to the accompanying drawings.

Figure 1 represents in side elevation the operative parts or elements of a motor embodying the principles of my invention, and in section the generator for operating the same. Fig. 2 is a horizontal central section of the motor in Fig. 1, the circuits being shown partly in diagram. Fig. 3 is a modified form of motor in side elevation. Fig. 4 is a central horizontal cross-section of Fig. 3.

In Figs. 1 and 2, A is an annular core of soft iron, preferably laminated or formed of insulated sections, so as to be susceptible to rapid variations of magnetism. This core is wound with four coils, C C C′ C′, the diametrically-opposite coils being connected in the same circuit, and the two free ends of each pair being brought to the terminals t and t', respectively, as shown. Within this annular field-magnet A is mounted a soft-iron cylinder or disk, D, on an axis, a, in bearings b b, properly supported by the frame-work of the machine. The disk carries two coils, E E′, of insulated wire, wound at right angles to one another, and having their respective ends joined, so that each coil forms a separate closed circuit.

In illustration of the action or mode of operation of this apparatus, let it be assumed that the annular field-magnet A is permanently magnetized, so as to present two free poles diametrically opposite. If suitable mechanical provision be now made for rotating the field-magnet around the disk, the apparatus exemplifies the conditions of an ordinary magneto-generator, and currents would be set up in the coils or closed conductors E E′ on the disk D. Evidently these currents would be the most powerful at or near the points of the greatest density of the lines of force, and they would, as in all similar cases, tend, at least theoretically, to establish magnetic poles in the disk D at right angles to those in the annular field-magnet A. As a result of the well-known reaction of these polarities upon each other, a more or less powerful tendency in the disk to rotate in the same direction as that of the field-magnet would be established. If, on the other hand, the ring or annular field-magnet A be held stationary and its magnetic poles progressively shifted by passing through its coils C C′ properly-alternated currents, it is obvious that similar results will follow, for the passage of the currents causing the shifting or whirling of the poles of the field-magnet A induces currents in the closed circuits of the armature coils E E′, with the result of setting up a rotation of the disk D in the same direction of such shifting. Inasmuch as the currents are always induced or generated in the coils E E′ in the same manner, the poles of the disk or cylinder follow continuously the poles of the annular field-magnet, maintaining, at least theoretically, the same rela-

tive positions. This results in an even and perfect action of the apparatus.

In order that the system as a whole may be better understood, I shall now describe the mode or plan devised by me for producing the currents that effect the progressive shifting of the poles of the motor.

In Fig. 1, B B′ are the poles or pole-pieces of an alternating-current generator. They are permanently magnetized and of opposite polarity. F is a cylindrical or other armature containing the independent coils G G′. These coils are wound at right angles, so that while one is crossing the strongest portion of the field of force the other is at the neutral point. The coils G G′ terminate in the two pairs of insulated collecting-rings *f* and *f′*, upon which bear the brushes *g g′*. Four wires connect the motor-terminals *t* and *t′* with the brushes *g* and *g′*, respectively. When the generator is rotated, the coil G will at the certain point shown in the drawings be generating its maximum current, while coil G′ is neutral. Let it be assumed that this current is conveyed from the rings *f f* to the terminals *t t* and through the coils C C. Its effect will be to establish poles in the ring midway between the two coils. By the further rotation of the generator the coil G′ is brought within the influence of the field and begins to produce a current, which grows stronger as the said coil approaches the maximum points of the field, while the current produced in the coil G diminishes as the said coil recedes from those points. The current from the coil G′, being conveyed to the terminals *t′ t′* and through coils C′ C′, has a tendency to establish poles at right angles to those set up by the coils C C; but owing to the greater effect of the current in coils C C the result is merely to advance the poles from the position in which they would remain if due to the magnetizing influence of coils C C alone. This progression continues for a quarter-revolution until coil G G becomes neutral and coil G′ G′ produces its maximum current. The action described is then repeated, the poles having been shifted through one-half of the field, or a half-revolution. The second half-revolution is accomplished in a similar way, the same polarity being maintained in the shifting poles by the movement of the generator-coils alternately through fields of opposite polarity.

The same principle of operation may be applied to motors of various forms, and I have shown one of such modified forms in Figs. 3 and 4 of the drawings. In these figures, M M′ are field-magnets secured to or forming part of a frame, F′, mounted on a base, P. These magnets should be laminated or composed of a number of electrically-insulated magnetic sections, to prevent the circulation of induced currents and to render them capable of rapid magnetic changes. These magnetic cores or poles are wound with insulated coils C C′, the diametrically-opposite coils being connected together in series and their free ends brought to terminals *t t′*, respectively. Between the poles there is mounted, in bearings in the cross-pieces G″, a cylindrical iron core, D, which, in order to prevent the formation of eddying currents, and the loss consequent thereon, is subdivided in the usual way. Insulated conductors or coils are applied to the cylinder D longitudinally, and for these I may employ copper plates E E′, which are secured to the sides and ends of the cylindrical core in well-known ways. These plates or conductors may form one or preferably several independent circuits around the core. In the drawings two of such circuits are shown, formed respectively by the conductors E and E′, which are insulated from each other. It is advantageous also to slot these plates longitudinally, to prevent the formation of eddy currents and waste of energy.

From what has now been given the operation of this apparatus will be readily understood. To the binding-posts *t t′* are connected the proper circuits from the generator to cause a progressive shifting of the resultant magnetic poles produced by the magnets M upon the armature. Thus currents are induced in the closed circuits on the core, which, energizing the core strongly, maintain a powerful attraction between the same and the field, which causes a rotation of the armature in the direction in which the resultant poles are shifted.

The particular advantage of the construction illustrated in Figs. 3 and 4 is that a concentrated and powerful field is obtained and a remarkably powerful tendency to rotation in the armature secured. The same results may be obtained in the form illustrated in Figs. 1 and 2, however, by forming polar projections on the field and armature cores.

When these motors are not loaded, but running free, the rotation of the armature is nearly synchronous with the rotation of the poles of the field, and under these circumstances very little current is perceptible in the coils E E′; but if a load is added the speed tends to diminish and the currents in coils E E′ are augmented, so that the rotary effort is increased proportionately.

Obviously the principle of this invention is capable of many modified applications, most of which follow as a matter of course from the constructions described. For instance, the armature-coils, or those in which the currents are set up by induction, may be held stationary and the alternating currents from the generator conducted through the rotating inducing or field coils by means of suitable sliding contacts. It is also apparent that the induced coils may be movable and the magnetic parts of the motor stationary; but I have illustrated these modifications fully in the application to which reference has herein been made.

In the case of motors wound with independent field and armature circuits and operated by shifting their poles, as described in my said

prior application, I may by short-circuiting the armature-coils apply the present invention in order to obtain greater power on starting.

An advantage and characteristic feature of motors constructed and operated in accordance with this invention is their capability of almost instantaneous reversal by a reversal of one of the energizing-currents from the generator. This will be understood from a consideration of the working conditions. Assuming the armature to be rotating in a certain direction following the movement of the shifting poles, then reverse the direction of the shifting, which may be done by reversing the connections of one of the two energizing-circuits. If it be borne in mind that in a dynamo-electric machine the energy developed is very nearly proportionate to the cube of the speed, it is evident that at such moment an extraordinary power is brought to play in reversing the motor. In addition to this the resistance of the motor is very greatly reduced at the moment of reversal, so that a much greater amount of current passes through the energizing-circuits.

The phenomenon alluded to—viz., the variation of the resistance of the motor apparently like that in ordinary motors—I attribute to the variation in the amount of self-induction in the primary or energizing circuits.

These motors present numerous advantages, chief among which are their simplicity, reliability, economy in construction and maintenance, and their easy and dangerless management. As no commutators are required on either the generators or the motors, the system is capable of a very perfect action and involves but little loss.

I do not claim herein the mode or plan of producing currents in closed conductors in a magnetic field which is herein disclosed, except in its application to this particular purpose; but

What I claim is—

1. The combination, with a motor containing independent inducing or energizing circuits and closed induced circuits, of an alternating-current generator having induced or generating circuits corresponding to and connected with the energizing-circuits of the motor, as set forth.

2. An electro-magnetic motor having its field-magnets wound with independent coils and its armature with independent closed coils, in combination with a source of alternating currents connected to the field-coils and capable of progressively shifting the poles of the field-magnet, as set forth.

3. A motor constructed with an annular field-magnet wound with independent coils and a cylindrical or disk armature wound with closed coils, in combination with a source of alternating currents connected with the field-magnet coils and acting to progressively shift or rotate the poles of the field, as herein set forth.

NIKOLA TESLA.

Witnesses:
FRANK B. MURPHY,
FRANK E. HARTLEY.

(Model.)

4 Sheets—Sheet 1.

N. TESLA.

ELECTRICAL TRANSMISSION OF POWER.

No. 382,280. Patented May 1, 1888.

Fig. 1

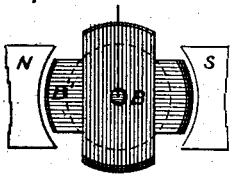

Fig. 2

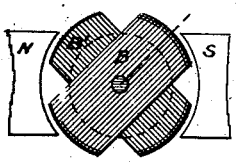

Fig. 3

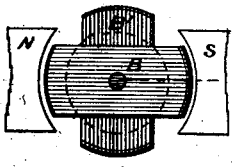

Fig. 4

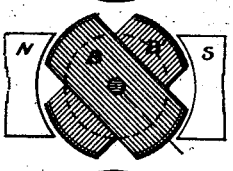

Fig. 5

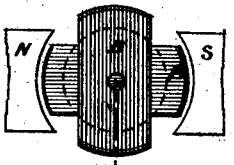

Fig. 6

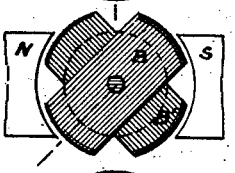

Fig. 7

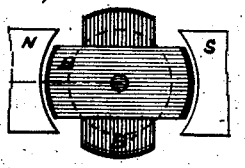

Fig. 8

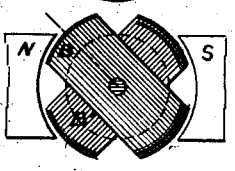

Fig. 1ª

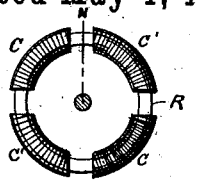

Fig. 2ª

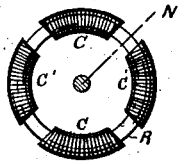

Fig. 3ª

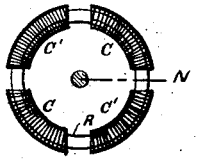

Fig. 4ª

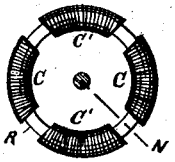

Fig. 5ª

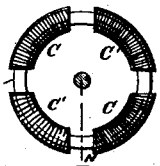

Fig. 6ª

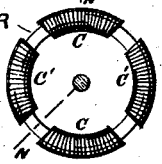

Fig. 7ª

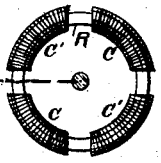

Fig. 8ª

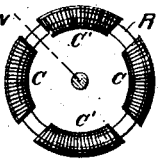

WITNESSES:

D. H. Sherman

Marvin A. Curtis

INVENTOR.

Nikola Tesla,

BY

Duncan, Curtis & Page

ATTORNEYS.

(No Model.) 4 Sheets—Sheet 2.

N. TESLA.

ELECTRICAL TRANSMISSION OF POWER.

No. 382,280. Patented May 1, 1888.

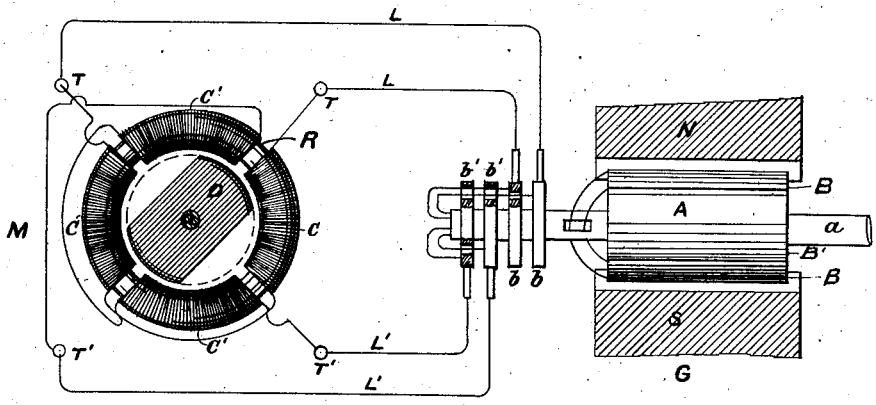

Fig. 9

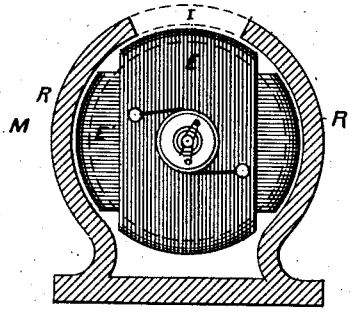

Fig. 10

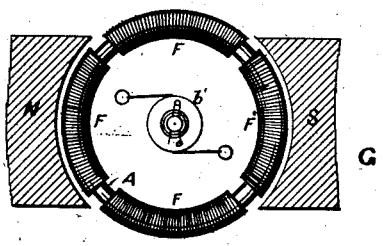

Fig. 11

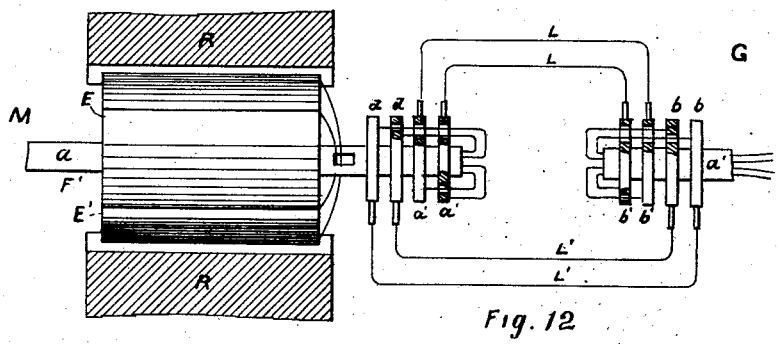

Fig. 12

WITNESSES:
D. H. Sherman.
Marvin A. Curtis.

INVENTOR.
Nikola Tesla.
BY
Duncan, Curtis & Page
ATTORNEYS.

(No Model.) 4 Sheets—Sheet 3.

N. TESLA.

ELECTRICAL TRANSMISSION OF POWER.

No. 382,280. Patented May 1, 1888.

Fig. 13

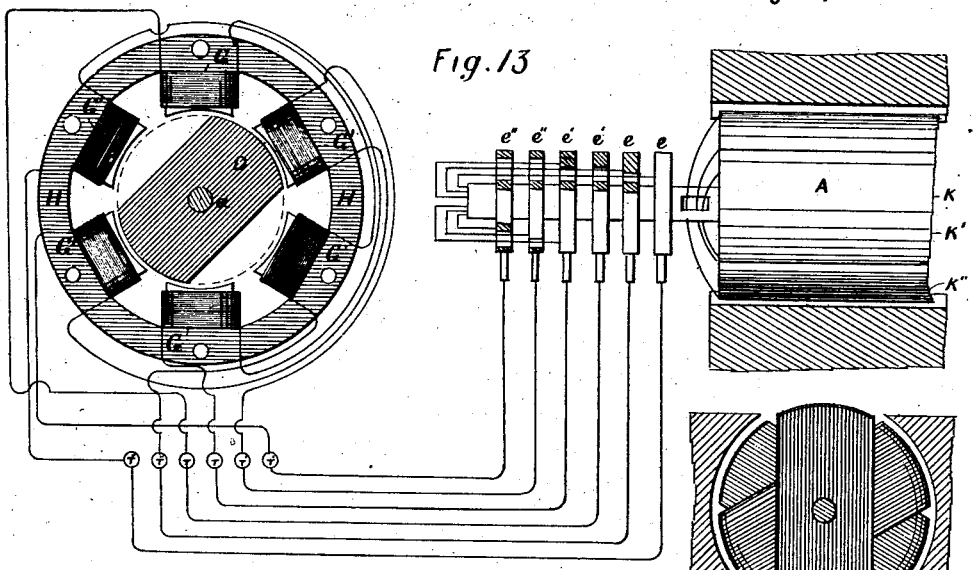

Fig. 14

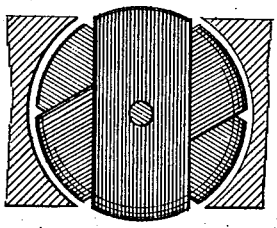

Fig. 15

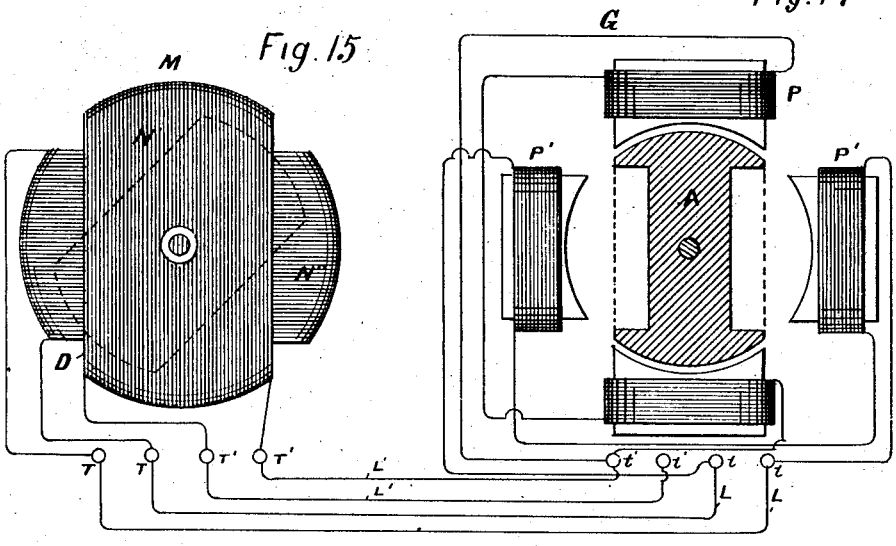

Fig. 16

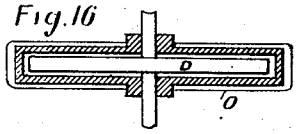

WITNESSES:
D. H. Sherman
Marvin A. Curtis

INVENTOR,
Nikola Tesla,
BY
Duncan, Curtis & Page
ATTORNEYS.

(No Model.) 4 Sheets—Sheet 4.

N. TESLA.

ELECTRICAL TRANSMISSION OF POWER.

No. 382,280. Patented May 1, 1888.

Fig. 17

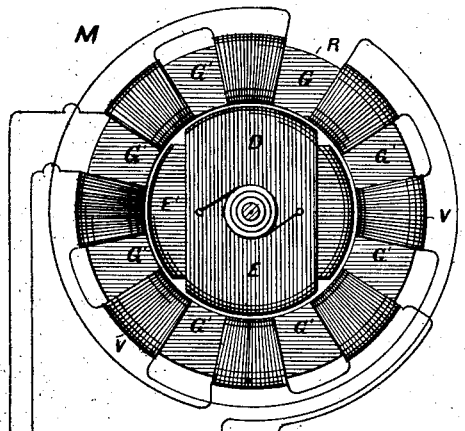

Fig. 18

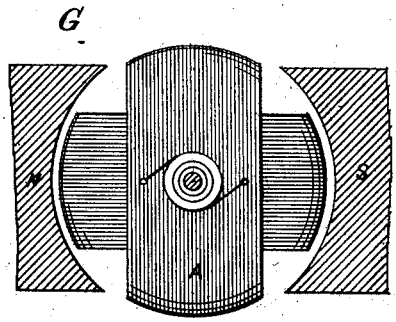

Fig. 19

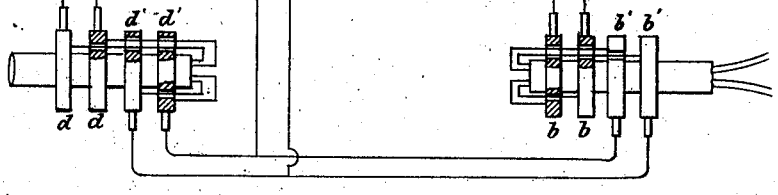

WITNESSES:
D. H. Sherman.
Marvin A. Curtis.

INVENTOR.
Nikola Tesla.
BY
Duncan, Curtis & Page.
ATTORNEYS.

UNITED STATES PATENT OFFICE.

NIKOLA TESLA, OF NEW YORK, N. Y.

ELECTRICAL TRANSMISSION OF POWER.

SPECIFICATION forming part of Letters Patent No. 382,280, dated May 1, 1888.

Original application filed October 12, 1887. Serial No. 252,132. Divided and this application filed March 9, 1888. Serial No. 266,755. (No model.)

To all whom it may concern:

Be it known that I, NIKOLA TESLA, from Smiljan, Lika, border country of Austria-Hungary, and residing in the city, county, and State of New York, have invented certain new and useful Improvements in the Transmission of Power, of which the following is a specification, reference being had to the drawings accompanying and forming a part of the same.

This application is a division of an application filed by me October 12, 1887, No. 252,132.

The practical solution of the problem of the electrical conversion and transmission of mechanical energy involves certain requirements which the apparatus and systems heretofore employed have not been capable of fulfilling. Such a solution primarily demands a uniformity of speed in the motor irrespective of its load within its normal working limits. On the other hand, it is necessary, to attain a greater economy of conversion than has heretofore existed, to construct cheaper and more reliable and simple apparatus, and such that all danger from the use of currents of high tension, which are necessary to an economical transmission, may be avoided.

My present invention is a new method or mode of effecting the transmission of power by electrical agency, whereby many of the present objections are overcome and great economy and efficiency secured.

In carrying out my invention I employ a motor in which there are two or more independent energizing-circuits, through which I pass, in the manner hereinafter described, alternating currents, effecting thereby a progressive shifting of the magnetism or of the "lines of force," which, in accordance with well-known theories, produces the action of the motor.

It is obvious that a proper progressive shifting of the lines of force may be utilized to set up a movement or rotation of either element of the motor, the armature, or the field-magnet, and that if the currents directed through the several circuits of the motor are in proper direction no commutator for the motor will be required; but to avoid all the usual commutating appliances in the system I connect the motor-circuits directly with those of a suitable alternating-current generator. The practical results of such a system, its economical advantages, and the mode of its construction and operation will be described more in detail by reference to the accompanying diagrams and drawings.

Figures 1 to 8 and 1^a to 8^a, inclusive, are diagrams illustrating the principle of the action of my invention. The remaining figures are views of the apparatus in various forms by means of which the invention may be carried into effect, and which will be described in their order.

Referring first to Fig. 9, which is a diagrammatic representation of a motor, a generator, and connecting-circuits in accordance with my invention, M is the motor, and G the generator for driving it. The motor comprises a ring or annulus, R, preferably built up of thin insulated iron rings or annular plates, so as to be as susceptible as possible to variations in its magnetic condition. This ring is surrounded by four coils of insulated wire symmetrically placed and designated by C C C′ C′. The diametrically-opposite coils are connected up so as to co-operate in pairs in producing free poles on diametrically-opposite parts of the ring. The four free ends thus left are connected to terminals T T T′ T′, as indicated. Near the ring, and preferably inside of it, there is mounted on an axis or shaft a magnetic disk, C, generally circular in shape, but having two segments, cut away as shown. This disk is mounted so as to turn freely within the ring R. The generator G is of any ordinary type, that shown in the present instance having field-magnets N S and a cylindrical armature-core, A, wound with the two coils B B′. The free ends of each coil are carried through the shaft a' and connected, respectively, to insulated contact-rings b b b' b'. Any convenient form of collector or brush bears on each ring and forms a terminal by which the current to and from a ring is conveyed. These terminals are connected to the terminals of the motor by the wires L and L′ in the manner indicated, whereby two complete circuits are formed, one including, say, the coils B of the generator and C C of the motor and the other the remaining coils B′ and C′ C′ of the generator and the motor.

It remains now to explain the mode of operation of this system, and for this purpose I

refer to the diagrams, Figs. 1 to 8 and 1ª to 8ª, for an illustration of the various phases through which the coils of the generator pass when in operation, and the corresponding and resultant magnetic changes produced in the motor. The revolution of the armature of the generator between the field-magnets N S obviously produces in the coils B B′ alternating currents the intensity and direction of which depend upon well-known laws. In the position of the coils indicated in Fig. 1 the current in the coil B is practically *nil*, whereas the coil B′ at the same time is developing its maximum current, and by the means indicated in the description of Fig. 9 the circuit including this coil may also include, say, the coils C C of the motor, Fig. 1ª. The result, with the proper connections, would be the magnetization of the ring R, the poles being on the line N S. The same order of connections being observed between the coil B and the coil C′, the latter when traversed by a current tend to fix the poles at right angles to the line N S of Fig. 1ª. It results, therefore, that when the generator-coils have made one-eighth of a revolution, reaching the position shown in Fig. 2, both pairs of coils, C and C′, will be traversed by current and act in opposition in so far as the location of the poles is concerned. The position of the poles will therefore be the resultant of the magnetizing forces of the coils—that is to say, it will advance along the ring to a position corresponding to one-eighth of the revolution of the armature of the generator.

In Fig. 3 the armature of the generator has progressed to one-fourth of a revolution. At the point indicated the current in the coil B is maximum, while in B′ it is *nil*, the latter coil being in its neutral position. The poles of the ring R in Fig. 3ª will in consequence be shifted to a position ninety degrees from that at the start, as shown. I have in like manner shown the conditions existing at each successive eighth of one revolution in the remaining figures. A short reference to these figures will suffice to an understanding of their significance.

Figs. 4 and 4ª illustrate the conditions which exist when the generator-armature has completed three-eighths of a revolution. Here both coils are generating currents; but the coil B′, having now entered the opposite field, is generating a current in the opposite direction having the opposite magnetizing effect; hence the resultant pole will be on the line N S, as shown.

In Fig. 5 one-half of one revolution of the armature of the generator has been completed, and the resulting magnetic condition of the ring is shown in Fig. 5ª. In this phase coil B is in the neutral position, while coil B′ is generating its maximum current, which is in the same direction as in Fig. 4. The poles will consequently be shifted through one half of the ring.

In Fig. 6 the armature has completed five-eighths of a revolution. In this position coil B′ develops a less powerful current, but in the same direction as before. The coil B, on the other hand, having entered a field of opposite polarity, generates a current of opposite direction. The resultant poles will therefore be in the line N S, Fig. 6ª; or, in other words, the poles of the ring will be shifted along five-eighths of its periphery.

Figs. 7 and 7ª in the same manner illustrate the phases of the generator and ring at three-quarters of a revolution, and Figs. 8 and 8ª the same at seven eighths of a revolution of the generator-armature. These figures will be readily understood from the foregoing.

When a complete revolution is accomplished, the conditions existing at the start are re-established, and the same action is repeated for the next and all subsequent revolutions, and in general it will now be seen that every revolution of the armature of the generator produces a corresponding shifting of the poles or lines of force around the ring. This effect I utilize in producing the rotation of a body or armature in a variety of ways—for example, applying the principle above described to the apparatus shown in Fig. 9. The disk D, owing to its tendency to assume that position in which it embraces the greatest possible number of the magnetic lines, is set in rotation, following the motion of the lines or the points of greatest attraction.

The disk D in Fig. 9 is shown as cut away on opposite sides; but this I have found is not essential to effecting its rotation, as a circular disk, as indicated by dotted lines, is also set in rotation. This phenomenon I attribute to a certain inertia or resistance inherent in the metal to the rapid shifting of the lines of force through the same, which results in a continuous tangential pull upon the disk, causing its rotation. This seems to be confirmed by the fact that a circular disk of steel is more effectively rotated than one of soft iron, for the reason that the former is assumed to possess a greater resistance to the shifting of the magnetic lines.

In illustration of other forms of apparatus by means of which I carry out my invention, I shall now describe the remaining figures of the drawings.

Fig. 10 is a view in elevation and part vertical section of a motor. Fig. 12 is a top view of the same with the field in section and a diagram of connections. Fig. 11 is an end or side view of a generator with the fields in section. This form of motor may be used in place of that shown.

D is a cylindrical or drum armature-core, which, for obvious reasons, should be split up as far as practicable to prevent the circulation within it of currents of induction. The core is wound longitudinally with two coils, E and E′, the ends of which are respectively connected to insulated contact-rings *d d′ d″ d‴*, carried by the shaft *a*, upon which the armature is mounted.

The armature is set to revolve within an

iron shell, R, which constitutes the field-magnet or other element of the motor. This shell is preferably formed with a slot or opening, *r*; but it may be continuous, as shown by the dotted lines, and in this event it is preferably made of steel. It is also desirable that this shell should be divided up similarly to the armature, and for similar reasons. As a generator for driving this motor, I may use the device shown in Fig. 11. This represents an annular or ring armature, A, surrounded by four coils, F F F′ F′, of which those diametrically opposite are connected in series, so that four free ends are left, which are connected to the insulated contact-rings *b b b′ b′*. The ring is suitably mounted on a shaft, *a′*, between the poles N S. The contact-rings of each pair of generator coils are connected to those of the motor, respectively, by means of contact-brushes and the two pairs of conductors, L L and L′ L′, as indicated diagrammatically in Fig. 13.

Now, it is obvious from a consideration of the preceding figures that the rotation of the generator-ring produces currents in the coils F F′, which, being transmitted to the motor-coils, impart to the core of the latter magnetic poles constantly shifting or whirling around the core. This effect sets up a rotation of the armature, owing to the attractive force between the shell and the poles of the armature; but inasmuch as the coils in this case move relatively to the shell or field-magnet the movement of the coils is in the opposite direction to the progressive shifting of the poles.

Other arrangements of the coils of both generator and motor are possible, and a greater number of circuits may be used, as will be seen in the two succeeding figures.

Fig. 13 is a diagrammatic illustration of a motor and a generator connected and constructed in accordance with my invention. Fig. 14 is an end view of the generator with its field-magnets in section.

The field of the motor M is produced by six magnetic poles, G′ G′, secured to or projecting from a ring or frame, H. These magnets or poles are wound with insulated coils, those diametrically opposite to each other being connected in pairs, so as to produce opposite poles in each pair. This leaves six free ends, which are connected to the terminals T T T′ T′ T″ T″. The armature which is mounted to rotate between the poles is a cylinder or disk, D, of wrought-iron, mounted on the shaft *a*. Two segments of the same are cut away, as shown. The generator for this motor has in this instance an armature, A, wound with three coils, K K′ K″, at sixty degrees apart. The ends of these coils are connected, respectively, to insulated contact rings *e e e′ e′ e″ e″*. These rings are connected to those of the motor in proper order by means of collecting-brushes and six wires, forming three independent circuits. The variations in the strength and direction of the currents transmitted through these circuits and traversing the coils of the motor produce a steadily-progressive shifting of the resultant attractive force exerted by the poles G′ upon the armature D, and consequently keep the armature rapidly rotating. The peculiar advantage of this disposition is in obtaining a more concentrated and powerful field. The application of this principle to systems involving multiple circuits generally will be understood from this apparatus.

Referring now to Figs. 15 and 16, Fig. 15 is a diagrammatic representation of a modified disposition of my invention. Fig. 16 is a horizontal cross-section of the motor. In this case a disk, D, of magnetic metal, preferably cut away at opposite edges, as shown in dotted lines in the figure, is mounted so as to turn freely inside two stationary coils, N′ N″, placed at right angles to one another. The coils are preferably wound on a frame, O, of insulating material, and their ends are connected to the fixed terminals T T T′ T′. The generator G is a representative of that class of alternating-current machines in which a stationary induced element is employed. That shown consists of a revolving permanent or electro-magnet, A, and four independent stationary magnets, P P′, wound with coils, those diametrically opposite to each other being connected in series and having their ends secured to the terminals *t t t′ t′*. From these terminals the currents are led to the terminals of the motor, as shown in the drawings. The mode of operation is substantially the same as in the previous cases, the currents traversing the coils of the motor having the effect to turn the disk D. This mode of carrying out the invention has the advantage of dispensing with the sliding contacts in the system.

In the forms of motor above described only one of the elements—the armature or the field-magnet—is provided with energizing-coils. It remains, then, to show how both elements may be wound with coils. Reference is therefore had to Figs. 17, 18, and 19. Fig. 17 is an end view of such a motor. Fig. 18 is a similar view of the generator, with the field-magnets in section; and Fig. 19 is a diagram of the circuit-connections. In Fig. 17 the field-magnet of the motor consists of a ring, R, preferably of thin insulated iron sheets or bands, with eight pole-pieces, G, and corresponding recesses in which four pairs of coils, V, are wound. The diametrically-opposite pairs of coils are connected in series and the free ends connected to four terminals, *w*, the rule to be followed in connecting being the same as hereinbefore explained. An armature, D, with two coils, E E′, at right angles to each other, is mounted to rotate inside of the field-magnet R. The ends of the armature-coils are connected to two pairs of contact-rings, *d d d′ d′*. The generator for this motor may be of any suitable kind to produce currents of the desired character. In the present instance it consists of a field-magnet, N S, and an armature, A, with two coils at right angles, the ends of which are connected to four contact-

rings, *b b b' b'*, carried by its shaft. The circuit-connections are established between the rings on the generator-shaft and those on the motor-shaft by collecting brushes and wires, as previously explained. In order to properly energize the field-magnet of the motor, however, the connections are so made with the armature-coils by wires leading thereto that while the points of greatest attraction or greatest density of magnetic lines of force upon the armature are shifted in one direction those upon the field-magnet are made to progress in an opposite direction. In other respects the operation is identically the same as in the other cases cited. This arrangement results in an increased speed of rotation.

In Figs. 17 and 19, for example, the terminals of each set of field-coils are connected with the wires to the two armature-coils in such a way that the field-coils will maintain opposite poles in advance of the poles of the armature.

In the drawings the field-coils are in shunts to the armature; but they may be in series or in independent circuits.

It is obvious that the same principle may be applied to the various typical forms of motor hereinbefore described.

Having now described the nature of my invention and some of the various ways in which it is or may be carried into effect, I would call attention to certain characteristics which the applications of the invention possess, and the advantages which it offers.

In my motor, considering, for convenience, that represented in Fig. 9, it will be observed that since the disk D has a tendency to follow continuously the points of greatest attraction, and since these points are shifted around the ring once for each revolution of the armature of the generator, it follows that the movement of the disk D will be synchronous with that of the armature A. This feature by practical demonstration I have found to exist in all other forms in which one revolution of the armature of the generator produces a shifting of the poles of the motor through three hundred and sixty degrees.

In the particular modification shown in Fig. 15, or in others constructed on a similar plan, the number of alternating impulses resulting from one revolution of the generator-armature is double as compared with the preceding cases, and the polarities in the motor are shifted around twice by one revolution of the generator-armature. The speed of the motor will therefore be twice that of the generator. The same result is evidently obtained by such a disposition as that shown in Fig. 17, where the poles of both elements are shifted in opposite directions.

Again, considering the apparatus illustrated by Fig. 9 as typical of the invention, it is obvious that since the attractive effect upon the disk D is greatest when the disk is in its proper relative position to the poles developed in the ring R—that is to say, when its ends or poles immediately follow those of the ring—the speed of the motor for all loads within the normal working limits of the motor will be practically constant.

It is clearly apparent that the speed can never exceed the arbitrary limit as determined by the generator, and also that within certain limits, at least, the speed of the motor will be independent of the strength of the current.

It will now be more readily seen from the above description how far the requirements of a practical system of electrical transmission of power are realized in my invention. I secure, first, a uniform speed under all loads within the normal working limits of the motor without the use of any auxiliary regulator; second, synchronism between the motor and the generator; third, greater efficiency by the more direct application of the current, no commutating devices being required on either the motor or the generator; fourth, cheapness and simplicity of mechanical construction; fifth, the capability of being very easily managed or controlled, and, sixth, diminution of danger from injury to persons and apparatus.

These motors may be run in series—multiple arc or multiple series—under conditions well understood by those skilled in the art.

I am aware that it is not new to produce the rotations of a motor by intermittently shifting the poles of one of its elements. This has been done by passing through independent energizing-coils on one of the elements the current from a battery or other source of direct or continuous currents, reversing such current by suitable mechanical appliances, so that it is directed through the coils in alternately opposite directions. In such cases, however, the potential of the energizing-currents remains the same, their direction only being changed. According to my invention, however, I employ true alternating currents; and my invention consists in the discovery of the mode or method of utilizing such currents.

The difference between the two plans and the advantages of mine are obvious. By producing an alternating current each impulse of which involves a rise and fall of potential I reproduce in the motor the exact conditions of the generator, and by such currents and the consequent production of resultant poles the progression of the poles will be continuous and not intermittent. In addition to this, the practical difficulty of interrupting or reversing a current of any considerable strength is such that none of the devices at present could be made to economically or practically effect the transmission of power by reversing in the manner described a continuous or direct current. In so far, then, as the plan of acting upon one element of the motor is concerned, my invention involves the use of an alternating as distinguished from a reversed current, or a current which, while continuous and direct, is shifted from coil to coil by any form of commutator, reverser, or interrupter. With regard to that part of the invention which consists in acting upon both elements of the motor

simultaneously, I regard the use of either alternating or reversed currents as within the scope of the invention, although I do not consider the use of reversed currents of any practical importance.

What I claim is—

The method herein described of electrically transmitting power, which consists in producing a continuously-progressive shifting of the polarities of either or both elements (the armature or field magnet or magnets) of a motor by developing alternating currents in independent circuits, including the magnetizing-coils of either or both elements, as herein set forth.

NIKOLA TESLA.

Witnesses:
FRANK B. MURPHY,
FRANK E. HARTLEY.

Tesla's (real) Flying Machine

Nikola Tesla, what a great man – a real "superman" as O'Neill called him – but even this is not enough to describe the extent of his vision and truth revealing mind. "Who is Tesla?" not surprisingly one might ask; unfortunately this is not the right place to find this answer. There have been several biographies[1] and documents about him, more or less accurate, all in all sufficient to reveal hard evidence on an active and hasty "erasure" of his figure and occultation of related inventions. This however is still not enough to justify the entity of this oppression and misinformation. Who can see through the smoke screen, created by the powers that be, can sense that these are not just the obvious reasons for this historical "eradication". This brings us to the reason of the creation of this document with the hope of bringing back to the world what has unjustly and oppressively been removed. I believe that there are no better words than his own, taken from his own interviews and publications, to indicate what his real secret (even if he did not intend to keep it so forever) and his life long dream, dare I say obsession, really was. This is why I will limit myself in illustrating excerpts of these important passages, which I have been able to recover after months of research, so that they can be read one after the other for major emphasis. Fortunately, not all truth has been erased and not all documents have been minutely screened permitting the pieces of the puzzle to be put back together. I consider this a simple but valuable report which will speak for itself and hopefully interest those who have not yet been enlightened by the information "packed" books written by William Lyne[2], who has been an invaluable source and stands out between the gibberish garbage and mystical baloney that I have read and found all around. Again, there are no better words than Tesla's to describe our current "scientific" community situation and tendency:

"The scientists of today have substituted mathematics for experiments and they wander off through equation after equation and eventually build a mathematical structure which has no relation to reality. They are metaphysicians rather than scientists."[3]

Another remarkable statement Tesla made was that "one can think clearly, but one can be quite insane and think deeply". We have to think clearly, and not get sucked or suckered into thinking deeply by our own mind conditioned by the brainwashing media.

If one carefully studies not only his life, but most importantly his interviews, Tesla's real dream will emerge and this will explain and justify all the other actions he made during his "electric revolution" – I have absolutely no doubt. Instead of creating then diving into "supernatural" problems and deviated ideas one should start from the facts that have already been clearly demonstrated in front of hundreds of people through as many of his experiments. The transcripts and reports are right there under our noses, they just have to be read and most of all understood – what else could Tesla have done for us other than demonstrating[4] his advance in the field? What more could he have done I ask myself than demonstrating in front of the highest figures in scientific research his discoveries and interpretations which in the end were valid? Ask yourselves why so many supposed scientists and mega-phD "dudes" still try to debunk his most critical views while

---

(1) "Prodigal Genius" by J. J. O'Neill, "Man out of time" by M. Cheney, "Wizard" by M. J. Seifer, "My Inventions: the autobiography of Nikola Tesla" Ben Johnston Editor

(2) "Pentagon Aliens", "Occult Ether Physics", "Occult Science Dictatorship" by William Lyne

(3) *"Dr. Tesla, at 77, seldom sleeps" Jul 11th 1933 New York Times*

(4) Experiments with alternate currents of high potential and high frequency delivered before the I.E.E. in London 1892

present objectable or no hard evidence to the contrary. We have evidence, we have facts and we have thousands of people who have witnessed his ideal flying machine zip through the air; what more evidence can that be? The word "Alien" here is out of question. The only "alien" word I see here is in the "alienated" minds of these propagandistic brainwashed back-government funded group of people. Is it possible that amongst all of the world population there are so little straight thinkers? The government controlled brainwashing media has done an exceptionally good job in creating and maintaining these lies and the false "cradle of love" sensation it wants to project - that is certain. I refuse to believe that people do not realize what has happened in the last 100 years of scientific research. We have practically moved from scientific to metaphysic research, from Ether physics (or more correctly Ether Mechanics) to Relativity. Tesla thought of relativity as a "beggar wrapped in purple whom ignorant people take for a king" and "a mass of error and deceptive ideas violently opposed to the teachings of great men of science of the past and even common sense." [(1)] Do people not see how Relativity has stolen ether physics' major truths and deviated them to fit it's own greedy needs? One must see both "sides of the medal" to see the truth, not be narrow visioned and suffocated and accept what is thrown at you just because it is just Mr. PhD who is vomiting it.

The excerpts hereafter are sorted in "striking" order, from the most explicative and obvious to the lesser ones, but all similarly pertinent. At the end of the document I have added some pictures which resemble an idea of his flying machine for reference with an interesting "cover" originally taken from the New York Herald tribune. There is plenty more of course to all this (the truckloads of notes brought away by the FBI and still classified must contain a lot more information than we can imagine) but this should be enough to start the rediscovery of his hidden work for those researchers with good will with a still uncontaminated and open mind.

I will start with the first most explicative article which I believe really says it all about Tesla's life long dream. This was taken from an interview about his bladeless turbine invention and application (emphasis mine):

Excerpt from "Tesla's New Monarch of Machines" Oct. 15, 1911:

"And it makes the aeroplane practical," I suggested.

"Not the aeroplane, the flying machine," responded Dr. Tesla. "Now you have struck the point in which I am most deeply interested—the object toward which I have been devoting my energies for more than twenty years—the dream of my life. It was in seeking the means of making the perfect flying machine that I developed this engine."

"Twenty years ago I believed that I would be the first man to fly; that I was on the track of accomplishing what no one else was anywhere near reaching. I was working entirely in electricity then and did not realize that the gasoline engine was approaching a perfection that was going to make the aeroplane feasible. There is nothing new about the aeroplane but its engine, you know."

[(1)] *"Tesla, 79, promises to transmit force" July 11, 1935 New York Times*

"What I was working on twenty years ago was the wireless transmission of electric power. My idea was a flying machine propelled by an electric motor, with power supplied from stations on the earth. I have not accomplished this as yet, but am confident that I will in time."

"When I found that I had been anticipated as to the flying machine, by men working in a different field, I began to study the problem from other angles, to regard it as a mechanical rather than an electrical problem. I felt certain there must be some means of obtaining power that was better than any now in use. And by vigorous use of my gray matter for a number of years, I grasped the possibilities of the principle of the viscosity and adhesion of fluids and conceived the mechanism of my engine. Now that I have it, my next step will be the perfect flying machine."

An aeroplane driven by your engine?" I asked.

"Not at all," said Dr. Tesla. "The aeroplane is fatally defective. It is merely a toy—a sporting play-thing. It can never become commercially practical. It has fatal defects. One is the fact that when it encounters a downward current of air it is helpless. The "hole in the air" of which aviators speak is simply a downward current, and unless the aeroplane is high enough above the earth to move laterally but can do nothing but fall."

"There is no way of detecting these downward currents, no way of avoiding them, and therefore the aeroplane must always be subject to chance and its operator to the risk of fatal accident. Sportsmen will always take these chances, but as a business proposition the risk is too great.

"The flying machine of the future—my flying machine—will be heavier than air, but it will not be an aeroplane. It will have no wings. It will be substantial, solid, stable. You cannot have a stable airplane. The gyroscope can never be successfully applied to the airplane, for it would give a stability that would result in the machine being torn to pieces by the wind, just as the unprotected aeroplane on the ground is torn to pieces by a high wind.

"My flying machine will have neither wings nor propellers. You might see it on the ground and you would never guess that it was a flying machine. Yet it will be able to move at will through the air in any direction with perfect safety, higher speeds than have yet been reached, regardless of weather and oblivious of "holes in the air" or downward currents. It will ascend in such currents if desired. It can remain absolutely stationary in the air, even in a wind, for great length of time. Its lifting power will not depend upon any such delicate devices as the bird has to employ, but upon positive mechanical action."

"You will get stability through gyroscopes?" I asked.

"Through gyroscopic action of my engine, assisted by some devices I am not yet prepared to talk about," he replied.

"Powerful air currents that may be deflected at will, if produced by engines and compressors sufficiently light and powerful, might lift a heavy body off the ground and propel it through the air," I ventured, wondering if I had grasped the inventor's secret.

Dr. Tesla smiled an inscrutable smile.

"All I have to say on that point is that my airship will have neither gas bag, wings nor propellers," he said. "It is the child of my dreams, the product of years of intense and painful toil and research. I am not going to talk about it any further. But whatever my airship may be, here at least is an engine that will do things that no other engine ever has done, and that is something tangible."

Excerpt from "Tesla's new device like bolts of Thor" Dec 8, 1915 NY Times:

"…He is not yet ready to give the details of the engine which he says will render fruitless any military expedition against a country which possesses it. Suffice it to say that the destructive invention will go through space with a speed of 300miles per second, a manless airship without propelling engine or wings, sent by electricity to any desired point of the globe on its errand of destruction, if destruction its manipulator wishes to effect."

Excerpt from "Tesla at 78 bears new Death beam" Jul 11, 1934 NY Times:

"The production of the death beam, Dr. Tesla said, involves four new inventions, which have not been announced by him. The scientific details of these inventions are to be given out by him before tha proper scientific bodies in the near future.

….

"The first inventions, he said, comprises a method and apparatus for producing rays and other manifestations of energy in free air, eliminating the high vacuum necessary at present for the production of such rays and beams.

The second is a method and process for producing "great electrical force."

The third is a method for amplifying this process in the second invention. The fourth, he said, is "a new method for producing a tremendous electrical repelling* force." (*repelling may have been changed from "propelling" in this article to mislead. Tesla has always referred to a propelling force.)

***Excerpt from "Little airplane progress" June 6, 1908*:**

"The aeroplane of the Langley type, such as was used by Farman and others with some success, will hardly ever prove a practical aerial machine, because no provision is made for maintaining it in the air in a downward current. This and the perfect balance independently of the navigator's control is absolutely essential to the success of the heavier-than-air machine. These two improvements I am myself endeavoring to embody in a machine of my own design"

Excerpt from "Tesla's new engine - Tesla's Wireless Torpedo" Sep 13, 1911 NY Times:

"Mr. Charles Wilson Price, editor of the Electrical Review, does not say that Nikola Tesla's latest invention of a rotary engine operated by steam or gases will save most of the 30,000,000 horse power wasted annually by manufacturing plants in this country, power that is worth upward half a billion dollars. He has not said, as Mr. Tesla is reported

saying, that the new engine will give the world a flying machine that, without planes or screw propellers, 'excessively swift, and, above all, perfectly safe in the greatest storm,' will be small and compact compared with present machines, but capable of carrying shiploads of passengers."

Excerpt from "Tesla Promises Big Things - Planeless, screwless air-ship safe in any storm" Sept. 15, 1911:

"Dr. Nikola Tesla leaned back against his chair at the Waldorff last night and talked calmly of airships without planes, propellers or any of the other gear of the now familiar aeroplanes hurtling through space at tremendous speeds or driving more slowly carrying great loads, and in either case always as safely as the most prosaic of wheeled vehicles."

….

"How about aerial navigation?" Dr. Tesla was asked. He considered for a moment or two and then replied with great deliberation:

"The application of this principle will give the world a flying machine unlike anything that has ever been suggested before. It will have no planes, no screw propellers or devices of any kind hitherto used. It will be small and compact, excessively swift, and, above all, perfectly safe in the greatest storm. It can be built of any size and can carry any weight that may be desired"

Excerpt from "The boy's book of new inventions – The Tesla Turbine" 1912:

"But most of your research has been in electricity," Tesla was reminded, for no one can forget that Tesla's inventions largely have made possible most of the world's greatest electrical power developments.

"Yes," he answered, "but I was a mechanical engineer before I was an electrical engineer, and besides, this principle was worked on in the course of my search for the ideal motor for airships, to be used in conjunction with my invention for the wireless transmission of electrical power. For twenty years I worked on the problem, but I have not given up. When my plan is perfected the present-day aeroplanes and dirigible balloons will disappear, and the dangerous sport of aviation, as we know it now with its hundreds of accidents, and its picturesque birdmen, will give way to safe, seaworthy airships, without wings or gas bags, but supported and driven by mechanical means.

"As I told you before when we were talking of the wireless transmission of power, the mechanism will be a development of the principle on which my turbine is constructed. It will be so tremendously powerful that it will make a veritable rope of air above the great machine to hold it at any altitude the navigators may choose, and also a rope of air in front or in the rear to send it forward or backward at almost any speed desired. When that day comes, airship travel will be as safe and prosaic as travel by railroad train today, and not much very different, except that there will be no dirt, and it will be much faster. One will be able to dine in New York, retire in an aero Pullman berth in a closed and perfectly furnished car, and arise to breakfast in London."

….

"And so, while we are waiting for the world-moving wireless transmission of power and for the completion of Tesla's invention for the safe and stable airships, we can look for the speedy development of his turbine in practically all departments of mechanical engineering."

Excerpt from "The World's Work – The Tesla Turbine" March 1920:

"How did you happen to turn your attention to mechanics instead of electricity?" I asked.

"I was a mechanical engineer before I ever took up electricity," replied Dr. Tesla. "I went into electricity," replied Dr. Tesla "I went into electric science years ago because I thought, in that direction, I was going to solve the problem I have been working on all my life – the production of an engine sufficiently light and powerful to operate the ideal flying machine. All my work in the wireless transmission of power, which has attracted more public attention than anything else I have ever done, was toward that end. I do not expect to build that ideal machine tomorrow, any more than I expect every steam engine in the world to be thrown into the scrap-heap because of this new application of mechanical principles, but such a flying machine will come some day, and meantime I have succeeded in developing something new in prime movers."

Excerpt from "Tesla, 79, promises to transmit force - WOULD EVEN GUIDE SHIPS" Jul 11, 1935 NY Times

"…He described relativity as a 'beggar wrapped in purple whom ignorant people take for a king.'"

Excerpt from "Man out of Time" by M. Cheney, Chapter 20 "Flying Stove"

" When the manager of Westinghouse's railway and lighting division wrote asking for details on the turbine, Tesla replied confidently that it was superior to anything in the competition in terms of extreme lightness and high performance. Indeed, he said, he was planning to use it in a box-like flivver airplane.

"You should not be at all surprised," he wrote, "if some day you see me fly from new York to Colorado Springs in a contrivance which will resemble a gas stove and weigh as much." (The plane would weigh only eight hundred pounds and could if necessary enter and depart through a window.)"

Excerpt from "My Inventions" Ben Johnston Editor, Chap. VI, last page

" As stated on a previous occasion, when I was a student at college I conceived a flying machine quite unlike the present ones. The underlying principle was sound but could not be carried into practice for want of a prime-mover of sufficiently great activity. In recent years I have successfully solved this problem and am now planning aerial machines devoid of sustaining planes, ailerons, propellers, and other external attachments which will be capable of immense speeds and are very likely to furnish powerful arguments for peace in the future. Such a machine, sustained and propelled entirely by reaction, is shown on page 108 (here: second last picture) and is supposed to be controlled either mechanically or by wireless energy."

A representation of Tesla's Flying Machine

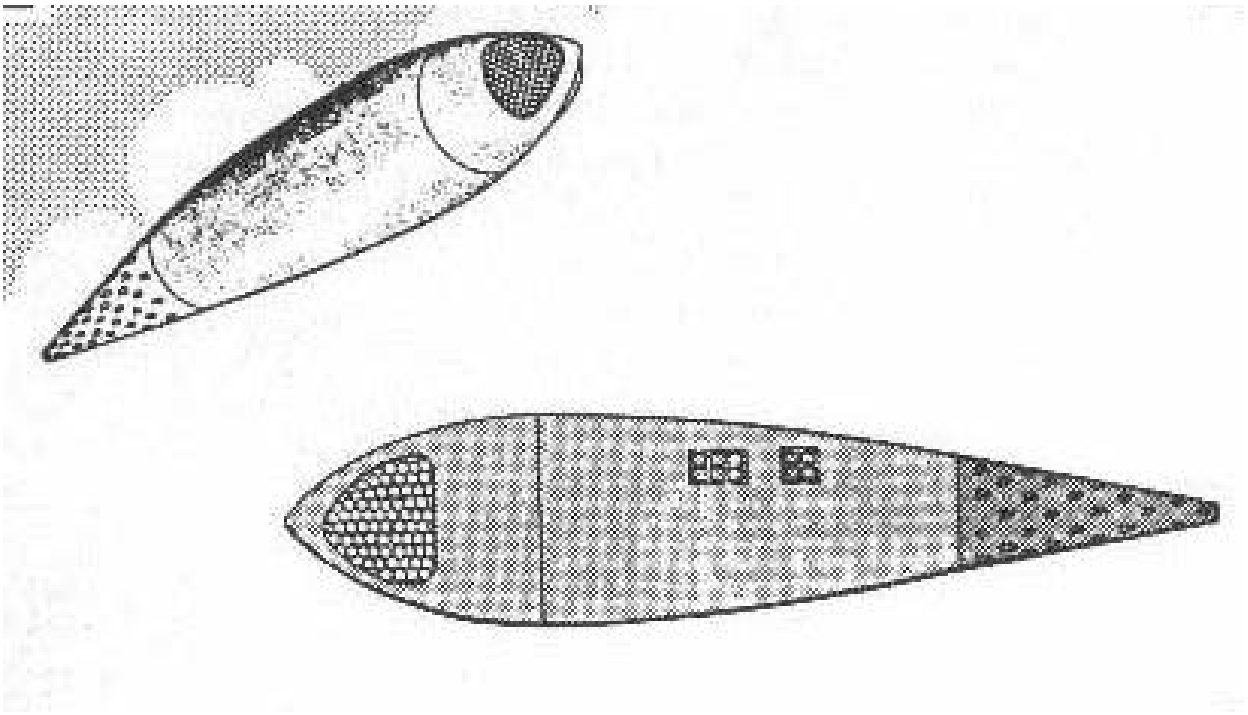

The above design is the more simpler of the 2 possible fundamental types: the disc or saucer shaped "translation" type (developed later) and the "directional" cigar or ovoid type as the above original conception. Here follows a brief description by W. Lyne himself of the above pictured ether propulsion or "electropulsion" craft:

"In considering the gyro system only two large stabilizing gyros are needed, vertically oriented and with axes connected to the airframe. These can be side-by-side or front-to-back on the same plane. This will prevent the ship from rolling side to side or front to back, but will permit the ship to turn horizontally and to rise and drop vertically without problem. Three electrodes on the front would provide turning and forward motion and the polarity could be reversed for braking. To turn, an electrode to the right or left front would be activated and air pressure would push the ship around in that direction after which the front electrode would be activated.

For a small ship, a set of twin turbines would turn a 20kW alternator or generator. Some of this power (about 5-10kW) would run the two synchronous electric motors turning the two gyro-stabilizers. One other small gyro---on gimbals---would be the master gyro for the Peiltochterkompass. For a larger ship, the alternator might have to be perhaps 50kW.

Each "negative" electrode---top one and three front and one rear one---would have a "Tesla bulb" to focus the "ropes" when needed.

Pseudo-electrostatic discharge electrodes would surround each bulb.

This should be all that is needed for a "simple" ship."

Page 1 NEW YORK HERALD TRIBUNE Oct. 15, 1911

WILL TESLA'S NEW MONARCH OF MACHINES REVOLUTIONIZE THE WORLD?

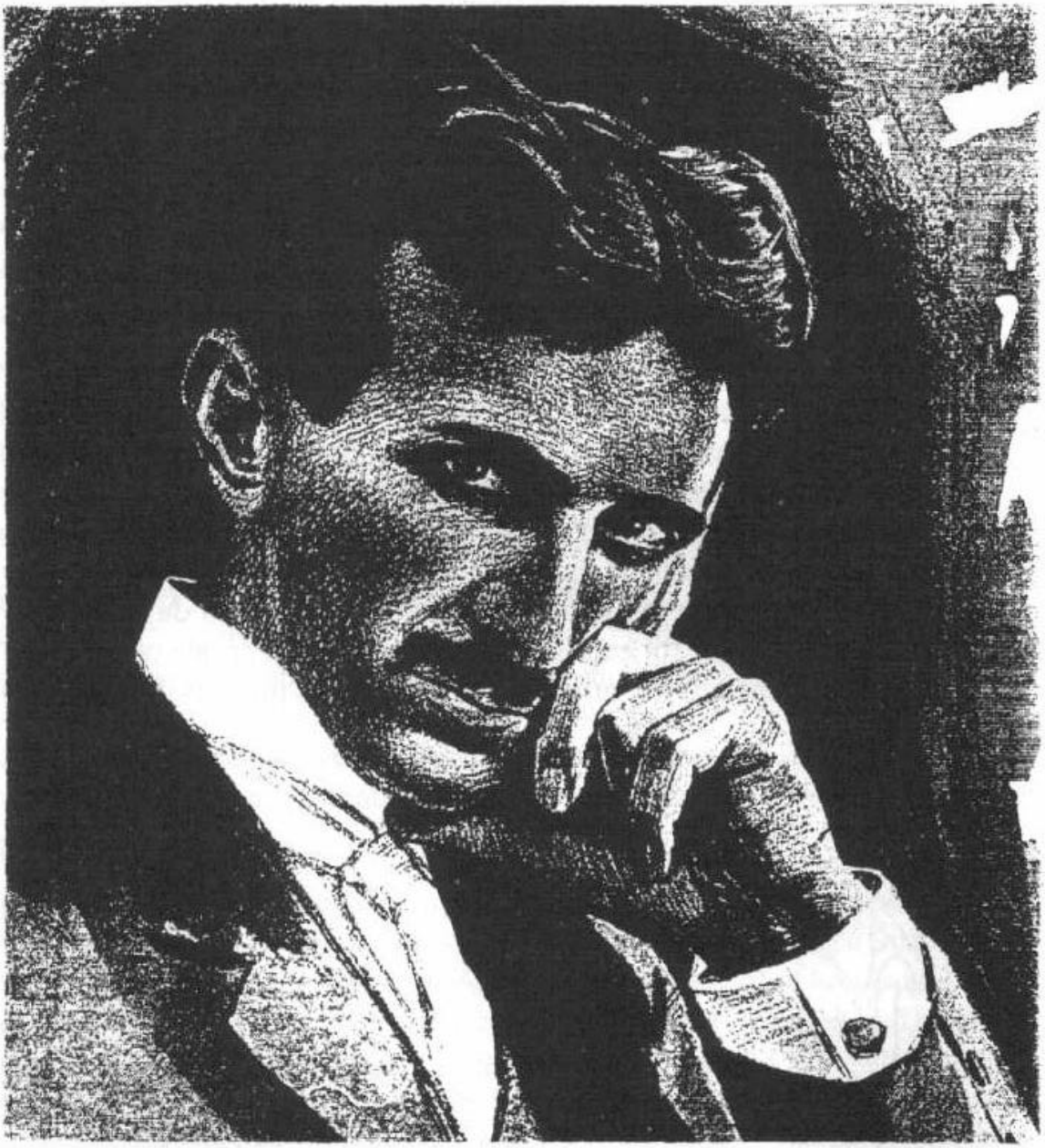

Noted Balkan Scientist claims to have perfected an engine that will develop ten horsepower to every pound of weight, and promises soon to give to the world a flying machine without wings, propeller, or gas bag. Characterizes aeroplanes of today as mere dangerous toys compared with the safe and stable appliance which will be used in a short time to dash through the air at a speed now unimagined.

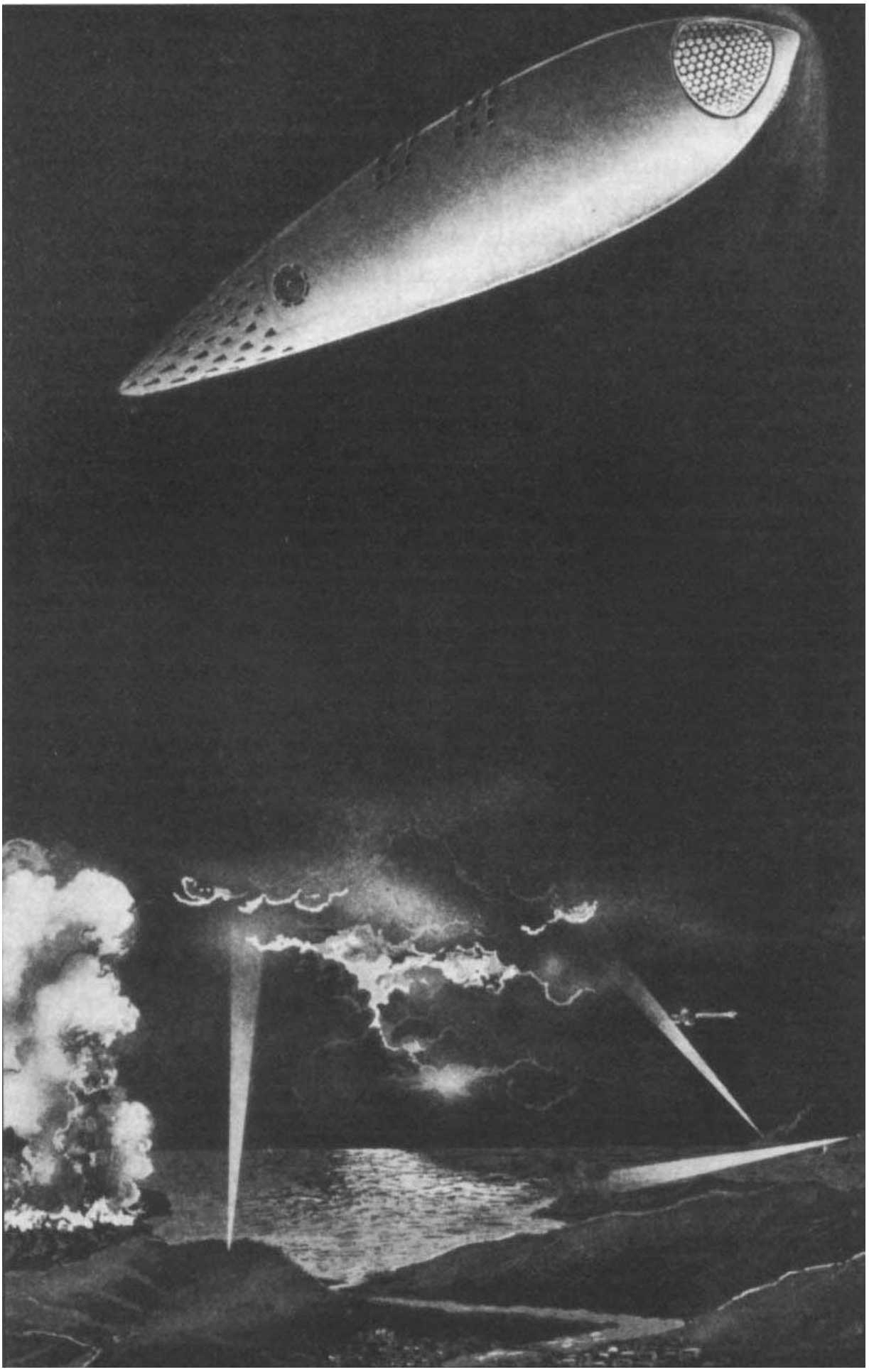

THE FUTURE OF THE WIRELESS ART

by Nikola Tesla

Previous Article Tesla Patents

WIRELESS TELEGRAPHY & TELEPHONY
By Walter W. Massie & Charles R. Underhill, 1908, pp. 67-71.

Mr. Nikola Tesla, in a recent interview by the authors, as to the future of the Wireless Art, volunteered the following statement which is herewith produced in his own words.

"A mass in movement resists change of direction. So does the world oppose a new idea. It takes time to make up the minds to its value and importance. Ignorance, prejudice and inertia of the old retard its early progress. It is discredited by insincere exponents and selfish exploiters. It is attacked and condemned by its enemies. Eventually, though, all barriers are thrown down, and it spreads like fire. This will also prove true of the wireless art.

"The practical applications of this revolutionary principle have only begun. So far they have been confined to the use of oscillations which are quickly damped out in their passage through the medium. Still, even this has commanded universal attention. What will be achieved by waves which do not diminish with distance, baffles comprehension.

"It is difficult for a layman to grasp how an electric current can be propagated to distances of thousands of miles without diminution of intention. But it is simple after all. Distance is only a relative conception, a reflection in the mind of physical limitation. A view of electrical phenomena must be free of this delusive impression. However surprising, it is a fact that a sphere of the size of a little marble offers a greater impediment to the passage of a current than the whole earth. Every experiment, then, which can be performed with such a small sphere can likewise be carried out, and much more perfectly, with the immense globe on which we live. This is not merely a theory, but a truth established in numerous and carefully conducted experiments. When the earth is struck mechanically, as is the case in some powerful terrestrial upheaval, it vibrates like a bell, its period being measured in hours. When it is struck electrically, the charge oscillates, approximately, twelve times a second. By impressing upon it current waves of certain lengths, definitely related to its diameter, the globe is thrown into resonant vibration like a wire, stationary waves forming, the nodal and ventral regions of which can be located with mathematical precision. Owing to this fact and the spheroidal shape of the earth, numerous geodetical and other data, very accurate and of the greatest scientific and practical value, can be readily secured. Through the observation of these astonishing phenomena we shall soon be able to determine the exact diameter of the planet, its configuration and volume, the extent of its elevations and depressions, and to measure, with great precision and with nothing more than an electrical device, all terrestrial distances. In the densest fog or darkness of night, without a compass or other instruments of orientation, or a timepiece, it will be possible to guide a vessel along the shortest or orthodromic path, to instantly read the latitude and longitude, the hour, the distance from any point, and the true speed and direction of movement. By proper use of such disturbances a wave may be made to travel over the earth's surface with any velocity desired, and an electrical effect produced at any spot which can be selected at will and the geographical position of which can be closely ascertained from simple rules of trigonometry.

"This mode of conveying electrical energy to a distance is not 'wireless' in the popular sense, but a transmission through a conductor, and one which is incomparably more perfect than any artificial one. All impediments of conduction arise from confinement of the electric and magnetic fluxes to narrow channels. The globe is free of such cramping and hinderment. It is an ideal conductor because of its immensity, isolation in space, and geometrical form. Its singleness is only an apparent limitation, for by impressing upon it numerous non-interfering vibrations, the flow of energy may be directed through any number of paths which, though bodily connected, are yet perfectly distinct and separate like ever so many cables. Any apparatus, then, which can be operated through one or more wires, at distances obviously limited, can likewise be worked without artificial conductors, and with the same facility and precision, at distances without limit other than that imposed by the physical dimensions of the globe.

"It is intended to give practical demonstrations of these principles with the plant illustrated. As soon as completed, it will be possible for a business man in New York to dictate instructions, and have them instantly appear in type at his office in London or elsewhere. He will be able to call up, from his desk, and talk to any telephone subscriber on the globe, without any change whatever in the existing equipment. An inexpensive instrument, not bigger than a watch, will enable its bearer to hear anywhere, on sea or land, music or song, the speech of a political leader, the address of an eminent man of science, or the sermon of an eloquent clergyman, delivered in some other place, however distant. In the same manner any picture, character, drawing, or print can be transferred from one to another place. Millions of such instruments can be operated from but one plant of this kind. More important than all of this, however, will be the transmission of power, without wires, which will be shown on a scale large enough to carry conviction. These few indications will be sufficient to show that the wireless art offers greater possibilities than any invention or discovery heretofore made, and if the conditions are favorable, we can expect with certitude that in the next few years wonders will be wrought by its application."

The Genius Behind It All

© 1999 Grayson Dietrich (note: this paper was written a while ago. I since have come to believe some of the ideas and information put forth here about Tesla and his work are false, specifcally, the info on his wireless power transmission. Don't take it too seriously. Laters, -The Electrophile)

The sky was ablaze with light above the village of Smiljan, in Croatia, linten by a dazzling electrical storm that had raged for several hours. Inside the household of the Rev. Milutin Tesla, a new child had just been born. That child was Nikola Tesla, born at midnight, July 9, 1856. The Tesla heritage was solid, with a background of scholarships, military honors, clerical dedication, and manual dexterity. There is a legend that the midwife predicted that he would be a child of the storm. The story credits the mother with evading the connotation, preferring to interpret that her son would be a child of light. The father added his own prediction. He was certain that his son would spread the light of the gospel.

Living up to the original two predictions, Nikola Tesla became one of history's greatest electrical engineers; his inventions changed and created, and continue to change, the world as we know it. His most well known creation is the 60-cycle alternating current electrical system utilized in our country since its introduction by Tesla in the 1890's, through allience with Westinghouse. His working with Westinghouse gave his system the support it needed to triumph over Thomas Edison's direct-current system that was currently in use. Without the A.C. system develpoed by Tesla, our power grid and style of life could not exist. First of all, alternating current is much easier to generate than D.C., plus its voltage or current can be readily and easily changed, something impossible with direct current. This allows extreme high-voltage, which travels long distances on wires with little loss, to be stepped up to using transformers, and then sent cross-country on high-tension power lines. D.C. made this impossible, every few hundred yards a new generator was neccesary to maintain power levels, so it couls only be used within individual cities or ships. A.C. is also far less deadly than D.C., since if one were to recieve a shock from a D.C. power line, your muscles would contract with crushing force, locking you onto what ever you happened to have touched. A.C., on the other hand, would force your muscles to vibrate, rather than contract, enabling you a slight chance of rulling away. Tesla created all aspects of the A.C. system, including the first motor to run aff of alternating currnet, which made its adoption possible. After he succeeded, indeed during the struggle, he turned his expertice to another area, even more important than his electrical system: radio.

Nikola Tesla produced the very first radio apparatus, providing the basis for all modern communications. Without it, television, cellular phones, pagers, RADAR, radio broacasting, satellite communications, and many other aspects of daily life normally taken for granted couldn't exist. While it was Nikola Tesla's work that led to the realization of radio, history has it stated that Marconi, an Italian inventor and rival of Tesla, invented radio. His much-publisized trans-atlantic "s" signal ushered in the age of radio signalling and broadcasting, so most people naturally assumed that he had invented the appartatus he had used. When told of the feat, Tesla simply stated: " He is a good man. Let Mr. Marconi continue. He is using 17 of my patents." (Cheyney 161)

It wasn't untill after Tesla's death that in 1947 the Supreme Court overturned the Marconi patents and awarded Tesla as the true father of radio. Even so, Marconi still generally gets the credit, and Nikola Tesla is most often remembered for another of his inventions, dubbed for its creator, the Tesla Coil.

The Tesla Coil was developed by Tesla as a more advanced radio transmitter, and was in fact the first "modern" radio transmitter in that it gives a continuous signal, but the coil also has other properties, among what it is most remembered for being that it can produce electrical discharges amounting to millions of volts. He constructed a great number of the machines, the largest of which that any substantiating information exists about being a huge coil at his Colorado Springs laboratory which gave off lightening bolts nearly a hundred feet long. As it was this large, he designed it to run with special configuration known as a tesla magnifier or magnifying transmitter. He at least partially constructed another of these "magnifying transmitters", this one being what would have been the world's first trans-altlantic broadcasting station.

Located at Wardenclyffe, NJ, this station not only was built with communications in mind, but was to be the means of realization for Tesla's highest aspirations and wishes: the wireless transmission of energy. J.P. Morgan had backed the whole venture and was unaware of tesla's true goal; if he had been, he never would have backed it. Morgan had invested heavily in coal and electric companies; a means of transmitting energy freely would destroy most of those industries. And yet, even without that knowledge, Morgan was very catious about his investment in Tesla's project. An unstable economy and shaky investments in other areas, coupled with Tesla beginning to run over budget, caused him to cut his funding. Tesla stayed on untill the end though, as did his loyal employees, but eventually they left, too.

Before that happened, though, Tesla managed to give the local resisdents enough to spark legends about into the future. In the final nights of Wardenclyffe, before the station fell dark forever, Tesla filled the sky with indescribable displays. Reports tell of his device lighting up the dark sky for a radius of hundreds of miles.

When questioned during this time, he said, "The people about there, had they been awake instead of asleep, at times would have seen even stranger things. Some day, but not at this time, I shall make an announcement of something that I never once dreamed of."(Cheyney 165)

But, this was saddly the site's swan song, and soon afterward the bulding and tower lay abondoned. After the watchmen left, vandals broke in, smashed things, destroyed notes, scattered papers on the floor, and trampled them. Eventually, the entire structure was ordered destoyed to be sold as scrap to pay off some of Tesla's many outstanding debts. It took many attempte to dynamite the tower, it remained stubbornly glued to the spot untill finally, on the ensuing labor day, the dynamite overcame the merely celestial. A junkman noticed some of Tesla's notes blowing down the street. "I did not exactly cry after seeing my place after so long an interval," the inventor wrote,"but I came very close."(Cheyney 174)

A Tesla Coil gives off huge amounts of RF (radio-frequency) energy into the surrounding air and can be collected very easily, with very,VERY simple equipment. Also, the only connection for the recieving equipment is a strong ground attachment, as the energy travels freely through the air. Tesla had envisioned using a network of massive magnifying transmitters to power a world-wide wireless power and communications grid, imagining being able to fly in ultralight plane or land vehical nonstop with all power coming from a simple tunable coil and a large antenna. Saddly, his understanding of radio was flawed. The technology still in its infancy as it was, and while his system would have worked great for communications, his ultimate dream of a wireless power grid would have failed. He misunderstood how electromagnetic waves propogate through the atmosphere, though the principle behind the system still lies mostly intact today.

His idea was to set of a system of standing electromagnetic waves accross the earth's surface. Either this would have been accomplished using the earth itself as a singular conducting body, or he would have used the gap between the the earth's surface and the ionosphere as a massive waveguide. Either of these things could be done, theoretically, but the extreamely low frequencies that would be needed to achieve resonance, only a few hertz in the case of the standing wave system, would be nearly impossible to produce reliably. To construct a tesla coil with a secondary frequency of, say, 20 hertz, and demensions of 100 feet by 33 &1/3feet, nearly 16 million feet of wire would be needed. That works out to be about 1,500 turns per inch, which means the wire could be only 2/3 of a mil(one one thousandth of an inch)thick!

So, yes, the telsa power grid might (HUMONGOUS VERY IFFY "MIGHT")be achieved in this fashion, though another major drawback is that this would have made any and all advanced technologies that we have today utterly impossible. The tesla communications grid would have been simple, but would have had a multitude of crude signals, being broadcast do strongly that anything would be exposed to huge induced voltages. This means no integrated circuits, so all technology would be reduced to the use of large and cumbersome vacuum tubes. And even then we still would not have radio as we know it, so no TV, cell phones, walkman radios, pagers, sattelite communications, or any such things that we take for granted. It must be considered, however, that none of these things existed, aside from simple tones and beeps over long-wave radio, in the time when Tesla proposed and tried to achieve his wireless power grid. Despite his failure to complete his dreams, Tesla contributed more to society than is imaginable. His inventions effect every aspect of our lives, every second depends on principles he created, technologies he devised. Tesla: the true prophet of the modern world.

Perhaps even more important than his invention of radio, was Tesla creation of the first electrical logic circuits. These are the basis of all computers, and allowed Tesla to use his radio transmitters to control several model boats and torpedoes without physical connection. He was using remote control. The most fundamental aspect of what computers are, the electrical switch known as the transistor, only makes the devices posible when used to make up logic circuits. These simple inventions of Tesla may have changed our world more than anything else, and yet, he is nearly never given credit.

Tesla pioneered a vast quantity of sciences, and many of his demonstrations and experiments have remained unreproduced to this very day. So Tesla is credited with a whole slew of "lost inventions", about which nearly all records regarding his experiments are either lost, destroyed, or classified as top secret by various governments. Among these are two actual inventions credited to have existed, and multiple laboratory phenomena unexplainable by any living person. The bladeless steam turbine, for instance, was said to have been so efficient that a 10-inch unit moving at 1000rpm could develope 100 horsepower, running off a conventional steam boiler. This far exceeds a gasoline engine in efficiency. Another invention reported to have been developed in Nikola's New York laboratory was a small, mechanical vibratory oscillator, about the size of an alarm clock. When clamped to any object, it would begin to vibrate, gradually increasing the frequency until it reached the resonating frequency of the object, whereupon the object would shatter. This was demonstrated on bars of steel, and, supposedly, by Mr. Tesla clamping it to a shaft of steel drilled and bolted into the bedrock beneath New York, and causing an earthquake for several blocks around his lab.

Unexplained phenomena he supposedly produced include a variety of plasma discharges, from ball lightning to indoor auroras. One of the least explainable of these is the indoor aurora, causing the very air within his lab to glow harmlessly with a soft, diffused illuminance, giving the sensation of standing in a cloud of light. The only related phenomena to this in nature is the rare low-level aurora, occuring when either the aurora borealis or the aurora austrailis forms only a few feet from the ground, which defies and contradicts modern theory as to how such displays form. Tesla would often amaze visitors with his handling what appeared to be a red

flame, with no fuel visible, his hands totally unprotected, letting the glowing ball roll aound his body, and extinguished at a snap of his fingers.

Nikola Tesla was truly a man of genius, misunderstood, and many times labled a charlatan, but in the end, time and time again, he was proved right. He realized that this would happen with time, that if an invention or idea were stolen, credit would eventually returned, and he would be viewed all the better for it. Tesla once commented when asked about Marconi's use of his (Tesla) radio patents: "Let the future tell the truth and evaluate each one according to his work and accomplishments. The present is theirs, the future, for which I really worked, is mine." (Cheney, 236)

Bibliography

Cheney, Margaret. Tesla: Man Out Of Time New York, New York, Dell publishing, C. 1981

Hunt, Inez, and Wanetta W. Draper. Lightning in His Hand: The Life Story of Nikola Tesla California: Omni Productions, C. 1981

Trikhaus, George. Tesla: The Lost Inventions New York: High Voltage Press, C. 1988*

Turner, Brent. The Tesla Coil Book: What They Are and How They Are Built Privately Printed, C. Brent Turner 1996

In addition, a wildly varied collection of web pages, each dedicated to the furtherment of Tesla Coils.

*A comment must be made here, about this book. It is highly suspect, as multiple statements made within it broke several laws of thermodynamics, including the law of consevation of energy. As such it was viewed with a critical eye, and was used as a source of speculative information only. It served no purpose to the scientific basis for any reasoning in this paper.

The New Wizard of the West

An interview with Tesla, the Modern Miracle-Worker, who is Harnessing the Rays of the Sun; has Discovered Ways of Transmitting Power without Wires and of Seeing by Telephone; has Invented a Means of Employing Electricity as a Fertiliser; and, Finally, is Able to Manufacture Artificial Daylight.

By Chauncy Montgomery M'Govern

From Pearson's Magazine, May 1899

Index to Illustrations

[Tesla's proposed arrangement of balloon stations
for transmitting electricity without wires.]

NOT to stagger on being shown through the laboratory of Nikola Tesla requires the possession of an uncommonly sturdy mind. No person can escape a feeling of giddiness when permitted to pass into this miracle-factory and contemplate for a moment the amazing feats which this young man can accomplish by the mere turning of a hand.

Fancy yourself seated in a large, well- lighted room, with mountains of curious-looking machinery on all sides. A tall, thin young man walks up to you, and by merely snapping his fingers creates instantaneously a ball of leaping red flame, and holds it calmly in his hands. As you gaze you are surprised to see it does not burn his fingers. He lets it fall upon his clothing, on his hair, into your lap, and, finally, puts the ball of flame into a wooden box. You are amazed to see that nowhere does the flame leave the slightest trace, and you rub your eyes to make sure you are not asleep.

The odd flame having been extinguished as miraculously as it appeared, the tall, thin young man next signals to his assistants to close up all the windows. When this has been done the room is as dark as a cave. A moment later you hear the young man say in the laboured accentuation of the foreigner: " Now, my friends, I will make for you some daylight." Quick as a flash the whole laboratory is filled with a strange light as beautiful as that of the moon, but as strong as that of old Sol. As you glance up at the closed shutters on each window, you see that each of them is as tight as a vice, and that no rays are coming through them. Cast your eyes wherever you will you can see no trace of the source of the odd light.

Scarcely have you begun to marvel when the light goes out by a touch on a button by the young man's hand. The room is in darkness again until the same laboured accentuation causes the reopening of all the shutters. Some animal is now brought out from a cage, it is tied to a platform, an electric current is applied to its body and in a second the animal is dead. The tall young man calls your attention to the fact that the indicator registers only one thousand volts, and the dead animal being removed, he jumps upon the platform himself, and his assistants apply the same current to the dismay of the spectators.

You feel a creeping sensation course up your back, and you see the indicator slowly mounting up to nine hundred, and then one thousand volts, and you involuntarily close your eyes, expecting the young man to fall dead before you the very next minute. But he does not budge. Quickly the indicator goes up, up, up, until presently it shows that ten thousand volts, then two million volts of electricity are pouring through the frame of the tall young man, who does not move a muscle.

[Nikola Tesla holding in his hands balls of flame.]

At a sign, the current is stopped, the room is again made dark as night, and presently the visitor sees the sharply-defined black silhouette of the young man, with a beautiful halo of electricity in the background, formed by myriads of tongues of electric flame which are darting out from every quarter of the tall, thin frame. The place is lighted once more, and as the young man comes up to you and shakes your hand, you twist it about in the same fashion as you have seen people do who hold the handles of a strong electric battery. The young man is literally a human electric " live wire."

To tell of these and a thousand other wonders that Tesla does in a trice gives only a faint conception of their effect on the visitor. To really appreciate them one must see, hear, and feel them in the flesh. It is a scientific treat of a lifetime, but it is a treat that few can enjoy, for the laboratory of Tesla is securely locked against everyone not provided with an introduction from a personal friend of the audacious wizard.

"Oh, pshaw! these are only a few play- things," Nikola Tesla replies when the visitor puts into words the astonishment he has experienced; " none of these amount to anything--they are of no value to the great world of science. But come over here and I will show you something that will make a big revolution in every business and home as soon as I am able to get the thing into working form," and then he leads the way through a forest of queer-looking discs and mysterious coils of copper and steel, until the party reaches a raised wall of masonry, on which reposes a long cylinder of glass filled with water, and surrounded by a circle of large mirrors. The roof over this apparatus is of glass, and as the sun pours its rays through this, the rays strike the mirrors and are reflected again towards the glass cylinder, magnifying glasses intensifying the heat of the rays before they strike the cylinder.

[Nikola Tesla]

"This is the experimental model of the apparatus with which I hope some day to so harness the rays of the sun that that heavenly body will operate every machine in our factories, propel every train and carriage in our streets, and do all the cooking in our homes, as well as furnish all the light that man may need by night as well as by day. It will, in short, replace all wood and coal as a producer of motive power and heat and electric lighting

The plan of Nikola Tesla to harness the rays of the sun to do man's bidding is probably the boldest engineering feat that he or anyone else has ever attempted. Though the idea is so great, its principle is so simple that a schoolboy can readily comprehend it. It consists of concentrating the heat of the sun on one spot (the glass cylinder) by the series of complicated mirrors and magnifying glasses until the resulting heat is something terrific.

This manufactured heat is directed upon the cylinder filled with water. This water is chemically prepared so that in a short time the water has evaporated into steam and has passed from the cylinder through a pipe and into another chamber, In the latter place this sun-made steam is made to operate a steam-engine of ordinary construction, the horse-power of which will be determined by the size of the apparatus by which the sun generates steam in that spot. This steam-engine is used to generate electricity. And this electricity can be either used at once or else stored up in storage batteries to be used on days when there is no sunlight.

It will be seen that the object of this plan of Tesla is. to do away with coal, wood, or other fuel, in the manufacture of steam. The remainder of his invention calls for the use of this sun-made steam-pressure, as steam-pressure made from coal is at present in use, throughout the world. The advantage of this Tesla invention is that the cost of manufacturing steam to generate electricity, which would propel say one hundred tram cars, would be infinitely smaller than the cost of the coal required to produce the power to do the same work. The cost of manufacturing the electricity to operate these one hundred tram cars by the Tesla plan, when once the sun station has been completed, would only be a sufficient amount to pay the salaries of a few engineers in charge of the sun-station.

"In this way electricity will be so cheapened," says Mr. Tesla, " that it will be possible for the poorest factory-owner to use it as a power at a smaller cost than steam. Electricity will in this way supplant steam as a motive power on all railways and -- in the shape of storage batteries -- on all water vessels. And the humblest citizen will profit by the new system of producing electricity; for he can have it in his home to do all his cooking and lighting and heating. and it will be even cheaper for him than coal, wood, or petroleum."

It is, of course, not the intention of Mr. Tesla that one sun-station will provide all the electricity for the whole world. His scheme is that in every city and town the local authorities shall build one or more of these sun-stations by public taxation for the use of the whole population, just as these cities now have waterworks and gas plants. Each factory and home will then get its supply of electricity from the nearest sun-station by ordinary electric wires.

Any person can appreciate the big boon that Tesla will confer on humanity by the early completion of this master task. Among other things it will solve a question that has been occupying the minds of scientific men for a long time, viz: As the supply of coal in the earth will be exhausted in about: thousand years, what are we going to do for fuel? " It was when Tesla first thought about the question that he turned his mind to the invention of some form of making power that would not depend upon coal. The plan to harness the sun's rays is the result.

Quite independent of his scheme to harness old Sol, but yet capable of cooperation with it, is Tesla's invention to transmit electrical power without the use of wires, This consists of a means of generating electricity in one spot, where it can be done with little cost, and transmitting the electricity to some other spot where it is impossible to generate electricity except at a big outlay of money.

Of course, it is now possible to transmit electrical power from one place to another by the use of electrical cables, but the cost of these transmitting cables is nearly as great as would be the cost of generating the electricity itself in the locality to which it is desired to transmit it. By the use of Tesla's invention, the atmosphere takes the place of the electrical cables in the transmission of the power, and as the use of the atmosphere would be free, the cost of the transmission ofelectricity from one city to another would be merely nominal.

To make the atmosphere take the part of the costly cables, Tesla's plan is to erect large power stations at every spot where a great waterfall like Niagara, for instance, makes the cost of generating electricity only trifling when the apparatus has once been constructed.

Above each of the stations Tesla wants to build a high tower, over which will be suspended a large balloon. As the electricity is generated in the station below it is conveyed by cables to the tower, and thence to the balloon, where the electricity is set free into the atmosphere. As the atmosphere at this height is much rarefied, and as Tesla has demonstrated rarefied atmosphere to be a good conductor of electricity, the electricity which is thus set free will be carried on by the atmosphere to any indefinite distance.

The second part of the Tesla plan for transmitting electrical power without wires calls for the erection of receiving stations wherever desired. These will act as sort of receivers and storage houses for the electricity set free into the atmosphcre at the generating station miles away. Over each of the receiving stations will be put up a tower and a balloon, which will be equipped with the apparatus necessary to absorb the free electricity in the atmosphere and send it to the receiving station below, from which it can be sent out on wires to light the surrounding country and drive all the machinery of that particular district.

It will be observed that in this scheme Tesla depends on getting his electricity through the agency of the waterfalls, while in the previous scheme he depends upon the agency of the sun for the same purpose. but the inventor is far from believing that the two schemes will conflict. He believes that when both inventions come into popular use they will work together for the common good of man. "The agency of waterfalls to generate electricity could be used when that agency is most convenient in view of natural conditions," says Tesla, " and the agency of the sun could be used in all other cases. But my scheme of transmitting electrical energy without wires can be applied with equally good results to both systems."

Of all the great inventions which Tesla has well on the way towards that point where they can be given to the world for every-day use, his wireless telegraphy invention is the furthest advanced, All that is necessary now is the formation of a company to put up the public station. The principle of this invention is almost too well known now to bear extended explanation. Briefly described, it consists of constructing an apparatus to stir up the electric currents in the earth in such a way that their disturbance will be felt on a second apparatus fitted up in a different part of the world. Different disturbances of the electric currents produce correspondingly different impressions on the second apparatus --the receiver--and in this way an intelligible code is readily arranged.

For the benefit of non-scientific people the great inventor has described for me his wire-less telegraphy invention in the following words:

"Imagine you have on a table before you an immense rubber bag snugly filled with water. I take a rubber tube with a piston-rod in it and insert the tube into the rubber bag. When I press on the piston-rod I compress the water in the bag so that it expands the bag.

"When I withdraw the piston," continued Tesla, " the bag will shrink just so much as there is water drawn up into my tube; and now if I put a second tube with a piston-rod into the bag at the other end, at every pressure of the first piston-rod the effect will be felt and measured in the second tube. Now if a certain action of one piston-rod indicates a certain word or a certain sentence, if you watch the other piston-rod carefully you may easily read it. This is exactly what takes place in wireless telegraphy," concluded Tesla; " let the rubber bag stand for the earth, the water for the electric currents in the earth, and the two tubes and piston-rods for a sending oscillator and receiving oscillator. One sort of disturbance by one oscillator means a certain sentence, and when this particular disturbance is recorded on the second oscillator the operator there knows exactly how to interpret it."

The "oscillators " to which the inventor refers are huge discs on which are insulated hundreds of coils of copper wire whose ends connect with the centre of the disc, where there is a huge round copper ball. They are really the only apparatus required for wireless telegraphy. To operate them Tesla simply turns the transmitting oscillator face downwards, and turns on a current which causes immense tongues of visible electric flashes to leap from the ball into the ground. The receiving oscillator has a delicate contrivance which throbs with each disturbance of the earth's electric currents and records them on a specially contrived apparatus.

Not the least fascinating of Tesla's numerous inventions is one to which he has given the name of " visual telegraphy." With this apparatus one person has only to look into the receiver of an ordinary telephone in one city, and, while talking to a friend a thousand miles away, he can watch the expression on the other's face, criticise the cut of his new suit of clothing, or advise him what to do for that tired look about the eyes. In this invention the experimental apparatus has proved thoroughly successful. The principle of this invention is that just as much as sound-waves make an impression on the immediate atmosphere, so do light waves make their impression.

[Nikola Tesla's wireless telegraphy apparatus.]

"Now, as sound waves of the human voice are transmitted miles and miles by the present telephone after their impression is made on the telephone transmitter," says Mr. Tesla, " just so my experiments have demonstrated that the light waves of the human body can be

transmitted by a different sort of telephone miles and miles away. All we need is the invention of a new transmitter. As the impressions of light waves are so many times more delicate than the impressions of sound waves, it follows that to transmit the impression of the human face, for instance, we require a transmitter many times more delicate. Now, selenium being an extremely sensitive substance, I have utilised this material in the construction of the transmitter which I have just described, and I have found it to be perfectly satisfactory."

To make our homes, our offices, and the streets at midnight as light as day, is another of the great tasks which Mr. Tesla set out for himself many years ago. His hope was to invent a new kind of electric light which would have the strong, steady glow of sunlight.

That Tesla has succeeded in his dream to make artificial daylight there can be no doubt. To every visitor of his laboratory he shows numerous balls of glass of different sizes which look like miniature suns. The glass balls are perfectly empty, there are no wires in them, nor are there any wires on the outside of them. They do not burn the fingers when they are touched. The light does not hurt the eyes as sunlight and ordinary electric light do.

By the time this article is published, a number of the leading New York and Chicago photographers will have their studios supplied with the new artificial daylight.

[The hand of Nikola Tesla, taken by his wonderful artificial daylight, just perfected. This is the first photograph made by the light of the future]

"The reason I have chosen to introduce the new daylight to the photographers first," says the inventor, " is that I believe them to be the severest critics, and most hard to please in the matter of light. If it succeeds with them, a new light will succeed everywhere."

Not the least ingenious of Tesla's great schemes is his invention to fertilise impoverished land by electricity. When Tesla has a company formed to put this invention on the market it will no longer be necessary for the farmer to spend half his year's receipts in purchasing fertilisers. He has only to buy an electric fertiliscr of his own, which he can secure for a trifle at the nearest town.

Dumping a few loads of loose earth into the fertiliser, it comes out at the other end, ready to be spread over the surface of the impoverished ground, where it will insure for the Eollowing season the luxurious crop of the virgin soil.

The explanation which Mr. Tesla gives of just why so simple a piece of work should be productive of such wonderful results is not difficult to comprehend. " Everyone knows," says he, " that the constituent of a fertiliser which makes the ground productive is its nitrogen. Everybody knows also that nitrogen forms four-fifths of the volume of the atmosphere above that piece of unfertile land. This being the case it occurred to me: 'Where is the sense in the farmer buying expensive nitrogen when he has it free of cost at his own door? All the agriculturist needs is some method by which he can separate some of this nitrogen from the atmosphere above the ground and place it on the surface.' And it was to discover this means that I set to work."

As far as the non-technical eye can perceive, the working model of the electric fertiliser consists of nothing but an upright copper cylinder with a removable top, with a spiral coil of wire running throughout the length of the cylinder. Through the bottom of the cylinder are two wires, which connect with a specially constructed dynamo. A quantity of loose earth, treated by a secret chemical preparation in liquid form, is shovelled into the cylinder, an electric current is passed through the confined atmosphere; the oxygen and hydrogen are thus expelled, and the nitrogen which remains is absorbed into the loose earth. There is thus produced as strong a fertiliser for a nominal price at home as it is possible to purchase at a large cost miles and miles away.

Mention is made in this paper of only those inventions of Mr. Tesla which have passed beyond the experimental stage. But there are hundreds of other promised wonders in the yet incipient stage of development in the great inventor's miracle-factory. As I have heard one of his admirers express it, an enumeration of these " sounds like the dream of a half-intoxicated god." Signalling to other planets, raising of certain of the dead by electricity, ending all wars by a terrible machine -- these are a few suggestions selected at random.

Nikola Tesla is a young man yet, and on this account many of his promises have been looked upon by older scientists as but fanciful dreams of a youthful mind. He has scarcely ever made any invention whichthe scientific world has accepted as possible on the first public announcement. But sooner or later the scientific wiseacres have been compelled to admit that Tesla has proven their theories to be wrong.

How these conservative scientists sneered at Tesla's "Utopian audacity" when he first suggested that man should harness the great Niagara Falls! But they humbled their pride sufficiently to be present when the enterprise was formally completed. Again, when he announced the invention of the "Tesla coil" they set him down as "pipe-dreamer." But a few of the brightest of them set to work seriously on the "coil" with the result that one of them -- Rontgen -- discovered his famous X-Rays. No one who is privileged to know Tesla personally, to have heard him explain his plans, and to have been shown through his unique workshop, has the slightest doubt that every one of his promises will be fulfilled in an equally successful way.

THE PROBLEM OF INCREASING HUMAN ENERGY

WITH SPECIAL REFERENCES TO THE HARNESSING OF THE SUN'S ENERGY.

by Nikola Tesla

Tesla Writings TOC Next Article

THE ONWARD MOVEMENT OF MAN—THE ENERGY OF THE MOVEMENT—THE THREE WAYS OF INCREASING HUMAN ENERGY.

Of all the endless variety of phenomena which nature presents to our senses, there is none that fills our minds with greater wonder than that inconceivably complex movement which, in its entirety, we designate as human life; Its mysterious origin is veiled in the forever impenetrable mist of the past, its character is rendered incomprehensible by its infinite intricacy, and its destination is hidden in the unfathomable depths of the future. Whence does it come? What is it? Whither does it tend? are the great questions which the sages of all times have endeavored to answer.

Modern science says: The sun is the past, the earth is the present, the moon is the future. From an incandescent mass we have originated, and into a frozen mass we shall turn. Merciless is the law of nature, and rapidly and irresistibly we are drawn to our doom. Lord Kelvin, in his profound meditations, allows us only a short span of life, something like six million years, after which time the suns bright light will have ceased to shine, and its life giving heat will have ebbed away, and our own earth will be a lump of ice, hurrying on through the eternal night. But do not let us despair. There will still be left upon it a glimmering spark of life, and there will be a chance to kindle a new fire on some distant star. This wonderful possibility seems, indeed, to exist, judging from Professor Dewar's beautiful experiments with liquid air, which show that germs of organic life are not destroyed by cold, no matter how intense; consequently they may be transmitted through the interstellar space. Meanwhile the cheering lights of science and art, ever increasing in intensity, illuminate our path, and marvels they disclose, and the enjoyments they offer, make us measurably forgetful of the gloomy future.

Though we may never be able to comprehend human life, we know certainly that it is a movement, of whatever nature it be. The existence of movement unavoidably implies a body which is being moved and a force which is moving it. Hence, wherever there is life, there is a mass moved by a force. All mass possesses inertia, all force tends to persist. Owing to this universal property and condition, a body, be it at rest or in motion, tends to remain in the same state, and a force, manifesting itself anywhere and through whatever cause, produces an equivalent opposing force, and as an absolute necessity of this it follows that every movement in nature must be rhythmical. Long ago this simple truth was clearly pointed out by Herbert Spencer, who arrived at it through a somewhat different process of reasoning. It is borne out in everything we perceive—in the movement of a planet, in the surging and ebbing of the tide, in the reverberations of the air, the swinging of a pendulum, the oscillations of an electric current, and in the infinitely varied phenomena of organic life. Does not the whole of human life attest to it? Birth, growth, old age, and death of an individual, family, race, or nation, what is it all but a rhythm? All life-manifestation, then, even in its most intricate form, as exemplified in man, however involved and inscrutable, is only a movement, to which the same general laws of movement which govern throughout the physical universe must be applicable.

[See *Nikola Tesla: Colorado Springs Notes*, page 334, Photograph X.]

FIG. 1. BURNING THE NITROGEN OF THE ATMOSPHERE.
Note to Fig. 1.—This result is produced by the discharge of an electrical oscillator giving twelve million volts. The electrical pressure, alternating one hundred thousand times per second, excites the normally inert nitrogen, causing it to combine with the oxygen. The flame-like discharge shown in the photograph measures sixty-five feet across.

When we speak of man, we have a conception of humanity as a whole, and before applying scientific methods to, the investigation of his movement we must accept this as a physical fact. But can anyone doubt to-day that all the millions of individuals and all the innumerable types and characters constitute an entity, a unit? Though free to think and act, we are held together, like the stars in the firmament, with ties inseparable. These ties cannot be seen, but we can feel them. I cut myself in the finger, and it pains me: this finger is a part of me. I see a friend hurt, and it hurts me, too: my friend and I are one. And now I see stricken down an enemy, a lump of matter which, of all the lumps of matter in the universe, I care least for, and it still grieves me. Does this not prove that each of us is only part of a whole?

For ages this idea has been proclaimed in the consummately wise teachings of religion, probably not alone as a means of insuring peace and harmony among men, but as a deeply founded truth. The Buddhist expresses it in one way, the Christian in another, but both say the same: We are all one. Metaphysical proofs are, however, not the only ones which we are able to bring forth in support of this idea. Science, too, recognizes this connectedness of separate individuals, though not quite in the same sense as it admits that the suns, planets, and moons of a constellation are one body, and there can be no doubt that it will be experimentally confirmed in times to come, when our means and methods for investigating psychical and other states and phenomena shall have

been brought to great perfection. Still more: this one human being lives on and on. The individual is ephemeral, races and nations come and pass away, but man remains. Therein lies the profound difference between the individual and the whole. Therein, too, is to be found the partial explanation of many of those marvelous phenomena of heredity which are the result of countless centuries of feeble but persistent influence.

Conceive, then, man as a mass urged on by a force. Though this movement is not of a translatory character, implying change of place, yet the general laws of mechanical movement are applicable to it, and the energy associated with this mass can be measured, in accordance with well-known principles, by half the product of the mass with the square of a certain velocity. So, for instance, a cannon-ball which is at rest possesses a certain amount of energy in the form of heat, which we measure in a similar way. We imagine the ball to consist of innumerable minute particles, called atoms or molecules, which vibrate or whirl around one another. We determine their masses and velocities, and from them the energy of each of these minute systems, and adding them all together, we get an idea of the total heat-energy contained in the ball, which is only seemingly at rest. In this purely theoretical estimate this energy may then be calculated by multiplying half of the total mass—that is half of the sum of all the small masses—with the square of a velocity which is determined from the velocities of the separate particles. In like manner we may conceive of human energy being measured by half the human mass multiplied with the square of the velocity which we are not yet able to compute. But our deficiency in this knowledge will not vitiate the truth of the deductions I shall draw, which rest on the firm basis that the same laws of mass and force govern throughout nature.

Man, however, is not an ordinary mass, consisting of spinning atoms and molecules, and containing merely heat-energy. He is a mass possessed of certain higher qualities by reason of the creative principle of life with which he is endowed. His mass, as the water in an ocean wave, is being continuously exchanged, new taking the place of the old. Not only this, but he grows propagates, and dies, thus altering his mass independently, both in bulk and density. What is most wonderful of all, he is capable of increasing or diminishing his velocity of movement by the mysterious power he possesses by appropriating more or less energy from other substance, and turning it into motive energy. But in any given moment we may ignore these slow changes and assume that human energy is measured by half the product of man's mass with the square of a certain hypothetical velocity. However we may compute this velocity, and whatever we may take as the standard of its measure, we must, in harmony with this conception, come to the conclusion that the great problem of science is, and always will be, to increase the energy thus defined. Many years ago, stimulated by the perusal of that deeply interesting work, Draper's "History of the Intellectual Development of Europe," depicting so vividly human movement, I recognized that to solve this eternal problem must ever be the chief task of the man of science. Some results of my own efforts to this end I shall endeavor briefly to describe here.

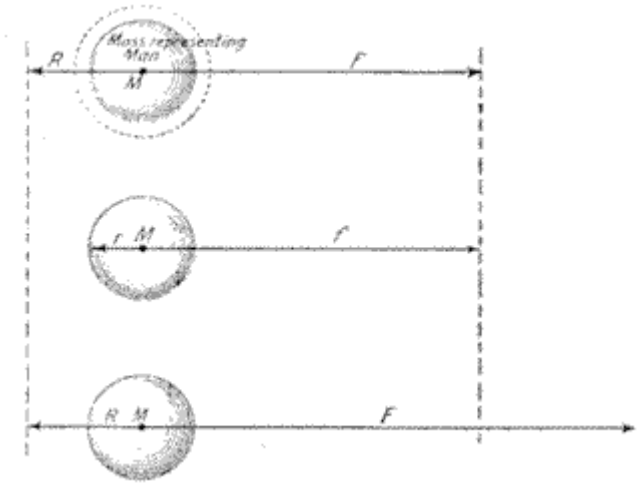

DIAGRAM *a*. THE THREE WAYS OF INCREASING HUMAN ENERGY.

Let, then, in diagram *a*, *M* represent the mass of man. This mass is impelled in one direction by a force *f*, which is resisted by another partly frictional and partly negative force *R*, acting in a direction exactly opposite, and retarding the movement of the mass. Such an antagonistic force is present in every movement and must be taken into consideration. The difference between these two forces is the effective force which imparts a velocity *V* to the mass *M* in the direction of the arrow on the line representing the force *f*. In accordance with the preceding, the human energy will then be given by the product $\frac{1}{2} MV^2 = \frac{1}{2} MV \times V$, in which *M* is the total mass of man in the ordinary interpretation of the term "mass," and *V* is a certain hypothetical velocity, which, in the present state of science, we are unable exactly to define and determine. To increase the human energy is, therefore, equivalent to increasing this product, and there are, as will readily be seen, only three ways possible to attain this result, which are illustrated in the above

diagram. The first way shown in the top figure, is to increase the mass (as indicated by the dotted circle), leaving the two opposing forces the same. The second way is to reduce the retarding force *R* to a smaller value *r*, leaving the mass and the impelling force the same, as diagrammatically shown in the middle figure. The third way, which is illustrated in the last figure, is to increase the impelling force *f* to a higher value *F*, while the mass and the retarding force*R* remain unaltered. Evidently fixed limits exist as regards increase of mass and reduction of retarding force, but the impelling force can be increased indefinitely. Each of these three possible solutions presents a different aspect of the main problem of increasing human energy, which is thus divided into three distinct problems, to be successively considered.

THE FIRST PROBLEM: HOW TO INCREASE THE HUMAN MASS—THE BURNING OF ATMOSPHERIC NITROGEN.

Viewed generally, there are obviously two ways of increasing the mass of mankind: first, by aiding and maintaining those forces and conditions which tend to increase it; and, second, by opposing and reducing those which tend to diminish it. The mass will be increased by careful attention to health, by substantial food, by moderation, by regularity of habits, by promotion of marriage, by conscientious attention to children, and, generally stated, by the observance of all the many precepts and laws of religion and hygiene. But in adding new mass to the old, three cases again present themselves. Either the mass added is of the same velocity as the old, or it is of a smaller or of a higher velocity. To gain an idea of the relative importance of these cases, imagine a train composed of, say, one hundred locomotives running on a track, and suppose that, to increase the energy of the moving mass, four more locomotives are added to the train. If these four move at the same velocity at which the train is going, the total energy will be increased four per cent.; if they are moving at only one half of that velocity, the increase will amount to only one per cent.; if they are moving at twice that velocity, the increase of energy will be sixteen per cent. This simple illustration shows that it is of greatest importance to add mass of a higher velocity. Stated more to the point, if, for example, the children be of the same degree of enlightenment as the parents,—that is, mass of the "same velocity,"—the energy will simply increase proportionately to the number added. If they are less intelligent or advanced, or mass of "smaller velocity," there will be a very slight gain in the energy; but if they are further advanced, or mass of "higher velocity," then the new generation will add very considerably to the sum total of human energy. any addition of mass of "smaller velocity," beyond that indispensable amount required by the law expressed in the proverb, "Mens sana in corpore sano," should be strenuously opposed. For instance, the mere development of muscle, as aimed at in some of our colleges, I consider equivalent to adding mass of "smaller velocity," and I would not commend it, although my views were different when I was a student myself. Moderate exercise, insuring the right balance between mind and body, and the highest efficiency of performance, is, of course, a prime requirement. The above example shows that the most important result to be attained is the education, or the increase of the "velocity," of the mass newly added.

Conversely, it scarcely need be stated that everything that is against the teachings of religion and the laws of hygiene is tending to decrease the mass. Whisky, wine, tea coffee, tobacco, and other such stimulants are responsible for the shortening of the lives of many, and ought to be used with moderation. But I do not think that rigorous measures of suppression of habits followed through many generations are commendable. It is wiser to preach moderation than abstinence. We have become accustomed to these stimulants, and if such reforms are to be effected, they must be slow and gradual. Those who are devoting their energies to such ends could make themselves far more useful by turning their efforts in other directions, as, for instance, toward providing pure water.

For every person who perishes from the effects of a stimulant, at least a thousand die from the consequences of drinking impure water. This precious fluid, which daily infuses new life into us, is likewise the chief vehicle through which disease and death enter our bodies. The germs of destruction it conveys are enemies all the more terrible as they perform their fatal work unperceived. They seal our doom while we live and enjoy. The majority of people are so ignorant or careless in drinking water, and the consequences of this are so disastrous, that a philanthropist can scarcely use his efforts better than by endeavoring to enlighten those who are thus injuring themselves. By systematic purification and sterilization of the drinking water the human mass would be very considerably increased. It should be made a rigid rule—which might be enforced by law—to boil or to sterilize otherwise the drinking water in every household and public place. The mere filtering does not afford sufficient security against infection. All ice for internal uses should be artificially prepared from water thoroughly sterilized. The importance of eliminating germs of disease from the city water is generally recognized, but little is being done to improve the existing conditions, as no satisfactory method of sterilizing great quantities of water has yet been brought forward. By improved electrical appliances we are now enabled to produce ozone cheaply and in large amounts, and this ideal disinfectant seems to offer a happy solution of the important question.

Gambling, business rush, and excitement, particularly on the exchanges, are causes of much mass reduction, all the more so because the individuals concerned represent units of higher value. Incapacity of observing the first symptoms of an illness, and careless neglect of the same, are important factors of mortality. In noting carefully every new sign of approaching danger, and making conscientiously every possible effort to avert it, we are not only following wise laws of hygiene in the interest of our well-being and the success of our labors, but we are also complying with a higher moral duty. Everyone should consider his body as a priceless gift from one whom he loves above all, as a marvelous work of art, of indescribable beauty and mastery beyond human conception, and so delicate and frail that a word, a breath, a look, nay, a thought, may injure it. Uncleanliness, which breeds disease and death, is not only a self destructive but highly immoral habit. In keeping our bodies free from infection, healthful, and pure, we are expressing our reverence for the high principle with which they are endowed. He who follows the precepts of hygiene in this spirit is proving himself, so far, truly religious. Laxity of morals is a terrible evil, which poisons both mind and body, and which is responsible for a

great reduction of the human mass in some countries. Many of the present customs and tendencies are productive of similar hurtful results. For example, the society life, modern education and pursuits of women, tending to draw them away from their household duties and make men out of them, must needs detract from the elevating ideal they represent, diminish the artistic creative power, and cause sterility and a general weakening of the race. A thousand other evils might be mentioned, but all put together, in their bearing upon the problem under discussion, they could not equal a single one, the want of food, brought on by poverty, destitution, and famine. Millions of individuals die yearly for want of food, thus keeping down the mass. Even in our enlightened communities, and not withstanding the many charitable efforts, this is still, in all probability, the chief evil. I do not mean here absolute want of food, but want of healthful nutriment.

How to provide good and plentiful food is, therefore, a most important question of the day. On the general principles the raising of cattle as a means of providing food is objectionable, because, in the sense interpreted above, it must undoubtedly tend to the addition of mass of a "smaller velocity." It is certainly preferable to raise vegetables, and I think, therefore, that vegetarianism is a commendable departure from the established barbarous habit. That we can subsist on plant food and perform our work even to advantage is not a theory, but a well-demonstrated fact. Many races living almost exclusively on vegetables are of superior physique and strength. There is no doubt that some plant food, such as oatmeal, is more economical than meat, and superior to it in regard to both mechanical and mental performance. Such food, moreover, taxes our digestive organs decidedly less, and, in making us more contented and sociable, produces an amount of good difficult to estimate. In view of these facts every effort should be made to stop the wanton and cruel slaughter of animals, which must be destructive to our morals. To free ourselves from animal instincts and appetites, which keep us down, we should begin at the very root from which we spring: we should effect a radical reform in the character of the food.

There seems to be no *philosophical* necessity for food. We can conceive of organized beings living without nourishment, and deriving all the energy they need for the performance of their life functions from the ambient medium. In a crystal we have the clear evidence of the existence of a formative life-principle, and though we cannot understand the life of a crystal, it is none the less a living being. There may be, besides crystals, other such individualized, material systems of beings, perhaps of gaseous constitution, or composed of substance still more tenuous. In view of this possibility,—nay, probability, we cannot apodictically deny the existence of organized beings on a planet merely because the conditions on the same are unsuitable for the existence of life as we conceive it. We cannot even, with positive assurance, assert that some of them might not be present here, in this our world, in the very midst of us, for their constitution and life-manifestation may be such that we are unable to perceive them.

The production of artificial food as a means for causing an increase of the human mass naturally suggests itself, but a direct attempt of this kind to provide nourishment does not appear to me rational, at least not for the present. Whether we could thrive on such food is very doubtful. We are the result of ages of continuous adaptation, and we cannot radically change without unforeseen and, in all probability, disastrous consequences. So uncertain an experiment should not be tried. By far the best way, it seems to me, to meet the ravages of the evil, would be to find ways of increasing the productivity of the soil. With this object the preservation of forests is of an importance which cannot be overestimated, and in this connection, also, the utilization of water-power for purposes of electrical transmission, dispensing in many ways with the necessity of burning wood, and tending thereby to forest preservation, is to be strongly advocated. But there are limits in the improvement to be effected in this and similar ways.

To increase materially the productivity of the soil, it must be more effectively fertilized by artificial means. The question of food-production resolves itself, then, into the question how best to fertilize the soil. What it is that made the soil is still a mystery. To explain its origin is probably equivalent to explaining the origin of life itself. The rocks, disintegrated by moisture and heat and wind and weather, were in themselves not capable of maintaining life. Some unexplained condition arose, and some new principle came into effect, and the first layer capable of sustaining low organisms, like mosses was formed. These, by their life and death, added more of the life sustaining quality to the soil, and higher organisms could then subsist, and so on and on, until at last highly developed plant and animal life could flourish. But though the theories are, even now, not in agreement as to how fertilization is effected, it is a fact, only too well ascertained, that the soil cannot indefinitely sustain life, and some way must be found to supply it with the substances which have been abstracted from it by the plants. The chief and most valuable among these substances are compounds of nitrogen, and the cheap production of these is, therefore, the key for the solution of the all-important food problem. Our atmosphere contains an inexhaustible amount of nitrogen, and could we but oxidize it and produce these compounds, an incalculable benefit for mankind would follow.

Long ago this idea took a powerful hold on the imagination of scientific men, but an efficient means for accomplishing this result could not be devised. The problem was rendered extremely difficult by the extraordinary inertness of the nitrogen, which refuses to combine even with oxygen. But here electricity comes to our aid: the dormant affinities of the element are awakened by an electric current of the proper quality. As a lump of coal which has been in contact with oxygen for centuries without burning will combine with it when once ignited, so nitrogen, excited by electricity, will burn. I did not succeed, however, in producing electrical discharges exciting very effectively the atmospheric nitrogen until a comparatively recent date, although I showed, in May, 1891, in a scientific lecture, a novel form of discharge or electrical flame named "St. Elmo's hotfire," which, besides being capable of generating ozone in abundance, also possessed, as I pointed out on that occasion, distinctly the quality of exciting chemical affinities. This discharge or flame was then only three or four inches long, its chemical action was likewise very feeble, and consequently the process of

oxidation of nitrogen was wasteful. How to intensify this action was the question. Evidently electric currents of a peculiar kind had to be produced in order to render the process of nitrogen combustion more efficient.

The first advance was made in ascertaining that the chemical activity of the discharge was very considerably increased by using currents of extremely high frequency or rate of vibration. This was an important improvement, but practical considerations soon set a definite limit to the progress in this direction. Next, the effects of the electrical pressure of the current impulses, of their wave-form and other characteristic features, were investigated. Then the influence of the atmospheric pressure and temperature and of the presence of water and other bodies was studied, and thus the best conditions for causing the most intense chemical action of the discharge and securing the highest efficiency of the process were gradually ascertained. Naturally, the improvements were not quick in coming; still, little by little, I advanced. The flame grew larger and larger, and its oxidizing action grew more intense. From an insignificant brush-discharge a few inches long it developed into a marvelous electrical phenomenon, a roaring blaze, devouring the nitrogen of the atmosphere and measuring sixty or seventy feet across. Thus slowly, almost imperceptibly, possibility became accomplishment. All is not yet done, by any means, but to what a degree my efforts have been rewarded an idea may be gained from an inspection of Fig. 1 (p. 176), which, with its title, is self explanatory. The flame-like discharge visible is produced by the intanse electrical oscillations which pass through the coil shown, and violently agitate the electrified molecules of the air. By this means a strong affinity is created between the two normally indifferent constituents of the atmosphere, and they combine readily, even if no further provision is made for intensifying the chemical action of the discharge. In the manufacture of nitrogen compounds by this method, of course, every possible means bearing upon the intensity of this action and the efficiency of the process will be taken advantage of, and, besides, special arrangements will be provided for the fixation of the compounds formed, as they are generally unstable, the nitrogen becoming again inert after a little lapse of time. Steam is a simple and effective means for fixing permanently the compounds. The result illustrated makes it practicable to oxidize the atmospheric nitrogen in unlimited quantities, merely by the use of cheap mechanical power and simple electrical apparatus. In this manner many compounds of nitrogen may be manufactured all over the world, at a small cost, and in any desired amount, and by means of these compounds the soil can be fertilized and its productiveness indefinitely increased. An abundance of cheap and healthful food, not artificial, but such as we are accustomed to, may thus be obtained. This new and inexhaustible source of food-supply will be of incalculable benefit to mankind, for it will enormously contribute to the increase of the human mass, and thus add immensely to human energy. Soon, I hope, the world will see the beginning of an industry which, in time to come, will, I believe, be in importance next to that if iron.

THE SECOND PROBLEM: HOW TO REDUCE THE FORCE RETARDING THE HUMAN MASS—THE ART OF TELAUTOMATICS.

As before stated, the force which retards the onward movement of man is partly frictional and partly negative. To illustrate this distinction I may name, for example, ignorance, stupidity, and imbecility as some of the purely frictional forces, or resistances devoid of any directive tendency. On the other hand, visionariness, insanity, self-destructive tendency, religious fanaticism, and the like, are all forces of a negative character, acting in definite directions. To reduce or entirely overcome these dissimilar retarding forces, radically different methods must be employed. One knows, for instance, what a fanatic may do, and one can take preventive measures, can enlighten, convince, and, possibly direct him, turn his vice into virtue; but one does not know, and never can know, what a brute or an imbecile may do, and one must deal with him as with a mass, inert, without mind, let loose by the mad elements. A negative force always implies some quality, not infrequently a high one, though badly directed, which it is possible to turn to good advantage; but a directionless, frictional force involves unavoidable loss. Evidently, then, the first and general answer to the above question is: turn all negative force in the right direction and reduce all frictional force.

There can be no doubt that, of all the frictional resistances, the one that most retards human movement is ignorance. Not without reason said that man of wisdom, Buddha: "Ignorance is the greatest evil in the world." The friction which results from ignorance, and which is greatly increased owing to the numerous languages and nationalities, can be reduced only by the spread of knowledge and the unification of the heterogeneous elements of humanity. No effort could be better spent. But however ignorance may have retarded the onward movement of man in times past, it is certain that, nowadays, negative forces have become of greater importance. Among these there is one of far greater moment than any other. It is called organized warfare. When we consider the millions of individuals, often the ablest in mind and body, the flower of humanity, who are compelled to a life of inactivity and unproductiveness, the immense sums of money daily required for the maintenance of armies and war apparatus, representing ever so much of human energy, all the effort uselessly spent in the production of arms and implements of destruction, the loss of life and the fostering of a barbarous spirit, we are appalled at the inestimable loss to mankind which the existence of these deplorable conditions must involve. What can we do to combat best this great evil?

Law and order absolutely require the maintenance of organized force. No community can exist and prosper without rigid discipline. Every country must be able to defend itself, should the necessity arise. The conditions of to-day are not the result of yesterday, and a radical change cannot be effected to-morrow. If the nations would at once disarm, it is more than likely that a state of things worse than war itself would follow. Universal peace is a beautiful dream, but not at once realizable. We have seen recently that even the nobel effort of the man invested with the greatest worldly power has been virtually without effect. And no wonder, for the establishment of universal peace is, for the time being, a physical impossibility. War is a negative force, and cannot be turned in a

positive direction without passing through, the intermediate phases. It is a problem of making a wheel, rotating one way, turn in the opposite direction without slowing it down, stopping it, and speeding it up again the other way.

It has been argued that the perfection of guns of great destructive power will stop warfare. So I myself thought for a long time, but now I believe this to be a profound mistake. Such developments will greatly modify, but not arrest it. On the contrary, I think that every new arm that is invented, every new departure that is made in this direction, merely invites new talent and skill, engages new effort, offers new incentive, and so only gives a fresh impetus to further development. Think of the discovery of gun-powder. Can we conceive of any more radical departure than was effected by this innovation? Let us imagine ourselves living in that period: would we not have thought then that warfare was at an end, when the armor of the knight became an object of ridicule, when bodily strength and skill, meaning so much before, became of comparatively little value? Yet gunpowder did not stop warfare: quite the opposite—it acted as a most powerful incentive. Nor do I believe that warfare can ever be arrested by any scientific or ideal development, so long as similar conditions to those prevailing now exist, because war has itself become a science, and because war involves some of the most sacred sentiments of which man is capable. In fact, it is doubtful whether men who would not be ready to fight for a high principle would be good for anything at all. It is not the mind which makes man, nor is it the body; it is mind and body. Our virtues and our failings are inseparable, like force and matter. When they separate, man is no more.

Another argument, which carries considerable force, is frequently made, namely, that war must soon become impossible be cause the means of defense are outstripping the means of attack. This is only in accordance with a fundamental law which may be expressed by the statement that it is easier to destroy than to build. This law defines human capacities and human conditions. Were these such that it would be easier build than to destroy, man would go on unresisted, creating and accumulating without limit. Such conditions are not of this earth. A being which could do this would not be a man: it might be a god. Defense will always have the advantage over attack, but this alone, it seems to me, can never stop war. By the use of new principles of defense we can render harbors impregnable against attack, but we cannot by such means prevent two warships meeting in battle on the high sea. And then, if we follow this idea to its ultimate development, we are led to the conclusion that it would be better for mankind if attack and defense were just oppositely related; for if every country, even the smallest, could surround itself with a wall absolutely impenetrable, and could defy the rest of the world, a state of things would surely be brought on which would be extremely unfavorable to human progress. It is by abolishing all the barriers which separate nations and countries that civilization is best furthered.

Again, it is contended by some that the advent of the flying-machine must bring on universal peace. This, too, I believe to be an entirely erroneous view. The flying-machine is certainly coming, and very soon, but the conditions will remain the same as before. In fact, I see no reason why a ruling power, like Great Britain, might not govern the air as well as the sea. Without wishing to put myself on record as a prophet, I do not hesitate to say that the next years will see the establishment of an "air-power," and its center may be not far from New York. But, for all that, men will fight on merrily.

The ideal development of the war principle would ultimately lead to the transformation of the whole energy of war into purely potential, explosive energy, like that of an electrical condenser. In this form the war-energy could be maintained without effort; it would need to be much smaller in amount, while incomparably more effective.

As regards the security of a country against foreign invasion, it is interesting to note that it depends only on the relative, and not the absolute, number of the individuals or magnitude of the forces, and that, if every country should reduce the war-force in the same ratio, the security would remain unaltered. An international agreement with the object of reducing to a minimum the war-force which, in view of the present still imperfect education of the masses, is absolutely indispensable, would, therefore, seem to be the first rational step to take toward diminishing the force retarding human movement.

Fortunately, the existing conditions cannot continue indefinitely, for a new element is beginning to assert itself. A change for the better is eminent, and I shall now endeavor to show what, according to my ideas, will be the first advance toward the establishment of peaceful relations between nations, and by what means it will eventually be accomplished.

Let us go back to the early beginning, when the law of the stronger was the only law. The light of reason was not yet kindled, and the weak was entirely at the mercy of the strong. The weak individual then began to learn how to defend himself. He made use of a club, stone, spear, sling, or bow and arrow, and in the course of time, instead of physical strength, intelligence became the chief deciding factor in the battle. The wild character was gradually softened by the awakening of noble sentiments, and so, imperceptibly, after ages of continued progress, we have come from the brutal fight of the unreasoning animal to what we call the "civilized warfare" of to-day, in which the combatants shake hands, talk in a friendly way, and smoke cigars in the entr'actes, ready to engage again in deadly conflict at a signal. Let pessimists say what they like, here is an absolute evidence of great and gratifying advance.

But now, what is the next phase in this evolution? Not peace as yet, by any means. The next change which should naturally follow from modern developments should be the continuous diminution of the number of individuals engaged in battle. The apparatus will be one of specifically great power, but only a few individuals will be required to operate it. This evolution will bring more and more into prominence a machine or mechanism with the fewest individuals as an element of warfare, and the absolutely unavoidable

consequence of this will be the abandonment of large, clumsy, slowly moving, and unmanageable units. Greatest possible speed and maximum rate of energy-delivery by the war apparatus will be the main object. The loss of life will become smaller and smaller, and finally, the number of the individuals continuously diminishing, merely machines will meet in a contest without blood-shed, the nations being simply interested, ambitious spectators. When this happy condition is realized, peace will be assured. But, no matter to what degree of perfection rapid-fire guns, high-power cannon, explosive projectiles, torpedo-boats, or other implements of war may be brought, no matter how destructive they may be made, that condition can never be reached through any such development. All such implements require men for their operation; men are indispensable parts of the machinery. Their object is to kill and to destroy. Their power resides in their capacity for doing evil. So long as men meet in battle, there will be bloodshed. Bloodshed will ever keep up barbarous passion. To break this fierce spirit, a radical departure must be made, an entirely new principle must be introduced, something that never existed before in warfare—a principle which will forcibly, unavoidably, turn the battle into a mere spectacle, a play, a contest without loss of blood. To bring on this result men must be dispensed with: machine must fight machine. But how accomplish that which seems impossible? The answer is simple enough: produce a machine capable of acting as though it were part of a human being—no mere mechanical contrivance, comprising levers, screws, wheels, clutches, and nothing more, but a machine embodying a higher principle, which will enable it to per form its duties as though it had intelligence, experience, judgment, a mind! This conclusion is the result of my thoughts and observations which have extended through virtually my whole life, and I shall now briefly describe how I came to accomplish that which at first seemed an unrealizable dream.

A long time ago, when I was a boy, I was afflicted with a singular trouble, which seems to have been due to an extraordinary excitability of the retina. It was the appearance of images which, by their persistence, marred the vision of real objects and interfered with thought. When a word was said to me, the image of the object which it designated would appear vividly before my eyes, and many times it was impossible for me to tell whether the object I saw was real or not. This caused me great discomfort and anxiety, and I tried hard to free myself of the spell. But for a long time I tried in vain, and it was not, as I clearly recollect, until I was about twelve years old that I succeeded for the first time, by an effort of the will, in banishing an image which presented itself. My happiness will never be as complete as it was then, but, unfortunately (as I thought at that time), the old trouble returned, and with it my anxiety. Here it was that the observations to which I refer began. I noted, namely, that whenever the image of an object appeared before my eyes I had seen something that reminded me of it. In the first instances I thought this to be purely accidental, but soon I convinced myself that it was not so. A visual impression, consciously or unconsciously received, invariably preceded the appearance of the image. Gradually the desire arose in me to find out, every time, what caused the images to appear, and the satisfaction of this desire soon became a necessity. The next observation I made was that, just as these images followed as a result of something I had seen, so also the thoughts which I conceived were suggested in like manner. Again, I experienced the same desire to locate the image which caused the thought, and this search for the original visual impression soon grew to be a second nature. Mt mind became automatic, as it were, and in the course of years of continued, almost unconscious performance, I acquired the ability of locating every time and, as a rule, instantly the visual impression which started the thought. Nor is this all. It was not long before I was aware that also all my movements were prompted in the same way, and so, searching, observing, and verifying continuously, year by year, I have, by every thought and every act of mine, demonstrated, and do so daily, to my absolute satisfaction, that I am an automaton endowed with power of movement, which merely responds to external stimuli beating upon my sense organs, and thinks and acts and moves accordingly. I remember only one or two cases in all my life in which I was unable to locate the first impression which prompted a movement or a thought, or even a dream.

[See *Tesla—Man Out of Time* photograph section.]

FIG. 2. THE FIRST PRACTICAL TELAUTOMATON.
A machine having all the bodily or translatory movements and the operations of the interior mechanism controlled from a distance without wires. The crewless boat shown in the photograph contains its own motive power, propelling and steering machinery, and numerous other accessories, all of which are controlled by transmitting from a distance, without wires, electrical oscillations to a circuit carried by the boat and adjusted to respond only to these oscillations.

With these experiences it was only natural that, long ago, I conceived the idea of constructing an automaton which would mechanically represent me, and which would respond, as I do myself, but, of course, in a much more primitive manner, to external influences. Such an automaton evidently had to have motive power, organs for locomotion, directive organs, and one or more sensitive organs so adapted as to be excited by external stimuli. This machine would, I reasoned, perform its movements in the manner of a living being, for it would have all the chief mechanical characteristics or elements of the same. There was still the capacity for growth, propagation, and, above all, the mind which would be wanting to make the model complete. But growth was not necessary in this case, since a machine could be manufactured full grown, so to speak. As to the capacity for propagation, it could likewise be left out of consideration, for in the mechanical model it merely signified a process of manufacture. Whether the automation be of flesh and bone, or of wood and steel, it mattered little, provided it could perform all the duties required of it like an intelligent being. To do so, it had to have an element corresponding to the mind, which would effect the control of all its movements and operations, and cause it to act, in any unforeseen case that might present itself, with knowledge, reason, judgment, and experience. But this element I could easily embody in it by conveying to it my own intelligence, my own understanding. So this invention was evolved, and so a new art came into existence, for which the name "telautomatics" has been suggested, which means the art of controlling the movements and operations of distant automatons. This principle evidently was applicable to any kind of

machine that moves on land or in the water or in the air. In applying it practically for the first time, I selected a boat (see Fig. 2). A storage battery placed within it furnished the motive power. The propeller, driven by a motor, represented the locomotive organs. The rudder, controlled by another motor likewise driven by the battery, took the place of the directive organs. As to the sensitive organ, obviously the first thought was to utilize a device responsive to rays of light, like a selenium cell, to represent the human eye. But upon closer inquiry I found that, owing to experimental and other difficulties, no thoroughly satisfactory control of the automaton could be effected by light, radiant heat, hertzian radiations, or by rays in general, that is, disturbances which pass in straight lines through space. One of the reasons was that any obstacle coming between the operator and the distant automaton would place it beyond his control. Another reason was that the sensitive device representing the eye would have to be in a definite position with respect to the distant controlling apparatus, and this necessity would impose great limitations in the control. Still another and very important reason was that, in using rays, it would be difficult, if not impossible, to give to the automaton individual features or characteristics distinguishing it from other machines of this kind. Evidently the automaton should respond only to an individual call, as a person responds to a name. Such considerations led me to conclude that the sensitive device of the machine should correspond to the ear rather than the eye of a human being, for in this case its actions could be controlled irrespective of intervening obstacles, regardless of its position relative to the distant controlling apparatus, and, last, but not least, it would remain deaf and unresponsive, like a faithful servant, to all calls but that of its master. These requirements made it imperative to use, in the control of the automaton, instead of light or other rays, waves or disturbances which propagate in all directions through space, like sound, or which follow a path of least resistance, however curved. I attained the result aimed at by means of an electric circuit placed within the boat, and adjusted, or "tuned," exactly to electrical vibrations of the proper kind transmitted to it from a distant "electrical oscillator." This circuit, in responding, however feebly, to the transmitted vibrations, affected magnets and other contrivances, through the medium of which were controlled the movements of the propeller and rudder, and also the operations of numerous other appliances.

By the simple means described the knowledge, experience, judgment—the mind, so to speak—of the distant operator were embodied in that machine, which was thus enabled to move and to perform all its operations with reason and intelligence. It behaved just like a blindfolded person obeying directions received through the ear.

The automatons so far constructed had "borrowed minds," so to speak, as each merely formed part of the distant operator who conveyed to it his intelligent orders; but this art is only in the beginning. I purpose to show that, however impossible it may now seem, an automaton may be contrived which will have its "own mind," and by this I mean that it will be able, independent of any operator, left entirely to itself, to perform, in response to external influences affecting its sensitive organs, a great variety of acts and operations as if it had intelligence. It will be able to follow a course laid out or to obey orders given far in advance; it will be capable of distinguishing between what it ought and what it ought not to do, and of making experiences or, otherwise stated, of recording impressions which will definitely affect its subsequent actions. In fact, I have already conceived such a plan.

Although I evolved this invention many years ago and explained it to my visitors very frequently in my laboratory demonstrations, it was not until much later, long after I had perfected it, that it became known, when, naturally enough, it gave rise to much discussion and to sensational reports. But the true significance of this new art was not grasped by the majority, nor was the great force of the underlying principle recognized. As nearly as I could judge from the numerous comments which appeared, the results I had obtained were considered as entirely impossible. Even the few who were disposed to admit the practicability of the invention saw in it merely an automobile torpedo, which was to be used for the purpose of blowing up battleships, with doubtful success. The general impression was that I contemplated simply the steering of such a vessel by means of Hertzian or other rays. There are torpedoes steered electrically by wires, and there are means of communicating without wires, and the above was, of course an obvious inference. Had I accomplished nothing more than this, I should have made a small advance indeed. But the art I have evolved does not contemplate merely the change of direction of a moving vessel; it affords means of absolutely controlling, in every respect, all the innumerable translatory movements, as well as the operations of all the internal organs, no matter how many, of an individualized automaton. Criticisms to the effect that the control of the automaton could be interfered with were made by people who do not even dream of the wonderful results which can be accomplished by use of electrical vibrations. The world moves slowly, and new truths are difficult to see. Certainly, by the use of this principle, an arm for attack as well as defense may be provided, of a destructiveness all the greater as the principle is applicable to submarine and aerial vessels. There is virtually no restriction as to the amount of explosive it can carry, or as to the distance at which it can strike, and failure is almost impossible. But the force of this new principle does not wholly reside in its destructiveness. Its advent introduces into warfare an element which never existed before—a fighting-machine without men as a means of attack and defense. The continuous development in this direction must ultimately make war a mere contest of machines without men and without loss of life—a condition which would have been impossible without this new departure, and which, in my opinion, must be reached as preliminary to permanent peace. The future will either bear out or disprove these views. My ideas on this subject have been put forth with deep conviction, but in a humble spirit.

The establishment of permanent peaceful relations between nations would most effectively reduce the force retarding the human mass, and would be the best solution of this great human problem. But will the dream of universal peace ever be realized? Let us hope that it will. When all darkness shall be dissipated by the light of science, when all nations shall be merged into one, and patriotism shall be identical with religion, when there shall be one language, one country, one end, then the dream will have become reality.

THE THIRD PROBLEM: HOW TO INCREASE THE FORCE ACCELERATING THE HUMAN MASS—THE HARNESSING OF THE SUN'S ENERGY.

Of the three possible solutions of the main problem of increasing human energy, this is by far the most important to consider, not only because of its intrinsic significance, but also because of its intimate bearing on all the many elements and conditions which determine the movement of humanity. In order to proceed systematically, it would be necessary for me to dwell on all those considerations which have guided me from the outset in my efforts to arrive at a solution, and which have led me, step by step, to the results I shall now describe. As a preliminary study of the problem an analytical investigation, such as I have made, of the chief forces which determine the onward movement, would be of advantage, particularly in conveying an idea of that hypothetical "velocity" which, as explained in the beginning, is a measure of human energy; but to deal with this specifically here, as I would desire, would lead me far beyond the scope of the present subject. Suffice it to state that the resultant of all these forces is always in the direction of reason, which therefore, determines, at any time, the direction of human movement. This is to say that every effort which is scientifically applied, rational, useful, or practical, must be in the direction in which the mass is moving. The practical, rational man, the observer, the man of business, he who reasons, calculates, or determines in advance, carefully applies his effort so that when coming into effect it will be in the direction of the movement, making it thus most efficient, and in this knowledge and ability lies the secret of his success. Every new fact discovered, every new experience or new element added to our knowledge and entering into the domain of reason, affects the same and, therefore, changes the direction of movement, which, however, must always take place along the resultant of all those efforts which, at that time, we designate as reasonable, that is, self-preserving, useful, profitable, or practical. These efforts concern our daily life, our necessities and comforts, our work and business, and it is these which drive man onward.

But looking at all this busy world about us, on all this complex mass as it daily throbs and moves, what is it but an immense clock-work driven by a spring? In the morning, when we rise, we cannot fail to note that all the objects about us are manufactured by machinery: the water we use is lifted by steam-power; the trains bring our breakfast from distant localities; the elevators in our dwelling and our office building, the cars that carry us there, are all driven by power; in all our daily errands, and in our very life-pursuit, we depend upon it; all the objects we see tell us of it; and when we return to our machine-made dwelling at night, lest we should forget it, all the material comforts of our home, our cheering stove and lamp, remind us of how much we depend on power. And when there is an accidental stoppage of the machinery, when the city is snowbound, or the life sustaining movement otherwise temporarily arrested, we are affrighted to realize how impossible it would be for us to live the life we live without motive power. Motive power means work. To increase the force accelerating human movement means, therefore, to perform more work.

So we find that the three possible solutions of the great problem of increasing human energy are answered by the three words: *food, peace, work*. Many a year I have thought and pondered, lost myself in speculations and theories, considering man as a mass moved by a force, viewing his inexplicable movement in the light of a mechanical one, and applying the simple principles of mechanics to the analysis of the same until I arrived at these solutions, only to realize that they were taught to me in my early childhood. These three words sound the key-notes of the Christian religion. Their scientific meaning and purpose now clear to me: food to increase the mass, peace to diminish the retarding force, and work to increase the force accelerating human movement. These are the only three solutions which are possible of that great problem, and all of them have one object, one end, namely, to increase human energy. When we recognize this, we cannot help wondering how profoundly wise and scientific and how immensely practical the Christian religion is, and in what a marked contrast it stands in this respect to other religions. It is unmistakably the result of practical experiment and scientific observation which have extended through the ages, while other religions seem to be the outcome of merely abstract reasoning. Work, untiring effort, useful and accumulative, with periods of rest and recuperation aiming at higher efficiency, is its chief and ever-recurring command. Thus we are inspired both by Christianity and Science to do our utmost toward increasing the performance of mankind. This most important of human problems I shall now specifically consider.

THE SOURCE OF HUMAN ENERGY—THE THREE WAYS OF DRAWING ENERGY FROM THE SUN.

First let us ask: Whence comes all the motive power? What is the spring that drives all? We see the ocean rise and fall, the rivers flow, the wind, rain, hail, and snow beat on our windows, the trains and steamers come and go; we here the rattling noise of carriages, the voices from the street; we feel, smell, and taste; and we think of all this. And all this movement, from the surging of the mighty ocean to that subtle movement concerned in our thought, has but one common cause. All this energy emanates from one single center, one single source—the sun. The sun is the spring that drives all. The sun maintains all human life and supplies all human energy. Another answer we have now found to the above great question: To increase the force accelerating human movement means to turn to the uses of man more of the sun's energy. We honor and revere those great men of bygone times whose names are linked with immortal achievements, who have proved themselves benefactors of humanity—the religious reformer with his wise maxims of life, the philosopher with his deep truths, the mathematician with his formulæ, the physicist with his laws, the discover with his principles and secrets wrested from nature, the artist with his forms of the beautiful; but who honors him, the greatest of all,—who can tell the name of him,—who first turned to use the sun's energy to save the effort of a weak fellow-creature? That was

man's first act of scientific philanthropy, and its consequences have been incalculable.

From the very beginning three ways of drawing energy from the sun were open to man. The savage, when he warmed his frozen limbs at a fire kindled in some way, availed himself of the energy of the sun stored in the burning material. When he carried a bundle of branches to his cave and burned them there, he made use of the sun's stored energy transported from one to another locality. When he set sail to his canoe, he utilized the energy of the sun applied to the atmosphere or the ambient medium. There can be no doubt that the first is the oldest way. A fire, found accidentally, taught the savage to appreciate its beneficial heat. He then very likely conceived of the idea of carrying the glowing members to his abode. Finally he learned to use the force of a swift current of water or air. It is characteristic of modern development that progress has been effected in the same order. The utilization of the energy stored in wood or coal, or, generally speaking, fuel, led to the steam-engine. Next a great stride in advance was made in energy-transportation by the use of electricity, which permitted the transfer of energy from one locality to another without transporting the material. But as to the utilization of the energy of the ambient medium, no radical step forward has as yet been made known.

The ultimate results of development in these three directions are: first, the burning of coal by a cold process in a battery; second, the efficient utilization of the energy of the ambient medium; and, third the transmission without wires of electrical energy to any distance. In whatever way these results may be arrived at, their practical application will necessarily involve an extensive use of iron, and this invaluable metal will undoubtedly be an essential element in the further development along these three lines. If we succeed in burning coal by a cold process and thus obtain electrical energy in an efficient and inexpensive manner, we shall require in many practical uses of this energy electric motors—that is, iron. If we are successful in deriving energy from the ambient medium, we shall need, both in the obtainment and utilization of the energy, machinery—again, iron. If we realize the transmission of electrical energy without wires on an industrial scale, we shall be compelled to use extensively electric generators—once more, iron. Whatever we may do, iron will probably be the chief means of accomplishment in the near future, possibly more so than in the past. How long its reign will last is difficult to tell, for even now aluminium is looming up as a threatening competitor. But for the time being, next to providing new resources of energy, it is of the greatest importance to making improvements in the manufacture and utilization of iron. Great advances are possible in these latter directions, which, if brought about, would enormously increase the useful performance of mankind.

GREAT POSSIBILITIES OFFERED BY IRON FOR INCREASING HUMAN PERFORMANCE—ENORMOUS WASTE IN IRON MANUFACTURE.

Iron is by far the most important factor in modern progress. It contributes more than any other industrial product to the force accelerating human movement. So general is the use of this metal, and so intimately is it connected with all that concerns our life, that it has become as indispensable to us as the very air we breathe. Its name is synonymous with usefulness. But, however great the influence of iron may be on the present human development, it does not add to the force urging man onward nearly as much as it might. First of all, its manufacture as now carried on is connected with an appalling waste of fuel—that is, waste of energy. Then, again, only a part of all the iron produced is applied for useful purposes. A good part of it goes to create frictional resistances, while still another large part is the means of developing negative forces greatly retarding human movement. Thus the negative force of war is almost wholly represented in iron. It is impossible to estimate with any degree of accuracy the magnitude of this greatest of all retarding forces, but it is certainly very considerable. If the present positive impelling force due to all useful applications of iron be represented by ten, for instance, I should not think it exaggeration to estimate the negative force of war, with due consideration of all its retarding influences and results, at, say, six. On the basis of this estimate the effective impelling force of iron in the positive direction would be measured by the difference of these two numbers, which is four. But if, through the establishment of universal peace, the manufacture of war machinery should cease, and all struggle for supremacy between nations should be turned into healthful, ever active and productive commercial competition, then the positive impelling force due to iron would be measured by the sum of those two, numbers, which is sixteen—that is, this force would have four times its present value. This example is, of course, merely intended to give an idea of the immense increase in the useful performance of mankind which would result from a radical reform of the iron industries supplying the implements of warfare.

A similar inestimable advantage in the saving of energy available to man would be secured by obviating the great waste of coal which is inseparably connected with the present methods of manufacturing iron. In some countries, such as Great Britain, the hurtful effects of this squandering of fuel are beginning to be felt. The price of coal is constantly rising, and the poor are made to suffer more and more. Though we are still far from the dreaded "exhaustion of the coal-fields," philanthropy commands us to invent novel methods of manufacturing iron, which will not involve such barbarous waste of this valuable material from which we derive at present most of our energy. It is our duty to coming generations to leave this store of energy intact for them, or at least not to touch it until we shall have perfected processes for burning coal more efficiently. Those who are coming after us will need fuel more than we do. We should be able to manufacture the iron we require by using the sun's energy, without wasting any coal at all. As an effort to this end the idea of smelting iron ores by electric currents obtained from the energy of falling water has naturally suggested itself to many. I have myself spent much time in endeavoring to evolve such a practical process, which would enable iron to be manufactured at small cost. After a prolonged investigation of the subject, finding that it was unprofitable to use the currents generated directly for

smelting the ore, I devised a method which is far more economical.

ECONOMICAL PRODUCTION OF IRON BY A NEW PROCESS.

The industrial project, as I worked it out six years ago, contemplated the employment of the electric currents derived from the energy of a waterfall, not directly for smelting the ore, but for decomposing water for a preliminary step. To lessen the cost of the plant, I proposed to generate the currents in exceptionally cheap and simple dynamos, which I designed for this sole purpose. The hydrogen liberated in the electrolytic decomposition was to be burned or recombined with oxygen, not with that from which it was separated, but with that of the atmosphere. Thus very nearly the total electrical energy used up in the decomposition of the water would be recovered in the form of heat resulting from the recombination of the hydrogen. This heat was to be applied to the smelting of ore. The oxygen gained as a by-product of the decomposition of the water I intended to use for certain other industrial purposes, which would probably yield good financial returns, inasmuch as this is the cheapest way of obtaining this gas in large quantities. In any event, it could be employed to burn all kinds of refuse, cheap hydrocarbon, or coal of the most inferior quality which could not be burned in air or be otherwise utilized to advantage, and thus again a considerable amount of heat would be made available for the smelting of the ore. To increase the economy of the process I contemplated, furthermore, using an arrangement such that the hot metal and the products of combustion, coming out of the furnace, would give up their heat upon the cold ore going into the furnace, so that comparatively little of the heat energy would be lost in the smelting. I calculated that probably forty thousand pounds of iron could be produced per horse-power per annum by this method. Liberal allowances were made for those losses which are unavoidable, the above quantity being about half of that theoretically obtainable. Relying on this estimate and on practical data with reference to a certain kind of sand ore existing in abundance in the region of the Great Lakes, including cost of transportation and labor, I found that in some localities iron could be manufactured in this manner cheaper than by any of the adopted methods. This result would be obtained all the more surely if the oxygen obtained from the water, instead of being used for smelting of ore, as assumed, should be more profitably employed. Any new demand for this gas would secure a higher revenue from the plant, thus cheapening the iron. This project was advanced merely in the interest of industry. Some day, I hope, a beautiful industrial butterfly will come out of the dusty and shriveled chrysalis.

The production of iron from sand ores by a process of magnetic separation is highly commendable in principle, since it involves no waste of coal; but the usefulness of this method is largely reduced by the necessity of melting the iron afterward. As to the crushing of iron ore, I would consider it rational only if done by water-power, or by energy otherwise obtained without consumption of fuel. An electrolytic cold process, which would make it possible to extract iron cheaply, and also to mold it into the required forms without any fuel consumption, would, in my opinion, be a very great advance in iron manufacture. In common with some other metals, iron has so far resisted electrolytic treatment, but there can be no doubt that such a cold process will ultimately replace in metallurgy the present crude method of casting, and thus obviating the enormous waste of fuel necessitated by the repeated heating of metal in the foundries.

Up to a few decades ago the usefulness of iron was based almost wholly on its remarkable mechanical properties, but since the advent of the commercial dynamo and electric motor its value to mankind has been greatly increased by its unique magnetic qualities. As regards the latter, iron has been greatly improved of late. The signal progress began about thirteen years ago, when I discovered that in using soft Bessemer steel instead of wrought iron, as then customary, in an alternating motor, the performance of the machine was doubled. I brought this fact to the attention of Mr. Albert Schmid, to whose untiring efforts and ability is largely due the supremacy of American electrical machinery, and who was then superintendent of an industrial corporation engaged in this field. Following my suggestion, he constructed transformers of steel, and they showed the same marked improvement. The investigation was then systematically continued under Mr. Schmid's guidance, the impurities being gradually eliminated from the "steel" (which was only such in name, for in reality it was pure soft iron), and soon a product resulted which admitted of little further improvement.

THE COMING OF AGE OF ALUMINIUM—DOOM OF THE COPPER INDUSTRY—THE GREAT CIVILIZING POTENCY OF THE NEW METAL.

With the advances made in iron of late years we have arrived virtually at the limits of improvement. We cannot hope to increase very materially its tensile strength, elasticity, hardness, or malleability, nor can we expect to make it much better as regards its magnetic qualities. More recently a notable gain was secured by the mixture of a small percentage of nickel with the iron, but there is not much room for further advance in this direction. New discoveries may be expected, but they cannot greatly add to the valuable properties of the metal, though they may considerably reduce the cost of manufacture. The immediate future of iron is assured by its cheapness and its unrivaled mechanical and magnetic qualities. These are such that no other product can compete with it now. But there can be no doubt that, at a time not very distant, iron, in many of its now uncontested domains, will have to pass the scepter to another: the coming age will be the age of aluminium. It is only seventy years since this wonderful metal was discovered by Woehler, and the aluminium industry, scarcely forty years old, commands already the attention of the entire world. Such rapid growth has not been recorded in the history of civilization before. Not long ago aluminium was sold at the fanciful price of thirty or forty dollars per pound; to-day it can be had in any desired amount for as many cents. What is more, the time is not far off when this price, too, will be considered fanciful, for great improvements are possible in the methods of its manufacture. Most of the metal is now produced in

the electric furnace by a process combining fusion and electrolysis, which offers a number of advantageous features, but involves naturally a great waste of the electrical energy of the current. My estimates show that the price of aluminium could be considerably reduced by adopting in its manufacture a method similar to that proposed by me for the production of iron. A pound of aluminium requires for fusion only about seventy per cent. of the heat needed for melting a pound of iron, and inasmuch as its weight is only about one third of that of the latter, a volume of aluminium four times that of iron could be obtained from a given amount of heat-energy. But a cold electrolytic process of manufacture is the ideal solution, and on this I have placed my hope.

The absolutely unavoidable consequence of the advancement of the aluminium industry will be the annihilation of the copper industry. They cannot exist and prosper together, and the latter is doomed beyond any hope of recovery. Even now it is cheaper to convey an electric current through aluminium wires than through copper wires; aluminium castings cost less, and in many domestic and other uses copper has no chance of successfully competing. A further material reduction of the price of aluminium cannot but be fatal to copper. But the progress of the former will not go on unchecked, for, as it ever happens in such cases, the larger industry will absorb the smaller one: the giant copper interests will control the pygmy aluminium interests, and the slow-pacing copper will reduce the lively gait of aluminium. This will only delay, not avoid the impending catastrophe.

Aluminium, however, will not stop at downing copper. Before many years have passed it will be engaged in a fierce struggle with iron, and in the latter it will find an adversary not easy to conquer. The issue of the contest will largely depend on whether iron shall be indispensable in electric machinery. This the future alone can decide. The magnetism as exhibited in iron is an isolated phenomenon in nature. What it is that makes this metal behave so radically different from all other materials in this respect has not yet been ascertained, though many theories have been suggested. As regards magnetism, the molecules of the various bodies behave like hollow beams partly filled with a heavy fluid and balanced in the middle in the manner of a see-saw. Evidently some disturbing influence exists in nature which causes each molecule, like such a beam, to tilt either one or the other way. If the molecules are tilted one way, the body is magnetic; if they are tilted the other way, the body is non-magnetic; but both positions are stable, as they would be in the case of the hollow beam, owing to the rush of the fluid to the lower end. Now, the wonderful thing is that the molecules of all known bodies went one way, while those of iron went the other way. This metal, it would seem, has an origin entirely different from that of the rest of the globe. It is highly improbable that we shall discover some other and cheaper material which will equal or surpass iron in magnetic qualities.

Unless we should make a radical departure in the character of the electric currents employed, iron will be indispensable. Yet the advantages it offers are only apparent. So long as we use feeble magnetic forces it is by far superior to any other material; but if we find ways of producing great magnetic forces, than better results will be obtainable without it. In fact, I have already produced electric transformers in which no iron is employed, and which are capable of performing ten times as much work per pound of weight as those of iron. This result is attained by using electric currents of a very high rate of vibration, produced in novel ways, instead of the ordinary currents now employed in the industries. I have also succeeded in operating electric motors without iron by such rapidly vibrating currents, but the results, so far, have been inferior to those obtained with ordinary motors constructed of iron, although theoretically the former should be capable of performing incomparably more work per unit of weight than the latter. But the seemingly insuperable difficulties which are now in the way may be overcome in the end, and then iron will be done away with, and all electric machinery will be manufactured of aluminium, in all probability, at prices ridiculously low. This would be a severe, if not fatal, blow to iron. In many other branches of industry, as ship-building, or wherever lightness of structure is required, the progress of the new metal will be much quicker. For such uses it is eminently suitable, and is sure to supersede iron sooner or later. It is highly probable that in the course of time we shall be able to give it many of those qualities which make iron so valuable.

While it is impossible to tell when this industrial revolution will be consummated, there can be no doubt that the future belongs to aluminium, and that in times to come it will be the chief means of increasing human performance. It has in this respect capacities greater by far than those of any other metal. I should estimate its civilizing potency at fully one hundred times that of iron. This estimate, though it may astonish, is not at all exaggerated. First of all, we must remember that there is thirty times as much aluminium as iron in bulk, available for the uses of man. This in itself offers great possibilities. Then, again, the new metal is much more easily workable, which adds to its value. In many of its properties it partakes of the character of a precious metal, which gives it additional worth. Its electric conductivity, which, for a given weight, is greater than that of any other metal, would be alone sufficient to make it one of the most important factors in future human progress. Its extreme lightness makes it far more easy to transport the objects manufactured. By virtue of this property it will revolutionize naval construction, and in facilitating transport and travel it will add enormously to the useful performance of mankind. But its greatest civilizing property will be, I believe, in aërial travel, which is sure to be brought about by means of it. Telegraphic instruments will slowly enlighten the barbarian. Electric motors and lamps will do it more quickly, but quicker than anything else the flying-machine will do it. By rendering travel ideally easy it will be the best means for unifying the heterogeneous elements of humanity. As the first step toward this realization we should produce a lighter storage-battery or get more energy from coal.

EFFORTS TOWARD OBTAINING MORE ENERGY FROM COAL—THE ELECTRIC TRANSMISSION—THE GAS-ENGINE—THE COLD-COAL BATTERY.

I remember that at one time I considered the production of electricity by burning coal in a battery as the greatest achievement toward the advancing civilization, and I am surprised to find how much the continuous study of these subjects has modified my views. It now seems to me that to burn coal, however efficiently, in a battery would be a mere makeshift, a phase in the evolution toward something much more perfect. After all, in generating electricity in this manner, we should be destroying material, and this would be a barbarous process. We ought to be able to obtain the energy we need without consumption of material. But I am far from underrating the value of such an efficient method of burning fuel. At the present time most motive power comes from coal, and, either directly or by its products, it adds vastly to human energy. Unfortunately, in all the process now adopted, the larger portion of the energy of the coal is uselessly dissipated. The best steam-engines utilize only a small part of the total energy. Even in gas-engines, in which, particularly of late, better results are obtainable, there is still a barbarous waste going on. In our electric-lighting systems we scarcely utilize one third of one per cent., and in lighting by gas a much smaller fraction, of the total energy of the coal. Considering the various uses of coal throughout the world, we certainly do not utilize more than two per cent. of its energy theoretically available. The man who should stop this senseless waste would be a great benefactor of humanity, though the solution he would offer could not be a permanent one, since it would ultimately lead to the exhaustion of the store of material. Efforts toward obtaining more energy from coal are now being made chiefly in two directions—by generating electricity and by producing gas for motive-power purposes. In both of these lines notable success has already been achieved.

The advent of the alternating-current system of electric power-transmission marks an epoch in the economy of energy available to man from coal. Evidently all electrical energy obtained from a waterfall, saving so much fuel, is a net gain to mankind, which is all the more effective as it is secured with little expenditure of human effort, and as this most perfect of all known methods of deriving energy from the sun contributes in many ways to the advancement of civilization. But electricity enables us also to get from coal much more energy than was practicable in the old ways. Instead of transporting the coal to distant places of consumption, we burn it near the mine, develop electricity in the dynamos, and transmit the current to remote localities, thus effecting a considerable saving. Instead of driving the machinery in a factory in the old wasteful way of belts and shafting, we generate electricity by steam-power and operate electric motors. In this manner it is not uncommon to obtain two or three times as much effective motive power from the fuel, besides securing many other important advantages. It is in this field as much as in the transmission of energy to great distance that the alternating system, with its ideally simple machinery, is bringing about an industrial revolution. But in many lines this progress has not been yet fully felt. For example, steamers and trains are still being propelled by the direct application of steam-power to shafts or axles. A much greater percentage of the heat-energy of the fuel could be transformed into motive energy by using, in place of the adopted marine engines and locomotives, dynamos driven by specially designed high-pressure steam- or gas-engines and by utilizing the electricity generated for the propulsion. A gain of fifty to one hundred per cent. in the effective energy derived from the coal could be secured in this manner. It is difficulty to understand why a fact so plain and obvious is not receiving more attention from engineers. In ocean steamers such an improvement would be particularly desirable, as it would do away with noise and increase materially the speed and the carrying capacity of the liners.

Still more energy is now being obtained from coal by the latest improved gas-engine, the economy of which is, on the average, probably twice that of the best steam-engine. The introduction of the gas-engine is very much facilitated by the importance of the gas industry. With the increasing use of the electric light more and more of the gas is utilized for heating and motive-power purposes. In many instances gas is manufactured close to the coal-mine and conveyed to distant places of consumption, a considerable saving both in cost of transportation and in utilization of the energy of the fuel being thus effected. In the present state of the mechanical and electrical arts the most rational way of deriving energy from coal is evidently to manufacture gas close to the coal store, and to utilize it, either on the spot or elsewhere, to generate electricity for industrial uses in dynamos driven by gas engines. The commercial success of such a plant is largely dependent upon the production of gas-engines of great nominal horse-power, which, judging from the keen activity in this field will soon be forthcoming. Instead of consuming coal directly, as usual, gas should be manufactured from it and burned to economize energy.

But all such improvements cannot be more than passing phases in the evolution toward something far more perfect, for ultimately we must succeed in obtaining electricity from coal in a more direct way, involving no great loss of heat-energy. Whether coal can be oxidized by a cold process is still a question. Its combination with oxygen always involves heat, and whether the energy of the combination of the carbon with another element can be turned directly into electrical energy has not yet been determined. Under certain conditions nitric acid will burn the carbon, generating an electric current, but the solution does not remain cold. Other means of oxidizing coal have been proposed, but they have offered no promise of leading to an efficient process. My own lack of success has been complete, though perhaps not quite so complete as that of some who have "perfected" the cold-coal battery. This problem is essentially one for the chemist to solve. It is not for the physicist, who determines all his results in advance, so that, when the experiment is tried, it cannot fail. Chemistry, though a positive science, does not yet admit of a solution by such positive methods as those which are available in the treatment of many physical problems. The result, if possible, will be arrived at through patent trying rather than through deduction or calculation. The time will soon come, however, when the chemist will be able to follow a course clearly mapped out beforehand, and when the process of his arriving at a desired result will be purely constructive. The cold-coal battery would give a great impetus to electrical development; it would lead very shortly to a practical flying-machine, and would enormously enhance the introduction of the automobile. But these and many other problems will be better solved, and in a more scientific manner, by a light storage battery.

ENERGY FROM THE MEDIUM—THE WINDMILL AND THE SOLAR ENGINE,—MOTIVE POWER FROM TERRESTRIAL HEAT—ELECTRICITY FROM NATURAL SOURCES.

Besides fuel, there is abundant material from which we might eventually derive power. An immense amount of energy is locked up in limestone, for instance, and machines can be driven by liberating the carbonic acid through sulphuric acid or otherwise. I once constructed such an engine, and it operated satisfactorily.

But, whatever our resources of primary energy may be in the future, we must, to be rational, obtain it without consumption of any material. Long ago I came to this conclusion, and to arrive at this result only two ways, as before indicated, appeared possible—either to turn to use the energy of the sun stored in the ambient medium, or to transmit, through the medium, the sun's energy to distant places from some locality where it was obtainable without consumption of material. At that time I at once rejected the latter method as entirely impracticable, and turned to examine the possibilities of the former.

It is difficult to believe, but it is, nevertheless, a fact, that since time immemorial man has had at his disposal a fairly good machine which has enabled him to utilize the energy of the ambient medium. This machine is the windmill. Contrary to popular belief, the power obtainable from wind is very considerable. Many a deluded inventor has spent years of his life in endeavoring to "harness the tides," and some have even proposed to compress air by tide- or wave-power for supplying energy, never understanding the signs of the old windmill on the hill, as it sorrowfully waved its arms about and bade them stop. The fact is that a wave- or tide-motor would have, as a rule, but a small chance of competing commercially with the windmill, which is by far the better machine, allowing a much greater amount of energy to be obtained in a simpler way. Wind-power has been, in old times, of inestimable value to man, if for nothing else but for enabling him, to cross the seas, and it is even now a very important factor in travel and transportation. But there are great limitations in this ideally simple method of utilizing the sun's energy. The machines are large for a given output, and the power is intermittent, thus necessitating the storage of energy and increasing the cost of the plant.

A far better way, however, to obtain power would be to avail ourselves of the sun's rays, which beat the earth incessantly and supply energy at a maximum rate of over four million horsepower per square mile. Although the average energy received per square mile in any locality during the year is only a small fraction of that amount, yet an inexhaustible source of power would be opened up by the discovery of some efficient method of utilizing the energy of the rays. The only rational way known to me at the time when I began the study of this subject was to employ some kind of heat- or thermodynamic-engine, driven by a volatile fluid evaporate in a boiler by the heat of the rays. But closer investigation of this method, and calculation, showed that, notwithstanding the apparently vast amount of energy received from the sun's rays, only a small fraction of that energy could be actually utilized in this manner. Furthermore, the energy supplied through the sun's radiations is periodical, and the same limitations as in the use of the windmill I found to exist here also. After a long study of this mode of obtaining motive power from the sun, taking into account the necessarily large bulk of the boiler, the low efficiency of the heat-engine, the additional cost of storing the energy and other drawbacks, I came to the conclusion that the "solar engine," a few instances excepted, could not be industrially exploited with success.

Another way of getting motive power from the medium without consuming any material would be to utilize the heat contained in the earth, the water, or the air for driving an engine. It is a well-known fact that the interior portions of the globe are very hot, the temperature rising, as observations show, with the approach to the center at the rate of approximately 1 degree C. for every hundred feet of depth. The difficulties of sinking shafts and placing boilers at depths of, say, twelve thousand feet, corresponding to an increase in temperature of about 120 degrees C., are not insuperable, and we could certainly avail ourselves in this way of the internal heat of the globe. In fact, it would not be necessary to go to any depth at all in order to derive energy from the stored terrestrial heat. The superficial layers of the earth and the air strata close to the same are at a temperature sufficiently high to evaporate some extremely volatile substances, which we might use in our boilers instead of water. There is no doubt that a vessel might be propelled on the ocean by an engine driven by such a volatile fluid, no other energy being used but the heat abstracted from the water. But the amount of power which could be obtained in this manner would be, without further provision, very small.

Electricity produced by natural causes is another source of energy which might be rendered available. Lightning discharges involve great amounts of electrical energy, which we could utilize by transforming and storing it. Some years ago I made known a method of electrical transformation which renders the first part of this task easy, but the storing of the energy of lightning discharges will be difficult to accomplish. It is well known, furthermore, that electric currents circulate constantly through the earth, and that there exists between the earth and any air stratum a difference of electrical pressure, which varies in proportion to the height.

In recent experiments I have discovered two novel facts of importance in this connection. One of these facts is that an electric current is generated in a wire extending from the ground to a great height by the axial, and probably also by the translatory, movement of the earth. No appreciable current, however, will flow continuously in the wire unless the electricity is allowed to leak out into the air. Its escape is greatly facilitated by providing at the elevated end of the wire a conducting terminal of great surface, with many sharp edges or points. We are thus enabled to get a continuous supply of electrical energy by merely supporting a wire at a height, but,

unfortunately, the amount of electricity which can be so obtained is small.

The second fact which I have ascertained is that the upper air strata are permanently charged with electricity opposite to that of the earth. So, at least, I have interpreted my observations, from which it appears that the earth, with its adjacent insulating and outer conducting envelope, constitutes a highly charged electrical condenser containing, in all probability, a great amount of electrical energy which might be turned to the uses of man, if it were possible to reach with a wire to great altitudes.

It is possible, and even probable, that there will be, in time, other resources of energy opened up, of which we have no knowledge now. We may even find ways of applying forces such as magnetism or gravity for driving machinery without using any other means. Such realizations, though highly improbable, are not impossible. An example will best convey an idea of what we can hope to attain and what we can never attain. Imagine a disk of some homogeneous material turned perfectly true and arranged to turn in frictionless bearings on a horizontal shaft above the ground. This disk, being under the above conditions perfectly balanced, would rest in any position. Now, it is possible that we may learn how to make such a disk rotate continuously and perform work by the force of gravity without any further effort on our part; but it is perfectly impossible for the disk to turn and to do work without any force from the outside. If it could do so, it would be what is designated scientifically as a "perpetuum mobile," a machine creating its own motive power. To make the disk rotate by the force of gravity we have only to invent a screen against this force. By such a screen we could prevent this force from acting on one half of the disk, and the rotation of the latter would follow. At least, we cannot deny such a possibility until we know exactly the nature of the force of gravity. Suppose that this force were due to a movement comparable to that of a stream of air passing from above toward the center of the earth. The effect of such a stream upon both halves of the disk would be equal, and the latter would not rotate ordinarily; but if one half should be guarded by a plate arresting the movement, then it would turn.

A DEPARTURE FROM KNOWN METHODS—POSSIBILITY OF A "SELF-ACTING" ENGINE OR MACHINE, INANIMATE, YET CAPABLE, LIKE A LIVING BEING, OF DERIVING ENERGY FROM THE MEDIUM—THE IDEAL WAY OF OBTAINING MOTIVE POWER.

When I began the investigation of the subject under consideration, and when the preceding or similar ideas presented themselves to me for the first time, though I was then unacquainted with a number of the facts mentioned, a survey of the various ways of utilizing the energy of the medium convinced me, nevertheless, that to arrive at a thoroughly satisfactory practical solution a radical departure from the methods then known had to be made. The windmill, the solar engine, the engine driven by terrestrial heat, had their limitations in the amount of power obtainable. Some new way had to be discovered which would enable us to get more energy. There was enough heat-energy in the medium, but only a small part of it was available for the operation of an engine in the ways then known. Besides, the energy was obtainable only at a very slow rate. Clearly, then, the problem was to discover some new method which would make it possible both to utilize more of the heat-energy of the medium and also to draw it away from the same at a more rapid rate.

I was vainly endeavoring to form an idea of how this might be accomplished, when I read some statements from Carnot and Lord Kelvin (then Sir William Thomson) which meant virtually that it is impossible for an inanimate mechanism or self-acting machine to cool a portion of the medium below the temperature of the surrounding, and operate by the heat abstracted. These statements interested me intensely. Evidently a living being could do this very thing, and since the experiences of my early life which I have related had convinced me that a living being is only an automaton, or, otherwise stated, a "self-acting-engine," I came to the conclusion that it was possible to construct a machine which would do the same. As the first step toward this realization I conceived the following mechanism. Imagine a thermopile consisting of a number of bars of metal extending from the earth to the outer space beyond the atmosphere. The heat from below, conducted upward along these metal bars, would cool the earth or the sea or the air, according to the location of the lower parts of the bars, and the result, as is well known, would be an electric current circulating in these bars. The two terminals of the thermopile could now be joined through an electric motor, and, theoretically, this motor would run on and on, until the media below would be cooled down to the temperature of the outer space. This would be an inanimate engine which, to all evidence, would be cooling a portion of the medium below the temperature of the surrounding, and operating by the heat abstracted.

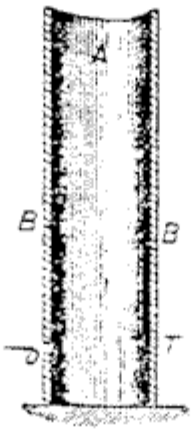

DIAGRAM *b*. OBTAINING ENERGY FROM THE AMBIENT MEDIUM
A, medium with little energy; *B*, *B*, ambient medium with much energy; *O*, path of the energy.

But was it not possible to realize a similar condition without necessarily going to a height? Conceive, for the sake of illustration, [a cylindrical] enclosure T, as illustrated in diagram b, such that energy could not be transferred across it except through a channel or path O, and that, by some means or other, in this enclosure a medium were maintained which would have little energy, and that on the outer side of the same there would be the ordinary ambient medium with much energy. Under these assumptions the energy would flow through the path O, as indicated by the arrow, and might then be converted on its passage into some other form of energy. The question was, Could such a condition be attained? Could we produce artificially such a "sink" for the energy of the ambient medium to flow in? Suppose that an extremely low temperature could be maintained by some process in a given space; the surrounding medium would then be compelled to give off heat, which could be converted into mechanical or other form of energy, and utilized. By realizing such a plan, we should be enabled to get at any point of the globe a continuous supply of energy, day and night. More than this, reasoning in the abstract, it would seem possible to cause a quick circulation of the medium, and thus draw the energy at a very rapid rate.

Here, then, was an idea which, if realizable, afforded a happy solution of the problem of getting energy from the medium. But was it realizable? I convinced myself that it was so in a number of ways, of which one is the following. As regards heat, we are at a high level, which may be represented by the surface of a mountain lake considerably above the sea, the level of which may mark the absolute zero of temperature existing in the interstellar space. Heat, like water, flows from high to low level, and, consequently, just as we can let the water of the lake run down to the sea, so we are able to let heat from the earth's surface travel up into the cold region above. Heat, like water, can perform work in flowing down, and if we had any doubt as to whether we could derive energy from the medium by means of a thermopile, as before described, it would be dispelled by this analogue. But can we produce cold in a given portion of the space and cause the heat to flow in continually? To create such a "sink," or "cold hole," as we might say, in the medium, would be equivalent to producing in the lake a space either empty or filled with something much lighter than water. This we could do by placing in the lake a tank, and pumping all the water out of the latter. We know, then, that the water, if allowed to flow back into the tank, would, theoretically, be able to perform exactly the same amount of work which was used in pumping it out, but not a bit more. Consequently nothing could be gained in this double operation of first raising the water and then letting it fall down. This would mean that it is impossible to create such a sink in the medium. But let us reflect a moment. Heat, though following certain general laws of mechanics, like a fluid, is not such; it is energy which may be converted into other forms of energy as it passes from a high to a low level. To make our mechanical analogy complete and true, we must, therefore, assume that the water, in its passage into the tank, is converted into something else, which may be taken out of it without using any, or by using very little, power. For example, if heat be represented in this analogue by the water of the lake, the oxygen and hydrogen composing the water may illustrate other forms of energy into which the heat is transformed in passing from hot to cold. If the process of heat transformation were absolutely perfect, no heat at all would arrive at the low level, since all of it would be converted into other forms of energy. Corresponding to this ideal case, all the water flowing into the tank would be decomposed into oxygen and hydrogen before reaching the bottom, and the result would be that water would continually flow in, and yet the tank would remain entirely empty, the gases formed escaping. We would thus produce, by expending initially a certain amount of work to create a sink for the heat or, respectively, the water to flow in, a condition enabling us to get any amount of energy without further effort. This would be an ideal way of obtaining motive power. We do not know of any such absolutely perfect process of heat-conversion, and consequently some heat will generally reach the low level, which means to say, in our mechanical analogue, that some water will arrive at the bottom of the tank, and a gradual and slow filling of the latter will take place, necessitating continuous pumping out. But evidently there will be less to pump out than flows in, or, in other words, less energy will be needed to maintain the initial condition than is developed by the fall, and this is to say that some energy will be gained from the medium. What is not converted in flowing down can just be raised up with its own energy, and what is converted is clear gain. Thus the virtue of the principle I have discovered

resides wholly in the conversion of the energy on the downward flow.

FIRST EFFORTS TO PRODUCE THE SELF-ACTING ENGINE—THE MECHANICAL OSCILLATOR—WORK OF DEWAR AND LINDE—LIQUID AIR.

Having recognized this truth, I began to devise means for carrying out my idea, and, after long thought, I finally conceived a combination of apparatus which should make possible the obtaining of power from the medium by a process of continuous cooling of atmospheric air. This apparatus, by continually transforming heat into mechanical work, tended to become colder and colder, and if it only were practicable to reach a very low temperature in this manner, then a sink for the heat could be produced, and energy could be derived from the medium. This seemed to be contrary to the statements of Carnot and Lord Kelvin before referred to, but I concluded from the theory of the process that such a result could be attained. This conclusion I reached, I think, in the latter part of 1883, when I was in Paris, and it was at a time when my mind was being more and more dominated by an invention which I had evolved during the preceding year, and which has since become known under the name of the "rotating magnetic field." During the few years which followed I elaborated further the plan I had imagined, and studied the working conditions, but made little headway. The commercial introduction in this country of the invention before referred to required most of my energies until 1889, when I again took up the idea of the self-acting machine. A closer investigation of the principles involved, and calculation, now showed that the result I aimed at could not be reached in a practical manner by ordinary machinery, as I had in the beginning expected. This led me, as a next step, to the study of a type of engine generally designated as "turbine," which at first seemed to offer better chances for a realization of the idea. Soon I found, however, that the turbine, too, was unsuitable. But my conclusions showed that if an engine of a peculiar kind could be brought to a high degree of perfection, the plan I had conceived was realizable, and I resolved to proceed with the development of such an engine, the primary object of which was to secure the greatest economy of transformation of heat into mechanical energy. A characteristic feature of the engine was that the work-performing piston was not connected with anything else, but was perfectly free to vibrate at an enormous rate. The mechanical difficulties encountered in the construction of this engine were greater than I had anticipated, and I made slow progress. This work was continued until early in 1892, when I went to London, where I saw Professor Dewar's admirable experiments with liquefied gases. Others had liquefied gases before, and notably Ozlewski and Pictet had performed creditable early experiments in this line, but there was such a vigor about the work of Dewar that even the old appeared new. His experiments showed, though in a way different from that I had imagined, that it was possible to reach a very low temperature by transforming heat into mechanical work, and I returned, deeply impressed with what I had seen, and more than ever convinced that my plan was practicable. The work temporarily interrupted was taken up anew, and soon I had in a fair state of perfection the engine which I have named "the mechanical oscillator." In this machine I succeeded in doing away with all packings, valves, and lubrication, and in producing so rapid a vibration of the piston that shafts of tough steel, fastened to the same and vibrated longitudinally, were torn asunder. By combining this engine with a dynamo of special design I produced a highly efficient electrical generator, invaluable in measurements and determinations of physical quantities on account of the unvarying rate of oscillation obtainable by its means. I exhibited several types of this machine, named "mechanical and electrical oscillator," before the Electrical Congress at the World's Fair in Chicago during the summer of 1893, in a lecture which, on account of other pressing work, I was unable to prepare for publication. On that occasion I exposed the principles of the mechanical oscillator, but the original purpose of this machine is explained here for the first time.

In the process, as I had primarily conceived it, for the utilization of the energy of the ambient medium, there were five essential elements in combination, and each of these had to be newly designed and perfected, as no such machines existed. The mechanical oscillator was the first element of this combination, and having perfected this, I turned to the next, which was an air-compressor of a design in certain respects resembling that of the mechanical oscillator. Similar difficulties in the construction were again encountered, but the work was pushed vigorously, and at the close of 1894 I had completed these two elements of the combination, and thus produced an apparatus for compressing air, virtually to any desired pressure, incomparably simpler, smaller, and more efficient than the ordinary. I was just beginning work on the third element, which together with the first two would give a refrigerating machine of exceptional efficiency and simplicity, when a misfortune befell me in the burning of my laboratory, which crippled my labors and delayed me. Shortly afterward Dr. Carl Linde announced the liquefaction of air by a self-cooling process, demonstrating that it was practicable to proceed with the cooling until liquefaction of the air took place. This was the only experimental proof which I was still wanting that energy was obtainable from the medium in the manner contemplated by me.

The liquefaction of air by a self-cooling process was not, as popularly believed, an accidental discovery, but a scientific result which could not have been delayed much longer, and which, in all probability, could not have escaped Dewar. This fascinating advance, I believe, is largely due to the powerful work of this great Scotchman. Nevertheless, Linde's is an immortal achievement. The manufacture of liquid air has been carried on for four years in Germany, on a scale much larger than in any other country, and this strange product has been applied for a variety of purposes. Much was expected of it in the beginning, but so far it has been an industrial ignis fatuus. By the use of such machinery as I am perfecting, its cost will probably be greatly lessened, but even then its commercial success will be questionable. When, used as a refrigerant it is uneconomical, as its temperature is unnecessarily low. It is as expensive to maintain a body at a very low temperature as it is to keep it very hot; it takes coal to keep air cold. In oxygen manufacture it cannot yet compete with the electrolytic method. For use as an explosive it is unsuitable, because its low temperature again condemns it to a small efficiency, and for motive-power purposes its cost is still by far too high. It is of interest to note,

however, that in driving an engine by liquid air a certain amount of energy may be gained from the engine, or, stated otherwise, from the ambient medium which keeps the engine warm, each two hundred pounds of iron-casting of the latter contributing energy at the rate of about one effective horsepower during one hour. But this gain of the consumer is offset by an equal loss of the producer.

Much of this task on which I have labored so long remains to be done. A number of mechanical details are still to be perfected and some difficulties of a different nature to be mastered, and I cannot hope to produce a self-acting machine deriving energy from the ambient medium for a long time yet, even if all my expectations should materialize. Many circumstances have occurred which have retarded my work of late, but for several reasons the delay was beneficial.

One of these reasons was that I had ample time to consider what the ultimate possibilities of this development might be. I worked for a long time fully convinced that the practical realization of this method of obtaining energy from the sun would be of incalculable industrial value, but the continued study of the subject revealed the fact that while it will be commercially profitable if my expectations are well founded, it will not be so to an extraordinary degree.

DISCOVERY OF UNEXPECTED PROPERTIES OF THE ATMOSPHERE—STRANGE EXPERIMENTS—TRANSMISSION OF ELECTRICAL ENERGY THROUGH ONE WIRE WITHOUT RETURN—TRANSMISSION THROUGH THE EARTH WITHOUT ANY WIRE.

Another of these reasons was that I was led to recognize the transmission of electrical energy to any distance through the media as by far the best solution of the great problem of harnessing the sun's energy for the uses of man. For a long time I was convinced that such a transmission on an industrial scale, could never be realized, but a discovery which I made changed my view. I observed that under certain conditions the atmosphere, which is normally a high insulator, assumes conducting properties, and so becomes capable of conveying any amount of electrical energy. But the difficulties in the way of a practical utilization of this discovery for the purpose of transmitting electrical energy without wires were seemingly insuperable. Electrical pressures of many millions of volts had to be produced and handled; generating apparatus of a novel kind, capable of withstanding the immense electrical stresses, had to be invented and perfected, and a complete safety against the dangers of the high-tension currents had to be attained in the system before its practical introduction could be even thought of. All this could not be done in a few weeks or months, or even years. The work required patience and constant application, but the improvements came, though slowly. Other valuable results were, however, arrived at in the course of this long-continued work, of which I shall endeavor to give a brief account, enumerating the chief advances as they were successively effected.

The discovery of the conducting properties of the air, though unexpected, was only a natural result of experiments in a special field which I had carried on for some years before. It was, I believe, during 1889 that certain possibilities offered by extremely rapid electrical oscillations determined me to design a number of special machines adapted for their investigation. Owing to the peculiar requirements, the construction of these machines was very difficult, and consumed much time and effort; but my work on them was generously rewarded, for I reached by their means several novel and important results. One of the earliest observations I made with these new machines was that electrical oscillations of an extremely high rate act in an extraordinary manner upon the human organism. Thus, for instance, I demonstrated that powerful electrical discharges of several hundred thousand volts, which at that time were considered absolutely deadly, could be passed through the body without inconvenience or hurtful consequences. These oscillations produced other specific physiological effects, which, upon my announcement, were eagerly taken up by skilled physicians and further investigated. This new field has proved itself fruitful beyond expectation, and in the few years which have passed since, it has been developed to such an extent that it now forms a legitimate and important department of medical science. Many results, thought impossible at that time, are now readily obtainable with these oscillations, and many experiments undreamed of then can now be readily performed by their means. I still remember with pleasure how, nine years ago, I passed the discharge of a powerful induction-coil through my body to demonstrate before a scientific society the comparative harmlessness of very rapidly vibrating electric currents, and I can still recall the astonishment of my audience. I would now undertake, with much less apprehension that I had in that experiment, to transmit through my body with such currents the entire electrical energy of the dynamos now working at Niagara—forty or fifty thousand horse-power. I have produced electrical oscillations which were of such intensity that when circulating through my arms and chest they have melted wires which joined my hands, and still I felt no inconvenience. I have energized with such oscillations a loop of heavy copper wire so powerfully that masses of metal, and even objects of an electrical resistance specifically greater than that of human tissue brought close to or placed within the loop, were heated to a high temperature and melted, often with the violence of an explosion, and yet into this very space in which this terribly-destructive turmoil was going on I have repeatedly thrust my head without feeling anything or experiencing injurious after-effects.

Another observation was that by means of such oscillations light could be produced in a novel and more economical manner, which promised to lead to an ideal system of electric illumination by vacuum-tubes, dispensing with the necessity of renewal of lamps or incandescent filaments, and possibly also with the use of wires in the interior of buildings. The efficiency of this light increases in proportion to the rate of the oscillations, and its commercial success is, therefore, dependent on the economical production of electrical vibrations of transcending rates. In this direction I have met with gratifying success of late, and the practical introduction of

this new system of illumination is not far off.

The investigations led to many other valuable observations and results, one of the more important of which was the demonstration of the practicability of supplying electrical energy through one wire without return. At first I was able to transmit in this novel manner only very small amounts of electrical energy, but in this line also my efforts have been rewarded with similar success.

[See *Nikola Tesla: Colorado Springs Notes*, page 360, Photograph XXVIII.]

FIG. 3. EXPERIMENT TO ILLUSTRATE THE SUPPLYING OF ELECTRICAL ENERGY THROUGH A SINGLE WIRE WITHOUT RETURN
An ordinary incandescent lamp, connected with one or both of its terminals to the wire forming the upper free end of the coil shown in the photograph, is lighted by electrical vibrations conveyed to it through the coil from an electrical oscillator, which is worked only to one fifth of one per cent. of its full capacity.

The photograph shown in Fig. 3 illustrates, as its title explains, an actual transmission of this kind effected with apparatus used in other experiments here described. To what a degree the appliances have been perfected since my first demonstrations early in 1891 before a scientific society, when my apparatus was barely capable of lighting one lamp (which result was considered wonderful), will appear when I state that I have now no difficulty in lighting in this manner four or five hundred lamps, and could light many more. In fact, there is no limit to the amount of energy which may in this way be supplied to operate any kind of electrical device.

[See *Nikola Tesla: Colorado Springs Notes*, page 354, Photograph XXVI.]

FIG. 4. EXPERIMENT TO ILLUSTRATE THE TRANSMISSION OF ELECTRICAL ENERGY THROUGH THE EARTH WITHOUT WIRE.
The coil shown in the photograph has its lower end or terminal connected to the ground, and is exactly attuned to the vibrations of a distant electrical oscillator. The lamp lighted is in an independent wire loop, energized by induction from the coil excited by the electrical vibrations transmitted to it through the ground from the oscillator, which is worked only to five per cent. of its full capacity.

After demonstrating the practicability of this method of transmission, the thought naturally occurred to me to use the earth as a conductor, thus dispensing with all wires. Whatever electricity may be, it is a fact that it behaves like an incompressible fluid, and the earth may be looked upon as an immense reservoir of electricity, which, I thought, could be disturbed effectively by a properly designed electrical machine. Accordingly, my next efforts were directed toward perfecting a special apparatus which would be highly effective in creating a disturbance of electricity in the earth. The progress in this new direction was necessarily very slow and the work discouraging, until I finally succeeded in perfecting a novel kind of transformer or induction-coil, particularly suited for this special purpose. That it is practicable, in this manner, not only to transmit minute amounts of electrical energy for operating delicate electrical devices, as I contemplated at first, but also electrical energy in appreciable quantities, will appear from an inspection of Fig. 4, which illustrates an actual experiment of this kind performed with the same apparatus. The result obtained was all the more remarkable as the top end of the coil was not connected to a wire or plate for magnifying the effect.

"WIRELESS" TELEGRAPHY—THE SECRET OF TUNING—ERRORS IN THE HERTZIAN INVESTIGATIONS—A RECEIVER OF WONDERFUL SENSITIVENESS.

As the first valuable result of my experiments in this latter line a system of telegraphy without wires resulted, which I described in two scientific lectures in February and March, 1893. It is mechanically illustrated in diagram *c*, the upper part of which shows the electrical arrangement as I described it then, while the lower part illustrates its mechanical analogue. The system is extremely simple in principle. Imagine two tuning-forks *F*, F_1, one at the sending- and the other at the receiving-station respectively, each having attached to its lower prong a minute piston *p*, fitting in a cylinder. Both the cylinders communicate with a large reservoir *R*, with elastic walls, which is supposed to be closed and filled with a light and incompressible fluid. By striking repeatedly one of the prongs of the tuning-fork *F*, the small piston *p* below would be vibrated, and its vibrations, transmitted through the fluid, would reach the distant fork F_1, which is "tuned" to the fork *F*, or, stated otherwise, of exactly the same note as the latter. The fork F_1 would now be set vibrating, and its vibration would be intensified by the continued action of the distant fork *F* until its upper prong, swinging far out, would make an electrical connection with a stationary contact *c*", starting in this manner some electrical or other appliances which may be used for recording the signals. In this simple way messages could be exchanged between the two stations, a similar contact *c'* being provided for this purpose, close to the upper prong of the fork*F*, so that the apparatus at each station could be employed in turn as receiver and transmitter.

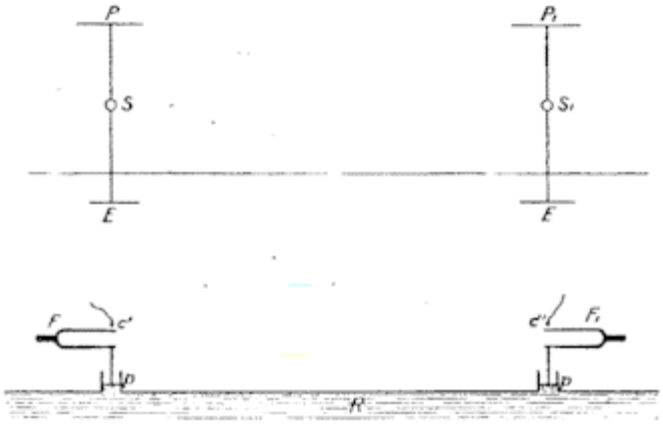

DIAGRAM *c*. "WIRELESS" TELEGRAPHY MECHANICALLY ILLUSTRATED.

The electrical system illustrated in the upper figure of diagram *c* is exactly the same in principle, the two wires or circuits *ESP* and $E_1S_1P_1$, which extend vertically to a height, representing the two tuning-forks with the pistons attached to them. These circuits are connected with the ground by plates *E*, E_1, and to two elevated metal sheets *P*, P_1, which store electricity and thus magnify considerably the effect. The closed reservoir *R*, with elastic walls, is in this case replaced by the earth, and the fluid by electricity. Both of these circuits are "tuned" and operate just like the two tuning-forks. Instead of striking the fork *F* at the sending-station, electrical oscillations are produced in the vertical sending- or transmitting-wire *ESP*, as by the action of a source*S*, included in this wire, which spread through the ground and reach the distant vertical receiving-wire $E_1S_1P_1$, exciting corresponding electrical oscillations in the same. In the latter wire or circuit is included a sensitive device or receiver S_1, which is thus set in action and made to operate a relay or other appliance. Each station is, of course, provided both with a source of electrical oscillations *S* and a sensitive receiver S_1, and a simple provision is made for using each of the two wires alternately to send and to receive the messages.

[See *Nikola Tesla: Colorado Springs Notes*, page 326, Photograph V.]

FIG. 5. PHOTOGRAPHIC VIEW OF THE COILS RESPONDING TO ELECTRICAL OSCILLATIONS.
The picture shows a number of coils , differently attuned and responding to the vibrations transmitted to them through the earth from an electrical oscillator. The large coil on the right, discharging strongly, is tuned to the fundamental vibration, which is fifty thousand per second; the two larger vertical coils to twice that number; the smaller white wire coil to four times that number, and the remaining small coils to higher tones. The vibrations produced by the oscillator were so intense that they affected perceptibly a small coil tuned to the twenty-sixth higher tone.

The exact attunement of the two circuits secures great advantages, and, in fact, it is essential in the practical use of the system. In this respect many popular errors exist, and, as a rule, in the technical reports on this subject circuits and appliances are described as affording these advantages when from their very nature it is evident that this is impossible. In order to attain the best results it is essential that the length of each wire or circuit, from the ground connection to the top, should be equal to one quarter of the wave-length of the electrical vibration in the wire, or else equal to that length multiplied by an odd number. Without the observation of this rule it is virtually impossible to prevent the interference and insure the privacy of messages. Therein lies the secret of tuning. To obtain the most satisfactory results it is, however, necessary to resort to electrical vibrations of low pitch. The Hertzian spark apparatus, used generally by experimenters, which produces oscillations of a very high rate, permits no effective tuning, and slight disturbances are sufficient to render an exchange of messages impracticable. But scientifically designed, efficient appliances allow nearly perfect adjustment. An experiment performed with the improved apparatus repeatedly referred to, and intended to convey an idea of this feature, is illustrated in Fig. 5, which is sufficiently explained by its note.

Since I described these simple principles of telegraphy without wires I have had frequent occasion to note that the identical features and elements have been used, in the evident belief that the signals are being transmitted to considerable distance by "Hertzian" radiations. This is only one of many misapprehensions to which the investigations of the lamented physicist have given rise. About thirty-three years ago Maxwell, following up a suggestive experiment made by Faraday in 1845, evolved an ideally simple theory which intimately connected light, radiant heat, and electrical phenomena, interpreting them as being all due to vibrations of a hypothetical fluid of inconceivable tenuity, called the ether. No experimental verification was arrived at until Hertz, at the suggestion of Helmholtz, undertook a series of experiments to this effect. Hertz proceeded with extraordinary ingenuity and insight, but devoted little energy to the perfection of his old-fashioned apparatus. The consequence was that he failed to observe the important function which the air played in his experiments, and which I subsequently discovered. Repeating his experiments and reaching different results, I ventured to point out this oversight. The strength of the proofs brought forward by Hertz in support of Maxwell's theory resided in the correct estimate of the rates of vibration of the circuits he used. But I ascertained that he could not have obtained the

rates he thought he was getting. The vibrations with identical apparatus he employed are, as a rule, much slower, this being due to the presence of air, which produces a dampening effect upon a rapidly vibrating electric circuit of high pressure, as a fluid does upon a vibrating tuning-fork. I have, however, discovered since that time other causes of error, and I have long ago ceased to look upon his results as being an experimental verification of the poetical conceptions of Maxwell. The work of the great German physicist has acted as an immense stimulus to contemporary electrical research, but it has likewise, in a measure, by its fascination, paralyzed the scientific mind, and thus hampered independent inquiry. Every new phenomenon which was discovered was made to fit the theory, and so very often the truth has been unconsciously distorted.

When I advanced this system of telegraphy, my mind was dominated by the idea of effecting communication to any distance through the earth or environing medium, the practical consummation of which I considered of transcendent importance, chiefly on account of the moral effect which it could not fail to produce universally. As the first effort to this end I proposed at that time, to employ relay-stations with tuned circuits, in the hope of making thus practicable signaling over vast distances, even with apparatus of very moderate power then at my command. I was confident, however, that with properly designed machinery signals could be transmitted to any point of the globe, no matter what the distance, without the necessity of using such intermediate stations. I gained this conviction through the discovery of a singular electrical phenomenon, which I described early in 1892, in lectures I delivered before some scientific societies abroad, and which I have called a "rotating brush." This is a bundle of light which is formed, under certain conditions, in a vacuum-bulb, and which is of a sensitiveness to magnetic and electric influences bordering, so to speak, on the supernatural. This light-bundle is rapidly rotated by the earth's magnetism as many as twenty thousand times pre second, the rotation in these parts being opposite to what it would be in the southern hemisphere, while in the region of the magnetic equator it should not rotate at all. In its most sensitive state, which is difficult to obtain, it is responsive to electric or magnetic influences to an incredible degree. The mere stiffening of the muscles of the arm and consequent slight electrical change in the body of an observer standing at some distance from it, will perceptibly affect it. When in this highly sensitive state it is capable of indicating the slightest magnetic and electric changes taking place in the earth. The observation of this wonderful phenomenon impressed me strongly that communication at any distance could be easily effected by its means, provided that apparatus could be perfected capable of producing an electric or magnetic change of state, however small, in the terrestrial globe or environing medium.

DEVELOPMENT OF A NEW PRINCIPLE—THE ELECTRICAL OSCILLATOR—PRODUCTION OF IMMENSE ELECTRICAL MOVEMENTS—THE EARTH RESPONDS TO MAN—INTERPLANETARY COMMUNICATION NOW PROBABLE.

I resolved to concentrate my efforts upon this venturesome task, though it involved great sacrifice, for the difficulties to be mastered were such that I could hope to consummate it only after years of labor. It meant delay of other work to which I would have preferred to devote myself, but I gained the conviction that my energies could not be more usefully employed; for I recognized that an efficient apparatus for, the production of powerful electrical oscillations, as was needed for that specific purpose, was the key to the solution of other most important electrical and, in fact, human problems. Not only was communication, to any distance, without wires possible by its means, but, likewise, the transmission of energy in great amounts, the burning of the atmospheric nitrogen, the production of an efficient illuminant, and many other results of inestimable scientific and industrial value. Finally, however, I had the satisfaction of accomplishing the task undertaken by the use of a new principle, the virtue of which is based on the marvelous properties of the electrical condenser. One of these is that it can discharge or explode its stored energy in an inconceivably short time. Owing to this it is unequaled in explosive violence. The explosion of dynamite is only the breath of a consumptive compared with its discharge. It is the means of producing the strongest current, the highest electrical pressure, the greatest commotion in the medium. Another of its properties, equally valuable, is that its discharge may vibrate at any rate desired up to many millions per second.

[See *Nikola Tesla: Colorado Springs Notes*, page 324, Photograph III.]

FIG. 6. PHOTOGRAPHIC VIEW OF THE ESSENTIAL PARTS OF THE ELECTRICAL OSCILLATOR USED IN THE EXPERIMENTS DESCRIBED

I had arrived at the limit of rates obtainable in other ways when the happy idea presented itself to me to resort to the condenser. I arranged such an instrument so as to be charged and discharged alternately in rapid succession through a coil with a few turns of stout wire, forming the primary of a transformer or induction-coil. Each time the condenser was discharged the current would quiver in the primary wire and induce corresponding oscillations in the secondary. Thus a transformer or induction-coil on new principles was evolved, which I have called "the electrical oscillator," partaking of those unique qualities which characterize the condenser, and enabling results to be attained impossible by other means. Electrical effects of any desired character and of intensities undreamed of before are now easily producible by perfected apparatus of this kind, to which frequent reference has been made, and the essential parts of which are shown in Fig. 6. For certain purposes a strong inductive effect is required; for others the greatest possible suddenness; for others again, an exceptionally high rate of vibration or extreme pressure; while for certain other objects immense electrical movements are necessary. The photographs in Figs. 7, 8, 9, and 10, of experiments performed with such an oscillator, may serve to illustrate some of these features and convey an idea of the magnitude of the effects actually produced. The completeness of

the titles of the figures referred to makes a further description of them unnecessary.

[See *Nikola Tesla: Colorado Springs Notes*, page 344, Photograph XVII.]

FIG. 7. EXPERIMENT TO ILLUSTRATE AN INDUCTIVE EFFECT OF AN ELECTRICAL OSCILLATOR OF GREAT POWER.
The photograph shows three ordinary incandescent lamps lighted to full candle-power by currents induced in a local loop consisting of a single wire forming a square of fifty feet each side, which includes the lamps, and which is at a distance of one hundred feet from the primary circuit energized by the oscillator. The loop likewise includes an electrical condenser, and is exactly attuned to the vibrations of the oscillator, which is worked at less than five percent of its total capacity.

[See *Nikola Tesla: Colorado Springs Notes*, page 335, Photograph XI.]

FIG. 8. EXPERIMENT TO ILLUSTRATE THE CAPACITY OF THE OSCILLATOR FOR PRODUCING ELECTRICAL EXPLOSIONS OF GREAT POWER.
Note to Fig. 8.—The coil, partly shown in the photograph, creates an alternative movement of electricity from the earth into a large reservoir and back at a rate of one hundred thousand alternations per second. The adjustments are such that the reservoir is filled full and bursts at each alternation just at the moment when the electrical pressure reaches the maximum. The discharge escapes with a deafening noise, striking an unconnected coil twenty-two feet away, and creating such a commotion of electricity in the earth that sparks an inch long can be drawn from a water main at a distance of three hundred feet from the laboratory.

[See *Nikola Tesla: Colorado Springs Notes*, page 390, Photograph LXII.]

FIG. 9. EXPERIMENT TO ILLUSTRATE THE CAPACITY ON THE OSCILLATOR FOR CREATING A GREAT ELECTRICAL MOVEMENT.
The ball shown in the photograph, covered with a polished metallic coating of twenty square feet of surface, represents a large reservoir of electricity, and the inverted tin pan underneath, with a sharp rim, a big opening through which the electricity can escape before filling the reservoir. The quantity of electricity set in movement is so great that, although most of it escapes through the rim of the pan or opening provided, the ball or reservoir is nevertheless alternately emptied and filled to over-flowing (as is evident from the discharge escaping on the top of the ball) one hundred and fifty thousand times per second.

[See *Nikola Tesla: Colorado Springs Notes*, page 332, Photograph IX.]

FIG. 10. PHOTOGRAPHIC VIEW OF AN EXPERIMENT TO ILLUSTRATE AN EFFECT OF AN ELECTRICAL OSCILLATOR DELIVERING ENERGY AT A RATE OF SEVENTY-FIVE THOUSAND HORSE-POWER.
The discharge, creating a strong draft owing to the heating of the air, is carried upward through the open roof of the building. The greatest width across is nearly seventy feet. The pressure is over twelve million volts, and the current alternates one hundred and thirty thousand times per second.

However extraordinary the results shown may appear, they are but trifling compared with those which are attainable by apparatus designed on these same principles. I have produced electrical discharges the actual path of which, from end to end, was probably more than one hundred feet long; but it would not be difficult to reach lengths one hundred times as great. I have produced electrical movements occurring at the rate of approximately one hundred thousand horse-power, but rates of one, five, or ten million horse-power are easily practicable. In these experiments effects were developed incomparably greater than any ever produced by human agencies, and yet these results are but an embryo of what is to be.

That communication without wires to any point of the globe is practicable with such apparatus would need no demonstration, but through a discovery which I made I obtained absolute certitude. Popularly explained, it is exactly this: When we raise the voice and hear an echo in reply, we know that the sound of the voice must have reached a distant wall, or boundary, and must have been reflected from the same. Exactly as the sound, so an electrical wave is reflected, and the same evidence which is afforded by an echo is offered by an electrical phenomenon known as a "stationary" wave—that is, a wave with fixed nodal and ventral regions. Instead of sending sound-vibrations toward a distant wall, I have sent electrical vibrations toward the remote boundaries of the earth, and instead of the wall the earth has replied. In place of an echo I have obtained a stationary electrical wave, a wave reflected from afar.

Stationary waves in the earth mean something more than mere telegraphy without wires to any distance. They will enable us to attain many important specific results impossible otherwise. For instance, by their use we may produce at will, from a sending-station, an electrical effect in any particular region of the globe; we may determine the relative position or course of a moving object, such as a vessel at sea, the distance traversed by the same, or its speed; or we may send over the earth a wave of electricity traveling at any rate

we desire, from the pace of a turtle up to lightning speed.

With these developments we have every reason to anticipate that in a time not very distant most telegraphic messages across the oceans will be transmitted without cables. For short distances we need a "wireless" telephone, which requires no expert operators. The greater the spaces to be bridged, the more rational becomes communication without wires. The cable is not only an easily damaged and costly instrument, but it limits us in the speed of transmission by reason of a certain electrical property inseparable from its construction. A properly designed plant for effecting communication without wires ought to have many times the working capacity of a cable, while it will involve incomparably less expense. Not a long time will pass, I believe, before communication by cable will become obsolete, for not only will signaling by this new method be quicker and cheaper, but also much safer. By using some new means for isolating the messages which I have contrived, an almost perfect privacy can be secured.

I have observed the above effects so far only up to a limited distance of about six hundred miles, but inasmuch as there is virtually no limit to the power of the vibrations producible with such an oscillator, I feel quite confident of the success of such a plant for effecting transoceanic communication. Nor is this all. My measurements and calculations have shown that it is perfectly practicable to produce on our globe, by the use of these principles, an electrical movement of such magnitude that, without the slightest doubt, its effect will be perceptible on some of our nearer planets, as Venus and Mars. Thus from mere possibility interplanetary communication has entered the stage of probability. In fact, that we can produce a distinct effect on one of these planets in this novel manner, namely, by disturbing the electrical condition of the earth, is beyond any doubt. This way of effecting such communication is, however, essentially different from all others which have so far been proposed by scientific men. In all the previous instances only a minute fraction of the total energy reaching the planet—as much as it would be possible to concentrate in a reflector—could be utilized by the supposed observer in his instrument. But by the means I have developed he would be enabled to concentrate the larger portion of the entire energy transmitted to the planet in his instrument, and the chances of affecting the latter are thereby increased many millionfold.

Besides machinery for producing vibrations of the required power, we must have delicate means capable of revealing the effects of feeble influences exerted upon the earth. For such purposes, too, I have perfected new methods. By their use we shall likewise be able, among other things, to detect at considerable distance the presence of an iceberg or other object at sea. By their use, also, I have discovered some terrestrial phenomena still unexplained. That we can send a message to a planet is certain, that we can get an answer is probable: man is not the only being in the Infinite gifted with a mind.

TRANSMISSION OF ELECTRICAL ENERGY TO ANY DISTANCE WITHOUT WIRES—NOW PRACTICABLE—THE BEST MEANS OF INCREASING THE FORCE ACCELERATING THE HUMAN MASS.

The most valuable observation made in the course of these investigations was the extraordinary behavior of the atmosphere toward electric impulses of excessive electromotive force. The experiments showed that the air at the ordinary pressure became distinctly conducting, and this opened up the wonderful prospect of transmitting large amounts of electrical energy for industrial purposes to great distances without wires, a possibility which, up to that time, was thought of only as a scientific dream. Further investigation revealed the important fact that the conductivity imparted to the air by these electrical impulses of many millions of volts increased very rapidly with the degree of rarefaction, so that air strata at very moderate altitudes, which are easily accessible, offer, to all experimental evidence, a perfect conducting path, better than a copper wire, for currents of this character.

Thus the discovery of these new properties of the atmosphere not only opened up the possibility of transmitting, without wires, energy in large amounts, but, what was still more significant, it afforded the certitude that energy could be transmitted in this manner economically. In this new system it matters little—in fact, almost nothing—whether the transmission is effected at a distance of a few miles or of a few thousand miles.

While I have not, as yet, actually effected a transmission of a considerable amount of energy, such as would be of industrial importance, to a great distance by this new method, I have operated several model plants under exactly the same conditions which will exist in a large plant of this kind, and the practicability of the system is thoroughly demonstrated. The experiments have shown conclusively that, with two terminals maintained at an elevation of not more than thirty thousand to thirty-five thousand feet above sea-level, and with an electrical pressure of fifteen to twenty million volts, the energy of thousands of horse-power can be transmitted over distances which may be hundreds and, if necessary, thousands of miles. I am hopeful, however, that I may be able to reduce very considerably the elevation of the terminals now required, and with this object I am following up an idea which promises such a realization. There is, of course, a popular prejudice against using an electrical pressure of millions of volts, which may cause sparks to fly at distances of hundreds of feet, but, paradoxical as it may seem, the system, as I have described it in a technical publication, offers greater personal safety than most of the ordinary distribution circuits now used in the cities. This is, in a measure, borne out by the fact that, although I have carried on such experiments for a number of years, no injury has been sustained either by me or any of my assistants.

But to enable a practical introduction of the system, a number of essential requirements are still to be fulfilled. It is not enough to

develop appliances by means of which such a transmission can be effected. The machinery must be such as to allow the transformation and transmission, of electrical energy under highly economic and practical conditions. Furthermore, an inducement must be offered to those who are engaged in the industrial exploitation of natural sources of power, as waterfalls, by guaranteeing greater returns on the capital invested than they can secure by local development of the property.

From that moment when it was observed that, contrary to the established opinion, low and easily accessible strata of the atmosphere are capable of conducting electricity, the transmission of electrical energy without wires has become a rational task of the engineer, and one surpassing all others in importance. Its practical consummation would mean that energy would be available for the uses of man at any point of the globe, not in small amounts such as might be derived from the ambient medium by suitable machinery, but in quantities virtually unlimited, from waterfalls. Export of power would then become the chief source of income for many happily situated countries, as the United States, Canada, Central and South America, Switzerland, and Sweden. Men could settle down everywhere, fertilize and irrigate the soil with little effort, and convert barren deserts into gardens, and thus the entire globe could be transformed and made a fitter abode for mankind. It is highly probable that if there are intelligent beings on Mars they have long ago realized this very idea, which would explain the changes on its surface noted by astronomers. The atmosphere on that planet, being of considerably smaller density than that of the earth, would make the task much more easy.

It is probable that we shall soon have a self-acting heat-engine capable of deriving moderate amounts of energy from the ambient medium. There is also a possibility—though a small one—that we may obtain electrical energy direct from the sun. This might be the case if the Maxwellian theory is true, according to which electrical vibrations of all rates should emanate from the sun. I am still investigating this subject. Sir William Crookes has shown in his beautiful invention known as the "radiometer" that rays may produce by impact a mechanical effect, and this may lead to some important revelation as to the utilization of the sun's rays in novel ways. Other sources of energy may be opened up, and new methods of deriving energy from the sun discovered, but none of these or similar achievements would equal in importance the transmission of power to any distance through the medium. I can conceive of no technical advance which would tend to unite the various elements of humanity more effectively than this one, or of one which would more add to and more economize human energy. It would be the best means of increasing the force accelerating the human mass. The mere moral influence of such a radical departure would be incalculable. On the other hand if at any point of the globe energy can be obtained in limited quantities from the ambient medium by means of a self-acting heat-engine or otherwise, the conditions will remain the same as before. Human performance will be increased, but men will remain strangers as they were.

I anticipate that any, unprepared for these results, which, through long familiarity, appear to me simple and obvious, will consider them still far from practical application. Such reserve, and even opposition, of some is as useful a quality and as necessary an element in human progress as the quick receptivity and enthusiasm of others. Thus, a mass which resists the force at first, once set in movement, adds to the energy. The scientific man does not aim at an immediate result. He does not expect that his advanced ideas will be readily taken up. His work is like that of the planter—for the future. His duty is to lay the foundation for those who are to come, and point the way. He lives and labors and hopes with the poet who says:

Schaff' das Tagwerk meiner Hände,
Hohes Glück, dass ich's vollende!
Lass, o lass mich nicht ermatten!
Nein, es sind nicht leere Träume:
Jetzt nur Stangen, diese Bäume
Geben einst noch Frucht und Schatten. [1]

1 Daily work—my hands' employment,
To complete is pure enjoyment!
Let, oh, let me never falter!
No! there is no empty dreaming:
Lo! these trees, but bare poles seeming,
Yet will yield both food and shelter!

Goethe's "Hope"
Translated by William Gibson, Com. U. S. N.

THE STRANGE LIFE OF NIKOLA TESLA

Editors Note, August 28, 1995

This text has been entered by John R.H. Penner from a small booklet found in a used bookstore for $2.50. The only form of date identification is the name of the original purchaser, Arthua Daine (?), dated April 29, 1978.

The book appears to be considerably older, made with typewriters, and then photocopied and stapled. The only other significant features of the booklet is that it contains four photocopied photographs of Tesla, and was originally forty pages long. I must apologise for the qualitty of the scans, but the originals were of very poor quality, and this is the best that could be obtained after touching-up in Photoshop.

The book has no Copyright identification, nor any means of contacting the publishers. As far as I am aware, this autobiography is no longer available in printed form anywhere.

In the interest of making this important text available to the wider public, I have retyped the entire text word-for-word as it originally appears into this electronic format. The only words which appear in this file, that are not in the original book are this Editors Note, and the Introduction. I have exactly maintained page numbers as they appear in the original – including the somewhat odd artifact of Chapter 1 starting on page two.

If anyone knows how to reach the original publisher, please contact me at the below address, so proper credit may be given where it is due.

John Roland Hans Penner
464 Scott Street
St. Catharines, Ontario
L2M 3W7, Canada
Phone: 905.646.3551
eMail: J.Penner@GEnie.GEIS.com

This file may be freely redistributed as long as it's content is not modified in any way. It may not be sold or published for profit unless specifically authorised prior to publication by the express permission of Kolmogorov- Smirnov Publishing, or John R.H. Penner. Unless otherwise notified, this work is Copyright ©1995 by John R.H. Penner.

Introduction

Nikola Tesla was born in Croatia (then part of Austria-Hungary) on July 9, 1856, and died January 7, 1943. He was the electrical engineer who invented the AC (alternating current) induction motor, which made the universal transmission and distribution of electricity possible. Tesla began his studies in physics and mathematics at Graz Polytechnic, and then took philosophy at the University of Prague. He worked as an electrical engineer in Budapest, Hungary, and subsequently in France and Germany. In 1888 his discovery that a magnetic field could be made to rotate if two coils at right angles are supplied with AC current 90° out of phase made possible the invention of the AC induction motor. The major advantage of this motor being its brushless operation, which many at the time believed impossible.

Tesla moved to the United States in 1884, where he worked for Thomas Edison who quickly became a rival – Edison being an advocate of the inferior DC power transmission system. During this time, Tesla was commissioned with the design of the AC generators installed at Niagara Falls. George Westinghouse purchased the patents to his induction motor, and made it the basis of the Westinghouse power system which still underlies the modern electrical power industry today.

He also did notable research on high-voltage electricity and wireless communication; at one point creating an earthquake which shook the ground for several miles around his New York laboratory. He also devised a system which anticipated world-wide wireless communications, fax machines, radar, radio-guided missiles and aircraft.

NIKOLA TESLA IS THE TRUE UNSUNG PROPHET OF THE ELECTRIC AGE!; without whom our radio, auto ignition, telephone, alternating current power generation and transmission, radio and television would all have been impossible.

Yet his life and times have vanished largely from public access.

This AUTOBIOGRAPHY is released to remedy this situation, and to fill this “BLACK HOLE” in information space.

©Kolmogorov- Smirnov Publishing.

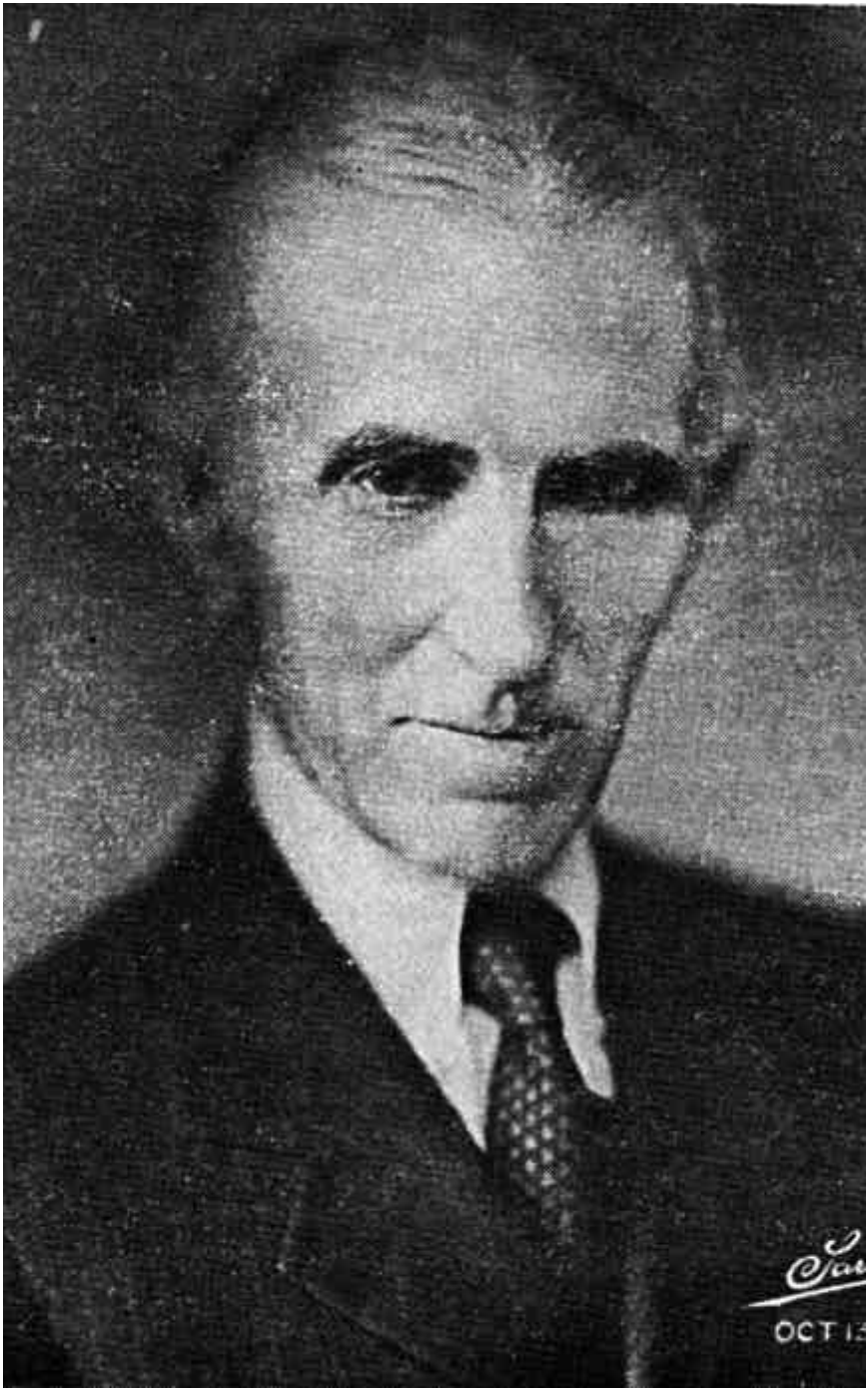

October 13, 1933

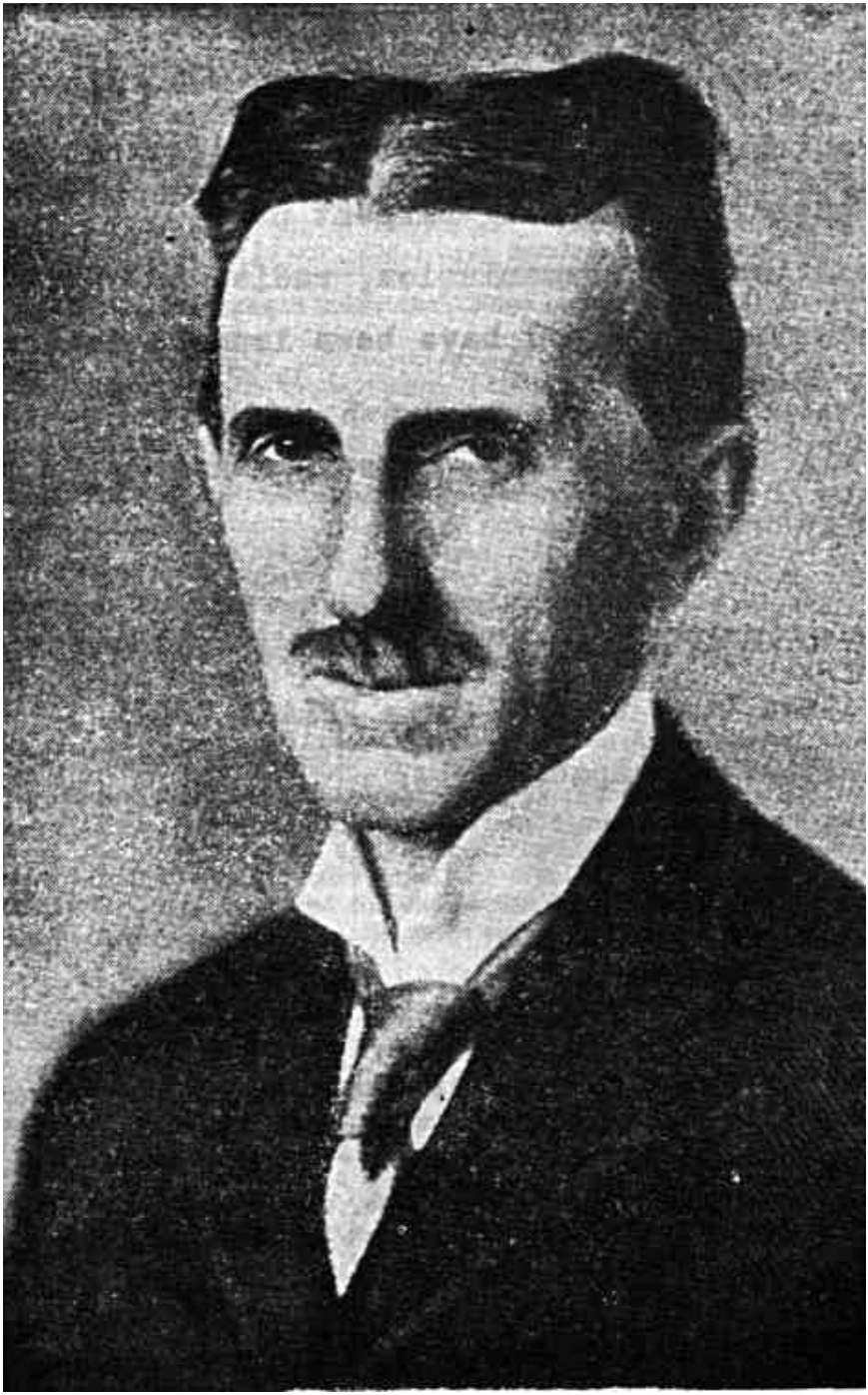

Chapter 1
My Early Life

By Nikola Tesla

The progressive development of man is vitally dependent on invention. It is the most important product of his creative brain. Its ultimate purpose is the complete mastery of mind over the material world, the harnessing of the forces of nature to human needs. This is the difficult task of the inventor who is often misunderstood and unrewarded. But he finds ample compensation in the pleasing exercises of his powers and in the knowledge of being one of that exceptionally privileged class without whom the race would have long ago perished in the bitter struggle against pitiless elements. Speaking for myself, I have already had more than my full measure of this exquisite enjoyment; so much, that for many years my life was little short of continuous rapture. I am credited with being one of the hardest workers and perhaps I am, if thought is the equivalent of labour, for I have devoted to it almost all of my waking hours. But if work is interpreted to be a definite performance in a specified time according to a rigid rule, then I may be the worst of idlers.

Every effort under compulsion demands a sacrifice of life-energy. I never paid such a price. On the contrary, I have thrived on my thoughts. In attempting to give a connected and faithful account of my activities in this story of my life, I must dwell, however reluctantly, on the impressions of my youth and the circumstances and events which have been instrumental in determining my career. Our first endeavours are purely instinctive promptings of an imagination vivid and undisciplined. As we grow older reason asserts itself and we become more and more systematic and designing. But those early impulses, though not immediately productive, are of the greatest moment and may shape our very destinies. Indeed, I feel now that had I understood and cultivated instead of suppressing them, I would have added substantial value to my bequest to the world. But not until I had attained manhood did I realise that I was an inventor.

This was due to a number of causes. In the first place I had a brother who was gifted to an extraordinary degree; one of those rare phenomena of mentality which biological investigation has failed to explain. His premature death left my earth parents disconsolate. (I will explain my remark about my “earth parents” later.) We owned a horse which had been presented to us by a dear friend. It was a magnificent animal of Arabian breed, possessed of almost human intelligence, and was cared for and petted by the whole family, having on one occasion saved my dear father’s life under remarkable circumstances.

My father had been called one winter night to perform an urgent duty and while crossing the mountains, infested by wolves, the horse became frightened and ran away, throwing him violently to the ground. It arrived home bleeding and exhausted, but after the alarm was sounded, immediately dashed off again, returning to the spot, and before the searching party were far on the way they were met by my father, who had recovered consciousness and remounted, not realising that he had been lying in the snow for several hours. This horse was responsible for my brother’s injuries from which he died. I witnessed the tragic scene and although so many years have elapsed since, my visual impression of it has lost none of its force. The recollection of his attainments made every effort of mine seem dull in comparison. Anything I did that was creditable merely caused my parents to feel their loss more keenly. So I grew up with little confidence in myself.

But I was far from being considered a stupid boy, if I am to judge from an incident of which I have still a strong remembrance. One day the Aldermen were passing through a street where I was playing with other boys. The oldest of these venerable gentlemen, a wealthy citizen, paused to give a silver piece to each of us. Coming to me, he suddenly stopped and commanded, "Look in my eyes." I met his gaze, my hand outstretched to receive the much valued coin, when to my dismay, he said, "No, not much; you can get nothing from me. You are too smart."

They used to tell a funny story about me. I had two old aunts with wrinkled faces, one of them having two teeth protruding like the tusks of an elephant, which she buried in my cheek every time she kissed me. Nothing would scare me more then the prospects of being by these affectionate, unattractive relatives. It happened that while being carried in my mother's arms, they asked who was the prettier of the two. After examining their faces intently, I answered thoughtfully, pointing to one of them, "This here is not as ugly as the other."

Then again, I was intended from my very birth, for the clerical profession and this thought constantly oppressed me. I longed to be an engineer, but my father was inflexible. He was the son of an officer who served in the army of the Great Napoleon and in common with his brother, professor of mathematics in a prominent institution, had received a military education; but, singularly enough, later embraced the clergy in which vocation he achieved eminence. He was a very erudite man, a veritable natural philosopher, poet and writer and his sermons were said to be as eloquent as those of Abraham a-Sancta-Clara. He had a prodigious memory and frequently recited at length from works in several languages. He often remarked playfully that if some of the classics were lost he could restore them. His style of writing was much admired. He penned sentences short and terse and full of wit and satire. The humorous remarks he made were always peculiar and characteristic. Just to illustrate, I may mention one or two instances.

Among the help, there was a cross-eyed man called Mane, employed to do work around the farm. He was chopping wood one day. As he swung the axe, my father, who stood nearby and felt very uncomfortable, cautioned him, "For God's sake, Mane, do not strike at what you are looking but at what you intend to hit."

On another occasion he was taking out for a drive, a friend who carelessly permitted his costly fur coat to rub on the carriage wheel. My father reminded him of it saying, "Pull in your coat; you are ruining my tire."

He had the odd habit of talking to himself and would often carry on an animated conversation and indulge in heated argument, changing the tone of his voice. A casual listener might have sworn that several people were in the room.

Although I must trace to my mother's influence whatever inventiveness I possess, the training he gave me must have been helpful. It comprised all sorts of exercises - as, guessing one another's thoughts, discovering the defects of some form of expression, repeating long sentences or performing mental calculations. These daily lessons were intended to strengthen memory and reason, and especially to develop the critical sense, and were undoubtedly very beneficial.

My mother descended from one of the oldest families in the country and a line of inventors. Both her father and grandfather originated numerous implements for household, agricultural and other uses. She was a truly great woman,

of rare skill, courage and fortitude, who had braved the storms of life and passed through many a trying experience. When she was sixteen, a virulent pestilence swept the country. Her father was called away to administer the last sacraments to the dying and during his absence she went alone to the assistance of a neighbouring family who were stricken by the dread disease. She bathed, clothed and laid out the bodies, decorating them with flowers according to the custom of the country and when her father returned he found everything ready for a Christian burial.

My mother was an inventor of the first order and would, I believe, have achieved great things had she not been so remote from modern life and its multifold opportunities. She invented and constructed all kinds of tools and devices and wove the finest designs from thread which was spun by her. She even planted seeds, raised the plants and separated the fibres herself. She worked indefatigably, from break of day till late at night, and most of the wearing apparel and furnishings of the home were the product of her hands. When she was past sixty, her fingers were still nimble enough to tie three knots in an eyelash.

There was another and still more important reason for my late awakening. In my boyhood I suffered from a peculiar affliction due to the appearance of images, often accompanied by strong flashes of light, which marred the sight of real objects and interfered with my thoughts and action. They were pictures of things and scenes which i had really seen, never of those imagined. When a word was spoken to me the image of the object it designated would present itself vividly to my vision and sometimes I was quite unable to distinguish weather what I saw was tangible or not. This caused me great discomfort and anxiety. None of the students of psychology or physiology whom i have consulted, could ever explain satisfactorily these phenomenon. They seem to have been unique although I was probably predisposed as I know that my brother experienced a similar trouble. The theory I have formulated is that the images were the result of a reflex action from the brain on the retina under great excitation. They certainly were not hallucinations such as are produced in diseased and anguished minds, for in other respects i was normal and composed. To give an idea of my distress, suppose that I had witnessed a funeral or some such nerve-wracking spectacle. The, inevitably, in the stillness of night, a vivid picture of the scene would thrust itself before my eyes and persist despite all my efforts to banish it. If my explanation is correct, it should be possible to project on a screen the image of any object one conceives and make it visible. Such an advance would revolutionise all human relations. I am convinced that this wonder can and will be accomplished in time to come. I may add that I have devoted much thought to the solution of the problem.

I have managed to reflect such a picture, which i have seen in my mind, to the mind of another person, in another room. To free myself of these tormenting appearances, I tried to concentrate my mind on something else I had seen, and in this way I would often obtain temporary relief; but in order to get it I had to conjure continuously new images. It was not long before I found that I had exhausted all of those at my command; my ‘reel’ had run out as it were, because I had seen little of the world — only objects in my home and the immediate surroundings. As I performed these mental operations for the second or third time, in order to chase the appearances from my vision, the remedy gradually lost all its force. Then I instinctively commenced to make excursions beyond the limits of the small world of which I had knowledge, and I saw new scenes. These were at first very blurred and indistinct, and would flit away when I tried to concentrate my attention upon them. They gained in strength

and distinctness and finally assumed the concreteness of real things. I soon discovered that my best comfort was attained if I simply went on in my vision further and further, getting new impressions all the time, and so I began to travel; of course, in my mind. Every night, (and sometimes during the day), when alone, I would start on my journeys — see new places, cities and countries; live there, meet people and make friendships and acquaintances and, however unbelievable, it is a fact that they were just as dear to me as those in actual life, and not a bit less intense in their manifestations.

This I did constantly until I was about seventeen, when my thoughts turned seriously to invention. Then I observed to my delight that i could visualise with the greatest facility. I needed no models, drawings or experiments. I could picture them all as real in my mind. Thus I have been led unconsciously to evolve what I consider a new method of materialising inventive concepts and ideas, which is radially opposite to the purely experimental and is in my opinion ever so much more expeditious and efficient.

The moment one constructs a device to carry into practice a crude idea, he finds himself unavoidably engrossed with the details of the apparatus. As he goes on improving and reconstructing, his force of concentration diminishes and he loses sight of the great underlying principle. Results may be obtained, but always at the sacrifice of quality. My method is different. I do not rush into actual work. When I get an idea, I start at once building it up in my imagination. I change the construction, make improvements and operate the device in my mind. It is absolutely immaterial to me whether I run my turbine in thought or test it in my shop. I even note if it is out of balance. There is no difference whatever; the results are the same. In this way I am able to rapidly develop and perfect a conception without touching anything. When I have gone so far as to embody in the invention every possible improvement I can think of and see no fault anywhere, I put into concrete form this final product of my brain. Invariably my device works as I conceived that it should, and the experiment comes out exactly as I planned it. In twenty years there has not been a single exception. Why should it be otherwise? Engineering, electrical and mechanical, is positive in results. There is scarcely a subject that cannot be examined beforehand, from the available theoretical and practical data. The carrying out into practice of a crude idea as is being generally done, is, I hold, nothing but a waste of energy, money, and time.

My early affliction had however, another compensation. The incessant mental exertion developed my powers of observation and enabled me to discover a truth of great importance. I had noted that the appearance of images was always preceded by actual vision of scenes under peculiar and generally very exceptional conditions, and I was impelled on each occasion to locate the original impulse. After a while this effort grew to be almost automatic and I gained great facility in connecting cause and effect. Soon I became aware, to my surprise, that every thought I conceived was suggested by an external impression. Not only this but all my actions were prompted in a similar way. In the course of time it became perfectly evident to me that I was merely an automation endowed with power OF MOVEMENT RESPONDING TO THE STIMULI OF THE SENSE ORGANS AND THINKING AND ACTING ACCORDINGLY. The practical result of this was the art of teleautomatics which has been so far carried out only in an imperfect manner. Its latent possibilities will, however be eventually shown. I have been years planning self-controlled automata and believe that mechanisms can be produced which will act as if possessed of reason, to a limited degree, and will create a revolution in many commercial and industrial departments. I was about twelve years of age when I first succeeded in banishing an image from my vision by wilful effort, but I never had any control over the flashes of light to which

I have referred. They were, perhaps, my strangest and [most] inexplicable experience. They usually occurred when I found myself in a dangerous or distressing situations or when i was greatly exhilarated. In some instances i have seen all the air around me filled with tongues of living flame. Their intensity, instead of diminishing, increased with time and seemingly attained a maximum when I was about twenty-five years old.

While in Paris in 1883, a prominent French manufacturer sent me an invitation to a shooting expedition which I accepted. I had been long confined to the factory and the fresh air had a wonderfully invigorating effect on me. On my return to the city that night, I felt a positive sensation that my brain had caught fire. I was a light as though a small sun was located in it and I passed the whole night applying cold compressions to my tortured head. Finally the flashes diminished in frequency and force but it took more than three weeks before they wholly subsided. When a second invitation was extended to me, my answer was an emphatic NO!

These luminous phenomena still manifest themselves from time to time, as when a new idea opening up possibilities strikes me, but they are no longer exciting, being of relatively small intensity. When I close my eyes I invariably observe first, a background of very dark and uniform blue, not unlike the sky on a clear but starless night. In a few seconds this field becomes animated with innumerable scintillating flakes of green, arranged in several layers and advancing towards me. Then there appears, to the right, a beautiful pattern of two systems of parallel and closely spaced lines, at right angles to one another, in all sorts of colours with yellow, green, and gold predominating. Immediately thereafter, the lines grow brighter and the whole is thickly sprinkled with dots of twinkling light. This picture moves slowly across the field of vision and in about ten seconds vanishes on the left, leaving behind a ground of rather unpleasant and inert grey until the second phase is reached. Every time, before falling asleep, images of persons or objects flit before my view. When I see them I know I am about to lose consciousness. If they are absent and refuse to come, it means a sleepless night. To what an extent imagination played in my early life, I may illustrate by another odd experience.

Like most children, I was fond of jumping and developed an intense desire to support myself in the air. Occasionally a strong wind richly charged with oxygen blew from the mountains, rendering my body light as cork and then I would leap and float in space for a long time. It was a delightful sensation and my disappointment was keen when later I undeceived myself. During that period I contracted many strange likes, dislikes and habits, some of which I can trace to external impressions while others are unaccountable. I had a violent aversion against the earing of women, but other ornaments, as bracelets, pleased me more or less according to design. The sight of a pearl would almost give me a fit, but I was fascinated with the glitter of crystals or objects with sharp edges and plane surfaces. I would not touch the hair of other people except, perhaps at the point of a revolver. I would get a fever by looking at a peach and if a piece of camphor was anywhere in the house it caused me the keenest discomfort. Even now I am not insensible to some of these upsetting impulses. When I drop little squares of paper in a dish filled with liquid, I always sense a peculiar and awful taste in my mouth. I counted the steps in my walks and calculated the cubical contents of soup plates, coffee cups and pieces of food, otherwise my meal was unenjoyable. All repeated acts or operations I performed had to be divisible by three and if I missed I felt impelled to do it all over again, even if it took hours. Up to the age of eight years, my

character was weak and vacillating. I had neither courage or strength to form a firm resolve. My feelings came in waves and surges and variated unceasingly between extremes. My wishes were of consuming force and like the heads of the hydra, they multiplied. I was oppressed by thoughts of pain in life and death and religious fear. I was swayed by superstitious belief and lived in constant dread of the spirit of evil, of ghosts and ogres and other unholy monsters of the dark. Then all at once, there came a tremendous change which altered the course of my whole existence.

Of all things I liked books best. My father had a large library and whenever I could manage I tried to satisfy my passion for reading. He did not permit it and would fly in a rage when he caught me in the act. He hid the candles when he found that I was reading in secret. He did not want me to spoil my eyes. But I obtained tallow, made the wicking and cast the sticks into tin forms, and every night I would bush the keyhole and the cracks and read, often till dawn, when all others slept and my mother started on her arduous daily task.

On one occasion I came across a novel entitled 'Aoafi,' (the son of Aba), a Serbian translation of a well known Hungarian writer, Josika. This work somehow awakened my dormant powers of will and I began to practice self-control. At first my resolutions faded like snow in April, but in a little while I conquered my weakness and felt a pleasure I never knew before — that of doing as I willed.

In the course of time this vigorous mental exercise became second to nature. At the outset my wishes had to be subdued but gradually desire and will grew to be identical. After years of such discipline I gained so complete a mastery over myself that I toyed with passions which have meant destruction to some of the strongest men. At a certain age I contracted a mania for gambling which greatly worried my parents. To sit down to a game of cards was for me the quintessence of pleasure. My father led an exemplary life and could not excuse the senseless waste of my time and money in which I indulged. I had a strong resolve, but my philosophy was bad. I would say to him, 'I can stop whenever I please, but it it worth while to give up that which I would purchase with the joys of paradise?' On frequent occasions he gave vent to his anger and contempt, but my mother was different. She understood the character of men and knew that one's salvation could only be brought about through his own efforts. One afternoon, I remember, when I had lost all my money and was craving for a game, she came to me with a roll of bills and said, 'Go and enjoy yourself. The sooner you lose all we possess, the better it will be. I know that you will get over it.' She was right. I conquered my passion then and there and only regretted that it had not been a hundred times as strong. I not only vanquished but tore it from my heart so as not to leave even a trace of desire.

Ever since that time I have been as indifferent to any form of gambling as to picking teeth. During another period I smoked excessively, threatening to ruin my health. Then my will asserted itself and I not only stopped but destroyed all inclination. Long ago I suffered from heart trouble until I discovered that it was due to the innocent cup of coffee I consumed every morning. I discontinued at once, though I confess it was not an easy task. In this way I checked and bridled other habits and passions, and have not only preserved my life but derived an immense amount of satisfaction from what most men would consider privation and sacrifice.

After finishing the studies at the Polytechnic Institute and University, I had a complete nervous breakdown and while the malady lasted I observed many phenomena, strange and unbelievable...

Chapter 2

I shall dwell briefly on these extraordinary experiences, on account of their possible interest to students of psychology and physiology and also because this period of agony was of the greatest consequence on my mental development and subsequent labours. But it is indispensable to first relate the circumstances and conditions which preceded them and in which might be found their partial explanation.

From childhood I was compelled to concentrate attention upon myself. This caused me much suffering, but to my present view, it was a blessing in disguise for it has taught me to appreciate the inestimable value of introspection in the preservation of life, as well as a means of achievement. The pressure of occupation and the incessant stream of impressions pouring into our consciousness through all the gateways of knowledge make modern existence hazardous in many ways. Most persons are so absorbed in the contemplation of the outside world that they are wholly oblivious to what is passing on within themselves. The premature death of millions is primarily traceable to this cause. Even among those who exercise care, it is a common mistake to avoid imaginary, and ignore the real dangers. And what is true of an individual also applies, more or less, to a people as a whole.

Abstinence was not always to my liking, but I find ample reward in the agreeable experiences I am now making. Just in the hope of converting some to my precepts and convictions I will recall one or two.

A short time ago I was returning to my hotel. It was a bitter cold night, the ground slippery, and no taxi to be had. Half a block behind me followed another man, evidently as anxious as myself to get under cover. Suddenly my legs went up in the air. At the same instant there was a flash in my brain. The nerves responded, the muscles contracted. I swung 180 degrees and landed on my hands. I resumed my walk as though nothing had happened when the stranger caught up with me. “How old are you?” he asked, surveying me critically.

“Oh, about fifty-nine,” I replied, “What of it?”

“Well,” said he, “I have seen a cat do this but never a man.” About a month ago I wanted to order new eye glasses and went to an oculist who put me through the usual tests. He looked at me incredulously as I read off with ease the smallest print at considerable distance. But when I told him I was past sixty he gasped in astonishment. Friends of mine often remark that my suits fit me like gloves but they do not know that all my clothing is made to measurements which were taken nearly fifteen years ago and never changed. During this same period my weight has not varied one pound. In this connection I may tell a funny story.

One evening, in the winter of 1885, Mr. Edison, Edward H. Johnson, the President of the Edison Illuminating Company, Mr. Batchellor, Manager of the works, and myself, entered a little place opposite 65 Firth Avenue, where the offices of the company were located. Someone suggested guessing weights and I was induced to step on a scale. Edison felt me all over and said: “Tesla weighs 152 lbs. to an ounce,” and he guessed it exactly. Stripped I weighed 142 pounds, and that is still my weight. I whispered to Mr. Johnson; “How is it possible that Edison could guess my weight so closely?”

“Well,” he said, lowering his voice. “I will tell you confidentially, but you must not say anything. He was employed for a long time in a Chicago slaughter-house where he weighed thousands of hogs every day. That’s why.”

My friend, the Hon. Chauncey M. Dupew, tells of an Englishman on whom he sprung one of his original anecdotes and who listened with a puzzled expression, but a year later, laughed out loud. I will frankly confess it took me longer than that to appreciate Johnson’s joke. Now, my well-being is simply the result of a careful and measured mode of living and perhaps the most astonishing thing is that three times in my youth I was rendered by illness a hopeless physical wreck and given up by physicians. MORE than this, through ignorance and lightheartedness, I got into all sorts of difficulties, dangers and scrapes from which I extricated myself as by enchantment. I was almost drowned, entombed, lost and frozen. I had hair-breadth escapes from mad dogs, hogs, and other wild animals. I passed through dreadful diseases and met with all kinds of odd mishaps and that I am whole and hearty today seems like a miracle. But as I recall these incidents to my mind I feel convinced that my preservation was not altogether accidental, but was indeed the work of divine power. An inventor’s endeavour is essentially life saving. Whether he harnesses forces, improves devices, or provides new comforts and conveniences, he is adding to the safety of our existence. He is also better qualified than the average individual to protect himself in peril, for he is observant and resourceful. If I had no other evidence that I was, in a measure, possessed of such qualities, I would find it in these personal experiences. The reader will be able to judge for himself if I mention one or two instances.

On one occasion, when about fourteen years old, I wanted to scare some friends who were bathing with me. My plan was to dive under a long floating structure and slip out quietly at the other end. Swimming and diving came to me as naturally as to a duck and I was confident that I could perform the feat. Accordingly I plunged into the water and, when out of view, turned around and proceeded rapidly towards the opposite side. Thinking that I was safely beyond the structure, I rose to the surface but to my dismay struck a beam. Of course, I quickly dived and forged ahead with rapid strokes until my breath was beginning to give out. Rising for the second time, my head came again in contact with a beam. Now I was becoming desperate. However, summoning all my energy, I made a third frantic attempt but the result was the same. The torture of suppressed breathing was getting unendurable, my brain was reeling and I felt myself sinking. At that moment, when my situation seemed absolutely hopeless, I experienced one of those flashes of light and the structure above me appeared before my vision. I either discerned or guessed that there was a little space between the surface of the water and the boards resting on the beams and, with consciousness nearly gone, I floated up, pressed my mouth close to the planks and managed to inhale a little air, unfortunately mingled with a spray of water which nearly choked me. Several times I repeated this procedure as in a dream until my heart, which was racing at a terrible rate, quieted down, and I gained composure. After that I made a number of unsuccessful dives, having completely lost the sense of direction, but finally succeeded in getting out of the trap when my friends had already given me up and were fishing for my body. That bathing season was spoiled for me through recklessness but I soon forgot the lesson and only two years later I fell into a worse predicament.

There was a large flour mill with a dam across the river near the city where I was studying at the time. As a rule the height of the water was only two or three inches above the dam and to swim to it was a sport not very dangerous in which I often indulged. One day I went alone to the river to enjoy

myself as usual. When I was a short distance from the masonry, however, I was horrified to observe that the water had risen and was carrying me along swiftly. I tried to get away but it was too late. Luckily, though, I saved myself from being swept over by taking hold of the wall with both hands. The pressure against my chest was great and I was barely able to keep my head above the surface. Not a soul was in sight and my voice was lost in the roar of the fall. Slowly and gradually I became exhausted and unable to withstand the strain longer. Just as I was about to let go, to be dashed against the rocks below, I saw in a flash of light a familiar diagram illustrating the hydraulic principle that the pressure of a fluid in motion is proportionate to the area exposed and automatically I turned on my left side. As if by magic, the pressure was reduced and I found it comparatively easy in that position to resist the force of the stream. But the danger still confronted me. I knew that sooner or later I would be carried down, as it was not possible for any help to reach me in time, even if I had attracted attention. I am ambidextrous now, but then I was left-handed and had comparatively little strength in my right arm. For this reason I did not dare to turn on the other side to rest and nothing remained but to slowly push my body along the dam. I had to get away from the mill towards which my face was turned, as the current there was much swifter and deeper. It was a long and painful ordeal and I came near to failing at its very end, for I was confronted with a depression in the masonry. I managed to get over with the last ounce of my strength and fell in a swoon when I reached the bank, where I was found. I had torn virtually all the skin from my left side and it took several weeks before the fever had subsided and I was well. These are only two of many instanced, but they may be sufficient to show that had it not been for the inventor's instinct, I would not have lived to tell the tale.

Interested people have often asked me how and when I began to invent. This I can only answer from my present recollection in the light of which, the first attempt I recall was rather ambitious for it involved the invention of an apparatus and a method. In the former I was anticipated, but the later was original. It happened in this way. One of my playmates had come into the possession of a hook and fishing tackle which created quite an excitement in the village, and the next morning all started out to catch frogs. I was left alone and deserted owing to a quarrel with this boy. I had never seen a real hook and pictured it as something wonderful, endowed with peculiar qualities, and was despairing not to be one of the party. Urged by necessity, I somehow got hold of a piece of soft iron wire, hammered the end to a sharp point between two stones, bent it into shape, and fastened it to a strong string. I then cut a rod, gathered some bait, and went down to the brook where there were frogs in abundance. But I could not catch any and was almost discouraged when it occurred to me dangle the empty hook in front of a frog sitting on a stump. At first he collapsed but by and by his eyes bulged out and became bloodshot, he swelled to twice his normal size and made a vicious snap at the hook. Immediately I pulled him up. I tried the same thing again and again and the method proved infallible. When my comrades, who in spite of their fine outfit had caught nothing, came to me, they were green with envy. For a long time I kept my secret and enjoyed the monopoly but finally yielded to the spirit of Christmas. Every boy could then do the same and the following summer brought disaster to the frogs.

In my next attempt, I seem to have acted under the first instinctive impulse which later dominated me, — to harness the energies of nature to the service of man. I did this through the medium of May bugs, or June bugs as they are called in America, which were a veritable pest in that country and sometimes broke the branches of trees by the sheer weight of their bodies. The

bushes were black with them. I would attach as many as four of them to a cross-piece, rotably arranged on a thin spindle, and transmit the motion of the same to a large disc and so derive considerable 'power.' These creatures were remarkably efficient, for once they were started, they had no sense to stop and continued whirling for hours and hours and the hotter it was, the harder they worked. All went well until a strange boy came to the place. He was the son of a retired officer in the Austrian army. That urchin ate May-bugs alive and enjoyed them as though they were the finest blue-point oysters. That disgusting sight terminated my endeavours in this promising field and I have never since been able to touch a May-bug or any other insect for that matter.

After that, I believe, I undertook to take apart and assemble the clocks of my grandfather. In the former operation I was always successful, but often failed in the latter. So it came that he brought my work to a sudden halt in a manner not too delicate and it took thirty years before I tackled another clockwork again.

Shortly thereafter, I went into the manufacture of a kind of pop-gun which comprised a hollow tube, a piston, and two plugs of hemp. When firing the gun, the piston was pressed against the stomach and the tube was pushed back quickly with both hands. the air between the plugs was compressed and raised to a high temperature and one of them was expelled with a loud report. The art consisted in selecting a tube of the proper taper from the hollow stalks which were found in our garden. I did very well with that gun, but my activities interfered with the window panes in our house and met with painful discouragement.

If I remember rightly, I then took to carving swords from pieces of furniture which I could conveniently obtain. At that time I was under the sway of the Serbian national poetry and full of admiration for the feats of the heroes. I used to spend hours in mowing down my enemies in the form of corn-stalks which ruined the crops and netted me several spankings from my mother. Moreover, these were not of the formal kind but the genuine article.

I had all this and more behind me before I was six years old and had passed through one year of elementary school in the village of Smiljan where my family lived. At this juncture we moved to the little city of Gospic nearby. This change of residence was like a calamity to me. It almost broke my heart to part from our pigeons, chickens and sheep, and our magnificent flock of geese which used to rise to the clouds in the morning and return from the feeding grounds at sundown in battle formation, so perfect that it would have put a squadron of the best aviators of the present day to shame. In our new house I was but a prisoner, watching the strange people I saw through my window blinds. My bashfulness was such that I would rather have faced a roaring lion than one of the city dudes who strolled about. But my hardest trial came on Sunday when I had to dress up and attend the service. There I met with an accident, the mere thought of which made my blood curdle like sour milk for years afterwards. It was my second adventure in a church. Not long before, I was entombed for a night in an old chapel on an inaccessible mountain which was visited only once a year. It was an awful experience, but this one was worse.

There was a wealthy lady in town, a good but pompous woman, who used to come to the church gorgeously painted up and attired with an enormous train and attendants. One Sunday I had just finished ringing the bell in the belfry and rushed downstairs, when this grand dame was sweeping out and I jumped on her train. It tore off with a ripping noise which sounded like a salvo of musketry

fired by raw recruits. My father was livid with rage. He gave me a gentle slap on the cheek, the only corporal punishment he ever administered to me, but I almost feel it now. The embarrassment and confusion that followed are indescribably. I was practically ostracised until something else happened which redeemed me in the estimation of the community.

An enterprising young merchant had organised a fire department. A new fire engine was purchased, uniforms provided and the men drilled for service and parade. The engine was beautifully painted red and black. One afternoon, the official trial was prepared for and the machine was transported to the river. The entire population turned out to witness the great spectacle. When all the speeches and ceremonies were concluded, the command was given to pump, but not a drop of water came from the nozzle. The professors and experts tried in vain to locate the trouble. The fizzle was complete when I arrived at the scene. My knowledge of of the mechanism was nil and I knew next to nothing of air pressure, but instinctively I felt for the suction hose in the water and found that it had collapsed. When I waded in the river and opened it up, the water rushed forth and not a few Sunday clothes were spoiled. Archimedes running naked through the streets of Syracuse and shouting Eureka at the top of his voice did not make a greater impression than myself. I was carried on the shoulders and was hero of the day.

Upon settling in the city I began a four years course in the so-called Normal School preparatory to my studies at the College or Real-Gymnasium. During this period my boyish efforts and exploits as well as troubles, continued.

Among other things, I attained the unique distinction of champion crow catcher in the country. My method of procedure was extremely simple. I would go into the forest, hide in the bushes, and imitate the call of the birds. Usually I would get several answers and in a short while a crow would flutter down into the shrubbery near me. After that, all I needed to do was to throw a piece of cardboard to detract its attention, jump up and grab it before it could extricate itself from the undergrowth. In this way I would capture as many as I desired. But on one occasion something occurred which made me respect them. I had caught a fine pair of birds and was returning home with a friend. When we left the forest, thousands of crows had gathered making a frightful racket. In a few minutes they rose in pursuit and soon enveloped us. The fun lasted until all of a sudden I received a blow on the back of my head which knocked me down. Then they attacked me viciously. I was compelled to release the two birds and was glad to join my friend who had taken refuge in a cave.

In the school room there were a few mechanical models which interested me and turned my attention to water turbines. I constructed many of these and found great pleasure in operating them. How extraordinary was my life an incident may illustrate. My uncle had no use for this kind of pastime and more than once rebuked me. I was fascinated by a description of Niagara Falls I had perused, and pictured in my imagination a big wheel run by the falls. I told my uncle that I would go to America and carry out this scheme. Thirty years later I was my ideas carried out at Niagara and marvelled at the unfathomable mystery of the mind.

I made all kinds of other contrivances and contraptions but among those, the arbalests I produced were the best. My arrows, when short, disappeared from sight and at close range traversed a plank of pine one inch thick. Through the continuous tightening of the bows I developed a skin on my stomach much like that of a crocodile and I am often wondering whether it is due to this exercise

that I am able even now to digest cobble-stones! Nor can I pass in silence my performances with the sling which would have enabled me to give a stunning exhibit at the Hippodrome. And now I will tell of one of my feats with this unique implement of war which will strain to the utmost the credulity of the reader.

I was practising while walking with my uncle along the river. The sun was setting, the trout were playful and from time to time one would shoot up into the air, its glistening body sharply defined against a projecting rock beyond. Of course any boy might have hit a fish under these propitious conditions but I undertook a much more difficult task and I foretold to my uncle, to the minutest detail, what I intended doing. I was to hurl a stone to meet the fish, press its body against the rock, and cut it in two. It was no sooner said than done. My uncle looked at me almost scared out of his wits and exclaimed "Vade retra Satanae!" and it was a few days before he spoke to me again. Other records, however great, will be eclipsed but I feel that I could peacefully rest on my laurels for a thousand years.

Chapter 3
How Tesla Conceived The Rotary Magnetic Field

At the age of ten I entered the Real gymnasium which was a new and fairly well equipped institution. In the department of physics were various models of classical scientific apparatus, electrical and mechanical. The demonstrations and experiments performed from time to time by the instructors fascinated me and were undoubtedly a powerful incentive to invention. I was also passionately fond of mathematical studies and often won the professor's praise for rapid calculation. This was due to my acquired facility of visualising the figures and performing the operation, not in the usual intuitive manner, but as in actual life. Up to a certain degree of complexity it was absolutely the same to me whether I wrote the symbols on the board or conjured them before my mental vision. But freehand drawing, to which many hours of the course were devoted, was an annoyance I could not endure. This was rather remarkable as most of the members of the family excelled in it. Perhaps my aversion was simply due to the predilection I found in undisturbed thought. Had it not been for a few exceptionally stupid boys, who could not do anything at all, my record would have been the worst.

It was a serious handicap as under the then existing educational regime drawing being obligatory, this deficiency threatened to spoil my whole career and my father had considerable trouble in rail-roading me from one class to another.

In the second year at that institution I became obsessed with the idea of producing continuous motion through steady air pressure. The pump incident, of which I have been told, had set afire my youthful imagination and impressed me with the boundless possibilities of a vacuum. I grew frantic in my desire to harness this inexhaustible energy but for a long time I was groping in the dark. Finally, however, my endeavours crystallised in an invention which was to enable me to achieve what no other mortal ever attempted. Imagine a cylinder freely rotatable on two bearings and partly surrounded by a rectangular trough which fits it perfectly. The open side of the trough is enclosed by a partition so that the cylindrical segment within the enclosure divides the latter into two compartments entirely separated from each other by air-tight sliding joints. One of these compartments being sealed and once for all exhausted, the other remaining open, a perpetual rotation of the cylinder would result. At least, so I thought.

A wooden model was constructed and fitted with infinite care and when I applied the pump on one side and actual observed that there was a tendency to turning, I was delirious with joy. Mechanical flight was the one thing I wanted to accomplish although still under the discouraging recollection of a bad fall I sustained by jumping with an umbrella from the top of a building. Every day I used to transport myself through the air to distant regions but could not understand just how I managed to do it. Now I had something concrete, a flying machine with nothing more than a rotating shaft, flapping wings, and; - a vacuum of unlimited power! From that time on I made my daily aerial excursions in a vehicle of comfort and luxury as might have befitted King Solomon. It took years before I understood that the atmospheric pressure acted at right angles to the surface of the cylinder and that the slight rotary effort I observed was due to a leak! Though this knowledge came gradually it gave me a painful shock.

I had hardly completed my course at the Real Gymnasium when I was prostrated with a dangerous illness or rather, a score of them, and my condition became so desperate that I was given up by physicians. During this period I was permitted to read constantly, obtaining books from the Public Library which had been neglected and entrusted to me for classification of the works and preparation of catalogues.

One day I was handed a few volumes of new literature unlike anything I had ever read before and so captivating as to make me utterly forget me hopeless state. They were the earlier works of Mark Twain and to them might have been due the miraculous recovery which followed. Twenty-five years later, when I met Mr. Clements and we formed a friendship between us, I told him of the experience and was amazed to see that great man of laughter burst into tears...

My studies were continued at the higher Real Gymnasium in Carlstadt, Croatia, where one of my aunts resided. She was a distinguished lady, the wife of a Colonel who was an old war-horse having participated in many battles, I can never forget the three years I passed at their home. No fortress in time of war was under a more rigid discipline. I was fed like a canary bird. All the meals were of the highest quality and deliciously prepared, but short in quantity by a thousand percent. The slices of ham cut by my aunt were like tissue paper. When the Colonel would put something substantial on my plate she would snatch it away and say excitedly to him; “Be careful. Niko is very delicate.”

I had a voracious appetite and suffered like Tantalus.

But I lived in an atmosphere of refinement and artistic taste quite unusual for those times and conditions. The land was low and marshy and malaria fever never left me while there despite the enormous amounts of qunine I consumed. Occasionally the river would rise and drive an army of rats into the buildings, devouring everything, even to the bundles of fierce paprika. These pests were to me a welcome diversion. I thinned their ranks by all sorts of means, which won me the unenviable distinction of rat-catcher in the community. At last, however, my course was completed, the misery ended, and I obtained the certificate of maturity which brought me to the cross-roads.

During all those years my parents never wavered in their resolve to make me embrace the clergy, the mere thought of which filled me with dread. I had become intensely interested in electricity under the stimulating influence of my Professor of Physics, who was an ingenious man and often demonstrated the principles by apparatus of his own invention. Among these I recall a device in the shape of a freely rotatable bulb, with tinfoil coating, which was made to spin rapidly when connected to a static machine. It is impossible for me to convey an adequate idea of the intensity of feeling I experienced in witnessing his exhibitions of these mysterious phenomena. Every impression produced a thousand echoes in my mind. I wanted to know more of this wonderful force; I longed for experiment and investigation and resigned myself to the inevitable with aching heart. Just as I was making ready for the long journey home I received word that my father wished me to go on a shooting expedition. It was a strange request as he had been always strenuously opposed to this kind of sport. But a few days later I learned that the cholera was raging in that district and, taking advantage of an opportunity, I returned to Gospic in disregard to my parent’s wishes. It is incredible how absolutely ignorant people were as to the causes of this scourge which visited the country in intervals of fifteen to twenty years. They thought that the deadly agents were transmitted through the air and filled it with pungent odours and smoke. In the meantime they drank infested water and died in heaps. I contracted the dreadful

disease on the very day of my arrival and although surviving the crisis, I was confined to bed for nine months with scarcely any ability to move. My energy was completely exhausted and for the second time I found myself at Death's door.

In one of the sinking spells which was thought to be the last, my father rushed into the room. I still see his pallid face as he tried to cheer me in tones belying his assurance. "Perhaps," I said, "I may get well if you will let me study engineering." "You will go to the best technical institution in the world," he solemnly replied, and I knew that he meant it. A heavy weight was lifted from my mind but the relief would have come too late had it not been for a marvellous cure brought through a bitter decoction of a peculiar bean. I came to life like Lazarus to the utter amazement of everybody.

My father insisted that I spend a year in healthful physical outdoor exercise to which I reluctantly consented. For most of this term I roamed in the mountains, loaded with a hunter's outfit and a bundle of books, and this contact with nature made me stronger in body as well as in mind. I thought and planned, and conceived many ideas almost as a rule delusive. The vision was clear enough but the knowledge of principles was very limited.

In one of my invention I proposed to convey letters and packages across the seas, through a submarine tube, in spherical containers of sufficient strength to resist the hydraulic pressure. The pumping plant, intended to force the water through the tube, was accurately figured and designed and all other particulars carefully worked out. Only one trifling detail, of no consequence, was lightly dismissed. I assumed an arbitrary velocity of the water and, what is more, took pleasure in making it high, thus arriving at a stupendous performance supported by faultless calculations. Subsequent reflections, however, on the resistance of pipes to fluid flow induced me to make this invention public property.

Another one of my projects was to construct a ring around the equator which would, of course, float freely and could be arrested in its spinning motion by reactionary forces, thus enabling travel at a rate of about one thousand miles an hour, impracticable by rail. The reader will smile. The plan was difficult of execution, I will admit, but not nearly so bad as that of a well known New York professor, who wanted to pump the air from the torrid to temperate zones, entirely forgetful of the fact that the Lord had provided a gigantic machine for this purpose.

Still another scheme, far more important and attractive, was to derive power from the rotational energy of terrestrial bodies. I had discovered that objects on the earth's surface owing to the diurnal rotation of the globe, are carried by the same alternately in and against the direction of translatory movement. From this results a great change in momentum which could be utilised in the simplest imaginable manner to furnish motive effort in any habitable region of the world. I cannot find words to describe my disappointment when later I realised that I was in the predicament of Archimedes, who vainly sought for a fixed point in the universe.

At the termination of my vacation I was sent to the Poly-Technic School in Gratz, Styria (Austria), which my father had chosen as one of the oldest and best reputed institutions. That was the moment I had eagerly awaited and I began my studies under good auspices and firmly resolved to succeed. My previous training was above average, due to my father's teaching and opportunities afforded. I had acquired the knowledge of a number of languages and waded through the books of several libraries, picking up information more or

less useful. Then again, for the first time, I could choose my subjects as I liked, and free-hand drawing was to bother me no more.

I had made up my mind to give my parents a surprise, and during the whole first year I regularly started my work at three o'clock in the morning and continued until eleven at night, no Sundays or holidays excepted. As most of my fellow-students took things easily, naturally I eclipsed all records. In the course of the year I passed through nine exams and the professors thought I deserved more than the highest qualifications. Armed with their flattering certificated, I went home for a short rest, expecting triumph, and was mortified when my father made light of these hard-won honours.

That almost killed my ambition; but later, after he had died, I was pained to find a package of letters which the professors had written to him to the effect that unless he took me away from the Institution I would be killed through overwork. Thereafter I devoted myself chiefly to physics, mechanics and mathematical studies, spending the hours of leisure in the libraries.

I had a veritable mania for finishing whatever I began, which often got me into difficulties. On one occasion I started to read the works of Voltaire, when I learned, to my dismay that there were close to one hundred large volumes in small print which that monster had written while drinking seventy-two cups of black coffee per diem. It had to be done, but when I laid aside that last book I was very glad, and said, "Never more!"

My first year's showing had won me the appreciation and friendship of several professors. Among these, Professor Rogner, who was teaching arithmetical subjects and geometry; Professor Poeschl, who held the chair of theoretical and experimental physics, and Dr. Alle, who taught integral calculus and specialised in differential equations. This scientist was the most brilliant lecturer to whom I ever listened. He took a special interest in my progress and would frequently remain for an hour or two in the lecture room, giving me problems to solve, in which I delighted. To him I explained a flying machine I had conceived, not an illusory invention, but one based on sound, scientific principles, which has become realisable through my turbine and will soon be given to the world. Both Professors Rogner and Poeschl were curious men. The former had peculiar ways of expressing himself and whenever he did so, there was a riot, followed by a long embarrassing pause. Professor Poeschl was a methodical and thoroughly grounded German. He had enormous feet, and hands like the paws of a bear, but all of his experiments were skilfully performed with clock-like precision and without a miss. It was in the second year of my studies that we received a Gramoe Dyname from Paris, having the horseshoe form of a laminated field magnet, and a wire wound armature with a commutator. It was connected up and various effects of the currents were shown. While Professor Poeschl was making demonstrations, running the machine was a motor, the brushes gave trouble, sparking badly, and I observed that it might be possible to operate a motor without these appliances. But he declared that it could not be done and did me the honour of delivering a lecture on the subject, at the conclusion he remarked, "Mr. Tesla may accomplish great things, but he certainly will never do this. It would be equivalent to converting a steadily pulling force, like that of gravity into a rotary effort. It is a perpetual motion scheme, an impossible idea." But instinct is something which transcends knowledge. We have, undoubtedly, certain finer fibres that enable us to perceive truths when logical deduction, or any other wilful effort of the brain, is futile.

For a time I wavered, impressed by the professor's authority, but soon

became convinced I was right and undertook the task with all the fire and boundless confidence of my youth. I started by first picturing in my mind a direct-current machine, running it and following the changing flow of the currents in the armature. Then I would imagine an alternator and investigate the progresses taking place in a similar manner. Next I would visualise systems comprising motors and generators and operate them in various ways.

The images I saw were to me perfectly real and tangible. All my remaining term in Gratz was passed in intense but fruitless efforts of this kind, and I almost came to the conclusion that the problem was insolvable.

In 1880 I went to Prague, Bohemia, carrying out my father's wish to complete my education at the University there. It was in that city that I made a decided advance, which consisted in detaching the commutator from the machine and studying the phenomena in this new aspect, but still without result. In the year following there was a sudden change in my views of life.

I realised that my parents had been making too great sacrifices on my account and resolved to relieve them of the burden. The wave of the American telephone had just reached the European continent and the system was to be installed in Budapest, Hungary. It appeared an ideal opportunity, all the more as a friend of our family was at the head of the enterprise.

It was here that I suffered the complete breakdown of the nerves to which I have referred. What I experienced during the period of the illness surpasses all belief. My sight and hearing were always extraordinary. I could clearly discern objects in the distance when others saw no trace of them. Several times in my boyhood I saved the houses of our neighbours from fire by hearing the faint crackling sounds which did not disturb their sleep, and calling for help. In 1899, when I was past forty and carrying on my experiments in Colorado, I could hear very distinctly thunderclaps at a distance of 550 miles. My ear was thus over thirteen times more sensitive, yet at that time I was, so to speak, stone deaf in comparison with the acuteness of my hearing while under the nervous strain.

In Budapest I could hear the ticking of a watch with three rooms between me and the time-piece. A fly alighting on a table in the room would cause a dull thud in my ear. A carriage passing at a distance of a few miles fairly shook my whole body. The whistle of a locomotive twenty or thirty miles away made the bench or chair on which I sat, vibrate so strongly that the pain was unbearable. The ground under my feet trembled continuously. I had to support my bed on rubber cushions to get any rest at all. The roaring noises from near and far often produced the effect of spoken words which would have frightened me had I not been able to resolve them into their accumulated components. The sun rays, when periodically intercepted, would cause blows of such force on my brain that they would stun me. I had to summon all my will power to pass under a bridge or other structure, as I experienced the crushing pressure on the skull. In the dark I had the sense of a bat, and could detect the presence of an object at a distance of twelve feet by a peculiar creepy sensation on the forehead. My pulse varied from a few to two hundred and sixty beats and all the tissues of my body with twitchings and tremors, which was perhaps hardest to bear. A renowned physician who have me daily large doses of Bromide of Potassium, pronounced my malady unique and incurable.

It is my eternal regret that I was not under the observation of experts in physiology and psychology at that time. I clung desperately to life, but

never expected to recover. Can anyone believe that so hopeless a physical wreck could ever be transformed into a man of astonishing strength and tenacity; able to work thirty-eight years almost without a day's interruption, and find himself still strong and fresh in body and mind? Such is my case. A powerful desire to live and to continue the work and the assistance of a devoted friend, an athlete, accomplished the wonder. My health returned and with it the vigour of mind.

In attacking the problem again, I almost regretted that the struggle was soon to end. I had so much energy to spare. When I understood the task, it was not with a resolve such as men often make. With me it was a sacred vow, a question of life and death. I knew that I would perish if I failed. Now I felt that the battle was won. Back in the deep recesses of the brain was the solution, but I could net yet give it outward expression.

One afternoon, which is ever present in my recollection, I was enjoying a walk with my friend in the City Park and reciting poetry. At that age, I knew entire books by heart, word for word. One of these was Goethe's "Faust." The sun was just setting and reminded me of the glorious passage, "Sie ruckt und weicht, der Tag ist uberlebt, Dort eilt sie hin und fordert neues Leben. Oh, daß kein Flugel mich vom Boden hebt Ihr nach und immer nach zu streben! Ein schöner Traum indessen sie entweicht, Ach, au des Geistes Flügein wird so leicht Kein korperlicher Flugel sich gesellen!" As I uttered these inspiring words the idea came like a flash of lightening and in an instant the truth was revealed. I drew with a stick on the sand, the diagram shown six years later in my address before the American Institute of Electrical Engineers, and my companion understood them perfectly. The images I saw were wonderfully sharp and clear and had the solidity of metal and stone, so much so that I told him, "See my motor here; watch me reverse it." I cannot begin to describe my emotions. Pygmalion seeing his statue come to life could not have been more deeply moved. A thousand secrets of nature which I might have stumbled upon accidentally, I would have given for that one which I had wrested from her against all odds and at the peril of my existence...

Chapter 4
The Discovery of the Tesla Coil and Transformer

(The Basic Part of Every Radio and T.V.)

For a while I gave myself up entirely to the intense enjoyment of picturing machines and devising new forms. It was a mental state of happiness about as complete as I have ever known in life. Ideas came in an uninterrupted stream and the only difficulty I had was to hold them fast. The pieces of apparatus I conceived were to me absolutely real and tangible in every detail, even to the minutest marks and signs of wear. I delighted in imagining the motors constantly running, for in this way they presented to the mind's eye a fascinating sight. When natural inclination develops into a passionate desire, one advances towards his goal in seven-league boots. In less than two months I evolved virtually all the types of motors and modifications of the system which are now identified with my name, and which are used under many other names all over the world. It was, perhaps, providential that the necessities of existence commanded a temporary halt to this consuming activity of the mind.

I came to Budapest prompted by a premature report concerning the telephone enterprise and, as irony of fate willed it, I had to accept a position as draughtsman in the Central Telegraph Office of the Hungarian Government at a salary which I deem it my privilege not to disclose. Fortunately, I soon won the interest of the Inspector-in-Chief and was thereafter employed on calculations, designs and estimates in connection with new installations, until the Telephone exchange started, when I took charge of the same. The knowledge and practical experience I gained in the course of this work, was most valuable and the employment gave me ample opportunities for the exercise of my inventive faculties. I made several improvements in the Central Station apparatus and perfected a telephone repeater or amplifier which was never patented or publicly described but would be creditable to me even today. In recognition of my efficient assistance the organiser of the undertaking, Mr. Puskas, upon disposing of his business in Budapest, offered me a position in Paris which I gladly accepted.

I never can forget the deep impression that magic city produced on my mind. For several days after my arrival, I roamed through the streets in utter bewilderment of the new spectacle. The attractions were many and irresistible, but, alas, the income was spent as soon as received. When Mr. Puskas asked me how I was getting along in the new sphere, I described the situation accurately in the statement that "The last twenty-nine days of the month are the toughest." I led a rather strenuous life in what would now be termed "Rooseveltian fashion." Every morning, regardless of the weather, I would go from the Boulevard St. Marcel, where I resided, to a bathing house on the Seine; plunge into the water, loop the circuit twenty-seven times and then walk an hour to reach Ivry, where the Company's factory was located. There I would have a wood-chopper's breakfast at half-past seven o'clock and then eagerly await the lunch hour, in the meanwhile cracking hard nuts for the Manager of the Works, Mr. Charles Batchellor, who was an intimate friend and assistant of Edison. Here I was thrown in contact with a few Americans who fairly fell in love with my because of my proficiency in Billiards! To these men I explained my invention and one of them, Mr. D. Cunningham, foreman of

the Mechanical Department, offered to form a stock company. The proposal seemed to me comical in the extreme. I did not have the faintest conception of what he meant, except that it was an American way of doing things. Nothing came of it, however, and during the next few months I had to travel from one place to another in France and Germany to cure the ills of the power plants.

On my return to Paris, I submitted to one of the administrators of the Company, Mr. Rau, a plan for improving their dynamos and was given an opportunity. My success was complete and the delighted directors accorded me the privilege of developing automatic regulators which were much desired. Shortly after, there was some trouble with the lighting plant which had been installed at the new railroad station in Straßburg, Alsace. The wiring was defective and on the occasion of the opening ceremonies, a large part of a wall was blown out through a short-circiut, right in the presence of old Emperor William I. The German Government refused to take the plant and the French Company was facing a serious loss. On account of my knowledge of the German language and past experience, I was entrusted with the difficult task of straightening out matters and early in 1883, I went to Straßburg on that mission.

Some of the incidents in that city have left an indelible record on my memory. By a curious coincidence, a number of the men who subsequently achieve fame, lived there about that time. In later life I used to say, “There were bacteria of greatness in that old town.” Others caught the disease, but I escaped!” The practical work, correspondence, and conferences with officials kept me preoccupied day and night, but as soon as I was able to manage, I undertook the construction of a simple motor in a mechanical shop opposite the rail-road station, having brought with me from Paris some material for that purpose. The consummation of the experiment was, however, delayed until the summer of that year, when I finally had the satisfaction of seeing the rotation effected by alternating currents of different phase, and without sliding contacts or commutator, as I had conceived a year before. It was an exquisite pleasure but not to compare with the delirium of joy following the first revelation.

Among my new friends was the former Mayor of the city, Mr. Sauzin, whom I had already, in a measure, acquainted with this and other inventions of mine and whose support I endeavoured to enlist. He was sincerely devoted to me and put my project before several wealthy persons, but to my mortification, found no response. He wanted to help me in every possible way and the approach of the first of July, 1917, happens to remind me of a form of “assistance” I received from that charming man, which was not financial, but none the less appreciated. In 1870, when the Germans invaded the country, Mr. Sauzin had buried a good sized allotment of St. Estephe of 1801 and he came to the conclusion that he knew no worthier person than myself, to consume that precious beverage. This, I may say, is one of the unforgettable incidents to which I have referred. My friend urged me to return to Paris as soon as possible and seek support there. This I was anxious to do, but my work and negotiations were protracted, owing to all sorts of petty obstacles I encountered, so that at times the situation seemed hopeless. Just to give an idea of German thoroughness and “efficiency,” I may mention here a rather funny experience.

An incandescent lamp of 16 c.p. was to be placed in a hallway, and upon selected the proper location, I ordered the “monteur” to run the wires. After working for a while, he concluded that the engineer had to be consulted and this was done. The latter made several objections but ultimately agreed that the lamp should be placed two inches from the spot I had assigned, whereupon the work proceeded. Then the engineer became worried and told me that Inspector Averdeck should be notified. That important person was called,

he investigated, debated, and decided that the lamp should be shifted back two inches, which was the placed I had marked! It was not long, however, before Averdeck got cold feet himself and advised me that he had informed Ober-Inspector Hieronimus of the matter and that I should await his decision. It was several days before the Ober-Inspector was able to free himself of other pressing duties, but at last he arrived and a two hour debate followed, when he decided to move the lamp two inches further. My hopes that this was the final act, were shattered when the Ober-Inspector returned and said to me, "Regierungsrath Funke is particular that I would not dare to give an order for placing this lamp without his explicit approval." Accordingly, arrangements for a visit from that great man were made. We started cleaning up and polishing early in the morning, and when Funke came with his retinue he was ceremoniously received. After two hours of deliberation, he suddenly exclaimed, "I must be going!," and pointing to a place on the ceiling, he ordered me to put the lamp there. It was the exact spot which I had originally chosen! So it went day after day with variations, but I was determined to achieve, at whatever cost, and in the end my efforts were rewarded.

By the spring of 1884, all the differences were adjusted, the plant formally accepted, and I returned to Paris with pleasing anticipation. One of the administrators had promised me a liberal compensation in case I succeeded, as well as a fair consideration of the improvements I had made to their dynamos and I hoped to realise a substantial sum. There were three administrators, whom I shall designate as A, B, and C for convenience. When I called on A, he told me that B had the say. This gentleman thought that only C could decide, and the latter was quite sure that A alone had the power to act. After several laps of this circulus viciousus, it dawned upon me that my reward was a castle in Spain.

The utter failure of my attempts to raise capital for development was another disappointment, and when Mr. Bachelor pressed me to go to America with a view of redesigning the Edison machines, I determined to try my fortunes in the Land of Golden Promise. But the chance was nearly missed. I liquefied my modest assets, secured accommodations and found myself at the railroad station as the train was pulling out. At that moment, I discovered that my money and tickets were gone. What to do was the question. Hercules had plenty of time to deliberate, but I had to decide while running alongside the train with opposite feeling surging in my brain like condenser oscillations. Resolve, helped by dexterity, won out in the nick of time and upon passing through the usual experience, as trivial and unpleasant, I managed to embark for New York with the remnants of my belongings, some poems and articles I had written, and a package of calculations relating to solutions of an unsolvable integral and my flying machine. During the voyage I sat most of the time at the stern of the ship watching for an opportunity to save somebody from a watery grave, without the slightest thought of danger. Later, when I had absorbed some of the practical American sense, I shivered at the recollection and marvelled at my former folly. The meeting with Edison was a memorable event in my life. I was amazed at this wonderful man who, without early advantages and scientific training, had accomplished so much. I had studied a dozen languages, delved in literature and art, and had spent my best years in libraries reading all sorts of stuff that fell into my hands, from Newton's "Principia" to the novels of Paul de Kock, and felt that most of my life had been squandered. But it did not take long before I recognised that it was the best thing I could have done. Within a few weeks I had won Edison's confidence, and it came about in this way.

The S.S. Oregon, the fastest passenger steamer at that time, had both of

its lighting machines disabled and its sailing was delayed. As the super-structure had been built after their installation, it was impossible to remove them from the hold. The predicament was a serious one and Edison was much annoyed. In the evening I took the necessary instruments with me and went aboard the vessel where I stayed for the night. The dynamos were in bad condition, having several short-circuits and breaks, but with the assistance of the crew, I succeeded in putting them in good shape. At five o'clock in the morning, when passing along Fifth Avenue on my way to the shop, I met Edison with Bachelor and a few others, as they were returning home to retire. "Here is our Parisian running around at night," he said. When I told him that I was coming from the Oregon and had repaired both machines, he looked at me in silence and walked away without another word. But when he had gone some distance I heard him remark, "Bachelor, this is a good man." And from that time on I had full freedom in directing the work. For nearly a year my regular hours were from 10:30 A.M. until 5 o'clock the next morning without a day's exception. Edison said to me, "I have had many hard working assistants, but you take the cake." During this period I designed twenty-four different types of standard machines with short cores and uniform pattern, which replaced the old ones. The Manager had promised me fifty thousand dollars on the completion of this task, but it turned out to be a practical joke. This gave me a painful shock and I resigned my position.

Immediately thereafter, some people approached me with the proposal of forming an arc light company under my name, to which I agreed. Here finally, was an opportunity to develop the motor, but when I broached the subject to my new associates they said, "No, we want the arc lamp. We don't care for this alternating current of yours." In 1886 my system of arc lighting was perfected and adopted for factory and municipal lighting, and I was free, but with no other possession than a beautifully engraved certificate of stock of hypothetical value. Then followed a period of struggle in the new medium for which I was not fitted, but the reward came in the end, and in April, 1887, the TESLA Electric Co. was organised, providing a laboratory and facilities. The motors I built there were exactly as I had imagined them. I made no attempt to improve the design, but merely reproduced the pictures as they appeared to my vision and the operation was always as I expected.

In the early part of 1888, an arrangement was made with the Westinghouse Company for the manufacture of the motors on a large scale. But great difficulties had still to be overcome. My system was based on the use of low frequency currents and the Westinghouse experts had adopted 133 cycles with the objects of securing advantages in transformation. They did not want to depart with their standard forms of apparatus and my efforts had to be concentrated upon adapting the motor to these conditions. Another necessity was to produce a motor capable of running efficiently at this frequency on two wire, which was not an easy accomplishment.

At the close of 1889, however, my services in Pittsburgh being no longer essential, I returned to New York and resumed experimental work in a Laboratory on Grand Street, where I began immediately the design of high-frequency machines. The problems of construction in this unexplored field were novel and quite peculiar, and I encountered many difficulties. I rejected the inductor type, fearing that it might not yield perfect sine waves, which were so important to resonant action. Had it not been for this, I could have saved myself a great deal of labour. Another discouraging feature of the high-frequency alternator seemed to be the inconstancy of speed which threatened to impose serious limitations to its use. I had already noted in my demonstrations before the American Institution of Electrical Engineers, that several times

the tune was lost, necessitating readjustment, and did not yet foresee what I discovered long afterwards, – a means of operating a machine of this kind at a speed constant to such a degree as not to vary more than a small fraction of one revolution between the extremes of load. From many other considerations, it appeared desirable to invent a simpler device for the production of electric oscillations.

In 1856, Lord Kelvin had exposed the theory of the condenser discharge, but no practical application of that important knowledge was made. I saw the possibilities and undertook the development of induction apparatus on this principle. My progress was so rapid as to enable me to exhibit at my lecture in 1891, a coil giving sparks of five inches. On that occasion I frankly told the engineers of a defect involved in the transformation by the new method, namely, the loss in the spark gap. Subsequent investigation showed that no matter what medium is employed, –be it air, hydrogen, mercury vapour, oil, or a stream of electrons, the efficiency is the same. It is a law very much like the governing of the conversion of mechanical energy. We may drop a weight from a certain height vertically down, or carry it to the lower level along any devious path; it is immaterial insofar as the amount of work is concerned. Fortunately however, this drawback is not fatal, as by proper proportioning of the resonant, circuits of an efficiency of 85 percent is attainable. Since my early announcement of the invention, it has come into universal use and wrought a revolution in many departments, but a still greater future awaits it.

When in 1900 I obtained powerful discharges of 1,000 feet and flashed a current around the globe, I was reminded of the first tiny spark I observed in my Grand Street laboratory and was thrilled by sensations akin to those I felt when I discovered the rotating magnetic field.

Chapter 5

As I review the events of my past life I realise how subtle are the influences that shape our destinies. An incident of my youth may serve to illustrate. One winter's day I managed to climb a steep mountain, in company with other boys. The snow was quite deep and a warm southerly wind made it just suitable for our purpose. We amused ourselves by throwing balls which would roll down a certain distance, gathering more or less snow, and we tried to out-do one another in this sport. Suddenly a ball was seen to go beyond the limit, swelling to enormous proportions until it became as big as a house and plunged thundering into the valley below with a force that made the ground tremble. I looked on spell-bound incapable of understanding what had happened. For weeks afterward the picture of the avalanche was before my eyes and I wondered how anything so small could grow to such an immense size.

Ever since that time the magnification of feeble actions fascinated me, and when, years later, I took up the experimental study of mechanical and electrical resonance, I was keenly interested from the very start. Possibly, had it not been for that early powerful impression I might not have followed up the little spark I obtained with my coil and never developed my best invention, the true history of which I will tell.

Many technical men, very able in their special departments, but dominated by a pedantic spirit and near-sighted, have asserted that excepting the induction motor, I have given the world little of practical use. This is a grievous mistake. A new idea must not be judged by its immediate results. My alternating system of power transmission came at a psychological moment, as a long sought answer to pressing industrial questions, and although considerable resistance had to be overcome and opposing interests reconciled, as usual, the commercial introduction could not be long delayed. Now, compare this situation with that confronting my turbines, for example. One should think that so simple and beautiful an invention, possessing many features of an ideal motor, should be adopted at once and, undoubtedly, it would under similar conditions. But the prospective effect of the rotating field was not to render worthless existing machinery; on the contrary, it was to give it additional value. The system lent itself to new enterprise as well as to improvement of the old. My turbine is an advance of a character entirely different. It is a radical departure in the sense that its success would mean the abandonment of the antiquated types of prime movers on which billions of dollars have been spent. Under such circumstances, the progress must needs be slow and perhaps the greatest impediment is encountered in the prejudicial opinions created in the minds of experts by organised opposition.

Only the other day, I had a disheartening experience when I met my friend and former assistant, Charles F. Scott, now professor of Electric Engineering at Yale. I had not seen him for a long time and was glad to have an opportunity for a little chat at my office. Our conversation, naturally enough, drifted on my turbine and I became heated to a high degree. "Scott," I exclaimed, carried away by the vision of a glorious future, "My turbine will scrap all the heat engines in the world." Scott stroked his chin and looked away thoughtfully, as though making a mental calculation. "That will make quite a pile of scrap," he said, and left without another word!

These and other inventions of mine, however, were nothing more than steps

forward in a certain directions. In evolving them, I simply followed the inborn instinct to improve the present devices without any special thought of our far more imperative necessities. The "Magnifying Transmitter" was the product of labours extending through years, having for their chief object, the solution of problems which are infinitely more important to mankind than mere industrial development.

If my memory serves me right, it was in November, 1890, that I performed a laboratory experiment which was one of the most extraordinary and spectacular ever recorded in the annal of Science. In investigating the behaviour of high frequency currents, I had satisfied myself that an electric field of sufficient intensity could be produced in a room to light up electrodeless vacuum tubes. Accordingly, a transformer was built to test the theory and the first trial proved a marvellous success. It is difficult to appreciate what those strange phenomena meant at the time. We crave for new sensations, but soon become indifferent to them. The wonders of yesterday are today common occurrences. When my tubes were first publicly exhibited, they were viewed with amazement impossible to describe. From all parts of the world, I received urgent invitations and numerous honours and other flattering inducements were offered to me, which I declined. But in 1892 the demand became irresistible and I went to London where I delivered a lecture before the institution of Electrical Engineers.

It has been my intention to leave immediately for Paris in compliance with a similar obligation, but Sir James Dewar insisted on my appearing before the Royal Institution. I was a man of firm resolve, but succumbed easily to the forceful arguments of the great Scotchman. He pushed me into a chair and poured out half a glass of a wonderful brown fluid which sparkled in all sorts of iridescent colours and tasted like nectar. "Now," said he, "you are sitting in Faraday's chair and you are enjoying whiskey he used to drink." (Which did not interest me very much, as I had altered my opinion concerning strong drink). The next evening I have a demonstration before the Royal Institution, at the termination of which, Lord Rayleigh addressed the audience and his generous words gave me the first start in these endeavours. I fled from London and later from Paris, to escape favours showered upon me, and journeyed to my home, where I passed through a most painful ordeal and illness.

Upon regaining my health, I began to formulate plans for the resumption of work in America. Up to that time I never realised that I possessed any particular gift of discovery, but Lord Rayleigh, whom I always considered as an ideal man of science, had said so and if that was the case, I felt that I should concentrate on some big idea.

At this time, as at many other times in the past, my thoughts turned towards my Mother's teaching. The gift of mental power comes from God, Divine Being, and if we concentrate our minds on that truth, we become in tune with this great power. My Mother had taught me to seek all truth in the Bible; therefore I devoted the next few months to the study of this work.

One day, as I was roaming the mountains, I sought shelter from an approaching storm. The sky became overhung with heavy clouds, but somehow the rain was delayed until, all of a sudden, there was a lightening flash and a few moments after, a deluge. This observation set me thinking. It was manifest that the two phenomena were closely related, as cause and effect, and a little reflection led me to the conclusion that the electrical energy involved in the precipitation of the water was inconsiderable, the function of the lightening being much like that of a sensitive trigger. Here was a stupendous possibility of

achievement. If we could produce electric effects of the required quality, this whole planet and the conditions of existence on it could be transformed. The sun raises the water of the oceans and winds drive it to distant regions where it remains in a state of most delicate balance. If it were in our power to upset it when and wherever desired, this might life sustaining stream could be at will controlled. We could irrigate arid deserts, create lakes and rivers, and provide motive power in unlimited amounts. This would be the most efficient way of harnessing the sun to the uses of man. The consummation depended on our ability to develop electric forces of the order of those in nature.

It seemed a hopeless undertaking, but I made up my mind to try it and immediately on my return to the United States in the summer of 1892, after a short visit to my friends in Watford, England; work was begun which was to me all the more attractive, because a means of the same kind was necessary for the successful transmission of energy without wires.

At this time I made a further careful study of the Bible, and discovered the key in Revelation. The first gratifying result was obtained in the spring of the succeeding year, when I reaching a tension of about 100,000,000 volts — one hundred million volts — with my conical coil, which I figured was the voltage of a flash of lightening. Steady progress was made until the destruction of my laboratory by fire, in 1895, as may be judged from an article by T.C. Martin which appeared in the April number of the Century Magazine. This calamity set me back in many ways and most of that year had to be devoted to planning and reconstruction. However, as soon as circumstances permitted, I returned to the task.

Although I knew that higher electric-motive forces were attainable with apparatus of larger dimensions, I had an instinctive perception that the object could be accomplished by the proper design of a comparatively small and compact transformer. In carrying on tests with a secondary in the form of flat spiral, as illustrated in my patents, the absence of streamers surprised me, and it was not long before I discovered that this was due to the position of the turns and their mutual action. Profiting from this observation, I resorted to the use of a high tension conductor with turns of considerable diameter, sufficiently separated to keep down the distributed capacity, while at the same time preventing undue accumulation of the charge at any point. The application of this principle enabled me to produce pressures of over 100,000,000 volts, which was about the limit obtainable without risk of accident. A photograph of my transmitter built in my laboratory at Houston Street, was published in the Electrical Review of November, 1898.

In order to advance further along this line, I had to go into the open, and in the spring of 1899, having completed preparations for the erection of a wireless plant, I went to Colorado where I remained for more than one year. Here I introduced other improvements and refinements which made it possible to generate currents of any tension that may be desired. Those who are interested will find some information in regard to the experiments I conducted there in my article, “The Problem of Increasing Human Energy,” in the Century Magazine of June 1900, to which I have referred on a previous occasion.

I will be quite explicit on the subject of my magnifying transformer so that it will be clearly understood. In the first place, it is a resonant transformer, with a secondary in which the parts, charged to a high potential, are of considerable area and arranged in space along ideal enveloping surfaces of very large radii of curvature, and at proper distances from one another, thereby

insuring a small electric surface density everywhere, so that no leak can occur even if the conductor is bare. It is suitable for any frequency, from a few to many thousands of cycles per second, and can be used in the production of currents of tremendous volume and moderate pressure, or of smaller amperage and immense electromotive force. The maximum electric tension is merely dependent on the curvature of the surfaces on which the charged elements are situated and the area of the latter. Judging from my past experience there is no limit to the possible voltage developed; any amount is practicable. On the other hand, currents of many thousands of amperes may be obtained in the antenna. A plant of but very moderate dimensions is required for such performances. Theoretically, a terminal of less than 90 feet in diameter is sufficient to develop an electromotive force of that magnitude, while for antenna currents of from 2,000-4,000 amperes at the usual frequencies, it need not be larger than 30 feet in diameter. In a more restricted meaning, this wireless transmitter is one in which the Hertzwave radiation is an entirely negligible quantity as compared with the whole energy, under which condition the damping factor is extremely small and an enormous charge is stored in the elevated capacity. Such a circuit may then be excited with impulses of any kind, even of low frequency and it will yield sinusoidal and continuous oscillations like those of an alternator. Taken in the narrowest significance of the term, however, it is a resonant transformer which, besides possessing these qualities, is accurately proportioned to fit the globe and its electrical constants and properties, by virtue of which design it becomes highly efficient and effective in the wireless transmission of energy. Distance is then ABSOLUTELY ELIMINATED, THERE BEING NO DIMINUATION IN THE INTENSITY of the transmitted impulses. It is even possible to make the actions increase with the distance from the plane, according to an exact mathematical law. This invention was one of a number comprised in my "World System" of wireless transmission which I undertook to commercialise on my return to New York in 1900.

As to the immediate purposes of my enterprise, they were clearly outlined in a technical statement of that period from which I quote, "The world system has resulted from a combination of several original discoveries made by the inventor in the course of long continued research and experimentation. It makes possible not only the instantaneous and precise wireless transmission of any kind of signals, messages or characters, to all parts of the world, but also the inter-connection of the existing telegraph, telephone, and other signal stations without any change in their present equipment. By its means, for instance, a telephone subscriber here may call up and talk to any other subscriber on the Earth. An inexpensive receiver, not bigger than a watch, will enable him to listen anywhere, on land or sea, to a speech delivered or music played in some other place, however distant."

These examples are cited merely to give an idea of the possibilities of this great scientific advance, which annihilates distance and makes that perfect natural conductor, the Earth, available for all the innumerable purposes which human ingenuity has found for a line-wire. One far-reaching result of this is that any device capable of being operated through one or more wires (at a distance obviously restricted) can likewise be actuated, without artificial conductors and with the same facility and accuracy, at distances to which there are no limits other than those imposed by the physical dimensions of the earth. Thus, not only will entirely new fields for commercial exploitation be opened up by this ideal method of transmission, but the old ones vastly extended. The World System is based on the application of the following import and inventions and discoveries:

1) The Tesla Transformer: This apparatus is in the production of elec-

trical vibrations as revolutionary as gunpowder was in warfare. Currents many times stronger than any ever generated in the usual ways and sparks over one hundred feet long, have been produced by the inventor with an instrument of this kind.

2) The Magnifying Transmitter: This is Tesla's best invention, a peculiar transformer specially adapted to excite the earth, which is in the transmission of electrical energy when the telescope is in astronomical observation. By the use of this marvellous device, he has already set up electrical movements of greater intensity than those of lightening and passed a current, sufficient to light more than two hundred incandescent lamps, around the Earth.

3) The Tesla Wireless System: This system comprises a number of improvements and is the only means known for transmitting economically electrical energy to a distance without wires. Careful tests and measurements in connection with an experimental station of great activity, erected by the inventor in Colorado, have demonstrated that power in any desired amount can be conveyed, clear across the Globe if necessary, with a loss not exceeding a few per cent.

4) The Art of Individualisation: This invention of Tesla is to primitive Tuning, what refined language is to unarticulated expression. It makes possible the transmission of signals or messages absolutely secret and exclusive both in the active and passive aspect, that is, non-interfering as well as non-interferable. Each signal is like an individual of unmistakable identity and there is virtually no limit to the number of stations or instruments which can be simultaneously operated without the slightest mutual disturbance.

5) The Terrestrial Stationary Waves: This wonderful discovery, popularly explained, means that the Earth is responsive to electrical vibrations of definite pitch, just as a tuning fork to certain waves of sound. These particular electrical vibrations, capable of powerfully exciting the Globe, lend themselves to innumerable uses of great importance commercially and in many other respects. The "first World System" power plant can be put in operation in nine months. With this power plant, it will be practicable to attain electrical activities up to ten million horse-power and it is designed to serve for as many technical achievements as are possible without due expense. Among these are the following:

1) The inter-connection of existing telegraph exchanges or offices all over the world;
2) The establishment of a secret and non-interferable government telegraph service;
3) The inter-connection of all present telephone exchanges or offices around the Globe;
4) The universal distribution of general news by telegraph or telephone, in conjunction with the Press;
5) The establishment of such a "World System" of intelligence transmission for exclusive private use;
6) The inter-connection and operation of all stock tickers of the world;
7) The establishment of a World system — of musical distribution, etc.;
8) The universal registration of time by cheap clocks indicating the hour with astronomical precision and requiring no attention whatever;
9) The world transmission of typed or hand-written characters, letters, checks, etc.;
10) The establishment of a universal marine service enabling the navigators of all ships to steer perfectly without compass, to determine the exact location, hour and speak; to prevent collisions and disasters, etc.;

11) The inauguration of a system of world printing on land and sea;
12) The world reproduction of photographic pictures and all kinds of drawings or records..."

I also proposed to make demonstration in the wireless transmission of power on a small scale, but sufficient to carry conviction. Besides these, I referred to other and incomparably more important applications of my discoveries which will be disclosed at some future date. A plant was built on Long Island with a tower 187 feet high, having a spherical terminal about 68 feet in diameter. These dimensions were adequate for the transmission of virtually any amount of energy. Originally, only from 200 to 300 K.W. were provided, but I intended to employ later several thousand horsepower. The transmitter was to emit a wave-complex of special characteristics and I had devised a unique method of telephonic control of any amount of energy. The tower was destroyed two years ago (1917) but my projects are being developed and another one, improved in some features will be constructed.

On this occasion I would contradict the widely circulated report that the structure was demolished by the Government, which owing to war conditions, might have created prejudice in the minds of those who may not know that the papers, which thirty years ago conferred upon me the honour of American citizenship, are always kept in a safe, while my orders, diplomas, degrees, gold medals and other distinctions are packed away in old trunks. If this report had a foundation, I would have been refunded a large sum of money which I expended in the construction of the tower. On the contrary, it was in the interest of the Government to preserver it, particularly as it would have made possible, to mention just one valuable result, the location of a submarine in any part of the world. My plant, services, and all my improvements have always been at the disposal of the officials and ever since the outbreak of the European conflict, I have been working at a sacrifice on several inventions of mine relating to aerial navigation, ship propulsion and wireless transmission, which are of the greatest importance to the country. Those who are well informed know that my ideas have revolutionised the industries of the United States and I am not aware that there lives an inventor who has been, in this respect, as fortunate as myself, — especially as regards the use of his improvements in the war.

I have refrained from publicly expressing myself on this subject before, as it seemed improper to dwell on personal matters while all the world was in dire trouble. I would add further, in view of various rumours which have reached me, that Mr. J. Pierpont Morgan did not interest himself with me in a business way, but in the same large spirit in which he has assisted many other pioneers. He carried out his generous promise to the letter and it would have been most unreasonable to expect from him anything more. He had the highest regard for my attainments and gave me every evidence of his complete faith in my ability to ultimately achieve what I had set out to do. I am unwilling to accord to some small-minded and jealous individuals the satisfaction of having thwarted my efforts. These men are to me nothing more than microbes of a nasty disease. My project was retarded by laws of nature. The world was not prepared for it. It was too far ahead of time, but the same laws will prevail in the end and make it a triumphal success.

Chapter 6

No subject to which I have ever devoted myself has called for such concentration of mind, and strained to so dangerous a degree the finest fibres of my brain, as the systems of which the Magnifying transmitter is the foundation. I put all the intensity and vigour of youth in the development of the rotating field discoveries, but those early labours were of a different character. Although strenuous in the extreme, they did not involve that keen and exhausting discernment which had to be exercised in attacking the many problems of the wireless.

Despite my rare physical endurance at that period, the abused nerves finally rebelled and I suffered a complete collapse, just as the consummation of the long and difficult task was almost in sight. Without doubt I would have paid a greater penalty later, and very likely my career would have been prematurely terminated, had not providence equipped me with a safety device, which seemed to improve with advancing years and unfailingly comes to play when my forces are at an end. So long as it operates I am safe from danger, due to overwork, which threatens other inventors, and incidentally, I need no vacations which are indispensable to most people. When I am all but used up, I simply do as the darkies who "naturally fall asleep while white folks worry."

To venture a theory out of my sphere, the body probably accumulates little by little a definite quantity of some toxic agent and I sink into a nearly lethargic state which lasts half an hour to the minute. Upon awakening I have the sensation as though the events immediately preceding had occurred very long ago, and if I attempt to continue the interrupted train of thought I feel veritable nausea. Involuntarily, I then turn to other and am surprised at the freshness of the mind and ease with which I overcome obstacles that had baffled me before. After weeks or months, my passion for the temporarily abandoned invention returns and I invariably find answers to all the vexing questions, with scarcely any effort. In this connection, I will tell of an extraordinary experience which may be of interest to students of psychology.

I had produced a striking phenomenon with my grounded transmitter and was endeavouring to ascertain its true significance in relation to the currents propagated through the earth. It seemed a hopeless undertaking, and for more than a year I worked unremittingly, but in vain. This profound study so entirely absorbed me, that I became forgetful of everything else, even of my undermined health. At last, as I was at the point of breaking down, nature applied the preservative inducing lethal sleep. Regaining my senses, I realised with consternation that I was unable to visualise scenes from my life except those of infancy, the very first ones that had entered my consciousness. Curiously enough, these appeared before my vision with startling distinctness and afforded me welcome relief. Night after night, when retiring, I would think of them and more and more of my previous existence was revealed. The image of my mother was always the principal figure in the spectacle that slowly unfolded, and a consuming desire to see her again gradually took possession of me. This feeling grew so strong that I resolved to drop all work and satisfy my longing, but I found it too hard to break away from the laboratory, and several months elapsed during which I had succeeded in reviving all the impressions of my past life, up to the spring of 1892. In the next picture that came out of the mist of oblivion, I saw myself at the Hotel de la Paix in Paris, just coming to from one of my peculiar sleeping spells, which had

been caused by prolonged exertion of the brain. Imagine the pain and distress I felt, when it flashed upon my mind that a dispatch was handed to me at that very moment, bearing the sad news that my mother was dying. I remembered how I made the long journey home without an hour of rest and how she passed away after weeks of agony.

It was especially remarkable that during all this period of partially obliterated memory, I was fully alive to everything touching on the subject of my research. I could recall the smallest detail and the least insignificant observations in my experiments and even recite pages of text and complex mathematical formulae.

My belief is firm in a law of compensation. The true rewards are ever in proportion to the labour and sacrifices made. This is one of the reasons why I feel certain that of all my inventions, the magnifying Transmitter will prove most important and valuable to future generations. I am prompted to this prediction, not so much by thoughts of the commercial and industrial revolution which it will surely bring about, but of the humanitation consequences of the many achievements it makes possible. Considerations of mere utility weigh little in the balance against the higher benefits of civilisation. We are confronted with portentous problems which can not be solved just by providing for our material existence, however abundantly. On the contrary, progress in this direction is fraught with hazards and perils not less menacing than those born from want and suffering. If we were to release the energy of atoms or discover some other way of developing cheap and unlimited power at any point on the globe, this accomplishment, instead of being a blessing, might bring disaster to mankind in giving rise to dissension and anarchy, which would ultimately result in the enthronement of the hated regime of force. The greatest good will come from technical improvements tending to unification and harmony, and my wireless transmitter is preeminently such. By its means, the human voice and likeness will be reproduced everywhere and factories driven thousands of miles from waterfalls furnishing power. Aerial machines will be propelled around the earth without a stop and the sun's energy controlled to create lakes and rivers for motive purposes and transformation of arid deserts into fertile land. Its introduction for telegraphic, telephonic and similar uses, will automatically cut out the statics and all other interferences which at present, impose narrow limits to the application of the wireless. This is a timely topic on which a few words might not be amiss.

During the past decade a number of people have arrogantly claimed that they had succeeded in doing away with this impediment. I have carefully examined all of the arrangements described and tested most of them long before they were publicly disclosed, but the finding was uniformly negative. Recent official statement from the U.S. Navy may, perhaps, have taught some beguilable news editors how to appraise these announcements at their real worth. As a rule, the attempts are based on theories so fallacious, that whenever they come to my notice, I can not help thinking in a light vein. Quite recently a new discovery was heralded, with a deafening flourish of trumpets, but it proved another case of a mountain bringing forth a mouse. This reminds me of an exciting incident which took place a year ago, when I was conducting my experiments with currents of high frequency.

Steve Brodie had just jumped off the Brooklyn Bridge. The feat has been vulgarised since by imitators, but the first report electrified New York. I was very impressionable then and frequently spoke of the daring printer. On a hot afternoon I felt the necessity of refreshing myself and stepped into

one of the popular thirty thousand institutions of this great city, where a delicious twelve per cent beverage was served, which can now be had only by making a trip to the poor and devastated countries of Europe. The attendance was large and not over-distinguished and a matter was discussed which gave me an admirable opening for the careless remark, "This is what I said when I jumped off the bridge." No sooner had I uttered these words, than I felt like the companion of Timothens, in the poem of Schiller. In an instant there was pandemonium and a dozen voices cried, "It is Brodie!" I threw a quarter on the counter and bolted for the door, but the crowd was at my heels with yells, – "Stop, Steeve!", which must have been misunderstood, for many persons tried to hold me up as I ran frantically for my haven of refuge. By darting around corners I fortunately managed, through the medium of a fire escape, to reach the laboratory, where I threw off my coat, camouflaged myself as a hard-working blacksmith and started the forge. But these precautions proved unnecessary, as I had eluded my pursuers. For many years afterward, at night, when imagination turns into spectres the trifling troubles of the day, I often thought, as I tossed on the bed, what my fate would have been, had the mob caught me and found out that I was not Steve Brodie!

Now the engineer who lately gave an account before a technical body of a novel remedy against statics based on a "heretofore unknown law of nature," seems to have been as reckless as myself when he contended that these disturbances propagate up and down, while those of a transmitter proceed along the earth. It would mean that a condenser as this globe, with its gaseous envelope, could be charged and discharged in a manner quite contrary to the fundamental teachings propounded in every elemental text book of physics. Such a supposition would have been condemned as erroneous, even in Franklin's time, for the facts bearing on this were then well known and the identity between atmospheric electricity and that developed by machines was fully established. Obviously, natural and artificial disturbances propagate through the earth and the air in exactly the same way, and both set up electromotive forces in the horizontal, as well as vertical sense. Interference can not be overcome by any such methods as were proposed. The truth is this: In the air the potential increases at the rate of about fifty volts per foot of elevation, owing to which there may be a difference of pressure amounting to twenty, or even forty thousand volts between the upper and lower ends of the antenna. The masses of the charged atmosphere are constantly in motion and give up electricity to the conductor, not continuously, but rather disruptively, this producing a grinding noise in a sensitive telephonic receiver. The higher the terminal and the greater the space encompast by the wires, the more pronounced is the effect, but it must be understood that it is purely local and has little to do with the real trouble.

In 1900, while perfecting my wireless system, one form of apparatus compressed four antennae. These were carefully calibrated in the same frequency and connected in multiple with the object of magnifying the action in receiving from any direction. When I desired to ascertain the origin of the transmitted impulse, each diagonally situated pair was put in series with a primary coil energising the detector circuit. In the former case, the sound was loud in the telephone; in the latter it ceased, as expected, – the two antennae neutralising each other, but the true statics manifested themselves in both instances and I had to devise special preventives embodying different principles. By employing receivers connected to two points of the ground, as suggested by me long ago, this trouble caused by the charged air, which is very serious in the structures as now built, is nullified and besides, the liability of all kinds of interference is reduced to about one-half because of the directional character of the circuit. This was perfectly self-evident, but

came as a revelation to some simple-minded wireless folks whose experience was confined to forms of apparatus that could have been improved with an axe, and they have been disposing of the bear's skin before killing him. If it were true that strays performed such antics, it would be easy to get rid of them by receiving without aerials. But, as a matter of fact, a wire buried in the ground which, conforming to this view, should be be absolutely immune, is more susceptible to certain extraneous impulses than one placed vertically in the air. To state it fairly, a slight progress has been made, but not by virtue of any particular method or device. It was achieved simply by discerning the enormous structures, which are bad enough for transmission but wholly unsuitable for reception and adopting a more appropriate type of receiver. As I have said before, to dispose of this difficulty for good, a radical change must be made in the system and the sooner this is done the better.

It would be calamitous, indeed, if at this time when the art is in its infancy and the vast majority, not excepting even experts, have no conception of its ultimate possibilities, a measure would be rushed through the legislature making it a government monopoly. This was proposed a few weeks ago by Secretary Daniels and no doubt that distinguished official has made his appeal to the Senate and House of Representatives with sincere conviction. But universal evidence unmistakably shows that the best results are always obtained in healthful commercial competition. there are, however, exceptional reasons why wireless should be given the fullest freedom of development. In the first place, it offers prospects immeasurably greater and more vital to betterment of human life than any other invention or discovery in the history of man. Then again, it must be understood that this wonderful art has been, in its entirety, evolved here and can be called "American" with more right and propriety than the telephone, the incandescent lamp or the aeroplane.

Enterprising press agents and stock jobbers have been so successful in spreading misinformation, that even so excellent a periodical as the *Scientific American*, accords the chief credit to a foreign country. The Germans, of course, gave us the Hertz waves and the Russian, English, French and Italian experts were quick in using them for signalling purposes. It was an obvious application of the new agent and accomplished with the old classical and unimproved induction coil, scarcely anything more than another kind of heliography. The radius of transmission was very limited, the result attained of little value, and the Hertz oscillations, as a means for conveying intelligence, could have been advantageously replaced by sound waves, which I advocated in 1891. Moreover, all of these attempts were made three years after the basic principles of the wireless system, which is universally employed today, and its potent instrumentalities had been clearly described and developed in America.

No trace of those Hertzian appliances and methods remains today. We have proceeded in the very opposite direction and what has been done is the product of the brains and efforts of citizens of this country. The fundamental patents have expired and the opportunities are open to all. The chief argument of the Secretary is based on interference. According to his statement, reported in the New York Herald of July 29th, signals from a powerful station can be intercepted in every village in the world. In view of this fact, which was demonstrated in my experiments in 1900, it would be of little use to impose restrictions in the United States.

As throwing light on this point, I may mention that only recently an odd looking gentleman called on me with the object of enlisting my services in the construction of world transmitters in some distant land. "We have no money,"

he said, “but carloads of solid gold, and we will give you a liberal amount.” I told him that I wanted to see first what will be done with my inventions in America, and this ended the interview. But I am satisfied that some dark forces are at work, and as time goes on the maintenance of continuous communication will be rendered more difficult. The only remedy is a system immune against interruption. It has been perfected, it exists, and all that is necessary is to put it in operation.

The terrible conflict is still uppermost in the minds and perhaps the greatest importance will be attached to the magnifying Transmitter as a machine for attack and defence, more particularly in connection with TELAUTAMATICS. This invention is a logical outcome of observations begun in my boyhood and continued throughout my life. When the first results were published, the Electrical Review stated editorially that it would become one of the “most potent factors in the advance of civilisation of mankind.” The time is not distant when this prediction will be fulfilled. In 1898 and 1900, it was offered by me to the Government and might have been adopted, were I one of those who would go to Alexander’s shepherd when they want a favour from Alexander!

At that time I really thought that it would abolish war, because of its unlimited destructiveness and exclusion of the personal element of combat. But while I have not lost faith in its potentialities, my views have changed since. War can not be avoided until the physical cause for its recurrence is removed and this, in the last analysis, is the vast extent of the planet on which we live. Only though annihilation of distance in every respect, as the conveyance of intelligence, transport of passengers and supplies and transmission of energy will conditions be brought about some day, insuring permanency of friendly relations. What we now want most is closer contact and better understanding between individuals and communities all over the earth and the elimination of that fanatic devotion to exalted ideals of national egoism and pride, which is always prone to plunge the world into primeval barbarism and strife. No league or parliamentary act of any kind will ever prevent such a calamity. These are only new devices for putting the weak at the mercy of the strong.

I have expressed myself in this regard fourteen years ago, when a combination of a few leading governments, a sort of Holy alliance, was advocated by the late Andrew Carnegie, who may be fairly considered as the father of this idea, having given to it more publicity and impetus than anybody else prior to the efforts of the President. While it can not be denied that such aspects might be of material advantage to some less fortunate peoples, it can not attain the chief objective sought. Peace can only come as a natural consequence of universal enlightenment and merging of races, and we are still far from this blissful realisation, because few indeed, will admit the reality – that God made man in His image – in which case all earth men are alike. There is in fact but one race, of many colours. Christ is but one person, yet he is of all people, so why do some people think themselves better than some other people?

As I view the world of today, in the light of the gigantic struggle we have witnessed, I am filled with conviction that the interests of humanity would be best served if the United States remained true to its traditions, true to God whom it pretends to believe, and kept out of “entangling alliances.” Situated as it is, geographically remote from the theatres of impending conflicts, without incentive to territorial aggrandisement, with inexhaustible resources and immense population thoroughly imbued with the spirit of liberty and right, this country is placed in a unique and privileged position. It is

thus able to exert, independently, its colossal strength and moral force to the benefit of all, more judiciously and effectively, than as a member of a league.

I have dwelt on the circumstances of my early life and told of an affliction which compelled me to unremitting exercise of imagination and self-observation. This mental activity, at first involuntary under the pressure of illness and suffering, gradually became second nature and led me finally to recognise that I was but an automaton devoid of free will in thought and action and merely responsible to the forces of the environment. Our bodies are of such complexity of structure, the motions we perform are so numerous and involved and the external impressions on our sense organs to such a degree delicate and elusive, that it is hard for the average person to grasp this fact. Yet nothing is more convincing to the trained investigator than the mechanistic theory of life which had been, in a measure, understood and propounded by Descartes three hundred years ago. In his time many important functions of our organisms were unknown and especially with respect to the nature of light and the construction and operation of the eye, philosophers were in the dark.

In recent years the progress of scientific research in these fields has been such as to leave no room for a doubt in regard to this view on which many works have been published. One of its ablest and most eloquent exponents is, perhaps, Felix le Dantec, formerly assistant of Pasteur. Professor Jacques Loeb has performed remarkable experiments in heliotropism, clearly establishing the controlling power of light in lower forms of organisms and his latest book, "Forced Movements," is revelatory. But while men of science accept this theory simply as any other that is recognised, to me it is a truth which I hourly demonstrate by every act and thought of mine. The consciousness of the external impression prompting me to any kind of exertion, – physical or mental, is ever present in my mind. Only on very rare occasions, when I was in a state of exceptional concentration, have I found difficulty in locating the original impulse. The by far greater number of human beings are never aware of what is passing around and within them and millions fall victims of disease and die prematurely just on this account. The commonest, every-day occurrences appear to them mysterious and inexplicable. One may feel a sudden wave of sadness and rack his brain for an explanation, when he might have noticed that it was caused by a cloud cutting off the rays of the sun. He may see the image of a friend dear to him under conditions which he construes as very peculiar, when only shortly before he has passed him in the street or seen his photograph somewhere. When he loses a collar button, he fusses and swears for an hour, being unable to visualise his previous actions and locate the object directly. Deficient observation is merely a form of ignorance and responsible for the many morbid notions and foolish ideas prevailing. There is not more than one out of every ten persons who does not believe in telepathy and other psychic manifestations, spiritualism and communion with the dead, and who would refuse to listen to willing or unwilling deceivers?

Just to illustrate how deeply rooted this tendency has become even among the clear-headed American population, I may mention a comical incident. Shortly before the war, when the exhibition of my turbines in this city elicited widespread comment in the technical papers, I anticipated that there would be a scramble among manufacturers to get hold of the invention and I had particular designs on that man from Detroit who has an uncanny faculty for accumulating millions. So confident was I, that he would turn up some day, that I declared this as certain to my secretary and assistants. Sure enough, one fine morning a body of engineers from the Ford Motor Company presented them-

selves with the request of discussing with me an important project. “Didn’t I tell you?,” I remarked triumphantly to my employees, and one of them said, “You are amazing, Mr. Tesla. Everything comes out exactly as you predict.”

As soon as these hard-headed men were seated, I of course, immediately began to extol the wonderful features of my turbine, when the spokesman interrupted me and said, “We know all about this, but we are on a special errand. We have formed a psychological society for the investigation of psychic phenomena and we want you to join us in this undertaking.” I suppose these engineers never knew how near they came to being fired out of my office.

Ever since I was told by some of the greatest men of the time, leaders in science whose names are immortal, that I am possessed of an unusual mind, I bent all my thinking faculties on the solution of great problems regardless of sacrifice. For many years I endeavoured to solve the enigma of death, and watched eagerly for every kind of spiritual indication. But only once in the course of my existence have I had an experience which momentarily impressed me as supernatural. It was at the time of my mother’s death.

I had become completely exhausted by pain and long vigilance, and one night was carried to a building about two blocks from our home. As I lay helpless there, I thought that if my mother died while I was away from her bedside, she would surely give me a sign. Two or three months before, I was in London in company with my late friend, Sir William Crookes, when spiritualism was discussed and I was under the full sway of these thoughts. I might not have paid attention to other men, but was susceptible to his arguments as it was his epochal work on radiant matter, which I had read as a student, that made me embrace the electrical career. I reflected that the conditions for a look into the beyond were most favourable, for my mother was a woman of genius and particularly excelling in the powers of intuition. During the whole night every fibre in my brain was strained in expectancy, but nothing happened until early in the morning, when I fell in a sleep, or perhaps a swoon, and saw a cloud carrying angelic figures of marvellous beauty, one of whom gazed upon me lovingly and gradually assumed the features of my mother. The appearance slowly floated across the room and vanished, and I was awakened by an indescribably sweet song of many voices. In that instant a certitude, which no words can express, came upon me that my mother had just died. And that was true. I was unable to understand the tremendous weight of the painful knowledge I received in advance, and wrote a letter to Sir William Crookes while still under the domination of these impressions and in poor bodily health. When I recovered, I sought for a long time the external cause of this strange manifestation and, to my great relief, I succeeded after many months of fruitless effort.

I had seen the painting of a celebrated artist, representing allegorically one of the seasons in the form of a cloud with a group of angels which seemed to actually float in the air, and this had struck me forcefully. It was exactly the same that appeared in my dream, with the exception of my mother’s likeness. The music came from the choir in the church nearby at the early mass of Easter morning, explaining everything satisfactorily in conformity with scientific facts.

This occurred long ago, and I have never had the faintest reason since to change my views on psychical and spiritual phenomena, for which there is no foundation. The belief in these is the natural outgrowth of intellectual development. Religious dogmas are no longer accepted in their orthodox meaning, but every individual clings to faith in a supreme power of some kind.

We all must have an ideal to govern our conduct and insure contentment, but it is immaterial whether it be one of creed, art, science, or anything else, so long as it fulfils the function of a dematerialising force. It is essential to the peaceful existence of humanity as a whole that one common conception should prevail. While I have failed to obtain any evidence in support of the contentions of psychologists and spiritualists, I have proved to my complete satisfaction the automatism of life, not only through continuous observations of individual actions, but even more conclusively through certain generalisations. these amount to a discovery which I consider of the greatest moment to human society, and on which I shall briefly dwell.

I got the first inkling of this astonishing truth when I was still a very young man, but for many years I interpreted what I noted simply as coincidences. Namely, whenever either myself or a person to whom I was attached, or a cause to which I was devoted, was hurt by others in a particular way, which might be best popularly characterised as the most unfair imaginable, I experienced a singular and undefinable pain which, for the want of a better term, I have qualified as "cosmic" and shortly thereafter, and invariably, those who had inflicted it came to grief. After many such cases I confided this to a number of friends, who had the opportunity to convince themselves of the theory of which I have gradually formulated and which may be stated in the following few words: Our bodies are of similar construction and exposed to the same external forces. This results in likeness of response and concordance of the general activities on which all our social and other rules and laws are based. We are automata entirely controlled by the forces of the medium, being tossed about like corks on the surface of the water, but mistaking the resultant of the impulses from the outside for the free will. The movements and other actions we perform are always life preservative and though seemingly quite independent from one another, we are connected by invisible links. So long as the organism is in perfect order, it responds accurately to the agents that prompt it, but the moment that there is some derangement in any individual, his self-preservative power is impaired.

Everybody understands, of course, that if one becomes deaf, has his eyes weakened, or his limbs injured, the chances for his continued existence are lessened. But this is also true, and perhaps more so, of certain defects in the brain which drive the automaton, more or less, of that vital quality and cause it to rush into destruction. A very sensitive and observant being, with his highly developed mechanism all intact, and acting with precision in obedience to the changing conditions of the environment, is endowed with a transcending mechanical sense, enabling him to evade perils too subtle to be directly perceived. When he comes in contact with others whose controlling organs are radically faulty, that sense asserts itself and he feels the "cosmic" pain.

The truth of this has been borne out in hundreds of instances and I am inviting other students of nature to devote attention to this subject, believing that through combined systematic effort, results of incalculable value to the world will be attained. The idea of constructing an automaton, to bear out my theory, presented itself to me early, but I did not begin active work until 1895, when I started my wireless investigations. During the succeeding two or three years, a number of automatic mechanisms, to be actuated from a distance, were constructed by me and exhibited to visitors in my laboratory.

In 1896, however, I designed a complete machine capable of a multitude of operations, but the consummation of my labours was delayed until late in 1897.

This machine was illustrated and described in my article in the Century Magazine of June, 1900; and other periodicals of that time and when first shown in the beginning of 1898, it created a sensation such as no other invention of mine has ever produced. In November, 1898, a basic patent on the novel art was granted to me, but only after the Examiner-in-Chief had come to New York and witnessed the performance, for what I claimed seemed unbelievable. I remember that when later I called on an official in Washington, with a view of offering the invention to the Government, he burst out in laughter upon my telling him what I had accomplished. Nobody thought then that there was the faintest prospect of perfecting such a device. It is unfortunate that in this patent, following the advice of my attorneys, I indicated the control as being affected through the medium of a single circuit and a well-known form of detector, for the reason that I had not yet secured protection on my methods and apparatus for individualisation. As a matter of fact, my boats were controlled through the joint action of several circuits and interference of every kind was excluded.

Most generally, I employed receiving circuits in the form of loops, including condensers, because the discharges of my high-tension transmitter ionised the air in the (laboratory) so that even a very small aerial would draw electricity from the surrounding atmosphere for hours.

Just to give an idea, I found, for instance, that a bulb twelve inches in diameter, highly exhausted, and with one single terminal to which a short wire was attached, would deliver well on to one thousand successive flashes before all charge of the air in the laboratory was neutralised. The loop form of receiver was not sensitive to such a disturbance and it is curious to note that it is becoming popular at this late date. In reality, it collects much less energy than the aerials or a long grounded wire, but it so happens that it does away with a number of defects inherent to the present wireless devices.

In demonstrating my invention before audiences, the visitors were requested to ask questions, however involved, and the automaton would answer them by signs. This was considered magic at the time, but was extremely simple, for it was myself who gave the replies by means of the device.

At the same period, another larger telautomatic boat was constructed, a photograph of which was shown in the October 1919 number of the Electrical Experimenter. It was controlled by loops, having several turns placed in the hull, which was made entirely water-tight and capable of submergence. The apparatus was similar to that used in the first with the exception of certain special features I introduced as, for example, incandescent lamps which afforded a visible evidence of the proper functioning of the machine. These automata, controlled within the range of vision of the operator, were, however, the first and rather crude steps in the evolution of the art of Telautomatics as I had conceived it.

The next logical improvement was its application to automatic mechanisms beyond the limits of vision and at great distances from the centre of control, and I have ever since advocated their employment as instruments of warfare in preference to guns. The importance of this now seems to be recognised, if I am to judge from casual announcements through the press, of achievements which are said to be extraordinary but contain no merit of novelty, whatever. In an imperfect manner it is practicable, with the existing wireless plants, to launch an aeroplane, have it follow a certain approximate course, and perform some operation at a distance of many hundreds of miles. A machine of this kind can also be mechanically controlled in several ways and I have no doubt

that it may prove of some usefulness in war. But there are to my best knowledge, no instrumentalities in existence today with which such an object could be accomplished in a precise manner. I have devoted years of study to this matter and have evolved means, making such and greater wonders easily realisable.

As stated on a previous occasion, when I was a student at college I conceived a flying machine quite unlike the present ones. The underlying principle was sound, but could not be carried into practice for want of a prime-mover of sufficiently great activity. In recent years, I have successfully solved this problem and am now planning aerial machines *devoid of sustaining planes, ailerons, propellers, and other external* attachments, which will be capable of immense speeds and are very likely to furnish powerful arguments for peace in the near future. Such a machine, sustained and propelled *entirely by reaction*, is shown on one of the pages of my lectures, and is supposed to be controlled either mechanically, or by wireless energy. By installing proper plants, it will be practicable to *project a missile of this kind into the air and drop it* almost on the very spot designated, which may be thousands of miles away.

But we are not going to stop at this. Telautomats will be ultimately produced, capable of acting as if possessed of their own intelligence, and their advent will create a revolution. As early as 1898, I proposed to representatives of a large manufacturing concern the construction and public exhibition of an automobile carriage which, left to itself, would perform a great variety of operations involving something akin to judgment. But my proposal was deemed chimerical at the time and nothing came of it.

At present, many of the ablest minds are trying to devise expedients for preventing a repetition of the awful conflict which is only theoretically ended and the duration and main issues of which I have correctly predicted in an article printed in the SUN of December 20, 1914. The proposed League is not a remedy but, on the contrary, in the opinion of a number of competent men, may bring about results just the opposite.

It is particularly regrettable that a punitive policy was adopted in framing the terms of peace, because a few years hence, it will be possible for nations to fight without armies, ships or guns, by weapons far more terrible, to the destructive action and range of which there is virtually no limit. Any city, at a distance, whatsoever, from the enemy, can be destroyed by him and no power on earth can stop him from doing so. If we want to avert an impending calamity and a state of things which may transform the globe into an inferno, we should push the development of flying machines and wireless transmission of energy without an instant's delay and with all the power and resources of the nation.

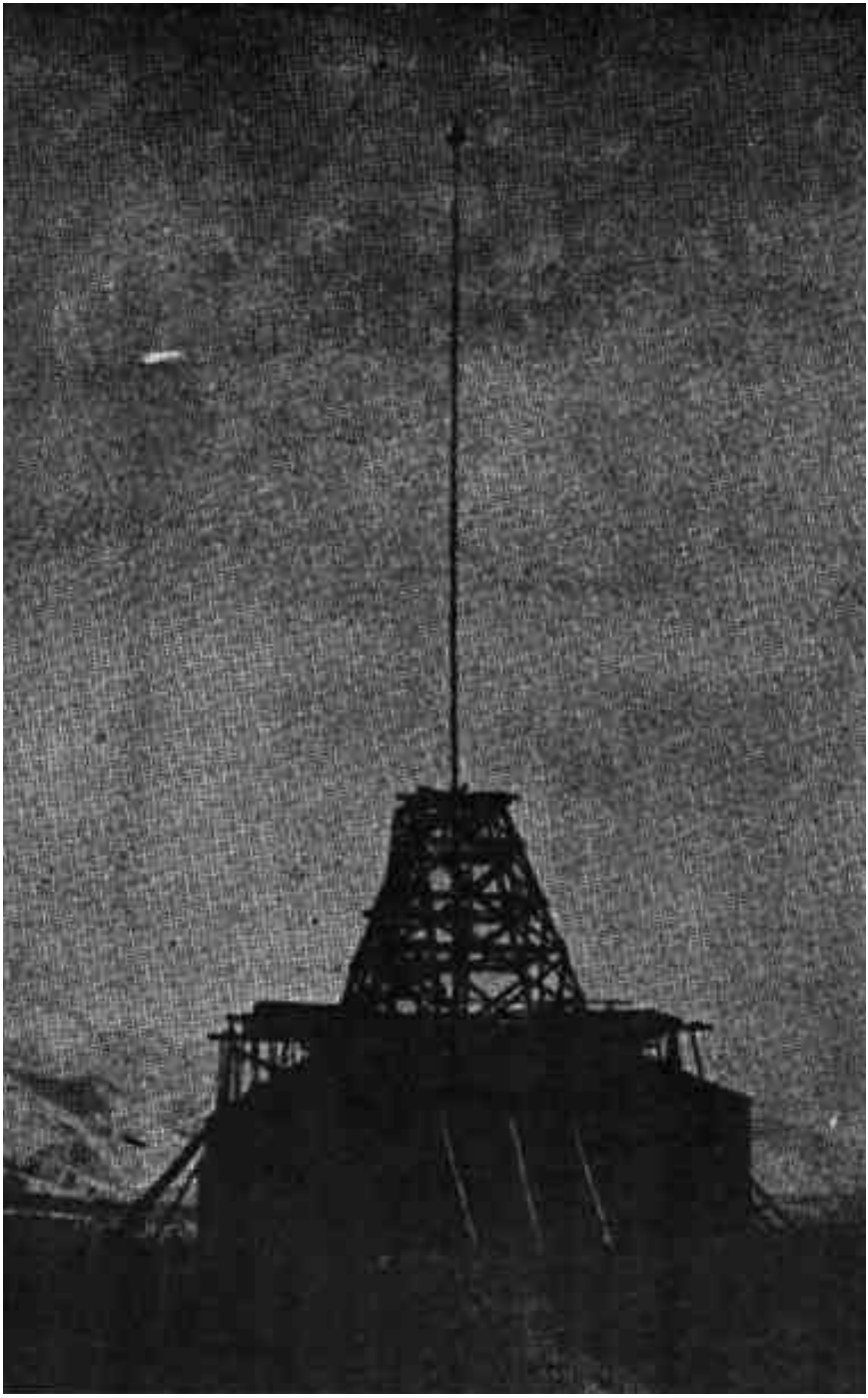

Published in: Arizona Journal of Natural Philosophy, Vol.1. No.**8**, 1987, pgs. 3–19.

The Tesla Genius:

Part 2: Inventions and innovations—Visions of electric fires

Thomas Kelley

The higher a man's status, the more he is under the sway of daemons
and he must always be on his guard lest he be diverted from the main course he has set for himself.
—Johann W von Goethe, 1829

For the past fifteen years, I have pursued occasional research of Nikola Tesla, which includes performing various Tesla Coil experiments (3–15kW class). During that time, I have defended Tesla when I thought credit was due him, and I have tried to refute some of the fringe-science misconceptions about him. My satisfaction in writing this series of articles is to construct a balanced view of the life and work of Tesla and to debunk some of the misconceptions about Tesla that have prevailed since his death.

As a review, in the first article (*AJNP* Vol. 1, July 1987, 3–10) I briefly outlined a biography of Tesla. I defined three periods in his life that chronologically reflected his work, reputation, and important people involved with him at each of those stages: From Tesla's birth to his arrival in America, I called the Constructive period, which is characterized by his family life, education, and engineering work (in Budapest and Paris). The next phase of Tesla's life was the Productive Period, which is characterized by his prolific and profitable inventive activity after he arrived in America. This period lasted approximately two decades, ending before World War I. I showed that the Period of Decline overlapped the Productive Period—this final period starting with the 1895 New York laboratory fire. This period is further characterized by Tesla's onerous financial problems, his floundering reputation, and his obsessive caring for pigeons. This article will not, however, present Tesla's inventions in chronological order.

Nikola Tesla was described by Hugo Gernsback, noted science-fiction writer, as "the greatest inventor that ever lived." Many biographers and science writers have liberally expressed these sentiments on many occasions (Cheney [1981] 1983, 239; Hunt and Draper [1964] 1981, 222). What did Tesla invent to earn such accolades? What quantity and quality of inventiveness did he exhibit? By what standards shall we measure Tesla's works? What things were unique about the age that allowed him to thrive and, ultimately, to fail? I will define three categories of the work accomplished, attempted, and attributed to Nikola Tesla that will help answer these questions.

The first category of Tesla's inventions is what I call the Manifested Technologies; it is characterized by those inventions and technological systems which found profitable markets for Tesla and his backers. The second category I call the Prototype Technologies; it includes those inventions and systems that never came to fruition. The reason for these failed products was primarily due to poor capitalization. In other instances, the support technologies didn't as yet exist. At other times the problem was that the newly competing material or technology was not sufficiently superior to existing ones to warrant expensive industrial conversions. The third category I call the Speculative Technologies, featuring Tesla's speculations for technological utopias. These technologies are documented by his writings to specific people or companies and by his general articles written for public reading.

Manifested Technologies

One can't deny that Tesla was one of the most prolific inventors that America has ever seen. I believe he was second only to Edison for the number of patents filed by an individual. We must credit Edison for the higher profile of all his patents, each of which was already a significant part of a marketable or marketed product. Nearly half of Tesla's patents were never developed into products or realized in the marketplace. However, Tesla's innovations were quite insightful; his inventiveness outclassed Edison's work in one area in particular: Tesla's alternating-current theories and technologies changed the modern world tremendously. These technologies are the apex of his Manifested Technologies.

War of the Currents

Known historically as the "War of the Currents," the battle for the choice between AC and DC during the period from the late 1880's to the early 1890's realized the completion of the greatest of Tesla's achievements. Consider the following developments that set the stage for the AC verse DC conflict: various inventors in America and Europe were scrambling to apply the emerging electrical sciences and technologies in all manner of novel ways. The most common application for electricity at the time was to operate electric motors, which operated industrial machinery. The new electric light bulb offered profound new applications for electricity. (Yes, Edison gets the credit this time.) The fast-spreading technologies of the telephone and telegraph required easily sustainable sources of electricity to thrive. Electric motors were becoming sophisticated and powerful enough to employ them as the motive source for elevators, urban trains, and small vehicles. The only two common sources of constant electricity were batteries and dynamos. But as the reader knows, batteries are expensive and short lived. And though the dynamo had been developed around 1830, it had found little industrial use before 1850, and was a constant maintenance problem for the thirty years preceding Tesla's arrival in New York in 1884.

The War of the Currents was a clash between two ideologies. Edison with his financial backer J.P. Morgan was pitted against Tesla with his two financial backers George Westinghouse and A.K. Brown (of the Western Union Telegraph Company). Morgan consolidated Edison and several other companies (such as Thompson-Houston) into a large holding company then named General Electric. Considerable investments were made in setting up DC as the dominant form of electricity for eventual world-wide use. In the same way that he had gained control of the steel and railroad industries through his financial trusts, Morgan was determined to control the emerging electrical utilities. These investments required the placement of the DC generators in the proximity of the customer. AC, on the other hand, requires only one alternator to serve many customers, and the cost of the distribution network is dramatically cheaper than multiple generators on every block. Thus, the capitalization of DC power required the resources of a man like Morgan. He could influence politicians and universities, print propaganda against AC, and secure the backing of several eminent engineers and scientists such as Edison and Lord Kelvin.

The principal financial resource for AC research was George Westinghouse. He was clearly the underdog against Morgan's financial empire, but he believed in the superiority of alternating current. He was able to gain the support of several university scientists and electrical engineers who recognized the value of the AC system. Two supporters were Michael Pupin and William Anthony. It was Anthony that won for Tesla an invitation to lecture the American Institute of Electrical Engineers (AIEE) on May 16, 1888. Tesla's

apologetics for AC is a classic. Thus, the opening salvos in the War of the Currents were fired by Tesla, and he won the AIEE's support for the campaign to come (Cheney [1981] 1983, 39 ff).

DC and AC technology

To more fully appreciate Tesla's insights into AC generation, let's first review the state of electrical power generation just prior to Tesla's contributions to it. Of course there were batteries for generating near steady DC power, but they were not versatile for practical use. There were also devices called dynamos for mechanically generating DC, and alternators for mechanically generating AC. The basic principle that both of these devices operate on is called *electromagnetic induction*, which applied to practical generators at that time can be stated as the production of a current in a conductor (in our case a conducting wire by moving the conductor through a magnetic field. Now since the strongest part of a magnetic field of a magnet is localized near the magnet itself, then one good way to move the wire through its field ought to be to form it into one or more loops, fix the loops to an axle, and then spin the axle near the strongest part of magnet's field. This loop-and-axle configuration is referred to as a rotor (see Fig. 1). (It's important to note that direct current does not mean that the current is constant—it means that the current circulates in one direction only, though its current strength may vary.)

One obvious problem with this arrangement is the removal of the generated current from the rotor, a process called commutation in the case of direct current. After all, we can't simply dangle the ends of the looped wire out of the rotor, for in just a few rotations the wires would be wrapped-up on the axle. One solution is to solder the ends of the looped wired to isolated conducting insulated contacts that are fixed to the axle, and then to remove the current out of the rotor by touching conducting "brushes" to the contact strips but allowing the brushes to slip freely as the axle rotates. (The brushes for industrial use are usually just conducting metallic graphite.) The commutation of direct current is represented in Fig. 2.

The first inefficiency in this attempted solution arises because of the inefficient contact of the brushes on the slip rings from each winding as the rotor turns. Another source of inefficiency results from the process of producing a steady dynamo output current. Many independent windings are placed on the rotor at regularly varied angles. From the laws of physics it is known that as a winding rotates within a magnetic field, with each rotation there comes an instant at which the winding develops its maximum current. The slip contacts are so positioned that when a winding is producing its maximum current, the brushes can complete the circuit and thereby route this current for useful power. Each winding will, on its turn, present its maximum current to the brushes as the rotor continues to rotate in the magnetic field. But because the windings are only allowed to conduct during the time its current is near or at its maximum, then more than fifty percent of the available energy from the winding can go unused. By the time of Tesla's contributions, capacitors and other means were used to filter-out the variations, so that the dynamo could maintain a steady output current. Now, while an alternator can produce more current and sustain longer brush life than a dynamo for a given size and mass, the world of the latter nineteenth century couldn't do very much with AC except to light electric lamps. The opportunity and timing for Nikola Tesla could not have been better.

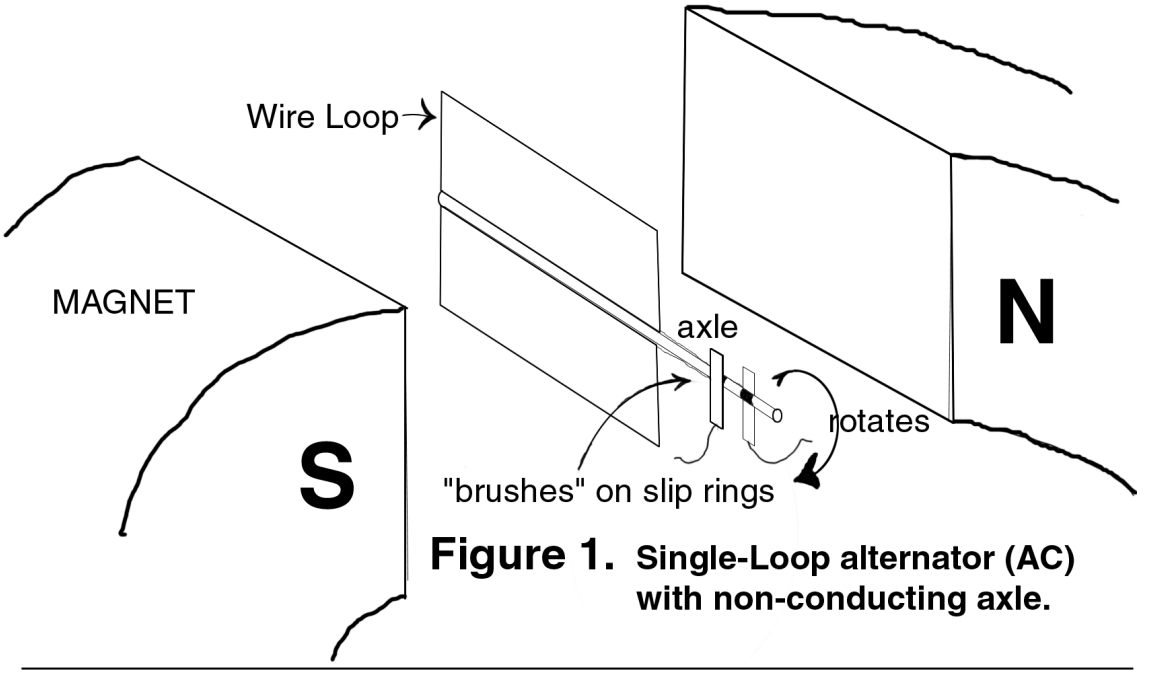

Figure 1. **Single-Loop alternator (AC) with non-conducting axle.**

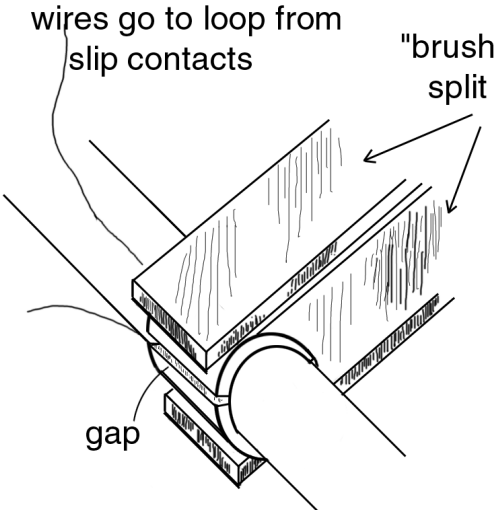

Figure 2.
Single-loop commutator for DC.

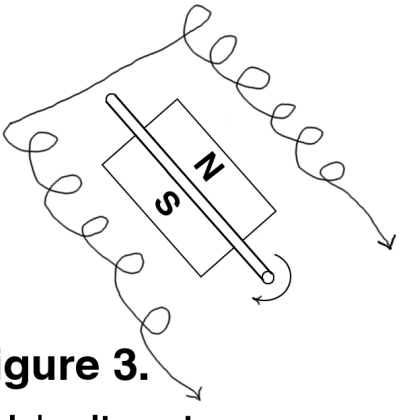

Figure 3.
Tesla's alternator --
Only the magnet "moves" (rotates)

Tesla's genius in AC technology started while he was still in college. In a series of remarkable insights and visions, he realized that only relative motion between the windings and the magnetic field is needed to produce alternating current. He reasoned that if the magnet is rotated within stationary windings, alternating current can still be produced without having to use slip rings and brushes. (See Fig. 3.) His insights also included how to use the current more effectively. Tesla conceived of a vastly improved transformer for AC use. While others at the time had some moderate success with building AC transformers, Tesla's innovations were to be the standards of AC transformer design. Tesla also applied his AC induction theory to producing an efficient AC motor which was more than a match for its DC industrial rival. At the same time, he figured out how to convert AC to DC without the use of rectifiers, by using a scheme of synchronous motor activity to extract the desired current. Tesla had, therefore, solved all three problems with AC: how to generate it, transmit it, and use it.

So why is AC, rather than DC, the preferred means of transmitting electrical power? From the laws of physics we know that the resistance of a wire is not ideally zero, and that the power loss over a length of wire is described by

$$\text{Power Loss} = \text{Current}^2 \times \text{Resistance}$$

The longer the wire, the higher the resistance to both alternating and direct current. Since both types of current experience equal loss under the same resistance and average current, why is AC better for transmission than DC? Because the *Total Power* developed by a generator is Current $\times$ Voltage, one can reduce the current in the wire and maintain the same power by dramatically increasing the voltage. So, a given long length of wire will be much more efficient at transmitting power at high voltage, which reduces the power consumed by the resistance of the wire. Physicists and engineers knew this principle at the time of Tesla's activity, so why was Tesla so opposed? The answer hinges on the prevailing technologies of his time.

Edison had only low-voltage DC motors, generators, and other devices for industrial and consumer use, which he intended to power by placing generators on every block and in every factory. Although Edison could raise the DC voltage to allow placement of the generator far away from where the current was going to be used, the power loss to line resistance would be excessive. Most of the power generated would be lost in the transmitting wires, before the appliances, lights, or whatever could use it. Therefore Edison would have to supply his thousands of customers with thousands of generators to reduce the distances between the generators and consumers. And he actually intended to pursue this scheme. Before Tesla, there was no known effective way of transforming either AC or DC up to a high voltage for transmission to the user, and then reducing it efficiently for the user's appliances to operate. With the AC technology that Tesla designed, AC could be produced far away from the consumer, and efficiently shipped to the consumer by increasing the transmission voltage quite high by transformers (which only work with AC). Near the consumer, the high-voltage AC is reduced to usable lower voltages by another transformer, while maintaining virtually the same power transfer levels. Finally, the cost of the AC distribution systems would be much less than constructing a myriad of DC generators for thousands, even millions, of users.

In terms of daily usage and civilized living, the ubiquitous electric outlet is as indispensable as the automobile. Life would be radically different if modern civilization weren't able to plug-in its electrical appliances. What would be the prevailing form of transportation if there were no cars as they exist now? Just as we can lay the prevalence of the automobile at

the feet of men such as Henry Ford, we can lay the form of prevailing electric power at the feet of Nikola Tesla. Even the sixty-Hertz frequency that the modern power grid oscillates at is Tesla's idea. The structure of the power grid—with its centralized, distantly located power generating stations supplying power over long distances—is a manifestation of Tesla's genius. (The Edison alternative would require a generator on virtually every block.) Part of the durability of the AC power grid is its flexibility: Originally, the standard low-voltage AC value meant for consumer use was to be 100 volts. As subsequent years have passed, the demand for more electric power for individual consumer use, and demand for power in terms of the vast number of new customers has over a period of time, required the low-voltage standard to creep upward from time-to-time. First, it was 100 volts; then around 1925, the standard was 105–7 volts; sometime around World War II, the consumer needed a standard of 110 volts. By the middle of the sixth decade, 115–7 volts became the standard. More recently, 120 volts became the standard. As this is written, some experts that I know are talking about 123-5 volts as a coming standard. Tesla's scheme for our AC power grid is quite durable and has survived the test of time well.

Tesla's other important inventions

This structure that Tesla conceived long before coming to America is the height of his Manifested Technologies. There were about forty patents alone, which applied to every aspect of AC power generation and use. Directly following the sale of his AC patent rights and royalties to Westinghouse, Tesla financed many new products, many of which became successful in the marketplace. One of the early inventions to help Tesla gain a reputation in America was his new and improved arc light, on which he posted seven patents. To reduce the resistance of the wire used in his high-voltage experiments, he also invented the so-called Litz wire (stranded bundles of insulated wires) for his Tesla Coils. This, like many of Tesla's ideas, is simple and elegant. Litz wire has a lower overall resistance (reactance) to the energies and frequencies than a single wire of comparable size and bulk. This is because the surface area of conduction in Litz wire is many times that of ordinary wire. One must realize that Tesla was operating his famous Tesla Coils at radio frequencies, which induces current mainly on the surface of a conductor (Cheney [1981] 1983, 61).

Around 1890, Tesla built his high-frequency generators. Operating up to 33kHz, these electro-mechanical devices were Tesla's first attempts at building radio-frequency generating apparatus. He quickly realized that the frequencies developed were not high enough to be useful, and soon afterwards, he built the forerunners of what are now the nefariously electrifying, though very useful, Tesla Coils. These devices were able to generate radio frequencies up to several megahertz. By far the most spectacular Tesla Coil system was built by Tesla himself at Colorado Springs in 1899. As the Tesla Coil is a resonant auto-transformer, its principle application is in modern electronics. The basic circuit that Tesla developed used transformers and capacitors to resonantly tune the primary and secondary circuits to each other. Since the primary and secondary windings frequently shared a common current (depending upon the design and application), this arrangement is called an *auto-transformer*. These resonant auto-transformers are used as high-voltage power supplies in television sets, while radios use the basic circuit in matching radio-frequency circuits.

A couple other practical inventions serve to show the range of Tesla's genius. Shortly after leaving the employ of Edison, he developed an automatic-feeding arc light. It was marketed and its success helped him to meet Westinghouse. Most people are unaware that Tesla built and patented an automobile speedometer (Cheney [1981] 1983, 219).

Prototype Technologies

Probably the broadest range of inventive activity that Nikola Tesla was involved with were the Prototype Technologies. In researching a broad range of Tesla's developments and inventions, I found that most were never placed on the market by Tesla. For a variety of reasons Tesla couldn't gain sufficient capitalization. Actually, he wasn't too interested in marketing some of his inventions; furthermore, the support technologies of his day were often too backward to allow him his desired goals. Tesla was interested in everything, and he dabbled with all kinds of engineering disciplines. Whereas Edison would experiment with something only if he knew that there was a market ready for the invention, Tesla tended to experiment first and look for a market later.

There are many good examples of inventions that Tesla built to serve some useful application for himself; yet, it was others who came after Tesla that found a marketable product in what he had done first. Artificial lighting in the form of fluorescent tubes, neon lights, etc are good examples. Shortly after Tesla started building his high-voltage, high-frequency machines, he found that rarefied gases inside glass tubes emitted light when electrically excited. It's curious to me that he never sought to market these new lighting systems. But hindsight is perfect they say. The most novel of Tesla's artificial lights was the carbon-button lamp: Inside a mostly-evacuated glass bulb was a small disk of hard carbon suspended by a wire. When the lamp was placed inside a strong high-voltage, high-frequency field, the ionized gas inside would oscillate with the field. This created friction with the carbon, thereby heating it up to incandescence. Witnesses observed that the light emitted was pure white. But for Tesla, the carbon-button lamp wasn't a grand enough development to consider selling. Maybe Tesla was aware of some formidable problems with it as a viable product; but if that is so, he never told anybody. Tesla's demonstrations with lighting tubes in the early 1890's were the triggers for other engineers to duplicate the work. What we now use as fluorescent lights were developed by D. McFarlane Moore at Sylvania, based on his observations of Tesla's demonstrations at the 1893 Columbian Exposition in Chicago. There are numerous ways that tube lights with rarefied gas are excited to emit light. Tesla used both high-voltage transformers and radio-frequency fields to operate his rarefied gas (e.g., neon, mercury vapor, air) lights. Yet, some of Tesla's artificial lights have never been developed outside his laboratories. In several instances, the light is well documented, such as the carbon-button lamp, yet has not found commercial or consumer use today (Cheney [1981] 1983, 90; Hunt and Draper [1964] 1981, 89; O'Neill [n.d.] 1981, 46–49, 146–149).

Some of the more dynamic opinions for or against Tesla were formed during Tesla's involvement with x rays. Most of the early x-ray research was done around 1890, involving a group of about a dozen scientists on both sides of the Atlantic. X-ray effects were being discovered and studied by these scientists for nearly a decade, especially as higher and higher voltages were available. Although Wilhelm Roentgen is credited with the discovery of x radiation, Tesla and several other scientists were trailing Roentgen's research by only a matter of weeks, or even days. As noted in the video teaching series *The Mechanical Universe* (Goodstein 1985, part 1), the scientist or explorer gets the credit for a discovery because he identifies and documents the discovery so that it never needs to be rediscovered. The example used in *Mechanical Universe* to clarify this discovery/credit phenomena is that of Columbus in 1492. While settlers, raiders, fishing fleets, and other explorers from Europe had encountered the Americas in previous centuries, it is to Columbus that we credit the discovery of America because no other Europeans needed to rediscover it. The same phenomena generally holds true for pioneering scientists and engineers. Roentgen

consolidated his observations and experiments, and he theorized the nature of what he called "X Radiation." His announcement, in January 1890, touched off parallel research but also claims of prior discovery. Tesla acknowledged the value of Roentgen's work and claims, even though he had already exceeded the sophistication of Roentgen's experiments. Tesla didn't claim prior discovery though, since, by his own admission, he didn't recognize the significance of his results (Cheney [1981] 1983, 101).

However, Michael Pupin did not react to Roentgen's claims as magnanimously as Tesla had. Pupin was also a Serbian immigrant, having arrived in America fifteen years before Tesla. He was an early supporter of Tesla's alternating current scheme. In fact, Pupin jeopardized his faculty position at the then recently-formed Columbia University electrical engineering college by breaking with the vested DC interests there. The question of who really discovered x rays caused Pupin to diverge from Tesla. Ultimately, a number of other differences arose between Pupin and Tesla, which led Pupin to side with Marconi against Tesla's claim to being the originator of radio. Pupin asserted to have discovered x radiation before Roentgen. He said that he had x ray shadow photographs made at the same time as Roentgen's. That may very well be, but Roentgen published his results two weeks before Pupin. Now Tesla didn't endear himself to Pupin any by producing two-year old x-ray photographs of his friend Mark Twain. No matter which way Pupin turned to show that his work predated Roentgen's, Tesla could easily show that his own experiments not only predated Pupin's but that they were much more advanced. Tesla had undermined every one of Pupin's claims about having first discovered x rays and their properties (Cheney [1981] 1983, 100-101). Nearly every research laboratory on both continents, it seems, jumped into x-ray research during the ensuing years. Tesla's experiments led him to speculate that x rays were particles. The x-ray experiments on biological organisms (including people) led him to warn of their detrimental effects on living tissue. In 1897, Tesla was the first to call for some regulation of exposure and uses of x rays. So Tesla's contribution to the x-ray industry was in the form of introducing safety measures, not in pioneering x-ray machines or realizing a profit from his own research (Cheney [1981] 1983, 105).

Tesla's radio pioneering—"fatherhood" and fiasco

The wireless—or what we now call radio—was one of Tesla's more controversial projects. By the time Tesla arrived in America, many scientists had been working with the theory of electromagnetism: The mathematical basis for which had been codified by James Clark Maxwell about twenty-five years earlier. And at about the same time that Tesla decided to study the wireless, Heinrich Hertz, in 1888, demonstrated that a spark transmitter could induce a spark in a nearby receiver. Tesla determined that an electro-mechanical, high-frequency alternator would be the basis for his radio technology. These devices were built during the early years that Tesla was in America. It wasn't long, however, before Tesla decided that the frequencies developed by these machines were too low to be useful. This challenged him to conceive the quintessential contribution to radio technology—the so-called "tank circuit." This circuit is a parallel arrangement of capacitor and inductor to form a resonant, high-Q circuit. Tesla went on to use this circuit, fed by other resonant transformer circuits, to generate for the first time manmade high-frequency electromagnetic energy. Some of the basic alternators of the time could generate up to around 30kHz, but by feeding the tank circuits with those alternators, Tesla could achieve frequencies up to ten times greater.

During the early years that Tesla spent lecturing to scientists and engineers about the

value of AC, he described and demonstrated his wireless apparatus. He also published his ideas, drawings, and possible uses for the emerging technology. Fully intending to develop the wireless as a marketable, profitable system, Tesla centralized his research in his New York laboratory. It appeared that Tesla's scheme of combining the wireless as a means of transmitting information (by telegraphy, voice, etc) and as a means of transmitting electric power was progressing quickly; he expected to see fruition within a decade. Accounts of the various activities (including the wireless) in the New York laboratory captured public fancy. It was during this time that Tesla perfected his now famous Tesla Coils, which utilize the tank circuits. However, independent of Tesla, enough scientists around the world were working with the same technology based on Tesla's, Maxwell's, and Hertz's earlier developments. The race was on, and Tesla was the odds-on favorite to win. Then, in 1895, Tesla's lead was lost because of a disastrous fire that destroyed his New York laboratory. It took two years of recovery for Tesla to file just several patents for wireless technology. In any case, there was a philosophic chasm between Tesla and the other radio investigators around the world that left him in isolation.

This isolation ultimately lost the race for Tesla, but he didn't go down without a fight. While other researchers were perfecting wireless technology for information transmission, Tesla, on the other hand, tied-in his scheme of electric power transmission with information transmission. This was apparently the tactical error which cost him any supremacy in radio technology. By not seeing the transmission of information as the immediate goal of wireless technology, Tesla had to spend greater amounts of time and money to pursue his research, allowing other scientists and engineers to catch up to and then surpass his state of research. As the description of the historical events will shortly demonstrate, Tesla's stubborn insistence that all wireless technology be able to transmit electric power placed him outside the mainstream of prevailing scientific and engineering thought about the uses of wireless technology. Though Tesla eventually won the court battle to prove his priority of investigation, he lost the war for the fortunes of radio.

Tesla was quite sure of his preeminence in wireless technology as he arrived in Colorado Springs, Colorado in May of 1899. Most of what developed from the Colorado Springs experiments are better discussed later, but his experiments in wireless transmission of information and electric power are properly dealt with here. The Colorado Springs laboratory housed the largest Tesla Coil built until Robert Golka's experiments during the late 1970's. "The remaining space was filled with dynamos, electric wires, switches, generators, motors, and every conceivable gadget known to electricians" write Hunt and Draper ([1964] 1981, 114). Tesla had maintained for some time that the earth was an efficient conductor, suitable for all-points transmission of electric power. His tests, in early July, with the giant Tesla Coil (which he called his "Magnifying Transmitter") seemed to support his theory of the conducting earth. Now, ever since I first heard of Tesla, I was told that Tesla succeeded in transmitting power efficiently over a distance of about 20 miles, and lighting up a 20kW load (or variations thereof). The following is a typical example: "In actuality, he lighted more than 200 incandescent lamps 26 miles away" (McBirnie 1987, 2). So, it would seem that Tesla successfully tied together the transmission of information and electric power from one station. However, it's time to burst the apocryphal bubble that supports this legend. In all my research of this matter, I have not find any definitive evidence to support the assertion that Tesla had in fact performed this demonstration. Cheney ([1981] 1983, 148–149) offers the best explanation of what may have actually happened:

> It has been reported by various writers that during his power transmission experiments in Colorado, Tesla succeeded in lighting up a bank of two hundred 50-watt incandescent lamps wirelessly, at a distance of twenty-six miles from his station. In his own writings, however, no such claim was ever made, nor is there other evidence that he did so.

Though Tesla thought that he had passed a current around the earth capable of lighting 200 incandescent lights.

It is likely that Tesla really didn't demonstrate the viability of transmitting power and information while he was in Colorado. Furthermore, he didn't produce any new marketable inventions from the Colorado experiments. But his letters to financiers and entrepreneurs promised fortunes from the wireless technology based on these experiments. Unfortunately for Tesla, the rest of the pioneering radio engineers had caught up with him. As he was seeking funds for his "World Broadcasting" center, Guglielmo Marconi made world headlines by wirelessly transmitting telegraphy across the Atlantic in December 1901. But Marconi used Tesla's descriptions of the wireless published during the early 1890's, which the courts later decided was an infringement on the patents filed by Tesla in 1897. In other words, Marconi used Tesla's patented designs to steal Tesla's preeminence in wireless technology. Nevertheless, Marconi does deserve credit for developing a practical wireless system—a system which Tesla wouldn't have bothered to work-out the details. Even when radio broadcasting became widespread some two decades later, Tesla still insisted that his system, fully developed, would have been superior. Convinced that Marconi's feat was only an insignificant stunt, and having finally managed to gain financial backing, Tesla embarked on the second phase of his grand plan. But Tesla had compromised by accepting the backing of J.P. Morgan—the man he distrusted most in business dealings.

In his hurry to compete with other researchers, Tesla was almost frantic while building the Wardenclyff transmitter site. He insisted that the rash of successful wireless demonstrations following Marconi was superfluous and misdirected at best. Wardenclyff was to show the world what the proper use of wireless technology should be, and all other wireless experimenters would therefore have to fall in line. But Tesla was hampered by the poor flow of incoming money, and he had to make many compromises in its construction. Most of the work was done over a two year period, but still the project wasn't finished. For a number of years following, Tesla tried to get Wardenclyff operational, but more and more, assistants left and creditors demanded their due. After learning that no more money would come from the Morgans, Tesla fired up the transmitter that night, giving New Yorkers a grand display in what was, ironically, Wardenclyff's death knell. For several more years it stood mute on Long Island, until, at the onset of World War I, it was torn down. In the meantime, wireless systems had proliferated all over the world. Defeated, Tesla never again participated in wireless technology.

The balanced view of Tesla's work on what we now know as radio technology acknowledges his pioneering ideas, yet notes that he spent too much time and money pursuing projects that never yielded the desired results or fortunes for Tesla. Even while Tesla strove to get Wardenclyff operational, Lee DeForest invented the triode vacuum tube amplifier (used for voice modulation). Quite sensitive regenerative radios were beginning to be used around World War I. Yet, Tesla still thought in terms of telegraphy and mega-power levels. If Tesla had spent his time pursuing low-power, narrow-band wireless applications, who knows what form the early radio industry would have taken? Posthumously, Tesla won a U.S. Supreme Court decision against Marconi and others, essentially declaring Tesla the

"father" of radio. But it was some forty years too late for Tesla. Even if the decision had occurred on a timely basis, the Serbian-born genius would have pursued his own goals all the more furiously, even though it was already apparent that the world wanted something else from the fruits of his genius.

From turbines to "atom-smashers"

Conceived originally by Tesla when he was four, the bladeless turbine was to be his new fortune after World War I. About 1890, Tesla constructed several prototypes while in his first laboratory in New York. He didn't take this project too seriously until, in 1906, he built a ten-pound model that developed ten horsepower. After the Wardenclyff fiasco, Tesla returned to this project to help him overcome his depression. Predictably, he began to solicit new investors. The greatest financial success that the turbine brought to Tesla during this period was in prewar Europe. This invention had the ill-fated timing of gaining interest from the German navy. Despite Tesla having offered the device to the U.S. war industries first, his U.S. backers wanted to pull the financial rug out from under him. Tesla pleaded with J.P. Morgan, Jr. to maintain the funding. However, the onset of war quenched any hopes that the turbine would succeed in Europe. By 1915, an industrial model was financed for demonstration at the steam-electric plant at Waterside Station in New York. This turbine was to generate 200 horsepower. From the start, Tesla had friction with the Edison engineers that worked there. Other problems developed with the turbine operating at industrial capacity. These problems never would have exhibited themselves with the prototype models because they were not under the degree of stress developed by the industrial model. It turned out that the state of metallurgy and alloy construction early in this century could never have built a strong but light-weight alloy for the turbine that could withstand the 35,000 rpm stresses. The necessary alloys for the turbine were not available until World War II, but once again, this was too late for Tesla. Cheney ([1981] 1983, 193) notes that the Office of Naval Research in Washington, D.C., frequently receives proposals for research and development based on the Tesla turbine. These proposals will invariably be rejected until one of them offers a ten-fold improvement over the current Parsons turbine.

To be fair, Cheney cites some 1980's university scientists and alternative-energy firms that are seriously examining uses of the bladeless turbine for solutions to their own problems: Warren Rice of Arizona State University is cited by Cheney as the premier expert on Tesla's bladeless turbine and on fluid mechanics. Some incidental patents were issued to Tesla in 1916 concerning the turbine. One of them describes a valvular conduit mechanism. This device is, in reality, a fluid diode: it allows fluids to flow through it in only one direction. This device has found widespread use throughout industries dependent upon fluid dynamics, yet Tesla never earned a profit from its uses (Cheney [1981] 1383, 199 et passim). By about 1920, the continued development of the turbine was completely abandoned. Now, the reader may have noticed that I haven't attempted to describe how the bladeless turbine works. Even though I examined a copy of the patent and other sources, I couldn't figure out which were the moving parts (Tesla patent #1,061,206 [1913] 51–62).

A minor example of Tesla's Prototype Technologies is that of the *Tesla Nitrates Company.* The technique of extracting nitrogen from the air to make fertilizer was originally published in Century magazine in 1900. During World War I, Tesla formed a company to profit from this process. However, it proved to be economically unfeasible, and he made no further attempts to revive the technique (Cheney [1981] 1983, 219). A similar fate occurred to Tesla's Solar Engine: In 1898, he announced a way of producing electricity from a solar-

heated steam turbine—a remarkably modern idea. The idea was good, but its efficiency was no match for the conventional steam producing methods (Cheney [1981] 1983, 119–120). Cheney ([1981] 1983, 119 et passim) cites about sixty similar examples.

Some unfortunate terminology seems to be used by many Tesla biographers, and much of it relates to Tesla's experiments with vacuum tubes during the early 1890's. Several misnomers applied to Tesla's innovations include the "atom-smasher" (really just the carbon-button lamp), the point "electron microscope" (really just an electron stream in a vacuum tube), and the "cyclotron" (really just an ion stream in a vacuum tube) (McBirnie 1987, 3 et passim; O'Neill [n.d.] 1981, 152 et passim; Cheney [1981] 1983, 59 et passim; Hunt and Draper [1964] 1981, 88 et passim). While some credence may be given to Tesla for discovering some of the principles underlying these high-tech devices, he didn't develop his apparatus into the recognized modern ones.

My final example is one of the more entertaining of Tesla's successful but unmarketable developments. There were two era's in Tesla's life where he observed ball lightning. As a young boy in Croatia, and during the experiments in Colorado, Tesla had frequent occasion to observe natural ball lightning. The apparatus in Colorado was sufficient for Tesla to produce ball lightning artificially. While nothing came of those experiments during Tesla's life, a new interest in them developed during the last twenty years for nuclear fusion research. During the late 1970's, Robert Golka duplicated the Colorado Tesla Coil in Wendover, Utah to investigate the possibility that a low-energy plasma such as ball lightning could be useful in containing a fusion reaction. As of this writing, no definitive results have come from this line of research.

Speculative Technologies

This is the one area of any discussion about Tesla that can elicit the most fringe or mystical beliefs and self-serving opinions from people. This category embraces a wide range of Tesla's writings for public reading or otherwise about technological utopias. Tesla attempted to motivate new inventions that didn't even make it to the prototype stage, and his unsolicited letters to companies, offering solutions to an array of engineering problems, were not always welcome. Tesla's public image during his active career—and later—is in part due to the most common type of journalism of his day: It was the era of yellow journalism and sensationalism. "His own extravagant statements were grist for the mill of every sensational journalist" and "Tesla has been the victim of more forged interviews and sensational articles appearing without authority than any other inventor" report Hunt and Draper ([1964] 1981, 183) from an 1896 edition of the New York Sun. Some things that Tesla speculated about enjoyed public fancy, and in at least one case, came true. About 1890, Tesla reported that his 60-cycle frequency standard used in AC power was so stable that a synchronous motor, appropriately geared down, could run an accurate clock (Cheney [1981] 1983, 61). Tesla never built such a clock as far as I can determine, but before his death, *telechron* (brandname) movements were the operational part of all analog, motor-driven, AC-operated clocks.

VTOLs, death rays, and "scalar electromagnetics"

Another early speculation of Tesla's that saw subsequent fruition, was the heavier-than-air flying machine. Tesla had designed a variety of aircraft prior to the Wright brothers' successful flight in 1903. He even had one aircraft plan that he called the "Aeromobile," which was a combination car and airplane. Post Wright brothers, Tesla maintained that then-prevailing designs for airframes were always inefficient. One such advanced plan of

Tesla's was patented in 1927, a "boxlike flivver airplane" (Cheney [1981] 1983, 198). This aircraft is essentially a Vertical-Take-Off-and-Landing (VTOL) type. It was sort of a single-seated helicopter no larger than a small car. The magic property of the aircraft, which Cheney calls a "flying stove," was to be Tesla's turbine used as the motive source. But construction of even a prototype was never considered. As with a great many of Tesla's ideas, it resurfaces every so often in the popular, scientific, or engineering literature. As recently as the writing of this series, the "flying stove" concept reappeared in the September 1987 edition of Popular Science magazine. "The excellent article *X-Wing and Tilt-Rotor: Hybrid Aircraft That Get Up and Go* [July] brought to mind Nikola Tesla's 1927 patent for a vertical-takeoff-and-landing apparatus ... Like many of Tesla's ideas, it preceded the technology that brought it to fruition by many years. —Harry Goldman" (Goldman 1987, 4). During the 1950's, Convair built and tested the *XFY-1* VTOL aircraft. It was based on the concept of the "flying stove." While they found that the *XFY-1*, nicknamed the "Pogo," experienced stability problems, needed a more powerful engine than was feasible for a small frame, and afforded the pilot a blind view of the landings, the overall idea of VTOL was feasible. Even though it was not the same machine as Tesla's—and as such, it would be unfair to compare the Pogo identically to the flying stove—the Pogo demonstrated some problems with the "flying stove" concept that Tesla could not have been aware of (Cheney [1981] 1983, 201–203).

One of the more common of Tesla's ideas that get recycled into public awareness every so often is the so-called "death ray." I will cite one such occasion during his life. Commentary on the death ray is appropriate, as the Strategic Defense technologies sought after these days allows Tesla's ideas on this to resurface in the public mind. In 1924, newspapers announced that a death ray capable of shooting down aircraft had been invented by an Englishman—a German a Russian (take your pick). Cheney cites a newspaper in Colorado that rebuked those other news reports by pointing out that Tesla had invented such a device while in Colorado Springs in 1899. Yet, Tesla was "unusually noncommittal on the matter" (Cheney [1981] 1983, 235). Another example of Tesla's death ray speculations that captured public fancy was that of the "teleforce." On the occasion of his 81st birthday (1937), journalists heard Tesla tell of his plan to protect the U.S. coastlines with the teleforce invention. He maintained that it only needed a little more work to become operational (Cheney [1981] 1983, 255–256).

On Tesla's 75th birthday, he released plans for a geothermal steam plant, and a sea-water thermal-layer-electricity-production process. Both of these ideas have found merit in experimental research seeking alternative energy sources during the past two decades. To whatever extent that these systems are ultimately successful, we can acknowledge Tesla's visionary genius. But in no way can we say that he actually invented the alternative energy processes that may finally develop. Consider an alternative example to help clarify my point. In both the television series documentaries by Arthur C. Clarke (1983 and 1985) produced in the mid-1980's, the introductory narrative of each program gives Clarke the credit for inventing the communications satellite. Now, Clarke did write a science-fiction story in 1947 describing how such a communications network might work. It was precise in operational details, including the idea of placing the satellites in geosynchronous orbit. But Clarke did not design, build, and send up a satellite himself. The narrator's comments leave out the myriad of theoretical and applied engineering disciplines that it actually took to get the first satellites in orbit. It was major corporate entities such as RCA that placed geosynchronous communication satellites in operation during the 1970's that also share with Clark and these engineers the credit for the communications satellite.

Tesla's keen interest in flying again led him to approach the U.S. War department just prior to World War I about the construction of a remote-control dirigible that could fire torpedoes. As far as I can determine, this was the closest that Tesla ever got to actually building a prototype of one of his aircraft plans. Even with the help of John Jays Hammond, Jr., a young pioneering radio engineer, Tesla couldn't get more than a casual interest from the wartime government bureaucracy (Cheney [1981] 1983, 193). This is an example of an unsolicited innovation that Tesla promoted to a company, individual, or government. Another one was his plan to degasify copper. About 1933, he approached Dr. A.J. Phillips of the American Smelting and Refining Company (ASARCO) with a plan to degasify (or remove bubbles from) copper during the purification process. As Cheney ([1981] 1983, 248) writes, "Tesla was perfectly capable of going off half-cocked, as his forays into metallurgy (as his dissatisfaction with the metals available for use in his turbine) suggest."

One of the more amusing Tesla speculations goes back to his experiments with vacuum tubes during the early 1890's. He built a tube which contained a visible ion stream. Placing it near electric or magnetic fields would deflect the beam into all manner of interesting shapes. Tesla suggested that it would detect biological forms of life, become a medical diagnostic tool, and even detect the presence of ghosts. So far, the closest that Tesla's speculations on these matters have shown any results, have been with Kirlian photography (Cheney [1981] 1983, 93–94).

There is one other speculation on the part of Tesla that deserves mention. While in Colorado, Tesla claimed to have discovered a special class of electromagnetic phenomena which he labeled "scalar electromagnetics." For purposes of this part of the article, I don't need to go into detail of what scalar electromagnetic energies are, save that Tesla stated that such energy could transcend the speed of light—he did admitted however that this stuff was different than your run-of-the-mill transverse electromagnetic phenomena. He believed that communication with extra-terrestrial civilizations (especially with Mars) was possible by using the scalar electromagnetics devices. Tesla also believed that this class of energy could be harnessed to deliver any amount of useful electric power to anywhere in the world. Some recent allegations are that the Russians have harnessed this technology to trigger earthquakes; control weather; destroy ships, aircraft, and spacecraft including the ill-fated Challenger space shuttle (McBirnie 1987, 1 ff). This area of discussion is better dealt with in the third part in the series of articles.

Tesla's rock-and-roll mania

My final example of the Speculative Technologies involves the resonating earth. There are numerous times in Tesla's career where he speculated about destroying the earth by using mechanical resonant processes. My favorite episode concerning Tesla's mechanical resonance "inventions" occurred in 1898. Some parts of it strike me as apocryphal, but there appears to be one specific incident that did happen. One day Tesla tested a "tiny" (Cheney's word) electromechanical oscillator by clamping it to an iron pillar in the lab. With scientific curiosity, he proceeded to observe the effects of resonance as it became louder, various objects in the room would vibrate resonantly as the frequency of the device was changed. Unfortunately, Tesla was unaware that the vibrations were being transmitted through the building into the surrounding block. Cheney writes, "Buildings began to shake, windows shattered, and citizens poured onto the streets in the nearby Italian and Chinese neighborhoods. At Police Headquarters on Mulberry Street, where Tesla was already regarded with suspicion, it soon became apparent that no other part of the city was having an earthquake." She con-

tinues, "Two officers were dispatched posthaste to check on the mad inventor. The latter, unaware of the shambles occurring all around his building...." (Cheney [1981] 1983, 115). Tesla shut down the experiment just as the officers burst into his lab. He explained that although he had to (violently) terminate the experiment just then, he would welcome them back later that evening for another demonstration. "When reporters arrived, he blandly told them that he could destroy the Brooklyn Bridge in a matter of minutes if he felt like it," writes Cheney ([1981] 1983, 116). I heard the same story while in high school many years ago. But the physics teacher related to me that it was a five-ton platform in the basement that Tesla set oscillating. This is more plausible to me than Tesla's using a wind-up "chatter toy" as Cheney seems to be describing. It's the ratio of several orders of magnitude of horsepower needed by an oscillator to move a very heavy platform over a "tiny" oscillator driving against an iron pillar that makes the earlier version of the two stories more plausible to me. Cheney ([1981] 1983, 116) quotes Tesla in an interview with a reporter, Allan L. Benson, on one other episode. She sets-up the situation first:

> "...he put the little vibrator in his coat pocket and went out to hunt a half-built steel building. Finding one in the Wall Street district, ten stories high, with nothing up but the steelwork, he clamped the vibrator to one of the beams. "In a few minutes, ... I could feel the beam trembling. Gradually the trembling increased in intensity and extended throughout the whole great mass of steel. Finally, the structure began to creak and weave, and the steelworkers came to the ground panic-stricken, believing that there had been an earthquake."

Tesla continued on with the interview by declaring "that he could split the Earth in the same way—split it as a boy would split an apple—and forever end the career of man'. Earth's vibrations, he went on, have a periodicity of about one hour and forty-nine minutes." I find this story about the building under construction too hard to believe. The same applies to his alleged comment about the earth. What we are dealing with here is the physical property of resonance, examples of which are found in electric circuits, and with acoustic instruments. The physical resonance that Tesla was referring to was in the area of acoustic instruments: A taut string can be plucked to produce a musical note. Technically, while the string is ringing out its note, it is resonating. Any object of can be periodically "kicked" by a variable frequency "kicker" (i.e., generator) and tuned until the tested object begins to harmonize with the generator. The object then begins to resonate. Short of performing an actual test, determining whether or not an object will vibrate strongly at resonance, even under the best possible conditions, can be a very complex matter. A short, but technical, explanation of resonance should help to clarify things a bit. The best explanation of physical resonance that I have ever seen is a segment entitled "Resonance" from the television series *The Mechanical Universe*. I will abbreviate the facts presented in this segment to show why Tesla understood resonance, yet related dubious accounts to Benson.

Let a_0 be the amplitude of a "driving machine"—such as Tesla's building "rocker"—and driven at frequency ω_0; and let A be the magnitude of vibration of the oscillator, such as Tesla's laboratory building; then the variation of oscillation is given by:

$$A \sin \omega_0 t = \frac{a_0}{\omega_0^2 - \omega_r^2 + df} \sin \omega_0 t$$

As the generator frequency ω_0 approaches the resonance frequency ω_r of the object, the vibration approaches its maximum. The df, or *damping function*, term is the fly-in-the-

ointment for Tesla: It is determined by the physical circumstances that the object is found in. For example, a taut string that strongly resonates may not vibrate at all if placed under water. The function, when properly used, specifies a threshold magnitude necessary for the object to finally achieve resonance. It is that damping function, in my opinion, that disturbs Tesla's account of the building. A pocketsized, variable-frequency generator that Tesla is supposed to have used, could not have delivered sufficient horsepower into the building to start a resonance response. The minute energy would have been damped-out before it did anything "useful." As the *Mechanical Universe* segment relates, any building between five and forty stories is susceptible to resonant only at earthquake frequencies—i.e., between .1 to 25 Hertz, including the significant harmonics. The ten-story building that Tesla tested would have had to experienced impulses from the generator at those frequencies. And here's the rub, the energy delivered into the building by the generator would have to be of the same magnitude of energy as would be delivered by an earthquake to actually cause the building to resonate.

As for bringing down the Brooklyn Bridge, let's examine an actual example when a bridge was destroyed by resonance. On November 7, 1940, the Tacoma Narrows bridge at Tacoma, Washington collapsed from winds in excess of forty miles-an-hour. The energy delivered into the bridge structure by the cross-winds was sufficient to make the bridge oscillate violently. As the wind can be mathematically described as high-amplitude (and therefore high-energy) "pink noise" (i.e., a frequency-dependent energy density distribution curve), the frequencies within the noise band that would set the bridge into resonance would be supplied by the wind in sufficient quantity to overcome the bridge's natural damping function. Based on what actually happened, it's apparent that the wind had to supply an incredible amount of energy into the bridge to cause its destruction. This energy level is probably ten orders of magnitude over what Tesla's little generator could supply. Historically, this incident has been the only such example of a bridge collapse due to resonance. All modern bridges are designed to damp-out destructive resonance energies.

Finally, I believe that splitting the earth apart by some Tesla resonance mechanism is just about impossible. Different frequencies propagate through the earth in different layers, i.e., are ducted around the crust, mantle, etc at different rates. Tesla thought of the earth as a simple construct—a single homogenous mass. He obviously didn't stop to think of the specific order of magnitude of energy necessary to overcome the natural damping factors within the earth. Tesla thought he could do it with a ton of dynamite exploded on the same site every hour and forty-nine minutes. I maintain (without actually performing the calculations) that it would take an impact of something the size of a cometary body striking the same place on the earth at a rate of whatever the fundamental resonant frequency of the earth turns out to be.

Conclusion

The purpose of this article was to present the real accomplishments of Tesla—especially his enormous contributions to the development of cost-effective AC technology—and to help the reader develop a sense of how to interpret Tesla's works and writings within their historical context. To simplify my presentation, I classified his inventions and innovations into three easy-to-manage categories.

The middle ground of the classification scheme which are the Prototype Technologies shows Tesla's vigor and visionary thinking that ultimately yielded fruit for others, but seemed to always evade renewed fortunes for him. Some of this was due to Tesla's inability

to gauge the marketability of his "lesser" developments. Another restriction Tesla constantly contended with were the various financial and business problems that resulted from his own inability to properly plan and insure his assets and documentation. The first and foremost category of accomplishment that I defined are the Manifested Technologies. These are the most visible, demonstrable, and successful of Tesla's works. Whenever one wants to talk of the "real" Tesla inventions it's somehow much more fascinating and relevant to investigate the tangible remainders of Tesla technologies. The analysis of the rationale and intrigue surrounding the creation of the modern AC power grid is to me much more interesting than speculating on what might have been or what the Russians might be doing with Tesla technologies.

From this article and the previous one, the foundation has now been laid to examine the legacy, mysticism, and idiosyncrasies of Tesla. His technical accomplishments invite many more questions about the ripple effects he left in the vast modern sea of technology. And some of the post World War II political opinions that generated anti-Tesla writings will be examined in the coming article. Tesla continues to fascinate us; he's a model of excellence in character, determination, and inventiveness. Despite significant problems with achieving his goals, Nikola Tesla has, to this day, few rivals to his deep visionary genius.

References

Cheney, M. 1981. *Tesla: Man out of Time*. Reprint. New York: Dell Publishing Co. 1983.

Clarke, A.C. 1985. *Arthur C. Clarke's World of Mysterious Powers*. [12-Part Video Series (30 min. each). Each documentary segment examines a different unusual phenomenon.] Production: Yorkshire Television, LTD.

Goldman, H. 1987. Tesla's First Again. *Popular Science Magazine*. New York: Times Mirrors Magazines, INC.

Goodstein, D.L. 1985. *The Mechanical Universe*. [52-part Video Series (30 min. each)—Introductory Physics Course, College Level.] Pasadena, CA: California Institute of Technology.

Hunt, I. and W.W. Draper. 1964. *Lightning in His Hand: The Story of Nikola Tesla*. Reprint. Clackamas, Oregon: Emissary Publications (formerly Omni Publications, Hawthorne CA) 1981.

McBirnie, W. S. 1987. *The Amazing Story of Nikola Tesla: America's Forgotten Genius*. (Publication #816.) Glendale, California: United Community Churches of America.

Nikola Tesla: The Scientific Genius, 1856–1943; This Planets Most Outstanding Individual. No editor or date given. A compilation of articles and patents.

O'Neill, J.J. [n.d.] *Prodigal Genius: The life of Nikola Tesla–inventor extraordinary*. Reprint. Hollywood, CA: Angriff Press. 1981.

THE TRUE WIRELESS

by Nikola Tesla

Previous Article Next Article

Electrical Experimenter, May 1919

In this remarkable and complete story of his discovery of the "True Wireless" and the principles upon which transmission and reception, even in the present day systems, are based, Dr. Nikola Tesla shows us that he is indeed the "Father of the Wireless." To him the Hertz wave theory is a delusion; it looks sound from certain angles, but the facts tend to prove that it is hollow and empty. He convinces us that the real Hertz waves are blotted out after they have traveled but a short distance from the sender. It follows, therefore, that the measured antenna current is no indication of the effect, because only a small part of it is effective at a distance. The limited activity of pure Hertz wave transmission and reception is here clearly explained, besides showing definitely that in spite of themselves, the radio engineers of today are employing the original Tesla tuned oscillatory system. He shows by examples with different forms of aerials that the signals picked up by the instruments must actually be induced by earth currents—not etheric space waves. Tesla also disproves the "Heaviside layer" theory from his personal observations and tests. EDITOR.

Ever since the announcement of Maxwell's electro-magnetic theory scientific investigators all the world over had been bent on its experimental verification. They were convinced that it would be done and lived in an atmosphere of eager expectancy, unusually favorable to the reception of any evidence to this end. No wonder then that the publication of Dr. Heinrich Hertz's results caused a thrill as had scarcely ever been experienced before. At that time I was in the midst of pressing work in connection with the commercial introduction of my system of power transmission, but, nevertheless, caught the fire of enthusiasm and fairly burned with desire to behold the miracle with my own eyes. Accordingly, as soon as I had freed myself of these imperative duties and resumed research work in my laboratory on Grand Street, New York, I began, parallel with high frequency alternators, the construction of several forms of apparatus with the object of exploring the field opened up by Dr. Hertz. Recognizing the limitations of the devices he had employed, I concentrated my attention on the production of a powerful induction coil but made no notable progress until a happy inspiration led me to the invention of the oscillation transformer. In the latter part of 1891 I was already so far advanced in the development of this new principle that I had at my disposal means vastly superior to those of the German physicist. All my previous efforts with Rhumkorf coils had left me unconvinced, and in order to settle my doubts I went over the whole ground once more, very carefully, with these improved appliances. Similar phenomena were noted, greatly magnified in intensity, but they were susceptible of a different and more plausible explanation. I considered this so important that in 1892 I went to Bonn, Germany, to confer with Dr. Hertz in regard to my observations. He seemed disappointed to such a degree that I regretted my trip and parted from him sorrowfully. During the succeeding years I made numerous experiments with the same object, but the results were uniformly negative. In 1900, however, after I had evolved a wireless transmitter which enabled me to obtain electro-magnetic activities of many millions of horse-power, I made a last desperate attempt to prove that the disturbances emanating from the oscillator were ether vibrations akin to those of light, but met again with utter failure. For more than eighteen years I have been reading treatises, reports of scientific transactions, and articles on Hertz-wave telegraphy, to keep myself informed, but they have always imprest me like works of fiction.

The history of science shows that theories are perishable. With every new truth that is revealed we get a better understanding of Nature and our conceptions and views are modified. Dr. Hertz did not discover a new principle. He merely gave material support to hypothesis which had been long ago formulated. It was a perfectly well-established fact that a circuit, traversed by a periodic current, emitted some kind of space waves, but we were in ignorance as to their character. He apparently gave an experimental proof that they were transversal vibrations in the ether. Most people look upon this as his great accomplishment. To my mind it seems that his immortal merit was not so much in this as in the focusing of the investigators' attention on the processes taking place in the ambient medium. The Hertz-wave theory, by its fascinating hold on the imagination, has stifled creative effort in the wireless art and retarded it for twenty-five years. But, on the other hand, it is impossible to over-estimate the beneficial effects of the powerful stimulus it has given in many directions.

As regards signaling without wires, the application of these radiations for the purpose was quite obvious. When Dr. Hertz was asked whether such a system would be of practical value, he did not think so, and he was correct in his forecast. The best that might have been expected was a method of communication similar to the heliographic and subject to the same or even greater limitations.

In the spring of 1891 I gave my demonstrations with a high frequency machine before the American Institute of Electrical Engineers at Columbia College, which laid the foundation to a new and far more promising departure. Altho the laws of electrical resonance were well known at that time and my lamented friend, Dr. John Hopkinson, had even indicated their specific application to an alternator in the Proceedings of the Institute of Electrical Engineers, London, Nov.13, 1889, nothing had been done towards the practical use of this knowledge and it is probable that those experiments of mine were the first public exhibition with resonant circuits, more particularly of high frequency. While the spontaneous success of my lecture was due to spectacular features, its chief import was in showing that all kinds of devices could be operated thru a single wire without return. This was the initial step in the

evolution of my wireless system. The idea presented itself to me that it might be possible, under observance of proper conditions of resonance, to transmit electric energy thru the earth, thus dispensing with all artificial conductors. Anyone who might wish to examine impartially the merit of that early suggestion must not view it in the light of present day science. I only need to say that as late as 1893, when I had prepared an elaborate chapter on my wireless system, dwelling on its various instrumentalities and future prospects, Mr. Joseph Wetzler and other friends of mine emphatically protested against its publication on the ground that such idle and far-fetched speculations would injure me in the opinion of conservative business men. So it came that only a small part of what I had intended to say was embodied in my address of that year before the Franklin Institute and National Electric Light Association under the chapter "On Electrical Resonance." This little salvage from the wreck has earned me the title of "Father of the Wireless" from many well-disposed fellow workers, rather than the invention of scores of appliances which have brought wireless transmission within the reach of every young amateur and which, in a time not distant, will lead to undertakings overshadowing in magnitude and importance all past achievements of the engineer.

The popular impression is that my wireless work was begun in 1893, but as a matter of fact I spent the two preceding years in investigations, employing forms of apparatus, some of which were almost like those of today. It was clear to me from the very start that the successful consummation could only be brought about by a number of radical improvements. Suitable high frequency generators and electrical oscillators had first to be produced. The energy of these had to be transformed in effective transmitters and collected at a distance in proper receivers. Such a system would be manifestly circumscribed in its usefulness if all extraneous interference were not prevented and exclusiveness secured. In time, however, I recognized that devices of this kind, to be most effective and efficient, should be designed with due regard to the physical properties of this planet and the electrical conditions obtaining on the same. I will briefly touch upon the salient advances as they were made in the gradual development of the system.

The high frequency alternator employed in my first demonstrations is illustrated in Fig. 1. It comprised a field ring, with 384 pole projections and a disc armature with coils wound in one single layer which were connected in various ways according to requirements. It was an excellent machine for experimental purposes, furnishing sinusoidal currents of from 10,000 to 20,000 cycles per second. The output was comparatively large, due to the fact that as much as 30 amperes per square millimeter could be past thru the coils without injury.

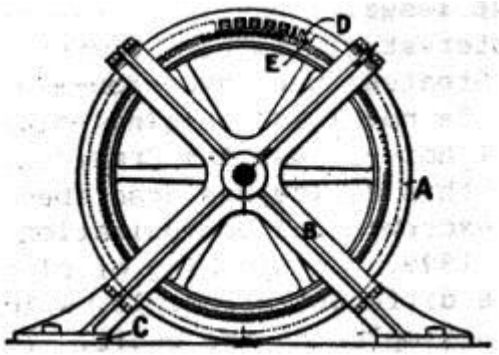

Fig. 1. Alternator of 10.000 Cycles p.s., Capacity 10K.W.. Which Was Employed by Tesla in His First Demonstrations of High Frequency Phenomena Before the American Institute of Electrical Engineers at Columbia College, May 20, 1891.

The diagram in Fig. 2 shows the circuit arrangements as used in my lecture. Resonant conditions were maintained by means of a condenser subdivided into small sections, the finer adjustments being effected by a movable iron core within an inductance coil. Loosely linked with the latter was a high tension secondary which was tuned to the primary.

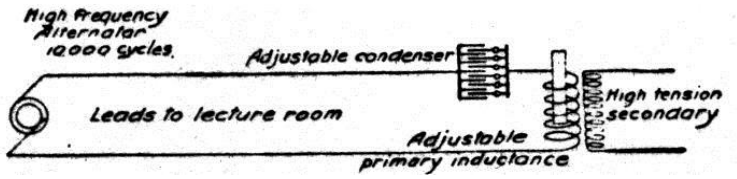

Fig. 2. Diagram Illustrating the Circuit Connections and Tuning Devices Employed by Tesla In His Experimental Demonstrations Before the American Institute of Electrical Engineers With the High Frequency Alternator Shown in Fig. 1.

The operation of devices thru a single wire without return was puzzling at first because of its novelty, but can be readily explained by suitable analogs. For this purpose reference is made to Figs. 3 and 4.

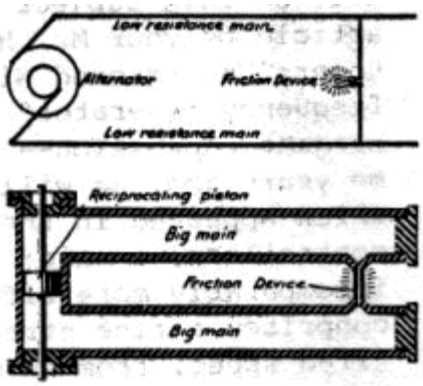

Fig. 3. Electric Transmission Thru Two Wires and Hydraulic Analog.

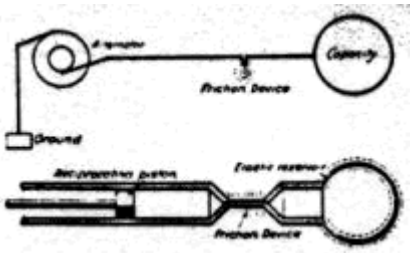

Fig. 4. Electric Transmission Thru a Single Wire Hydraulic Analog.

In the former the low resistance electrical conductors are represented by pipes of large cross section, the alternator by an oscillating piston and the filament of an incandescent lamp by a minute channel connecting the pipes. It will be clear from a glance at the diagram that very slight excursions of the piston would cause the fluid to rush with high velocity thru the small channel and that virtually all the energy of movement would be transformed into heat by friction, similarly to that of the electric current in the lamp filament.

The second diagram will now be self-explanatory. Corresponding to the terminal capacity of the electric system an elastic reservoir is employed which dispenses with the necessity of a return pipe. As the piston oscillates the bag expands and contracts, and the fluid is made to surge thru the restricted passage with great speed, this resulting in the generation of heat as in the incandescent lamp. Theoretically considered, the efficiency of conversion of energy should be the same in both cases.

Granted, then, that an economic system of power transmission thru a single wire is practicable, the question arises how to collect the energy in the receivers. With this object attention is called to Fig. 5, in which a conductor is shown excited by an oscillator joined to it at one end. Evidently, as the periodic impulses pass thru the wire, differences of potential will be created along the same as well as at right angles to it in the surrounding medium and either of these may be usefully applied. Thus at a, a circuit comprising an inductance and capacity is resonantly excited in the transverse, and at b, in the longitudinal sense. At c, energy is collected in a circuit parallel to the conductor but not in contact with it, and again at d, in a circuit which is partly sunk into the conductor and may be, or not, electrically connected to the same. *It is important to keep these typical dispositions in mind, for however the distant actions of the oscillator might be modified thru the immense extent of the globe the principles involved are the same.*

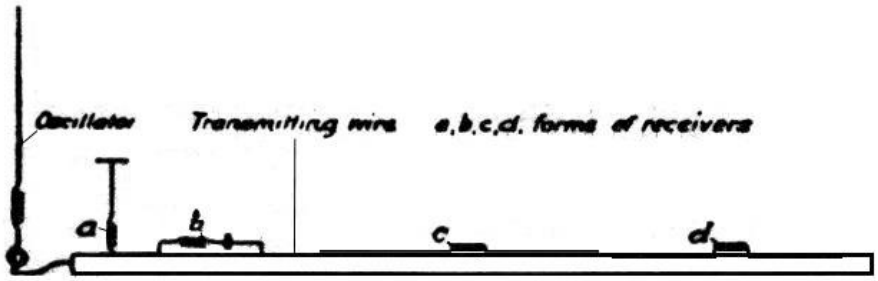

Fig. 5. Illustrating Typical Arrangements for Collecting Energy In a System of Transmission Thru a Single Wire.

Consider now the effect of such a conductor of vast dimensions on a circuit exciting it. The upper diagram of Fig. 6 illustrates a familiar oscillating system comprising a straight rod of self-inductance 2L with small terminal capacities cc and a node in the center. In the lower diagram of the figure a large capacity C is attached to the rod at one end with the result of shifting the node to the right, thru a distance corresponding to self-inductance X. As both parts of the system on either side of the node vibrate at the same rate, we

have evidently, (L+X)c = (L-X)C from which X = L(C-c/C+c). When the capacity C becomes commensurate to that of the earth, X approximates L, in other words, the node is close to the ground connection. *The exact determination of its position is very important in the calculation of certain terrestrial electrical and geodetic data* and I have devised special means with this purpose in view.

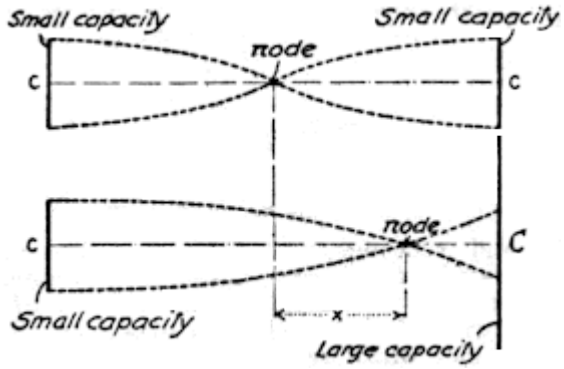

Fig. 6. Diagram Elucidating Effect of Large Capacity on One End.

My original plan of transmitting energy without wires is shown in the upper diagram of Fig. 7, while the lower one illustrates its mechanical analog, first published in my article in the Century Magazine of June, 1900. An alternator, preferably of high tension, has one of its terminals connected to the ground and the other to an elevated capacity and impresses its oscillations upon the earth. At a distant point a receiving circuit, likewise connected to ground and to an elevated capacity, collects some of the energy and actuates a suitable device. I suggested a multiplication of such units in order to intensify the effects, an idea which may yet prove valuable. In the analog two tuning forks are provided, one at the sending and the other at the receiving station, each having attached to its lower prong a piston fitting in a cylinder. The two cylinders communicate with a large elastic reservoir filled with an incompressible fluid. The vibrations transmitted to either of the tuning forks excite them by resonance and, thru electrical contacts or otherwise, bring about the desired result. This, I may say, was not a mere mechanical illustration, but a simple representation of my apparatus for submarine signaling, perfected by me in 1892, but not appreciated at that time, altho more efficient than the instruments now in use.

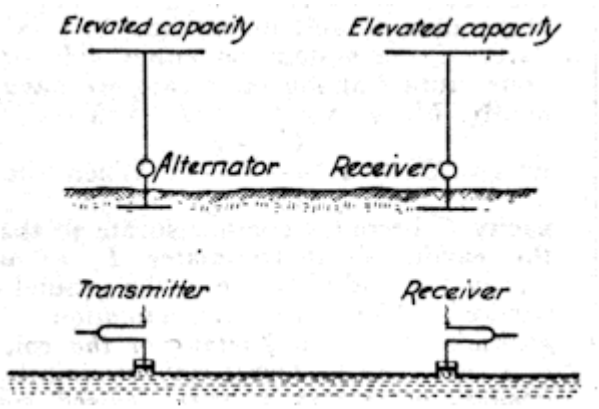

Fig. 7. Transmission of Electrical Energy Thru the Earth as Illustrated in Tesla's Lectures Before the Franklin Institute and Electric Light Association in February and March, 1893, and Mechanical Analog of the Same.

The electric diagram in Fig. 7, which was reproduced from my lecture, was meant only for the exposition of the principle. The arrangement, as I described it in detail, is shown in Fig. 8. In this case an alternator energizes the primary of a transformer, the high tension secondary of which is connected to the ground and an elevated capacity and tuned to the imprest oscillations. The receiving circuit consists of an inductance connected to the ground and to an elevated terminal without break and is resonantly responsive to the transmitted oscillations. A specific form of receiving device was not mentioned, but I had in mind to transform the received currents and thus make their volume and tension suitable for any purpose. This, in substance, is the system of today and I am not aware of a singe authenticated instance of successful transmission at considerable distance by different instrumentalities. It might, perhaps, not be clear to those who have perused my first description of these improvements that, besides making known new and efficient types of apparatus, I gave to the world a wireless system of potentialities far beyond anything before conceived. I made explicit and repeated statements that I contemplated transmission, absolutely unlimited as to terrestrial distance and amount of energy. But, altho I have overcome all obstacles which seemed in the beginning unsurmountable and found elegant solutions of all the problems which confronted me, yet, even at this very day, the majority of experts are still blind to the possibilities which are within easy attainment.

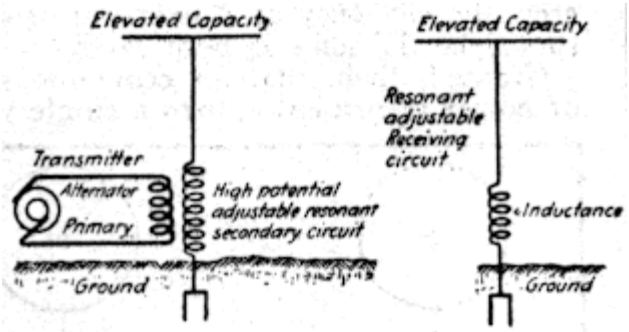

Fig. 8. Tesla's System of Wireless Transmission Thru the Earth as Actually Exposed In His Lectures Before the Franklin Institute and Electric Light Association in February and March, 1893.

My confidence that a signal could be easily flashed around the globe was strengthened thru the discovery of the "rotating brush," a wonderful phenomenon which I have fully described in my address before the Institution of Electrical Engineers, London, in 1892, and which is illustrated in Fig. 9. This is undoubtedly the most delicate wireless detector known, but for a long time it was hard to produce and to maintain in the sensitive state. These difficulties do not exist now and I am looking to valuable applications of this device, particularly in connection with the high-speed photographic method, which I suggested, in wireless, as well as in wire, transmission.

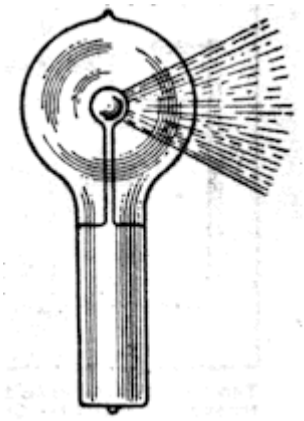

Fig. 9. The Forerunner of the Audion-the Most Sensitive Wireless Detector Known, as Described by Tesla In His Lecture Before the Institution of Electrical Engineers, London, February, 1892.

Possibly the most important advances during the following three or four years were my system of concatenated tuned circuits and methods of regulation, now universally adopted. The intimate bearing of these inventions on the development of the wireless art will appear from Fig. 10, which illustrates an arrangement described in my U.S. Patent No. 568,178 of September 22, 1896, and corresponding dispositions of wireless apparatus. The captions of the individual diagrams are thought sufficiently explicit to dispense with further comment. I will merely remark that in this early record, in addition to indicating how any number of resonant circuits may be linked and regulated, I have shown the advantage of the proper timing of primary impulses and use of harmonics. In a farcical wireless suit in London, some engineers, reckless of their reputation, have claimed that my circuits were not at all attuned; in fact they asserted that I had looked upon resonance as a sort of wild and untamable beast!

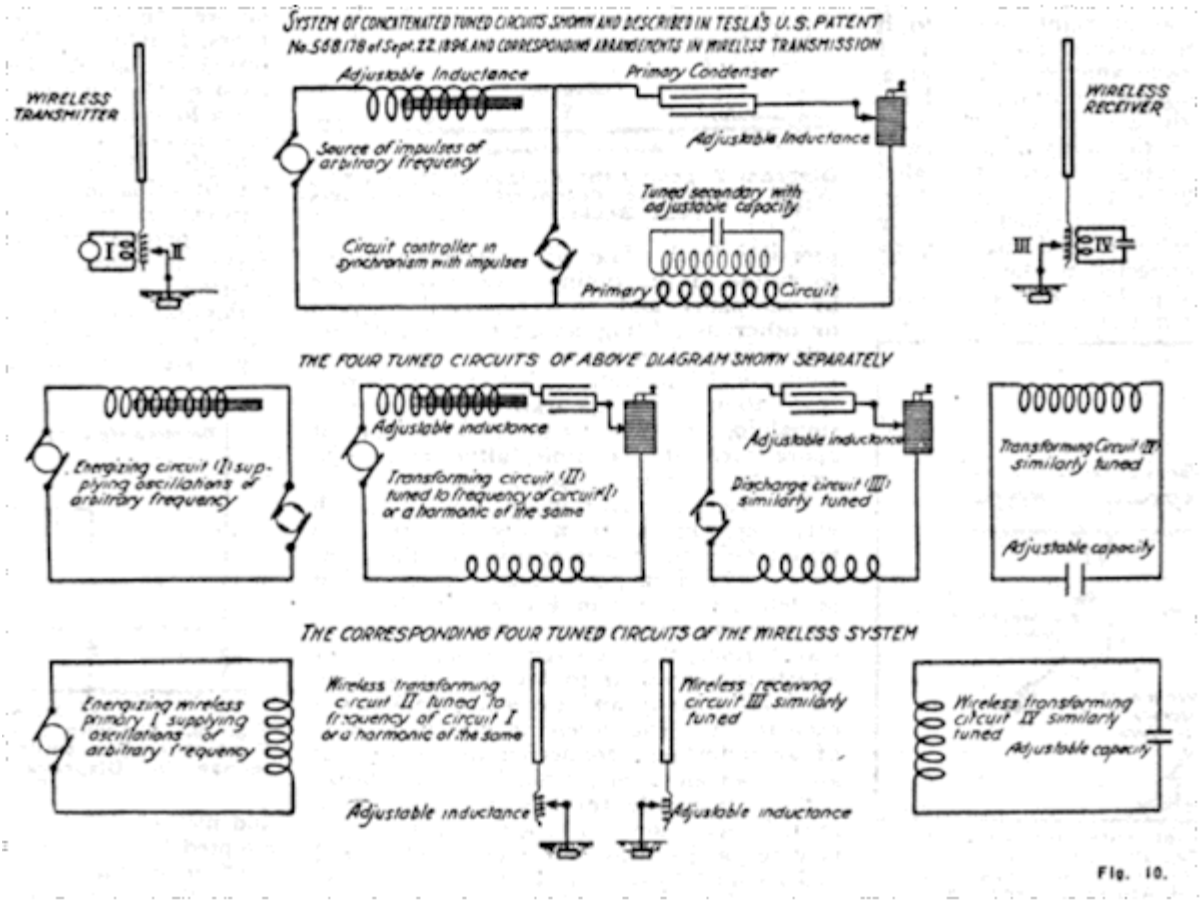

Fig. 10. Tesla's System of Concatenated Tuned Circuits Shown and Described In U. S. Patent No. 568,178 of September 22, 1896, and Corresponding Arrangements in Wireless Transmission.

It will be of interest to compare my system as first described in a Belgian patent of 1897 with the Hertz-wave system of that period. The significant differences between them will be observed at a glance. The first enables us to transmit economically energy to any distance and is of inestimable value; the latter is capable of a radius of only a few miles and is worthless. In the first there are no spark-gaps and the actions are enormously magnified by resonance. In both transmitter and receiver the currents are transformed and rendered more effective and suitable for the operation of any desired device. Properly constructed, my system is safe against static and other interference and the amount of energy which may be transmitted is *billions of times greater*than with the Hertzian which has none of these virtues, has never been used successfully and of which no trace can be found at present.

A well-advertised expert gave out a statement in 1899 that my apparatus did not work and that it would take 200 years before a message would be flashed across the Atlantic and even accepted stolidly my congratulations on a supposed great feat. But subsequent examination of the records showed that my devices were secretly used all the time and ever since I learned of this I have treated these Borgia-Medici methods with the contempt in which they are held by all fair-minded men. The wholesale appropriation of my inventions was, however, not always without a diverting side. As an example to the point I may mention my oscillation transformer operating with an air gap. This was in turn replaced by a carbon arc, quenched gap, an atmosphere of hydrogen, argon or helium, by a mechanical break with oppositely rotating members, a mercury interrupter or some kind of a vacuum bulb and by such *tours de force* as many new "systems" have been produced. I refer to this of course, without the slightest ill-feeling, let us advance by all means. But I cannot help thinking how much better it would have been if the ingenious men, who have originated these "systems," had invented something of their own instead of depending on me altogether.

Before 1900 two most valuable improvements were made. One of these was my individualized system with transmitters emitting a wave-complex and receivers comprising separate tuned elements cooperatively associated. The underlying principle can be explained in a few words. Suppose that there are n simple vibrations suitable for use in wireless transmission, the probability that any one tune will be struck by an extraneous disturbance is 1/n. There will then remain n-1 vibrations and the chance that one of these will be excited is 1/n-1 hence the probability that two tunes would be struck at the same time is 1/n(n-1). Similarly, for a combination of three the chance will be 1/n(n-1)(n-2) and so on. It will be readily seen that in this manner any desired degree of safety against the statics or other kind of disturbance can be attained provided the receiving apparatus is so designed that is operation is possible only thru the joint action of all the tuned elements. This was a difficult problem which I have successfully solved so that now *any desired number of simultaneous messages is practicable in the transmission thru the earth as well as thru artificial conductors*.

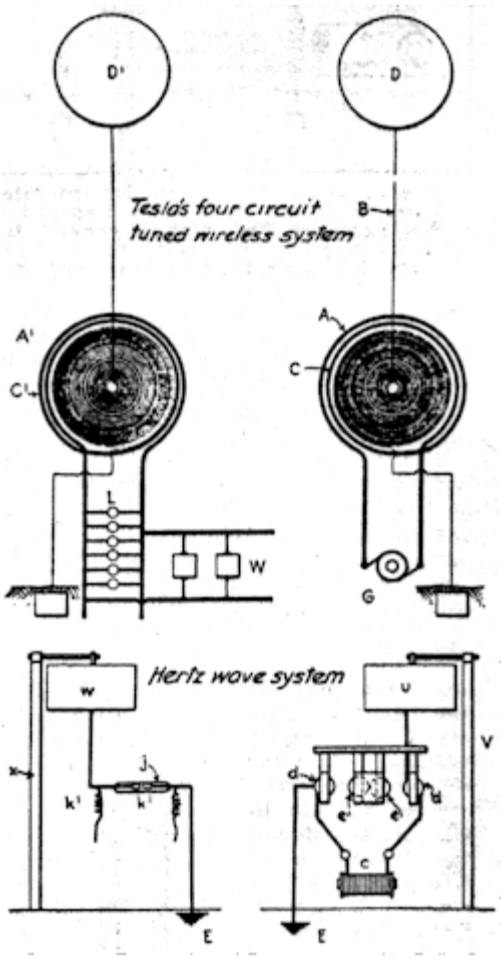

Fig. 11. Tesla's Four Circuit Tuned System Contrasted With the Contemporaneous Hertz-wave System.

The other invention, of still greater importance, is a peculiar oscillator enabling the transmission of energy without wires in any quantity that may ever be required for industrial use, to any distance, and with very high economy. It was the outcome of years of systematic study and investigation and wonders will be achieved by its means.

The prevailing misconception of the mechanism involved in the wireless transmission has been responsible for various unwarranted announcements which have misled the public and worked harm. By keeping steadily in mind that the transmission thru the earth is in every respect identical to that thru a straight wire, one will gain a clear understanding of the phenomena and will be able to judge correctly the merits of a new scheme. Without wishing to detract from the value of any plan that has been put forward I may say that they are devoid of novelty. So for instance in Fig. 12 arrangements of transmitting and receiving circuits are illustrated, which I have described in my U.S. Patent No. 613,809 of November 8, 1898 on a Method of and Apparatus for Controlling Mechanism of Moving Vessels or Vehicles, and which have been recently dished up as original discoveries. In other patents and technical publications I have suggested conductors in the ground as one of the obvious modifications indicated in Fig. 5.

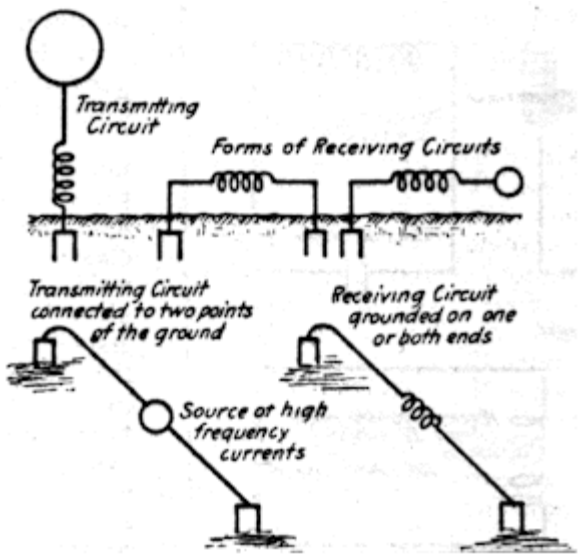

Fig. 12. Arrangements of Directive Circuits Described In Tesla's U. S. Patent No. 613,809 of November 8. 1898, on "Method of and Apparatus for Controlling Mechanism of Moving Vessels or Vehicles."

For the same reason the statics are still the bane of the wireless. There is about as much virtue in the remedies recently proposed as in hair restorers. *A small and compact apparatus has been produced which does away entirely with this trouble*, at least in plants suitably remodeled.

Nothing is more important in the present phase of development of the wireless art than to dispose of the dominating erroneous ideas. With this object I shall advance a few arguments based on my own observations *which prove that Hertz waves have little to do with the results obtained even at small distances*.

In Fig. 13 a transmitter is shown radiating space waves of considerable frequency. It is generally believed that these waves pass along the earth's surface and thus affect the receivers. I can hardly think of anything more improbable than this "gliding wave" theory and the conception of the "guided wireless" which are contrary to all laws of action and reaction. Why should these disturbances cling to a conductor where they are counteracted by induced currents, when they can propagate in all other directions unimpeded? The fact is that the radiations of the transmitter passing along the earth's surface are soon extinguished, the height of, the inactive zone indicated in the diagram, being some function of the wave length, the bulk of the waves traversing freely the atmosphere. Terrestrial phenomena which I have noted conclusively show that there is no *Heaviside layer*, or if it exists, it is of no effect. It certainly would be unfortunate if the human race were thus imprisoned and forever without power to reach out into the depths of space.

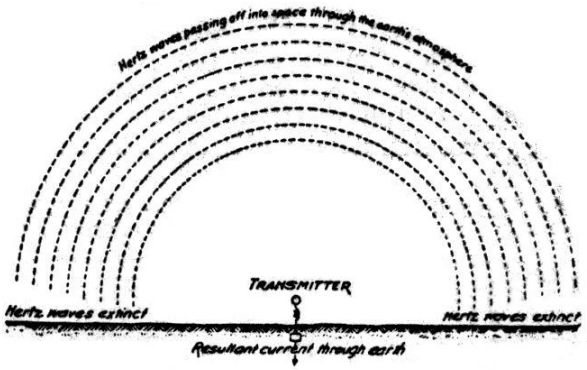

Fig. 13. Diagram Exposing the Fallacy of the Gilding Wave Theory as Propounded In Wireless Text Books.

The actions at a distance cannot be proportionate to the height of the antenna and the current in the same. I shall endeavor to make this clear by reference to diagram in Fig. 14. The elevated terminal charged to a high potential induces an equal and opposite charge in the earth and there are thus Q lines giving an average current I=4Qn which circulates locally and is useless except that it adds to the momentum. A relatively small number of lines q however, go off to great distance and to these corresponds a mean current of ie = 4qn to *which is due the action at a distance*. The total average current in the antenna is thus Im = 4Qn + 4qn and its intensity is no criterion for the performance. The electric efficiency of the antenna is q/Q+q and this is often a very small fraction.

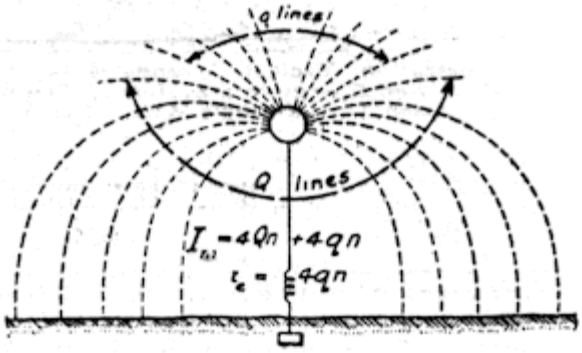

Fig. 14. Diagram Explaining the Relation Between the Effective and the Measured Current In the Antenna.

Dr. L. W. Austin and Mr. J. L. Hogan have made quantitative measurements which are valuable, but far from supporting the Hertz wave theory they are evidences in disproval of the same, as will be easily perceived by taking the above facts into consideration. Dr. Austin's researches are especially useful and instructive and I regret that I cannot agree with him on this subject. I do not think that if his receiver was affected by Hertz waves he could ever establish such relations as he has found, but he would be likely to reach these results if the Hertz waves were in a large part eliminated. At great distance the space waves and the current waves are of equal energy, the former being merely an accompanying manifestation of the latter in accordance with the fundamental teachings of Maxwell.

It occurs to me here to ask the question—why have the Hertz waves, been reduced from the original frequencies to those I have advocated for my system, when in so doing the activity of the transmitting apparatus has been reduced a billion fold? I can invite any expert to perform an experiment such as is illustrated in Fig. 15, which shows the classical Hertz oscillator altho we may have in the Hertz oscillator an activity thousands of times greater, the effect on the receiver is not to be compared to that of the grounded circuit. This shows that *in the transmission from an airplane we are merely working thru a condenser*, the capacity of which is a function of a logarithmic ratio between the length of the conductor and the distance from the ground. The receiver is affected in exactly the same manner as from an ordinary transmitter, the only difference being that there is a certain modification of the action which can be predetermined from the electrical constants. It is not at all difficult to maintain communication between an airplane and a station on the ground, on the contrary, the feat is very easy.

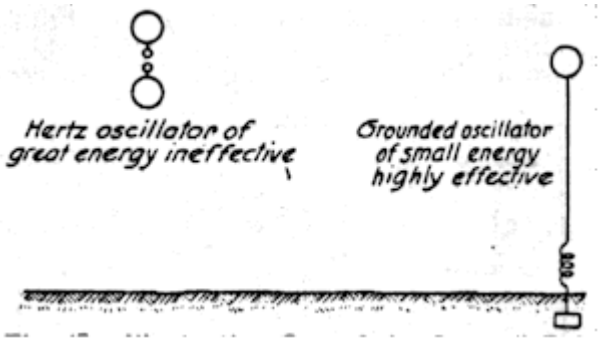

Fig. 15. Illustrating One of the General Evidences Against the Space Wave Transmission.

To mention another experiment in support of my view, I may refer to Fig. 16 in which two grounded circuits are shown excited by oscillations of the Hertzian order. It will be found that the antennas can be put out of parallelism without noticeable change in the action on the receiver, this proving that it is due to currents propagated thru the ground and not to space waves.

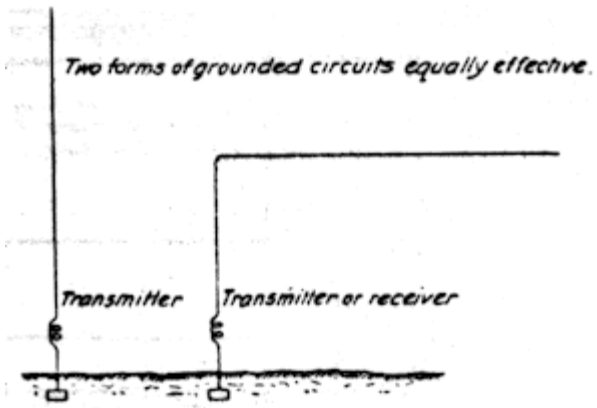

Fig. 16. Showing Unimportance of Relative Position of Transmitting and Receiving Antennae In Disproval of the Hertz-wave Theory.

Particularly significant are the results obtained in cases illustrated in Figures 17 and 18. In the former an obstacle is shown in the path of the waves but unless the receiver is within the effective *electrostatic* influence of the mountain range, the signals are not appreciably weakened by the presence of the latter, because the currents pass under it and excite the circuit in the same way as if it were attached to an energized wire. If, as in Fig. 18, a second range happens to be beyond the receiver, it could only strengthen the Hertz wave effect by reflection, but as a matter of fact it detracts greatly from the intensity of the received impulses because the electric niveau between the mountains is raised, as I have explained with my lightning protector in the EXPERIMENTER of February.

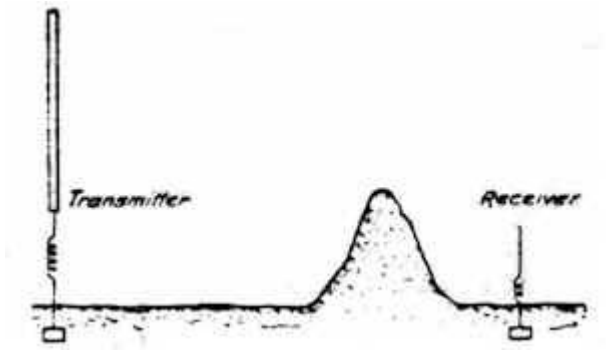

Fig. 17. Illustrating Influence of Obstacle In the Path of Transmission as Evidence Against the Hertz-wave Theory.

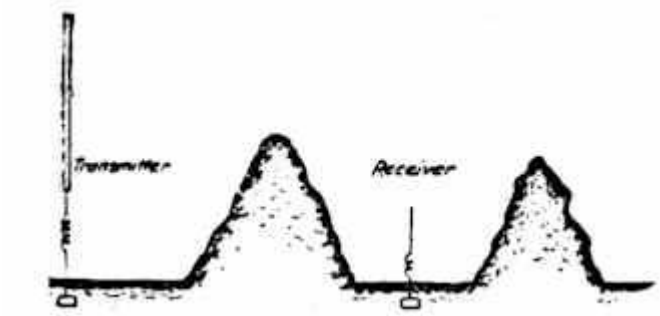

Fig. 18. Showing Effect of Two Hills as Further Proof Against the Hertz-wave Theory.

Again in Fig. 19 two transmitting circuits, one grounded directly and the other thru an air gap are shown. It is a common observation that the former is far more effective, which could not be the case with Hertz radiations. In a like manner if two grounded circuits are observed from day to day the effect is found to increase greatly with the dampness of the ground, and for the same reason also the transmission thru sea-water is more efficient.

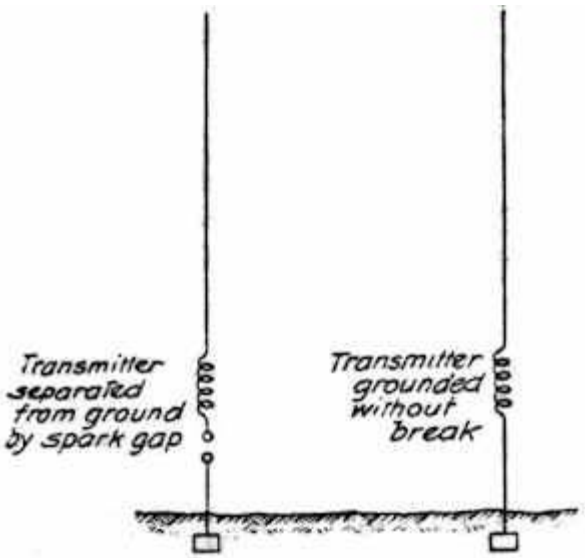

Fig. 19. Comparing the Actions of Two Forms of Transmitter as Bearing Out the Fallacy of the Hertz-wave Theory.

An illuminating experiment is indicated in Fig. 20 in which two grounded transmitters are shown, one with a large and the other with a small terminal capacity. Suppose that the latter be 1/10 of the former but that it is charged to 10 times the potential and let the frequency of the two circuits and therefore the currents in both antennas be exactly the same. The circuit with the smaller capacity will then have 10 times the energy of the other but the effects on the receiver will be in no wise proportionate.

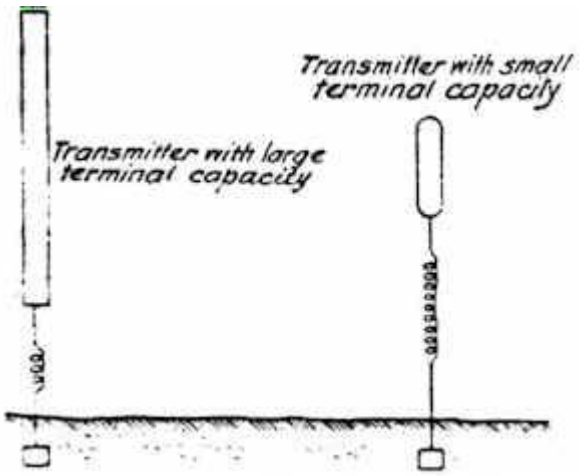

Fig. 20. Disproving the Hertz-wave Theory by Two Transmitters, One of Great and the Other of Small Energy.

The same conclusions will be reached by transmitting and receiving circuits with wires buried underground. In each case the actions carefully investigated will be found to be due to *earth currents*. Numerous other proofs might be cited which can be easily verified. So for example *oscillations of low frequency* are ever so much more effective in the transmission which is inconsistent with the prevailing idea. My observations in 1900 and the recent transmissions of signals to very great distances are another emphatic disproval.

The Hertz wave theory of wireless transmission may be kept up for a while, but I do not hesitate to say that in a short time it will be recognized as one of the most remarkable and inexplicable aberrations of the scientific mind which has ever been recorded in history.

The Tunguska Mystery

In 1908, something exploded in an isolated area of Siberia. Was it a meteor, a comet, or something even more incredible?

"I was sitting on the porch of the house at the trading station, looking north. Suddenly, in the north... the sky was split in two, and high above the forest the whole northern part of the sky appeared covered with fire. I felt a great heat, as if my shirt had caught fire. At that moment, there was a bang in the sky, and a mighty crash. I was thrown twenty feet from the porch. The earth trembled."

Dialogue from the latest asteroid impact movie? An excerpt from a science fiction novel? A witness to the test of a nuclear explosion? The witness is real, but the event was not the test of an atomic or nuclear device. And it certainly wasn't fiction.

This incredible event, related by this Russian witness, took place on the morning of June 30, 1908 in a remote area of Siberia called Tunguska. And exactly what happened there is still unknown. There are several theories as to what caused the great explosion in the sparsely populated forest at 62 degrees north latitude, but there is no definitive proof for any of them. Ninety years later, the debate about the Tunguska event continues.

Whatever happened, the resulting devastation was enormous. A fireball as bright as the sun was seen streaking across the sky. Observers 300 miles away heard deafening bangs. Trees were flattened in a radial pattern over an area of 850 square miles. Seismic vibrations were recorded by instruments as far away as 600 miles. Fires burned for weeks. Forty miles from ground zero, people were thrown to the ground and knocked unconscious. One man was hurled into a tree and killed. Scientists examining the area calculated that the explosion was equivalent to 40 megatons of TNT - 2,000 times the force of the atomic bomb released on Hiroshima in 1945. Yet there was no crater.

Other, more enigmatic, effects were recorded: disturbances in the Earth's magnetic field; a local geomagnetic storm; a reversal of soil magnetization; an electromagnetic pulse, similar to what would be created by a nuclear explosion; aurora displays before and after the event; unusually bright nights seen before and after the event; genetic mutations in plants and animals; accelerated growth of plants afterward; radiation-like burns and deaths of exposed people.

So What Happened?

The theories put forth to account for the Tunguska event range from the scientifically plausible to the ridiculous to the intriguing. They included:

- A fragmentary asteroid or meteorite that exploded in the atmosphere.
- The nucleus of a comet that likewise exploded in the atmosphere.
- A tiny black hole that entered the Earth's atmosphere from outer space and imploded.
- A chunk of antimatter that reacted with the matter of our planet.
- A crashed UFO, the propulsion drive of which exploded.
- A deliberate attack by extraterrestrials.
- The result of a test of Nikola Tesla's wireless power transmitter.

Again, there's no definitive proof for any of these ideas, but let's consider each.

Asteroid - This and the comet theory are favored by scientists, of course - mainly because they can't conceive of any other explanation. I'd have to agree that it's the most likely. But because there is no crater and little debris, there's only circumstantial evidence. Before Tunguska, scientists rarely considered that an asteroid would explode in the atmosphere before striking the ground. Yet, because there is no crater, they reason, that must be what happened. So where are all the fragments of the asteroid that they estimate must have weighed some 100,000 tons? Vaporized, they say - pulverized into dust and tiny gravel. The only fragments found thus far have been tiny glass nodules embedded in the fallen trees, which are consistent in makeup with stony asteroid fragments that have been super heated.

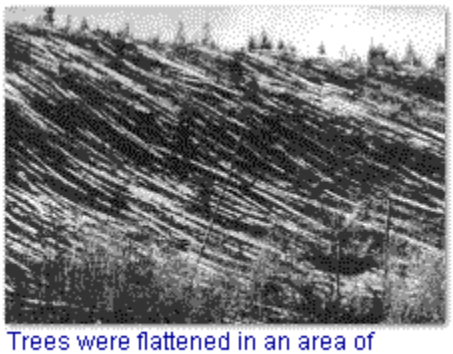

Trees were flattened in an area of 850 square miles.

Public domain photo

Comet - This is the prevailing theory today - that it was a 100,000-ton fragment of Encke's Comet. Since there is little debris, the explosion might be consistent with a comet, which generally is a loose mixture of stone and ice. Upon explosion, very little debris would remain as evidence. Ironically, it is the very lack of evidence that boosts the credibility of the comet theory.

Black hole - This idea isn't taken very seriously by mainstream scientists, simply because it's not known whether such small black holes even exist. And if they did, what the result would be upon one entering our atmosphere is completely unknown.

Antimatter - This idea is also readily dismissed, since it is unlikely that antimatter would be able to transverse space and reach our planet without already encountering some matter and annihilating.

Crashed UFO - There's no evidence whatever of this idea, of course. No fragments of the spacecraft or piece of an alien's intergalactic map. If it were the explosion of the UFO's propulsion system - nuclear or whatever - it might have vaporized all traces of the ship, but come on....

Extraterrestrial attack - If they were going to attack, why would they choose an unpopulated region, unless their intelligence was bad? Or unless it was meant as just a warning. And it it was just a warning, where was the follow-up or contact?

Nikola Tesla's experiment - Granted, this idea is far more unlikely than an asteroid or comet strike, but I find it quite a bit more interesting. A lot of myth has grown around the mysterious, dark and temperamental figure of Tesla. Although known as the discoverer of the principals of alternating current and other inventions, he is also credited in some quarters with far more notorious inventions, including a death ray. Some say the controversial HAARP array in Alaska is a continuation of Tesla's experiments that used electricity to create super weapons. The Tunguska event, they say, was the result of a test of such a weapon - a test that didn't go exactly as planned.

The Tesla Connection

Oliver Nichelson has a very interesting web site entitled, "Tesla Wireless and the Tunguska Explosion" that advocates this theory, with some very compelling information about the background and secret experiments of the Serbian-born American inventor. "Tesla's writings have many references to the use of his wireless power transmission technology as a directed energy weapon," says Nichelson. "The Tunguska explosion of 1908 may have been a test firing of Tesla's energy weapon."

Nichelson details many of the experiments with electricity conducted by Tesla in many areas of the United States. He relates one such experiment at his Colorado Springs laboratory where he erected a 200-foot pole topped by a large copper sphere that discharged lighting bolts up to 135 feet long. "People along the streets were amazed to see sparks jumping between their feet and the ground," Nichelson writes. "Flames of electricity would spring from a tap when anyone turned them on for a drink of water. Light bulbs within 100 feet of the experimental tower glowed when they were turned off."

Nichelson then chronicles the evolution of Tesla's method of the wireless transmission of electrical energy, and how it led up to the secret test in 1908. Apparently, Tesla had proved that directed electrical energy could be used as a beneficial or destructive force. "Beset by financial problems and spurned by the scientific establishment, Tesla was in a desperate situation by mid-decade... and, according to Tesla's biographers, he suffered an emotional collapse. In order to make a final effort to have his grand scheme recognized, he may have tried one high-power test of his transmitter to show off its destructive potential. This would have been in 1908."

In fact, perhaps Tesla was confessing in 1915 when he wrote: "It is perfectly practical to transmit electrical energy without wires and produce destructive effects at a distance. I have already constructed a wireless transmitter which makes this possible. But when unavoidable [it] may be used to destroy property and life. The art is already so far developed that the great destructive effects can be produced at any point on the globe, defined beforehand with great accuracy."

The Tesla experiment might also account for the enigmatic aspects of the Tunguska event, according to Nichelson: the lack of a crater; the disturbances in the planet's magnetic field; the odd glow in the sky seen before and after the event; the radiation-like burns; and the electromagnetic pulse.

The test, however, may not have been a complete success, says Nichelson. Tesla may have been aiming for the completely uninhabited region of the north pole. He may have overshot his target.

Research Continues

Scientists continue to research the Tunguska event and debate its causes. As recently as 1996, they gathered in Bologna, Italy for the Tunguska International Workshop. More than 65 participants attended the conference, mostly Russians and Americans, but no consensus was reached. The scientists remained divided between those who favor the meteorite hypothesis and those who favor the comet hypothesis. Why is it important to study Tunguska? Because it may have been the most recent occurrence of a major meteor or

comet impact on our planet. If it had struck over a major city instead of an isolated forest, hundreds of thousands of people would have been killed.

But no one at the conference, it seemed, was seriously interested in the Tesla theory, nor in the suggestion raised that the explosion was actually caused by an errant, 2,000-year-old Japanese nuclear spacecraft returning home... but missing the runway.

Do You Have Your Own Theories About Tunguska?

If you do, or if you've had personal encounters with meteorites or unexplained explosions, I'd like to hear from you.

You have a standing invitation to tell me your experiences with the paranormal and unexplained.

Related sites of interest:

- **1908 Siberia Explosion - Reconstructing an asteroid impact from eyewitness accounts.**
- **The Cosmic Mystery of the Century - Good, basic information and eyewitness accounts.**

THE WONDER WORLD TO BE CREATED BY ELECTRICITY

by Nikola Tesla

Manufacturer's Record, September 9, 1915

Whoever wishes to get a true appreciation of the greatness of our age should study the history of electrical development. There he will find a story more wonderful than any tale from Arabian Nights. It begins long before the Christian era when Thales, Theophrastus and Pliny tell of the magic properties of electron—the precious substance we call amber—that came from the pure tears of the Heliades, sisters of Phaeton, the unfortunate youth who attempted to run the blazing chariot of Phoebus and nearly burned up the earth. It was but natural for the vivid imagination of the Greeks to ascribe the mysterious manifestations to a hyperphysical cause, to endow the amber with life and with a soul.

Whether this was actual belief or merely poetic interpretation is still a question. When at this very day many of the most enlightened people think that the pearl is alive, that it grows more lustrous and beautiful in the warm contact of the human body. So too, it is the opinion of men of science that a crystal is a living being and this view is being extended to embrace the entire physical universe since Prof. Jagadis Chunder Bose has demonstrated, in a series of remarkable experiments, that inanimate matter responds to stimuli as plant fiber and animal tissue.

The superstitious belief of the ancients, if it existed at all, can therefore not be taken as a reliable proof of their ignorance, but just how much they knew about electricity can only be conjectured. A curious fact is that the ray or torpedo fish, was used by them in electro-therapy. Some old coins show twin stars, or sparks, such as might be produced by a galvanic battery. The records, though scanty, are of a nature to fill us with conviction that a few initiated, at least, had a deeper knowledge of amber-phenomena. To mention one, Moses was undoubtedly a practical and skillful electrician far in advance of his time. The Bible describes precisely and minutely arrangements constituting a machine in which electricity was generated by friction of air against silk curtains and stored in a box constructed like a condenser. It is very plausible to assume that the sons of Aaron were killed by a high tension discharge and that the vestal fires of the Romans were electrical. The belt drive must have been known to engineers of that epoch and it is difficult to see how the abundant evolution of static electricity could have escaped their notice. Under favorable atmospheric conditions a belt may be transformed into a dynamic generator capable of producing many striking actions. I have lighted incandescent lamps, operated motors and performed numerous other equally interesting experiments with electricity drawn from belts and stored in tin cans.

That many facts in regard to the subtle force were known to the philosophers of old can be safely concluded, the wonder is, why two thousand years elapsed before [William] Gilbert in 1600 published his famous work, the first scientific treatise on electricity and magnetism. To an extent this long period of unproductiveness can be explained. Learning was the privilege of a few and all information was jealously guarded. Communication was difficult and slow and a mutual understanding between widely separated investigators hard to reach. Then again, men of those times had no thought of the practical, they lived and fought for abstract principles, creeds, traditions and ideals. Humanity did not change much in Gilbert's time but his clear teachings had a telling effect on the minds of the learned. Friction machines were produced in rapid succession and experiments and observations multiplied. Gradually fear and superstition gave way to scientific in-sight and in 1745 the world was thrilled with the news that Kleist and Leyden had succeeded in imprisoning the uncanny agent in a phial from which it escaped with an angry snap and destructive force. This was the birth of the condenser, perhaps the most marvelous electrical device ever invented.

Two tremendous leaps were made in the succeeding forty years. One was when Franklin demonstrated the identity between the gentle soul of amber and the awe-inspiring belt of Jupiter; the other when Galvany and Volta brought out the contact and chemical battery, from which the magic fluid could be drawn in unlimited quantities. The succeeding forty years bore still greater fruit. Oersted made a significant advance in deflecting a magnetic needle by an electric current, Arago produced the electro-magnet, Seebeck the thermo-pile and in 1831, as the crowning achievement of all, Faraday announced that he had obtained electricity from a magnet, thus discovering the principle of that wonderful engine—the dynamo, and inaugurating a new era both in scientific research and practical application.

From that time on inventions of inestimable value have followed one another at a bewildering rate. The telegraph, telephone, phonograph and incandescent lamp, the induction motor, oscillatory transformer, Roentgen ray, Radium, wireless and numerous other revolutionary advances have been made and all conditions of existence eighty-four years which have since elapsed, the subtle agents dwelling in the living amber and loadstone have been transformed into cyclopean forces turning the wheels of human progress with ever increasing speed. This, in brief, is the fairy tale of electricity from Thales to the present day. The impossible has happened, the wildest dreams have been surpassed and the astounded world is asking: What is coming next?

ELECTRICAL POSSIBILITIES IN COAL AND IRON

Many a would-be discoverer, failing in his efforts, has felt the regret to have been born at a time when everything has been already accomplished and nothing is left to be done. This erroneous impression that, as we are advancing, the possibilities of invention are being exhausted, is not uncommon. In reality it is just the opposite. Spenser has conveyed the right idea when he likened civilization to the sphere of light which a lamp throws out in darkness. The brighter the lamp and the larger the sphere the greater is its dark boundary. It is paradoxical, yet true, to say, that the more we know the more ignorant we become in the absolute sense, for it is only through enlightenment that we become conscious of our limitations. Precisely one of the most gratifying results of intellectual evolution is the continuous opening up of new and greater prospects. We are progressing at an amazing pace, but the truth is that, even in fields most successfully exploited, the ground has only been broken. What has been so far done by electricity is nothing compared with what the future has in store. Not only this, but there are now innumerable things done in old-fashioned ways which are much inferior in economy, convenience and many other respects to the new method. So great are the advantages of the latter that whenever an opportunity presents itself the engineer advises his client to "do it electrically."

Consider, in illustration, one of the largest industries, that of coal. From this valuable mineral we chiefly draw the sun's stored energy which is required to meet our industrial and commercial needs. According to statistical records, the output in the United States during the past year was 480,000,000 tons. In perfect engines this fuel would have been sufficient to develop 500,000,000 horse-power steadily for one year, but the squandering is so reckless that we do not get more than 5 per cent of its heating value on the average. There is an appalling waste in mining, handling, transportation, store and use of coal, which could be very much reduced through the adoption of a comprehensive electrical plan in all these operations. The market value of the yearly product would be easily doubled and an immense sum added to the revenues of the country. What is more, inferior grades, billions of tons of which are being thrown away, might be turned to profitable use.

Similar considerations apply to natural gas and mineral oil, the annual loss of which amounts to hundreds of millions of dollars. In the very near future such waste will be looked upon as criminal and the introduction of the new methods will be forced upon the owners of such properties. Here, then, is an immense field for the use of electricity in many ways, vast industries which are bound to be revolutionized through its extensive application.

To give another example, I may refer to the manufacture of iron and steel, which is carried on in this country on a scale truly colossal. During the last year, notwithstanding unfavorable business conditions, 31,000,000 tons of steel have been produced. It would lead too far to dwell on the possibilities of electrical improvements in the manufacturing processes themselves, and I will only indicate what is likely to be accomplished in using the waste gases from the coke ovens and blast furnaces to generate electricity for industrial purposes.

Since in the production of pig-iron for every ton about one ton of coke is employed, the yearly consumption of coke may be put at 31,000,000 tons. The combustion in the blast furnaces yields, per minute, 7,000,000 cubic feet of gas of a heating value of 110 B. T. units per cubic foot. Of this total, without making special provision, 4,000,000 cubic feet may be made available for power purposes. If all the heat energy of this gas could be transformed into mechanical effort, it would develop 10,389,000 horse-power. This result is impossible, but it is perfectly practicable to obtain 2,500,000 horse-power electrical energy at the terminals of the dynamos.

In the manufacture of coke approximately 9400 cubic feet of gas are evolved per ton of coal. This gas is excellent for power purposes, having an average heating value of 600 B. T. units, but very little is now used in engines, largely because of their great cost and other imperfections. A ton of coke requires about 1.32 tons of American coal; hence the total coal consumption per annum on the above basis is nearly 41,000,000 tons, which give, per minute, 733,000 cubic feet of gas. Assuming the yield of surplus or rich gas to be 333,000 cubic feet, the balance of 400,000 cubic feet could be used in gas engines. The heat contents would be, theoretically, sufficient to develop 5,660,000 horse-power, of which 1,500,000 horse-power could be obtained in the form of electric energy.

I have devoted much thought to this industrial proposition, and find that *with new, efficient, extremely cheap and simple thermo-dynamic transformers not less than 4,000,000 horse-power could be developed in electric generators by utilizing the heat of these gases, which, if not entirely wasted, are only in part and inefficiently employed.*

With systematic improvements and refinements much better results could be secured and an annual revenue of $50,000,000 or more derived. The electrical energy could be advantageously used in the fixation of atmospheric nitrogen and production of fertilizers, for which there is an unlimited demand and the manufacture of which is restricted here on account of the high cost of power. I expect confidently the practical realization of the project in the very near future, and look to exceptionally rapid electrical development in this direction.

HYDRO-ELECTRIC DEVELOPMENT

Water-power offers great opportunities for novel electrical applications, particularly in the department of electro-chemistry. The harness of waterfalls is the most economical method known for drawing energy from the sun. This is due to the fact that both water and electricity are incompressible. The net efficiency of the hydro-electric process can be as high as 85 per cent. The initial outlay is generally great, but the cost of maintenance is small and the convenience offered ideal. My alternating system is invariably employed , and so far about 7,000,000 horse-power have been developed. As generally used we do not get more than six-hundredths of a horse-power per ton of coal per year. *This water energy is therefore equivalent to that obtainable from an annual supply of 120,000,000 tons of coal, which is about 25 per cent of the total output in the United States.* The estimate is conservative, and in view of the immense waste of coal 50 per cent may be a closer guess.

We get better appreciation of the tremendous value of this power in our economic development when we remember that, unlike fuel, which demands a terrible sacrifice of human energy and is consumed, it is supplied without effort and destruction of material and equals the mechanical performance of 150,000,000 men—one and one-half times the entire population of this country. These figures are imposing; nevertheless, we have only begun the exploitation of this vast national resource.

There are two chief limitations at present—one in the availability of the energy, the other in its transmission to distance. The theoretical power of the falling water is enormous. If we assume for the rain clouds an average height of 15,000 feet and annual precipitation of 33 inches, the 24 horse-power per square mile is over 4000, and for the whole area in the United States more than 12,000,000,000 horse-power. As a matter of fact, the larger portion of the potential energy is used up in air friction. This, while disappointing to the economist, is a fortunate circumstance, for otherwise the drops would reach the ground with a speed of 800 feet per second—sufficient to raise blisters on our bodies, while hail would be positively deadly. Most of the water, which is available for power purposes comes from a height of about 2000 feet and represents over one and one-half billion horse-power, but we are only able to use an average fall of, say, 100 feet, which means that if all the water-power in this country were harnessed under the existing conditions only 80,000,000 horse-power could be obtained.

THE NEXT GREAT ACHIEVEMENT—ELECTRICAL CONTROL OF ATMOSPHERIC MOISTURE

But the time is very near when we shall have the precipitation of the moisture of the atmosphere under complete control, and then it will be possible to draw unlimited quantities of water from the oceans, develop any desired amount of energy, and completely transform the globe by irrigation and intensive farming. A greater achievement of man through the medium of electricity can hardly be imagined.

The present limitations in the transmission of power to distance will be overcome in two ways—through the adoption of underground conductors insulated by power, and through the introduction of the wireless art. The first plan I have advanced years ago. The underlying principle is to convey through a tubular conductor hydrogen at a very low temperature, freeze the surrounding material and thus secure a perfect insulation by indirect use of electric energy. In this manner the power derived from falls can be transmitted to distances of hundreds of miles with the highest economy and at a small cost. This innovation is sure to greatly extend the fields of electrical application. As to the wireless method, we have now the means for economic transmission of energy in any desired amount and to distances only limited by the dimensions of this planet. In view of assertions of some misinformed experts to the effect that in the wireless system I have perfected the power of the transmitter is dissipated in all directions, I wish to be emphatic in my statement that such is not the case. The energy goes only to the place where it is needed and to no other.

When these advanced ideas are practically realized we shall get the full benefit of water-power, and it will become our chief dependence in the supply of electricity for domestic, public and other uses in the arts of peace and war.

ECONOMY IN LIGHT AND POWER—ELECTRIC PROPULSION

In the great departments of electric light and power immense opportunities are offered through the introduction of all kinds of novel devices which can be attached to the circuits at convenient hours for the purpose of equalizing the loads and increasing the revenues from the plants. I have myself knowledge of a number of new appliances of this kind. The most important among them is probably an electrical ice machine which obviates entirely the use of dangerous and otherwise objectionable chemicals. The new machine will also require absolutely no attention and will be extremely economical in operation, so that the refrigeration will be effected very cheaply and conveniently in every household.

An interesting fountain, electrically operated, has been brought out which is likely to be extensively introduced, and will afford an unusual and pleasing sight in squares, parks, hotels and residences.

Cooking devices for all domestic purposed are being provides, and there is great demand for practical designs and suggestions in this

field. The same may be stated of electric signs and other attractive means of advertising which can be electrically operated. Some of the effects which it is possible to produce by electric currents are wonderful and lend themselves to exhibitions, and there is no doubt that much can be done in that direction. Theaters, public halls and private dwellings are in need of a great many devices and instruments for convenience and offer ample opportunities to an ingenious and practical inventor.

A vast and absolutely untouched field is the use of electricity for the propulsion of ships. The leading electrical company in this country has just equipped a large vessel with high-speed turbines and electric motors and has achieved a signal success. Applications of this kind will multiply at a rapid rate, for the advantages of the electrical drive are now patent to everybody. In this connection gyroscopic apparatus will probably play an important part, as its general adoption on vessels is sure to come. Very little has yet been done in the introduction of electrical drive in the various branches of industry and manufacture, and the prospects are unlimited.

A FEW OF THE WONDERS TO COME

Books have already been written on the agricultural uses of electricity, but the fact is that hardly anything has been practically done. The beneficial effects of electricity of high tension have been unmistakably established, and a revolution will be brought about through the extensive adoption of agricultural electrical apparatus. *The safeguarding of forests against fires, the destruction of microbes, insects and rodents will, in due course, be accomplished by electrical means.*

In the near future we shall see a great many new uses of electricity aiming at safety, particularly vessels at sea. We shall have electrical instruments for preventing collisions, and we shall even be able to disperse fogs by electric force and powerful and penetrative rays. I am hopeful that within the next few years wireless plants will be installed for the purpose of illuminating the oceans. The project is perfectly feasible, and if carried out will contribute more than any other provision to the safety of property and human lives at sea. The same plant could also produce stationary electrical waves and enable vessels to get at any time accurate bearings and other valuable practical data without resorting to the present means. It could also be used for time signaling and many other purposes of similar nature.

Electrotherapy is another great field in which there are unlimited possibilities for electrical applications. High-frequency currents especially have a great future. The time will come when this form of electrical energy will be available in every private residence. I consider it quite possible that through their surface actions we may do away with the customary bath, as the cleaning of the body can be instantaneously effected simply by connecting it to a source of currents or electric energy of very high potential, which results in the throwing off of dust or any small particles adhering to the skin. Such a dry bath, besides being convenient and time-saving, would also be of beneficial therapeutic influence. New electric devices for use of the deaf and blind are coming and will be a blessing to the afflicted.

In the prevention of crime electrical instruments will soon become an important factor. In court proceedings electric evidence will often be decisive. *In a time not distant it will be possible to flash any image formed in thought on a screen and render it visible at any place desired.* The perfection of this means of reading thought will create a revolution for the better in all our social relations. Unfortunately, it is true, that cunning lawbreakers will avail themselves of such advantages to further their nefarious business.

TELEGRAPHIC PHOTOGRAPHY AND OTHER ADVANCES

Great improvements are still possible in telegraphy and telephony. The use of a new receiving device which will be shortly described, and the sensitiveness of which can be increased almost without limit, will enable telephoning through aerial lines or cables however long by reducing the necessary working current to an infinitesimal value. This invention will dispense with the necessity of resorting to expensive constructions, which, however, are of circumscribed usefulness. It will also enormously extend the wireless transmission of intelligence in all its departments.

The next art to be inaugurated is that of picture transmission by ordinary telegraphic methods and existing apparatus. This idea of telegraphing or telephoning pictures is old, but practical difficulties have hampered commercial realizations. A number of improvements of great promise have been made, and there is every reason to expect that success will soon be achieved.

Another valuable novelty will be a typewriter electrically operated by the human voice. This advance will fill a long-felt want, as it will do away with the operator and save a great deal of labor and time in offices.

A new and extremely simple electric tachometer is being prepared for the market, and it is expected that it will prove useful in power plants and central stations, on boats, locomotives and automobiles.

Many municipal improvements based on the use of electricity are about to be introduced. *We have soon to have everywhere smoke annihilators, dust absorbers, ozonizers, sterilizers of water, air, food and clothing, and accident preventers on streets, elevated roads*

and in subways. It will become next to impossible to contract disease germs or get hurt in the city, and country folk will got to town to rest and get well.

ELECTRIC INVENTIONS IN WAR

The present international conflict is a powerful stimulus to invention of devices and implements of warfare. An electric gun will soon be brought out. The wonder is that it was not produced long ago. Dirigibles and aeroplanes will be equipped with small electric generators of high tension, from which the deadly currents will be conveyed through the wires to the ground. Battleships and submarines will be provided with electric and magnetic feelers so delicate that the approach of any body underwater or in darkness will be detected. Torpedoes and floating mines are almost in sight which will direct themselves automatically and without fail get in fatal contact with the object to be destroyed. The art of telautomatics, or wireless control of automatic machines at a distance, will play a very important part in future wars and, possibly, in the next phases of the present one. Such contrivances which act as if endowed with intelligence will be used in innumerable ways for attack as well as defense. They may take the shape of aeroplanes, balloons, automobiles, surface or under-water boats, or any other form according to the requirement in each special case, and will be of greater range and destructiveness than the implements now employed. *I believe that the telautomatic aerial torpedo will make the large siege gun, on which so much dependence is placed at present, obsolete.*

A volume might be filled with such suggestions without exhausting the possibilities. The advance even under the conditions existing is rapid enough, but when the wireless transmission of energy for general use becomes a practical fact the human progress will assume the character of a hurricane. So all-surpassing is the importance of this marvelous art to the future existence and welfare of the human race that every enlightened person should have a clear idea of the chief factors bearing on its development.

THE POWER OF THE FUTURE

We have at our disposal three main sources of life-sustaining energy—fuel, water-power and the heat of the sun's rays. Engineers often speak of harnessing the tides, but the discouraging truth is that the tidewater over one acre of ground will, on the average, develop only one horse-power. Thousands of mechanics and inventors have spent their best efforts in trying to perfect wave motors, not realizing that the power so obtained could never compete with that derived from other sources. The force of wind offers much better chances and is valuable in special instances, but is by far inadequate. Moreover, the tides, waves and winds furnish only periodic and often uncertain power and necessitate the employment of large and expensive storage plants. Of course, there are other possibilities, but they are remote, and we must depend on the first of three resources. If we use fuel to get our power, we are living on our capital and exhausting it rapidly. This method is barbarous and wantonly wasteful, and will have to be stopped in the interest of coming generations. The heat of the sun's rays represents an immense amount of energy vastly in excess of water-power. The earth receives an equivalent of 83 foot-pounds per second for each square foot on which the rays fall perpendicularly. From simple geometrical rules applying to a spherical body it follows that the mean rate per square foot of the earth's surface is one-quarter of that, or 20 3/4 foot-pounds. This is to say over one million horse-power per square mile, or 250 times the water-power for the same area. But that is only true in theory; the practical facts put this in a different aspect. For instance, considering the United States, and taking into account the mean latitude, the daily variation, the diurnal changes, the seasonal variations and casual changes, this power of the sun's rays reduces to about one-tenth, or 100,00 horse-power per square mile, of which we might be able to recover in high-speed low-pressure turbines 10,000 horse-power. To do this would mean the installment of apparatus and storage plants so large and expensive that such a project is beyond the pale of the practical. The inevitable conclusion is that water-power is by far our most valuable resource. On this humanity must build its hopes for the future. With its full development and a perfect system of wireless transmission of the energy to any distance man will be able to solve all the problems of material existence. Distance, which is the chief impediment to human progress, will be completely annihilated in thought, word and action. Humanity will be united, wars will be made impossible and peace will reign supreme.

This area shows the construction and testing of a medium to large class Tesla coil. In this section, the previous coils were dismantled and a new larger coil, with a secondary over 6 inches, was redesigned and constructed for maximum efficiency at a power if about 1,440 watts. The tesla coil project is aimed mainly at the scientific and Tesla coiler community. I intend to use my Tesla coil for lightning demonstrations and entertainment.

Note - This page may take a while to load on some SLOWER connections!

TESLA COIL PROJECT - PART FIVE (BIG COIL)

The Tesla coils so far on this page were of low power and experimental in nature. This section shows a larger and more efficient coil built from scratch and within stricter adherance to the electrical rules involved in Tesla coiling. The new coil is a 1.5 KVA coil running off a bank of two 12KV, 60 mA NST's and sports a 6-inch secondary made from scratch! The secondary form for this coil is made of layered acrylic fabric sheets stiffened with styrofoam to form a 6-inch diameter cylinder and laminated with many layers of polystyrene resin (fiberglass clear boat resin). Each end is sealed and capped with 1/4 inch plexiglass and the form is close-wound with about 900 turns of #22 magnet wire. The tank circuit for this coil is a modified RQ spark gap with 10 3" x 3/4" copper pipe electrodes and 10 doorknob capacitors in parallel (each is 2500 pF at 30KV) yeilding 0.025 uF. The entire tank circuit is wired with 1/4" copper tubing encased in clear neoprene and heavy metal strip for the caps. The primary is a 15 degree inverted cone of 1/4" copper tubing with 1/4" spacing (about 10 turns tapped at 8). The support for the coil is a wooden frame about 18 inches high on casters for easy movement. There are three safety gaps, two formed by bolts on the doorknob EMMC bank, and one on the "supply panel" where two RF chokes (each 100 turns #22 wire on 1" PVC form) and HV terminals are. The panel safety gap forms a spark gap between the earth (RF) ground post and the two HV supply inputs. The toroids are easily interchangeable atop the secondary and are the two 11" salad bowl halves, or oversized (6" by 18" diameter) toroid. The system is supplied by a separate power supply which supplies the two HV terminals as well as spark-gap quench motor power. This unit contains two 12 KV 60 mA NST's in parallel with 130 uF PFC capacitor in parallel with each NST input. There is key switch and main power switch with indicator light which feeds a 10A variac for the NST's. A voltmeter is fed by a diode and 12V transformer showing 0-15 (x1000) volts. When powered up via the main switch, a buzzer sounds (which also can be silenced by a switch) as a HV warning alarm. There is also a dual outlet, one for the variac output and the other for the quench motor, also controlled by a switch. There are four HV outputs in the back of this unit on PVC cap "bushings". Two are from one NST, the other two are from the other. A "bus strip" parallels the two NST's at these output terminals. The HV wires are #14 house wire encased in neoprene tubing, and connect the PSU with the Tesla coil unit. The PSU also is on wheels for easy moving as it weighs about 75 pounds. This makes this Tesla coil system a 1440 Watt (1.5 kVA) medium power Tesla coil capeable of generating 4 foot plus arcs under the right conditions! Most pictures of this project are of the completed coil and setup / spark pictures. The only down side is that the older Tesla coils, including the dual unit and original PSU, were dismantled for the parts to build this version.

Lessons learned - Toroids and top-loads are VERY important for Tesla coil spark types! Further modifications to this version include using the 4x24 secondary (these are easily changed) from the dismantled old coil, using a well quenched spark gap. Also modified the copper tube type connections to reduce any "sharp" turns and solder them where necessary. Spark gap quenching is also very important, and an additional fan was added to improve quench air flow over the spark gap electrodes. Also modified secondary connections so that they can be changed quickly and easily. Also, you can use PVC for your secondary as long as it is thin-walled, sanded, dried, sealed FIRST, then wound and sealed thoroughly with urethane varnish. A similar secondary using boat styrene resin was easier to make, but cracks too easily when heated. Also made a supply "bus" of copper tubing with both ends connected to the HV primary supply post so that taps on the primary can be made ANYWHERE around the coil rather than just near the HV post.

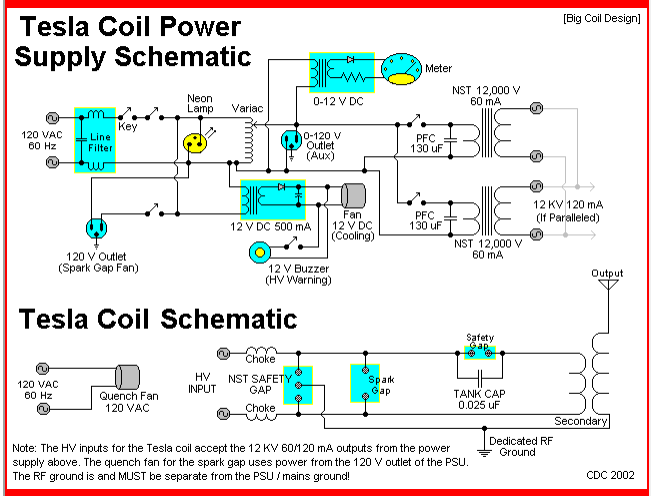

The diagram above is the schematic for my fifth and big (6 inch) Tesla coil design step. In this configuration, the AC power enters a separate power supply box with high voltage and mains level (120 V) outlets. The power supply unit contains a key switch as well as illuminated main switch for the power input. Upon power up of the mains switch, the power supply for the cooling / vent fan is energized, which also powers an audible buzzer (warning) that can be silenced via a switch. The mains-level power also is sent to a switchable outlet which supplied the spark-gap blower motor (this also has an on-off switch). The remaining power goes through a powestat variac where it is varied from 0 to 120 V. The output of the variac is also routed to another outlet (if needed for convenience) and to two separate neon sign transformers rated at 12,000 V, 60 mA each. Each NST input is controlled by its own on-off switch and has a 130 uF (330 WVAC) power factor capacitor in parallel with its input. Yet another branch off the variac power output goes to a small transfomer, diode, and 15K resistor to power a small voltmeter. The range is from 0-15 volts, but is calibrated so that 15 x1000 = 15,000. The outputs of the NST's have their separate outputs emerging from the back of the unit via PVC HV bushings (made from 1/2" PVC end caps and bolts). These two outputs can easily be paralleled for an output of 12 KV at 120 mA. If one transformer is energized, 60 mA at the same voltage is produced, but the outputs have to be un-paralleled to prevent leakage into the other unpowered NST.

The actual Tesla coil unit is separate from the power supply, as one would expect from a medium to high powered TC system. The high voltage inputs arrive on PVC bushings and are routed through two chokes (100 turns of #22 magnet wire on a 3/4" PVC core). A safety spark gap is between the two HV bushings and RF ground for NST protection. The output of these terminals goes right to the tank circuit consisting of 10 turns (tapped at 8) of 1/4 copper tubing, 10 2500 pF 30 KV doorknob capacitors in parallel (for a total of 0.025 uF), and a RQ static spark gap. The RQ gap has 10 copper pipe (3" by 3/4") electrodes in series with 9 gaps each spaced 1/32". The capacitor bank also has a small safety spark gap. The secondary is a custom built 6 inch by 24 inch and has roughly 900 turns of #22 magnet wire. The secondary is connected to RF ground at one end (not the mains ground, ofcourse) and the other end is the output HV terminal for the coil.

Image is scaled ... Click on the image to the left for the full size picture.

This picture shows the entire 6-inch Tesla coil system. The entire unit stands about 4 1/2 feet high. The power supply unit is to the left of the Tesla coil and the neoprene-encased high voltage hookup wire in the foreground. The unit was spray-painted white and appears as a work of art in addition to it being an electrical device.

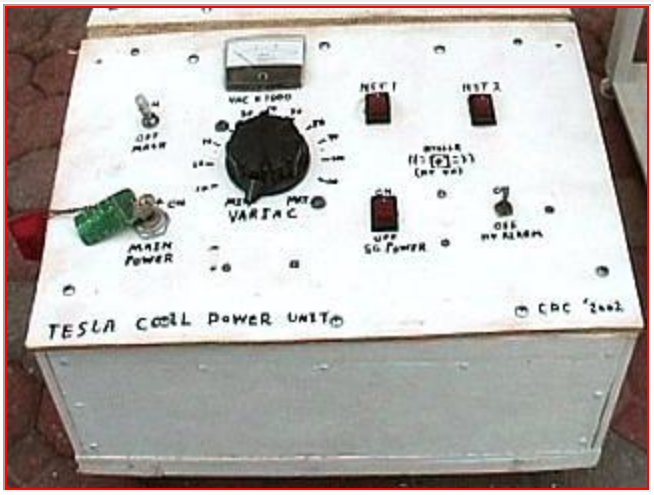

Here is the front control panel for the big Tesla coil power supply unit. Note the key switch to the lower left of the panel. Above that is an illuminated main power toggle switch. The large dial below the volt-meter is the 0-120 volt variac control. The volt-meter displays 0-15 (calibrated for 0-15,000 volts). The top two switches in the upper-right are the two internal NST power switches. The one below the first NST switch turns on an off the spark-gap 120 VAC power outlet. The buzzer for the high voltage warning is in the center of the 4 switches to the right and can be silenced by turning off the lower right toggle switch. The HV warning buzzer sounds whenever the main toggle switch above the key switch is energized.

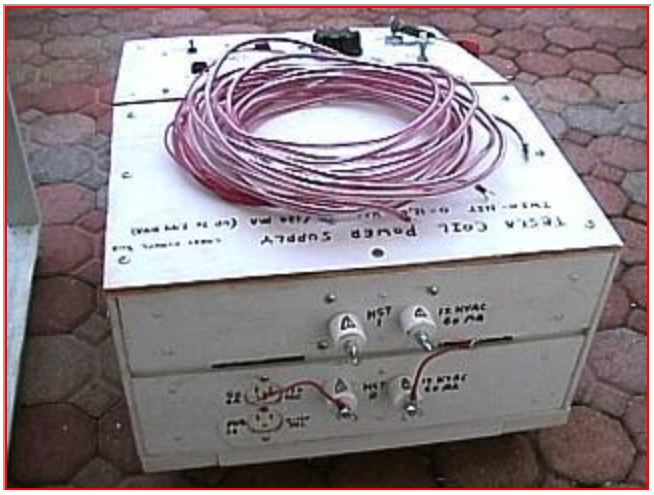

Here is the rear panel of the big Tesla coil power supply unit. The high voltage hookup wire was placed atop the unit. This wire is solid #12 wire with 600 V insulation. The hookup lines are 20 feet long and 2 are enclosed in aquarium airline (neoprene) tubing for the HV connections with one uncovered for the RF ground connection. This allows the power supply to be operated 20 feet from the coil. The back of the PSU has 4 high voltage bushings made from PVC pipe end caps and wing-nut bolts for easy connections. The top and bottom connectors each put out up to 12,000 volts at 60 mA. The connections in parallel yeild the same voltages up to 120 mA. The outlet in the far lower left is for the spark gap motor (120 VAC) as well as an additional 0-120 VAC variac output.

This picture shows the high voltage, RF ground, and spark gap blower power connections on the Tesla coil base. The two wing-nuts and bolts in the PVC end caps are the two high voltage power inputs. These both pass through RF chokes of 100 turns of #22 wire on 3/4-inch PVC tubes to prevent damage to the power supply (neon sign transformers). The high voltage also goes through a safety spark gap (three 3/4 inch copper tubes in the center of the panel with the center tube the RF ground). The center electrode in the safety gap also has a wing-nut so the dedicated RF ground can be connected. The panel is supported by clear plexiglass. The 120 VAC plug at the bottom is for the connections to the blower motor in the RQ spark gap quench fan.

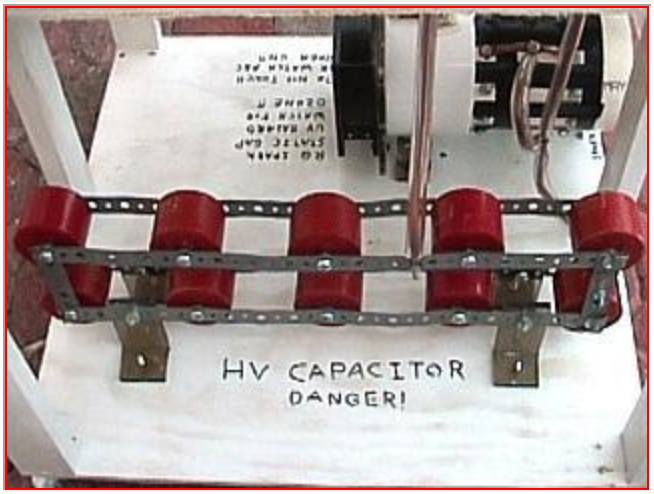

This is a view of the EMMC (Enhanced Multiple Mini-Capacitor) section on the base of the larger Tesla coil. The MMC is made from 10 doorknob type capacitors each rated at 30 KV, 2500 pF. The caps are in parallel via bolts and stiff metallic strips. The supports are 1/4 inch thick plastic "L" brackets. Note that the inside bolt head of the "L" brackets also form a mini spark gap to protect the capacitors (I have seen this gap fire in tests). The total capacitance yielded by this setup is 0.025 uF. Note that the tank circuit connections are done with 1/4 copper tubing encased in neoprene tubing. The unit in the upper right is the Richard Quick static spark gap.

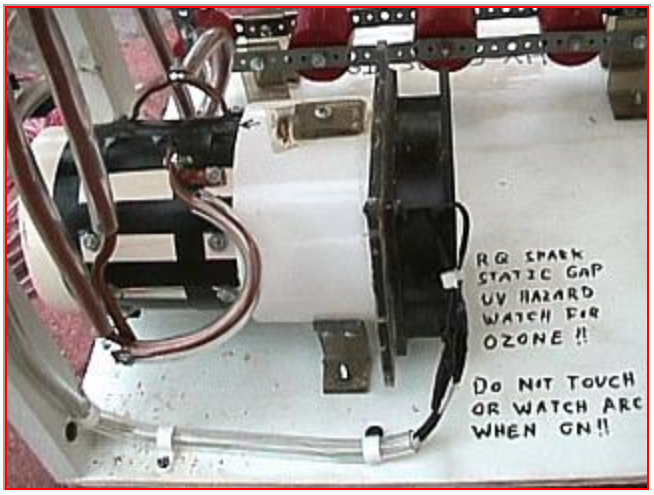

This is a side view of the the Richard Quick static spark gap for my 6 inch Tesla coil. The 120 VAC, 65 CFM fan is on the right side of the gap housing. The PVC collar and housing for the tubing electrodes mate to form the gap assembly. The tank circuit connections can be seen to the right. When these are removed, the entire gap assembly slides out (to the left in this picture) for easy cleaning of the electrodes while the fan assembly remains in place. The black electrical tape covers the adjustment grooves for the electrodes. Air flows from left to right in the unit in this picture. Note the warning messages to the right!

This is a view of the inlet to the Richard Quick static spark gap for my 6 inch Tesla coil. Air is "sucked" into this side and flows over the copper-pipe electrodes and exhausted out the fan at the other side. In this picture, we can see the 10 3" by 3/4" copper tubes spaced no more than 1/32" apart to formn 9 series gaps. The main form is a section of 4" ID PVC pipe. Note the small PVC pipe and end cap to increase the speed of incoming air and force it to flow more over the electrodes. The 1/4 inch strip of plexiglass barely visible in the top is the arc shield for the first two copper electrodes.

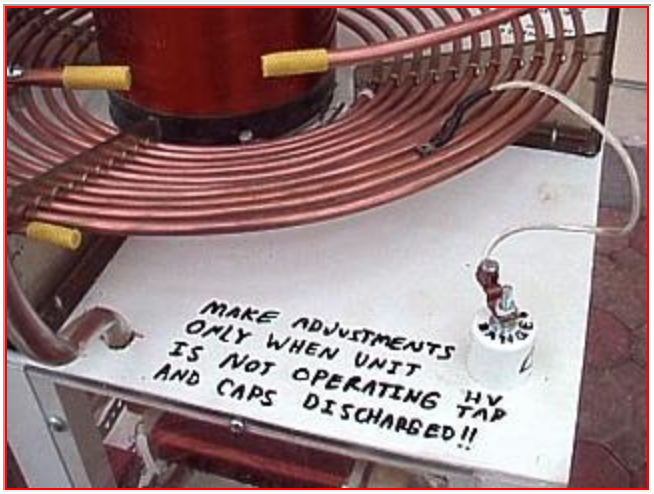

This view shows the primary coil and taps of the large Tesla coil. In this picture, one can clearly see the inverted cone type "saucer" primary coil at an angle of 15 degrees. The coil has about 11 turns of 1/4 copper tubing and is tapped at turn 8 in this picture. The tap "post" is the PVC end cap type high voltage bushing to the lower right. The small tap wire has a fuse holder soldered to its other end to taps can be made by clipping it on the primary quickly and easily. Note the stop-gap approach to warning lettering on the un-cluttered area. The strike rail and ground connections can also be see to the left and top of the picture.

The secondary coil for the new 6-inch tesla coil was actually constructed from scratch. It started out as two acrylic sheets wrapped around styrofoam 6-inch disks to form the "skeleton" onto which layer upon layer of urethane sealant was applied until it was fairly stiff. The next step was several layers of styrene resin used in boat repair (two chemicals mixed and applied before their 15-minute cure time). Two plexiglass 6-inch circular end-caps were placed on each end of the unit and covered with more boat styrene. After many coats, the form was sanded and smoothed, sealed with more urethane, and finally wound on a home made wooden lathe with #22 AWG magnet wire. The winding is 6 inches in diameter and about 24 inches in height (with 1 inch unwound on each end of the 26-inch form) and has roughly 900 turns. The wound form was then convered with more coats of boat repair styrene and finished with urethane sealant. The plastic disks at each end had a bolt with a plastic end affixed to the disks before being sealed in styrene. These served as the supports for the lathe, as well as the connections on each end of the finished unit. A PVC pipe and end cap on the top of the secondary makes attaching the top loads easy. I wanted to avoid using PVC on this unit and acrylic tube was so hard to come by, so I took this arduous approach.

This picture shows one of many top loads that can be attached to this version of my Tesla coil. The top load here is a toroid made from 4" aluminum vent duct around a 20-inch wooden disk. Aluminum tape covers and holds the entire unit together. The final skin is aluminum foil held on with spotty contact cement (all sections of foil are electrically conductive). The bolt in the middle holds a PVC end cap in place to attach the toroid to the top of the secondary via a section of PVC. A wire connects the secondary to the underside of the top load via a screw terminal and clip. Note the nail in the front of the toroid, that is to help initiate spark breakout.

These are the various toroids, or top loads, that are designed to fit atop the 6 inch Tesla coil. Clockwise from the upper left, the 11-inch semi-sphere was made from two steel salad bowls and attaches via a PVC fitting and screw terminal. The small toroid is about 10 inches in diamaeter and 4 inches tube diameter. The big one is about 22 inches with a 6 inch tube diameter. Finally, the other big one to the lower left if about 22 inches by 4 inches. All are tried atop the new coil for various effects.

Here is a picture of myself standing next to the improved big Tesla coil. The entire unit, with two oversized toroid top-loads, stands about 5 feet (60 inches) high. I am 5' 7" tall.

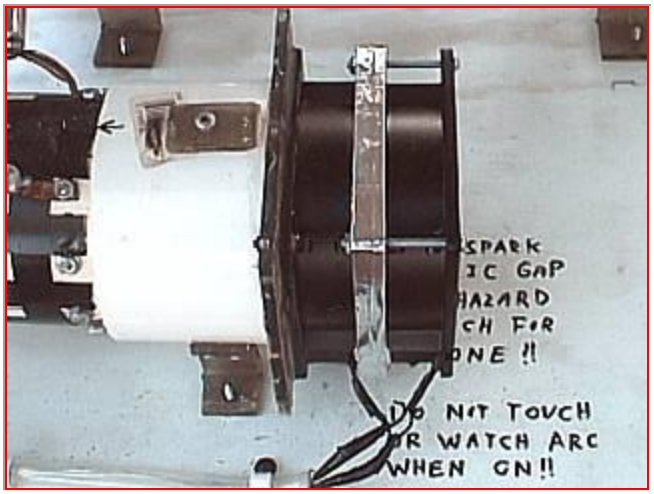

This picture shows the second quench fan added for increased spark-gap performance. The second fan is the same 65 CFM 120 VAC rating as the other one and is bolted onto the existing fan for increased axial flow of air. I don't know what the new CFM (Cubic Feet Per Minute) is, but it appears the speed of the airflow over the spark-gap electrodes has about doubled.

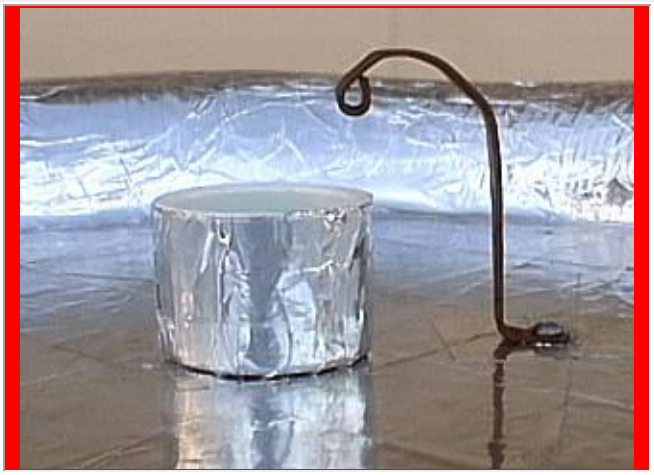

Here is a rather ingenious way of mounting different top loads (toroids) to the secondary terminal of my big Tesla coil. A metal clip made out of flattened scrap copper tubing that forms a contact from one metal surface to the other. In this picture, a PVC pipe with 1 3/4 coupler coated with aluminum foil forms the contacts for the metal clip. This works great at ultra-high voltages at RF frequencies. The toroids and top loads have such connectors as well as the top terminal of the secondary.

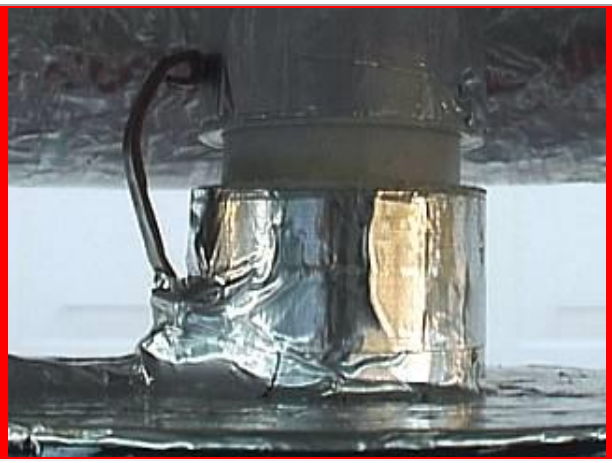

This picture shows the "mating" terminal of the big Tesla coil's secondary output forming a connection to the top-load (toroid). The conducting surface of the toroid and "corona ring" of the top of the new secondary electrically "connects" via a simple copper "clip" from a flattened section of copper tubing. Between the two aliminum coated PVC couplers, a short piece of 1 3/4 PVC pipe completes the connection, as long as the metal clip contacts the metal surface of the top-load.

This is a picture of myself holding the new and improved secondary coil for the big Tesla coil. This one was made from thouroughly dried and sealed electrical grade PVC thin-walled pipe and is 6 1/2 inches in diameter. The winding length is 24 inches of #22 magnet wire and has been sealed with nearly 20 layers of urethane varnish (note the gloss). Each end is sealed with plexiglass and epoxy and the top-end has a special "mating" piece of 1 3/4 PVC coated with aluminum foil tape which also forms a "corona ring" on the end of the unit. The bottom end has a mounting bolt for attachment to the Tesla coil base. The total length of the tube is 26 inches (one-inch unwound at each end). Absolutely no wires or bolts are exposed inside the tube!

This picture shows the changes made to the primary tap of the big Tesla coil. Here we can see a high voltage supply bus formed by a continous loop of copper tubing below the strike rail bolted to the outer edge of the plastic supports. Both ends of this supply bus terminate at the original high voltage tap. Using this method, not only can the primary be tapped at 8, 9, or 10 turns, but also at 8 and a 1/2, 9 and 3/4, etc! In the picture above, the coil is tapped at about 10.6 turns via a moveable small metal clip made from flattened copper tubing in the upper left corner of this picture. In addition to the improvements made since first "light" of this bigger coil, the coil has yet a larger secondary (6.5 inch sealed PVC), improved spark-gap quenching, and most "sharp" and redundant turns in the copper tubing of the primary and tank circuits eliminated for better RF performance. The blue shield over the first 2 inches of the secondary also is new. It is the bottom section of a vinyl fishing bait bucket and insulates the bottom end of the secondary from primary arcing, and also reduces "running" arcs over the secondary. A 1-inch thick by 6-inch diameter styrofoam disk placed under the secondary also decreased over-coupling and eliminated the running arc issue.

BELOW ARE THE WINTESLA COMPUTATIONS FOR THIS COIL

Primary Transformer

```
Output Voltage  : 12,000 VAC
Maximum Current : 120 mA
PFC Capacitor   : 260 uF
Frequency       : 60 HZ
Computed Power  : 1440 VA
```

Primary Information (Overall)

```
Inside Diameter : 8.0"
Total Diameter  : 17.2"
Length Of Wire  : 32.02'
Average Radius  : 6.30"
Wire Diameter   : 0.25"
Wire Spacing    : 0.25"
Winding Type    : 15 Degree Inverted cone
Maximum Taps    : 11
```

Secondary Information (Overall)

```
Diameter                    : 6.5"
Length                      : 24.0"
Radius                      : 3.25"
Circumference               : 20.42"
Length Of Wire              : 1484.6'
Wire Guage                  : 22
Turns Per Inch              : 37.48
Aspect Ratio                : 1:3.69
Computed Inductance         : 29.86 mH
Computed Medhurst K         : 0.67
Computed Self-Capacitance   : 11.04 pF
Computed Resonant Frequency : 277.18 KHz
```

Computed Requirements

```
Actual Tank Capacitance       : 0.025 uF
Top Load Major Diameter       : 22"
Top Load Minor Diameter       : 4"
Computed Top Load capacitance : 26.17 pF
Required Primary Tap          : 10.6 Turns
Computed Resonant Frequency   : 148.17 KHz
```

BIG TESLA COIL - SPARK PICTURES

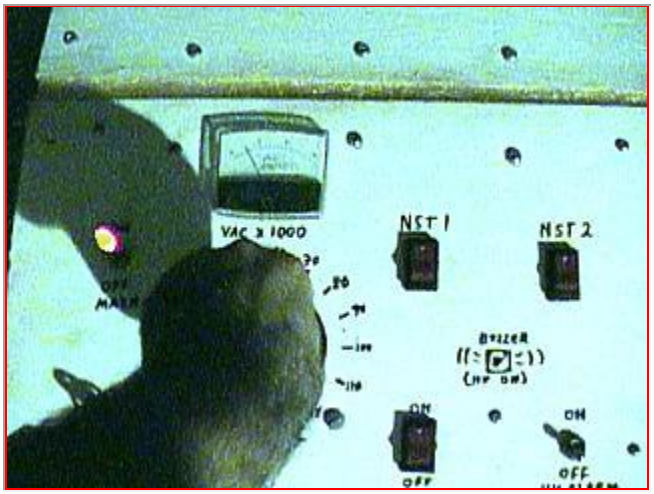

Here is a picture of the control panel of the power supply for my latest big Tesla coil being "ramped" up by turning the variac slowly clockwise. In this picture, the voltmeter indicates "5" for about 5,000 volts out on the neon sign transformer. The spark gap begins firing at around 4-5 KV out (about 1/4 power on the variac).

This is a picture of my latest and greatest Tesla coil being powered up to near full power for the first time. In this picture, a beautiful streamer makes its connection with a grounding rod about 3 feet from the coil. The way the coil behaved was pretty interesting. When ramped up to full power, a small "brush type" discharge appeared at the 4x24 toroid breakout point (nail). In the course of about 30 seconds, the "brush" evolved into branching, withering streamers up to 40 inches in length. Two things cause this "latency", which is very normal for this type of coil. One is that the quench fan on the spark gap has to get up to speed thus allowing the caps to charge more before the gap fires. Second, the Tesla coil, its topload (toroid), and the earth (RF ground) are all capacitors, and the high-frequency RF field also creates a tremendous amount of static electricity, which has to "build up".

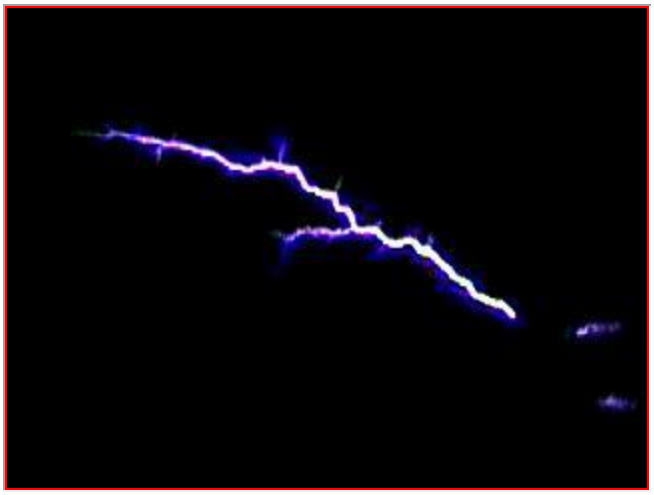

This is a picture of a lonely first streamer about 20 inches in length that came out of a break-out point on my large 4x22 inch toroid running on my coil at about 1/2 power. The breakout point is a 3 inch nail on the surface of the toroid.

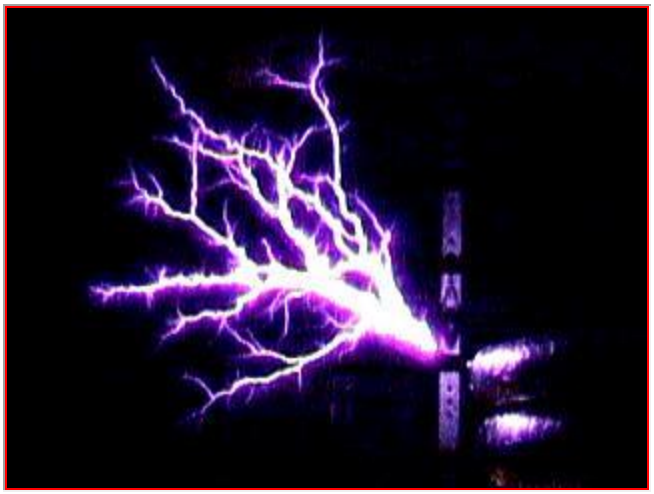

This longer exposure video frame grab shows the beautiful display of hot, multiple streamers coming off the break-out point when running my coil at near full power with two over-sized toroids (6x24 stacked atop a 4x24). These streamers are hot and very loud! Maximum spark-length here is about 36 inches.

This is another exposure video frame grab showing the branching effect of the multiple streamers coming from the breakout point with two toroids on top my coil running near full-power. Note that there are two white-hot streamers, both going out of frame, one upwards and the other to a grounded cable near the floor. These streamers were approaching 40 inches in length.

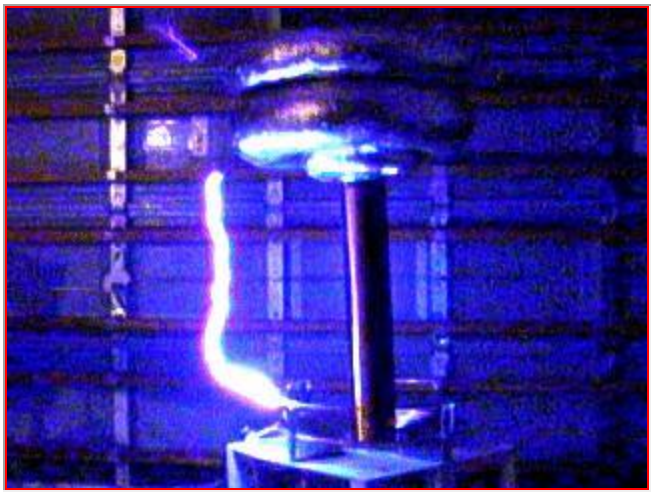

Here is a video grab showing my large Tesla coil running at full power with a 4x24 secondary (from my older coil I dismantled). It performed nearly as good as my 6x24 secondary! In this picture, a nasty, white-hot power arc takes a direct hit on the strike rail. Note I have two break-out points, one on each toroid. I removed the bottom one after this to reduce these strike-rail and even some primary power arcing (I counted at least 3 hits to the primary tap wire, and all fired my safety gap - but the coil just kept running)! The power arc in this picture is at least 24 inches long.

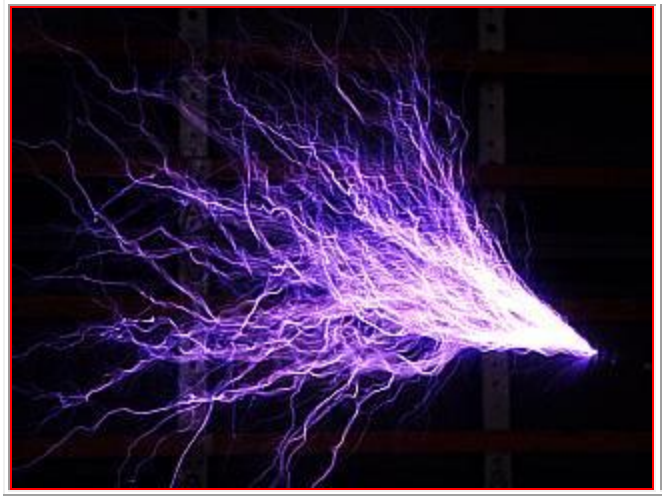

This is a picture of the spark breakout from a nail on the 4x22 inch toroid of my Tesla coil running near full power. The streamers are over 30 inches in length. This picture is a 3-second exposure taken from a Fuji digital camera.

Here is another picture of myself holding one end of a fluorescent tube with my big Tesla coil running at 1/4 to 1/3 power in the background. This is a two-second time exposure taken with a Fuji digital camera. The coil is producing a small discharge (not visible to the left) and enough RF energy to light the tube between 5 and 10 feet from the coil. Another strange phenomina was that any ungrounded metal objects in the garage within 15 feet of the coil running even at low power produced a small arc to my fingers when touched. I was able to draw a small 1/4 to 1/2 inch arc from the metal handlebars of my bicycles to my finger tip giving me a tiny RF burn! Sort of scary effect of being in the "reactive RF near-field" of such a transmitter (Tesla coil).

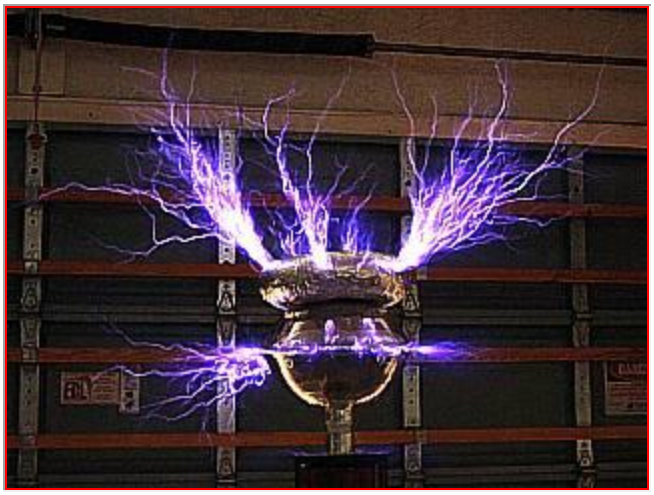

This picture shows my big Tesla coil running near full power with the smaller original top-load used on my earlier coils (a ball made with 2 steel 11-inch salad bowls topped with a 4x12 inch toroid). With nearly 1.5 KVA, the breakout length is slightly smaller with streamers less than 2 feet but much more frequent due to the smaller capacitance of the old top-load.

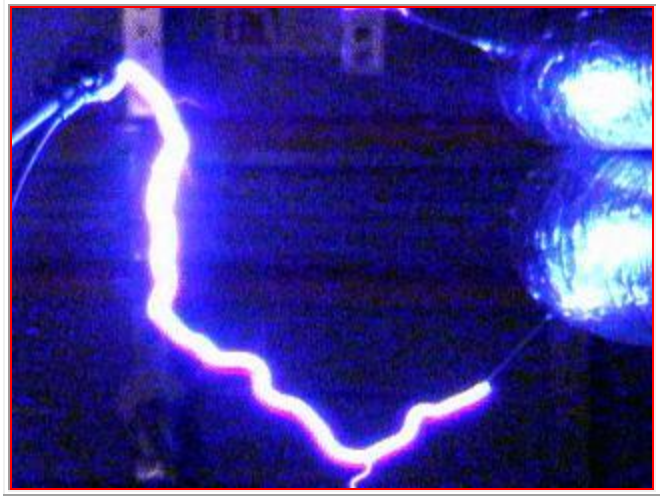

In this video frame-grab, I am holding a grounded discharge near the breakout points on my coil running near 3/4 full power. Again, white-hot power arcs, loud and terrifying, leap to the grounding rod. The power arc clearly is a brilliant blue and white channel of hot plasma. Note the "noise" in the video created from the intense RF field generated near the coil. My Canon 2000 EOS SLR camera simply kept "locking up" when I tried to take pictures this close, and only came back if I removed and replaced its batteries. Finally, my SLR took on a mind of its own and rewound the film (with a full unused roll in it) so I used the camcorder instead for these pictures!

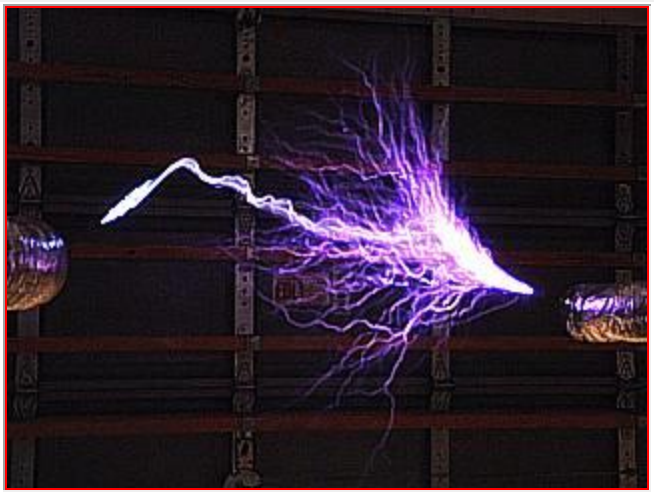	In this picture, with my big coil running at full-power, a power arc leaps from one breakout point (nail) on the coil toroid to a second nail on a grounded toroid at a distance of 36 inches (I measured it).
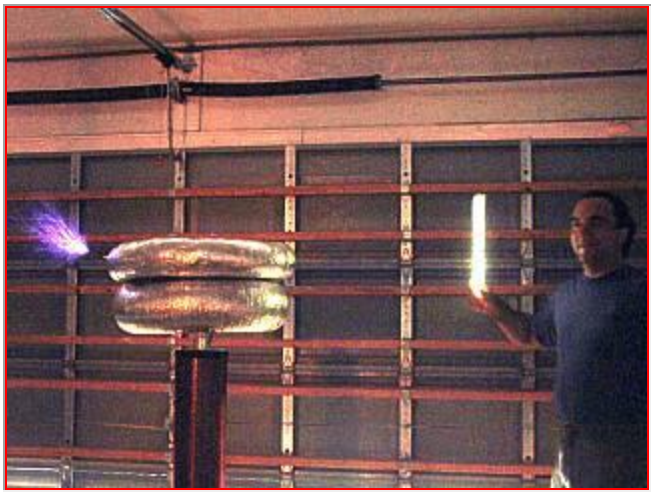	This picture shows my big Tesla coil running at about 1/3 power and producing a discharge up to 10 inches from its breakout point. The RF energy generated lights the fluorescent tube in my hand as I stand at least 5 feet from the coil.
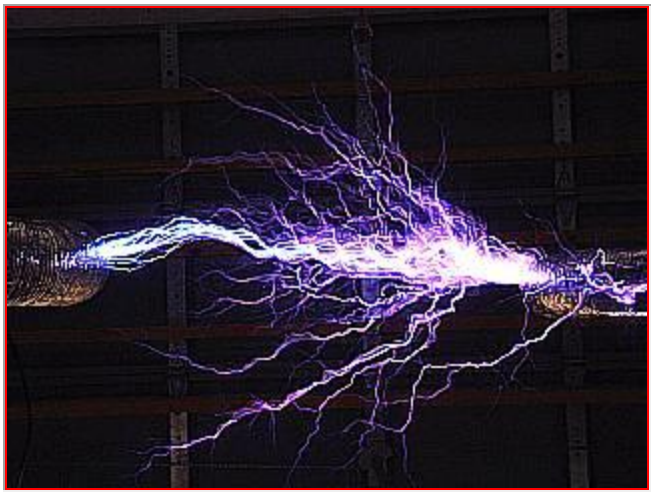	This is a picture of a power arc slightly more than 3-feet in length (my personal record so far) from the toroid of my Tesla coil at full power to a grounded toroid spaced slightly more than 36 inches (measured with a tape measure). Exposure is 3-seconds with a Fuji digital camera and also captures countless streamers at nearly the same length.

This picture is a 3-second exposure taken with a Fuji digital camera of my big Tesla coil running at full power. With the main breakout point (nail) removed, spark breakout was more random and energetic. The breakout seemed to favor the left and right sides of the 4x22 toroid in this picture. Note the one streamer extending below and to the left of the strike rail on the lower-left side of the picture.

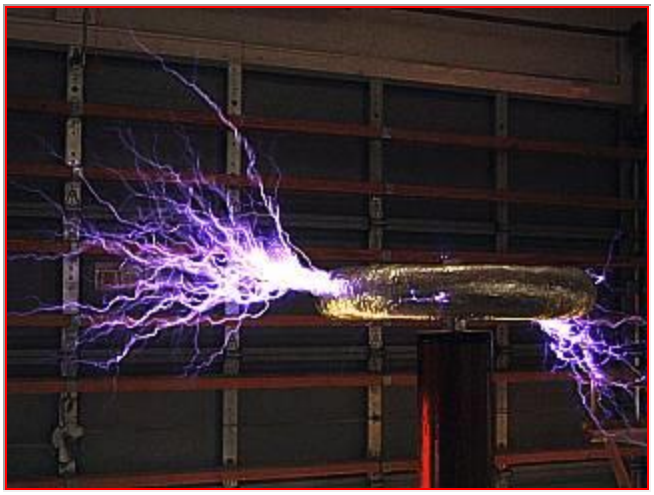

In this picture, streamers approaching 3 feet in length eminate from a rough area of aluminum on my 4x22 inch top-load torus when running my big Tesla coil at near full power. Note that streamers are also in the background as this shot is a 3-second exposure on a Fuji digital camera.

TREMENDOUS NEW POWER SOON TO BE UNLEASHED

Nikola Tesla, Starting His 78th Year, Works on Revolutionary Power Project and Also Is Completing Process for Photographing Thought.

The Kansas City Journal-Post ran this headline on September 10, 1933:

The following are quotes from this newspaper:

'Several of these inventions or discoveries will be looked upon as 'miracles' by many people, for Mr. Tesla has long been a scientist years ahead of his time, one whose advanced theories have alternately stamped him a 'madman' and a wizard. Just as people ridiculed Copernicus' theory of the planetary system, the unenlightened jeered Tesla's pronouncement, years ago regarding cosmic rays. The pathfinder and the pioneer - and Mr. Tesla is both - are always condemned by the masses.'

'Mr. Tesla is the father of the alternating system of power transmission and radio, the induction motor and Tesla coil. Asked about his startling new scientific discoveries, one of which concerns the 'photographing of thought,' which will, he maintains, bring about a tremendous social revolution, he said:
'My first and most important discovery concerns the harnessing of a new source of power, hitherto unavailable, to be developed through fundamentally novel machines of my invention.'

'Will the smashing of the atom lead to this new power energy? Let Mr. Tesla answer: 'The public is naturally led to expect a great revolution through the harnessing of atomic power, but this is an illusion. Atomic energy is not available for work...For the last thirty years I have warned my fellow scientists that there is nothing to be expected in this field...'

'I expect to photograph thoughts,' announced Mr. Tesla calmly, in the same tone of voice one might talk about the rain. Continued Mr. Tesla: 'In 1893...I became convinced that a definite image formed in thought must, by reflex action, produce a corresponding image on the retina, which can be read by suitable apparatus. This brought me to my system of television...'

{I first came across Nikola Tesla not in Scientific American; not on Nova; not in Popular Mechanics...I came across the most amazing, scientific genius of all time in a magazine called Ancient Astronauts! The article was called: 'Nikola Tesla: The Man Who Fell To Earth' by Harry Imber. The first paragraph blew my mind and still does to this day. When I first read it, it was hardly believed. Everything I have read on Tesla after this article has supported its credibility. The first paragraph deserves reprinting:

'Nikola Tesla invented the 20th and 21st Century. A 'discoverer of new principles,' Tesla was the sole inventor of the alternating poly-phase current generators that light up every town in the world today. He was the original inventor of the radio, and placed his ideas in print and demonstrated them before the public 5 years before Marconi. By the turn of the century, he had discussed the feasibility of television; he created an atom smasher capable of evaporating rubies and diamonds; he built wireless neon lamps that gave off more light than today's conventional bulbs provide; he built precursors to the electron microscope, the laser and X-ray photographs. He sent his shadowgraphs to the discoverer of X-rays in 1895 as soon a Roentgen published his famous pictures. Tesla also created Kirlian-like photographs 75 years before they became famous. All of this took place before 1900!'

John O'Neill, author of Prodigal Genius, describes Tesla's New York lab as: '...seemingly unearthly forces that with invisible fingers set objects whirling, caused globes and tubes of various shapes to glow resplendently in unfamiliar colors...transplanting the darkened room into one crackling with hissing sheets of flame which issued from monstrous coils.'

Reproduced here is an old article called; **The Inventor Who Smashed His Own Invention**:

'Nikola Tesla - discoverer of the rotating magnetic field, which is the basis for AC electric current - once demolished one of his inventions to prevent disaster. In the 1890s, Tesla speculated about uses for resonance, the physical principle by which a high note from a soprano can shatter a glass. He invented a tiny oscillator that could produce vibrations with different frequencies and tested it on a half-constructed building. The girders trembled like a tree in a high wind.

Later, in his New York lab, Tesla fastened the machine to a pole and turned it on. The vibrations reached the local police station, where the furniture began dancing. Guessing that the source was the inventor, the police ran to the lab to find Tesla smashing his machine (with a sledgehammer). It was the only way to stop the vibrations. Tesla also postulated that by carefully timing the explosions, he could create waves of increasing force capable of shattering the earth. Scientists of the day denied the possibility.'

(The above describes the only known earthquake to strike New York; and it was produced by Tesla.)

A photomontage from The World Today illustrated Tesla's theory that the Earth itself could be 'split open like an apple' by applying the principle of mechanical resonance.

Tesla had the idea of illuminating the oceans! Critics saw this as absurd. With a fully operational World System, we could light the oceans. Large, permanent, WIRELESS lights could illuminate the depths of the seas. Why not? Tesla also bounced a laser off the Moon...in the 19th Century! Was Tesla DaVinci in a past life?

Nikola had the idea that a large transmitter could create an impenetrable wall of force. A literal force-field could be wrapped around cities; and even wrapped around countries. He saw this as an end to war. The truth is an invisible hole at the very top of the protective bubble, like a hurricane's eye, would leave the transmitter open to attack. The invention also would not eliminate war in the hearts of individuals.

One of Tesla's best friends was Mark Twain. When they first met is an interesting little story. What did these two brilliant men talk about at their first meeting? What was the subject these geniuses discussed? The weather. They talked about how: Everyone complains about the weather but no one does anything about it. Tesla DID do something about it. His devices could make rain; attract lightning; repel clouds, storms and rain. We do not have to be stuck with any reality when intelligence can break traditional laws.
Another odd and humorous event happened when Tesla asked Twain to test out another of his inventions. It was a platform that could be set for a wide range of frequencies. Clemens innocently stepped on the platform and it was made to vibrate. A few moments later, Twain cursed at Tesla and headed off toward the bathroom. Certain frequencies create certain physical reactions to the body. Tesla set his machine to cause an automatic-bathroom response!

Tesla was placed on a United States 20 cent postage stamp; but only for the induction motor. The other scientists in his stamp block; Armstrong, Steinmetz and Farnsworth only became famous building on the work of Tesla.

In 1901, when Marconi received world acclaim for sending a few 'clicks' across the Atlantic Ocean...Tesla had already developed and began construction of his Radio City. This tower 'Wardenclyffe' would have been able to transmit reproductions of photographic pictures (TV), news service, music, navigation service for ships and much more information which could be received anywhere in the world. (Tesla planned to contact Venus and Mars with his World Wireless!) Marconi literally stole the idea of radio right out of Tesla's lab. Marconi almost got away with it; Tesla was slow to capitalize on radio because he was so consumed with wireless principles applied to electricity.

In a chart entitled: Wireless Telegraphy Mechanically Illustrated, Tesla's World System is shown simply. Over an ocean, a tuning-fork is placed horizontally. There is a connection between the waves and the tuning-fork. In the distance, is another similarly placed tuning-fork. The idea here is any signal, picture or transmission created at one tower (or tuning-fork) can be recreated at any tower (or tuning-fork) at any distance around the Earth. The planet itself responds like a liquid; Electromagnetic (EM) waves that can be reproduced anywhere. This means the wireless system can provide instant World television, radio, information, entertainment and communications. Like ripples on a lake; any signal is recreated at any tower: DISTANCE IS ANNIHILATED!

Tesla's words, work and incredible accomplishments have inspired many others. Tesla's views of the future; what wonders electricity, if used properly, could achieve...have been such inspiration. Most people think he was drawing a blueprint for that undiscovered country known as the future. What enlightened readers should realize is that Tesla also provided a map

of the ancient past. Everything that Tesla dreamed and feared for tomorrow, his 'war of Science,' has already happened long ago in Atlantis.

To complete this Tesla tribute, there were others who followed in the master's footsteps:

At 19, Alfred Hubbard built a coil and motor that ran his boat 10 knots an hour on Portage Bay in Seattle. In 1920, this 'fuelless' unit was called an 'atmospheric power generator.' Hubbard claimed it could operate for years; drive a large car; light an office building; and fly a plane around the world nonstop. Little is known about the Hubbard Coil. He was forced into obscurity because of what his motor would do to the present industries.

Lester Hendershot developed a fuelless motor that could 'make its own electricity.' His system was 'based on electromagnetism applied to the rotary motion of the earth.' Dr. Frederick Hoffstetter rented a lecture hall in New York so Hendershot could demonstrate his motor. The motor never had a chance since Hoffstetter was only out to prove it a fraud. He even claimed that a battery was found inside. The inventor was ruined and nearly lost his life in an electrical accident.

In 1960, Hendershot's device (now called a 'magnatronic generator') was researched by the U.S. Navy's Office of Naval Research. The generator was reported to have lit a 100-watt lamp by 'induced radio frequency energy.' The project ended when Hendershot committed suicide.

A Doctor of Electrical Engineering, T. Henry Moray wrote the book 'The Sea of Energy in Which the Earth Floats' in 1960. It contains results of a 50 year study with another type of 'atmospheric energy collector.' During FDR's reign, Moray became the chief engineer of the western branch of the Rural Electrification Agency. He built a device that weighed 55 pounds and produced up to 50,000 watts. An ignorant co-worker was so enraged by the strange principles Moray tested, that he destroyed the machine. By today's standards, the loss would be over a million dollars. Moray wrote that 'frequencies maybe developed which will balance the force of gravity to a point of neutralization.'

Moray: 'It was during the Christmas holidays of 1911 that I began to realize the fact that the energy I was working with was not of a static nature but of an oscillating nature, and that the energy was not coming out of the Earth but that it rather was coming in to the Earth from some outside source.'

Copyright 2000-2002 by Doug Yurchey
All rights reserved. Reprinted with Permission.

Tunguska event

From Wikipedia, the free encyclopedia.

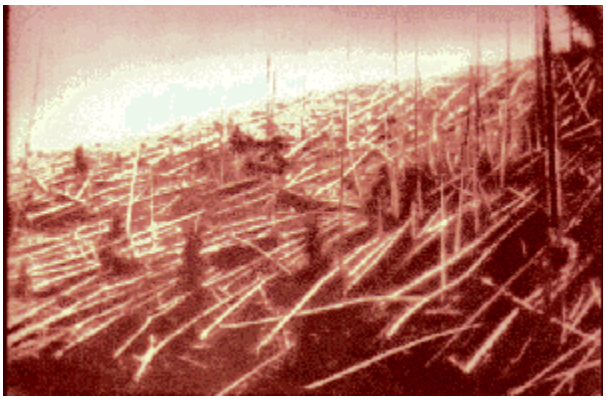

Trees felled by the Tunguska blast. Photograph from Kulik's 1927 expedition.

Approximate location of the Tunguska event, inSiberia.

The **Tunguska event** was an aerial explosion that occurred at 60°55′ N 101°57′ E, near the Podkamennaya (Stony) Tunguska River in what is now Evenkia, Siberia, at 7:17 AM on June 30,1908. The size of the blast was later estimated to be between 10 and 15 megatons. It felled an estimated 60 million trees over 2,150 square kilometers.

Contents

- 1 Description
- 2 History
- 3 Meteorite hypothesis
  - 3.1 Meteor airburst
  - 3.2 Blast patterns
  - 3.3 Asteroid or comet?
- 4 Unexplained phenomena
- 5 Speculative hypotheses
  - 5.1 Black Hole
  - 5.2 Antimatter
  - 5.3 Electromagnetism
  - 5.4 UFOs
  - 5.5 The Wardenclyffe Tower
- 6 Tunguska event in fiction
- 7 Books on Tunguska
- 8 See also
- 9 External links

Description

At around 7:15 AM, Tungus natives and Russian settlers in the hills northwest of Lake Baikal observed a huge fireball moving across the sky, nearly as bright as the Sun. A few minutes later, there was a flash that lit up half of the sky, followed by a shock wave that knocked people off their feet and broke windows up to 650 km (400 mi) away. The explosion registered on seismic stations across Eurasia, and produced fluctuations in atmospheric pressure strong enough to be detected by the recently invented barographs in Britain. Over the next few weeks, night skies were aglow such that one could read in their light. In the United States, the Smithsonian Astrophysical Observatory and the Mount Wilson Observatory observed a decrease in atmospheric transparency that lasted for several months.

History

Surprisingly, there was little scientific curiosity about the impact at the time, possibly due to the isolation of the Tunguska region. If there were any early expeditions to the site, their records were lost during the subsequent chaotic years — World War I, the Russian Revolution, and the Russian Civil War.

The first expedition for which records have survived arrived at the scene more than a decade after the event. In 1921, The Russian mineralogist Leonid Kulik, visiting the Podkamennaya Tunguska River basin as part of a survey for the Soviet Academy of Sciences, deduced from local accounts that the explosion had been caused by a giant meteorite impact. He persuaded theSoviet government to fund an expedition to the Tunguska region, based on the prospect of meteoric iron that could be salvaged to aid Soviet industry.

Photograph from Kulik's 1927expedition.

Kulik's expedition reached the site in 1927. To their surprise, no crater was to be found. There was instead a region of scorched trees about 50 kilometres across. A few near ground zero were still strangely standing upright, their branches and bark stripped off. Those farther away had been knocked down in a direction away from the center.

During the next ten years, there were three more expeditions to the area. Kulik found a little "pothole" bog that he thought might be the crater, but after a laborious exercise in draining the bog, he found there were old stumps on the bottom, ruling out the possibility that it was a crater. In 1938, Kulik managed to arrange for an aerial photographic survey of the area, which revealed that the event had knocked over trees in a huge butterfly-shaped pattern. Despite the large amount of devastation, there was no crater to be seen.

Expeditions sent to the area in the 1950s and 1960s found microscopic glass spheres in siftings of the soil. Chemical analysis showed that the spheres contained high proportions of nickel andiridium, which are found in high concentrations in meteorites, and indicated that they were of extraterrestrial origin. Expeditions led by Gennady Plekhanov found no elevated levels of radiation, which might have been expected if the detonation were nuclear in nature.

Meteorite hypothesis

Meteor airburst

In scientific circles, the leading explanation for the blast is the airburst of a meteor 6 to 10 kilometers above the Earth's surface.

Meteors are constantly entering the Earth's atmosphere from outer space, usually travelling at a speed of more than 10 kilometers per second. The heat generated by compression of air in front of the meteor as it travels through the atmosphere is immense, and most meteors completely burn up or explode before they can reach the ground. Starting from the second half of the 20th century, close monitoring of the Earth's atmosphere has led to the discovery that such meteor airbursts occur rather frequently. A stony meteoroid of about 10 meters in diameter can produce an explosion of around 20 kilotons, similar to the Little Boy bomb that flattened Hiroshima, and data released by the U.S. Air Force's Defense Support Program has shown that such explosions occur at a rate of more than once a

year. Tunguska-like megaton-range events are much rarer. Eugene Shoemaker has estimated that such events occur at the rate of about once every 300 years.

Blast patterns

The curious effect of the Tunguska explosion on the trees near ground zero has been observed during atmospheric nuclear tests in the 1950s and 1960s, and is due to the shock wave produced by such large explosions. (The radioactivity emitted by nuclear blasts does not have any effect on the phenomena in question.) The trees directly below the explosion are stripped as the blast wave moves vertically downward, while trees further away are felled because the blast wave is travelling closer to the horizontal when it reaches them.

Soviet experiments performed in the mid-1960s, with model forests and small explosive charges slid downward on wires, produced butterfly-shaped blast patterns strikingly similar to the pattern found at the Tunguska site. The experiments suggested that the object had approached at an angle of roughly 30 degrees from the ground and 115 degrees from north, and exploded in mid-air.

Asteroid or comet?

The composition of the Tunguska body remains a matter of controversy. In 1930, the British astronomer F.J.W. Whipple suggested that the Tunguska body was a small comet. A cometary meteorite, being composed primarily of ice and dust, could have been completely vaporized by the impact with the Earth's atmosphere, leaving no obvious traces. The comet hypothesis was further supported by the glowing skies (or "skyglows") observed across Europe for several evenings after the impact, apparently caused by dust that had been dispersed across the upper atmosphere. In addition, chemical analyses of the area have shown it to be rich in cometary material. In 1978, Slovak astronomer Lubor Kresak suggested that the body was a piece of the short-period Comet Encke, which is responsible for the Beta Taurid meteor shower; the Tunguska event coincided with a peak in that shower. It is now known such bodies regularly explode tens to hundreds of kilometres before hitting the ground, as military satellites have been observing such explosions for decades.

In 1983, astronomer Zdenek Sekanina published a paper criticizing the comet hypothesis. He pointed out that a body composed of cometary material, travelling through the atmosphere along such a shallow trajectory, ought to have disintegrated, whereas the Tunguska body apparently remained intact into the lower atmosphere. Sekanina argued that the evidence pointed to a dense, rocky object, probably of asteroidal origin. This hypothesis was further boosted in 2001, when Farinella, Foschini, *et al.* released a study suggesting that the object had arrived from the direction of the asteroid belt.

Proponents of the comet hypothesis have suggested that the object was an extinct comet with a stony mantle that allowed it to penetrate the atmosphere.

The chief difficulty in the asteroid hypothesis is that a stony object should have produced a large crater where it struck the ground, but no such crater has been found. It has been hypothesized that the passage of the asteroid through the atmosphere caused pressures and temperatures to build up to a point where the asteroid abruptly disintegrated in a huge explosion. The destruction would have had to be so complete that no remnants of substantial size survived, and the material scattered into the upper atmosphere during the explosion would have caused the skyglows. Models published in 1993 suggested that the stony body would have been about 60 metres across, with physical properties somewhere between an ordinary chondrite and a carbonaceous chondrite.

Christopher Chyba and others have proposed a process whereby a stony meteorite could have exhibited the behavior of the Tunguska impactor. Their models show that when the forces opposing a body's descent become greater than the cohesive force holding it together, it blows apart, releasing nearly all its energy at once. The result is no crater, and damage distributed over a fairly wide radius, all of the damage being blast and thermal.

Unexplained phenomena

There are still some aspects that have not been convincingly explained. Reports say the skyglow began the night before the explosion, and that there was strange weather and increased seismic activity for days beforehand. Attempts to apply carbon-14 dating to soil in the area gave a date "in the future" — that is, the soil was enriched in radioactive carbon-14. Some trees near the blast centre were not burnt. The site lies in the middle of an ancient volcanic eruption zone, and researchers once detected an emission of radon gas that lasted four hours. The size of bolide necessary to create such a large explosion is very unlikely in such a recent time. According to Russian geologist Vladimir Epifanov and German astrophysicist Wolfgang Kundt, some of these aspects suggest that the explosion was an explosion of methane gas which was emitted from the earth. Something similar seems to have occurred in 1994 near the village of Cando in Spain. See 'New Scientist', 7 Sept. 2002, p. 14 [1] [2].

Speculative hypotheses

Scientific understanding of the behaviour of meteorites in the Earth's atmosphere was much sparser during the early decades of the 20th century. Due to this lack of knowledge, a great many other hypotheses for the Tunguska event have sprung up, with varying degrees of credibility. The hypotheses listed below are all rejected by modern science and by skeptics who generally see them as being gross violations of Occam's Razor.

Black Hole

In 1973, Jackson and Ryan proposed that the Tunguska event was caused by a "small" (around 10^{23} kg) black hole passing through the Earth. Unfortunately for this hypothesis, there is no evidence for a second explosion occurring as the black hole exited the Earth and it has not gained wide acceptance. Furthermore, the subsequent discovery by Stephen Hawking that black holes radiate energy indicates that such a small black hole would have evaporated away long before it could encounter the Earth.

Antimatter

In 1965, Cowan, Atluri, and Libby suggested that the Tunguska event was caused by the annihilation of a chunk of antimatter falling from space. However, as with the other hypotheses described in this section, this does not account for the mineral debris left in the area of the explosion. Furthermore, there is no astronomical evidence for the existence of such chunks of antimatter in our region of the universe. If such objects existed, they should be constantly producing energetic gamma rays due to annihilation against the interstellar medium, but such gamma rays have not been observed.

Electromagnetism

Some hypotheses link the Tunguska event to the magnetic storms similar to those that occur after thermonuclear explosions in the stratosphere. For example, in 1984 V. K. Zhuravlev and A. N. Dmitriev proposed a "heliophysical" model based on "plasmoids" ejected from the Sun. Valeriy Buerakov has also developed an independent model of an electromagnetic "fireball".

UFOs

UFO aficionados have long claimed that the Tunguska event is the result of an exploding alien spaceship or an alien weapon going off to "save the Earth from an imminent threat". This hypothesis appears to originate from a science fiction story penned by Soviet engineer Aleksander Kazantsev in 1946, in which a nuclear-powered Martian spaceship, seeking fresh water from Lake Baikal, blew up in mid-air. This story was inspired by Kazantsev's visit to Hiroshima in late 1945.

A 1960 movie and a 1951 novel, on which the movie is based, seized upon the UFO concept.

Many events in Kazantsev's tale were subsequently confused with the actual occurrences at Tunguska. The nuclear-powered UFO hypothesis was adopted by TV drama critics Thomas Atkins and John Baxter in their book *The Fire Came By* (1976).
The 1998 television series *The Secret KGB UFO Files*, broadcast on Turner Network Television, referred to the Tunguska event as "the Russian Roswell" and claimed that crashed UFO debris had been recovered from the site. In 2004, a group of Russian scientists from the Tunguska Space Phenomenon Public State Fund claimed to have found the wreck of an alien spacecraft at the site [3].

The proponents of the UFO hypothesis have never been able to provide any significant evidence for their claims. It should be noted that the Tunguska site is downrange from the Baikonur Cosmodrome and has been contaminated repeatedly by Russian space debris, most notably by the failed launch of the fifth Vostok test flight on December 22, 1960. The payload landed close to the Tunguska impact site, and a team of engineers was dispatched there to recover the capsule and its two canine passengers (which survived).

The Wardenclyffe Tower

It has also been suggested that the Tunguska explosion was the result of an experiment by Nikola Tesla at his Wardenclyffe Tower, performed during Robert Peary's second North Pole expedition. Allegedly he had sent a communication to Peary advising him to be on the alert for unusual auroral phenomena encountered as he attempted to reach the North Pole. However, by 1908 most work at Wardenclyffe had already ended and the site was mostly abandoned. Nor is it obvious how a small energy input at Wardenclyffe be responsible for a large energy output elsewhere, something that is essentially a physical impossibility.

Even if it was possible for the facility to produce such an effect, the main contention that Tesla was not responsible for the Tunguska event is that it occurred at about 7:17 AM. Given accounts (if they can be trusted) stating that Tesla performed his experiments in the

evening of June 30th, and that his facility was 1/4 a day ahead of Tunguska time, his Wardenclyffe experiment would then have been the day after the Tunguska event (which occurred around 1:00 in the morning on June 30th New York time).

Tunguska event in fiction

- A crossover novel featuring Tom Swift and the Hardy Boys, entitled *The Alien Factor*, reveals that the Tunguska event was due to an antimatter-powered alien lifeboat crash-landing upon the Earth.
- In an *X-Files* multiple episode story arc, the Tunguska incident was purported to be caused by an asteroid impact. The asteroid itself contained an alien life-form, looking similar to motor oil, which can "crawl" into a human body and control them.
- In the director's cut of the 2004 film *Hellboy*, Grigori Rasputin purchases a stone key monolith which the Russians had hidden since it landed in Tunguska, which Rasputin states was theOgdru Jahad sending it as a way to assist him in bringing them to Earth.
- In a Marvel Comics trilogy of publications entitled *Ultimate Nightmare* (2004-2005), *Ultimate Secret* (2005), and "Ultimate Extinction"(2005), the Ultimate universe characters confront the mystery of the event, linking it to an alien encounter with the Ultimate version of Galactus. Ultimate Nightmare #1 errs in giving the year of the Event as 1904 (four years off), and depicting it as leaving a rather large impact crater (it left none).
- Science fiction writer Stanisław Lem in his first novel *Astronauts* (1951) explains this event as crash of interplanetary reconnaissance vessel from Venus civilization.
- The 1984 movie *Ghostbusters* references the Tunguska Event in the line, "You have been a participant in the biggest interdimensional cross-rip since the Tunguska blast of 1909.", which is off by one year.
- The book *Callahan's Key* by Spider Robinson uses the connection between Tesla (made immortal in this fiction) and the Tunguska event. The 'death ray' has been stolen by the U.S. government and its use may destroy the known universe.
- The humorous 1978 alternate history novel *And Having Writ* by Donald R. Bensen features four space travelers whose ship crashes to Earth at Tunguska. Needing to jumpstart Earth technology to rebuild their ship, they analyze world affairs and foresee the impending World War I, and travel the world attempting to provoke the war to get it out of the way as quickly as possible so science can move on. In the course of their travels, they interact with such characters as Theodore Roosevelt, H.G. Wells, Henry Ford, Kaiser Wilhelm, and Grigori Rasputin.
- The novel *Singularity* by Bill DeSmedt explores the Jackson-Ryan hypothesis — i.e., the possibility that the Tunguska Event was caused by a submicroscopic black hole.
- The novel *Earth* by David Brin also features the Jackson-Ryan hypothesis.
- The Tunguska event (and the Jackson-Ryan hypothesis) forms part of the backstory for the 1975 Larry Niven novelette *The Borderland Of Sol*.
- In the 1960 movie "First Spaceship on Venus", based on Stanisław Lem's novel, an expedition discovered a magnetic recording device at Tunguska, determined its origin as the planet Venus, and a newly-completed spacecraft was sent to Venus instead of Mars as originally planned. The expedition determined, from translation of the recording, that the aliens planned to occupy Earth, but they discovered that the people of Venus were abruptly rendered extinct by their incomprehensible machinery.
- The novel *Intervention*, by Julian May, depicts a commemoration of the 100th anniversary of the impact, which was caused by the destruction of an out-of-control alien craft. Apparently, if the crew had not activated the self-destruct program, the ship would have crashed into Moscow.
- "Chekhov's Journey" by Ian Watson, 1983, describes the possibility that the famous author Chekhov knew of the 1908 Tunguska explosion back in 1890 which turned out to be caused by an out of control Soviet time-ship.
- The novel, "Sandstorm," by James Rollins (c)2004, uses the circumstances of Tunguska event -- in this case, a meteor composed of anti-matter -- as evidence to suggest the cause of the explosion in the book's opening pages, and the set up for the cataclysmic events of the book's climax.

Books on Tunguska

- John Baxter and Thomas Atkins, *The Fire Came By: The Riddle of the Great Siberian Explosion*, Macdonald and Jane's, London 1975
- Rupert Furneaux, *The Tungus Event*, Nordon Publications, New York, 1977
- Roy A. Gallant, *The Day the Sky Split Apart: Investigating a Cosmic Mystery*, Atheneum Books for Children, New York, 1995
- E.L. Kirnov, *Giant Meteorites*, trans. J.S. Romankiewicz (Part III: The Tunguska Meteorite), Pergamon Press, Oxford, 1966
- Jack Stoneley, *Cauldron of Hell: Tunguska*, Simon and Schuster, New York, 1977
- Surendra Verma, *The Tunguska Fireball: Solving One of the Great Mysteries of the 20th Century*, Icon Books, Cambridge, 2005

See also

- Vitim event

External links

Wikimedia Commons has more media related to:
Tunguska event

- TFC Books article Tesla & Tunguska.
- Tunguska.ru Russian site with a tiny English section. Includes some gorgeous Tunguska photos.
- The Tunguska event Includes several photos from Kulik's expedition.
- Preliminary results from the 1961 combined Tunguska meteorite expedition
- Tunguska A research group at University of Bologna that has conducted several recent expeditions to the site.
- Probable asteroidal origin of the Tunguska Cosmic Body A 2001 paper arguing for the asteroidal hypothesis.
- Geomagnetic effects as one aspect of the Tunguska event
- "Russian Alien Spaceship Claims Raise Eyebrows, Skepticism" article, arguing the event was caused by meteor explosion
- "The Vurdalak Conjecture" website explores the science behind the black-hole impact hypothesis.
- The Tectonic Interpretation Of The 1908 Tunguska Event

Retrieved from "http://en.wikipedia.org/wiki/Tunguska_event"

Categories: Impact events

Jan. 3, 1928. 1,655,114

N. TESLA

APPARATUS FOR AERIAL TRANSPORTATION

Filed Oct. 4, 1927 2 Sheets-Sheet 1

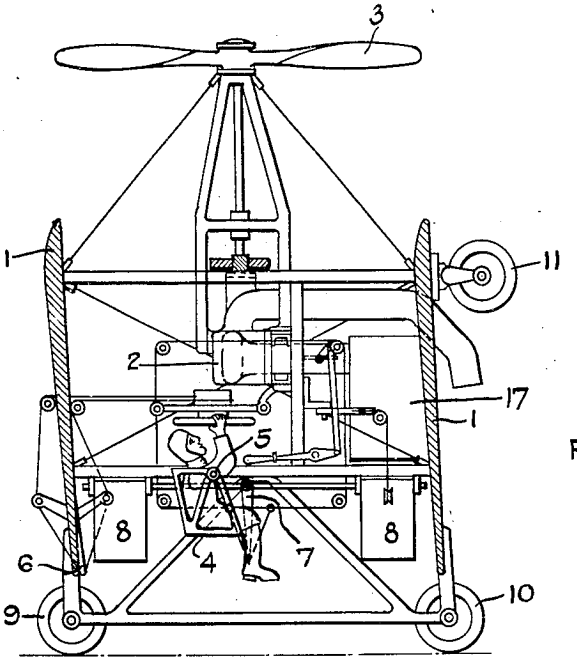

FIG. 1.

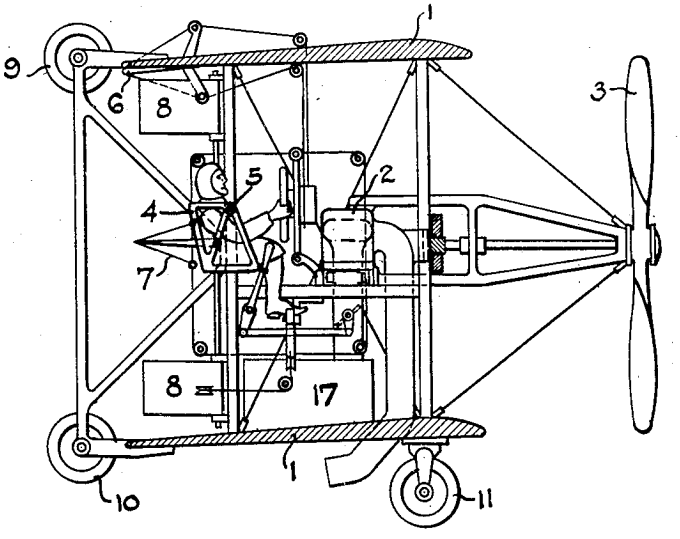

FIG. 2.

INVENTOR.

NIKOLA TESLA.

BY

ATTORNEY.

Jan. 3, 1928. 1,655,114

N. TESLA

APPARATUS FOR AERIAL TRANSPORTATION

Filed Oct. 4, 1927 2 Sheets-Sheet 2

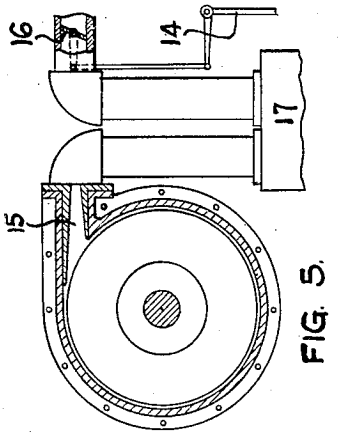

FIG. 5.

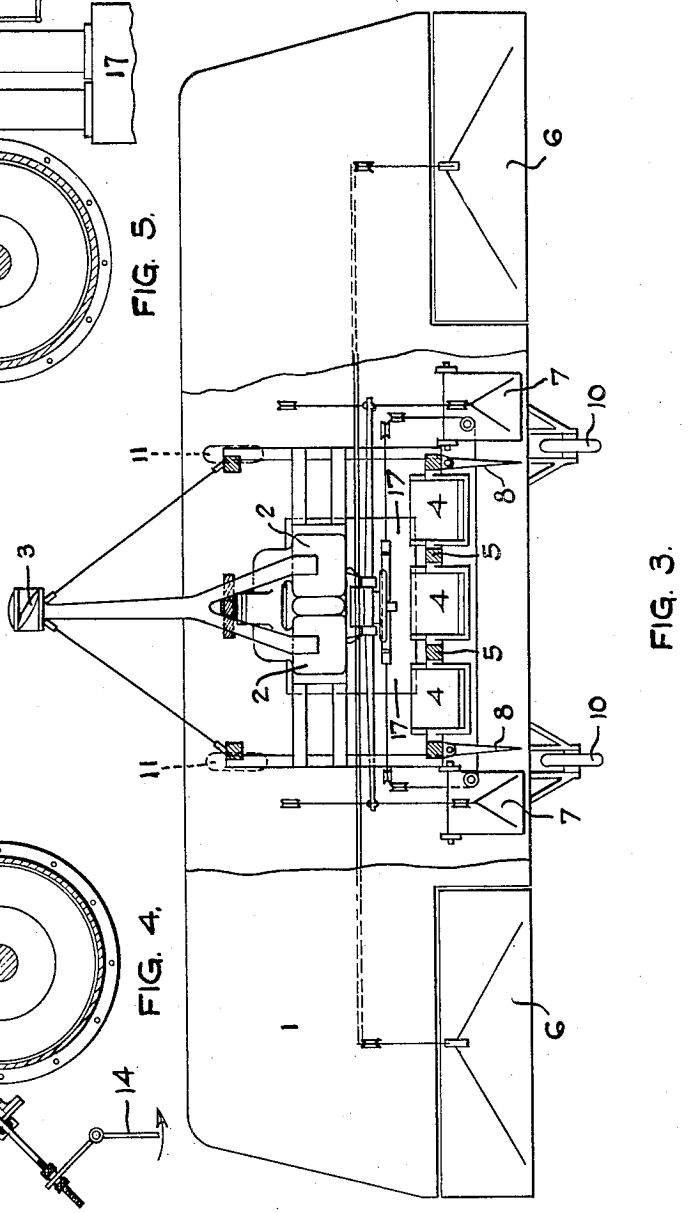

FIG. 3.

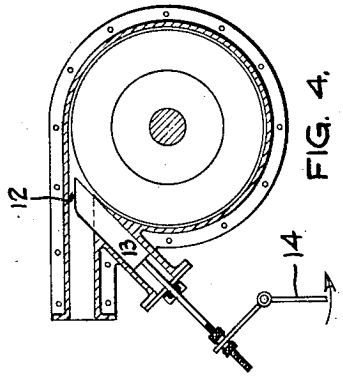

FIG. 4.

INVENTOR.
NIKOLA TESLA.
BY John P. Barker
ATTORNEY.

Patented Jan. 3, 1928. 1,655,114

UNITED STATES PATENT OFFICE.

NIKOLA TESLA, OF NEW YORK, N. Y.

APPARATUS FOR AERIAL TRANSPORTATION.

Application filed October 4, 1927. Serial No. 223,915.

This application is a continuation in part of my application Serial No. 499,518, filed September 9, 1921, and is made pursuant to the rules of the Patent Office, its purpose being to describe and claim apparatus which I have invented for carrying into practice the method therein disclosed.

The invention consists of a new type of flying machine, designated "helicopter-plane", which may be raised and lowered vertically and driven horizontally by the same propelling devices and comprises: a prime mover of improved design and an airscrew, both especially adapted for the purpose, means for tilting the machine in the air, arrangements for controlling its operation in any position, a novel landing gear and other constructive details, all of which will be hereinafter fully described.

The utility of the aeroplane as a means of transport is materially lessened and its commercial introduction greatly hampered owing to the inherent inability of the mechanism to readily rise and alight, which is an unavoidable consequence of the fact that the required lifting force can only be produced by a more or less rapid translatory movement of the planes or foils. This indispensable high velocity, imperilling life and property, makes it necessary to equip the machine with special appliances and provide suitable facilities at the terminals of the route, all of which entail numerous drawbacks and difficulties of a serious nature.

More recently, professional attention has been turned to the helicopter which is devoid of planes as distinct organs of support and, presumably, enables both vertical and horizontal propulsion to be satisfactorily accomplished through the instrumentality of the propeller alone.

The prospects of such a flying machine appear at first attractive, primarily because it makes possible the carrying of great weight with a relatively small expenditure of energy. This follows directly from the fundamental laws of fluid propulsion, laid down by W. T. M. Rankine more than fifty years ago, in conformity with which the thrust is equal to the integral sum of the products of the masses and velocities of the projected air particles; symbolically expressed,

$$T=\Sigma(mv).$$

On the other hand, the kinetic energy of the air set in motion is

$$E=\Sigma\left(\frac{lmv^2}{2}\right).$$

From these equations it is evident that a great thrust can be obtained with a comparatively small amount of power simply by increasing the aggregate mass of the particles and reducing their velocities. But the seemingly great gain thus secured is of small value in aviation for the reason that a high speed of travel is generally an essential requirement which cannot be fulfilled except by propelling the air at high velocity, and that obviously implies a relatively small thrust.

Another quality commonly attributed to the helicopter is great stability, this being apparently a logical inference judging from the location of the centers of gravity and pressure. It will be found, though, that contrary to this prevailing opinion the device, while moving in any direction other than up or down, has an equilibrium easily disturbed and has, moreover, a pronounced tendency to oscillate.

In explanation of these and other peculiarities, assume the helicopter poised in still air at a certain height, the axial thrust T just equalling the weight, and let the axis of the propeller be inclined to form an angle α with the horizontal. The change to the new position will have a two-fold effect: the vertical thrust will be diminished to

$$T_v=T\sin\alpha$$

and at the same time there will be produced a horizontal thrust

$$T_h=T\cos\alpha$$

Under the action of the unbalanced force of gravity, the machine will now fall along a curve to a level below and if the inclination of the propeller as well as its speed of rotation remain unaltered during the descent, the forces T, T_v and T_h will continuously increase in proportion to the density of the

air until the vertical component T_v of the axial thrust T becomes equal to the gravitational attraction. The extent of the drop will be governed by the inclination of the propeller axis and for a given angle it will be, theoretically, the same no matter at what altitude the events take place. To get an idea of its magnitude suppose the elevations of the upper and lower strata measured from sea level be h_1 and h_2, respectively, d_1 and d_2 the corresponding air densities and H=26,700 feet the height of the "uniform atmosphere," then as a consequence of Boyle's Law the relation will exist

$$h_1 - h_2 = H \log_e \frac{d_2}{d_1}$$

It is obvious that

$$\frac{T}{T_v} = \frac{T}{T \sin \alpha} = \frac{1}{\sin \alpha} \text{ must be equal to } \frac{d_2}{d_1}$$

in order that the vertical component of the axial thrust in the lower stratum should just support the weight. Hence

$$H_1 - h_2 = H \log_e \frac{1}{\sin \alpha}$$

Taking, in a special case, the angle $\alpha=60$ degrees, then

$$\frac{1}{\sin \alpha} = \frac{1}{0.866} = 1.1547, \text{ and}$$

$$h_1 - h_2 = 26{,}700 \times \log_e 1.1547 = 3{,}840 \text{ feet.}$$

In reality the drop will be much greater for the machine, upon reaching the lower layer with a high velocity relative to the medium, will be urged further down along the curved path and the kinetic energy, in the vertical sense, possessed by the moving mass must be annihilated before the fall is arrested in a still denser air stratum. At this point the upward thrust will be far in excess of the opposed pull of the weight and the apparatus will rise with first increasing and then diminishing speed to a height which may approximate the original. From there it will again fall and so on, these operations being repeated during the forward flight, the up and down excursions from the main horizontal line gradually diminishing in magnitude. After a lapse of time, determined by numerous influences, these deviations should become insignificant and the path described nearly rectilinear. But this is next to impossible as can be readily shown by pointing out another curious feature of the helicopter.

In the foregoing the axis of the propeller was supposed to move always parallel to itself, which result might be accomplished by the use of an adjustable aileron. In this connection it may be pointed out, however, that such a device will not act in the manner of a rudder, coming into full play at intervals only and performing its functions economically, but will steadily absorb energy, this occasioning a considerable waste of motive power and adding another to the many disadvantages of the helicopter.

Let now the machine be possessed of a certain degree of freedom, as will be the case normally, and observe in the first place that the blades of the propeller themselves constitute planes developing a reaction thrust, the pressure on the lower leading blade being greater than that exerted on the higher one owing to the compression of the air by the body of the machine and increased density in that region. This thrust tending to diminish the angle α, will vary during one revolution, being maximum in a position when the line of symmetry of the two propeller blades and that of flight are in the same vertical plane and minimum when the former is at right angles to it. Nevertheless, if the horizontal speed is great, it may be considerable and sufficient to quickly overcome the inertia and gyroscopic resistances all the more readily as the upper blade operates to the same effect. Moreover, this intermittent action partakes of the regenerative quality, the force increasing as the angle diminishes up to a maximum for $\alpha=45$ degrees, and may also give rise to disturbing resonant vibrations in the structure. As its axis is tilted more and more, the vertical sustaining effort of the propeller correspondingly diminishes and the machine will fall with a rapidly increasing velocity, which may finally exceed the horizontal, when the reaction of the blades is directed upward so as to increase the angle α and thereby cause the machine to soar higher. Thus periodic oscillations, accompanied by ascents and descents, will be set up which may well be magnified to an extent such as to bring about a complete overturn and plunge to earth.

It is held by some experts that the helicopter, because of its smaller body resistance, would be capable of a higher speed than the aeroplane. This is an erroneous conclusion, contrary to the laws of propulsion. It must be borne in mind that in the former type, the motive power being the same, a greater mass of air must be set in motion with a velocity smaller than in the latter, consequently it must be inferior in speed. But even if the air were propelled in the direction of the axis of the screw with the same speed V in both of them, while the aeroplane approximates the same, the helicopter can never exceed the horizontal component V cos α which, under the theoretically most economical conditions of operation, would only be 0.7V, and this would be true no matter how much its resistance is reduced.

Another very serious defect of this kind of flying machine, from the practical point

of view, is found in its inability of supporting itself in the air in case of failure of the motor, the projected area of the propeller blades being inadequate for reducing the speed of the fall sufficiently to avoid disaster, and this is an almost fatal impediment to its commercial use.

From the preceding facts, which are ignored in the technical publications on the subject, it will be clear that the successful solution of the problem is in a different direction.

In an application of even date, referred to above, I have disclosed an invention which meets the present necessity in a simple manner and, briefly stated, consists in a novel method of transporting bodies through the air according to which the machine is raised and lowered solely by the propeller and sustained in lateral flight by planes.

My present application is based on new and useful features and combinations of apparatus which I have devised for carrying this method into practice.

Full knowledge of these improvements will be readily gained by reference to the accompanying drawings in which

Fig. 1 illustrates the machine in the starting or landing position and

Fig. 2 in horizontal flight;

Fig. 3 is a plan view of the same with the upper plane partly broken away and

Fig. 4 and Fig. 5 sectional views of constructive details.

The structure is composed of two planes or foils 1, 1 rigidly joined. Their length and distance apart may be such as to form a near-square for the sake of smallness and compactness. With the same object the tail is omitted or, if used, it is retractable. In order to raise the machine vertically a very light and powerful prime mover is necessary and as particularly suited for the purpose, I employ, preferably, a turbine described in my U. S. Patent 1,061,206 of May 6, 1913, which not only fulfills these requirements but lends itself especially to operation at very high temperatures. Two such turbines, designated 2, 2 together with other parts and accessories of the power plant, are bolted to the frame, being pla ed with due regard to the centers of gravity and pressure. The usual controlling means are provided and, in addition to these, any of the known stabilizing devices may be embodied in the machine. At rest the planes are vertical, or nearly so, and likewise the shaft driving the propeller 3, which is of a strength, size and pitch such as will enable it to lift the entire weight vertically and withstand safely the stresses. Power is transmitted to the shaft from the turbines through gearing which may be of the single reduction type as illustrated, the turbines rotating in the same direction ar l neutralizing the gyroscopic moment of the screw. If, instead of one, two propellers are used, either coaxially or otherwise disposed, the motors should revolve in opposite directions. The seats 4, 4, 4 for the operator and passengers are suspended on trunnions 5, 5 on which they can turn through an angle of about 90 degrees, springs and cushions (not shown) being employed to insure and limit their motion through this angle. The ordinary devices for lateral and directional control 6, 6, 7, 7 and 8, 8 are provided with mechanical connections enabling the aviator to actuate them by hand or foot from his seat in any position.

Stated in a few words, the operation is as follows: At the start, sufficient power is turned on by suitable means, also within reach, and the machine rises vertically in the air to the desired height when it is gradually tilted through manipulation of the elevator devices and then proceeds more and more like an aeroplane, the sustaining force of the propeller being replaced by vertical reaction of the foils as the angle of inclination diminishes and horizontal velocity increases. In descending, the forward speed is reduced and the machine righted again, acting as a helicopter with the propeller supporting all the load. The turbine used is of great lightness and activity exceptionally qualified to perform such work for which the present aviation motors are unsuited. It is capable of carrying an extraordinarily great overload and running at excessive speed, and during the starting, landing and other relatively short operations, not only can the necessary power be easily developed, but this can be accomplished without incurring a serious loss of efficiency. Owing to its extreme simplicity the motive apparatus is very reliable, but should the power give out accidentally, landing can still be effected by volplaning. For this purpose, in addition to wheels 9, 9 and 10, 10, wheels 11, 11 are employed, the latter being mounted on the forward end under the lower plane and so that when the machine rests on level ground, the propeller shaft will have the desired inclination which is deemed best for rising in the manner of an aeroplane. Such a "helicopter-plane," constructed and operated as described, unites the advantages of both types and seems to meet well the requirements of a small, compact, very speedy and safe craft for commercial use.

The abnormal power requirements are met by supplying more of the working fluid to the motors and driving them faster, or running them at about the same speed and increasing the thrust by adjustment of the pitch of the propeller. On account of simplicity and much greater range it is preferable to resort to the first method, in which

case the screw should be designed to work most economically in horizontal flight, as its efficiency in the starting and landing operations is of comparatively small importance. Instead of a single large propeller, as described, a number of small ones can be used, when the turbine units may be connected advantageously in stages and the gearing dispensed with. The biplane seems to be particularly well suited for the chief purpose contemplated, but the invention is equally well applicable to monoplanes and other types.

In order to secure the best results I have found it indispensable to depart, in some respects, from the usual design of my turbines and embody in them certain constructive features and means for varying the power developed from the minimum necessary in horizontal flight to an amount exceeding by far their rated performance, as may be required in the operations of ascent and descent, or spurts of speed, or in combatting the fury of the elements. Furthermore, I so proportion and coordinate the fluid pressure generator supplying the primary energy, the propelling and the controlling means, that for any attitude or working condition of the machine the requisite thrust may be almost instantly produced and accurately adjusted.

The understanding of these improvements will be facilitated by reference to Fig. 4 and Fig. 5. In the first named the turbines are intended to operate as rotary engines, expanding the gases in the rotor as well as the inlet nozzle or port 12, the depth of which can be varied by shifting a block 13, fitting freely in a milled channel of the casing, through the medium of lever 14 controlled by the aviator. The orifice for the passage of the elastic fluid is straight or slightly converging, so that a much smaller velocity is obtained than with an expanding nozzle, this enabling the best relation between the peripheral speed of the rotor and that of the fluid to be readily attained. The performance of such an engine at constant pressure of supply is, within wide limits, proportionate to the quantity of the working medium passed through the inlet port and it is practicable to carry, for indefinite intervals of time, an exceedingly great overload, by which I mean up to three or even four times the normal. Exceptional strength and ruggedness of the motors being imperative in view of centrifugal stresses and critical speed, their weight need not be appreciably increased as would be the case in other forms of prime movers in which, as a rule, the weight is in nearly direct proportion to the power developed. To accomplish my purpose I further provide commensurately larger inlet and outlet openings. No serious disadvantage is thereby incurred because windage and other losses are virtually absent and most of the rotary effort is due to the peripheral parts of the discs. As shown in the figure, block 13 is in the position corresponding to minimum effort, the section of the inlet channel being about one-fifth of the whole which is obtained when the block is pulled in its extreme position indicated by the dotted line. Owing to the increase of the coefficient of contraction and counterpressure attendant the enlargement of the inlet, the same should be made of ample section.

Figure 5 shows a different means for attaining the same purpose. In this case the motors operate like true turbines, the working fluid being fully expanded, or nearly so, through divergent exchangeable nozzles as 15, having a throat of sufficient section for the passage of fluid required during maximum performance. The exhaust opening is also correspondingly enlarged, though not necessarily to the extent indicated in Figure 4. The power is varied by means of a throttle valve 16, as used in automobiles, located in the conduit supplying the air and carbureted fuel to the fluid pressure generator and mechanically connected to the controlling lever 14. This apparatus is of a capacity adequate to the maximum demand by which I do not mean that it is necessarily much larger than required for normal performances, but is merely designed to supply the working fluid or, broadly stated, energy—whenever desired, at a rate greatly exceeding the normal. In Figure 3 this apparatus is diagrammatically indicated by 17, and may be any one of a number of well-known types, producing pressure by internal combustion of a suitable fuel or by external firing of a steam boiler. In the latter case, with constant pressure, the arrangement shown in Figure 4 is best to employ, while the plan illustrated in Figure 5 can be used to advantage when both pressure and quantity of fluid are varied.

In operation for vertical ascent, the machine being in the attitude of Figure 1, the aviator will push forward lever 14 and supply sufficient primary energy to the motors for lifting the machine with the desired velocity. When the objective elevation is reached rudders 7, 7 are manipulated to incline the machine at a certain angle, the aviator simultaneously applying more pressure to the lever and augmenting the fluid supply to the motors, thereby increasing the propeller thrust in the vertical direction so as to prevent the machine from descending. He continues these operations always coordinating the thrust developed with the changes in attitude of the machine until a certain angle of inclination is attained and the machine is supported chiefly by reaction of the planes. At this stage he begins to re-

duce the pressure on the lever and supply of working fluid simultaneously decreasing the angle of inclination thus finally effecting, by insensible steps, horizontal flight.

It should be understood that descent and alighting, as well as rising in the manner of a true aeroplane may be accomplished as usual. In such case the motors will be operated at their normal rated capacity. However, when excessive speed becomes necessary, the effort of the motors may be instantly and greatly augmented by merely manipulating block 13 or valve 16 as described.

Whenever it is desired to descend vertically, the aviator will reverse the operations as applying to substantial vertical ascent, which is to say, bring the machine gradually into starting attitude, at the same time increasing the supply of fluid to the motors and the vertical component of the propeller thrust, while reducing the horizontal. Finally, he will steadily reduce the fluid supply and the vertical thrust so as to descend to the landing place at a very low, safe velocity.

In the preceding I have described a flying machine characterized by a number of novel constructive and operative features and well suited for meeting a pressing necessity in the present state of the art. The chief improvements consist in first, adapting my turbine motor for excessive overload without appreciable increase of its weight, second, providing large variable inlet ports and corresponding exhaust openings, with the object of meeting the abnormal power requirements in the starting, landing and other short operations, and still preserving a high efficiency in horizontal flight; third, combining with the turbine a fluid pressure generator of adequate capacity with means for control and, fourth, embodying these and other features in a suitable structure improved in various details. These may be greatly varied and I wish it to be understood that I do not limit myself to the precise arrangements illustrated and described.

I claim as my invention:

1. In an aeroplane adapted for vertical and horizontal propulsion and change from one to the other attitude, the combination of means for tilting the machine in the air, a fluid pressure generator of a capacity several times greater than normally required in horizontal flight, a motor capable of carrying overloads adequate for support in all attitudes, and means for controlling the supply of the fluid to the motor in accordance with the inclination of the machine.

2. In an aeroplane adapted for vertical and horizontal propulsion and change from one to the other attitude, the combination with means for tilting the machine in the air and a system producing thrust approximately parallel to the principal axis of the same and including a fluid pressure generator having a capacity several times greater than normally required in horizontal flight, a motor capable of carrying over-loads adequate for support in all attitudes, and means for controlling the supply of the fluid to the motor in accordance with the inclination of the machine.

3. In an aeroplane adapted for vertical and horizontal propulsion and change from one to the other attitude, the combination of means for tilting the machine in the air, a fluid pressure generator capable of supplying fluid at a rate several times greater than required for horizontal flight, a prime mover consisting of a rotor of plane spaced discs with central openings and an enclosing casing with inlet and outlet orifices of a section much greater than required for normal performances respectively at the periphery and center of the same, and means for controlling the supply of the fluid to the motor in accordance with the inclination of the machine.

4. In an aeroplane adapted for vertical and horizontal propulsion and change from one to the other attitude, the combination of means for tilting the machine in the air, a thrust producing system having its principal energy producing elements designed for normal load in horizontal flight but capable of carrying over-loads adequate for support of the aeroplane in all attitudes, and means for controlling the energy produced in said system in accordance with the inclination of the machine.

5. In a flying machine of the kind described in combination with means for vertical and lateral control of two wheel bases at right angles to one another as set forth.

6. In a flying machine of the kind described in combination with means for vertical and lateral control of two wheel bases at right angles to one another and having one or more wheels common to both.

In testimony whereof I hereunto affix my signature.

NIKOLA TESLA.

Certificate of Correction.

Patent No. 1,655,114. Granted January 3, 1928, to

NIKOLA TESLA.

It is hereby certified that error appears in the printed specification of the above-numbered patent requiring correction as follows: Page 1, after line 57, strike out the formula and insert instead

$$E=\Sigma\left(\frac{1}{2}mv^2\right);$$

and that the said Letters Patent should be read with this correction therein that the same may conform to the record of the case in the Patent Office.

Signed and sealed this 20th day of March, A. D. 1928.

[SEAL.]

M. J. MOORE,
Acting Commissioner of Patents.

US 20080191580A1

(19) **United States**

(12) **Patent Application Publication**

(10) **Pub. No.: US 2008/0191580 A1**

(43) **Pub. Date: Aug. 14, 2008**

Deyo

(54) **HARMONIC ENERGY EXCHANGE DEVICE**

(76) Inventor: **Harold Stanley Deyo**, Pueblo West, CO (US)

Correspondence Address:
HAROLD S DEYO, JR.
241 S. DOS PALOS DRIVE
PUEBLO WEST, CO 81007

(21) Appl. No.: **11/675,060**

(22) Filed: **Feb. 14, 2007**

Publication Classification

(51) **Int. Cl.**
H02N 11/00 (2006.01)

(52) **U.S. Cl.** **310/300**

(57) **ABSTRACT**

This invention converts inertial impulses into electric currents. Specifically, it converts impulses created by the impacts of high-energy particles from the Sun and other cosmic sources into the Earth's Magnetosphere and the varying D, E, F1 and F2 layers of its Ionosphere to controlled electric currents. This invention presents a new method of utilizing energy from the Sun and other sources of high energy articles as a virtually, inexhaustible, alternative-energy source for the world.

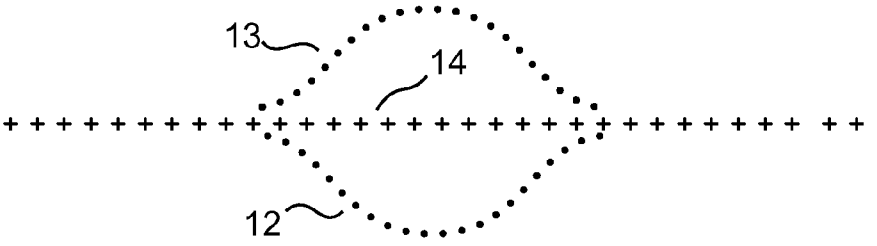

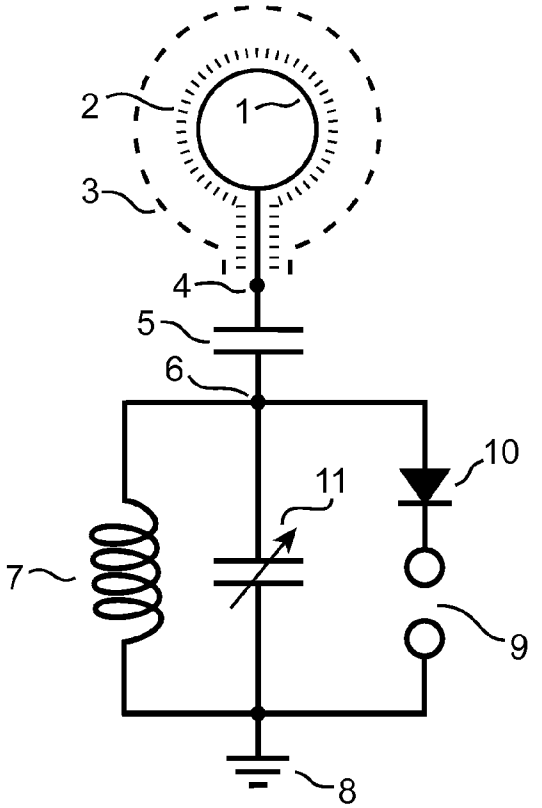

FIGURE 1

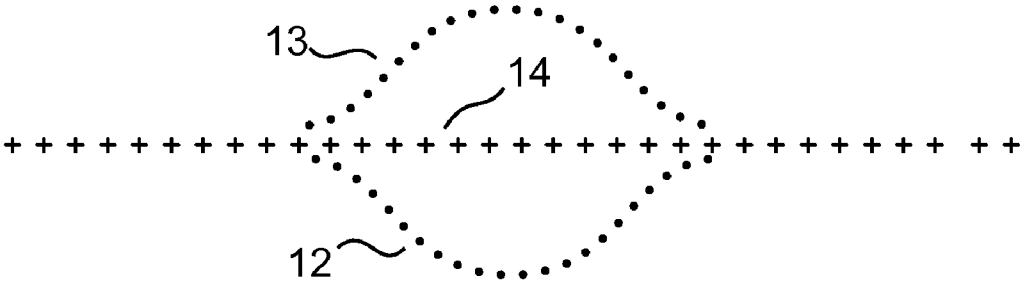

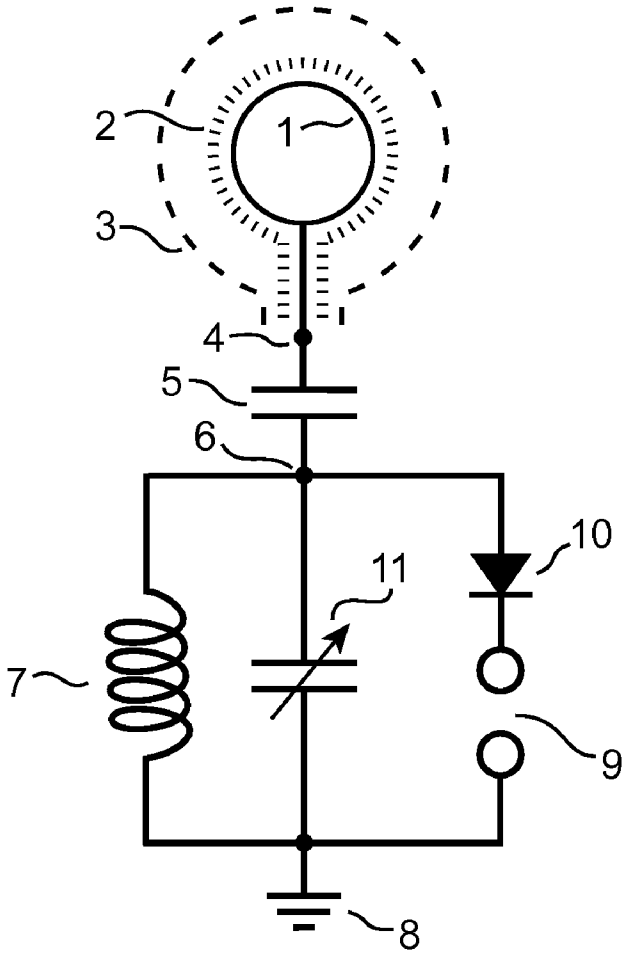

FIGURE 2

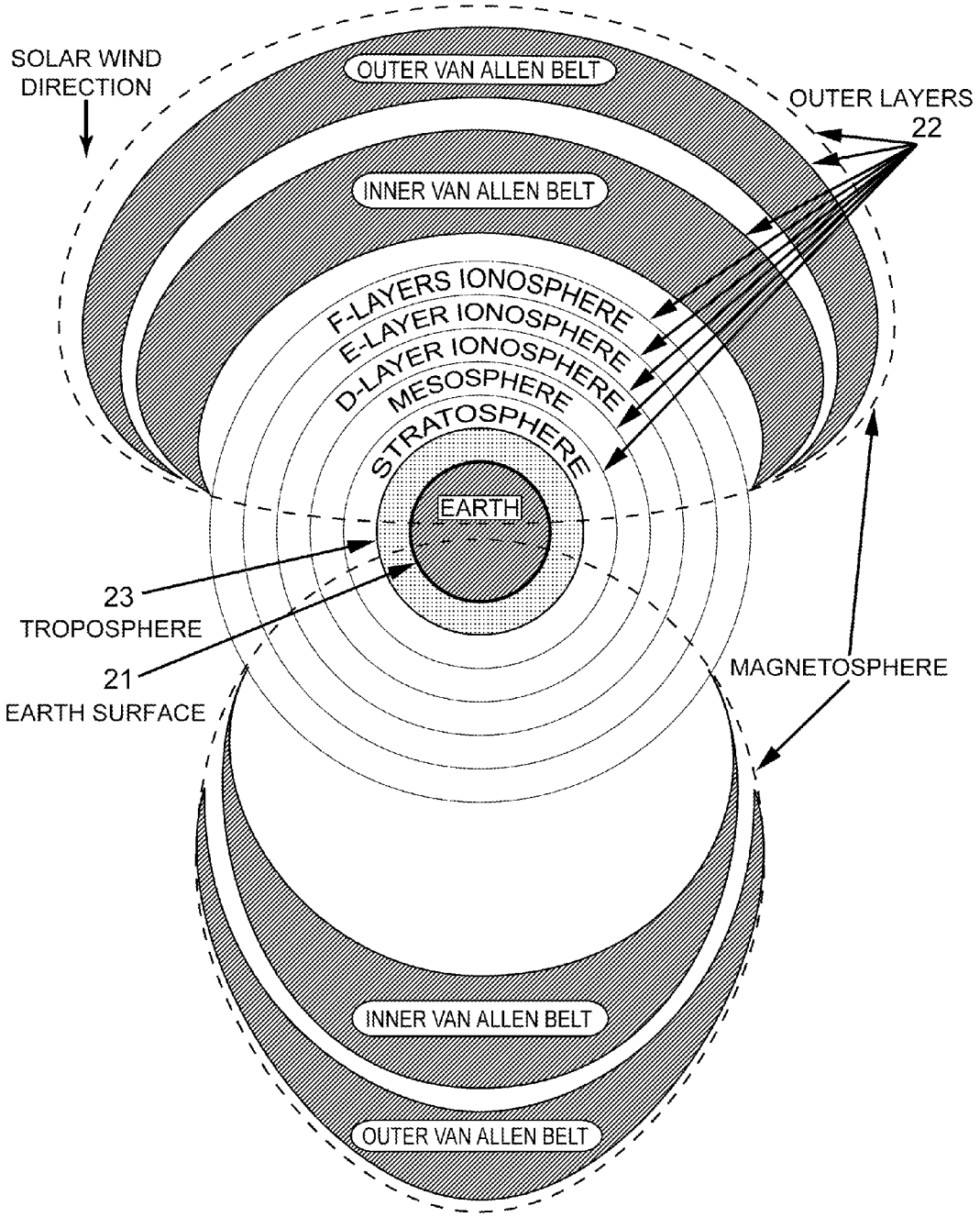
SOLAR WIND DIRECTION
OUTER VAN ALLEN BELT
OUTER LAYERS
22
INNER VAN ALLEN BELT
F-LAYERS IONOSPHERE
E-LAYER IONOSPHERE
D-LAYER IONOSPHERE
MESOSPHERE
STRATOSPHERE
EARTH
23
TROPOSPHERE
21
EARTH SURFACE
MAGNETOSPHERE
INNER VAN ALLEN BELT
OUTER VAN ALLEN BELT

FIGURE 3

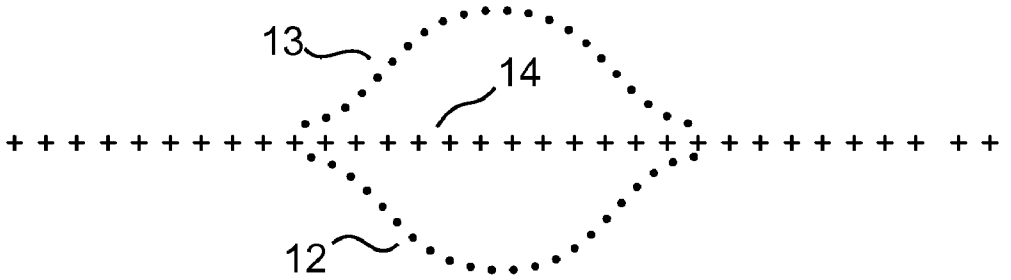

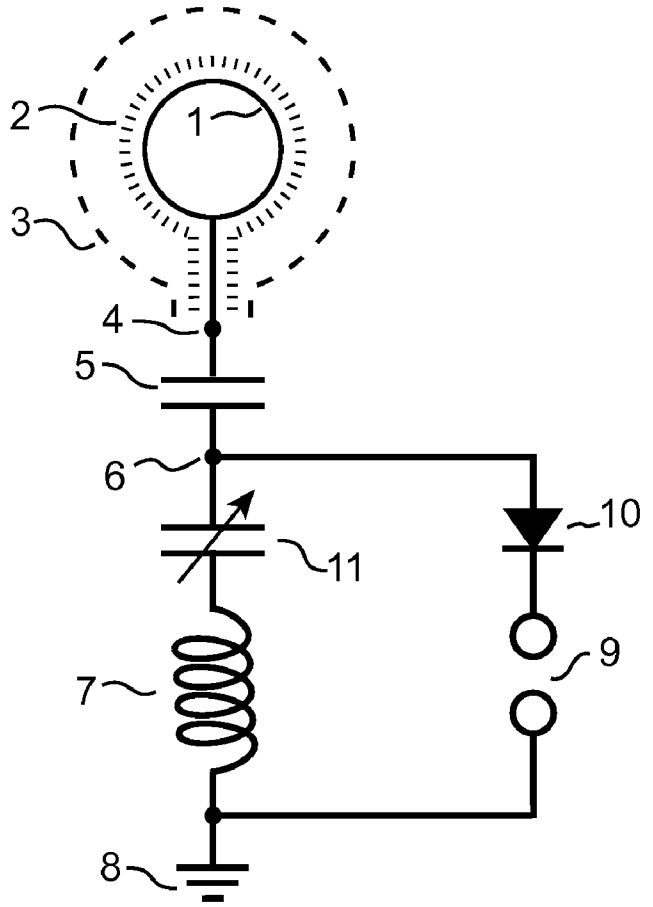

HARMONIC ENERGY EXCHANGE DEVICE

BACKGROUND OF THE INVENTION

[0001] 1. Field of Invention

[0002] This invention relates to the conversion of impact energies created by the collision of high-speed cosmic particles and electromagnetic radiations with "Earth's Outer Layers" to produce inertial waves in the dielectric Troposphere which are subsequently converted into electricity by this invention.

[0003] The term "Earth's Outer Layers" refers to: Earth's Magnetosphere, Van Allen Belts, Ionosphere, Mesosphere, and Stratosphere as illustrated in FIG. **2**

[0004] 2. Description of the Prior Art

[0005] One day while reading an old scientific magazine I saw a small article on the research of Dr. John Trump of MIT (the basis for an electrostatic generator patented later by Onezime P. Breaux in U.S. Pat. No. 4,127,804). The article talked about a series of experiments which Dr. Trump had performed with a 2-plate, capacitor in a vacuum dielectric. Briefly, he discovered that by varying the distance between the two plates one could produce current flows in one direction or the other between either of the plates and ground.

[0006] The Solar Wind strikes "Earth's Outer Layers" constantly as do many other cosmic particles. At any given instant of time, the vector product of these impacts produces either a net pressure increase or decrease in the Troposphere. This creates random waves of pressure in the "Earth's Outer Layers" as one charged "plate" moves in relation to the oppositely-charged Earth's surface as the other "plate". This variation of pressure in the "Earth's Outer Layers" is equivalent to moving an outer "plate" back and forth toward the Troposphere and the Earth's surface as the inner "plate"—thus giving rise to variations in voltage on both "plates". In this case the Troposphere (see FIG. **2**) acts as the dielectric medium instead of the vacuum in the Trump experiments. Furthermore, the Troposphere, itself, is also compressed and decompressed by these random waves of pressure on the "Earth's Outer Layers". Thus, I reasoned if one could create a charged envelope or field of sufficient voltage within the Troposphere, one could convert these random pressure waves in the dielectric Troposphere into current flow on the Earth's surface.

[0007] As "Earth's Outer Layers" surround the planet, any impact waves propagate throughout all of them when they are present—even to the nighttime side of the planet. Thus, I also reasoned one could extract power from these impacts anywhere on Earth's surface or in its atmosphere whether it be day or night. The pressure waves on the dark side of Earth would be less energetic than those occurring on the daytime side because the nighttime layers of the Ionosphere are compressed so much that the D-Layer of the Ionosphere disappears at night and the F1 and F2-Layers of the Ionosphere combine into one F-Layer. I calculated the available energy from these impact waves would be significantly less by 30-45% depending upon one's location on the night side of the planet in respect to the terminator.

[0008] Many years ago around 1900 Dr Nikola Tesla built and tested a device to extract energy from the Sun using an apparatus which forms part of my own invention (see U.S. Pat. Nos. 685,957 an 685,958 dated 5 Nov. 1901).

[0009] Subsequently, Dr. Thomas Henry Moray, another inventor and student of these Tesla patents made a device which apparently accessed the same source of energy but with a method different than my own. As Dr. Moray was never granted a patent for his device I cannot be certain that his work is considered prior art but I list it here as part of my due diligence. Apparently, he had trouble explaining the source of energy his device was converting to the patent reviewer and was, thus, not granted a patent for his impressive work. Dr. Moray's public disclosure of certain aspects of his invention are public knowledge through his published lectures and his book, "The Sea of Energy in Which the Earth Floats'—published in 1931.

[0010] Since the beginning of the 20th Century mankind has been looking for new sources of electric power to feed the ever-increasing energy demands of the human population. In the last half of the 19th Century coal, whale oil, human and animal labor, moving water, wind and wood were main sources of energy. However, in the first quarter of the 20th Century mankind began to use more electricity produced by hydroelectric generators and other generators producing electricity by combustion of fossil fuels. With increasing use of gasoline engines and the increasing use of electrical appliances the demand for electricity accelerated the addition of heat and greenhouse gases into the Earth's ecosystem.

[0011] In the last half of the 20th Century many forward-thinking individuals began looking for alternate energy sources to reduce the emissions of greenhouse gases. All of the alternate energy systems investigated and/or developed in the last 56 years have had significant drawbacks to their usage as the main energy supply for the needs of humanity.

[0012] Some of those alternate energy systems were nowhere near as efficient as the existing systems. Some of the alternate energy systems still introduced extra heat into the environment like the existing fossil fuel and nuclear energy systems. And, yet, others produced even more greenhouse gases than the existing energy systems. Some of the new systems used food resources to produce combustible fuels which, consequently, reduced the food resources of the planet. Among the leaders in the new energy sources was and is nuclear energy which produces extra heat, toxic wastes and materials which can be used in nuclear weapons. Hydroelectric energy sources do not add heat to the ecosystem but they are not an inexhaustible resource as they depend upon rainfall which is diminishing as global warming increases. Wind energy resources do not add heat to the ecosystem but they are not constant and require expensive conversion and storage equipment.

[0013] The ideal energy source for mankind will not add heat to the planet's ecosystem, will not produce by-product green house gases; will not deplete our food and water resources; will not produce toxic wastes; however, it will be portable, self-replenishing and constantly available in real time anywhere on Earth and in useful quantities.

[0014] Our major source of natural energy on Earth is the Sun. Energy from the Sun enters the Earth's ecosphere by particle bombardment, radiated electromagnetic energy, gravitational variations and magnetic processes. Mankind has developed various methods of capturing energy from the Sun already. Silicon-based solar cells convert light in a narrow bandwidth into electron flows. These cells are—at most—only 50% efficient and only work when the Sun is shining on them and at an optimum angle. Wind turbines only work when there is wind to power them and are—for the most part—not portable. Devices to convert wave action in the oceans only work when there are waves created by the wind and tidal

effects caused by gravitational variations; and they are not portable enough to be used in common transportation devices.

[0015] I concluded if mankind could find an inexpensive method of obtaining electricity from the Sun in some form that worked both day and night and which was already flowing into the Earth's ecosystem, we might be able to develop a clean and self-replenishing energy source which would add no extra heat to our ecosystem, would not alter our planetary albedo and might well be made in a portable form.

SUMMARY OF THE INVENTION

[0016] The Harmonic Energy Exchange Device (or "HEED") offers an interim solution to Earth's dwindling fossil fuel resources. It utilizes a previously untapped energy resource which exists throughout the known Universe. By the very nature of the invention, it only interrupts the flow of energy from the Sun and all the other cosmic sources of high-energy particles on their normal journey to the Earth by way of The Outer Layers.

[0017] The invention does not add energy to the normal thermodynamic equilibrium of the planet and its associated outer layers. The invention does not produce wastes—toxic or otherwise. It does not produce harmful gases; and in some embodiments it could even assist in the rebuilding of our thinning ozone shield. Use of this invention will eventually remove mankind's dependence on fossil fuels and create new occupations. It will be cheap enough that homeowners will be able to install their own HEED and sell back energy to the grid until such time as every home has their own HEED and civilization has completely weaned itself from the use of fossil fuels and nuclear energy in its current form.

BRIEF DESCRIPTION OF DRAWING

[0018] FIG. **1**: Is the preferred embodiment of the circuit diagram of my invention incorporating references to external stimuli which are used to activate the circuit. It represents a parallel tuned circuit to store the energy.

[0019] FIG. **2**: Is an illustration of the Earth and it immediate environment as a global capacitor where The Outer Layers form one plate and the Earth's surface form the other plate and both are separated by the Troposphere as a dielectric medium.

[0020] FIG. **3**: Is an alternate embodiment of the circuit diagram of my invention incorporating references to external stimuli which are used to activate the circuit. It represents the use of a series tuned circuit to store the energy.

DETAILED DESCRIPTION OF A PREFERRED EMBODIMENT OF THE INVENTION

[0021] Be it known that I, Harold Stanley Deyo, Jr, a citizen of both The United States of America and The Commonwealth of Australia, residing in the community of Pueblo West in Pueblo County, Colorado have invented an Harmonic Energy Exchange Device which converts dynamic pressures in the ambient media around Earth to controlled electric currents.

[0022] This invention as represented in FIG. **1** is unique in that it is designed to extract electricity from random pressure waves propagated in the Troposphere **14** by impacts of the solar wind and other cosmic particles with the Earth's "The Outer Layers" **22** of FIG. **2**.

[0023] In FIG. **1**, the Troposphere **14** in its rest state is represented by the line of "+" marks **14**. The convergent or compression state **12** of the random waves in the Troposphere **14** is represented by the lower line of dots while the divergent or decompression state **13** of the random waves in the Troposphere **14** is represented by the upper line of dots. The preferred embodiment of my invention FIG. **1** is a method of coupling a parallel, resonant, electrical circuit to these random pressure waves to extract electricity from them.

[0024] As Dr John Trump's research and Onezime P. Breaux's U.S. Pat. No. 4,127,804 show, when one plate of a charged capacitor is moved closer to or farther from the other plate of that capacitor a voltage change appears on both plates of that capacitor. Furthermore, the electric field gradient between those plates changes as the plates are moved in this manner. Thus they have described a method of converting mechanical energy into electrical current by simply varying the plate spacing over time which can be expressed as ds/dt where "ds" is the change in spacing and "dt" is the change in time.

[0025] As illustrated in FIG. **2**, The Outer Layers can be viewed as one plate of a capacitor comprised of the Earth's surface itself as one plate **21** and Earth's outer layers as the other plate **22** where the Earth's Troposphere **23** serves as the dielectric medium separating the two plates. There is a charge between these plates which varies extremely rapidly but not with a constant period. At any given instant, the vector product of all the impacts by the cosmic particles with The Outer Layers **22** will create a pressure wave in The Outer Layers **22** which will manifest in the Troposphere **23**. Whatever that vector product is, it will alter the field gradient in the dielectric Troposphere **23**. That alteration will either increase or decrease the effective spacing between "plates" **22** and **23**.

[0026] In order to capture and convert the resulting voltage variations produced at or near the Earth's surface **21** of FIG. **2**, this invention creates its own, localized stress field **3** of FIG. **1** established in the Troposphere **23** of FIG. **2** with a charged, conductive surface **1** of FIG. **1** which is encased in high-voltage insulation **2** of FIG. **1** and extending into the Troposphere **23** of FIG. **2**.

[0027] In FIG. **1**, a series of high-voltage, starting pulses is applied across points **4** and **6** on opposite sides of a capacitor **5** to create the localized stress field **3**. As these high-voltage starting pulses are applied, the parallel resonant circuit formed by inductor coil **7** and variable capacitor **11** both referenced to ground **8** is stimulated into resonance within the bandwidth determined by the values of these circuit components. Tuning of this circuit is effected through variable capacitor **11**. The high voltage charge on conductive surface **1** of FIG. **1** is maintained by the parallel tuned circuit formed by inductor coil **7** and variable capacitor **11**.

[0028] Then as the random, pressure waves propagate throughout the Troposphere **23** of FIG. **2**, the localized stress field **3** of FIG. **1** is oscillated by the compression wave front **12** and the decompression wave front **13**—both of FIG. **1** which creates voltage changes on capacitor **5**.

[0029] In FIG. **1**, the resulting voltages changes on capacitor **5** will add energy to the parallel resonant circuit formed by inductor coil **7** and variable capacitor **11** which acts as a tank circuit to store the energy which has been passed to it. As energy builds in the parallel circuit the voltage of the circuit rises until a spark discharge occurs across the gap **9** also referenced to ground **8**. The current will only discharge in one direction as determined by diode **10**. The circuit will work

without diode **10** but a diode is used here as one method to keep from draining all the energy from the tank circuit when a discharge occurs.

[0030] This resonant circuit can be tuned to various bandwidths to maximize the efficiency of the conversion process depending upon location of the device, time of day, temperature variations, relative humidity and other variables in the ambient Troposphere **23** of FIG. **2** around the conductive surface **1** of FIG. **1**. A resistive load to extract power from the resonant circuit can be used instead of the spark gap **9** of FIG. **1**.

[0031] This preferred embodiment uses a parallel, tuned circuit to access a wide range of frequencies usually to be found in the range of 4.5 to 7 MHz. This range encompasses the major, naturally-occurring, resonant frequencies found in the ionosphere.

[0032] A second embodiment of this invention as shown in FIG. **3** replaces the parallel tuned circuit formed by inductor coil **7** and variable capacitor **11** in FIG. **1** placed in parallel to each other and referenced to ground **8** in FIG. **1**. This second embodiment forms a series tuned circuit formed by inductor coil **7** and variable capacitor **11** in FIG. **3** placed in series to each other and referenced to ground **8** of FIG. **3**. It differs from the preferred embodiment only in the placement of variable capacitor **11** of FIG. **3** so that it is in series with coil **7** of FIG. **3**.

[0033] This embodiment limits the frequency range and, hence, the energy the system will store when compared to the preferred embodiment. It produces higher voltages across the spark gap **9** of FIG. **3** than those produced in the preferred embodiment across the spark gap **9** of FIG. **1**.

1. An apparatus for coupling to the pressure waves created in the Earth's Magnetosphere and the varying D, E, F1 and F2 layers of its Ionosphere by the impacts of various high-energy particles from both our Sun and other cosmic sources.

2. An electrical circuit for harmonically converting the pressure waves described in claim (**1**) into periodic electric current discharges.

* * * * *

Weather Control

Is it strange how, when we are in the middle of summer, it can be raining out, and one day it is very "hot", the next day it is 15 degree cooler, and two days later, it is "hot" again? Does this seem strange? How about earthquakes in parts of the world, that are so devastating, that if they were to happen here, our whole economy could be ruined.

Do you think it is "odd" that people would suggest that the government can and does control the weather? I KNOW it sounds a little paranoid, but if you do the research to investigate, you will undoubtably arrive at the same conclusions. OUR WEATHER IS CONTROLLED!!

It all began with a Serbian fellow named Nikola Tesla, who came here to the United States in the late 1800's at the turn of the century. Tesla was a true "genius". Tesla had invented or discovered, the Radio, Television, Neon Lighting, Alternating Current, Partical Beams, and there is much reason to believe he was involved with building the world's first flying saucer projects equipt with Free-Energy. Tesla had figured out how to "tap" the abundant electricity generated by the earth's rotation. The same electricity which causes lightning, which we can visibly see.

Tesla was also known for having developed ways to use "Scalar Electromagnetics". The use of which could be for "Good" purposes or "not so good" ones. One of the "Inventions" he had, he called the "Earthquake Machine". He claimed that with the "Press of a button", he could split the Earth in two. There are also variations of this, depending on the frequency used and the ocillating rate. A small tremor could be produced, or a huge catastrophe.

To read more about Nikola Tesla, his background, and Flying Saucers - Click Here!!

Currently, the military has control over this technology and is using it in a number of ways. The main use of it for weather control, I believe, is a project in Alaska called HAARP. This stands for High Auroral Arial Research Project. The "Official" story behing this can be checked out by going to the Offical HAARP Home Page. Be aware though, that the Army has created a "Cover" for what this Project "Really" is. The project is for "Weather Control", however, they claim it was created to "Monitor" the waether patterns, and such. This is total Bulls**t. If you believe that, I have some "Prime" real estate, farmland, and fruit orchards to sell you, in Alaska, that is.

Nick Begich is probably the best source today, as well as the first, to point out and teach about the "True" story behind HAARP, and how it all got started. (I am not very scientific, although I understand alot. So I will not go into things I cannot explain or discuss on my own here. You can read these people's writings for yourself to get the best understanding. I am only going to convey the basic message here.)

Since Nick's book, "Angel's Don't Play this HAARP" came out a few years back, there have been several other good sources of information that have come along. To read a summary of the book - Click Here!! -

Here is an Excellent background report on Tesla, HAARP, and the use of Scalar Weaponry-Click Here!!

Thomas Bearden Interview from Feb. 4 1991 - Click Here!!
From Nexus Magazine : "Bright Skies - Fireballs & Tesla Weapons Testing" - Click Here!!

From Nexus Magazine : "HAARP : Vandalism in the Sky" - By Nick Begich - Click Here!!

The Military's Pandora's Box - By Nick Begich and Jean Manning - From Earthpulse - Click Here!!

The E-Bomb - Devastating Effect of Electromagnetic Warfare on Computers & Machines - Click Here!!

Joint Economic Committee Hearing on Radio Frequency Weapons and Proliferation: Potential Impact on the Economy Wednesday, February 25, 1998 : Click Here!!

Here is a List of Relevant Books & Videos : To Read a Comprehensive Summary or to Order, Click on the Item : Items marked with a " * " are in stock and may be ordered. Here is a List of Relevant Book & Video Titles - To Read a Comprehensive Summary or to Order, Click on the Item : Items marked with a " * " are in stock and may be ordered. Any Books in

the Catalog Marked with a (@) are carried by Amazon.com and most may be ordered. Some are "Out of Print", but if you follow the link,, and have them do a used-bookstore search, they will get back to you with a couple of weeks. Items marked (In Stock) are carried by me and must be purchased through me by Postal Money Order or E-Gold. If Ordering with E-Gold, make sure to contact me me by E-mail first to verify that I have the Items you are looking for. Thank you.

Books

* ANGELS DON'T PLAY THIS HAARP : Advances in Tesla Technology - Jeane Manning, Dr. Nick Begich - 233 P. - 1997 -

* SECRETS OF COLD WAR TECHNOLOGY : Project HAARP and Beyond - Gerry Vassilatos - 2000 - 250 P. -

* GRAVITOBIOLOGY - Thomas Beardon -

* ANALYSIS OF SCALAR ELECTROMAGNETIC TECHNOLOGY - Thomas Beardon - 1990 -

* FER-DE-LANCE - A Briefing on Soviet Scalar Electromagnetic Weapons - Thomas Beardon - 1986

* SPACE ALIENS FROM THE PENTAGON: Flying Saucers are Man-Made Elictrical Machines - William Lyne - 1993 - 244 P. -

* OCCULT ETHER PHYSICS : Tesla's Hidden Space Propulsion System & the Conspiracy to Conceal It" - Bill Lyne - 106 P. - 1998 -

* LOOM OF THE FUTURE : Weather Engineering Work of Trevor James Constable - Thomas J.Brown -

Videos

* ANGELS DON'T PLAY THIS HAARP (The Video)--Nick Begich-

* THE EYE OF THE STORM : The Inventions of Nikola Tesla - Narrated by Stan Deyo - 90 Min.-

* The New World Order, Secret Societies, Flying Saucers and other Top Secret Government Cover-ups - (A Hard Rain)--An Interview With William Lyne, Author of "Space Aliens From The Pentagon"--Approx. 3 1/2 Hours-

* ELECTRONIC WEATHER CONTROL BY THE NEW WORLD ORDER - Bob Fletcher - Grenada Forum - 9-5-96

* ABOVE TOP SECRET--Militia of Montana--Hosted By Bob Fletcher - 10-95 -

* EXOTIC WEAPONS OF MASS CONTROL - Bob Fletcher - 1998 (5 Hours/2 Tapes)

* WEATHER WARFARE ENGINEERING - Thomas Beardon -

* EARTHQUAKE ENGINEERING - Thomas Beardon -

* AMERICA UNDER SIEGE - Linda Thompson -

* ENEMIES FOREIGN & DOMESTIC--Part. 1 - The problem - John Trochmann - Militia of Montana - 12-95

* AMERICA : It's Not too Late...Yet ! - Bob Fletcher - Militia of Montana -

This area shows modifications and re-powering of my first Tesla coil for higher output power with improvements over the original design. The Tesla coil project is aimed mainly at the scientific and Tesla coiler community. I intend to use my Tesla coil for lightning demonstrations and entertainment.
Note - This page may take a while to load on some SLOWER connections!

TESLA COIL PROJECT - PART TWO

This section includes modifications and enhancements to the Tesla coil design shown above. The original coil was redesigned and rebuilt with a larger power supply, a 12,000 volt at 60 mA neon sign transformer, adjustable RQ spark gap, MMC capacitor array, copper tubing primary, and best of all, a larger secondary coil wound over thin 4 inch polyethelyne with the ability to change the secondary via a quick connection on the new Tesla coil base. Both the original and new secondary coils are adapted to mate with the new Tesla coil. This design was not spark tested because of problems encountered while testing the spark gap performance before connecting and secondary.

Lessons learned - First of all, don't use WOOD for your Tesla coil primary support / form. If you have to use wood, make sure it is very dry and / or that the bare copper of the primary remains on a plastic support at least 1/2 inch from any wood. I found out that plywood is a very good conductor at high voltages and directly shorted my primary to mains ground! Maybe this happened due to moisture in the wood, the humidity here in South Florida rarely is less that 90 percent! When using an MMC array, make sure a far overkill is used in voltage ratings. My MMC was not cheap and lasted less than the plate cap design on the first Tesla coil attempt ... 20 kV is not enough, especially when a 12 kV RMS peaks at 17 kV for 120 kV input. For a 0-140 volt variac control as an input, that's up to 19.7 kV peak. A simple spike could easily exceed this, that's what blew my caps. I will try a 30 kV or even a 40 kV array. If that is not sufficient, maybe a rolled HDPE sheet capacitor at 40 kV rating will be better.

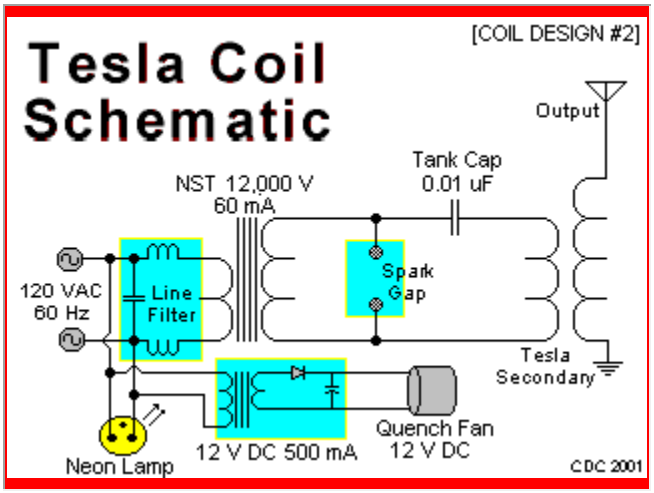

The diagram above is the schematic for my redesigned Tesla coil. The AC input runs through a 120 VAC line filter (from a PC power supply plug) to a 12,000 volt 60 mA neon sign transformer. The primary circuit of the tesla coil assembly is series connected with the 0.01 uF tank capacitor. The Richard Quick type spark gap is parallel connected in the circuit. The secondary is connected to RF ground at one end (not the mains ground, ofcourse) and the other end is the output HV terminal for the coil. The RQ spark gap fan is powered by a small 12 VDC cooling fan running off a small 12 VAC step-down transformer and a rectifier to power the fan. A small neon power indicator lamp was also added in this design step.

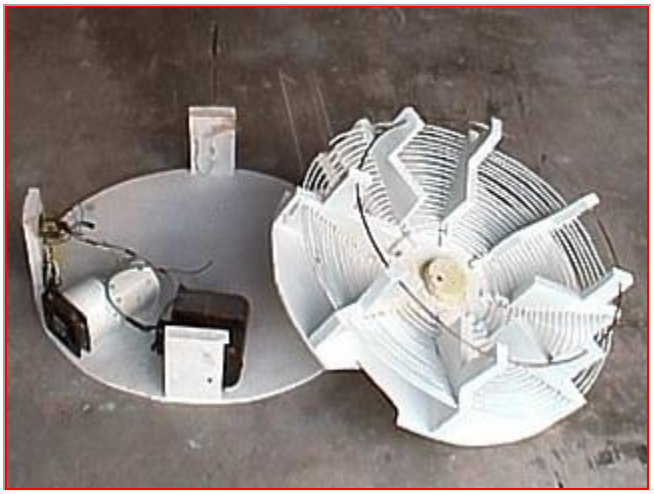

During the redesign of the original tesla coil project, the primary structure is removed from the base of the unit via a jig-saw cutting around the supports. The thin plywood was left on the supports for the new primary coil. The RQ spark gap, oil burner transformer, and wiring are still on the base. Note the plate capacitor has been removed, a multiple mini capacitor (MMC) array will replace it in the new design.

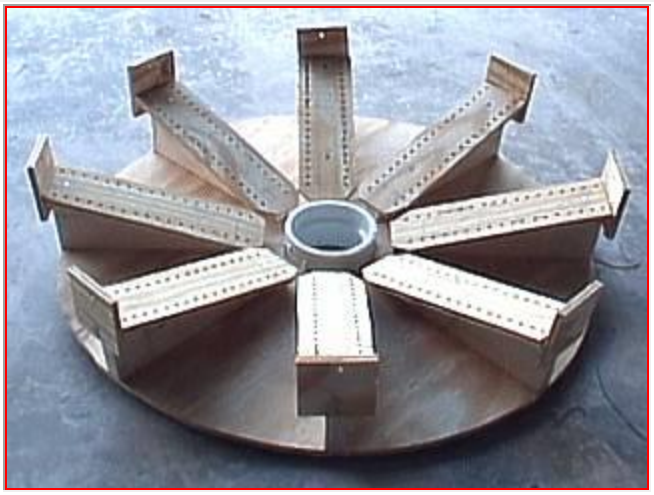

This is a picture of the wood form for the new primary coil. The supports will be a "top mounted" design rather than running through drilled holes. This reduced the frustrating splitting and splintering of the thin plywood. The center hub is a PVC adapter to accept the secondary coil. The strike / RF ground rail will run around the unit on the outermost supports. Each of the eight pieces is drilled so that the primary coil can be attached to it using plastic wire ties.

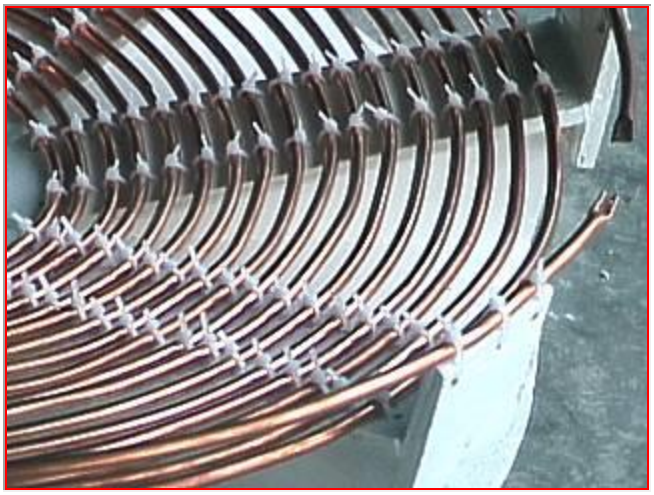

This is a closeup of the completed primary coil structure. Note how the primary conductor, a 1/4 inch bare copper refrigeration tube, is attached to the surface of each of the eight radial supports using plastic locking wire ties. The grounding rail runs around the edge supports. Note the break in the ground / strike rail to the upper right. This cone is at roughly a 20 degree angle and there is 17 turns of tubing spaced at about 1/4 to 1/3 of an inch.

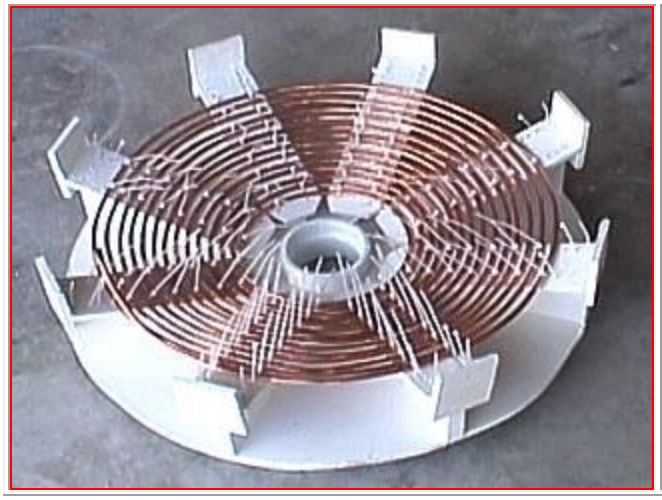

The redesigned new primary coil is now painted white with an oil based, moisture shielding paint and the 1/4 inch copper tubing is being wound. In this picture, the first 50 feet of tubing is done. About another 15 feet or so was needed to complete the coil. The tubing solders very well and was easy to join with the rest of the required tubing.

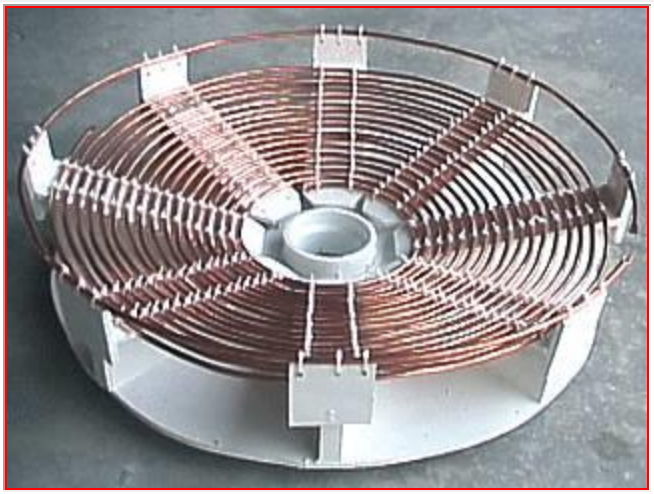

This is the redesigned primary coil in its completion. It is an inverted cone of about 20 degrees of about 17 turns of 1/4 inch copper refrigeration tubing spaced at 1/4 to 1/3 of an inch. The RF ground / strike rail is another short section of non-continuous tubing roughly 2 inches above the outhermost turn of the primary. An alligator clip will allow tapping into any location on this primary coil, such as the more common turn 12 or turn 15. The center hub has a mount for the secondary, allowing for easy disassembly, storage, or even adding another secondary type in the future.

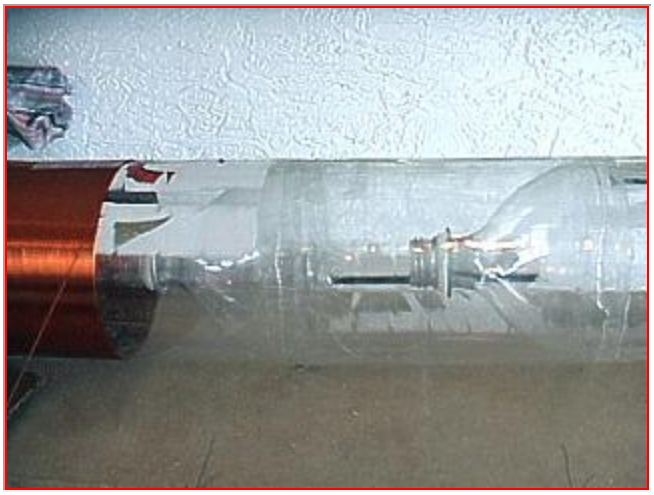

Here is the new secondary coil being wound on the winding lathe. The major difference between this coil and the original is that extremely thin polyethylene is being used opposed to PVC tubing. This type of material is best for minimal RF loss compared to PVC. Note that 2 liter soda bottles are being used! Cutting off the base of each bottle and inserting the top formed a tight fit which was sealed with PVC cement. Most of the labeling, also plastic, was removed from each bottle prior to winding it with AWG 22 enameled magnet wire. The bottle tops formed a reinforcement for the thin clear-plastic used in this form.

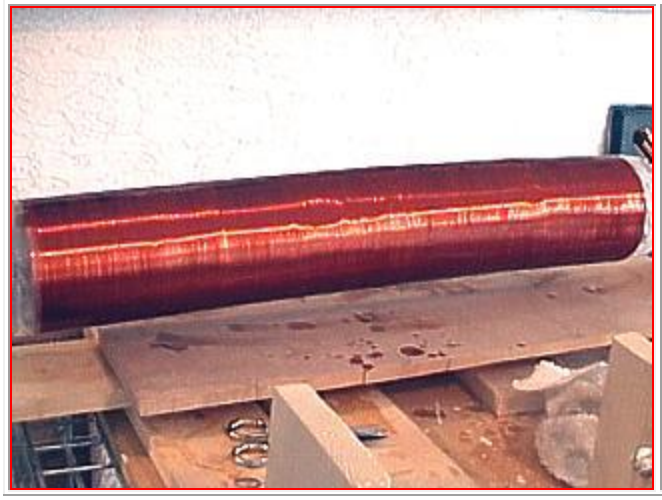

The new secondary coil, exactly 4 inches in diameter and 24 inches long, is finished being wound with #22 magnet wire and has the first coat of polyurethane varnish in this picture while still on the winding lathe. The varnish will actually strengthen the coil on the thin polyethylene plastic of four 2 liter soda bottles. This new coil will be slightly bigger than the original secondary, which was on thick PVC tubing around 3 1/2 inches in diameter. Winding the magnet wire on such a form was more difficult than winding it on PVC, but is well worth it due to the higher RF efficiency of such material.

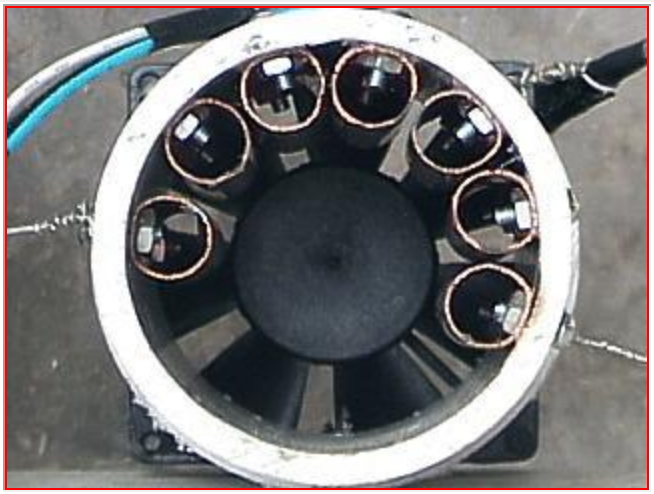

The Richard Quick type spark gap used in this project also has been slightly modified for the new tesla coil design. The original had a copper electrode, a 3 inch long piece of copper tubing, which was in the bottom of the unit in this picture. This piece, which served as a safety gap, was removed and placed with the other six electrodes. The new spark gap has a total of seven copper electrodes. Also, the wires going through the PVC and soldered to the electrodes were changed to that they attach to the nuts holding them on the outside instead. More spark gaps means better frequency switching for the tesla coil.

Here are the secondary coils used in this project. The one on the left is the original secondary used in the original coil design and is PVC based at about 3.5 inches. The new coil is to the right, and is larger at 4 inches. Both have a winding length of 24 inches and are wound with roughly 900 turns of AWG 22 enameled magnet wire. The new coil is made of lightweight and thin polyethylene plastic from four 2-liter soda pop bottles end to end. The end bottle forms the top of the new secondary and is coated with aluminum foil forming the top terminal. The bolt on the top of each secondary is for a top load attachment. The new tesla coil has the ability to remove the secondary for storage purposes, as well as swapping each secondary if needed. The base of the new secondary has a wood chock to mate it with the secondary mount of the new tesla coil.

One of the best and inexpensive ways to construct a good tesla coil top load is out of two metal salad bowls like the ones in this picture. They can easily be drilled and either bolted or welded together and attached to the top of the tesla coil secondary. The two bowls here are roughly 12 inches in diameter and were very inexpensive at my local KMart.

The completed new and redesigned secondary is shown here with the top load installed. The top load, which is two metal salad bowls joined together, was bolted to a soda bottle cap, which easily attaches to the top of the secondary unit and also can be removed if needed. The entire secondary rig stands about 3 feet tall.

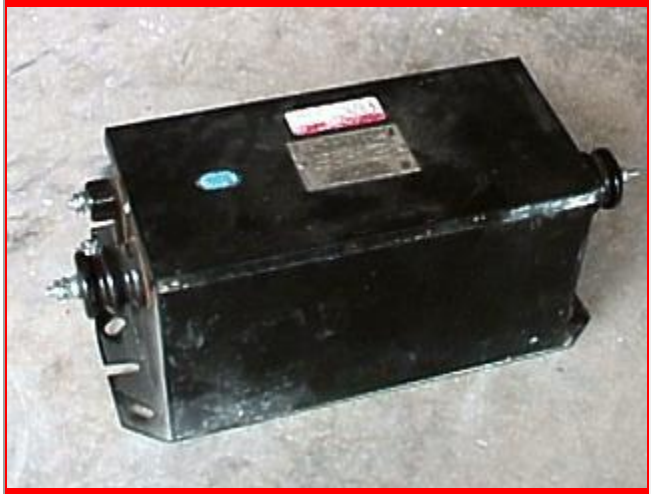

Here is a picture of the neon sign transformer (NST) to be used with the redesigned tesla coil. It is a big step over the 10 kv, 23 ma oil burner transformer with an output of 12 kv at 60 ma. This should increase the power of the tesla coil from 230 watts to about 720 watts, over three times as much. The only down side was obtaining such a device. The unit here was a nearly new model from Franceformer, a good transformer choice. The unit was not cheap either, at 85 dollars from a local sign company. Some places will give away such units, especially if they are broken, or depending on the area where you live. 60 ma models are much harder to find than the 30 ma models, especially in warmer climates (more current is needed for signs operating in cold weather). Higher power is also needed to drive larger sparks on a tesla coil. The rule of thumb is, the 9 to 12 kv range is fine at 30 ma, but 60 ma is a much better choice, if available. This unit also is great for building a jacobs ladder, where and arc climbs up two spaced metal rods (remember Frankenstein)?

Here is my attempt at building a MMC (Multiple Mini Capactior) array. There are a total of 40 capacitors, each rated at 10 kv at 0.001 uF. The array consists of 20 parelleled sets of 2 of these capacitors in series to bring up the voltage rating to 20 kv at 0.01 uF. The capacitors are ceramic disk type and are mounted on a piece of polycarbonate sheet with drilled holes. The ends are connected on the other side with #22 bare copper wire and soldered in place. The parallel connection to the entire array is to the left of this picture. Black electrical tape was also used to cover the exposed metal on the bottom of the unit.

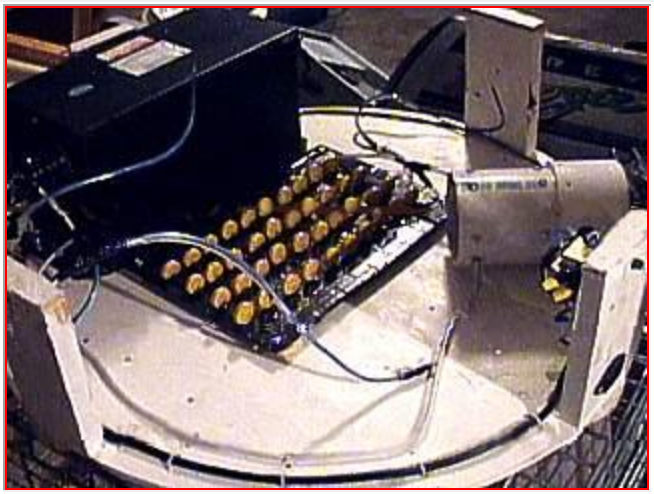

Here is the components installed in the unfinished base of the new tesla coil. The 12 kV, 30 mA neon sign transformer (left), MMC array (center), RQ spark gap (right) and electrical connections can be seen in this picture. Note that all high voltage wiring is covered in clear plastic tubing, similar to aquarium air lines. Also, not visible in this picture, a dolly with four wheels was attached to the bottom of the base. The NST was quite heavy and the entire unit is great when wheels are installed. To the far right, the power input is visible on the support stud. A green neon power indicator light was added above the power input connector.

The finished tesla coil base for the redesigned coil is shown here. The wheeled base and components support the primary coil which can be interchanged because the center has a mounting hub with a screw terminal to connect the RF ground. On the left, the strike / RF ground rail connects to another terminal so that the RF ground can be hooked up to an appropriate ground OTHER than the mains ground. Although it may look nearly perfect, this base had a MAJOR problem ... The bare primary, sitting ON the wood supports, conducted electricity really GOOD, and shorted the system, even blowing a few snubber caps on the MMC array! This was before the coil could even be "spark tested". Wood is a good insulator, but not when above the kilovolt range. Carbonizing is what lowered the wood resistance. The next design will have thick plastic to hold the primary above the wood surface.

Each capacitor in a multiple Mini capacitor (MMC) array is called a snubber capacitor. After constructing the 0.01 uF MMC array (At a theoretical 20 kV rating) and powering it up to test the primary, NST, and spark gap performance ... Flashover! The high voltage in the primary jumped from the metal contacts on the MMC unit directly to the wood structure of the tesla coil base ... I guess wood is an excellent conductor at 12 kV plus. Each capacitor started to flashover and fail like the one in this picture. A very disappointing failure after time and money spend building the MMC. Maybe I will try three or four in each series pack instead of two ... Or try another design. The blown cap is obvious to the right, a good capacitor is on the left.

presented at "Causality and Locality in Modern Physics & Astronomy: Open Questions and Possible Solutions"
A Symposium to Honor Jean-Pierre Vigier, York Univ., Toronto, Aug. 25–29, 1997

THE ZERO-POINT FIELD AND INERTIA

B. HAISCH
Solar and Astrophysics Laboratory, Lockheed Martin
3251 Hanover St., Palo Alto, CA 94304

A. RUEDA
Dept. of Electrical Engineering & Dept. of Physics
California State Univ., Long Beach, CA 90840

1. Introduction

Is the vacuum electromagnetic zero-point field (ZPF) real? In a nice collection of examples, Milonni (1988) has shown that the interpretations of vacuum field fluctuations vs. radiation reaction are merely like two sides of the same quantum mechanical coin (cf. Senitzky 1973). Physical phenomena such as spontaneous emission, the Lamb shift and the Casimir force can be analyzed either way with the same result. The Casimir force is of particular interest (Milonni 1982). The recent measurements by Lamoreaux (1997) show agreement with the semiclassical theory of Casimir based on a real ZPF to within 5% over the measured range. Of course this effect is derived in standard QED calculations via subtraction of two formally infinite integrals over electromagnetic field modes. Another approach yielding identical results simply treats the quantum vacuum as consisting of (virtual) photons carrying linear momentum. Reflections off the conducting plates inside and outside the cavity are in balance for wavelengths shorter than the plate separation, but for longer wavelengths modes are excluded within the cavity. This imbalance results in a net "zero-point radiation pressure" pushing the plates together which is exactly the Casimir force (Milonni, Cook & Goggin 1988; Milonni 1994). *One may argue over the correct theoretical perspective, but the new measurements leave no doubt that the predicted macroscopic forces are quite real.*

A similar treatment of the quantum vacuum can be applied to scattering of momentum-carrying zero-point photons by quarks and electrons in matter. As with the Casimir cavity, such scattering is almost entirely a detailed balance process. However it can be shown that, owing to acceleration effects within the class of those first studied by Davies (1975) and Unruh (1976), an acceleration-dependent imbalance results in a net reaction force (Rueda & Haisch 1997a,b). Thus as with the Casimir force, a zero-point field quantum vacuum effect is proposed to give rise to a macroscopic phenomenon: in this case, the inertia of matter.

2. The Zero-Point Field in Quantum Physics

The Hamiltonian of a one-dimensional harmonic oscillator of unit mass may be written (cf. Loudon 1983, chap. 4)

$$\hat{H} = \frac{1}{2}(\hat{p}^2 + \omega^2 \hat{q}^2), \tag{1}$$

where $\hat{p}$ is the momentum operator and $\hat{q}$ the position operator. From these the destruction (or lowering) and creation (or raising) operators are formed:

$$\hat{a} = (2\hbar\omega)^{-1/2}(\omega\hat{q} + i\hat{p}), \tag{2a}$$

$$\hat{a}^\dagger = (2\hbar\omega)^{-1/2}(\omega\hat{q} - i\hat{p}). \tag{2b}$$

The application of these operators to states of a quantum oscillator results in lowering or raising of the state:

$$\hat{a}|n\rangle = n^{1/2}|n-1\rangle, \tag{3a}$$

$$\hat{a}^\dagger|n\rangle = (n+1)^{1/2}|n+1\rangle. \tag{3b}$$

Since the lowering operator produces zero when acting upon the ground state,

$$\hat{a}|0\rangle = 0, \tag{4}$$

the ground state energy of the quantum oscillator, $|0\rangle$, must be greater than zero,

$$\hat{H}|0\rangle = E_0|0\rangle = \frac{1}{2}\hbar\omega|0\rangle, \tag{5}$$

and thus for excited states

$$E_n = \left(n + \frac{1}{2}\right)\hbar\omega. \tag{6}$$

The electromagnetic field is quantized by associating a quantum mechanical harmonic oscillator with each **k**-mode. Plane electromagnetic waves propagating in a direction **k** may be written in terms of a vector potential $\mathbf{A_k}$ as (ignoring polarization for simplicity)

$$\mathbf{E_k} = i\omega_\mathbf{k}\{\mathbf{A_k}\exp(-i\omega_\mathbf{k}t + i\mathbf{k}\cdot\mathbf{r}) - \mathbf{A_k^*}\exp(i\omega_\mathbf{k}t - i\mathbf{k}\cdot\mathbf{r})\}, \tag{7a}$$

$$\mathbf{B_k} = i\mathbf{k}\times\{\mathbf{A_k}\exp(-i\omega_\mathbf{k}t + i\mathbf{k}\cdot\mathbf{r}) - \mathbf{A_k^*}\exp(i\omega_\mathbf{k}t - i\mathbf{k}\cdot\mathbf{r})\}. \tag{7b}$$

Using generalized mode coordinates analogous to momentum ($P_\mathbf{k}$) and position ($Q_\mathbf{k}$) in the manner of (2ab) above one can write $\mathbf{A_k}$ and $\mathbf{A_k^*}$ as

$$\mathbf{A_k} = (4\epsilon_0 V\omega_\mathbf{k}^2)^{-\frac{1}{2}}(\omega_\mathbf{k}Q_\mathbf{k} + iP_\mathbf{k})\varepsilon_\mathbf{k}, \tag{8a}$$

$$\mathbf{A}_\mathbf{k}^* = (4\epsilon_0 V\omega_\mathbf{k}^2)^{-\frac{1}{2}}(\omega_\mathbf{k}Q_\mathbf{k} - iP_\mathbf{k})\varepsilon_\mathbf{k}. \tag{8b}$$

In terms of these variables, the single-mode energy is

$$< E_\mathbf{k} >= \frac{1}{2}(P_\mathbf{k}^2 + \omega_\mathbf{k}^2 Q_\mathbf{k}^2). \tag{9}$$

Equation (8) is analogous to (2), as is Equation (9) with (1). Just as mechanical quantization is done by replacing $\mathbf{x}$ and $\mathbf{p}$ by quantum operators $\hat{\mathbf{x}}$ and $\hat{\mathbf{p}}$, so is the quantization of the electromagnetic field accomplished by replacing $\mathbf{A}$ with the quantum operator $\hat{\mathbf{A}}$, which in turn converts $\mathbf{E}$ into the operator $\hat{\mathbf{E}}$, and $\mathbf{B}$ into $\hat{\mathbf{B}}$. In this way, the electromagnetic field is quantized by associating each $\mathbf{k}$-mode (frequency, direction and polarization) with a quantum-mechanical harmonic oscillator. The ground-state of the quantized field has the energy

$$< E_{\mathbf{k},0} >= \frac{1}{2}(P_{\mathbf{k},0}^2 + \omega_\mathbf{k}^2 Q_{\mathbf{k},0})^2 = \frac{1}{2}\hbar\omega_\mathbf{k}. \tag{10}$$

3. The Zero-Point Field in Stochastic Electrodynamics

Stochastic Electrodynamics (SED; see de la Peña & Cetto 1996; Milonni 1994) treats the ZPF via a plane electromagnetic wave modes expansion representation whose amplitudes are *exactly* such as to result in a phase-averaged energy of $\hbar\omega/2$ in each mode ($\mathbf{k}$,σ), where σ represents polarization (cf. Boyer 1975):

$$\mathbf{E}^{ZP}(\mathbf{r},t) = \mathrm{Re}\sum_{\sigma=1}^{2}\int d^3k\hat{\varepsilon}_{\mathbf{k},\sigma}\left[\frac{\hbar\omega_\mathbf{k}}{8\pi^3\epsilon_0}\right]^{\frac{1}{2}}\exp(i\mathbf{k}\cdot\mathbf{r} - i\omega_\mathbf{k}t + i\theta_{\mathbf{k},\sigma}), \tag{11a}$$

$$\mathbf{B}^{ZP}(\mathbf{r},t) = \mathrm{Re}\sum_{\sigma=1}^{2}\int d^3k(\hat{k}\times\hat{\varepsilon}_{\mathbf{k},\sigma})\left[\frac{\hbar\omega_\mathbf{k}}{8\pi^3\epsilon_0}\right]^{\frac{1}{2}}\exp(i\mathbf{k}\cdot\mathbf{r} - i\omega_\mathbf{k}t + i\theta_{\mathbf{k},\sigma}). \tag{11b}$$

This kind of representation was used by Planck (1914) and Einstein and co-workers (Bergia 1979). The stochasticity is entirely in the phase, $\theta_{\mathbf{k},\sigma}$, of each wave. (As discussed in § 7 this is not entirely correct.)

The spectral energy density of the classical ZPF is obtained from the number of modes per unit volume, $8\pi\nu^2/c^3$ (Loudon 1983, Eq. 1.10), times the energy per mode, $h\nu/2$. The Planck spectrum plus ZPF radiation is thus:

$$\rho(\nu,T)d\nu = \frac{8\pi\nu^2}{c^3}\left(\frac{h\nu}{e^{h\nu/kT}-1} + \frac{h\nu}{2}\right)d\nu. \tag{12}$$

4. The Davies-Unruh Effect

Motivated by Hawking's evaporating black hole concept, Davies (1975) and Unruh (1976) determined that a Planck-like component of the background scalar field will arise as seen from a uniformly-accelerated point with constant proper acceleration $\mathbf{a}$ (where $|\mathbf{a}| = a$) having an effective temperature,

$$T_a = \frac{\hbar a}{2\pi c k}. \tag{13}$$

(For the classical Bohr electron, $v^2/r \approx 10^{25}$ cm/s^2, $T_a \approx 367$ K.) This effect is derivable from quantum field theory (Davies 1975, Unruh 1976). It was also derived in SED for the classical ZPF by Boyer (1980) who obtained for the spectrum a quasi-Planckian form (in the absence of external radiation):

$$\rho(\nu, T_a)d\nu = \frac{8\pi\nu^2}{c^3}\left[1 + \left(\frac{a}{2\pi c\nu}\right)^2\right]\left[\frac{h\nu}{2} + \frac{h\nu}{e^{h\nu/kT_a} - 1}\right]d\nu. \tag{14}$$

5. Newtonian Inertia from ZPF Electrodynamics

While these additional acceleration-dependent terms in Eq. (14) do not show any spatial asymmetry in the expression for the ZPF spectral energy density, certain asymmetries do appear when the electromagnetic field interactions with charged particles are analyzed. Haisch, Rueda & Puthoff (HRP; 1994) made use of this to propose a connection between the ZPF and inertia of matter. Assume that there are interactions between a real ZPF, represented as above, and matter at the fundamental particle level, treated as a collection of electrons and quarks, both of which are simply thought of as oscillating point charges: partons in the terminology of Feynmann. If the ZPF-parton interactions take place at high frequencies, then one need not worry about how the three quarks in a proton or a neutron are bound together. Each will interact independently with the ZPF, even though the three-quark ensemble is constrained to macroscopically move together.

The method of Einstein and Hopf (1910) was followed: it breaks the analysis of the dynamics of the uniformly-accelerated parton into two steps. First we assume that the electric component of the ZPF, $\mathbf{E}^{zp}$, drives the parton to harmonic oscillation, i.e. creates a Planck oscillator. For simplicity we restrict these oscillations to a yz-plane characterized by the velocity vector $\mathbf{v}_{osc}$ and we force the oscillating parton to accelerate, via an external agent, in the x-direction with constant acceleration $\mathbf{a}$ (perpendicular to $\mathbf{v}_{osc}$). The acceleration will introduce asymmetries in the ZPF radiation field perceived by the oscillating parton. Second, we then ask what the effect is of the magnetic ZPF-parton interactions, specifically, what is the resulting Lorentz force: $< \mathbf{v}_{osc} \times \mathbf{B}^{zp} >$? The result was the discovery of a reaction force of the form

$$\mathbf{F}_r = \langle \mathbf{v}_{osc} \times \mathbf{B}^{zp} \rangle = -\left[\frac{\Gamma_Z \hbar \omega_c^2}{2\pi c^2}\right]\mathbf{a}. \tag{15}$$

The quantity in brackets on the right hand side we interpreted as the inertial mass,

$$m_i = \left[\frac{\Gamma_Z \hbar \omega_c^2}{2\pi c^2}\right] \tag{16}$$

where Γ_Z is the classical radiation damping constant of Abraham and Lorentz, but now referring to the Zitterbewegung oscillations [c] and ω_c was taken to be an effective cut-off frequency of either the ZPF spectrum itself (perhaps at the Planck frequency) or of the particle-field interaction owing to a minimum (Planck) particle size (Rueda 1981). Newton's Third Law tells us that a (motive) force, $\mathbf{F}$ will generate an equal and opposite (reaction) force, $\mathbf{F}_r$, and from Equation (15)

$$\mathbf{F} = -\mathbf{F}_r = m_i \mathbf{a}. \tag{17}$$

Newton's third law is fundamental, whereas Newton's second law, $\mathbf{F} = m\mathbf{a}$, appears to be derivable from the third law together with the laws of electrodynamics.

6. The Relativistic Formulation of ZPF-based Inertia

The oversimplification of an idealized oscillator interacting with the ZPF as well as the mathematical complexity of the HRP analysis are understandable sources of skepticism, as is the limitation to Newtonian mechanics. A relativistic form of the equation of motion having standard covariant properties has been obtained (Rueda & Haisch 1997), which is independent of any particle model, relying solely on the standard Lorentz-transformation properties of the electromagnetic fields.

Newton's third law states that if an agent applies a force to a point on an object, at that point there arises an equal and opposite force back upon the agent. Were this not the case, the agent would not experience the process of exerting a force and we would have no basis for mechanics. The mechanical law of equal and opposite contact forces is thus fundamental both conceptually and perceptually, but it is legitimate to seek further underlying connections. In the case of a stationary object (fixed to the earth, say), the equal and opposite force can be said to arise in interatomic forces in the neighborhood of the point of contact which act to resist compression. This can be traced more deeply still to electromagnetic interactions involving orbital electrons of adjacent atoms or molecules, etc.

A similar experience of equal and opposite forces arises in the process of accelerating (pushing on) an object that is free to move. It is an experimental fact that to accelerate an object a force must be applied by an agent and that the agent will thus experience an equal and opposite reaction force so long as the acceleration continues. It appears that this equal and opposite reaction force also has a deeper physical cause, which turns out to also be electromagnetic and is specifically due to the scattering of ZPF radiation. Rueda & Haisch (1997) demonstrate that from the point of view of the pushing agent there exists a net flux (Poynting vector)

[c] As discussed in chapter 17 of Jackson (1975) *Classical Electrodynamics*, one can obtain a characteristic radiation damping time for an electron having the value $\Gamma_e = 6.26 \times 10^{-24}$. This is not the proper Γ_Z for Zitterbewegung.

of ZPF radiation transiting the accelerating object in a direction opposite to the acceleration. The scattering opacity of the object to the transiting flux creates the back reaction force called inertia.

The new approach is less complex and model-dependent than the HRP analysis in that it assumes simply that the fundamental particles in any material object interact with the ZPF in some way that is analogous to ordinary scattering of radiation. It is well known that treating the ZPF-particle interaction as dipole scattering is a successful representation in that the dipole-scattered field exactly reproduces the original unscattered field radiation pattern, i.e. results in detailed balance. It is thus likely that dipole scattering is a correct way to describe the ZPF-particle interaction, but in fact for our analysis we simply need to assume that there is some dimensionless efficiency factor, $\eta(\omega)$, that describes whatever the process is (be it dipole scattering or not). We suspect that $\eta(\omega)$ contains one or more resonances, but again this is not a necessary assumption.

The new approach relies on making standard transformations of the $\mathbf{E}^{zp}$ and $\mathbf{B}^{zp}$ from a stationary to an accelerated coordinate system (cf. § 11.10 of Jackson, 1975). In a stationary or uniformly-moving frame the $\mathbf{E}^{zp}$ and $\mathbf{B}^{zp}$ constitute an isotropic radiation pattern. In an accelerated frame the radiation pattern acquires asymmetries. There is thus a non-zero Poynting vector in any accelerated frame carrying a non-zero net flux of electromagnetic momentum. The scattering of this momentum flux generates a reaction force, $\mathbf{F}_r$. Moreover since any physical object will undergo a Lorentz contraction in the direction of motion the reaction force, $\mathbf{F}_r$, can be shown to depend on γ_τ, the Lorentz factor (which is a function of proper time, τ, since the object is accelerating). We find that

$$m_i = \left[\frac{V_0}{c^2}\int \eta(\omega)\frac{\hbar\omega^3}{2\pi^2c^3}d\omega\right]. \tag{18}$$

We find the momentum of the object to be of the form

$$\mathbf{p} = m_i\gamma_\tau\mathbf{v}_\tau. \tag{19}$$

Thus, we arrive at the relativistic equation of motion

$$\mathcal{F} = \frac{d\mathcal{P}}{d\tau} = \frac{d}{d\tau}(\gamma_\tau m_i c,\ \mathbf{p}\ ). \tag{20}$$

The origin of inertia becomes remarkably intuitive. Any material object resists acceleration because the acceleration produces a perceived flux of radiation in the opposite direction that scatters within the object and thereby pushes against the accelerating agent. Inertia is a kind of acceleration-dependent electromagnetic drag force acting upon fundamental charges particles.

7. For the Future

Clearly a quantum field theoretical derivation of the ZPF-inertia connection is highly desireable. Another approach would be to demonstrate the exact equivalence of SED and QED. However as shown convincingly by de la Peña and Cetto

(1996), the present form of SED is not compatible with QED, but modified forms could well be, such as their own proposed "linear SED." Another step in the direction of reconciling SED and QED is the proposed modification of SED by Ibison and Haisch (1996), who showed that a modification of the standard ZPF representation (Eqs. 11ab) can exactly reproduce the statistics of the electromagnetic vacuum of QED.

For an oscillator of amplitude $\pm A$ the classical probability of finding the point-mass in the interval dx is a smooth function with a minimum at the origin (where the velocity is greatest) and a maximum at the endpoints of the oscillation. Treated quantum mechanically, an oscillator has a very different behaviour, but in an excited state approximates the classical probability distribution in the mean (see Fig. 1 of Ibison & Haisch). However the quantum $n = 0$ ground-state — the one of direct relevance to the ZPF — is radically different from the classical one: the quantum-state probability maximum occurs where the classical state probability is at a minimum (position zero) and vice versa at the endpoints; indeed the quantum probability distribution is non-zero beyond $\pm A$. In both cases the average position, of course, remains zero. The same disagreement characterizes the difference between the Boyer description of the ZPF and the quantum ZPF. It has been shown by Ibison and Haisch (1996) that this can be remedied by introduction of a stochastic element into the amplitude of each mode that precisely agrees with the quantum statistics. This gives us confidence that the SED basis of the inertia (and gravitation) concepts is a valid one.

The two most frequently posed questions, indeed perhaps the most important ones, are (1) whether the ZPF-inertia theory is subject to experimental validation, and (2) what the implications might be for revolutionary new technologies. An independent assessment of the case for experimental testing was carried out by Forward (1996) as a USAF-sponsored study. No *direct* test could be identified as currently feasible, but a constellation of related experiments were identified.

A NASA Breakthrough Propulsion Physics program is being initiated, and the ZPF-inertia concept is high on the list of candidate ideas to explore (see Haisch & Rueda 1997a) along with the Sakharov-Puthoff concept of ZPF-gravitation linked to the ideas herein by the principle of equivalence (Sakharov 1968, Puthoff 1989, see also Haisch & Rueda 1997b). We note that four decades elapsed before atomic energy became a technology following Einstein's 1905 paper proposing (special) relativity. A similar time-scale may apply here.

Acknowledgements

We acknowledge support of NASA contract NASW-5050 for this work. BH also thanks Prof. J. Trümper and the Max-Planck-Institut where some of these ideas originated during several extended stays as a Visiting Fellow. AR acknowledges valuable discussions with Dr. D. C. Cole.

References

Bergia, S. (1979), The light quantum and the wave-particle duality for radiation in Einstein's research: 1904–1925, preprint, Inst. di Fisica, U. Bologna.

Boyer, T.H. (1975), Random electrodynamics: The theory of classical electrodynamics with classical electromagnetic zero-point radiation, *Phys. Rev. D*, **11**, 790–808.

Boyer, T.H. (1980), Thermal effects of acceleration through random classical radiation, *Phys. Rev. D*, **21**, 2137–2148.

Boyer, T.H. (1984), Thermal effects of acceleration for a classical dipole oscillator in classical electromagnetic zero-point radiation, *Phys. Rev. D*, **29**, 1089–1095.

Davies, P.C.W. (1975), Scalar particle production in Schwarzschild and Rindler metrics, *J. Phys. A*, **8**, 609.

de la Peña, L. & Cetto, A. (1996), *The Quantum Dice: An Introduction to Stochastic Electrodynamics*, (Kluwer Acad. Publ., Dordrecht).

Einstein, A. & Hopf, L. (1910), Über einen Satz der Wahrscheinlichkeitsrechnung und seine Anwendung in der Strahlungstheorie, *Annalen der Physik (Leipzig)*, **33**, 1096; Statistische Untersuchung der Bewegung eines Resonators in einem Strahlungsfeld, **33**, 1105.

Forward, R.L. (1996), Mass Modification Experiment Definition Study, Phillips Lab. Rept. 96-3004; also published in *J. Sci. Expl.*, **10**, 325–354 (1996).

Haisch, B. & Rueda, A. (1997a), The Zero-Point Field and the NASA Challenge to Create the Space Drive, *Proc. NASA Breakthrough Prop. Physics Workshop*, in press.

Haisch, B. & Rueda, A. (1997b), Reply to Michel's 'Comment on Zero-Point Fluctuations and the Cosmological Constant', *Ap. J.*, to appear in Oct. 20 issue.

Haisch, B., Rueda, A. & Puthoff, H.E. (1994), Inertia as a zero-point field Lorentz Force, *Phys. Rev. A*, **49**, 678.

Ibison, M. & Haisch, B. (1996), Quantum and classical statistics of the electromagnetic zero-point field, *Phys. Rev. A*, **54**, 2737.

Jackson, J. D. (1975), *Classical Electrodynamics*, 2nd ed., Wiley & Sons.

Lamoreaux, S.K. (1997), Demonstration of the Casimir Force in the 0.6 to 6 μm Range, *Phys. Rev. Letters* **78**, 5–8.

Loudon, R. (1983), *The Quantum Theory of Light (2nd. ed)*., Oxford Univ. Press, chap. 4.

Milonni, P.W. (1982), Casimir forces without the radiation field, *Phys. Rev. A* **25**, 1315–1327.

Milonni, P.W. (1988), Different Ways of Looking at the Electromagnetic Vacuum, *Physica Scripta* **T21**, 102–109..

Milonni, P.W. (1994), *The Quantum Vacuum*, Academic Pres, chap. 1.

Milonni, P.W., Cook, R.J. & Goggin, M.E. (1988), Radiation pressure from the vacuum: Physical interpretation of the Casimir force, *Phys. Rev. A* **38**, 1621–1623.

Planck, M. (1914), The theory of heat radiation (P. Blakansten & Son, London)

Puthoff, H.E. (1989), Gravity as a zero-point fluctuation force, *Phys. Rev. A*, **39**, 2333.

Rueda, A. (1981), Behaviour of classical particles immersed in the classical electromagnetic field, *Phys. Rev. A*, **23**, 2020.

Rueda, A. & Haisch, B. (1997a), Inertial mass as reaction of the vacuum to accelerated motion *Phys. Rev. A*, submitted.

Rueda, A. & Haisch, B. (1997b), Electromagnetic vacuum and inertial mass, this volume.

Sakharov, A. (1968), Vacuum Quantum Fluctuations in Curved Space and the Theory of Gravitation *Soviet Physics - Doklady*, **12**, No. 11, 1040.

Senitzky, I.R. (1973), Radiation reaction and vacuum field effects in Heisenberg picture QED, *Phys. Rev. Lett.*, **31**, 955.

Unruh, W.G. (1976) Notes on black-hole evaporation, *Phys. Rev. D*, **14**, 870.

ZERO-POINT FIELDS, GRAVITATION AND NEW PHYSICS

A Report by

Professor Paul S. Wesson, F.R.A.S.*

Department of Physics
University of Waterloo
Waterloo, Ontario N2L 3G1
Canada

for

The California Institute for Physics and Astrophysics
366 Cambridge Avenue
Palo Alto, California 94306
U.S.A.

wesson@astro.uwaterloo.ca *or* wesson@step.stanford.edu

CONTENTS

Abstract
1. Introduction
2. Recent Work on the Electromagnetic ZPF
3. Outstanding Problems
4. Recommendations for Research
5. Conclusion
Acknowledgements
Bibliography

Abstract

Research over the last decade has shown that problems exist about how to reconcile the zero-point fields that follow from quantum mechanics with the energy conditions built into classical gravitational theories such as general relativity. Here, these problems are identified, and possible resolutions are suggested. The inference from the material presented here is that research into zero-point physics is justified and should continue to be supported. However, a catalog is given detailing 11 topics wherein past research has run into difficulties. These difficulties are in principle surmountable, and there is given a list of 6 topics that are theoretically and practically important for future pursuit.

1 Introduction

In recent years, it has been suggested that the electromagnetic zero-point field (zpf) is not merely an artefact of quantum mechanics, but a real entity with major implications for gravity, astrophysics and technology. This view is shared by a number of researchers, including Boyer (1980), McCrea (1986), Puthoff (1987) and Rueda and Haisch (1998a). The present work is a report on research into the zpf during the last decade, with recommendations about where investigations should be directed in the future.

The theoretical basis for believing in a real zpf is simple. A one-dimensional harmonic oscillator has states which can be raised or lowered in units n of $\hbar\omega$ where $\hbar$ is Planck's constant divided by 2π and ω is the frequency. In terms of the momentum operator $\hat{p}$ and the position operator $\hat{q}$, the Hamiltonian (energy) of the system is $\hat{H} = (\hat{p}^2 + \omega^2\hat{q}^2)/2$. The excited states have energy $E_n = (n + 1/2)\,\hbar\omega$, a relation which is known to lead to acceptable results in quantum-mechanical calculations for $n \geq 0$. However, if the kinetic energy of the system (or alternatively the temperature) goes to zero, there remains a zero-point energy of $\hbar\omega/2$. This, summed over frequencies, represents a zero-point field with a large energy density.

The countervailing approach to modern physics is via Einstein's theory of general relativity. This is supported by the so-called $(3 + 1)$ classical solar-system tests, as well as data from binary pulsars and gravitational lensing. According to general relativity, all forms of energy produce gravitational effects.

The quantum and classical pillars of modern physics are not architecturally campatible: the (electromagnetic) zero-point field does not appear to produce the expected classical gravitational effects.

This report aims to elucidate this contratemps. Section 2 is an account of research in both the quantum and gravitational domains, where contradictions are highlighted. Section 3 is a catalog of problems that are outstanding. There are many of these, so Section 4 is a list of recommendations about where future research efforts should be focussed. Section 5 is a conclusion, and there follows an up-to-date bibliography.

2 Recent Work on the Electromagnetic ZPF

This section presents an objective discussion of the most significant work that has been done on the zpf and its implications for gravity in the last decade. The emphasis is on how a quantum-mechanical electromagnetic zpf can be reconciled with a classical theory of gravity such as general relativity.

Haisch, Rueda and Puthoff (1994) argued that the elementary constituents of matter, such as electrons and quarks, when accelerating through the electromagnetic zero-point field, experience a Lorentz-type force. This force acts against the acceleration, and the authors identified this as giving rise to inertia. The calculations leading to this conclusion are lengthy, but the main result is simple: a particle acquires an inertial mass

$$m_i = \frac{\Gamma \hbar \omega_c^2}{2\pi c^2} \qquad . \tag{1}$$

Here Γ is the Abraham-Lorentz damping constant, $\hbar \equiv h/2\pi$ as above, c is the speed of light, and ω_c is a cutoff frequency.

The last is not fixed by theoretical considerations. From the physical side, one might expect ω_c to correspond to the size of the particle, and its inability to respond to oscillations of the zpf with wavelengths of arbitrary smallness. Provided ω_c is large enough (or the wavelength small enough), the Lorentz invariance of the zpf spectrum will not be measurably affected. One could, of course, relate ω_c to the Planck frequency:

$$\omega_P = \left(\frac{c^5}{\hbar G} \right)^{1/2} \qquad . \tag{2}$$

Here G is the Newtonian gravitational constant, which since c and $\hbar$ also appear is commonly taken to indicate that $\omega_P$is a fundamental limit on frequency set by quantum gravity. This argument, as pointed out by Wesson (1992a) and others, is logically suspect. The same dimensional argument, applied to the mass, would imply that the Universe should be dominated by

particles with the Planck mass of order 10^{-5} gm. This is manifestly not the case. Wisely, Haisch, Rueda and Puthoff (1994) avoid the identification of ω_c with ω_P.

Another physical constant which the authors leave out of their discussion is Λ, the cosmological constant (loc. cit., p. 693). This parameter is present in Einstein's field equations of general relativity because the metric tensor g_{ij} on which the theory is based acts like a constant under covariant (curved-space) differentiation, so a term like Λg_{ij} will not affect the consequences of the field equations. (To this extent, it is like the gauge-invariance manifested by Maxwell's equations of electromagnetism.) Then Einstein's field equations in full read

$$R_{ij} - \frac{Rg_{ij}}{2} + \Lambda g_{ij} = \frac{8\pi G}{c^2} T_{ij} \, (i, j = 0, 123) \quad . \tag{3}$$

Here R_{ij} is the Ricci tensor, R is the Ricci scalar, and T_{ij} is the energy-momentum tensor. The last depends in general on the 4-velocity of the matter $u^i = dx^i/ds$ (where s is the 4D interval or proper time) and properties of the matter. For a perfect fluid with density ρ and pressure p,

$$T_{ij} = \left(\rho + \frac{p}{c^2}\right) u_i u_j - \frac{p}{c^2} g_{ij} \qquad . \tag{4}$$

Now Λ in textbooks is commonly regarded as a kind of force per unit mass, which from the Schwarzschild metric is given by $\Lambda r c^2/3$ (here we take Λ to have dimension length^{-2}). However, (3) and (4) show that Λ can also be regarded as describing a density and pressure for the vacuum, given by

$$\rho_v = \frac{\Lambda c^2}{8\pi G} = -\frac{p_v}{c^2} \qquad . \tag{5}$$

That is, the equation of state of the vacuum in Einstein's theory is the inflationary universe one $\rho_v + p_v/c^2 = 0$. Also, the fluid decribed by (5) behaves to all physical intents as a zero-point field.

It is well known that the zero-point fields predicted by particle physics are many orders more intense than the cosmological Λ-field, a puzzle which is usually termed the cosmological constant problem (see Weinberg 1989, Ng

1992 and Wesson 1999 for reviews). This is basically a contradiction between a particle-physics prediction and an astrophysical observation. There are several possible resolutions of it, but the consensus is that the zpf's associated with the interactions of particles must in some way cancel, perhaps due to the operation of a physical principle such as supersymmetry (see Wesson 1999, p. 33). From the viewpoint of the electromagnetic zpf and the origin of inertia as discussed by Haisch, Rueda and Puthoff (1994), something similar must necessarily happen. Otherwise, the energy-density of the zpf would curve spacetime (as does Λ) to a degree which is incompatible with astrophysical observations such as the dynamics of galaxies and the lensing of QSOs. The authors in fact avoid this and related problems by arguing that it is only the perturbation of the zpf which produces gravity and curvature; and that the zpf itself does not gravitate or produce a Λ-type field.

Cosmological and astrophysical constraints on the zpf were derived by Wesson (1991) using a model of Puthoff (1987; 1989a,b). The latter model envisioned the electromagnetic zpf as an Olbers-type field that is continuously absorbed and regenerated by charged particles within the observable part of the universe. The latter can be assumed to have uniform density and (if finite) pressure, in which case (3) reduce to the Friedmann equations:

$$8\pi G\rho = \frac{3kc^2}{R^2} + \frac{3\dot{R}^2}{R^2} - \Lambda c^2$$

$$\frac{8\pi Gp}{c^2} = \frac{-kc^2}{R^2} - \frac{\dot{R}^2}{R^2} - \frac{2\ddot{R}}{R} + \Lambda c^2 \qquad . \tag{6}$$

Here $R = R(t)$ is the scale factor, k is the curvature constant ($k = \pm 1$ or 0) and an overdot represents differentiation with respect to the time t. The joining of a quantum-mechanical zpf to classical models in Einstein's theory which obey (6) is technically problematical, and the original model of Puthoff was criticized in connection with its application to general relativity and its derivation of a quasi-Newtonian law of gravity (Santos 1991, Wesson 1992b, Carlip 1993). However, the reformulation of the model by Wesson (1991) is technically sound. This is not to say, though, that its implications for cosmology and astrophysics are benign. For example, it is difficult to see how an electromagnetic zpf does not leak energy into wavelength bands on which conventional astrophysics has much data. There is excellent data on

the isotropy and intensity of the 3K microwave background, good constraints on the infrared, optical and ultraviolet backgrounds, and usable data on the X-ray and γ-ray backgrounds (for a review see Overduin and Wesson 1992). One wonders how the zpf is so isolated as not to produce any notable perturbations in these wavebands. A related question, which we have touched on above, concerns the gravitational effect of the zpf. If one requires that its mass density not exceed the critical (Einstein-deSitter) density, its spectrum must have a cutoff at a wavelength $\lambda_c \geq 0.2$ mm, which would destroy its Lorentz invariance in a practical way since wavelengths of this type are readily observable using conventional astrophysical techniques. This constraint can, however, be reinterpreted to mean that the view of Puthoff, Haisch and Rueda is correct and that the zpf does not gravitate.

Rueda and Haisch (1998 a,b) revisited the issues discussed above, removing certain ad hoc aspects of the particle-field interaction, but reaching similar results. In particular, they reiterated that inertia is a kind of electromagnetic drag that affects charged particles undergoing acceleration through the (electromagnetic) zpf, and connected this again to the existence of a gravity-like force as originally envisioned by Sakharov (1968). They concentrated on rectilinear motion with uniform constant acceleration, which results in hyperbolic orbits, but also considered more general motion. They also pointed out that their model for the origin of inertia is Machian, in the sense that a local particle acquires its (inertial) mass through an interaction with a global field.

The history of Mach's principle is long, and there are several different formulations of it in the literature (see Wesson 1978, 1999 for reviews). Though it is widely conceded that Einstein's theory of general relativity is not Machian, there is a consensus among researchers that an extension of that theory would be appealing if it gave an account of the properties of particles in terms of some cosmological field. Theories of this type have been proposed by Dirac, Hoyle and Narlikar, Canuto and coworkers, and Wesson and coworkers.

In the approach of the last-mentioned authors, the (inertial) rest mass of a particle is treated as a coordinate in a dimensionally-extended spacetime, where the two physically natural (but mathematically equivalent) choices are

$$\ell_g = \frac{Gm}{c^2} \qquad , \qquad \ell_p = \frac{h}{mc} \qquad . \tag{7}$$

These choices correspond to what in 4D scale-covariant theories of gravity are called gravitational and particle units. In a fully-covariant, dimensionally-extended theory based on Riemannian geometry, these choices are seen as representing convenient coordinate frames. There are many theories with extended dimensionality, notably Kaluza-Klein theory (5D), superstrings (10D) and supergravity (11D). The choice of dimensionality depends on which aspects of particle physics one wishes to explain alongside gravity. Most work has been done on Kaluza-Klein theory, which since its origin in the 1920s has accummulated a vast literature (Kaluza 1921; Klein 1926; for a review of modern 5D theory, see Overduin and Wesson 1997). In the current approach, so-called induced-matter theory, the Einstein field equations (3) for 4D with matter are replaced by the 5D field equations with vacuum:

$$R_{AB} = 0 \qquad\qquad (A, B = 0, 1, 2, 3, 4) \quad . \tag{8}$$

These 15 equations break down into sets of 10, 4 and 1. The first set is just Einstein's equations (3), but now with matter derived from the field equations by virtue of the extra metric coefficient and derivatives with respect to the extra coordinate. [It is now widely conceded that one should not insist on a circular topology for the extra dimension or insist on setting derivatives with respect to the extra coordinate to zero, as in the original Kaluza-Klein theory, since these assumptions lead to the hierarchy and cosmological-constant problems to do with particle masses and the value of Λ, as alluded to elsewhere.] The second set of 4D equations given by the 5D ones (8) has been known for a long time to be just Maxwell's equations of electrodynamics. The last (or 4-4) equation in (8) is a conservation equation for the scalar field in the extended metric (g_{44}). The field equations (8) are in agreement with the classical tests of relativity and cosmological data (Will 1993; Kalligas, Wesson and Everitt 1995) and cosmological data (Wesson 1999). The identification (7) for mass makes the theory Machian. The field equations (2.7) are non-linear, leading to a rich field of solutions for the fields.

Both of the latter characteristics were mentioned by Rueda and Haisch (1998) as attributes of their approach to the origin of inertia by accelerated motion through vacuum. This approach can be based on stochastic electrodynamics or SED, which briefly is an alternative approach using classical field theory to results derived from quantum field theory (for a review see De La Peña and Cetto 1996). However, as described above, a Machian theory of non-linear fields can also be approached through dimensionally-extended Riemannian geometry as used in modern Kaluza-Klein or KK theory (for a review see Wesson 1999). The choice between SED and KK - or other theories - depends on academic concerns to do with consistency and practical concerns to do with testability. We will return to these issues below.

Haisch and Rueda (1999a) returned to the issue of non-linearities, arguing that the observed masses of particles (e.g., the electron mass at 512 keV) are due to resonances in the electromagnetic zpf. They also suggested that the scattering of the zpf by a charged particle takes place at the Compton wavelength defined by the second relation in (7); and that this leads to the de Broglie relation characterizing the wave description of the particle in terms of $\lambda_{deB} = h/p$ (where p is the momentum). This extension of their previous work is interesting; but in terms of making contact with the testable aspects of wave-mechanics, needs to be extended to a full discussion of the wave function and how its modulus defines the probability of finding a particle at a given place in a given potential.

Haisch, Rueda and Puthoff (1998) discussed further aspects of their approach to the zpf, including its possible practical application to spacecraft propulsion (see below) and the concept of negative mass. The latter idea may sound unusual. However, it should be recalled that a negative-energy field is potentially a way of cancelling the enormous positive energy densities of particle physics, and would lead to a cosmological model of the Milne type. The Milne model (Wesson 1991) is a solution of the Friedmann equations (6) with zero net density and pressure, zero cosmological constant, and a scale factor varying as the time t. Its interval is given in spherical polar coordinates by

$$ds^2 = c^2 dt^2 - t^2 \left[\frac{dr^2}{(1+r^2)} + r^2 \left(d\theta^2 + \sin^2 \theta d\phi^2 \right) \right] \quad . \tag{9}$$

This metric can be changed by a coordinate transformation to flat spacetime (see Wesson 1999), so the model is a logical one to consider from the viewpoint of a zpf-dominated universe. It has the practical advantage of avoiding the horizon problem posed by the isotropy of the 3K microwave background, since it has no horizon.

However, Haisch, Rueda and Puthoff (1998) argued that the concept of negative inertial mass is unacceptable within their formalism of the zpf, basically because inertia is the resistance of a charged particle to acceleration in the zpf, and so cannot be reversed. As the authors note, this runs counter to the work by Bondi (1957), which showed that negative inertia is a viable proposition. On a more recent note, Bonnor (1989) has discussed the various types of mass which enter the laws of physics, and concluded that negative mass does not violate any of the standard postulates, including the weak equivalence principle.

A dichotomy therefore becomes apparent: one can either argue that the zpf does not gravitate at all, or one can argue that it does gravitate but is cancelled by another field of negative energy density.

Haisch, Rueda and Puthoff (1998) also mentioned several other effects which are in principle measurable. The Davis-Unruh effect really follows from work by Hawking on the match between quantum field theory and general relativity, originally applied to black holes. In terms of a particle which undergoes an acceleration a, the theory predicts that an observer on such a particle would measure an ambient temperature

$$T = \frac{\hbar a}{2\pi c k} \quad , \tag{10}$$

where k is Boltzmann's constant and the other parameters have been defined. However (10) was derived without the zpf formalism, and in most astrophysically-accessible situations is unmeasurably small.

The same is not true of the Casimir effect. This is commonly derived on the basis of a wave-mechanical argument, wherein two parallel plates exclude modes with wavelengths larger than the plate separation, producing

a decrease in energy between the plates compared to their external environment, or equivalently a force of attraction between the plates (Casimir 1948; Sparnaay 1958; De Witt 1975, 1989; Milonni, Cook and Goggin 1988). This reasoning is actually generic, applying not only to electromagnetism but also to other wave phenomena such as gravity. However, the Casimir effect has only been measured in the laboratory for the electromagnetic interaction. The best experiment, which supersedes earlier questionable ones, was carried out by Lamoreaux (1997). Due to the difficulty of aligning plane plates, he used a plate and a sphere. The results confirmed the predicted (distance)$^{-4}$ dependency of the Casimir force to an accuracy of 5%.

This result is unique in the realm of vacuum physics. However, it should be recalled that the excluded-mode derivation is generic (De Witt 1975, 1989). This leaves an opportunity for more detailed interpretations, including ones which are not dependent on the assumption of an electromagnetic zpf.

In a series of collected papers, Haisch and Rueda (1997a,b; 1998, 1999b) discussed possible experimental and technological applications of the zpf. Of these articles, the one presented at the NASA conference on spacecraft propulsion offers the most intriguing suggestions for future space drives (Haisch and Rueda 1997a). One cannot but agree with other workers in the field that conventional spacecraft limited to velocities $v < c$ are an impractical way of exploring space beyond our solar system. If the (electromagnetic) zpf exists, then it represents an untapped source of energy; and in conjunction with modern quantum field theory wherein virtual particles can come into and go out of existence below the limits set by Heisenberg's uncertainty principle, the opportunity exists in principle for new forms of travel. Indeed, that communication at $v > c$ is possible is already presaged by quantum-interference experiments and the Aharanov-Bohm effect. One should, however, be careful to note that concrete models of propogation at $v > c$ are theory-dependent. The zpf formalism, non-localized quantum field theory, and Kaluza-Klein theory all in principle allow communication with $v > c$. But the precise mode depends on the theory adopted, so any practical application would appear destined to wait on a clearing of the theoretical waters.

3 Outstanding Problems

It is clear from the considerations of the preceding section that certain problems exist in the matching of a quantum-mechanical zero-point field to classical general relativity (or a replacement for the latter). Therefore, it is useful to collect, in the same order as they were discussed above, the main issues of contention:

1. The origin of inertia is a long-standing problem in physics and the idea that the rest mass of a particle like an electron is purely electromagnetic in origin has a history of more than a century. However, one can question why electromagnetism is supposed to play a fundamental role in inertia compared to the other (known) three interactions of physics.

2. There is no generally agreed theory of quantum gravity, but the existence of the constants c, G and h (as used liberally in the zpf approach) raises the question of why their dimensional products of length, time and mass are not natural parameters of the theory, and not represented (especially in terms of the Planck mass) in the real world.

3. The cosmological constant, with dimensions of length^{-2} or time^{-2} (depending on whether it is combined with c^2), plays no role in the zpf approach. But astrophysical observations of QSO lensing, and cosmological observations of the effective density of the universe as measured by the dynamics of galaxies, indicate that Λ is finite and positive.

4. The so-called cosmological-constant problem highlights the mismatch between the most widely accepted theories of particle physics (the standard model) and gravitation (general relativity), but one might expect that the zpf approach would provide a natural resolution of this problem.

5. To avoid intense curvature, the zpf either does not gravitate or is cancelled by another field of opposite sign. The proponents of the zpf prefer the former view, but studies have shown the acceptability of the latter view. There certainly are negative fields in physics (e.g. gravitational potential energy); so the fiat of a non-gravitational zpf may appear ad hoc to some workers.

6. The idea that it is only perturbations of the zpf which are important has merit. But attempts to derive a quasi-Newtonian law of gravity from such perturbations have been criticized; and even if this were the case, such a simple law cannot reproduce the $(3+1)$ classical tests of general relativity in the solar system, or the data which indicate gravitational radiation as predicted by Einstein's theory from binary pulsars. This is a major problem: the zpf approach is intuitive but restrictive, and one wonders how it can tackle the extensive data which support general relativity.

7. Mach's principle is well-regarded by many researchers, who acknowledge that while desirable it is not incorporated in Einstein's theory of general relativity. One might reasonably expect that the zpf approach would give a more clear-cut rationale for this principle.

8. Dimensionality of the equations of physics is a major issue today. It is worthwhile recalling that special relativity was made mathematically concrete by Minkowski, who realized that time and space could be put on the same footing by simply defining ct as a new coordinate. The zpf approach uses 4D spacetime as a basis. However, there is no uniqueness about 4D; and, mainly motivated by a wish to understand the properties of particles, there is currently much work underway on $N(>4)D$ field theory. (This incorporates Kaluza-Klein theory, superstrings and supergravity.) One can raise the question of whether the assumption of $N = 4$ does not unreasonably constrain the zpf approach.

9. The Davis-Unruh effect is derived on the basis of quantum field theory in a curved spacetime described by general relativity. This presents a two-sided problem: if the effect exists, it should be deriveable in a straightforward way from the zpf approach; but it has never been observed, so another view (dependent on which physics one adopts) is that it does not exist and is therefore not an effect that needs to be addressed in the zpf approach.

10. The Casimir effect (contrary to the preceding) exists, and has been measured. This is a strong argument in favour of the existence of a real zpf. However, a practical effect can derive from several theories, and there is controversy about the underlying mechanism.

11. If the (electromagnetic) zpf is real, it does in principle provide a new source of energy that has potential applications to technology, and particularly spacecraft propulsion. Now one could argue that current understanding of the zpf is similar to the understanding of electromagnetism in the 1800's, insofar as the equations were written down but nobody had built a radio. However, one could also argue that the physics of the zpf is based on known laws and is mathematically fairly straightforward, so that a practical application should be deliverable in relatively short order.

4 Recommendations for Research

The problems described in the preceding section are in principle surmountable; but they are extensive. Therefore, in this section, issues will be identified that are academically important but expected practically to yield to analysis.

1. The status of the cosmological constant needs to be addressed. Astrophysical data indicate that it is finite, and if so it represents a fundamental length or frequency which should be incorporated into the zpf approach.

2. The existence of a real (electromagnetic) zpf is conceptually distinct from the (questionable) existence of a quasi-Newtonian law of gravity derived from zpf perturbations. It is recommended that future work concentrate on the physics of the zpf and not on a quasi-Newtonian form of gravitation.

3. As an extension of the comments of the preceding paragraph, it should be acknowledged that a large body of data exists which supports the standard gravitational theory of general relativity. It is essential that some effort be made to match zpf theory and Einstein theory.

4. The Davis-Unruh effect, since it is derived from quantum field theory in curved space and has never been measured, is not something with which the zpf approach should be concerned, and discussion of it should therefore be dropped.

5. The Casimir effect is central to the zpf argument. However, the magnitude of the force is topology-dependent. Therefore, theoretical studies should be made on the Casimir effect for various configurations, as a precursor to practical measurements of the force which might be of technological value.

6. Following from the experimental verification of the Casimir effect, work should be continued to identify technological applications of a zpf. Conventional spacecraft are pre-obsolete in regard to interstellar exploration, so alternatives should be investigated.

5 Conclusion

Zero-point fields are predicted by interactions which are well described by quantum mechanics, but the energies involved do not manifest themselves either in terms of the curvature of spacetime as formalized in general relativity or in the energy density of the cosmological vacuum as measured by the cosmological constant. This is a peculiar situation, and arguably unique in modern physics.

In Section 2 there was given an account of recent work on the electromagnetic zpf. In Section 3 there was presented an 11-point summary of outstanding problems, and in Section 4 there was given a 6-item list of recommendations for future research. These suggestions should lead to a resolution of the difficulties which exist in the amalgamation of quantum mechanics and classical field theory.

The conclusion to be drawn from this report is that research into the zpf is justified because it is of fundamental academic importance and of potential importance to technology.

Acknowledgements

This report is an independent study supported under grants from the National Aeronautics and Space Administration and the Natural Sciences and Engineering Research Council. The author thanks J.M. Overduin of Stanford University for comments on theoretical issues, and J. Rather of N.A.S.A. for comments on practical issues.

Bibliography

Bonnor, W.B. 1989. Gen. Rel. Grav. 21, 1143.

Bondi, H. 1957. Rev. Mod. Phys. 29, 423.

Boyer, T.H. 1980. In Foundations of Radiation Theory and Quantum Electrodynamics (ed. Barut, A.O.), Plenum, New York, 49.

Carlip, A. 1993. Phys. Rev. A 47, 3452.

Casimir, H.B.G. 1948. Konikl. Ned. Akad. Wetenschap. Proc. 51, 793.

De La Peña, L., Cetto, M. 1996. The Quantum Dice: An Introduction to Stochastic Electrodynamics, Kluwer, New York.

DeWitt, B.S. 1975. Phys. Rep. 19, 295.

DeWitt, B.S. 1989. In Modern Physics in the Making (eds. Sarlemijn, A., Sparnaay, M.I.), Elsevier, New York, 247.

Haisch, B., Rueda, A. 1997a. Breakthrough Propulsion Physics Workshop, Cleveland, OH, Aug. 12-14.

Haisch, B., Rueda, A. 1997b. Causality and Locality in Modern Physics and Astronomy, York Un., Toronto, ON, Aug. 25-29.

Haisch, B., Rueda, A. 1998. Space Technology and Applications, Albuquerque, NM, Jan. 25-29.

Haisch, B., Rueda, A. 1999a. Phys. Lett A, in press.

Haisch, B., Rueda, A. 1999b. Space Technology and Applications, Albuquerque, NM, Jan. 31-Feb. 4.

Haisch, B., Rueda, A., Puthoff, H.E. 1994. Phys. Rev. A 49, 678.

Haisch, B., Rueda, A., Puthoff, H.E. 1998. Joint Propulsion Conference, Cleveland, OH, July 13-15.

Kalligas, D., Wesson, P.S., Everitt, C.W.F. 1995. Astrophys. J. 439, 548.

Kaluza, T. 1921. Sitz. Preuss. Akad. Wiss. 33, 966.

Klein, O. 1926. Z. Phys. 37, 895.

Lamoreaux, S.K. 1997. Phys. Rev. Lett. 78, 5.

McCrea, W.H. 1986. Quart. J. Roy. Astr. Soc. 27, 137.

Milonni, P.W., Cook, R.J., Goggin, M.E. 1988. Phys. Rev. A 38, 1621.

Ng, Y.J. 1992. Int. J. Mod. Phys. D 1, 145.

Overduin, J.M., Wesson, P.S. 1992. Vistas Astron. 35, 439.

Overduin, J.M. Wesson, P.S. 1997. Phys. Rep. 283, 303.

Puthoff, H.E. 1987. Phys. Rev. D 35, 3266.

Puthoff, H.E. 1989a. Phys. Rev. A 40, 4857.

Puthoff, H.E. 1989b. Phys. Rev. A 39, 2333.

Rueda, A., Haisch, B. 1998a. Found. Phys. 28, 1057.

Rueda, A., Haisch, B. 1998b. Phys. Lett. A 240, 115.

Sakharov, A.D. 1968. Sov. Phys. Dekl. 12, 1040.

Santos, E. 1991. Phys. Rev. A 44, 3383.

Sparnaay, M.J. 1958. Physica (Utrecht) 24, 751.

Weinberg, S. 1989. Rev. Mod. Phys. 61, 1.

Wesson, P.S. 1978. Cosmology and Geophysics. Oxford Un. P./Hilger, New York.

Wesson, P.S. 1991. Astrophys. J. 378, 466.

Wesson, P.S. 1992a. Space Science Rev. 59, 365.

Wesson, P.S. 1992b. Phys. Essays (Toronto) 5, 561.

Wesson, P.S. 1997. Int. J. Mod. Phys. D 6, 643.

Wesson, P.S. 1999. Space, Time, Matter. World Scientific, Singapore [see pp. 93, 161, 205].

Will, C.M. 1993. Theory and Experiment in Gravitational Physics. Cambridge Un. P., Cambridge.

NIKOLA TESLA

1856 — 1943

MNT 2/3

NIKOLA TESLA

LECTURES * PATENTS * ARTICLES

Published
by
NIKOLA TESLA MUSEUM
BEOGRAD, YUGOSLAVIA

In honour of Nikola Tesla
by IOE

BEOGRAD
1956

MUZEJ NIKOLE TESLE
Inv. br. 1372

Documents taken from the Nikola Tesla Museum, Beograd, Yugoslavia

Selected and prepared by:

VOJIN POPOVIĆ,
Professor of Electrical Engineering, Beograd University
Beograd, Yugoslavia

RADOSLAV HORVAT,
Associate Professor of Electrical Engineering, Beograd University
Beograd, Yugoslavia

NIKOLA NIKOLIĆ,
Assistant Professor of Electrical Engineering, Beograd University
Beograd, Yugoslavia

The Yugoslav National Committee for the Celebration of the Centennial Birthday of Nikola Tesla and the Nikola Tesla Museum in Beograd consider the publishing of Nikola Tesla's scientific works to be an honourable obligation to this great scientist and inventor, to science and humanity. The lucky circumstance that, according to Tesla's will, his entire works have been collected in the Nikola Tesla Museum in Beograd, has made the carrying out of this task much easier. Unfortunately, we have not at our disposal one part of Nikola Tesla's documents, the part regarding the first period of his creative activity, which were lost when his laboratory was destroyed by fire. Among the documents at our disposal, a large part could not yet be examined. The documents chosen for this book are published not only as a precious evidence of Tesla's important scientific work, which constitutes one of the bases of contemporary electrical engineering, but they also provide a worthy signpost for the present and future generations of inventors in all fields of science and technics, in which such great results were achieved by Nikola Tesla.

The President
of the Yugoslav National Committee
for the Celebration of the Centennial
Birthday of Nikola Tesla,

Rodoljub Čolaković

MUZEJ NIKOLE TESLE

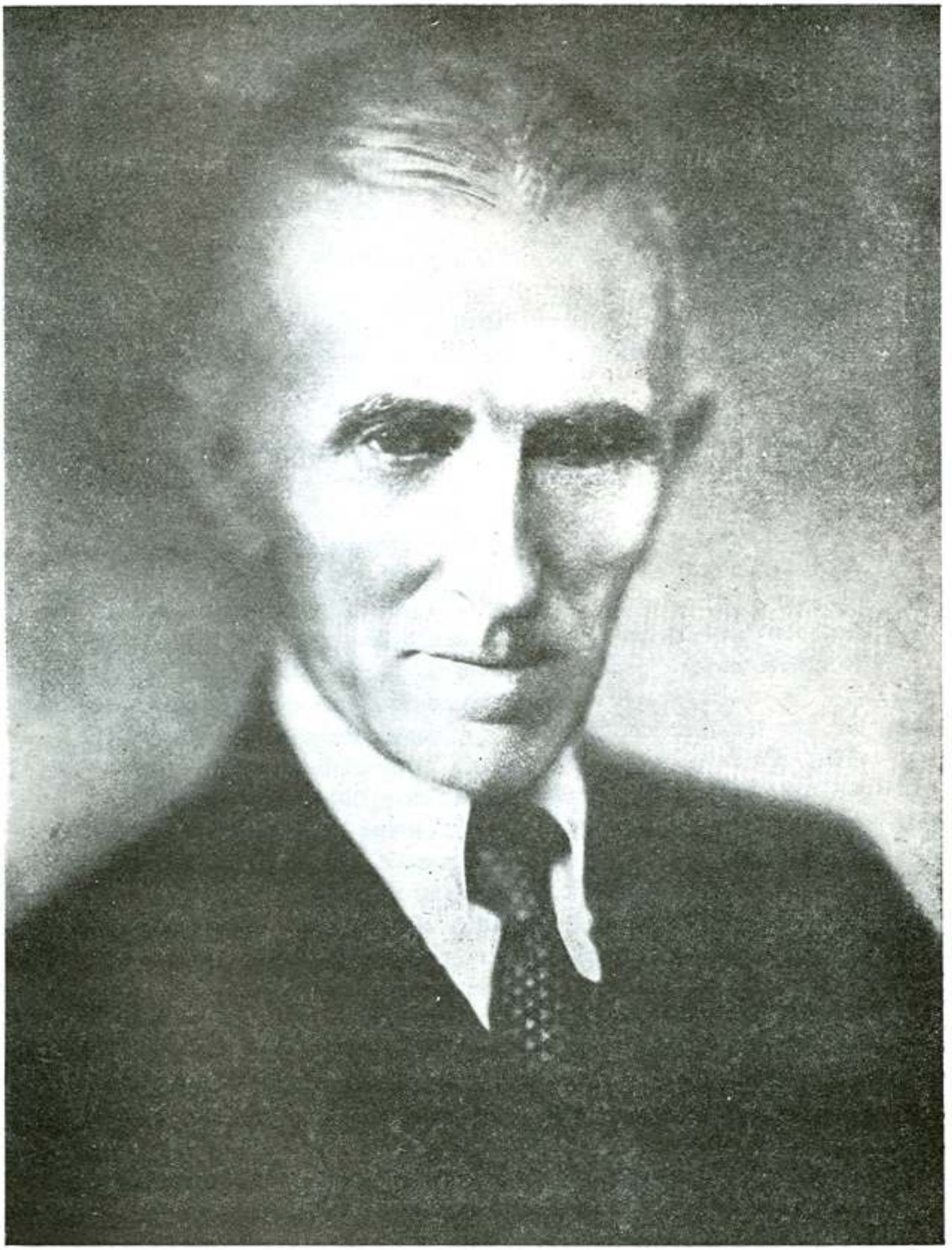

Nikola Tesla

INTRODUCTION

Nikola Tesla was born at Smiljan, Province of Lika, in Yugoslavia on July 10, 1856. From 1862 to 1874 he attended elementary and lower secondary school at Smiljan and Gospić, and high secondary one at Karlovac. From 1875 to 1878 he attended the Advanced Technical School at Graz and finished his studies at the University of Prague in 1880.

From the year 1876, when a student in Graz, Tesla was interested in the construction of a motor without commutator. In February 1882, in Budapest, he discovered the principle of the rotating magnetic field. In 1883, at Strasbourg, he made the first models of induction motors. The following year, Tesla left for the United States of America where he worked in Edison Laboratory for a short period of time; later, in 1885, he founded the enterprise "Tesla Arc Light Company" in New York. After founding the entreprise "Tesla Electric Company" in 1887, Tesla was able to obtain the necessary financial and material resources that were needed for the realization of his invention of the polyphase system of the transmission of power and for induction motors of highgrade efficiency.

After taking out the original patents for the asynchronous motor and the polyphase system for the transmission of electric power on October 12, 1887, Tesla took out a further series of 40 patents within the same field from 1887 to 1891. Tesla's polyphase system of power transmission was applied in 1891 at the hydroelectric power station at the Niagara Falls, the first three aggregates of which began to operate in 1896 with a total amount of 15,000 horsepower.

In the second half of 1890, Tesla started to work in the field of high frequency currents by building machine generators with a frequency of up to approximately 30 kc/s. In 1891 he invented a transformer for the production of currents of high frequency and of high tension, which later became known as "The Tesla transformer". Tesla explained the results achieved in the field of high frequency currents in his famous lectures which were held in the period between 1891 and 1893. Work in this field was interrupted temporarily owing to a fire in Tesla's laboratory on March 13, 1895.

After the erection of a new laboratory in 1896, Tesla resumed his work once again, and from 1896 to 1914 he published a series of new inventions which are the fountainhead for contemporary radio technics. The discovery of the four tuned circuits system, which is the basis of radio transmission, is of particular importance here. The construction of a large radio station of 200 kW in Colorado, during 1899, enabled Tesla to apply the principles and ideas set forth in his lectures in 1892 and 1893.

In the spring of 1898, Tesla constructed a radio-guided ship model, and, on July 1, 1898, he took out a patent dealing with the remote control by radio of moving vessels and vehicles. By this invention, he laid the basis for wireless telemechanics. He displayed the results of his work in the article entitled "The Problem of Increasing Human Energy", published in June 1900.

With these extremely important discoveries and inventions, Tesla occupies one of the outstanding places in the history of modern sciences and technics. For his scientific accomplishments, Nikola Tesla received worthy and esteemed recognition from many distinguished scientific institutions, from renewned fellow scientists throughout the world. He was presented with doctor's degrees from the following universities:

Sorbonne (Paris), Columbia, Vienna, Prague, Beograd, Zagreb, Yale, Nebraska, Grenoble, Brno, Bucharest, Graz, Poitiers, Sofia, etc.

He died in New York on January 7, 1943, where he had spent the longest period of his life.

•

The purpose of this book is to acquaint the reader with Nikola Tesla's most important works in the numerous fields of science to which he dedicated himself. Following Tesla's example, who published his inventions in lectures held at various scientific institutions, who took out numerous patents for his inventions during the course of his life, and who wrote articles in various newspapers and magazines, the book contains three parts: lectures, patents and articles.

The first part of the book contains five of the most important lectures of Nikola Tesla in chronological order. Of primary importance is the classical lecture: "A New System of Alternate Current Motors and Transformers", held at The American Institute of Electrical Engineers, on May 16, 1888, in which Tesla explained the principle of his famous induction motor. Other important lectures herein included are: "Experiments with Alternate Currents of very High-Frequency and their Application to Methods of Artificial Illumination", read before The American Institute of Electrical Engineers on May 20, 1891; "Experiments with Alternate Currents of High Potential and High Frequency" delivered before The Institute of Electrical Engineers and at The Royal Institute in London, as well as at The International Association of Electricians in Paris, on February 3, 4 and 19, 1892 respectively; "On Light and other High-Frequency Phenomena", held at The Franklin Institute in Philadelphia on February 24, 1893, and repeated before the American National Electric Light Association at Saint Louis in March of the same year. In these lectures, Tesla explained his achievements in the field of high frequencies and high voltages. This part of the book ends with the lecture; "High-Frequency Oscillators for Electro-therapeutic and other Purposes", held before The American Electro-Therapeutic Association at Buffalo, on September 13, 1898.

The second part of the book deals with Nikola Tesla's patents, selected from the numerous patents registered at the Patent Office of the United States

of America. These patents are divided into select groups, each of the groups being arranged according to the order of registration. The first group numbers 25 patents for electrical motors and generators, while the second group consists of 9 patents for electric power transmission. Then follows a group of 6 patents for the solving of certain problems of lighting; then 17 patents for controllers and high frequency apparatus and a group of 12 patents from the field of radio-technics. After listing the important patent for radio-control and a group of 5 patents for turbines and similar apparatus, this part of the book ends with a group of 11 patents for the solution of various problems in which Tesla was interested.

The third part of the book, which contains a cross section of Nikola Tesla's scientific and technical articles, is also divided into select groups. Tesla's articles are given in the order of their publication. The first group consists of 17 articles dealing with Tesla's work on X-ray, Tesla's oscillator, high frequency currents, electric machines, electric discharge in tubes, and ends with an article on telephotography. The second group of this part deals with 8 articles concerning Tesla's views about the world, his opinions about the future of electricity, wherein he discussed technical as well as general problems, which are of interest for humanity. This part ends with Tesla's own biographical sketch.

CONTENTS

LECTURES

1. *A New System of Alternate Current Motors and Transformers* . . . L-1
   A lecture delivered before the AIEE, May 16, 1888.
2. *Experiments with Alternate Currents of Very High Frequency and Their Application to Methods of Artificial Illumination* L-15
   A lecture delivered before the AIEE, May 20, 1891.
3. *Experiments with Alternate Currents of High Potential and High Frequency* L-48
   A lecture delivered before the IEE, London, Febr. 1892.
4. *On Light and Other High Frequency Phenomena* L-107
   A lecture delivered before the Franklin Institute, Philadelphia, February 1893, and before the National Electric Light Association, St. Louis, March, 1893.
5. *High Frequency Oscillators for Electro-Therapeutic and Other Purposes* L-156
   A lecture delivered before the American Electro-Therapeutic Association, Buffalo, Sept. 13, 1898.

PATENTS

I MOTORS AND GENERATORS.

1. No. 334823 *Commutator for Dynamo Electric Machines* P-5
   Application filed May 18, 1885.
2. No. 336961 *Regulator for Dynamo Electric Machines* P-7
   Application filed May 18, 1885.
3. No. 336962 *Regulator for Dynamo Electric Machines* P-11
   Application filed June 1, 1885.
4. No. 350954 *Regulator for Dynamo Electric Machines* P-15
   Application filed January 14, 1886.
5. No. 359748 *Dynamo Electric Machine* P-18
   Application filed January 14, 1886.
6. No. 382845 *Commutator for Dynamo Electric Machines* P-23
   Application filed April 30, 1887.

7. No. 381968 *Electro Magnetic Motor* P-28
Application filed October 12, 1887.

8. No. 381969 *Electro Magnetic Motor* P-37
Application filed November 30, 1887.

9. No. 382279 *Electro Magnetic Motor* P-41
Application filed November 30, 1887.

10. No. 390414 *Dynamo Electric Machine* P-46
Application filed April 23, 1888.

11. No. 390820 *Regulator for Alternate Current Motors* P-50
Application filed April 24, 1888.

12. No. 390721 *Dynamo Electric Machine* P-55
Application filed April 28, 1888.

13. No. 390415 *Dynamo Electric Machine for Motor* P-59
Application filed May 15, 1888.

14. No. 555190 *Alternating Motor* P-61
Application filed May 15, 1888.

15. No. 524426 *Electro Magnetic Motor* P-65
Application filed October 20, 1888.

16. No. 405858 *Electro Magnetic Motor* P-68
Application filed January 8, 1889.

17. No. 401520 *Method of Operating Electro Magnetic Motors* . . . P-71
Application filed February 18, 1889.

18. No. 406968 *Dynamo Electric Machine* P-75
Application filed March 23, 1889.

19. No. 459772 *Electro Magnetic Motor* P-78
Application filed April 6, 1889.

20. No. 416191 *Electro Magnetic Motor* P-83
Application filed May 20, 1889.

21. No. 416192 *Method of Operating Electro Magnetic Motors* . . P-86
Application filed May 20, 1889.

22. No. 416193 *Electro Magnetic Motor* P-91
Application filed May 20, 1889.

23. No. 416194 *Electric Motor* P-94
Application filed May 20, 1889.

24. No. 416195 *Electro Magnetic Motor* P-97
Application filed May 20, 1889.

25. No. 418248 *Electro Magnetic Motor* P-103
Application filed May 20, 1889.

26. No. 424036 *Electro Magnetic Motor* P-106
Application filed May 20, 1889.

27. No. 445207 *Electro Magnetic Motor* P-110
Application filed May 20, 1889.

28. No. 417794 *Armature for Electric Machines* P-113
(with A. Schmid) Application filed June 28, 1889.

29. No. 433700 *Alternating Current Electro Magnetic Motor* P-117
Application filed March 26, 1890.
30. No. 433701 *Alternating Current Motor* P-120
Application filed March 26, 1890.
31. No. 433702 *Electrical Transformer of Induction Device* P-123
Application filed March 28, 1890.
32. No. 433703 *Electro Magnetic Motor* P-126
Application filed April 4, 1890.
33. No. 447921 *Alternating Electric Current Generator* P-129
Application filed November 15, 1890.
34. No. 455067 *Electro Magnetic Motor* P-134
Application filed January 27, 1891.
35. No. 464666 *Electro Magnetic Motor* P-138
Application filed July 13, 1891.
36. No. 511916 *Electric Generator* P-141
Application filed August 19, 1893.

II TRANSMISSION OF ELECTRIC POWER

1. No. 382280 *Electrical Transmission of Power* P-149
Application filed October 12, 1887.
2. No. 382281 *Electrical Transmission of Power* P-158
Application filed November 30, 1887.
3. No. 381970 *System of Electrical Distribution* P-162
Application filed December 23, 1887.
4. No. 390413 *System of Electrical Distribution* P-167
Application filed April 10, 1888.
5. No. 487796 *System of Electrical Transmission of Power* P-172
Application filed May 15, 1888.
6. No. 511915 *Electrical Transmission of Power* P-178
Application filed May 15, 1888.
7. No. 511559 *Electrical Transmission of Power* P-181
Application filed December 8, 1888.
8. No. 511560 *System of Electrical Power Transmission* P-184
Application filed December 8, 1888.
9. No. 405859 *Method of Electrical Power Transmission* P-190
Application filed March 14, 1889.

III LIGHTING

1. No. 335786 *Electric Arc Lamp* P-195
Application filed March 30, 1885.
2. No. 335787 *Electric Arc Lamp* P-200
Application filed July 13, 1885.

3. No. 447920 *Method of Operating Arc Lamps* P-205
Application filed October 1, 1890.
4. No. 454622 *System of Electric Lighting* P-208
Application filed April 25, 1891.
5. No. 455069 *Electric Incandescent Lamp* P-213
Application filed May 14, 1891.
6. No. 514170 *Incandescent Electric Light* P-216
Application filed January 2, 1892.

IV HIGH FREQUENCY APPARATUS AND CIRCUIT CONTROLLERS

1. No. 462418 *Method of and Apparatus for Electrical Conversion and Distribution* P-221
Application filed February 4, 1891.
2. No. 514168 *Means for Generating Electric Currents* P-225
Application filed August 2, 1893.
3. No. 568178 *Method of Regulating Apparatus for Producing Currents of High Frequency* P-228
Application filed April 20, 1896.
4. No. 568176 *Apparatus for Producing Electric Currents of High Frequency and Potential* P-233
Application filed April 22, 1896.
5. No. 568179 *Method of and Apparatus for Producing Currents of High Frequency* P-237
Application filed July 6, 1896.
6. No. 568180 *Apparatus for Producing Electrical Currents of High Frequency* P-241
Application filed July 9, 1896.
7. No. 577670 *Apparatus for Producing Electric Currents of High Frequency* P-245
Application filed September 3, 1896.
8. No. 583953 *Apparatus for Producing Currents of High Frequency* P-249
Application filed October 19, 1896.
9. No. 593138 *Electrical Transformer* P-252
Application filed March 20, 1897.
10. No. 609251 *Electric Circuit Controller* P-256
Application filed June 3, 1897.
11. No. 609245 *Electrical Circuit Controller* P-262
Application filed December 2, 1897.
12. No. 611719 *Electrical Circuit Controller* P-267
Application filed December 10, 1897.
13. No. 609246 *Electric Circuit Controller* P-272
Application filed February 28, 1898.

14. No. 609247 *Electric Circuit Controller* P-276
Application filed March 12, 1898.
15. No. 609248 *Electric Circuit Controller* P-279
Application filed March 12, 1898.
16. No. 609249 *Electric Circuit Controller* P-282
Application filed March 12, 1898.
17. No. 613735 *Electric Circuit Controller* P-285
Application filed April 19, 1898.

V RADIO

1. No. 649621 *Apparatus for Transmission of Electrical Energy* . . P-293
Application filed September 2, 1897.
2. No. 685953 *Method of Intensifying and Utilizing Effects Transmitted Through Natural Media* P-297
Application filed June 24, 1899.
3. No. 685954 *Method of Utilizing Effects Transmitted Through Natural Media* P-303
Application filed August 1, 1899.
4. No. 685955 *Apparatus for Utilizing Effects Transmitted from a Distance to a Receiving Device Through Natural Media* P-312
Application filed September 8, 1899.
5. No. 685956 *Apparatus for Utilizing Effects Transmitted Through Natural Media* P-319
Application filed November 2, 1899.
6. No. 685012 *Means for Increasing the Intensity of Electrical Oscillations* P-327
Application filed March 21, 1900.
7. No. 787412 *Art of Transmitting Electrical Energy Through the Natural Media* P-331
Application filed May 16, 1900.
8. No. 725605 *System of Signaling* P-337
Application filed July 16, 1900.
9. No. 685957 *Apparatus for the Utilization of Radiant Energy* . . P-343
Application filed March 21, 1901.
10. No. 685958 *Method of Utilizing Radiant Energy* P-348
Application filed March 21, 1901.
11. No. 723188 *Method of Signaling* P-352
Application filed June 14, 1901.
12. No. 1119732 *Apparatus for Transmitting Electrical Energy* . . . P-357
Application filed January 18, 1902.

VI TELEMECHANICS

1. No. 613809 *Method of and Apparatus for Controlling Mechanism of Moving Vessels or Vehicles* P-363
Application filed July 1, 1898.

VII TURBINES AND SIMILAR APPARATUS

1. No. 1061142 *Fluid Propulsion* P-379
Application filed October 21, 1909.
2. No. 1061206 *Turbine* P-383
Application filed January 17, 1911.
3. No. 1209359 *Speed Indicator* P-388
Application filed May 29, 1914.
4. No. 1402025 *Frequency Meter* P-396
Application filed December 18, 1916.
5. No. 1274816 *Speed Indicator* P-400
Application filed December 18, 1916.
6. No. 1314718 *Ship's Log* P-405
Application filed December 18, 1916.
7. No. 1365547 *Flow Meter* P-408
Application filed December 18, 1916.

VIII VARIOUS PATENTS

1. No. 413353 *Method of Obtaining Direct from Alternating Currents* P-413
Application filed June 12, 1889.
2. No. 455068 *Electrical Meter* P-420
Application filed March 27, 1891.
3. No. 464667 *Electrical Condenser* P-423
Application filed August 1, 1891.
4. No. 514167 *Electrical Conductor* P-425
Application filed January 2, 1892.
5. No. 512340 *Coil for Electro Magnets* P-428
Application filed July 7, 1893.
6. No. 568177 *Apparatus for Producing Ozone* P-431
Application filed June 17, 1896.
7. No. 577671 *Manufacture of Electrical Condensers Coils* P-435
Application filed September 5, 1896.
8. No. 609250 *Electrical Igniter for Gas Engines* P-438
Application filed February 17, 1897.
9. No. 1113716 *Fountain* P-441
Application filed October 28, 1913.

10. No. 1329559 *Valvular Conduit* P-445
Application filed February 21, 1916.
11. No. 1266175 *Lightning Protector* P-451
Application filed May 6, 1916.

ARTICLES

I SCIENTIFIC AND TECHNICAL ARTICLES

1. *Phenomena of Alternating Currents of Very High Frequency* . . . A-3
(The El. World, Febr. 21, 1891).
2. *An Electrolytic Clock* A-12
(The El. Engineer, May 6, 1891).
3. *Alternate Current Electrostatic Induction Apparatus* A-14
(The El. Engineer, May 6, 1891).
4. *Electric Discharge in Vacuum Tubes* A-16
(The El. Engineer, July 1, 1891).
5. *Notes on a Unipolar Dynamo* A-22
(The El. Engineer, Sept. 2, 1891).
6. *On Roentgen Rays* A-27
(El. Rev. March. 11, 1896).
7. *On Reflected Roentgen Rays* A-34
(El. Rev. April 1, 1896).
8. *On Roentgen Radiations* A-39
(El. Rev. April 8, 1896).
9. *Roentgen Ray Investigations* A-43
(El. Rev. April 22, 1896).
10. *An Interesting Feature of X-Ray Radiations* A-49
(El. Rev. July 8, 1896).
11. *Roentgen Rays or Streams* A-51
(El. Rev. August 12, 1896).
12. *On the Roentgen Streams* A-56
(El. Rev. December 1, 1896).
13. *On the Hurtful Actions of Lenard and Roentgen Tubes* A-62
(El. Rev. May 5, 1897).
14. *On the Source of Roentgen Rays and the Practical Construction and Safe Operation of Lenard Tubes* A-69
(El. Rev. August 11, 1897).
15. *On Current Interrupters* A-76
(El. Rev. March 15, 1899).
16. *Electrical Oscillators* A-78
(El. Experimenter, July 1919).
17. *Developments in Practice and Art of Telephotography* A-94
(El. Rev. Dec. 11, 1920).

II ARTICLES ON SOME GENERAL PROBLEMS

1. *On Electricity* A-101
(El. Rev. Jan. 27, 1897).
2. *The Problem of Increasing Human Energy* A-109
(The Century Illustrated Monthly Magazine, June 1900).
3. *The Transmission of Electric Energy Without Wires* A-153
(Electr. World and Eng. March 5, 1904).
4. *Science and Discovery are the great Forces which will lead to the Consummation of the War* A-162
(The Sun,Dec. 20, 1914).
5. *How Cosmic Forces Shape Our Destinies* A-172
(New York American, Febr. 7, 1915).
6. *The Wonder World to Be Created by Electricity* A-177
(Manufacturer's Record, Sept. 9, 1915).
7. *Electric Drive for Battle Ships* A-185
(New York Herald, Febr. 25, 1917).

III AN AUTOBIOGRAPHICAL ARTICLE

1. *Some Personal Recollections* A-195
(Scientific American, June 5, 1915).

PHOTOGRAPHS

LECTURES

A NEW SYSTEM OF ALTERNATE CURRENT MOTORS AND TRANSFORMERS *

I desire to express my thanks to Professor Anthony for the help he has given me in this matter. I would also like to express my thanks to Mr. Pope and Mr. Martin for their aid. The notice was rather short, and I have not been able to treat the subject so extensively as I could have desired, my health not being in the best condition at present. I ask your kind indulgence, and I shall be very much gratified if the little I have done meets your approval.

In the presence of the existing diversity of opinion regarding the relative merits of the alternate and continuous current systems, great importance is attached to the question whether alternate currents can be successfully utilized in the operation of motors. The transformers, with their numerous advantages, have afforded us a relatively perfect system of distribution, and although, as in all branches of the art, many improvements are desirable, comparatively little remains to be done in this direction. The transmission of power, on the contrary, has been almost entirely confined to the use of continuous currents, and notwithstanding that many efforts have been made to utilize alternate currents for this purpose, they have, up to the present, at least as far as known, failed to give the result desired. Of the various motors adapted to be used on alternate current circuits the following have been mentioned: 1. A series motor with subdivided field. 2. An alternate current generator having its field excited by continuous currents. 3. Elihu Thomson's motor. 4. A combined alternate and continuous current motor. Two more motors of this kind have suggested themselves to me. 1. A motor with one of its circuits in series with a transformer and the other in the secondary of the transformer. 2. A motor having its armature circuit connected to the generator and the field coils closed upon themselves. These, however, I mention only incidentally.

The subject which I now have the pleasure of bringing to your notice is a novel system of electric distribution and transmission of power by means of alternate currents, affording peculiar advantages, particularly in the way of motors, which I am confident will at once establish the superior adaptability of these currents to the transmission of power and will show that many results heretofore unattainable can be reached by their use; results which are very much desired in the practical operation of such systems and which cannot be accomplished by means of continuous currents.

Before going into a detailed description of this system, I think it necessary to make a few remarks with reference to certain conditions existing in continuous current generators and motors, which, although generally known, are frequently disregarded.

In our dynamo machines, it is well known, we generate alternate currents which we direct by means of a commutator, a complicated device and, it may be justly said, the source of most of the troubles experienced in the operation of the machines. Now,

* Read before the American Institute of Electrical Engineers, May 16, 1888.

the currents so directed cannot be utilized in the motor, but they must — again by means of a similar unreliable device — be reconverted into their original state of alternate currents. The function of the commutator is entirely external, and in no way does it affect the internal working of the machines. In reality, therefore, all machines are alternate current machines, the currents appearing as continuous only in the external circuit during their transit from generator to motor. In view simply of this fact, alternate currents would commend themselves as a more direct application of electrical energy, and the employment of continuous currents would only be justified if we had dynamos which would primarily generate, and motors which would be directly actuated by such currents.

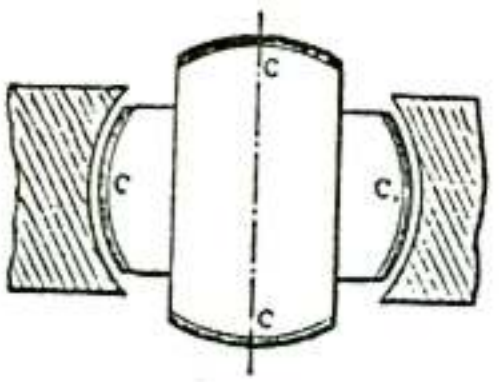

Fig. 1.

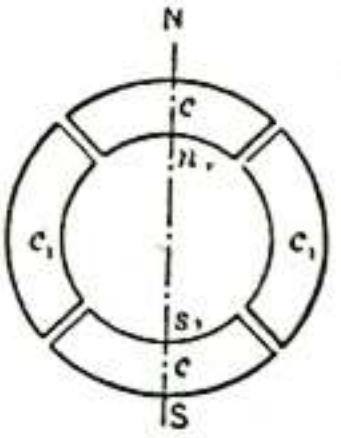

Fig. 1a.

But the operation of the commutator on a motor is twofold; firstly, it reverses the currents through the motor, and secondly, it effects, automatically, a progressive shifting of the poles of one of its magnetic constituents. Assuming, therefore, that both of the useless operations in the system, that is to say, the directing of the alternate currents on the generator and reversing the direct currents on the motor, be eliminated, it would still be necessary, in order to cause a rotation of the motor, to produce a progressive shifting of the poles of one of its elements, and the question presented itself, — How to perform this operation by the direct action of alternate currents? I will now proceed to show how this result was accomplished.

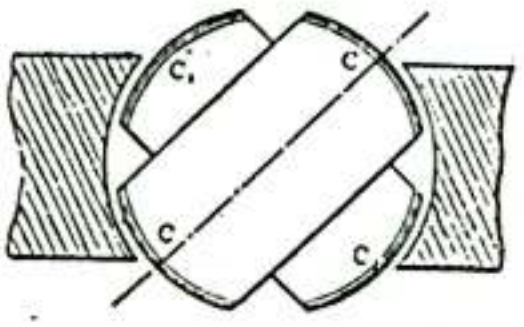

Fig. 2.

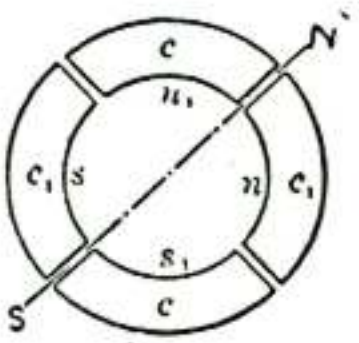

Fig. 2a.

In the first experiment a drum-armature was provided with two coils at right angles to each other, and the ends of these coils were connected to two pairs of insulated contact-rings as usual. A ring was then made of thin insulated plates of sheet-iron and wound with four coils, each two opposite coils being connected together so as to produce free poles on diametrically opposite sides of the ring. The remaining free ends of the coils were then connected to the contact-rings of the generator armature so as to form two independent circuits, as indicated in figure 9. It may now be seen what results were secured in this combination, and with this view I would refer to the diagrams, figures 1 to *8a*. The field of the generator being independently excited, the rotation of the armature sets up currents in the coils C C, varying in strength and direction in the well-known manner. In the position shown in figure 1 the current in coil C is nil while

coil C_1 is traversed by its maximum current, and the connections my be such that the ring is magnetized by the coils c_1 c_1 as indicated by the letters N S in figure *1a,* the magnetizing effect of the coils *c c* being nil, since these coils are included in the circuit of coil C.

In figure 2 the armature coils are shown in a more advanced position, one-eighth of one revolution being completed. Figure 2*a* illustrates the corresponding magnetic condition of the ring. At this moment the coil c_1 generates a current of the same direction as previously, but weaker, producing the poles n_1 s_1 upon the ring; the coil c also generates a current of the same direction, and the connections may be such that the coils *c c* produce the poles *n s,* as shown in figure 2*a.* The resulting polarity is indicated by the letters N S, and it will be observed that the poles of the ring have been shifted one-eighth of the periphery of the same:

In figure 3 the armature has completed one-quarter of one revolution. In this phase the current in coil C is maximum, and of such direction as to produce the poles N S in

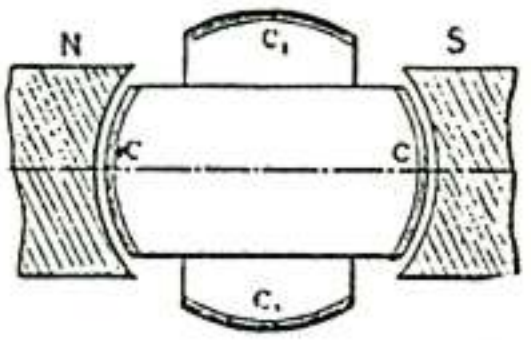

Fig. 3.

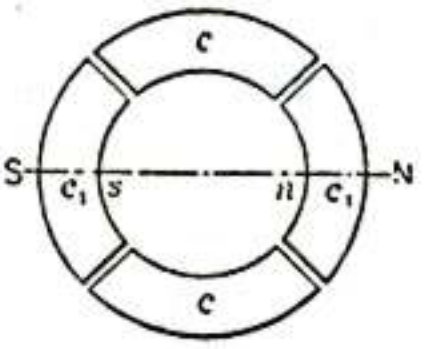

Fig. 3a.

figure 3*a,* whereas the current in coil C_1 is nil, this coil being at its neutral position. The poles N S in figure 3*a* are thus shifted one-quarter of the circumference of the ring.

Figure 4 shows the coils C C in a still more advanced position, the armature having completed three-eighths of one revolution. At that moment the coil C still generates a current of the same direction as before, but of less strength, producing the comparatively weaker poles *n s* in figure 4a. The current in the coil C_1 is of the same strength, but of opposite direction. Its effect is, therefore, to produce upon the ring the poles n_1 and s_1 as indicated, and a polarity, N S, results, the poles now being shifted three-eighths of the periphery of the ring.

In figure 5 one-half of one revolution of the armature is completed, and the resulting magnetic condition of the ring is indicated in figure 5*a.* Now, the current in coil C is nil, while the coil C_1 yields its maximum current, which is of the same direction as

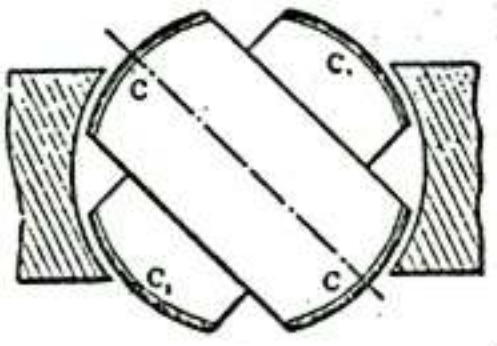

Fig. 4.

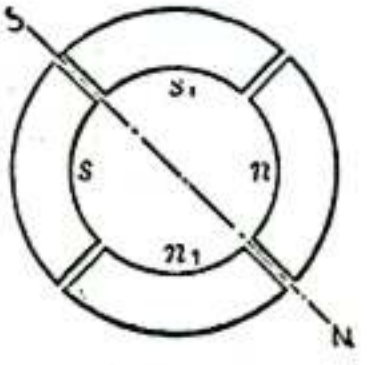

Fig. 4a.

previously; the magnetizing effect is, therefore, due to the coils c_1 c_1 alone, and, referring to figure 5*a,* it will be observed that the poles N S are shifted one-half of the circumference of the ring. During the next half revolution the operations are repeated, as represented in the figures 6 to 8*a.*

A reference to the diagrams will make it clear that during one revolution of the armature the poles of the ring are shifted once around its periphery, and each revolution

producing like effects, a rapid whirling of the poles in harmony with the rotation of the armature is the result. If the connections of either one of the circuits in the ring are reversed, the shifting of the poles is made to progress in the opposite direction, but the operation is identically the same. Instead of using four wires, with like result, three wires may be used, one forming a common return for both circuits.

This rotation or whirling of the poles manifests itself in a series of curious phenomena. If a delicately pivoted disc of steel or other magnetic metal is approached to the ring it is set in rapid rotation, the direction of rotation varying with the position of the disc. For instance, noting the direction outside of the ring it will be found that inside the ring it turns in an opposite direction, while it is unaffected if placed in a

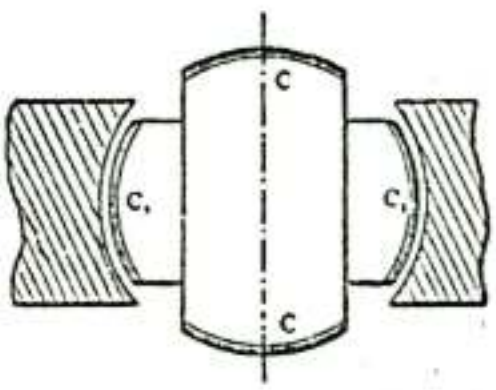

Fig. 5.

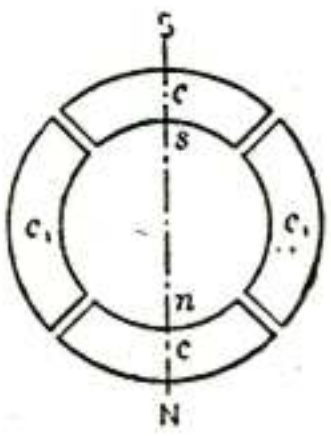

Fig. 5a.

position symmetrical to the ring. This is easily explained. Each time that a pole approaches it induces an opposite pole in the nearest point on the disc, and an attraction is produced upon that point; owing to this, as the pole is shifted further away from the disc a tangential pull is exerted upon the same, and the action being constantly repeated, a more or less rapid rotation of the disc is the result. As the pull is exerted mainly upon that part which is nearest to the ring, the rotation outside and inside, or right and left, respectively, is in opposite directions, figure 9. When placed symmetrically to the ring, the pull on opposite sides of the disc being equal, no rotation results. The action is based on the magnetic inertia of the iron; for this reason a disc of hard steel is much more affected than a disc of soft iron, the latter being capable of very rapid variations of magnetism. Such a disc has proved to be a very useful instrument in all these investi-

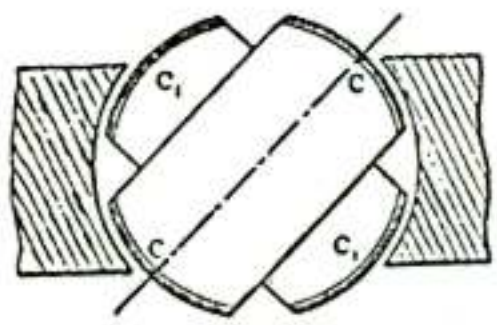

Fig. 6.

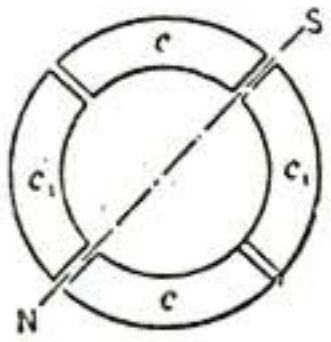

Fig. 6a.

gations, as it has enabled me to detect any irregularity in the action. A curious effect is also produced upon iron filings. By placing some upon a paper and holding them externally quite close to the ring they are set in a vibrating motion, remaining in the same place, although the paper may be moved back and forth; but in lifting the paper to a certain height which seems to be dependent on the intensity of the poles and the speed of rotation, they are thrown away in a direction always opposite to the supposed movement of the poles. If a paper with filings is put flat upon the ring and the current turned on suddenly, the existence of a magnetic whirl may be easily observed.

To demonstrate the complete analogy between the ring and a revolving magnet, a strongly energized electro-magnet was rotated by mechanical power, and phenomena identical in every particular to those mentioned above were observed.

Obviously, the rotation of the poles produces corresponding inductive effects and may be utilized to generate currents in a closed conductor placed within the influence of the poles. For this purpose it is convenient to wind a ring with two sets of superimposed coils forming respectively the primary and secondary circuits, as shown in figure 10. In order to secure the most economical results the magnetic circuit should be completely closed, and with this object in view the construction may be modified at will.

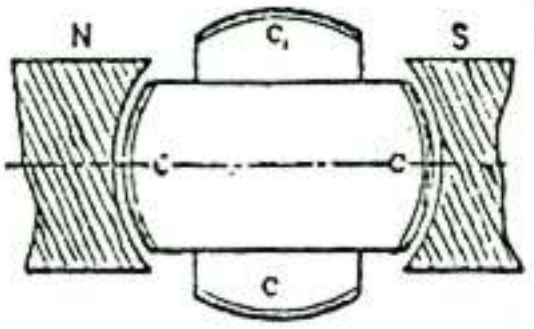

Fig. 7.

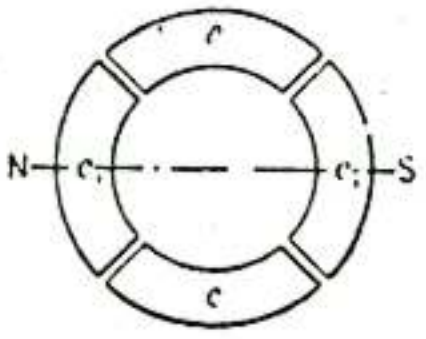

Fig. 7a.

The inductive effect exerted upon the secondary coils will be mainly due to the shifting or movement of the magnetic action; but there may also be currents set up in the circuits in consequence of the variations in the intensity of the poles. However, by properly designing the generator and determining the magnetizing effect of the primary coils the latter element may be made to disappear. The intensity of the poles being maintained constant, the action of the apparatus will be perfect, and the same result will be secured as though the shifting were effected by means of a commutator with an infinite number of bars. In such case the theoretical relation between the energizing effect of each set of primary coils and their resultant magnetizing effect may be expressed by the equation of a circle having its centre coinciding with that of an orthogonal system of axes, and in which the radius represents the resultant and the

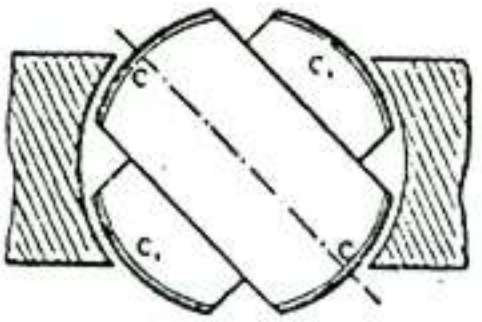

Fig. 8.

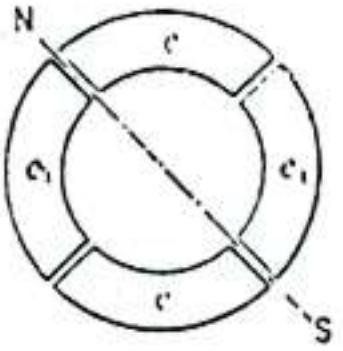

Fig. 8a.

co-ordinates both of its components. These are then respectively the sine and cosine of the angle α between the radius and one of the axes *(O X)*. Referring to figure 1 I, we have $r^2 = x^2 + y^2$; where $x = r \cos \alpha$, and $y = r \sin \alpha$.

Assuming the magnetizing effect of each set of coils in the transformer to be proportional to the current — which may be admitted for weak degrees of magnetization — then $x = Kc$ and $y = Kc^1$, where K is a constant and c and c^1 the current in both sets of coils respectively. Supposing, further, the field of the generator to be uniform, we have for constant speed $c^1 = K^1 \sin \alpha$ and $c = K^1 \sin (90^0 + \alpha) = K^1 \cos \alpha$, where K^1 is a constant. See figure 12.

Therefore, $x = Kc = K K^1 \cos \alpha$;

$y = Kc^1 = K K^1 \sin \alpha$, and

$K K^1 = r$.

That is, for a uniform field the disposition of the two coils at right angles will secure the theoretical result, and the intensity of the shifting poles will be constant. But from $r^2 = x^2 + y^2$ it follows that for $y = 0$, $r = x$; it follows that the joint magnetizing effect of both sets of coils should be equal to the effect of one set when at its maximum action. In transformers and in a certain class of motors the fluctuation of the poles is not of great importance, but in another class of these motors it is desirable to obtain the theoretical result.

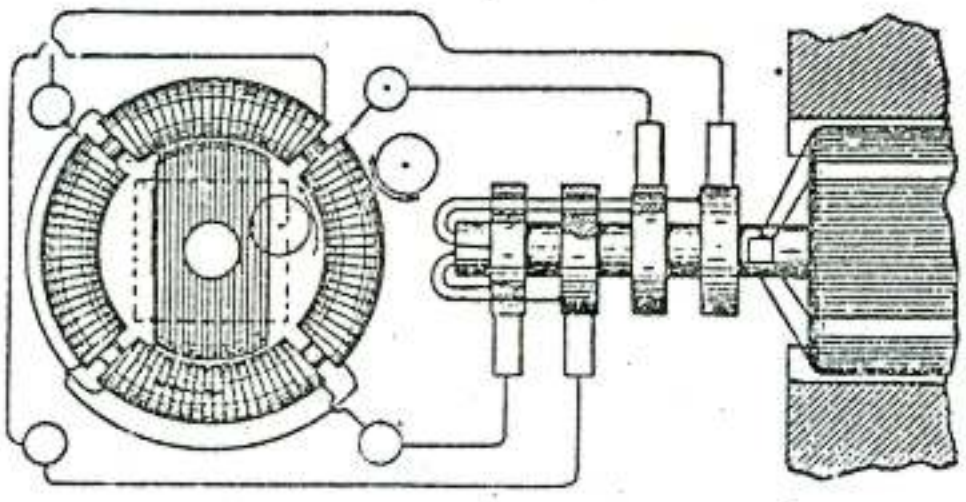

Fig. 9.

In applying this principle to the construction of motors, two typical forms of motor have been developed. First, a form having a comparatively small rotary effort at the start, but maintaining a perfectly uniform speed at all loads, which motor has been termed synchronous. Second, a form possessing a great rotary effort at the start, the speed being dependent on the load.

These motors may be operated in three different ways: 1. By the alternate currents of the source only. 2. By a combined action of these and of induced currents. 3. By the joint action of alternate and continuous currents.

The simplest form of a synchronous motor is obtained by winding a laminated ring provided with pole projections with four coils, and connecting the same in the manner before indicated. An iron disc having a segment cut away on each side may be used as an armature. Such a motor is shown in figure 9. The disc being arranged to rotate freely within the ring in close proximity to the projections, it is evident that as the poles are shifted it will, owing to its tendency to place itself in such a position as to embrace the greatest number of the lines of force, closely follow the movement of the poles, and its motion will be synchronous with that of the armature of the generator; that is, in the peculiar disposition shown in figure 9, in which the armature produces by one revolution two current impulses in each of the circuits. It is evident that if, by one revolution of the armature, a greater number of impulses is produced, the speed of the motor will be correspondingly increased. Considering that the attraction exerted upon the disc is greatest when the same is in close proximity to the poles, it follows that such a motor will maintain exactly the same speed at all loads within the limits of its capacity.

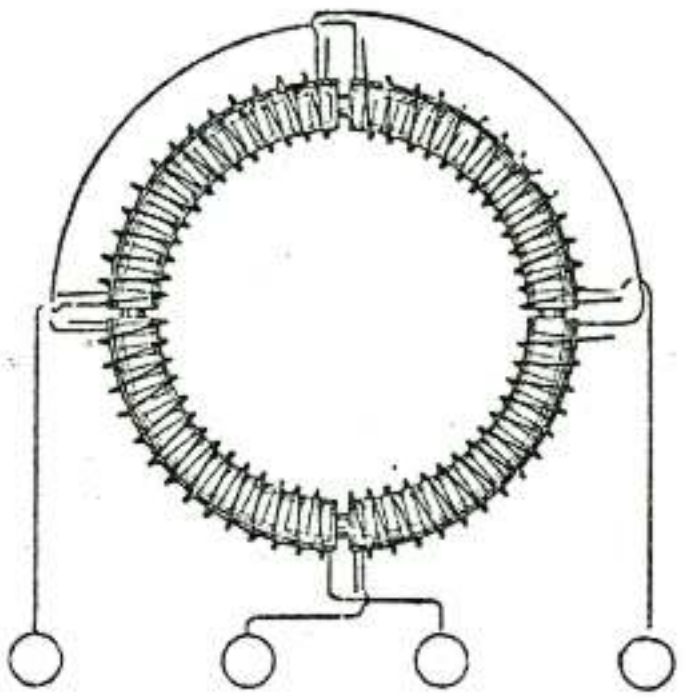

Fig. 10.

To facilitate the starting, the disc may be provided with a coil closed upon itself. The advantage secured by such a coil is evident. On the start the currents set up in the coil strongly energize the disc and increase the attraction exerted upon the same by the ring, and currents being generated in the coil as long as the speed of the armature is inferior to that of the poles, considerable work may be performed by such a motor even if the speed be below normal. The intensity of the poles being constant, no currents will be generated in the coil when the motor is turning at its normal speed.

Instead of closing the coil upon itself, its ends may be connected to two insulated sliding rings, and a continuous current supplied to these from a suitable generator. The proper way to start such a motor is to close the coil upon itself until the normal speed is reached, or nearly so, and then turn on the continuous current. If the disc be very strongly energized by a continuous current the motor may not be able to start, but if it be weakly energized, or generally so that the magnetizing effect of the ring is preponderating it will start and reach the normal speed. Such a motor will maintain absolutely the same speed at all loads. It has also been found that if the motive power of the generator is not excessive, by checking the motor the speed of the generator is diminished in synchronism with that of the motor. It is characteristic of this form of motor that it cannot be reversed by reversing the continuous current through the coil.

The synchronism of these motors may be demonstrated experimentally in a variety of ways. For this purpose it is best to employ a motor consisting of a stationary field magnet and an armature arranged to rotate within the same, as indicated in figure 13. In this case the shifting of the poles of the armature produces a rotation of the latter in the opposite direction. It results therefrom that when the normal speed is reached, the poles of the armature assume fixed positions relatively to the field magnet and the

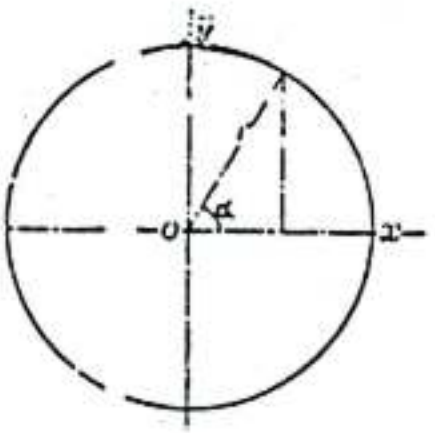

Fig. 11.

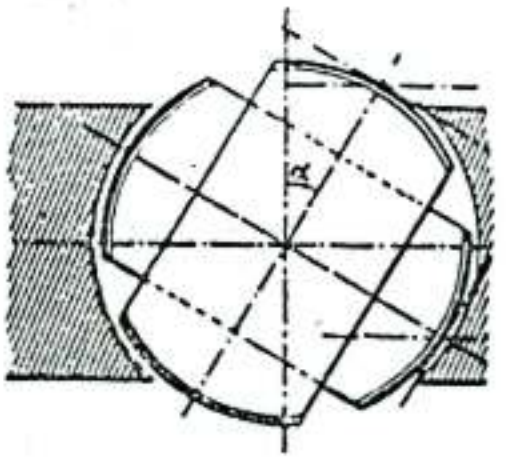

Fig. 12.

same is magnetized by induction, exhibiting a distinct pole on each of the pole-pieces. If a piece of soft iron is approached to the field magnet it will at the start be attracted with a rapid vibrating motion produced by the reversals of polarity of the magnet, but as the speed of the armature increases the vibrations become less and less frequent and finally entirely cease. Then the iron is weakly but permanently attracted, showing that the synchronism is reached and the field magnet energized by induction.

The disc may also be used for the experiment. If held quite close to the armature it will turn as long as the speed of rotation of the poles exceeds that of the armature; but when the normal speed is reached, or very nearly so, it ceases to rotate and is permanently attracted.

A crude but illustrative experiment is made with an incandescent lamp. Placing the lamp in circuit with the continuous current generator, and in series with the magnet coil, rapid fluctuations are observed in the light in consequence of the induced currents set up in the coil at the start; the speed increasing, the fluctuations occur at longer intervals, until they entirely disappear, showing that the motor has attained its normal speed.

A telephone receiver affords a most sensitive instrument; when connected to any circuit in the motor the synchronism may be easily detected on the disappearance of the induced currents.

In motors of the synchronous type it is desirable to maintain the quantity of the shifting magnetism constant, especially if the magnets are not properly subdivided.

To obtain a rotary effort in these motors was the subject of long thought. In order to secure this result it was necessary to make such a disposition that while the poles

of one element of the motor are shifted by the alternate currents of the source, the poles produced upon the other element should always be maintained in the proper relation to the former, irrespective of the speed of the motor. Such a condition exists in a continuous current motor; but in a synchronous motor, such as described, this condition is fulfilled only when the speed is normal.

The object has been attained by placing within the ring a properly subdivided cylindrical iron core wound with several independent coils closed upon themselves. Two

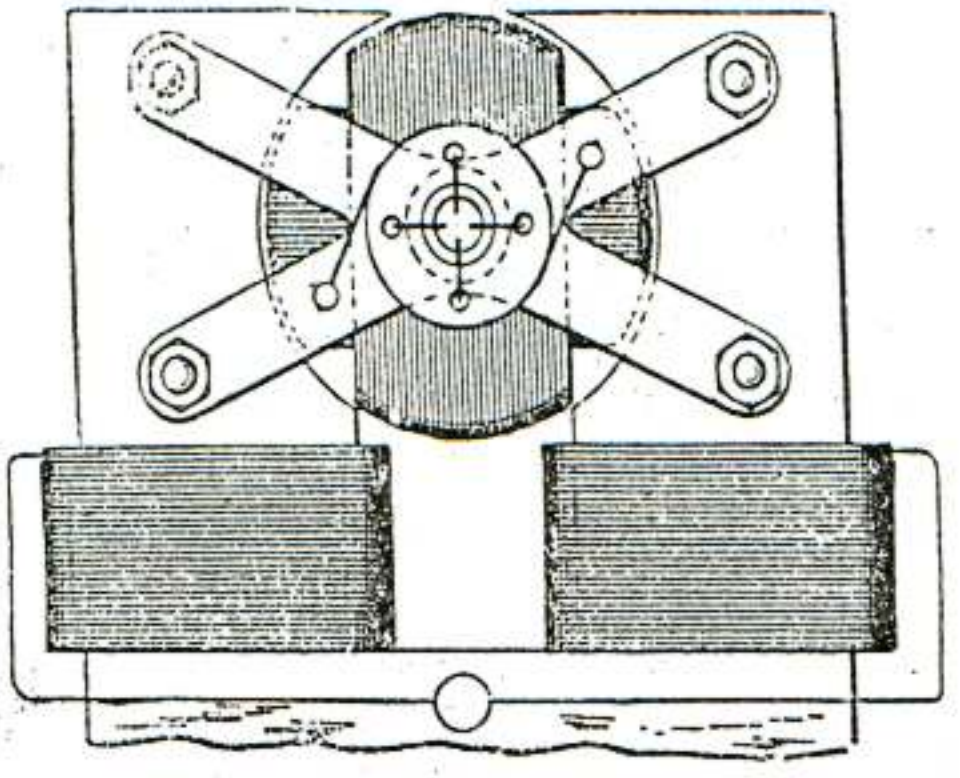

Fig. 13.

coils at right angles as in figure 14, are sufficient, but a greater number may be advantageously employed. It results from this disposition that when the poles of the ring are shifted, currents are generated in the closed armature coils. These currents are the most intense at or near the points of the greatest density of the lines of force, and their effect is to produce poles upon the armature at right angles to those of the ring, at least theoretically so; and since action is entirely independent of the speed — that is, as far as the location of the poles is concerned — a continuous pull is exerted upon the periphery of the armature. In many respects these motors are similar to the continuous current motors. If load is put on, the speed, and also the resistance of the motor, is diminished and more current is made to pass through the energizing coils, thus increasing the effort. Upon the load being taken off, the counter-electromotive force increases and less current passes through the primary or energizing coils. Without any load the speed is very nearly equal to that of the shifting poles of the field magnet.

It will be found that the rotary effort in these motors fully equals that of the continuous current motors. The effort seems to be greatest when both armature and field magnet are without any projections; but as in such dispositions the field cannot be very concentrated, probably the best results will be obtained by leaving pole projections on one of the elements only. Generally, it may be stated that the projections diminish the torque and produce a tendency to synchronism.

A characteristic feature of motors of this kind is their capacity of being very rapidly reversed. This follows from the peculiar action of the motor. Suppose the armature to be rotating and the direction of rotation of the poles to be reversed. The apparatus then represents a dynamo machine, the power to drive this machine being the momentum stored up in the armature and its speed being the sum of the speeds of the armature and the poles. If we now consider that the power to drive such a dynamo would be very nearly proportional to the third power of the speed, for this reason alone the armature should be quickly reversed. But simultaneously with the reversal another element is brought into action, namely, as the movement of the poles with respect to the

armature is reversed, the motor acts like a transformer in which the resistance of the secondary circuit would be abnormally diminished by producing in this circuit an additional electromotive force. Owing to these causes the reversal is instantaneous.

If it is desirable to secure a constant speed, and at the same time a certain effort at the start, this result may be easily attained in a variety of ways. For instance, two armatures, one for torque and the other for synchronism, may be fastened on the same shaft, and any desired preponderance may be given to either one, or an armature may be wound for rotary effort, but a more or less pronounced tendency to synchronism may be given to it by properly constructing the iron core; and in many other ways.

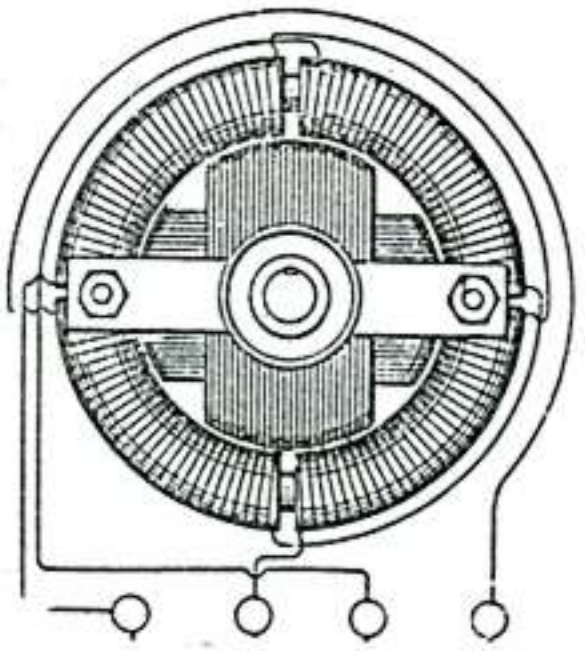

Fig. 14.

As a means of obtaining the required phase of the currents in both the circuits, the disposition of the two coils at right angles is the simplest, securing the most uniform action; but the phase may be obtained in many other ways, varying with the machine employed. Any of the dynamos at present in use may be easily adapted for this purpose by making connections to proper points of the generating coils. In closed circuit armatures, such as used in the continuous current systems, it is best to make four derivations from equi-distant points or bars of the commutator, and to connect the same to four insulated sliding rings on the shaft. In this case each of the motor circuits is connected to two diametrically opposite bars of the commutator. In such a disposition the motor may also be operated at half the potential and on the three-wire plan, by connecting the motor circuits in the proper order to three of the contact rings.

In multipolar dynamo machines, such as used in the converter systems, the phase is conveniently obtained by winding upon the armature two series of coils in such a manner that while the coils of one set or series are at their maximum production of current, the coils of the other will be at their neutral position, or nearly so, whereby both sets of coils may be subjected simultaneously or successively to the inducing action of the field magnets.

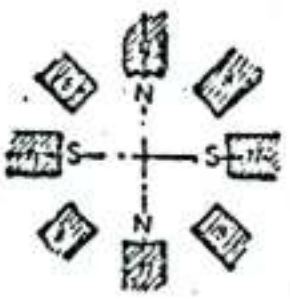

Fig. 15.

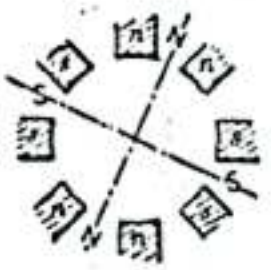

Fig. 16.

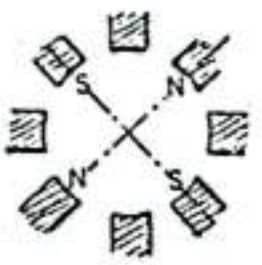

Fig. 17.

Generally the circuits in the motor will be similarly disposed, and various arrangements may be made to fulfill the requirements; but the simplest and most practicable is to arrange primary circuits on stationary parts of the motor, thereby obviating, at least in certain forms, the employment of sliding contacts. In such a case the magnet coils are connected alternately in both the circuits; that is 1, 3, 5 ..... in one, and 2, 4, 6 ..... in the other, and the coils of each set of series may be connected all in the same manner, or alternately in opposition; in the latter case a motor with half the number of poles will result, and its action will be correspondingly modified. The figures 15, 16 and 17, show three different phases, the magnet coils in each circuit

being connected alternately in opposition. In this case there will be always four poles, as in figures 15 and 17, four pole projections will be neutral, and in figure 16 two adjacent pole projections will have the same polarity. If the coils are connected in the same manner there will be eight alternating poles, as indicated by the letters *n' s'* in fig. 15.

The employment of multipolar motors secures in this system an advantage much desired and unattainable in the continuous current system, and that is, that a motor may be made to run exactly at a predetermined speed irrespective of imperfections in construction, of the load, and, within certain limits, of electromotive force and current strength.

In a general distribution system of this kind the following plan should be adopted. At the central station of supply a generator should be provided having a considerable number of poles. The motors operated from this generator should be of the synchronous type, but possessing sufficient rotary effort to insure their starting. With the observance of proper rules of construction it may be admitted that the speed of each motor will be in some inverse proportion to its size, and the number of poles should be chosen accordingly. Still exceptional demands may modify this rule. In view of this, it will be advantageous to provide each motor with a greater number of pole projections or coils, the number

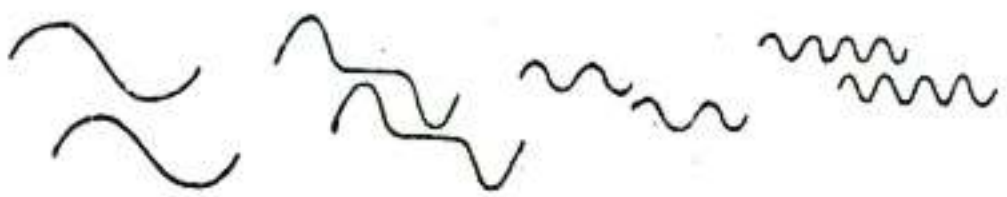

Fig. 18. Fig. 19. Fig. 20. Fig 21.

being preferably a multiple of two and three. By this means, by simply changing the connections of the coils, the motor may be adapted to any probable demands.

If the number of the poles in the motor is even, the action will be harmonious and the proper result will be obtained; if this is not the case the best plan to be followed is to make a motor with a double number of poles and connect the same in the manner before indicated, so that half the number of poles result. Suppose, for instance, that the generator has twelve poles, and it would be desired to obtain a speed equal to $\frac{12}{7}$ of the speed of the generator. This would require a motor with seven pole projections or magnets, and such a motor could not be properly connected in the circuits unless fourteen armature coils would be provided, which would necessitate the employment of sliding contacts. To avoid this the motor should be provided with fourteen magnets and seven connected in each circuit, the magnets in each circuit alternating among themselves. The armature should have fourteen closed coils. The action of the motor will not be quite as perfect as in the case of an even number of poles, but the drawback will not be of a serious nature.

However, the disadvantages resulting from this unsymmetrical form will be reduced in the same proportion as the number of the poles is augmented.

If the generator has, say, n, and the motor n_1 poles, the speed of the motor will be equal to that of the generator multiplied by $\frac{n}{n_1}$.

The speed of the motor will generally be dependent on the number of the poles, but there may be exceptions to this rule. The speed may be modified by the phase of the currents in the circuits or by the character of the current impulses or by intervals between each or between groups of impulses. Some of the possible cases are indicated in the diagrams, figures 18, 19, 20 and 21, which are self-explanatory. Figure 18 represents the condition generally existing, and which secures the best result. In such a case, if the typical form of motor illustrated in figure 9 is employed, one complete wave in each circuit will produce one revolution of the motor. In figure 19 the same result will be effected by one wave in each circuit, the impulses being successive; in figure 20 by four, and in figure 21 by eight waves.

By such means any desired speed may be attained; that is, at least within the limits of practical demands. This system possesses this advantage besides others, resulting from simplicity. At full loads the motors show an efficiency fully equal to that of the continuous current motors. The transformers present an additional advantage in their capability of operating motors. They are capable of similar modifications in construction, and will facilitate the introduction of motors and their adaptation to practical demands. Their efficiency should be higher than that of the present transformers, and I base my assertion on the following:

In a transformer as constructed at present we produce the currents in the secondary circuit by varying the strength of the primary or exciting currents. If we admit proportionality with respect to the iron core the inductive effect exerted upon the secondary coil will be proportional to the numerical sum of the variations in the strength of the exciting current per unit of time; whence it follows that for a given variation any prolongation of the primary current will result in a proportional loss. In order to obtain rapid variations in the strength of the current, essential to efficient induction, a great number of undulations are employed. From this practice various disadvantages result. These are, increased cost and diminished efficiency of the generator, more waste of energy in heating the cores, and also diminished output of the transformer, since the core is not properly utilized, the reversals being too rapid. The inductive effect is also very small in certain phases, as will be apparent from a graphic representation, and there may be periods of inaction, if there are intervals between the succeeding current impulses or waves. In producing a shifting of the poles in the transformer, and thereby inducing currents, the induction is of the ideal character, being always maintained at its maximum action. It is also reasonable to assume that by a shifting of the poles less energy will be wasted than by reversals.

DISCUSSION

Mr. Martin — Professor Anthony, I believe, is here, and as he has given this subject some attention, I think he might very properly supplement Mr. Tesla's paper by some remarks.

Mr. Tesla — I want to express once more my best thanks to Professor Anthony for aiding me in many respects, and I hope he will be able to explain many of the features in this system that I was unable to explain at present.

Professor Anthony — Mr. President and Gentlemen: I have been referred to as having had something to do with these forms of motors. I am very glad to be able to add my testimony to what Mr. Tesla has already given you in regard to their action, and I confess that on first seeing the motors the action seemed to me an exceedingly remarkable one. After my first visit to Mr. Tesla's works, some of the motors, I think these very two that you see here on the table, were brought to me to make some tests of their efficiency, and probably you will be more interested in those than in anything else that I might say. I am sorry I have not brought with me the exact figures that we obtained, but I can give you from memory something of the result. This little motor that you see here gave us about half a horse-power, and gave an efficiency of something above fifty per cent., which I considered a very fair efficiency for a motor of this size, as we cannot expect on such small motors to get as high efficiency as we can on larger ones. This, I believe, is the armature that Mr. Tesla calls the armature for high rotary effort. This little pulley, which is only about three inches in diameter, gave a pull of something like fifty pounds, as I remember it on turning on the current, so that you see the rotary effort is very considerable, and that is also shown in the quickness with which the armature will reverse its motion on reversing the relation of the two currents which pass through the two opposite coils. That could be done by shifting two of the wires, or simply shifting a reversing key in one of the circuits, and the armature would stop and reverse its motion so quickly that it was almost impossible to tell when the change took place. That shows also the very considerable rotary effort that the armature presents. This motor (referring to the second specimen) gave us, I think, about 1¾ h.p., and showed a somewhat higher efficiency than the other — a little over sixty per cent. This would run, with the armature as here constructed, almost at the speed of the generator even under a very heavy load. When the load was brought up to the maximum load, where the efficiency began to fall off somewhat, the speed of rotation was

reduced. As I remember now, it was reduced to about twenty-eight hundred, and the speed, you see, kept up very nearly to that of the generator under heavy load.

I can add very little to what Mr. Tesla has already given you in regard to these motors. I have no question but that all of you would be as much interested as I was in seeing them work. That is really the best way in which to determine what the motors will do.

Mr. Tesla — Mr. President and Gentlemen: Professor Anthony just made the remark that the speed of this motor fell off when the load was increased. That was due to the fact that this armature was designed to secure a strong effort from the start. But if we make an armature which is only designed for synchronism, the speed will always be the same no matter what the load; only there is a disadvantage that at the start the rotary force is so small that it is apt not to start. It would generally start if put in a proper position, but if not put in a proper position it might not start. If we employ an armature consisting of a cut-away block of steel with a coil, it will maintain its speed at all loads. The importance of maintaining the intensity of the pole constant is that if this can be produced we can utilize, instead of the subdivided armature, an ordinary steel block with the same result. It is only desired to close the magnetic field. You can readily see, if the poles are fixed, that it is not necessary to subdivide the armature, if the intensity of the force is constantly maintained the same. But, if the intensity is not maintained the same, then it is necessary to subdivide, and generally in the results that I have obtained I have found that it is necessary to subdivide. I have also observed that in the tests of Professor Anthony the results obtained were superior. I attribute that to the fact that the dynamo has got a powerful field and a small armature and the field is very concentrated, and for that reason probably, the result is nearer a theoretical result.

Professor Thomson — I have been very much interested in the description given by Mr. Tesla of his new and admirable little motor. I have, as probably you may be aware, worked in somewhat similar directions, and towards the attainment of similar ends. The trials which I have made have been by the use of a single alternating current circuit — not a double alternating circuit — a single circuit supplying a motor constructed to utilize the alternation and produce rotation. I have carried on since the last annual meeting of the Institute the development and perfecting, as far as my time allowed, of a closed circuited armature — if we may so term it — related to the alternating field. That is, the plan which I used and which I brought to the notice of the Institute last year, was to make a laminated field and in that field to place an armature also laminated, winding upon the armature a coil which periodically is close circuited during the revolution by a suitable commutator or circuit-closing device. I have made several such motors on different designs and they uniformly start from a state of rest and develop power, and some of them show, at speeds close to the rate of alternations of the dynamo, a tendency to synchronize. Their rotary effort in most cases is a little greater nearer that point than at other points. I hope sometime before a great while to bring most of these results before the notice of the Institute, and I would therefore prefer delaying further remarks on motors of this description. I certainly think there is a field for alternating motors, and there is undoubtedly an opportunity for obtaining motors which possess even some advantages over the continuous current motors.

Mr. Tesla — Gentlemen, I wish to say that the testimony of such a man as Professor Thomson, as being foremost in his profession, flatters me very much. I might say that I have worked in the same line with Professor Thomson at a period when the invention of Professor Thomson was not known to me. I had a motor identically the same as that of Professor Thomson but I was anticipated by him. I believe that although that peculiar form of motor represents the disadvantage that a pair of brushes must be employed to short circuit the armature coil, that such a form of motor may be made practicable for the simple reason that a motor represents a transformer, and such a transformer we well know we can bring to a very high efficiency. On the other hand, the armature may be provided with conductors that are of comparatively low resistance, and it is a mere matter of making a perfect arrangement for short circuiting. You will see the advantage of this disposition of the closed circuit coil — that this action is always maintained at the maximum and it is indeed more perfect than if the polarities were shifted by means of a commutator.

TESLA REPLIES TO DR. LOUIS DUNCAN, EXPLAINING HIS ALTERNATING CURRENT MOTOR

To the Editor of Electrical Review:

I find in your issue of last week a note of Mr. Duncan referring to my system of alternate current motors.

As I see that Dr. Duncan has not as yet been made acquainted with the real character of my invention, I cannot consider his article in the light of a serious criticism and would think it unnecessary to respond; but desiring to express my consideration for him and the importance which I attach to his opinion, I will point out here briefly the characteristic features of my invention, inasmuch as they have a direct bearing on the article above referred to.

The principle of action of my motor will be well understood from the following:

By passing alternate currents in proper manner through independent energizing circuits in the motor, a progressive shifting or rotation of the poles of the same is effected. This shifting is more or less continuous according to the construction of the motor and the character and relative phase of the currents employed, and I have indicated the theoretical conditions which should exist in order to secure the most perfect action.

If a laminated ring be wound with four coils, and the same be connected in proper order to two independent circuits of an alternate current generator adapted for this purpose, the passage of the currents through the coils produces theoretically a rotation of the poles of the ring, and in actual practice in a series of experiments, I have demonstrated the complete analogy between such a ring and a revolving magnet. From the application of this principle to the operation of motors, two forms of motor of a character widely differing have resulted, one designed for constant and the other for variable load. The misunderstanding of Dr. Duncan is due to the fact that the prominent features of each of these two forms have not been specifically stated. In illustration of a representative of the second class, I refer to Fig. 1, on page 1 of ELECTRICAL REVIEW of May 12th. In this instance, the armature of the motor is provided with two coils at right angles. As it may be believed that a symmetrical arrangement of the coils with respect to the poles is required. I will assume that the armature is provided with a great number of diametrically wound coils or conductors closed upon themselves, and forming as many independent circuits. Let it now be supposed that the ring is permanently magnetized so as to show two poles (N and S) at two points diametrically opposite, and that it is rotated by mechanical power. The armature being stationary, the rotation of the ring magnet will set up currents in the closed armature coils. These currents will be most intense at or near the points of the greatest density of the force, and they will produce poles upon the armature core at right angles to those of the ring. Of course there will be other elements entering into action which will tend to modify this, but for the present they may be left unconsidered. As far as the location of the poles upon the armature core is concerned, the currents generated in the armature coils will always act in the same manner, and will maintain continuously the poles of the core in the same position, with respect to those of the ring in any position of the latter and independently of the speed. From the attraction between the core and the ring, a continuous rotary effort, constant in all positions, will result, the same as in a continuous current motor with a great number of armature coils. If the armature be allowed to turn, it will revolve in the direction of rotation of the ring magnet, the induced current diminishing as the speed increases, until upon the armature reaching wery nearly the speed of the magnet, just enough current will flow through the coils to keep up the rotation. If, instead of rotating the ring by mechanical power the poles of the same are shifted by the action of the alternate currents in the two circuits, the same results are obtained.

Now compare this system with a continuous current system. In the latter we have alternate currents in the generator and motor coils, and intervening devices for commutating the currents, which on the motor besides effect automatically a progressive shifting or rotation of the poles of the armature; here we have the same elements and identically the same operation, but without the commutating devices. In view of the fact that these devices are entirely unessential to the operation, such alternate current system will — at least in many respects — show a complete similarity with a continuous current system, and the motor will act precisely like a continuous current motor. If the load is augmented the speed is diminished and the rotary effort correspondingly increased, as more current is made to pass through energizing circuits; load being taken off the speed increases and the current, and consequently the effort, is lessened. The effort, of course, is greatest when the armature is in the state of rest.

But since the analogy is complete, how about the maximum efficiency and current passing through the circuits when the motor is running without any load, one will naturally inquire? It must be remembered that we have to deal with alternate currents. In this form the motor simply represents a transformer in which currents are induced by a dynamic action instead of by reversals, and as it might be expected the efficiency will be maximum at full load. As regards the current, there will be — at least under proper conditions — as wide a variation in its strength as in a transformer, and by observing proper rules, it may be reduced to any desired quantity. Moreover, the current passing through the motor when running free, is no measure for the energy absorbed since the instruments indicate only the numerical sum of the direct and induced electro-motive forces and currents instead of showing their difference.

Regarding the other class of these motors, designed for constant speed, the objections of Dr. Duncan are, in a measure, applicable to certain constructions, but it should be considered that such motors are not expected to run withour any, or with a very light load, and, if so, they do not, when properly constructed, present in this respect any more disadvantage than transformers under similar conditions. Besides, both features, rotary effort and tendency to constant speed, may be combined in a motor, and any desired preponderance may be given to either one, and in this manner a motor may be obtained possessing any desired character and capable of satisfying all possible demand in practice.

In conclusion, I will remark, with all respect to Dr. Duncan, that the advantages claimed for my system are not mere assumptions, but results actually obtained, and that for this purpose experiments have been conducted through a long period, and with an assiduity such as only a deep interest in the invention could inspire; nevertheless, although my motor is the fruit of long labor and careful investigation, I do not wish to claim any other merit beyond that of having invented, and I leave it to men more competent than myself to determine the true laws of the principle and the best mode of its application. What the result of these investigations will be the future will tell; but whatever they may be and to whatever this principle may lead, I shall be sufficiently recompensed if later it will be admitted that I have contributed a share, however small, to the advancement of science.

NIKOLA TESLA

New York, May 26, 1888.

EXPERIMENTS WITH ALTERNATE CURRENTS OF VERY HIGH FREQUENCY AND THEIR APPLICATION TO METHODS OF ARTIFICIAL ILLUMINATION*

There is no subject more captivating, more worthy of study, than nature. To understand this great mechanism, to discover the forces which are active, and the laws which govern them, is the highest aim of the intellect of man.

Nature has stored up in the universe infinite energy. The eternal recipient and transmitter of this infinite energy is the ether. The recognition of the existence of ether, and of the functions it performs, is one of the most important results of modern scientific research. The mere abandoning of the idea of action at a distance, the assumption of a medium pervading all space and connecting all gross matter, has freed the minds of thinkers of an ever present doubt, and, by opening a new horizon — new and unforeseen possibilities — has given fresh interest to phenomena with which we are familiar of old. It has been a great step towards the understanding of the forces of nature and their multifold manifestations to our senses. It has been for the enlightened student of physics what the understanding of the mechanism of the firearm or of the steam engine is for the barbarian. Phenomena upon which we used to look as wonders baffling explanation, we now see in a different light. The spark of an induction coil, the glow of an incandescent lamp, the manifestations of the mechanical forces of currents and magnets are no longer beyond our grasp; instead of the incomprehensible, as before, their observation suggests now in our minds a simple mechanism, and although as to its precise nature all is still conjecture, yet we know that the truth cannot be much longer hidden, and instinctively we feel that the understanding is dawning upon us. We still admire these beautiful phenomena, these strange forces, but we are helpless no longer; we can in a certain measure explain them, account for them, and we are hopeful of finally succeeding in unraveling the mystery which surrounds them.

In how far we can understand the world around us is the ultimate thought of every student of nature. The coarseness of our senses prevents us from recognizing the ulterior construction of matter, and astronomy, this grandest and most positive of natural sciences, can only teach us something that happens, as it were, in our immediate neighborhood; of the remoter portions of the boundless universe, with its numberless stars and suns, we know nothing. But far beyond the limit of perception of our senses the spirit still can guide us, and so we may hope that even these unknown worlds — infinitely small and great — may in a measure become known to us. Still, even if this knowledge should reach us, the searching mind will find a barrier, perhaps forever unsurpassable, to the *true* recognition of that which *seems* to be, the mere *appearance* of which is the only and slender basis of all our philosophy.

---

* A lecture delivered before the American Institute of Electrical Engineers, at Columbia College, N. Y., May 20, 1891.

Of all the forms of nature's immeasurable, all-pervading energy, which ever and ever changing and moving, like a soul animates the inert universe, electricity and magnetism are perhaps the most fascinating. The effects of gravitation, of heat and light we observe daily, and soon we get accustomed to them, and soon they lose for us the character of the marvelous and wonderful; but electricity and magnetism, with their singular relationship, with their seemingly dual character, unique among the forces in nature, with their phenomena of attractions, repulsions and rotations, strange manifestations of mysterious agents, stimulate and excite the mind to thought and research. What is electricity, and what is magnetism? These questions have been asked again and again. The most able intellects have ceaselessly wrestled with the problem; still the question has not as yet been fully answered. But while we cannot even to-day state what these singular forces are, we have made good headway towards the solution of the problem. We are now confident that electric and magnetic phenomena are attributable to ether, and we are perhaps justified in saying that the effects of static electricity are effects of ether under strain, and those of dynamic electricity and electro-magnetism effects of ether in motion. But this still leaves the question, as to what electricity and magnetism are, unanswered.

First, we naturally inquire, What is electricity, and is there such a thing as electricity? In interpreting electric phenomena, we may speak of electricity or of an electric condition, state or effect. If we speak of electric effects we must distinguish two such effects, opposite in character and neutralizing each other, as observation shows that two such opposite effects exist. This is unavoidable, for in a medium of the properties of ether, we cannot possibly exert a strain, or produce a displacement or motion of any kind, without causing in the surrounding medium an equivalent and opposite effect. But if we speak of electricity, meaning a *thing*, we must, I think, abandon the idea of two electricities, as the existence of two such things is highly improbable. For how can we imagine that there should be two things, equivalent in amount, alike in their properties, but of opposite character, both clinging to matter, both attracting and completely neutralizing each other? Such an assumption, though suggested by many phenomena, though most convenient for explaining them, has little to commend it. If there *is* such a thing as electricity, there can be only *one* such thing, and, excess and want of that one thing, possibly; but more probably its condition determines the positive and negative character. The old theory of Franklin, though falling short in some respects, is, from a certain point of view, after all, the most plausible one. Still, in spite of this, the theory of the two electricities is generally accepted, as it apparently explains electric phenomena in a more satisfactory manner. But a theory which better explains the facts is not necessarily true. Ingenious minds will invent theories to suit observation, and almost every independent thinker has his own views on the subject.

It is not with the object of advancing an opinion, but with the desire of acquainting you better with some of the results, which I will describe, to show you the reasoning I have followed, the departures I have made — that I venture to express, in a few words, the views and convictions which have led me to these results.

I adhere to the idea that there is a thing which we have been in the habit of calling electricity. The question is, What is that thing? or, What, of all things, the existence of which we know, have we the best reason to call electricity? We know that it acts like an incompressible fluid; that there must be a constant quantity of it in nature; that it can be neither produced nor destroyed; and, what is more important, the electro-magnetic theory of light and all facts observed teach us that electric and ether phenomena are identical. The idea at once suggests itself, therefore, that electricity might be called ether. In fact, this view has in a certain sense been advanced by Dr. Lodge. His interesting work has been read by everyone and many have been convinced by his arguments. His great ability and the interesting nature of the subject, keep the

reader spellbound; but when the impressions fade, one realizes that he has to deal only with ingenious explanations. I must confess, that I cannot believe in two electricities, much less in a doubly-constituted ether. The puzzling behavior of the ether as a solid to waves of light and heat, and as a fluid to the motion of bodies through it, is certainly explained in the most natural and satisfactory manner by assuming it to be in motion, as Sir William Thomson has suggested; but regardless of this, there is nothing which would enable us to conclude with certainty that, while a fluid is not capable of transmitting transverse vibrations of a few hundred or thousand per second, it might not be capable of transmitting such vibrations when they range into hundreds of million millions per second. Nor can anyone prove that there are transverse ether waves emitted from an alternate current machine, giving a small number of alternations per second; to such slow disturbances, the ether, if at rest, may behave as a true fluid.

Returning to the subject, and bearing in mind that the existence of two electricities is, to say the least, highly improbable, we must remember, that we have no evidence of electricity, nor can we hope to get it, unless gross matter is present. Electricity, therefore, cannot be called ether in the broad sense of the term; but nothing would seem to stand in the way of calling electricity ether associated with matter, or bound ether; or, in other words, that the so-called static charge of the molecule is ether associated in some way with the molecule. Looking at it in that light, we would be justified in saying, that electricity is concerned in all molecular actions.

Now, precisely what the ether surrounding the molecules is, wherein it differs from ether in general, can only be conjectured. It cannot differ in density, ether being incompressible; it must, therefore, be under some strain or in motion, and the latter is the most probable. To understand its functions, it would be necessary to have an exact idea of the physical construction of matter, of which, of course, we can only form a mental picture.

But of all the views on nature, the one which assumes one matter and one force, and a perfect uniformity throughout, is the most scientific and most likely to be true. An infinitesimal world, with the molecules and their atoms spinning and moving in orbits, in much the same manner as celestial bodies, carrying with them and probably spinning with them ether, or in other words, carrying with them static charges, seems to my mind the most probable view, and one which, in a plausible manner, accounts for most of the phenomena observed. The spinning of the molecules and their ether sets up the ether tensions or electrostatic strains; the equalization of ether tensions sets up ether motions or electric currents, and the orbital movements produce the effects of electro and permanent magnetism.

About fifteen years ago, Prof. Rowland demonstrated a most interesting and important fact, namely, that a static charge carried around produces the effects of an electric current. Leaving out of consideration the precise nature of the mechanism, which produces the attraction and repulsion of currents, and conceiving the electrostatically charged molecules in motion, this experimental fact gives us a fair idea of magnetism. We can conceive lines or tubes of force which physically exist, being formed of rows of directed moving molecules; we can see that these lines must be closed, that they must tend to shorten and expand, etc. It likewise explains in a reasonable way, the most puzzling phenomenon of all, permanent magnetism, and, in general, has all the beauties of the Ampere theory without possessing the vital defect of the same, namely, the assumption of molecular currents. Without enlarging further upon the subject, I would say, that I look upon all electrostatic, current and magnetic phenomena as being due to electrostatic molecular forces.

The preceding remarks I have deemed necessary to a full understanding of the subject as it presents itself to my mind.

Of all these phenomena the most important to study are the current phenomena, on account of the already extensive and evergrowing use of currents for industrial purposes. It is now a century since the first practical source of current was produced, and, ever since, the phenomena which accompany the flow of currents have been diligently studied, and through the untiring efforts of scientific men the simple laws which govern them have been discovered. But these laws are found to hold good only when the currents are of a steady character. When the currents are rapidly varying in strength, quite different phenomena, often unexpected, present themselves, and quite different laws hold good, which even now have not been determined as fully as is desirable, though through the work, principally, of English scientists, enough knowledge has been gained on the subject to enable us to treat simple cases which now present themselves in daily practice.

The phenomena which are peculiar to the changing character of the currents are greatly exalted when the rate of change is increased, hence the study of these currents is considerably facilitated by the employment of properly constructed apparatus. It was with this and other objects in view that I constructed alternate current machines capable of giving more than two million reversals of current per minute, and to this circumstance it is principally due, that I am able to bring to your attention some of the results thus far reached, which I hope will prove to be a step in advance on account of their direct bearing upon one of the most important problems, namely, the production of a practical and efficient source of light.

The study of such rapidly alternating currents is very interesting. Nearly every experiment discloses something new. Many results may, of course, be predicted, but many more are unforeseen. The experimenter makes many interesting observations. For instance, we take a piece of iron and hold it against a magnet. Starting from low alternations and running up higher and higher we feel the impulses succeed each other faster and faster, get weaker and weaker, and finally disappear. We then observe a continuous pull; the pull, of course, is not continuous; it only appears so to us; our sense of touch is imperfect.

We may next establish an arc between the electrodes and observe, as the alternations rise, that the note which accompanies alternating arcs gets shriller and shriller, gradually weakens, and finally ceases. The air vibrations, of course, continue, but they are too weak to be perceived; our sense of hearing fails us.

We observe the small physiological effects, the rapid heating of the iron cores and conductors, curious inductive effects, interesting condenser phenomena, and still more interesting light phenomena with a high tension induction coil. All these experiments and observations would be of the greatest interest to the student, but their description would lead me too far from the principal subject. Partly for this reason, and partly on account of their vastly greater importance, I will confine myself to the description of the light effects produced by these currents.

In the experiments to this end a high tension induction coil or equivalent apparatus for converting currents of comparatively low into currents of high tension is used.

If you will be sufficiently interested in the results I shall describe as to enter into an experimental study of this subject; if you will be convinced of the truth of the arguments I shall advance — your aim will be to produce high frequencies and high potentials; in other words, powerful electrostatic effects. You will then encounter many difficulties, which, if completely overcome, would allow us to produce truly wonderful results.

First will be met the difficulty of obtaining the required frequencies by means of mechanical apparatus, and, if they be obtained otherwise, obstacles of a different nature will present themselves. Next it will be found difficult to provide the

requisite insulation without considerably increasing the size of the apparatus, for the potentials required are high, and, owing to the rapidity of the alternations, the insulation presents peculiar difficulties. So, for instance, when a gas is present, the discharge may work, by the molecular bombardment of the gas and consequent heating, through as much as an inch of the best solid insulating material, such as glass, hard rubber, porcelain, sealing wax, etc.; in fact, through any known insulating substance. The chief requisite in the insulation of the apparatus is, therefore, the exclusion of any gaseous matter.

In general my experience tends to show that bodies which possess the highest specific inductive capacity, such as glass, afford a rather inferior insulation to others, which, while they are good insulators, have a much smaller specific inductive capacity, such as oils, for instance, the dielectric losses being no doubt greater in the former. The difficulty of insulating, of course, only exists when the potentials are excessively high, for with potentials such as a few thousand volts there is no particular difficulty encountered in conveying currents from a machine giving, say, 20,000 alternations per second, to quite a distance. This number of alternations, however, is by far too small for many purposes,

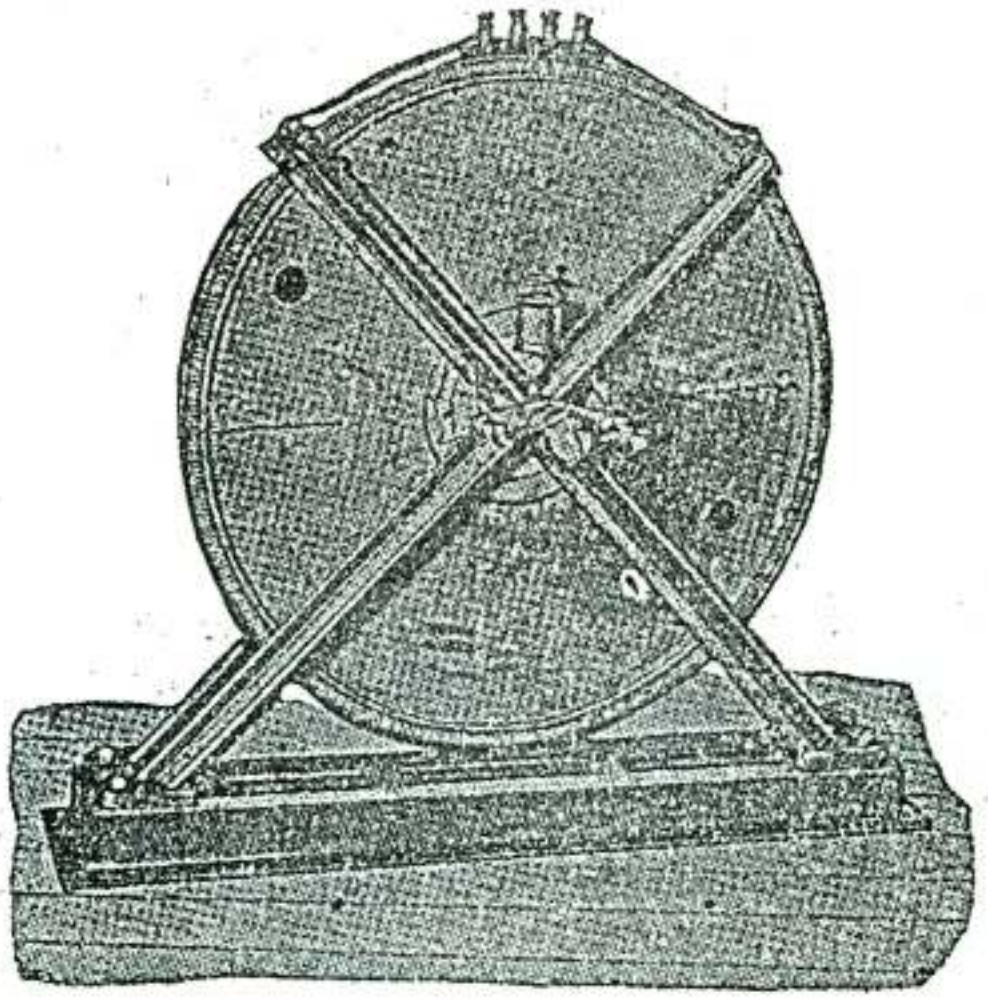

Fig. 1.

though quite sufficient for some practical applications. This difficulty of insulating is fortunately not a vital drawback; it affects mostly the size of the apparatus, for, when excessively high potentials would be used, the light-giving devices would be located not far from the apparatus, and often they would be quite close to it. As the air-bombardment of the insulated wire is dependent on condenser action, the loss may be reduced to a trifle by using excessively thin wires heavily insulated.

Another difficulty will be encountered in the capacity and self-induction necessarily possessed by the coil. If the coil be large, that is, if it contain a great length of wire, it will be generally unsuited for excessively high frequencies; if it be small, it may be well adapted for such frequencies, but the potential might then not be as high as desired. A good insulator, and preferably one possessing a small specific inductive capacity, would afford a two-fold advantage. First, it would enable us to construct a very small coil

capable of withstanding enormous differences of potential; and secondly, such a small coil, by reason of its smaller capacity and self-induction, would be capable of a quicker and more vigorous vibration. The problem then of constructing a coil or induction apparatus of any kind possessing the requisite qualities I regard as one of no small importance, and it has occupied me for a considerable time.

The investigator who desires to repeat the experiments which I will describe, with an alternate current machine, capable of supplying currents of the desired frequency, and an induction coil, will do well to take the primary coil out and mount the secondary in such a manner as to be able to look through the tube upon which the secondary is wound. He will then be able to observe the streams which pass from the primary to the insulating tube, and from their intensity he will know how far he can strain the coil. Without this precaution he is sure to injure the insulation. This arrangement permits, however, an easy exchange of the primaries, which is desirable in these experiments.

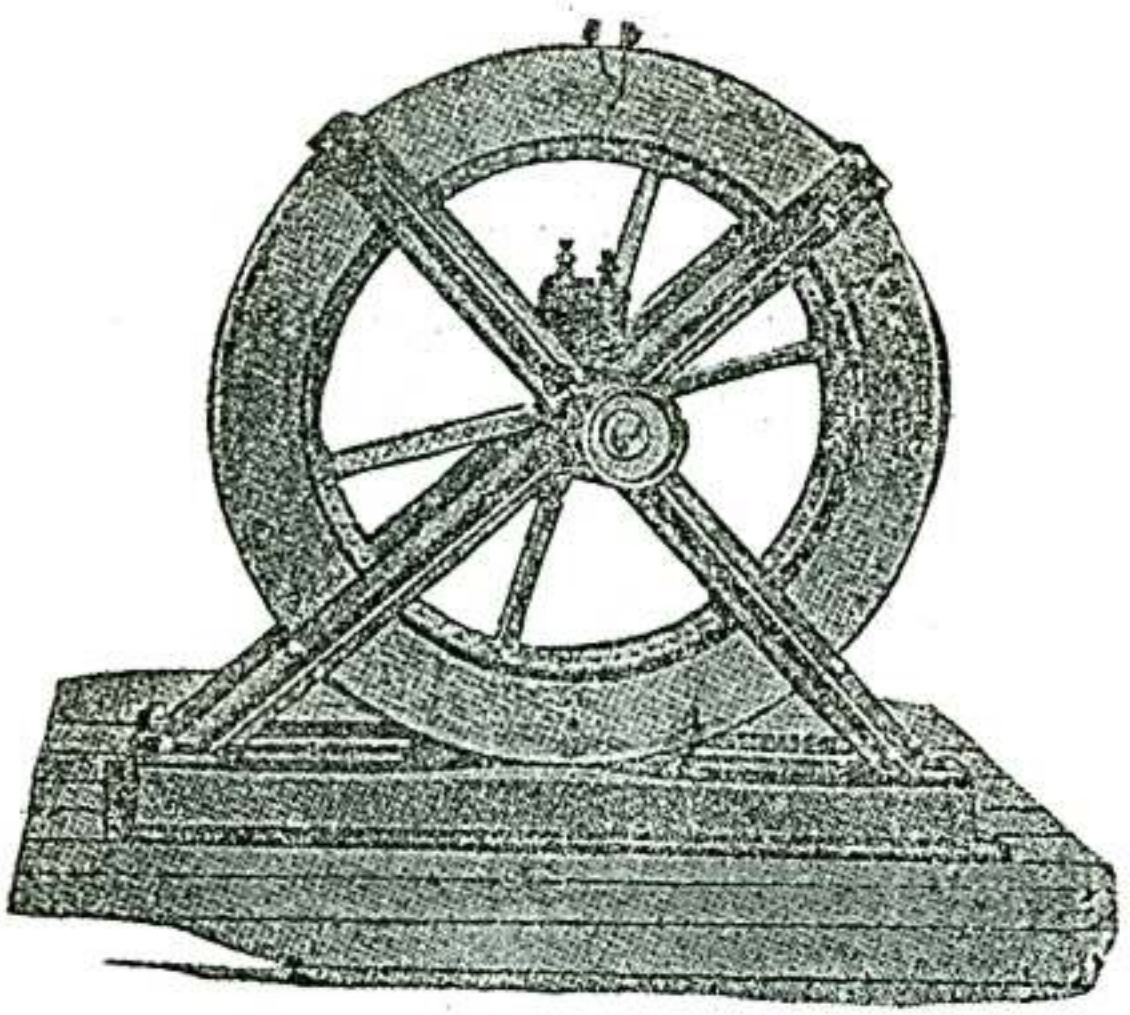

Fig. 2.

The selection of the type of machine best suited for the purpose must be left to the judgment of the experimenter. There are here illustrated three distinct types of machines, which, besides others, I have used in my experiments.

Fig. 1 represents the machine used in my experiments before this Institute. The field magnet consists of a ring of wrought iron with 384 pole projections. The armature comprises a steel disc to which is fastened a thin, carefully welded rim of wrought iron. Upon the rim are wound several layers of fine, well annealed iron wire, which, when wound, is passed through shellac. The armature wires are wound around brass pins, wrapped with silk thread. The diameter of the armature wire in this type of machine should not be more than $\frac{1}{6}$ of the thickness of the pole projections, else the local action will be considerable.

Fig. 2 represents a larger machine of a different type. The field magnet of this machine consists of two like parts which either enclose an exciting coil, or else are independently wound. Each part has 480 pole projections, the projections of one facing

those of the other. The armature consists of a wheel of hard bronze, carrying the conductors which revolve between the projections of the field magnet. To wind the armature conductors, I have found it most convenient to proceed in the following manner. I construct a ring of hard bronze of the required size. This ring and the rim of the wheel are provided with the proper number of pins, and both fastened upon a plate. The armature conductors being wound, the pins are cut off and the ends of the conductors fastened by two rings which screw to the bronze ring and the rim of the wheel, respectively. The whole may then be taken off and forms a solid structure. The conductors in such a type of machine should consist of sheet copper, the thickness of which, of course, depends on the thickness of the pole projections; or else twisted thin wires should be employed.

Fig. 3 is a smaller machine, in many respects similar to the former, only here the armature conductors and the exciting coil are kept stationary, while only a block of wrought iron is revolved.

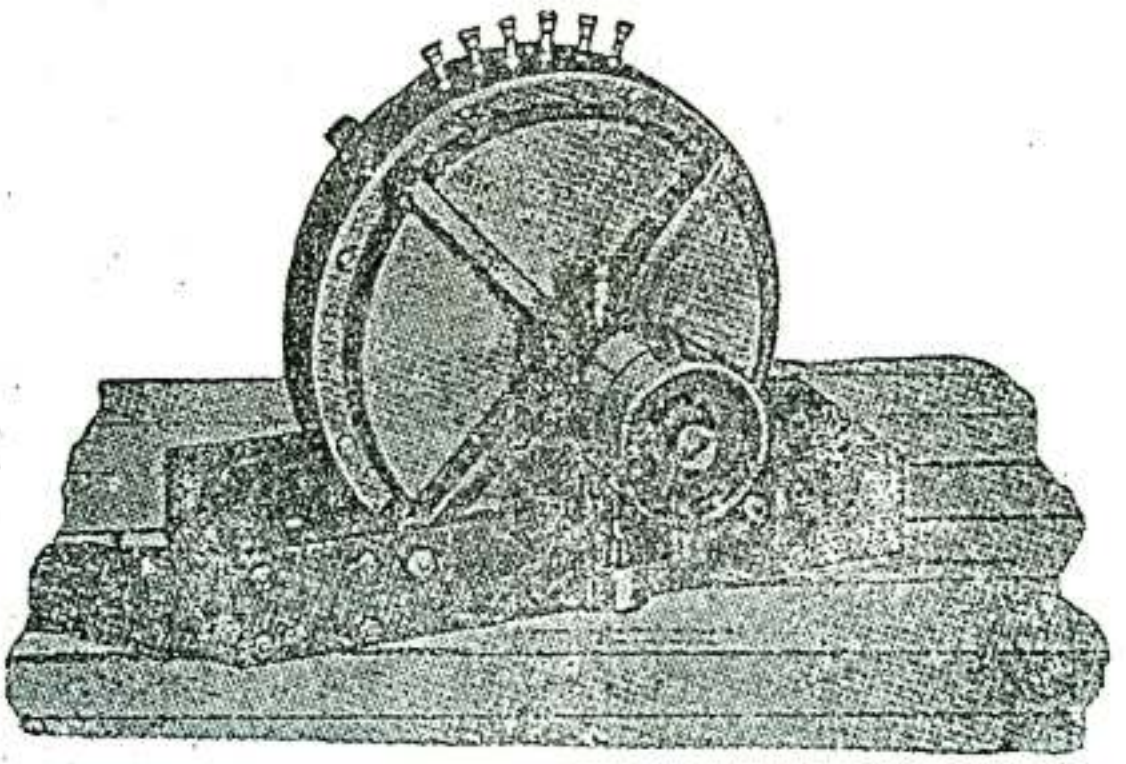

Fig. 3.

It would be uselessly lengthening this description were I to dwell more on the details of construction of these machines. Besides, they have been described somewhat more elaborately in *The Electrical Engineer,* of March 18, 1891. I deem it well, however, to call the attention of the investigator to two things, the importance of which, though self evident, he is nevertheless apt to underestimate; namely, to the local action in the conductors which must be carefully avoided, and to the clearance, which must be small. I may add, that since it is desirable to use very high peripheral speeds, the armature should be of very large diameter in order to avoid impracticable belt speeds. Of the several types of these machines which have been constructed by me, I have found that the type illustrated in Fig. 1 caused me the least trouble in construction, as well as in maintenance, and on the whole, it has been a good experimental machine.

In operating an induction coil with very rapidly alternating currents, among the first luminous phenomena noticed are naturally those presented by the high-tension discharge. As the number of alternations per second is increased, or as — the number being high — the current through the primary is varied, the discharge gradually changes in appearance. It would be difficult to describe the minor changes which occur, and the conditions which bring them about, but one may note five distinct forms of the discharge.

MUZEJ NIKOLE TESLE

First, one may observe a weak, sensitive discharge in the form of a thin, feeble-colored thread (Fig. 4a). It always occurs when, the number of alternations per second being high, the current through the primary is very small. In spite of the excessively small current, the rate of change is great, and the difference of potential at the terminals of the secondary is therefore considerable, so that the arc is established at great distances; but the quantity of "electricity" set in motion is insignificant, barely sufficient to maintain a thin, threadlike arc. It is excessively sensitive and may be made so to such a degree that the mere act of breathing near the coil will affect it, and unless it is perfectly well protected from currents of air, it wriggles around constantly. Nevertheless, it is in this

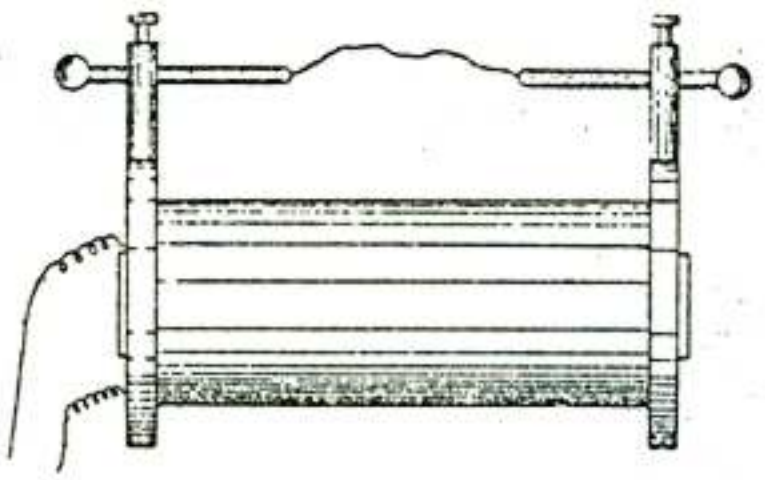

Fig. 4a.

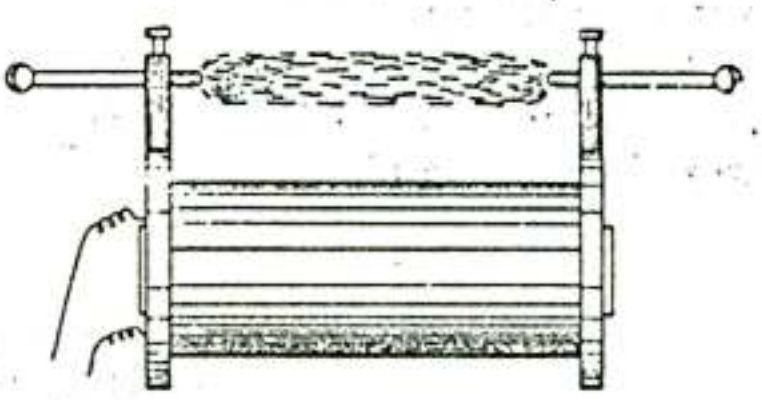

Fig. 4b.

form excessively persistent, and when the terminals are approached to, say, one-third of the striking distance, it can be blown out only with difficulty. This exceptional persistency, when short, is largely due to the arc being excessively thin; presenting, therefore, a very small surface to the blast. Its great sensitiveness, when very long, is probably due to the motion of the particles of dust suspended in the air.

When the current through the primary is increased, the discharge gets broader and stronger, and the effect of the capacity of the coil becomes visible until, finally, under proper conditions, a white flaming arc, Fig. 4b, often as thick as one's finger, and striking across the whole coil, is produced. It develops remarkable heat, and may be further characterized by the absence of the high note which accompanies the less powerful discharges. To take a shock from the coil under these conditions would not be advisable, although under different conditions, the potential being much higher, a shock from the coil may be taken with impunity. To produce this kind of discharge the number of alternations per second must not be too great for the coil used; and, generally speaking, certain relations between capacity, self-induction and frequency must be observed.

The importance of these elements in an alternate current circuit is now well-known, and under ordinary conditions, the general rules are applicable. But in an induction coil exceptional conditions prevail. First, the self-induction is of little importance before the arc is established, when it asserts itself, but perhaps never as prominently as in ordinary alternate current circuits, because the capacity is distributed all along the coil, and by reason of the fact that the coil usually discharges through very great resistances; hence the currents are exceptionally small. Secondly, the capacity goes on increasing continually as the potential rises, in consequence of absorption which takes place to a considerable extent. Owing to this there exists no critical relationship between these quantities, and ordinary rules would not seem to be applicable. As the potential is increased either in consequence of the increased frequency or of the increased current through the primary, the amount of the energy stored becomes greater and greater, and the capacity gains more and more in importance. Up to a certain point the capacity is beneficial, but after that it begins to be an enormous drawback. It follows from this that each coil gives the best

result with a given frequency and primary current. A very large coil, when operated with currents of very high frequency, may not give as much as $\frac{1}{8}$ inch spark. By adding capacity to the terminals, the condition may be improved, but what the coil really wants is a lower frequency.

When the flaming discharge occurs, the conditions are evidently such that the greatest current is made to flow through the circuit. These conditions may be attained by varying the frequency within wide limits, but the highest frequency at which the flaming arc can still be produced, determines, for a given primary current, the maximum striking distance of the coil. In the flaming discharge the *eclat* effect of the capacity is not perceptible; the rate at which the energy is being stored then just equals the rate at which it can be disposed of through the circuit. This kind of discharge is the severest test for a coil; the break, when it occurs, is of the nature of that in an overcharged Leyden jar. To give a rough approximation I would state that, with an ordinary coil of, say, 10,000 ohms resistance, the most powerful arc would be produced with about 12,000 alternations per second.

When the frequency is increased beyond that rate, the potential, of course, rises, but the striking distance may, nevertheless, diminish, paradoxical as it may seem. As the potential rises the coil attains more and more the properties of a static machine until, finally, one may observe the beautiful phenomenon of the streaming discharge, Fig. 5, which may be produced across the whole length of the coil. At that stage streams begin to issue freely from all points and projections. These streams will also be seen to pass in abundance in the space between the primary and the insulating tube. When the potential is excessively high they will always appear, even if the frequency be low, and even if the primary be surrounded by as much as an inch of wax, hard rubber, glass, or any other insulating substance. This limits greatly the output of the coil, but I will later show how I have been able to overcome to a considerable extent this disadvantage in the ordinary coil.

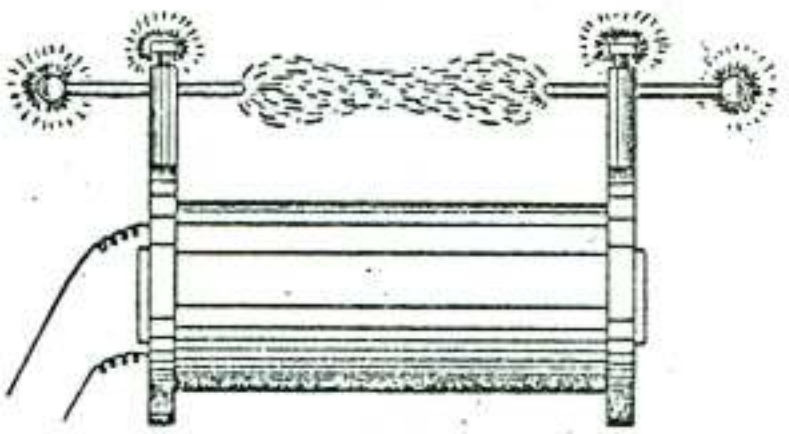

Fig. 5.

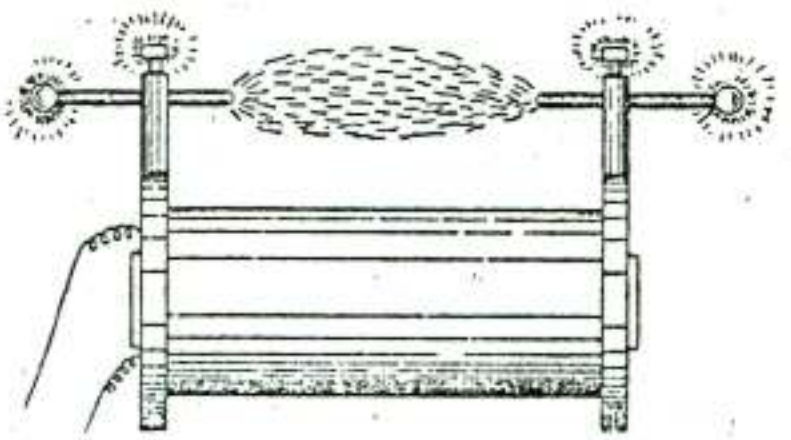

Fig. 6.

Besides the potential, the intensity of the streams depends on the frequency; but if the coil be very large they show themselves, no matter how low the frequencies used. For instance, in a very large coil of a resistance of 67,000 ohms, constructed by me some time ago, they appear with as low as 100 alternations per second and less, the insulation of the secondary being $\frac{3}{4}$ inch of ebonite. When very intense they produce a noise similar to that produced by the charging of a Holtz machine, but much more powerful, and they emit a strong smell of ozone. The lower the frequency, the more apt they are to suddenly injure the coil. With excessively high frequencies they may pass freely without producing any other effect than to heat the insulation slowly and uniformly.

The existence of these streams shows the importance of constructing an expensive coil so as to permit of one's seeing through the tube surrounding the primary, and the latter should be easily exchangeable; or else the space between the primary and secondary should be completely filled up with insulating material so as to exclude all air.

The non-observance of this simple rule in the construction of commercial coils is responsible for the destruction of many an expensive coil.

At the stage when the streaming discharge occurs, or with somewhat higher frequencies, one may, by approaching the terminals quite nearly, and regulating properly the effect of capacity, produce a veritable spray of small silver-white sparks, or a bunch of excessively thin silvery threads (Fig. 6) amidst a powerful brush — each spark or thread possibly corresponding to one alternation. This, when produced under proper conditions, is probably the most beautiful discharge, and when an air blast is directed against it, it presents a singular appearance. The spray of sparks, when received through the body, causes some inconvenience, whereas, when the discharge simply streams, nothing at all is likely to be felt if large conducting objects are held in the hands to protect them from receiving small burns.

If the frequency is still more increased, then the coil refuses to give any spark unless at comparatively small distances, and the fifth typical form of discharge may be observed (Fig. 7). The tendency to stream out and dissipate is then so great that when the brush is produced at one terminal no sparking occurs, even if, as I have repeatedly tried, the hand, or any conducting object, is held within the stream; and, what is more singular, the luminous stream is not at all easily deflected by the approach of a conducting body.

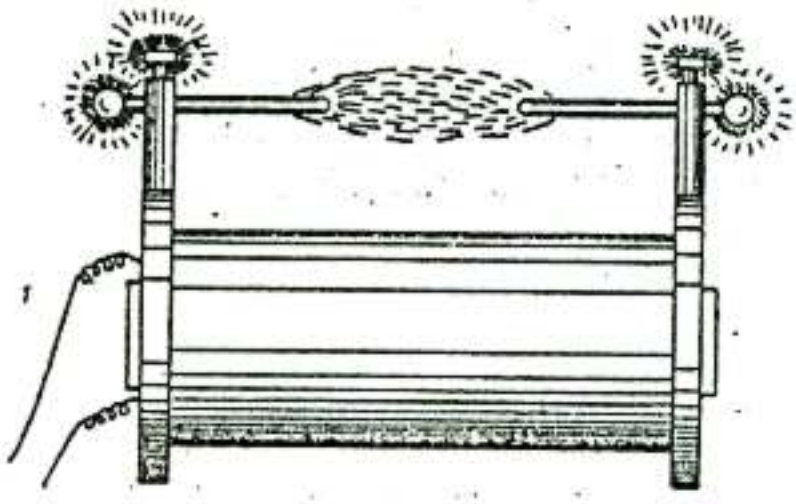

Fig. 7.

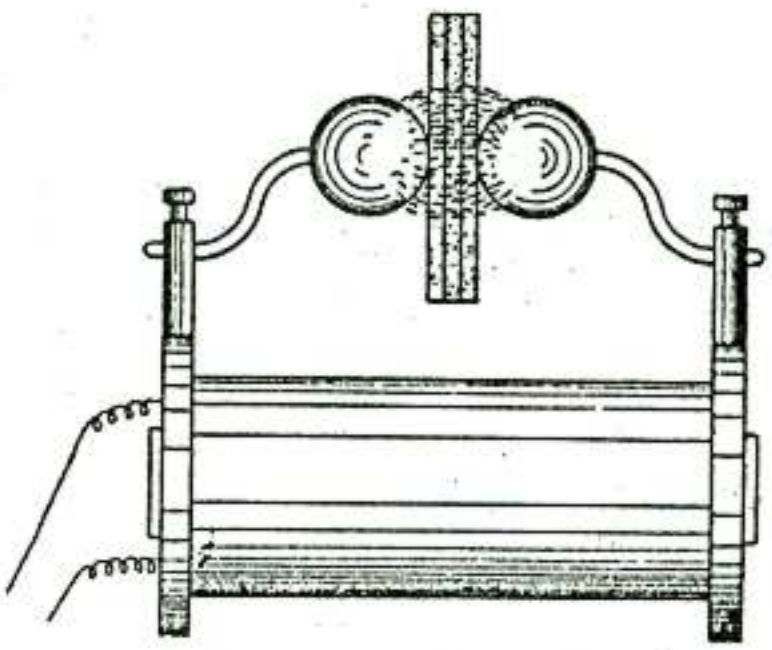

Fig. 8.

At this stage the streams seemingly pass with the greatest freedom through considerable thicknesses of insulators, and it is particularly interesting to study their behavior. For this purpose it is convenient to connect to the terminals of the coil two metallic spheres which may be placed at any desired distance, Fig. 8. Spheres are preferable to plates, as the discharge can be better observed. By inserting dielectric bodies between the spheres, beautiful discharge phenomena may be observed. If the spheres be quite close and the spark be playing between them, by interposing a thin plate of ebonite between the spheres the spark instantly ceases and the discharge spreads into an intensely luminous circle several inches in diameter, provided the spheres are sufficiently large. The passage of the streams heats, and, after a while, softens, the rubber so much that two plates may be made to stick together in this manner. If the spheres are so far apart that no spark occurs, even if they are far beyond the striking distance, by inserting a thick plate of glass the discharge is instantly induced to pass from the spheres to the glass in the form of luminous streams. It appears almost as though these streams pass *through* the dielectric. In reality this is not the case, as the streams are due to the molecules of the air which are violently agitated in the space between the oppositely charged surfaces of the spheres. When no dielectric other than air is present, the bombardment goes on, but is too weak to be visible; by inserting a dielectric the inductive

effect is much increased, and besides, the projected air molecules find an obstacle and the bombardment becomes so intense that the streams become luminous. If by any mechanical means we could effect such a violent agitation of the molecules we could produce the same phenomenon. A jet of air escaping through a small hole under enormous pressure and striking against an insulating substance, such as glass, may be luminous in the dark, and it might be possible to produce a phosphorescence of the glass or other insulators in this manner.

The greater the specific inductive capacity of the interposed dielectric, the more powerful the effect produced. Owing to this, the streams show themselves with excessively high potentials even if the glass be as much as one and one-half to two inches thick. But besides the heating due to bombardment, some heating goes on undoubtedly in the dielectric, being apparently greater in glass than in ebonite. I attribute this to the greater specific inductive capacity of the glass, in consequence of which, with the same potential difference, a greater amount of energy is taken up in it than in rubber. It is like connecting to a battery a copper and a brass wire of the same dimensions. The copper wire, though a more perfect conductor, would heat more by reason of its taking more current. Thus what is otherwise considered a virtue of the glass is here a deffect. Glass usually gives way much quicker than ebonite; when it is heated to a certain degree, the discharge suddenly breaks through at one point, assuming then the ordinary form of an arc.

The heating effect produced by molecular bombardment of the dielectric would, of course, diminish as the pressure of the air is increased, and at enormous pressure it would be negligible, unless the frequency would increase correspondingly.

It will be often observed in these experiments that when the spheres are beyond the striking distance, the approach of a glass plate, for instance, may induce the spark to jump between the spheres. This occurs when the capacity of the spheres is somewhat below the critical value which gives the greatest difference of potential at the terminals of the coil. By approaching a dielectric, the specific inductive capacity of the space between the spheres is increased, producing the same effect as if the capacity of the spheres were increased. The potential at the terminals may then rise so high that the air space is cracked. The experiment is best performed with dense glass or mica.

Another interesting observation is that a plate of insulating material, when the discharge is passing through it, is strongly attracted by either of the spheres, that is by the nearer one, this being obviously due to the smaller mechanical effect of the bombardment on that side, and perhaps also to the greater electrification.

From the behavior of the dielectrics in these experiments, we may conclude that the best insulator for these rapidly alternating currents would be the one possessing the smallest specific inductive capacity and at the same time one capable of withstanding the greatest differences of potential; and thus two diametrically opposite ways of securing the required insulation are indicated, namely, to use either a perfect vacuum or a gas under great pressure: but the former would be preferable. Unfortunately neither of these two ways is easily carried out in practice.

It is especially interesting to note the behavior of an excessively high vacuum in these experiments. If a test tube, provided with external electrodes and exhausted to the highest possible degree, be connected to the terminals of the coil, Fig. 9, the electrodes of the tube are instantly brought to a high temperature and the glass at each end of the tube is rendered intensely phosphorescent, but the middle appears comparatively dark, and for a while remains cool.

When the frequency is so high that the discharge shown in Fig. 7 is observed, considerable dissipation no doubt occurs in the coil. Nevertheless the coil may be worked for a long time, as the heating is gradual.

In spite of the fact that the difference of potential may be enormous, little is felt when the discharge is passed through the body, provided the hands are armed. This is to some extent due to the higher frequency, but principally to the fact that less energy is available externally, when the difference of potential reaches an enormous value, owing to the circumstance that, with the rise of potential, the energy absorbed in the coil increases as the square of the potential. Up to a certain point the energy available externally increases with the rise of potential, then it begins to fall off rapidly. Thus, with the ordinary high tension induction coil, the curious paradox exists, that, while with a given current through the primary the shock might be fatal, with many times that current it might be perfectly harmless, even if the frequency be the same. With high frequencies and excessively high potentials when the terminals are not connected to bodies of some size, practically all the energy supplied to the primary is taken up by the coil. There is no breaking through, no local injury, but all the material, insulating and conducting, is uniformly heated.

To avoid misunderstanding in regard to the physiological effect of alternating currents of very high frequency, I think it necessary to state that, while it is an undeniable fact that they are incomparably less dangerous than currents of low

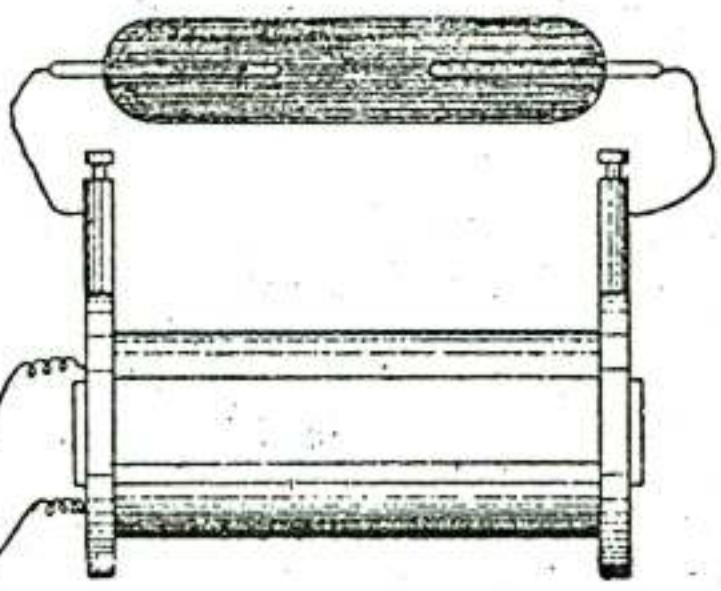

Fig. 9.

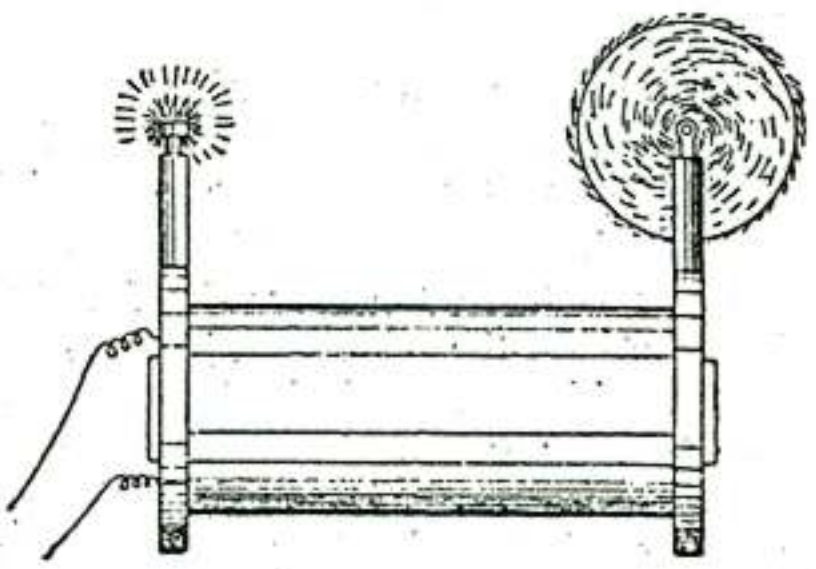

Fig. 10.

frequencies, it should not be thought that they are altogether harmless. What has just been said refers only to currents from an ordinary high tension induction coil, which currents are necessarily very small; if received directly from a machine or from a secondary of low resistance, they produce more or less powerful effects, and may cause serious injury, especially when used in conjunction with condensers.

The streaming discharge of a high tension induction coil differs in many respects from that of a powerful static machine. In color it has neither the violet of the positive, nor the brightness of the negative, static discharge, but lies somewhere between, being, of course, alternatively positive and negative. But since the streaming is more powerful when the point or terminal is electrified positively, than when electrified negatively, it follows that the point of the brush is more like the positive, and the root more like the negative, static discharge. In the dark, when the brush is very powerful, the root may appear almost white. The wind produced by the escaping streams, though it may be very strong — often indeed to such a degree that it may be felt quite a distance from the coil — is, nevertheless, considering the quantity of the discharge, smaller than that produced by the positive brush of a static machine, and it affects the flame much less powerfully. From the nature of the phenomenon we can conclude that the higher the frequency, the smaller must, of course, be the wind produced by the streams, and with sufficiently high frequencies no wind at all would be produced at the ordinary atmospheric pressures.

With frequencies obtainable by means of a machine, the mechanical effect is sufficiently great to revolve, with considerable speed, large pin-wheels, which in the dark present a beautiful appearance owing to the abundance of the streams (Fig. 10).

In general, most of the experiments usually performed with a static machine can be performed with an induction coil when operated with very rapidly alternating currents. The effects produced, however, are much more striking, being of incomparably greater power. When a small length of ordinary cotton covered wire, Fig. 11, is attached to one terminal of the coil, the streams issuing from all points of the wire may be so intense as to produce a considerable light effect. When the potentials and frequencies are very high, a wire insulated with gutta percha or rubber and attached to one of the terminals, appears to be covered with a luminous film. A very thin bare wire when attached to a terminal emits powerful streams and vibrates continually to and fro or spins in a circle, producing a singular effect (Fig. 12). Some of these experiments have been described by me in *The Electrical World*, of February 21, 1891.

Another peculiarity of the rapidly alternating discharge of the induction coil is its radically different behavior with respect to points and rounded surfaces.

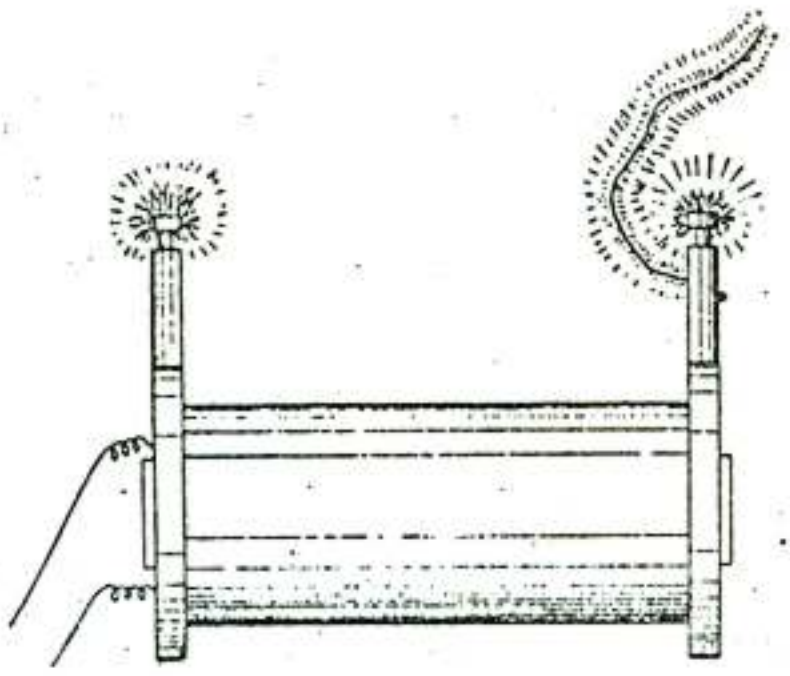

Fig. 11.

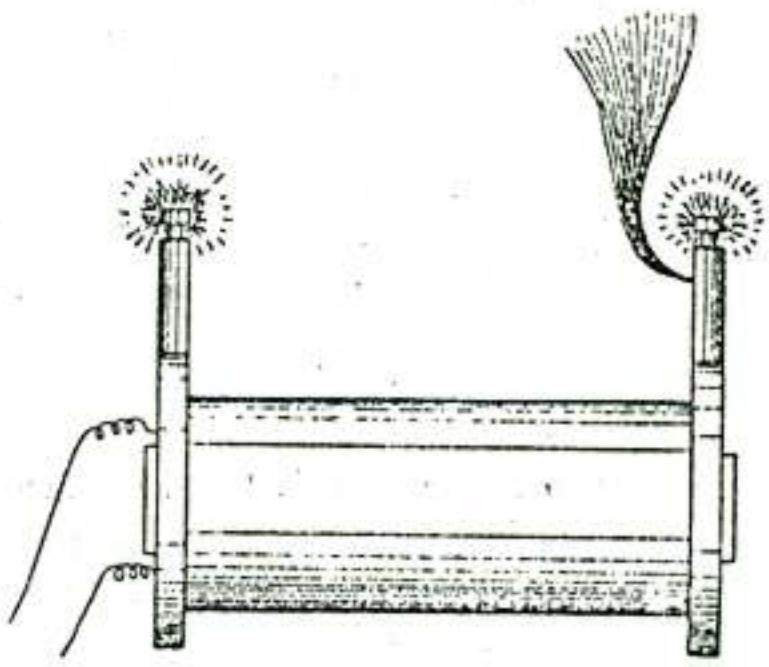

Fig. 12.

If a thick wire, provided with a ball at one end and with a point at the other, be attached to the positive terminal of a static machine, practically all the charge will be lost through the point, on account of the enormously greater tension, dependent on the radius of curvature. But if such a wire is attached to one of the terminals of the induction coil, it will be observed that with very high frequencies streams issue from the ball almost as copiously as from the point (Fig. 13).

It is hardly conceivable that we could produce such a condition to an equal degree in a static machine, for the simple reason, that the tension increases as the square of the density, which in turn is proportional to the radius of curvature; hence, with a steady potential an enormous charge would be required to make streams issue from a polished ball while it is connected with a point. But with an induction coil the discharge of which alternates with great rapidity it is different. Here we have to deal with two distinct tendencies. First, there is the tendency to escape which exists in a condition of rest, and which depends on the radius of curvature; second, there is the tendency to dissipate into the surrounding air by condenser action, which depends on the surface. When one of these tendencies is at a maximum, the other is at a minimum. At the point the luminous stream is principally due to the air molecules coming bodily in contact with the point; they are attracted and repelled, charged and discharged, and, their atomic charges being thus disturbed, vibrate and emit light waves. At the ball, on the contrary,

there is no doubt that the effect is to a great extent produced inductively, the air molecules not *necessarily* coming in contact with the ball, though they undoubtedly do so. To convince ourselves of this we only need to exalt the condenser action, for instance, by enveloping the ball, at some distance, by a better conductor than the surrounding medium, the conductor being, of course, insulated; or else by surrounding it with a better dielectric and approaching an insulated conductor; in both cases the streams will break forth more copiously. Also, the larger the ball with a given frequency, or the higher the frequency, the more will the ball have the advantage over the point. But, since a certain intensity of action is required to render the streams visible, it is obvious that in the experiment described the ball should not be taken too large.

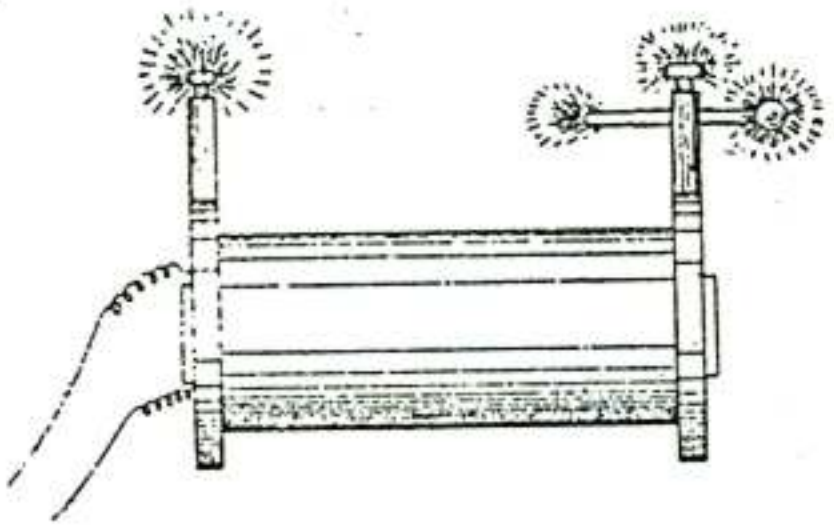

Fig. 13.

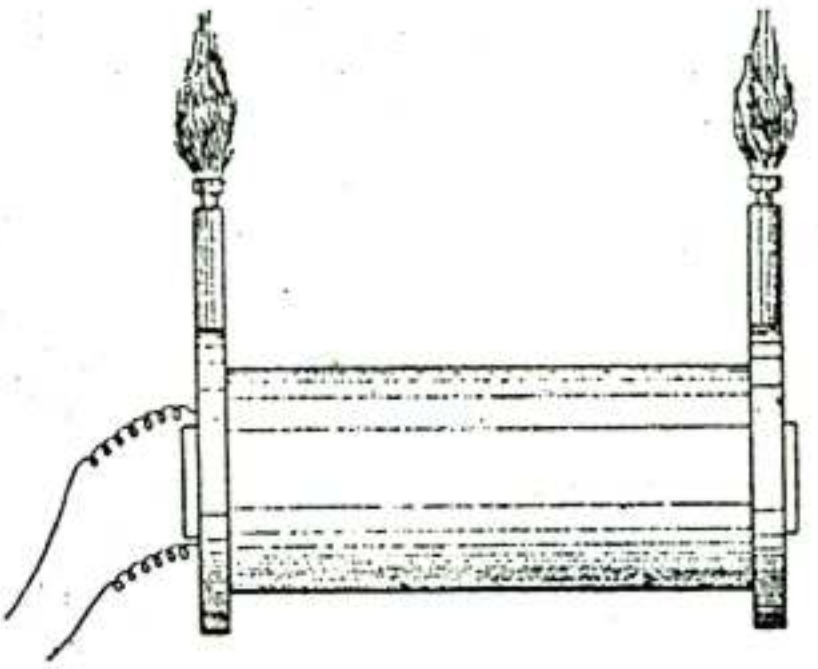

Fig. 14.

In consequence of this two-fold tendency, it is possible to produce by means of points, effects identical to those produced by capacity. Thus, for instance, by attaching to one terminal of the coil a small length of soiled wire, presenting many points and offering great facility to escape, the potential of the coil may be raised to the same value as by attaching to the terminal a polished ball of a surface many times greater than that of the wire.

An interesting experiment, showing the effect of the points, may be performed in the following manner: Attach to one of the terminals of the coil a cotton covered wire about two feet in length, and adjust the conditions so that streams issue from the wire. In this experiment the primary coil should be preferably placed so that it extends only about half way into the secondary coil. Now touch the free terminal of the secondary with a conducting object held in the hand, or else connect it to an insulated body of some size. In this manner the potential on the wire may be enormously raised. The effect of this will be either to increase, or to diminish, the streams. If they increase, the wire is too short; if they diminish, it is too long. By adjusting the length of the wire, a point is found where the touching of the other terminal does not at all affect the streams. In this case the rise of potential is exactly counteracted by the drop through the coil. It will be observed that small lengths of wire produce considerable difference in the magnitude and luminosity of the streams. The primary coil is placed sidewise for two reasons: First, to increase the potential at the wire; and, second, to increase the drop through the coil. The sensitiveness is thus augmented.

There is still another and far more striking peculiarity of the brush discharge produced by very rapidly alternating currents. To observe this it is best to replace the usual terminals of the coil by two metal columns insulated with a good thickness of ebonite. It is also well to close all fissures and cracks with wax so that the brushes cannot form anywhere except at the tops of the columns. If the conditions are carefully

adjusted — which, of course, must be left to the skill of the experimenter — so that the potential rises to an enormous value, one may produce two powerful brushes several inches long, nearly white at their roots, which in the dark bear a striking resemblance to two flames of a gas escaping under pressure (Fig. 14). But they do not only *resemble,* they *are* veritable flames, for they are hot. Certainly they are not as hot as a gas burner, *but they would be so if the frequency and the potential would be sufficiently high.* Produced with, say, twenty thousand alternations per second, the heat is easily perceptible even if the potential is not excessively high. The heat developed is, of course, due to the impact of the air molecules against the terminals and against each other. As, at the ordinary pressures, the mean free path is excessively small, it is possible that in spite of the enormous initial speed imparted to each molecule upon coming in contact with the terminal, its progress — by collision with other molecules — is retarded to such an extent, that it does not get away far from the terminal, but may strike the same many times in succession. The higher the frequency, the less the molecule is able to get away, and this the more so, as for a given effect the potential required is smaller; and a frequency is conceivable — perhaps even obtainable — at which practically the same molecules would strike the terminal. Under such conditions the exchange of the molecules would be very slow, and the heat produced at, and very near, the terminal would be excessive. But if the frequency would go on increasing constantly, the heat produced would begin to diminish for obvious reasons. In the positive brush of a static machine the exchange of the molecules is very rapid, the stream is constantly of one direction, and there are fewer collisions; hence the heating effect must be very small. Anything that impairs the facility of exchange tends to increase the local heat produced. Thus, if a bulb be held over the terminal of the coil so as to enclose the brush, the air contained in the bulb is very quickly brought to a high temperature. If a glass tube be held over the brush so as to allow the draught to carry the brush upwards, scorching hot air escapes at the top of the tube. Anything held within the brush is, of course, rapidly heated, and the possibility of using such heating effects for some purpose or other suggests itself.

When contemplating this singular phenomenon of the hot brush, we cannot help being convinced that a similar process must take place in the ordinary flame, and it seems strange that after all these centuries past of familiarity with the flame, now, in this era of electric lighting and heating, we are finally led to recognize, that since time immemorial we have, after all, always had "electric light and heat" at our disposal. It is also of no little interest to contemplate, that we have a possible way of producing — by other than chemical means — a veritable flame, which would give light and heat without any material being consumed, without any chemical process taking place, and to accomplish this, we only need to perfect methods of producing enormous frequencies and potentials. I have no doubt that if the potential could be made to alternate with sufficient rapidity and power, the brush formed at the end of a wire would lose its electrical characteristics and would become flamelike. The flame must be due to electrostatic molecular action.

This phenomenon now explains in a manner which can hardly be doubted the frequent accidents occurring in storms. It is well known that objects are often set on fire without the lightning striking them. We shall presently see how this can happen. On a nail in a roof, for instance, or on a projection of any kind, more or less conducting, or rendered so by dampness, a powerful brush may appear. If the lightning strikes somewhere in the neighborhood the enormous potential may be made to alternate or fluctuate perhaps many million times a second. The air molecules are violently attracted and repelled, and by their impact produce such a powerful heating effect that a fire is started. It is conceivable that a ship at sea may, in this manner, catch fire at many points at once. When we consider, that even with the comparatively low frequencies obtained from a dynamo machine, and with potentials of no more than one or two

hundred thousand volts, the heating effects are considerable, we may imagine how much more powerful they must be with frequencies and potentials many times greater; and the above explanation seems, to say the least, very probable. Similar explanations may have been suggested, but I am not aware that, up to the present, the heating effects of a brush produced by a rapidly alternating potential have been experimentally demonstrated, at least not to such a remarkable degree.

By preventing completely the exchange of the air molecules, the local heating effect may be so exalted as to bring a body to incandescence. Thus, for instance, if a small button, or preferably a very thin wire or filament be enclosed in an unexhausted globe and connected with the terminal of the coil, it may be rendered incandescent. The phenomenon is made much more interesting by the rapid spinning round in a circle of the top of the filament, thus presenting the appearance of a luminous funnel, Fig. 15, which widens when the potential is increased. When the potential is small the end of the filament may perform irregular motions, suddenly changing from one to the other, or it may describe an ellipse; but when the potential is very high it always spins in a circle; and so does generally a thin straight wire attached freely to the terminal of the coil. These motions are, of course, due to the impact of the molecules, and the irregularity in the distribution of the potential, owing to the roughness and dissymmetry

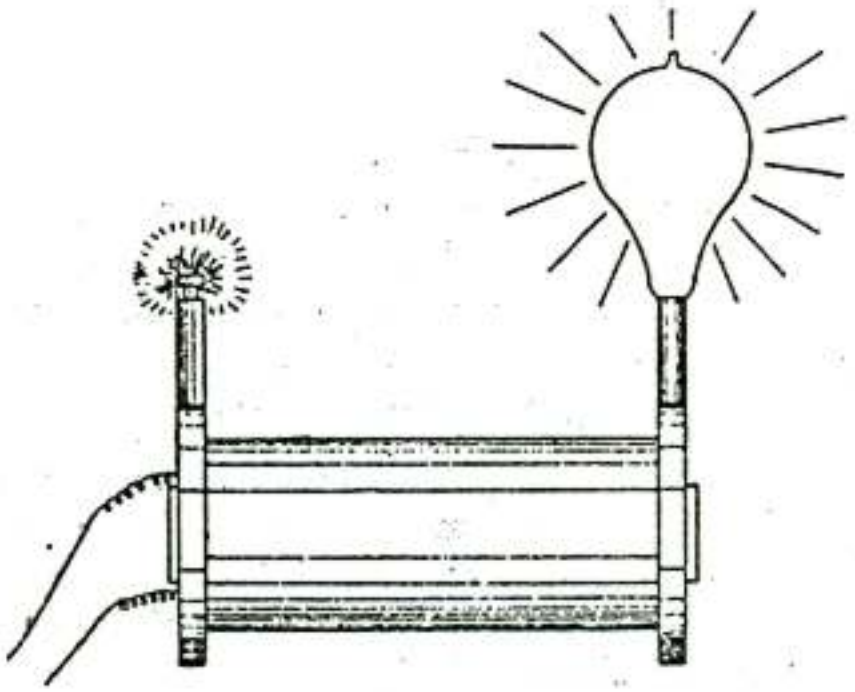

Fig. 15.

of the wire or filament. With a perfectly symmetrical and polished wire such motions would probably not occur. That the motion is not likely to be due to other causes is evident from the fact that it is not of a definite direction, and that in a very highly exhausted globe it ceases altogether. The possibility of bringing a body to incandescence in an exhausted globe, or even when not at all enclosed, would seem to afford a possible way of obtaining light effects, which, in perfecting methods of producing rapidly alternating potentials, might be rendered available for useful purposes.

In employing a commercial coil, the production of very powerful brush effects is attended with considerable difficulties, for when these high frequencies and enormous potentials are used, the best insulation is apt to give way. Usually the coil is insulated well enough to stand the strain from convolution to convolution, since two double silk covered paraffined wires will withstand a pressure of several thousand volts; the difficulty lies principally in preventing the breaking through from the secondary to the primary, which is greatly facilitated by the streams issuing from the latter. In the coil, of course, the strain is greatest from section to section, but usually in a larger coil there are so many sections that the danger of a sudden giving way is not very great. No difficulty will generally be encountered in that direction, and besides, the liability of

injuring the coil internally is very much reduced by the fact that the effect most likely to be produced is simply a gradual heating, which, when far enough advanced, could not fail to be observed. The principal necessity is then to prevent the streams between the primary and the tube, not only on account of the heating and possible injury, but also because the streams may diminish very considerably the potential difference available at the terminals. A few hints as to how this may be accomplished will probably be found useful in most of these experiments with the ordinary induction coil.

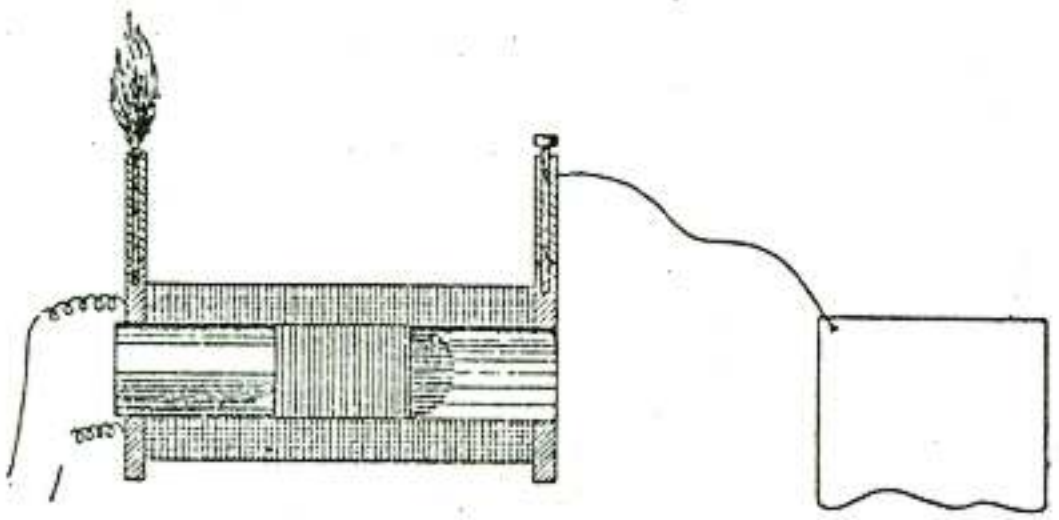

Fig. 16a.

One of the ways is to wind a short primary, Fig. 16a, so that the difference of potential is not at that length great enough to cause the breaking forth of the streams through the insulating tube. The length of the primary should be determined by experiment. Both the ends of the coil should be brought out on one end through a plug of insulating material fitting in the tube as illustrated. In such a disposition one terminal of the secondary is attached to a body, the surface of which is determined with the greatest care so as to produce the greatest rise in the potential. At the other terminal a powerful brush appears, which may be experimented upon.

The above plan necessitates the employment of a primary of comparatively small size, and it is apt to heat when powerful effects are desirable for a certain length of time. In such a case it is better to employ a larger coil, Fig. 16b, and introduce it from one side of the tube, until the streams begin to appear. In this case the nearest terminal of the secondary may be connected to the primary or to the ground, which is practically the same thing, if the primary is connected directly to the machine. In the case of ground connections it is well to determine experimentally the frequency which is best suited under the conditions of the test. Another way of obviating the streams, more or less, is to make the primary in sections and supply it from separate, well insulated sources.

In many of these experiments, when powerful effects are wanted for a short time, it is advantageous to use iron cores with the primaries. In such case a very large primary coil may be wound and placed side by side with the secondary, and, the nearest terminal of the latter being connected to the primary, a laminated iron core is introduced through the primary into the secondary as far as the streams will permit. Under these conditions an excessively powerful brush, several inches long, which may be appropriately called "St. Elmo's hot fire", may be caused to appear at the other terminal of the secondary, producing striking effects. It is a most powerful ozonizer, so powerful indeed, that only a few minutes are sufficient to fill the whole room with the smell of ozone, and it undoubtedly possesses the quality of exciting chemical affinities.

For the production of ozone, alternating currents of very high frequency are eminently suited, not only on account of the advantages they offer in the way of conversion but also because of the fact, that the ozonizing action of a discharge is dependent on the frequency as well as on the potential, this being undoubtedly confirmed by observation.

In these experiments if an iron core is used it should be carefully watched, as it is apt to get excessively hot in an incredibly short time. To give an idea of the rapidity of the heating, I will state, that by passing a powerful current through a coil with many turns, the inserting within the same of a thin iron wire for no more than one second's time is sufficient to heat the wire to something like 100°C.

But this rapid heating need not discourage us in the use of iron cores in connection with rapidly alternating currents. I have for a long time been convinced that in the industrial distribution by means of transformers, some such plan as the following might be practicable. We may use a comparatively small iron core, subdivided, or perhaps not even subdivided. We may surround this core with a considerable thickness of material which is fire-proof and conducts the heat poorly, and on top of that we may place the

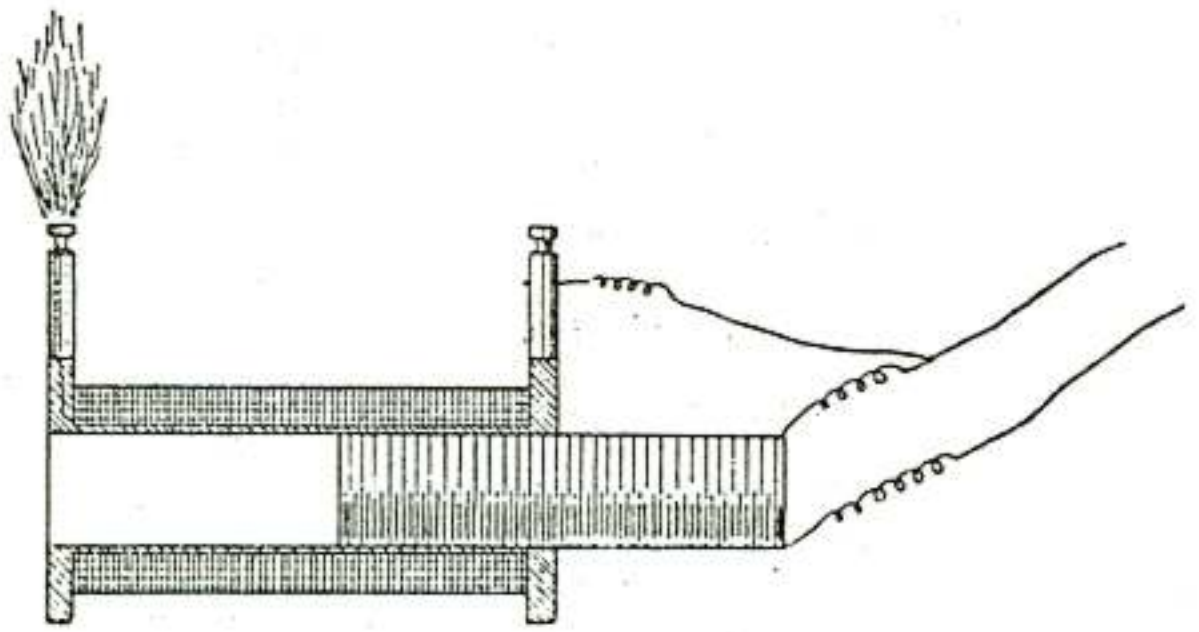

Fig. 16b.

primary and secondary windings. By using either higher frequencies or greater magnetizing forces, we may by hysteresis and eddy currents heat the iron core so far as to bring it nearly to its maximum permeability, which, as Hopkinson has shown, may be as much as sixteen times greater than that at ordinary temperatures. If the iron core were perfectly enclosed, it would not be deteriorated by the heat, and, if the enclosure of fire-proof material would be sufficiently thick, only a limited amount of energy could be radiated in spite of the high temperature. Transformers have been constructed by me on that plan, but for lack of time, no thorough tests have as yet been made.

Another way of adapting the iron core to rapid alternations, or, generally speaking, reducing the frictional losses, is to produce by continuous magnetization a flow of something like seven thousand or eight thousand lines per square centimetre through the core, and then work with weak magnetizing forces and preferably high frequencies around the point of greatest permeability. A higher efficiency of conversion and greater output are obtainable in this manner. I have also employed this principle in connection with machines in which there is no reversal of polarity. In these types of machines, as long as there are only few pole projections, there is no great gain, as the maxima and minima of magnetization are far from the point of maximum permeability; but when the number of the pole projections is very great, the required rate of change may be obtained, without the magnetization varying so far as to depart greatly from the point of maximum permeability, and the gain is considerable.

The above described arrangements refer only to the use of commercial coils as ordinarily constructed. If it is desired to construct a coil for the express purpose of performing with it such experiments as I have described, or, generally, rendering it capable of withstanding the greatest possible difference of potential, then a construction as indicated in Fig. 17 will be found of advantage. The coil in this case is formed of

two independent parts which are wound oppositely, the connection between both being made near the primary. The potential in the middle being zero, there is not much tendency to jump to the primary and not much insulation is required. In some cases the middle point may, however, be connected to the primary or to the ground. In such a coil the places of greatest difference of potential are far apart and the coil is capable ot withstanding an enormous strain. The two parts may be movable so as to allow a slight adjustment of the capacity effect.

As to the manner of insulating the coil, it will be found convenient to proceed in the following way: First, the wire should be boiled in paraffine until all the air is out; then the coil is wound by running the wire through melted paraffine, merely for the purpose of fixing the wire. The coil is then taken off from the spool, immersed in a cylindrical vessel filled with pure melted wax and boiled for a long time until the bubbles cease to appear. The whole is then left to cool down thoroughly, and then the mass is taken out of the vessel and turned up in a lathe. A coil made in this manner and with care is capable of withstanding enormous potential differences.

It may be found convenient to immerse the coil in paraffine oil or some other kind of oil; it is a most effective way of insulating, principally on account of the perfect exclusion of air, but it may be found that, after all, a vessel filled with oil is not a very convenient thing to handle in a laboratory.

If an ordinary coil can be dismounted, the primary may be taken out of the tube and the latter plugged up at one end, filled with oil, and the primary reinserted. This affords an excellent insulation and prevents the formation of the streams.

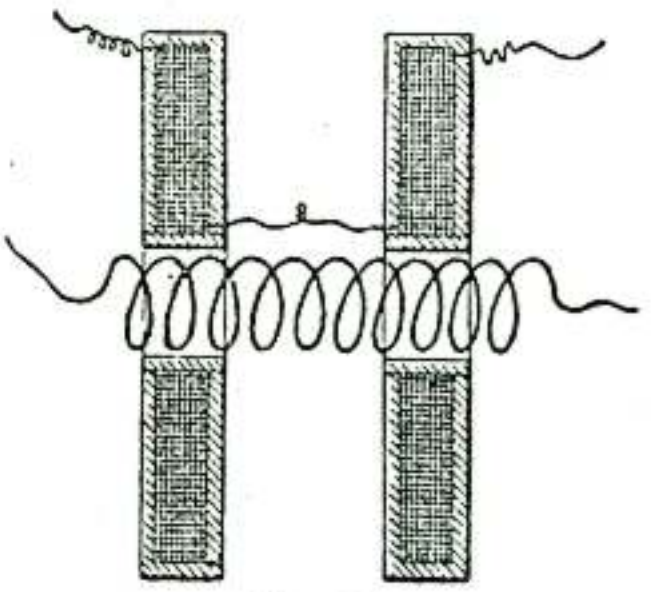

Fig. 17.

Of all the experiments which may be performed with rapidly alternating currents the most interesting are those which concern the production of a practical illuminant. It cannot be denied that the present methods, though they were brilliant advances, are very wasteful. Some better methods must be invented, some more perfect apparatus devised. Modern research has opened new possibilities for the production of an efficient source of light, and the attention of all has been turned in the direction indicated by able pioneers. Many have been carried away by the enthusiasm and passion to discover, but in their zeal to reach results, some have been misled. Starting with the idea of producing electro-magnetic waves, they turned their attention, perhaps, too much to the study of electro-magnetic effects, and neglected the study of electrostatic phenomena. Naturally, nearly every investigator availed himself of an apparatus similar to that used in earlier experiments. But in those forms of apparatus, while the electro-magnetic inductive effects are enormous, the electrostatic effects are excessively small.

In the Hertz experiments, for instance, a high tension induction coil is short circuited by an arc, the resistance of which is very small, the smaller, the more capacity is attached to the terminals; and the difference of potential at these is enormously diminished. On the other hand, when the discharge is not passing between the terminals, the static effects may be considerable, but only qualitatively so, not quantitatively, since their rise and fall is very sudden, and since their frequency is small. In neither case, therefore, are powerful electrostatic effects perceivable. Similar conditions exist when, as in some interesting experiments of Dr. Lodge, Leyden jars are discharged disruptively. It has been thought — and I believe asserted — that in such cases most of the energy is radiated into space. In the light of the experiments which I have described above,

it will now not be thought so. I feel safe in asserting that in such cases most of the energy is partly taken up and converted into heat in the arc of the discharge and in the conducting and insulating material of the jar, some energy being, of course, given off by electrification of the air; but the amount of the directly radiated energy is very small.

When a high tension induction coil, operated by currents alternating only 20,000 times a second, has its terminals closed through even a very small jar, practically all the energy passes through the dielectric of the jar, which is heated, and the electrostatic effects manifest themselves outwardly only to a very weak degree. Now the external circuit of a Leyden jar, that is, the arc and the connections of the coatings, may be looked upon as a circuit generating alternating currents of excessively high frequency and fairly high potential, which is closed through the coatings and the dielectric between them, and from the above it is evident that the external electrostatic effects must be very small, even if a recoil circuit be used. These conditions make it appear that with the apparatus usually at hand, the observation of powerful electrostatic effects was impossible, and what experience has been gained in that direction is only due to the great ability of the investigators.

But powerful electrostatic effects are a *sine qua non* of light production on the lines indicated by theory. Electro-magnetic effects are primarily unavailable, for the reason that to produce the required effects we would have to pass current impulses through a conductor, which, long before the required frequency of the impulses could be reached, would cease to transmit them. On the other hand, electro-magnetic waves many times longer than those of light, and producible by sudden discharge of a condenser, could not be utilized, it would seem, except we avail ourselves of their effect upon conductors as in the present methods, which are wasteful. We could not affect by means of such waves the static molecular or atomic charges of a gas, cause them to vibrate and to emit light. Long transverse waves cannot, apparently, produce such effects, since excessively small electro-magnetic disturbances may pass readily through miles of air. Such dark waves, unless they are of the length of true light waves, cannot, it would seem, excite luminous radiation in a Geissler tube, and the luminous effects, which are producible by induction in a tube devoid of electrodes, I am inclined to consider as being of an electrostatic nature.

To produce such luminous effects, straight electrostatic thrusts are required; these, whatever be their frequency, may disturb the molecular charges and produce light. Since current impulses of the required frequency cannot pass through a conductor of measurable dimensions, we must work with a gas, and then the production of powerful electrostatic effects becomes an imperative necessity.

It has occurred to me, however, that electrostatic effects are in many ways available for the production of light. For instance, we may place a body of some refractory material in a closed, and preferably more or less exhausted, globe, connect it to a source of high, rapidly alternating potential, causing the molecules of the gas to strike it many times a second at enormous speeds, and in this manner, with trillions of invisible hammers, pound it until it gets incandescent; or we may place a body in a very highly exhausted globe, in a non-striking vacuum, and, by employing very high frequencies and potentials, transfer sufficient energy from it to other bodies in the vicinity, or in general to the surroundings, to maintain it at any degree of incandescence; or we may, by means of such rapidly alternating high potentials, disturb the ether carried by the molecules of a gas or their static charges, causing them to vibrate and to emit light.

But, electrostatic effects being dependent upon the potential and frequency, to produce the most powerful action it is desirable to increase both as far as practicable. It may be possible to obtain quite fair results by keeping either of these factors small, provided the other is sufficiently great; but we are limited in both directions. My

experience demonstrates that we cannot go below a certain frequency, for, first, the potential then becomes so great that it is dangerous; and, secondly, the light production is less efficient.

I have found that, by using the ordinary low frequencies, the physiological effect of the current required to maintain at a certain degree of brightness a tube four feet long, provided at the ends with outside and inside condenser coatings, is so powerful that, I think, it might produce serious injury to those not accustomed to such shocks; whereas, with twenty thousand alternations per second, the tube may be maintained at the same degree of brightness without any effect being felt. This is due principally to the fact that a much smaller potential is required to produce the same light effect, and also to the higher efficiency in the light production. It is evident that the efficiency in such cases is the greater, the higher the frequency, for the quicker the process of

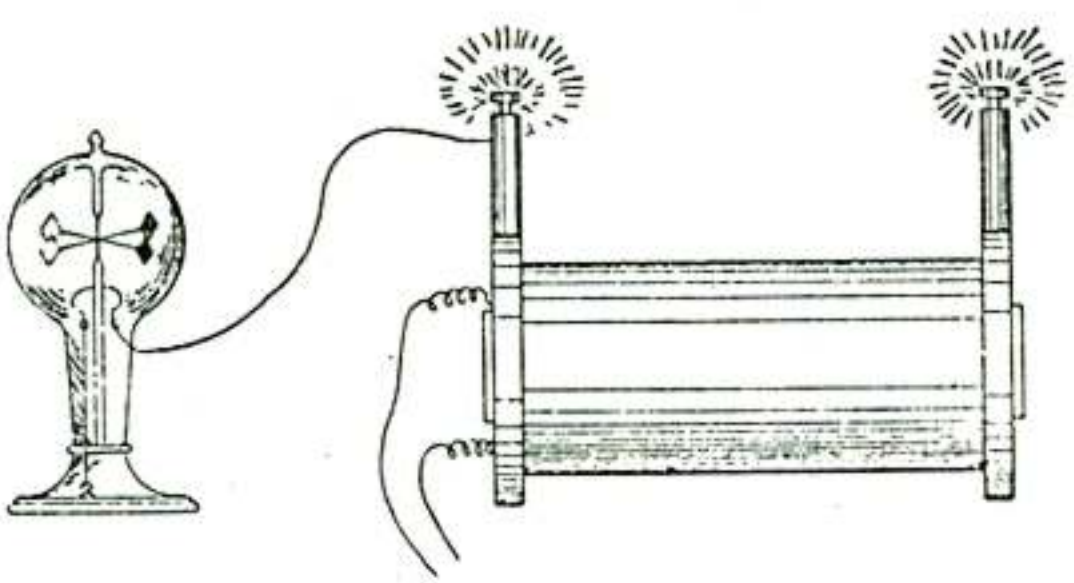

Fig. 18.

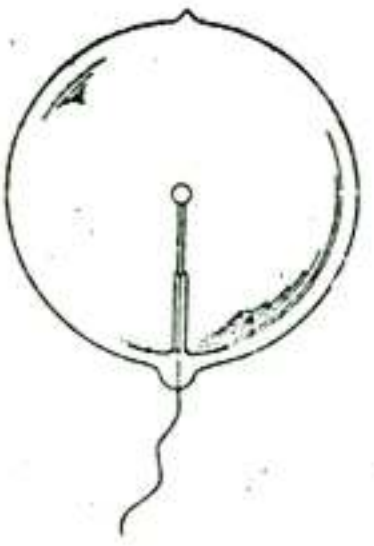

Fig. 19.

charging and discharging the molecules, the less energy will be lost in the form of dark radiation. But, unfortunately, we cannot go beyond a certain frequency on account of the difficulty of producing and conveying the effects.

I have stated above that a body inclosed in an unexhausted bulb may be intensely heated by simply connecting it with a source of rapidly alternating potential. The heating in such a case is, in all probability, due mostly to the bombardment of the molecules of the gas contained in the bulb. When the bulb is exhausted, the heating of the body is much more rapid, and there is no difficulty whatever in bringing a wire or filament to any degree of incandescence by simply connecting it to one terminal of a coil of the proper dimensions. Thus, if the well-known apparatus of Prof. Crookes, consisting of a bent platinum wire with vanes mounted over it (Fig. 18), be connected to one terminal of the coil — either one or both ends of the platinum wire being connected — the wire is rendered almost instantly incandescent, and the mica vanes are rotated as though a current from a battery were used. A thin carbon filament, or, preferably, a button of some refractory material (Fig. 19), even if it be a comparatively poor conductor, inclosed in an exhausted globe, may be rendered highly incandescent; and in this manner a simple lamp capable of giving any desired candle power is provided.

The success of lamps of this kind would depend largely on the selection of the light-giving bodies contained within the bulb. Since, under the conditions described, refractory bodies — which are very poor conductors and capable of withstanding for a long time excessively high degrees of temperature — may be used, such illuminating devices may be rendered successful.

It might be thought at first that if the bulb, containing the filament or button of refractory material, be perfectly well exhausted — that is, as far as it can be done by the use of the best apparatus — the heating would be much less intense, and that in a perfect

vacuum it could not occur at all. This is not confirmed by my experience; quite the contrary, the better the vacuum the more easily the bodies are brought to incandescence. This result is interesting for many reasons.

At the outset of this work the idea presented itself to me, whether two bodies of refractory material enclosed in a bulb exhausted to such a degree that the discharge of a large induction coil, operated in the usual manner, cannot pass through, could be rendered incandescent by mere condenser action. Obviously, to reach this result enormous potential differences and very high frequencies are required, as is evident from a simple calculation.

But such a lamp would possess a vast advantage over an ordinary incandescent lamp in regard to efficiency. It is well-known that the efficiency of a lamp is to some extent a function of the degree of incandescence, and that, could we but work a filament

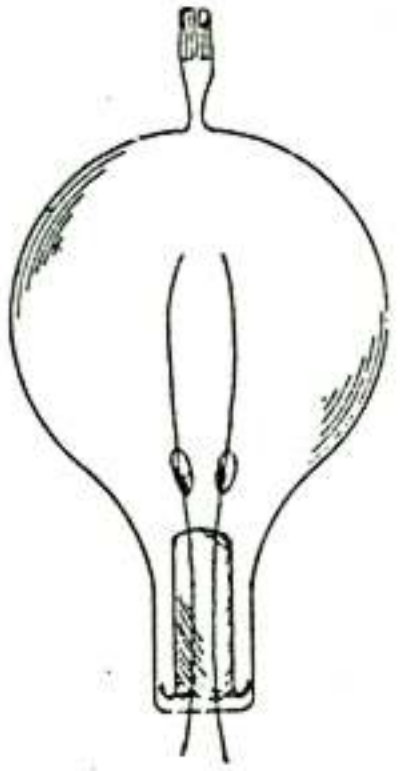

Fig. 20.

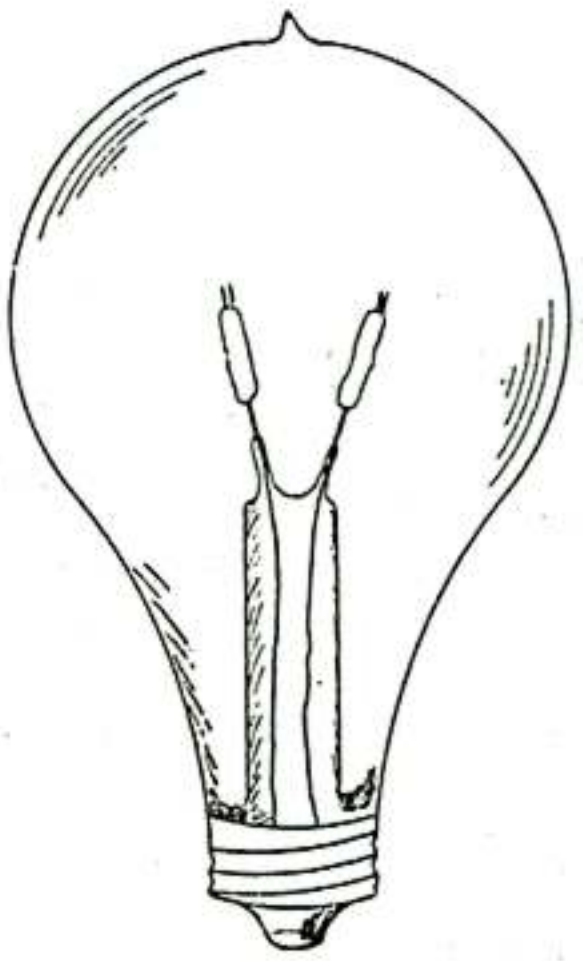

Fig. 21.

at many times higher degrees of incandescence, the efficiency would be much greater. In an ordinary lamp this is impracticable on account of the destruction of the filament, and it has been determined by experience how far it is advisable to push the incandescence. It is impossible to tell how much higher efficiency could be obtained if the filament could withstand indefinitely, as the investigation to this end obviously cannot be carried beyond a certain stage; but there are reasons for believing that it would be very considerably higher. An improvement might be made in the ordinary lamp by employing a short and thick carbon; but then the leading-in wires would have to be thick, and, besides, there are many other considerations which render such a modification entirely impracticable. But in a lamp as above described, the leading-in wires may be very small, the incandescent refractory material may be in the shape of blocks offering a very small radiating surface, so that less energy would be required to keep them at the desired incandescence; and in addition to this, the refractory material need not be carbon, but may be manufactured from mixtures of oxides, for instance, with carbon or other material, or may be selected from bodies which are practically non-conductors, and capable of withstanding enormous degrees of temperature.

All this would point to the possibility of obtaining a much higher efficiency with such a lamp than is obtainable in ordinary lamps. In my experience it has been

demonstrated that the blocks are brought to high degrees of incandescence with much lower potentials than those determined by calculation, and the blocks may be set at greater distances from each other. We may freely assume, and it is probable, that the molecular bombardment is an important element in the heating, even if the globe be exhausted with the utmost care, as I have done; for although the number of the molecules is, comparatively speaking, insignificant, yet on account of the mean free path being very great, there are fewer collisions, and the molecules may reach much higher speeds, so that the heating effect due to this cause may be considerable, as in the Crookes experiments with radiant matter.

But it is likewise possible that we have to deal here with an increased facility of losing the charge in very high vacuum, when the potential is rapidly alternating, in which case most of the heating would be directly due to the surging of the charges in the heated bodies. Or else the observed fact may be largely attributable to the effect of the points which I have mentioned above, in consequence of which the blocks or filaments contained in the vacuum are equivalent to condensers of many times greater surface than that calculated from their geometrical dimensions. Scientific men still differ in opinion as to whether a charge should, or should not, be lost in a perfect vacuum, or in other words, whether ether is, or is not, a conductor. If the former were the case, then a thin filament enclosed in a perfectly exhausted globe, and connected to a source of enormous, steady potential, would be brought to incandescence.

Various forms of lamps on the above described principle, with the refractory bodies in the form of filaments, Fig. 20, or blocks, Fig. 21, have been constructed and operated by me, and investigations are being carried on in this line. There is no difficulty in reaching such high degrees of incandescence that ordinary carbon is to all appearance melted and volatilized. If the vacuum could be made absolutely perfect, such a lamp, although inoperative with apparatus ordinarily used, would, if operated with currents of the required character, afford an illuminant which would never be destroyed, and which would be far more efficient than an ordinary incandescent lamp. This perfection can, of course, never be reached, and a very slow destruction and gradual diminution in size always occurs, as in incandescent filaments; but there is no possibility of a sudden and premature disabling which occurs in the latter by the breaking of the filament, especially when the incandescent bodies are in the shape of blocks.

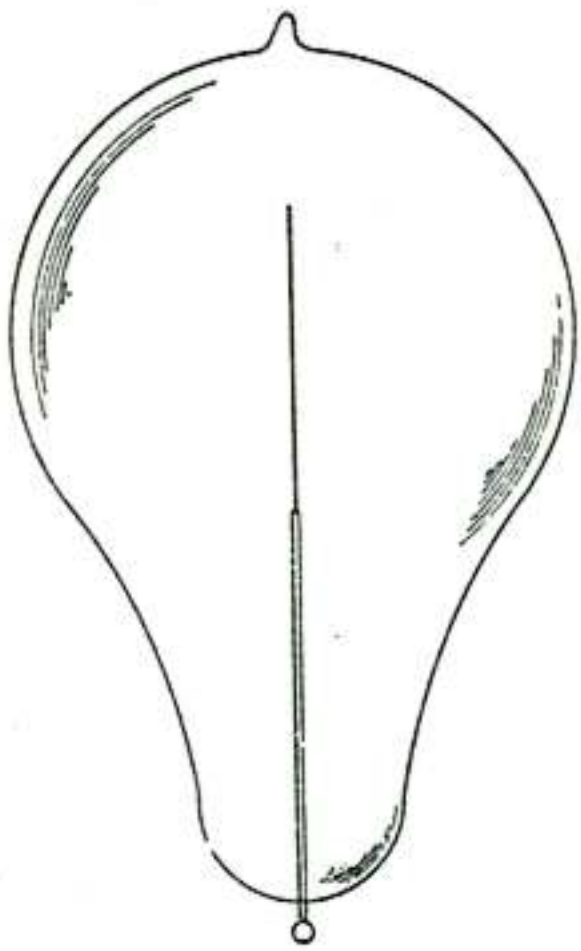

Fig. 22.

With these rapidly alternating potentials there is, however, no necessity of enclosing two blocks in a globe, but a single block, as in Fig. 19, or filament, Fig. 22, may be used. The potential in this case must of course be higher, but is easily obtainable, and besides it is not necessarily dangerous.

The facility with which the button or filament in such a lamp is brought to incandescence, other things being equal, depends on the size of the globe. If a perfect vacuum could be obtained, the size of the globe would not be of importance, for then the heating would be wholly due to the surging of the charges, and all the energy would be given off to the surroundings by radiation. But this can never occur in practice. There is always some gas left in the globe, and although the exhaustion may be carried to the highest degree, still the space inside of the bulb must be considered as conducting

when such high potentials are used, and I assume that, in estimating the energy that may be given off from the filament to the surroundings, we may consider the inside surface of the bulb as one coating of a condenser, the air and other objects surrounding the bulb forming the other coating. When the alternations are very low there is no doubt that a considerable portion of the energy is given off by the electrification of the surrounding air.

In order to study this subject better, I carried on some experiments with excessively high potentials and low frequencies. I then observed that when the hand is approached to the bulb, — the filament being connected with one terminal of the coil, — a powerful vibration is felt, being due to the attraction and repulsion of the molecules of the air

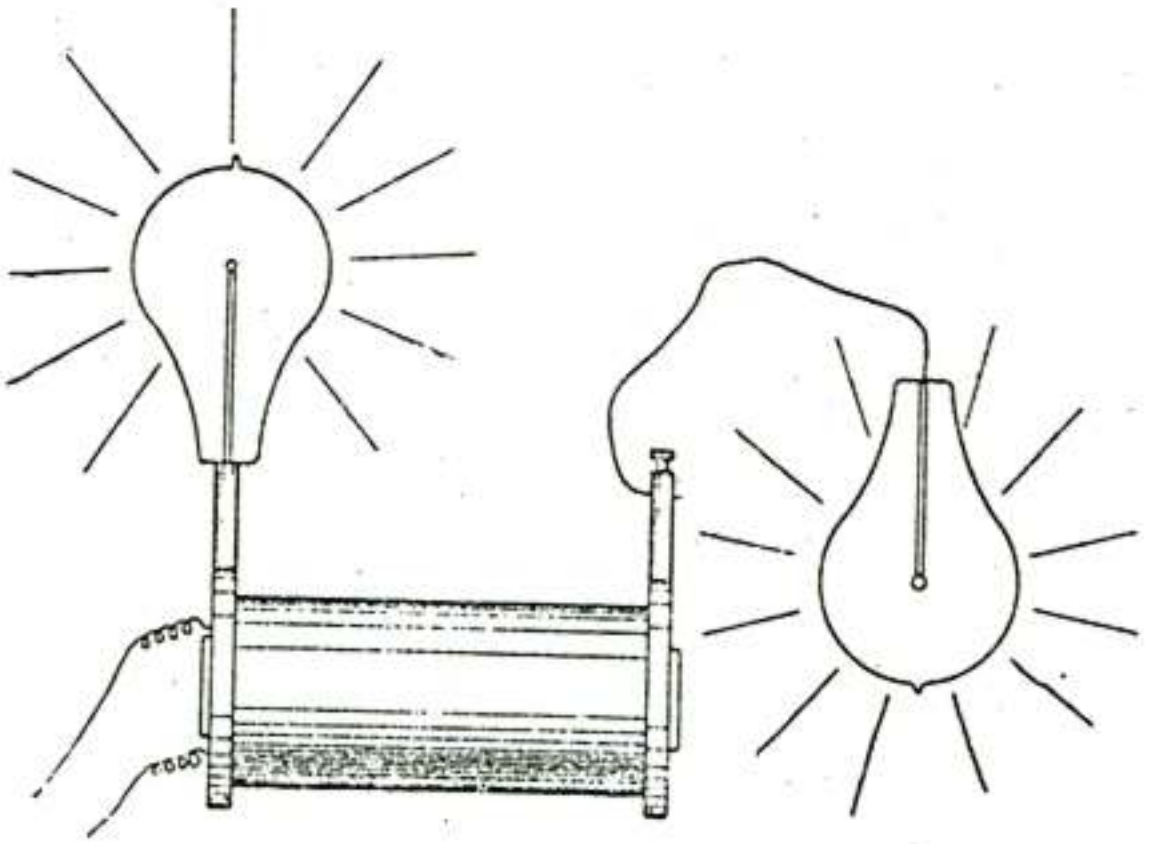

Fig. 23.

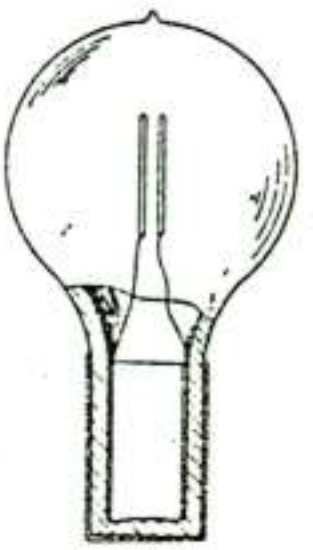

Fig. 24.

which are electrified by induction through the glass. In some cases when the action is very intense I have been able to hear a sound, which must be due to the same cause.

When the alternations are low, one is apt to get an excessively powerful shock from the bulb. In general, when one attaches bulbs or objects of some size to the terminals of the coil, one should look out for the rise of potential, for it may happen that by merely connecting a bulb or plate to the terminal, the potential may rise to many times its original value. When lamps are attached to the terminals, as illustrated in Fig. 23, then the capacity od the bulbs should be such as to give the maximum rise of potential under the existing conditions. In this manner one may obtain the required potential with fewer turns of wire.

The life of such lamps as described above depends, of course, largely on the degree of exhaustion, but to some extent also on the shape of the block of refractory material. Theoretically it would seem that a small sphere of carbon enclosed in a sphere of glass would not suffer deterioration from molecular bombardment, for, the matter in the globe being radiant, the molecules would move in straight lines, and would seldom strike the sphere obliquely. An interesting thought in connection with such a lamp is, that in it "electricity" and electrical energy apparently must move in the same lines.

The use of alternating currents of very high frequency makes it possible to transfer, by electrostatic or electromagnetic induction through the glass of a lamp, sufficient energy to keep a filament at incandescence and so do away with the leading-in wires. Such lamps have been proposed, but for want of proper apparatus they have not been successfully operated. Many forms of lamps on this principle with continuous and broken filaments have been constructed by me and experimented upon. When using a secondary

enclosed within the lamp, a condenser is advantageously combined with the secondary. When the transference is effected by electrostatic induction, the potentials used are, of course, very high with frequencies obtainable from a machine. For instance, with a condenser surface of forty square centimetres, which is not impracticably large, and with glass of good quality 1 mm. thick, using currents alternating twenty thousand times a second, the potential required is approximately 9,000 volts. This may seem large, but since each lamp may be included in the secondary of a transformer of very small dimensions, it would not be inconvenient, and, moreover, it would not produce fatal injury. The transformers would all be preferably in series. The regulation would offer no difficulties, as with currents of such frequencies it is very easy to maintain a constant current.

In the accompanying engravings some of the types of lamps of this kind are shown. Fig. 24 is such a lamp with a broken filament, and Figs. 25a and 25b one with a single outside and inside coating and a single filament. I have also made lamps with two outside and inside coatings and a continuous loop connecting the latter. Such lamps have been operated by me with current impulses of the enormous frequencies obtainable by the disruptive discharge of condensers.

The disruptive discharge of a condenser is especially suited for operating such lamps — with no outward electrical connections — by means of electromagnetic induction, the electromagnetic inductive effects being excessively high; and I have been able to produce the desired incandescence with only a few short turns of wire. Incandescence may also be produced in this manner in a simple closed filament.

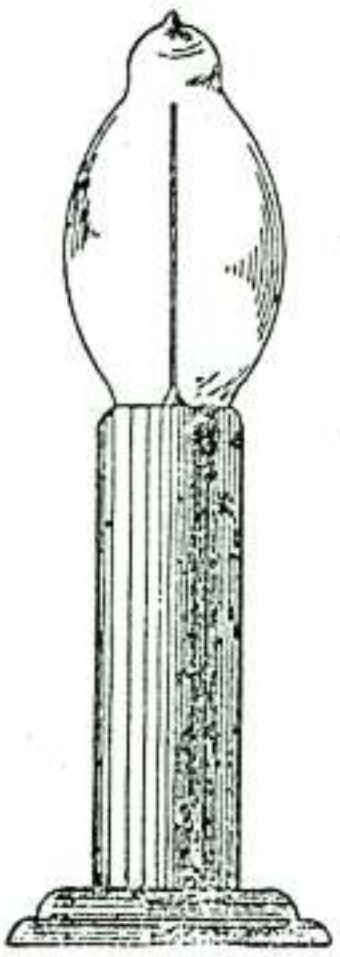

Fig. 25a.

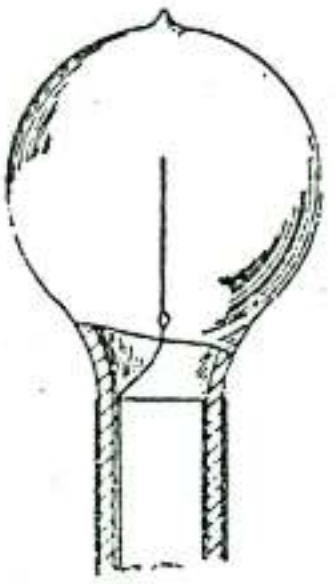

Fig. 25b.

Leaving now out of consideration the practicability of such lamps, I would only say that they possess a beautiful and desirable feature, namely, that they can be rendered, at will, more or less brilliant simply by altering the relative position of the outside and inside condenser coatings, or inducing and induced circuits.

When a lamp is lighted by connecting it to one terminal only of the source, this may be facilitated by providing the globe with an outside condenser coating, which serves at the same time as a reflector, and connecting this to an insulated body of some size. Lamps of this kind are illustrated in Fig. 26 and Fig. 27. Fig. 28 shows the plan of connection. The brilliancy of the lamp may, in this case, be regulated within wide limits by varying the size of the insulated metal plate to which the coating is connected.

It is likewise practicable to light with one leading wire lamps such as illustrated in Fig. 20 and Fig. 21, by connecting one terminal of the lamp to one terminal of the source, and the other to an insulated body of the required size. In all cases the insulated body serves to give off the energy into the surrounding space, and is equivalent to a return wire. Obviously, in the two last-named cases, instead of connecting the wires to an insulated body, connections may be made to the ground.

The experiments which will prove most suggestive and of most interest to the investigator are probably those performed with exhausted tubes. As might be anticipated, a source of such rapidly alternating potentials is capable of exciting the tubes at a considerable distance, and the light effects produced are remarkable.

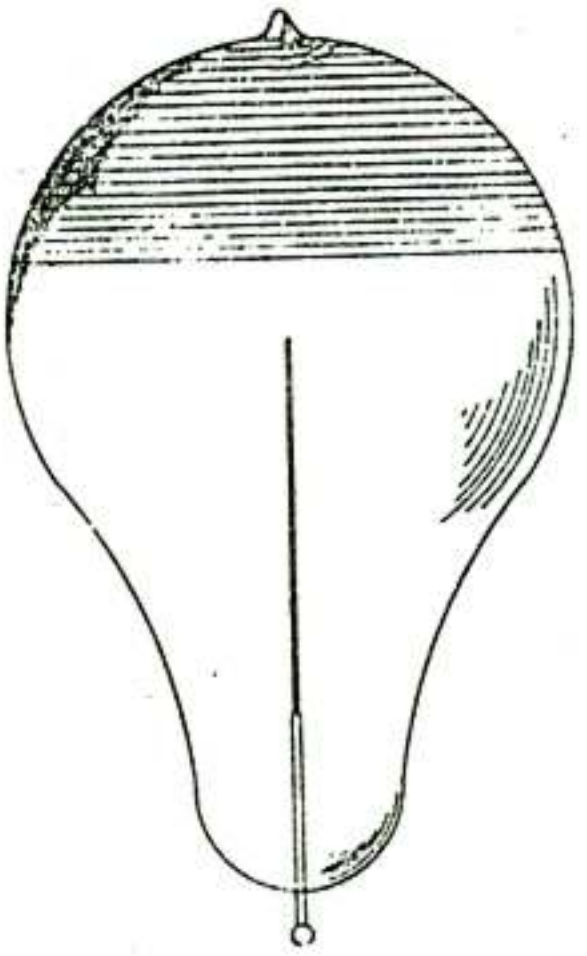

Fig. 26.

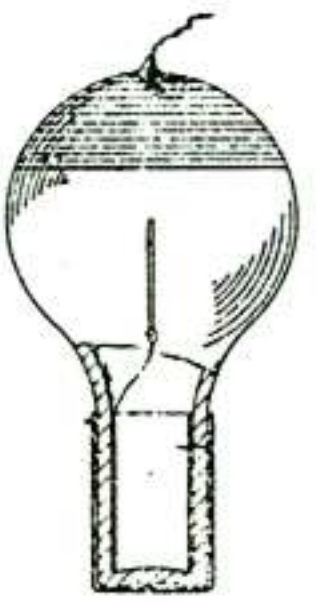

Fig. 27.

During my investigations in this line I endeavored to excite tubes, devoid of any electrodes, by electromagnetic induction, making the tube the secondary of the induction device, and passing through the primary the discharges of a Leyden jar. These tubes were made of many shapes, and I was able to obtain luminous effects which I then thought were due wholly to electromagnetic induction. But on carefully investigating the phenomena I found that the effects produced were more of an electrostatic nature. It may be attributed to this circumstance that this mode of exciting tubes is very wasteful, namely, the primary circuit being closed, the potential, and consequently the electrostatic inductive effect, is much diminished.

When an induction coil, operated as above described, is used, there is no doubt that the tubes are excited by electrostatic induction, and that electromagnetic induction has little, if anything, to do with the phenomena.

This is evident from many experiments. For instance, if a tube be taken in one hand, the observer being near the coil, it is brilliantly lighted and remains so no matter in what position it is held relatively to the observer's body. Were the action electromagnetic, the tube could not be lighted when the observer's body is interposed between it and the coil, or at least its luminosity should be considerably diminished. When the tube is held exactly over the centre of the coil — the latter being wound in sections and the primary placed symmetrically to the secondary — it may remain completely dark, whereas it is rendered intensely luminous by moving it slightly to the

right or left from the centre of the coil. It does not light because in the middle both halves of the coil neutralize each other, and the electric potential is zero. If the action were electromagnetic, the tube should light best in the plane through the centre of the coil, since the electromagnetic effect there should be a maximum. When an arc is established between the terminals, the tubes and lamps in the vicinity of the coil go out, but light up again when the arc is broken, on account of the rise of potential. Yet the electromagnetic effect should be practically the same in both cases.

By placing a tube at some distance from the coil, and nearer to one terminal — preferably at a point on the axis of the coil — one may light it by touching the remote terminal with an insulated body of some size or with the hand, thereby raising the potential at that terminal nearer to the tube. If the tube is shifted nearer to the coil so that it is lighted by the action of the nearer terminal, it may be made to go out by holding, on an insulated support, the end of a wire connected to the remote terminal, in the vicinity of the nearer terminal, by this means counteracting the action of the latter upon the tube. These effects are evidently electrostatic. Likewise, when a tube is placed at a considerable distance from the coil, the observer may, standing upon an insulated support between coil and tube, light the latter by approaching the hand to it; or he may even render it luminous by simply stepping between it and the coil. This would be impossible with electro-magnetic induction, for the body of the observer would act as a screen.

When the coil is energized by excessively weak currents, the experimenter may, by touching one terminal of the coil with the tube, extinguish the latter, and may again light it by bringing it out of contact with the terminal and allowing a small arc to form. This is clearly due to the respective lowering and raising of the potential at that terminal. In the above experiment, when the tube is lighted through a small arc, it may go out when the arc is broken, because the electrostatic inductive effect alone is too weak, though the potential may be much higher; but when the arc is established, the electrification of the end of the tube is much greater, and it consequently lights.

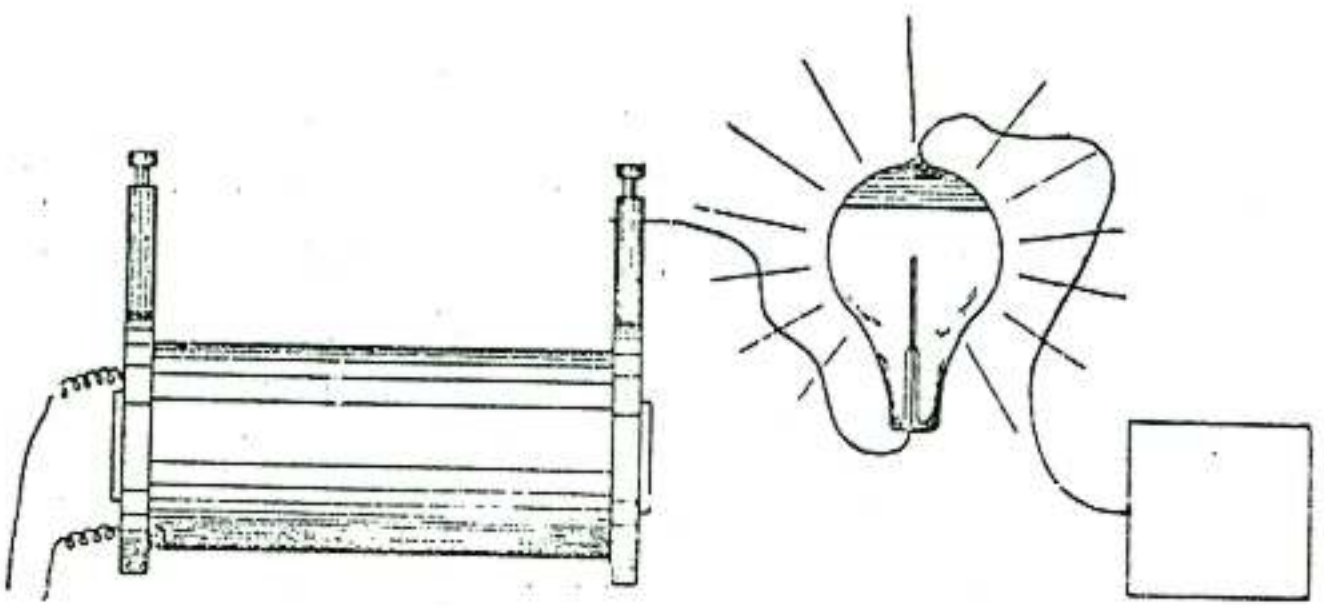

Fig. 28.

If a tube is lighted by holding it near to the coil, and in the hand which is remote, by grasping the tube anywhere with the other hand, the part between the hands is rendered dark, and the singular effect of wiping out the light of the tube may be produced by passing the hand quickly along the tube and at the same time withdrawing it gently from the coil, judging properly the distance so that the tube remains dark afterwards.

If the primary coil is placed sidewise, as in Fig. 16b for instance, and an exhausted tube be introduced from the other side in the hollow space, the tube is lighted most intensely because of the increased condenser action, and in this position the striae are

most sharply defined. In all these experiments described, and in many others, the action is clearly electrostatic.

The effects of screening also indicate the electrostatic nature of the phenomena and show something of the nature of electrification through the air. For instance, if a tube is placed in the direction of the axis of the coil, and an insulated metal plate be interposed, the tube will generally increase in brilliancy, or if it be too far from the coil to light, it may even be rendered luminous by interposing an insulated metal plate. The magnitude of the effects depends to some extent on the size of the plate. But if the metal plate be connected by a wire to the ground, its interposition will always make the tube go out even if it be very near the coil. In general, the interposition of a body between the coil and tube, increases or diminishes the brilliancy of the tube, or its facility to light up, according to whether it increases or diminishes the electrification. When experimenting with an insulated plate, the plate should not be taken too large, else it will generally produce a weakening effect by reason of its great facility for giving off energy to the surroundings.

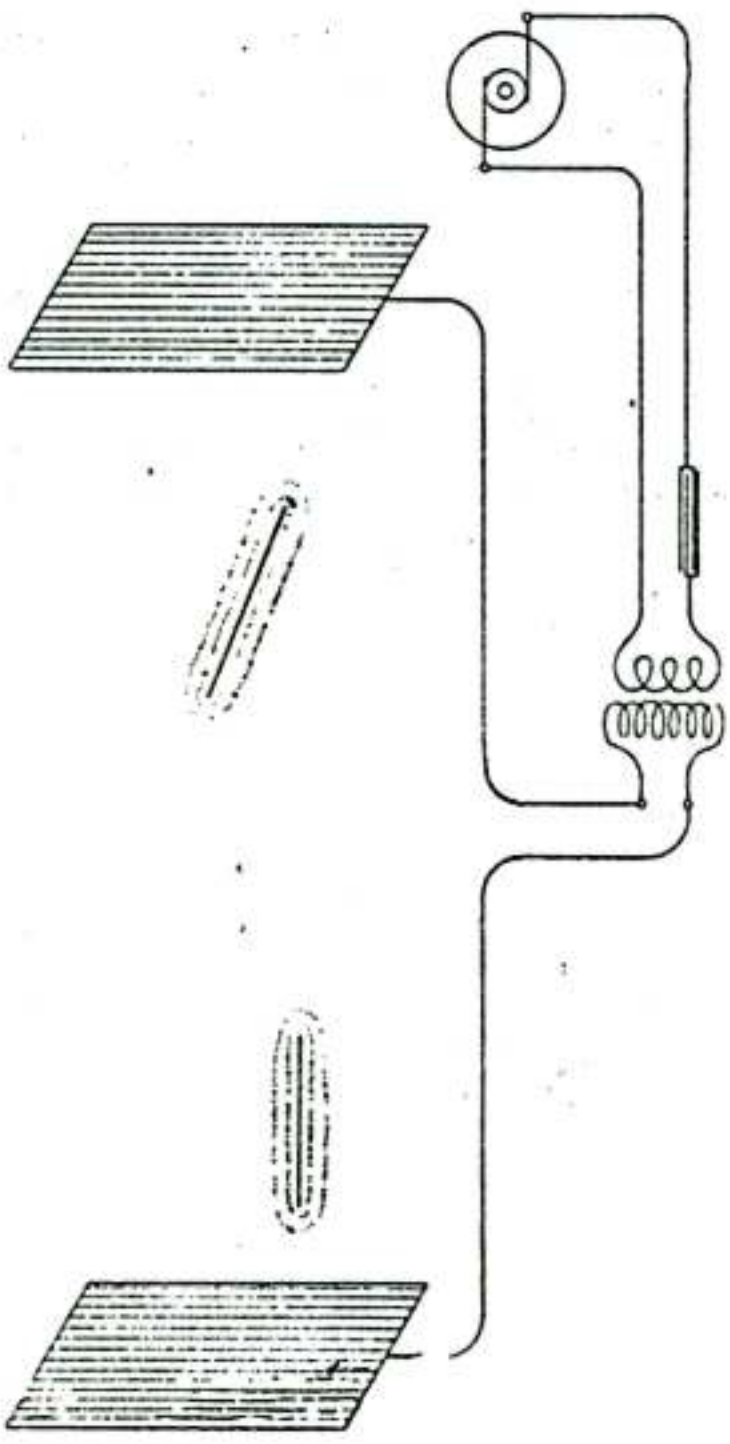

Fig. 29.

If a tube be lighted at some distance from the coil, and a plate of hard rubber or other insulating substance be interposed, the tube may be made to go out. The interposition of the dielectric in this case only slightly increases the inductive effect, but diminishes considerably the electrification through the air.

In all cases, then, when we excite luminosity in exhausted tubes by means of such a coil, the effect is due to the rapidly alternating electrostatic potential; and, furthermore, it must be attributed to the harmonic alternation produced directly by the machine, and not to any superimposed vibration which might be thought to exist. Such superimposed vibrations are impossible when we work with an alternate current machine. If a spring be gradually tightened and released, it does not perform independent vibrations; for this a sudden release is necessary. So with the alternate currents from a dynamo machine; the medium is harmonically strained and released, this giving rise to only one kind of waves; a sudden contact or break, or a sudden giving way of the dielectric, as in the disruptive discharge of a Leyden jar, are essential for the production of superimposed waves.

In all the last described experiments, tubes devoid of any electrodes may be used; and there is no difficulty in producing by their means sufficient light to read by. The light effect is, however, considerably increased by the use of phosphorescent bodies such as yttria, uranium glass, etc. A difficulty will be found when the phosphorescent material is used, for with these powerful effects, it is carried gradually away, and it is preferable to use material in the form of a solid.

Instead of depending on induction at a distance to light the tube, the same may be provided with an external — and, if desired, also with an internal — condenser

coating, and it may then be suspended anywhere in the room from a conductor connected to one terminal of the coil, and in this manner a soft illumination may be provided.

The ideal way of lighting a hall or room would, however, be to produce such a condition in it that an illuminating device could be moved and put anywhere, and that it is lighted, no matter where it is put and without being electrically connected to anything. I have been able to produce such a condition by creating in the room a powerful, rapidly alternating electrostatic field. For this purpose I suspend a sheet of metal a distance from the ceiling on insulating cords and connect it to one terminal of the induction coil, the other terminal being preferably connected to the ground. Or else I suspend two sheets as illustrated in Fig. 29, each sheet being connected with one of the terminals of the coil, and their size being carefully determined. An exhausted tube may then be carried in the hand anywhere between the sheets or placed anywhere, even a certain distance beyond them; it remains always luminous.

In such an electrostatic field interesting phenomena may be observed, especially if the alternations are kept low and the potentials excessively high. In addition to the luminous phenomena mentioned, one may observe that any insulated conductor gives sparks when the hand or another object is approached to it, and the sparks may often be powerful. When a large cconducting object is fastened on an insulating support, and the hand approached to it, a vibration, due to the rythmical motion of the air molecules is felt, and luminous streams may be perceived when the hand is held near a pointed projection. When a telephone receiver is made to touch with one or both of its terminals an insulated conductor of some size, the telephone emits a loud sound; it also emits a sound when a length of wire is attached to one or both terminals, and with very powerful fields a sound may be perceived even without any wire.

How far this principle is capable of practical application, the future will tell. It might be thought that electrostatic effects are unsuited for such action at a distance. Electromagnetic inductive effects, if available for the production of light, might be thought better suited. It is true the electrostatic effects diminish nearly with the cube of the distance from the coil, whereas the electromagnetic inductive effects diminish simply with the distance. But when we establish an electrostatic field of force, the condition is very different, for then, instead of the differential effect of both the terminals, we get their conjoint effect. Besides, I would call attention to the effect that in an alternating electrostatic field, a conductor, such as an exhausted tube, for instance, tends to take up most of the energy, whereas in an electromagnetic alternating field the conductor tends to take up the least energy, the waves being reflected with but little loss. This is one reason why it is difficult to excite an exhausted tube, at a distance, by electromagnetic induction. I have wound coils of very large diameter and of many turns of wire, and connected a Geissler tube to the ends of the coil with the object of exciting the tube at a distance; but even with the powerful inductive effects producible by Leyden jar discharges, the tube could not be excited unless at a very small distance, although some judgment was used as to the dimensions of the coil. I have also found that even the most powerful Leyden jar discharges are capable of exciting only feeble luminous effects in a closed exhausted tube, and even these effects upon thorough examination I have been forced to consider of an electrostatic nature.

How then can we hope to produce the required effects at a distance by means of electromagnetic action, when even in the closest proximity to the source of disturbance, under the most advantageous conditions, we can excite but faint luminosity? It is true that when acting at a distance we have the resonance to help us out. We can connect an exhausted tube, or whatever the illuminating device may be, with an insulated system of the proper capacity, and so it may be possible to increase the effect qualitatively, and only qualitatively, for we would not get *more* energy through the device. So we may, by resonance effect, obtain the required electromotive force in an exhausted tube, and

excite faint luminous effects, but we cannot get enough energy to render the light practically available, and a simple calculation, based on experimental results, shows that even if all the energy which a tube would receive at a certain distance from the source should be wholly converted into light, it would hardly satisfy the practical requirements. Hence the necessity of directing, by means of a conducting circuit, the energy to the place of transformation. But in so doing we cannot very sensibly depart from present methods, and all we could do would be to improve the apparatus.

From these considerations it would seem that if this ideal way of lighting is to rendered practicable it will be only by the use of electrostatic effects. In such a case the most powerful electrostatic inductive effects are needed; the apparatus employed must, therefore, be capable of producing high electrostatic potentials changing in value with extreme rapidity. High frequencies are especially wanted, for practical considerations make it desirable to keep down the potential. By the employment of machines, or, generally speaking, of any mechanical apparatus, but low frequencies can be reached; recourse must, therefore, be had to some other means. The discharge of a condenser affords us a means of obtaining frequencies by far higher than are obtainable mechanically, and I have accordingly employed condensers in the experiments to the above end.

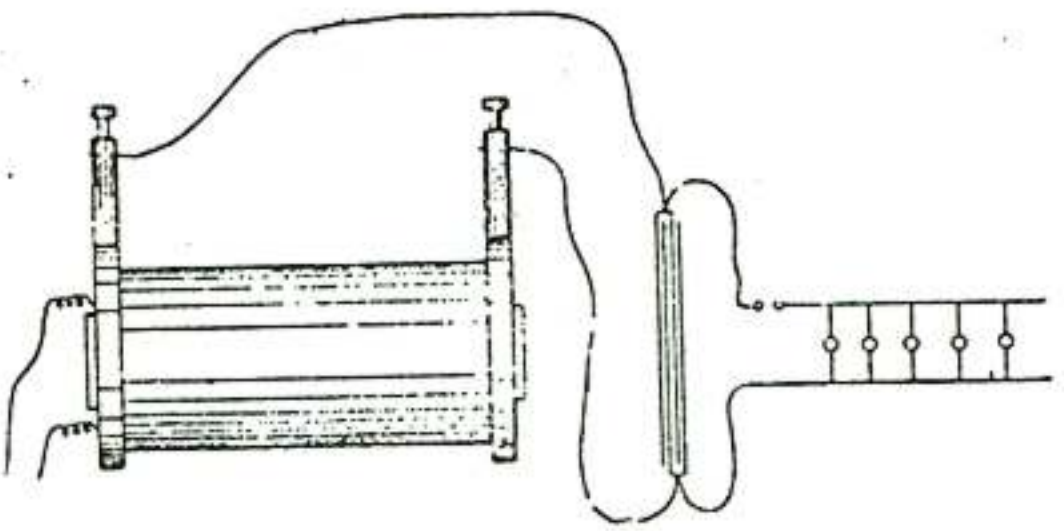

Fig. 30.

When the terminals of a high tension induction coil, Fig. 30, are connected to a Leyden jar, and the latter is discharging disruptively into a circuit, we may look upon the arc playing between the knobs as being a source of alternating, or generally speaking, undulating currents, and then we have to deal with the familiar system of a generator of such currents, a circuit connected to it, and a condenser bridging the circuit. The condenser in such case is a veritable transformer, and since the frequency is excessive, almost any ratio in the strength of the currents in both the branches may be obtained. In reality the analogy is not quite complete, for in the disruptive discharge we have most generally a fundamental instantaneous variation of comparatively low frequency, and a superimposed harmonic vibration, and the laws governing the flow of currents are not the same for both.

In converting in this manner, the ratio of conversion should not be too great, for the loss in the arc between the knobs increases with the square of the current, and if the jar be discharged through very thick and short conductors, with the view of obtaining a very rapid oscillation, a very considerable portion of the energy stored is lost. On the other hand, too small ratios are not practicable for many obvious reasons.

As the converted currents flow in a practically closed circuit, the electrostatic effects are necessarily small, and I therefore convert them into currents or effects of the required character. I have effected such conversions in several ways. The preferred plan of connections is illustrated in Fig. 31. The manner of operating renders it easy to obtain by means of a small and inexpensive apparatus enormous differences of potential which have

been usually obtained by means of large and expensive coils. For this it is only necessary to take an ordinary small coil, adjust to it a condenser and discharging circuit, forming the primary of an auxiliary small coil, and convert upward. As the inductive effect of the primary currents is excessively great, the second coil need have comparatively but very few turns. By properly adjusting the elements, remarkable results may be secured.

In endeavoring to obtain the required electrostatic effects in this manner, I have, as might be expected, encountered many difficulties which I have been gradually overcoming, but I am not as yet prepared to dwell upon my experiences in this direction.

I believe that the disruptive discharge of a condenser will play an important part in the future, for it offers vast possibilities, not only in the way of producing light in a more efficient manner and in the line indicated by theory, but also in many other respects.

For years the efforts of inventors have been directed towards obtaining electrical energy from heat by means of the thermopile. It might seem invidious to remark that but few know what is the real trouble with the thermopile. It is not the inefficiency or small output — though these are great drawbacks — but the fact that the thermopile has its phylloxera, that is, that by constant use it is deteriorated, which has thus far prevented its introduction on an industrial scale. Now that all modern research seems to point with certainty to the use of electricity of excessively high tension, the question must present itself to many whether it is not possible to obtain in a practicable manner this form of energy from heat. We have been used to look upon an electrostatic machine

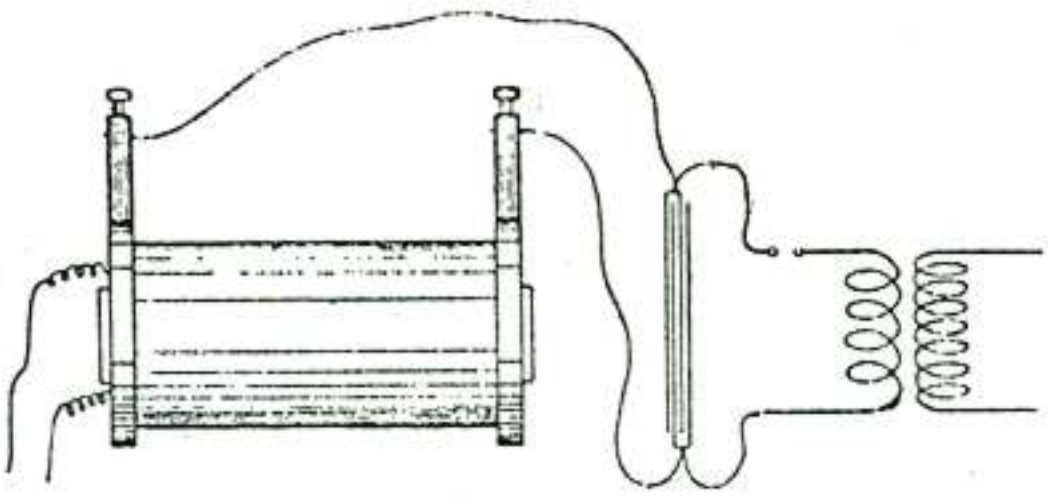

Fig. 31.

as a plaything, and somehow we couple with it the idea of the inefficient and impractical. But now we must think differently, for now we know that everywhere we have to deal with the same forces, and that it is a mere question of inventing proper methods or apparatus for rendering them available.

In the present systems of electrical distribution, the employment of the iron with its wonderful magnetic properties allows us to reduce considerably the size of the apparatus; but, in spite of this, it is still very cumbersome. The more we progress in the study of electric and magnetic phenomena, the more we become convinced that the present methods will be short-lived. For the production of light, at least, such heavy machinery would seem to be unnecessary. The energy required is very small, and if light can be obtained as efficiently as, theoretically, it appears possible, the apparatus need have but a very small output. There being a strong probability that the illuminating methods of the future will involve the use of very high potentials, it seems very desirable to perfect a contrivance capable of converting the energy of heat into energy of the requisite form. Nothing to speak of has been done towards this end, for the thought that electricity of some 50,000 or 100,000 volts pressure or more, even if obtained, would be unavailable for practical purposes, has deterred inventors from working in this direction.

In Fig. 30 a plan of connections is shown for converting currents of high, into currents of low, tension by means of the disruptive discharge of a condenser. This plan

has been used by me frequently for operating a few incandescent lamps required in the laboratory. Some difficulties have been encountered in the arc of the discharge which I have been able to overcome to a great extent; besides this, and the adjustment necessary for the proper working, no other difficulties have been met with, and it was easy to operate ordinary lamps, and even motors, in this manner. The line being connected to the ground, all the wires could be handled with perfect impunity, no matter how high the potential at the terminals of the condenser. In these experiments a high tension induction coil, operated from a battery or from an alternate current machine, was employed to charge the condenser; but the induction coil might be replaced by an apparatus of a different kind, capable of giving electricity of such high tension. In this manner, direct or alternating currents may be converted, and in both cases the current-impulses may be of any desired frequency. When the currents charging the condenser are of the same direction, and it is desired that the converted currents should also be of one direction, the resistance of the discharging circuit should, of course, be so chosen that there are no oscillations.

In operating devices on the above plan I have observed curious phenomena of impedance which are of interest. For instance if a thick copper bar be bent, as indicated in Fig. 32, and shunted by ordinary incandescent lamps, then, by passing the discharge between the knobs, the lamps may be brought to incandescence although they are short-circuited. When a large induction coil is employed it is easy to obtain nodes on the bar, which are rendered evident by the different degree of brilliancy of the lamps, as shown roughly in Fig. 32. The nodes are never clearly defined, but they are simply maxima and minima of potentials along the bar. This is probably due to the irregularity of the arc between the knobs. In general when the above-described plan of conversion from high to low tension is used, the behavior of the disruptive discharge may be closely studied. The nodes may also be investigated by means of an ordinary Cardew voltmeter which should be well insulated. Geissler tubes may also be lighted across the points of the bent bar; in this case, of course, it is better to employ smaller capacities. I have found it practicable to light up in this manner a lamp, and even a Geissler tube, shunted by a short, heavy block of metal, and this result seems at first very curious. In fact, the thicker the copper bar in Fig. 32, the better it is for the success of the experiments, as they appear more striking. When lamps with long slender filaments are used it will be often noted that the filaments are from time to time violently vibrated, the vibration being smallest at the nodal points. This vibration seems to be due to an electrostatic action between the filament and the glass of the bulb.

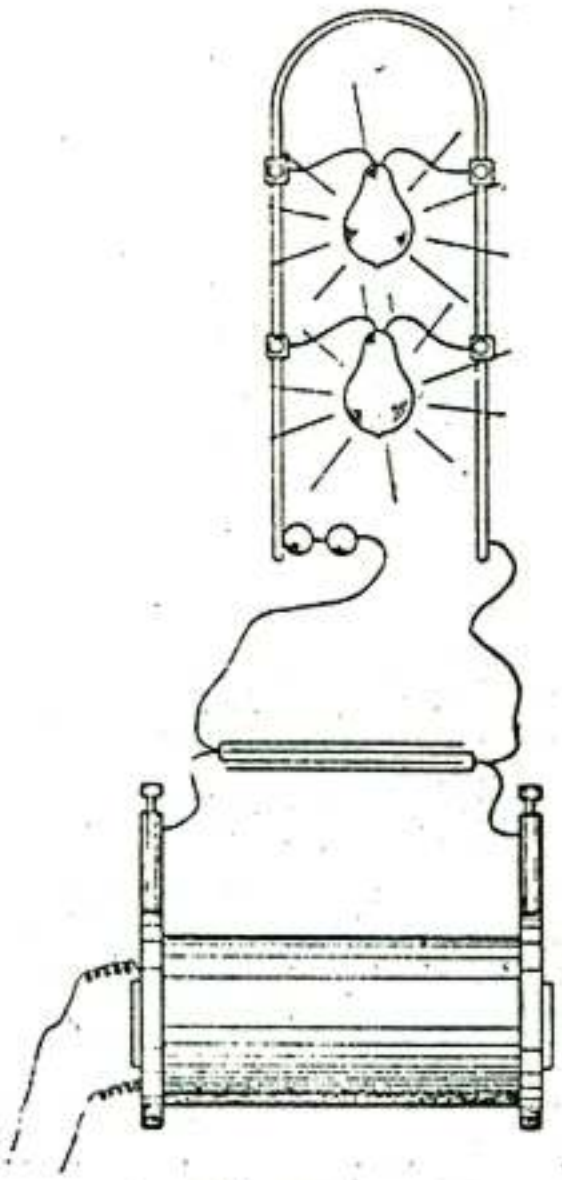

Fig. 32.

In some of the above experiments it is preferable to use special lamps having a straight filament as shown in Fig. 33. When such a lamp is used a still more curious phenomenon than those described may be observed. The lamp may be placed across the copper bar and lighted, and by using somewhat larger capacities, or, in other words, smaller frequencies or smaller impulsive impedances, the filament may be brought to any desired degree of incandescence. But when the impedance is increased, a point is reached when comparatively little current passes through the carbon, and most of it

through the rarefied gas; or perhaps it may be more correct to state that the current divides nearly evenly through both, in spite of the enormous difference in the resistance, and this would be true unless the gas and the filament behave differently. It is then noted that the whole bulb is brilliantly illuminated, and the ends of the leading-in wires become incandescent and often throw off sparks in consequence of the violent bombardment, but the carbon filament remains dark. This is illustrated in Fig. 33. Instead of the filament a single wire extending through the whole bulb may be used, and in this case the phenomenon would seem to be still more interesting.

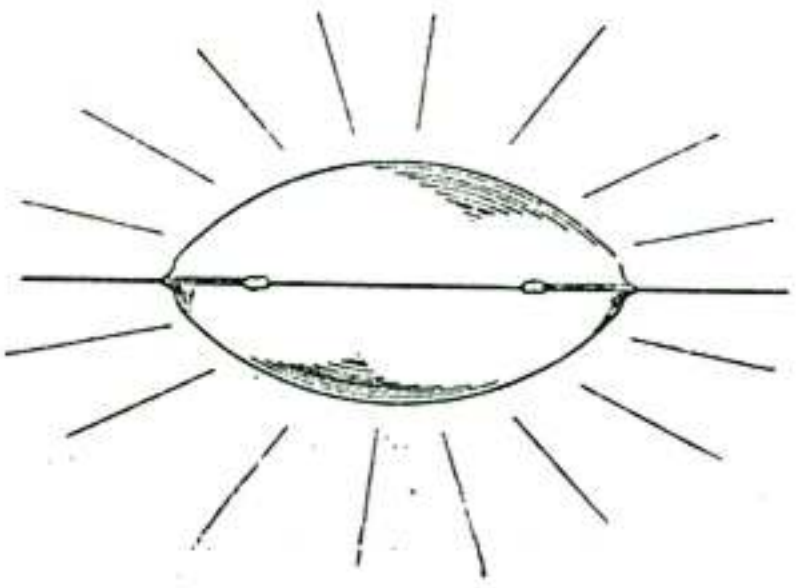

Fig. 33.

From the above experiment it will be evident, that when ordinary lamps are operated by the converted currents, those should be preferably taken in which the platinum wires are far apart, and the frequencies used should not be too great, else the discharge will occur at the ends of the filament or in the base of the lamp between the leading-in wires, and the lamp might then be damaged.

In presenting to you these results of my investigation on the subject under consideration, I have paid only a passing notice to facts upon which I could have dwelt at length, and among many observations I have selected only those which I thought most likely to interest you. The field is wide and completely unexplored, and at every step a new truth is gleaned, a novel fact observed.

How far the results here borne out are capable of practical applications will be decided in the future. As regards the production of light, some results already reached are encouraging and make me confident in asserting that the practical solution of the problem lies in the direction I have endeavored to indicate. Still, whatever may be the immediate outcome of these experiments I am hopeful that they will only prove a step in further developments towards the ideal and final perfection. The possibilities which are opened by modern research are so vast that even the most reserved must feel sanguine of the future. Eminent scientists consider the problem of utilizing one kind of radiation without the others a rational one. In an apparatus designed for the production of light by conversion from any form of energy into that of light, such a result can never be reached, for no matter what the process of producing the required vibrations, be it electrical, chemical or any other, it will not be possible to obtain the higher light vibrations without going through the lower heat vibrations. It is the problem of imparting to a body a certain velocity without passing through all lower velocities. But there is a possibility of obtaining energy not only in the form of light, but motive power, and energy of any other form, in some more direct way from the medium. The time will be when this will be accomplished, and the time has come when one may utter such words before an enlightened audience without being considered a visionary. We are whirling through endless space with an inconceivable speed, all around us everything is spinning, everything is moving, everywhere is energy. There *must* be some way of availing ourselves of this energy more directly. Then, with the light obtained from the medium, with the power derived from it, with every form of energy obtained without effort, from the store forever inexhaustible, humanity will advance with giant strides. The mere contemplation of these magnificent possibilities expands our minds, strengthens our hopes and fills our hearts with supreme delight.

EXPERIMENTS WITH ALTERNATE CURRENTS OF HIGH POTENTIAL AND HIGH FREQUENCY*

I cannot find words to express how deeply I feel the honor of addressing some of the foremost thinkers of the present time, and so many able scientific men, engineers and electricians, of the country greatest in scientific achievements.

The results which I have the honor to present before such a gathering I cannot call my own. There are among you not a few who can lay better claim than myself on any feature of merit which this work may contain. I need not mention many names which are world-known — names of those among you who are recognized as the leaders in this enchanting science; but one, at least, I must mention — a name which could not be omitted in a demonstration of this kind. It is a name associated with the most beautiful invention ever made: it is Crookes!

When I was at college, a good time ago, I read, in a translation (for then I was not familiar with you magnificent language), the description of his experiments on radiant matter. I read it only once in my life — that time — yet every detail about that charming work I can remember this day. Few are the books, let me say, which can make such an impression upon the mind of a student.

But if, on the present occasion, I mention this name as one of many your institution can boast of, it is because I have more than one reason to do so. For what I have to tell you and to show you this evening concerns, in a large measure, that same vague world which Professor Crookes has so ably explored; and, more than this, when I trace back the mental process which led me to these advances — which even by myself cannot be considered trifling, since they are so appreciated by you — I believe that their real origin, that which started me to work in this direction, and brought me to them, after a long period of constant thought, was that fascinating little book which I read many years ago.

And now that I have made a feeble effort to express my homage and acknowledge my indebtedness to him and others among you, I will make a second effort, which I hope you will not find so feeble as the first, to entertain you.

Give me leave to introduce the subject in a few words.

A short time ago I had the honor to bring before our American Institute of Electrical Engineers some results then arrived at by me in a novel line of work. I need not assure you that the many evidences which I have received that English scientific men and engineers were interested in this work have been for me a great reward and encouragement. I will not dwell upon the experiments already described, except with the view of completing, or more clearly expressing, some ideas advanced by me before, and also with the view of rendering the study here presented self-contained, and my remarks on the subject of this evening's lecture consistent.

---

* Lecture delivered before the I.E.E., London, February, 1892.

This investigation, then, it goes without saying, deals with alternating currents, and, to be more precise, with alternating currents of high potential and high frequency. Just in how much a very high frequency is essential for the production of the results presented is a question which, even with my present experience, would embarrass me to answer. Some of the experiments may be performed with low frequencies; but very high frequencies are desirable, not only on account of the many effects secured by their use, but also as a convenient means of obtaining, in the induction apparatus employed, the high potentials, which in their turn are necessary to the demonstration of most of the experiments here contemplated.

Of the various branches of electrical investigation, perhaps the most interesting and immediately the most promising is that dealing with alternating currents. The progress in this branch of applied science has been so great in recent years that it justifies the most sanguine hopes. Hardly have we become familiar with one fact, when novel experiences are met with and new avenues of research are opened. Even at this hour possibilities not dreamed of before are, by the use of these currents, partly realized. As in nature all is ebb and tide, all is wave motion, so it seems that in all branches of industry alternating currents — electric wave motion — will have the sway.

One reason, perhaps, why this branch of science is being so rapidly developed is to be found in the interest which is attached to its experimental study. We wind a simple ring of iron with coils; we establish the connections to the generator, and with wonder and delight we note the effects of strange forces which we bring into play, which allow us to transform, to transmit and direct energy at will. We arrange the circuits properly, and we see the mass of iron and wires behave as though it were endowed with life, spinning a heavy armature, through invisible connections, with great speed and power — with the energy possibly conveyed from a great distance. We observe how the energy of an alternating current traversing the wire manifests itself — not so much in the wire as in the surrounding space — in the most surprising manner, taking the forms of heat, light, mechanical energy, and, most surprising of all, even chemical affinity. All these observations fascinate us, and fill us with an intense desire to know more about the nature of these phenomena. Each day we go to our work in the hope of discovering, — in the hope that some one, on matter who, may find a solution of one of the pending great problems, — and each succeeding day we return to our task with renewed ardor; and even if we *are* unsuccessful, our work has not been in vain, for in these strivings, in these efforts, we have found hours of untold pleasure, and we have directed our energies to the benefit of mankind.

We may take — at random, if you choose — any of the many experiments which may be performed with alternating currents; a few of which only, and by no means the most striking, form the subject of this evening's demonstration; they are all equally interesting, equally inciting to thought.

Here is a simple glass tube from which the air has been partially exhausted. I take hold of it; I bring my body in contact with a wire conveying alternating currents of high potential, and the tube in my hand is brilliantly lighted. In whatever position I may put it, wherever I may move it in space, as far as I can reach, its soft, pleasing light persists with undiminished brightness.

Here is an exhausted bulb suspended from a single wire. Standing on an insulated support, I grasp it, and a platinum button mounted in it is brought to vivid incandescence.

Here, attached to a leading wire, is another bulb, which, as I touch its metallic socket, is filled with magnificent colors of phosphorescent light.

Here still another, which by my fingers' touch casts a shadow — the Crookes shadow, of the stem inside of it.

Here, again, insulated as I stand on this platform, I bring my body in contact with one of the terminals of the secondary of this induction coil — with the end of a wire many miles long — and you see streams of light break forth from its distant end, which is set in violent vibration.

Here, once more, I attach these two plates of wire gauze to the terminals of the coil, I set them a distance apart, and I set the coil to work. You may see a small spark pass between the plates. I insert a thick plate of one of the best dielectrics between them, and instead of rendering altogether impossible, as we are used to expect, I *aid* the passage of the discharge, which, as I insert the plate, merely changes in appearance and assumes the form of luminous streams.

Is there, I ask, can there be, a more interesting study than that of alternating currents?

In all these investigations, in all these experiments, which are so very, very interesting, for many years past — ever since the greatest experimenter who lectured in this hall discovered its principle — we have had a steady companion, an appliance familiar to every one, a plaything once, a thing of momentous importance now — the induction coil. There is no dearer appliance to the electrician. From the ablest among you, I dare say, down to the inexperienced student, to your lecturer, we all have passed many delightful hours in experimenting with the induction coil. We have watched its play, and thought and pondered over the beautiful phenomena which it disclosed to our ravished eyes. So well known is this apparatus, so familiar are these phenomena to every one, that my courage nearly fails me when I think that I have ventured to address so able an audience, that I have ventured to entertain you with that same old subject. Here in reality is the same apparatus, and here are the same phenomena, only the apparatus is operated somewhat differently, the phenomena are presented in a different aspect. Some of the results we find as expected, others surprise us, but all captivate our attention, for in scientific investigation each novel result achieved may be the centre of a new departure, each novel fact learned may lead to important developments.

Usually in operating an induction coil we have set up a vibration of moderate frequency in the primary, either by means of an interrupter or break, or by the use of an alternator. Earlier English investigators, to mention only Spottiswoode and J. E. H. Gordon, have used a rapid break in connection with the coil. Our knowledge and experience of to-day enables us to see clearly why these coils under the conditions of the tests did not disclose any remarkable phenomena, and why able experimenters failed to perceive many of the curious effects which have since been observed.

In the experiments such as performed this evening, we operate the coil either from a specially constructed alternator capable of giving many thousands of reversals of current per second, or, by disruptively discharging a condenser through the primary, we set up a vibration in the secondary circuit of a frequency of many hundred thousand or millions per second, if we so desire; and in using either of these means we enter a field as yet unexplored.

It is impossible to pursue an investigation in any novel line without finally making some interesting observation or learning some useful fact. That this statement is applicable to the subject of this lecture the many curious and unexpected phenomena which we observe afford a convincing proof. By way of illustration, take for instance the most obvious phenomena, those of the discharge of the induction coil.

Here is a coil which is operated by currents vibrating with extreme rapidity, obtained by disruptively discharging a Leyden jar. It would not surprise a student were the lecturer to say that the secondary of this coil consists of a small length of comparatively stout wire; it would not surprise him were the lecturer to state that, in spite of this, the coil is capable of giving any potential which the best insulation of the turns is able to

withstand; but although he may be prepared, and even be indifferent as to the anticipated result, yet the aspect of the discharge of the coil will surprise and interest him. Every one is familiar with the discharge of an ordinary coil; it need not be reproduced here. But, by way of contrast, here is a form of discharge of a coil, the primary current of which is vibrating several hundred thousand times per second. The discharge of an ordinary coil appears as a simple line or band of light. The discharge of this coil appears in the form of powerful brushes and luminous streams issuing from all points of the two straight wires attached to the terminals of the secondary (Fig. 1.)

Now compare this phenomenon which you have just witnessed with the discharge of a Holtz or Wimshurst machine — that other interesting appliance so dear to the experimenter. What a difference there is between these phenomena! And yet, had I made the necessary arrangements — which could have been made easily, were it not that they would interfere with other experiments — I could have produced with this coil sparks which, had I the coil hidden from your view and only two knobs exposed, even the keenest observer among you would find it difficult, if not impossible, to distinguish from those of an influence or friction machine. This may be done in many ways — for instance, by operating the induction coil which charges the condenser from an alternating-current machine of very low frequency, and preferably adjusting the discharge circuit so that there are no oscillations set up in it. We then obtain in the secondary circuit, if the knobs are of the required size and properly set, a more or less rapid succession of sparks of great intensity and small quantity, which possess the same brilliancy, and are accompanied by the same sharp crackling sound, as those obtained from a friction or influence machine.

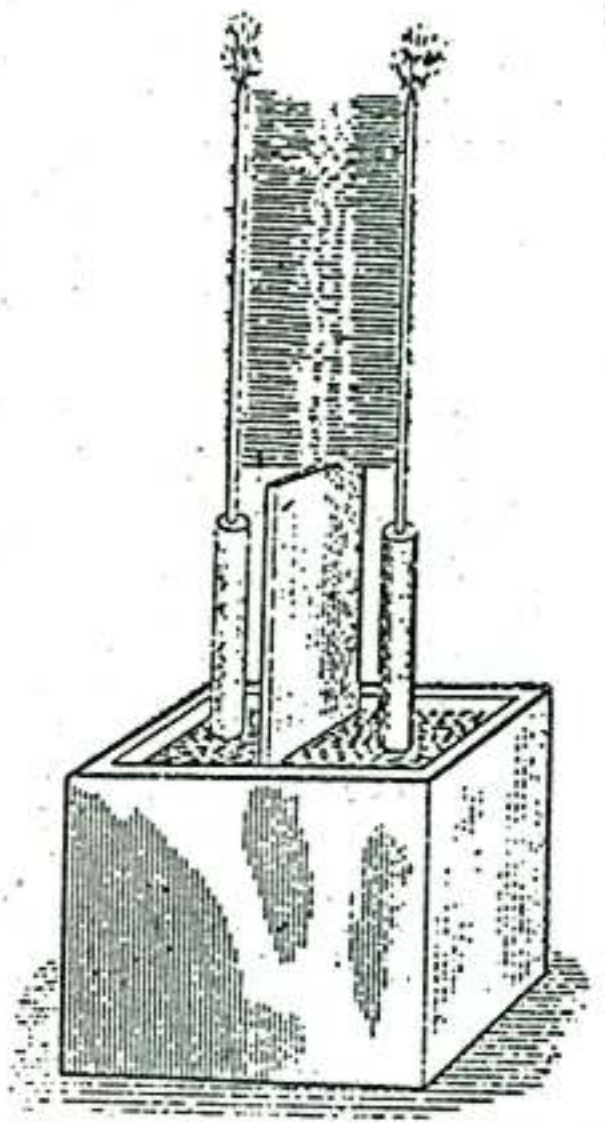

Fig. 1.

Another way is to pass through two primary circuits, having a common secondary, two currents of a slightly different period, which produce in the secondary circuit sparks occurring at comparatively long intervals. But, even with the means at hand this evening, I may succeed in imitating the spark of a Holtz machine. For this purpose I establish between the terminals of the coil which charges the condenser a long, unsteady arc, which is periodically interrupted by the upward current of air produced by it. To increase the current of air I place on each side of the arc, and close to it, a large plate of mica. The condenser charged from this coil discharges into the primary circuit of a second coil through a small air gap, which is necessary to produce a sudden rush of current through the primary. The scheme of connections in the present experiment is indicated in Fig. 2.

G is an ordinarily constructed alternator, supplying the primary *P* of an induction coil, the secondary *S* of which charges the condensers or jars *C C*. The terminals of the secondary are connected to the inside coatings of the jars, the outer coatings being connected to the ends of the primary *p p* of a second induction coil. This primary *p p* has a small air gap *a b*.

The secondary *s* of this coil is provided with knobs or spheres *K K* of the proper size and set at a distance suitable for the experiment.

A long arc is established between the terminals *A B* of the first induction coil. *M M* are the mica plates.

Each time the arc is broken between *A* and *B* the jars are quickly charged and discharged through the primary *p p*, producing a snapping spark between the knobs *K K*. Upon the arc forming between *A* and *B* the potential falls, and the jars cannot be charged to such high potential as to break through the air gap *a b* until the arc is again broken by the draught.

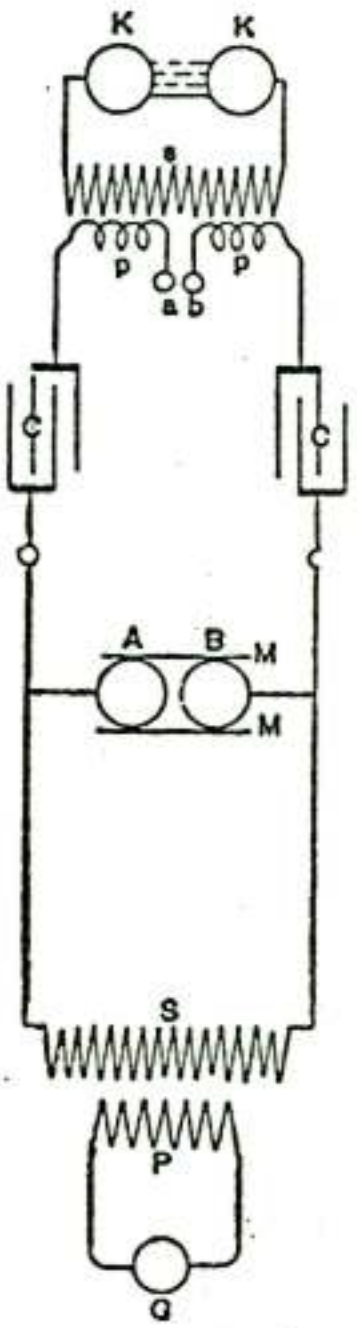

Fig. 2.

In this manner sudden impulses, at long intervals, are produced in the primary *p p*, which in the secondary *s* give a corresponding number of impulses of great intensity. If the secondary knobs or spheres, *K K*, are of the proper size, the sparks show much resemblance to those of a Holtz machine.

But these two effects, which to the eye appear so very different, are only two of the many discharge phenomena. We only need to change the conditions of the test, and again we make other observations of interest.

When, instead of operating the induction coil as in the last two experiments, we operate it from a high frequency alternator, as in the next experiment, a systematic study of the phenomena is rendered much more easy. In such case, in varying the strength and frequency of the currents through the primary, we may observe five distinct forms of discharge, which I have described in my former paper on the subject* before the American Institute of Electrical Engineers, May 20, 1891.

It would take too much time, and it would lead us too far from the subject presented this evening, to reproduce all these forms, but it seems to me desirable to show you one of them. It is a brush discharge, which is interesting in more than one respect. Viewed from a near position it resembles much a jet of gas escaping under great pressure. We know that the phenomenon is due to the agitation of the molecules near the terminal, and we anticipate that some heat must be developed by the impact of the molecules against the terminal or against each other. Indeed, we find that the brush is hot, and only a little thought leads us to the conclusion that, could we but reach sufficiently high frequencies, we could produce a brush which would give intense light and heat, and which would resemble in every particular an ordinary flame, save, perhaps, that both phenomena might not be due to the same agent — save, perhaps, that chemical affinity might not be *electrical* in its nature.

As the production of heat and light is here due to the impact of the molecules, or atoms of air, or something else besides, and, as we can augment the energy simply by raising the potential, we might, even with frequencies obtained from a dynamo machine, intensify the action to such a degree as to bring the terminal to melting heat. But with such low frequencies we would have to deal always with something of the nature of an electric current. If I approach a conducting object to the brush, a thin little spark passes, yet, even with the frequencies used this evening, the tendency to spark is not very great. So, for instance, if I hold a metallic sphere at some distance above the

* See The Electrical World, July 11, 1891.

terminal you may see the whole space between the terminal and sphere illuminated by the streams without the spark passing; and with the much higher frequencies obtainable by the disruptive discharge of a condenser, were it not for the sudden impulses, which are comparatively few in number, sparking would not occur even at very small distances. However, with incomparably higher frequencies, which we may yet find means to produce efficiently, and provided that electric impulses of such high frequencies could be transmitted through a conductor, the electrical characteristics of the brush discharge would completely vanish — no spark would pass, no shock would be felt — yet we would still have to deal with an *electric* phenomenon, but in the broad, modern interpretation of the word. In my first paper before referred to I have pointed out the curious properties of the brush, and described the best manner of producing it, but I have thought it worth while to endeavor to express myself more clearly in regard to this phenomenon, because of its absorbing interest.

When a coil is operated with currents of wery high frequency, beautiful brush effects may be produced, even if the coil be of comparatively small dimensions. The experimenter may vary them in many ways, and, if it were nothing else, they afford a pleasing sight. What adds to their interest is that they may be produced with one single terminal as well as with two — in fact, often better with one than with two.

But of all the discharge phenomena observed, the most pleasing to the eye, and the most instructive, are those observed with a coil which is operated by means of the disruptive discharge of a condenser. The power of the brushes, the abundance of the sparks, when the conditions are patiently adjusted, is often amazing. With even a very small coil, if it be so well insulated as to stand a difference of potential of several thousand volts per turn, the sparks may be so abundant that the whole coil may appear a complete mass of fire.

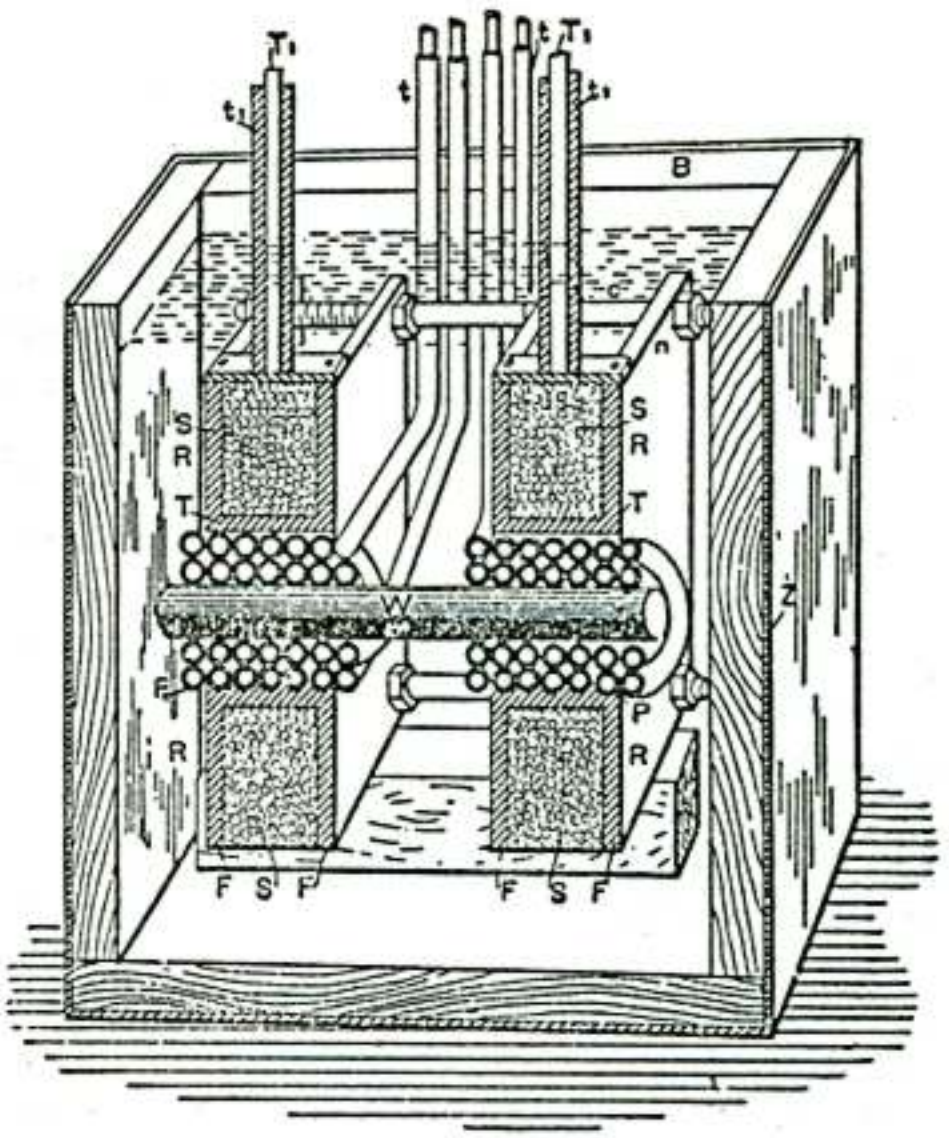

Fig. 3.

Curiously enough the sparks, when the terminals of the coil are set at a considerable distance, seem to dart in every possible direction as though the terminals were perfectly independent of each other. As the sparks would soon destroy the insulation it is necessary to prevent them. This is best done by immersing the coil in a good liquid insulator, such as boiled-out oil. Immersion in a liquid may be considered almost an absolute necessity for the continued and successful working of such a coil.

It is of course out of the question, in an experimental lecture, with only a few minutes at disposal for the performance of each experiment, to show these discharge phenomena to advantage, as to produce each phenomenon at its best a very careful adjustment is required. But even if imperfectly produced, as they are likely to be this evening, they are sufficiently striking to interest an intelligent audience.

Before showing some of these curious effects I must, for the sake of completeness, give a short description of the coil and other apparatus used in the experiments with the disruptive discharge this evening.

It is contained in a box *B* (Fig. 3) of thick boards of hard wood, covered on the outside with zinc sheet Z, which is carefully soldered all around. It might be advisable, in a strictly scientific investigation, when accuracy is of great importance, to do away with the metal cover, as it might introduce many errors, principally on account of its complex action upon the coil, as a condenser of very small capacity and as an electrostatic and electromagnetic screen. When the coil is used for such experiments as are here contemplated, the employment of the metal cover offers some practical advantages, but these are not of sufficient importance to be dwelt upon.

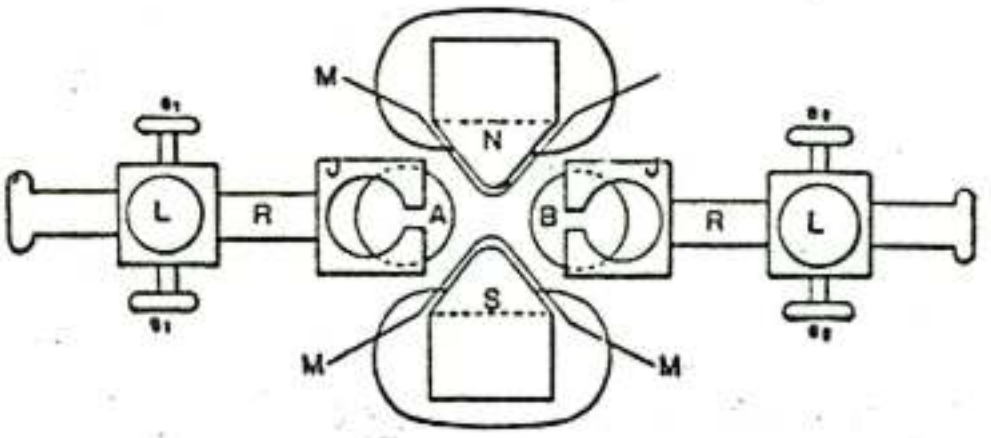

Fig. 4.

The coil should be placed symmetrically to the metal cover, and the space between should, of course, not be too small, certainly not less than, say, five centimetres, but much more if possible; especially the two sides of the zinc box, which are at right angles to the axis of the coil, should be sufficiently remote from the latter, as otherwise they might impair its action and be a source of loss.

The coil consists of two spools of hard rubber *R R*, held apart at a distance of 10 centimetres by bolts *c* and nuts *n*, likewise of hard rubber. Each spool comprises a tube *T* of approximately 8 centimetres inside diameter, and 3 millimetres thick, upon which are screwed two flanges *F F*, 24 centimetres square, the space between the flanges being about 3 centimetres. The secondary, *S S*, of the best gutta percha-covered wire, has 26 layers, 10 turns in each, giving for each half a total of 260 turns. The two halves are wound oppositely and connected in series, the connection between both being made over the primary. This disposition, besides being convenient, has the advantage that when the coil is well balanced — that is, when both of its terminals T_1 T_1 are connected to bodies or devices of equal capacity — there is not much danger of breaking through to the primary, and the insulation between the primary and the secondary need not be thick. In using the coil it is advisable to attach to *both* terminals devices of nearly equal capacity, as, when the capacity of the terminals is not equal, sparks will be apt to pass to the primary. To avoid this, the middle point of the secondary may be connected to the primary, but this is not always practicable.

The primary *P P* is wound in two parts, and oppositely, upon a wooden spool *W*, and the four ends are led out of the oil through hard rubber tubes *t t*. The ends of the secondary T_1 T_1 are also led out of the oil through rubber tubes t_1 t_1 of great thickness. The primary and secondary layers are insulated by cotton cloth, the thickness of the insulation, of course, bearing some proportion to the difference of potential between the turns of the different layers. Each half of the primary has four layers, 24 turns in each, this giving a total of 96 turns. When both the parts are connected in series, this gives a ratio of conversion of about 1:2.7, and with the primaries in multiple, 1:5,4; but in

operating with very rapidly alternating currents this ratio does not convey even an approximate idea of the ratio of the E.M.Fs. in the primary and secondary circuits. The coil is held in position in the oil on wooden supports, there being about 5 centimetres thickness of oil all round. Where the oil is not specially needed, the space is filled with pieces of wood, and for this purpose principally the wooden box *B* surrounding the whole is used.

The construction here shown is, of course, not the best on general principles, but I believe it is a good and convenient one for the production of effects in which an excessive potential and a very small current are needed.

In connection with the coil I use either the ordinary form of discharger or a modified form. In the former I have introduced two changes which secure some advantages, and which are obvious. If they are mentioned, it is only in the hope that some experimenter may find them of use.

One of the changes is that the adjustable knobs *A* and *B* (Fig. 4), of the discharger are held in jaws of brass, *J J*, by spring pressure, this allowing of turning them successively into different positions, and so doing away with the tedious process of frequent polishing up.

The other change consists in the employment of a strong electromagnet *N S*, which is placed with its axis at right angles to the line joining the knobs *A* and *B*, and produces a strong magnetic field between them. The pole pieces of the magnet are movable and properly formed so as to protrude between the brass knobs, in order to make the field

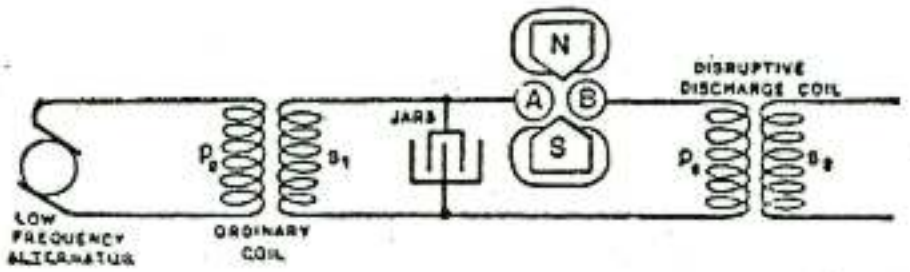

Fig. 5.

as intense as possible; but to prevent the discharge from jumping to the magnet the pole pieces are protected by a layer of mica, *M M*, of sufficient thickness. s_1 s_1 and s_2 s_2 are screws for fastening the wires. On each side one of the screws is for large and the other for small wires. *L L* are screws for fixing in position the rods *R R*, which support the knobs.

In another arrangement with the magnet I take the discharge between the rounded pole pieces themselves, which in such case are insulated and preferably provided with polished brass caps.

The employment of an intense magnetic field is of advantage principally when the induction coil or transformer which charges the condenser is operated by currents of very low frequency. In such a case the number of the fundamental discharges between the knobs may be so small as to render the currents produced in the secondary unsuitable for many experiments. The intense magnetic field than serves to blow out the arc between the knobs as soon as it is formed, and the fundamental discharges occur in quicker succession.

Instead of the magnet, a draught or blast of air may be employed with some advantage. In this case the arc is preferably established between the knobs *A B*, in Fig. 2 (the knobs *a b* being generally joined, or entirely done away with), as in this disposition the arc is long and unsteady, and is easily affected by the draught.

When a magnet is employed to break the arc, it is better to choose the connection indicated diagrammatically in Fig 5, as in this case the currents forming the arc are much more powerful, and the magnetic field exercises a greater influence. The use of the

magnet permits, however, of the arc being replaced by a vacuum tube, but I have encountered great difficulties in working with an exhausted tube.

The other form of discharger used in these and similar experiments is indicated in Figs. 6 and 7. It consists of a number of brass pieces *c c* (Fig. 6), each of which comprises a spherical middle portion *m* with an extension *e* below — which is merely used to fasten the piece in a lathe when polishing up the discharging surface — and a column above, which consists of a knurled flange *f* surmounted by a threaded stem *l* carrying a nut *n*, by means of which a wire is fastened to the column. The flange *f*

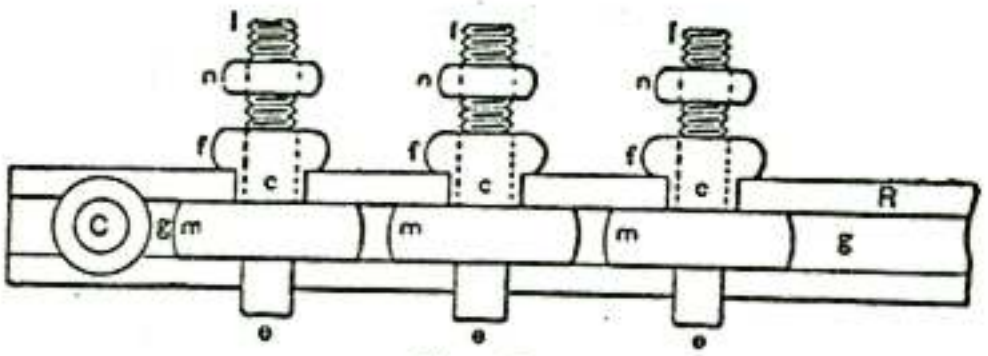

Fig. 6.

conveniently serves for holding the brass piece when fastening the wire, and also for turning it in any position when it becomes necessary to present a fresh discharging surface. Two stout strips of hard rubber *R R*, with planed grooves *g g* (Fig. 7) to fit the middle portion of the pieces *c c*, serve to clamp the latter and hold them firmly in position by means of two bolts *C C* (of which only one is shown) passing through the ends of the strips.

In the use of this kind of discharger I have found three principal advantages over the ordinary form. First, the dielectric strength of a given total width of air space is greater when a great many small air gaps are used instead of one, which permits of working with a smaller length of air gap, and that means smaller loss and less deterioration of the metal; secondly by reason of splitting the arc up into smaller arcs, the polished surfaces are made to last much longer; and, thirdly, the apparatus affords some gauge in the experiments. I usually set the pieces by putting between them sheets of uniform thickness at a certain very small distance which is known from the experiments of Sir William Thomson to require a certain electromotive force to be bridged by the spark.

It should, of course, be remembered that the sparking distance is much diminished as the frequency is increased. By taking any number of spaces the experimenter has a rough idea of the electromotive force, and he finds it easier to repeat an experiment, as he has not the trouble of setting the knobs again and again. With this kind of discharger I have been able to maintain an oscillating motion without any spark being visible with the naked eye between the knobs, and they would not show a very appreciable rise in temperature. This form of discharge also lends itself to many arrangements of condensers and circuits which are often very convenient and time-saving. I have used it preferably in a disposition similar to that indicated in Fig. 2, when the currents forming the arc are small.

I may here mention that I have also used dischargers with single or multiple air gaps, in which the discharge surfaces were rotated with great speed. No particular advantage was, however, gained by this method, except in cases where the currents from the condenser were large and the keeping cool of the surfaces was necessary, and in cases when, the discharge not being oscillating of itself, the arc as soon as established was broken by the air current, thus starting the vibration at intervals in rapid succession. I have also used mechanical interrupters in many ways. To avoid the difficulties with frictional contacts, the preferred plan adopted was to establish the arc and rotate through it at great speed a rim of mica provided with many holes and fastened to a steel plate.

It is understood, of course, that the employment of a magnet, air current, or other interrupter, produces an effect worth noticing, unless the self-induction, capacity and resistance are so related that there are oscillations set up upon each interruption.

I will now endeavor to show you some of the most noteworthy of these discharge phenomena.

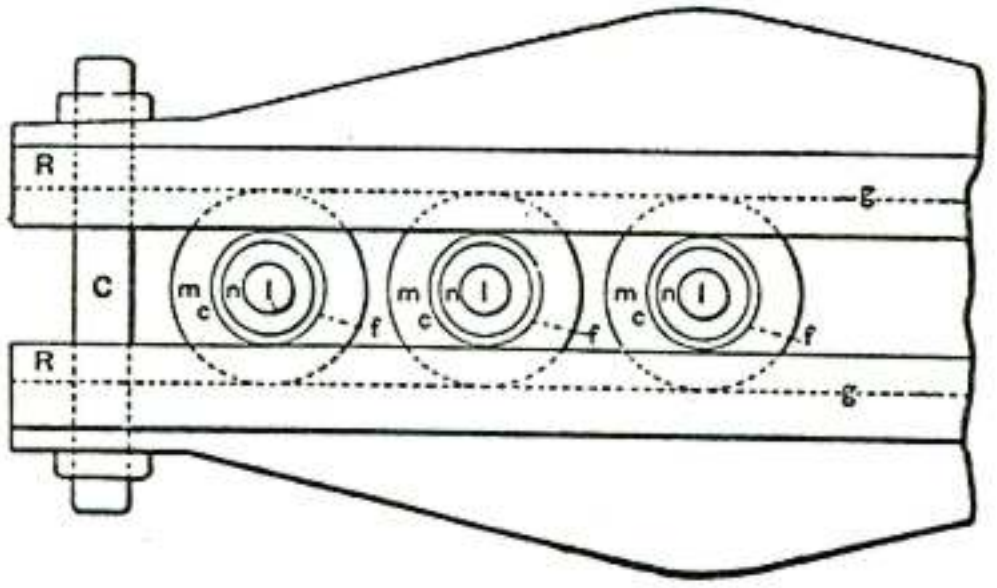

Fig. 7.

I have stretched across the room two ordinary cotton covered wires, each about 7 metres in length. They are supported on insulating cords at a distance of about 30 centimetres. I attach now to each of the terminals of the coil one of the wires and set the coil in action. Upon turning the lights off in the room you see the wires strongly illuminated by the streams issuing abundantly from their whole surface in spite of the cotton covering, which may even be very thick. When the experiment is performed under good conditions, the light from the wires is sufficiently intense to allow distinguishing the objects in a room. To produce the best result it is, of cource, necessary to adjust carefully the capacity of the jars, the arc between the knobs and the length of the wires. My experience is that calculation of the length of the wires leads, in such case, to no result whatever. The experimenter will do best to take the wires at the start very long, and then adjust by cutting off first long pieces, and then smaller and smaller ones as he approaches the right length.

A convenient way is to use an oil condenser of very small capacity, consisting of two small adjustable metal plates, in connection with this and similar experiments. In such case I take wires rather short and set at the beginning the condenser plates at maximum distance. If the streams for the wires increase by approach of the plates, the length of the wires is about right; if they diminish the wires are too long for that frequency and potential. When a condenser is used in connection with experiments with such a coil, it should be an oil condenser by all means, as in using an air condenser considerable energy might be wasted. The wires leading to the plates in the oil should be very thin, heavily coated with some insulating compound, and provided with a conducting covering — this preferably extending under the surface of the oil. The conducting cover should not be too near the terminals, or ends, of the wire, as a spark would be apt to jump from the wire to it. The conducting coating is used to diminish the air losses, in virtue of its action as an electrostatic screen. As to the size of the vessel containing the oil, and the size of the plates, the experimenter gains at once an idea from a rough trial. The size of the plates *in oil* is, however, calculable, as the dielectric losses are very small.

In the preceding experiment it is of considerable interest to know what relation the quantity of the light emitted bears to the frequency and potential of the electric impulses. My opinion is that the heat as well as light effects produced should be

proportionate, under otherwise equal conditions of test, to the product of frequency and square of potential, but the experimental verification of the law, whatever it may be, would be exceedingly difficult. One thing is certain, at any rate, and that is, that in augmenting the potential and frequency we rapidly intensify the streams; and, though it may be very sanguine, it is surely not altogether hopeless to expect that we may succeed in producing a practical illuminant on these lines. We would then be simply using burners or flames, in which there would be no chemical process, no consumption of material, but merely a transfer of energy, and which would, in all probability emit more light and less heat than ordinary flames.

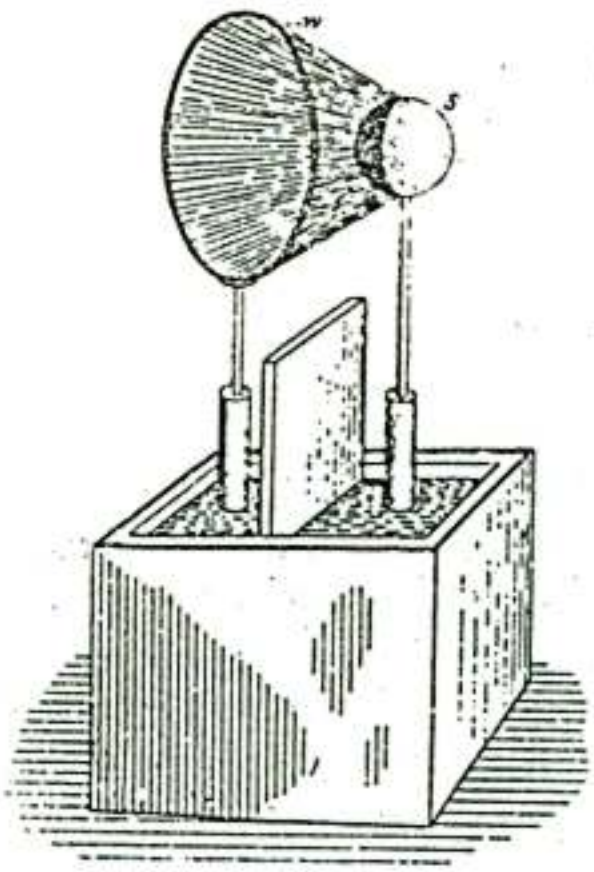

Fig. 8.

The luminous intensity of the streams is, of course, considerably increased when they are focused upon a small surface. This may be shown by the following experiment:

I attach to one of the terminals of the coil a wire *w* (Fig. 8), bent in a circle of about 30 centimetres in diameter, and to the other terminal I fasten a small brass sphere *s*, the surface of the wire being preferably equal to the surface of the sphere, and the centre of the latter being in a line at right angles to the plane of the wire circle and passing through its centre. When the discharge is established under proper conditions, a luminous hollow cone is formed, and in the dark one-half of the brass sphere is strongly illuminated, as shown in the cut.

By some artifice or other, it is easy to concentrate the streams upon small surfaces and to produce very strong light effects. Two thin wires may thus be rendered intensely luminous.

In order to intensify the streams the wires should be very thin and short; but as in this case their capacity would be generally too small for the coil — at least, for such a one as the present — it is necessary to augment the capacity to the required value, while, at the same time, the surface of the wires remains very small. This may be done in many ways.

Here, for instance, I have two plates *R R*, of hard rubber (Fig. 9), upon which I have glued two very thin wires *w w*, so as to form a name. The wires may be bare or covered with the best insulation — it is immaterial for the success of the experiment. Well insulated wires, if anything, are preferable. On the back of each plate, indicated by the shaded portion, is a tinfoil coating *t t*. The plates are placed in line at a sufficient distance to prevent a spark passing from one to the other wire. The two tinfoil coatings I have joined by a conductor *C*, and the two wires I presently connect to the terminals of the coil. It is now easy, by varying the strength and frequency of the currents through the primary, to find a point at which the capacity of the system is best suited to the conditions, and the wires become so strongly luminous that, when the light in the room is turned off the name formed by them appears in brilliant letters.

It is perhaps preferable to perform this experiment with a coil operated from an alternator of high frequency, as then, owing to the harmonic rise and fall, the streams are very uniform, though they are less abundant than when produced with such a coil as the present. This experiment, however, may be performed with low frequencies, but much less satisfactorily.

When two wires, attached to the terminals of the coil, are set at the proper distance, the streams between them may be so intense as to produce a continuous luminous sheet.

To show this phenomenon I have here two circles, *C* and *c* (Fig. 10), of rather stout wire, one being about 80 centimetres and the other 30 centimetres in diameter. To each of the terminals of the coil I attach one of the circles. The supporting wires are so bent that the circles may be placed in the same plane, coinciding as nearly as possible. When the light in the room is turned off and the coil set to work, you see the whole space between the wires uniformly filled with streams, forming a luminous disc, which could be seen from a considerable distance, such is the intensity of the streams. The outer circle could have been much larger than the present one; in fact, with this coil I have used much larger circles, and I have been able to produce a strongly luminous sheet, covering an area of more than one square metre, which is a remarkable effect with this very small coil. To avoid uncertainty, the circle has been taken smaller, and the area is now about 0,43 square metre.

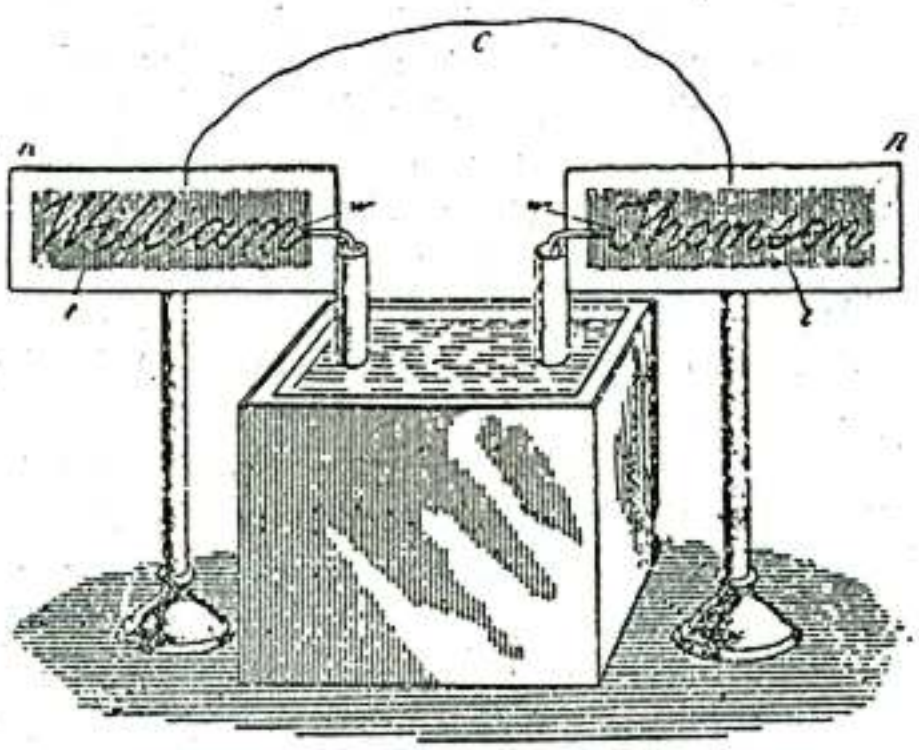

Fig. 9.

The frequency of the vibration, and the quickness of succession of the sparks between the knobs, affect to a marked degree the appearance of the streams. When the frequency is very low, the air gives way in more or less the same manner, as by a steady difference of potential, and the streams consist of distinct threads, generally mingled with thin sparks, which probably correspond to the successive discharges occurring between the knobs. But when the frequency is extremely high, and the arc of the discharge produces a very *loud* but *smooth* sound — showing both that oscillation takes place and that the sparks succeed each other with great rapidity — then the luminous streams formed are perfectly uniform. To reach this result very small coils and jars of small capacity should be used. I take two tubes of thick Bohemian glass, about 5 centimetres in diameter and 20 centimetres long. In each of the tubes I slip a primary of very thick copper wire. On the top of each tube I wind a secondary of much thinner gutta-percha covered wire. The two secondaries I connect in series, the primaries preferably in multiple arc. The tubes are then placed in a large glass vessel, at a distance of 10 to 15 centimetres from each other, on insulating supports, and the vessel is filled with boiled out oil, the oil reaching about an inch above the tubes. The free ends of the secondary are lifted out of the oil and placed parallel to each other at a distance of about 10 centimetres. The ends which are scraped should be dipped in the oil. Two four-pint jars joined in series may be used to discharge through the primary. When the necessary adjustments in the length and distance of the wires above the oil and in the arc of discharge are made, a luminous sheet is produced between the wires which is perfectly smooth and textureless, like the ordinary discharge through a moderately exhausted tube.

I have purposely dwelt upon this apparently insignificant experiment. In trials of this kind the experimenter arrives at the startling conclusion that, to pass ordinary luminous discharges through gases, no particular degree of exhaustion is needed, but that the gas may be at ordinary or even greater pressure. To accomplish this, a very high frequency is essential; a high potential is likewise required, but this is a merely incidental necessity. These experiments teach us that, in endeavoring to discover novel methods of producing light by the agitation of atoms, or molecules, of a gas, we need not limit our research to the vacuum tube, but may look forward quite seriously to the possibility of obtaining the light effects without the use of any vessel whatever, with air at ordinary pressure.

Such discharges of very high frequency, which render luminous the air at ordinary pressures, we have probably often occasion to witness in Nature. I have no doubt that if, as many believe, the aurora borealis is produced by sudden cosmic disturbances, such as eruptions at the sun's surface, which set the electrostatic charge of the earth in an extremely rapid vibration, the red glow observed is not confined to the upper rarefied strata of the air, but the discharge traverses, by reason of its very high frequency, also the dense atmosphere in the form of a *glow,* such as we ordinarily produce in a slightly exhausted tube. If the frequency were very low, or even more so, if the charge were not at all vibrating, the dense air would break down as in a lightning discharge. Indications of such breaking down of the lower dense strata of the air have been repeatedly observed at the occurrence of this marvelous phenomenon; but if it does occur, it can only be attributed to the fundamental disturbances, which are few in number, for the vibration produced by them would be far too rapid to allow a disruptive break. It is the original and irregular impulses which affect the instruments; the superimposed vibrations probably pass unnoticed.

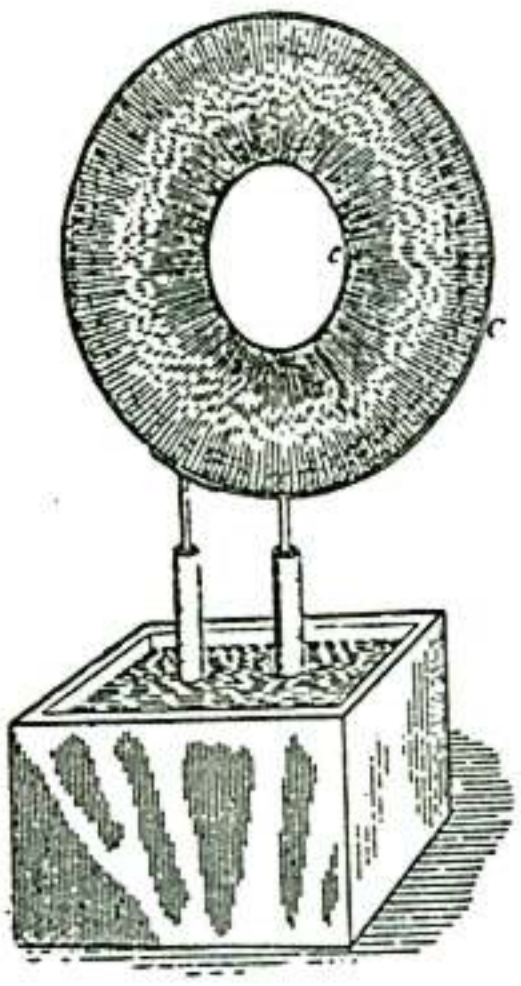

Fig. 10.

When an ordinary low frequency discharge is passed through moderately rarefied air, the air assumes a purplish hue. If by some means or other we increase the intensity of the molecular, or atomic, vibration, the gas changes to a white color. A similar change occurs at ordinary pressures with electric impulses of very high frequency. If the molecules of the air around a wire are moderately agitated, the brush formed is reddish or violet; if the vibration is rendered sufficiently intense, the streams become white. We may accomplish this in various ways. In the experiment before shown with the two wires across the room, I have endeavored to secure the result by pushing to a high value both the frequency and potential; in the experiment with the thin wires glued on the rubber plate I have concentrated the action upon a very small surface — in other words, I have worked with a great electric density.

A most curious form of discharge is observed with such a coil when the frequency and potential are pushed to the extreme limit. To perform the experiment, every part of the coil should be heavily insulated, and only two small spheres — or, better still, two sharp-edged metal discs *(d d,* Fig. 11) of no more than a few centimetres in diameter — should be exposed to the air. The coil here used is immersed in oil, and the ends of the secondary reaching out of the oil are covered with an air-tight cover

of hard rubber of great thickness. All cracks, if there are any, should be carefully stopped up, so that the brush discharge cannot form anywhere except on the small spheres or plates which are exposed to the air. In this case, since there are no large plates or other bodies of capacity attached to the terminals, the coil is capable of an extremely rapid vibration. The potential may be raised by increasing, as far as the experimenter judges proper, the rate of change of the primary current. With a coil not widely differing from the present, it is best to connect the two primaries in multiple arc; but if the secondary should have a much greater number of turns the primaries should preferably be used in series, as otherwise the vibration might be too fast for the secondary. It occurs under these conditions that misty white streams break forth from the edges of the discs and spread out phantom-like into space. With this coil, when fairly well produced, they are about 25 to 30 centimetres long. When the hand is held against them no sensation is produced, and a spark, causing a shock, jumps from the terminal only upon the hand being brought much nearer. If the oscillation of the primary current is rendered intermittent by some means or other, there is a corresponding throbbing of the streams, and now the hand or other conducting object may be brought in still greater proximity to the terminal without a spark being caused to jump.

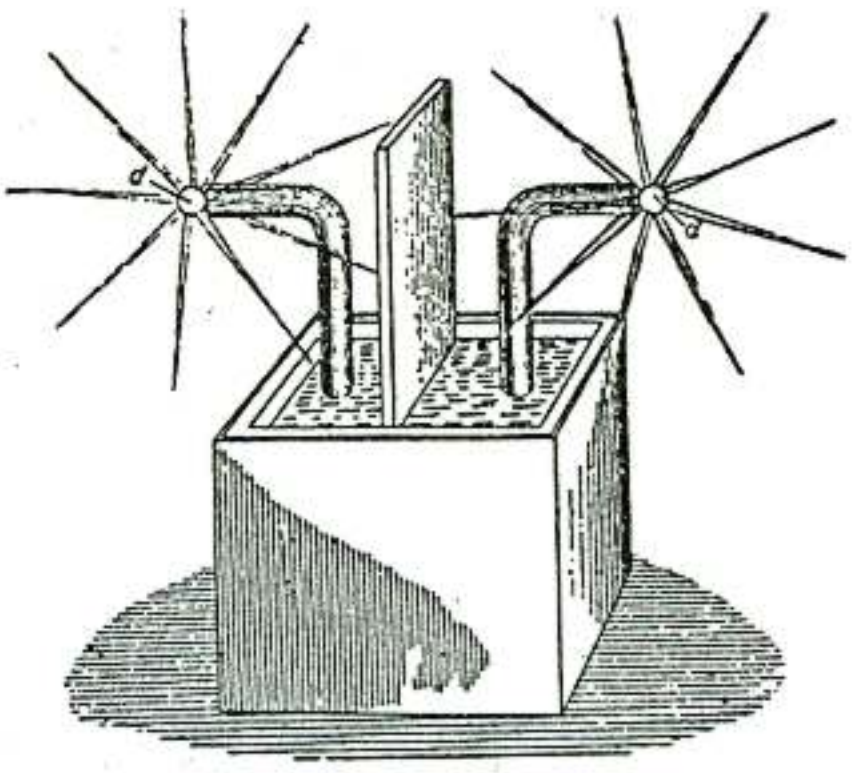

Fig. 11.

Among the many beautiful phenomena which may be produced with such a coil I have here selected only those which appear to possess some features of novelty, and lead us to some conclusions of interest. One will not find it at all difficult to produce in the laboratory, by means of it, many other phenomena which appeal to the eye even more than these here shown, but present no particular feature of novelty.

Early experimenters describe the display of sparks produced by an ordinary large induction coil upon an insulating plate separating the terminals. Quite recently Siemens performed some experiments in which fine effects were obtained, which were seen by many with interest. No doubt large coils, even if operated with currents of low frequencies, are capable of producing beautiful effects. But the largest coil ever made could not, by far, equal the magnificent display of streams and sparks obtained from such a disruptive discharge coil when properly adjusted. To give an idea, a coil such as the present one will cover easily a plate of 1 metre in diameter completely with the streams. The best way to perform such experiments is to take a very thin rubber or a glass plate and glue on one side of it a narrow ring of tinfoil of very large diameter, and on the other a circular washer, the centre of the latter coinciding with that of the ring, and the surfaces of both being preferably equal, so as to keep the coil well balanced. The washer and ring should be connected to the terminals by heavily insulated thin wires. It is easy in observing the effect of the capacity to produce a sheet of uniform streams, or a fine network of thin silvery threads, or a mass of loud brilliant sparks, which completely cover the plate.

Since I have advanced the idea of the conversion by means of the disruptive discharge, in my paper before the American Institute of Electrical Engineers at the

beginning of the past year, the interest excited in it has been considerable. It affords us a means for producing any potentials by the aid of inexpensive coils operated from ordinary systems of distribution, and — what is perhaps more appreciated — it enables us to convert currents of any frequency into currents of any other lower or higher frequency. But its chief value will perhaps be found in the help which it will afford us in the investigations of the phenomena of phosphorescence, which a disruptive discharge coil is capable of exciting in innumerable cases where ordinary coils, even the largest, would utterly fail.

Considering its probable uses for many practical purposes, and its possible introduction into laboratories for scientific research, a few additional remarks as to the construction of such a coil will perhaps not be found superfluous.

It is, of course, absolutely necessary to employ in such a coil wires provided with the best insulation.

Good coils may be produced by employing wires covered with several layers of cotton, boiling the coil a long time in pure wax, and cooling under moderate pressure. The advantage of such a coil is that it can be easily handled, but it cannot probably give as satisfactory results as a coil immersed in pure oil. Besides, it seems that the presence of a large body of wax affects the coil disadvantageously, whereas this does not seem to be the case with oil. Perhaps it is because the dielectric losses in the liquid are smaller.

I have tried at first silk and cotton covered wires with oil immersion, but I have been gradually led to use gutta-percha covered wires, which proved most satisfactory. Gutta-percha insulation adds, of course, to the capacity of the coil, and this, especially if the coil be large, is a great disadvantage when extreme frequencies are desired; but, on the other hand, gutta-percha will withstand much more than an equal thickness of oil, and this advantage should be secured at any price. Once the coil has been immersed, it should never be taken out of the oil for more than a few hours, else the gutta-percha will crack up and the coil will not be worth half as much as before. Gutta-percha is probably slowly attacked by the oil, but after an immersion of eight to nine months I have found no ill effects.

I have obtained in commerce two kinds of gutta-percha wire: in one the insulation sticks tightly to the metal, in the other it does not. Unless a special method is followed to expel all air, it is much safer to use the first kind. I wind the coil within an oil tank so that all interstices are filled up with the oil. Between the layers I use cloth boiled out thoroughly in oil, calculating the thickness according to the difference of potential between the turns. There seems not to be a very great difference whatever kind of oil is used; I use paraffine or linseed oil.

To exclude more perfectly the air, an excellent way to proceed, and easily practicable with small coils, is the following: Construct a box of hard wood of very thick boards which have been for a long time boiled in oil. The boards should be so joined as to safely withstand the external air pressure. The coil being placed and fastened in position within the box, the latter is closed with a strong lid, and covered with closely fitting metal sheets, the joints of which are soldered very carefully. On the top two small holes are drilled, passing through the metal sheet and the wood, and in these holes two small glass tubes are inserted and the joints made air-tight. One of the tubes is connected to a vacuum pump, and the other with a vessel containing a sufficient quantity of boiled-out oil. The latter tube has a very small hole at the bottom, and is provided with a stopcock. When a fairly good vacuum has been obtained, the stopcock is opened and the oil slowly fed in. Proceeding in this manner, it is impossible that any big bubbles, which are the principal danger, should remain between the turns. The air is most completely excluded, probably better than by boiling out, which, however, when gutta-percha coated wires are used, is not practicable.

For the primaries I use ordinary line wire with a thick cotton coating. Strands of very thin insulated wires properly interlaced would, of course, be the best to employ for the primaries, but they are not to be had.

In an experimental coil the size of the wires is not of great importance. In the coil here used the primary is No. 12 and the secondary No. 24 Brown & Sharpe gauge wire; but the sections may be varied considerably. I would only imply different adjustments; the results aimed at would not be materially affected.

I have dwelt at some length upon the various forms of brush discharge because, in studying them, we not only observe phenomena which please our eye, but also afford us food for thought, and lead us to conclusions of practical importance. In the use of alternating currents of very high tension, too much precaution cannot be taken to prevent the brush discharge. In a main conveying such currents, in an induction coil or transformer, or in a condenser, the brush discharge is a source of great danger to the insulation. In a condenser especially the gaseous matter must be most carefully expelled, for in it the charged surfaces are near each other, and if the potentials are high, just as sure as a weight will fall if let go, so the insulation will give way if a single gaseous bubble of some size be present, whereas, if all gaseous matter were carefully excluded, the condenser would safely withstand a much higher difference of potential. A main conveying alternating currents of very high tension may be injured merely by a blowhole or small crack in the insulation, the more so as a blowhole is apt to contain gas at low pressure; and as it appears almost impossible to completely obviate such little imperfections, I am led to believe that in our future distribution of electrical energy by currents of very high tension liquid insulation will be used. The cost is a great drawback, but if we employ an oil as an insulator the distribution of electrical energy with something like 100,000 volts, and even more, become, at least with higher frequencies, so easy that they could be hardly called engineering feats. With oil insulation and alternate current motors transmissions of power can be effected with safety and upon an industrial basis at distances of as much as a thousand miles.

A peculiar property of oils, and liquid insulation in general, when subjected to rapidly changing electric stresses, is to disperse any gaseous bubbles which may be present, and diffuse them through its mass, generally long before any injurious break can occur. This feature may be easily observed with an ordinary induction coil by taking the primary out, plugging up the end of the tube upon which the secondary is wound, and filling it with some fairly transparent insulator, such as paraffine oil. A primary of a diameter something like six millimetres smaller than the inside of the tube may be inserted in the oil. When the coil is set to work one may see, looking from the top through the oil, many luminous points — air bubbles which are caught by inserting the primary, and which are rendered luminous in consequence of the violent bombardment. The occluded air, by its impact against the oil, beats it; the oil begins to circulate, carrying some of the air along with it, until the bubbles are dispersed and the luminous points disappear. In this manner, unless large bubbles are occluded in such way that circulation is rendered impossible, a damaging break is averted, the only effect being a moderate warming up of the oil. If, instead of the liquid, a solid insulation, no matter how thick, were used, a breaking through and injury of the apparatus would be inevitable.

The exclusion of gaseous matter from any apparatus in which the dielectric is subjected to more or less rapidly changing electric forces is, however, not only desirable in order to avoid a possible injury of the apparatus, but also on account of economy. In a condenser, for instance, as long as only a solid or only a liquid dielectric is used, the loss is small; but if a gas under ordinary or small pressure be present the loss may be very great. Whatever the nature of the force acting in the dielectric may be, it seems that in a solid or liquid the molecular displacement produced by the force is small :

hence the product of force and displacement is insignificant, unless the force be very great; but in a gas the displacement, and therefore this product, is considerable; the molecules are free to move, they reach high speeds, and the energy of their impact is lost in heat or otherwise. If the gas be strongly compressed, the displacement due to the force is made smaller, and the losses are reduced.

In most of the succeeding experiments I prefer, chiefly on account of the regular and positive action, to employ the alternator before referred to. This is one of the several machines constructed by me for the purposes of these investigations. It has 384 pole projections, and is capable of giving currents of a frequency of about 10,000 per second. This machine has been illustrated and briefly described in my first paper before the American Institute of Electrical Engineers, May 20, 1891, to which I have already referred. A more detailed description, sufficient to enable any engineer to build a similar machine, will be found in several electrical journals of that period.

The induction coils operated from the machine are rather small, containing from 5,000 to 15,000 turns in the secondary. They are immersed in boiled-out linseed oil, contained in wooden boxes covered with zinc sheet.

I have found it advantageous to reverse the usual position of the wires, and to wind, in these coils, the primaries on the top; this allowing the use of a much bigger primary, which, of course, reduces the danger of overheating and increases the output of the coil. I make the primary on each side at least one centimetre shorter than the secondary, to prevent the breaking through on the ends, which would surely occur unless the insulation on the top of the secondary be very thick, and this, of course, would be disadvantageous.

When the primary is made movable, which is necessary in some experiments, and many times convenient for the purposes of adjustment, I cover the secondary with wax, and turn it off in a lathe to a diameter slightly smaller than the inside of the primary coil. The latter I provide with a handle reaching out of the oil, which serves to shift it in any position along the secondary.

I will now venture to make, in regard to the general manipulation of induction coils, a few observations bearing upon points which have not been fully appreciated in earlier experiments with such coils, and are even now often overlooked.

The secondary of the coil possesses usually such a high self-induction that the current through the wire is inappreciable, and may be so even when the terminals are joined by a conductor of small resistance. If capacity is added to the terminals, the self-induction is counteracted, and a stronger current is made to flow through the secondary, though its terminals are insulated from each other. To one entirely unacquainted with the properties of alternating currents nothing will look more puzzling. This feature was illustrated in the experiment performed at the beginning with the top plates of wire gauze attached to the terminals and the rubber plate. When the plates of wire gauze were close together, and a small arc passed between them, the arc *prevented* a strong current from passing through the secondary, because it did away with the capacity on the terminals; when the rubber plate was inserted between, the capacity of the condenser formed counteracted the self-induction of the secondary, a stronger current passed now, the coil performed more work, and the discharge was by far more powerful.

The first thing, then, in operating the induction coil is to combine capacity with the secondary to overcome the self-induction. If the frequencies and potentials are very high gaseous matter should be carefully kept away from the charged surfaces. If Leyden jars are used, they should be immersed in oil, as otherwise considerable dissipation may occur if the jars are greatly strained. When high frequencies are used, it is of equal importance to combine a condenser with the primary. One may use a condenser connected to the ends of the primary or to the terminals of the alternator, but the latter is not to be recommended, as the machine might be injured. The best way is undoubtedly

to use the condenser in series with the primary and with the alternator, and to adjust its capacity so as to annul the self-induction of both the latter. The condenser should be adjustable by very small steps, and for a finer adjustment a small oil condenser with movable plates may be used conveniently.

I think it best at this juncture to bring before you a phenomenon, observed by me some time ago, which to the purely scientific investigator may perhaps appear more interesting than any of the results which I have the privilege to present to you this evening.

It may be quite properly ranked among the brush phenomena — in fact, it is a brush, formed at, or near, a single terminal in high vacuum.

In bulbs provided with a conducting terminal, though it be of aluminium, the brush has but an ephemeral existence, and cannot, unfortunately, be indefinitely preserved in its most sensitive state, even in a bulb devoid of any conducting electrode. In studying one phenomenon, by all means a bulb having no leading-in wire should be used. I have found it best to use bulbs constructed as indicated in Figs. 12 and 13.

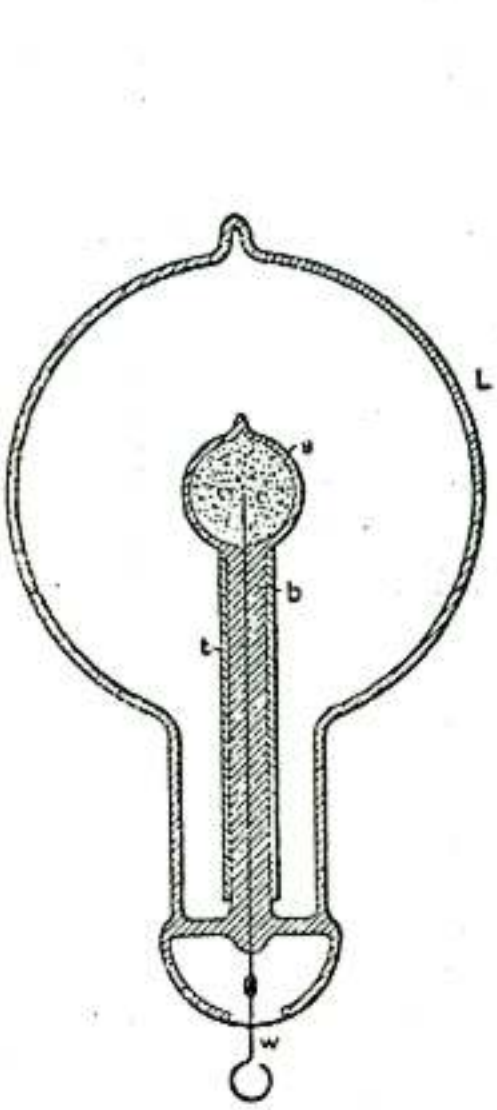

Fig. 12.

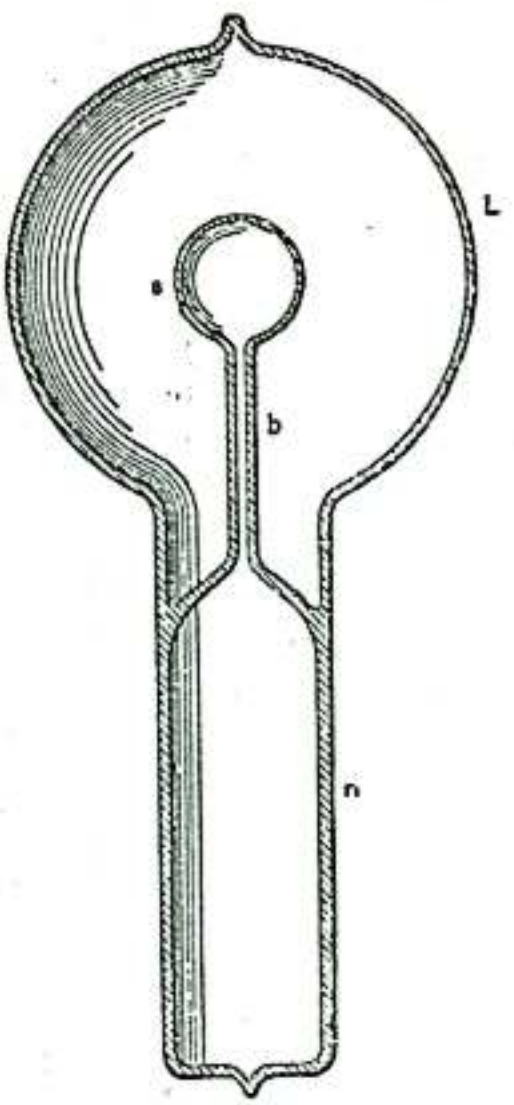

Fig. 13.

In Fig. 12 the bulb comprises an incandescent lamp globe *L*, in the neck of which is sealed a barometer tube *b*, the end of which is blown out to form a small sphere *s*. This sphere should be sealed as closely as possible in the centre of the large globe. Before sealing, a thin tube *t*, of aluminium sheet, may be slipped in the barometer tube, but it is not important to employ it.

The small hollow sphere *s* is filled with some conducting powder, and a wire *w* is cemented in the neck for the purpose of connecting the conducting powder with the generator.

The construction shown in Fig. 13 was chosen in order to remove from the brush any conducting body which might possibly affect it. The bulb consists in this case of a lamp globe *L*, which has a neck *n*, provided with a tube *b* and small sphere *s*, sealed

to it, so that two entirely independent compartments are formed, as indicated in the drawing. When the bulb is in use, the neck *n* is provided with a tinfoil coating, which is connected to the generator and acts inductively upon the moderately rarefied and highly conducting gas inclosed in the neck. From there the current passes through the tube *b* into the small sphere *s*, to act by induction upon the gas contained in the globe *L*.

It is of advantage to make the tube *t* very thick, the hole through it very small, and to blow the sphere *s* very thin. It is of the greatest importance that the sphere *s* be placed in the centre of the globe *L*.

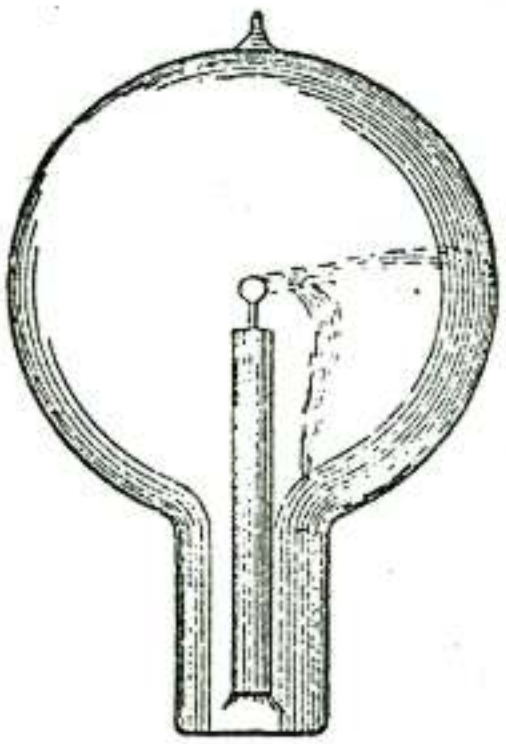

Fig. 14.

Figs. 14, 15 and 16 indicate different forms, or stages, of the brush. Fig. 14 shows the brush as it first appears in a bulb provided with a conducting terminal: but, as in such a bulb it very soon disappears — often after a few minutes — I will confine myself to the description of the phenomenon as seen in a bulb without conducting electrode. It is observed under the following conditions:

When the globe *L* (Figs. 12 and 13) is exhausted to a very high degree, generally the bulb is not excited upon connecting the wire *w* (Fig. 12) or the tinfoil coating of the bulb (Fig. 13) to the terminal of the induction coil. To excite it, it is usually sufficient to grasp the globe *L* with the hand. An intense phosphorescence then spreads at first over the globe, but soon gives place to a white, misty light. Shortly afterward one may notice that the luminosity is unevenly distributed in the globe, and after passing the current for some time the bulb appears as in Fig. 15. From this stage the phenomenon will gradually pass to that indicated in Fig. 16, after some minutes, hours, days or weeks, according as the bulb is worked. Warming the bulb or increasing the potential hastens the transit.

When the brush assumes the form indicated in Fig. 16, it may be brought to a state of extreme sensitiveness to electrostatic and magnetic influence. The bulb hanging straight down from a wire, and all objects being remote from it, the approach of the observer at a few paces from the bulb will cause the brush to fly to the opposite side, and if he walks around the bulb it will always keep on the opposite side. It may begin to spin around the terminal long before it reaches that sensitive stage. When it begins to turn around principally, but also before, it is affected by a magnet, and at a certain stage it is susceptible to magnetic influence to an astonishing degree. A small permanent magnet, with its poles at a distance of no more than two centimetres, will affect it visibly at a distance of two metres, slowing down or accelerating the rotation according to how it is held relatively to the brush. I think I have observed that at the stage when it is most sensitive to magnetic, it is not most sensitive to electrostatic, influence. My explanation is, that the electrostatic attraction between the brush and the glass of the bulb, which retards the rotation, grows much quicker than the magnetic influence when the intensity of the stream is increased.

When the bulb hangs with the globe *L* down, the rotation is always clockwise. In the southern hemisphere it would occur in the opposite direction and on the equator the brush should not turn at all. The rotation may be reversed by a magnet kept at some distance. The brush rotates best, seemingly, when it is at right angles to the lines of force of the earth. It very likely rotates, when at its maximum speed, in synchronism with the alternations, say 10,000 times a second. The rotation can be slowed down or accelerated by the approach or receding of the observer, or any conducting body, but it cannot be reversed by putting the bulb in any position. When it is in the state of the

highest sensitiveness and the potential or frequency be varied the sensitiveness is rapidly diminished. Changing either of these but little will generally stop the rotation. The sensitiveness is likewise affected by the variations of temperature. To attain great sensitiveness it is necessary to have the small sphere *s* in the centre of the globe *L*, as otherwise the electrostatic action of the glass of the globe will tend to stop the rotation. The sphere *s* should be small and of uniform thickness; any dissymmetry of course has the effect to diminish the sensitiveness.

The fact that the brush rotates in a definite direction in a permanent magnetic field seems to show that in alternating currents of very high frequency the positive and negative impulses are not equal, but that one always preponderates over the other.

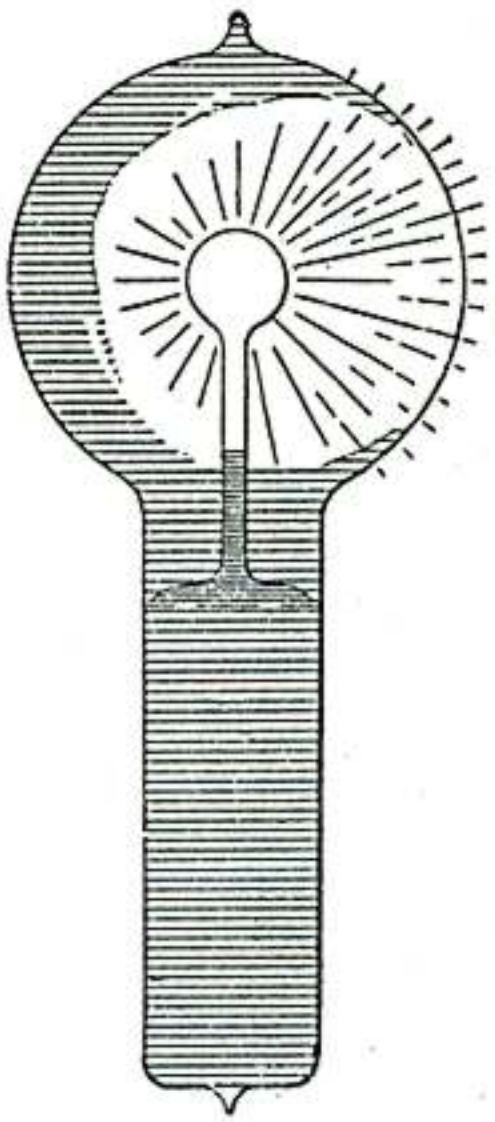

Fig. 15.

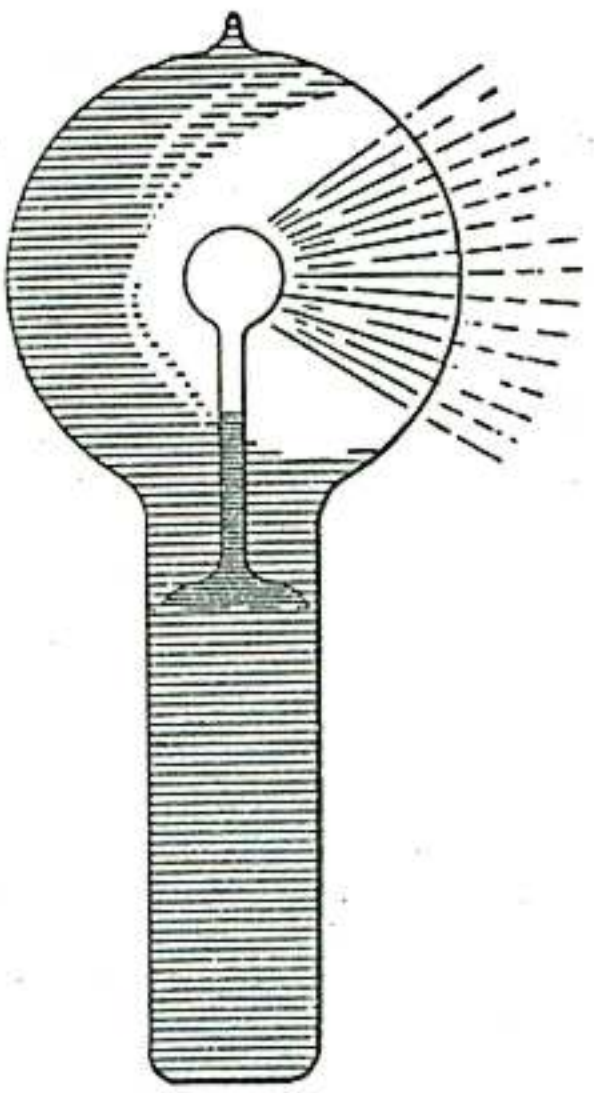

Fig. 16.

Of course, this rotation in one direction may be due to the action of two elements of the same current upon each other, or to the action of the field produced by one of the elements upon the other, as in a series motor, without necessarily one impulse being stronger than the other. The fact that the brush turns, as far as I could observe, in any position, would speak for this view. In such case it would turn at any point of the earth's surface. But, on the other hand, it is then hard to explain why a permanent magnet should reverse the rotation, and one must assume the preponderance of impulses of one kind.

As to the causes of the formation of the brush or stream, I think it is due to the electrostatic action of the globe and the dissymmetry of the parts. If the small bulb *s* and the globe *L* were perfect concentric spheres, and the glass throughout of the same thickness and quality, I think the brush would not form, as the tendency to pass would be equal on all sides. That the formation of the stream is due to an irregularity is apparent from the fact that it has the tendency to remain in one position, and rotation occurs most generally only when it is brought out of this position by electrostatic or magnetic influence. When in an extremely sensitive state it rests in one position, most

curious experiments may be performed with it. For instance, the experimenter may, by selecting a proper position, approach the hand at a certain considerable distance to the bulb, and he may cause the brush to pass off by merely stiffening the muscles of the arm. When it begins to rotate slowly, and the hands are held at a proper distance, it is impossible to make even the slightest motion without producing a visible effect upon the brush. A metal plate connected to the other terminal of the coil affects it at a great distance, slowing down the rotation often to one turn a second.

I am firmly convinced that such a brush, when we learn how to produce it properly, will prove a valuable aid in the investigation of the nature of the forces acting in an electrostatic or magnetic field. If there is any motion which is measurable going on in the space, such a brush ought to reveal it. It is, so to speak, a beam of light, frictionless, devoid of inertia.

I think that it may find practical applications in telegraphy. With such a brush it would be possible to send dispatches across the Atlantic, for instance, with any speed, since its sensitiveness may be so great that the slightest changes will affect it. If it were possible to make the stream more intense and very narrow, its deflections could be easily photographed.

I have been interested to find whether there is a rotation of the stream itself, or whether there is simply a stress traveling around in the bulb. For this purpose I mounted a light mica fan so that its vanes were in the path of the brush. If the stream itself was rotating the fan would be spun around. I could produce no distinct rotation of the fan, although I tried the experiment repeatedly; but as the fan exerted a noticeable influence on the stream, and the apparent rotation of the latter was, in this case, never quite satisfactory, the experiment did not appear to be conclusive.

I have been unable to produce the phenomenon with the disruptive discharge coil, although every other of these phenomena can be well produced by it — many, in fact, much better than with coils operated from an alternator.

It may be possible to produce the brush by impulses of one direction, or even by a steady potential, in which case it would be still more sensitive to magnetic influence.

In operating an induction coil with rapidly alternating currents, we realize with astonishment, for the first time, the great importance of the relation of capacity, self-induction and frequency as regards the general result. The effects of capacity are the most striking, for in these experiments, since the self-induction and frequency both are high, the critical capacity is very small, and need be but slightly varied to produce a very considerable change. The experimenter may bring his body in contact with the terminals of the secondary of the coil, or attach to one or both terminals insulated bodies of very small bulk, such as bulbs, and he may produce a considerable rise or fall of potential, and greatly affect the flow of the current through the primary. In the experiment before shown, in which a brush appears at a wire attached to one terminal, and the wire is vibrated when the experimenter brings his insulated body in contact with the other terminal of the coil, the sudden rise of potential was made evident.

I may show you the behavior of the coil in another manner which possesses a feature of some interest. I have here a little light fan of aluminium sheet, fastened to a needle and arranged to rotate freely in a metal piece screwed to one of the terminals of the coil. When the coil is set to work, the molecules of the air are rhythmically attracted and repelled. As the force with which they are repelled is greater than that with which they are attracted, it results that there is a repulsion exerted on the surfaces of the fan. If the fan were made simply of a metal sheet, the repulsion would be equal on the opposite sides, and would produce no effect. But if one of the opposite surfaces is screened, or if, generally speaking, the bombardment on this side is weakened in some way or other, there remains the repulsion exerted upon the other, and the fan is set in rotation. The screening is best effected by fastening upon one of the opposing sides of the fan

insulated conducting coatings, or, if the fan is made in the shape of an ordinary propeller screw, by fastening on one side, and close to it, an insulated metal plate. The static screen may however, be omitted and simply a thickness of insulating material fastened to one of the sides of the fan.

To show the behavior of the coil, the fan may be placed upon the terminal and it will readily rotate when the coil is operated by currents of very high frequency. With a steady potential, of course, and even with alternating currents of very low frequency, it would not turn, because of the very slow exchange of air and, consequently, smaller bombardment; but in the latter case it might turn if the potential were excessive. With a pin wheel, quite the opposite rule holds good; it rotates best with a steady potential, and the effort is the smaller the higher the frequency. Now, it is very easy to adjust the conditions so that the potential is normally not sufficient to turn the fan, but that by connecting the other terminal of the coil with an insulated body it rises to a much greater value, so as to rotate the fan, and it is likewise possible to stop the rotation by connecting to the terminal a body of different size, thereby diminishing the potential.

Instead of using the fan in this experiment, we may use the "electric" radiometer with similar effect. But in this case it will be found that the vanes will rotate only at high exhaustion or at ordinary pressures; they will not rotate at moderate pressures, when the air is highly conducting. This curious observation was made conjointly by Professor Crookes and myself. I attribute the result to the high conductivity of the air, the molecules of which then do not act as independent carriers of electric charges, but act all together as a single conducting body. In such case, of course, if there is any repulsion at all of the molecules from the vanes, it must be very small. It is possible, however, that the result is in part due to the fact that the greater part of the discharge passes from the leading-in wire through the highly conducting gas, instead of passing off from the conducting vanes.

In trying the preceding experiment with the electric radiometer the potential should not exceed a certain limit, as then the electrostatic attraction between the vanes and the glass of the bulb may be so great as to stop the rotation.

A most curious feature of alternate currents of high frequencies and potentials is that they enable us to perform many experiments by the use of one wire only. In many respects this feature is of great interest.

In a type of alternate current motor invented by me some years ago I produced rotation by inducing, by means of a single alternating current passed through a motor circuit, in the mass or other circuits of the motor, secondary currents, which, jointly with the primary or inducing current, created a moving field of force. A simple but crude form of such a motor is obtained by winding upon an iron core a primary, and close to it a secondary coil, joining the ends of the latter and placing a freely movable metal disc within the influence of the field produced by both. The iron core is employed for obvious reasons, but it is not essential to the operation. To improve the motor, the iron core is made to encircle the armature. Again to improve, the secondary coil is made to overlap partly the primary, so that it cannot free itself from a strong inductive action of the latter, repel its lines as it may. Once more to improve, the proper difference of phase is obtained between the primary and secondary currents by a condenser, self-induction, resistance or equivalent windings.

I had discovered, however, that rotation is produced by means of a single coil and core; my explanation of the phenomenon, and leading thought in trying the experiment, being that there must be a true time lag in the magnetization of the core. I remember the pleasure I had when, in the writings of Professor Ayrton, which came later to my hand, I found the idea of the time lag advocated. Whether there is a true time lag, or whether the retardation is due to eddy currents circulating in minute paths, must remain an open question, but the fact is that a coil wound upon an iron core and traversed by an alternating current creates a moving field of force, capable of setting an armature

in rotation. It is of some interest, in conjunction with the historical Arago experiment, to mention that in lag or phase motors I have produced rotation in the opposite direction to the moving field, which means that in that experiment the magnet may not rotate, or may even rotate in the opposite direction to the moving disc. Here, then, is a motor (diagrammatically illustrated in Fig. 17), comprising a coil and iron core, and a freely movable copper disc in proximity to the latter.

To demonstrate a novel and interesting feature, I have, for a reason which I will explain, selected this type of motor. When the ends of the coil are connected to the terminals of an alternator the disc is set in rotation. But it is not this experiment, now well known, which I desire to perform. What I wish to show you is that this motor rotates with *one single* connection between it and the generator; that is to say, one terminal of the motor is connected to one terminal of the generator — in this case the secondary of a high-tension induction coil — the other terminals of motor and generator being insulated in space. To produce rotation it is generally (but not absolutely) necessary to connect the free end of the motor coil to an insulated body of some size. The experimenter's body is more than sufficient. If he touches the free terminal with an object held in the

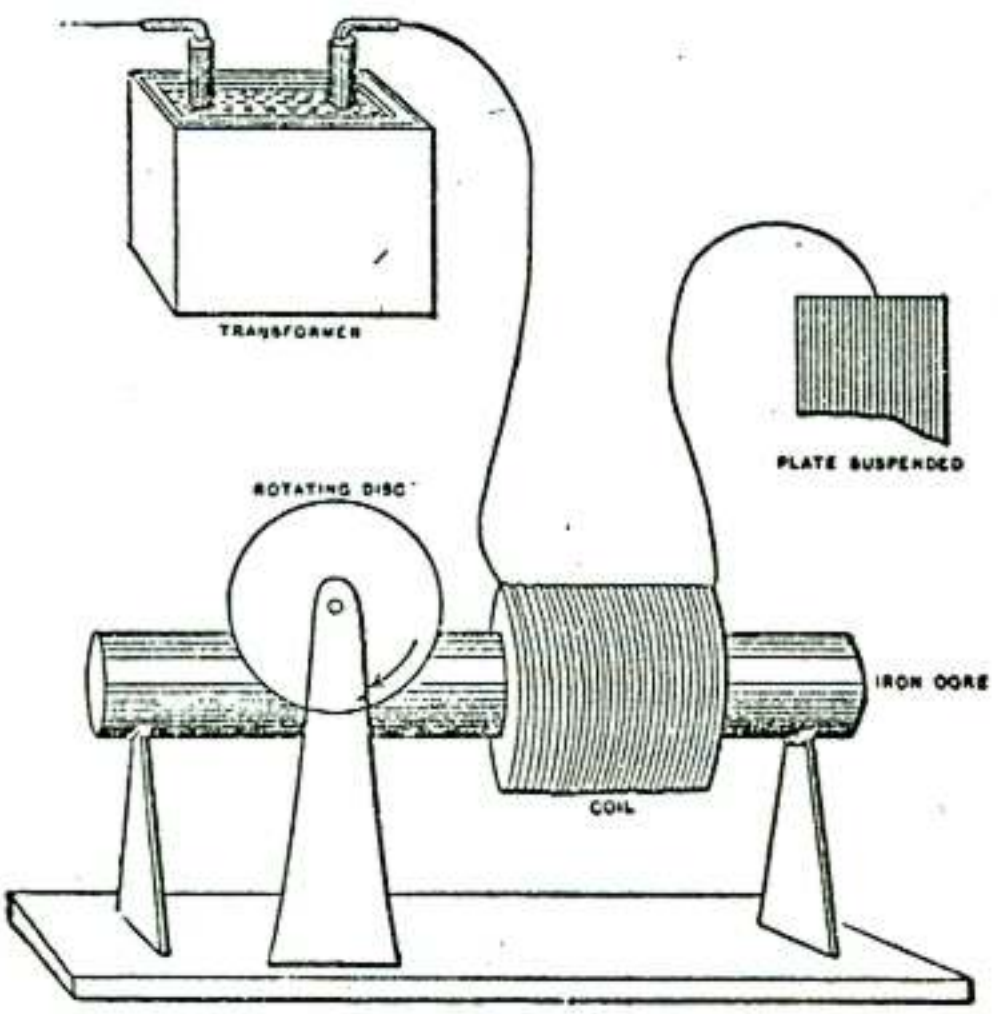

Fig. 17.

hand, a current passes through the coil and the copper disc is set in rotation. If an exhausted tube is put in series with the coil, the tube lights brilliantly, showing the passage of a strong current. Instead of the experimenter's body, a small metal sheet suspended on a cord may be used with the same result. In this case the plate acts as a condenser in series with the coil. It counteracts the self-induction of the latter and allows a strong current to pass. In such a combination, the greater the self-induction of the coil the smaller need be the plate, and this means that a lower frequency, or eventually a lower potential, is required to operate the motor. A single coil wound upon a core has a high self-induction; for this reason principally, this type of motor was chosen to perform the experiment. Were a secondary closed coil wound upon the core, it would tend to diminish the self-induction, and then it would be necessary to employ a much higher frequency and potential. Neither would be advisable, for a higher potential would endanger the insulation of the small primary coil, and a higher frequency would result in a materially diminished torque.

It should be remarked that when such a motor with a closed secondary is used, it is not at all easy to obtain rotation with excessive frequencies, as the secondary cuts off almost completely the lines of the primary — and this, of course, the more, the higher the frequency — and allows the passage of but a minute current. In such a case, unless the secondary is closed through a condenser, it is almost essential, in order to produce rotation, to make the primary and secondary coils overlap each other more or less.

But there is an additional feature of interest about this motor, namely, it is not necessary to have even a single connection between the motor and generator, except, perhaps, through the ground; for not only is an insulated plate capable of giving off energy into space, but it is likewise capable of deriving it from an alternating electrostatic field, though in the latter case the available energy is much smaller. In this instance one of the motor terminals is connected to the insulated plate or body located within the alternating electrostatic field, and the other terminal preferably to the ground.

It is quite possible, however, that such "no-wire" motors, as they might be called, could be operated by conduction through the rarefied air at considerable distances. Alternate currents, especially of high frequencies, pass with astonishing freedom through even slightly rarefied gases. The upper strata of the air are rarefied. To reach a number of miles out into space requires the overcoming of difficulties of a merely mechanical nature. There is no doubt that with the enormous potentials obtainable by the use of high frequencies and oil insulation luminous discharges might be passed through many miles of rarefied air, and that, by thus directing the energy of many hundreds or thousands of horse-power, motors or lamps might be operated at considerable distances from stationary sources. But such schemes are mentioned merely as possibilities. We shall have no need to *transmit* power at all. Ere many generations pass, our machinery will be driven by a power obtainable at any point of the universe. This idea is not novel. Men have been led to it long ago by instinct or reason. It has been expressed in many ways, and in many places, in the history of old and new. We find it in the delightful myth of Antheus, who derives power from the earth; we find it among the subtile speculations of one of your splendid mathematicians, and in many hints and statements of thinkers of the present time. Throughout space there is energy. Is this energy static or kinetic? If static our hopes are in vain; if kinetic — and this we know it is, for certain — then it is a mere question of time when men will succeed in attaching their machinery to the very wheelwork of nature. Of all, living or dead, Crookes came nearest to doing it. His radiometer will turn in the light of day and in the darkness of the night; it will turn everywhere where there is heat, and heat is everywhere. But, unfortunately, this beautiful litte machine, while it goes down to posterity as the most interesting, must likewise be put on record as the most inefficient machine ever invented!

The preceding experiment is only one of many equally interesting experiments which may be performed by the use of only one wire with alternate currents of high potential and frequency. We may connect an insulated line to a source of such currents, we may pass an inappreciable current over the line, and on any point of the same we are able to obtain a heavy current, capable of fusing a thick copper wire. Or we may, by the help of some artifice, decompose a solution in any electrolytic cell by connecting only one pole of the cell to the line or source of energy. Or we may, by attaching to the line, or only bringing into its vicinity, light up an incandescent lamp, an exhausted tube, or a phosphorescent bulb.

However impracticable this plan of working may appear in many cases, it certainly seems practicable, and even recommendable, in the production of light. A perfected lamp would require but little energy, and if wires were used at all we ought to be able to supply that energy without a return wire.

It is now a fact that a body may be rendered incandescent or phosphorescent by bringing it either in single contact or merely in the vicinity of a source of electric impulses of the proper character, and that in this manner a quantity of light sufficient to afford a practical illuminant may be produced. It is, therefore, to say the least, worth while to attempt to determine the best conditions and to invent the best appliances for attaining this object.

Some experiences have already been gained in this direction, and I will dwell on them briefly, in the hope that they might prove useful.

The heating of a conducting body inclosed in a bulb, and connected to a source of rapidly alternating electric impulses, is dependent on so many things of a different nature, that it would be difficult to give a generally applicable rule under which the maximum heating occurs. As regards the size of the vessel, I have lately found that at ordinary or only slightly differing atmospheric pressures, when air is a good insulator, and hence practically the same amount of energy by a certain potential and frequency is given off from the body, whether the bulb be small or large, the body is brought to a higher temperature if inclosed in a small bulb, because of the better confinement of heat in this case.

At lower pressures, when air becomes more or less conducting, or if the air be sufficiently warmed as to become conducting, the body is rendered more intensely incandescent in a large bulb, obviously because, under otherwise equal conditions of test, more energy may be given off from the body when the bulb is large.

At very high degrees of exhaustion, when the matter in the bulb becomes "radiant", a large bulb has still an advantage, but a comparatively slight one, over the small bulb.

Finally, at excessively high degrees of exhaustion, which cannot be reached except by the employment of special means, there seems to be, beyond a certain and rather small size of vessel, no perceptible difference in the heating.

These observations were the result of a number of experiments, of which one, showing the effect of the size of the bulb at a high degree of exhaustion, may be described and shown here, as it presents a feature of interest. Three spherical bulbs of 2 inches, 3 inches and 4 inches diameter were taken, and in the centre of each was mounted an equal length of an ordinary incandescent lamp filament of uniform thickness. In each bulb the piece of filament was fastened to the leading-in wire of platinum, contained in a glass stem sealed in the bulb; care being taken, of course, to make everything as nearly alike as possible. On each glass stem in the inside of the bulb was slipped a highly polished tube made of aluminium sheet, which fitted the stem and was held on it by spring pressure. The function of this aluminium tube will be explained subsequently. In each bulb an equal length of filament protruded above the metal tube. It is sufficient to say now that under these conditions equal lengths of filament of the same thickness — in other words, bodies of equal bulk — were brought to incandescence. The three bulbs were sealed to a glass tube, which was connected to a Sprengel pump. When a high vacuum had been reached, the glass tube carrying the bulbs was sealed off. A current was then turned on successively on each bulb, and it was found that the filaments came to about the same brightness, and, if anything, the smallest bulb, which was placed midway between the two larger ones, may have been slightly brighter. This result was expected, for when either of the bulbs was connected to the coil the luminosity spread through the other two, hence the three bulbs constituted really one vessel. When all the three bulbs were connected in multiple arc to the coil, in the largest of them the filament glowed brightest, in the next smaller it was a little less bright, and in the smallest it only came to redness. The bulbs were then sealed off and separately tried. The brightness of the filaments was now such as would have been expected on the supposition that the energy given off was proportionate to the surface of the bulb, this surface in each case representing one of the coatings of a condenser.

Accordingly, there was less difference between the largest and the middle sized than between the latter and the smallest bulb.

An interesting observation was made in this experiment. The three bulbs were suspended from a straight bare wire connected to a terminal of the coil, the largest bulb being placed at the end of the wire, at some distance from it the smallest bulb, and an equal distance from the latter the middle-sized one. The carbons glowed then in both the larger bulbs about as expected, but the smallest did not get its share by far. This observation led me to exchange the position of the bulbs, and I then observed that whichever of the bulbs was in the middle it was by far less bright than it was in any other position. This mystifyng result was, of course, found to be due to the electrostatic action between the bulbs. When they were placed at a considerable distance, or when they were attached to the corners of an equilateral triangle of copper wire, they glowed about in the order determined by their surfaces.

As to the shape of the vessel, it is also of some importance, especially at high degrees of exhaustion. Of all the possible constructions, it seems that a spherical globe with the refractory body mounted in its centre is the best to employ. In experience it has been demonstrated that in such a globe a refractory body of a given bulk is more easily brought to incandescence than when otherwise shaped bulbs are used. There is also an advantage in giving to the incandescent body the shape of a sphere, for self-evident reasons. In any case the body should be mounted in the centre, where the atoms rebounding from the glass collide. This object is best attained in the spherical bulb; but it is also attained in a cylindrical vessel with one or two straight filaments coinciding with its axis, and possibly also in parabolical or spherical bulbs with the refractory body or bodies placed in the focus or foci of the same; though the latter is not probable, as the electrified atoms should in all cases rebound normally from the surface they strike, unless the speed were excessive, in which case they *would* probably follow the general law of reflection. No matter what shape the vessel may have, if the exhaustion be low, a filament mounted in the globe is brought to the same degree of incandescence in all parts; but if the exhaustion be high and the bulb be spherical or pear-shaped, as usual, focal points form and the filament is heated to a higher degree at or near such points.

To illustrate the effect, I have here two small bulbs which are alike, only one is exhausted to a low and the other to a very high degree. When connected to the coil, the filament in the former glows uniformly throughout all its length; whereas in the latter, that portion of the filament which is in the centre of the bulb glows far more intensely than the rest. A curious point is that the phenomenon occurs even if two filaments are mounted in a bulb, each being connected to one terminal of the coil, and, what is still more curious, if they be very near together, provided the vacuum be very high. I noted in experiments with such bulbs that the filaments would give way usually at a certain point, and in the first trials I attributed it to a defect in the carbon. But when the phenomenon occurred many times in succession I recognized its real cause.

In order to bring a refractory body inclosed in a bulb to incandescence, it is desirable, on account of economy, that all the energy supplied to the bulb from the source should reach without loss the body to be heated; from there, and from nowhere else, it should be radiated. It is, of course, out of the question to reach this theoretical result, but it is possible by a proper construction of the illuminating device to approximate it more or less.

For many reasons, the refractory body is placed in the centre of the bulb and it is usually supported on a glass stem containing the leading-in wire. As the potential of this wire is alternated, the rarefied gas surrounding the stem is acted upon inductively, and the glass stem is violently bombarded and heated. In this manner by far the greater portion of the energy supplied to the bulb — especially when exceedingly high

frequencies are used — may be lost for the purpose contemplated. To obviate this loss, or at least to reduce it to a minimum, I usually screen the rarefied gas surrounding the stem from the inductive action of the leading-in wire by providing the stem with a tube or coating of conducting material. It seems beyond doubt that the best among metals to employ for this purpose is aluminium, on account of its many remarkable properties. Its only fault is that it is easily fusible, and, therefore, its distance from the incandescing body should be properly estimated. Usually, a thin tube, of a diameter somewhat smaller than that of the glass stem, is made of the finest aluminium sheet, and slipped on the stem. The tube is conveniently prepared by wrapping around a rod fastened in a lathe a piece of aluminium sheet of the proper size, grasping the sheet firmly with clean chamois leather or blotting paper, and spinning the rod very fast. The sheet is wound tightly around the rod, and a highly polished tube of one or three layers of the sheet is obtained. When slipped on the stem, the pressure is generally sufficient to prevent it from slipping off, but, for safety, the lower edge of the sheet may be turned inside. The upper inside corner of the sheet — that is, the one which is nearest to the refractory incandescent body — should be cut out diagonally, as it often happens that, in consequence of the intense heat, this corner turns toward the inside and comes very near to, or in contact with, the wire, or filament, supporting the refractory body. The greater part of the energy supplied to the bulb is then used up in heating the metal tube, and the bulb is rendered useless for the purpose. The aluminium sheet should project above the glass stem more or less — one inch or so — or else, if the glass be too close to the incandescing body, it may be strongly heated and become more or less conducting, whereupon it may be ruptured, or may, by its conductivity, establish a good electrical connection between the metal tube and the leading-in wire, in which case, again, most of the energy will be lost in heating the former. Perhaps the best way is to make the top of the glass tube for about an inch, of a much smaller diameter. To still further reduce the danger arising from the heating of the glass stem, and also with the view of preventing an electrical connection between the metal tube and the electrode, I preferably wrap the stem with several layers of thin mica, which extends at least as far as the metal tube. In some bulbs I have also used an outside insulating cover.

The preceding remarks are only made to aid the experimenter in the first trials, for the difficulties which he encounters he may soon find means to overcome in his own way.

To illustrate the effect of the screen, and the advantage of using it, I have here two bulbs of the same size, with their stems, leading-in wires and incandescent lamp filaments tied to the latter, as nearly alike as possible. The stem of one bulb is provided with an aluminium tube, the stem of the other has none. Originally the two bulbs were joined by a tube which was connected to a Sprengel pump. When a high vacuum had been reached, first the connecting tube, and then the bulbs, were sealed off; they are therefore of the same degree of exhaustion. When they are separately connected to the coil giving a certain potential, the carbon filament in the bulb provided with the aluminium screen in rendered highly incandescent, while the filament in the other bulb may, with the same potential, not even come to redness, although in reality the latter bulb takes generally more energy than the former. When they are both connected together to the terminal, the difference is even more apparent, showing the importance of the screening. The metal tube placed on the stem containing the leading-in wire performs really two distinct functions: First; it acts more or less as an electrostatic screen, thus economizing the energy supplied to the bulb; and, second, to whatever extent it may fail to act electrostatically, it acts mechanically, preventing the bombardment, and consequently intense heating and possible deterioration of the slender support of the refractory incandescent body, or of the glass stem containing the leading-in wire. I say *slender* support, for it is evident that in order to confine the heat more completely to

the incandescing body its support should be very thin, so as to carry away the smallest possible amount of heat by conduction. Of all the supports used I have found an ordinary incandescent lamp filament to be the best, principally because among conductors it can withstand the highest degrees of heat.

The effectiveness of the metal tube as an electrostatic screen depends largely on the degree of exhaustion.

At excessively high degrees of exhaustion — which are reached by using great care and special means in connection with the Sprengel pump — when the matter in the globe is in the ultra-radiant state, it acts most perfectly. The shadow of the upper edge of the tube is then sharply defined upon the bulb.

At a somewhat lower degree of exhaustion, which is about the ordinary "non-striking" vacuum, and generally as long as the matter moves predominantly in straight lines, the screen still does well. In elucidation of the preceding remark it is necessary to state that what is a "non-striking" vacuum for a coil operated, as ordinarily, by impulses, or currents, of low frequency, is not, by far, so when the coil is operated by currents of very high frequency. In such case the discharge may pass with great freedom through the rarefied gas through which a low-frequency discharge may not pass, even though the potential be much higher. At ordinary atmospheric pressures just the reverse rule holds good: the higher the frequency, the less the spark discharge is able to jump between the terminals, especially if they are knobs or spheres of some size.

Finally, at very low degrees of exhaustion, when the gas is well conducting, the metal tube not only does not act as an electrostatic screen, but even is a drawback, aiding to a considerable extent the dissipation of the energy laterally from the leading-in wire. This, of course, is to be expected. In this case, namely, the metal tube is in good electrical connection with the leading-in wire, and most of the bombardment is directed upon the tube. As long as the electrical connection is not good, the conducting tube is always of some advantage, for although it may not greatly economize energy, still it protects the support of the refractory button, and is a means for concentrating more energy upon the same.

To whatever extent the aluminium tube performs the function of a screen, its usefulness is therefore limited to very high degrees of exhaustion when it is insulated from the electrode — that is, when the gas as a whole is non-conducting, and the molecules, or atoms, act as independent carriers of electric charges.

In addition to acting as a more or less effective screen, in the true meaning of the word, the conducting tube or coating may also act, by reason of its conductivity, as a sort of equalizer or dampener of the bombardment against the stem. To be explicit, I assume the action as follows: Suppose a rhythmical bombardment to occur against the conducting tube by reason of its imperfect action as a screen; it certainly must happen that some molecules, or atoms, strike the tube sooner than others. Those which come first in contact with it give up their superfluous charge, and the tube is electrified, the electrification instantly spreading over its surface. But this must diminish the energy lost in the bombardment for two reasons: first, the charge given up by the atoms spreads over a great area, and hence the electric density at any point is small, and the atoms are repelled with less energy than they would be if they would strike against a good insulator; secondly, as the tube is electrified by the atoms which first come in contact with it, the progress of the following atoms against the tube is more or less checked by the repulsion which the electrified tube must exert upon the similarly electrified atoms. This repulsion may perhaps be sufficient to prevent a large portion of the atoms from striking the tube, but at any rate it must diminish the energy of their impact. It is clear that when the exhaustion is very low, and the rarefied gas well conducting, neither of the above effects can occur, and, on the other hand, the fewer the atoms, with

the greater freedom they move; in other words, the higher the degree of exhaustion, up to a limit, the more telling will be both the effects.

What I have just said may afford an explanation of the phenomenon observed by Prof. Crookes, namely, that a discharge through a bulb is established with much greater facility when an insulator than when a conductor is present in the same. In my opinion, the conductor acts as a dampener of the motion of the atoms in the two ways pointed out; hence, to cause a visible discharge to pass through the bulb, a much higher potential is needed if a conductor, especially of much surface, be present.

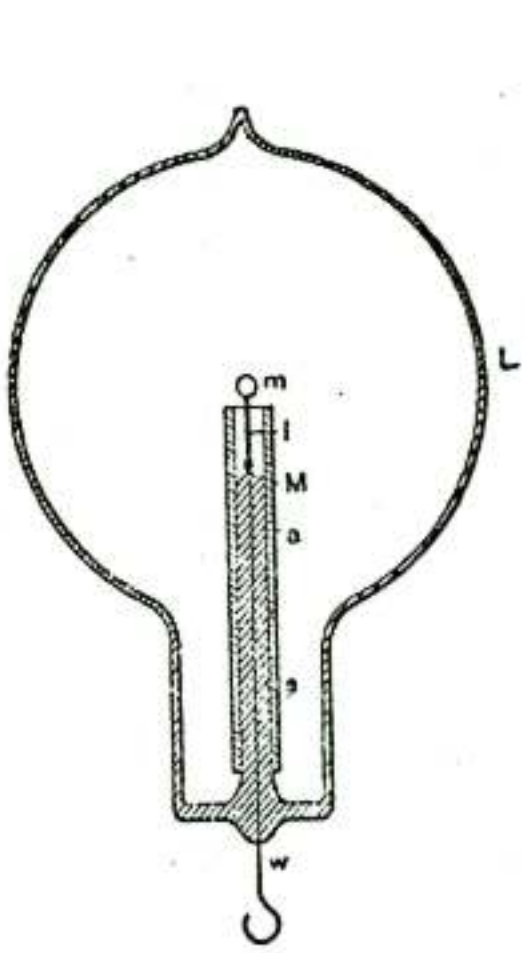

Fig. 18.

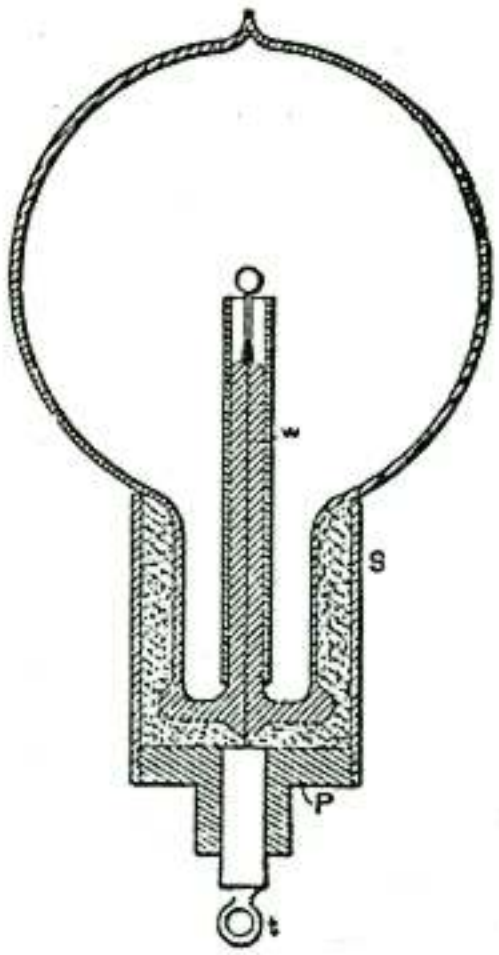

Fig. 19.

For the sake of clearness of some of the remarks before made, I must now refer to Figs. 18, 19 and 20, which illustrate various arrangements with a type of bulb most generally used.

Fig. 18 is a section through a spherical bulb *L*, with the glass stem *s*, containing the leading-in wire *w*, which has a lamp filament *l* fastened to it, serving to support the refractory button *m* in the centre. *M* is a sheet of thin mica wound in several layers around the stem *s*, and *a* is the aluminium tube.

Fig. 19 illustrates such a bulb in a somewhat more advanced stage of perfection. A metallic tube *S* is fastened by means of some cement to the neck of the tube. In the tube is screwed a plug *P*, of insulating material, in the centre of which is fastened a metallic terminal *t*, for the connection to the leading-in wire *w*. This terminal must be well insulated from the metal tube *S*, therefore, if the cement used is conducting — and most generally it is sufficiently so — the space between the plug *P* and the neck of the bulb should be filled with some good insulating material, as mica powder.

Fig. 20 shows a bulb made for experimental purposes. In this bulb the aluminium tube is provided with an external connection, which serves to investigate the effect of the tube under various conditions. It is referred to chiefly to suggest a line of experiment followed.

Since the bombardment against the stem containing the leading-in wire is due to the inductive action of the latter upon the rarefied gas, it is of advantage to reduce this action as far as practicable by employing a very thin wire, surrounded by a very

thick insulation of glass or other material, and by making the wire passing through the rarefied gas as short as practicable. To combine these features I employ a large tube *T* (Fig. 21), which protrudes into the bulb to some distance, and carries on the top a very short glass stem *s*, into which is sealed the leading-in wire *w*, and I protect the top of the glass stem against the heat by a small, aluminium tube *a* and a layer of mica underneath the same, as usual. The wire *w*, passing through the large tube to the outside of the bulb, should be well insulated — with a glass tube, for instance — and the space between ought to be filled out with some excellent insulator. Among many insulating powders I have tried, I have found that mica powder is the best to employ. If this precaution is not taken, the tube *T*, protruding into the bulb, will surely be cracked in consequence of the heating by the brushes which are apt to form in the upper part of the tube, near the exhausted globe, especially if the vacuum be excellent, and therefore the potential necessary to operate the lamp very high.

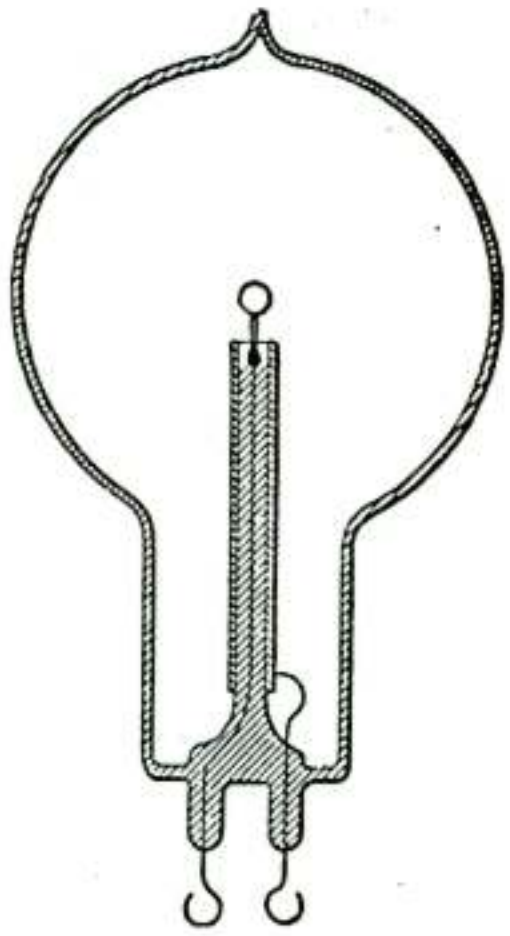

Fig. 20.

Fig. 22 illustrates a similar arrangement, with a large tube *T* protruding into the part of the bulb containing the refractory button *m*. In this case the wire leading from the outside into the bulb is omitted, the energy required being supplied through condenser coatings *C C*. The insulating packing *P* should in this construction be tightly fitting to the glass, and rather wide, or otherwise the discharge might avoid passing through the wire *w*, which connects the inside condenser coating to the incandescent button *m*.

The molecular bombardment against the glass stem in the bulb is a source of great trouble. As illustration I will cite a phenomenon only too frequently and unwillingly observed. A bulb, preferably a large one, may be taken, and a good conducting body, such as a piece of carbon, may be mounted in it upon a platinum wire sealed in the glass stem. The bulb may be exhausted to a fairly high degree, nearly to the point when phosphorescence begins to appear. When the bulb is connected with the coil, the piece of carbon, if small, may become highly incandescent at first, but its brightness immediately diminishes, and then the discharge may break through the glass somewhere in the middle of the stem, in the form of bright sparks, in spite of the fact that the platinum wire is in good electrical connection with the rarefied gas through the piece of carbon or metal at the top. The first sparks are singularly bright, recalling those drawn from a clear surface of mercury. But, as they heat the glass rapidly, they, of course, lose their brightness, and cease when the glass at the ruptured place becomes incandescent, or generally sufficiently hot to conduct. When observed for the first time the phenomenon must appear very curious, and shows in a striking manner how radically different alternate currents, or impulses, of high frequency behave, as compared with steady currents, or currents of low frequency. With such currents — namely, the latter — the phenomenon would of course not occur. When frequencies such as are obtained by mechanical means are used, I think that the rupture of the glass is more or less the consequence of the bombardment, which warms it up and impairs its insulating power; but with frequencies obtainable with condensers I have no doubt that the glass may give way without previous heating. Although this appears most singular at first, it is in reality what we might expect to occur. The energy supplied to the wire leading into the bulb is given off partly by direct action through the carbon button, and partly by

inductive action through the glass surrounding the wire. The case is thus analogous to that in which a condenser shunted by a conductor of low resistance is connected to a source of alternating currents. As long as the frequencies are low, the conductor gets the most, and the condenser is perfectly safe; but when the frequency becomes excessive, the *rôle* of the conductor may become quite insignificant. In the latter case the difference of potential at the terminals of the condenser may become so great as to rupture the dielectric, notwithstanding the fact that the terminals are joined by a conductor of low resistance.

Fig. 21.

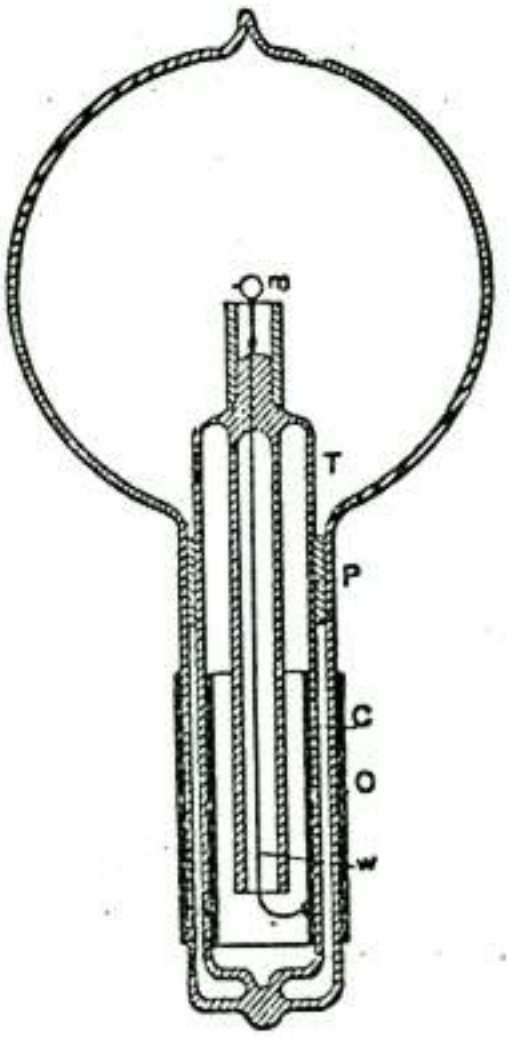

Fig. 22.

It is, of course, not necessary, when it is desired to produce the incandescence of a body inclosed in a bulb by means of these currents, that the body should be a conductor, for even a perfect non-conductor may be quite as readily heated. For this purpose it is sufficient to surround a conducting electrode with a non-conducting material, as, for instance, in the bulb described before in Fig. 21, in which a thin incandescent lamp filament is coated with a non-conductor, and supports a button of the same material on the top. At the start the bombardment goes on by inductive action through the non-conductor, until the same is sufficiently heated to become conducting, when the bombardment continues in the ordinary way.

A different arrangement used in some of the bulbs constructed is illustrated in Fig. 23. In this instance a non-conductor *m* is mounted in a piece of common arc light carbon so as to project some small distance above the latter. The carbon piece is connected to the leading-in wire passing through a glass stem, which is wrapped with several layers of mica. An aluminium tube *a* is employed as usual for screening. It is so arranged that it reaches very nearly as high as the carbon and only the non-conductor *m* projects a little above it. The bombardment goes at first against the upper surface of carbon, the lower parts being protected by the aluminium tube. As soon, however, as the non-conductor *m* is heated it is rendered good conducting, and then it becomes the centre of the bombardment, being most exposed to the same.

I have also constructed during these experiments many such single-wire bulbs with or without internal electrode, in which the radiant matter was projected against, or focused upon, the body to be rendered incandescent. Fig. 24 illustrates one of the bulbs used. It consists of a spherical globe *L*, provided with a long neck *n*, on the top, for increasing the action in some cases by the application of an external conducting coating. The globe *L* is blown out on the bottom into a very small bulb *b*, which serves to hold it firmly in a socket *S* of insulating material into which it is cemented. A fine lamp filament *f*, supported on a wire *w*, passes through the centre of the globe *L*. The filament is rendered incandescent in the middle portion, where the bombardment proceeding from the lower inside surface of the globe is most intense. The lower portion of the globe, as far as the socket *S* reaches, is rendered conducting, either by a tinfoil coating or otherwise, and the external electrode is connected to a terminal of the coil.

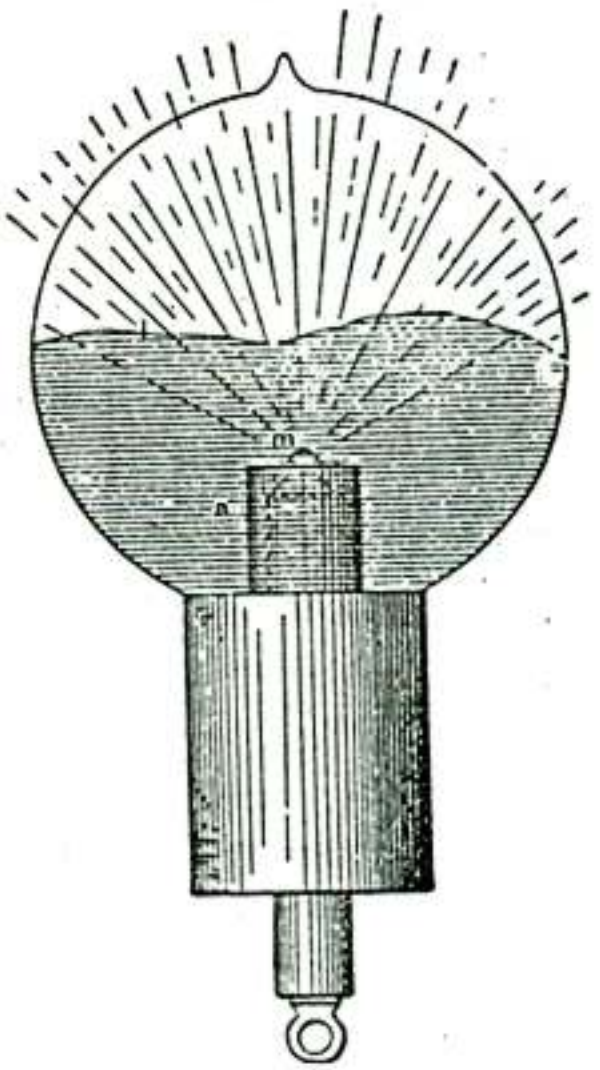

Fig. 23.

The arrangement diagrammatically indicated in Fig. 24 was found to be an inferior one when it was desired to render incandescent a filament or button supported in the centre of the globe, but it was convenient when the object was to excite phosphorescence.

In many experiments in which bodies of a different kind were mounted in the bulb as, for instance, indicated in Fig. 23, some observations of interest were made.

It was found, among other things, that in such cases, no matter where the bombardment began, just as soon as a high temperature was reached there was generally one of the bodies which seemed to take most of the bombardment upon itself, the other, or others, being thereby relieved. This quality appeared to depend principally on the point of fusion, and on the facility with which the body was "evaporated", or, generally speaking, disintegrated — meaning by the latter term not only the throwing off of atoms, but likewise of larger lumps. The observation made was in accordance with generally accepted notions. In a highly exhausted bulb electricity is carried off from the electrode by independent carriers, which are partly the atoms, or molecules, of the residual atmosphere, and partly the atoms, molecules, or lumps thrown off from the electrode. If the electrode is composed of bodies of different character, and if one of these is more easily disintegrated than the others, most of the electricity supplied is carried off from that body, which is then brought to a higher temperature than the others, and this the more, as upon an increase of the temperature the body is still more easily disintegrated.

It seems to me quite probable that a similar process takes place in the bulb even with a homogenous electrode, and I think it to be the principal cause of the disintegration. There is bound to be some irregularity, even if the surface is highly polished, which, of course, is impossible with most of the refractory bodies employed as electrodes. Assume that a point of the electrode gets hotter, instantly most of the discharge passes through that point, and a minute patch is probably fused and evaporated. It is now possible that in consequence of the violent disintegration the spot attacked sinks in

temperature, or that a counter force is created, as in an arc; at any rate, the local tearing off meets with the limitations incident to the experiment, whereupon the same process occurs on another place. To the eye the electrode appears uniformly brilliant, but there are upon it points constantly shifting and wandering around, of a temperature far above the mean, and this materially hastens the process of deterioration. That some such thing occurs, at least when the electrode is at a lower temperature, sufficient experimental evidence can be obtained in the following manner: Exhaust a bulb to a very high degree, so that with a fairly high potential the discharge cannot pass — that is, not a *luminous* one, for a weak invisible discharge occurs always, in all probability. Now raise slowly and carefully the potential, leaving the primary current on no more than for an instant. At a certain point, two, three, or half a dozen phosphorescent spots will appear on the globe. These places of the glass are evidently more violently bombarded than others, this being due to the unevenly distributed electric density, necessitated, of course, by sharp projections, or, generally speaking, irregularities of the electrode. But the luminous patches are constantly changing in position, which is especially well observable if one manages to produce very few, and this indicates that the configuration of the electrode is rapidly changing.

From experiences of this kind I am led to infer that, in order to be most durable, the refractory button in the bulb should be in the form of a sphere with a highly polished surface. Such a small sphere could be manufactured from a diamond or some other crystal, but a better way would be to fuse, by the employment of extreme degrees of temperature, some oxide — as, for instance, zirconia — into a small drop, and then keep it in the bulb at a temperature somewhat below its point of fusion.

Interesting and useful results can no doubt be reached in the direction of extreme degrees of heat. How can such high temperatures be arrived at? How are the highest degrees of heat reached in nature? By the impact of stars, by high speeds and collisions. In a collision any rate of heat generation may be attained. In a chemical process we are limited. When oxygen and hydrogen combine, they fall, metaphorically speaking, from a definite height. We cannot go very far with a blast, nor by confining heat in a furnace, but in an exhausted bulb we can concentrate any amount of energy upon a minute button. Leaving practicability out of consideration, this, then, would be the means which, in my opinion, would enable us to reach the highest temperature. But a great difficulty when proceeding in this way is encountered, namely, in most cases the body is carried off before it can fuse and form a drop. This difficulty exists principally with an oxide such as zirconia, because it cannot be compressed in so hard a cake that it would not be carried off quickly. I endeavored repeatedly to fuse zirconia, placing it in a cup or arc light carbon as indicated in Fig. 23. It glowed with a most intense light, and the stream of the particles projected out of the carbon cup was of a vivid white; but whether it was compressed in a cake or made into a paste with carbon, it was carried off before it could be fused. The carbon cup containing the zirconia had to be mounted very low in the neck of a large bulb, as the heating of the glass by the projected particles of the oxide was so rapid that in the first trial the bulb was cracked almost in an instant when the current was turned on. The heating of the glass by the projected particles was found to be always greater when the carbon cup contained a body which was rapidly carried off — I presume because in such cases, with the same potential, higher speeds were reached, and also because, per unit of time, more matter was projected — that is, more particles would strike the glass.

The before mentioned difficulty did not exist, however, when the body mounted in the carbon cup offered great resistance to deterioration. For instance, when an oxide was first fused in an oxygen blast and then mounted in the bulb, it melted very readily into a drop.

Generally during the process of fusion magnificent light effects were noted, of which it would be difficult to give an adequate idea. Fig. 23 is intended to illustrate

the effect observed with a ruby drop. At first one may see a narrow funnel of white light projected against the top of the globe, where it produces an irregularly outlined phosphorescent patch. When the point of the ruby fuses the phosphorescence becomes very powerful; but as the atoms are projected with much greater speed from the surface of the drop, soon the glass gets hot and "tired", and now only the outer edge of the patch glows. In this manner an intensely phosphorescent, sharply defined line, *l*, corresponding to the outline of the drop, is produced, which spreads slowly over the globe as the drop gets larger. When the mass begins to boil, small bubbles and cavities are formed, which cause dark colored spots to sweep across the globe. The bulb may be turned downward without fear of the drop falling off, as the mass possesses considerable viscosity.

I may mention here another feature of some interest, which I believe to have noted in the course of these experiments, though the observations do not amount to a certitude. It *appeared* that under the molecular impact caused by the rapidly alternating potential the body was fused and maintained in that state at a lower temperature in a highly exhausted bulb than was the case at normal pressure and application of heat in the ordinary way — that is, at least, judging from the quantity of the light emitted. One of the experiments performed may be mentioned here by way of illustration. A small piece of pumice stone was stuck on a platinum wire, and first melted to it in a gas burner. The wire was next placed between two pieces of charcoal and a burner applied so as to produce an intense heat, sufficient to melt down the pumice stone into a small glass - like button. The platinum wire had to be taken of sufficient thickness to prevent its melting in the fire. While in the charcoal fire, or when held in a burner to get a better idea of the degree of heat, the button glowed with great brilliancy. The wire with the button was then mounted in a bulb, and upon exhausting the same to a high degree, the current was turned on slowly so as to prevent the cracking of the button. The button was heated to the point of fusion, and when it melted it did not, apparently, glow with the same brilliancy as before, and this would indicate a lower temperature. Leaving out of consideration the observer's possible, and even probable, error, the question is, can a body under these conditions be brought from a solid to a liquid state with evolution of *less* light?

When the potential of a body is rapidly alternated it is certain that the structure is jarred. When the potential is very high, although the vibrations may be few — say 20,000 per second — the effect upon the structure may be considerable. Suppose, for example, that a ruby is melted into a drop by a steady application of energy. When it forms a drop it will emit visible and invisible waves, which will be in a definite ratio, and to the eye the drop will appear to be of a certain brilliancy. Next, suppose we diminish to any degree we choose the energy steadily supplied, and, instead, supply energy which rises and falls according to a certain law. Now, when the drop is formed, there will be emitted from it three different kinds of vibrations — the ordinary visible, and two kinds of invisible waves: that is, the ordinary dark waves of all lengths, and, in addition, waves of a well defined character. The latter would not exist by a steady supply of the energy; still they help to jar and loosen the structure. If this really be the case, then the ruby drop will emit relatively less visible and more invisible waves than before. Thus it would seem that when a platinum wire, for instance, is fused by currents alternating with extreme rapidity, it emits at the point of fusion less light and more invisible radiation than it does when melted by a steady current, though the total energy used up in the process of fusion is the same in both cases. Or, to cite another example, a lamp filament is not capable of withstanding as long with currents of extreme frequency as it does with steady currents, assuming that it be worked at the same luminous intensity. This means that for rapidly alternating currents the filament should be shorter and thicker. The higher the frequency — that is, the greater the departure from the

steady flow — the worse it would be for the filament. But if the truth of this remark were demonstrated, it would be erroneous to conclude that such a refractory button as used in these bulbs would be deteriorated quicker by currents of extremely high frequency than by steady or low frequency currents. From experience I may say that just the opposite holds good: the button withstands the bombardment better with currents of very high frequency. But this is due to the fact that a high frequency discharge passes through a rarefied gas with much greater freedom than a steady or low frequency discharge, and this will say that with the former we can work with a lower potential or with a less violent impact. As long, then, as the gas is of no consequence, a steady or low frequency current is better; but as soon as the action of the gas is desired and important, high frequencies are preferable.

In the course of these experiments a great many trials were made with all kinds of carbon buttons. Electrodes made of ordinary carbon buttons were decidedly more durable when the buttons were obtained by the application of enormous pressure. Electrodes prepared by depositing carbon in well known ways did not show up well; they blackened the globe very quickly. From many experiencies I conclude that lamp filaments obtained in this manner can be advantageously used only with low potentials and low frequency currents. Some kinds of carbon withstand so well that, in order to bring them to the point of fusion, it is necessary to employ very small buttons. In this case the observation is rendered very difficult on account of the intense heat produced. Nevertheless there can be no doubt that all kinds of carbon are fused under the molecular bombardment, but the liquid state must be one of great instability. Of all the bodies tried there were two which withstood best — diamond and carborundum. These two showed up about equally, but the latter was preferable, for many reasons. As it is more than likely that this body is not yet generally known, I will venture to call your attention to it.

It has been recently produced by Mr. E. G. Acheson, of Monongahela City, Pa., U. S. A. It is intended to replace ordinary diamond powder for polishing precious stones, etc., and I have been informed that it accomplishes this object quite successfully. I do not know why the name "carborundum" has been given to it, unless there is something in the process of its manufacture which justifies this selection. Through the kindness of the inventor, I obtained a short while ago some samples which I desired to test in regard to their qualities of phosphorescence and capability of withstanding high degrees of heat.

Carborundum can be obtained in two forms — in the form of "crystals" and of powder. The former appear to the naked eye dark colored, but are very brilliant; the latter is of nearly the same color as ordinary diamond powder, but very much finer. When viewed under a microscope the samples of crystals given to me did not appear to have any definite form, but rather resembled pieces of broken up egg coal of fine quality. The majority were opaque, but there were some which were transparent and colored. The crystals are a kind of carbon containing some impurities; they are extremely hard, and withstand for a long time even an oxygen blast. When the blast is directed against them they at first form a cake of some compactness, probably in consequence of the fusion of impurities they contain. The mass withstands for a very long time the blast without further fusion; but a slow carrying off, or burning, occurs, and, finally, a small quantity of a glass-like residue is left, which, I suppose, is melted alumina. When compressed strongly they conduct very well, but not as well as ordinary carbon. The powder, which is obtained from the crystals in some way, is practically non-conducting. It affords a magnificent polishing material for stones.

The time has been too short to make a satisfactory study of the properties of this product, but enough experience has been gained in a few weeks I have experimented upon it to say that it does possess some remarkable properties in many respects. It

withstands excessively high degrees of heat, it is little deteriorated by molecular bombardment, and it does not blacken the globe as ordinary carbon does. The only difficulty which I have found in its use in connection with these experiments was to find some binding material which would resist the heat and the effect of the bombardment as successfully as carborundum itself does.

I have here a number of bulbs which I have provided with buttons of carborundum. To make such a button of carborundum crystals I proceed in the following manner: I take an ordinary lamp filament and dip its point in tar, or some other thick substance or paint which may be readily carbonized. I next pass the point of the filament through the crystals, and then hold it vertically over a hot plate. The tar softens and forms a drop on the point of the filament, the crystals adhering to the surface of the drop. By regulating the distance from the plate the tar is slowly dried out and the button becomes solid. I then once more dip the button in tar and hold it again over a plate until the tar is evaporated, leaving only a hard mass which firmly binds the crystals. When a larger button is required I repeat the process several times, and I generally also cover the filament a certain distance below the button with crystals. The button being mounted in a bulb, when a good vacuum has been reached, first a weak and then a strong discharge is passed through the bulb to carbonize the tar and expel all gases, and later it is brought to a very intense incandescence.

When the powder is used I have found it best to proceed as follows: I make a thick paint of carborundum and tar, and pass a lamp filament through the paint. Taking then most of the paint off by rubbing the filament against a piece of chamois leather, I hold it over a hot plate until the tar evaporates and the coating becomes firm. I repeat this process as many times as it is necessary to obtain a certain thickness of coating. On the point of the coated filament I form a button in the same manner.

There is no doubt that such a button — properly prepared under great pressure — of carborundum, especially of powder of the best quality, will withstand the effect of the bombardment fully as well as anything we know. The difficulty is that the binding material gives way, and the carborundum is slowly thrown off after some time. As it does not seem to blacken the globe in the least, it might be found useful for coating the filaments of ordinary incandescent lamps, and I think that it is even possible to produce thin threads or sticks of carborundum which will replace the ordinary filaments in an incandescent lamp. A carborundum coating seems to be more durable than other coatings, not only because the carborundum can withstand high degrees of heat, but also because it seems to unite with the carbon better than any other material I have tried. A coating of zirconia or any other oxide, for instance, is far more quickly destroyed. I prepared buttons of diamond dust in the same manner as of carborundum, and these came in durability nearest to those prepared of carborundum, but the binding paste gave way much more quickly in the diamond buttons: this, however, I attributed to the size and irregularity of the grains of the diamond.

It was of interest to find whether carborundum possesses the quality of phosphorescence. One is, of course, prepared to encounter two difficulties: first, as regards the rough product, the "crystals", they are good conducting, and it is a fact that conductors do not phosphoresce; second, the powder, being exceedingly fine, would not be apt to exhibit very prominently this quality, since we know that when crystals, even such as diamond or ruby, are finely powdered, they lose the property of phosphorescence to a considerable degree.

The question presents itself here, can a conductor phosphoresce? What is there in such a body as a metal, for instance, that would deprive it of the quality of phosphorescence, unless it is that property which characterizes it as a conductor? for it is a fact that most of the phosphorescent bodies lose that quality when they are sufficiently heated to become more or less conducting. Then, if a metal be in a large measure, or perhaps entirely, deprived of that property, it should be capable of phospho-

rescence. Therefore it is quite possible that at some extremely high frequency, when behaving practically as a non-conductor, a metal or any other conductor might exhibit the quality of phosphorescence, even though it be entirely incapable of phosphorescing under the impact of a low-frequency discharge. There is, however, another possible way how a conductor might at least *appear* to phosphoresce.

Considerable doubt still exists as to what really is phosphorescence, and as to whether the various phenomena comprised under this head are due to the same causes. Suppose that in an exhausted bulb, under the molecular impact, the surface of a piece of metal or other conductor is rendered strongly luminous, but at the same time it is found that it remains comparatively cool, would not this luminosity be called phosphorescence? Now such a result, theoretically at least, is possible, for it is a mere question of potential or speed. Assume the potential of the electrode, and consequently the speed of the projected atoms, to be sufficiently high, the surface of the metal piece against which the atoms are projected would be rendered highly incandescent, since the process of heat generation would be incomparably faster than that of radiating or conducting away from the surface of the collision. In the eye of the observer a single impact of the atoms would cause an instantaneous flash, but if the impacts were repeated with sufficient rapidity they would produce a continuous impression upon his retina. To him then the surface of the metal would appear continuously incandescent and of constant luminous intensity, while in reality the light would be either intermittent or at least changing periodically in intensity. The metal piece would rise in temperature until equilibrium was attained — that is, until the energy continuously radiated would equal that intermittently supplied. But the supplied energy might under such conditions not be sufficient to bring the body to any more than a very moderate mean temperature, especially if the frequency of the atomic impacts be very low — just enough that the fluctuation of the intensity of the light emitted could not be detected by the eye. The body would now, owing to the manner in which the energy is supplied, emit a strong light, and yet be at a comparatively very low mean temperature. How could the observer call the luminosity thus produced? Even if the analysis of the light would teach him something definite, still he would probably rank it under the phenomena of phosphorescence. It is conceivable that in such a way both conducting and non-conducting bodies may be maintained at a certain luminous intensity, but the energy required would very greatly vary with the nature and properties of the bodies.

These and some foregoing remarks of a speculative nature were made merely to bring out curious features of alternate currents or electric impulses. By their help we may cause a body to emit *more* light, while at a certain mean temperature, than it would emit if brought to that temperature by a steady supply; and, again, we may bring a body to the point of fusion, and cause it to emit *less* light than when fused by the application of energy in ordinary ways. It all depends on how we supply the energy, and what kind of vibrations we set up: in one case the vibrations are more, in the other less, adapted to affect our sense of vision.

Some effects, which I had not observed before, obtained with carborundum in the first trials, I attributed to phosphorescence, but in subsequent experiments it appeared that it was devoid of that quality. The crystals possess a noteworthy feature. In a bulb provided with a single electrode in the shape of a small circular metal disc, for instance, at a certain degree of exhaustion the electrode is covered with a milky film, which is separated by a dark space from the glow filling the bulb. When the metal disc is covered with carborundum crystals, the film is far more intense, and snow-white. This I found later to be merely an effect of the bright surface of the crystals, for when an aluminium electrode was highly polished it exhibited more or less the same phenomenon. I made a number of experiments with the samples of crystals obtained, principally because it would have been of special interest to find that they are capable of

phosphorescence, on account of their being conducting. I could not produce phosphorescence distinctly, but I must remark that a decisive opinion cannot be formed until other experimenters have gone over the same ground.

The powder behaved in some experiments as though it contained alumina, but it did not exhibit with sufficient distinctness the red of the latter. Its dead color brightens considerably under the molecular impact, but I am now convinced it does not phosphoresce. Still, the tests with the powder are not conclusive, because powdered carborundum probably does not behave like a phosphorescent sulphide, for example, which could be finely powdered without impairing the phosphorescence, but rather like powdered ruby or diamond, and therefore it would be necessary, in order to make a decisive test, to obtain it in a large lump and polish up the surface.

If the carborundum proves useful in connection with these and similar experiments, its chief value will be found in the production of coatings, thin conductors, buttons, or other electrodes capable of withstanding extremely high degrees of heat.

The production of a small electrode capable of withstanding enormous temperatures I regard as of the greatest importance in the manufacture of light. It would enable us to obtain, by means of currents of very high frequencies, certainly 20 times, if not more, the quantity of light which is obtained in the present incandescent lamp by the same expenditure of energy. This estimate may appear to many exaggerated, but in reality I think it is far from being so. As this statement might be misunderstood I think it necessary to expose clearly the problem with which in this line of work we are confronted, and the manner in which, in my opinion, a solution will be arrived at.

Any one who begins a study of the problem will be apt to think that what is wanted in a lamp with an electrode is a very high degree of incandescence of the electrode. There he will be mistaken. The high incandescence of the button is a necessary evil, but what is really wanted is the high incandescence of the gas surrounding the button. In other words, the problem in such a lamp is to bring a mass of gas to the highest possible incandescence. The higher the incandescence, the quicker the mean vibration, the greater is the economy of the light production. But to maintain a mass of gas at a high degree of incandescence in a glass vessel, it will always be necessary to keep the incandescent mass away from the glass; that is, to confine it as much as possible to the central portion of the globe.

In one of the experiments this evening a brush was produced at the end of a wire. This brush was a flame, a source of heat and light. It did not emit much perceptible heat, nor did it glow with an intense light; but is it the less a flame because it does not scorch my hand? Is it the less a flame because it does not hurt my eye by its brilliancy? The problem is precisely to produce in the bulb such a flame, much smaller in size, but incomparably more powerful. Were there means at hand for producing electric impulses of a sufficiently high frequency, and for transmitting them, the bulb could be done away with, unless it were used to protect the electrode, or to economize the energy by confining the heat. But as such means are not at disposal, it becomes necessary to place the terminal in a bulb and rarefy the air in the same. This is done merely to enable the apparatus to perform the work which it is not capable of performing at ordinary air pressure. In the bulb we are able to intensify the action to any degree — so far that the brush emits a powerful light.

The intensity of the light emitted depends principally on the frequency and potential of the impulses, and on the electric density on the surface of the electrode. It is of the greatest importance to employ the smallest possible button, in order to push the density very far. Under the violent impact of the molecules of the gas surrounding it, the small electrode is of course brought to an extremely high temperature, but around it is a mass of highly incandescent gas, a flame photosphere, many hundred times the

volume of the electrode. With a diamond, carborundum or zirconia button the photosphere can be as much as one thousand times the volume of the button. Without much reflecting one would think that in pushing so far the incandescence of the electrode it would be instantly volatilized. But after a careful consideration he would find that, theoretically, it should not occur, and in this fact — which, however, is experimentally demonstrated — lies principally the future value of such a lamp.

At first, when the bombardment begins, most of the work is performed on the surface of the button, but when a highly conducting photosphere is formed the button is comparatively relieved. The higher the incandescence of the photosphere the more it approaches in conductivity to that of the electrode, and the more, therefore, the solid and the gas form one conducting body. The consequence is that the further is forced the incandescence the more work, comparatively, is performed on the gas, and the less on the electrode. The formation of a powerful photosphere is consequently the very means for protecting the electrode. This protection, of course, is a relative one, and it should not be thought that by pushing the incandescence higher the electrode is actually less deteriorated. Still, theoretically, with extreme frequencies, this result must be reached, but probably at a temperature too high for most of the refractory bodies known. Given, then, an electrode which can withstand to a very high limit the effect of the bombardment and outward strain, it would be safe no matter how much it is forced beyond that limit. In an incandescent lamp quite different considerations apply. There the gas is not at all concerned: the whole of the work is performed on the filament; and the life of the lamp diminishes so rapidly with the increase of the degree of incandescence that economical reasons compel us to work it at a low incandescence. But if an incandescent lamp is operated with currents of very high frequency, the action of the gas cannot be neglected, and the rules for the most economical working must be considerably modified.

In order to bring such a lamp with one or two electrodes to a great perfection, it is necessary to employ impulses of very high frequency. The high frequency secures, among others, two chief advantages, which have a most important bearing upon the economy of the light production. First, the deterioration of the electrode is reduced by reason of the fact that we employ a great many small impacts, instead of a few violent ones, which shatter quickly the structure; secondly, the formation of a large photosphere is facilitated.

In order to reduce the deterioration of the electrode to the minimum, it is desirable that the vibration be harmonic, for any suddenness hastens the process of destruction. An electrode lasts much longer when kept at incandescence by currents, or impulses, obtained from a high-frequency alternator, which rise and fall more or less harmonically, than by impulses obtained from a disruptive discharge coil. In the latter case there is no doubt that most of the damage is done by the fundamental sudden discharges.

One of the elements of loss in such a lamp is the bombardment of the globe. As the potential is very high, the molecules are projected with great speed; they strike the glass, and usually excite a strong phosphorescence. The effect produced is very pretty, but for economical reasons it would be perhaps preferable to prevent, or at least reduce to the minimum, the bombardment against the globe, as in such case it is, as a rule, not the object to excite phosphorescence, and as some loss of energy results from the bombardment. This loss in the bulb is principally dependent on the potential of the impulses and on the electric density on the surface of the electrode. In employing very high frequencies the loss of energy by the bombardment is greatly reduced, for, first, the potential needed to perform a given amount of work is much smaller; and, secondly, by producing a highly conducting photosphere around the electrode, the same result is obtained as though the electrode were much larger, which is equivalent to a smaller electric density. But be it by the diminution of the maximum potential or of the density, the gain is effected in the same manner, namely, by avoiding violent shocks, which

strain the glass much beyond its limit of elasticity. If the frequency could be brought high enough, the loss due to the imperfect elasticity of the glass would be entirely negligible. The loss due to bombardment of the globe may, however, be reduced by using two electrodes instead of one. In such case each of the electrodes may be connected to one of the terminals; or else, if it is preferable to use only one wire, one electrode may be connected to one terminal and the other to the ground or to an insulated body of some surface, as, for instance, a shade on the lamp. In the latter case, unless some judgment is used, one of the electrodes might glow more intensely than the other.

But on the whole I find it preferable when using such high frequencies to employ only one electrode and one connecting wire. I am convinced that the illuminating device of the near future will not require for its operation more than one lead, and, at any rate, it will have no leading-in wire, since the energy required can be as well transmitted through the glass. In experimental bulbs the leading-in wire is most generally used on account of convenience, as in employing condenser coatings in the manner indicated in Fig. 22, for example, there is some difficulty in fitting the parts, but these difficulties would not exist if a great many bulbs were manufactured; otherwise the energy can be conveyed through the glass as well as through a wire, and with these high frequencies the losses are very small. Such illuminating devices will necessarily involve the use of very high potentials, and this, in the eyes of practical men, might be an objectionable feature. Yet, in reality, high potentials are not objectionable — certainly not in the least as far as the safety of the devices is concerned.

There are two ways of rendering an electric appliance safe. One is to use low potentials, the other is to determine the dimensions of the apparatus so that it is safe no matter how high a potential is used. Of the two the latter seems to me the better way, for then the safety is absolute, unaffected by any possible combination of circumstances which might render even a low-potential appliance dangerous to life and property. But the practical conditions require not only the judicious determination of the dimensions of the apparatus; they likewise necessitate the employment of energy of the proper kind. It is easy, for instance, to construct a transformer capable of giving, when operated from an ordinary alternate current machine of low tension, say 50,000 volts, which might be required to light a highly exhausted phosphorescent tube, so that, in spite of the high potential, it is perfectly safe, the shock from it producing no inconvenience. Still, such a transformer would be expensive, and in itself inefficient; and, besides, what energy was obtained from it would not be economically used for the production of light. The economy demands the employment of energy in the form of extremely rapid vibrations. The problem of producing light has been likened to that of maintaining a certain high-pitch note by means of a bell. It should be said a *barely audible* note; and even these words would not express it, so wonderful is the sensitiveness of the eye. We may deliver powerful blows at long intervals, waste a good deal of energy, and still not get what we want; or we may keep up the note by delivering frequent gentle taps, and get nearer to the object sought by the expenditure of much less energy. In the production of light, as fas as the illuminating device is concerned, there can be only one rule — that is, to use as high frequencies as can be obtained; but the means for the production and conveyance of impulses of such character impose, at present at least, great limitations. Once it is decided to use very high frequencies, the return wire becomes unnecessary, and all the appliances are simplified. By the use of obvious means the same result is obtained as though the return wire were used. It is sufficient for this purpose to bring in contact with the bulb, or merely in the vicinity of the same, an insulated body of some surface. The surface need, of course, be the smaller, the higher the frequency and potential used, and necessarily, also, the higher the economy of the lamp or other device.

This plan of working has been resorted to on several occasions this evening. So, for instance, when the incandescence of a button was produced by grasping the bulb with the hand, the body of the experimenter merely served to intensify the action. The bulb used was similar to that illustrated in Fig. 19, and the coil was excited to a small potential, not sufficient to bring the button to incandescence when the bulb was hanging from the wire; and incidentally, in order to perform the experiment in a more suitable manner, the button was taken so large that a perceptible time had to elapse before,

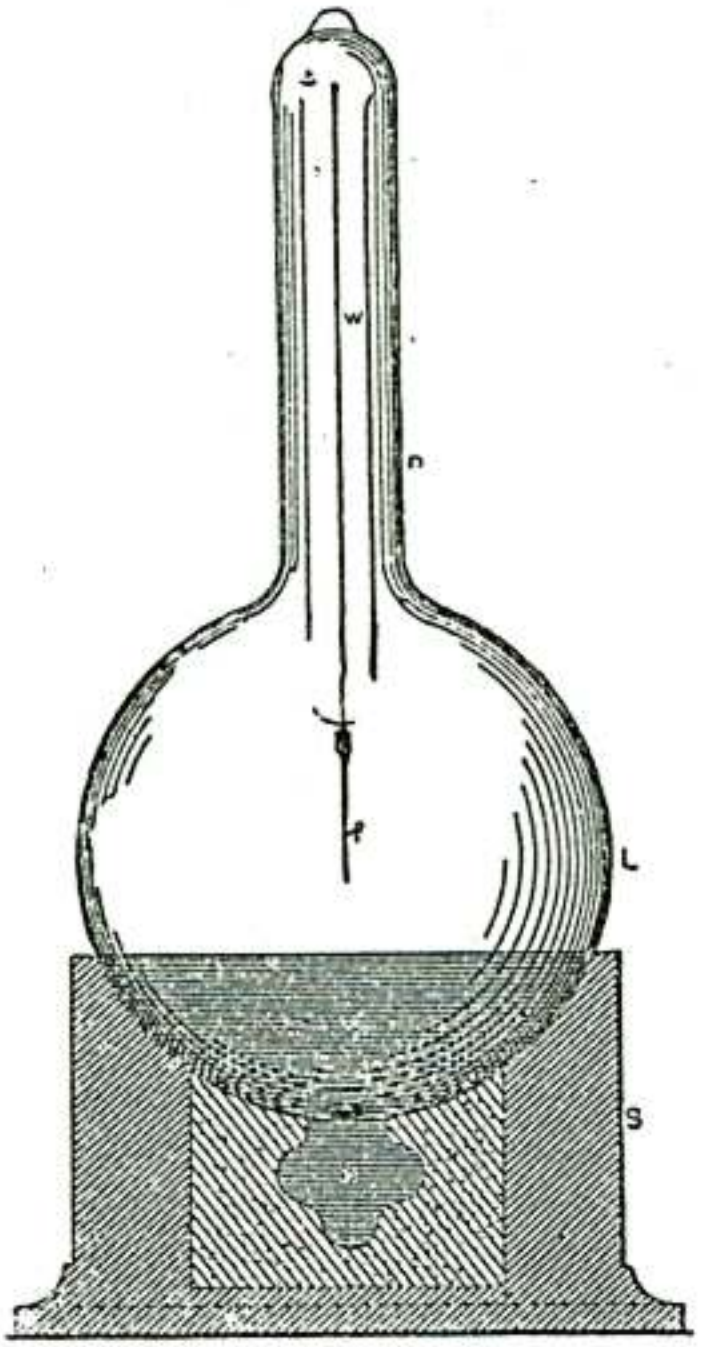

Fig. 24.

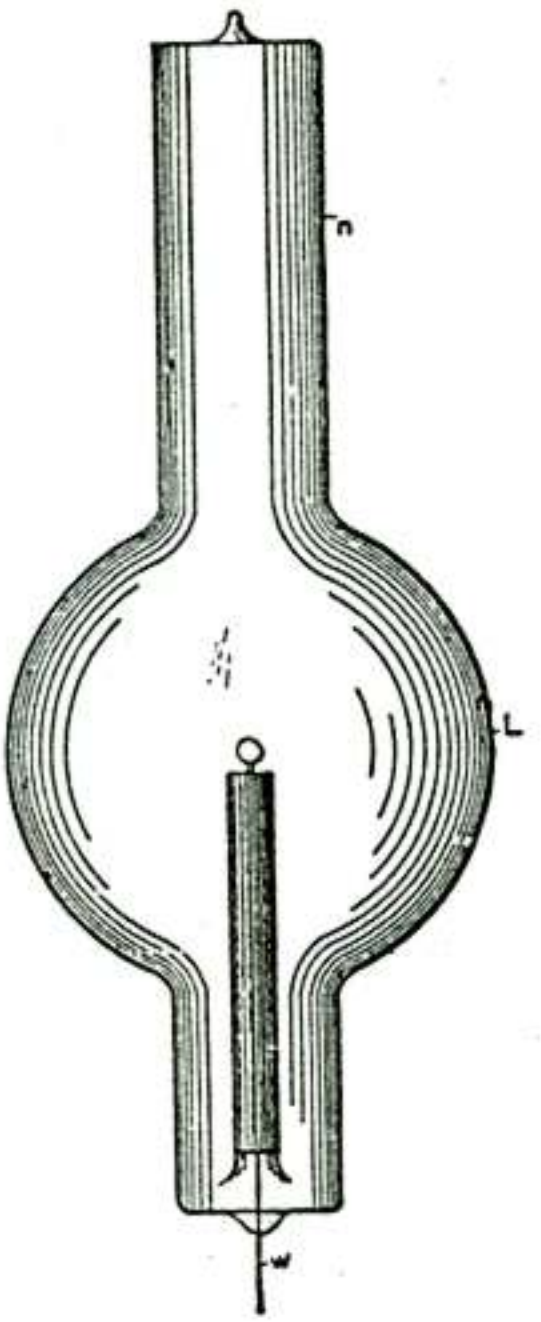

Fig. 25.

upon grasping the bulb, it could be rendered incandescent. The contact with the bulb was, of course, quite unnecessary. It is easy, by using a rather large bulb with an exceedingly small electrode, to adjust the conditions so that the latter is brought to bright incandescence by the mere approach of the experimenter within a few feet of the bulb, and that the incandescence subsides upon his receding.

In another experiment, when phosphorescence was excited, a similar bulb was used. Here again, originally, the potential was not sufficient to excite phosphorescence until the action was intensified — in this case, however, to present a different feature, by touching the socket with a metallic object held in the hand. The electrode in the bulb was a carbon button so large that it could not be brought to incandescence, and thereby spoil the effect produced by phosphorescence.

Again, in another of the early experiments, a bulb was used as illustrated in Fig. 12. In this instance, by touching the bulb with one or two fingers, one or two shadows of the stem inside were projected against the glass, the touch of the finger producing the same result as the application of an external negative electrode under ordinary circumstances.

In all these experiments the action was intensified by augmenting the capacity at the end of the lead connected to the terminal. As a rule, it is not necessary to resort to such means, and would be quite unnecessary with still higher frequencies; but when it *is* desired, the bulb, or tube, can be easily adapted to the purpose.

In Fig. 24, for example, an experimental bulb *L* is shown, which is provided with a neck *n* on the top for the application of an external tinfoil coating, which may be connected to a body of larger surface. Such a lamp as illustrated in Fig. 25 may also be lighted by connecting the tinfoil coating on the neck *n* to the terminal, and the leading-in wire *w* to an insulated plate. If the bulb stands in a socket upright, as shown in the cut, a shade of conducting material may be slipped in the neck *n*, and the action thus magnified.

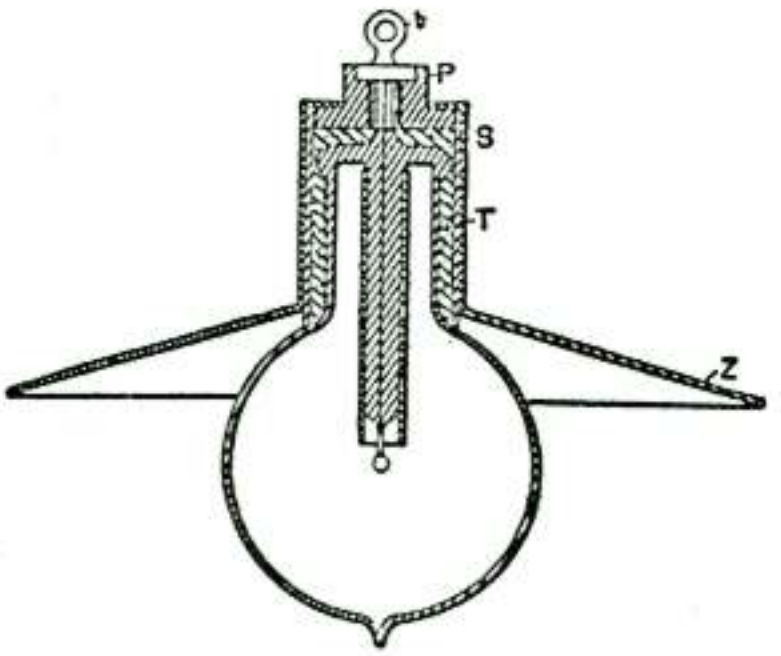

Fig. 26.

A more perfected arrangement used in some of these bulbs is illustrated in Fig. 26. In this case the construction of the bulb is as shown and described before, when reference was made to Fig. 19. A zinc sheet *Z*, with a tubular extension *T*, is slipped over the metallic socket *S*. The bulb hangs downward from the terminal *t*, the zinc sheet *Z*, performing the double office of intensifier and reflector. The reflector is separated from the terminal *t* by an extension of the insulating plug *P*.

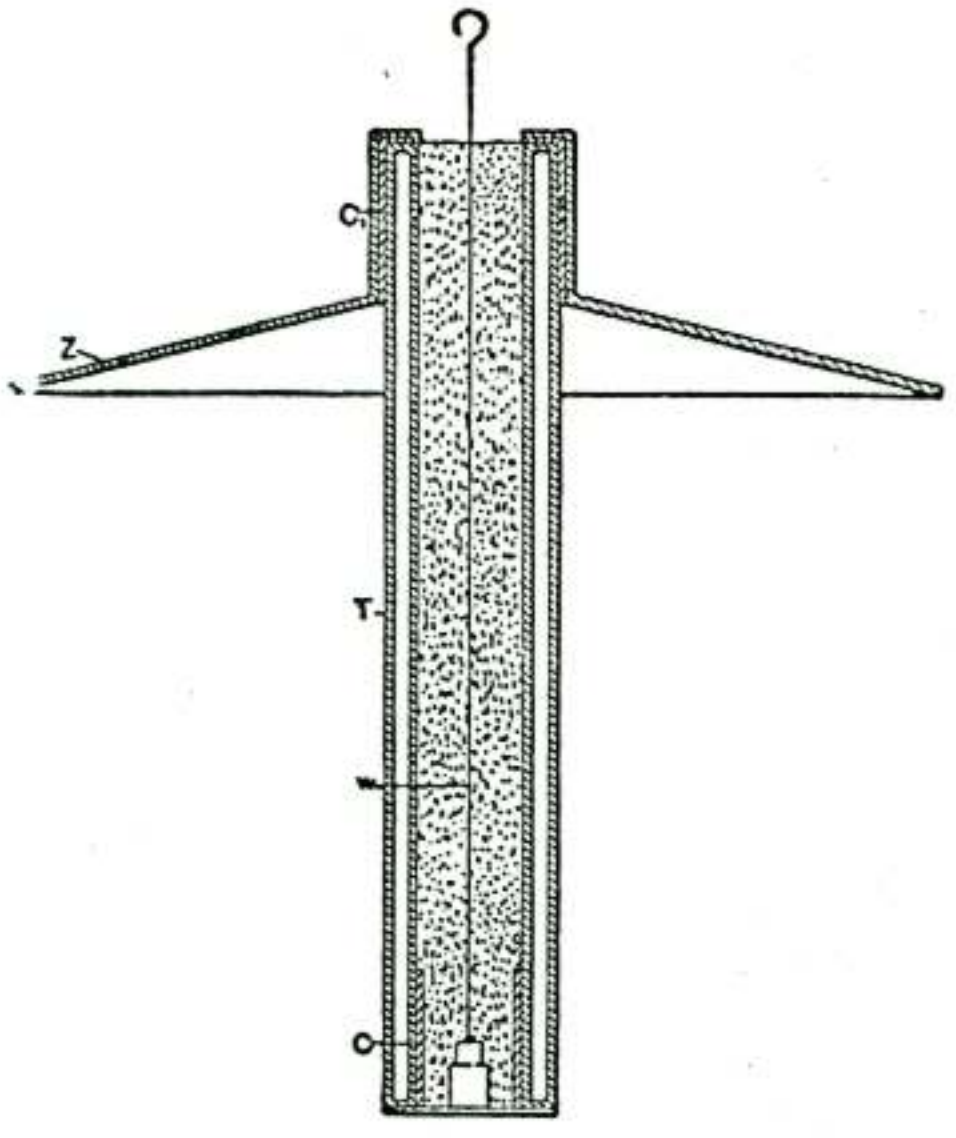

Fig. 27.

A similar disposition with a phosphorescent tube is illustrated in Fig. 27. The tube *T* is prepared from two short tubes of a different diameter, which are sealed on the ends. On the lower end is placed an outside conducting coating *C*, which connects to the wire *w*. The wire has a hook on the upper end for suspension, and passes through the centre of the inside tube, which is filled with some good and tightly packed insulator. On the outside of the upper end of the tube *T* is another conducting coating C_1, upon which is slipped a metallic reflector *Z*, which should be separated by a thick insulation from the end of wire *w*.

The economical use of such a reflector or intensifier would require that all energy supplied to an air condenser should be recoverable, or, in other words, that there should not be any losses, neither in the gaseous medium nor through its action elsewhere. This is far from being so, but, fortunately, the losses may be reduced to anything desired.

A few remarks are necessary on this subject, in order to make the experiences gathered in the course of these investigations perfectly clear.

Suppose a small helix with many well insulated turns, as in experiment Fig. 17, has one of its ends connected to one of the terminals of the induction coil, and the other to a metal plate, or, for the sake of simplicity, a sphere, insulated in space. When the coil is set to work, the potential of the sphere is alternated, and the small helix now behaves as though its free end were connected to the other terminal of the induction coil. If an iron rod be held within the small helix it is quickly brought to a high temperature, indicating the passage of a strong current through the helix. How does the insulated sphere act in this case? It can be a condenser, storing and returning the energy supplied to it, or it can be a mere sink of energy, and the conditions of the experiment determine whether it is more one or the other. The sphere being charged to a high potential, it acts inductively upon the surrounding air, or whatever gaseous medium there might be. The molecules, or atoms, which are near the sphere are of course more attracted, and move through a greater distance than the farther ones. When the nearest molecules strike the sphere they are repelled, and collisions occur at all distances within the inductive action of the sphere. It is now clear that, if the potential be steady, but little loss of energy can be caused in this way, for the molecules which are nearest to the sphere, having had an additional charge imparted to them by contact, are not attracted until they have parted, if not with all, at least with most of the additional charge, which can be accomplished only after a great many collisions. From the fact that with a steady potential there is but little loss in dry air, one must come to such a conclusion. When the potential of the sphere, instead of being steady, is alternating, the conditions are entirely different. In this case a rhythmical bombardment occurs, no matter whether the molecules after coming in contact with the sphere lose the imparted charge or not; what is more, if the charge is not lost, the impacts are only the more violent. Still if the frequency of the impulses be very small, the loss caused by the impacts and collisions would not be serious unless the potential were excessive. But when extremely high frequencies and more or less high potentials are used, the loss may be very great. The total energy lost per unit of time is proportionate to the product of the number of impacts per second, or the frequency and the energy lost in each impact. But the energy of an impact must be proportionate to the square of the electric density of the sphere, since the charge imparted to the molecule is proportionate to that density. I conclude from this that the total energy lost must be proportionate to the product of the frequency and the square of the electric density; but this law needs experimental confirmation. Assuming the preceding considerations to be true, then, by rapidly alternating the potential of a body immersed in an insulating gaseous medium, any amount of energy may be dissipated into space. Most of that energy then, I believe, is not dissipated in the form of long ether waves, propagated to considerable distance, as is thought most generally, but is consumed — in the case of an insulated sphere, for example — in impact and collisional losses — that is, heat vibrations — on the surface and in the vicinity of the sphere. To reduce the dissipation it is necessary to work with a small electric density — the smaller the higher the frequency.

But since, on the assumption before made, the loss is diminished with the square of the density, and since currents of very high frequencies involve considerable waste when transmitted through conductors, it follows that, on the whole, it is better to employ one wire than two. Therefore, if motors, lamps, or devices of any kind are perfected, capable of being advantageously operated by currents of extremely high frequency, economical reasons will make it advisable to use only one wire, especially if the distances are great.

When energy is absorbed in a condenser the same behaves as though its capacity were increased. Absorption always exists more or less, but generally it is small and of

no consequence as long as the frequencies are not very great. In using extremely high frequencies, and, necessarily in such case, also high potentials, the absorption — or, what is here meant more particularly by this term, the loss of energy due to the presence of a gaseous medium — is an important factor to be considered, as the energy absorbed in the air condenser may be any fraction of the supplied energy. This would seem to make it very difficult to tell from the measured or computed capacity of an air condenser its actual capacity or vibration period, especially if the condenser is of very small surface and is charged to a very high potential. As many important results are dependent upon the correctness of the estimation of the vibration period, this subject demands the most careful scrutiny of other investigators. To reduce the probable error as much as possible in experiments of the kind alluded to, it is advisable to use spheres or plates of large surface, so as to make the density exceedingly small. Otherwise, when it is practicable, an oil condenser should be used in preference. In oil or other liquid dielectrics there are seemingly no such losses as in gaseous media. It being impossible to exclude entirely the gas in condensers with solid dielectrics, such condensers should be immersed in oil, for economical reasons if nothing else; they can then be strained to the utmost and will remain cool. In Leyden jars the loss due to air is comparatively small, as the tinfoil coatings are large, close together, and the charged surfaces not directly exposed; but when the potentials are very high, the loss may be more or less considerable at, or near, the upper edge of the foil, where the air is principally acted upon. If the jar be immersed in boiled-out oil, it will be capable of performing four times the amount of work which it can for any length of time when used in the ordinary way, and the loss will be inappreciable.

It should not be thought that the loss in heat in an air condenser is necessarily associated with the formation of *visible* streams or brushes. If a small electrode, inclosed in an unexhausted bulb, is connected to one of the terminals of the coil, streams can be seen to issue from the electrode and the air in the bulb is heated; if, instead of a small electrode, a large sphere is inclosed in the bulb, no streams are observed, still the air is heated.

Nor should it be thought that the temperature of an air condenser would give even an approximate idea of the loss in heat incurred, as in such case heat must be given off much more quickly, since there is, in addition to the ordinary radiation, a very active carrying away of heat by independent carriers going on, and since not only the apparatus, but the air at some distance from it is heated in consequence of the collisions which must occur.

Owing to this, in experiments with such a coil, a rise of temperature can be distinctly observed only when the body connected to the coil is very small. But with apparatus on a larger scale, even a body of considerable bulk would be heated, as, for instance, the body of a person; and I think that skilled physicians might make observations of utility in such experiments, which, if the apparatus were judiciously designed, would not present the slightest danger.

A question of some interest, principally to meteorologists, presents itself here. How does the earth behave? The earth is an air condenser, but is it a perfect or a very imperfect one — a mere sink of energy? There can be little doubt that to such small disturbance as might be caused in an experiment the earth behaves as an almost perfect condenser. But it might be different when its charge is set in vibration by some sudden disturbance occurring in the heavens. In such case, as before stated, probably only little of the energy of the vibrations set up would be lost into space in the form of long ether radiations, but most of the energy, I think, would spend itself in molecular impacts and collisions, and pass off into space in the form of short heat, and possibly light, waves. As both the frequency of the vibrations of the charge and the potential are in all probability excessive, the energy converted into heat may be considerable. Since the

density must be unevenly distributed, either in consequence of the irregularity of the earth's surface, or on account of the condition of the atmosphere in various places, the effect produced would accordingly vary from place to place. Considerable variations in the temperature and pressure of the atmosphere may in this manner be caused at any point of the surface of the earth. The variations may be gradual or very sudden, according to the nature of the general disturbance, and may produce rain and storms, or locally modify the weather in any way.

From the remarks before made one may see what an important factor of loss the air in the neighborhood of a charged surface becomes when the electric density is great and the frequency of the impulses excessive. But the action as explained implies that the air is insulating — that is, that it is composed of independent carriers immersed in an insulating medium. This is the case only when the air is at something like ordinary or greater, or at extremely small, pressure. When the air is slightly rarefied and conducting, then true conduction losses occur also. In such case, of course, considerable energy may be dissipated into space even with a steady potential, or with impulses of low frequency, if the density is very great.

When the gas is at very low pressure, an electrode is heated more because higher speeds can be reached. If the gas around the electrode is strongly compressed, the displacements, and consequently the speeds, are very small, and the heating is insignificant. But if in such case the frequency could be sufficiently increased, the electrode would be brought to a high temperature as well as if the gas were at very low pressure; in fact, exhausting the bulb is only necessary because we cannot produce (and possibly not convey) currents of the required frequency.

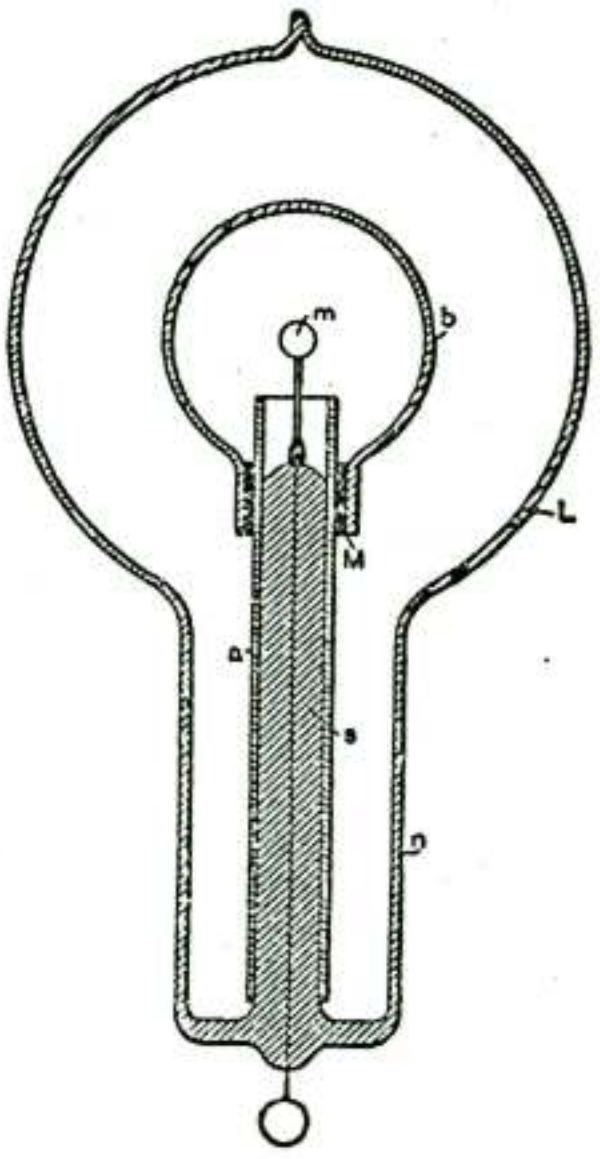

Fig. 28.

Returning to the subject of electrode lamps, it is obviously of advantage in such a lamp to confine as much as possible the heat to the electrode by preventing the circulation of the gas in the bulb. If a very small bulb be taken, it would confine the heat better than a large one, but it might not be of sufficient capacity to be operated from the coil, or, if so, the glass might get too hot. A simple way to improve in this direction is to employ a globe of the required size, but to place a small bulb, the diameter of which is properly estimated, over the refractory button contained in the globe. This arrangement is illustrated in Fig. 28.

The globe *L* has in this case a large neck *n*, allowing the small bulb *b* to slip through. Otherwise the construction is the same as shown in Fig. 18, for example. The small bulb is conveniently supported upon the stem *s*, carrying the refractory button *m*. It is separated from the aluminium tube *a* by several layers of mica *M*, in order to prevent the cracking of the neck by the rapid heating of the aluminium tube upon a sudden turning on of the current. The inside bulb should be as small as possible when it is desired to obtain light only by incandescence of the electrode. If it is desired to produce phosphorescence, the bulb should be larger, else it would be apt to get too hot, and the phosphorescence would cease. In this arrangement usually only the small bulb shows phosphorescence, as there is practically no bombardment against the outer globe. In some of these bulbs constructed as illustrated in Fig. 28 the small tube was coated

with phosphorescent paint, and beautiful effects were obtained. Instead of making the inside bulb large, in order to avoid undue heating, it answers the purpose to make the electrode *m* larger. In this case the bombardment is weakened by reason of the smaller electric density.

Many bulbs were constructed on the plan illustrated in Fig. 29. Here a small bulb *b*, containing the refractory button *m*, upon being exhausted to a very high degree was sealed in a large globe *L*, which was then moderately exhausted and sealed off. The principal advantage of this construction was that it allowed of reaching extremely high vacua, and, at the same time use a large bulb. It was found, in the course of experiences with bulbs such as illustrated in Fig. 29, that it was well to make the stem *s* near the seal at *e* very thick, and the leading-in wire *w* thin, as it occurred sometimes that the stem at *e* was heated and the bulb was cracked. Often the outer globe *L* was exhausted only just enough to allow the discharge to pass through, and the space between the bulbs appeared crimson, producing a curious effect. In some cases, when the exhaustion in globe *L* was very low, and the air good conducting, it was found necessary, in order to bring the button *m* to high incandescence, to place, preferably on the upper part of the neck of the globe, a tinfoil coating which was connected to an insulated body, to the ground, or to the other terminal of the coil, as the highly conducting air weakened the effect somewhat, probably by being acted upon inductively from the wire *w*, where it entered the bulb at *e*. Another difficulty — which, however, is always present when the refractory button is mounted in a very small bulb — existed in the construction illustrated in Fig. 29, namely, the vacuum in the bulb *b* would be impaired in a comparatively short time.

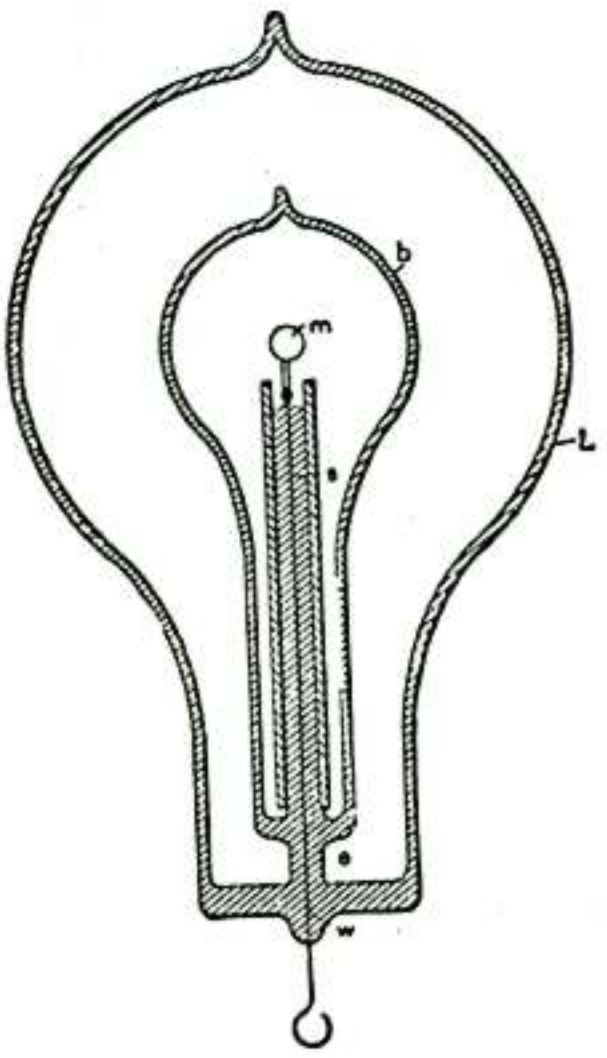

Fig. 29

The chief idea in the two last described constructions was to confine the heat to the central portion of the globe by preventing the exchange of air. An advantage is secured, but owing to the heating of the inside bulb and slow evaporation of the glass the vacuum is hard to maintain, even if the construction illustrated in Fig. 28 be chosen, in which both bulbs communicate.

But by far the better way — the ideal way — would be to reach sufficiently high frequencies. The higher the frequency the slower would be the exchange of the air, and I think that a frequency may be reached at which there would be no exchange whatever of the air molecules around the terminal. We would then produce a flame in which there would be no carrying away of material, and a queer flame it would be, for it would be rigid! With such high frequencies the inertia of the particles would come into play. As the brush, or flame, would gain rigidity in virtue of the inertia of the particles, the exchange of the latter would be prevented. This would necessarily occur, for, the number of the impulses being augmented, the potential energy of each would diminish, so that finally only atomic vibrations could be set up, and the motion of translation through measurable space would cease. Thus an ordinary gas burner connected to a source of rapidly alternating potential might have its efficiency augmented to a certain limit, and this for two reasons — because of the additional vibration imparted, and because of a slowing down of the process of carrying off. But the renewal

being rendered difficult, and renewal being necessary to maintain the *burner,* a continued increase of the frequency of the impulses, assuming they could be transmitted to and impressed upon the flame, would result in the "extinction" of the latter, meaning by this term only the cessation of the chemical process.

I think, however, that in the case of an electrode immersed in a fluid insulating medium, and surrounded by independent carriers of electric charges, which can be acted upon inductively, a sufficiently high frequency of the impulses would probably result in a gravitation of the gas all around toward the electrode. For this it would be only necessary to assume that the independent bodies are irregularly shaped; they would then turn toward the electrode their side of the greatest electric density, and this would be a position in which the fluid resistance to approach would be smaller than that offered to the receding.

The general opinion, I do not doubt, is that it is out of the question to reach any such frequencies as might — assuming some of the views before expressed to be true — produce any of the results which I have pointed out as mere possibilities. This may be so, but in the course of these investigations, from the observation of many phenomena I have gained the conviction that these frequencies would be much lower than one is apt to estimate at first. In a flame we set up light vibrations by causing molecules, or atoms, to collide. But what is the ratio of the frequency of the collisions and that of the vibrations set up? Certainly it must be incomparably smaller than that of the knocks of the bell and the sound vibrations, or that of the discharges and the oscillations of the condenser. We may cause the molecules of the gas to collide by the use of alternate electric impulses of high frequency, and so we may imitate the process in a flame; and from experiments with frequencies which we are now able to obtain, I think that the result is producible with impulses which are transmissible through a conductor.

In connection with thoughts of a similar nature, it appeared to me of great interest to demonstrate the rigidity of a vibrating gaseous column. Although with such low frequencies as, say 10,000 per second, which I was able to obtain without difficulty from a specially constructed alternator, the task looked discouraging at first, I made a series of experiments. The trials with air at ordinary pressure led to no result, but with air moderately rarefied I obtain what I think to be an unmistakable experimental evidence of the property sought for. As a result of this kind might lead able investigators to conclusions of importance I will describe one of the experiments performed.

It is well known that when a tube is slightly exhausted the discharge may be passed through it in the form of a thin luminous thread. When produced with currents of low frequency, obtained from a coil operated as usual, this thread is inert. If a magnet be approached to it, the part near the same is attracted or repelled, according to the direction of the lines of force of the magnet. It occurred to me that if such a thread would be produced with currents of very high frequency, it should be more or less rigid, and as it was visible it could be easily studied. Accordingly I prepared a tube about 1 inch in diameter and 1 metre long, with outside coating at each end. The tube was exhausted to a point at which by a little working the thread discharge could be obtained. It must be remarked here that the general aspect of the tube, and the degree of exhaustion, are quite different than when ordinary low frequency currents are used. As it was found preferable to work with one terminal, the tube prepared was suspended from the end of a wire connected to the terminal, the tinfoil coating being connected to the wire, and to the lower coating sometimes a small insulated plate was attached. When the thread was formed it extended through the upper part of the tube and lost itself in the lower end. If it possessed rigidity it resembled, not exactly an elastic cord stretched tight between two supports, but a cord suspended from a height with a small weight attached at the end. When the finger or a magnet was approached to the upper end of

the luminous thread, it could be brought locally out of position by electrostatic or magnetic action; and when the disturbing object was very quickly removed, an analogous result was produced, as though a suspended cord would be displaced and quickly released near the point of suspension. In doing this the luminous thread was set in vibration, and two very sharply marked nodes, and a third indistinct one, were formed. The vibration, once set up, continued for fully eight minutes, dying gradually out. The speed of the vibration often varied perceptibly, and it could be observed that the electrostatic attraction of the glass affected the vibrating thread; but it was clear that the electrostatic action was not the cause of the vibration, for the thread was most generally stationary, and could always be set in vibration by passing the finger quickly near the upper part of the tube. With a magnet the thread could be split in two and both parts vibrated. By approaching the hand to the lower coating of the tube, or insulated plate if attached, the vibration was quickened; also, as far as I could see, by raising the potential or frequency. Thus, either increasing the frequency or passing a stronger discharge of the same frequency corresponded to a tightening of the cord. I did not obtain any experimental evidence with condenser discharges. A luminous band excited in a bulb by repeated discharges of a Leyden jar must possess rigidity, and if deformed and suddenly released should vibrate. But probably the amount of vibrating matter is so small that in spite of the extreme speed the inertia cannot prominently assert itself. Besides, the observation in such a case is rendered extremely difficult on account of the fundamental vibration.

The demonstration of the fact — which still needs better experimental confirmation — that a vibrating gaseous column possesses rigidity, might greatly modify the views of thinkers. When with low frequencies and insignificant potentials indications of that property may be noted, how must a gaseous medium behave under the influence of enormous electrostatic stresses which may be active in the interstellar space, and which may alternate with inconceivable rapidity? The existence of such an electrostatic, rhythmically throbbing force — of a vibrating electrostatic field — would show a possible way how solids might have formed from the ultra-gaseous uterus, and how transverse and all kinds of vibrations may be transmitted through a gaseous medium filling all space. Then, ether might be a true fluid, devoid of rigidity, and at rest, it being merely necessary as a connecting link to enable interaction. What determines the rigidity of a body? It must be the speed and the amount of moving matter. In a gas the speed may be considerable, but the density is exceedingly small; in a liquid the speed would be likely to be small, though the density may be considerable; and in both cases the inertia resistance offered to displacement is practically *nil*. But place a gaseous (or liquid) column in an intense, rapidly alternating electrostatic field, set the particles vibrating with enormous speeds, then the inertia resistance asserts itself. A body might move with more or less freedom through the vibrating mass, but as a whole it would be rigid.

There is a subject which I must mention in connection with these experiments: it is that of high vacua. This is a subject the study of which is not only interesting, but useful, for it may lead to results of great practical importance. In commercial apparatus, such as incandescent lamps, operated from ordinary systems of distribution, a much higher vacuum than obtained at present would not secure a very great advantage. In such a case the work is performed on the filament and the gas is little concerned; the improvement, therefore, would be but trifling. But when we begin to use very high frequencies and potentials, the action of the gas becomes all important, and the degree of exhaustion materially modifies the results. As long as ordinary coils, even very large ones, were used, the study of the subject was limited, because just at a point when it became most interesting it had to be interrupted on account of the "non-striking" vacuum being reached. But presently we are able to obtain from a small disruptive discharge

coil potentials much higher than even the largest coil was capable of giving, and, what is more, we can make the potential alternate with great rapidity. Both of these results enable us now to pass a luminous discharge through almost any vacua obtainable, and the field of our investigations is greatly extended. Think we as we may, of all the possible directions to develop a practical illuminant, the line of high vacua seems to be the most promising at present. But to reach extreme vacua the appliances must be much more improved, and ultimate perfection will not be attained until we shall have discarded the mechanical and perfected an *electrical* vacuum pump. Molecules and atoms can be thrown out of a bulb under the action of an enormous potential: *this* will be the principle of the vacuum pump of the future. For the present, we must secure the best results we can with mechanical appliances. In this respect, it might not be out of the way to say a few words about the method of, and apparatus for, producing excessively high degrees of exhaustion of which I have availed myself in the course of these investigations. It is very probable that other experimenters have used similar arrangements; but as it is possible that there may be an item of interest in their description, a few remarks, which will render this investigation more complete, might be permitted.

The apparatus is illustrated in a drawing shown in Fig. 30. *S* represents a Sprengel pump, which has been specially constructed to better suit the work required. The stopcock which is usually employed has been omitted, and instead of it a hollow stopper *s* has been fitted in the neck of the reservoir *R*. This stopper has a small hole *h*, through which the mercury descends; the size of the outlet *o* being properly determined with respect to the section of the fall tube *t*, which is sealed to the reservoir instead of being connected to it in the usual manner. This arrangement overcomes the imperfections and troubles which often arise from the use of the stopcock on the reservoir and the connection of the latter with the fall tube.

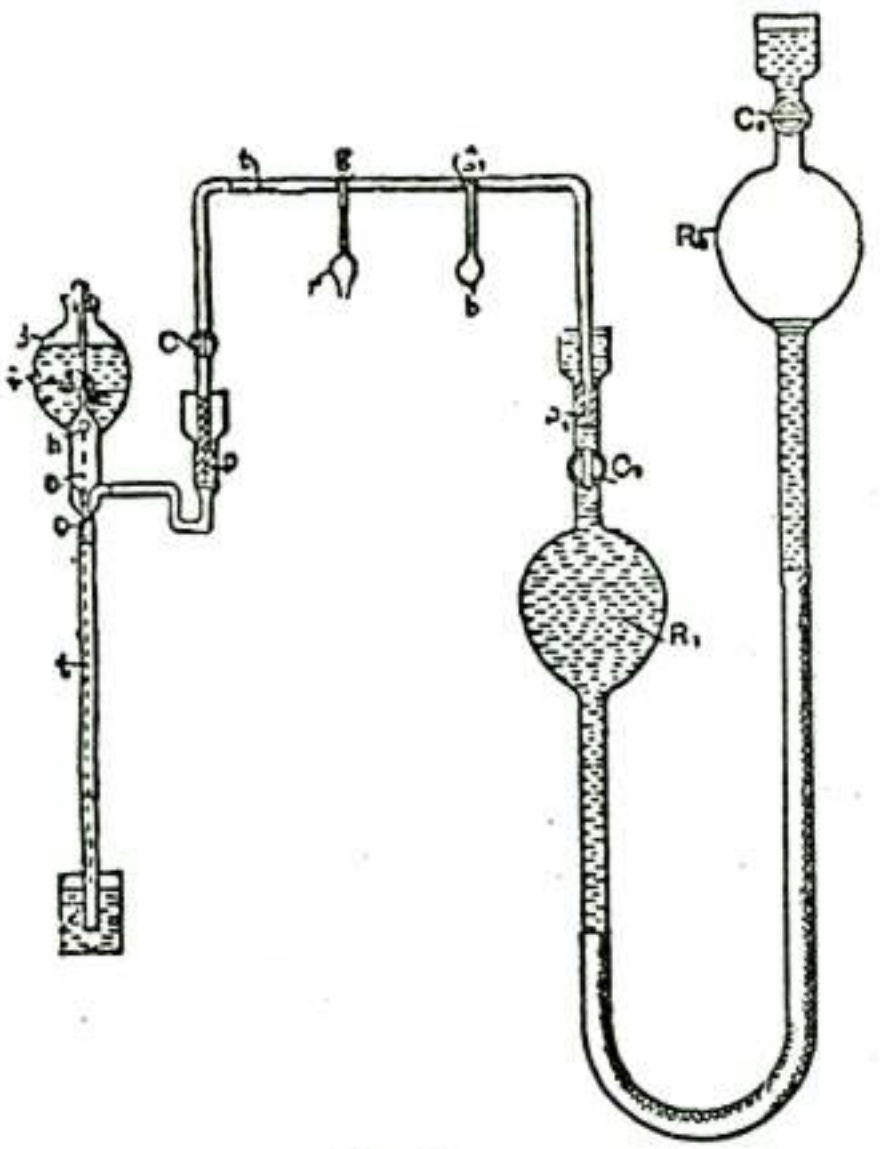

Fig. 30.

The pump is connected through a U-shaped tube *t* to a very large reservoir R_1. Especial care was taken in fitting the grinding surfaces of the stoppers *p* and p_1, and both of these and the mercury caps above them were made exceptionally long. After the U-shaped tube was fitted and put in place, it was heated, so as to soften and take off the strain resulting from imperfect fitting. The U-shaped tube was provided with a stopcock *C*, and two ground connections *g* and g_1 — one for a small bulb *b*, usually containing caustic potash, and the other for the receiver *r*, to be exhausted.

The reservoir R_1 was connected by means of a rubber tube to a slightly larger reservoir R_2, each of the two reservoirs being provided with a stopcock C_1 and C_2, respectively. The reservoir R_2 could be raised and lowered by a wheel and rack, and the range of its motion was so determined that when it was filled with mercury and the stopcock C_2 closed, so as to form a Torricellian vacuum in it when raised, it could be

lifted so high that the mercury in reservoir R_1 would stand a little above stopcock C_1: and when this stopcock was closed and the reservoir R_2 descended, so as to form a Torricellian vacuum in reservoir R_1, it could be lowered so far as to completely empty the latter, the mercury filling the reservoir R_2 up to a little above stopcock C_2.

The capacity of the pump and of the connections was taken as small as possible relatively to the volume of reservoir, R_1, since, of course, the degree of exhaustion depended upon the ratio of these quantities.

With this apparatus I combined the usual means indicated by former experiments for the production of very high vacua. In most of the experiments it was convenient to use caustic potash. I may venture to say, in regard to its use, that much time is saved and a more perfect action of the pump insured by fusing and boiling the potash as soon as, or even before, the pump settles down. If this course is not followed the sticks, as ordinarily employed, may give moisture off at a certain very slow rate, and the pump may work for many hours without reaching a very high vacuum. The potash was heated either by a spirit lamp or by passing a discharge through it, or by passing a current through a wire contained in it. The advantage in the latter case was that the heating could be more rapidly repeated.

Generally the process of exhaustion was the following: — At the start, the stopcocks C and C_1 being open, and all other connections closed, the reservoir R_2 was raised so far that the mercury filled the reservoir R_1 and a part of the narrow connecting U-shaped tube. When the pump was set to work, the mercury would, of course, quickly rise in the tube, and reservoir R_2 was lowered, the experimenter keeping the mercury at about the same level. The reservoir R_2 was balanced by a long spring which facilitated the operation, and the friction of the parts was generally sufficient to keep it almost in any position. When the Sprengel pump had done its work, the reservoir R_2 was further lowered and the mercury descended in R_1 and filled R_2, whereupon stopcock C_2 was closed. The air adhering to the walls of R_1 and that absorbed by the mercury was carried off, and to free the mercury of all air the reservoir R_2 was for a long time worked up and down. During this process some air, which would gather below stopcock C_2, was expelled from R_2 by lowering it far enough and opening the stopcock, closing the latter again before raising the reservoir. When all the air had been expelled from the mercury, and no air would gather in R_2 when it was lowered, the caustic potash was resorted to. The reservoir R_2 was now again raised until the mercury in R_1 stood above stopcock C_1. The caustic potash was fused and boiled, and the moisture partly carried off by the pump and partly re-absorbed; and this process of heating and cooling was repeated many times, and each time, upon the moisture being absorbed or carried off, the reservoir R_2 was for a long time raised and lowered. In this manner all the moisture was carried off from the mercury, and both the reservoirs were in proper condition to be used. The reservoir R_2 was then again raised to the top, and the pump was kept working for a long time. When the highest vacuum obtainable with the pump had been reached the potash bulb was usually wrapped with cotton which was sprinkled with ether so as to keep the potash at a very low temperature, then the reservoir R_2 was lowered, and upon reservoir R_1 being emptied the receiver r was quickly sealed up.

When a new bulb was put on, the mercury was always raised above stopcock C_1, which was closed, so as to always keep the mercury and both the reservoirs in fine condition, and the mercury was never withdrawn from R_1 except when the pump had reached the highest degree of exhaustion. It is necessary to observe this rule if it is desired to use the apparatus to advantage.

By means of this arrangement I was able to proceed very quickly, and when the apparatus was in perfect order it was possible to reach the phosphorescent stage in a small bulb in less than 15 minutes, which is certainly very quick work for a small laboratory arrangement requiring all in all about 100 pounds of mercury. With ordinary small

bulbs the ratio of the capacity of the pump, receiver, and connections, and that of reservoir R was about 1—20, and the degrees of exhaustion reached were necessarily very high, though I am unable to make a precise and reliable statement how far the exhaustion was carried.

What impresses the investigator most in the course of these experiences is the behavior of gases when subjected to great rapidly alternating electrostatic stresses. But he must remain in doubt as to whether the effects observed are due wholly to the molecules, or atoms, of the gas which chemical analysis discloses to us, or whether there enters into play another medium of a gaseous nature, comprising atoms, or molecules, immersed in a fluid pervading the space. Such a medium surely must exist, and I am convinced that, for instance, even if air were absent, the surface and neighborhood of a body in space would be heated by rapidly alternating the potential of the body; but no such heating of the surface or neighborhood could occur if all free atoms were removed and only a homogeneous, incompressible, and elastic fluid — such as ether is supposed to be — would remain, for then there would be no impacts, no collisions. In such a case, as far as the body itself is concerned, only frictional losses in the inside could occur.

It is a striking fact that the discharge through a gas is established with ever increasing freedom as the frequency of the impulses is augmented. It behaves in this respect quite contrarily to a metallic conductor. In the latter the impedance enters prominently into play as the frequency is increased, but the gas acts much as a series of condensers would: the facility with which the discharge passes through seems to depend on the rate of change of potential. If it act so, then in a vacuum tube even of great length, and no matter how strong the current, self-induction could not assert itself to any appreciable degree. We have, then, as far as we can now see, in the gas a conductor which is capable of transmitting electric impulses of any frequency which we may be able to produce. Could the frequency be brought high enough, then a queer system of electric distribution, which would be likely to interest gas companies, might be realized: metal pipes filled with gas — the metal being the insulator, the gas the conductor — supplying phosphorescent bulbs, or perhaps devices as yet uninvented. It is certainly possible to take a hollow core of copper, rarefy the gas in the same, and by passing impulses of sufficiently high frequency through a circuit around it, bring the gas inside to a high degree of incandescence; but as to the nature of the forces there would be considerable uncertainty, for it would be doubtful whether with such impulses the copper core would act as a static screen. Such paradoxes and apparent impossibilities we encounter at every step in this line of work, and therein lies, to a great extent, the charm of the study.

I have here a short and wide tube which is exhausted to a high degree and covered with a substantial coating of bronze, the coating allowing barely the light to shine through. A metallic clasp, with a hook for suspending the tube, is fastened around the middle portion of the latter, the clasp being in contact with the bronze coating. I now want to light the gas inside by suspending the tube on a wire connected to the coil. Any one who would try the experiment for the first time, not having any previous experience, would probably take care to be quite alone when making the trial, for fear that he might become the joke of his assistants. Still, the bulb lights in spite of the metal coating, and the light can be distinctly perceived through the latter. A long tube covered with aluminium bronze lights when held in one hand — the other touching the terminal of the coil — quite powerfully. It might be objected that the coatings are not sufficiently conducting; still, even if they were highly resistant, they ought to screen the gas. They certainly screen it perfectly in a condition of rest, but not by far perfectly when the charge is surging in the coating. But the loss of energy which occurs within the tube, notwithstanding the screen, is occasioned principally by the presence of the

gas. Were we to take a large hollow metallic sphere and fill it with a perfect incompressible fluid dielectric, there would be no loss inside of the sphere, and consequently the inside might be considered as perfectly screened, though the potential be very rapidly alternating. Even were the sphere filled with oil, the loss would be incomparably smaller than when the fluid is replaced by a gas, for in the latter case the force produces displacements; that means impact and collisions in the inside.

No matter what the pressure of the gas may be, it becomes an important factor in the heating of a conductor when the electric density is great and the frequency very high. That in the heating of conductors by lightning discharges air is an element of great importance, is almost as certain as an experimental fact. I may illustrate the action of the air by the following experiment: I take a short tube which is exhausted to a moderate degree and has a platinum wire running through the middle from one end to the other. I pass a steady or low frequency current through the wire, and it is heated uniformly in all parts. The heating here is due to conduction, or frictional losses, and the gas around the wire has — as far as we can see — no function to perform. But now let me pass sudden discharges, or a high frequency current, through the wire. Again the wire is heated, this time principally on the ends and least in the middle portion; and if the frequency of the impulses, or the rate of change, is high enough, the wire might as well be cut in the middle as not, for practically all the heating is due to the rarefied gas. Here the gas might only act as a conductor of no impedance diverting the current from the wire as the impedance of the latter is enormously increased, and merely heating the ends of the wire by reason of their resistance to the passage of the discharge. But it is not at all necessary that the gas in the tube should be conducting; it might be at an extremely low pressure, still the ends of the wire would be heated — as, however, is ascertained by experience — only the two ends would in such case not be electrically connected through the gaseous medium. Now what with these frequencies and potentials occurs in an exhausted tube occurs in the lightning discharges at ordinary pressure. We only need remember one of the facts arrived at in the course of these investigations, namely, that to impulses of very high frequency the gas at ordinary pressure behaves much in the same manner as though it were at moderately low pressure. I think that in lightning discharges frequently wires or conducting objects are volatilized merely because air is present, and that, were the conductor immersed in an insulating liquid, it would be safe, for then the energy would have to spend itself somewhere else. From the behavior of gases to sudden impulses of high potential I am led to conclude that there can be no surer way of diverting a lightning discharge than by affording it a passage through a volume of gas, if such a thing can be done in a practical manner.

There are two more features upon which I think it necessary to dwell in connection with these experiments — the "radiant state" and the "non-striking vacuum".

Any one who has studied Crookes' work must have received the impression that the "radiant state" is a property of the gas inseparably connected with an extremely high degree of exhaustion. But it should be remembered that the phenomena observed in an exhausted vessel are limited to the character and capacity of the apparatus which is made use of. I think that in a bulb a molecule, or atom, does not precisely move in a straight line because it meets no obstacle, but because the velocity imparted to it is sufficient to propel it in a sensibly straight line. The mean free path is one thing, but the velocity — the energy associated with the moving body — is another, and under ordinary circumstances I believe that it is a mere question of potential or speed. A disruptive discharge coil, when the potential is pushed very far, excites phosphorescence and projects shadows, at comparatively low degrees of exhaustion. In a lightning discharge, matter moves in straight lines at ordinary pressure when the mean free path is exceedingly small, and frequently images of wires or other metallic objects have been produced by the particles thrown off in straight lines.

I have prepared a bulb to illustrate by an experiment the correctness of these assertions. In a globe *L* (Fig. 31), I have mounted upon a lamp filament *f* a piece of lime *l*. The lamp filament is connected with a wire which leads into the bulb, and the general construction of the latter is as indicated in Fig. 19, before described. The bulb being suspended from a wire connected to the terminal of the coil, and the latter being set to work, the lime piece *l* and the projecting parts of the filament *f* are bombarded. The degree of exhaustion is just such that with the potential the coil is capable of giving phosphorescence of the glass is produced, but disappears as soon as the vacuum is impaired. The lime containing moisture, and moisture being given off as soon as heating occurs, the phosphorescence lasts only for a few moments. When the lime has been sufficiently heated, enough moisture has been given off to impair materially the vacuum of the bulb. As the bombardment goes on, one point of the lime piece is more heated than other points, and the result is that finally practically all the discharge passes through that point which is intensely heated, and a white stream of lime particles (Fig. 31) then breaks forth from that point. This stream is composed of "radiant" matter, yet the degree of exhaustion is low. But the particles move in straight lines because the velocity imparted to them is great, and this is due to three causes — to the great electric density, the high temperature of the small point, and the fact that the particles of the lime are easily torn and thrown off — far more easily than those of carbon. With frequencies such as we are able to obtain, the particles are bodily thrown off and projected to a considerable distance, but with sufficiently high frequencies no such thing would occur: in such case only a stress would spread or a vibration would be propagated through the bulb. It would be out of the question to reach any such frequency on the assumption that the atoms move with the speed of light; but I believe that such a thing is impossible; for this an enormous potential would be required. With potentials which we are able to obtain, even with a disruptive discharge coil, the speed must be quite insignificant.

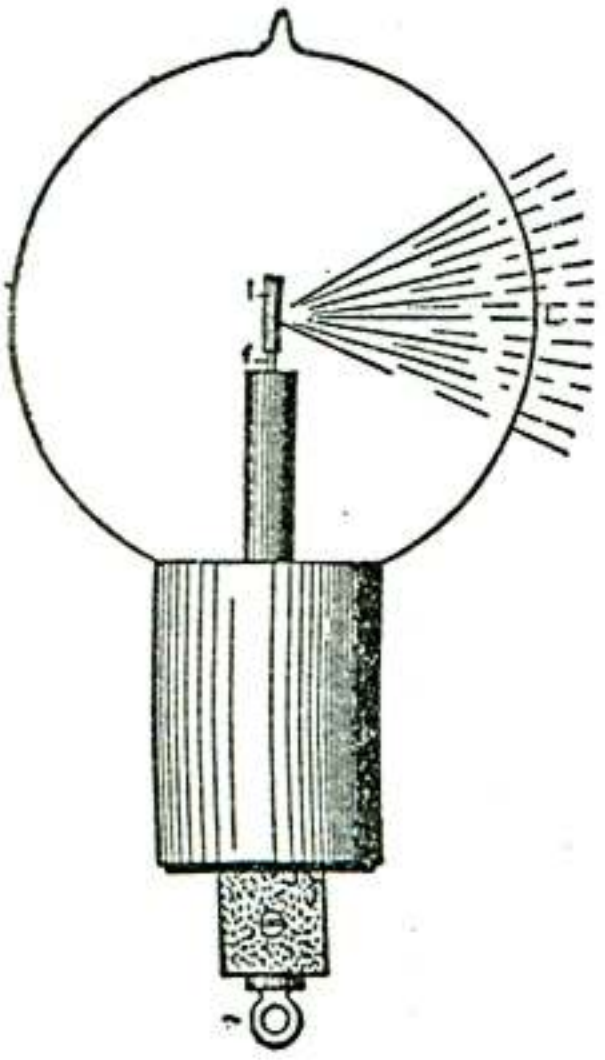

Fig. 31.

As to the "non-striking vacuum", the point to be noted is that it can occur only with low frequency impulses, and it is necessitated by the impossibility of carrying off enough energy with such impulses in high vacuum since the few atoms which are around the terminal upon coming in contact with the same are repelled and kept at a distance for a comparatively long period of time, and not enough work can be performed to render the effect perceptible to the eye. If the difference of potential between the terminals is raised, the dielectric breaks down. But with very high frequency impulses there is no necessity for such breaking down, since any amount of work can be performed by continually agitating the atoms in the exhausted vessel, provided the frequency is high enough. It is easy to reach — even with frequencies obtained from an alternator as here used — a stage at which the discharge does not pass between two electrodes in a narrow tube, each of these being connected to one of the terminals of the coil, but it is difficult to reach a point at which a luminous discharge would not occur around each electrode.

A thought which naturally presents itself in connection with high frequency currents, is to make use of their powerful electro-dynamic inductive action to produce light effects in a sealed glass globe. The leading-in wire is one of the defects of the present incandescent lamp, and if no other improvement were made, that imperfection at least should be done away with. Following this thought, I have carried on experiments in various directions, of which some were indicated in my former paper. I may here mention one or two more lines of experiment which have been followed up.

Many bulbs were constructed as shown in Fig. 32 and Fig. 33.

In Fig. 32 a wide tube T was sealed to a smaller W-shaped tube U, of phosphorescent glass. In the tube T was placed a coil C of aluminium wire, the ends of which were provided with small spheres t and t_1 of aluminium, and reached into the U tube. The tube T was slipped into a socket containing a primary coil through which usually the discharges of Leyden jars were directed, and the rarefied gas in the small U tube was excited to strong luminosity by the high-tension currents induced in the

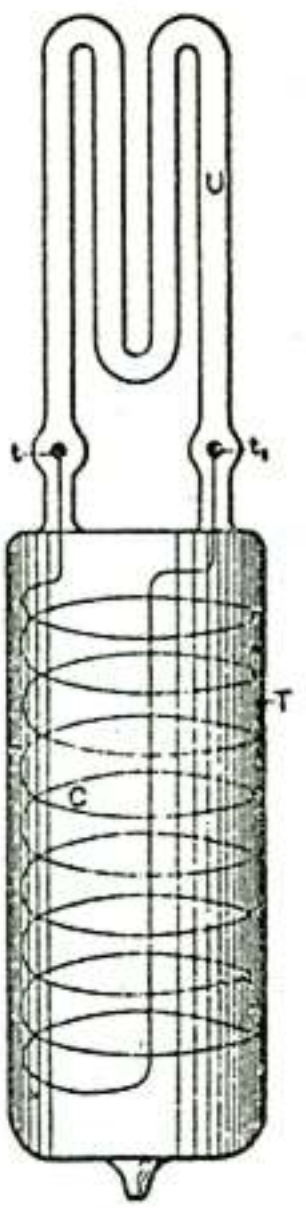

Fig. 32.

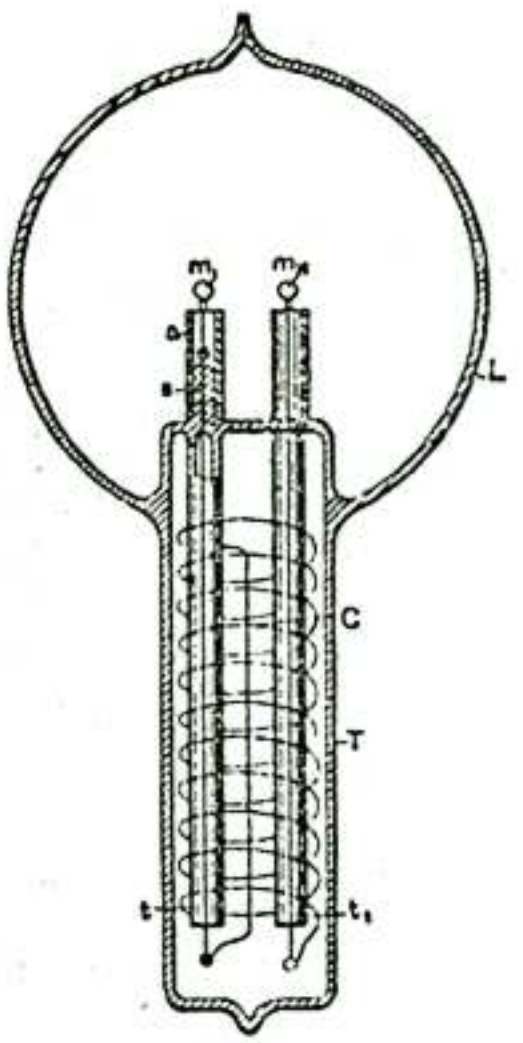

Fig. 33.

coil C. When Leyden jar discharges were used to induce currents in the coil C, it was found necessary to pack the tube T tightly with insulating powder, as a discharge would occur frequently between the turns of the coil, especially when the primary was thick and the air gap, through which the jars discharged, large, and no little trouble was experienced in this way.

In Fig. 33 is illustrated another form of the bulb constructed. In this case a tube T is sealed to a globe L. The tube contains a coil C, the ends of which pass through two small glass tubes t and t_1, which are sealed to the tube T. Two refractory buttons m and m_1 are mounted on lamp filaments which are fastened to the ends of the wires passing

through the glass tubes *t and* t_1. Generally in bulbs made on this plan the globe *L* communicated with the tube *T*. For this purpose the ends of the small tubes *t* and t_1 were just a trifle heated in the burner, merely to hold the wires, but not to interfere with the communication. The tube *T*, with the small tubes, wires through the same, and the refractory buttons *m* and m_1, was first prepared, and then sealed to globe *L*, whereupon the coil *C* was slipped in and the connections made to its ends. The tube was then packed with insulating powder, jamming the latter as tight as possible up to very nearly the end, then it was closed and only a small hole left through which the remainder of the powder was introduced, and finally the end of the tube was closed. Usually in bulbs constructed as shown in Fig. 33 an aluminium tube *a* was fastened to the upper end *s* of each of the tubes *t* and t_1, in order to protect that end against the heat. The buttons *m* and m_1 could be brought to any degree of incandescence by passing the discharges of Leyden jars around the coil *C*. In such bulbs with two buttons a very curious effect is produced by the formation of the shadows of each of the two buttons.

Another line of experiment, which has been assiduously followed, was to induce by electro-dynamic induction a current or luminous discharge in an exhausted tube or bulb. This matter has received such able treatment at the hands of Prof. J. J. Thomson that I could add but little to what he has made known, even had I made it the special subject of this lecture. Still, since experiences in this line have gradually led me to the present views and results, a few words must be devoted here to this subject.

It has occurred, no doubt, to many that as a vacuum tube is made longer the electromotive force per unit length of the tube, necessary to pass a luminous discharge through the latter, gets continually smaller; therefore, if the exhausted tube be made long enough, even with low frequencies a luminous discharge could be induced in such a tube closed upon itself. Such a tube might be placed around a hall or on a ceiling, and at once a simple appliance capable of giving considerable light would be obtained. But this would be an appliance hard to manufacture and extremely unmanageable. It would not do to make the tube up of small lengths, because there would be with ordinary frequencies considerable loss in the coatings, and besides, if coatings were used, it would be better to supply the current directly to the tube by connecting the coatings to a transformer. But even if all objections of such nature were removed, still, with low frequencies the light conversion itself would be inefficient, as I have before stated. In using extremely high frequencies the length of the secondary — in other words, the size of the vessel — can be reduced as far as desired, and the efficiency of the light conversion is increased, provided that means are invented for efficiently obtaining such high frequencies. Thus one is led, from theoretical and practical considerations, to the use of high frequencies, and this means high electromotive forces and small currents in the primary. When he works with condenser charges — and they are the only means up to the present known for reaching these extreme frequencies — he gets to electromotive forces of several thousands of volts per turn of the primary. He cannot multiply the electro-dynamic inductive effect by taking more turns in the primary, for he arrives at the conclusion that the best way is to work with one single turn — though he must sometimes depart from this rule — and he must get along with whatever inductive effect he can obtain with one turn. But before he has long experimented with the extreme frequencies required to set up in a small bulb an electromotive force of several thousands of volts he realizes the great importance of electrostatic effects, and these effects grow relatively to the electro-dynamic in significance as the frequency is increased.

Now, if anything is desirable in this case, it is to increase the frequency, and this would make it still worse for the electro-dynamic effects. On the other hand, it is easy to exalt the electrostatic action as far as one likes by taking more turns on the secondary,

or combining self-induction and capacity to raise the potential. It should also be remembered that, in reducing the current to the smallest value and increasing the potential, the electric impulses of high frequency can be more easily transmitted through a conductor.

These and similar thoughts determined me to devote more attention to the electrostatic phenomena, and to endeavor to produce potentials as high as possible, and alternating as fast as they could be made to alternate. I then found that I could excite vacuum tubes at considerable distance from a conductor connected to a properly constructed coil, and that I could, by converting the oscillatory current of a condenser to a higher potential, establish electrostatic alternating fields which acted through the whole extent of a room, lighting up a tube no matter where it was held in space. I thought I recognized that I had made a step in advance, and I have persevered in this line; but I wish to say that I share with all lovers of science and progress the one and only desire — to reach a result of utility to men in any direction to which thought or experiment may lead me. I think that this departure is the right one, for I cannot see, from the observation of the phenomena which manifest themselves as the frequency is increased, what there would remain to act between two circuits conveying, for instance, impulses of several hundred millions per second, except electrostatic forces. Even with such trifling frequencies the energy would be practically all potential, and my conviction has grown strong that, to whatever kind of motion light may be due, it is produced by tremendous electrostatic stresses vibrating with extreme rapidity.

Of all these phenomena observed with currents, or electric impulses, of high frequency, the most fascinating for an audience are certainly those which are noted in an electrostatic field acting through considerable distance, and the best an unskilled lecturer can do is to begin and finish with the exhibition of these singular effects. I take a tube in the hand and move it about, and it is lighted wherever I may hold it; throughout space the invisible forces act. But I may take another tube and it might not light, the vacuum being very high. I excite it by means of a disruptive discharge coil, and now it will light in the electrostatic field. I may put it away for a few weeks or months, still it retains the faculty of being excited. What change have I produced in the tube in the act of exciting it? If a motion imparted to the atoms, it is difficult to perceive how it can persist so long without being arrested by frictional losses; and if a strain exerted in the dielectric, such as a simple electrification would produce, it is easy to see how it may persist indefinitely but very difficult to understand why such a condition should aid the excitation when we have to deal with potentials which are rapidly alternating.

Since I have exhibited these phenomena for the first time, I have obtained some other interesting effects. For instance, I have produced the incandescence of a button, filament, or wire enclosed in a tube. To get to this result it was necessary to economize the energy which is obtained from the field and direct most of it on the small body to be rendered incandescent. At the beginning the task appeared difficult, but the experiences gathered permitted me to reach the result easily. In Fig. 34 and Fig. 35 two such tubes are illustrated which are prepared for the occasion. In Fig. 34 a short tube T_1, sealed to another long tube T, is provided with a stem s, with a platinum wire sealed in the latter. A very thin lamp filament l is fastened to this wire, and connection to the outside is made through a thin copper wire w. The tube is provided with outside and inside coatings, C and C_1 respectively, and is filled as far as the coatings reach with conducting, and the space above with insulating powder. These coatings are merely used to enable me to perform two experiments with the tube — namely, to produce the effect desired either by direct connection of the body of the experimenter or of another body to the wire w, or by acting inductively through the glass. The stem s is provided with an aluminium tube a, for purposes before explained, and only a small part of the filament

reaches out of this tube. By holding the tube T_1 anywhere in the electrostatic field the filament is rendered incandescent.

A more interesting piece of apparatus is illustrated in Fig. 35. The construction is the same as before, only instead of the lamp filament a small platinum wire *p*, sealed in a stem *s*, and bent above it in a circle, is connected to the copper wire *w*, which is joined to an inside coating *C*. A small stem s_1 is provided with a needle, on the point of which is arranged to rotate very freely a very light fan of mica *v*. To prevent the fan from falling out, a thin stem of glass *g* is bent properly and fastened to the aluminium tube. When the glass tube is held anywhere in the electrostatic field the platinum wire becomes incandescent, and the mica vanes are rotated very fast.

Fig. 34.

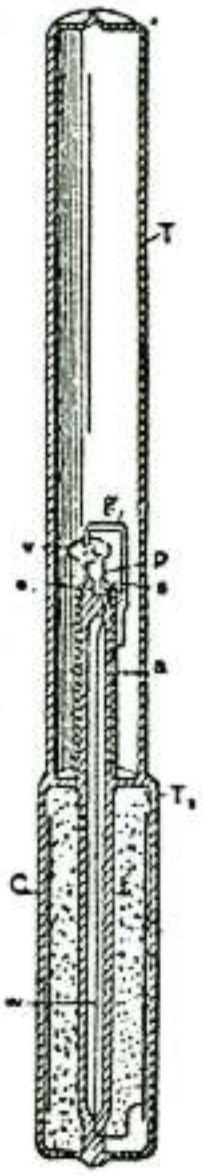

Fig. 35.

Intense phosphorescence may be excited in a bulb by merely connecting it to a plate within the field, and the plate need not be any larger than an ordinary lamp shade. The phosphorescence excited with these currents is incomparably more powerful than with ordinary apparatus. A small phosphorescent bulb, when attached to a wire connected to a coil, emits sufficient light to allow reading ordinary print at a distance of five to six paces. It was of interest to see how some of the phosphorescent bulbs of Professor Crookes would behave with these currents, and he has had the kindness to lend me a few for the occasion. The effects produced are magnificent, especially by the sulphide of calcium and sulphide of zinc. From the disruptive discharge coil they glow intensely merely by holding them in the hand and connecting the body to the terminal of the coil.

To whatever results investigations of this kind may lead, their chief interest lies for the present in the possibilities they offer for the production of an efficient illuminating device. In no branch of electric industry is an advance more desired than in the manufacture of light. Every thinker, when considering the barbarous methods employed, the deplorable losses incurred in our best systems of light production, must have asked himself, What is likely to be the light of the future? Is it to be an incandescent solid, as in the present lamp, or an incandescent gas, or a phosphorescent body, or something like a burner, but incomparably more efficient?

There is little chance to perfect a gas burner; not, perhaps, because human ingenuity has been bent upon that problem for centuries without a radical departure having been made — though this argument is not devoid of force — but because in a burner the higher vibrations can never be reached except by passing through all the low ones. For how is a flame produced unless by a fall of lifted weights? Such process cannot be maintained without renewal, and renewal is repeated passing from low to high vibrations. One way only seems to be open to improve a burner, and that is by trying to reach higher degrees of incandescence. Higher incandescence is equivalent to a quicker vibration; that means more light from the same material, and that, again, means

more economy. In this direction some improvements have been made, but the progress is hampered by many limitations. Discarding, then, the burner, there remain the three ways first mentioned, which are essentially electrical.

Suppose the light of the immediate future to be a solid rendered incandescent by electricity. Would it not seem that it is better to employ a small button than a frail filament? From many considerations it certainly must be concluded that a button is capable of a higher economy, assuming, of course, the difficulties connected with the operation of such a lamp to be effectively overcome. But to light such a lamp we require a high potential; and to get this economically we must use high frequencies.

Such considerations apply even more to the production of light by the incandescence of a gas, or by phosphorescence. In all cases we require high frequencies and high potentials. These thoughts occurred to me a long time ago.

Incidentally we gain, by the use of very high frequencies, many advantages, such as a higher economy in the light production, the possibility of working with one lead, the possibility of doing away with the leading-in wire, etc.

The question is, how far can we go with frequencies? Ordinary conductors rapidly lose the facility of transmitting electric impulses when the frequency is greatly increased. Assume the means for the production of impulses of very great frequency brought to the utmost perfection, every one will naturally ask how to transmit them when the necessity arises. In transmitting such impulses through conductors we must remember that we have to deal with *pressure* and *flow,* in the ordinary interpretation of these terms. Let the pressure increase to an enormous value, and let the flow correspondingly diminish, then such impulses — variations merely of pressure, as it were — can no doubt be transmitted through a wire even if their frequency be many hundreds of millions per second. It would, of course, be out of question to transmit such impulses through a wire immersed in a gaseous medium, even if the wire were provided with a thick and excellent insulation for most of the energy would be lost in molecular bombardment and consequent heating. The end of the wire connected to the source would be heated, and the remote end would receive but a trifling part of the energy supplied. The prime necessity, then, if such electric impulses are to be used, is to find means to reduce as much as possible the dissipation.

The first thought is, employ the thinnest possible wire surrounded by the thickest practicable insulation. The next thought is to employ electrostatic screens. The insulation of the wire may be covered with a thin conducting coating and the latter connected to the ground. But this would not do, as then all the energy would pass through the conducting coating to the ground and nothing would get to the end of the wire. If a ground connection is made it can only be made through a conductor offering an enormous impedance, or through a condenser of extremely small capacity. This, however, does not do away with other difficulties.

If the wave length of the impulses is much smaller than the length of the wire, then corresponding short waves will be sent up in the conducting coating, and it will be more or less the same as though the coating were directly connected to earth. It is therefore necessary to cut up the coating in sections much shorter than the wave length. Such an arrangement does not still afford a perfect screen, but it is ten thousand times better than none. I think it preferable to cut up the conducting coating in small sections, even if the current waves be much longer than the coating.

If a wire were provided with a perfect electrostatic screen, it would be the same as though all objects were removed from it at infinite distance. The capacity would then be reduced to the capacity of the wire itself, which would be very small. It would then be possible to send over the wire current vibrations of very high frequencies at enormous distance without affecting greatly the character of the vibrations. A perfect screen is of course out of the question, but I believe that with a screen such as I have

just described telephony could be rendered practicable across the Atlantic. According to my ideas, the gutta-percha covered wire should be provided with a third conducting coating subdivided in sections. On the top of this should be again placed a layer of gutta-percha and other insulation, and on the top of the whole the armor. But such cables will not be constructed, for ere long intelligence — transmitted without wires — will throb through the earth like a pulse through a living organism. The wonder is that, with the present state of knowledge and the experiences gained, no attempt is being made to disturb the electrostatic or magnetic condition of the earth, and transmit, if nothing else, intelligence.

It has been my chief aim in presenting these results to point out phenomena or features of novelty, and to advance ideas which I am hopeful will serve as starting points of new departures. It has been my chief desire this evening to entertain you with some novel experiments. Your applause, so frequently and generously accorded, has told me that I have succeeded.

In conclusion, let me thank you most heartily for your kindness and attention, and assure you that the honor I have had in addressing such a distinguished audience, the pleasure I have had in presenting these results to a gathering of so many able men — and among them also some of those in whose work for many years past I have found enlightenment and constant pleasure — I shall never forget.

ON LIGHT AND OTHER HIGH FREQUENCY PHENOMENA *

INTRODUCTORY — SOME THOUGHTS ON THE EYE

When we look at the world around us, on Nature, we are impressed with its beauty and grandeur. Each thing we perceive, though it may be vanishingly small, is in itself a world, that is, like the whole of the universe, matter and force governed by law, — a world, the contemplation of which fills us with feelings of wonder and irresistibly urges us to ceaseless thought and inquiry. But in all this vast world, of all objects our senses reveal to us, the most marvelous, the most appealing to our imagination, appears no doubt a highly developed organism, a thinking being. If there is anything fitted to make us admire Nature's handiwork, it is certainly this inconceivable structure, which performs its innumerable motions of obedience to external influence. To understand its workings, to get a deeper insight into this Nature's masterpiece, has ever been for thinkers a fascinating aim, and after many centuries of arduous research men have arrived at a fair understanding of the functions of its organs and senses. Again, in all the perfect harmony of its parts, of the parts which constitute the material or tangible of our being, of all its organs and senses, the eye is the most wonderful. It is the most precious, the most indispensable of our perceptive or directive organs, it is the great gateway through which all knowledge enters the mind. Of all our organs, it is the one, which is in the most intimate relation with that which we call intellect. So intimate is this relation, that it is often said, the very soul shows itself in the eye.

It can be taken as a fact, which the theory of the action of the eye implies, that for each external impression, that is, for each image produced upon the retina, the ends of the visual nerves, concerned in the conveyance of the impression to the mind, must be under a peculiar stress or in a vibratory state. It now does not seem improbable that, when by the power of thought an image is evoked, a distinct reflex action, no matter how weak, is exerted upon certain ends of the visual nerves, and therefore upon the retina. Will it ever be within human power to analyze the condition of the retina when disturbed by thought or reflex action, by the help of some optical or other means of such sensitiveness,that a clear idea of its state might be gained at any time? If this were possible, then the problem of reading one's thoughts with precision, like the characters of an open book, might be much easier to solve than many problems belonging to the domain of positive physical science, in the solution of which many, if not the majority, of scientific men implicitly believe. Helmholtz has shown that the fundi of the eye are themselves, luminous, and he was able to *see,* in total darkness, the movement of his arm by the light of his own eyes. This is one of the most remarkable experiments recorded in the history of science, and probably only a few men could satisfactorily

---

* A lecture delivered before the Franklin Institute, Philadelphia, February, 1893, and before the National Electric Light Association, St. Louis, March, 1893.

repeat it, for it is very likely, that the luminosity of the eyes is associated with uncommon activity of the brain and great imaginative power. It is fluorescence of brain action, as it were.

Another fact having a bearing on this subject which has probably been noted by many, since it is stated in popular expressions, but which I cannot recollect to have found chronicled as a positive result of observation is, that at times, when a sudden idea or image presents itself to the intellect, there is a distinct and sometimes painful sensation of luminosity produced in the eye, observable even in broad daylight.

The saying then, that the soul shows itself in the eye, is deeply founded, and we feel that it expresses a great truth. It has a profound meaning even for one who, like a poet or artist, only following his inborn instinct or love for Nature, finds delight in aimless thoughts and in the mere contemplation of natural phenomena, but a still more profound meaning for one who, in the spirit of positive scientific investigation, seeks to ascertain the causes of the effects. It is principally the natural philosopher, the physicist, for whom the eye is the subject of the most intense admiration.

Two facts about the eye must forcibly impress the mind of the physicist, notwithstanding he may think or say that it is an imperfect optical instrument, forgetting, that the very conception of that which is perfect or seems so to him, has been gained through this same instrument. First, the eye is, as far as our positive knowledge goes, the only organ which is *directly* affected by that subtile medium, which as science teaches us, must fill all space; secondly, it is the most sensitive of our organs, incomparably more sensitive to external impressions than any other.

The organ of hearing implies the impact of ponderable bodies, the organ of smell the transference of detached material particles, and the organs of taste, and of touch or force, the direct contact, or at least some interference of ponderable matter, and this is true even in those instances of animal organisms, in which some of these organs are developed to a degree of truly marvelous perfection. This being so, it seems wonderful that the organ of sight solely should be capable of being stirred by that, which all our other organs are powerless to detect, yet which plays an essential part in all natural phenomena, which transmits all energy and sustains all motion and, that most intricate of all, life, but which has properties such that even a scientifically trained mind cannot help drawing a distinction between it and all that is called matter. Considering merely this, and the fact that the eye, by its marvelous power, widens our otherwise very narrow range of perception far beyond the limits of the small world which is our own, to embrace myriads of other worlds, suns and stars in the infinite depths of the universe, would make it justifiable to assert, that it is an organ of a higher order. Its performances are beyond comprehension. Nature as far as we know never produced anything more wonderful. We can get barely a faint idea of its prodigious power by analyzing what it does and by comparing. When ether waves impinge upon the human body, they produce the sensations of warmth or cold, pleasure or pain, or perhaps other sensations of which we are not aware, and any degree or intensity of these sensations, which degrees are infinite in number, hence an infinite number of distinct sensations. But our sense of touch, or our sense of force, cannot reveal to us these differences in degree or intensity, unless they are very great. Now we can readily conceive how an organism, such as the human, in the eternal process of evolution, or more philosophically speaking, adaptation to Nature, being constrained to the use of only the sense of touch or force, for instance, might develop this sense to such a degree of sensitiveness or perfection, that it would be capable of distinguishing the minutest differences in the temperature of a body even at some distance, to a hundredth, or thousandth, or millionth part of a degree. Yet, even this apparently impossible performance would not begin to compare with that of the eye, which is capable of distinguishing and conveying to the mind in a single instant innumerable peculiarities of the body, be it in form, or color, or other

respects. This power of the eye rests upon two things, namely, the rectilinear propagation of the disturbance by which it is effected, and upon its sensitiveness. To say that the eye is sensitive is not saying anything. Compared with it, all other organs are monstrously crude. The organ of smell which guides a dog on the trail of a deer, the organ of touch or force which guides an insect in its wanderings, the organ of hearing, which is affected by the slightest disturbances of the air, are sensitive organs, to be sure, but what are they compared with the human eye! No doubt it responds to the faintest echoes or reverberations of the medium; no doubt, it brings us tidings from other worlds, infinitely remote, but in a language we cannot as yet always understand. And why not? Because we live in a medium filled with air and other gases, vapors and a dense mass of solid particles flying about. These play an important part in many phenomena; they fritter away the energy of the vibrations before they can reach the eye; they too, are the carriers of germs of destruction, they get into our lungs and other organs, clog up the channels and imperceptibly, yet inevitably, arrest the stream of life. Could we but do away with all ponderable matter in the line of sight of the telescope, it would reveal to us undreamt of marvels. Even the unaided eye, I think, would be capable of distinguishing in the pure medium, small objects at distances measured probably by hundreds or perhaps thousands of miles.

But there is something else about the eye which impresses us still more than these wonderful features which we observed, viewing it from the standpoint of a physicist, merely as an optical instrument, — something which appeals to us more than its marvelous faculty of being directly affected by the vibrations of the medium, without interference of gross matter, and more than its inconceivable sensitiveness and discerning power. It is its significance in the processes of life. No matter what one's views on nature and life may be, he must stand amazed when, for the first time in his thoughts, he realizes the importance of the eye in the physical processes and mental performances of the human organism. And how could it be otherwise, when he realizes, that the eye is the means through which the human race has acquired the entire knowledge it possesses, that it controls all our motions, more still, and our actions.

There is no way of acquiring knowledge except through the eye. What is the foundation of all philosophical systems of ancient and modern times, in fact, of all the philosophy of man? *I am, I think; I think, therefore I am.* But how could I think and how would I know that I exist, if I had not the eye? For knowledge involves consciousness; consciousness involves ideas, conceptions; conceptions involve pictures or images, and images the sense of vision, and therefore the organ of sight. But how about blind men, will be asked? Yes, a blind man may depict in magnificent poems, forms and scenes from real life, from a world he physically does not see. A blind man may touch the keys of an instrument with unerring precision, may model the fastest boat, may discover and invent, calculate and construct, may do still greater wonders — but all the blind men who have done such things have descended from those who had seeing eyes. Nature may reach the same result in many ways. Like a wave in the physical world, in the infinite ocean of the medium which pervades all, so in the world of organisms, in life, an impulse started proceeds onward, at times, may be, with the speed of light, at times, again, so slowly that for ages and ages it seems to stay, passing through processes of a complexity inconceivable to men, but in all its forms, in all its stages, its energy ever and ever integrally present. A single ray of light from a distant star falling upon the eye of a tyrant in by-gone times, may have altered the course of his life, may have changed the destiny of nations, may have transformed the surface of the globe, so intricate, so inconceivably complex are the processes in Nature. In no way can we get such an overwhelming idea of the grandeur of Nature, as when we consider, that in accordance with the law of the conservation of energy, throughout the infinite, the forces are in a perfect balance, and hence the energy of a single thought may determine

the motion of a Universe. It is not necessary that every individual, not even that every generation or many generations, should have the physical instrument of sight, in order to be able to form images and to think, that is, form ideas or conceptions; but sometime or other, during the process of evolution, the eye certainly must have existed, else thought, as we understand it, would be impossible; else conceptions, like spirit, intellect, mind, call it as you may, could not exist. It is conceivable, that in some other world, in some other beings, the eye is replaced by a different organ, equally or more perfect, but these beings cannot be men.

Now what prompts us all to voluntary motions and actions of any kind? Again the eye. If I am conscious of the motion, I must have an idea or conception, that is, an image, therefore the eye. If I am not precisely conscious of the motion, it is, because the images are vague or indistinct, being blurred by the superimposition of many. But when I perform the motion, does the impulse which prompts me to the action come from within or from without? The greatest physicists have not disdained to endeavor to answer this and similar questions and have at times abandoned themselves to the delights of pure and unrestrained thought. Such questions are generally considered not to belong to the realm of positive physical science, but will before long be annexed to its domain. Helmholtz has probably thought more on life than any modern scientist. Lord Kelvin expressed his belief that life's process is electrical and that there is a force inherent to the organism and determining its motions. Just as much as I am convinced of any physical truth I am convinced that the motive impulse must come from the outside. For, consider the lowest organism we know — and there are probably many lower ones — an aggregation of a few cells only. If it is capable of voluntary motion it can perform an infinite number of motions, all definite and precise. But now a mechanism consisting of a finite number of parts and few at that, cannot perform an infinite number of definite motions, hence the impulses which govern its movements must come from the environment. So, the atom, the ulterior element of the Universe's structure, is tossed about in space eternally, a play to external influences, like a boat in a troubled sea. Were it to stop its motion *it would die*. Matter at rest, if such a thing could exist, would be matter dead. Death of matter! Never has a sentence of deeper philosophical meaning been uttered. This is the way in which Prof. Dewar forcibly expresses it in the description of his admirable experiments, in which liquid oxygen is handled as one handles water, and air at ordinary pressure is made to condense and even to solidify by the intense cold. Experiments, which serve to illustrate, in his language, the last feeble manifestations of life, the last quiverings of matter about to die. But human eyes shall not witness such death. There is no death of matter, for throughout the infinite universe, all has to move, to vibrate, that is, to live.

I have made the preceding statements at the peril of treading upon metaphysical ground, in my desire to introduce the subject of this lecture in a manner not altogether uninteresting, I may hope, to an audience such as I have the honor to address. But now, then, returning to the subject, this divine organ of sight, this indispensable instrument for thought and all intellectual enjoyment, which lays open to us the marvels of this universe, through which we have acquired what knowledge we possess, and which prompts us to, and controls, all our physical and mental activity. By what is it affected? By light! What is light?

We have witnessed the great strides which have been made in all departments of science in recent years. So great have been the advances that we cannot refrain from asking ourselves, Is this all true, or is it but a dream? Centuries ago men have lived, have thought, discovered, invented, and have believed that they were soaring, while they were merely proceeding at a snail's pace. So we too may be mistaken. But taking the truth of the observed events as one of the implied facts of science, we must rejoice in the immense progress already made and still more in the anticipation of what must

come, judging from the possibilities opened up by modern research. There is, however, an advance which we have been witnessing, which must be particularly gratifying to every lover of progress. It is not a discovery, or an invention, or an achievement in any particular direction. It is an advance in all directions of scientific thought and experiment. I mean the generalization of the natural forces and phenomena, the looming up of a certain broad idea on the scientific horizon. It is this idea which has, however, long ago taken possession of the most advanced minds, to which I desire to call your attention, and which I intend to illustrate in a general way, in these experiments, as the first step in answering the question "What is light?" and to realize the modern meaning of this word.

It is beyond the scope of my lecture to dwell upon the subject of light in general, my object being merely to bring presently to your notice a certain class of light effects and a number of phenomena observed in pursuing the study of these effects. But to be consistent in my remarks it is necessary to state that, according to that idea, now accepted by the majority of scientific men as a positive result of theoretical and experimental investigation, the various forms or manifestations of energy which were generally designated as "electric" or more precisely "electromagnetic" are energy manifestations of the same nature as those of radiant heat and light. Therefore the phenomena of light and heat and others besides these, may be called electrical phenomena. Thus electrical science has become the mother science of all and its study has become all important. The day when we shall know exactly what "electricity" is, will chronicle an event probably greater, more important than any other recorded in the history of the human race. The time will come when the comfort, the very existence, perhaps, of man will depend upon that wonderful agent. For our existence and comfort we require heat, light and mechanical power. How do we now get all these? We get them from fuel, we get them by consuming material. What will man do when the forests disappear, when the coal fields are exhausted? Only one thing, according to our present knowledge will remain; that is, to transmit power at great distances. Men will go to the waterfalls, to the tides, which are the stores of an infinitesimal part of Nature's immeasurable energy. There will they harness the energy and transmit the same to their settlements, to warm their homes by, to give them light, and to keep their obedient slaves, the machines, toiling. But how will they transmit this energy if not by electricity? Judge then, if the comfort, nay, the very existence, of man will not depend on electricity. I am aware that this view is not that of a practical engineer, but neither is it that of an illusionist, for it is certain, that power transmission, which at present is merely a stimulus to enterprise, will some day be a dire necessity.

It is more important for the student, who takes up the study of light phenomena, to make himself thoroughly acquainted with certain modern views, than to peruse entire books on the subject of light itself, as disconnected from these views. Were I therefore to make these demonstrations before students seeking information — and for the sake of the few of those who may be present, give me leave to so assume — it would be my principal endeavor to impress these views upon their minds in this series of experiments.

It might be sufficient for this purpose to perform a simple and well-known experiment. I might take a familiar appliance, a Leyden jar, charge it from a frictional machine, and then discharge it. In explaining to you its permanent state when charged, and its transitory condition when discharging, calling your attention to the forces which enter into play and to the various phenomena they produce, and pointing out the relation of the forces and phenomena, I might fully succeed in illustrating that modern idea. No doubt, to the thinker, this simple experiment would appeal as much as the most magnificent display. But this is to be an experimental demonstration, and one which

should possess, besides instructive, also entertaining features and as such, a simple experiment, such as the one cited, would not go very far towards the attainment of the lecturer's aim. I must therefore choose another way of illustrating, more spectacular certainly, but perhaps also more instructive. Instead of the frictional machine and Leyden jar, I shall avail myself in these experiments, of an induction coil of peculiar properties, which was described in detail by me in a lecture before the London Institution of Electrical Engineers, in Feb., 1892. This induction coil is capable of yielding currents of enormous potential differences, alternating with extreme rapidity. With this apparatus I shall endeavor to show you three distinct classes of effects, or phenomena, and it is my desire that each experiment, while serving for the purposes of illustration, should at the same time teach us some novel truth, or show us some novel aspect of this fascinating science. But before doing this, it seems proper and useful to dwell upon the apparatus employed, and method of obtaining the high potentials and high-frequency currents which are made use of in these experiments.

ON THE APPARATUS AND METHOD OF CONVERSION.

These high-frequency currents are obtained in a peculiar manner. The method employed was advanced by me about two years ago in an experimental lecture before the American Institute of Electrical Engineers. A number of ways, as practiced in the

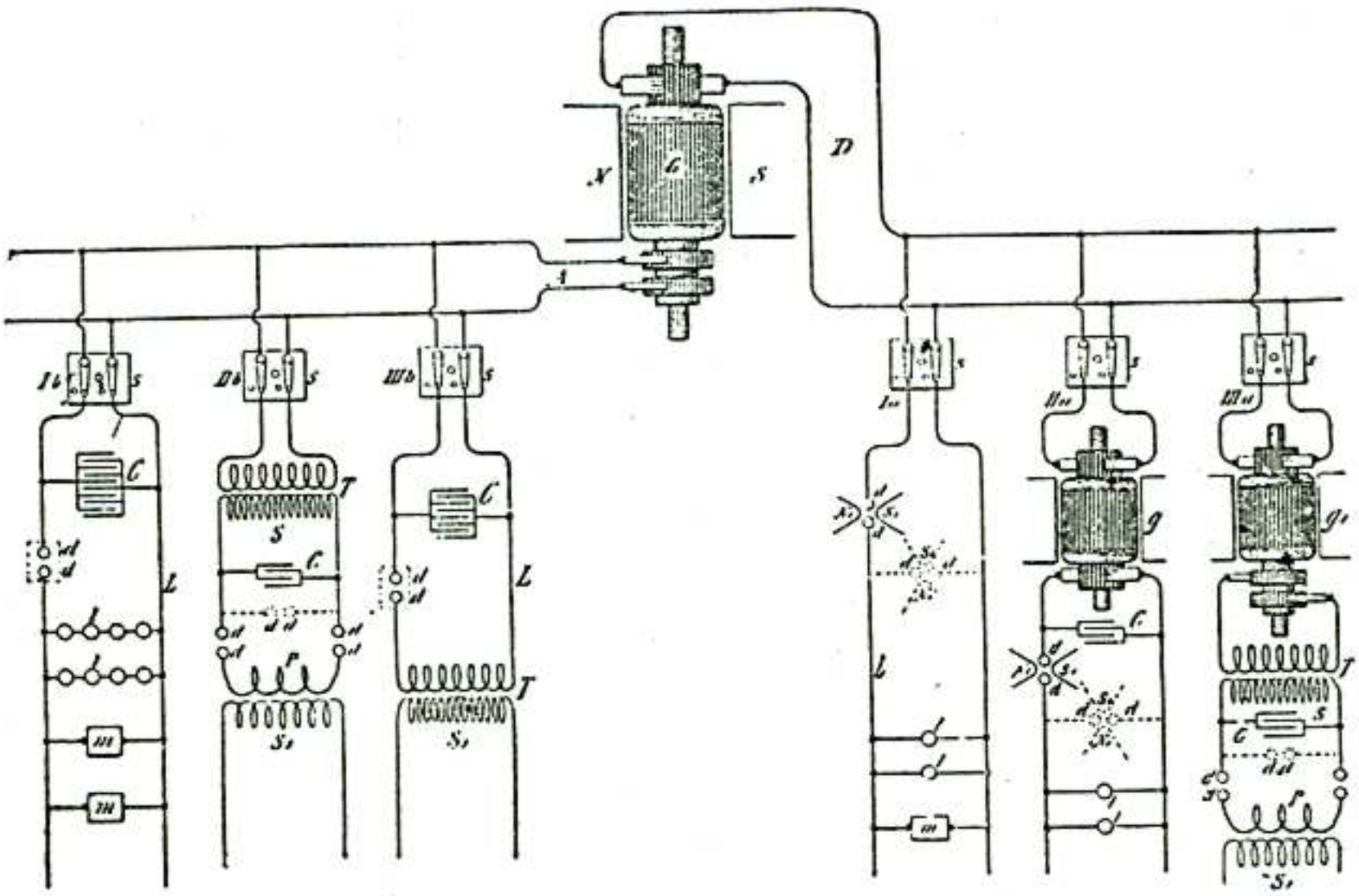

Fig. 1.

laboratory, of obtaining these currents either from continuous or low frequency alternating currents, is diagrammatically indicated in Fig. 1, which will be later described in detail. The general plan is to charge condensers, from a direct or alternate-current source, preferably of high-tension, and to discharge them disruptively while observing well-known conditions necessary to maintain the oscillations of the current. In view of the

general interest taken in high-frequency currents and effects producible by them, it seems to me advisable to dwell at some length upon this method of conversion. In order to give you a clear idea of the action, I will suppose that a continuous-current generator is employed, which is often very convenient. It is desirable that the generator should possess such high tension as to be able te break through a small air space. If this is not the case, then auxiliary means have to be resorted to, some of which will be indicated subsequently. When the condensers are charged to a certain potential, the air, or insulating space, gives way and a disruptive discharge occurs. There is then a sudden rush of current and generally a large portion of accumulated electrical energy spends itself. The condensers are thereupon quickly charged and the same process is repeated in more or less rapid succession. To produce such sudden rushes of current it is necessary to observe certain conditions. If the rate at which the condensers are discharged is the same as that at which they are charged, then, clearly, in the assumed case the condensers do not come into play. If the rate of discharge be smaller than the rate of charging, then, again, the condensers cannot play an important part. But if, on the contrary, the rate of discharging is greater than that of charging, then a succession of rushes of current is obtained. It is evident that, if the rate at which the energy is dissipated by the discharge is very much greater than the rate of supply to the condensers, the sudden rushes will be comparatively few, with long-time intervals between. This always occurs when a condenser of considerable capacity is charged by means of a comparatively small machine. If the rates of supply and dissipation are not widely different, then the rushes of current will be in quicker succession, and this the more, the more nearly equal both the rates are, until limitations incident to each case and depending upon a number of causes are reached. Thus we are able to obtain from a continuous-current generator as rapid a succession of discharges as we like. Of course, the higher the tension of the generator, the smaller need be the capacity of the condensers, and for this reason, principally, it is of advantage to employ a generator of very high tension. Besides, such a generator permits the attaining of greater rates of vibration.

The rushes of current may be of the same direction under the conditions before assumed, but most generally there is an oscillation superimposed upon the fundamental vibration of the current. When the conditions are so determined that there are no oscillations, the current impulses are unidirectional and thus a means is provided of transforming a continuous current of high tension, into a direct current of lower tension, which I think may find employment in the arts.

This method of conversion is exceedingly interesting and I was much impressed by its beauty when I first conceived it. It is ideal in certain respects. It involves the employment of no mechanical devices of any kind, and it allows of obtaining currents of any desired frequency from an ordinary circuit, direct or alternating. The frequency of the fundamental discharges depending on the relative rates of supply and dissipation can be readily varied within wide limits, by simple adjustments of these quantities, and the frequency of the superimposed vibration by the determination of the capacity, self-induction and resistance of the circuit. The potential of the currents, again, may be raised as high as any insulation is capable of withstanding safely by combining capacity and self-induction or by induction in a secondary, which need have but comparatively few turns.

As the conditions are often such that the intermittence or oscillation does not readily establish itself, especially when a direct current source is employed, it is of advantage to associate an interrupter with the arc, as I have, some time ago, indicated the use of an air-blast or magnet, or other such device readily at hand. The magnet is employed with special advantage in the conversion of direct currents, as it is then very effective. If the primary source is an alternate current generator, it is desirable, as I have stated on another occasion, that the frequency should be low, and that the current forming the arc be large, in order to render the magnet more effective.

A form of such discharger with a magnet which has been found convenient, and adopted after some trials, in the conversion of direct currents particularly, is illustrated in Fig. 2. N S are the pole pieces of a very strong magnet which is excited by a coil c. The pole pieces are slotted for adjustment and can be fastened in any position by screws s s_1. The discharge rods d d_1, thinned down on the ends in order to allow a closer approach of the magnetic pole pieces, pass through the columns of brass b b_1 and are fastened in position by screws s_2 s_2. Springs r r_1 and collars c c_1 are slipped on the rods, the latter serving to set the points of the rods at a certain suitable distance by

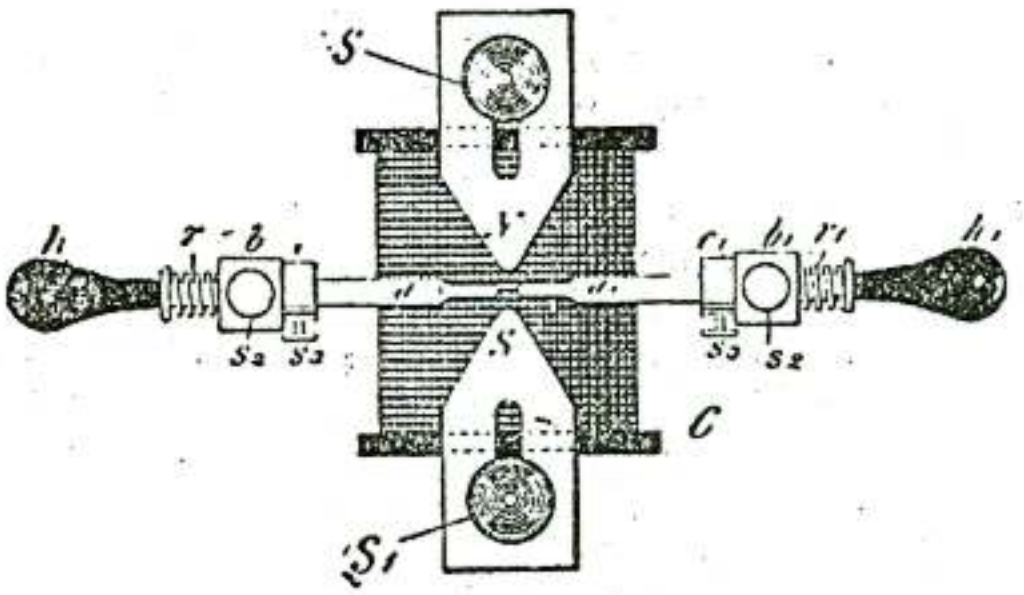

Fig. 2.

means of screws s_3 s_3, and the former to draw the points apart. When it is desired to start the arc, one of the large rubber handles h h_1 is tapped quickly with the hand, whereby the points of the rods are brought in contact but are instantly separated by the springs r r_1. Such an arrangement has been found to be often necessary, namely in cases when the E. M. F. was not large enough to cause the discharge to break through the gap, and also when it was desirable to avoid short circuiting of the generator by the metallic contact of the rods. The rapidity of the interruptions of the current with a magnet depends on the intensity of the magnetic field and on the potential difference at the end of the arc. The interruptions are generally in such quick succession as to produce a musical sound. Years ago it was observed that when a powerful induction coil is discharged between the poles of a strong magnet, the discharge produces a loud noise not unlike a small pistol shot. It was vaguely stated that the spark was intensified by the presence of the magnetic field. It is now clear that the discharge current, flowing for some time, was interrupted a great number of times by the magnet, thus producing the sound. The phenomenon is especially marked when the field circuit of a large magnet or dynamo is broken in a powerful magnetic field.

When the current through the gap is comparatively large, it is of advantage to slip on the points of the discharge rods pieces of very hard carbon and let the arc play between the carbon pieces. This preserves the rods, and besides has the advantage of keeping the air space hotter, as the heat is not conducted away as quickly through the carbons, and the result is that a smaller E. M. F. in the arc gap is required to maintain a succession of discharges.

Another form of discharger, which may be employed with advantage in some cases, is illustrated in Fig. 3. In this form the discharge rods d d_1 pass through perforations in a wooden box B, which is thickly coated with mica on the inside, as indicated by the heavy lines. The perforations are provided with mica tubes m m_1 of some thickness, which are preferably not in contact with the rods d d_1. The box has a cover c which is a little larger and descends on the outside of the box. The spark gap is warmed by a small lamp l contained in the box. A plate p above the lamp allows the draught to

pass only through the chimney *e* of the lamp, the air entering through holes *o o* in or near the bottom of the box and following the path indicated by the arrows. When the discharger is in operation, the door of the box is closed so that the light of the arc is not visible outside. It is desirable to exclude the light as perfectly as possible, as it interferes with some experiments. This form of discharger is simple and very effective when properly manipulated. The air being warmed to a certain temperature, has its insulating power impaired; it becomes dielectrically weak, as it were, and the consequence is that the arc can be established at much greater distance. The arc should, of course, be sufficiently insulating to allow the discharge to pass through the gap *disruptively*. The arc formed under such conditions, when long, may be made extremely sensitive, and the weak draught through the lamp chimney *c* is quite sufficient to produce rapid interruptions. The adjustment is made by regulating the temperature and velocity of the draught. Instead of using the lamp, it answers the purpose to provide for a draught of warm air in other ways. A very simple way which has been practiced is to enclose the arc in a long vertical tube, with plates on the top and bottom for regulating the temperature and velocity of the air current. Some provision had to be made for deadening the sound.

The air may be rendered dielectrically weak also by rarefaction. Dischargers of this kind have likewise been used by me in connection with a magnet. A large tube is for this purpose provided with heavy electrodes of carbon or metal, between which the discharge is made to pass, the tube being placed in a powerful magnetic field. The exhaustion of the tube is carried to a point at which the discharge breaks through easily,

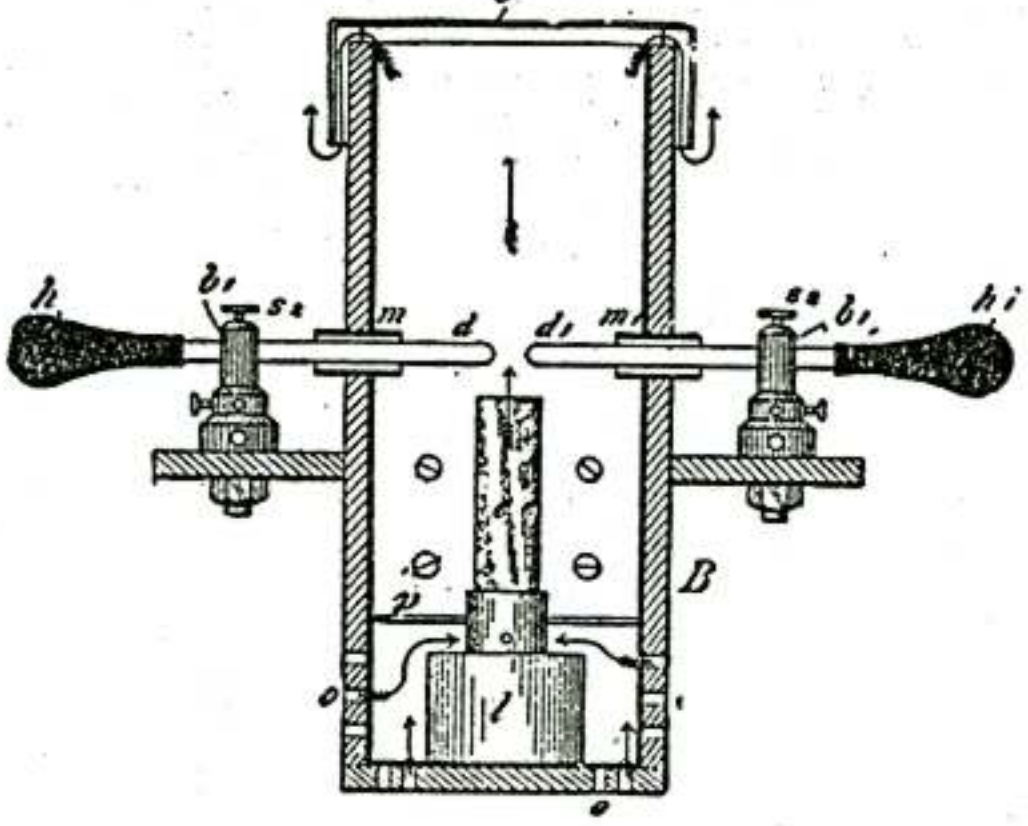

Fig 3.

but the pressure should be more than 75 millimetres, at which the ordinary thread discharge occurs. In another form of discharger, combining the features before mentioned, the discharge was made to pass between two adjustable magnetic pole pieces, the space between them being kept at an elevated temperature.

It should be remarked here that when such, or interrupting devices of any kind, are used and the currents are passed through the primary of a disruptive discharge coil, it is not, as a rule, of advantage to produce a number of interruptions of the current per second greater than the natural frequency of vibration of the dynamo supply circuit, which is ordinarily small. It should also be pointed out here, that while the devices mentioned in connection with the disruptive discharge are advantageous under

certain conditions, they may be sometimes a source of trouble, as they produce intermittences and other irregularities in the vibration which it would be very desirable to overcome.

There is, I regret to say, in this beautiful method of conversion a defect, which fortunately is not vital, and which I have been gradually overcoming. I will best call attention to this defect and indicate a fruitful line of work, by comparing the electrical process with its mechanical analogue. The process may be illustrated in this manner. Imagine a tank with a wide opening at the bottom, which is kept closed by spring pressure, but so that it snaps off *suddenly* when the liquid in the tank has reached a certain height. Let the fluid be supplied to the tank by means of a pipe feeding at a certain rate. When the critical height of the liquid is reached, the spring gives way and the bottom of the tank drops out. Instantly the liquid falls through the wide opening, and the spring, reasserting itself, closes the bottom again. The tank is now filled, and after a certain time interval the same process is repeated. It is clear, that if the pipe feeds the fluid quicker than the bottom outlet is capable of letting it pass through, the bottom will remain off and the tank will still overflow. If the rates of supply are exactly equal, then the bottom lid will remain partially open and no vibration of the same and of the liquid column will generally occur, though it might, if started by some means. But if the inlet pipe does not feed the fluid fast enough for the outlet, then there will be always vibration. Again, in such case, each time the bottom flaps up or down, the spring and the liquid column, if the pliability of the spring and the inertia of the moving parts are properly chosen, will perform independent vibrations. In this analogue the fluid may be likened to electricity or electrical energy, the tank to the condenser, the spring to the dielectric, and the pipe to the conductor through which electricity is supplied to the condenser. To make this analogy quite complete it is necessary to make the assumption, that the bottom, each time it gives way, is knocked violently against a non-elastic stop, this impact involving some loss of energy; and that, besides, some dissipation of energy results due to frictional losses. In the preceding analogue the liquid is supposed to be under a steady pressure. If the presence of the fluid be assumed to vary rhythmically, this may be taken as corresponding to the case of an alternating current. The process is then not quite as simple to consider, but the action is the same in principle.

It is desirable, in order to maintain the vibration economically, to reduce the impact and frictional losses as much as possible. As regards the latter, which in the electrical analogue correspond to the losses due to the resistance of the circuits, it is impossible to obviate them entirely, but they can be reduced to a minimum by a proper selection of the dimensions of the circuits and by the employment of thin conductors in the form of strands. But the loss of energy caused by the first breaking through of the dielectric — which in the above example corresponds to the violent knock of the bottom against the inelastic stop — would be more important to overcome. At the moment of the breaking through, the air space has a very high resistance, which is probably reduced to a very small value when the current has reached some strength, and the space is brought to a high temperature. It would materially diminish the loss of energy if the space were always kept at an extremely high temperature, but then there would be no disruptive break. By warming the space moderately by means of a lamp or otherwise, the economy as far as the arc is concerned is sensibly increased. But the magnet or other interrupting device does not diminish the loss in the arc. Likewise, a jet of air only facilitates the carrying off of the energy. Air, or a gas in general, behaves curiously in this respect. When two bodies charged to a very high potential, discharge disruptively through an air space, any amount of energy may be carried off by the air. This energy is evidently dissipated by bodily carriers, in impact and collisional losses of the molecules. The exchange of the molecules in the space occurs with inconceivable rapidity. A powerful discharge taking place between two electrodes, they may remain entirely cool, and yet

the loss in the air may represent any amount of energy. It is perfectly practicable, with very great potential differences in the gap, to dissipate several horse-power in the arc of the discharge without even noticing a small increase in the temperature of the electrodes. All the frictional losses occur then practically in the air. If the exchange of the air molecules is prevented, as by enclosing the air hermetically, the gas inside of the vessel is brought quickly to a high temperature, even with a very small discharge. It is difficult to estimate how much of the energy is lost in sound waves, audible or not, in a powerful discharge. When the currents through the gap are large, the electrodes may become rapidly heated, but this is not a reliable measure of the energy wasted in the arc, as the loss through the gap itself may be comparatively small. The air or a gas in general is, at ordinary pressure at least, clearly not the best medium through which a disruptive discharge should occur. Air or other gas under great pressure is of course a much more suitable medium for the discharge gap. I have carried on long-continued experiments in this direction, unfortunately less practicable on account of the difficulties and expense in getting air under great pressure. But even if the medium in the discharge space is solid or liquid, still the same losses take place, though they are generally smaller, for just as soon as the arc is established, the solid or liquid is volatilized. Indeed, there is no body known which would not be disintegrated by the arc, and it is an open question among scientific men, whether an arc discharge could occur at all in the air itself without the particles of the electrodes being torn off. When the current through the gap is very small and the arc very long, I believe that a relatively considerable amount of heat is taken up in the disintegration of the electrodes, which partially on this account may remain quite cold.

The ideal medium for a discharge gap should only *crack,* and the ideal electrode should be of some material which cannot be disintegrated. With small currents through the gap it is best to employ aluminum, but not when the currents are large. The disruptive break in the air, or more or less in any ordinary medium, is not of the nature of a crack, but it is rather comparable to the piercing of innumerable bullets through a mass offering great frictional resistances to the motion of the bullets, this involving considerable loss of energy. A medium which would merely crack when strained electrostatically — and this possibly might be the case with a perfect vacuum, that is, pure ether — would involve a very small loss in the gap, so small as to be entirely negligible, at least theoretically, because a crack may be produced by an infinitely small displacement. In exhausting an oblong bulb provided with two aluminum terminals, with the greatest care, I have succeeded in producing such a vacuum that the secondary discharge of a disruptive discharge coil would break disruptively through the bulb in the form of fine spark streams. The curious point was that the discharge would completely ignore the terminals and start far behind the two aluminum plates which served as electrodes. This extraordinary high vacuum could only be maintained for a very short while. To return to the ideal medium, think, for the sake of illustration, of a piece of glass or similar body clamped in a vice, and the latter tightened more and more. At a certain point a minute increase of the pressure will cause the glass to crack. The loss of energy involved in splitting the glass may be practically nothing, for though the force is great, the displacement need be but extremely small. Now imagine that the glass would possess the property of closing again perfectly the crack upon a minute diminution of the pressure. This is the way the dielectric in the discharge space should behave. But inasmuch as there would be always some loss in the gap, the medium, which should be continuous, should exchange through the gap at a rapid rate. In the preceding example, the glass being perfectly closed, it would mean that the dielectric in the discharge space possesses a great insulating power; the glass being cracked, it would signify that the medium in the space is a good conductor. The dielectric should vary enormously in resistance by minute variations of the E. M. F. across the discharge space. This

condition is attained, but in an extremely imperfect manner, by warming the air space to a certain critical temperature, dependent on the E. M. F. across the gap, or by otherwise impairing the insulating power of the air. But as a matter of fact the air does never break down *disruptively,* if this term be rigorously interpreted, for before the sudden rush of the current occurs, there is always a weak current preceding it, which rises first gradually and then with comparative suddenness. That is the reason why the rate of change is very much greater when glass, for instance, is broken through, than when the break takes place through an air space of equivalent dielectric strength. As a medium for the discharge space, a solid, or even a liquid, would be preferable therefore. It is somewhat difficult to conceive of a solid body which would possess the property of closing instantly after it has been cracked. But a liquid, especially under great pressure, behaves practically like a solid, while it possesses the property of closing the crack. Hence it was thought that a liquid insulator might be more suitable as a dielectric than air. Following out this idea, a number of different forms of dischargers in which a variety of such insulators, sometimes under great pressure, were employed, have been experimented upon. It is thought sufficient to dwell in a few words upon one of the forms experimented upon. One of these dischargers is illustrated in Figs. 4a and 4b.

A hollow metal pulley P (Fig. 4a), was fastened upon an arbor *a,* which by suitable means was rotated at a considerable speed. On the inside of the pulley, but disconnected from the same, was supported a thin disc *h* (which is shown thick for the sake of clearness), of hard rubber in which there were embedded two metal segments *s s* with metallic extensions *e e* into which were screwed conducting terminals *t t* covered with thick tubes of hard rubber *t t.* The rubber disc *h* with its metallic segments *s s,* was finished in a lathe, and its entire surface highly polished so as to offer the smallest possible frictional resistance to the motion through a fluid. In the hollow of

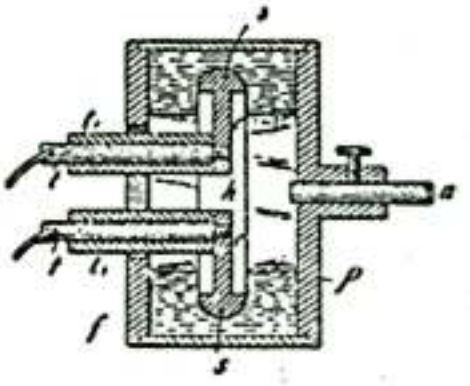

Fig. 4a.

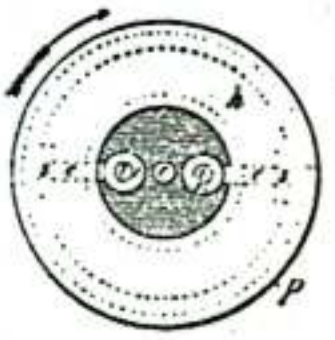

Fig. 4b.

the pulley an insulating liquid such as a thin oil was poured so as to reach very nearly to the opening left in the flange *f,* which was screwed tightly on the front side of the pulley. The terminals *t t,* were connected to the opposite coatings of a battery of condensers so that the discharge occurred through the liquid. When the pulley was rotated, the liquid was forced against the rim of the pulley and considerable fluid pressure resulted. In this simple way the discharge gap was filled with a medium which behaved practically like a solid, which possessed the quality of closing instantly upon the occurrence of the break, and which moreover was circulating through the gap at a rapid rate. Very powerful effects were produced by discharges of this kind with liquid interrupters, of which a number of different forms were made. It was found that, as expected, a longer spark for a given length of wire was obtainable in this way than by using air as an interrupting device. Generally the speed, and therefore also the fluid pressure, was limited by reason of the fluid friction, in the form of discharger described, but the practically obtainable speed was more than sufficient to produce a number of breaks suitable for the circuits ordinarily used. In such instances the metal pulley P was provided with a few projections inwardly, and a definite number of breaks was then

produced which could be computed from the speed of rotation of the pulley. Experiments were also carried on with liquids of different insulating power with the view of reducing the loss in the arc. When an insulating liquid is moderately warmed, the loss in the arc is diminished.

A point of some importance was noted in experiments with various discharges of this kind. It was found, for instance, that whereas the conditions maintained in these forms were favorable for the production of a great spark length, the current so obtained was not best suited to the production of light effects. Experience undoubtedly has shown, that for such purposes a harmonic rise and fall of the potential is preferable. Be it that a solid is rendered incandescent, or phosphorescent, or be it that energy is transmitted by condenser coating through the glass, it is quite certain that a harmonically rising and falling potential produces less destructive action, and that the vacuum is more permanently maintained. This would be easily explained if it were ascertained that the process going on in an exhausted vessel is of an electrolytic nature.

In the diagrammatical sketch, Fig. 1, which has been already referred to, the cases which are most likely to be met with in practice are illustrated. One has at his disposal either direct or alternating currents from a supply station. It is convenient for an experimenter in an isolated laboratory to employ a machine G, such as illustrated, capable of giving both kinds of currents. In such case it is also preferable to use a machine with multiple circuits, as in many experiments it is useful and convenient to have at one's disposal currents of different phases. In the sketch, D represents the direct and A the alternating circuit. In each of these, three branch circuits are shown, all of which are provided with double line switches *s s s s s s*. Consider first the direct current conversion; 1*a* represents the simplest case. If the E. M. F. of the generator is sufficient to break through a small air space, at least when the latter is warmed or otherwise rendered poorly insulating, there is no difficulty in maintaining a vibration with fair economy by judicious adjustment of the capacity, self-induction and resistance of the circuit L containing the devices *l l m*. The magnet N, S, can be in this case advantageously combined with the air space. The discharger *d d* with the magnet may be placed either way, as indicated by the full or by the dotted lines. The circuit 1*a* with the connections and devices is supposed to possess dimensions such as are suitable for the maintenance of a vibration. But usually the E. M. F. on the circuit or branch 1*a* will be something like a 100 volts or so, and in this case it is not sufficient to break through the gap. Many different means may be used to remedy this by raising the E. M. F. across the gap. The simplest is probably to insert a large self-induction coil in series with the circuit L. When the arc is established, as by the discharger illustrated in Fig. 2, the magnet blows the arc out the instant it is formed. Now the extra current of the break, being of high E. M. F., breaks through the gap, and a path of low resistance for the dynamo current being again provided, there is a sudden rush of current from the dynamo upon the weakening or subsidence of the extra current. This process is repeated in rapid succession, and in this manner I have maintained oscillation with as low as 50 volts, or even less, across the gap. But conversior on this plan is not to be recommended on account of the too heavy currents through the gap and consequent heating of the electrodes; besides, the frequencies obtained in this way are low, owing to the high self-induction necessarily associated with the circuit. It is very desirable to have the E. M. F. as high as possible, first, in order to increase the economy of the conversion, and secondly, to obtain high frequencies. The difference of potential in this electric oscillation is, of course, the equivalent of the stretching force in the mechanical vibration of the spring. To obtain very rapid vibration in a circuit of some inertia, a great stretching force or difference of potential is necessary. Incidentally, when the E. M. F. is very great, the condenser which is usually employed in connection with the circuit need but have a small capacity, and many other advantages are gained. With

a view of raising the E. M. F. to a many times greater value than obtainable from ordinary distribution circuits, a rotating transformer *g* is used, as indicated at I 1*a*, Fig. 1, or else a separate high potential machine is driven by means of a motor operated from the generator G. The latter plan is in fact preferable, as changes are easier made. The connections from the high tension winding are quite similar to those in branch 1*a* with the exception that a condenser C, which should be adjustable, is connected to the high tension circuit. Usually, also, an adjustable self-induction coil in series with the circuit has been employed in these experiments. When the tension of the currents is very high, the magnet ordinarily used in connection with the discharger is of comparatively small value, as it is quite easy to adjust the dimensions of the circuit so that oscillation is maintained. The employment of a steady E. M. F. in the high frequency conversion affords some advantages over the employment of alternating E. M. F., as the adjustments are much simpler and the action can be easier controlled. But unfortunately one is limited by the obtainable potential difference. The winding also breaks down easily in consequence of the sparks which form between the sections of the armature or commutator when a vigorous oscillation takes place. Besides, these transformers are expensive to build. It has been found by experience that it is best to follow the plan illustrated at III*a*. In this arrangement a rotating transformer *g*, is employed to convert the low tension direct currents into low frequency alternating currents, preferably also of small tension. The tension of the currents is then raised in a stationary transformer T. The secondary s of this transformer is connected to an adjustable condenser C which discharges through the gap or discharger *d d*, placed in either of the ways indicated, through the primary P of a disruptive discharge coil, the high frequency current being obtained from the secondary s of this coil, as described on previous occasions. This will undoubtedly be found the cheapest and most convenient way of converting direct currents.

The three branches of the circuit A represent the usual cases met in practice when alternating currents are converted. In Fig. I*b* a condenser C, generally of large capacity, is connected to the circuit L containing the devices *l l*, *m m*. The devices *m m* are supposed to be of high self-induction so as to bring the frequency of the circuit more or less to that of the dynamo. In this instance the discharger *d d* should best have a number of makes and breaks per second equal to twice the frequency of the dynamo. If not so, then it should have at least a number equal to a multiple or even fraction of the dynamo frequency. It should be observed, referring to I *b*, that the conversion to a high potential is also effected when the discharger *d d*, which is shown in the sketch, is omitted. But the effects which are produced by currents which rise instantly to high values, as in a disruptive discharge, are entirely different from those produced by dynamo currents which rise and fall harmonically. So, for instance, there might be in a given case a number of makes and breaks at *d d* equal to just twice the frequency of the dynamo, or in other words, there may be the same number of fundamental oscillations as would be produced without the discharge gap, and there might even not be any quicker superimposed vibration; yet the differences of potential at the various points of the circuit, the impedance and other phenomena, dependent upon the rate of change, will bear no similarity in the two cases. Thus, when working with currents discharging disruptively, the element chiefly to be considered is not the frequency, as a student might be apt to believe, but the rate of change per unit of time. With low frequencies in a certain measure the same effects may be obtained as with high frequencies, provided the rate of change is sufficiently great. So if a low frequency current is raised to a potential of, say, 75,000 volts, and the high tension current passed through a series of high resistance lamp filaments, the importance of the rarefied gas surrounding the filament is clearly noted, as will be seen later; or, if a low frequency current of several thousand amperes is passed through a metal bar, striking phenomena of impedance

are observed, just as with currents of high frequencies. But it is, of course, evident that with low frequency currents it is impossible to obtain such rates of change per unit of time as with high frequencies, hence the effects produced by the latter are much more prominent. It is deemed advisable to make the preceding remarks, inasmuch as many more recently described effects have been unwittingly identified with high frequencies. Frequency alone in reality does not mean anything, except when an undisturbed harmonic oscillation is considered.

In the branch III*b* a similar disposition to that in I*b* is illustrated, with the difference that the currents discharging through the gap *d d* are used to induce currents in the secondary s of a transformer T. In such case the secondary should be provided with an adjustable condenser for the purpose of tuning it to the primary.

II*b* illustrates a plan of alternate current high frequency conversion which is most frequently used and which is found to be most convenient. This plan has been dwelt upon in detail on previous occasions and need not be described here.

Some of these results were obtained by the use of a high frequency alternator. A description of such machines will be found in my original paper before the American Institute of Electrical Engineers, and in periodicals of that period, notably in The Electrical Engineer of March 18, 1891.

I will now proceed with the experiments.

ON PHENOMENA PRODUCED BY ELECTROSTATIC FORCE

The first class of effects I intend to show you are effects produced by electrostatic force. It is the force which governs the motion of the atoms, which causes them to collide and develop the life-sustaining energy of heat and light, and which causes them to aggregate in an infinite variety of ways, according to Nature's fanciful designs, and to form all these wondrous structures we perceive around us; it is, in fact, if our present views be true, the most important force for us to consider in Nature. As the term *electrostatic* might imply a steady electric condition, it should be remarked, that in these experiments the force is not constant, but varies at a rate which may be considered moderate, about one million times a second, or thereabouts. This enables me to produce many effects which are not producible with an unvarying force.

When two conducting bodies are insulated and electrified, we say that an electrostatic force is acting between them. This force manifests itself in attractions, repulsions and stresses in the bodies and space or medium without. So great may be the strain exerted in the air, or whatever separates the two conducting bodies, that it may break down, and we observe sparks or bundles of light or streamers, as they are called. These streamers form abundantly when the force through the air is rapidly varying. I will illustrate this action of electrostatic force in a novel experiment in which I will employ the induction coil before referred to. The coil is contained in a trough filled with oil, and placed under the table. The two ends of the secondary wire pass through the two thick columns of hard rubber which protrude to some height above the table. It is necessary to insulate the ends or terminals of the secondary heavily with hard rubber, because even dry wood is by far too poor an insulator for these currents of enormous potential differences. On one of the terminals of the coil, I have placed a large sphere of sheet brass, which is connected to a larger insulated brass plate, in order to enable me to perform the experiments under conditions, which, as you will see, are more suitable for this experiment. I now set the coil to work and approach the free terminal with a metallic object held in my hand, this simply to avoid burns. As I approach the metallic object to a distance of eight or ten inches, a torrent of furious sparks breaks forth from the end of the secondary wire, which passes through

the rubber column. The sparks cease when the metal in my hand touches the wire. My arm is now traversed by a powerful electric current, vibrating at about the rate of one million times a second. All around me the electrostatic force makes itself felt, and the air molecules and particles of dust flying about are acted upon and are hammering violently against my body. So great is this agitation of the particles, that when the lights are turned out you may see streams of feeble light appear on some parts of my body. When such a streamer breaks out on any part of the body, it produces a sensation like the pricking of a needle. Were the potentials sufficiently high and the frequency of the vibration rather low, the skin would probably be ruptured under the tremendous strain, and the blood would rush out with great force in the form of fine spray or jet so thin as to be invisible, just as oil will when placed on the positive terminal of a Holtz machine. The breaking through of the skin though it may seem impossible at first, would perhaps occur, by reason of the tissues under the skin being incomparably better conducting. This, at least, appears plausible, judging from some observations.

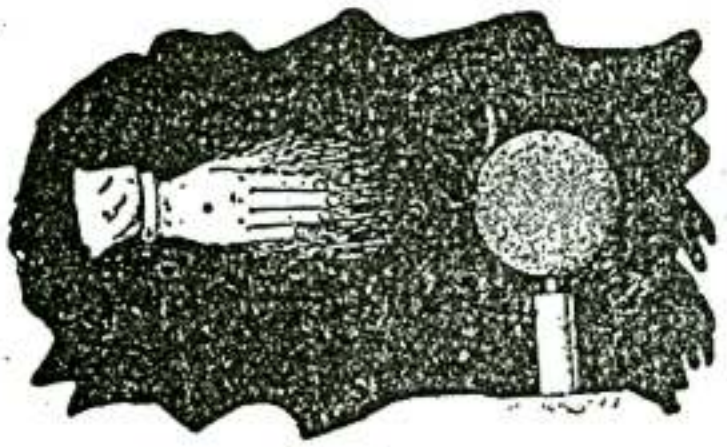

Fig. 5.

I can make these streams of light visible to all, by touching with the metallic object one of the terminals as before, and aproaching my free hand to the brass sphere, which is connected to the second terminal of the coil. As the hand is approached, the air between it and the sphere, or in the immediate neighborhood, is more violently agitated, and you see streams of light now break forth from my finger tips and from the whole hand (Fig. 5). Were I to approach the hand closer, powerful sparks would jump from the brass sphere to my hand, which might be injurious. The streamers offer no particular inconvenience, except that in the ends of the finger tips a burning sensation is felt. They should not be confounded with those produced by an influence machine, because in many respects they behave differently. I have attached the brass sphere and plate to one of the terminals in order to prevent the formation of visible streamers on that terminal, also in order to prevent sparks from jumping at a considerable distance. Besides, the attachment is favorable for the working of the coil.

The streams of light which you have observed issuing from my hand are due to a potential of about 200,000 volts, alternating in rather irregular intervals, sometimes like a million times a second. A vibration of the same amplitude, but four times as fast, to maintain which over 3,000,000 volts would be required, would be more than sufficient to envelop my body in a complete sheet of flame. But this flame would not burn me up; quite contrarily, the probability is that I would not be injured in the least. Yet a hundredth part of that energy, otherwise directed, would be amply sufficient to kill a person.

The amount of energy which may thus be passed into the body of a person depends on the frequency and potential of the currents, and by making both of these very great, a vast amount of energy may be passed into the body without causing any discomfort, except perhaps, in the arm, which is traversed by a true conduction current. The reason why no pain in the body is felt, and no injurious effect noted, is that everywhere, if a current be imagined to flow through the body, the direction of its flow would be at right angles to the surface; hence the body of the experimenter offers an enormous section to the current, and the density is very small, with the exception of the arm, perhaps, where the density may be considerable. But if only a small fraction of that energy would be applied in such a way that a current would traverse the body in the same manner as a low frequency current, a shock would be received which might be

fatal. A direct or low frequency alternating current is fatal, I think, principally because its distribution through the body is not uniform, as it must divide itself in minute streamlets of great density, whereby some organs are vitally injured. That such a process occurs I have not the least doubt, though no evidence might apparently exist, or be found upon examination. The surest to injure and destroy life, is a continuous current, but the most painful is an alternating current of very low frequency. The expression of these views, which are the result of long continued experiment and observation, both with steady and varying currents, is elicited by the interest which is at present taken in this subject, and by the manifestly erroneous ideas which are daily propounded in journals on this subject.

I may illustrate an effect of the electrostatic force by another striking experiment, but before, I must call your attention to one or two facts. I have said before, that when the medium between two oppositely electrified bodies is strained beyond a certain limit it gives way and, stated in popular language, the opposite electric charges unite and neutralize each other. This breaking down of the medium occurs principally when the force acting between the bodies is steady, or varies at a moderate rate. Were the variation sufficiently rapid, such a destructive break would not occur, no matter how great the force, for all the energy would be spent in radiation, convection and mechanical and chemical action. Thus the *spark* length, or greatest distance which a *spark* will jump between the electrified bodies is the smaller, the greater the variation or time rate of change. But this rule may be taken to be true only in a general way, when comparing rates which are widely different.

I will show you by an experiment the difference in the effect produced by a rapidly varying and a steady or moderately varying force. I have here two large circular brass plates *p p* (Fig. 6a and Fig. 6b), supported on movable insulating stands on the table, connected to the ends of the secondary of a coil similar to the one used before. I place the plates ten or twelve inches apart and set the coil to work. You see the whole space between the plates, nearly two cubic feet, filled with uniform light, Fig. 6a. This light is due to the streamers you have seen in the first experiment, which are now much more intense. I have already pointed out the importance of these streamers in commercial apparatus and their still greater importance in some purely scientific investigations. Often they are to weak to be visible, but they always exist, consuming energy and modifying the action of the apparatus. When intense, as they are at present, they produce ozone in great quantity, and also, as Professor Crookes has pointed out, nitrous acid. So quick is the chemical action that if a coil, such as this one, is worked for a very long time it will make the atmosphere of a small room unbearable, for the eyes and throat are attacked. But when moderately produced, the streamers refresh the atmosphere wonderfully, like a thunder-storm, and exercises unquestionably a beneficial effect.

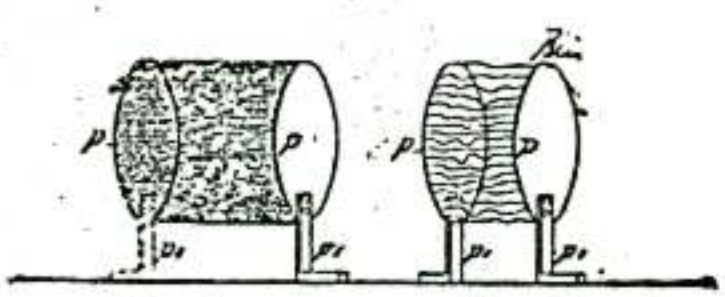

Fig. 6a. Fig. 6b.

In this experiment the force acting between the plates changes in intensity and direction at a very rapid rate. I will now make the rate of change per unit time much smaller. This I effect by rendering the discharges through the primary of the induction coil less frequent, and also by diminishing the rapidity of the vibration in the secondary. The former result is conveniently secured by lowering the E. M. F. over the air gap in the primary circuit, the latter by approaching the two brass plates to a distance of about three or four inches. When the coil is set to work, you see no streamers or light between the plates, yet the medium between them is under a tremendous strain. I still further augment the strain by raising the E. M. F. in the primary circuit, and soon you see the

air give away and the hall is illuminated by a shower of brilliant and noisy sparks, Fig. 6b. These sparks could be produced also with unvarying force; they have been for many years a familiar phenomenon, though they were usually obtained from an entirely different apparatus. In describing these two phenomena so radically different in appearance, I have advisedly spoken of a "force" acting between the plates. It would be in accordance with the accepted views to say, that there was an "alternating E. M. F.", acting between the plates. This term is quite proper and applicable in all cases where there is evidence of at least a possibility of an essential inter-dependence of the electric state of the plates, or electric action in their neighborhood. But if the plates were removed to an infinite distance, or if at a finite distance, there is no probability or necessity whatever for such dependence. I prefer to use the term "electrostatic force," and to say that such a force is acting around each plate or electrified insulated body in general. There is an inconvenience in using this expression as the term incidentally means a steady electric condition; but a proper nomenclature will eventually settle this difficulty.

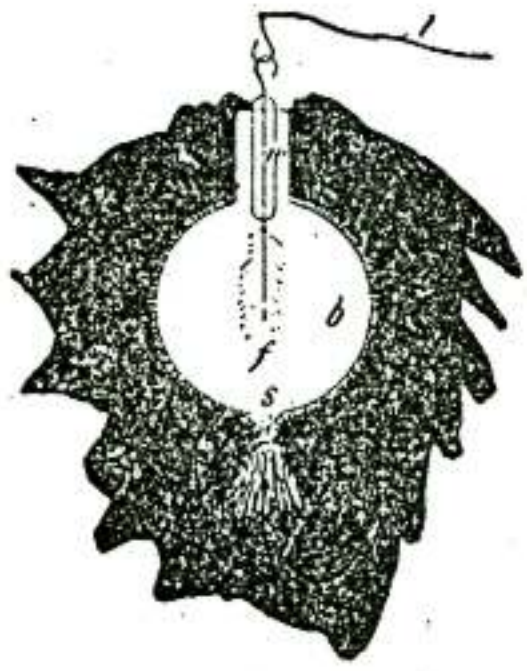

Fig. 7.

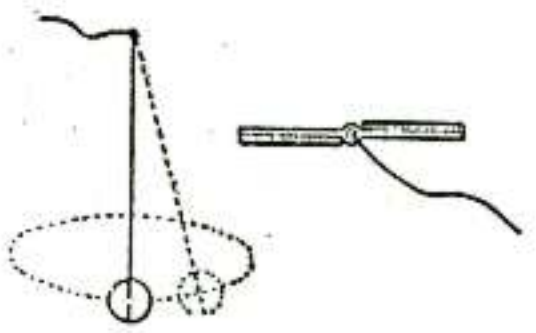

Fig. 8a.

Fig. 8b.

I now return to the experiment to which I have already alluded, and with which I desire to illustrate a striking effect produced by a rapidly varying electrostatic force. I attach to the end of the wire, *l* (Fig. 7), which is in connection with one of the terminals of the secondary of the induction coil, an exhausted bulb *b*. This bulb contains a thin carbon filament *f*, which is fastened to a platinum wire *w*, sealed in the glass and leading outside of the bulb, where it connects to the wire *l*. The bulb may be exhausted to any degree attainable with ordinary apparatus. Just a moment before, you have witnessed the breaking down of the air between the charged brass plates. You know that a plate of glass, or any other insulating material, would break down in like manner. Had I therefore a metallic coating attached to the outside of the bulb, or placed near the same, and were this coating connected to the other terminal of the coil, you would be prepared to see the glass give way if the strain were sufficiently increased. Even were the coating not connected to the other terminal, but to an insulated plate, still, if you have followed recent developments, you would naturally expect a rupture of the glass.

But it will certainly surprise you to note that under the action of the varying electrostatic force, the glass gives way when all other bodies are removed from the bulb. In fact, all the surrounding bodies we perceive might be removed to an infinite distance without affecting the result in the slightest. When the coil is set to work, the glass is invariably broken through at the seal, or other narrow channel, and the vacuum is

quickly impaired. Such a damaging break would not occur with a steady force, even if the same were many times greater. The break is due to the agitation of the molecules of the gas within the bulb, and outside of the same. This agitation, which is generally most violent in the narrow pointed channel near the seal, causes a heating and rupture of the glass. This rupture would, however, not occur, not even with a varying force, if the medium filling the inside of the bulb, and that surrounding it, were perfectly homogeneous. The break occurs much quicker if the top of the bulb is drawn out into a fine fibre. In bulbs used with these coils such narrow, pointed channels must therefore be avoided.

When a conducting body is immersed in air, or similar insulating medium, consisting of, or containing, small freely movable particles capable of being electrified, and when the electrification of the body is made to undergo a very rapid change — which is equivalent to saying that the electrostatic force acting around the body is varying in intensity, — the small particles are attracted and repelled, and their violent impacts against the body may cause a mechanical motion of the latter. Phenomena of this kind are noteworthy, inasmuch as they have not been observed before with apparatus such as has been commonly in use. If a very light conducting sphere be suspended on an exceedingly fine wire, and charged to a steady potential, however high, the sphere will remain at rest. Even if the potential would be rapidly varying, provided that the small particles of matter, molecules or atoms, are evenly distributed, no motion of the sphere should result. But if one side of the conducting sphere is covered with a thick insulating layer, the impacts of the particles will cause the sphere to move about, generally in irregular curves, Fig. 8a. In like manner, as I have shown on a previous occasion, a fan of sheet metal, Fig. 8b, covered partially with insulating material as indicated, and placed upon the terminal of the coil so as to turn freely on it, is spun around.

All these phenomena you have witnessed and others which will be shown later, are due to the presence of a medium like air, and would not occur in a continuous medium. The action of the air may be illustrated still better by the following experiment. I take a glass tube *t*, Fig. 9, of about an inch in diameter, which has a platinum wire *w* sealed in the lower end, and to which is attached a thin lamp filament *f*. I connect the wire with the terminal of the coil and set the coil to work. The platinum wire is now electrified positively and negatively in rapid succession and the wire and air inside of the tube is rapidly heated by the impacts of the particles, which may be so violent as to render the filament incandescent. But if I pour oil in the tube, just as soon as the wire is covered with the oil, all action apparently ceases and there is no marked evidence of heating. The reason of this is that the oil is a practically continuous medium. The displacements in such a continuous medium are, with these frequencies, to all appearance incomparably smaller than in air, hence the work performed in such a medium is insignificant. But oil would behave very differently with frequencies many times as great, for even though the displacements be small, if the frequency were much greater, considerable work might be performed in the oil.

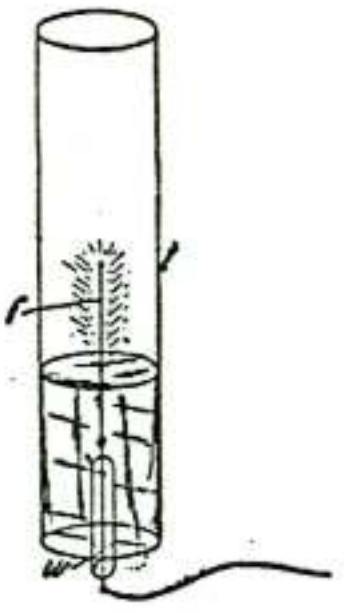

Fig. 9.

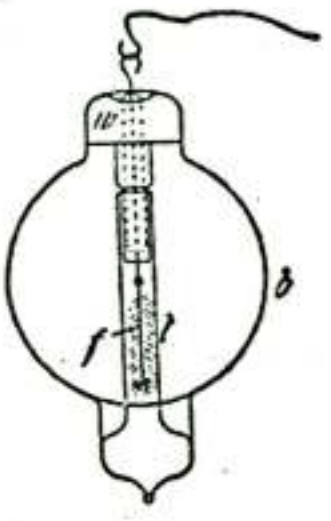

Fig. 10.

The electrostatic attractions and repulsions between bodies of measurable dimensions are, of all the manifestations of this force, the first so-called *electrical* phenomena noted.

But though they have been known to us for many centuries, the precise nature of the mechanism concerned in these actions is still unknown to us, and has not been even quite satisfactorily explained. What kind of mechanism must that be? We cannot help wondering when we observe two magnets attracting and repelling each other with a force of hundreds of pounds with apparently nothing between them. We have in our commercial dynamos magnets capable of sustaining in mid-air tons of weight. But what are even these forces acting between magnets when compared with the tremendous attractions and repulsions produced by electrostatic force, to which there is apparently no limit as to intensity. In lightning discharges bodies are often charged to so high a potential that they are thrown away with inconceivable force and torn asunder or shattered into fragments. Still even such effects cannot compare with the attractions and repulsions which exist between charged molecules or atoms, and which are sufficient to project them with speeds of many kilometres a second, so that under their violent impact bodies are rendered highly incandescent and are volatilized. It is of special interest for the thinker who inquires into the nature of these forces to note that whereas the actions between individual molecules or atoms occur seemingly under any conditions, the attractions and repulsions of bodies of measurable dimensions imply a medium possessing insulating properties. So, if air, either by being rarefied or heated, is rendered more or less conducting, these actions between two electrified bodies practically cease, while the actions between the individual atoms continue to manifest themselves.

An experiment may serve as an illustration and as a means of bringing out other features of interest. Some time ago I showed that a lamp filament or wire mounted in a bulb and connected to one of the terminals of a high tension secondary coil is set spinning, the top of the filament generally describing a circle. This vibration was very energetic when the air in the bulb was at ordinary pressure and became less energetic when the air in the bulb was strongly compressed. It ceased altogether when the air was exhausted so as to become comparatively good conducting. I found at that time that no vibration took place when the bulb was very highly exhausted. But I conjectured that the vibration which I ascribed to the electrostatic action between the walls of the bulb and the filament should take place also in a highly exhausted bulb. To test this under conditions which were more favorable, a bulb like the one in Fig. 10, was constructed. It comprised a globe *b*, in the neck of which was sealed a platinum wire *w* carrying a thin lamp filament *f*. In the lower part of the globe a tube *t* was sealed so as to surround the filament. The exhaustion was carried as far as it was practicable with the apparatus employed.

This bulb verified my expectation, for the filament was set spinning when the current was turned on, and became incandescent. It also showed another interesting feature, bearing upon the preceding remarks, namely, when the filament had been kept incandescent some time, the narrow tube and the space inside were brought to an elevated temperature, and as the gas in the tube then became conducting, the electrostatic attraction between the glass and the filament became very weak or ceased, and the filament came to rest. When it came to rest it would glow far more intensely. This was probably due to its assuming the position in the centre of the tube where the molecular bombardment was most intense, and also partly to the fact that the individual impacts were more violent and that no part of the supplied energy was converted into mechanical movement. Since, in accordance with accepted views, in this experiment the incandescence must be attributed to the impacts of the particles, molecules or atoms in the heated space, these particles must therefore, in order to explain such action, be assumed to behave as independent carriers of electric charges immersed in an insulating medium; yet there is no attractive force between the glass tube and the filament because the space in the tube is, as a whole, conducting.

It is of some interest to observe in this connection that whereas the attraction between two electrified bodies may cease owing to the impairing of the insulating power of the medium in which they are immersed, the repulsion between the bodies may still be observed. This may be explained in a plausible way. When the bodies are placed at some distance in a poorly conducting medium, such as slightly warmed or rarefied air, and are suddenly electrified, opposite electric charges being imparted to them, these charges equalize more or less by leakage through the air. But if the bodies are similarly electrified, there is less opportunity afforded for such dissipation, hence the repulsion observed in such case is greater than the attraction. Repulsive actions in a gaseous medium are however, as Prof. Crookes has shown, enhanced by molecular bombardment.

ON CURRENT OR DYNAMIC ELECTRICITY PHENOMENA

So far, I have considered principally effects produced by a varying electrostatic force in an insulating medium, such as air. When such a force is acting upon a conducting body of measurable dimensions, it causes within the same, or on its surface, displacements of the electricity, and gives rise to electric currents, and these produce another kind of phenomena, some of which I shall presently endeavor to illustrate. In presenting this second class of electrical effects, I will avail myself principally of such as are producible without any return circuit, hoping to interest you the more by presenting these phenomena in a more or less novel aspect.

It has been a long time customary, owing to the limited experience with vibratory currents, to consider an electric current as something circulating in a closed conducting path. It was astonishing at first to realize that a current may flow through the conducting path even if the latter be interrupted, and it was still more surprising to learn, that sometimes it may be even easier to make a current flow under such conditions than through a closed path. But that old idea is gradually disappearing, even among practical men, and will soon be entirely forgotten.

If I connect an insulated metal plate P, Fig. 11, to one of the terminals T of the induction coil by means of a wire, though this plate be very well insulated, a current passes through the wire when the coil is set to work. First I wish to give you evidence that there *is* a current passing through the connecting wire. An obvious way of demonstrating this is to insert between the terminal of the coil and the insulated plate a very thin platinum or german silver wire *w* and bring the latter to incandescence or fusion by the current. This requires a rather large plate of else current impulses of very high potential and frequency. Another way is to take a coil C, Fig. 11, containing many turns of thin insulated wire and to insert the same in the path of the current to the plate. When I connect one of the ends of the coil to the wire leading to another insulated plate P_1, and its other end to the terminal T_1 of the induction coil, and set the latter to work, a current passes through the inserted coil C and the existence of the current may be made manifest in various ways. For instance, I insert an iron core *i* within the coil. The current being one of very high frequency, will, if it be of some strength, soon bring the iron core to a noticeably higher temperature, as the hysteresis and current losses are great with such high frequencies. One might take a core of some size, laminated or not, it would matter little; but ordinary iron wire $\frac{1}{16}$-th or $\frac{1}{8}$-th of an inch thick is suitable for the purpose. While the induction coil is working, a current

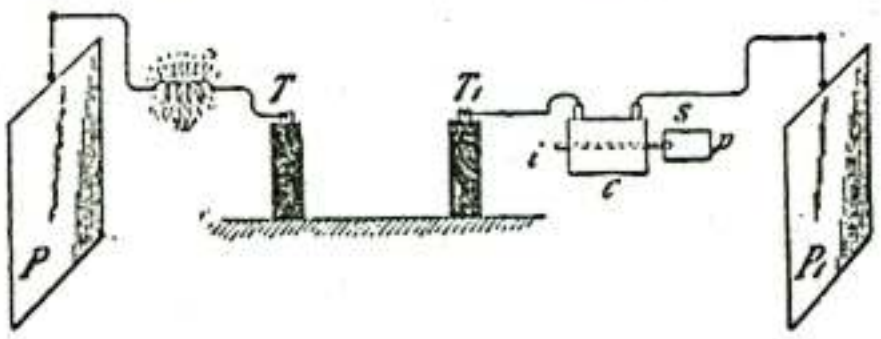

Fig. 11.

traverses the inserted coil and only a few moments are sufficient to bring the iron wire *i* to an elevated temperature sufficient to soften the sealing wax *s*, and cause a paper washer *p* fastened by it to the iron wire to fall off. But with the apparatus such as I have here, other, much more interesting, demonstrations of this kind can be made. I have a secondary s, Fig. 12, of coarse wire, wound upon a coil similar to the first. In the preceding experiment the current through the coil C, Fig. 11, was very small, but there being many turns a strong heating effect was, nevertheless, produced in the iron wire. Had I passed that current through a conductor in order to show the heating of the latter, the current might have been too small to produce the effect desired. But with this coil provided with a secondary winding, I can now transform the feeble current of high tension which passes through the primary P into a strong secondary current of low tension, and this current will quite certainly do what I expect. In a small glass tube (*t*, Fig. 12), I have enclosed a coiled platinum wire, *w*, this merely in order to protect the wire. On each end of the glass tube is sealed a terminal of stout wire to which one of the ends of the platinum wire *w*, is connected. I join the terminals of the secondary coil to these terminals and insert the primary *p*, between the insulated plate P_1, and the terminal T_1, of the induction coil as before. The latter being set to work, instantly the platinum wire *w* is rendered incandescent and can be fused, even if it be very thick.

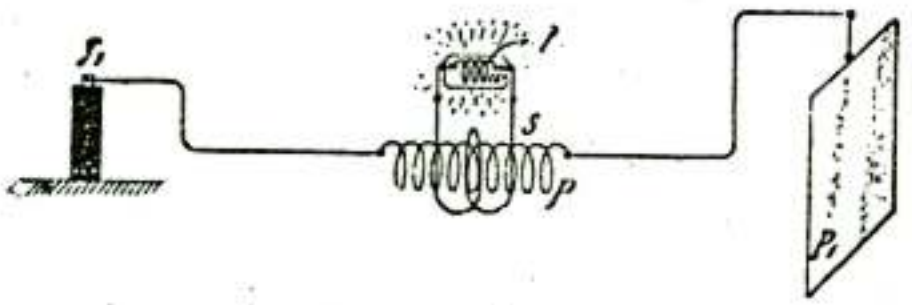

Fig. 12.

Instead of the platinum wire I now take an ordinary 50-volt 16 c. p. lamp. When I set the induction coil in operation the lamp filament is brought to high incandescence. It is, however, not necessary to use the insulated plate, for the lamp (*l*, Fig. 13) is rendered incandescent even if the plate P_1 be disconnected. The secondary may also be connected to the primary as indicated by the dotted line in Fig. 13, to do away more or less with the electrostatic induction or to modify the action otherwise.

I may here call attention to a number of interesting observations with the lamp. First, I disconnect one of the terminals of the lamp from the secondary s. When the induction coil plays, a glow is noted which fills the whole bulb. This glow is due to electrostatic induction. It increases when the bulb is grasped with the hand, and the capacity of the experimenter's body thus added to the secondary circuit. The secondary, in effect, is equivalent to a metallic coating, which would be placed near the primary. If the secondary, or its equivalent, the coating, were placed symmetrically to the primary, the electrostatic induction would be nil under ordinary conditions, that is, when a primary return circuit is used, as both halves would neutralize each other. The secondary *is* in fact placed symmetrically to the primary, but the action of both halves of the latter, when only one of its ends is connected to the induction coil, is not exactly equal; hence electrostatic induction takes place, and hence the glow in the bulb.

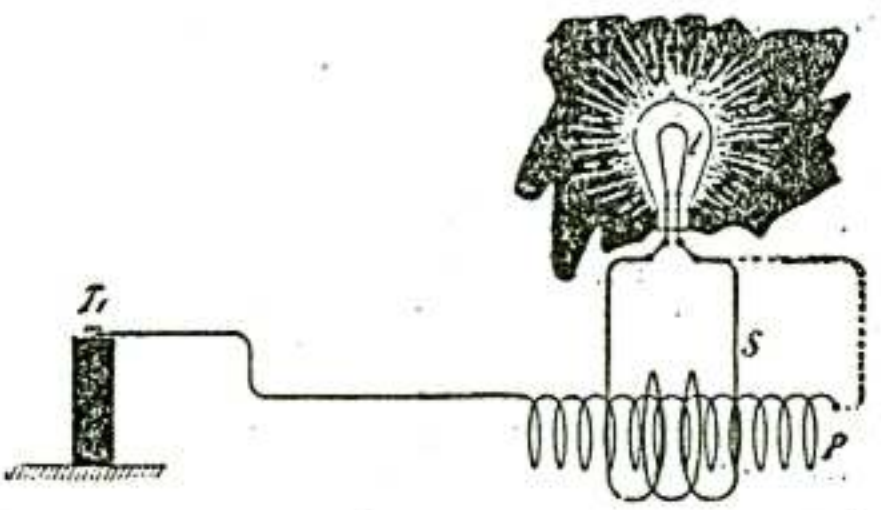

Fig. 13.

I can nearly equalize the action of both halves of the primary by connecting the other, free end of the same to the insulated plate, as in the preceding experiment. When the

plate is connected, the glow disappears. With a smaller plate it would not entirely disappear and then it would contribute to the brightness of the filament when the secondary is closed, by warming the air in the bulb.

To demonstrate another interesting feature, I have adjusted the coils used in a certain way. I first connect both the terminals of the lamp to the secondary, one end of the primary being connected to the terminal T_1 of the induction coil and the other to the insulated plate P_1 as before. When the current is turned on, the lamp glows brightly, as shown in Fig. 14b, in which *C* is a fine wire coil and *s* a coarse wire secondary wound upon it. If the insulated plate P_1 is disconnected, leaving one of the ends *a* of the primary insulated, the filament becomes dark or generally it diminishes in brightness (Fig. 14a). Connecting again the plate P_1 and raising the frequency of the current, I make the filament quite dark or barely red (Fig. 15b). Once more I will disconnect the plate. One will of course infer that when the plate is disconnected, the current through the primary will be weakened, that therefore the E. M. F. will fall in the secondary *s*, and that the brightness of the lamp will diminish. This might be the case and the result can be secured by an easy adjustment of the coils; also by varying the frequency and potential of the currents. But it is perhaps of greater interest to note, that the lamp increases in brightness when the plate is disconnected (Fig. 15a). In this case all the energy the primary receives is now sunk into it, like the charge of a battery in an ocean cable, but most of that energy is recovered through the secondary and used to light the lamp. The current traversing the primary is strongest at the end *b* which is connected to the terminal T_1 of the induction coil, and diminishes in strength towards the remote end *a*. But the dynamic inductive effect exerted upon the secondary *s* is now greater than before, when the suspended plate was connected to the primary. These results might have been produced by a number of causes. For instance, the plate P_1 being connected, the reaction from the coil C may be such as to diminish the potential at the terminal T_1 of the induction coil, and therefore weaken the current through the primary of the coil C. Or the disconnecting of the plate may diminish the capacity effect with relation to the primary of the latter coil to such an extent that the current through it is diminished, though the potential at the terminal T_1 of the induction coil may be the same or even higher. Or the result might have been produced by the change of phase of the primary and secondary currents and consequent reaction. But the chief determining factor is the relation of the self-induction and capacity of coil C and plate P_1 and the frequency of the currents. The greater brightness of the filament in Fig. 15a, is, however, in part due to the heating of the rarefied gas in the lamp by electrostatic induction, which, as before remarked, is greater when the suspended plate is disconnected.

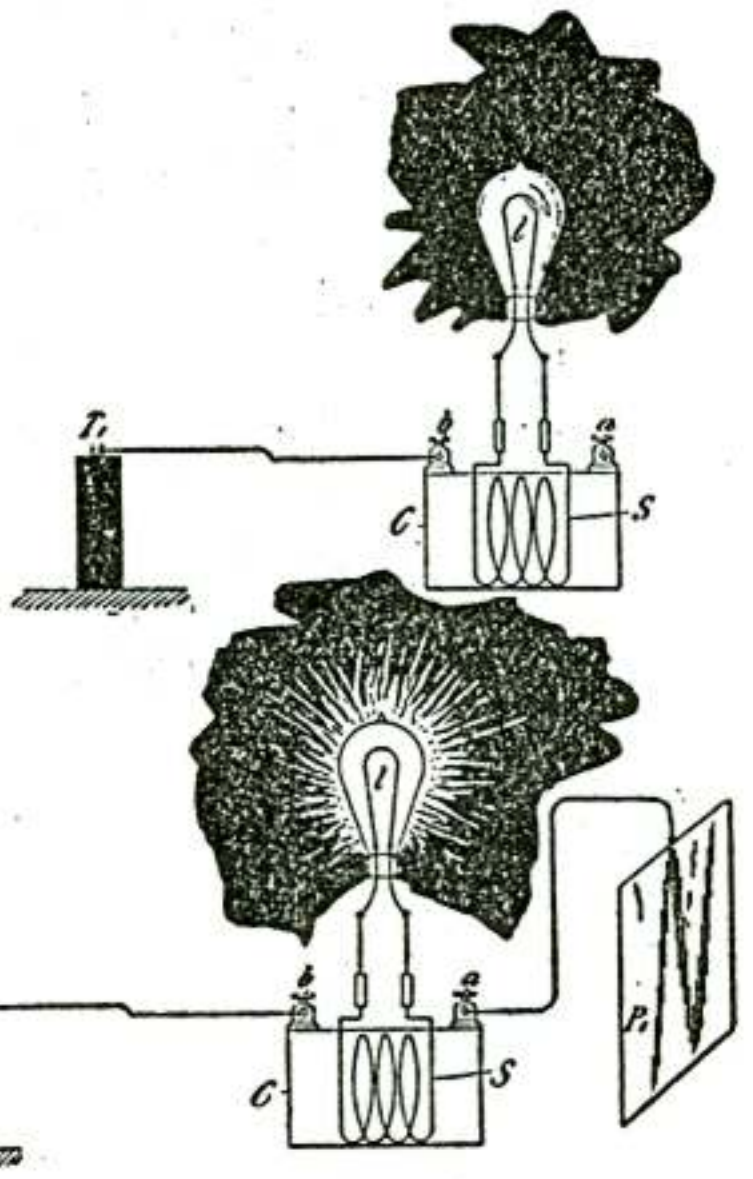

Fig. 14a.
Fig. 14b.

Still another feature of some interest I may here bring to your attention. When the insulated plate is disconnected and the secondary of the coil opened, by approaching a small object to the secondary, but very small sparks can be drawn from it, showing that the electrostatic induction is small in this case. But upon the secondary being closed upon itself or through the lamp, the filament glowing brightly, strong sparks are obtained from the secondary. The electrostatic induction is now much greater, because the closed secondary determines a greater flow of current through the primary and principally through that half of it which is connected to the induction coil. If now the bulb be grasped with the hand, the capacity of the secondary with reference to the primary is augmented by the experimenter's body and the luminosity of the filament is increased, the incandescence now being due partly to the flow of current through the filament and partly to the molecular bombardment of the rarefied gas in the bulb.

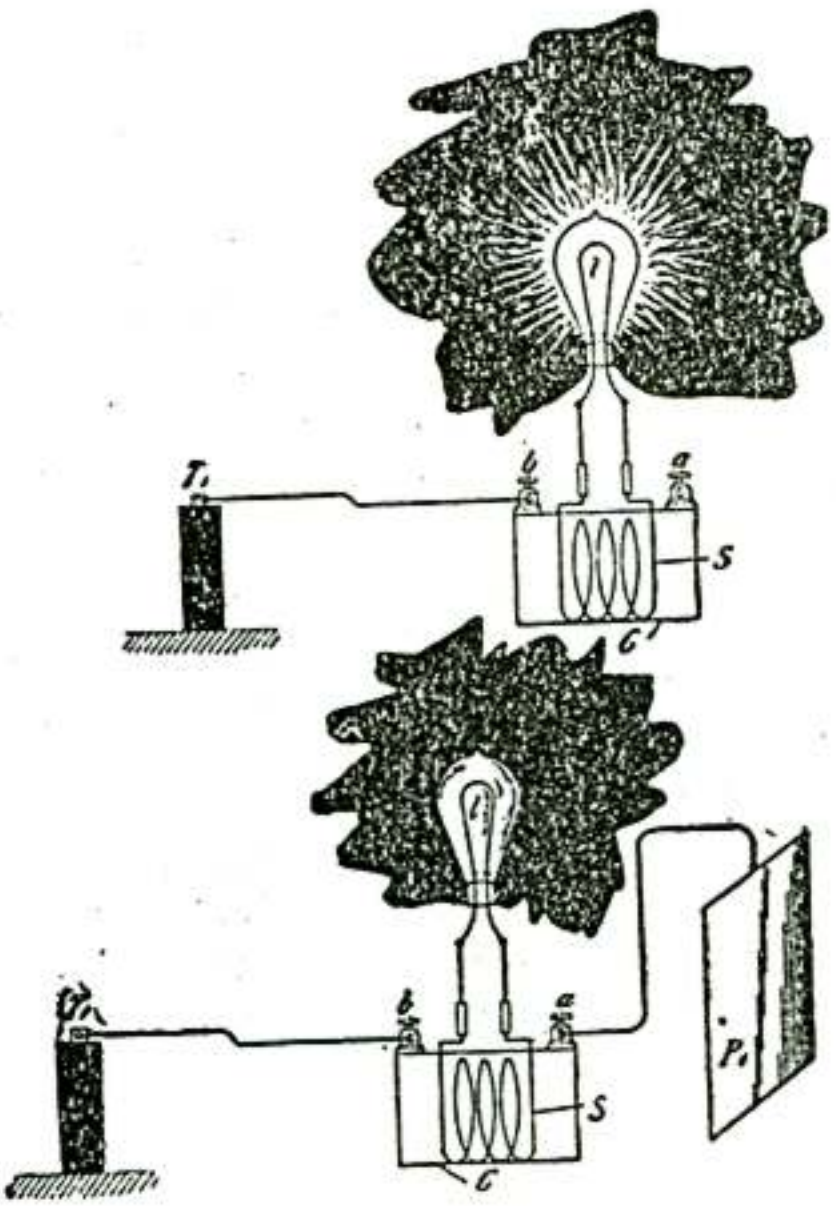

Fig. 15a.
Fig. 15b.

The preceding experiments will have prepared one for the next following results of interest, obtained in the course of these investigations. Since I can pass a current through an insulated wire merely by connecting one of its ends to the source of electrical energy, since I can induce by it another current, magnetize an iron core, and, in short, perform all operations as though a return circuit were used, clearly I can also drive a motor by the aid of only one wire. On a former occasion I have described a simple form of motor comprising a single exciting coil, an iron core and disc. Fig. 16 illustrates a modified way of operating such an alternate current motor by currents induced in a transformer connected to one lead, and several other arrangements of circuits for operating a certain class of alternating motors founded on the action of currents of differing phase. In view of the present state of the art it is thought sufficient to describe these arrangements in a few words only. The diagram, Fig. 16 II., shows a primary coil P, connected with one of its ends to the line L leading from a high tension transformer terminal T_1. In inductive relation to this primary P is a secondary *s* of coarse wire in the circuit of which is a coil *C*. The currents induced in the secondary energize the iron core *i*, which is preferably, but not necessarily, subdivided, and set the metal disc *d* in rotation. Such a motor. M_2 as diagrammatically shown in Fig. 16 II., has been called a "magnetic lag motor", but this expression may be objected to by those who attribute the rotation of the disc to eddy currents circulating in minute paths when the core *i* is finally subdivided. In order to operate such a motor effectively on the plan indicated, the frequencies should not be too high, not more than four or five thousand, though the rotation is produced even with ten thousand per second, or more.

In Fig. 16 I., a motor M_1 having two energizing circuits, A and B, is diagrammatically indicated. The circuit A is connected to the line L and in series with it is a primary P, which may have its free end connected to an insulated plate P_1, such connection being indicated by the dotted lines. The other motor circuit B is connected to the secondary *s* which is in inductive relation to the primary P. When the transformer terminal T_1 is alternately electrified, currents traverse the open line L and also circuit A and primary P. The currents through the latter induce secondary currents in the circuit S, which pass through the energizing coil B of the motor. The currents through the secondary S and those through the primary P differ in phase 90 degrees, or nearly so, and are capable of rotating an armature placed in inductive relation to the circuits A and B.

In Fig. 16 III., a similar motor M_3 with two energizing circuits A_1 and B_1 is illustrated. A primary P, connected with one of its ends to the line L has a secondary S, which is preferably wound for a tolerably high E. M. F., and to which the two energizing circuits of the motor are connected, one directly to the ends of the secondary and the other through a condenser C, by the action of which the currents traversing the circuit A_1 and B_1 are made to differ in phase.

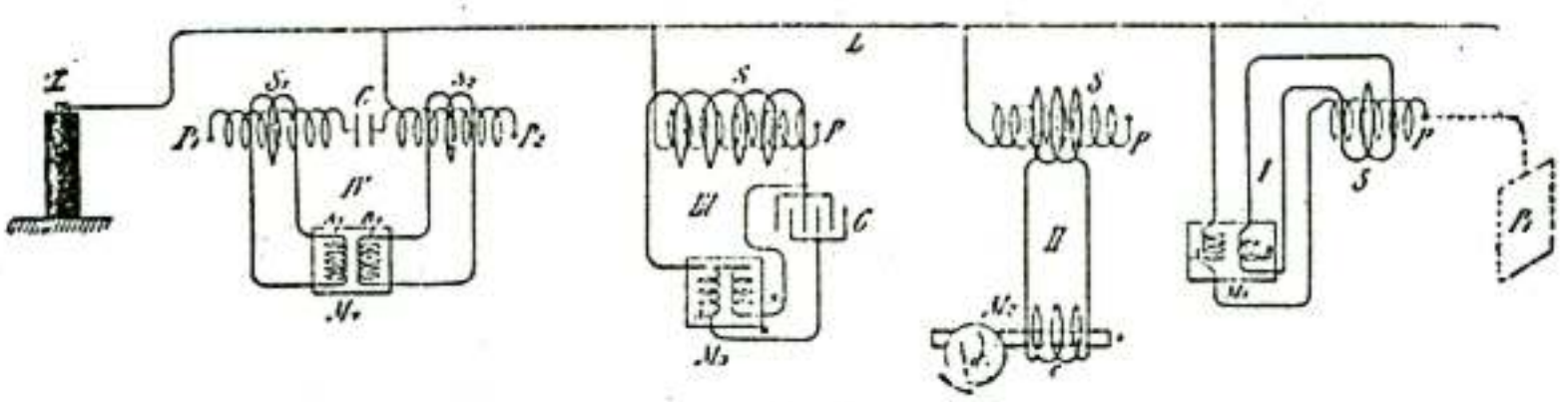

Fig. 16.

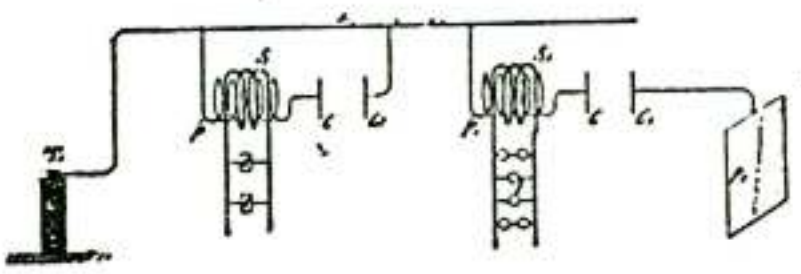

Fig. 17.

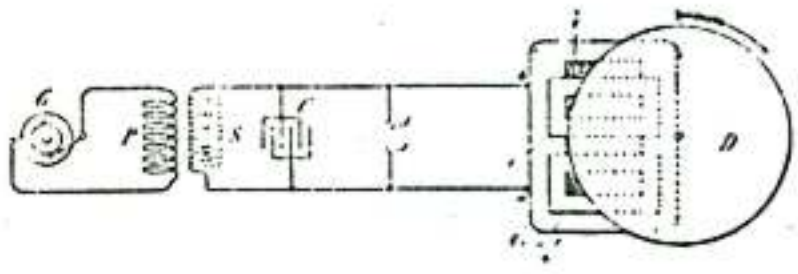

Fig. 18.

In Fig. 16 IV., still another arrangement is shown. In this case two primaries P_1 and P_2 are connected to the line L, one through a condenser C of small capacity, and the other directly. The primaries are provided with secondaries S_1 and S_2 which are in series with the energizing circuits, A_2 and B_2 and a motor M_3, the condenser C again serving to produce the requisite difference in the phase of the currents traversing the motor circuits. As such phase motors with two or more circuits are now well known in the art, they have been here illustrated diagrammatically. No difficulty whatever is found in operating a motor in the manner indicated, or in similar ways; and although such experiments up to this day present only scientific interest, they may at a period not far distant, be carried out with practical objects in view.

It is thought useful to devote here a few remarks to the subject of operating devices of all kinds by means of only one leading wire. It is quite obvious, that when high-frequency currents are made use of, ground connections are — at least when the E. M. F. of the currents is great — better than a return wire. Such ground connections are objectionable with steady or low frequency currents on account of destructive chemical actions

of the former and disturbing influences exerted by both on the neighboring circuits; but with high frequencies these actions practically do not exist. Still, even ground connections become superfluous when the E. M. F. is very high, for soon a condition is reached, when the current may be passed more economically through open, than through closed, conductors. Remote as might seem an industrial application of such single wire transmission of energy to one not experienced in such lines of experiment, it will not seem so to anyone who for some time has carried on investigations of such nature. Indeed I cannot see why such a plan should not be practicable. Nor should it be thought that for carrying out such a plan currents of very high frequency are expressly required, for just as soon as potentials of say 30,000 volts are used, the single wire transmission may be effected with low frequencies, and experiments have been made by me from which these inferences are made.

When the frequencies are very high it has been found in laboratory practice quite easy to regulate the effects in the manner shown in diagram Fig. 17. Here two primaries P and P_1 are shown, each connected with one of its ends to the line L and with the other end to the condenser plates C and C, respectively. Near these are placed other condenser plates C_1 and C_1, the former being connected to the line L and the latter to an insulated larger plate P_2. On the primaries are wound secondaries S and S_1, of coarse wire, connected to the devices *d* and *l* respectively. By varying the distances of the condenser plates C and C_1, and C and C_1 the currents through the secondaries S and S_1 are varied in intensity. The curious feature is the great sensitiveness, the slightest change in the distance of the plates producing considerable variations in the intensity or strength of the currents. The sensitiveness may be rendered extreme by making the frequency such, that the primary itself, without any plate attached to its free end, satisfies, in conjunction with the closed secondary, the condition of resonance. In such condition an extremely small change in the capacity of the free terminal produces great variations. For instance, I have been able to adjust the conditions so that the mere approach of a person to the coil produces a considerable change in the brightness of the lamps attached to the secondary. Such observations and experiments possess, of course, at present, chiefly scientific interest, but they may soon become of practical importance.

Very high frequencies are of course not practicable with motors on account of the necessity of employing iron cores. But one may use sudden discharges of low frequency and thus obtain certain advantages of high-frequency currents without rendering the iron core entirely incapable of following the changes and without entailing a very great expenditure of energy in the core. I have found it quite practicable to operate with such low frequency disruptive discharges of condensers, alternating-current motors. A certain class of such motors which I advanced a few years ago, which contain closed secondary circuits, will rotate quite vigorously when the discharges are directed through the exciting coils. One reason that such a motor operates so well with these discharges is that the difference of phase between the primary and secondary currents is 90 degrees, which is generally not the case with harmonically rising and falling currents of low frequency. It might not be without interest to show an experiment with a simple motor of this kind, inasmuch as it is commonly thought that disruptive discharges are unsuitable for such purposes. The motor is illustrated in Fig. 18. It comprises a rather large iron core *i* with slots on the top into which are embedded thick copper washers *C C*. In proximity to the core is a freely-movable metal disc D. The core is provided with a primary exciting coil C_1 the ends *a* and *b* of which are connected to the terminals of the secondary S of an ordinary transformer, the primary P of the latter being connected to an alternating distribution circuit or generator G of low or moderate frequency. The terminals of the secondary S are attached to a condenser C which discharges through an air gap *d d* which may be placed in series or shunt to the coil C_1. When the conditions are properly chosen the disc D rotates with considerable effort and the iron core *i* does

not get very perceptibly hot. With currents from a high-frequency alternator, on the contrary, the core gets rapidly hot and the disc rotates with a much smaller effort. To perform the experiment properly it should be first ascertained that the disc D is not set in rotation when the discharge is not occurring at *d d*. It is preferable to use a large iron core and a condenser of large capacity so as to bring the superimposed quicker oscillation to a very low pitch or to do away with it entirely. By observing certain elementary rules I have also found it practicable to operate ordinary series or shunt direct-current motors with such disruptive discharges, and this can be done with or without a return wire.

IMPEDANCE PHENOMENA

Among the various current phenomena observed, perhaps the most interesting are those of impedance presented by conductors to currents varying at a rapid rate. In my first paper before the American Institute of Electrical Engineers, I have described a few striking observations of this kind. Thus I showed that when such currents or sudden discharges are passed through a thick metal bar there may be points on the bar only a few inches apart, which have a sufficient potential difference between them to maintain at bright incandescence an ordinary filament lamp. I have also described the curious behavior of rarefied gas surrounding a conductor, due to such sudden rushes of current. These phenomena have since been more carefully studied and one or two novel experiments of this kind are deemed of sufficient interest to be described here.

Referring to Fig. 19a, B and B_1 are very stout copper bars connected at their lower ends to plates C and C_1, respectively, of a condenser, the opposite plates of the latter being connected to the terminals of the secondary S of a high-tension transformer, the primary P of which is supplied with alternating currents from an ordinary low-frequency dynamo G or distribution circuit. The condenser discharges through an adjustable gap *d d* as usual. By establishing a rapid vibration it was found quite easy to perform the following curious experiment. The bars B and B_1 were joined at the top by a low-voltage lamp l_3: a little lower was placed by means of clamps *C C*, a 50-volt lamp l_2; and still lower another 100-volt lamp l_1; and finally, at a certain distance below the latter lamp, an exhausted tube T. By carefully determining the positions of these devices it was found practicable to maintain them all at their proper illuminating power. Yet they were all connected in multiple arc to the two stout copper bars and required widely different pressures. This experiment requires of course some time for adjustment but is quite easily performed.

In Figs. 19b and 19c, two other experiments are illustrated which, unlike the previous experiment, do not require very careful adjustments. In Fig. 19b, two lamps, l_1 and l_2, the former a 100-volt and the latter a 50-volt are placed in certain positions as indicated, the 100-volt lamp being below the 50-volt lamp. When the arc is playing at *d d* and the sudden discharges are passed through the bars B B_1, the 50-volt lamp will, as a rule, burn brightly, or at least this result is easily secured, while the 100-volt lamp will burn very low or remain quite dark, Fig. 19b. Now the bars B B_1 may be joined at the top by a thick cross bar B_2 and it is quite easy to maintain the 100-volt lamp at full candle-power while the 50-volt lamp remains dark, Fig. 19c. These results, as I have pointed out previously, should not be considered to be due exactly to frequency but rather to the time rate of change which may be great, even with low frequencies. A great many other results of the same kind, equally interesting, especially to those who are only used to manipulate steady currents, may be obtained and they afford precious clues in investigating the nature of electric currents.

In the preceding experiments I have already had occasion to show some light phenomena and it would now be proper to study these in particular; but to make this investigation more complete I think it necessary to make first a few remarks on the subject of electrical resonance which has to be always observed in carrying out these experiments.

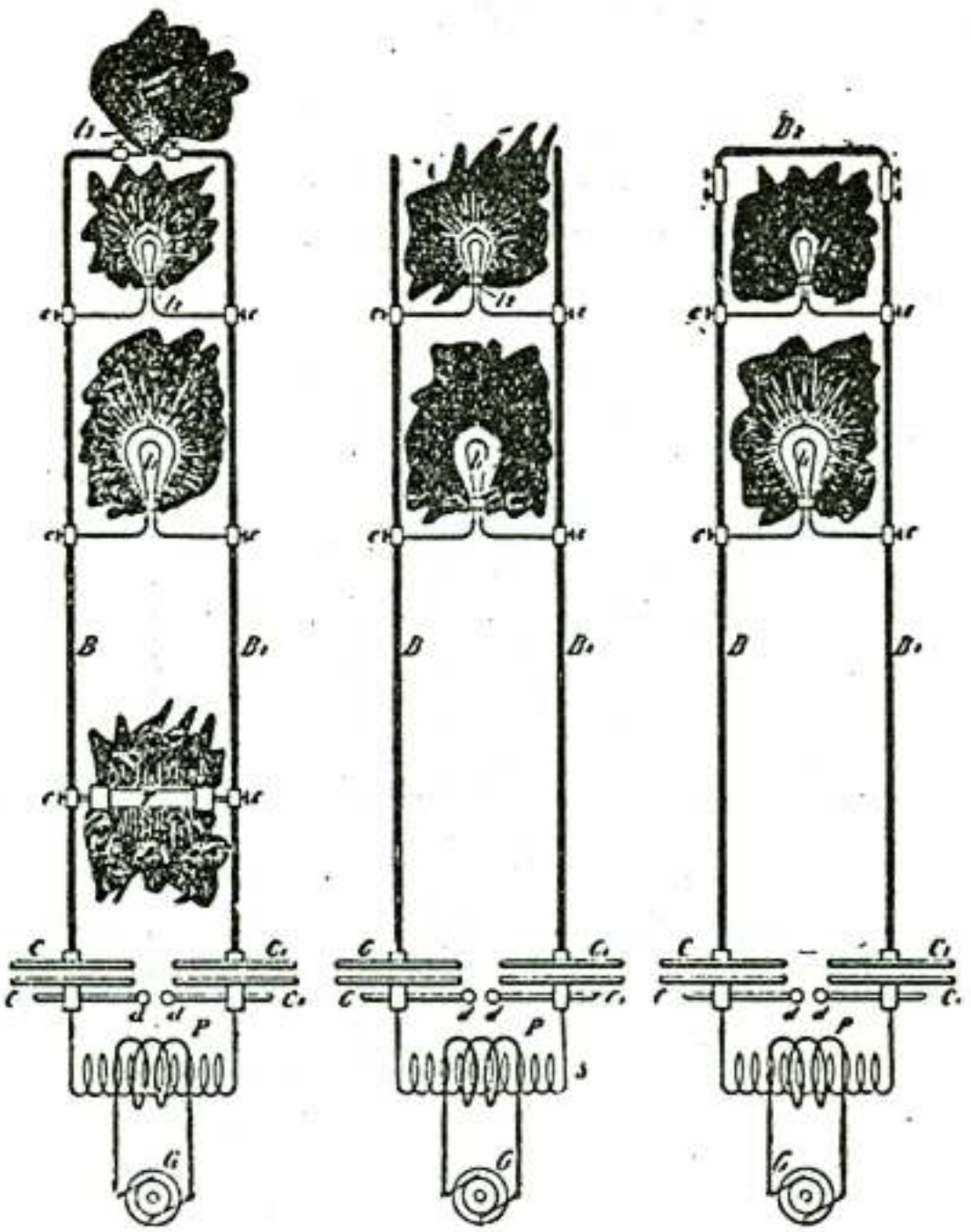

Figs. 19a, 19b and 19c.

ON ELECTRICAL RESONANCE

The effects of resonance are being more and more noted by engineers and are becoming of great importance in the practical operation of apparatus of all kinds with alternating currents. A few general remarks may therefore be made concerning these effects. It is clear, that if we succeed in employing the effects of resonance practically in the operation of electric devices the return wire will, as a matter of course, become unnecessary, for the electric vibration may be conveyed with one wire just as well as, and sometimes even better than, with two. The question first to answer is, then, whether pure resonance effects are producible. Theory and experiment both show that such is impossible in Nature, for as the oscillation becomes more and more vigorous, the losses in the vibrating bodies and environing media rapidly increase and necessarily check the vibration which otherwise would go on increasing forever. It is a fortunate circumstance that pure resonance is not producible, for if it were there is no telling what dangers might not lie in wait for the innocent experimenter. But to a certain degree resonance is producible, the magnitude of the effects being limited by the imperfect conductivity

and imperfect elasticity of the media or, generally stated, by frictional losses. The smaller these losses, the more striking are the effects. The same is the case in mechanical vibration. A stout steel bar may be set in vibration by drops of water falling upon it at proper intervals; and with glass, which is more perfectly elastic, the resonance effect is still more remarkable, for a goblet may be burst by singing into it a note of the proper pitch. The electrical resonance is the more perfectly attained, the smaller the resistance or the impedance of the conducting path and the more perfect the dielectric. In a Leyden jar discharging through a short stranded cable of thin wires these requirements are probably best fulfilled, and the resonance effects are therefore very prominent. Such is not the case with dynamo machines, transformers and their circuits, or with commercial apparatus in general in which the presence of iron cores complicates the action or renders it impossible. In regard to Leyden jars with which resonance effects are frequently demonstrated, I would say that the effects observed are often *attributed* but are seldom *due* to true resonance, for an error is quite easily made in this respect. This may be undoubtedly demonstrated by the following experiment. Take, for instance, two large insulated metallic plates or spheres which I shall designate A and B; place them at a certain small distance apart and charge them from a frictional or influence machine to a potential so high that just a slight increase of the difference of potential between them will cause the small air or insulating space to break down. This is easily reached by making a few preliminary trials. If now another plate — fastened on an insulating handle and connected by a wire to one of the terminals of a high tension secondary of an induction coil, which is maintained in action by an alternator (preferably high frequency) — is approached to one of the charged bodies A or B, so as to be nearer to either one of them, the discharge will invariably occur between them; at least it will, if the potential of the coil in connection with the plate is sufficiently high. But the explanation of this will soon be found in the fact that the approached plate acts inductively upon the bodies A and B and causes a spark to pass between them. When this spark occurs, the charges which were previously imparted to these bodies from the influence machine, must needs be lost, since the bodies are brought in electrical connection through the arc formed. Now this arc is formed whether there be resonance or not. But even if the spark would not be produced, still there is an alternating E. M. F. set up between the bodies when the plate is brought near one of them; therefore the approach of the plate, if it *does* not always actually, will, at any rate, *tend* to break down the air space by inductive action. Instead of the spheres or plates A and B we may take the coatings of a Leyden jar with the same result, and in place of the machine, — which is a high frequency alternator preferably, because it is more suitable for the experiment and also for the argument, — we may take another Leyden jar or battery of jars. When such jars are discharging through a circuit of low resistance the same is traversed by currents of very high frequency. The plate may now be connected to one of the coatings of the second jar, and when it is brought near to the first jar just previously charged to a high potential from an influence machine, the result is the same as before, and the first jar will discharge through a small air space upon the second being caused to discharge. But both jars and their circuits need not be tuned any closer than a basso profundo is to the note produced by a mosquito, as small sparks will be produced through the air space, or at least the latter will be considerably more strained owing to the setting up of an alternating E. M. F. by induction, which takes place when one of the jars begins to discharge. Again another error of a similar nature is quite easily made. If the circuits of the two jars are run parallel and close together, and the experiment has been performed of discharging one by the other, and now a coil of wire be added to one of the circuits whereupon the experiment does not succeed, the conclusion that this is due to the fact that the circuits are now not tuned, would be far from being safe. For the two circuits act as condenser coatings and the addition of the

coil to one of them is equivalent to bridging them, at the point where the coil is placed, by a small condenser, and the effect of the latter might be to prevent the spark from jumping through the discharge space by diminishing the alternating E. M. F. acting across the same. All these remarks, and many more which might be added but for fear of wandering too far from the subject, are made with the pardonable intention of cautioning the unsuspecting student, who might gain an entirely unwarranted opinion of his skill at seeing every experiment succeed; but they are in no way thrust upon the experienced as novel observations.

In order to make reliable observations of electric resonance effects it is very desirable, if not necessary, to employ an alternator giving currents which rise and fall harmonically, as in working with make and break currents the observations are not always trustworthy, since many phenomena, which depend on the rate of change, may be produced with widely different frequencies. Even when making such observations with an alternator one is apt to be mistaken. When a circuit is connected to an alternator there are an indefinite number of values for capacity and self-induction which, in conjunction, will satisfy the condition of resonance. So there are in mechanics an infinite number of tuning forks which will respond to a note of a certain pitch, or loaded springs which have a definite period of vibration. But the resonance will be most perfectly attained in that case in which the motion is effected with the greatest freedom. Now in mechanics, considering the vibration in the common medium — that is, air — it is of comparatively little importance whether one tuning fork be somewhat larger than another, because the losses in the air are not very considerable. One may, of course, enclose a tuning fork in an exhausted vessel and by thus reducing the air resistance to a minimum obtain better resonant action. Still the difference would not be very great. But it would make a great difference if the tuning fork were immersed in mercury. In the electrical vibration it is of enormous importance to arrange the conditions so that the vibration is effected with the greatest freedom. The magnitude of the resonance effect depends, under otherwise equal conditions, on the quantity of electricity set in motion or on the strength of the current driven through the circuit. But the circuit opposes the passage of the currents by reason of its impedance and therefore, to secure the best action it is necessary to reduce the impedance to a minimum. It is impossible to overcome it entirely, but merely in part, for the ohmic resistance cannot be overcome. But when the frequency of the impulses is very great, the flow of the current is practically determined by self-induction. Now self-induction can be overcome by combining it with capacity. If the relation between these is such, that at the frequency used they annul each other, that is, have such values as to satisfy the condition of resonance, and the greatest quantity of electricity is made to flow through the external circuit, then the best result is obtained. It is simpler and safer to join the condenser in series with the self-induction. It is clear that in such combinations there will be, for a given frequency, and considering only the fundamental vibration, values which will give the best result, with the condenser in shunt to the self-induction coil; of course more such values than with the condenser in series. But practical conditions determine the selection. In the latter case in performing the experiments one may take a small self-induction and a large capacity or a small capacity and a large self-induction, but the latter is preferable, because it is inconvenient to adjust a large capacity by small steps. By taking a coil with a very large self-induction the critical capacity is reduced to a very small value, and the capacity of the coil itself may be sufficient. It is easy, especially by observing certain artifices, to wind a coil through which the impedance will be reduced to the value of the ohmic resistance only; and for any coil there is, of course, a frequency at which the maximum current will be made to pass through the coil. The observation of the relation between self-induction, capacity and frequency is becoming important in the operation of alternate current apparatus, such as transformers or motors, because by a judicious determination of the elements the employment of an expensive condenser

becomes unnecessary. Thus it is possible to pass through the coils of an alternating current motor under the normal working conditions the required current with a low E. M. F. and do away entirely with the false current, and the larger the motor, the easier such a plan becomes practicable; but it is necessary for this to employ currents of very high potential or high frequency.

In Fig. 20 I. is shown a plan which has been followed in the study of the resonance effects by means of a high frequency alternator. C_1 is a coil of many turns, which is divided into small separate sections for the purpose of adjustment. The final adjustment was made sometimes with a few thin iron wires (though this is not always advisable) or with a closed secondary. The coil C_1 is connected with one of its ends to the line L from the alternator G and with the other end to one of the plates C of a condenser $C\ C_1$, the plate (C_1) of the latter being connected to a much larger plate P_1. In this manner both capacity and self-induction were adjusted to suit the dynamo frequency.

As regards the rise of potential through resonant action, of course, theoretically, it may amount to anything since it depends on self-induction and resistance and since these may have any value. But in practice one is limited in the selection of these values and besides these, there are other limiting causes. One may start with, say, 1,000 volts and raise the E. M. F. to 50 times that value, but one cannot start with 100,000 and raise it to ten times that value because of the losses in the media which are great, especially if the frequency is high. It should be possible to start with, for instance, two

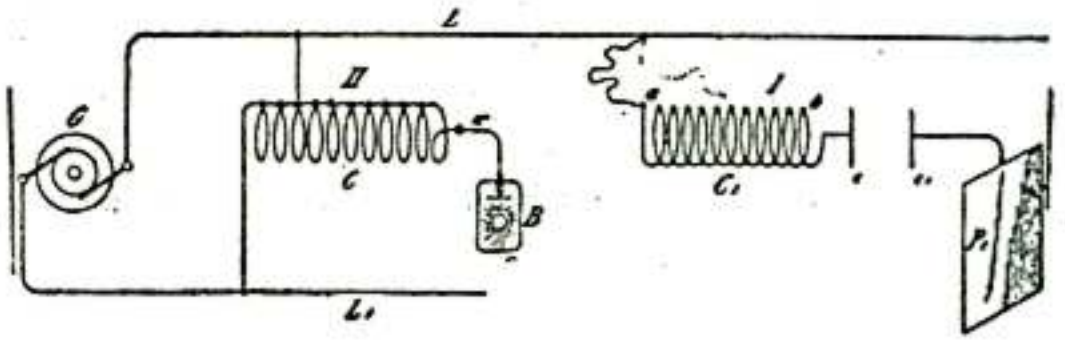

Fig. 20.

volts from a high or low frequency circuit of a dynamo and raise the E. M. F. to many hundred times that value. Thus coils of the proper dimensions might be connected each with only one of its ends to the mains from a machine of low E. M. F., and though the circuit of the machine would not be closed in the ordinary acceptance of the term, yet the machine might be burned out if a proper resonance effect would be obtained. I have not been able to produce, nor have I observed with currents from a dynamo machine, such great rises of potential. It is possible, if not probable, that with currents obtained from apparatus containing iron the disturbing influence of the latter is the cause that these theoretical possibilities cannot be realized. But if such is the case I attribute it solely to the hysteresis and Foucault current losses in the core. Generally it was necessary to transform upward, when the E. M. F. was very low, and usually an ordinary form of induction coil was employed, but sometimes the arrangement illustrated in Fig. 20 II., has been found to be convenient. In this case a coil C is made in a great many sections, a few of these being used as a primary. In this manner both primary and secondary are adjustable. One end of the coil is connected to the line L_1 from the alternator, and the other line L is connected to the intermediate point of the coil. Such a coil with adjustable primary and secondary will be found also convenient in experiments with the disruptive discharge. When true resonance is obtained the top of the wave must of course be on the free end of the coil as, for instance, at the terminal of the phosphorescence bulb B. This is easily recognized by observing the potential of a point on the wire *w* near to the coil.

In connection with resonance effects and the problem of transmission of energy over a single conductor which was previously considered, I would say a few words on a subject which constantly fills my thoughts and which concerns the welfare of all. I mean the transmission of intelligible signals or perhaps even power to any distance without the use of wires. I am becoming daily more convinced of the practicability of the scheme; and though I know full well that the great majority of scientific men will not believe that such results can be practically and immediately realized, yet I think that all consider the developments in recent years by a number of workers to have been such as to encourage thought and experiment in this direction. My conviction has grown so strong, that I no longer look upon this plan of energy or intelligence transmission as a mere theoretical possibility, but as a serious problem in electrical engineering, which must be carried out some day. The idea of transmitting intelligence without wires is the natural outcome of the most recent results of electrical investigations. Some enthusiasts have expressed their belief that telephony to any distance by induction through the air is possible. I cannot stretch my imagination so far, but I do firmly believe that it is practicable to disturb by means of powerful machines the electrostatic condition of the earth and thus transmit intelligible signals and perhaps power. In fact, what is there against the carrying out of such a scheme? We now know that electric vibration may be transmitted through a single conductor. Why then not try to avail ourselves of the earth for this purpose? We need not be frightened by the idea of distance. To the weary wanderer counting the mile-posts the earth may appear very large, but to that happiest of all men, the astronomer, who gazes at the heavens and by their standard judges the magnitude of our globe, it appears very small. And so I think it must seem to the electrician, for when he considers the speed with which an electric disturbance is propagated through the earth all his ideas of distance must completely vanish.

A point of great importance would be first to know what is the capacity of the earth? and what charge does it contain if electrified? Though we have no positive evidence of a charged body existing in space without other oppositely electrified bodies being near, there is a fair probability that the earth is such a body, for by whatever process it was separated from other bodies — and this is the accepted view of its origin — it must have retained a charge, as occurs in all processes of mechanical separation. If it be a charged body insulated in space its capacity should be extremely small, less than one-thousandth of a farad. But the upper strata of the air are conducting, and so, perhaps, is the medium in free space beyond the atmosphere, and these may contain an opposite charge. Then the capacity might be incomparably greater. In any case it is of the greatest importance to get an idea of what quantity of electricity the earth contains. It is difficult to say whether we shall ever acquire this necessary knowledge, but there is hope that we may, and that is, by means of electrical resonance. If ever we can ascertain at what period the earth's charge, when disturbed, oscillates with respect to an oppositely electrified system or known circuit, we shall know a fact possibly of the greatest importance to the welfare of the human race. I propose to seek for the period by means of an electrical oscillator, or a source of alternating electric currents. One of the terminals of the source would be connected to earth as, for instance, to the city water mains, the other to an insulated body of large surface. It is possible that the outer conducting air strata, or free space, contain an opposite charge and that, together with the earth, they form a condenser of very large capacity. In such case the period of vibration may be very low and an alternating dynamo machine might serve for the purpose of the experiment. I would then transform the current to a potential as high as it would be found possible and connect the ends of the high tension secondary to the ground and to the insulated body. By varying the frequency of the currents and carefully observing the potential of the insulated body and watching for the disturbance at

various neighboring points of the earth's surface resonance might be detected. Should, as the majority of scientific men in all probability believe, the period be extremely small, then a dynamo machine would not do and a proper electrical oscillator would have to be produced and perhaps it might not be possible to obtain such rapid vibrations. But whether this be possible or not, and whether the earth contains a charge or not, and whatever may be its period of vibration, it certainly is possible — for of this we have daily evidence — to produce some electrical disturbance sufficiently powerful to be perceptible by suitable instruments at any point of the earth's surface.

Assume that a source of alternating currents be connected, as in Fig. 21, with one of its terminals to earth (conveniently to the water mains) and with the other to a body of large surface P. When the electric oscillation is set up there will be a movement of electricity in and out of P, and alternating currents will pass through the earth, converging to, or diverging from, the point C where the ground connection is made. In this manner neighboring points on the earth's surface within a certain radius will be disturbed. But the disturbance will diminish with the distance, and the distance at which the effect will still be perceptible will depend on the quantity of electricity set in motion. Since the body P is insulated, in order to displace a considerable quantity, the potential of the source must be excessive, since there would be limitations as to the surface of P. The conditions might be adjusted so that the generator or source S will set up the same electrical movement as though its circuit were closed. Thus it is certainly practicable to impress an electric vibration at least of a certain low period upon the earth by means of proper machinery. At what distance such a vibration might be made perceptible can only be conjectured. I have on another occasion considered the question how the earth might behave to electric disturbances. There is no doubt that, since in such an experiment the electrical density at the surface could be but extremely small considering the size of the earth, the air would not act as a very disturbing factor, and there would be not much energy lost through the action of the air, which would be the case if the density were great. Theoretically, then, it could not require a great amount of energy to produce a disturbance perceptible at great distance, or even all over the surface of the globe. Now, it is quite certain that at any point within a certain radius of the source S a properly adjusted self-induction and capacity device can be set in action by resonance. But not only can this be done, but another source S_1, Fig. 21, similar to S, or any number of such sources, can be set to work in synchronism with the latter, and the vibration thus intensified and spread over a large area, or a flow of electricity produced to or from the source S_1 if the same be of opposite phase to the source S. I think that beyond doubt it is possible to operate electrical devices in a city through the ground or pipe system by resonance from an electrical oscillator located at a central point. But the practical solution of this problem would be of incomparably smaller benefit to man than the realization of the scheme of transmitting intelligence, or perhaps power, to any distance through the earth or environing medium. If this is at all possible, distance does not mean anything. Proper apparatus must first be produced by means of which the problem can be attacked and I have devoted much thought to this subject. I am firmly convinced that it can be done and hope that we shall live to see it done.

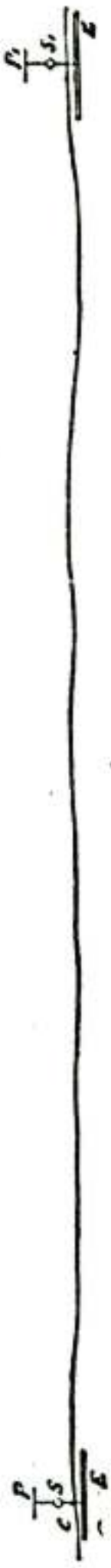

Fig. 21.

ON THE LIGHT PHENOMENA PRODUCED BY HIGH-FREQUENCY CURRENTS OF HIGH POTENTIAL AND GENERAL REMARKS RELATING TO THE SUBJECT

Returning now to the light effects which it has been the chief object to investigate, it is thought proper to divide these effects into four classes: 1. Incandescence of a solid. 2. Phosphorescence. 3. Incandescence or phosphorescence of a rarefied gas; and 4. Luminosity produced in a gas at ordinary pressure. The first question is: How are these luminous effects produced? In order to answer this question as satisfactorily as I am able to do in the light of accepted views and with the experience acquired, and to add some interest to this demonstration, I shall dwell here upon a feature which I consider of great importance, inasmuch as it promises, besides, to throw a better light upon the nature of most of the phenomena produced by high-frequency electric currents. I have on other occasions pointed out the great importance of the presence of the rarefied gas, or atomic medium in general, around the conductor through which alternate currents of high frequency are passed, as regards the heating of the conductor by the currents. My experiments, described some time ago, have shown that, the higher the frequency and potential difference of the currents, the more important becomes the rarefied gas in which the conductor is immersed, as a factor of the heating. The potential difference, however, is, as I then pointed out, a more important element than the frequency. When both of these are sufficiently high, the heating may be almost entirely due to the presence of the rarefied gas. The experiments to follow will show the importance of the rarefied gas, or, generally, of gas at ordinary or other pressure as regards the incandescence or other luminous effects produced by currents of this kind.

I take two ordinary 50-volt 16 C. P. lamps which are in every respect alike, with the exception, that one has been opened at the top and the air has filled the bulb, while the other is at the ordinary degree of exhaustion of commercial lamps. When I attach the lamp which is exhausted to the terminal of the secondary of the coil, which I have already used, as in experiments illustrated in Fig. 15a for instance, and turn on the current, the filament, as you have before seen, comes to high incandescence. When I attach the second lamp, which is filled with air, instead of the former, the filament still glows, but much less brightly. This experiment illustrates only in part the truth of the statements before made. The importance of the filament's being immersed in rarefied gas is plainly noticeable but not to such a degree as might be desirable. The reason is that the secondary of this coil is wound for low tension, having only 150 turns, and the potential difference at the terminals of the lamp is therefore small. Were I to take another coil with many more turns in the secondary, the effect would be increased, since it depends partially on the potential difference, as before remarked. But since the effect likewise depends on the frequency, it may be properly stated that it depends on the time rate of the variation of the potential difference. The greater this variation, the more important becomes the gas as an element of heating. I can produce a much greater rate of variation in another way, which, besides, has the advantage of doing away with the objections, which might be made in the experiment just shown, even if both the lamps were connected in series or multiple arc to the coil, namely, that in consequence of the reactions existing between the primary and secondary coil the conclusions are rendered uncertain. This result I secure by charging, from an ordinary transformer which is fed from the alternating current supply station, a battery of condensers, and discharging the latter directly through a circuit of small self-induction, as before illustrated in Figs. 19a, 19b and 19c.

In Figs. 22a, 22b and 22c, the heavy copper bars BB_1, are connected to the opposite coatings of a battery of condensers, or generally in such way, that the high frequency or sudden discharges are made to traverse them. I connect first an ordinary 50-volt

incandescent lamp to the bars by means of the clamps *C C*. The discharges being passed through the lamp, the filament is rendered incandescent, though the current through it is very small, and would not be nearly sufficient to produce a visible effect under the conditions of ordinary use of the lamp. Instead of this I now attach to the bars another lamp exactly like the first, but with the seal broken off, the bulb being therefore filled with air at ordinary pressure. When the discharges are directed through the filament, as before, it does not become incandescent. But the result might still be attributed to one of the many possible reactions. I therefore connect both the lamps in multiple arc as illustrated in Fig. 22a. Passing the discharges through both the lamps, again the filament in the exhausted lamp l glows very brightly while that in the non-exhausted lamp l_1 remains dark, as previously. But it should not be thought that the latter lamp is taking only a small fraction of the energy supplied to both the lamps; on the contrary, it may consume a considerable portion of the energy and it may become even hotter than the one which burns brightly. In this experiment the potential difference at the terminals of the lamps varies in sign theoretically three to four million times a second. The ends of the filaments are correspondingly electrified, and the gas in the bulbs is violently agitated and a large portion of the supplied energy is thus converted into heat. In the non-exhausted bulb, there being a few million times more gas molecules than in the exhausted one, the bombardment, which is most violent at the ends of the

Fig. 22a.

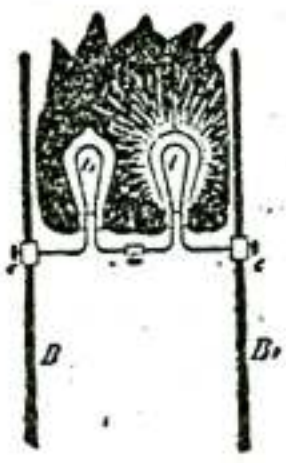

Fig. 22b.

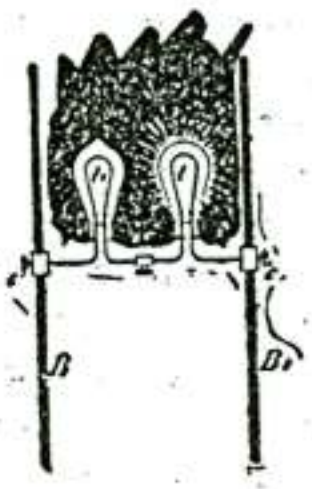

Fig. 22c.

filament, in the neck of the bulb, consumes a large portion of the energy without producing any visible effect. The reason is that, there being many molecules, the bombardment is quantitatively considerable, but the individual impacts are not very violent, as the speeds of the molecules are comparatively small owing to the small free path. In the exhausted bulb, on the contary, the speeds are very great, and the individual impacts are violent and therefore better adapted to produce a visible effect. Besides, the convection of heat is greater in the former bulb. In both the bulbs the current traversing the filaments is very small, incomparably smaller than that which they require on an ordinary low-frequency circuit. The potential difference, however, at the ends of the filaments is very great and might be possibly 20,000 volts or more, if the filaments were straight and their ends far apart. In the ordinary lamp a spark generally occurs between the ends of the filament or between the platinum wires outside, before such a difference of potential can be reached.

It might be objected that in the experiment before shown the lamps, being in multiple arc, the exhausted lamp might take a much larger current and that the effect observed might not be exactly attributable to the action of the gas in the bulbs. Such objections will lose much weight if I connect the lamps in series, with the same result. When this is done and the discharges are directed through the filaments, it is again noted that the filament in the non-exhausted bulb l_1 remains dark, while that in the exhausted one *(l)* glows even more intensely than under its normal conditions of

working, Fig. 22b. According to general ideas the current through the filaments should now be the same, were it not modified by the presence of the gas around the filaments.

At this juncture I may point out another interesting feature, which illustrates the effect of the rate of change of potential of the currents. I will leave the two lamps connected in series to the bars BB_1, as in the previous experiment, Fig. 22b, but will presently reduce considerably the frequency of the currents, which was excessive in the experiment just before shown. This I may do by inserting a self-induction coil in the path of the discharges, or by augmenting the capacity of the condensers. When I now pass these low-frequency discharges through the lamps, the exhausted lamp *l* again is as bright as before, but it is noted also that the non-exhausted lamp l_1 glows, though not quite as intensely as the other. Reducing the current through the lamps, I may bring the filament in the latter lamp to redness, and, though the filament in the exhausted lamp *l* is bright, Fig. 22c, the degree of its incandescence is much smaller than in Fig. 22b, when the currents were of a much higher frequency.

In these experiments the gas acts in two opposite ways in determining the degree of the incandescence of the filaments, that is, by convection and bombardment. The higher the frequency and potential of the currents, the more important becomes the bomdardment. The convection on the contrary should be the smaller, the higher the frequency. When the currents are steady there is practically no bombardment, and convection may therefore with such currents also considerably modify the degree of incandescence and produce results similar to those just before shown. Thus, if two lamps exactly alike, one exhausted and one not exhausted, are connected in multiple arc or series to a direct-current machine, the filament in the non-exhausted lamp will require a considerably greater current to be rendered incandescent. This result is entirely due to convection, and the effect is the more prominent the thinner the filament. Professor Ayrton and Mr. Kilgour some time ago published quantitative results concerning the thermal emissivity by radiation and convection in which the effect with thin wires was clearly shown. This effect may be strikingly illustrated by preparing a number of small, short, glass tubes, each containing through its axis the thinnest obtainable platinum wire. If these tubes be highly exhausted, a number of them may be connected in multiple arc to a direct-current machine and all of the wires may be kept at incandescence with a smaller current than that required to render incandescent a single one of the wires if the tube be not exhausted. Could the tubes be so highly exhausted that convection would be nil, then the relative amounts of heat given off by convection and radiation could be determined without the difficulties attending thermal quantitative measurements. If a source of electric impulses of high frequency and very high potential is employed, a still greater number of the tubes may be taken and the wires rendered incandescent by a current not capable of warming perceptibly a wire of the same size immersed in air at ordinary pressure, and conveying the energy to all of them.

I may here describe a result which is still more interesting, and to which I have been led by the observation of these phenomena. I noted that small differences in the density of the air produced a considerable difference in the degree of incandescence of the wires, and I thought that, since in a tube, through which a luminous discharge is passed, the gas is generally not of uniform density, a very thin wire contained in the tube might be rendered incandescent at certain places of smaller density of the gas, while it would remain dark at the places of greater density, where the convection would be greater and the bombardment less intense. Accordingly a tube *t* was prepared, as illustrated in Fig. 23, which contained through the middle a very fine platinum wire *w*. The tube was exhausted to a moderate degree and it was found that when it was attached to the terminal of a high-frequency coil the platinum wire *w* would indeed, become incandescent in patches, as illustrated in Fig. 23. Later a number of these tubes with one or more wires were prepared, each showing this result. The effect

was best noted when the striated discharge occurred in the tube, but was also produced when the striae were not visible, showing that, even then, the gas in the tube was not or uniform density. The position of the striae was generally such, that the rarefactions corresponded to the places of incandescence or greater brightness on the wire *w*. But in a few instances it was noted, that the bright spots on the wire were covered by the dense parts of the striated discharge as indicated by *l* in Fig. 23, though the effect was barely perceptible. This was explained in a plausible way by assuming that the convection was not widely different in the dense and rarefied places, and that the bombardment was greater on the dense places of the striated discharge. It is, in fact,

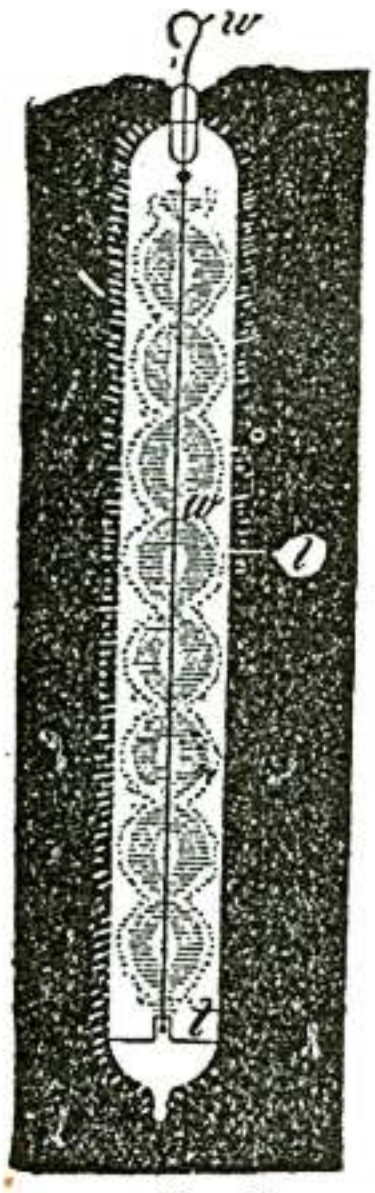

Fig. 23

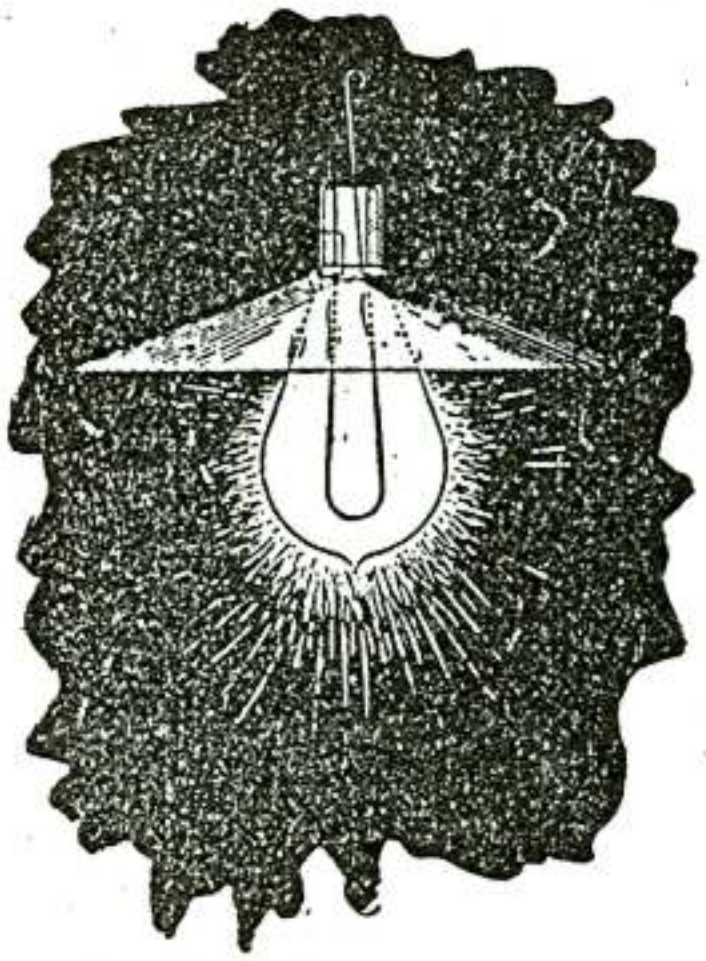

Fig. 24.

often observed in bulbs, that under certain conditions a thin wire is brought to higher incandescence when the air is not too highly rarefied. This is the case when the potential of the coil is not high enough for the vacuum, but the result may be attributed to many different causes. In all cases this curious phenomenon of incandescence disappears when the tube, or rather the wire, acquires throughout a uniform temperature.

Disregarding now the modifying effect of convection there are then two distinct causes which determine the incandescence of a wire or filament with varying currents, that is, conduction current and bombardment. With steady currents we have to deal only with the former of these two causes, and the heating effect is a minimum, since the resistance is least to steady flow. When the current is a varying one the resistance is greater, and hence the heating effect is increased. Thus if the rate of change of the current is very great, the resistance may increase to such an extent that the filament is brought to incandescence with inappreciable currents, and we are able to take a short and thick block of carbon or other material and bring it to bright incandescence with a current incomparably smaller than that required to bring to the same degree of incandescence an ordinary thin lamp filament with a steady or low frequency current. This result is important, and illustrates how rapidly our views on these subjects are

changing, and how quickly our field of knowledge is extending. In the art of incandescent lighting, to view this result in one aspect only, it has been commonly considered as an essential requirement for practical success, that the lamp filament should be thin and of high resistance. But now we know that the resistance of the filament to the steady flow does not mean anything; the filament might as well be short and thick; for if it be immersed in rarefied gas it will become incandescent by the passage of a small current. It all depends on the frequency and potential of the currents. We may conclude from this, that it would be of advantage, so far as the lamp is considered, to employ high frequencies for lighting, as they allow the use of short and thick filaments and smaller currents.

If a wire or filament be immersed in a homogeneous medium, all the heating is due to true conduction current, but if it be enclosed in an exhausted vessel the conditions are entirely different. Here the gas begins to act and the heating effect of the conduction current, as is shown in many experiments, may be very small compared with that of the bombardment. This is especially the case if the circuit is not closed and the potentials are of course very high. Suppose that a fine filament enclosed in an exhausted vessel be connected with one of its ends to the terminal of a high tension coil and with its other end to a large insulated plate. Though the circuit is not closed, the filament, as I have before shown, is brought to incandescence. If the frequency and potential be comparatively low, the filament is heated by the current passing *through it.* If the frequency and potential, and principally the latter, be increased, the insulated plate need be but very small, or may be done away with entirely; still the filament will become incandescent, practically all the heating being then due to the bombardment. A practical way of combining both the effects of conduction currents and bombardment is illustrated in Fig. 24, in which an ordinary lamp is shown provided with a very thin filament which has one of the ends of the latter connected to a shade serving the purpose of the insulated plate, and the other end to the terminal of a high tension source. It should not be thought that only rarefied gas is an important factor in the heating of a conductor by varying currents, but gas at ordinary pressure may become important, if the potential difference and frequency of the currents is excessive. On this subject I have already stated, that when a conductor is fused by a stroke of lightning, the current through it may be exceedingly small, not even sufficient to heat the conductor perceptibly, were the latter immersed in a homogeneous medium.

From the preceding it is clear that when a conductor of high resistance is connected to the terminals of a source of high frequency currents of high potential, there may occur considerable dissipation of energy, principally at the ends of the conductor, in consequence of the action of the gas surrounding the conductor. Owing to this, the current through a section of the conductor at a point midway between its ends may be much smaller than through a section near the ends. Furthermore, the current passes principally through the outer portions of the conductor, but this effect is to be distinguished from the skin effect as ordinarily interpreted, for the latter would, or should, occur also in a continuous incompressible medium. If a great many incandescent lamps are connected in series to a source of such currents, the lamps at the ends may burn brightly, whereas those in the middle may remain entirely dark. This is due principally to bombardment, as before stated. But even if the currents be steady, provided the difference of potential is very great, the lamps at the end will burn more brightly than those in the middle. In such case there is no rhythmical bombardment, and the result is produced entirely by leakage. This leakage or dissipation into space when the tension is high, is considerable when incandescent lamps are used, and still more considerable with arcs, for the latter act like flames. Generally, of course, the dissipation is much smaller with steady, than with varying, currents.

I have contrived an experiment which illustrates in an interesting manner the effect of lateral diffusion. If a very long tube is attached to the terminal of a high frequency coil, the luminosity is greatest near the terminal and falls off gradually towards the remote end. This is more marked if the tube is narrow.

A small tube about one-half inch in diameter and twelve inches long (Fig. 25), has one of its ends drawn out into a fine fibre *f* nearly three feet long. The tube is placed in a brass socket T which can be screwed on the terminal T_1 of the induction coil. The discharge passing through the tube first illuminates the bottom of the same,

Fig. 25

Fig. 26

which is of comparatively large section; but through the long glass fibre the discharge cannot pass. But gradually the rarefied gas inside becomes warmed and more conducting and the discharge spreads into the glass fibre. This spreading is so slow, that it may take half a minute or more until the discharge has worked through up to the top of the glass fibre, then presenting the appearance of a strongly luminous thin thread. By adjusting the potential at the terminal the light may be made to travel upwards at any speed. Once, however, the glass fibre is heated, the discharge breaks through its entire length instantly. The interesting point to be noted is that, the higher the frequency of the currents, or in other words, the greater relatively the lateral dissipation, at a slower rate may the light be made to propagate through the fibre. This experiment is best performed with a highly exhausted and freshly made tube. When the tube has been used for some time the experiment often fails. It is possible that the gradual and slow impairment of the vacuum is the cause. This slow propagation of the discharge through a very narrow glass tube corresponds exactly to the propagation of heat through a bar warmed at one end. The quicker the heat is carried away laterally the longer time it will take for the heat to warm the remote end. When the current of a low frequency coil is passed through the fibre from end to end, then the lateral dissipation is small and the discharge instantly breaks through almost without exception.

After these experiments and observations which have shown the importance of the discontinuity or atomic structure of the medium and which will serve to explain, in a measure at least, the nature of the four kinds of light effects producible with these currents, I may now give you an illustration of these effects. For the sake of interest I may do this in a manner which to many of you might be novel. You have seen before that we may now convey the electric vibration to a body by means of a single wire or conductor of any kind. Since the human frame is conducting I may convey the vibration through my body.

First, as in some previous experiments, I connect my body with one of the terminals of a high-tension transformer and take in my hand an exhausted bulb which contains a small carbon button mounted upon a platinum wire leading to the outside of the bulb, and the button is rendered incandescent as soon as the transformer is set to work (Fig. 26). I may place a conducting shade on the bulb which serves to intensify the action, but it is not necessary. Nor is it required that the button should be in conducting connection

Fig. 27.

Fig. 28.

with the hand through a wire leading through the glass, for sufficient energy may be transmitted through the glass itself by inductive action to render the button incandescent.

Next I take a highly exhausted bulb containing a strongly phosphorescent body, above which is mounted a small plate of aluminum on a platinum wire leading to the outside, and the currents flowing through my body excite intense phosphorescence in the bulb (Fig. 27). Next again I take in my hand a simple exhausted tube, and in the same manner the gas inside the tube is rendered highly incandescent or phosphorescent (Fig. 28). Finally, I may take in my hand a wire, bare or covered with thick insulation, it is quite immaterial; the electrical vibration is so intense as to cover the wire with a luminous film (Fig. 29).

A few words must now be devoted to each of these phenomena. In the first place, I will consider the incandescence of a button or of a solid in general, and dwell upon some facts which apply equally to all these phenomena. It was pointed out before that when a thin conductor, such as a lamp filament, for instance, is connected with one of its ends to the terminal of a transformer of high tension the filament is brought to incandescence partly by a conduction current and partly by bombardment. The shorter and thicker the filament the more important becomes the latter, and finally, reducing the filament to a mere button, all the heating must practically be attributed to the

bombardment. So in the experiment before shown, the button is rendered incandescent by the rhythmical impact of freely movable small bodies in the bulb. These bodies may be the molecules of the residual gas, particles of dust or lumps torn from the electrode; whatever they are, it is certain that the heating of the button is essentially connected with the pressure of such freely movable particles, or of atomic matter in general in the bulb. The heating is the more intense the greater the number of impacts per second and the greater the energy of each impact. Yet the button would be heated also if it were connected to a source of a steady potential. In such a case electricity would be carried away from the button by the freely movable carriers or particles flying about, and the quantity of electricity thus carried away might be sufficient to bring the button to incandescence by its passage through the latter. But the bombardment could not be of great importance in such case. For this reason it would require a comparatively very great supply of energy to the button to maintain it at incandescence with a steady potential. The higher the frequency of the electric impulses the more

Fig. 29.

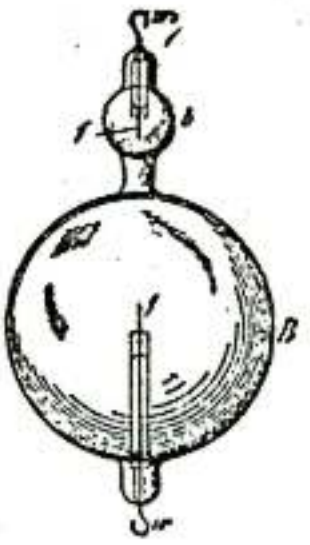

Fig. 30.

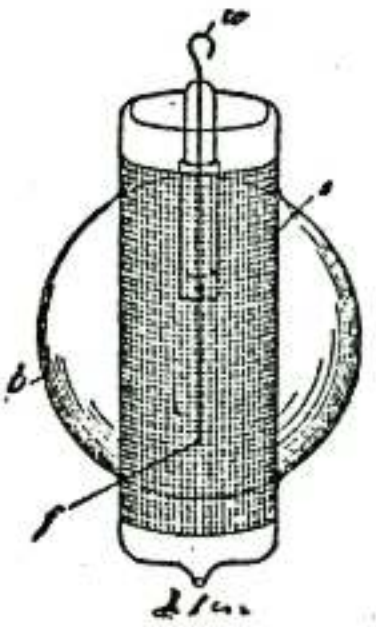

Fig. 31.

economically can the button be maintained at incandescence. One of the chief reasons why this is so, is, I believe, that with impulses of very high frequency there is less exchange of the freely movable carriers around the electrode and this means, that in the bulb the heated matter is better confined to the neighborhood of the button. If a double bulb, as illustrated in Fig. 30 be made, comprising a large globe B and a small one *b*, each containing as usual a filament *f* mounted on a platinum wire *w* and w_1, it is found, that if the filaments *f f* be exactly alike, it requires less energy to keep the filament in the globe *b* at a certain degree of incandescence, than that in the globe B. This is due to the confinement of the movable particles around the button. In this case it is also ascertained, that the filament in the small globe *b* is less deteriorated when maintained a certain length of time at incandescence. This is a necessary consequence of the fact that the gas in the small bulb becomes strongly heated and therefore a very good conductor, and less work is then performed on the button, since the bombardment becomes less intense as the conductivity of the gas increases. In this construction, of course, the small bulb becomes very hot and when it reaches an elevated temperature the convection and radiation on the outside increase. On another occasion I have shown bulbs in which this drawback was largely avoided. In these instances a very small bulb, containing a refractory button, was mounted in a large globe and the space between the walls of both was highly exhausted. The outer large globe remained comparatively cool in such constructions. When the large globe was on the pump and

the vacuum between the walls maintained permanent by the continuous action of the pump, the outer globe would remain quite cold, while the button in the small bulb was kept at incandescence. But when the seal was made, and the button in the small bulb maintained incandescent some length of time, the large globe too would become warmed. From this I conjecture that if vacuous space (as Prof. Dewar finds) cannot convey heat, it is so merely in virtue of our rapid motion through space or, generally speaking, by the motion of the medium relatively to us, for a permanent condition could not be maintained without the medium being constantly renewed. A vacuum cannot, according to all evidence, be permanently maintained around a hot body.

In these constructions, before mentioned, the small bulb inside would, at least in the first stages, prevent all bombardment against the outer large globe. It occurred to me then to ascertain how a metal sieve would behave in this respect, and several bulbs, as illustrated in Fig. 31, were prepared for this purpose. In a globe *b*, was mounted a thin filament *f* (or button) upon a platinum wire *w* passing through a glass stem and leading to the outside of the globe. The filament *f* was surrounded by a metal sieve *s*. It was found in experiments with such bulbs that a sieve with wide meshes apparently did not in the slightest affect the bombardment against the globe *b*. When the vacuum was high, the shadow of the sieve was clearly projected against the globe and the latter would get hot in a short while. In some bulbs the sieve *s* was connected to a platinum wire sealed in the glass. When this wire was connected to the other terminal of the induction coil (the E. M. F. being kept low in this case), or to an insulated plate, the bombardment against the outer globe *b* was diminished. By taking a sieve with fine meshes the bombardment against the globe *b* was always diminished, but even then if the exhaustion was carried very far, and when the potential of the transformer was very high, the globe *b* would be bombarded and heated quickly, though no shadow of the sieve was visible, owing to the smallness of the meshes. But a glass tube or other continuous body mounted so as to surround the filament, did entirely cut off the bombardment and for a while the outer globe *b* would remain perfectly cold. Of course when the glass tube was sufficiently heated the bombardment against the outer globe could be noted at once. The experiments with these bulbs seemed to show that the speeds of the projected molecules or particles must be considerable (though quite insignificant when compared with that of light), otherwise it would be difficult to understand how they could traverse a fine metal sieve without being affected, unless it were found that such small particles or atoms cannot be acted upon directly at measurable distances. In regard to the speed of the projected atoms, Lord Kelvin has recently estimated it at about one kilometre a second or thereabouts in an ordinary Crookes bulb. As the potentials obtainable with a disruptive discharge coil are much higher than with ordinary coils, the speeds must, of course, be much greater when the bulbs are lighted from such a coil. Assuming the speed to be as high as five kilometres and uniform through the whole trajectory, as it should be in a very highly exhausted vessel, then if the alternate electrifications of the electrode would be of a frequency of five million, the greatest distance a particle could get away from the electrode would be one millimetre, and if it could be acted upon directly at that distance, the exchange of electrode matter or of the atoms would be very slow and there would be practically no bombardment against the bulb. This at least should be so, if the action of an electrode upon the atoms of the residual gas would be such as upon electrified bodies which we can perceive. A hot body enclosed in an exhausted bulb produces always atomic bombardment, but a hot body has no definite rhythm, for its molecules perform vibrations of all kinds.

If a bulb containing a button or filament be exhausted as high as is possible with the greatest care and by the use of the best artifices, it is often observed that the discharge cannot, at first, break through, but after some time, probably in consequence

of some changes within the bulb, the discharge finally passes through and the button is rendered incandescent. In fact, it appears that the higher the degree of exhaustion the easier is the incandescence produced. There seem to be no other causes to which the incandescence might be attributed in such case except to the bombardment or similar action of the residual gas, or of particles of matter in general. But if the bulb be exhausted with the greatest care can these play an important part? Assume the vacuum in the bulb to be tolerably perfect, the great interest then centres in the question: Is the medium which pervades all space continuous or atomic? If atomic, then the heating of a conducting button or filament in an exhausted vessel might be due largely to ether bombardment, and then the heating of a conductor in general through which currents of high frequency or high potential are passed must be modified by the behavior of such medium; then also the skin effect, the apparent increase of the ohmic resistance, etc., admit, partially at least, of a different explanation.

It is certainly more in accordance with many phenomena observed with high-frequency currents to hold that all space is pervaded with free atoms, rather than to assume that it is devoid of these, and dark and cold, for so it must be, if filled with a continuous medium, since in such there can be neither heat nor light. Is then energy transmitted by independent carriers or by the vibration of a continuous medium? This important question is by no means as yet positively answered. But most of the effects which are here considered, especially the light effects, incandescence, or phosphorescence, involve the presence of free atoms and would be impossible without these.

In regard to the incandescence of a refractory button (or filament) in an exhausted receiver, which has been one of the subjects of this investigation, the chief experiences, which may serve as a guide in constructing such bulbs, may be summed up as follows: 1. The button should be as small as possible, spherical, of a smooth or polished surface, and of refractory material which withstands evaporation best. 2. The support of the button should be very thin and screened by an aluminum and mica sheet, as I have described on another occasion. 3. The exhaustion of the bulb should be as high as possible. 4. The frequency of the currents should be as high as practicable. 5. The currents should be of a harmonic rise and fall, without sudden interruptions. 6. The heat should be confined to the button by inclosing the same in a small bulb or otherwise. 7. The space between the walls of the small bulb and the outer globe should be highly exhausted.

Most of the considerations which apply to the incandescence of a solid just considered may likewise be applied to phosphorescence. Indeed, in an exhausted vessel the phosphorescence is, as a rule, primarily excited by the powerful beating of the electrode stream of atoms against the phosphorescent body. Even in many cases, where there is no evidence of such a bombardment, I think that phosphorescence is excited by violent impacts of atoms, which are not necessarily thrown off from the electrode but are acted upon from the same inductively through the medium or through chains of other atoms. That mechanical shocks play an important part in exciting phosphorescence in a bulb may be seen from the following experiment. If a bulb, constructed as that illustrated in Fig. 10, be taken and exhausted with the greatest care so that the discharge cannot pass, the filament *f* acts by electrostatic induction upon the tube *t* and the latter is set in vibration. If the tube *o* be rather wide, about an inch or so, the filament may be so powerfully vibrated that whenever it hits the glass tube it excites phosphorescence. But the phosphorescence ceases when the filament comes to rest. The vibration can be arrested and again started by varying the frequency of the currents. Now the filament has its own period of vibration, and if the frequency of the currents is such that there is resonance, it is easily set vibrating, though the potential of the currents be small. I have often observed that the filament in the bulb is destroyed by such mechanical resonance. The filament vibrates as a rule so rapidly that it cannot be seen

and the experimenter may at first be mystified. When such an experiment as the one described is carefully performed, the potential of the currents need be extremely small, and for this reason I infer that the phosphorescence is then due to the mechanical shock of the filament against the glass, just as it is produced by striking a loaf of sugar with a knife. The mechanical shock produced by the projected atoms is easily noted when a bulb containing a button is grasped in the hand and the current turned on suddenly. I believe that a bulb could be shattered by observing the conditions of resonance.

In the experiment before cited it is, of course, open to say, that the glass tube, upon coming in contact with the filament, retains a charge of a certain sign upon the point of contact. If now the filament again touches the glass at the same point while it is oppositely charged, the charges equalize under evolution of light. But nothing of importance would be gained by such an explanation. It is unquestionable that the initial charges given to the atoms or to the glass play some part in exciting phosphorescence. So, for instance, if a phosphorescent bulb be first excited by a high frequency coil by connecting it to one of the terminals of the latter and the degree of luminosity be noted, and then the bulb be highly charged from a Holtz machine by attaching it preferably to the positive terminal of the machine, it is found that when the bulb is again connected to the terminal of the high frequency coil, the phosphorescence is far more intense. On another occasion I have considered the possibility of some phosphorescent phenomena in bulbs being produced by the incandescence of an infinitesimal layer on the surface of the phosphorescent body. Certainly the impact of the atoms is powerful enough to produce intense incandescence by the collisions, since they bring quickly to a high temperature a body of considerable bulk. If any such effect exists, then the best appliance for producing phosphorescence in a bulb, which we know so far, is a disruptive discharge coil giving an enormous potential with but few fundamental discharges, say 25—30 per second, just enough to produce a continuous impression upon the eye. It is a fact that such a coil excites phosphorescence under almost any condition and at all degrees of exhaustion, and I have observed effects which appear to be due to phosphorescence even at ordinary pressures of the atmosphere, when the potentials are extremely high. But if phosphorescent light is produced by the equalization of charges of electrified atoms (whatever this may mean ultimately), then the higher the frequency of the impulses or alternate electrifications, the more economical will be the light production. It is a long known and noteworthy fact that all the phosphorescent bodies are poor conductors of electricity and heat, and that all bodies cease to emit phosphorescent light when they are brought to a certain temperature. Conductors on the contrary do not possess this quality. There are but few exceptions to the rule. Carbon is one of them. Becquerel noted that carbon phosphoresces at a certain elevated temperature preceding the dark red. This phenomenon may be easily observed in bulbs provided with a rather large carbon electrode (say, a sphere of six millimetres diameter). If the current is turned on after a few seconds, a snow white film covers the electrode, just before it gets dark red. Similar effects are noted with other conducting bodies, but many scientific men will probably not attribute them to true phosphorescence. Whether true incandescence has anything to do with phosphorescence excited by atomic impact or mechanical shocks still remains to be decided, but it is a fact that all conditions, which tend to localize and increase the heating effect at the point of impact, are almost invariably the most favorable for the production of phosphorescence. So, if the electrode be very small, which is equivalent to saying in general, that the electric density is great; if the potential be high, and if the gas be highly rarefied, all of which things imply high speed of the projected atoms, or matter, and consequently violent impacts — the phosphorescence is very intense. If a bulb provided with a large and small electrode be attached to the terminal of an induction coil, the small electrode excites phosphorescence while the large one may not do so, because of the smaller electric density and hence

smaller speed of the atoms. A bulb provided with a large electrode may be grasped with the hand while the electrode is connected to the terminal of the coil and it may not phosphoresce; but if instead of grasping the bulb with the hand, the same be touched with a pointed wire, the phosphorescence at once spreads through the bulb, because of the great density at the point of contact. With low frequencies it seems that gases of great atomic weight excite more intense phosphorescence than those of smaller weight, as for instance, hydrogen. With high frequencies the observations are not sufficiently reliable to draw a conclusion. Oxygen, as is well-known, produces exceptionally strong effects, which may be in part due to chemical action. A bulb with hydrogen residue seems to be most easily excited. Electrodes which are most easily deteriorated produce more intense phosphorescence in bulbs, but the condition is not permanent because of the impairment of the vacuum and the deposition of the electrode matter upon the phosphorescent surfaces. Some liquids, as oils, for instance, produce magnificent effects of phosphorescence (or fluorescence?), but they last only a few seconds. So if a bulb has a trace of oil on the walls and the current is turned on, the phosphorescence only persists for a few moments until the oil is carried away. Of all bodies so far tried, sulphide of zinc seems to be the most susceptible to phosphorescence. Some samples, obtained through the kindness of Prof. Henry in Paris, were employed in many of these bulbs. One of the defects of this sulphide is, that it loses its quality of emitting light when brought to a temperature which is by no means high. It can therefore, be used only for feeble intensities. An observation which might deserve notice is, that when violently bombarded from an aluminum electrode it assumes a black color, but singularly enough, it returns to the original condition when it cools down.

The most important fact arrived at in pursuing investigations in this direction is, that in all cases it is necessary, in order to excite phosphorescence with a minimum amount of energy, to observe certain conditions. Namely, there is always, no matter what the frequency of the currents, degree of exhaustion and character of the bodies in the bulb, a certain potential (assuming the bulb excited from one terminal) or potential difference (assuming the bulb to be excited with both terminals) which produces the most economical result. If the potential be increased, considerable energy may be wasted without producing any more light, and if it be diminished, then again the light production is not as economical. The exact condition under which the best result is obtained seems to depend on many things of a different nature, and it is to be yet investigated by other experimenters, but it will certainly have to be observed when such phosphorescent bulbs are operated, if the best results are to be obtained.

Coming now to the most interesting of these phenomena, the incandescence or phosphorescence of gases, at low pressures or at the ordinary pressure of the atmosphere, we must seek the explanation of these phenomena in the same primary causes, that is, in shocks or impacts of the atoms. Just as molecules or atoms beating upon a solid body excite phosphorescence in the same or render it incandescent, so when colliding among themselves they produce similar phenomena. But this is a very insufficient explanation and concerns only the crude mechanism. Light is produced by vibrations which go on at a rate almost inconceivable. If we compute, from the energy contained in the form of known radiations in a definite space the force which is necessary to set up such rapid vibrations, we find, that though the density of the ether be incomparably smaller than that of any body we know, even hydrogen, the force is something surpassing comprehension. What is this force, which in mechanical measure may amout to thousands of tons per square inch? It is electrostatic force in the light of modern views. It is impossible to conceive how a body of measurable dimensions could be charged to so high a potential that the force would be sufficient to produce these vibrations. Long before any such charge could be imparted to the body it would be shattered into atoms. The sun emits light and heat, and so does an ordinary flame or incandescent filament, but in

neither of these can the force be accounted for if it be assumed that it is associated with the body as a whole. Only in one way may we account for it, namely, by identifying it with the atom. An atom is so small, that if it be charged by coming in contact with an electrified body and the charge be assumed to follow the same law as in the case of bodies of measurable dimensions, it must retain a quantity of electricity which is fully capable of accounting for these forces and tremendous rates of vibration. But the atom behaves singularly in this respect — it always takes the same "charge".

It is very likely that resonant vibration plays a most important part in all manifestations of energy in nature. Throughout space all matter is vibrating, and all rates of vibration are represented, from the lowest musical note to the highest pitch of the chemical rays, hence an atom, or complex of atoms, no matter what its period, must find a vibration with which it is in resonance. When we consider the enormous rapidity of the light vibrations, we realize the impossibility of producing such vibrations directly with any apparatus of measurable dimensions, and we are driven to the only possible means of attaining the object of setting up waves of light by electrical means and economically, that is, to affect the molecules or atoms of a gas, to cause them to collide and vibrate. We then must ask ourselves — How can free molecules or atoms be affected?

It is a fact that they can be affected by electrostatic force, as is apparent in many of these experiments. By varying the electrostatic force we can agitate the atoms, and cause them to collide accompanied by evolution of heat and light. It is not demonstrated beyond doubt that we can affect them otherwise. If a luminous discharge is produced in a closed exhausted tube, do the atoms arrange themselves in obedience to any other but to electrostatic force acting in straight lines from atom to atom? Only recently I investigated the mutual action between two circuits with extreme rates of vibration. When a battery of a few jars (*c c c c*, Fig. 32), is discharged through a primary P of low resistance (the connections being as illustrated in Figs. 19a, 19b and 19c), and the frequency of vibration is many millions there are great differences of potential between points on the primary not more than a few inches apart. These differences may be 10,000 volts per inch, if not more, taking the maximum value of the E. M. F. The secondary *S* is therefore acted upon by electrostatic induction, which is in such extreme cases of much greater importance than the electro-dynamic. To such sudden impulses the primary as well as the secondary are poor conductors, and therefore great differences of potential may be produced by electrostatic induction between adjacent points on the secondary. Then sparks may jump between the wires and streamers become visible in the dark if the light of the discharge through the spark gap *d d* be carefully excluded. If now we substitute a closed vacuum tube for the metallic secondary *S*, the differences of potential produced in the tube by electrostatic induction from the primary are fully sufficient to excite portions of it; but as the points of certain differences of potential on the primary are not fixed, but are generally constantly changing in position, a luminous band is produced in the tube, apparently not touching the glass, as it should, if the points of maximum and minimum differences of potential were fixed on the primary. I do not exclude the possibility of such a tube being excited only by electro-dynamic induction, for very able physicists hold this view; but in my opinions, there is as yet no positive proof given that atoms of a gas in a closed tube may arrange themselves in chains under the action of an electromotive impulse produced by electro-dynamic induction in the tube. I have been unable so far to produce striae in a tube, however long, and at whatever degree of exhaustion, that is, striae at right angles to the supposed direction of the discharge or the axis of the tube; but I have distinctly observed in a large bulb, in which a wide luminous band was produced by passing a discharge of a battery through a wire surrounding the bulb, a circle of feeble luminosity between two luminous bands, one of which was more intense than the other. Furthermore, with my

present experience I do not think that such a gas discharge in a closed tube can vibrate, that is, vibrate as a whole. I am convinced that no discharge through a gas can vibrate. The atoms of a gas behave very curiously in respect to sudden electric impulses. The gas does not seem to possess any appreciable inertia to such impulses, for it is a fact, that the higher the frequency of the impulses, with the greater freedom does the discharge pass through the gas. If the gas possesses no inertia then it cannot vibrate, for some inertia is necessary for the free vibration. I conclude from this that if a lightning discharge occurs between two clouds, there can be no oscillation, such as would be expected, considering the capacity of the clouds. But if the lightning discharge strike the earth, there is always vibration — in the earth, but not in the cloud. In a gas discharge each atom vibrates at its own rate, but there is no vibration of the conducting gaseous mass as a whole. This is an important consideration in the great problem of producing light economically, for it teaches us that to reach this result we must use impulses of very high frequency and necessarily also of high potential. It is a fact that oxygen produces a more intense light in a tube. Is it because oxygen atoms possess some inertia and the vibration does not die out instantly? But then nitrogen

Fig. 32.

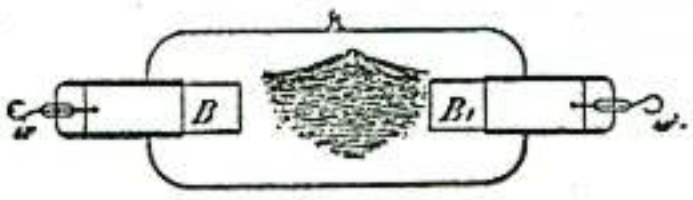

Fig. 33.

should be as good, and chlorine and vapors of many other bodies much better than oxygen, unless the magnetic properties of the latter enter prominently into play. Or, is the process in the tube of an electrolytic nature? Many observations certainly speak for it, the most important being that matter is always carried away from the electrodes and the vacuum in a bulb cannot be permanently maintained. If such process takes place in reality, then again must we take refuge in high frequencies, for, with such, electrolytic action should be reduced to a minimum, if not rendered entirely impossible. It is an undeniable fact that with very high frequencies, provided the impulses be of harmonic nature, like those obtained from an alternator, there is less deterioration and the vacua are more permanent. With disruptive discharge coils there are sudden rises of potential and the vacua are more quickly impaired, for the electrodes are deteriorated in a very short time. It was observed in some large tubes, which were provided with heavy carbon blocks B B_1, connected to platinum wires w w_1 (as illustrated in Fig. 33), and which were employed in experiments with the disruptive discharge instead of the ordinary air gap, that the carbon particles under the action of the powerful magnetic field in which the tube was placed, were deposited in regular fine lines in the middle of the tube, as illustrated. These lines were attributed to the deflection or distortion of the discharge by the magnetic field, but why the deposit occurred principally where the field was most intense did not appear quite clear. A fact of interest, likewise noted, was that the presence of a strong magnetic field increases the deterioration of the electrodes, probably by reason of the rapid interruptions it produces, whereby there is actually a higher E. M. F. maintained between the electrodes.

Much would remain to be said about the luminous effects produced in gases at low or ordinary pressures. With the present experiences before us we cannot say that the essential nature of these charming phenomena is sufficiently known. But investigations in this direction are being pushed with exceptional ardor. Every line of scientific pursuit has its fascinations, but electrical investigation appears to possess a peculiar attraction, for there is no experiment or observation of any kind in the domain of this wonderful science which would not forcibly appeal to us. Yet to me it seems, that of all the many marvelous things we observe, a vacuum tube, excited by an electric impulse from a distant source, bursting forth out of the darkness and illuminating the room with its beautiful light, is as lovely a phenomenon as can greet our eyes. More interesting still it appears when, reducing the fundamental discharges across the gap to a very small number and

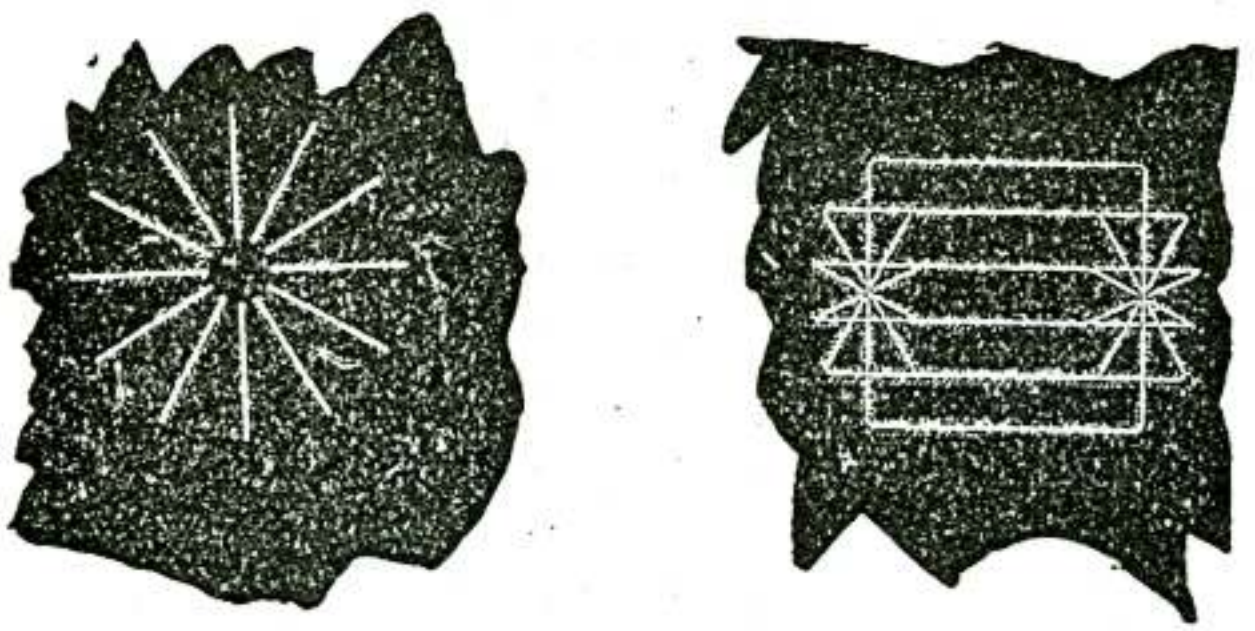

Fig. 34

waving the tube about we produce all kinds of designs in luminous lines. So by way of amusement I take a straight long tube, or a square one, or a square attached to a straight tube, and by whirling them about in the hand, I imitate the spokes of a wheel, a Gramme winding, a drum winding, an alternate current motor winding, etc (Fig. 34). Viewed from a distance the effect is weak and much of its beauty is lost, but being near or holding the tube in the hand, one cannot resist its charm.

In presenting these insignificant results I have not attempted to arrange and co-ordinate them, as would be proper in a strictly scientific investigation, in which every succeeding result should be a logical sequence of the preceding, so that it might be guessed in advance by the careful reader or attentive listener. I have preferred to concentrate my energies chiefly upon advancing novel facts or ideas which might serve as suggestions to others, and this may serve as an excuse for the lack of harmony. The

explanations of the phenomena have been given in good faith and in the spirit of a student prepared to find that they admit of a better interpretation. There can be no great harm in a student taking an erroneous view, but when great minds err, the world must dearly pay for their mistakes.

HIGH FREQUENCY OSCILLATORS FOR ELECTRO-THERAPEUTIC AND OTHER PURPOSES*

Some theoretical possibilities offered by currents of very high frequency and observations which I casually made while pursuing experiments with alternating currents, as well as the stimulating influence of the work of Hertz and of views boldly put forth by Oliver Lodge, determined me some time during 1889 to enter a systematic investigation of high frequency phenomena, and the results soon reached were such as to justify further efforts towards providing the laboratory with efficient means for carrying on the research in this particular field, which has proved itself so fruitful since. As a consequence alternators of special design were constructed and various arrangements for converting ordinary into high frequency currents perfected, both of which were duly described and are now — I assume — familiar.

One of the early observed and remarkable features of the high frequency currents, and one which was chiefly of interest to the physician, was their apparent harmlessness which made it possible to pass relatively great amounts of electrical energy through the body of a person without causing pain or serious discomfort. This peculiarity which, together with other mostly unlooked-for properties of these currents I had the honor to bring to the attention of scientific men first in an article in a technical journal in February, 1891, and in subsequent contributions to scientific societies, made it at once evident, that these currents would lend themselves particularly to electro-therapeutic uses.

With regard to the electrical actions in general, and by analogy it was reasonable to infer that the physiological effects, however complex, might be resolved in three classes. First the statical, that is, such as are chiefly dependent on the magnitude of electrical potential; second, the dynamical, that is, those principally dependent on the quality of electrical movement or current's strength through the body, and third, effects of a distinct nature due to electrical waves or oscillations, that is, impulses in which the electrical energy is alternately passing in more or less rapid succession through the static and dynamic forms.

Most generally in practice these different actions are coexistent, but by a suitable selection of apparatus and observance of conditions the experimenter may make one or other of these effects predominate. Thus he may pass through the body, or any part of the same, currents of comparatively large volume under a small electrical pressure, or he may subject the body to a high electrical pressure while the current is negligibly small, or he may put the patient under the influence of electrical waves transmitted, if desired, at considerable distance through space.

While it remained for the physician to investigate the specific actions on the organism and indicate proper methods of treatment, the various ways of applying these currents to the body of a patient suggested themselves readily to the electrician.

---

* Read at the eighth annual meeting of The American Electro-Therapeutic Association, Buffalo, N. Y., Sept. 13 to 15, 1898

As one cannot be too clear in describing a subject, a diagrammatic illustration of the several modes of connecting the circuits which I will enumerate, though obvious for the majority, is deemed of advantage.

The first and simplest method of applying the currents was to connect the body of the patient to two points of the generator, be it a dynamo or induction coil. Fig. 1 is intended to illustrate this case. The alternator G may be one giving from five to ten thousand complete vibrations per second, this number being still within the limit of practicability. The electromotive force — as measured by a hot wire instrument — may be from fifty to one hundred volts. To enable strong currents to be passed through the tissues, the terminals T T, which serve to establish contact with the patient's body should, of course, be of large area, and covered with cloth saturated with a solution of electrolyte harmless to the skin, or else the contacts are made by immersion. The regulation of the currents is best effected by means of an insulating trough A provided with two metal

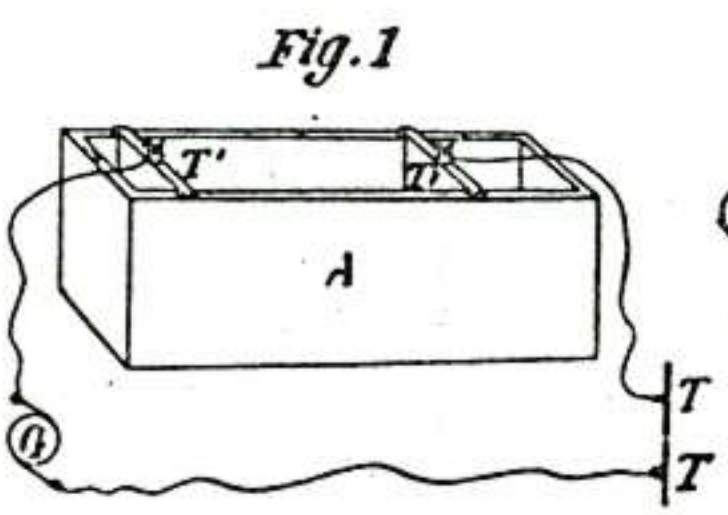

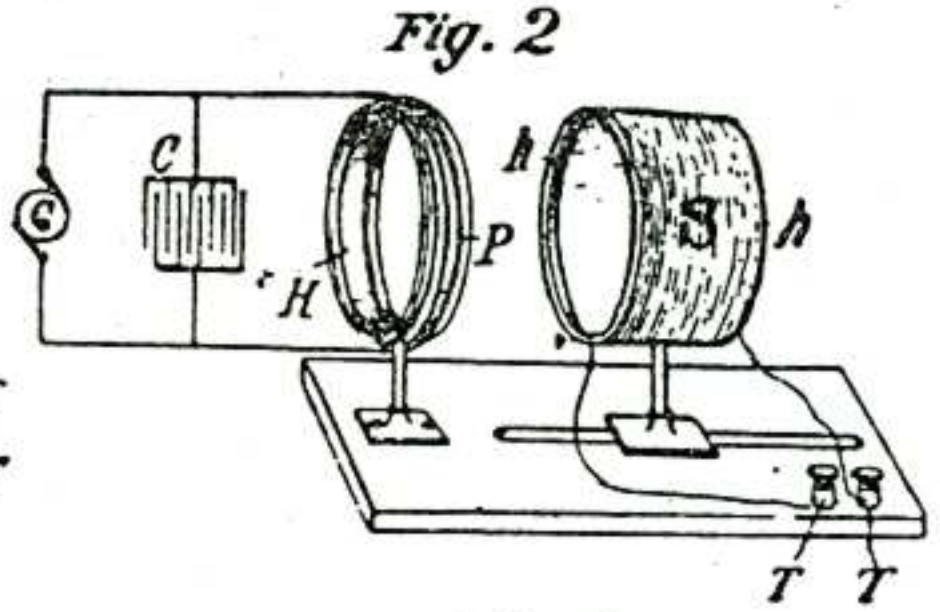

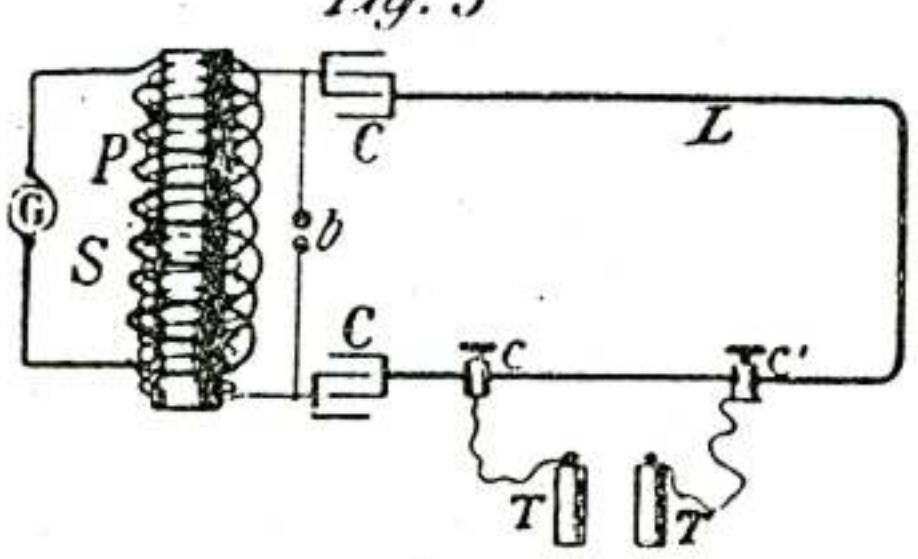

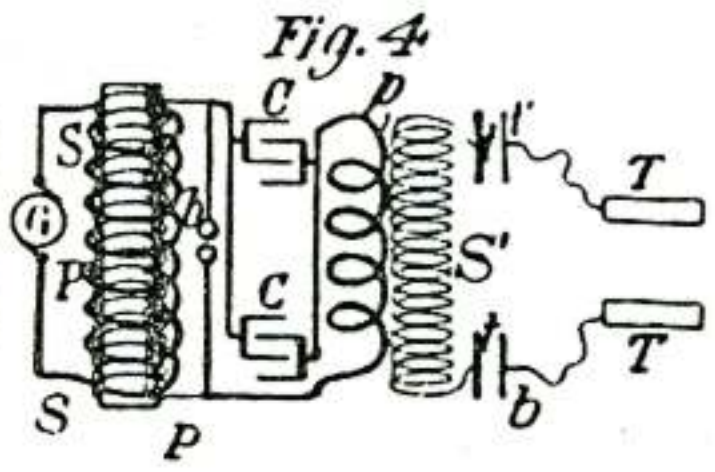

Figs. 1, 2, 3, 4.

terminals T' T' of considerable surface, one of which, at least, should be movable. The trough is filled with water, and an electrolytic solution is added to the same, until a degree of conductivity is obtained suitable for the experiments.

When it is desired to use small currents of high tension, a secondary coil is resorted to, as illustrated in Fig. 2. I have found it from the outset convenient to make a departure from the ordinary ways of winding the coils with a considerable number of small turns. For many reasons the physician will find it better to provide a large hoop H of not less than, say, three feet in diameter and preferably more, and to wind upon it a few turns of stout cable P. The secondary coil S is easily prepared by taking two wooden hoops h h and joining them with stiff cardboard. One single layer of ordinary magnet wire, and not too thin at that, will be generally sufficient, the number of turns necessary for the particular use for which the coil is intended being easily ascertained by a few trials. Two plates of large surface, forming an adjustable condenser, may be used for the

purpose of synchronizing the secondary with the primary circuit, but this is generally not necessary. In this manner a cheap coil is obtained, and one which cannot be easily injured. Additional advantages, however, will be found in the perfect regulation which is effected merely by altering the distance between the primary and secondary, for which adjustment provision should be made, and, furthermore, in the occurrence of harmonics which are more pronounced in such large coils of thick wire, situated at some distance from the primary.

The preceding arrangements may also be used with alternating or interrupted currents of low frequency, but certain peculiar properties of high frequency currents make it possible to apply the latter in ways entirely impracticable with the former.

One of the prominent characteristics of high frequency or, to be more general, of rapidly varying currents, is that they pass with difficulty through stout conductors of high self-induction. So great is the obstruction which self-induction offers to their passage that it was found practicable, as shown in the early experiments to which reference has been made, to maintain differences of potential of many thousands of volts between two points — not more than a few inches apart — of a thick copper bar of inappreciable resistance. This observation naturally suggested the disposition illustrated in Fig. 3. The source of high frequency impulses is in this instance a familiar type of transformer which may be supplied from a generator G of ordinary direct or alternating currents. The transformer comprises a primary P, a secondary S, two condensers C C which are joined in series, a loop or coil of very thick wire L and a circuit interrupting device or break b. The currents are derived from the loop L by two contacts c c', one or both of which are capable of displacement along the wire L. By varying the distance between these contacts, any difference of potential, from a few volts to many thousands, is readily obtained on the terminals or handles T T. This mode of using the currents is entirely safe and particularly convenient, but it requires a very uniform working of the break b employed for charging and discharging the condenser.

Another equally remarkable feature of high frequency impulses was found in the facility with which they are transmitted through condensers, moderate electromotive forces and very small capacities being required to enable currents of considerable volume to pass. This observation made it practicable to resort to a plan such as indicated in Fig. 4. Here the connections are similar to those shown in the preceding case, except that the condensers C C are joined in parallel. This lowers the frequency of the currents, but has the advantage of allowing the working with a much smaller difference of potential on the terminals of the secondary S. Since the latter is the chief item of expense of such apparatus and since its price rapidly increases with the number of turns required, the experimenter will find it generally cheaper to make a sacrifice in the frequency, which, however, will be high enough for most purposes. However, he only needs to reduce proportionately the number of turns or the length of primary p to obtain the same frequency as before, but the economy of transformation will be somewhat reduced in so doing and the break b will require more attention. The secondary S' of the high frequency coil has two metal plates t t of considerable surface connected to its terminals, and the current for use is derived from two similar plates t' t' in proximity to the former. Both the tension and volume of the currents taken from terminals T T may be easily regulated and in a continuous manner by simply varying the distance between the two pairs of plates t t and t' t' respectively.

A facility is also afforded in this disposition for raising or lowering the potential of one of the terminals T, irrespective of the changes produced on the other terminal, this making it possible to cause a stronger action on one or other part of the patient's body.

The physician may find it for some or other reason convenient to modify the arrangements in Figs. 2, 3 and 4 by connecting one terminal of the high frequency source to the ground. The effects will be in most respects the same, but certain peculiarities

will be noted in each case. When a ground connection is made it may be of some consequence which of the terminals of the secondary is connected to the ground, as in high frequency discharges the impulses of one direction are generally preponderating.

Among the various noteworthy features of these currents there is one which lends itself especially to many valuable uses. It is the facility which they afford for conveying large amounts of electrical energy to a body entirely insulated in space. The practicability of this method od energy transmission, which is already receiving useful applications and promises to become of great importance in the near future, has helped to dispel the old notion assuming the necessity of a return circuit for the conveyance of electrical

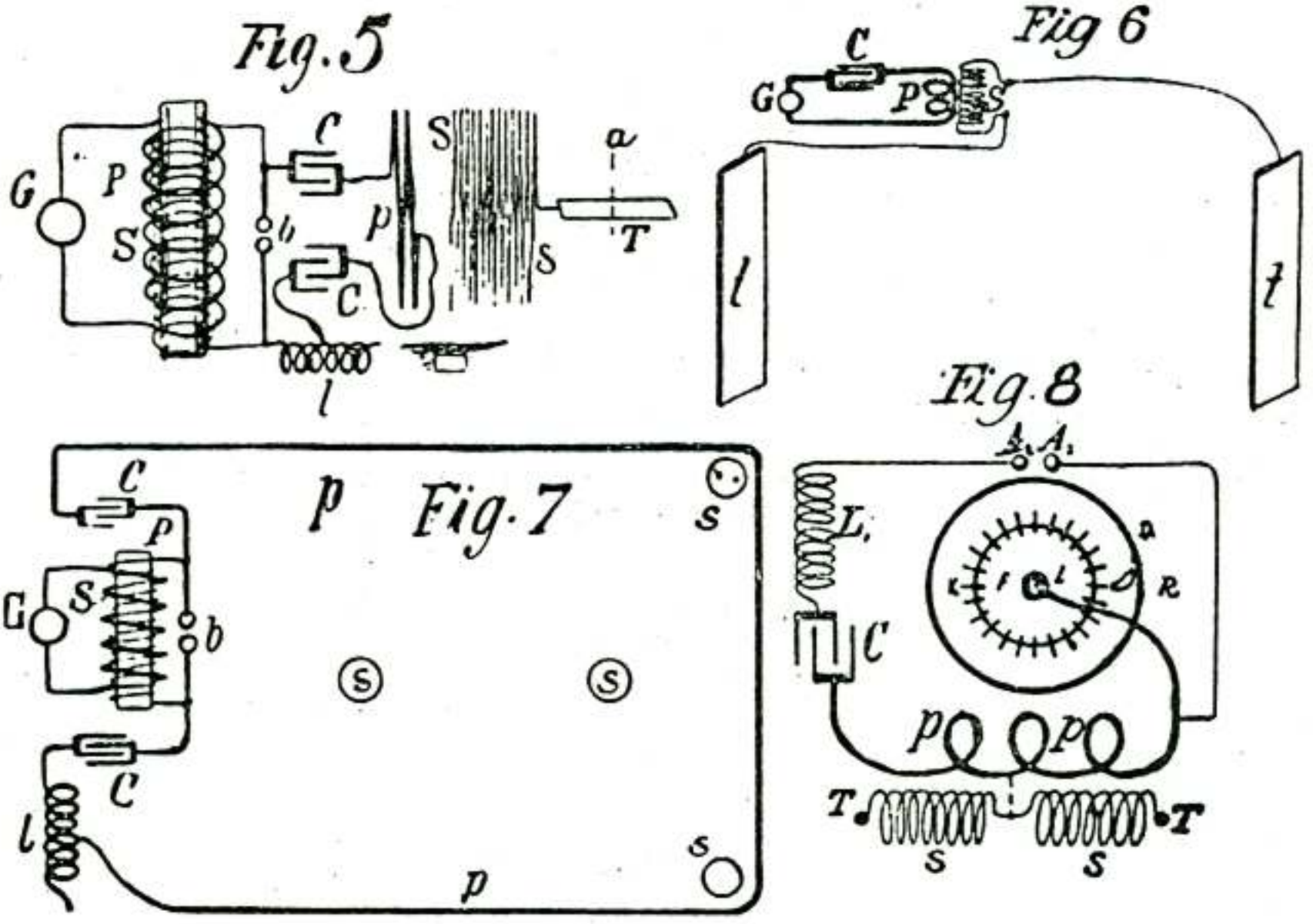

Figs. 5, 6, 7, 8.

energy in any considerable amount. With novel appliances we are enabled to pass through a wire, entirely insulated on one end, currents strong enough to fuse it, or to convey through the wire any amount of energy to an insulated body. This mode of applying high frequency currents in medical treatment appears to me to offer the greatest possibilities at the hands of the physician. The effects produced in this manner possess features entirely distinct from those observed when the currents are applied in any of the before mentioned or similar ways.

The circuit connections as usually made are illustrated schematically in Fig. 5, which, with reference to the diagrams before shown, is self-explanatory. The condensers C C, connected in series, are preferably charged by a step-up transformer, but a high frequency alternator, static machine, or a direct current generator, if it be of sufficiently high tension to enable the use of small condensers, may be used with more or less success. The primary p, through which the high frequency discharges of the condensers are passed, consists of very few turns of cable of as low resistance as possible, and the secondary s, preferably at some distance from the primary to facilitate free oscillation, has one of its ends — that is the one which is nearer to the primary — connected to the ground, while the other end leads to on insulated terminal T, with which the body of the patient is

connected. It is of importance in this case to establish synchronism between the oscillations in the primary and secondary circuits p and s respectively. This will be as a rule best effected by varying the self-induction of the circuit including the primary loop or coil p, for which purpose an adjustable self-induction e is provided; but in cases when the electromotive force of the generator is exceptionally high, as when a static machine is used and a condenser consisting of merely two plates offers sufficient capacity, it will be simpler to attain the same object by varying the distance of the plates.

The primary and secondary oscillations being in close synchronism, the points of highest potential will be on a part of terminal T, and the consumption of energy will occur chiefly there. The attachment of the patient's body to the terminal will in most cases very materially affect the period of oscillation in the secondary, making it longer, and a readjustment of the primary circuit will have to be made in each case to suit the capacity of the body connected with terminal T. Synchronism should always be preserved, and the intensity of the action varied by moving the secondary coil to or from the primary, as may be desired. I know of no method which would make it possible to subject the human body to such excessive electrical pressures as are practicable with this, or of one which would enable the conveying to and giving off from the body without serious injury amounts of electrical energy approximating even in a remote degree those which are entirely practicable when this manner of applying the energy is resorted to. This is evidently due to the fact that action is chiefly superficial, the largest possible section being offered to the transfer of the current, or, to say more correctly, of the energy. With a very rapidly and smoothly working break I would not think it impossible to convey to the body of a person and to give off into the space energy at the rate of several horse power with impunity, while a small part of this amount applied in other ways could not fail to produce injury.

When a person is subjected to the action of such a coil, the proper adjustments being carefully observed, luminous streams are seen in the dark issuing from all parts of the body. These streams are short and of delicate texture when the number of breaks is very great and the action of the device b (Fig. 5) free of any irregularities, but when the number of breaks is small or the action of the device imperfect, long and noisy streams appear which cause some discomfort. The physiological effects produced with apparatus of this kind may be graduated from a hardly perceptible action when the secondary is at a great distance from the primary, to a most violent one when both coils are placed at a small distance. In the latter case only a few seconds are sufficient to cause a feeling of warmth all over the body, and soon after the person perspires freely. I have repeatedly, in demonstrations to friends, exposed myself longer to the action of the oscillations, and each time, after the lapse of an hour or so, an immense fatigue, of which it is difficult to give an idea, would take hold of me. It was greater than I experienced on some occasions after the most straining and prolonged bodily exertion. I could scarcely make a step and could keep the eyes open only with the greatest difficulty. I slept soundly afterward, and the after-effect was certainly beneficial, but the medicine was manifestly too strong to be used frequently.

One should be cautious in performing such experiments for more than one reason. At or near the surface of the skin, where the most intense action takes place, various chemical products are formed, the chief being ozone and nitrogen compounds. The former is itself very destructive, this feature being illustrated by the fact that the rubber insulation of a wire is destroyed so quickly as to make the use of such insulation entirely impracticable. The compounds of nitrogen, when moisture is present, consist largely of nitric acid which might, by excessive application, prove hurtul to the skin. So far, I have not noted injuries which could be traced directly to this cause, though on several occasions burns were produced in all respects similar to those which were later observed and attributed to the Röntgen rays. This view is seemingly being abandoned, having not been substantiated by experimental facts, and so also is the notion that these rays are

transverse vibrations. But while investigation is being turned in what appears to be the right direction, scientific men are still at sea. This state of things impedes the progress of the physicist in these new regions and makes the already hard task of the physician still more difficult and uncertain.

One or two observations made while pursuing experiments with the apparatus described might be found as deserving mention here. As before stated, when the oscillations in the primary and secondary circuits are in synchronism, the points of highest potential are on some portion of the terminal T. The synchronism being perfect and the length of the secondary coil just equal to one-quarter of the wave length, these points will be exactly on the free end of terminal T, that is, the one situated farthest from the end of the wire attached to the terminal. If this be so and if now the period of the oscillations in the primary be shortened, the points of highest potential will recede towards the secondary coil, since the wave-length is reduced and since the attachment of one end of the secondary coil to the ground determines the position of the nodal points, that is, the points of least potential. Thus, by varying the period of vibration of the primary circuit in any manner, the points of highest potential may be shifted accordingly along the terminal T, which has been shown, designedly, long to illustrate this feature. The same phenomenon is, of course, produced if the body of a patient constitutes the terminal, and an assistant may by the motion of a handle cause the points of highest potential to shift along the body with any speed he may desire. When the action of the coil is vigorous, the region of highest potential is easily and unpleasantly located by the discomfort or pain experienced, and it is most curious to feel how the pain wanders up and down, or eventually across the body, from hand to hand, if the connection to the coil is accordingly made — in obedience to the movement of the handle controlling the oscillations. Though I have not observed any specific action in experiments of this kind, I have always felt that this effect might be capable of valuable use in electro-therapy.

Another observation which promises to lead to much more useful results is the following: As before remarked, by adopting the method described, the body of a person may be subjected without danger to electrical pressures vastly in excess of any producible by ordinary apparatus, for they may amount to several million volts, as has been shown in actual practice. Now, when a conducting body is electrified to so high a degree, small particles, which may be adhering firmly to its surface, are torn off with violence and thrown to distances which can be only conjectured. I find that not only firmly adhering matter, as paint, for instance, is thrown off, but even the particles of the toughest metals are torn off. Such actions have been thought to be restricted to a vacuous inclosure, but with a powerful coil they occur also in the ordinary atmosphere. The facts mentioned would make it reasonable to expect that this extraordinary effect which, in other ways, I have already usefully applied, will likewise prove to be of value in electro-therapy. The continuous improvement of the instruments and the study of the phenomenon may shortly lead to the establishment of a novel mode of hygienic treatment which would permit an instantaneous cleaning of the skin of a person, simply by connecting the same to, or possibly, by merely placing the person in the vicinity of a source of intense electrical oscillations, this having the effect of throwing off, in a twinkle of the eye, dust or particles of any extraneous matter adhering to the body. Such a result brought about in a practicable manner would, without doubt, be of incalculable value in hygiene and would be an efficient and time-saving substitute for a water bath, and particularly appreciated by those whose contentment consists in undertaking more than they can accomplish.

High frequency impulses produce powerful inductive actions and in virtue of this feature they lend themselves in other ways to the uses of the electro-therapeutist. These inductive effects are either electrostatic or electrodynamic. The former diminish much

more rapidly with the distance — with the square of the same — the latter are reduced simply in proportion to the distance. On the other hand, the former grow with the square of intensity of the source, while the latter increase in a simple proportion with the intensity. Both of these effects may be utilized for establishing a field of strong action extending through considerable space, as through a large hall, and such an arrangement might be suitable for use in hospitals or institutions of this kind, where it is desirable to treat a number of patients at the same time.

Fig. 6 illustrates the manner, as I have shown it originally, in which such a field of electrostatic action is established. In this diagram G is a generator of currents of very high frequency, C a condenser for counteracting the self-induction of the circuit which includes the primary P of an induction coil, the secondary S of which has two plates t t of large surface connected to its terminals. Well known adjustments being observed, a very strong action occurs chiefly in the space between the plates, and the body of a person

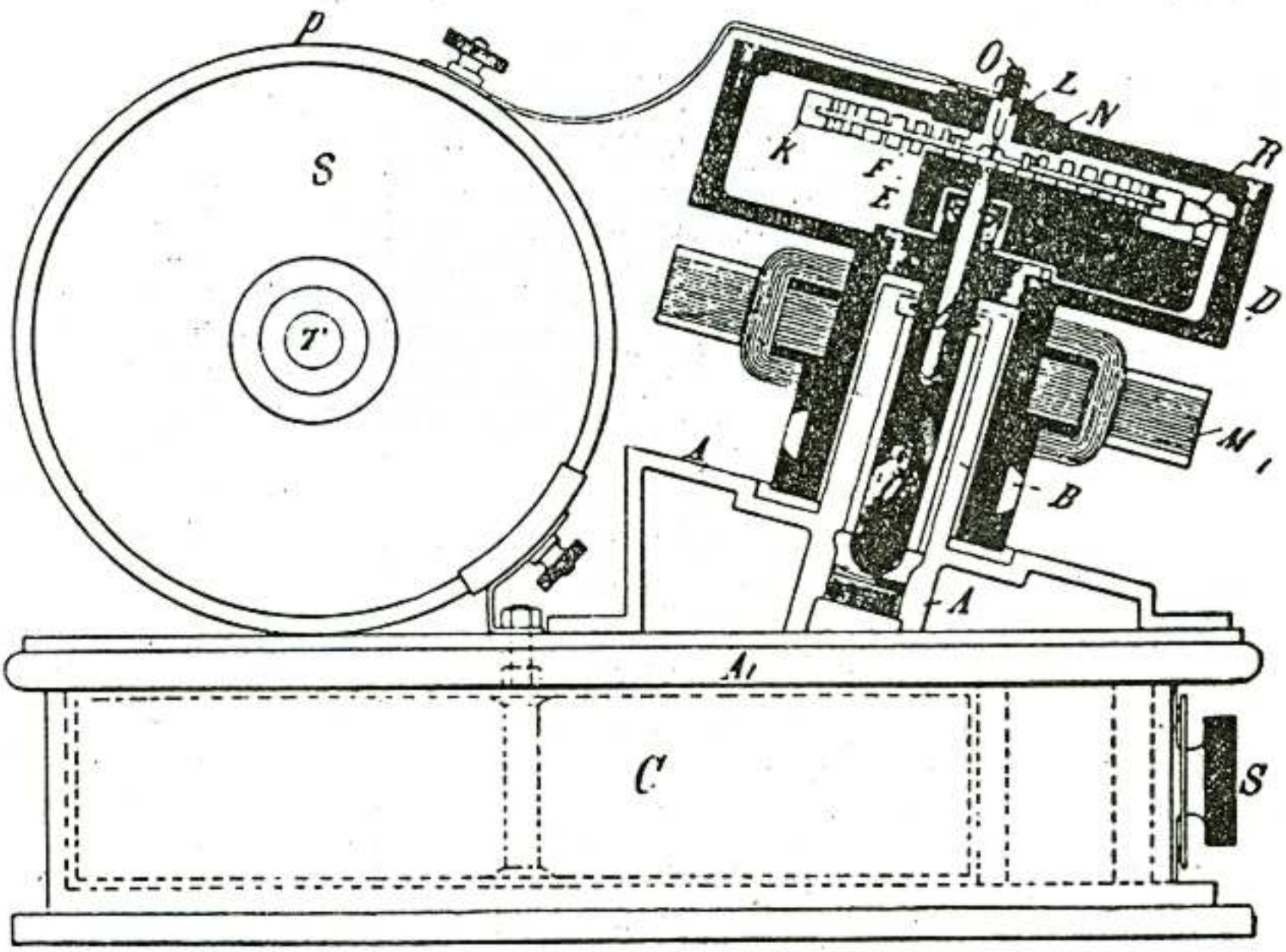

Fig. 9.

is subjected to rapid variations of potential and surgings of current, which produce, even at a great distance, marked physiological effects. In my first experiments I used two metal plates as shown, but later I found it preferable to replace them by two large hollow spheres of brass covered with wax of a thickness of about two inches. The cables leading to the terminals of the secondary coil were similarly covered, so that any of them could be approached without danger of the insulation breaking down. In this manner the unpleasant shocks, to which the experimenter was exposed when using the plates, were prevented.

In Fig. 7 a plan for similarly utilizing the dynamic inductive effects of high frequency currents is illustrated. As the frequencies obtainable from an alternator are

not as high as is desired, conversion by means of condensers is resorted to. The diagram will be understood at a glance from the foregoing description. It only need be stated that the primary p, through which the condensers are made to discharge, is formed by a thick stranded cable of low self-induction and resistance, and passes all around the hall. Any number of secondary coils s s s, each consisting generally of a single layer of rather thick wire, may be provided. I have found it practicable to use as many as one hundred, each being adjusted for a definite period and responding to a particular vibration passed through the primary. Such a plant I have had in use in my laboratory since 1892, and many times it has contributed to the pleasure of my visitors and also proved itself of practical utility. On a latter occasion I had the pleasure of entertaining some of the members with experiments of this kind, and this opportunity I cannot let pass without expressing my thanks for the interest which was awakened in me by their visit, as well as for the generous acknowledgment of the courtesy by the Association. Since that time my apparatus has been very materially improved, and now I am able to create a field of such intense induction in the laboratory that a coil three feet in diameter, by careful adjustment, will deliver energy at the rate of one-quarter of a horse power, no matter where it is placed within the area inclosed by the primary loops. Long sparks, streamers and all other phenomena obtainable with induction coils are easily producible anywhere within the space, and such coils, though not connected to anything, may be utilized exactly as ordinary coils, and what is still more remarkable, they are more effective. For the past few years I have often been urged to show experiments in public, but, though I was desirous to comply with such requests, pressing work has so far made it impossible. These advances have been the result of slow but steady improvement in the details of the apparatus which I hope to be able to describe connectedly in the near future.

However remarkable the electrodynamic inductive effects, which I have mentioned, may appear, they may be still considerably intensified by concentrating the action upon a very small space. It is evident that since, as before stated, electromotive forces of many thousand volts are maintained between two points of a conducting bar or loop only a few inches long, electromotive forces of approximately the same magnitude will be set up in conductors situated near by. Indeed, I found that it was practicable in this manner to pass a discharge through a highly exhausted bulb, although the electromotive force required amounted to as much as ten or twenty thousand volts, and for a long time I followed up experiments in this direction with the object of producing light in a novel and more economical way. But the tests left no doubt that there was great energy consumption attendant to this mode of illumination, at least with the apparatus I had then at command, and, finding another method which promised a higher economy of transformation, my efforts turned in this new direction. Shortly afterward (some time in June, 1891), Prof. J. J. Thomson described experiments which were evidently the outcome of long investigation, and in which he supplied much novel and interesting information, and this made me return with renewed zeal to my own experiments. Soon my efforts were centered upon producing in a small space the most intense inductive action, and by gradual improvement in the apparatus I obtained results of a surprising character. For instance, when the end of a heavy bar of iron was thrust within a loop powerfully energized, a few moments were sufficient to raise the bar to a high temperature. Even heavy lumps of other metals were heated as rapidly as though they were placed in a furnace. When a continuous band formed of a sheet of tin was thrust into the loop, the metal was fused instantly, the action being comparable to an explosion, and no wonder, for the frictional losses accumulated in it at the rate of possibly ten horse power. Masses of poorly conducting material behaved similarly, and when a highly exhausted bulb was pushed into the loop, the glass was heated in a few seconds nearly to the point of melting.

When I first observed these astonishing actions, I was interested to study their effects upon living tissues. As may be assumed, I proceeded with all the necessary caution, and well I might, for I had the evidence that in a turn of only a few inches in diameter an electromotive force of more than ten thousand volts was produced, and such high pressure would be more than sufficient to generate destructive currents in the tissue. This appeared all the more certain as bodies of comparatively poor conductivity were rapidly heated and even partially destroyed. One may imagine my astonishment when I found that I could thrust my hand or any other part of the body within the loop and hold it there with impunity. More than on one occasion, impelled by a desire to make some novel and useful observation, I have willingly or unconsciously performed an experiment connected with some risk, this being scarcely avoidable in laboratory experience, but have always believed, and do so now, that I have never undertaken anything in which, according to my own estimation, the chances of being injured were so great as when I placed my head within the space in which such terribly destructive forces were at work. Yet I have done so, and repeatedly, and have felt nothing. But I am firmly convinced that there is great danger attending such experiment, and some one going just a step farther than I have gone may be instantly destroyed. For, conditions may exist similar to those observable with a vacuum bulb. It may be placed in the field of the loop, however intensely energized, and so long as no path for the current is formed, it will remain cool and consume practically no energy. But the moment the first feeble current passes, most of the energy of the oscillations rushes to the place of consumption. If by any action whatever, a conducting path were formed within the living tissue or bones of the head, it would result in the instant destruction of these and death of the foolhardy experimenter. Such a method of killing, if it were rendered practicable, would be absolutely painless. Now, why is it that in a space in which such violent turmoil is going on living tissue remains uninjured? One might say the currents cannot pass because of the great self-induction offered by the large conducting mass. But this it cannot be, because a mass of metal offers a still higher self-induction and is heated just the same. One might argue the tissues offer too great a resistance. But this again cannot be the reason, for all evidence shows that the tissues conduct well enough, and besides, bodies of approximately the same resistance are raised to a high temperature. One might attribute the apparent harmlessness of the oscillations to the high specific heat of the tissue, but even a rough quantitative estimate from experiments with other bodies shows that this view is untenable. The only plausible explanation I have so far found is that the tissues are condensers. This only can account for the absence of injurious action. But it is remarkable that, as soon as a heterogeneous circuit is constituted, as by taking in the hands a bar of metal and forming a closed loop in this manner, the passage of the currents through the arms is felt, and other physiological effects are distinctly noted. The strongest action is, of course, secured when the exciting loop makes only one turn, unless the connections take up a considerable portion of the total length of the circuit, in which case the experimenter should settle upon the least number of turns by carefully estimating what he loses by increasing the number of turns, and what he gains by utilizing thus a greater proportion of the total length of the circuit. It should be borne in mind that, when the exciting coil has a considerable number of turns and is of some length, the effects of electrostatic induction may preponderate, as there may exist a very great difference of potential — a hundred thousand volts or more — between the first and last turn. However, these latter effects are always present even when a single turn is employed.

When a person is placed within such a loop, any pieces of metal, though of small bulk, are perceptibly warmed. Without doubt they would be also heated — particularly if they were of iron — when embedded in living tissue, and this suggests the possibility of

surgical treatment by this method. It might be possible to sterilize wounds, or to locate, or even to extract metallic objects, or to perform other operations of this kind within the sphere of the surgeon's duties in this novel manner.

Most of the results enumerated, and many others still more remarkable, are made possible only by utilizing the discharges of a condenser. It is probable that but a very few — even among those who are working in these identical fields — fully appreciate what a wonderful instrument such a condenser is in reality. Let me convey an idea to this effect. One may take a condenser, small enough to go in one's vest pocket, and by skilfully using it he may create an electrical pressure vastly in excess — a hundred times greater if necessary — than any producible by the largest static machine ever constructed. Or, he may take the same condenser and, using it in a different way, he may obtain from it currents against which those of the most powerful welding machine are utterly insignificant. Those who are imbued with popular notions as to the pressure of static machines and currents obtainable with a commercial transformer, will be astonished at this statement — yet the truth of it is easy to see. Such results are obtainable, and easily, because the condenser can discharge the stored energy in an inconceivably short time. Nothing like this property is known in physical science. A compressed spring, or a storage battery, or any other form of device capable of storing energy, cannot do this; if they could, things udreamt of at present might be accomplished by their means. The nearest approach to a charged condenser is a high explosive, as dynamite. But even the most violent explosion of such a compound bears no comparison with the discharge or explosion of a condenser. For, while the pressures which are produced in the detonation of a chemical compound are measured in tens of tons per square inch, those which may be caused by condenser discharges may amount to thousands of tons per square inch, and if a chemical could be made which would explode as quickly as a condenser can be discharged under conditions which are realizable — an ounce of it would quite certainly be sufficient to render useless the largest battleship.

That important realizations would follow from the use of an instrument possessing such ideal properties I have been convinced since long ago, but I also recognized early that great difficulties would have to be overcome before it could replace less perfect implements now used in the arts for the manifold transformations of electrical energy. These difficulties were many. The condensers themselves, as usually manufactured, were inefficient, the conductors wasteful, the best insulation inadequate, and the conditions for the most efficient conversion were hard to adjust and to maintain. One difficulty, however, which was more serious than the others, and to which I called attention when I first described this system of energy transformation, was found in the devices necessarily used for controlling the charges and discharges of the condenser. They were wanting in efficiency and reliability and threatened to prove a decided drawback, greatly restricting the use of the system and depriving it of many valuable features. For a number of years I have tried to master this difficulty. During this time a great number of such devices were experimented upon. Many of them promised well at first, only to prove inadequate in the end. Reluctantly, I came back upon an idea on which I had worked long before. It was to replace the ordinary brushes and commutator segments by fluid contacts. I had encountered difficulties then, but the intervening years in the laboratory were not spent in vain, and I made headway. First it was necessary to provide for a circulation of the fluid, but forcing it through by a pump proved itself impractical. Then the happy idea presented itself to make the pumping device an integral part of the circuit interrupter, inclosing both in a receptacle to prevent oxydation. Next some simple ways of maintaining the circulation, as by rotating a body of mercury, presented themselves. Then I learned how to reduce the wear and losses which still existed. I fear that these statements, indicating how much effort was spent in these seemingly insignificant details will not

convey a high idea of my ability, but I confess that my patience was taxed to the utmost. Finally, though, I had the satisfaction of producing devices which are simple and reliable in their operation, which require practically no attention and which are capable of effecting a transformation of considerable amounts of energy with fair economy. It is not the best that can be done, by any means, but it is satisfactory, and I feel that the hardest task is done.

The physician will now be able to obtain an instrument suitable to fulfil many requirements. He will be able to use it in electro-therapeutic treatment in most of the ways enumerated. He will have the facility of providing himself with coils such as he may desire to have for any particular purpose, which will give him any current or any pressure he may wish to obtain. Such coils will consist of but a few turns of wire, and the expense of preparing them will be quite insignificant. The instrument will also enable him to generate Röntgen rays of much greater power than obtainable with ordinary apparatus. A tube must still be furnished by the manufacturers which will not deteriorate and which will allow to concentrate larger amounts of energy upon the electrodes. When this is done, nothing will stand in the way of an extensive and efficient application of this beautiful discovery which must ultimately prove itself of the highest value, not only at the hands of the surgeon, but also of the electro-therapist and, what is most important, of the bacteriologist.

To give a general idea of an instrument in which many of the latter improvements are embodied, I would refer to Fig. 9, which illustrates the chief parts of the same in side elevation and partially in vertical cross-section. The arrangement of the parts is the same as in the form of instrument exhibited on former occasions, only the exciting coil with the vibrating interrupter is replaced by one of the improved circuit breakers to which reference has been made.

This device comprises a casting A with a protruding sleeve B, which in a bushing supports a freely rotatable shaft a. The latter carries an armature within a stationary field magnet M and on the top, a hollow iron pulley D, which contains the break proper. Within the shaft a, and concentrically with the same, is placed a smaller shaft b, likewise freely movable on ball-bearings and supporting a weight E. This weight being on one side and the shafts a and b inclined to the vertical, the weight remains stationary as the pulley is rotated. Fastened to the weight E is a device R in the form of a scoop with very thin walls, narrow on the end nearer to the pulley and wider on the other end. A small quantity of mercury being placed in the pulley and the latter rotated against the narrow end of the scoop, a portion of the fluid is taken up and thrown in a thin and wide stream towards the centre of the pulley. The top of the latter is hermetically closed by an iron washer, as shown, this washer supporting on a steel rod L a disk F of the same metal provided with a number of thin contact blades K. The rod L is insulated by washers N from the pulley, and for the convenience of filling in the mercury a small screw o is provided. The bolt L forming one terminal of the circuit breaker is connected by a copper strip to the primary p. The other end of the primary coil leads to one of the terminals of the condenser C, contained in a compartment of a box A, another compartment of the same being reserved for switch S and terminals of the instrument. The other terminal of the condenser is connected to the casting A and through it to pulley D. When the pulley is rotated, the contact blades K are brought rapidly in and out of contact with the stream of mercury, thus closing and opening the circuit in quick succession. With such a device it is easy to obtain ten thousand makes and breaks per second and even more. The secondary a is made of two separate coils and so arranged that it can be slipped out, and a metal strip in its middle connects it to the primary coil. This is done to prevent the secondary from breaking down when one of the terminals is overloaded, as it often happens in working Röntgen bulbs. This form of coil will withstand a very much greater difference of potential than coils as ordinarily constructed.

The motor has both field and armature built of plates, so that it can be used on alternating as well as direct current supply circuits, and the shafts are as nearly as possible vertical, so as to require the least care in oiling. Thus, the only thing which really requires some attention is the commutator of the motor, but where alternating currents are always available, this source of possible trouble is easily done away with.

The circuit connections of the instrument have been already shown and the mode of operation explained in periodicals. The usual manner of connecting is illustrated in Fig. 8, in which A_2 A_2 are the terminals of the supply circuit, L, a self-induction coil for raising the pressure, which is connected in series with condenser C and primary P P. The remaining letters designate the parts correspondingly marked in Fig. 9 and will be understood with reference to the latter.

PATENTS

I

MOTORS AND GENERATORS

UNITED STATES PATENT OFFICE.

NIKOLA TESLA, OF SMILJAN LIKA, AUSTRIA-HUNGARY, ASSIGNOR TO THE TESLA ELECTRIC LIGHT AND MANUFACTURING COMPANY, OF RAHWAY, NEW JERSEY

COMMUTATOR FOR DYNAMO-ELECTRIC MACHINES.

SPECIFICATION forming part of Letters Patent No. 334,823, dated January 26, 1886.

Application filed May 6, 1885. Serial No. 164,534. (No model.)

To all whom it may concern:

Be it known that I, NIKOLA TESLA, of Smiljan Lika, border country of Austria-Hungary, have invented an Improvement in Dynamo-Electric Machines, of which the following is a specification.

My invention relates to the commutators on dynamo electric machines, especially in machines of great electromotive force, adapted to arc lights; and it consists in a device by means of which the sparking on the commutator is prevented

It is knowu that in machines of great electromotive force—such, for instance, as those used for arc lights—whenever one commutator bar or plate comes out of contact with the collecting-brush a spark appears on the commutator. This spark may be due to the break of the complete circuit, or of a shunt of low resistance formed by the brush between two or more commutator-bars. In the first case the spark is more apparent, as there is at the moment when the circuit is broken a discharge of the magnets through the field-helices, producing a great spark or flash which causes an unsteady current, rapid wear of the commutator bars and brushes, and waste of power. The sparking may be reduced by various devices, such as providing a path for the current at the moment when the commutator segment or bar leaves the brush, by short-circuiting the field-helices, by increasing the number of the commutator-bars, or by other similar means; but all these devices are expensive or not fully available, and seldom attain the object desired.

My invention enables me to prevent the sparking in a simple manner. For this purpose I employ with the commutator-bars and intervening insulating material mica, asbestus paper or other insulating and preferably incombustible material, which I arrange to bear on the surface of the commutator, near to and behind the brush.

My invention will be easily understood by reference to the accompanying drawings.

In the drawings, Figure 1 is a section of a commutator with an asbestus insulating device; and Fig. 2 is a similar view, representing two plates of mica upon the back of the brush.

In Fig. 1, C represents the commutator and intervening insulating material; B B, the brushes. *d d* are sheets of asbestus paper or other suitable non-conducting material. *f f* are springs, the pressure of which may be adjusted by means of the screws *g g*.

In Fig. 2 a simple arrangement is shown with two plates of mica or other material. It will be seen that whenever one commutator-segment passes out of contact with the brush the formation of the arc will be prevented by the intervening insulating material coming in contact with the insulating material on the brush.

My invention may be carried out in many ways; and I do not limit myself to any particular device, as my invention consists, broadly, in providing a solid non-conducting body to bear upon the surface of the commutator, by the intervention of which body the sparking is partly or completely prevented.

I prefer to use asbestus paper or cloth impregnated with zinc-oxide, magnesia, zirconia, or other suitable material, as the paper and cloth are soft, and serve at the same time to wipe and polish the commutator; but mica or any other suitable material may be employed, said material being an insulator or a bad conductor of electricity.

y invention may be applied to any electric apparatus in which sliding contacts are employed.

I claim as my invention—

1. The combination, with the commutator-bars and intervening insulating material and brushes in a dynamo electric machine, of a solid insulator or bad conductor of electricity arranged to bear upon the surface of the commutator adjacent to the end of the brush, for the purpose set forth.

2. In an electric apparatus in which sliding contacts with intervening insulating material are employed, the combination, with the contact springs or brushes, of a solid insulator or bad conductor of electricity, as and for the purposes set forth.

Signed by me this 2d day of May, A. D. 1885.

NIKOLA TESLA.

Witnesses:
GEO. T. PINCKNEY,
WILLIAM G. MOTT.

P-6

(No Model.)

N. TESLA

COMMUTATOR FOR DYNAMO ELECTRIC MACHINES.

No. 334,823. Patented Jan. 26, 1886.

Fig 1

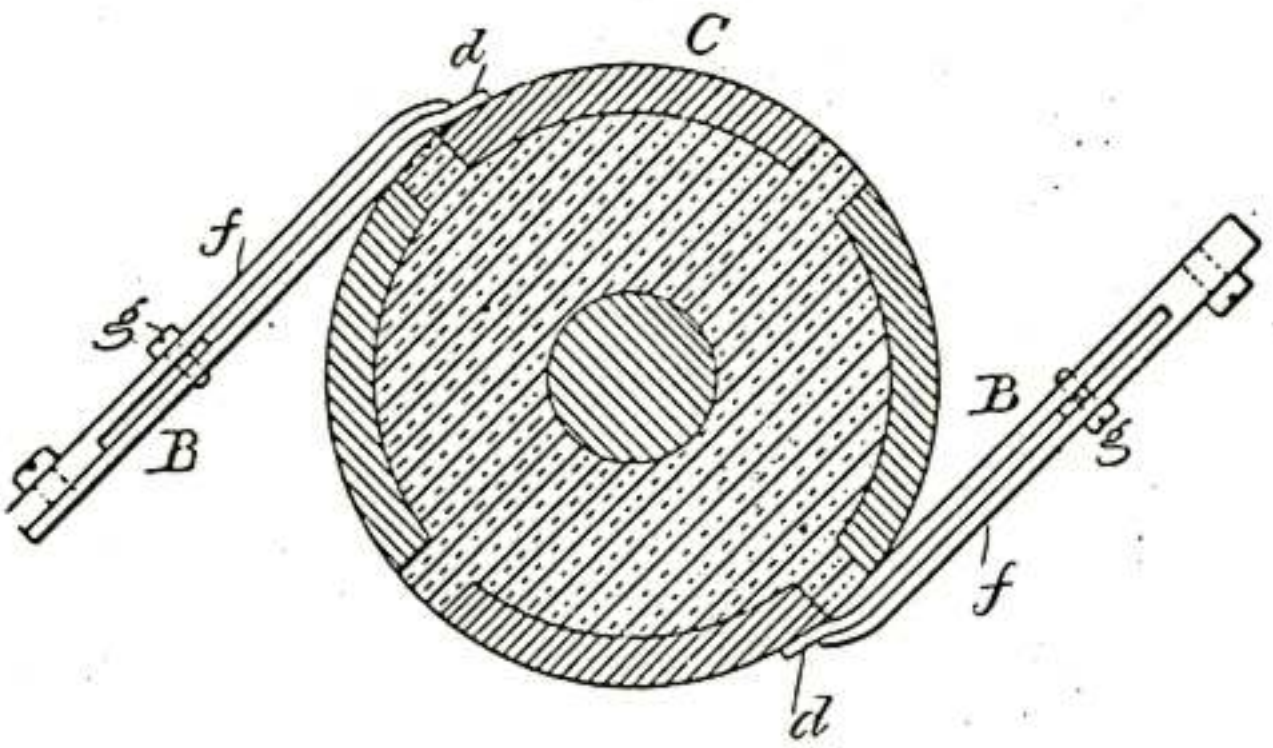

Fig 2

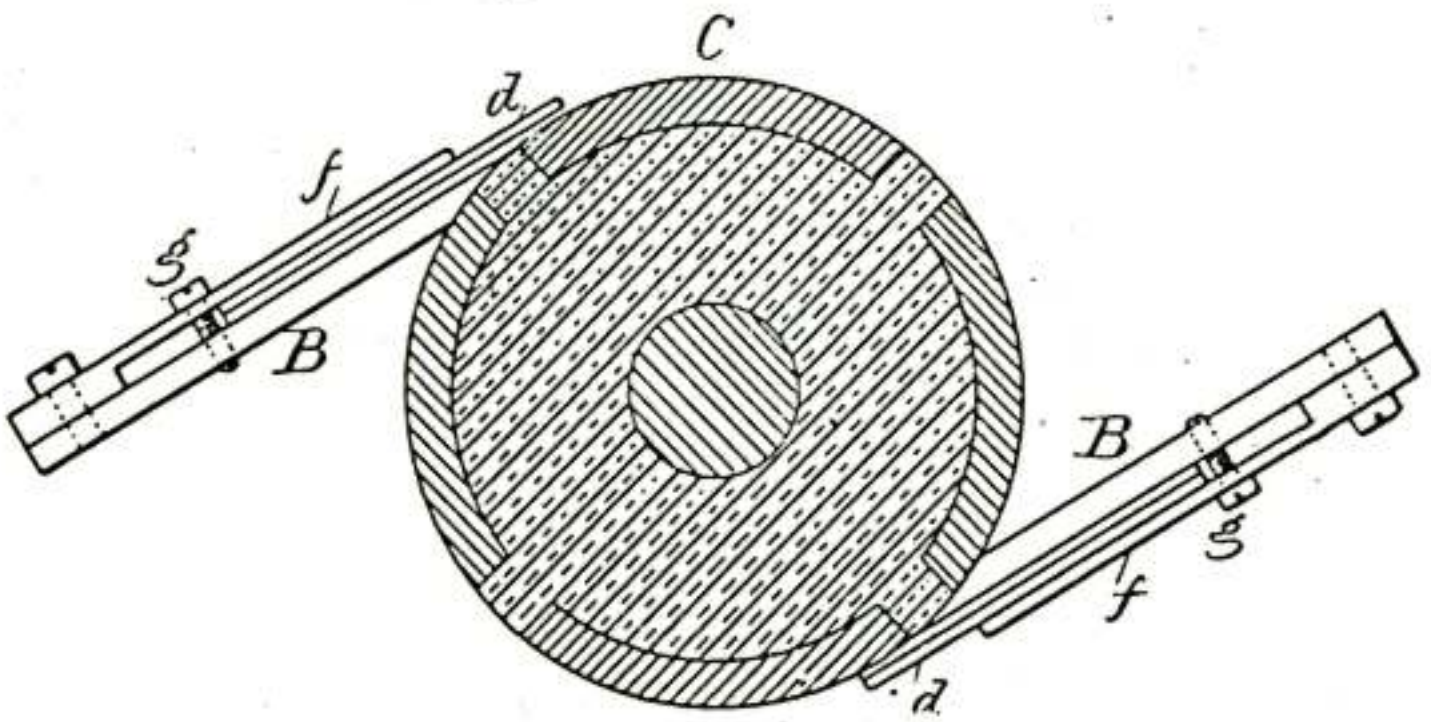

Witnesses

Chas H. Smith

J Staib

Inventor

Nikola Tesla

for Lemuel W. Serrell

atty

UNITED STATES PATENT OFFICE.

NIKOLA TESLA, OF SMILJAN LIKA, AUSTRIA-HUNGARY, ASSIGNOR TO THE TESLA ELECTRIC LIGHT AND MANUFACTURING COMPANY OF RAHWAY, NEW JERSEY.

REGULATOR FOR DYNAMO-ELECTRIC MACHINES.

SPECIFICATION forming part of Letters Patent No. 336,961, dated March 2, 1886.

Application filed May 18, 1885. Serial No. 165,793. (No model.)

To all whom it may concern:

Be it known that I, NIKOLA TESLA, of Smiljan Lika, border country of Austria-Hungary, have invented an Improvement in Dynamo-Electric Machines, of which the following is a specification.

The object of my invention is to provide an improved method for regulating the current on dynamo-electric machines.

In my improvement I make use of two main brushes, to which the ends of the helices of the field-magnets are connected, and an auxiliary brush and a branch or shunt connection from an intermediate point of the field-wire to the auxiliary brush.

The relative positions of the respective brushes are varied, either automatically or by hand, so that the shunt becomes inoperative when the auxiliary brush has a certain position upon the commutator; but when said auxiliary brush is moved in its relation to the main brushes, or the latter are moved in their relation to the auxiliary brush, the electric condition is disturbed and more or less of the current through the field-helices is diverted through the shunt or a current passed over said shunt to the field-helices.

By varying the relative position upon the commutator of the respective brushes automatically in proportion to the varying electrical conditions of the working-circuit the current developed can be regulated in proportion to the demands in the working-circuit.

Devices for automatically moving the brushes in dynamo-electric machines are well known, and those made use of in my machine may be of any desired or known character.

In the drawings, Figure 1 is a diagram illustrating my invention, showing one core of the field-magnets with one helix wound in the same direction throughout. Figs. 2 and 3 are diagrams showing one core of the field-magnets with a portion of the helices wound in opposite directions. Figs. 4 and 5 are diagrams illustrating the electric devices that may be employed for automatically adjusting the brushes, and Fig. 6 is a diagram illustrating the positions of the brushes when the machine is being energized on the start.

a and *b* are the positive and negative brushes of the main or working circuit, and *c* the auxiliary brush. The working-circuit D extends from the brushes *a* and *b*, as usual, and contains electric lamps or other devices, D', either in series or in multiple arc.

M M' represent the field-helices, the ends of which are connected to the main brushes *a* and *b*. The branch or shunt wire *c'* extends from the auxiliary brush *c* to the circuit of the field-helices, and is connected to the same at an intermediate point, X.

H represents the commutator, with the plates of ordinary construction. It is now to be understood that when the auxiliary brush *c* occupies such a position upon the commutator that the electro-motive force between the brushes *a* and *c* is to the electro-motive force between the brushes *c* and *b* as the resistance of the circuit *a* M *c' c* A to the resistance of the circuit *b* M' *c' c* B, the potentials of the points X and Y will be equal, and no current will flow over the auxiliary brush; but when the brush *c* occupies a different position the potentials of the points X and Y will be different, and a current will flow over the auxiliary brush to or from the commutator, according to the relative position of the brushes. If, for instance, the commutator-space between the brushes *a* and *c*, when the latter is at the neutral point, is diminished, a current will flow from the point Y over the shunt C to the brush *b*, thus strengthening the current in the part M', and partly neutralizing the current in the part M; but if the space between the brushes *a* and *c* is increased, the current will flow over the auxiliary brush in an opposite direction, and the current in M will be stregthened, and in M' partly neutralized.

By combining with the brushes *a*, *b*, and *c* any known automatic regulating mechanism the current developed can be regulated in proportion to the demands in the working-circuit. The parts M and M' of the field-wire may be wound in the same direction. (In this case they are arranged as shown in Fig. 1; or, the part M may be wound in the opposite direction, as shown in Figs. 2 and 3.)

It will be apparent that the respective cores of the field-magnets are subjected to the neutralizing or intensifying effects of the current

in the shunt through c', and the magnetism of the cores will be partially neutralized or the point of greatest magnetism shifted, so that it will be more or less remote from or approaching to the armature, and hence the aggregate energizing actions of the field magnets on the armature will be correspondingly varied.

In the form indicated in Fig. 1 the regulation is effected by shifting the point of greatest magnetism, and in Figs. 2 and 3 the same effect is produced by the action of the current in the shunt passing through the neutralizing-helix.

The relative positions of the respective brushes may be varied by moving the auxiliary brush or the brush c may remain quiescent and the core p be connected to the main-brush holder A', so as to adjust the brushes a b in their relation to the brush c. If, however, an adjustment is applied to all the brushes, as seen in Fig. 5, the solenoid should be connected to both A and C, so as to move them toward or away from each other.

There are several known devices for giving motion in proportion to an electric current. I have shown the moving cores in Figs. 4 and 5 as convenient devices for obtaining the required extent of motion with very slight changes in the current passing through the helices. It is understood that the adjustment of the main brushes causes variations in the strength of the current independently of the relative position of said brushes to the auxiliary brush. In all cases the adjustment may be such that no current flows over the auxiliary brush when the dynamo is running with its normal load.

In Figs. 4 and 5, A A indicate the main-brush holder, carrying the main brushes, and C the auxiliary-brush holder, carrying the auxiliary brush. These brush-holders are movable in arcs concentric with the center of the commutator shaft. An iron piston, P, of the solenoid S, Fig. 4, is attached to the auxiliary-brush holder C. The adjustment is effected by means of a spring and screw or tightener.

In Fig. 5, instead of a solenoid, an iron tube inclosing a coil is shown. The piston of the coil is attached to both brush-holders A A and C. When the brushes are moved directly by electrical devices, as shown in Figs. 4 and 5, these are so constructed that the force exerted for adjusting is practically uniform through the whole length of motion.

I am aware that auxiliary brushes have been used in connection with the helices of the field-wire; but in these instances the helices received the entire current through the auxiliary brush or brushes, and said brushes could not be taken off without breaking the circuit through the field. These brushes caused, however, a great sparking upon the commutator. In my improvement the auxiliary brush causes very little or no sparking, and can be taken off without breaking the circuit through the field-helices.

My improvement has, besides, the advantage to facilitate the self exciting of the machine in all cases where the resistance of the field-wire is very great comparatively to the resistance of the main circuit at the start—for instance, on arc-light machines. In this case I place the auxiliary brush c near to or in preference in contact with the brush b, as shown in Fig. 6. In this manner the part M' is completely cut out, and as the part M has a considerably smaller resistance than the whole length of the field-wire the machine excites itself, whereupon the auxiliary brush is shifted automatically to its normal position.

I claim as my invention—

The combination, with the commutator having two or more main brushes and an auxiliary brush, of the field-helices having their ends connected to the main brushes, and a branch or shunt connection from an intermediate point of the field-helices to the auxiliary brush, and means for varying the relative position upon the commutator of the respective brushes, substantially as set forth.

Signed by me this 13th day of May, A. D. 1885.

NIKOLA TESLA.

Witnesses:
GEO. T. PINCKNEY,
WALLACE L. SERRELL.

(No Model.) 2 Sheets—Sheet 1.

N. TESLA

REGULATOR FOR DYNAMO ELECTRIC MACHINES.

No. 336,961 Patented Mar. 2, 1886.

Fig. 1

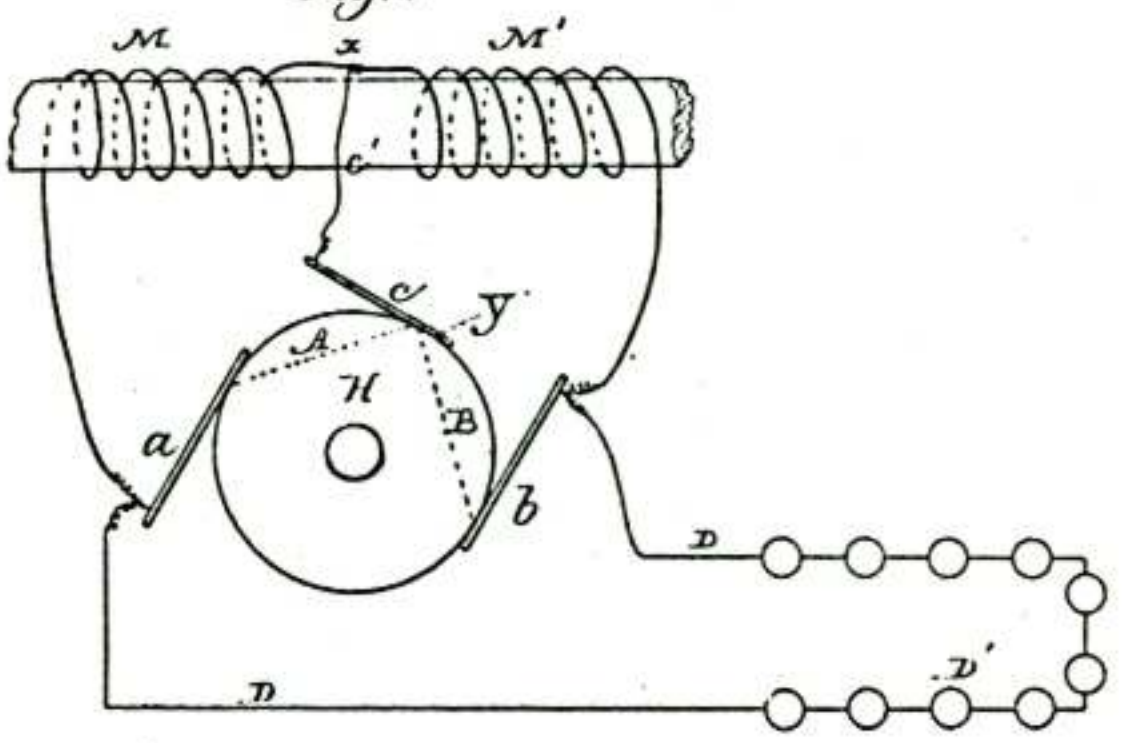

Fig 2

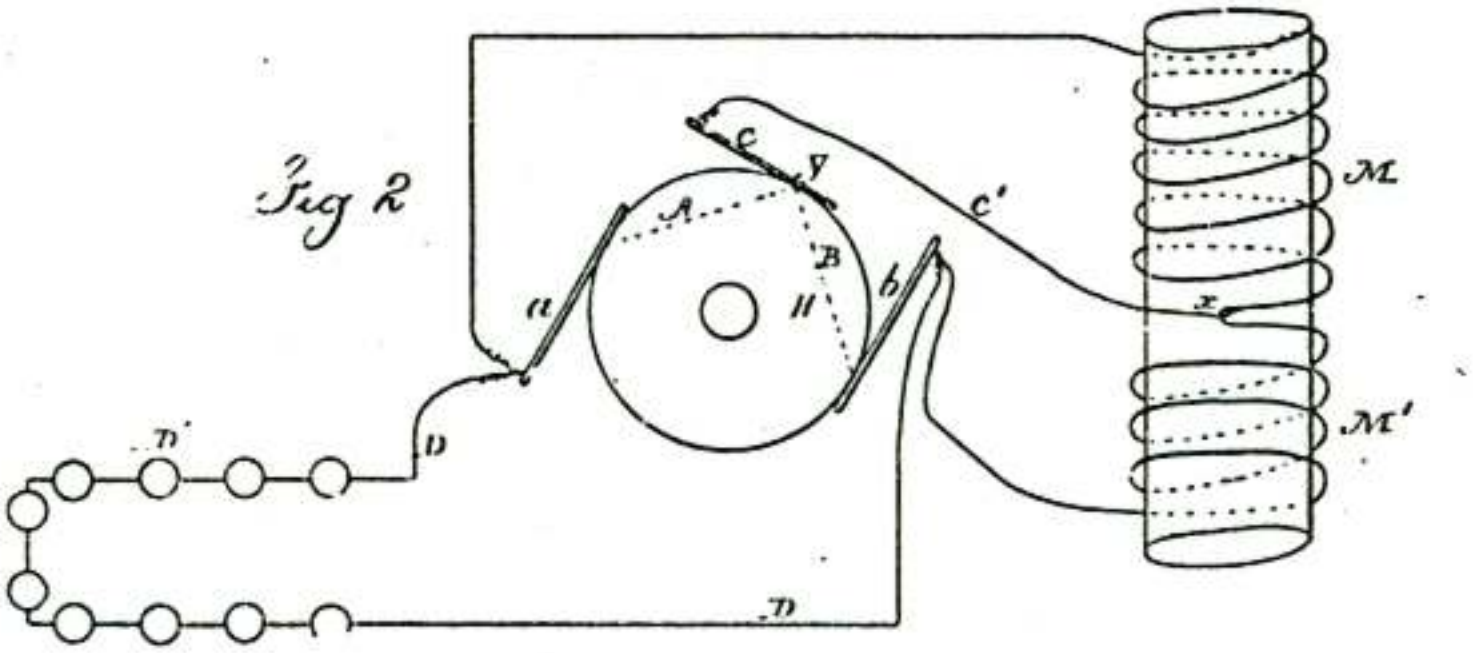

Fig. 3

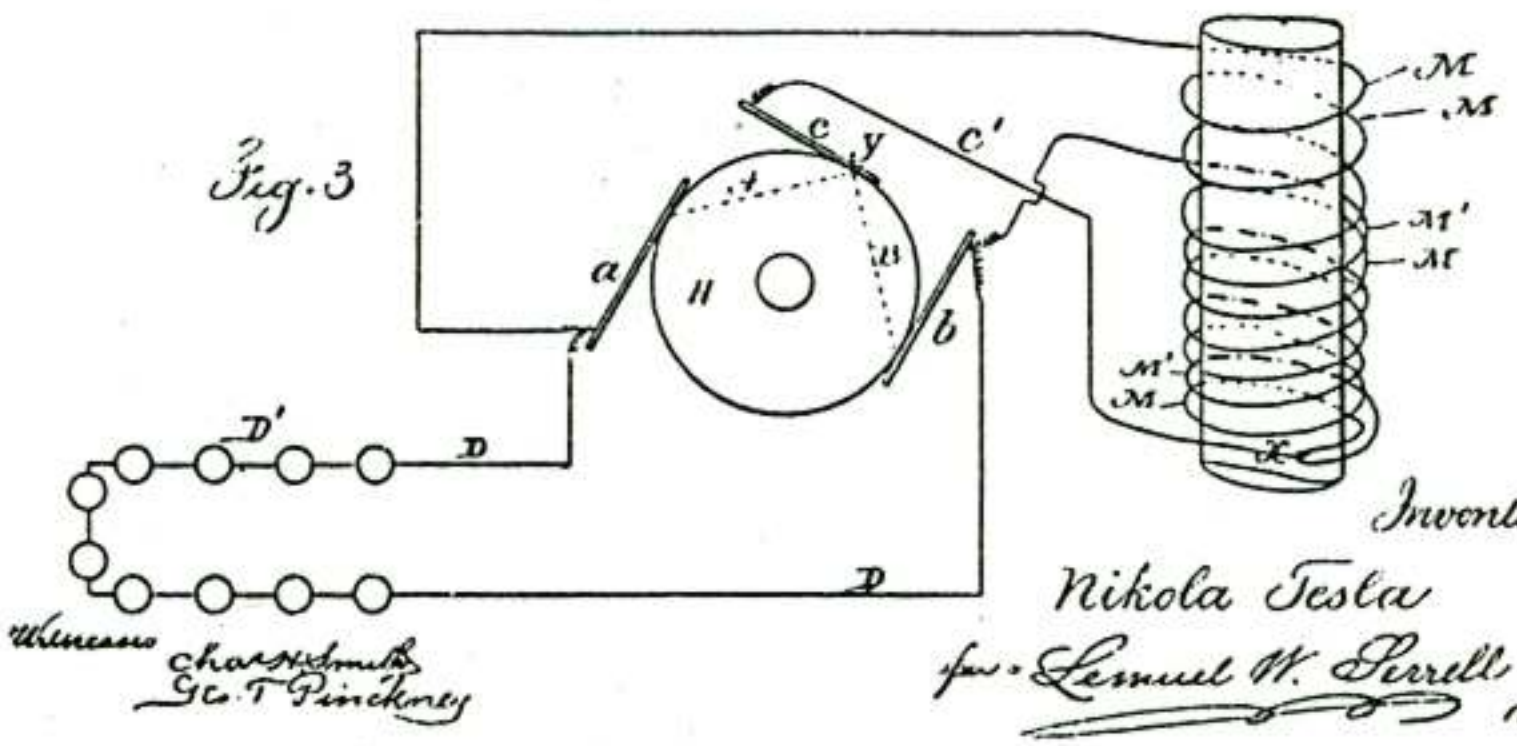

Witnesses
Chas. H. Smith
Geo. T. Pinckney

Inventor
Nikola Tesla
per Lemuel W. Serrell
Atty

P-10

(No Model.) 2 Sheets—Sheet 2.

N TESLA.

REGULATOR FOR DYNAMO ELECTRIC MACHINES.

No. 336,961. Patented Mar. 2, 1886.

Fig. 4

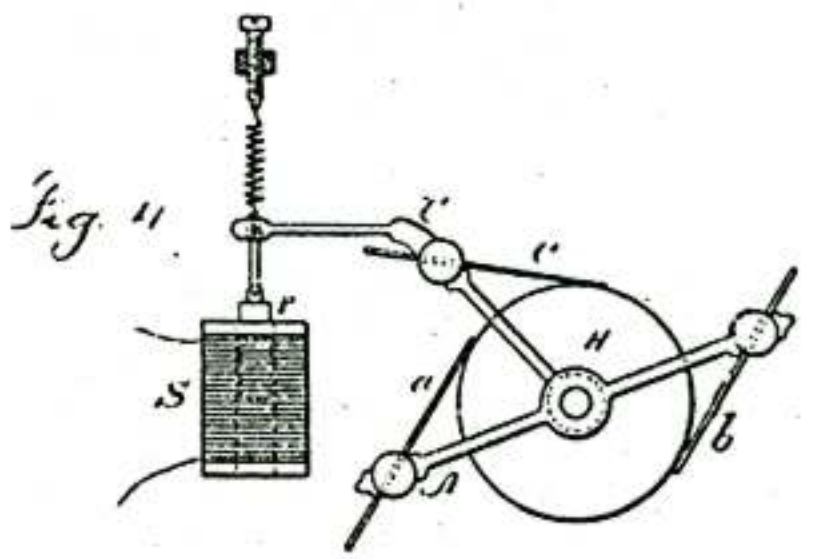

Fig. 5.

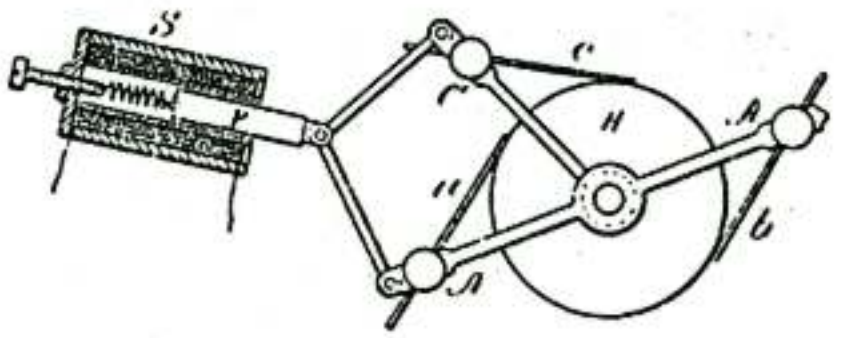

Fig. 6

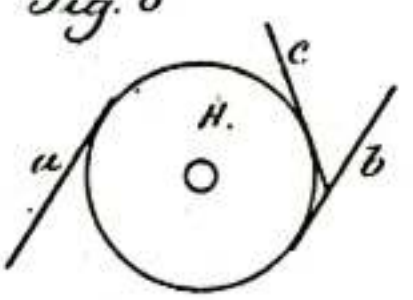

Witnesses

Chas. H. Smith

J. Stahl

Inventor

Nikola Tesla

per Lemuel W. Serrell

atty

UNITED STATES PATENT OFFICE.

NIKOLA TESLA, OF SMILJAN LIKA, AUSTRIA-HUNGARY, ASSIGNOR TO THE TESLA ELECTRIC LIGHT AND MANUFACTURING COMPANY, OF RAHWAY, NEW JERSEY.

REGULATOR FOR DYNAMO-ELECTRIC MACHINES.

SPECIFICATION forming part of Letters Patent No. 336,962, dated March 2, 1886.

Application filed June 1, 1885. Serial No. 167,136. (No model.)

To all whom it may concern:

Be it known that I, NIKOLA TESLA, of Smiljan Lika, border country of Austria-Hungary, have invented an Improvement in Dynamo-Electric Machines, of which the following is a specification.

My invention is designed to provide an improved method for regulating the current in dynamo-electric machines.

In another application, No. 165,793, filed by me May 18, 1885, I have shown a method for regulating the current in a dynamo having the field-helices in a shunt. My present application relates to a dynamo having its field-helices connected in the main circuit.

In my improvement I employ one or more auxiliary brushes, by means of which I shunt a portion or the whole of the field-helices. According to the relative position upon the commutator of the respective brushes more or less current is caused to pass through the helices of the field, and the current developed by the machine can be varied at will by varying the relative positions of the brushes.

In the drawings the present invention is illustrated by diagrams, which are hereinafter separately referred to.

In Figure 1, *a* and *b* are the positive and negative brushes of the main circuit, and *c* an auxiliary brush. The main circuit D extends from the brushes *a* and *b*, as usual, and contains the helices M of the field-wire and the electric lamps or other working devices. The auxiliary brush *c* is connected to the point *x* of the main circuit by means of the wire *c'*.

H is a commutator of ordinary construction.

From that which has been said in the application above referred to it will be seen that when the electro-motive force between the brushes *a* and *c* is to the electro-motive force between the brushes *c* and *b* as the resistance of the circuit *a* M *c' c* A to the resistance of the circuit *b* C B *c c'* D, the potentials of the points *x* and *y* will be equal, and no current will pass over the auxiliary brush *c;* but if said brush occupies a different position relatively to the main brushes the electric condition is disturbed, and current will flow either from *y* to *x* or from *x* to *y*, according to the relative position of the brushes. In the first case the current through the field-helices will be partly neutralized and the magnetism of the field-magnets diminished. In the second case the current will be increased and the magnets will gain strength. By combining with the brushes *a b c* any automatic regulating mechanism the current developed can be regulated automatically in proportion to the demands in the working-circuit.

In Figs. 6 and 7 I have represented some of the automatic means that may be used for moving the brushes. The core P, Fig. 6, of the solenoid-helix S, is connected with the brush *c* to move the same, and in Fig. 7 the core P is shown as within the helix S, and connected with both brushes *a* and *c*, so as to move the same toward or from each other, according to the strength of the current in the helix, the helix being within an iron tube, S', that becomes magnetized and increases the action of the solenoid.

In practice it is sufficient to move only the auxiliary brush, as shown in Fig. 6, as the regulation is very sensitive to the slightest changes; but the relative position of the auxiliary brush to the main brushes may be varied by moving the main brushes, or both main and auxiliary brushes may be moved, as illustrated in Fig. 7. In the latter two cases, it will be understood, the motion of the main brushes relatively to the neutral line of the machine causes variations in the strength of the current independently of their relative position to the auxiliary brush. In all cases the adjustment may be such that when the machine is running with the ordinary load no current flows over the auxiliary brush.

The field-helices may be connected as shown in Fig. 1, or a part of the field-helices may be in the outgoing and the other part in the return circuit, and two auxiliary brushes may be employed as shown in Figs. 3 and 4. Instead of shunting the whole of the field-helices, a portion only of such helices may be shunted, as shown in Figs. 2 and 4.

The arrangement shown in Fig. 4 is advantageous, as it diminishes the sparking upon the commutator, the main circuit being closed through the auxiliary brushes at the moment of the break of the circuit at the main brushes.

The field-helices may be wound in the same direction, or a part may be wound in opposite directions.

The connection between the helices and the auxiliary brush or brushes may be made by a wire of small resistance, or a resistance may be interposed (R, Fig. 5) between the point *x* and the auxiliary brush or brushes to divide the sensitiveness when the brushes are adjusted.

I am aware that it is not new to use auxiliary brushes on the commutator, and that auxiliary brushes have been connected to the field helices; but I am not aware that the helices of a series dynamo have been shunted by means of auxiliary brushes, and that the relative position of the respective brushes has been varied for the purpose of regulating the current developed by the machine.

In instances where auxiliary brushes have been used in connection with the field-helices said auxiliary brushes received the current continuously and caused great sparking, whereas in my invention the auxiliary brush receives current only when the normal electrical conditions of the circuit are disturbed.

I claim as my invention—

The combination, with the commutator and main brushes and one or more auxiliary brushes, of the field-helices in the main circuits and one or more shunt-connections from the field-helices to the auxiliary brushes, the relative positions upon the commutator of the respective brushes being adjustable, for the purpose set forth.

Signed by me this 16th day of May, A. D. 1885.

NIKOLA TESLA.

Witnesses:
GEO. T. PINCKNEY,
WALLACE L. SERRELL.

(No Model.) 2 Sheets—Sheet 1.

N. TESLA.

REGULATOR FOR DYNAMO ELECTRIC MACHINES.

No. 336,962. Patented Mar. 2, 1886.

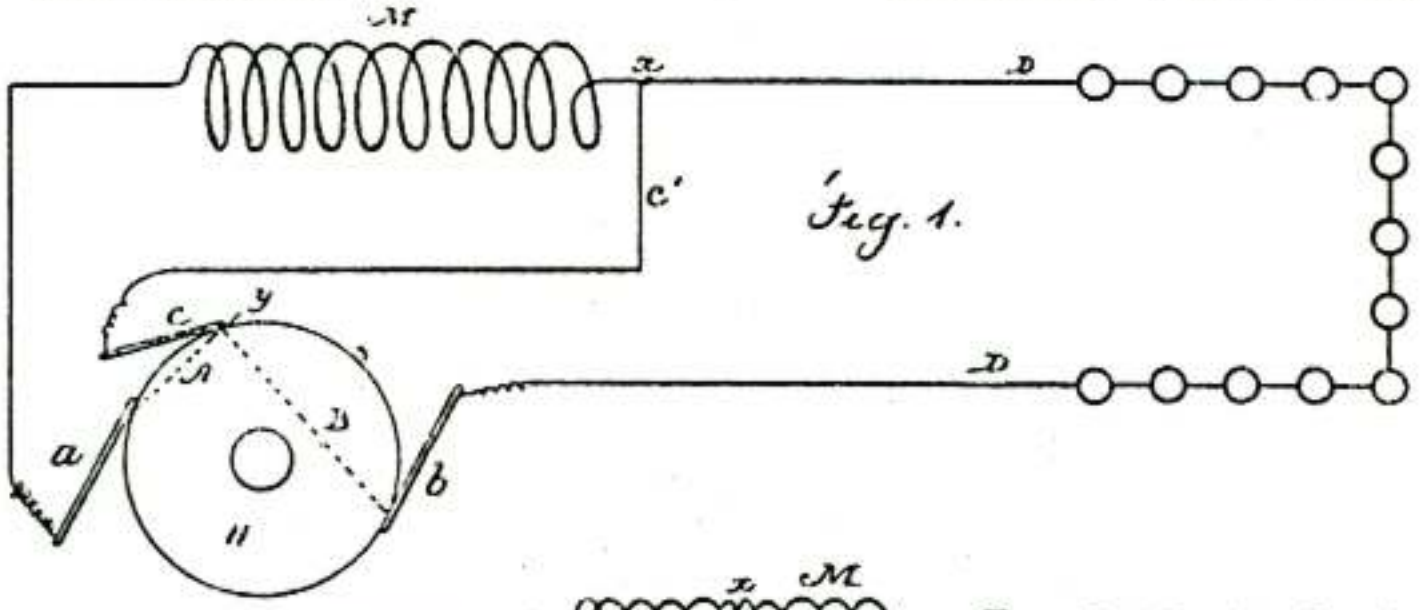

Fig. 1.

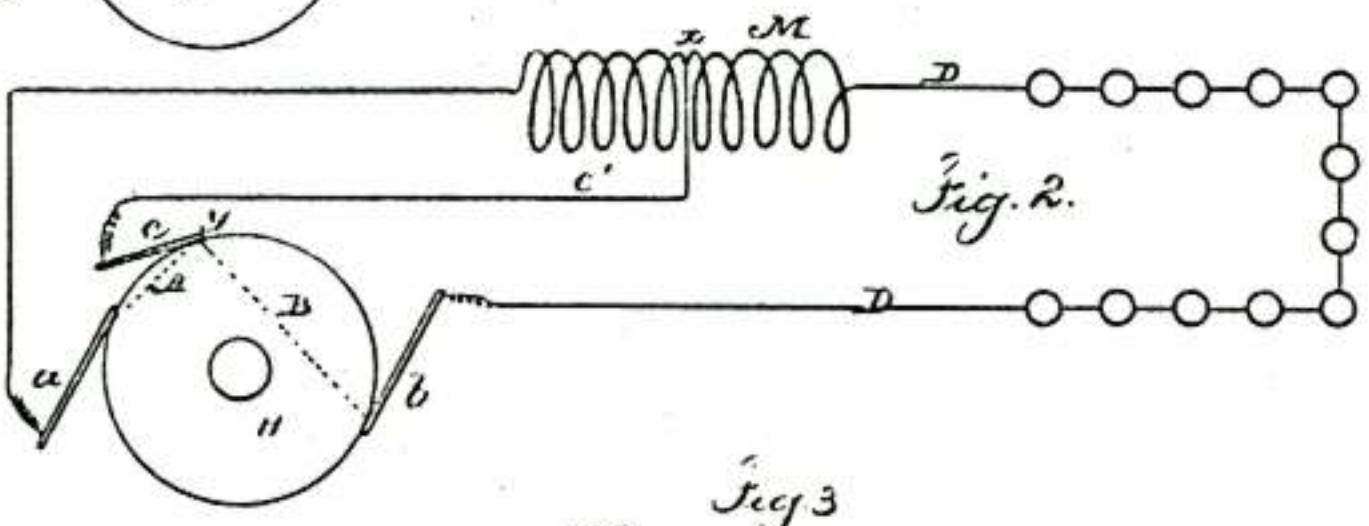

Fig. 2.

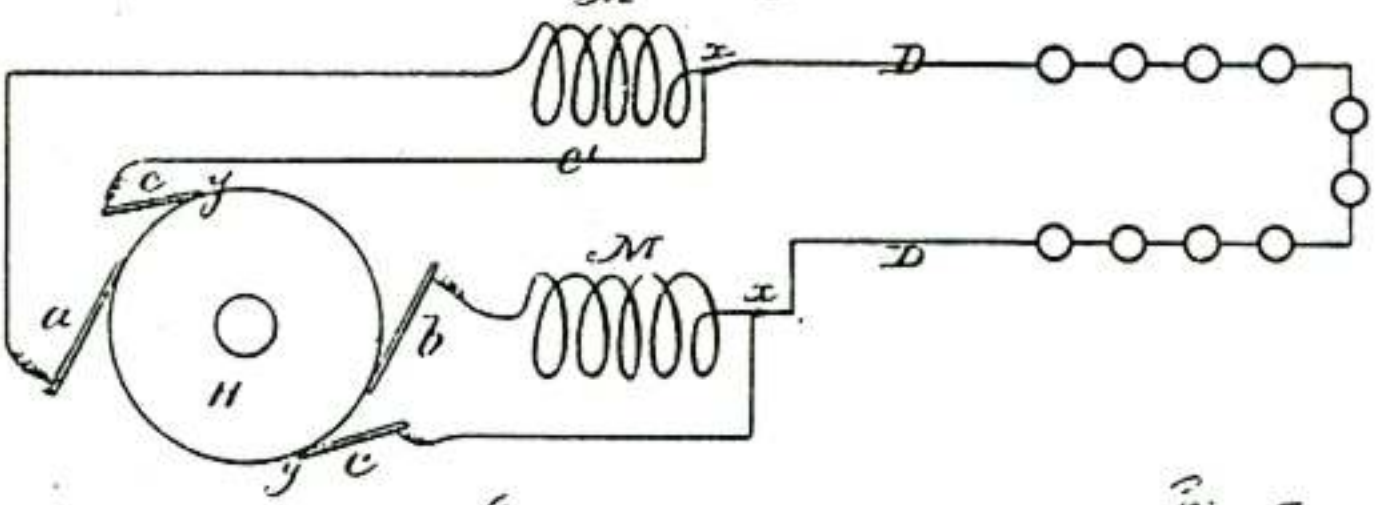

Fig 3

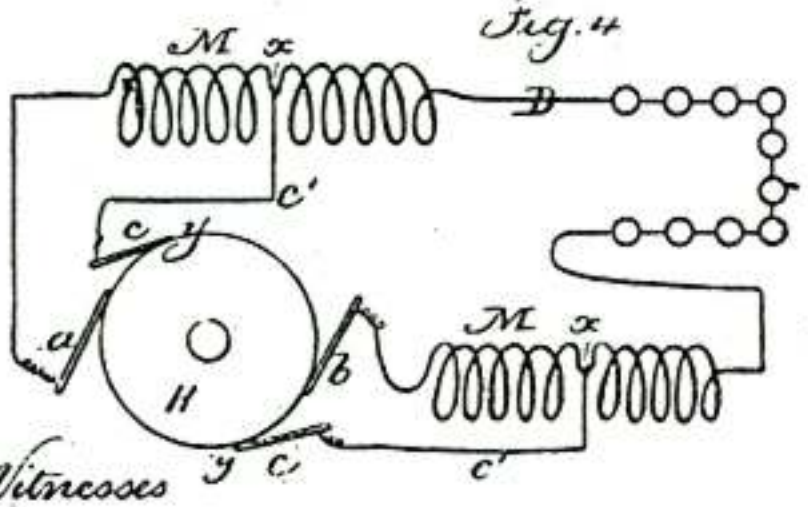

Fig. 4

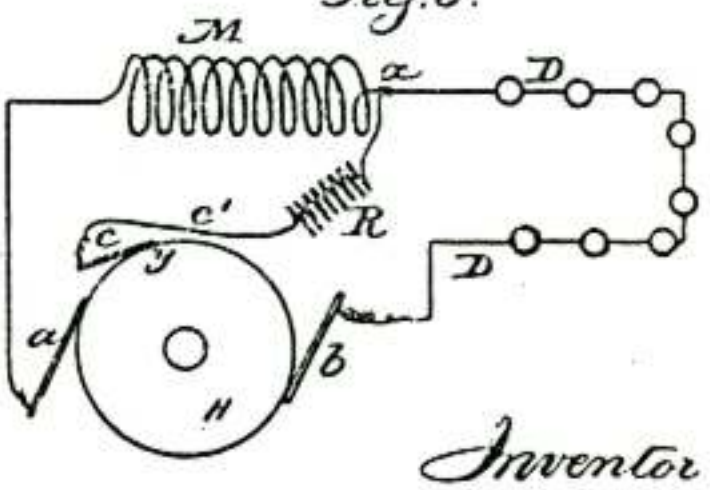

Fig. 5.

Witnesses
Chas. H. Smith.
I. Stahl.

Inventor
Nikola Tesla
per Samuel W. Sirrell
atty

P-14

(No Model.) 2 Sheets—Sheet 2

N. TESLA.

REGULATOR FOR DYNAMO ELECTRIC MACHINES.

No. 336,962. Patented Mar. 2, 1886.

Fig 6

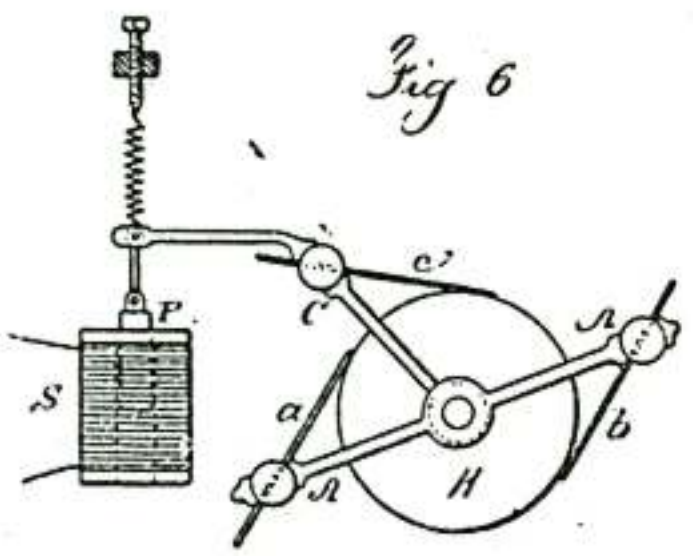

Fig. 7

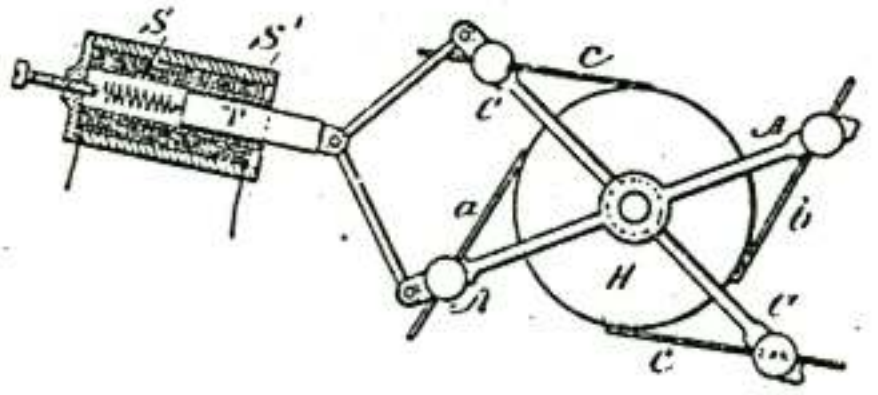

Witnesses

Chas. H. Smith

J. Stahl

Inventor

Nikola Tesla

Lemuel W. Serrell

UNITED STATES PATENT OFFICE.

NIKOLA TESLA, OF SMILJAN LIKA, AUSTRIA-HUNGARY, ASSIGNOR TO THE TESLA ELECTRIC LIGHT AND MANUFACTURING COMPANY, OF RAHWAY, NEW JERSEY.

REGULATOR FOR DYNAMO-ELECTRIC MACHINES.

SPECIFICATION forming part of Letters Patent No. 350,954, dated October 19, 1886.

Application filed January 14, 1886. Serial No. 188,539. (No model.)

To all whom it may concern:

Be it known that I, NIKOLA TESLA, from Smiljan Lika, border country of Austria-Hungary, have invented certain Improvements in Dynamo-Electric Machines, of which the following is a specification.

In other applications I have shown the commutator of a dynamo-machine with the main brushes connected in an electric circuit, and one or more auxiliary brushes serving to shunt a part or the whole of the field-coils, the regulation of the current being effected by shifting the respective brushes automatically upon the commutator in proportion to the varying resistances of the circuit.

My present invention relates to the mechanical devices which I employ to effect the shifting of the brushes.

My invention is clearly shown in the accompanying drawings, in which Figure 1 is an elevation of the regulator with the frame partly in section; and Fig. 2 is a section at the line *xx*, Fig. 1.

C is the commutator; B and B′, the brush-holders, B carrying the main brushes *a a′* and B′ the auxiliary or shunt brushes *b b*. The axis of the brush-holder B is supported by two pivot-screws, *p p*. The other brush-holder, B′, has a sleeve, *d*, and is movable around the axis of the brush-holder B. In this way both brush-holders can turn very freely, the friction of the parts being reduced to a minimum. Over the brush-holders is mounted the solenoid S, which rests upon a forked column, *c*. This column also affords a support for the pivots *p p*, and is fastened upon a solid bracket or projection, P, which extends from the base of the machine, and is preferably cast in one piece with the same. The brush-holders B B′ are connected by means of the links *e e* and the cross-piece F to the iron core I, which slides freely in the tube T of the solenoid. The iron core I has a screw, *s*, by means of which it can be raised and adjusted in its position relatively to the solenoid, so that the pull exerted upon it by the solenoid is practically uniform through the whole length of motion which is required to effect the regulation. In order to effect the adjustment with a greater precision the core I is provided with a small iron screw, *s′*. The core being first brought very nearly in the required position relatively to the solenoid by means of the screw *s*, the small screw *s′* is then adjusted until the magnetic attraction upon the core is the same when the core is in any position. A convenient stop, *t*, serves to limit the upward movement of the iron core.

To check somewhat the movement of the core I, a dash-pot, K, is used. The piston L of the dash-pot is provided with a valve, V, which opens by a downward pressure and allows an easy downward movement of the iron core I, but closes and checks the movement of the core when the same is pulled up under the action of the solenoid.

To balance the opposing forces, the weight of the moving parts, and the pull exerted by the solenoid upon the iron core, the weights W W may be used. The adjustment is such that when the solenoid is traversed by the normal current it is just strong enough to balance the downward pull of the parts.

The electrical circuit-connections are substantially the same, as indicated in my former applications, the solenoid being in series with the circuit when the translating devices are in series and in a shunt when the devices are in multiple arc.

The operation of the device is as follows: When upon a decrease of the resistance of the circuit or some other reason the current is increased, the solenoid S gains in strength and pulls up the iron core I, thus shifting the main brushes in the direction of rotation and the auxiliary brushes in the opposite way. This diminishes the strength of the current until the opposing forces are balanced and the solenoid is traversed by the normal current; but if from any cause the current in the circuit is diminished, then the weight of the moving parts overcomes the pull of the solenoid, the iron core I descends, thus shifting the brushes the opposite way and increasing the current to the normal strength. The dash pot connected to the iron core I may be of ordinary construction; but I prefer, especially in machines for arc lights, to provide the piston of

the dash-pot with a valve, as indicated in the drawings. This valve permits a comparatively easy downward movement of the iron core, but checks its movement when it is drawn up by the solenoid. Such an arrangement has the advantage that a great number of lights may be put on without diminishing the light-power of the lamps in the circuit, as the brushes assume at once the proper position. When lights are cut out, the dash-pot acts to retard the movement; but if the current is considerably increased the solenoid gets abnormally strong and the brushes are shifted instantly.

The regulator being properly adjusted, lights or other devices may be put on or out with scarcely any perceptible difference.

It is obvious that instead of the dash pot any other retarding device may be used.

I claim as my invention—

1. The combination, with the main and auxiliary brushes, of two brush-holders, an axis fastened to one of the brush-holders, supporting-screws for the same, a support for the other brush-holder surrounding the axis, a solenoid, a core for the same, and links connecting the core to the respective brush-holders, substantially as set forth.

2. The combination, with the brushes, brush-holders, and the axis upon which the brush-holders swing, of a solenoid and core, connections from the same to the brush-holders, and an adjusting screw to limit the movements of the core, substantially as set forth.

3. The combination, with the brush-holders and their axes, of a solenoid and core, and a connection from the core to the brush-holders, and an iron screw at the inner end of the core to adjust the action of the magnetism on the core, substantially as set forth.

4. The combination, with the brushes, the brush-holders and their axes, of a solenoid and core, and connections to move the brush-holders, and a dash-pot provided with a valve, substantially as described, to diminish the speed of movement of the core in one direction more than the other, substantially as set forth.

5. The combination, with the brushes, the brush-holders and their axes, of a solenoid and core, and connections to move the brush-holders, and a dash-pot to diminish the speed of movement of the core, substantially as set forth.

6. The combination, with the brush-holders and the solenoid and core, of links connecting to the holders, and a screw to adjust the position of the core in relation to the solenoid, substantially as set forth.

Signed by me this 12th day of January, A. D. 1886.

NIKOLA TESLA.

Witnesses:
GEO. T. PINCKNEY,
WILLIAM G. MOTT.

(No Model.)

N. TESLA.

REGULATOR FOR DYNAMO ELECTRIC MACHINES.

No. 350,954. Patented Oct. 19, 1886.

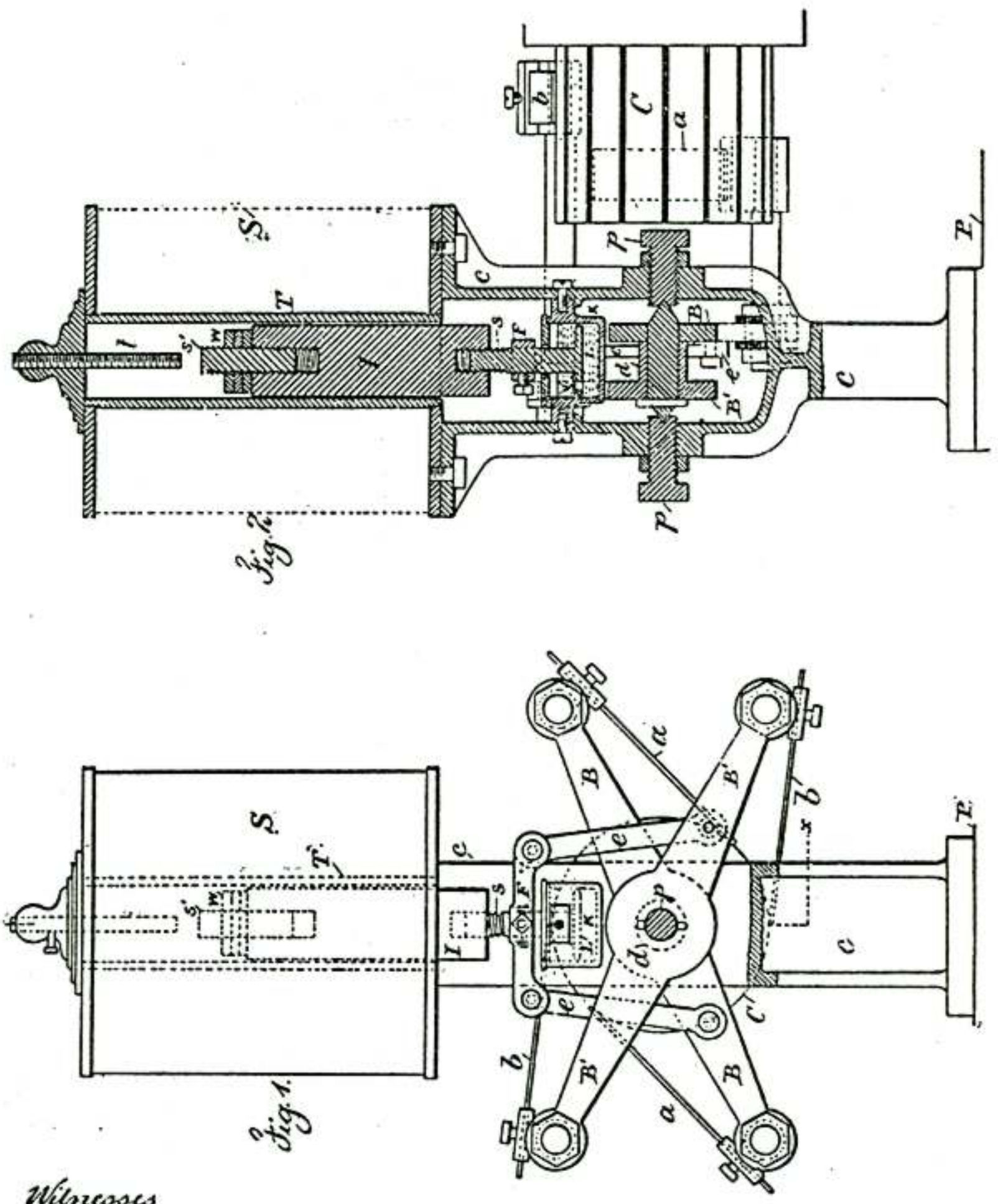

Witnesses:
Chas. H. Smith
J. Stahl.

Inventor
Nikola Tesla.
per Lemuel W. Serrell
atty

UNITED STATES PATENT OFFICE.

NIKOLA TESLA, OF SMILJAN LIKA, AUSTRIA-HUNGARY, ASSIGNOR TO THE TESLA ELECTRIC LIGHT AND MANUFACTURING COMPANY, OF RAHWAY, NEW JERSEY.

DYNAMO-ELECTRIC MACHINE.

SPECIFICATION forming part of Letters Patent No. 359,748, dated March 22, 1887.

Application filed January 14, 1886. Renewed December 1, 1886. Serial No. 220,370. (No model.)

To all whom it may concern:

Be it known that I, NIKOLA TESLA, of Smiljan Lika, border country of Austria-Hungary, have invented certain Improvements in Dynamo-Electric Machines, of which the following is a specification.

The main objects of my invention are to increase the efficiency of the machine and to facilitate and cheapen the construction of the same; and to this end my invention relates to the magnetic frame and the armature, and to other features of construction, hereinafter more fully explained.

My invention is illustrated in the accompanying drawings, in which Figure 1 is a longitudinal section, and Fig. 2 a cross-section, of the machine. Fig. 3 is a top view, and Fig. 4 a side view; of the magnetic frame. Fig. 5 is an end view of the commutator-bars, and Fig. 6 is a section of the shaft and commutator-bars. Fig. 7 is a diagram illustrating the coils of the armature and the connections to the commutator-plates.

The cores *c c c c* of the field-magnets may be tapering in both directions, as shown, for the purposes of concentrating the magnetism upon the middle of the pole-pieces.

The connecting-frame F F of the field-magnets is in the form indicated in the side view, Fig. 4, the lower part being provided with the spreading curved cast legs *e e*, so that the machine will rest firmly upon two base-bars, *r r*.

To the lower pole, S, of the field-magnet M is fastened, preferably by means of Babbitt or other fusible diamagnetic material, the base B, which is provided with bearings *b* for the armature-shaft H. The base B has a projection, P, which supports the brush-holders and the regulating devices, which may be of any ordinary character, or may be such as shown in an application of like date herewith.

The armature is constructed with the view to reduce to a minimum the loss of power due to the transversal or Foucault currents and to the change of polarity, and also to shorten as much as possible the length of the inactive wire wound upon the armature-core.

It is well known that when the armature is revolved between the poles of the field-magnets currents are generated in the iron body of the armature which develop heat, and consequently cause a waste of power. Owing to the mutual action of the lines of force, the magnetic properties of iron, and the speed of the different portions of the armature-core, these currents are generated principally on and near the surface of the armature-core, diminishing in strength gradually toward the center of the core. Their quantity is under same conditions proportional to the length of the iron body in the direction in which these currents are generated. By subdividing the iron core electrically in this direction the generation of these currents can be reduced to a great extent. For instance, if the length of the armature-core is twelve inches, and by a suitable construction the same is subdivided electrically, so that there are in the generating direction six inches of iron and six inches of intervening air-spaces or insulating material, the currents will be reduced to fifty per cent.

As shown in the drawings, the armature is constructed of thin iron disks D D D, of various diameters, fastened upon the armature-shaft in a suitable manner and arranged according to their sizes, so that a series of iron bodies, *i i i*, is formed, each of which diminishes in thickness from the center toward the periphery. At both ends of the armature the inwardly-curved disks *d d*, preferably of cast-iron, are fastened to the armature-shaft.

The armature-core being constructed as shown, it will be easily seen that on those portions of the armature that are the most remote from the axis, and where the currents are principally developed, the length of iron in the generating direction is only a small fraction of the total length of the armature-core, and besides this the iron body is subdivided in the generating direction, and therefore the Foucault currents are greatly reduced. Another cause of heating is the shifting of the poles of the armature-core. In consequence of the subdivision of the iron in the armature and the increased surface for radiation the risk of heating is lessened.

The iron disks D D D may be insulated or coated with some insulating-paint, a very care-

ful insulation being unnecessary, as an electrical contact between several disks can only occur on places where the generated currents are comparatively weak. An armature-core constructed in the manner described may be revolved between the poles of the field-magnets without showing the slightest increase of temperature.

The end disks, *d d*, which are of sufficient thickness and, for the sake of cheapness, preferably of cast-iron, are curved inwardly, as indicated in the drawings. The extent of the curve is dependent on the amount of wire to be wound upon the armatures. In my present invention the wire is wound upon the armature in two superimposed parts, and the curve of the end disks, *d d*, is so calculated that the first part—that is, practically half of the wire—just fills up the hollow space to the line *x x*; or, if the wire is wound in any other manner, the curve is such that when the whole of the wire is wound the outside mass of wires, *w*, and the inside mass of wires, *w'*, are equal at each side of the plane *x x*. In this case it will be seen the passive or electrically-inactive wires are of the smallest length practicable. The arrangement has further the advantage that the total lengths of the crossing wires at the two sides of the plane *x x* are practically equal.

To further equalize the armature-coils at both sides of the plates that are in contact with the brushes, the winding and connecting up is effected in the following manner: The whole wire is wound upon the armature-core in two superimposed parts, which are thoroughly insulated from each other. Each of these two parts is composed of three separated groups of coils. The first group of coils of the first part of wire being wound and connected to the commutator-bars in the usual manner, this group is insulated and the second group wound; but the coils of this second group instead of being connected to the next following commutator-bars, are connected to the directly-opposite bars of the commutator. The second group is then insulated and the third group wound, the coils of this group being connected to those bars to which they would be connected in the usual way. The wires are then thoroughly insulated and the second part of wire wound and connected in the same manner. Suppose, for instance, that there are twenty-four coils—that is, twelve in each part—and consequently twenty-four commutator-plates. There will be in each part three groups, each containing four coils, and the coils will be connected as follows:

	Groups.	*Commutator-bars.*
First part of wire	First	1— 5
	Second	17—21
	Third	9—13
Second part of wire	First	13—17
	Second	5— 9
	Third	21— 1

In constructing the armature-core and winding and connecting the coils in the manner indicated, the passive or electrically-inactive wire is reduced to a minimum, and the coils at each side of the plates that are in contact with the brushes are practically equal, and in this way the electrical efficiency of the machine is increased.

The commutator-plates *t* are shown as outside the bearing *b* of the armature-shaft. The shaft H is tubular and split at the end portion, and the wires are carried through the same in any usual manner and connected to the respective commutator-plates. The commutator-plates are upon a cylinder, *u*, and insulated, and this cylinder is to be properly placed and secured by expanding the split end of the shaft by a tapering screw-plug, *v*.

I do not claim herein the cores of the field-magnets converging toward the pole-pieces; nor do I claim the method of fastening the base to the lower field-magnet, as this has been claimed in my former application on dynamo-electric machines.

What I claim is—

1. In a dynamo-electric machine, the armature constructed of iron disks of various diameters arranged upon the shaft in such a manner that a series of iron bodies is formed, each diminishing in thickness from the center to the periphery, substantially as and for the purposes set forth.

2. In a dynamo-electric machine, the armature-core having iron disks of various diameters, in combination with inwardly-curved end disks, for the purposes and substantially as set forth.

3. In a dynamo-electric machine, an armature-core having inwardly-curved ends, in combination with the armature-coils, the crossing wires of which coils pass into the concave heads and project equally, substantially as set forth.

4. In a dynamo-electric machine, an armature having separate coils superimposed and connected to the commutator-plates in alternating groups, substantially as set forth.

5. An armature for dynamo-electric machines, having a core composed of disks of various diameters, in combination with separate superimposed coils connected to the commutator-plates in alternate groups, substantially as set forth.

6. In a dynamo-electric machine, the magnetic frame composed of the cores *c c c c*, the curved pole-pieces N S, and the connecting-frame with the curved and outwardly-projecting legs *c c*, substantially as described.

Signed by me this 12th day of January, A. D. 1886.

NIKOLA TESLA.

Witnesses:
GEO. T. PINCKNEY,
WALLACE L. SERRELL.

P-20

(No Model.) 3 Sheets—Sheet 1

N. TESLA.

DYNAMO ELECTRIC MACHINE.

No. 359.748. Patented Mar. 22, 1887.

Fig. 1

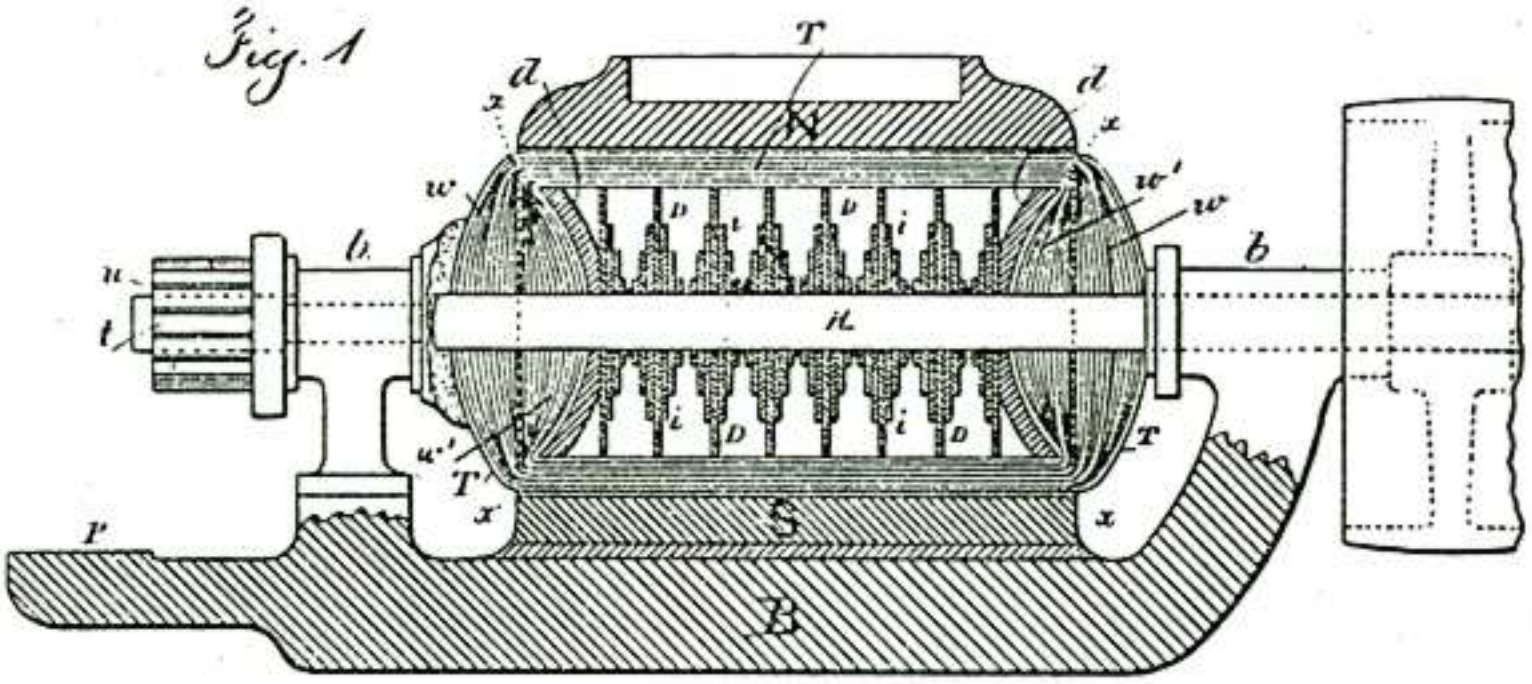

Fig 3

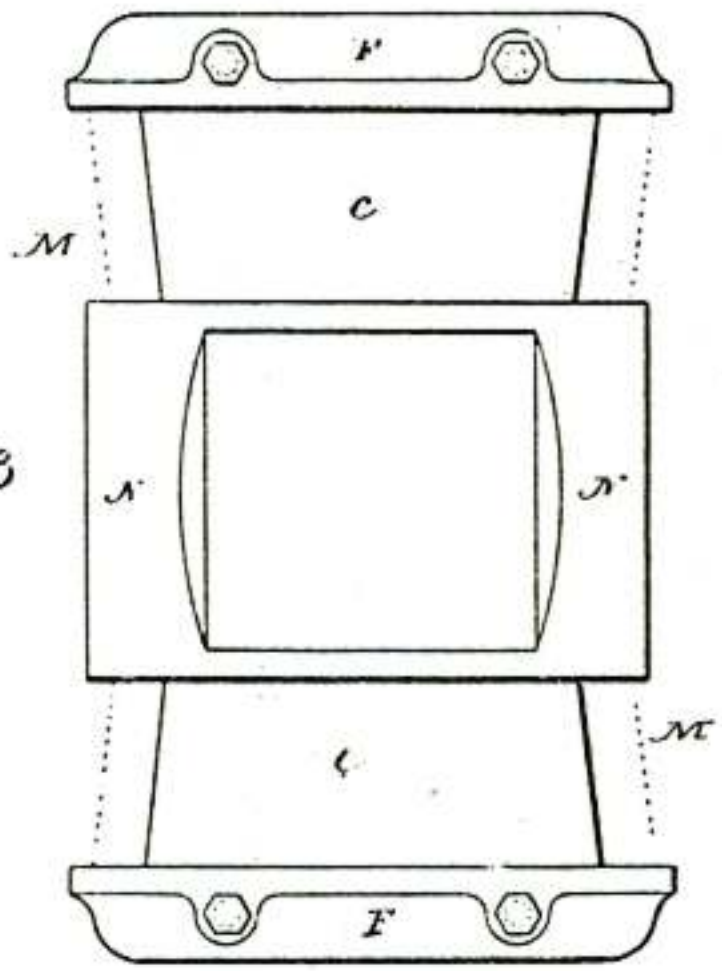

Witnesses

Chas. H. Smith

J. Stahl

Inventor

Nikola Tesla

per Lemuel W. Serrell

atty

THE WARREN PETERS CO., PHOTO-LITHO., WASHINGTON, D. C.

(No Model.) 3 Sheets—Sheet 2.

N. TESLA.

DYNAMO ELECTRIC MACHINE.

No. 359,748. Patented Mar. 22, 1887.

Fig. 4.

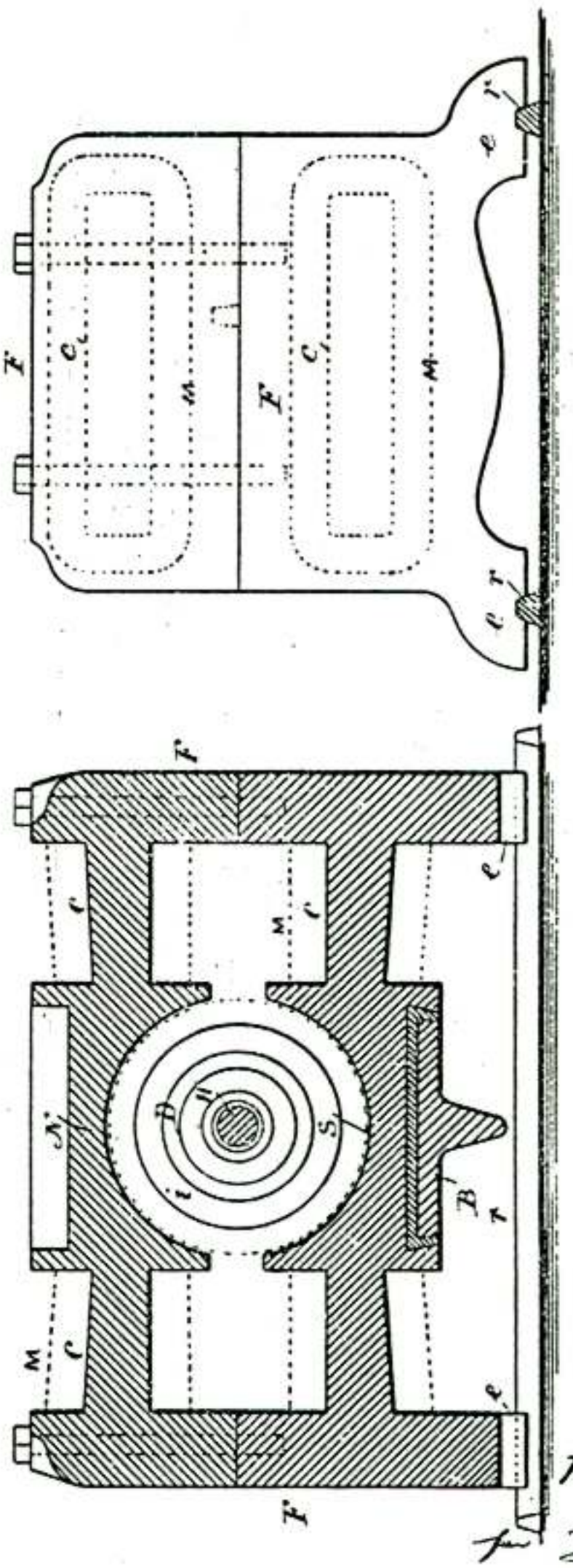

Fig. 6

Fig. 5

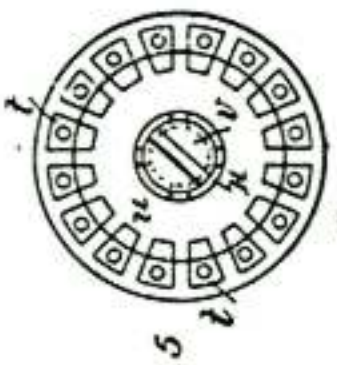

Fig. 2

Witnesses

Chas. H. Smith

J. Stahl

Inventor

Nikola Tesla

by L. W. Serrell

Atty

P-22

(No Model.) 3 Sheets—Sheet 3

N. TESLA.

DYNAMO ELECTRIC MACHINE.

No. 359,748. Patented Mar. 22, 1887.

Fig. 7.

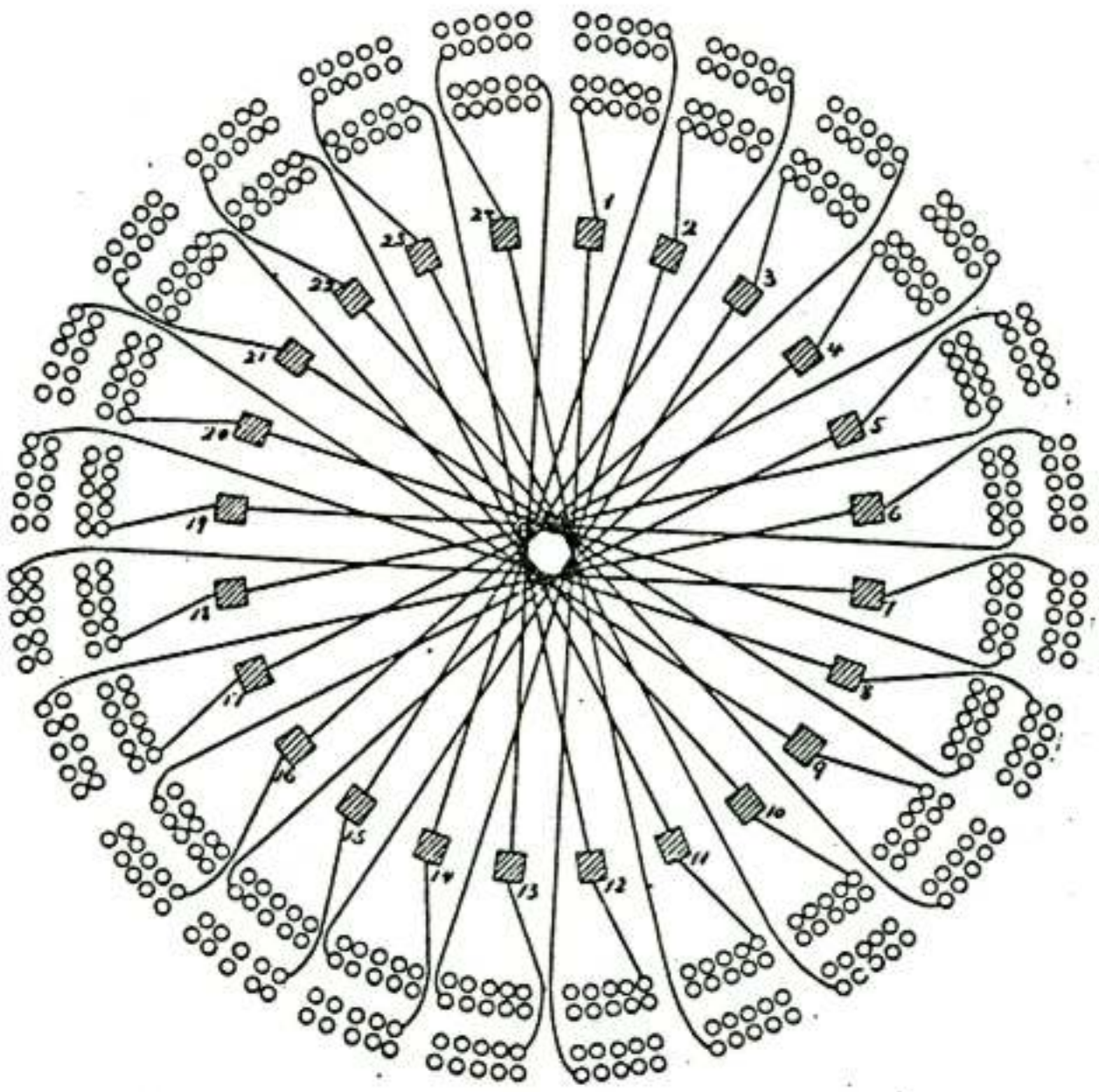

Witnesses

Chas. H. Smith
Geo. T. Pinckney

Inventor

Nikola Tesla

for Lemuel W. Serrell

atty.

UNITED STATES PATENT OFFICE.

NIKOLA TESLA, OF NEW YORK, N. Y., ASSIGNOR OF ONE-HALF TO CHARLES F. PECK, OF ENGLEWOOD, NEW JERSEY.

COMMUTATOR FOR DYNAMO-ELECTRIC MACHINES.

SPECIFICATION forming part of Letters Patent No. 382,845, dated May 15, 1888.

Application filed April 30, 1887. Serial No. 236,711. (No model.)

To all whom it may concern:

Be it known that I, NIKOLA TESLA, from Smiljan, Lika, border country of Austria-Hungary, at present residing in the city, county, and State of New York, have invented certain new and useful Improvements in Commutators for Dynamo-Electric Machines and Motors, of which the following is a specification, reference being had to the drawings accompanying and forming a part of the same.

This invention relates to dynamo electric machines or motors, and is an improvement in the devices for commutating and collecting the currents.

The objects of the invention are, first, to avoid the sparking and the gradual wearing away or destruction of the commutator-segments and brushes or collectors resulting therefrom; second, to obviate the necessity of readjustment of the commutator or the brushes or collectors and other consequences of the wear of the same; third, to render practicable the construction of very large dynamo-electric machines and motors with the minimum number of commutator-segments, and, fourth, to increase the efficiency and safety and reduce the cost of the machine.

In carrying out my invention in a manner to accomplish these results I construct a commutator and the collectors therefor in two parts mutually adapted to one another, and, so far as the essential features are concerned, alike in mechanical structure. Selecting as an illustration a commutator of two segments adapted for use with an armature the coils or coil of which have but two free ends, connected respectively to the said segments, the bearing-surface is the face of a disk, and is formed of two metallic quadrant-segments and two insulating-segments of the same dimensions, and the face of the disk should be smoothed off, so that the metal and insulating segments are flush. The part which takes the place of the usual brushes, or what I term the "collector," is a disk of the same character as the commutator and having a surface similarly formed with two insulating and two metallic segments. These two parts are mounted with their faces in contact and in such manner that the rotation of the armature causes the commutator to turn upon the collector, whereby the currents induced in the coils are taken off by the collector-segments and thence conveyed off by suitable conductors leading from the collector-segments. This is the general plan of the construction which I have invented. Aside from certain adjuncts, the nature and functions of which will be hereinafter set forth, this means of commutation will be seen to possess many important advantages. In the first place the short-circuiting and breaking of the armature-coil connected to the commutator-segments occur at the same instant, and from the nature of the construction this will be done with the greatest precision; secondly, the duration of both the break and that of the short circuit will be reduced to a minimum. The first results in a reduction which amounts practically to a suppression of the spark, since the break and the short circuit produce opposite effects in the armature-coil. The second has the effect of diminishing the destructive effect of a spark, since this would be in a measure proportioned to the duration of the spark, while lessening the duration of the short circuit obviously increases the efficiency of the machine.

The mechanical advantages will be better understood by referring to the accompanying drawings, in which—

Figure 1 is a central longitudinal section of the end of a shaft with my improved commutator carried thereon. Fig. 2 is a view of the inner or bearing face of the collector. Fig. 3 is an end view from the armature side of a modified form of commutator. Figs. 4 and 5 are views of details of Fig. 3. Fig. 6 is a longitudinal central section of another modification, and Fig. 7 is a sectional view of the same.

A is the end of the armature-shaft of a dynamo-electric machine or motor.

A′ is a sleeve of insulating material around the shaft, secured in place by a screw, *a′*, or by other suitable means.

The commutator proper is in the form of a disk which is made up of four segments, D D′ G G′, similar to those shown in Fig. 3. Two of these segments, as D D′, are of metal and are in electrical connection with the ends of the coils on the armature. The other two seg-

ments are of insulating material. The segments are held in place by a band, B, of insulating material. The disk is held in place by friction or by screws, such as *g' g'*, Fig. 3, which secure the disk firmly to the sleeve A'.

The collector is made in the same form as the commutator. It is composed of the two metallic segments E E' and the two insulating-segments F F', bound together by a band, C. The metallic segments E E' are of the same or practically the same width or extent as the insulating segments or spaces of the commutator. The collector is secured to a sleeve, B', by screws *g g*, and the sleeve is arranged to turn freely on the shaft A. The end of the sleeve B' is closed by a plate, as *f*, upon which presses a pivot-pointed screw, *h*, adjustable in a spring, H, which acts to maintain the collector in close contact with the commutator and to compensate for the play of the shaft. Any convenient means is employed to hold the collector so that it may not turn with the shaft. For example, I have shown a slotted plate, K, which is designed to be attached to a stationary support, and an arm extending from the collector and carrying a clamping-screw, L, by which the collector may be adjusted and set to the desired position.

I prefer in the form shown in Figs. 1 and 2 to fit the insulating-segments of both commutator and collector loosely and to provide some means—as, for example, light springs *e e*, secured to the bands A' B', respectively, and bearing against the segments—to exert a light pressure upon them and keep them in close contact and to compensate for wear. The metal segments of the commutator may be moved forward by loosening the screw *a'*.

The circuit or line wires are led from the metal segments of the collector, being secured thereto in any convenient manner, the plan of connections being shown as applied to a modified form of the commutator in Fig. 6. The commutator and the collector in thus presenting two flat and smooth bearing-surfaces prevent by mechanical action the occurrence of sparks, and this is more effectively accomplished as is here done—that is to say, by the interposition of an insulating body between the separating plates or segments of the commutator and collector—than by any other mechanical devices of which I am aware.

The insulating-segments are made of some hard material capable of being polished and formed with sharp edges. Such materials as glass, marble, or soapstone may be advantageously used. The metal segments are preferably of copper or brass; but they may have a facing or edge of durable material—such as platinum or the like—where the sparks are liable to occur.

In Fig. 3 a somewhat modified form of my invention is shown, a form designed to facilitate the construction and replacing of the parts. In this form the commutator and collector are made in substantially the same manner as previously described, except that the bands B C may be omitted. The four segments of each part, however, are secured to their respective sleeves by screws *g' g'*, and one edge of each segment is cut away, so that small plates *a b* may be slipped into the spaces thus formed. Of these plates *a a* are of metal, and are in contact with the metal segments D D', respectively. The other two, *b b*, are of glass or marble, and they are all preferably square, as shown in Figs. 4 and 5, so that they may be turned to present new edges should any edge become worn by use. Light springs *d* bear upon these plates and press those in the commutator toward those in the collector, and insulating-strips *c c* are secured to the periphery of the disks to prevent the blocks from being thrown out by centrifugal action. These plates are, of course, useful at those edges of the segments only where sparks are liable to occur, and, as they are easily replaced, they are of great advantage. I prefer to coat them with platinum or silver.

In Figs. 6 and 7 is shown the construction which I use when, instead of solid segments, a fluid is employed. In this case the commutator and collector are made of two insulating-disks, S T, and in lieu of the metal segments a space is cut out of each part, as at R R', corresponding in shape and size to a metal segment. The two parts are fitted smoothly and the collector T held by the screw *h* and spring H against the commutator S. As in the other cases, the commutator revolves while the collector remains stationary. The ends of the coils are connected to binding-posts *s s*, which are in electrical connection with metal plates *t t* within the recesses in the two parts S T. These chambers or recesses are filled with mercury, and in the collector part are tubes W W, with screws *w w*, carrying springs X and pistons X', which compensate for the expansion and contraction of the mercury under varying temperatures, but which are sufficiently strong not to yield to the pressure of the fluid due to centrifugal action, and which serve as binding posts.

In all the above cases I have described commutators adapted for a single coil, and the device is particularly adapted to such purposes. The number of segments may be increased, however, or more than one commutator used with a single armature, as will be well understood.

Although I have shown the bearing-surfaces as planes at right angles to the shaft or axis, it is evident that in this particular the construction may be very greatly modified without departure from the invention.

Without confining myself, therefore, to the details of construction which I have shown in illustration of the invention, what I claim as new is—

1. In a dynamo-electric machine, the combination, with a commutator formed with conducting terminals or segments with intervening insulating-spaces, of a collector adapted to bear upon the surface of the commutator

and formed with conducting terminals or segments equal in extent to the insulating space between the commutator-segments, as set forth.

2. The combination, with a commutator built or formed of alternate blocks or segments of conducting and insulating material, of a collector adapted to bear upon the surface of the commutator and formed of conducting blocks or segments of a width or extent equal to that of the insulating segments of the commutator and separated by interposed blocks or segments of insulating material, as described.

3. The combination, with a commutator formed as a disk with alternate terminals or segments of conducting and insulating material, of a collector similarly formed and mounted with its face in contact with that of the commutator, as set forth.

4. The combination, with a commutator having a bearing-surface formed of alternate sections of conducting and insulating material, of a collector with a similar and symmetrically-formed bearing-surface and means for applying spring-pressure to force the two bearing-surfaces together, as set forth.

5. The combination, with a commutator and a collector the bearing-surfaces of which are identical in respect to the disposition of the conducting and insulating parts, of means for applying spring-pressure to maintain the two bearing-surfaces in contact and means for holding the collector against rotary movement, as set forth.

Signed this 21st day of April, 1887.

NIKOLA TESLA.

Witnesses:
ROBT. F. GAYLORD,
FRANK E. HARTLEY.

P-26

(No Model.) 2 Sheets—Sheet 1

N. TESLA.

COMMUTATOR FOR DYNAMO ELECTRIC MACHINES.

No. 382,845. Patented May 15, 1888.

Fig. 2

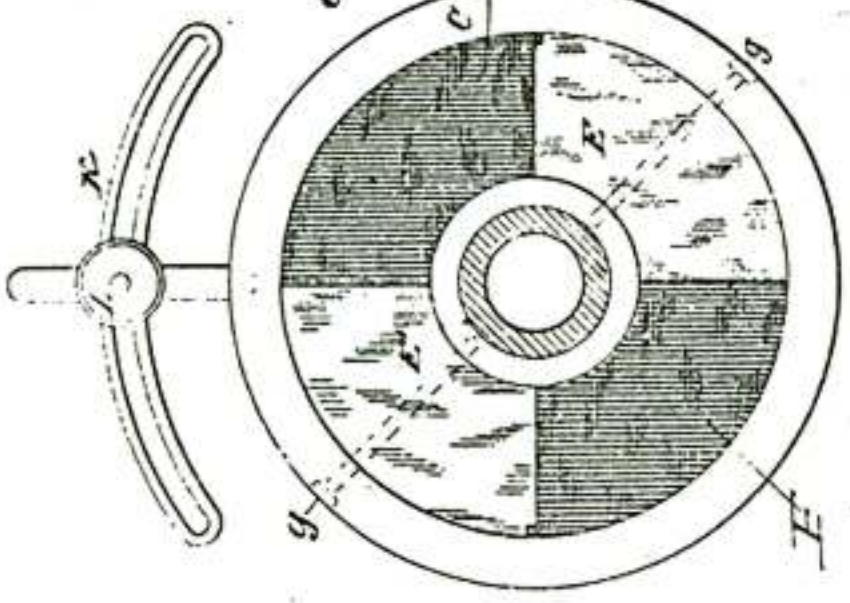

Fig. 3

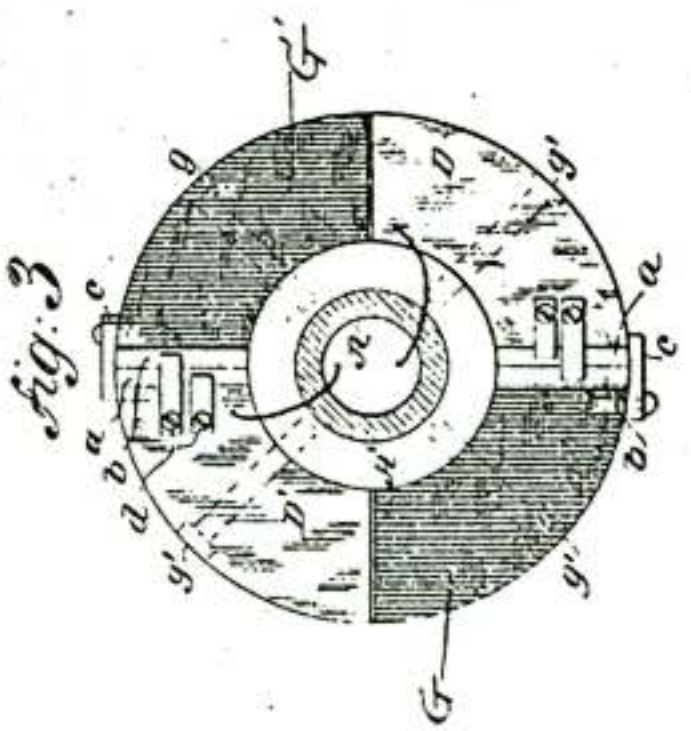

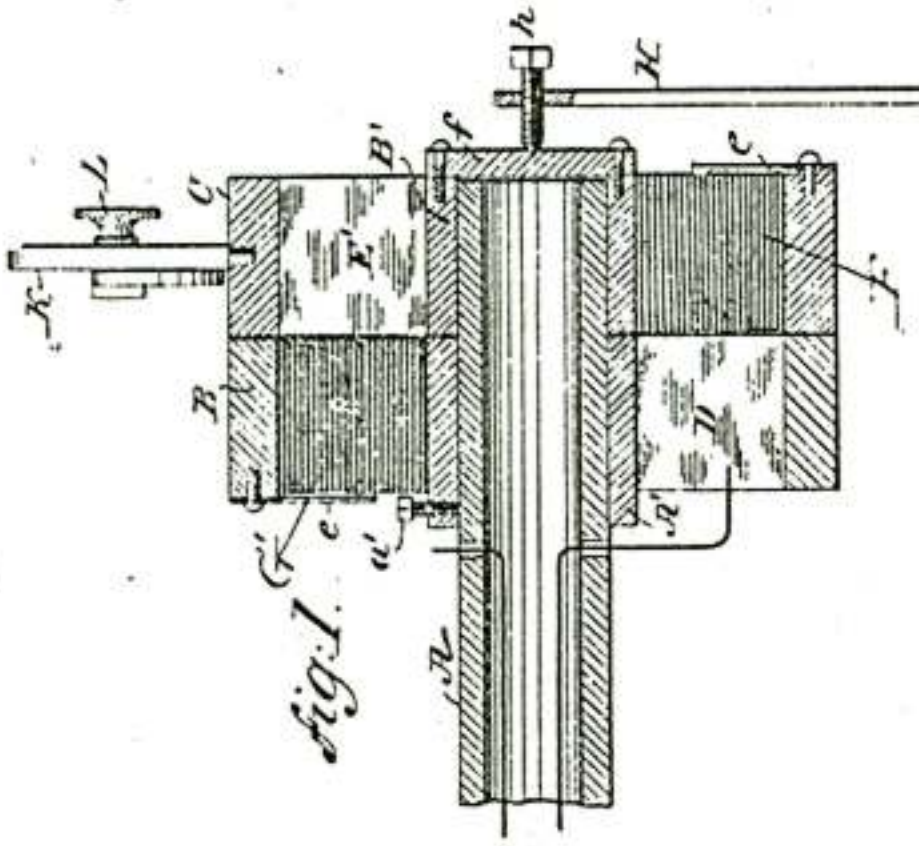

Fig. 1.

Fig. 5

Fig. 4.

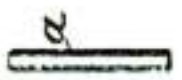

WITNESSES:

Robt. F. Gayford

Robt. F. Harlow

INVENTOR

Nikola Tesla

BY Duncan, Curtis & Page

ATTORNEYS

THE NORRIS PETERS CO. PHOTO-LITHO. WASHINGTON, D. C.

P-27

(No Model.) 2 Sheets—Sheet 2.

N. TESLA.

COMMUTATOR FOR DYNAMO ELECTRIC MACHINES.

No. 382,845. Patented May 15, 1888.

Fig. 6.

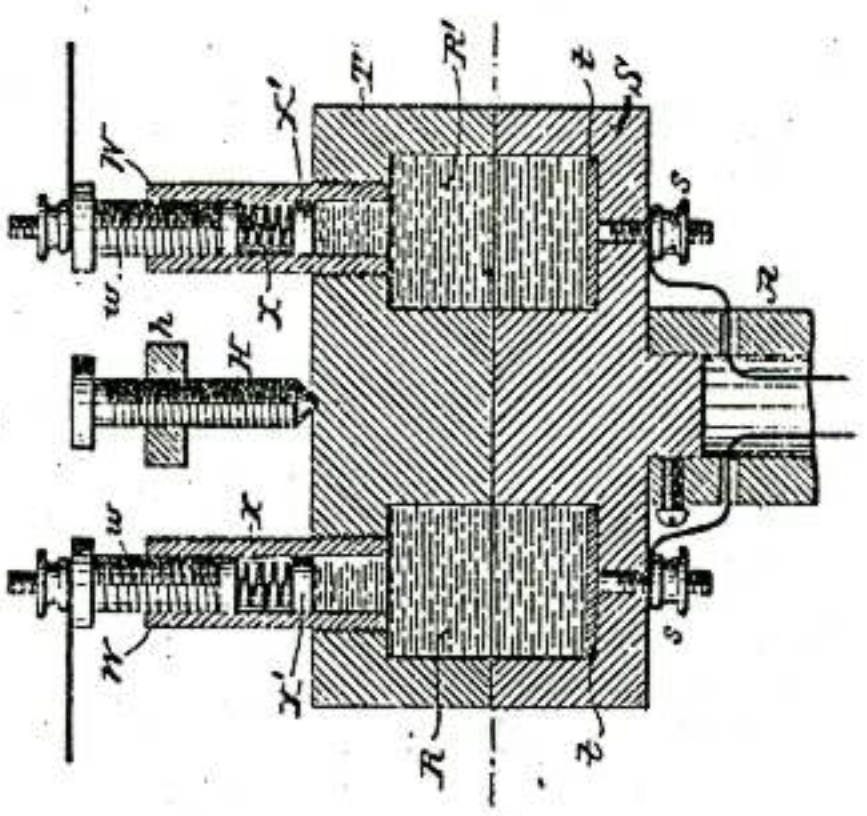

Fig. 7.

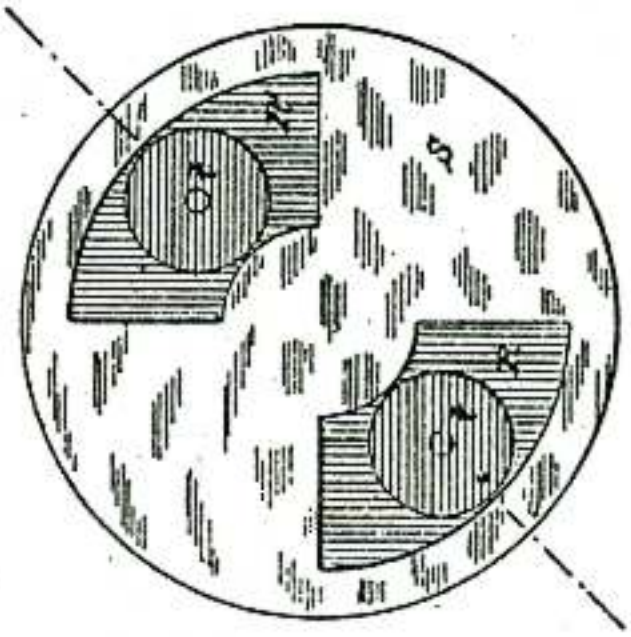

WITNESSES:

Robt. F. Gaylord.
Robt. P. Harlow

INVENTOR

Nikola Tesla.

BY

Duncan, Curtis & Page

ATTORNEYS.

THE NORRIS PETERS CO., PHOTO-LITHO., WASHINGTON, D. C.

UNITED STATES PATENT OFFICE.

NIKOLA TESLA, OF NEW YORK, N. Y., ASSIGNOR OF ONE-HALF TO CHARLES F. PECK, OF ENGLEWOOD, NEW JERSEY

ELECTRO-MAGNETIC MOTOR.

SPECIFICATION forming part of Letters Patent No. 381,968, dated May 1, 1888

Application filed October 12, 1887. Serial No. 252,132. (No model.)

To all whom it may concern:

Be it known that I, NIKOLA TESLA, from Smiljan Lika, border country of Austria-Hungary, residing at New York, N. Y., have invented certain new and useful Improvements in Electro-Magnetic Motors, of which the following is a specification, reference being had to the drawings accompanying and forming a part of the same.

The practical solution of the problem of the electrical conversion and transmission of mechanical energy involves certain requirements which the apparatus and systems heretofore employed have not been capable of fulfilling. Such a solution, primarily, demands a uniformity of speed in the motor irrespective of its load within its normal working limits. On the other hand, it is necessary, to attain a greater economy of conversion than has heretofore existed, to construct cheaper and more reliable and simple apparatus, and, lastly, the apparatus must be capable of easy management, and such that all danger from the use of currents of high tension, which are necessary to an economical transmission, may be avoided.

My present invention is directed to the production and improvement of apparatus capable of more nearly meeting these requirements than those heretofore available, and though I have described various means for the purpose, they involve the same main principles of construction and mode of operation, which may be described as follows: A motor is employed in which there are two or more independent circuits through which alternate currents are passed at proper intervals, in the manner hereinafter described, for the purpose of effecting a progressive shifting of the magnetism or of the "lines of force" in accordance with the well-known theory, and a consequent action of the motor. It is obvious that a proper progressive shifting of the lines of force may be utilized to set up a movement or rotation of either element of the motor, the armature, or the field magnet, and that if the currents directed through the several circuits of the motor are in the proper direction no commutator for the motor will be required; but to avoid all the usual commutating appliances in the system I prefer to connect the motor-circuits directly with those of a suitable alternate current generator. The practical results of such a system, its economical advantages, and the mode of its construction and operation will be described more in detail by reference to the accompanying diagrams and drawings.

Figures 1 to 8 and 1ª to 8ª, inclusive, are diagrams illustrating the principle of the action of my invention. The remaining figures are views of the apparatus in various forms by means of which the invention may be carried into effect, and which will be described in their order.

Referring first to Fig. 9, which is a diagrammatic representation of a motor, a generator, and connecting-circuits in accordance with my invention, M is the motor, and G the generator for driving it. The motor comprises a ring or annulus, R, preferably built up of thin insulated iron rings or annular plates, so as to be as susceptible as possible to variations in its magnetic condition. This ring is surrounded by four coils of insulated wire symmetrically placed, and designated by C C C' C'. The diametrically-opposite coils are connected up so as to co-operate in pairs in producing free poles on diametrically-opposite parts of the ring. The four free ends thus left are connected to terminals T T T' T', as indicated. Near the ring, and preferably inside of it, there is mounted on an axis or shaft, *a*, a magnetic disk, D, generally circular in shape, but having two segments cut away, as shown. This disk is mounted so as to turn freely within the ring R. The generator G is of any ordinary type, that shown in the present instance having field-magnets N S and a cylindrical armature-core, A, wound with the two coils B B'. The free ends of each coil are carried through the shaft *a'* and connected, respectively, to insulated contact-rings *b b' b' b'*. Any convenient form of collector or brush bears on each ring and forms a terminal by which the current to and from a ring is conveyed. These terminals are connected to the terminals of the motor by the wires L and L' in the manner indicated, whereby two complete circuits are formed—one including, say, the coils B of

the generator C' C' of the motor, and the other the remaining coils B' and C C of the generator and the motor.

It remains now to explain the mode of operation of this system, and for this purpose I refer to the diagrams, Figs. 1 to 8, and 1ª to 8ª, for an illustration of the various phases through which the coils of the generator pass when in operation, and the corresponding and resultant magnetic changes produced in the motor. The revolution of the armature of the generator between the field-magnets N S obviously produces in the coils B B' alternating currents, the intensity and direction of which depend upon well-known laws. In the position of the coils indicated in Fig. 1 the current in the coil B is practically *nil*, whereas the coil B' at the same time is developing its maximum current, and by the means indicated in the description of Fig. 9 the circuit including this coil B' may also include, say, the coils C C of the motor, Fig. 1ª. The result, with the proper connections, would be the magnetization of the ring R', the poles being on the line N S. The same order of connections being observed between the coil B and the coils C', the latter, when traversed by a current, tend to fix the poles at right angles to the line N S of Fig. 1ª. It results, therefore, that when the generator-coils have made one eighth of a revolution, reaching the position shown in Fig. 2, both pairs of coils C and C' will be traversed by currents and act in opposition, in so far as the location of the poles is concerned. The position of the poles will therefore be the resultant of the magnetizing forces of the coils—that is to say, it will advance along the ring to a position corresponding to one-eighth of the revolution of the armature of the generator. In Fig. 3 the armature of the generator has progressed to one-quarter of a revolution. At the point indicated the current in the coil B is maximum, while in B' it is *nil*, the latter coil being in its neutral position. The poles of the ring R in Fig. 3 will, in consequence, be shifted to a position ninety degrees from that at the start, as shown. I have in like manner shown the conditions existing at each successive eighth of one revolution in the remaining figures. A short reference to these figures will suffice for an understanding of their significance. Figs. 4 and 4ª illustrate the conditions which exist when the generator-armature has completed three eighths of a revolution. Here both coils are generating current; but the coil B', having now entered the opposite field, is generating a current in the opposite direction, having the opposite magnetizing effect; hence the resultant pole will be on the line N S, as shown. In Fig. 5 one-half of one revolution of the armature of the generator has been completed, and the resulting magnetic condition of the ring is shown in Fig. 5ª. In this phase coil B is in the neutral position while coil B' is generating its maximum current, which is in the same direction as in Fig. 4. The poles will consequently be shifted through one half of the ring. In Fig. 6 the armature has completed five-eighths of a revolution. In this position coil B' develops a less powerful current, but in the same direction as before. The coil B, on the other hand, having entered a field of opposite polarity, generates a current of opposite direction. The resultant poles will therefore be in the line N S, Fig. 6ª, or, in other words, the poles of the ring will be shifted along five-eighths of its periphery. Figs. 7 and 7ª in the same manner illustrate the phases of the generator and ring at three-quarters of a revolution, and Figs. 8 and 8ª the same at seven-eighths of a revolution of the generator-armature. These figures will be readily understood from the foregoing. When a complete revolution is accomplished, the conditions existing at the start are re-established and the same action is repeated for the next and all subsequent revolutions, and, in general, it will now be seen that every revolution of the armature of the generator produces a corresponding shifting of the poles or lines of force around the ring. This effect I utilize in producing the rotation of a body or armature in a variety of ways—for example, applying the principle above described to the apparatus shown in Fig. 9. The disk D, owing to its tendency to assume that position in which it embraces the greatest possible number of the magnetic lines, is set in rotation, following the motion of the lines or the points of greatest attraction.

The disk D in Fig. 9 is shown as cut away on opposite sides; but this, I have found, is not essential to effecting its rotation, as a circular disk, as indicated by dotted lines, is also set in rotation. This phenomenon I attribute to a certain inertia or resistance inherent in the metal to the rapid shifting of the lines of force through the same, which results in a continuous tangential pull upon the disk, causing its rotation. This seems to be confirmed by the fact that a circular disk of steel is more effectively rotated than one of soft iron, for the reason that the former is assumed to possess a greater resistance to the shifting of the magnetic lines.

In illustration of other forms of my invention, I shall now describe the remaining figures of the drawings.

Fig. 10 is a view in elevation and part vertical section of a motor. Fig. 12 is a top view of the same with the field in section and a diagram of connections. Fig. 11 is an end or side view of a generator with the fields in section. This form of motor may be used in place of that shown above. D is a cylindrical or drum-armature core, which, for obvious reasons, should be split up as far as practicable to prevent the circulation within it of currents of induction. The core is wound longitudinally with two coils, E and E', the ends of which are respectively connected to insulated contact-rings *d d' d' d'*, carried by the shaft *a*, upon which the armature is mounted. The armature is set to revolve within an iron shell, R',

which constitutes the field-magnet, or other element of the motor. This shell is preferably formed with a slot or opening, *r*, but it may be continuous, as shown by the dotted lines, and in this event it is preferably made of steel. It is also desirable that this shell should be divided up similarly to the armature and for similar reasons. As a generator for driving this motor I may use the device shown in Fig. 11. This represents an annular or ring armature, A, surrounded by four coils, F F F' F', of which those diametrically opposite are connected in series, so that four free ends are left, which are connected to the insulated contact-rings *b b b' b'*. The ring is suitably mounted on a shaft, *a'*, between the poles N S. The contact-rings of each pair of generator-coils are connected to those of the motor, respectively, by means of contact-brushes and the two pairs of conductors L L and L' L', as indicated diagrammatically in Fig. 12. Now it is obvious from a consideration of the preceding figures that the rotation of the generator-ring produces currents in the coils F F', which, being transmitted to the motor-coils, impart to the core of the latter magnetic poles constantly shifting or whirling around the core. This effect sets up a rotation of the armature owing to the attractive force between the shell and the poles of the armature, but inasmuch as the coils in this case move relative to the shell or field magnet the movement of the coils is in the opposite direction to the progressive shifting of the poles.

Other arrangements of the coils of both generator and motor are possible, and a greater number of circuits may be used, as will be seen in the two succeeding figures.

Fig. 13 is a diagrammatic illustration of a motor and a generator constructed and connected in accordance with my invention. Fig. 14 is an end view of the generator with its field-magnets in section. The field of the motor M is produced by six magnetic poles, G' G', secured to or projecting from a ring or frame, H. These magnets or poles are wound with insulated coils, those diametrically opposite to each other being connected in pairs so as to produce opposite poles in each pair. This leaves six free ends, which are connected to the terminals T T T' T' T'' T''. The armature, which is mounted to rotate between the poles, is a cylinder or disk, D, of wrought-iron, mounted on the shaft *a*. Two segments of the same are cut away, as shown. The generator for this motor has in this instance an armature, A, wound with three coils, K K' K'', at sixty degrees apart. The ends of these coils are connected, respectively, to insulated contact-rings *e e e' e'. e'' e''*. These rings are connected to those of the motor in proper order by means of collecting-brushes and six wires, forming three independent circuits. The variations in the strength and direction of the currents transmitted through these circuits and traversing the coils of the motor produce a steadily-progressive shifting of the resultant attractive force exerted by the poles G' upon the armature D, and consequently keep the armature rapidly rotating. The peculiar advantage of this disposition is in obtaining a more concentrated and powerful field. The application of this principle to systems involving multiple circuits generally will be understood from this apparatus.

Referring, now, to Figs. 15 and 16, Fig. 15 is a diagrammatic representation of a modified disposition of my invention. Fig. 16 is a horizontal cross section of the motor. In this case a disk, D, of magnetic metal, preferably cut away at opposite edges, as shown in dotted lines in Fig. 15, is mounted so as to turn freely inside two stationary coils, N' N'', placed at right angles to one another. The coils are preferably wound on a frame, O, of insulating material, and their ends are connected to the fixed terminals T T T' T'. The generator G is a representative of that class of alternating-current machines in which a stationary induced element is employed. That shown consists of a revolving permanent or electro magnet, A, and four independent stationary magnets, P P', wound with coils, those diametrically opposite to each other being connected in series and having their ends secured to the terminals *t t t' t'*. From these terminals the currents are led to the terminals of the motor, as shown in the drawings. The mode of operation is substantially the same as in the previous cases, the currents traversing the coils of the motor having the effect to turn the disk D. This mode of carrying out the invention has the advantage of dispensing with the sliding contacts in the system.

In the forms of motor above described only one of the elements, the armature or the field-magnet, is provided with energizing-coils. It remains, then, to show how both elements may be wound with coils. Reference is therefore had to Figs. 17, 18, and 19. Fig. 17 is an end view of such a motor. Fig. 18 is a similar view of the generator with the field-magnets in section, and Fig. 19 is a diagram of the circuit-connections. In Fig. 17 the field-magnet of the motor consists of a ring, R, preferably of thin insulated iron sheets or bands with eight pole pieces, G', and corresponding recesses, in which four pairs of coils, V, are wound. The diametrically opposite pairs of coils are connected in series and the free ends connected to four terminals, *w*, the rule to be followed in connecting being the same as hereinbefore explained. An armature, D, with two coils, E E', at right angles to each other, is mounted to rotate in side of the field-magnet R. The ends of the armature-coils are connected to two pairs of contact-rings, *d d d' d'*, Fig. 19. The generator for this motor may be of any suitable kind to produce currents of the desired character. In the present instance it consists of a field-magnet, N S, and an armature, A, with two coils at right angles, the ends of which are connected to four contact-rings, *b b b' b'*, carried by its shaft. The circuit-connections are es-

tablished between the rings on the generator-shaft and those on the motor-shaft by collecting brushes and wires, as previously explained. In order to properly energize the field-magnet of the motor, however, the connections are so made with the armature coils or wires leading thereto that while the points of greatest attraction or greatest density of magnetic lines of force upon the armature are shifted in one direction those upon the field-magnet are made to progress in an opposite direction. In other respects the operation is identically the same as in the other cases cited. This arrangement results in an increased speed of rotation. In Figs. 17 and 19, for example, the terminals of each set of field-coils are connected with the wires to the two armature-coils in such way that the field-coils will maintain opposite poles in advance of the poles of the armature.

In the drawings the field coils are in shunts to the armature, but they may be in series or in independent circuits.

It is obvious that the same principle may be applied to the various typical forms of motor hereinbefore described.

Having now described the nature of my invention and some of the various ways in which it is or may be carried into effect, I would call attention to certain characteristics which the applications of the invention possess and the advantages which the invention secures.

In my motor, considering for convenience that represented in Fig. 9, it will be observed that since the disk D has a tendency to follow continuously the points of greatest attraction, and since these points are shifted around the ring once for each revolution of the armature of the generator, it follows that the movement of the disk D will be synchronous with that of the armature A. This feature by practical demonstrations I have found to exist in all other forms in which one revolution of the armature of the generator produces a shifting of the poles of the motor through three hundred and sixty degrees.

In the particular construction shown in Fig. 15, or in others constructed on a similar plan, the number of alternating impulses resulting from one revolution of the generator armature is double as compared with the preceding cases, and the polarities in the motor are shifted around twice by one revolution of the generator-armature. The speed of the motor will, therefore, be twice that of the generator. The same result is evidently obtained by such a disposition as that shown in Fig. 17, where the poles of both elements are shifted in opposite directions.

Again, considering the apparatus illustrated by Fig. 9 as typical of the invention, it is obvious that since the attractive effect upon the disk D is greatest when the disk is in its proper relative position to the poles developed in the ring R—that is to say, when its ends or poles immediately follow those of the ring—the speed of the motor for all the loads within the normal working limits of the motor will be practically constant. It is clearly apparent that the speed can never exceed the arbitrary limit as determined by the generator, and also that within certain limits at least the speed of the motor will be independent of the strength of the current.

It will now be more readily seen from the above description how far the requirements of a practical system of electrical transmission of power are realized in my invention. I secure, first, a uniform speed under all loads within the normal working limits of the motor without the use of any auxiliary regulator; second, synchronism between the motor and generator; third, greater efficiency by the more direct application of the current, no commutating devices being required on either the motor or generator; fourth, cheapness and simplicity of mechanical construction and economy in maintenance; fifth, the capability of being very easily managed or controlled; and, sixth, diminution of danger from injury to persons and apparatus.

These motors may be run in series, multiple arc or multiple series, under conditions well understood by those skilled in the art.

The means or devices for carrying out the principle may be varied to a far greater extent than I have been able to indicate; but I regard as within my invention, and I desire to secure by Letters Patent in general, motors containing two or more independent circuits through which the operating-currents are led in the manner described. By "independent" I do not mean to imply that the circuits are necessarily isolated from one another, for in some instances there might be electrical connections between them to regulate or modify the action of the motor without necessarily producing a new or different action.

I am aware that the rotation of the armature of a motor wound with two energizing-coils at right angles to each other has been effected by an intermittent shifting of the energizing effect of both coils through which a direct current by means of mechanical devices has been transmitted in alternately-opposite directions; but this method or plan I regard as absolutely impracticable for the purposes for which my invention is designed—at least on any extended scale—for the reasons, mainly, that a great waste of energy is necessarily involved unless the number of energizing-circuits is very great, and that the interruption and reversal of a current of any considerable strength by means of any known mechanical devices is a matter of the greatest difficulty and expense.

In this application I do not claim the method of operating motors which is herein involved, having made separate application for such method.

I therefore claim the following:

1. The combination, with a motor containing separate or independent circuits on the armature or field-magnet, or both, of an alternating-current generator containing induced

circuits connected independently to corresponding circuits in the motor, whereby a rotation of the generator produces a progressive shifting of the poles of the motor, as herein described.

2. In a system for the electrical transmission of power, the combination of a motor provided with two or more independent magnetizing-coils and an alternating current generator containing induced coils corresponding to the motor coils, and circuits connecting directly the motor and generator coils in such order that the currents developed by the generator will be passed through the corresponding motor-coils, and thereby produce a progressive shifting of the poles of the motor, as herein set forth.

3. The combination, with a motor having an annular or ring-shaped field magnet and a cylindrical or equivalent armature, and independent coils on the field-magnet or armature, or both, of an alternating current generator having correspondingly independent coils, and circuits including the generator-coils and corresponding motor coils in such manner that the rotation of the generator causes a progressive shifting of the poles of the motor in the manner set forth.

4. In a system for the electrical transmission of power, the combination of the following instrumentalities, to wit: a motor composed of a disk or its equivalent mounted within a ring or annular field-magnet, which is provided with magnetizing-coils connected in diametrically-opposite pairs or groups to independent terminals, a generator having induced coils or groups of coils equal in number to the pairs or groups of motor-coils, and circuits connecting the terminals of said coils to the terminals of the motor, respectively, and in such order that the rotation of the generator and the consequent production of alternating currents in the respective circuits produces a progressive shifting of the poles of the motor, as hereinbefore described.

NIKOLA TESLA.

Witnesses:
FRANK E. HARTLEY,
FRANK B. MURPHY.

(No Model.) 4 Sheets—Sheet 1.

N. TESLA.

ELECTRO MAGNETIC MOTOR.

No. 381,968. Patented May 1, 1888.

Fig: 1

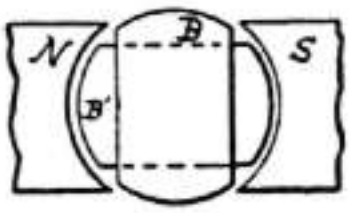

Fig: 2.

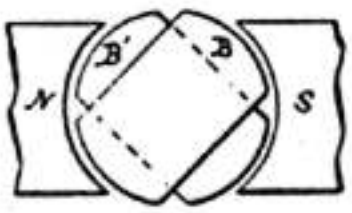

Fig: 3.

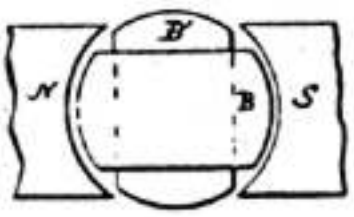

Fig: 4.

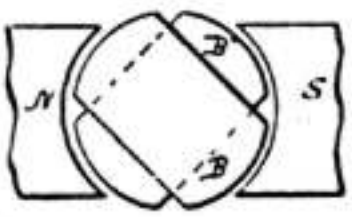

Fig: 5

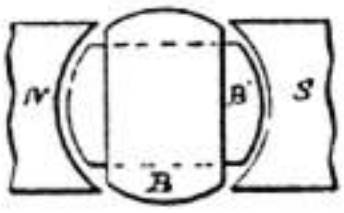

Fig: 6.

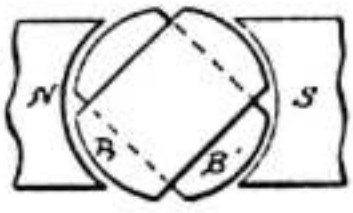

Fig: 7.

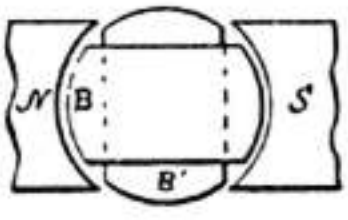

Fig: 8.

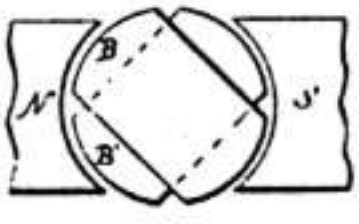

Fig: 1ª

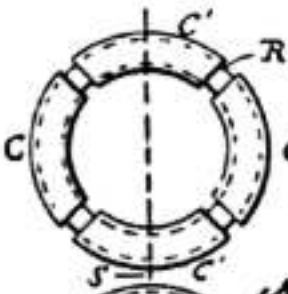

Fig: 2ª

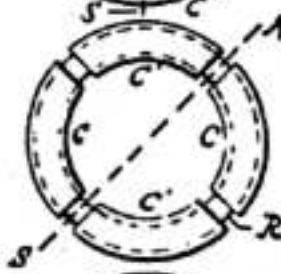

Fig: 3ª

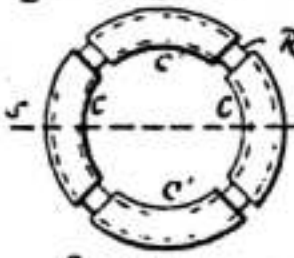

Fig: 4ª

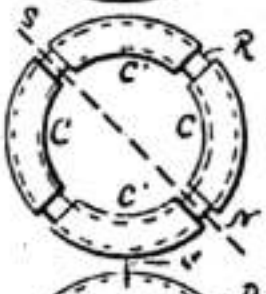

Fig: 5ª

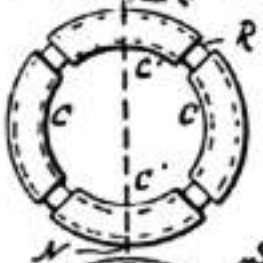

Fig: 6ª.

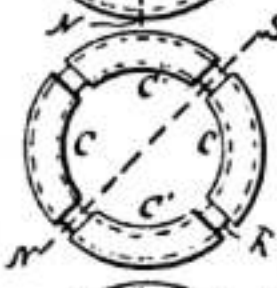

Fig: 7ª

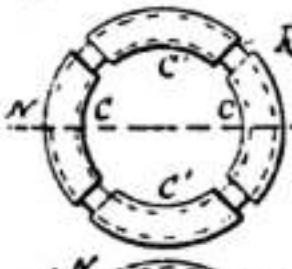

Fig: 8ª

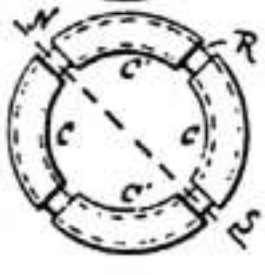

WITNESSES:

Frank E. Hartley
Frank B. Murphy.

INVENTOR

Nikola Tesla

BY

Duncan, Curtis & Page

ATTORNEYS.

P-34

(No Model.)

4 Sheets—Sheet 2.

N. TESLA.

ELECTRO MAGNETIC MOTOR.

No. 381,968. Patented May 1, 1888.

Fig: 9.

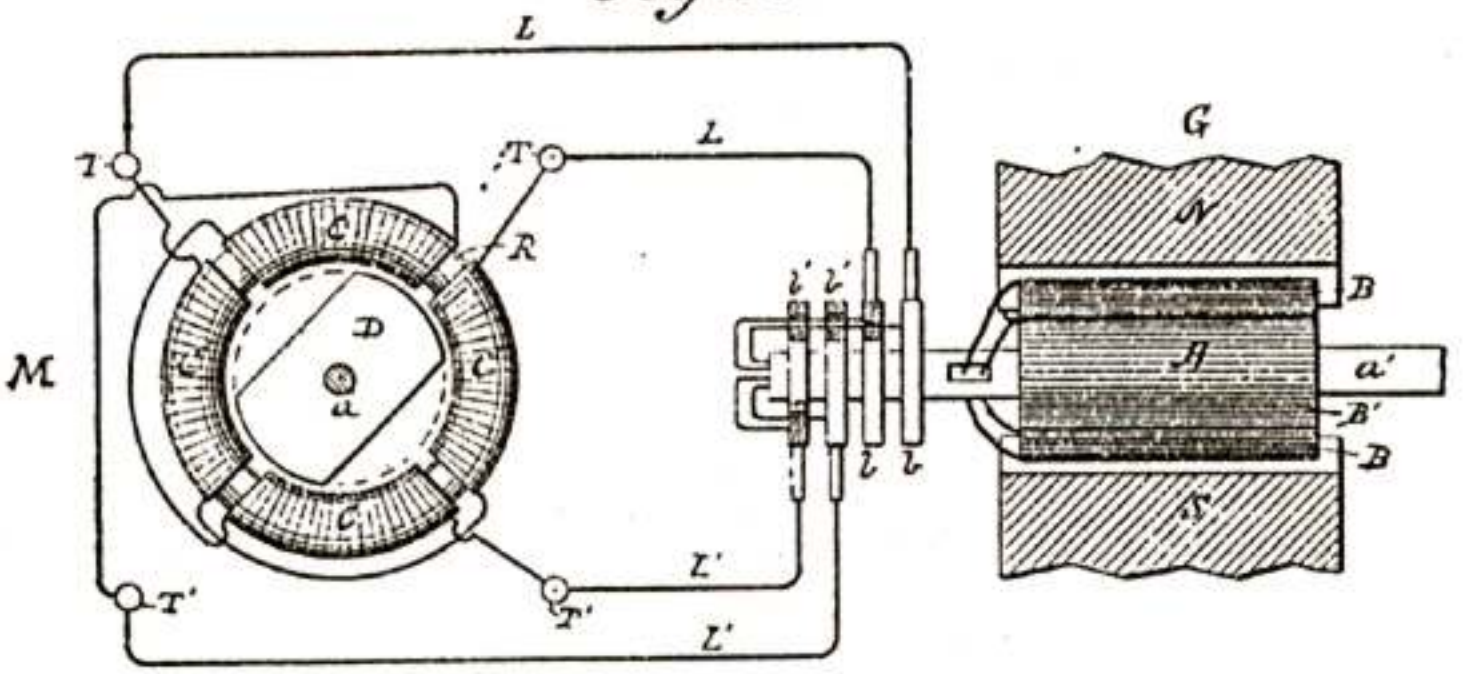

Fig: 10.

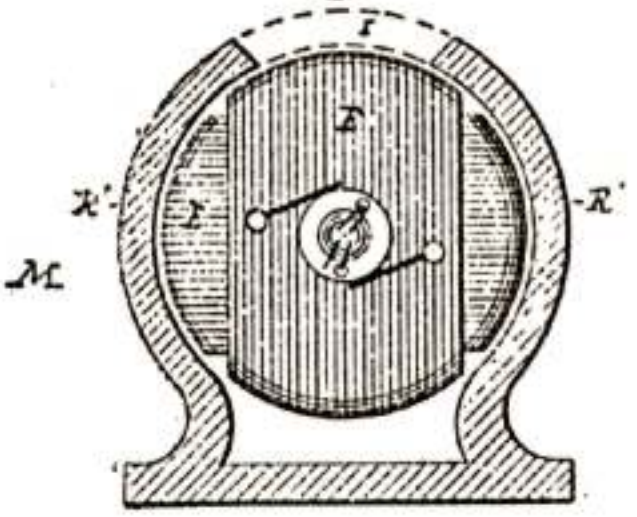

Fig: 11.

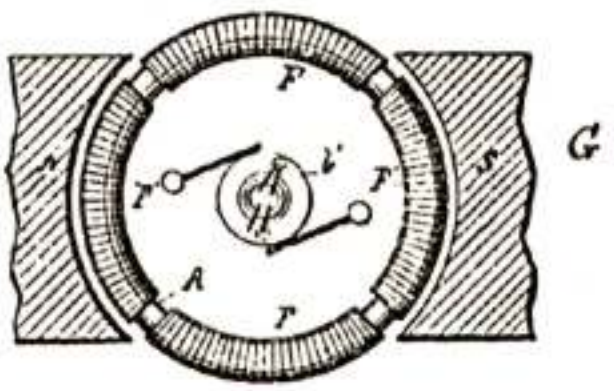

Fig: 12.

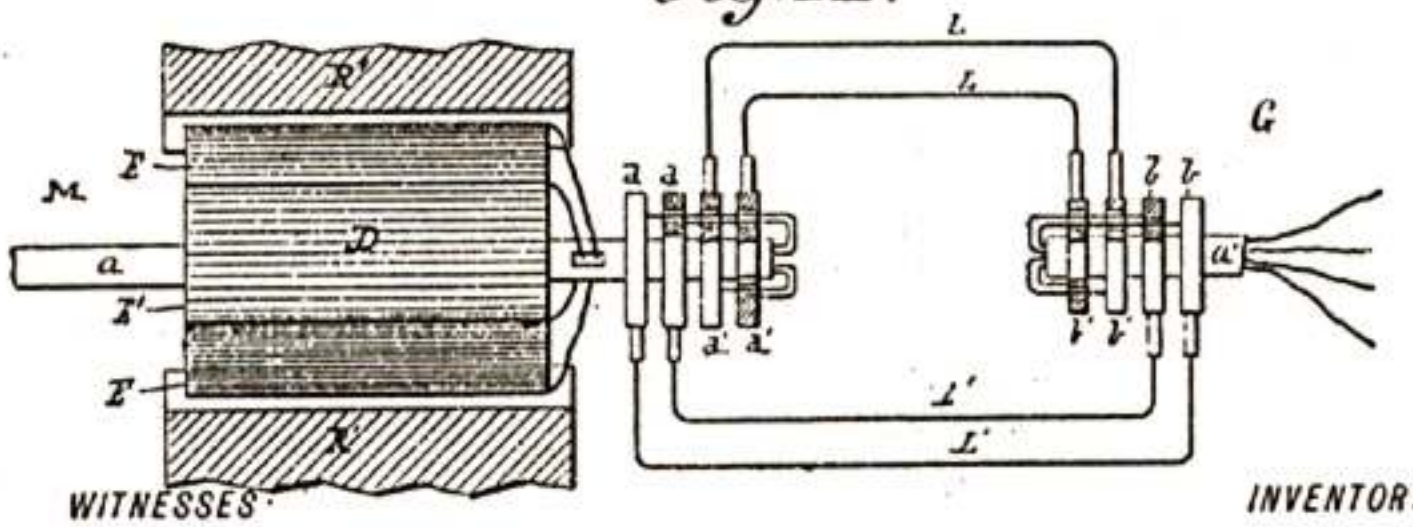

WITNESSES.

Frank C. Hartley.

Frank B. Murphy.

INVENTOR.

Nikola Tesla.

BY

Duncan Curtis & Page

ATTORNEYS.

(No Model.) 4 Sheets—Sheet 3.

N. TESLA.

ELECTRO MAGNETIC MOTOR.

No. 381,968. Patented May 1, 1888.

Fig: 13.

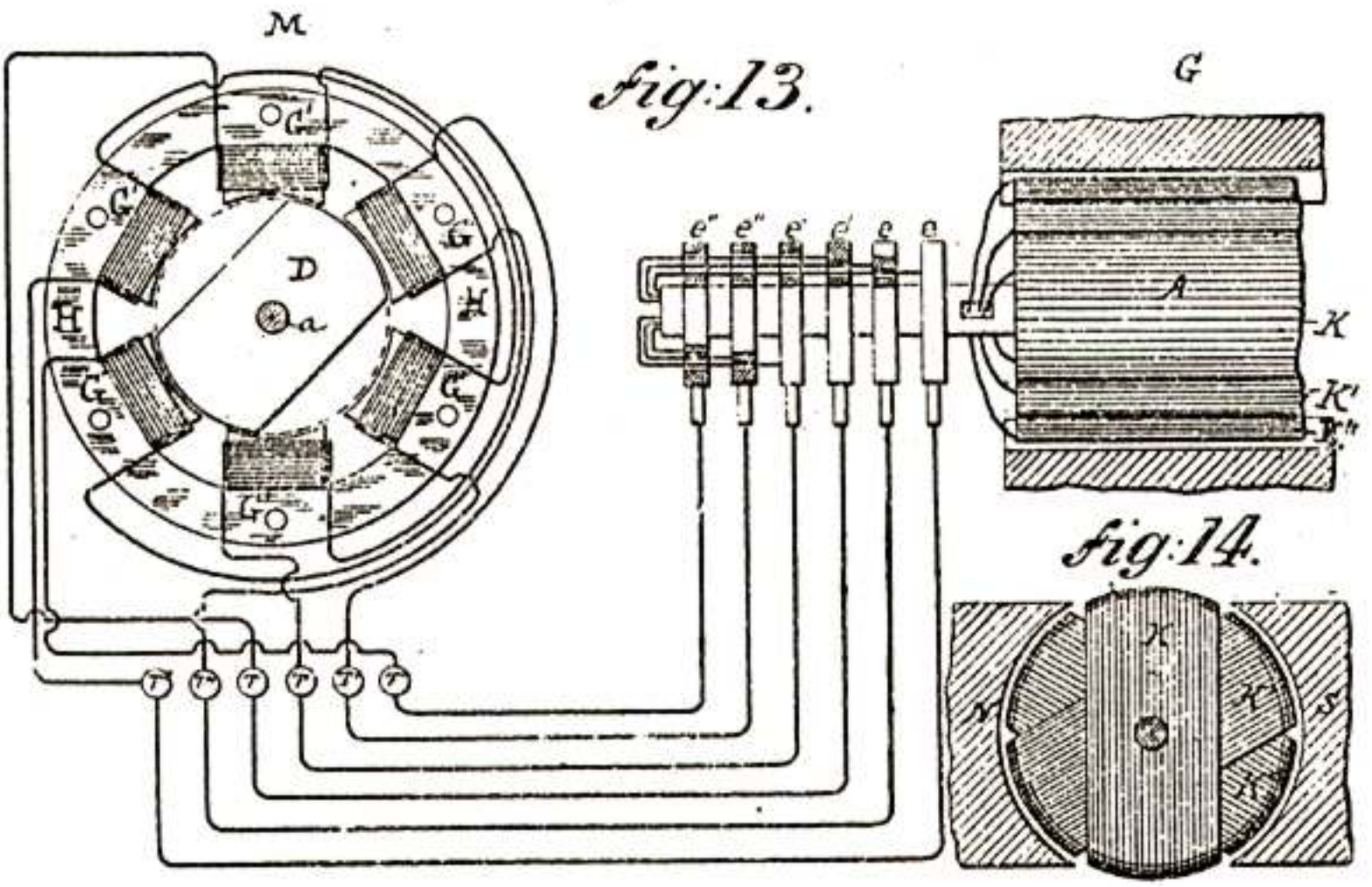

Fig: 14.

Fig: 15.

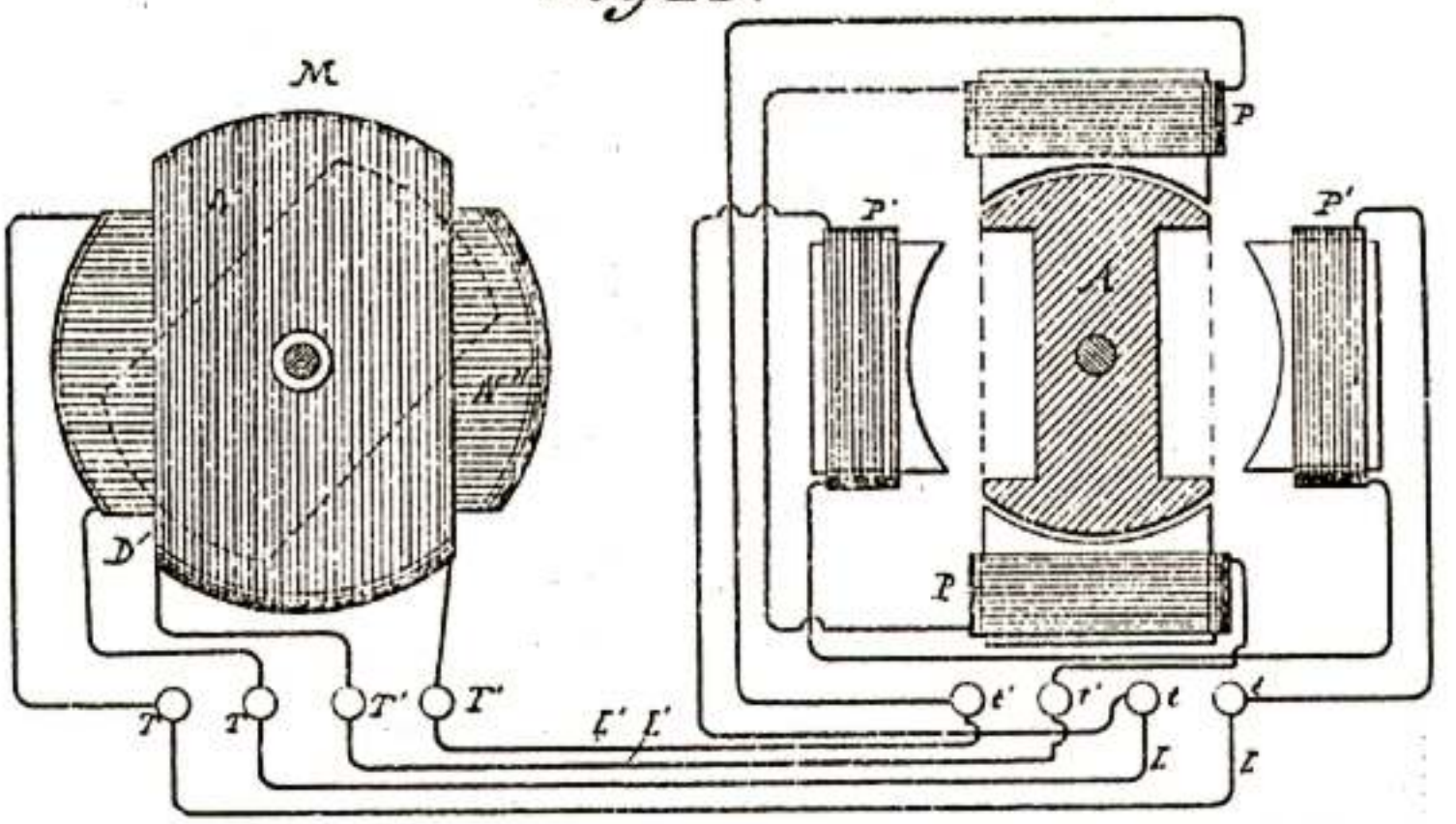

WITNESSES:

Frank E. Hastings.

Frank B. Murphy.

Fig: 16.

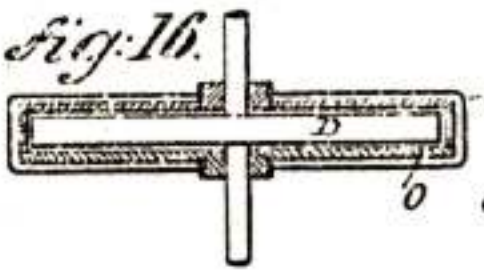

INVENTOR.

Nikola Tesla

BY

Duncan, Curtis & Page

ATTORNEYS.

P-36

(No Model.)

4 Sheets—Sheet 4

N. TESLA.

ELECTRO MAGNETIC MOTOR.

No. 381,968 Patented May 1, 1888.

Fig: 17

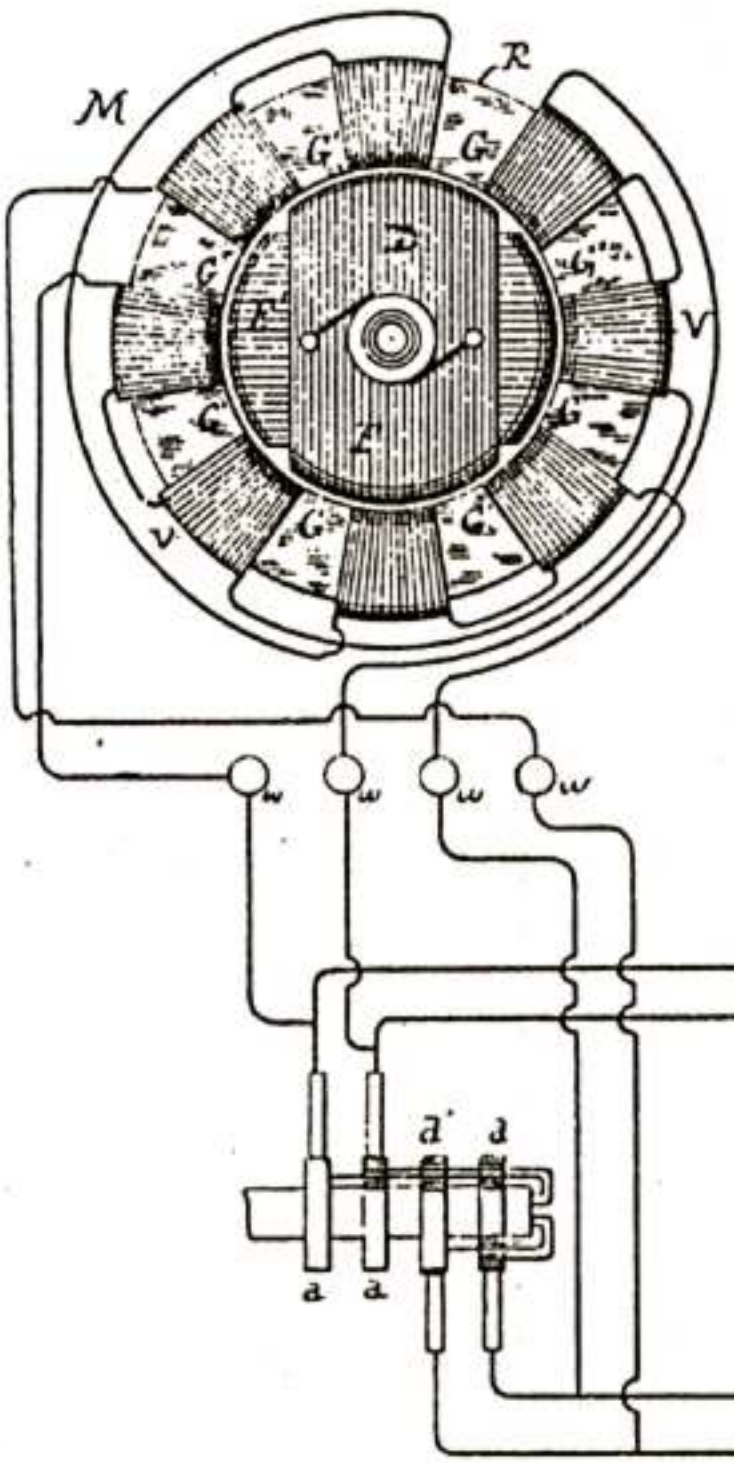

Fig: 18

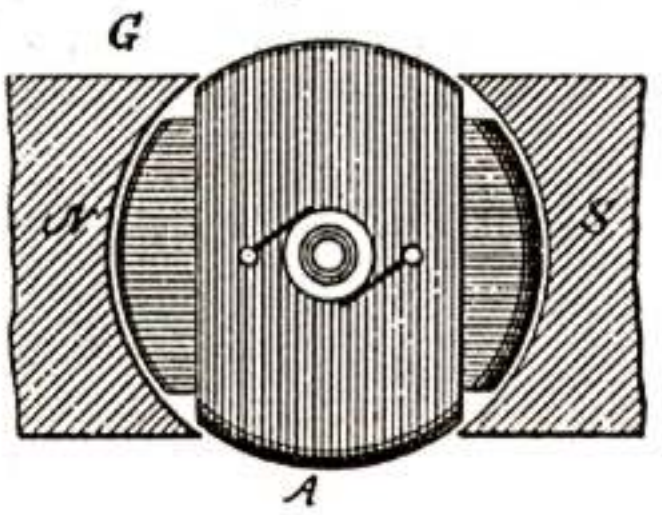

Fig: 19

WITNESSES

Frank E. Hartley

Frank B. Murphy.

INVENTOR

Nikola Tesla,

BY

Duncan Curtis & Page

ATTORNEYS.

UNITED STATES PATENT OFFICE.

NIKOLA TESLA, OF NEW YORK, N. Y., ASSIGNOR OF ONE HALF TO CHARLES F. PECK, OF ENGLEWOOD, NEW JERSEY.

ELECTRO-MAGNETIC MOTOR.

SPECIFICATION forming part of Letters Patent No. 381,969, dated May 1, 1888.

Application filed November 30, 1887. Serial No. 256,562. (No model.)

To all whom it may concern:

Be it known that I, NIKOLA TESLA, from Smiljan Lika, border country of Austria-Hungary, now residing in New York, in the county and State of New York, have invented certain new and useful Improvements in Electro-Magnetic Motors, of which the following is a specification, reference being had to the drawings accompanying and forming a part of the same.

In an application filed by me October 12, 1887, No. 252,132, I have shown and described a novel form of electro-magnetic motor and a mode of operating the same, which may be generally described as follows: The motor is wound with coils forming independent energizing-circuits on either the armature or field magnet, or both, (it is sufficient for present purposes to consider the case in which the coils are on the armature alone,) and these coils are connected up with corresponding circuits on an alternating-current generator. As the result of this, currents of alternately-opposite direction are sent through the energizing-coils of the motor in such manner as to produce a progressive shifting or rotation of the magnetic poles of the armature. This movement of the poles of the armature obviously tends to rotate the armature in the opposite direction to that in which the movement of the poles takes place, owing to the attractive force between said poles and the field-magnets, and the speed of rotation increases from the start until it equals that of the generator, supposing both motor and generator to be alike.

As the poles of the armature are shifted in a direction opposite to that in which the armature rotates, it will be apparent that when the normal speed is attained the poles of the armature will assume a fixed position relative to the field-magnet, and that in consequence the field-magnets will be energized by magnetic induction, exhibiting two distinct poles, one in each of the pole-pieces. In starting the motor, however, the speed of the armature being comparatively slow, the pole-pieces are subjected to rapid reversals of magnetic polarity; but as the speed increases these reversals become less and less frequent, and finally cease when the movement of the armature become synchronous with that of the generator. This being the case, the field-cores and the pole-pieces of the motor become a magnet, but by induction only.

I have found that advantageous results are secured by winding the field-magnets with a coil or coils and passing a continuous current through them, thus maintaining a permanent field, and in this feature my present invention consists.

I shall now describe the apparatus which I have devised for carrying out this invention and explain the mode of using or operating the same.

Figure 1 is an end view in elevation of my improved motor. Fig. 2 is a part horizontal central section, and Fig. 3 is a diagrammatic representation of the motor and generator combined and connected for operation.

Let A A in Fig. 1 represent the legs or pole-pieces of a field-magnet, around which are coils B B, included in the circuit of a continuous-current generator, C, which is adapted to impart magnetism to the said poles in the ordinary manner.

D D' are two independent coils wound upon a suitable cylindrical or equivalent armature-core, which, like all others used in a similar manner, should be split or divided up into alternate magnetic and insulating parts in the usual way. This armature is mounted in non-magnetic cross-bars E E, secured to the poles of the field-magnet. The terminals of the armature-coils D D' are connected to insulated sliding contact-rings *a a b b*, carried by the armature shaft, and brushes *c c'* bear upon these rings to convey to the coils the currents which operate the motor.

The generator for operating this motor is or may be of precisely identical construction; and for convenience of reference I have marked in Fig. 3 its parts, as follows: F F, the field-magnets, energized by a continuous current passing in its field-coils, G G; H H', the coils carried by the cylindrical armature; *d d c c*, the friction or collecting rings, carried by the armature-shaft and forming the terminals of the armature-coils; and *f f'*, the collecting-brushes which deliver the currents developed in the armature-coils to the two circuits *g g'*, which connect the generators with the motor.

The operation of this system will be understood from the foregoing. The action of the generator, by causing a progressive shifting of the poles in the motor-armature, sets up in the latter a rotation opposite in direction to that in which the poles move. If, now, the continuous current be directed through the field coils, so as to strongly energize the magnet A A, the speed of the motor, which depends upon that of the generator, will not be increased, but the power which produces its rotation will be increased in proportion to the energy supplied through the coils B B.

It is characteristic of this motor that its direction of rotation is not reversed by reversing the direction of the current through its field-coils, for the direction of rotation depends not upon the polarity of the field, but upon the direction in which the poles of the armature are shifted. To reverse the motor, the connections of either of the circuits *g g'* must be reversed.

I have found that if the field-magnet of the motor be strongly energized by its coils B B and the circuits through the armature-coils closed, assuming the generator to be running at a certain speed, the motor will not start; but if the field be but slightly energized or in general in such condition that the magnetic influence of the armature preponderates in determining its magnetic condition the motor will start and, with sufficient current, will reach its maximum or normal speed. For this reason it is desirable to keep at the start and until the motor has attained its normal speed, or nearly so, the field-circuit open or to permit but little current to pass through it. I have found, however, if the fields of both the generator and motor be strongly energized that starting the generator starts the motor, and that the speed of the motor is increased in synchronism with the generator. Motors constructed and operated on this principle maintain almost absolutely the same speed for all loads within their normal working-limits; and in practice I have observed that if the motor be overloaded to such an extent as to check its speed the speed of the generator, if its motive power be not too great, is diminished synchronously with that of the motor.

I have in other applications shown how the construction of these or similar motors may be varied in certain well-known ways—as, for instance, by rotating the field about a stationary armature or rotating conductors within the field; but I do not illustrate these features further herein, as with the illustration which I have given I regard the rest as within the power of a person skilled in the art to construct.

The present form of motor is cheap, simple, reliable, and easy to maintain. It requires the simplest type of generator for its operation, and when properly constructed shows a high efficiency.

I do not claim herein the method of transmitting power which this system involves, having made it the subject of another application for patent.

What I claim is—

The combination, with a motor having independent energizing or armature circuits, of an alternating-current generator with corresponding induced circuits connected with the motor for effecting a progressive shifting of the poles of the motor-armature, and a source of continuous current for energizing the field of said motor, as set forth.

NIKOLA TESLA.

Witnesses:
FRANK B. MURPHY,
FRANK E. HARTLEY.

P-39

(No Model.) 2 Sheets—Sheet 1.

N. TESLA.

ELECTRO MAGNETIC MOTOR.

No. 381,969. Patented May 1, 1888.

Fig: 1.

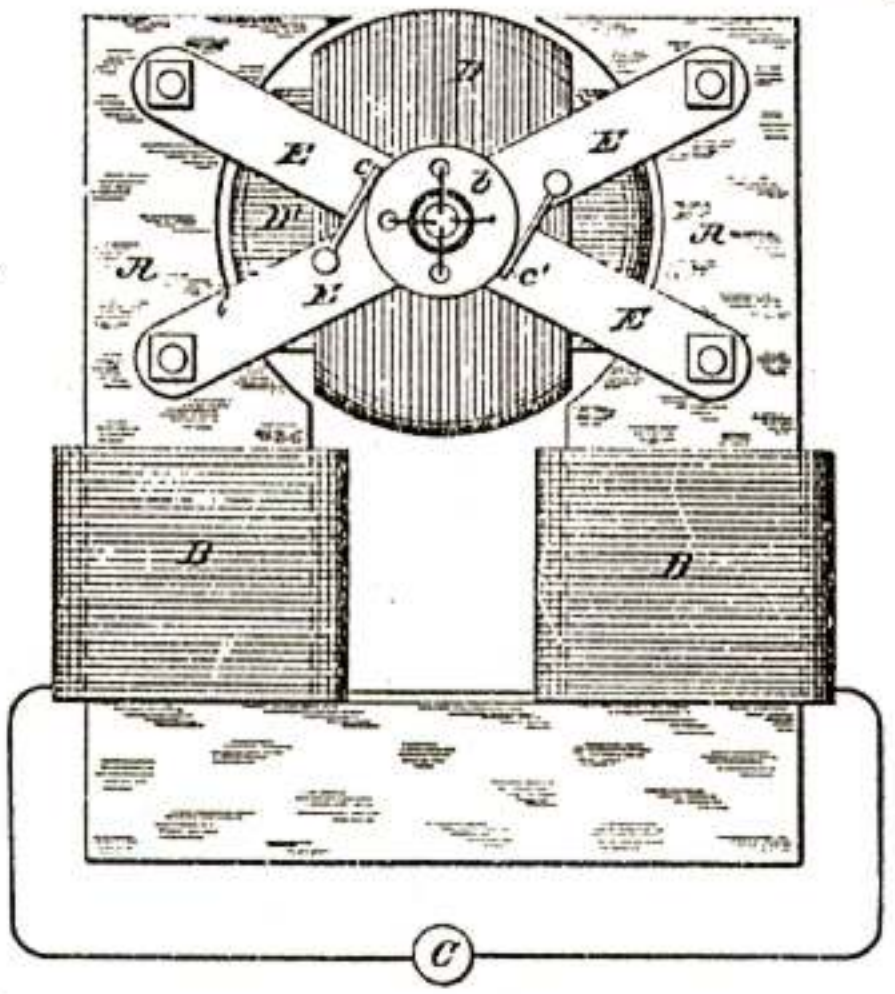

Fig: 2.

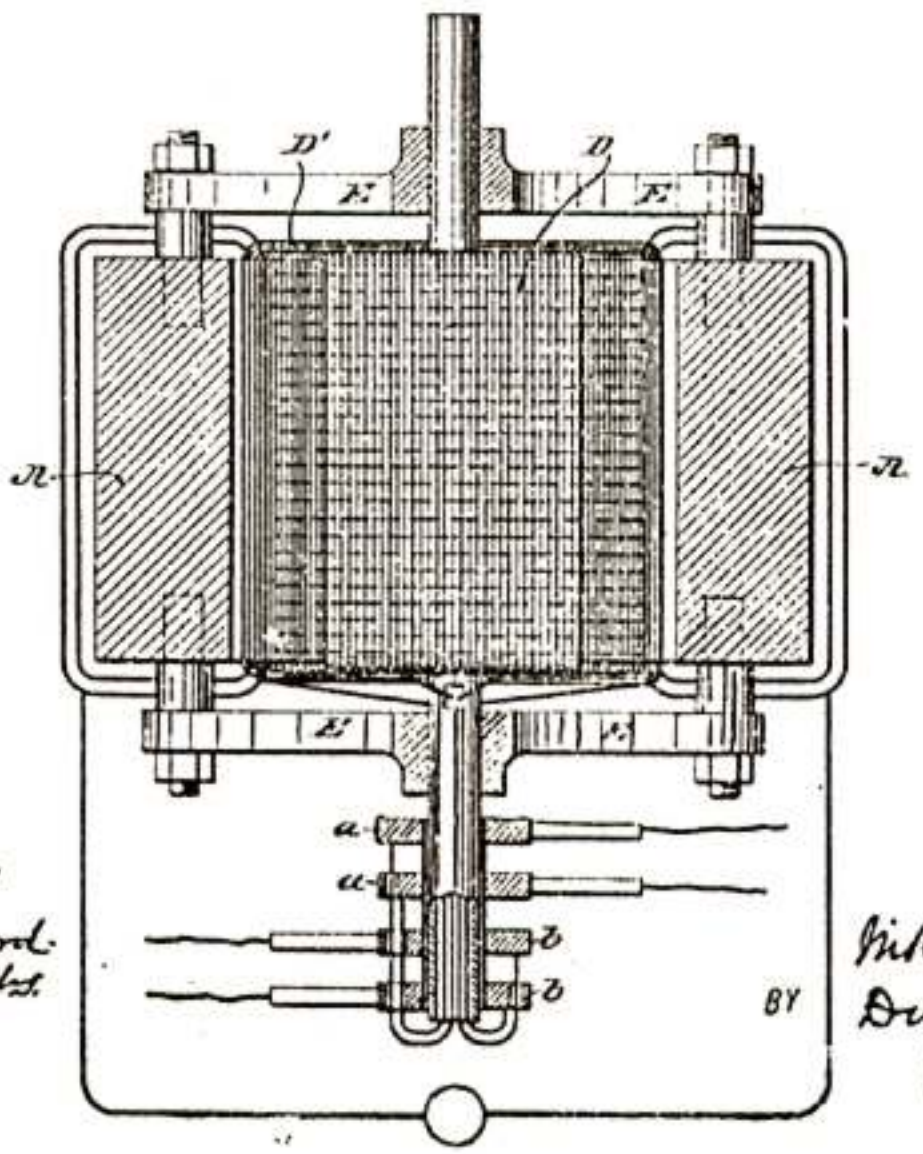

WITNESSES:

Robt. F. Gaylord.
Frank B. Murphy.

INVENTOR.

Nikola Tesla
Duncan Curtis
& Page
ATTORNEYS.

BY

P-40

(No Model.)

2 Sheets—Sheet 2.

N. TESLA

ELECTRO MAGNETIC MOTOR.

No 381,969. Patented May 1, 1888.

Fig: 3

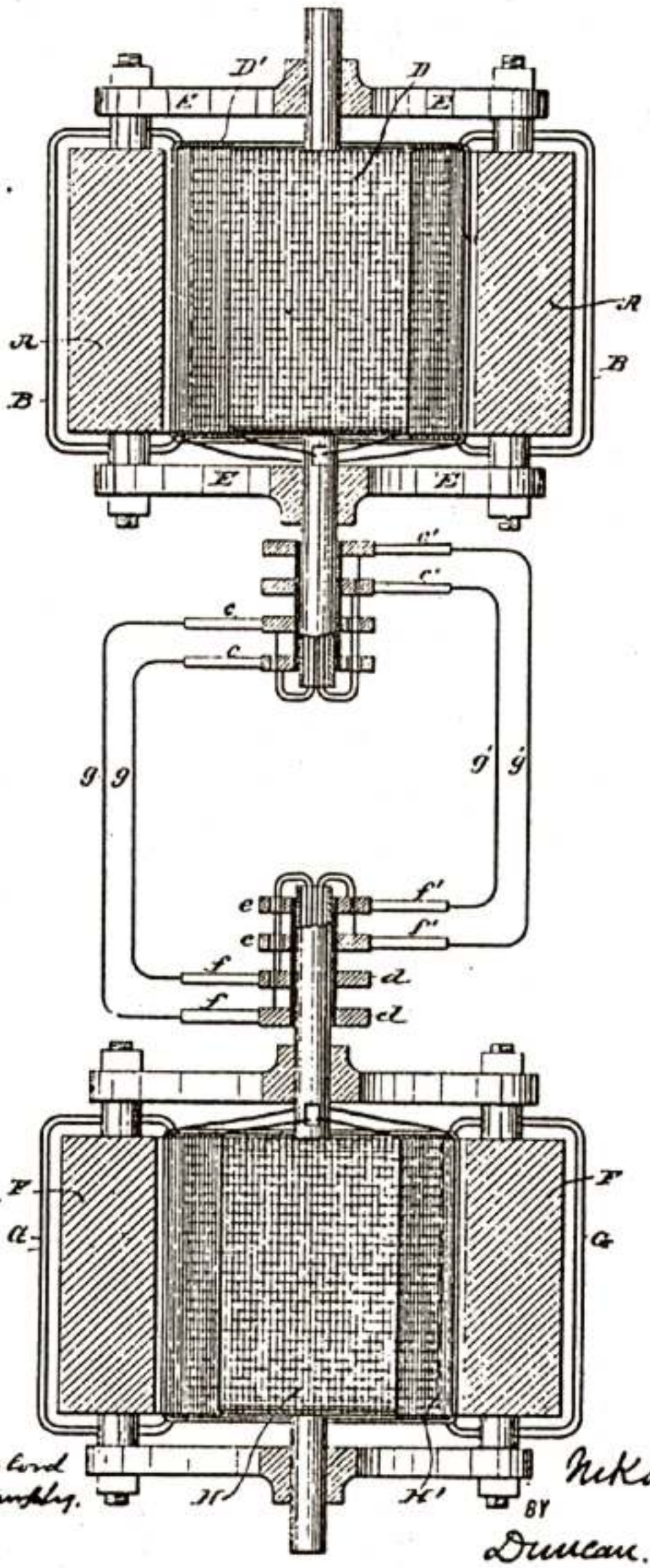

WITNESSES:

Robt F. Gaylord

Frank B. Murphy.

INVENTOR

Nikola Tesla

BY

Duncan, Curtis & Page

ATTORNEYS.

UNITED STATES PATENT OFFICE.

NIKOLA TESLA, OF NEW YORK, N. Y., ASSIGNOR OF ONE-HALF TO CHARLES F. PECK, OF ENGLEWOOD, NEW JERSEY.

ELECTRO-MAGNETIC MOTOR.

SPECIFICATION forming part of Letters Patent No. 382,279, dated May 1, 1888.

Application filed November 30, 1887. Serial No. 256,561. (No model.)

To all whom it may concern:

Be it known that I, NIKOLA TESLA, a subject of the Emperor of Austria, from Smiljan, Lika, border country of Austria-Hungary, now residing at New York, in the county and State of New York, have invented certain new and useful Improvements in Electro-Magnetic Motors, of which the following is a specification, reference being had to the drawings accompanying and forming a part of the same.

In a former application, filed October 12, 1887, No. 252,132, I have shown and described a mode or plan of operating electric motors by causing a progressive shifting of the poles of one or both of the parts or elements of a motor—that is to say, of either the field magnet or magnets or armature, or both. I accomplish this by constructing a motor with two or more independent energizing-circuits, on the field-magnets, for example, and I connect these up with corresponding induced or generating circuits in an alternating-current generator, so that alternating currents are caused to traverse the motor-circuits. By so doing the poles of the field-magnet of the motor are progressively shifted, and by their attraction upon a rotary armature set up a rotation in the latter in the direction of the movement of the poles. In this case, however, the rotation is produced and maintained by the direct attraction of the magnetic elements of the motor. I have discovered that advantageous results may be secured in this system by utilizing the shifting of the poles primarily to set up currents in a closed conductor located within the influence of the field of the motor, so that the rotation may result from the reaction of such currents upon the field.

To illustrate more fully the nature of the invention I refer to the accompanying drawings.

Figure 1 represents in side elevation the operative parts or elements of a motor embodying the principles of my invention, and in section the generator for operating the same. Fig. 2 is a horizontal central section of the motor in Fig. 1, the circuits being shown partly in diagram. Fig. 3 is a modified form of motor in side elevation. Fig. 4 is a central horizontal cross-section of Fig. 3.

In Figs. 1 and 2, A is an annular core of soft iron, preferably laminated or formed of insulated sections, so as to be susceptible to rapid variations of magnetism. This core is wound with four coils, C C C' C', the diametrically-opposite coils being connected in the same circuit, and the two free ends of each pair being brought to the terminals *t* and *t'*, respectively, as shown. Within this annular field-magnet A is mounted a soft-iron cylinder or disk, D, on an axis, *a*, in bearings *b b*, properly supported by the frame-work of the machine. The disk carries two coils, E E', of insulated wire, wound at right angles to one another, and having their respective ends joined, so that each coil forms a separate closed circuit.

In illustration of the action or mode of operation of this apparatus, let it be assumed that the annular field-magnet A is permanently magnetized, so as to present two free poles diametrically opposite. If suitable mechanical provision be now made for rotating the field-magnet around the disk, the apparatus exemplifies the conditions of an ordinary magneto-generator, and currents would be set up in the coils or closed conductors E E' on the disk D. Evidently these currents would be the most powerful at or near the points of the greatest density of the lines of force, and they would, as in all similar cases, tend, at least theoretically, to establish magnetic poles in the disk D at right angles to those in the annular field-magnet A. As a result of the well-known reaction of these polarities upon each other, a more or less powerful tendency in the disk to rotate in the same direction as that of the field-magnet would be established. If, on the other hand, the ring or annular field-magnet A be held stationary and its magnetic poles progressively shifted by passing through its coils C C' properly-alternated currents, it is obvious that similar results will follow, for the passage of the currents causing the shifting or whirling of the poles of the field-magnet A induces currents in the closed circuits of the armature-coils E E', with the result of setting up a rotation of the disk D in the same direction of such shifting. Inasmuch as the currents are always induced or generated in the coils E E' in the same manner, the poles of the disk or cylinder follow continuously the poles of the annular field-magnet, maintaining, at least theoretically, the same rela-

tive positions. This results in an even and perfect action of the apparatus.

In order that the system as a whole may be better understood, I shall now describe the mode or plan devised by me for producing the currents that effect the progressive shifting of the poles of the motor.

In Fig. 1, B B' are the poles or pole pieces of an alternating-current generator. They are permanently magnetized and of opposite polarity. F is a cylindrical or other armature containing the independent coils G G'. These coils are wound at right angles, so that while one is crossing the strongest portion of the field of force the other is at the neutral point. The coils G G' terminate in the two pairs of insulated collecting-rings *f* and *f'*, upon which bear the brushes *g g'*. Four wires connect the motor-terminals *t* and *t'* with the brushes *g* and *g'*, respectively. When the generator is rotated, the coil G will at the certain point shown in the drawings be generating its maximum current, while coil G' is neutral. Let it be assumed that this current is conveyed from the rings *f f* to the terminals *t t* and through the coils C C. Its effect will be to establish poles in the ring midway between the two coils. By the further rotation of the generator the coil G' is brought within the influence of the field and begins to produce a current, which grows stronger as the said coil approaches the maximum points of the field, while the current produced in the coil G diminishes as the said coil recedes from those points. The current from the coil G', being conveyed to the terminals *t' t'* and through coils C' C', has a tendency to establish poles at right angles to those set up by the coils C C; but owing to the greater effect of the current in coils C C the result is merely to advance the poles from the position in which they would remain if due to the magnetizing influence of coils C C alone. This progression continues for a quarter-revolution until coil G G becomes neutral and coil G' G' produces its maximum current. The action described is then repeated, the poles having been shifted through one-half of the field, or a half-revolution. The second half-revolution is accomplished in a similar way, the same polarity being maintained in the shifting poles by the movement of the generator-coils alternately through fields of opposite polarity.

The same principle of operation may be applied to motors of various forms, and I have shown one of such modified forms in Figs. 3 and 4 of the drawings. In these figures, M M' are field-magnets secured to or forming part of a frame, F', mounted on a base, P. These magnets should be laminated or composed of a number of electrically-insulated magnetic sections, to prevent the circulation of induced currents and to render them capable of rapid magnetic changes. These magnetic cores or poles are wound with insulated coils C C', the diametrically-opposite coils being connected together in series and their free ends brought to terminals *t t'*, respectively. Between the poles there is mounted, in bearings in the cross-pieces G", a cylindrical iron core, D, which, in order to prevent the formation of eddying currents, and the loss consequent thereon, is subdivided in the usual way. Insulated conductors or coils are applied to the cylinder D longitudinally, and for these I may employ copper plates E E', which are secured to the sides and ends of the cylindrical core in well-known ways. These plates or conductors may form one or preferably several independent circuits around the core. In the drawings two of such circuits are shown, formed respectively by the conductors E and E', which are insulated from each other. It is advantageous also to slot these plates longitudinally, to prevent the formation of eddy currents and waste of energy.

From what has now been given the operation of this apparatus will be readily understood. To the binding-posts *t t'* are connected the proper circuits from the generator to cause a progressive shifting of the resultant magnetic poles produced by the magnets M upon the armature. Thus currents are induced in the closed circuits on the core, which, energizing the core strongly, maintain a powerful attraction between the same and the field, which causes a rotation of the armature in the direction in which the resultant poles are shifted.

The particular advantage of the construction illustrated in Figs. 3 and 4 is that a concentrated and powerful field is obtained and a remarkably powerful tendency to rotation in the armature secured. The same results may be obtained in the form illustrated in Figs. 1 and 2, however, by forming polar projections on the field and armature cores.

When these motors are not loaded, but running free, the rotation of the armature is nearly synchronous with the rotation of the poles of the field, and under these circumstances very little current is perceptible in the coils E E'; but if a load is added the speed tends to diminish and the currents in coils E E' are augmented, so that the rotary effort is increased proportionately.

Obviously the principle of this invention is capable of many modified applications, most of which follow as a matter of course from the constructions described. For instance, the armature-coils, or those in which the currents are set up by induction, may be held stationary and the alternating currents from the generator conducted through the rotating inducing or field coils by means of suitable sliding contacts. It is also apparent that the induced coils may be movable and the magnetic parts of the motor stationary; but I have illustrated these modifications fully in the application to which reference has herein been made.

In the case of motors wound with independent field and armature circuits and operated by shifting their poles, as described in my said

prior application, I may by short circuiting the armature-coils apply the present invention in order to obtain greater power on starting.

An advantage and characteristic feature of motors constructed and operated in accordance with this invention is their capability of almost instantaneous reversal by a reversal of one of the energizing currents from the generator. This will be understood from a consideration of the working conditions. Assuming the armature to be rotating in a certain direction following the movement of the shifting poles, then reverse the direction of the shifting, which may be done by reversing the connections of one of the two energizing circuits. If it be borne in mind that in a dynamo-electric machine the energy developed is very nearly proportionate to the cube of the speed, it is evident that at such moment an extraordinary power is brought to play in reversing the motor. In addition to this the resistance of the motor is very greatly reduced at the moment of reversal, so that a much greater amount of current passes through the energizing-circuits.

The phenomenon alluded to--viz., the variation of the resistance of the motor apparently like that in ordinary motors—I attribute to the variation in the amount of self-induction in the primary or energizing circuits.

These motors present numerous advantages, chief among which are their simplicity, reliability, economy in construction and maintenance, and their easy and dangerless management. As no commutators are required on either the generators or the motors, the system is capable of a very perfect action and involves but little loss.

I do not claim herein the mode or plan of producing currents in closed conductors in a magnetic field which is herein disclosed, except in its application to this particular purpose; but

What I claim is—

1. The combination, with a motor containing independent inducing or energizing circuits and closed induced circuits, of an alternating-current generator having induced or generating circuits corresponding to and connected with the energizing-circuits of the motor, as set forth.

2. An electro-magnetic motor having its field-magnets wound with independent coils and its armature with independent closed coils, in combination with a source of alternating currents connected to the field-coils and capable of progressively shifting the poles of the field-magnet, as set forth.

3. A motor constructed with an annular field-magnet wound with independent coils and a cylindrical or disk armature wound with closed coils, in combination with a source of alternating currents connected with the field-magnet coils and acting to progressively shift or rotate the poles of the field, as herein set forth.

NIKOLA TESLA.

Witnesses:
FRANK B. MURPHY,
FRANK E. HARTLEY.

P-44

(No Model.) 2 Sheets—Sheet 1.

N. TESLA.

ELECTRO MAGNETIC MOTOR.

No. 382,279. Patented May 1, 1888.

Fig. 1.

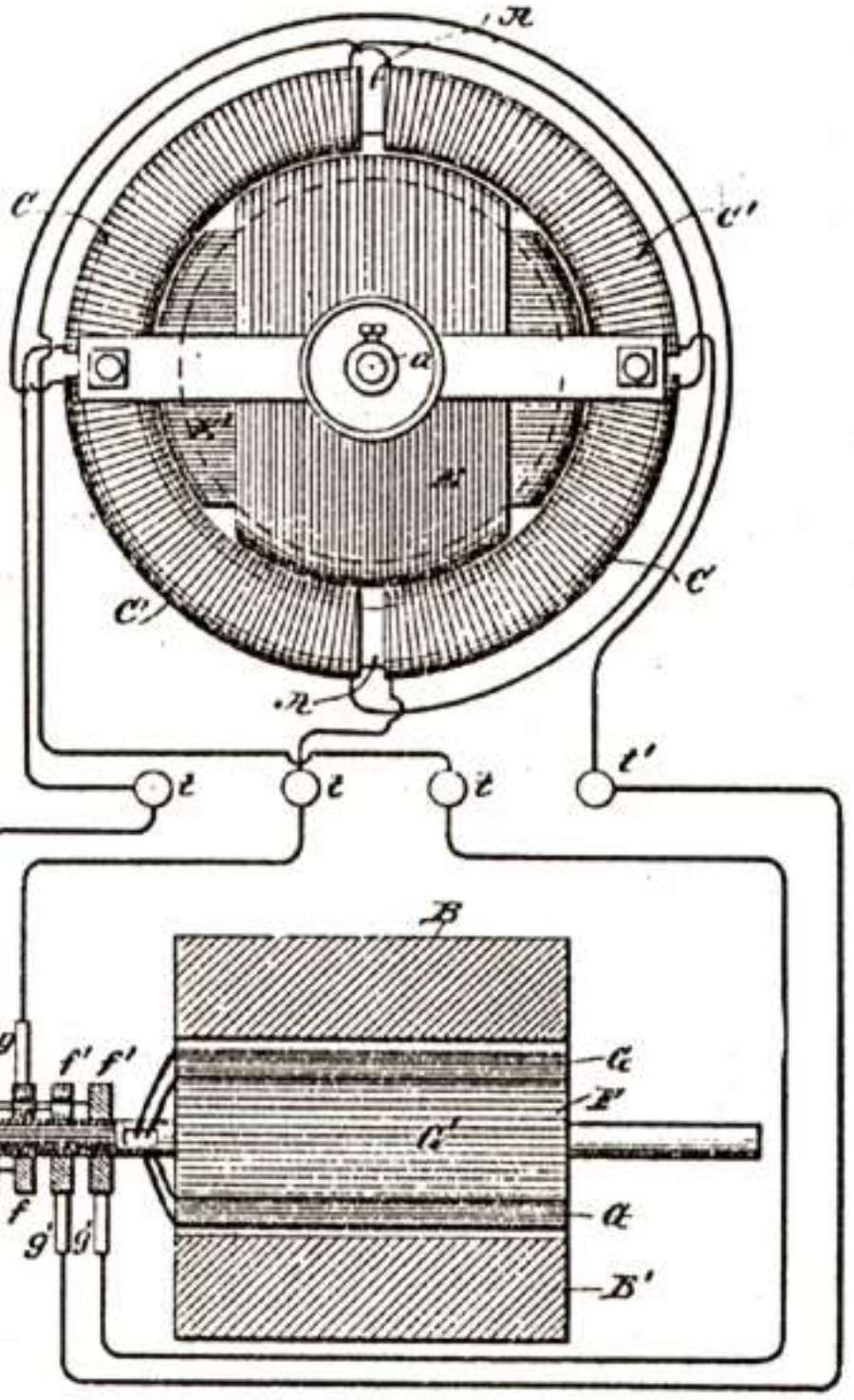

Fig: 2

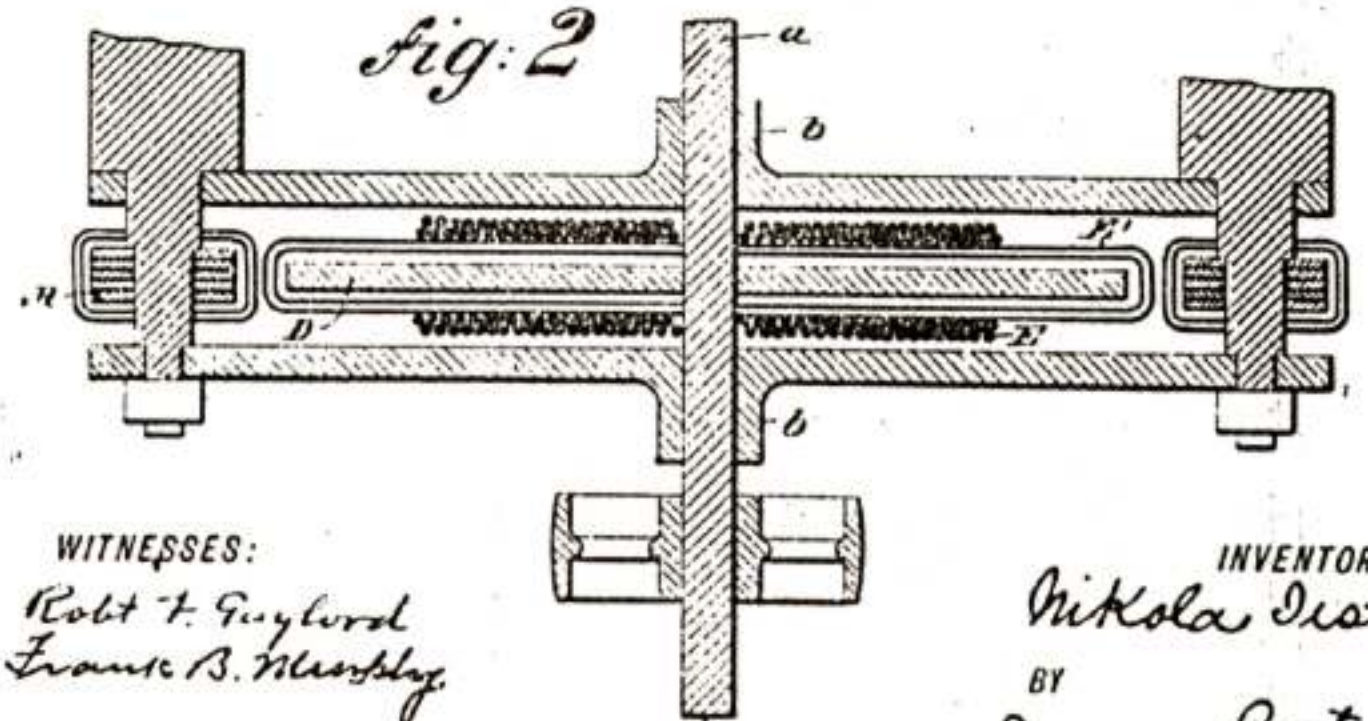

WITNESSES:
Robt F. Gaylord
Frank B. Mussey.

INVENTOR.
Nikola Tesla
BY
Duncan, Curtis & Page
ATTORNEYS

(No Model.) 2 Sheets—Sheet 2.

N. TESLA.

ELECTRO MAGNETIC MOTOR.

No. 382,279. Patented May 1, 1888.

Fig: 3.

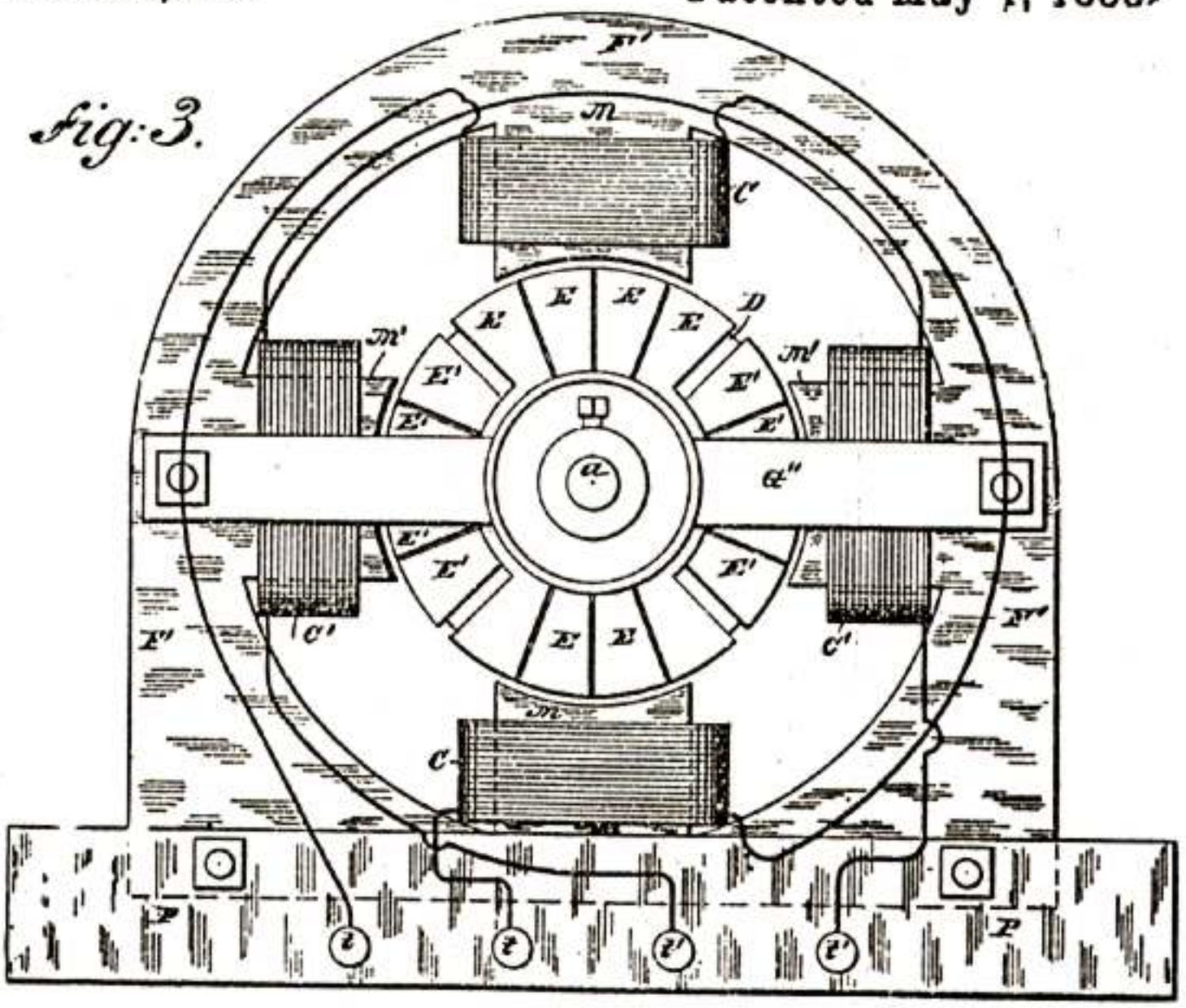

Fig: 4.

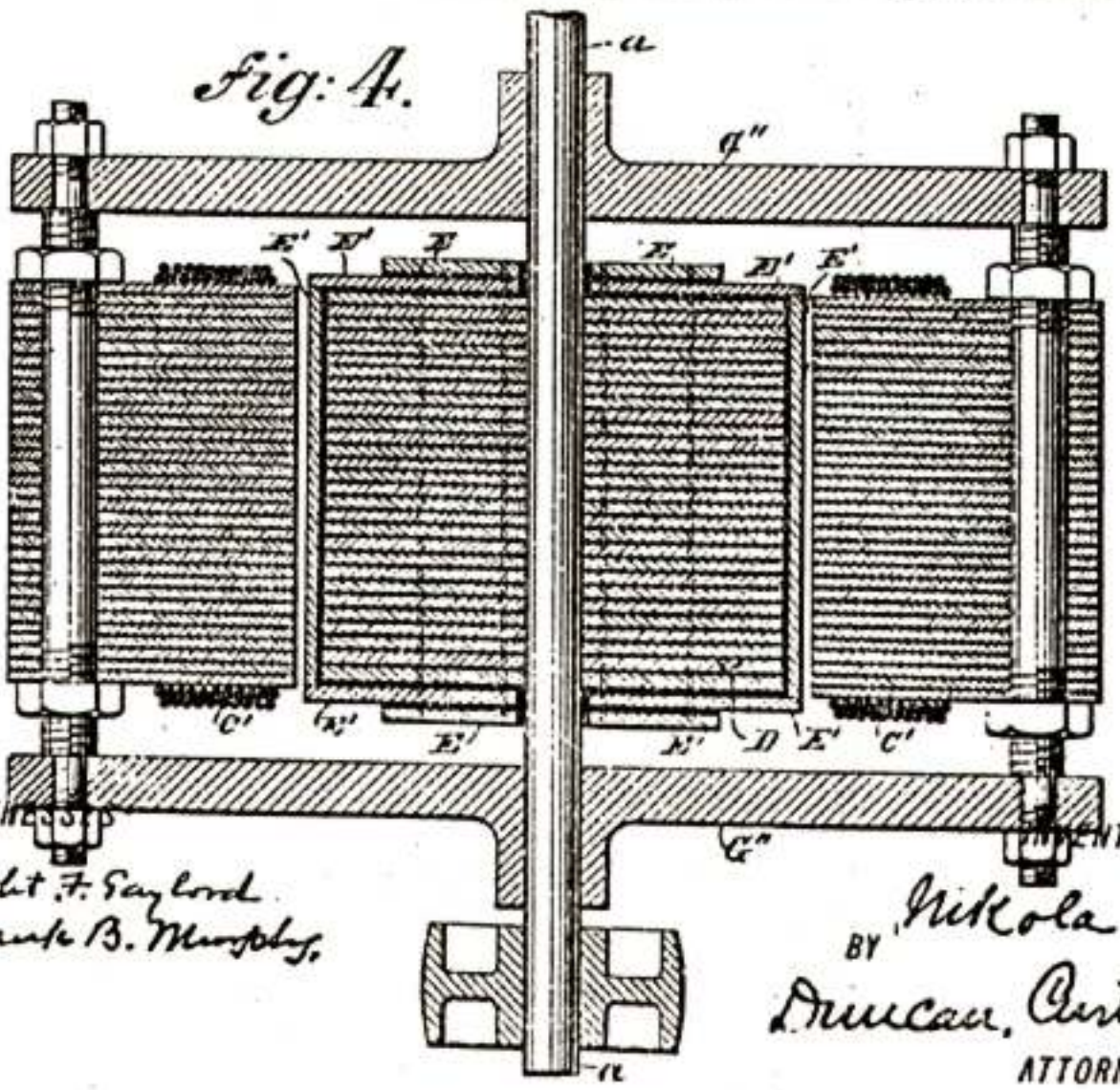

WITNESSES:
Robt. F. Gaylord.
Frank B. Murphy.

INVENTOR
Nikola Tesla.
BY
Duncan, Curtis & Page
ATTORNEYS.

UNITED STATES PATENT OFFICE.

NIKOLA TESLA, OF NEW YORK, N. Y., ASSIGNOR TO THE TESLA ELECTRIC COMPANY, OF SAME PLACE.

DYNAMO-ELECTRIC MACHINE.

SPECIFICATION forming part of Letters Patent No. 390,414, dated October 2, 1888.

Application filed April 12, 1888. Serial No. 271,626. (No model.)

To all whom it may concern:

Be it known that I, NIKOLA TESLA, a subject of the Emperor of Austria, from Smiljan, Lika, border country of Austria-Hungary, now residing at New York, in the county and State of New York, have invented certain new and useful Improvements in Dynamo-Electric Machines, of which the following is a specification, reference being had to the drawings accompanying and forming a part of the same.

In certain patents granted to Charles F. Peck and myself—notably in Patents No. 381,968 and No. 382,280, May 1, 1888—I have shown and described a plan of constructing and operating motors, transformers, and the like, by alternating currents conveyed through two or more independent circuits from a generator having such relation to the motors or transformers as to produce therein a progressive movement of the magnetic poles or lines of force. In the said applications the descriptions and illustrations of the generators were confined to those types of alternating current machine in which the current generating coils are independent or separate; but I have found that the ordinary forms of continuous current dynamos now in use may be readily and cheaply adapted to my system, or utilized both as continuous and alternating current generators with but slight changes in their construction. The mode of effecting this forms the substance of my present application.

Generally stated, the plan pursued by me in carrying out this invention is as follows: On the shaft of a given generator, either in place of or in addition to the regular commutator, I secure as many pairs of insulated collecting-rings as there are circuits to be formed. Now, it will be understood that in the operation of any dynamo electric generator the currents in the coils in their movement through the field of force undergo different phases—that is to say, at different positions of the coils the currents have certain directions and certain strengths—and that in my improved motors or transformers it is necessary that the currents in the energizing-coils should undergo a certain order of variations in strength and direction. Hence, the further step—viz, the connection between the induced or generating coils of the machine and the contact-rings from which the currents are to be taken off—will be determined solely by what order of variations of strength and direction in the currents is desired for producing a given result in the electrical translating device. This may be accomplished in various ways; but in the drawings I have given typical instances only of the best and most practicable ways of applying the invention to three of the best-known types of machines, in order to illustrate the principle and to enable any one skilled in the art to apply the invention in any other case or under any modified conditions which the circumstances of particular cases may require.

Figure 1 is a diagram illustrative of the mode of applying the invention to the well-known type of closed or continuous circuit machines. Fig. 2 is a similar diagram containing an armature with separate coils connected diametrically, or what is generally called an "open-circuit" machine. Fig. 3 is a diagram showing the application of the invention to a machine the armature-coils of which have a common joint.

Referring to Fig. 1, let A represent one of my improved motors or transformers, which, for convenience, I shall designate a "converter," which consists of an annular core, B, wound with four independent coils, C and D, those diametrically opposite being connected together so as to co operate in pairs in establishing free poles in the ring, the tendency of each pair being to fix the poles at ninety degrees from the other. There may be an armature, E, within the ring, which is wound with coils closed upon themselves. The object is to pass through coils C D currents of such relative strength and direction as to produce a progressive shifting or movement of the points of maximum magnetic effect around the ring, and to thereby maintain a rotary movement of the armature. I therefore secure to the shaft F of the generator four insulated contact-rings, *a b c d*, upon which I cause to bear the collecting-brushes *a' b' c' d'*, connected by wires G G H H, respectively, with the terminals of coils C and D.

Assume, for sake of illustration, that the coils D D are to receive the maximum and coils C C at the same instant the minimum current, so that the polar line may be midway

between the coils D D, the rings *a b* would therefore be connected to the continuous armature-coil at its neutral points with respect to the field or the point corresponding with that of the ordinary commutator brushes, and between which exists the greatest difference of potential, while rings *c d* would be connected to two points in the coil, between which exists no difference of potential. The best results will be obtained by making these connections at points equidistant from one another, as shown. These connections are easiest made by using wires L between the rings and the loops or wires J, connecting the coil I to the segments of the commutator K. When the converters are made in this manner, it is evident that the phases of the currents in the sections of the generator coil will be reproduced in the converter coils. For example, after turning through an arc of ninety degrees the conductors L L, which before conveyed the maximum current, will receive the minimum current by reason of the change in the position of their coils, and it is evident that for the same reason the current in said coils has gradually fallen from the maximum to the minimum in passing through the arc of ninety degrees. In this special plan of connections the rotation of the magnetic poles of the converter will be synchronous with that of the armature coils of the generator, and the result will be the same, whether the energizing circuits are derivations from a continuous armature coil or from independent coils, as in my previous devices.

I have shown in Fig. 1, in dotted lines, the brushes M M in their proper normal position. In practice these brushes may be removed from the commutator and the field of the generator excited by an external source of current; or the brushes may be allowed to remain on the commutator and to take off a converted current to excite the field, or to be used for other purposes.

In a certain well-known class of machines the armature contains a number of coils the terminals of which connect to commutator-segments, the coils being connected across the armature in pairs. This type of machine is represented in Fig. 2. In this machine each pair of coils goes through the same phases as the coils in some of the generators I have shown, and it is obviously only necessary to utilize them in pairs or sets to operate one of my converters by extending the segments of the commutators belonging to each pair of coils and causing a collecting-brush to bear on the continuous portion of each segment. In this way two or more circuits may be taken off from the generator, each including one or more pairs or sets of coils, as may be desired.

In Fig. 2 I I represent the armature-coils, T T the poles of the field-magnet, and F the shaft carrying the commutators, which are extended to form continuous portions *a b c d*. The brushes bearing on the continuous portions for taking off the alternating currents are represented by *a' b' c' d'*. The collecting-brushes, or those which may be used to take off the direct current, are designated by M M. Two pairs of the armature-coils and their commutators are shown in the figure as being utilized; but all may be utilized in a similar manner.

There is another well known type of machine in which three or more coils, A' B' C', on the armature have a common joint, the free ends being connected to the segments of a commutator. This form of generator is illustrated in Fig. 3. In this case each terminal of the generator is connected directly or in derivation to a continuous ring, *a b c*, and collecting brushes *a' b' c'*, bearing thereon, take off the alternating currents that operate the motor. It is preferable in this case to employ a motor or transformer with three energizing-coils, A" B" C", placed symmetrically with those of the generator, and the circuits from the latter are connected to the terminals of such coils either directly—as when they are stationary—or by means of brushes *c'* and contact-rings *c*. In this, as in the other cases, the ordinary commutator may be used on the generator, and the current taken from it utilized for exciting the generator field-magnets or for other purposes.

These examples serve to illustrate the principle of the invention. It will be observed that in any case it is necessary only to add the continuous contact or collecting rings and to establish the connections between them and the appropriate coils.

It will be understood that this invention is applicable to other types of machine—as, for example, those by which the induced coils are stationary and the brushes and magnet revolve; but the manner of its application is obvious to one skilled in the art.

Having now described my invention, what I claim is—

1. The combination, with a converter having independent energizing-coils, of a continuous or direct current dynamo or magneto machine, and intermediate circuits permanently connected at suitable points to the induced or generating coils of the generator, as herein set forth.

2. The combination, with a converter provided with independent energizing-circuits, of a continuous or direct current generator provided with continuous collecting-rings connected in derivation to the armature-coils to form the terminals of circuits corresponding to those of the converter, as herein set forth.

NIKOLA TESLA

Witnesses:
ROBT. F. GAYLORD,
FRANK D. MURPHY.

P-48

(No Model.) 2 Sheets—Sheet 1.

N. TESLA.

DYNAMO ELECTRIC MACHINE.

No. 390,414. Patented Oct. 2, 1888.

Fig. 1

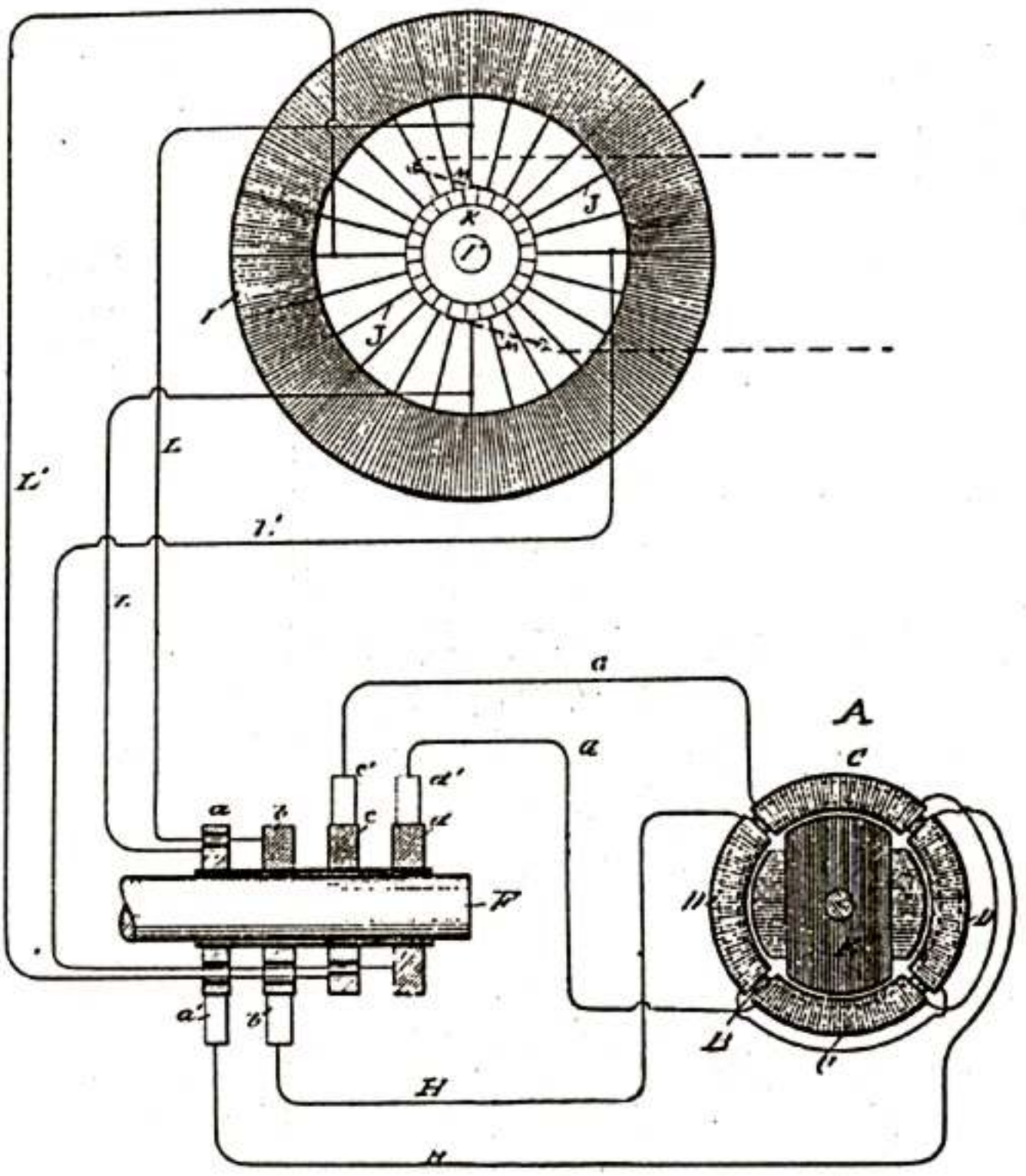

WITNESSES:
Raphael Netter
Frank C. Hartley

INVENTOR
Nikola Tesla
BY
Duncan, Curtis & Page

(No Model.) 2 Sheets—Sheet 2.

N. TESLA

DYNAMO ELECTRIC MACHINE.

No. 390,414 Patented Oct. 2, 1888.

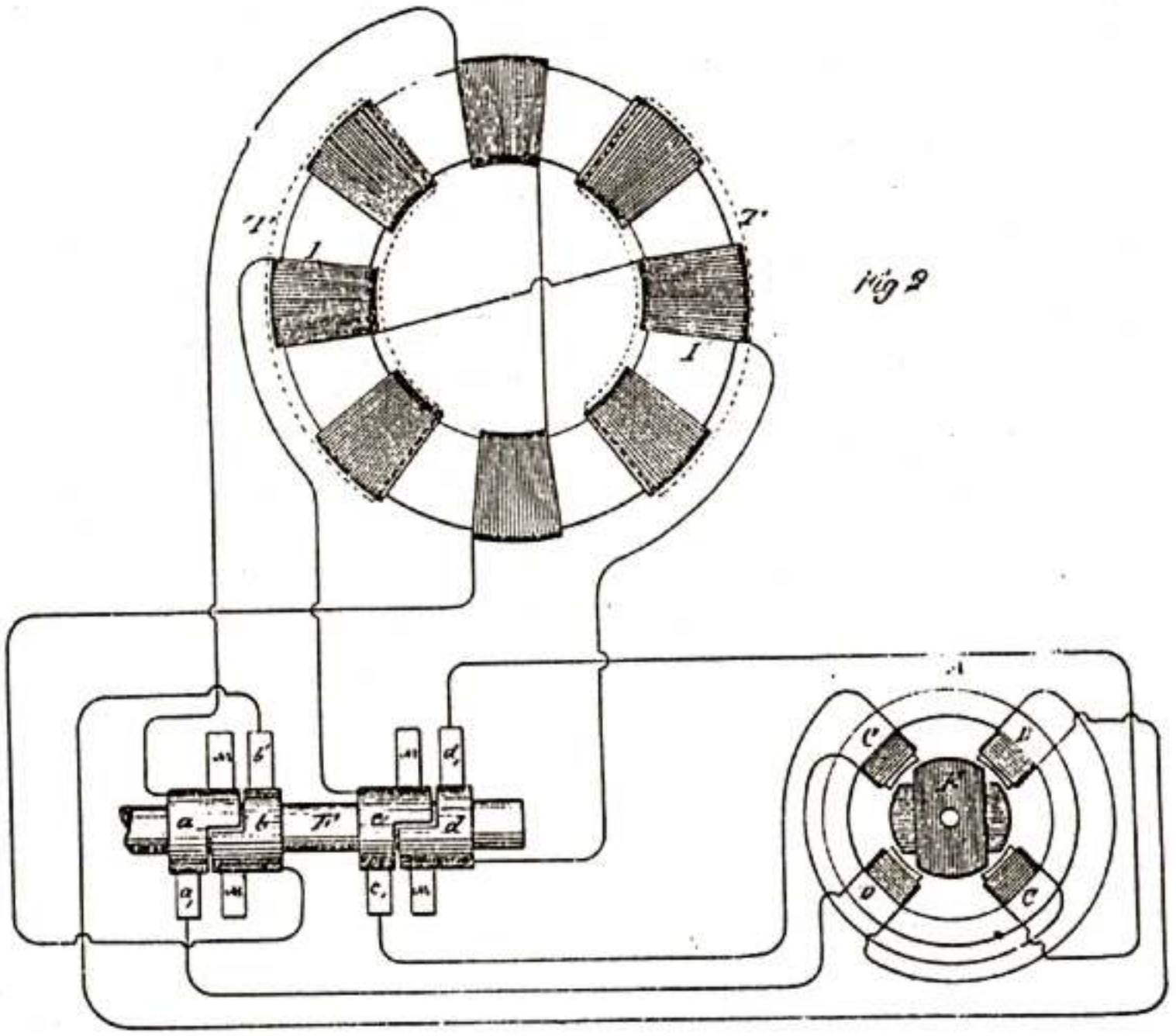

Fig 2

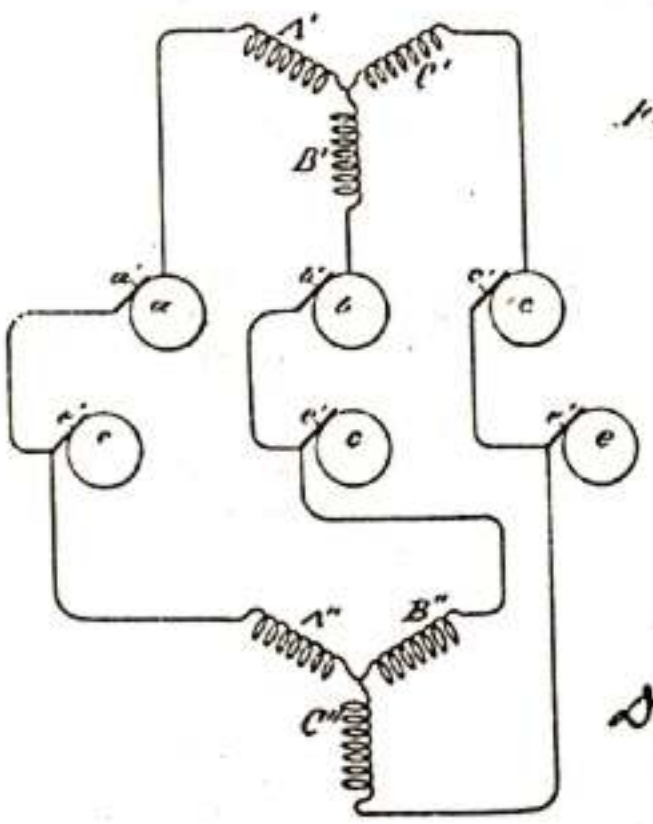

Fig. 3

WITNESSES:
Raphael Netter
Francis R. Hartley

INVENTOR
Nikola Tesla
BY
Duncan, Curtis & Page
ATTORNEYS.

UNITED STATES PATENT OFFICE.

NIKOLA TESLA, OF NEW YORK, N. Y., ASSIGNOR TO THE TESLA ELECTRIC COMPANY, OF SAME PLACE.

REGULATOR FOR ALTERNATE-CURRENT MOTORS.

SPECIFICATION forming part of Letters Patent No. 390,820, dated October 9, 1888.

Application filed April 21, 1888. Serial No. 271,622. (No model.)

To all whom it may concern.

Be it known that I, NIKOLA TESLA, a subject of the Emperor of Austria, from Smiljan, Lika, border country of Austria-Hungary, now residing in New York, in the county and State of New York, have invented certain new and useful Improvements in Regulators for Alternating-Current Motors, of which the following is a specification, reference being had to the drawings accompanying and forming part of the same.

My invention is an improvement in systems for the electric transmission of power; and it consists in a means of regulating the speed and power of the motor or motors. The system for use with which the invention is more particularly designed is one in which the motors, or what may be in certain cases their equivalents—the electrical transformers—have two or more independent energizing-circuits, which, receiving current from corresponding sources, act to set up a progressive movement or shifting of the magnetic poles of the motors; but the invention is also applicable to other purposes, as will hereinafter appear. I employ the regulator for the purpose of varying the speed of these motors.

The regulator proper consists of a form of converter or transformer with one element capable of movement with respect to the other, whereby the inductive relations may be altered, either manually or automatically, for the purpose of varying the strength of the induced current. I prefer to construct this device in such manner that the induced or secondary element may be movable with respect to the other; and the improvement, so far as relates merely to the construction of the device itself, consists, essentially, in the combination, with two opposite magnetic poles, of an armature wound with an insulated coil and mounted on a shaft, whereby it may be turned to the desired extent within the field produced by the poles. The normal position of the core of the secondary element is that in which it most completely closes the magnetic circuit between the poles of the primary element, and in this position its coil is in its most effective position for the inductive action upon it of the primary coils; but by turning the movable core to either side the induced currents delivered by its coil become weaker until, by a movement of the said core and coil through ninety degrees, there will be no current delivered.

The construction of this device, broadly, I do not claim as of my invention; but this, together with the manner of applying and using the same, which forms the subject of my invention, I will now explain by reference to the accompanying drawings.

Figure 1 is a view in side elevation of the regulator. Fig. 2 is a broken section on line $x\,x$ of Fig. 1. Fig. 3 is a diagram illustrating the preferred manner of applying the regulator to ordinary forms of motors, and Fig. 4 is a similar diagram illustrating the application of the device to my improved alternating-current motors.

The regulator may be constructed in many ways to secure the desired result; but in the best form of which I am now it is shown in Figs. 1 and 2.

A represents a frame of iron, and I would here state that the plan which is now invariably followed of dividing up all iron cores which are subjected to the influence of alternating currents should be adopted in the construction of this device.

B B are the cores of the inducing or primary coils C C, said cores being integral with or bolted to the frame A in any well-known way.

D is a shaft mounted in the side bars, D', and on which is secured a sectional iron core, E, wound with an induced or secondary coil, F, the convolutions of which are parallel with the axis of the shaft. The ends of the core are rounded off, so as to fit closely in the space between the two poles and permit the core E to be turned. A handle, G, secured to the projecting end of the shaft D, is provided for this purpose.

Any means may be employed for maintaining the core and secondary coil in any given position to which it is turned by the handle.

The operation or effect of the device will be understood by reference to the diagrams illustrating the manner of its application.

In Fig. 3, let H represent an ordinary alternating-current generator, the field-magnets of which are excited by a suitable source of current, I. Let J designate an ordinary form of

electro-magnetic motor provided with an armature, K, commutator L, and field-magnets M. It is well known that such a motor, if its field-magnets' cores be divided up into insulated sections, may be practically operated by an alternating current; but in using my regulator with such a motor I include one element of the motor only—say the armature-coils—in the main circuit of the generator, making the connections through the brushes and the commutator in the usual way. I also include one of the elements of the regulator—say the stationary coils—in the same circuit, and in the circuit with the secondary or movable coil of the regulator I connect up the field-coils of the motor. I prefer to use flexible conductors to make the connections from the secondary coil of the regulator, as I thereby avoid the use of sliding contacts or rings without interfering with the requisite movement of the core E.

If the regulator be in its normal position, or that in which its magnetic circuit is most nearly closed, it delivers its maximum induced current, the phases of which so correspond with those of the primary current that the motor will run as though both field and armature were excited by the main current.

To vary the speed of the motor to any rate between the minimum and maximum rates, the core E and coils F are turned in either direction to an extent which produces the desired result, for in its normal position the convolutions of coil F embrace the maximum number of lines of force, all of which act with the same effect upon said coil; hence it will deliver its maximum current; but by turning the coil F out of its position of maximum effect the number of lines of force embraced by it is diminished. The inductive effect is therefore impaired, and the current delivered by coil F will continue to diminish in proportion to the angle at which the coil F is turned until, after passing through an angle of ninety degrees, the convolutions of the coil will be at right angles to those of coils C C, and the inductive effect reduced to a minimum.

Incidentally to certain constructions, other causes may influence the variation in the strength of the induced currents. For example, in the present case it will be observed that by the first movement of coil F a certain portion of its convolutions are carried beyond the line of the direct influence of the lines of force, and that the magnetic path or circuit for said lines is impaired; hence the inductive effect would be reduced. Next, that after moving through a certain angle, which is obviously determined by the relative dimensions of the bobbin or coil F, diagonally-opposite portions of the coil will be simultaneously included in the field, but in such positions that the lines which produce a current-impulse in one portion of the coil in a certain direction will produce in the diagonally-opposite portion a corresponding impulse in the opposite direction; hence portions of the current will neutralize one another.

As before stated, the mechanical construction of the device may be greatly varied; but the essential conditions of the invention will be fulfilled in any apparatus in which the movement of the elements with respect to one another effects the same results by varying the inductive relations of the two elements in a manner similar to that described.

It may also be stated that the core E is not indispensable to the operation of the regulator; but its presence is obviously beneficial. This regulator, however, has another valuable property in its capability of reversing the motor, for if the coil F be turned through a half-revolution the position of its convolutions relatively to the two coils C C and the lines of force is reversed, and consequently the phases of the current will be reversed. This will produce a rotation of the motor in an opposite direction. This form of regulator is also applied with great advantage to my system of utilizing alternating currents, in which the magnetic poles of the field of a motor are progressively shifted by means of the combined effects upon the field of magnetizing-coils included in independent circuits, through which pass alternating currents in proper order and relations to each other.

In illustration, let P represent one of my generators having two independent coils, P′ and P″, on the armature, and T a diagram of a motor having two independent energizing-coils or sets of coils, R R′. One of the circuits from the generator, as S′ S′, includes one set, R′ R′, of the energizing-coils of the motor, while the other circuit, as S S, includes the primary coils of the regulator. The secondary coil of the regulator includes the other coils, R R, of the motor.

While the secondary coil of the regulator is in its normal position it produces its maximum current, and the maximum rotary effect is imparted to the motor; but this effect will be diminished in proportion to the angle at which the coil F of the regulator is turned. The motor will also be reversed by reversing the position of the coil with reference to the coils C C, and thereby reversing the phases of the current produced by the generator. This changes the direction of the movement of the shifting poles which the armature follows.

One of the main advantages of this plan of regulation is its economy of power. When the induced coil is generating its maximum current, the maximum amount of energy in the primary coils is absorbed; but as the induced coil is turned from its normal position the self-induction of the primary coils reduces the expenditure of energy and saves power.

It is obvious that in practice either coils C C or coil F may be used as primary or secondary, and it is well understood that their rela-

tive proportions may be varied to produce any desired difference or similarity in the inducing and induced currents.

I am aware that it is not new to vary the secondary current of an induction-coil by moving one coil with respect to the other, and thereby varying the inductive relations normally existing between the two. This I do not claim.

What I claim is—

1. The combination, with a motor having independent energizing-circuits, of an alternating-current regulator, consisting, essentially, of inducing and induced coils movable with respect to one another, whereby the strength of the induced currents may be varied, the induced coils being included in and adapted to supply the current for one of the motor-circuits, as set forth.

2. The combination, with a motor adapted to be run or operated by alternating currents and provided with independent energizing-coils, of a regulator consisting of stationary inducing-coils and an induced coil capable of being rotated, whereby it may be turned to a greater or less angle to the primary coils, or its position with respect thereto reversed, the induced coil or coils being included in and adapted to supply the current for one of the motor-circuits, as set forth.

NIKOLA TESLA.

Witnesses:
ROBT. F. GAYLORD,
FRANK B. MURPHY.

P-53

(No Model.) 2 Sheets—Sheet 1.

N. TESLA.

REGULATOR FOR ALTERNATE CURRENT MOTORS.

No 390,820. Patented Oct. 9, 1888.

Fig. 2

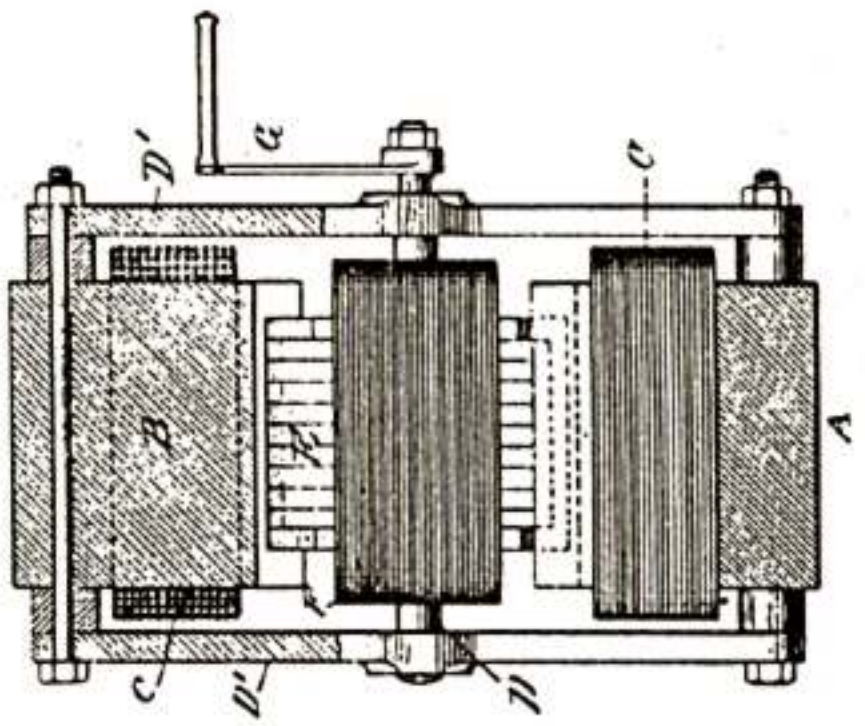

Fig. 1

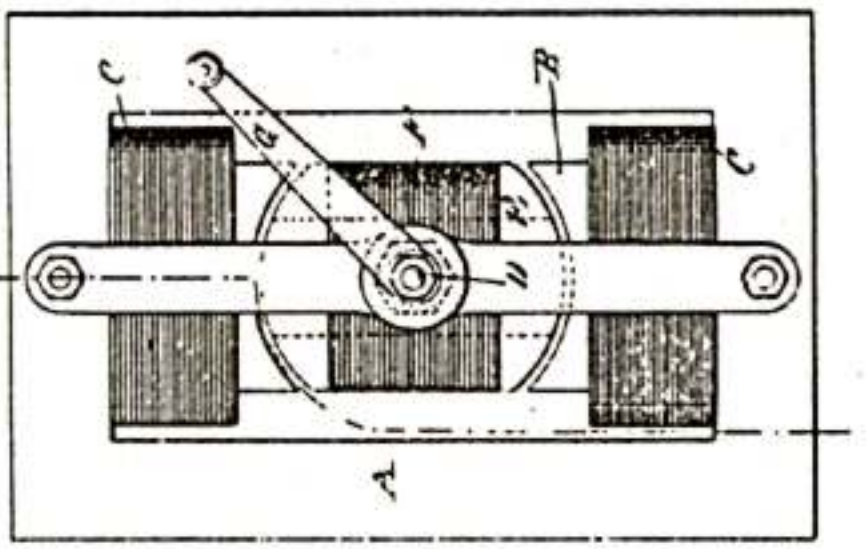

WITNESSES:

Raphaël Netter.

Robt. F. Gaylord

INVENTOR

Nikola Tesla.

BY

Duncan, Curtis & Page.

ATTORNEYS

P-54

(No Model.)

2 Sheets—Sheet 2.

N. TESLA.

REGULATOR FOR ALTERNATE CURRENT MOTORS.

No. 390,820. Patented Oct. 9, 1888.

Fig. 3

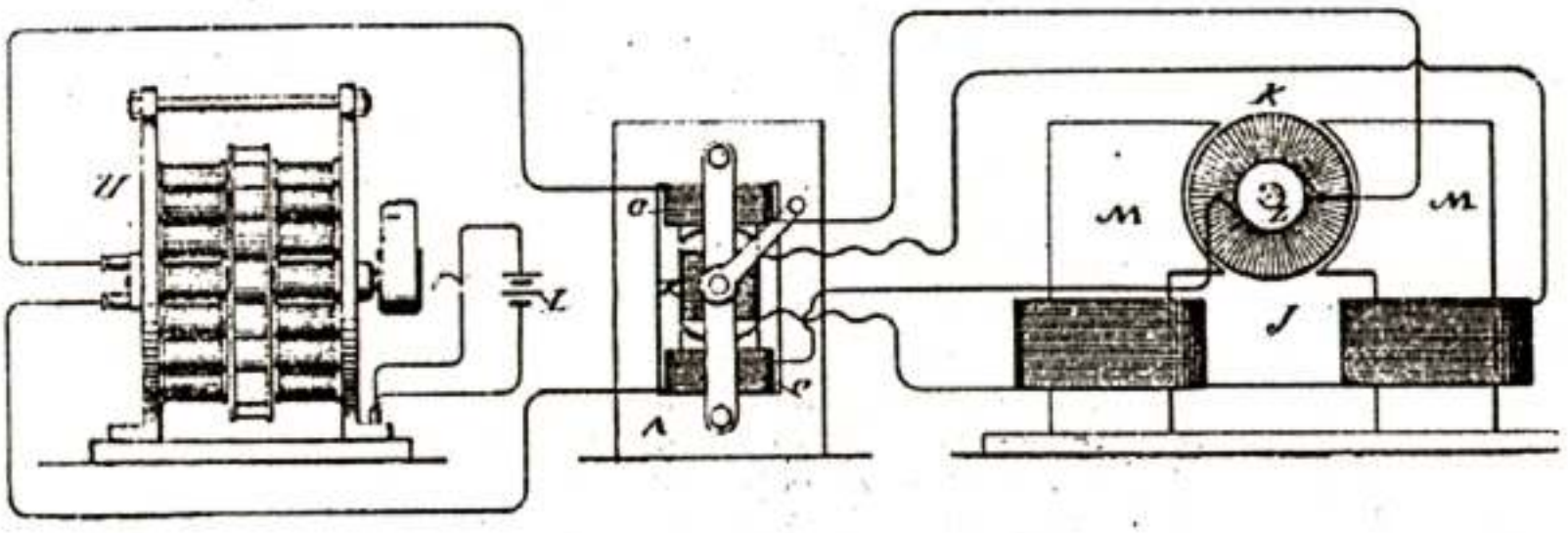

Fig. 4

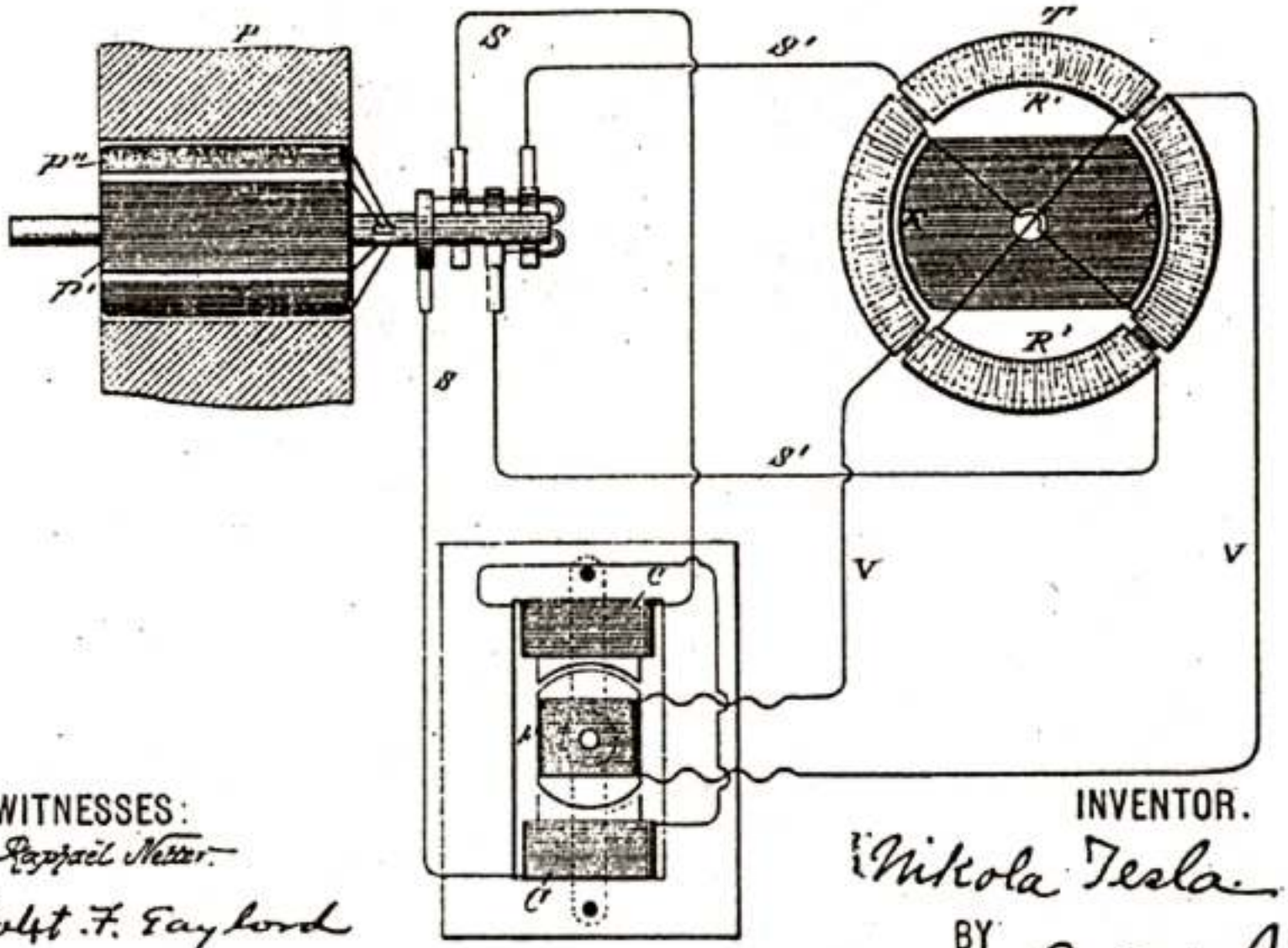

WITNESSES:
Raphael Netter
Robt. F. Gaylord

INVENTOR.
Nikola Tesla
BY
Duncan, Curtis & Page
ATTORNEYS.

UNITED STATES PATENT OFFICE.

NIKOLA TESLA, OF NEW YORK, N. Y., ASSIGNOR TO THE TESLA ELECTRIC COMPANY, OF SAME PLACE.

DYNAMO-ELECTRIC MACHINE.

SPECIFICATION forming part of Letters Patent No. 390,721, dated October 9, 1888.

Application filed April 28, 1888. Serial No. 272,153. (No model.)

To all whom it may concern:

Be it known that I, NIKOLA TESLA, a subject of the Emperor of Austria, from Smiljan, Lika, border country of Austria-Hungary, now residing at New York, in the county and State of New York, have invented certain new and useful Improvements in Electric Generators, of which the following is a specification, reference being had to the drawing accompanying and forming a part of the same.

My present invention relates, chiefly, to the alternating-current system invented by me and described in prior patents, notably Nos. 381,968 and 382,280, of May 1, 1888, in which the motors or transformers, or generally the converters, are operated by a progressive shifting or movement of their magnetic poles produced by the co-operative action of independent magnetizing-coils through which pass alternating currents in proper order and direction. In my said system, as I have heretofore shown, I employed a generator of alternating currents in which there were independent induced or generating coils corresponding to the energizing-coils of the converter, and the relations of the generator and converters were generally such that the speed of rotation of the magnetic poles of the converter equaled that of the armature of the generator.

To secure the greatest efficiency, it is necessary to run the machines at a high speed, and this is true not only of those generators and motors which are particularly adapted for use in my system, but of others. The practicability of running at very high speeds, however, particularly in the case of large generators, is limited by mechanical conditions, in seeking to avoid which I have devised various plans for operating the system under efficient conditions, although running the generator at a comparatively low rate of speed.

My present invention consists of another way of accomplishing this result, which in certain respects presents many advantages. According to the invention, in lieu of driving the armature of the generator at a high rate of speed, I produce a rotation of the magnetic poles of one element of the generator and drive the other at a different speed, by which similar results are obtained to those secured by a rapid rotation of one of the elements.

I shall describe this invention by reference to the diagram drawing hereto annexed.

The generator which supplies the current for operating the motors or transformers consists in this instance of a subdivided ring or annular core wound with four diametrically-opposite coils, E E'. Within the ring is mounted a cylindrical armature-core wound longitudinally with two independent coils, F F', the ends of which lead, respectively, to two pairs of insulated contact or collecting rings, D D' G G', on the armature shaft. Collecting-brushes *d d' g g'* bear upon these rings, respectively, and convey the currents through the two independent line-circuits M M'. In the main line there may be included one or more motors or transformers, or both. If motors be used, they are constructed in accordance with my invention with independent coils or sets of coils J J', included, respectively, in the circuits M M'. These energizing-coils are wound on a ring or annular field or on pole-pieces thereon, and produce by the action of the alternating currents passing through them a progressive shifting of the magnetism from pole to pole. The cylindrical armature H of the motor is wound with two coils at right angles, which form independent closed circuits.

If transformers be employed, I connect one set of the primary coils, as N N, wound on a ring or annular core, to one circuit, as M', and the other primary coils, N' N', to the circuit M. The secondary coils K K' may then be utilized for running groups of incandescent lamps P P'.

With the generator I employ an exciter. This consists of two poles, A A, of steel permanently magnetized, or of iron excited by a battery or other generator of continuous currents, and a cylindrical armature-core mounted on a shaft, B, and wound with two longitudinal coils, C C'. One end of each of these coils is connected to the collecting-rings *b c*, respectively, while the other ends are both connected to a ring, *a*. Collecting-brushes *b' c'* bear on the rings *b c*, respectively, and conductors L L convey the currents therefrom through the coils E and E' of the generator. *l'* is a common return-wire to brush *a'*. Two independent circuits are thus formed, one including coils Q of the exciter and E E of the generator,

P-56

the other coils C' of the exciter and E' E' of the generator. It results from this that the operation of the exciter produces a progressive movement of the magnetic poles of the annular field-core of the generator, the shifting or rotary movement of said poles being synchronous with the rotation of the exciter armature. Considering the operative conditions of a system thus established, it will be found that when the exciter is driven so as to energize the field of the generator the armature of the latter, if left free to turn, would rotate at a speed practically the same as that of the exciter. If under such conditions the coils F F' of the generator-armature be closed upon themselves or short-circuited, no currents, at least theoretically, will be generated in the said armature-coils. In practice I have observed the presence of slight currents, the existence of which is attributable to more or less pronounced fluctuations in the intensity of the magnetic poles of the generator ring. So, if the armature-coils F F' be closed through the motor, the latter will not be turned as long as the movement of the generator-armature is synchronous with that of the exciter or of the magnetic poles of its field. If, on the contrary, the speed of the generator armature be in any way checked, so that the shifting or rotation of the poles of the field becomes relatively more rapid, currents will be induced in the armature-coils. This obviously follows from the passing of the lines of force across the armature-conductors. The greater the speed of rotation of the magnetic poles relatively to that of the armature the more rapidly the currents developed in the coils of the latter will follow one another, and the more rapidly the motor will revolve in response thereto, and this continues until the armature-generator is stopped entirely, as by a brake, when the motor, if properly constructed, runs at the same speed with which the magnetic poles of the generator rotate.

The effective strength of the currents developed in the armature-coils of the generator is dependent upon the strength of the currents energizing the generator and upon the number of rotations per unit of time of the magnetic poles of the generator; hence the speed of the motor armature will depend in all cases upon the relative speeds of the armature of the generator and of its magnetic poles. For example, if the poles are turned two thousand times per unit of time and the armature is turned eight hundred, the motor will turn twelve hundred times, or nearly so. Very slight differences of speed may be indicated by a delicately-balanced motor.

Let it now be assumed that power is applied to the generator armature to turn it in a direction opposite to that in which its magnetic poles rotate. In such case the result would be similar to that produced by a generator the armature and field-magnets of which are rotated in opposite directions, and by reason of these conditions the motor-armature will turn at a rate of speed equal to the sum of the speeds of the armature and magnetic poles of the generator, so that a comparatively low speed of the generator-armature will produce a high speed in the motor.

It will be observed in connection with this system that on diminishing the resistance of the external circuit of the generator-armature by checking the speed of the motor or by adding translating devices in multiple arc in the secondary circuit or circuits of the transformer the strength of the current in the armature-circuit is greatly increased. This is due to two causes: first, to the great differences in the speeds of the motor and generator, and, secondly, to the fact that the apparatus follows the analogy of a transformer, for, in proportion as the resistance of the armature or secondary circuits is reduced, the strength of the currents in the field or primary circuits of the generator is increased and the currents in the armature augmented correspondingly. For similar reasons the currents in the armature-coils of the generator increase very rapidly when the speed of the armature is reduced when running in the same direction as the magnetic poles or conversely.

It will be understood from the above description that the generator-armature may be run in the direction of the shifting of the magnetic poles, but more rapidly, and that in such case the speed of the motor will be equal to the difference between the two rates.

In many applications to electrical conversion and distribution this system possesses great advantages both in economy, efficiency, and practicability.

What I claim is—

1. The combination, with an alternating-current generator having independent energizing or field and independent induced or armature coils, of an alternating-current exciter having generating or induced coils corresponding to and connected with the energizing-coils of the generator, as set forth.

2. In an alternating-current generator, the combination of the elements named and cooperatively associated in the following manner: a field-magnet wound with independent coils each connected with a source of alternating currents, whereby the magnetic poles produced by said coils will be progressively shifted or moved through the field, and an armature-core wound with independent coils, each having terminals from which currents are delivered to the independent external circuits.

3. The system of electrical distribution consisting of the combination, with an alternating-current generator having independent energizing-coils and an armature wound with independent induced coils, of an alternating-current exciter having induced coils corresponding to and connected with the energizing-coils of the generator, and one or more electrical converters having independent inducing or energizing coils connected with the corre-

sponding armature coils of the generator, as herein set forth.

4. The combination, with an alternating-current generator having a field-magnet wound with independent energizing-coils and an armature adapted to be rotated within the field produced by said magnet, of an exciter having induced or generating coils corresponding to and connected with the energizing-coils of the generator, as set forth.

NIKOLA TESLA.

Witnesses:
ROBT. F. GAYLORD,
PARKER W. PAGE.

P-58

(No Model.)

N. TESLA

DYNAMO ELECTRIC MACHINE.

No. 390,721. Patented Oct. 9, 1888.

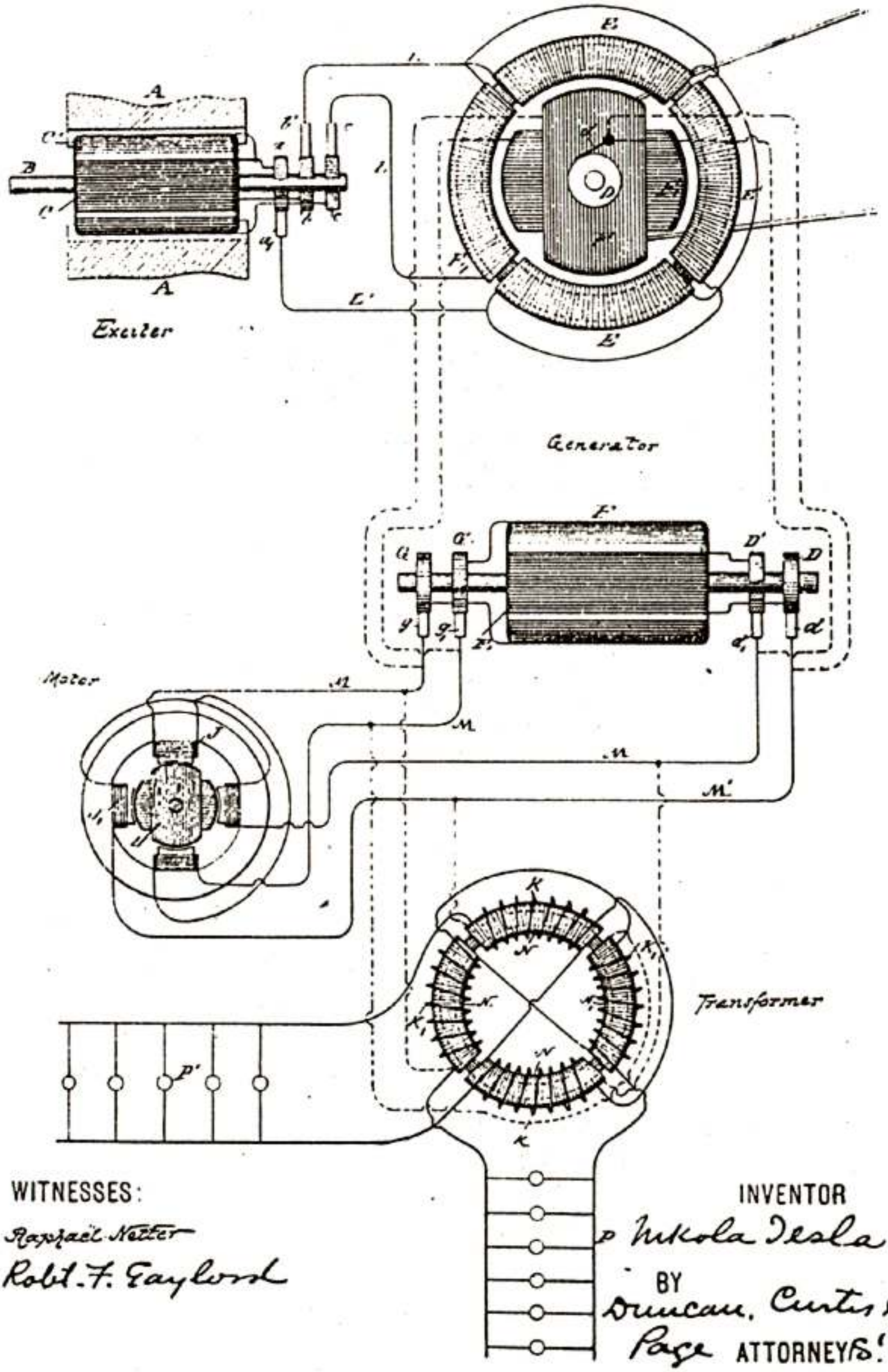

WITNESSES:

Raphael Netter

Robt. F. Gaylord

INVENTOR

Nikola Tesla

BY

Duncan, Curtis & Page ATTORNEYS.

UNITED STATES PATENT OFFICE.

NIKOLA TESLA, OF NEW YORK, N. Y., ASSIGNOR TO THE TESLA ELECTRIC COMPANY, OF SAME PLACE.

DYNAMO-ELECTRIC MACHINE OR MOTOR.

SPECIFICATION forming part of Letters Patent No. 390,415, dated October 2, 1888.

Application filed May 15, 1888. Serial No. 273,294. (No model.)

To all whom it may concern:

Be it known that I, NIKOLA TESLA, a subject of the Emperor of Austria, from Smiljan, Lika, border country of Austria-Hungary, now residing at New York, in the county and State of New York, have invented certain new and useful Improvements in Dynamo-Electric Machines and Motors, of which the following is a specification, reference being had to the drawings accompanying and forming a part of the same.

This invention is an improvement in the construction of dynamo or magneto electric machines or motors, the improvement consisting in a novel form of frame and field-magnet which renders the machine more solid and compact as a structure, which requires fewer parts, and which involves less trouble and expense in its manufacture.

The invention is applicable to generators and motors generally, not only to those which I have described in former patents, and which have independent circuits adapted for use in my patented alternating current system, but to other continuous or alternating current machines, such as have heretofore been more generally used.

In the drawings hereto annexed, which illustrate my improvements, Figure 1 shows the machine in side elevation. Fig. 2 is a vertical sectional view of the field magnets and frame and an end view of the armature; and Fig. 3 is a plan view of one of the parts of the frame and the armature, a portion of the latter being cut away.

I cast the field-magnets and frame in two parts. These parts are identical in size and shape, and each consists of the solid plates or ends A B, from which project inwardly the cores C D and the side bars or bridge-pieces, E F. The precise shape of these parts is largely a matter of choice—that is to say, each casting, as shown, forms an approximately-rectangular frame; but it may obviously be more or less oval, round, or square without departure from the invention. I also prefer to reduce the width of the side bars, E F, at the center and to so proportion the parts that when the frame is put together the spaces between the pole-pieces will be practically equal to the ares which the surfaces of the poles occupy.

The bearings G for the armature-shaft are cast in the side bars, E F. The field-coils are either wound on the pole-pieces or, preferably, wound on a form and then slipped on over the ends of the pole-pieces. The lower part or casting is secured to a suitable base after being finished off. The armature K on its shaft is then mounted in the bearings of the lower casting and the other part of the frame placed in position, dowel-pins L or any other means being used to secure the two parts in proper position.

In order to secure an easier fit I cast the side bars, E F, and end pieces, A B, so that slots M are formed when the two parts are put together.

This machine possesses many advantages. For example, I magnetize the cores alternately, as indicated by the characters N S, and it will be seen that the magnetic circuit between the poles of each part of a casting is completed through the solid iron side bars. The bearings for the shaft are located at the neutral points of the field, so that the armature-core is not affected by the magnetic condition of the field.

My improvement is not restricted to the use of four pole-pieces, as it is evident that each pole piece could be divided or more than four formed by the shape of the casting.

What I claim is—

1. A dynamo or magneto electric machine or motor the frame of which is built up of two castings, each consisting of end plates with pole-pieces extending inwardly therefrom and connecting side bars, as set forth.

2. A frame for generators or motors built up of two superposed castings, each consisting of a rectangular frame with pole-pieces extending inwardly from its ends, as set forth.

3. A frame and field-magnet for generators and motors built up of two rectangular castings having pole-pieces extending inwardly from their ends, the faces of said pole-pieces being curved to afford clearance for the armature and provided with energizing-coils, as set forth.

NIKOLA TESLA.

Witnesses:
ROBT. F. GAYLORD,
FRANK E. HARTLEY.

P-60

(No Model.)

N. TESLA.

DYNAMO ELECTRIC MAGHINE OR MOTOR.

No. 390,415. Patented Oct. 2, 1888.

Fig. 1

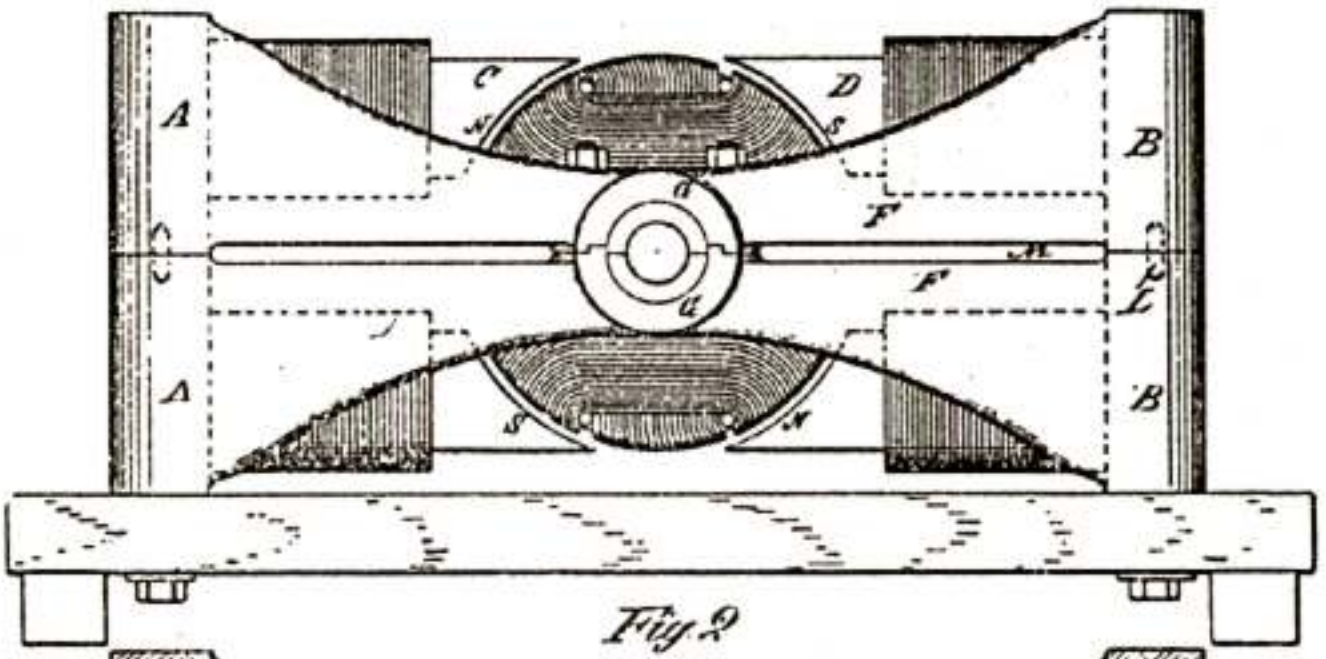

Fig. 2

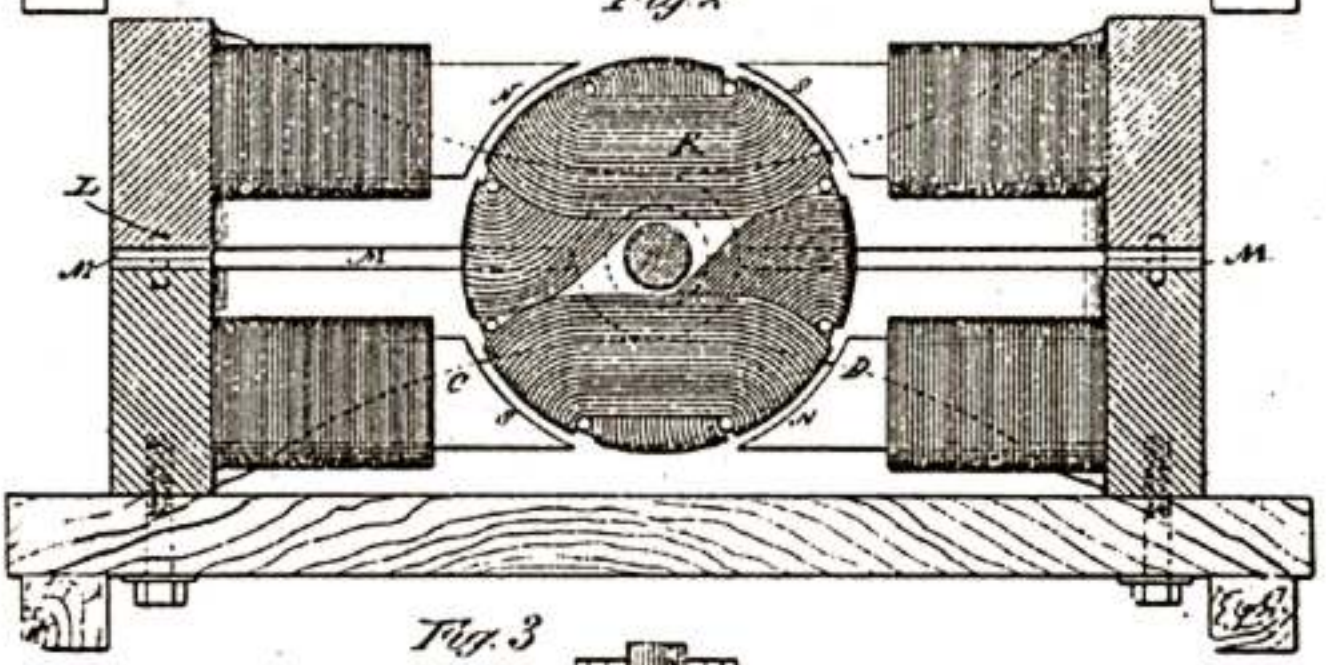

Fig. 3

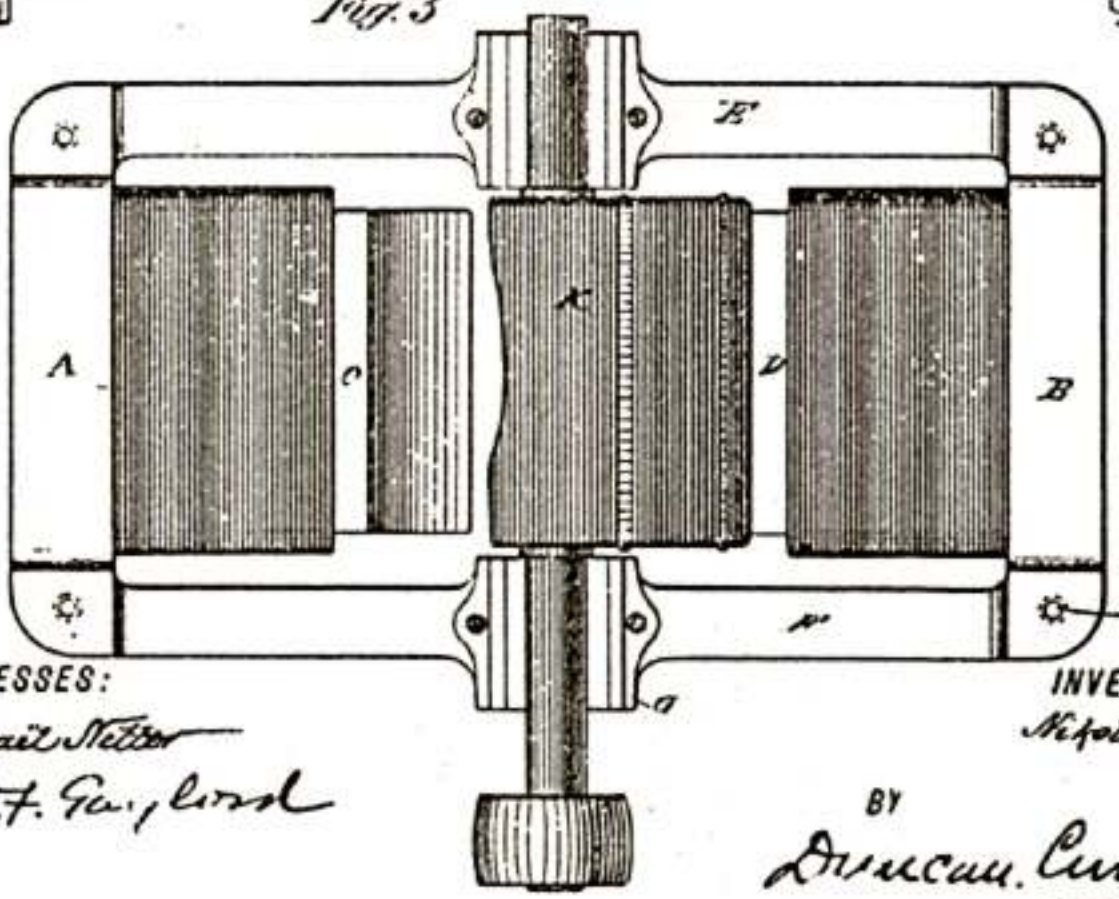

WITNESSES:

Raphael Netter

Robt. F. Gaylord

INVENTOR

Nikola Tesla

BY

Duncan, Curtis & Page

ATTORNEYS

UNITED STATES PATENT OFFICE.

NIKOLA TESLA, OF NEW YORK, N. Y., ASSIGNOR TO THE TESLA ELECTRIC COMPANY, OF SAME PLACE

ALTERNATING MOTOR.

SPECIFICATION forming part of Letters Patent No. 555,190, dated February 25, 1896.

Application filed May 15, 1888. Serial No. 273,993. (No model.)

To all whom it may concern:

Be it known that I, NIKOLA TESLA, a citizen of the United States, residing at New York, in the county and State of New York, have invented certain new and useful Improvements in Electromagnetic Motors, of which the following is a specification, reference being had to the drawings accompanying and forming a part of the same.

In former patents granted to me—notably, Patents Nos. 381,968 and 382,280, of May 1, 1888—I have shown and described a system for the electrical transmission of power characterized by the following particulars: The motor contains independent energizing-circuits and the generator has corresponding induced or current-generating circuits which are connected by independent line-circuits with those of the motor, the said circuits being independent in the sense only that the distinctive relations of the currents produced, transmitted and utilized in each are preserved to produce their proper conjoint effect. The disposition of the generator coils or circuits is such that the currents developed therein and transmitted therefrom to the motor will have a certain difference of phase—for example, so that the maximum periods of the currents generated in one of such circuits coincide with the minimum periods of the currents produced in the other circuit, and the corresponding energizing-circuits of the motor are so arranged that the two currents cooperate to effect a progressive shifting of the magnetic poles or the points of maximum magnetic effect in the motor, in consequence of which a rotation of its movable element is maintained.

My present invention pertains to this system of electrical transmission of power, its novel and distinguishing feature, however, being a special means for generating or producing in the two motor-circuits the alternating current necessary for the operation of the motor; for while in the instances referred to I produce both currents directly by a magneto-electric machine in the present instance I generate or produce in but one of the circuits of the motor directly an alternating current, and by means of such current induce in the other energizing-motor circuit the other alternating current necessary for its operation.

When the two currents are both produced in the magneto-electric machine, it will be observed that the two line or transmitting circuits will of necessity extend the entire distance from the generator to the motor; but by the plan herein provided one line-circuit only is required, as the circuit from the generator and the other are brought into inductive relation to each other in the motor itself.

The following is illustrative of a means by which I secure this result in accordance with my present invention: I employ as a motor, for example, a subdivided annular field-magnet within which is mounted a suitable armature, as a cylinder or disk, wound with two coils at right angles, each of which forms a closed circuit. On opposite sides of the annular field-magnet I wind two coils of insulated wire of a size adapted to carry the current from the generator. Over these coils, or close to them, in any of the well-understood ways, I wind secondary coils. I also wind on the annular field-magnet midway between the first-mentioned coils a pair of coils which I connect up in circuit with the secondary coils.

The last pair of coils I make of finer wire than the main or line and secondary coils, and with a greater number of convolutions, that they may have a greater relative magnetizing effect than either of the others.

By connecting up the main coils in circuit with a generator of alternating currents, the armature of the motor will be rotated. I have assumed that this action is explained by the following theory: A current-impulse on the line passing through the main coils establishes the magnetic poles of the annular field-magnet at points midway between said coils; but this impulse produces in the secondary coils a current differing in phase from the first, which, circulating through the second pair of energizing-coils, tends to establish the pole at points ninety degrees removed from their first position, with the result of producing a movement or shifting of the poles in obedience to the combined magnetizing effect of the two sets of coils. This shifting, continued by each successive current-impulse, establishes what

may be termed a "rotary effort," and operates to maintain the armature in rotation

In the drawings annexed I have shown, in Figure 1, an alternating-current generator connected with a motor shown diagrammatically and constructed in accordance with my invention, and in Fig. 2 a diagram of a modified form of motor.

A designates any ordinary form of alternating-current generator, and B B the line-wires for connecting the same with the motor.

C is the annular field-magnet of the motor.

D D are two main coils wound on opposite sides of the ring or annular field and connected up with the line and having a tendency to magnify the ring C with opposite poles midway between the two coils.

E E are two other magnetizing-coils wound midway between the coils D D, but having a stronger magnetizing influence for a current of given strength than coils D D.

F F are the secondary coils, which are associated with the main coils D D. They are in circuits which include the coils E E, respectively, the connections being made in such order that currents induced in coils F and circulating in coils E will act in opposition to those in coils E in so far only as the location of the magnetic poles in the ring C is concerned.

The armature may be of any of the forms used by me in my alternating-current system, and is shown as wound with two closed coils G H at right angles to each other.

In order to prolong the magnetizing effect of the induced currents in producing a shifting of the poles, I have carried the principle of the construction exhibited in Fig. 1 further, thereby obtaining a stronger and better rotary effect.

Referring to Fig. 2, C is an annular field-magnet having three pairs or oppositely-located sets of polar projections K L M. Upon one pair of these projections, as K, the main energizing-coils D are wound. Over these are wound the secondary coils E. On the next polar projections L L are wound the second energizing-coils F, which are in circuit with coils E. Tertiary-induced coils E' are then wound over the coils F, and on the remaining polar projections M the third energizing-coils F' are wound and connected up in the circuit of the tertiary coils E'.

The cylindrical or disk armature core N in this motor has polar projections wound with coils O, forming closed circuits. My object in constructing the motor in this way is to effect more perfectly the shifting of the points of maximum magnetic effect. For assuming the operation of the motor to be due to the action above set forth, the first effect of a current-impulse in this motor will be to magnetize the pole-pieces K K; but the current thereby induced in coils E magnetizes the pole-pieces L, and the current induced in turn in coils E' magnetizes the pole-pieces M. The pole-pieces are not magnetized, at least to their full extent, simultaneously by this means; but there is enough of a retardation or delay to produce a rotary effect or influence upon the armature. The application of this principle is not limited to the special forms of motor herein shown, as any of the double-circuit alternating current motors invented by me and described in former Letters Patent to me may be adapted to the same purpose.

This invention, moreover, is not limited to the specific means herein shown for inducing in one energizing-circuit of the motor the currents necessary for co-operating with the primary current of the generator for producing the progressive shifting of the poles or points of maximum magnetic effect.

I believe that I am the first to produce any kind of a motor adapted to be operated by alternating currents and characterized by any arrangement of independent circuits brought into inductive relation so as to produce a rotary effort or effect due to the conjoint action of alternating currents from a source of supply in one of the motor-circuits and alternating currents induced by the first-named currents in the other circuit, and this without reference to the specific character or arrangement of the said two circuits in the motor.

What I therefore claim as my invention is—

1. In an electromagnetic motor, the combination of independent energizing-circuits, one adapted to be connected with a source of alternating current, the other arranged in inductive relation to the said first circuit whereby the motor will be operated by the resultant action of the two circuits, as set forth.

2. The combination in an electromagnetic motor, with an alternating coil or conductor and a closed-circuit conductor in inductive relation thereto, of an armature mounted so as to be within the field produced by the coil and closed conductor, as set forth.

3. The combination in an electromagnetic motor, with energizing-coils adapted to be connected with the generator of induced coils and independent energizing-coils in circuit therewith and arranged to produce a shifting movement of the points of maximum magnetic effect of the motor, as set forth.

4. The combination in an electromagnetic motor of a series of independent energizing-coils or sets of coils and induced coils wound on all the energizing-coils or sets of coils but the last of the series, the first energizing-coil or set of coils being included in circuit with a generator and each succeeding energizing-coil or set of coils being in circuit with the induced coils of the next preceding energizing-coils of the series.

5. In a system for the electrical transmission of power the combination of an alternating-current generator, a motor with an energizing coil or coils connected with the generator, secondary coils in inductive relation to said energizing-coils, and energizing-coils in circuit therewith arranged in substantially

the mannor set forth to produce a movement or rotation of the points of maximum magnetic effect of the motor, as set forth

6. In an electromagnetic motor the combination of independent energizing-circuits, one for connection with a source of alternating currents, the other in inductive relation to the first, whereby a rotary movement or projection of the field-poles will be produced by the conjoint action of the two and an armature mounted within the influence of the field produced by the energizing-circuits and containing closed coils or circuits, as set forth

NIKOLA TESLA

Witnesses
ROBT F GAYLORD,
FRANK E HARTLEY

P-64.

(No Model.)

N. TESLA.

ALTERNATING MOTOR.

No. 555,190. Patented Feb. 25, 1896.

Fig. 1

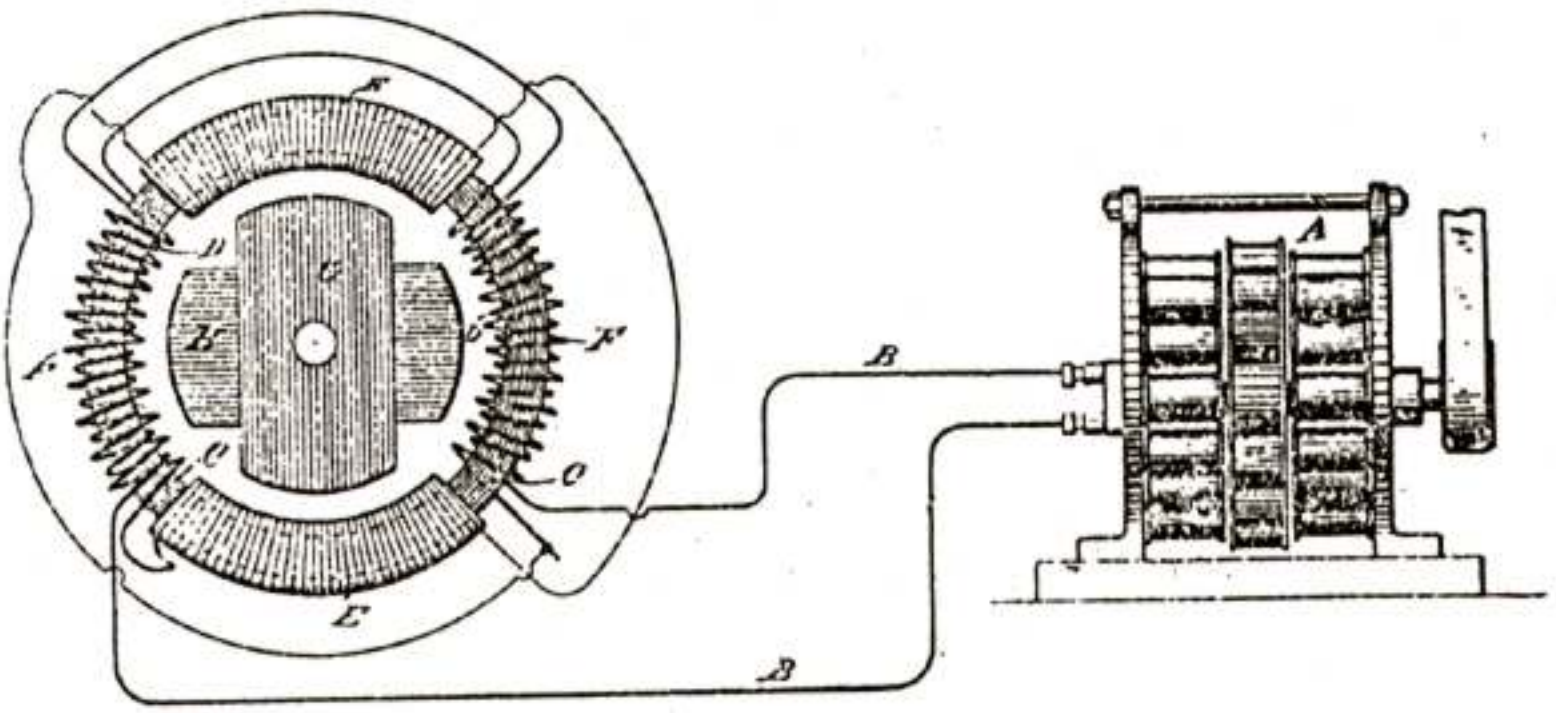

Fig. 2

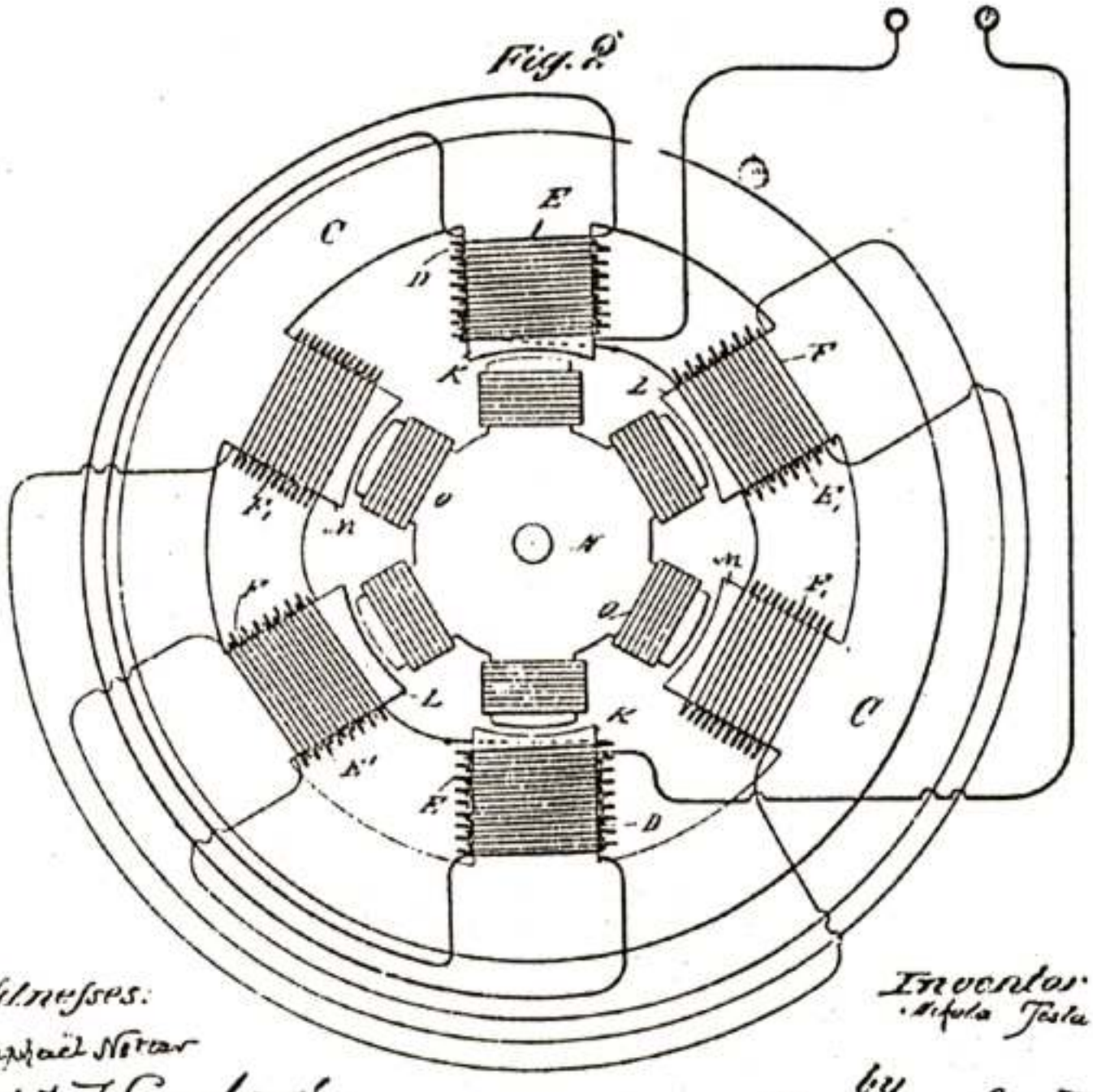

Witnesses:
Raphael Netter
Robt. F. Gaylord

Inventor:
Nikola Tesla
by
Duncan, Curtis & Page
Attorneys

UNITED STATES PATENT OFFICE.

NIKOLA TESLA, OF NEW YORK, N. Y., ASSIGNOR TO THE TESLA ELECTRIC COMPANY, OF SAME PLACE.

ELECTROMAGNETIC MOTOR.

SPECIFICATION forming part of Letters Patent No. 524,426, dated August 14, 1894.

Application filed October 20, 1888. Serial No. 288,677. (No model.)

To all whom it may concern.

Be it known that I, NIKOLA TESLA, a subject of the Emperor of Austria-Hungary, from Smiljan, Lika, border country of Austria-Hungary, and a resident of New York, in the county and State of New York, have invented certain new and useful Improvements in Electromagnetic Motors, of which the following is a specification, reference being had to the drawings accompanying and forming a part of the same.

In previous patents of the United States notably in those numbered 381,968 and 382,280, dated May 1, 1888, I have shown and described a system of transmitting power by means of electro-magnetic generators and motors. The distinguishing feature of this system was shown to be the progressive movement or shifting of the magnetic poles or points of maximum attraction of a motor, due to the action or effect of alternating currents passed through independent energizing circuits in the motor. To secure this result the two currents must have different phases, the best results being obtained when the two currents differ by a quarter phase, or in other words when the periods of maximum potential of one current coincide with the minimum periods of the other, and conversely. I have also discovered that a single alternating current may be utilized to produce a progression or shifting of the magnetic poles of a motor if the field magnets of the same be of different magnetic susceptibility in different parts so that the magnetic phases of the same will differ. That is to say, if the field magnets are of such character that their different portions will be differently magnetized—in respect to time—by the same current impulse, and so disposed that the difference of magnetic phase will maintain a rotary or progressive shifting of the points of maximum magnetic effect. This may be accomplished in various ways, as may best be explained by reference to the accompanying drawings, in which—

Figure 1, is a diagrammatic view of a motor constructed in accordance with my invention and a generator connected therewith. Fig. 2, is an end view of a modified form of armature for said motor.

Let A designate an ordinary type of alternating current generator in the circuit of which is to be connected a motor or motors, according to my present invention. I construct such motor or motors in the following manner: On a shaft *a* I mount an armature C, which for convenience of illustration is presumed to be a soft iron plate or disk with two cut-away portions or a bar with rounded ends. Around this armature I place say four poles, D D E E, of soft iron, and, as is usual in all alternating current machines, built up of insulated plates or sections to prevent the heating that would otherwise occur. Each of these cores is surrounded by an energizing coil F and all of these coils are connected to the main circuit from the generator A in series or in any other manner to receive simultaneously the current impulses delivered by the generator. If the cores are all of the same shape or mass, or composition, and the coils are all wound in the same or alternately opposite directions, no rotation would be produced by the passage through the coils of a current, whether alternating or direct, since the attractive forces of the poles upon the soft iron armature would be developed simultaneously and would counterbalance or neutralize each other. But to secure rotation I make, for example, the cores D D short with their coils close to their inner ends and the cores E E long, with their coils removed from the inner ends. By this means I secure a difference in the magnetic phases which the poles exhibit, for while the short cores will respond to the magnetizing effect of an alternation or impulse of current in the coils in a certain time, a greater interval of time will elapse before the same magnetic intensity will be developed at the ends of the longer cores, and in practice I have found that this difference in phase may be utilized to produce the rotation of the armature. The effect being virtually to produce a shifting of the points of maximum magnetic effect similar to that which takes place when two alternating energizing currents, differing in phase are used, as explained in the patents above referred to. The essential difference being that in my patented system the rotation is ef

fected by a time difference of electrical phase, while in the present case it is due to a difference in magnetic phases

The same or similar results are obtainable by other means. For example, to secure the requisite difference of magnetic phase, I may make two of the cores as E E of greater mass than cores D D, whereby their period of saturation will be greater than of cores D D, or I may make the cores E E of hard iron or steel and the cores D D of soft iron, in which case the cores E E offering greater resistance to magnetic changes, will not exhibit their magnetism as soon after the passage of a current as the cores D D. Or if the cores of one set of poles, as D, D, be removed, the attractive force of the coils or solenoids would be exerted instantly while the magnetic cores E E would lag or have a different phase.

The special form of the motor is largely a matter of choice, nor is the invention limited to the number of poles nor to the special form of armature shown For example, I may employ such an armature as that shown in Fig. 2, which is a cylinder or disk C wound with coils G closed upon themselves. This adds materially to the efficiency of the motor for the reason that currents are induced in the closed coils and magnetize the iron cylinder in a manner similar to that described in my Patent No 383,279 of May 1, 1888.

Without limiting myself, therefore, in the particulars hereinbefore specified, what I claim as my invention is—

1. In an alternating current motor the combination with energizing coils adapted to be connected with an external circuit of cores of different magnetic susceptibility so as to exhibit differences of magnetic phase under the influence of an energizing current, as herein set forth.

2. The combination in an alternating current motor with a rotary armature of magnetic poles, and coils adapted to be connected with the external circuit surrounding the same, the said cores being constructed of different size or material whereby their magnetic phase will differ in time as set forth

3. The combination in an electro magnetic motor with a rotary armature of magnetic cores of different length or mass and energizing coils surrounding the same and adapted to be connected with a single source of alternating currents, as set forth.

4. The combination in an electro magnetic motor with a rotary armature of short magnetic cores as D D and long magnetic cores as E E, and energizing coils surrounding the same, those on the cores E E being placed at a distance from the inner ends of the said cores, as herein set forth.

5. The combination in an electro-magnetic motor with energizing coils adapted to be connected with a source of alternating currents, and cores of different magnetic susceptibility, of an armature wound with coils closed upon themselves, as herein set forth.

6. The combination in an electro magnetic motor with a rotary armature of field cores of different magnetic susceptibility and energizing coils thereon connected in series and adapted to be connected with a source of alternating currents, as set forth.

NIKOLA TESLA.

Witnesses:
GEO. N. MONRO,
A. PATTERSON

(No Model.)

N. TESLA.

ELECTROMAGNETIC MOTOR.

No. 524,426 Patented Aug. 14, 1894.

Fig. 1

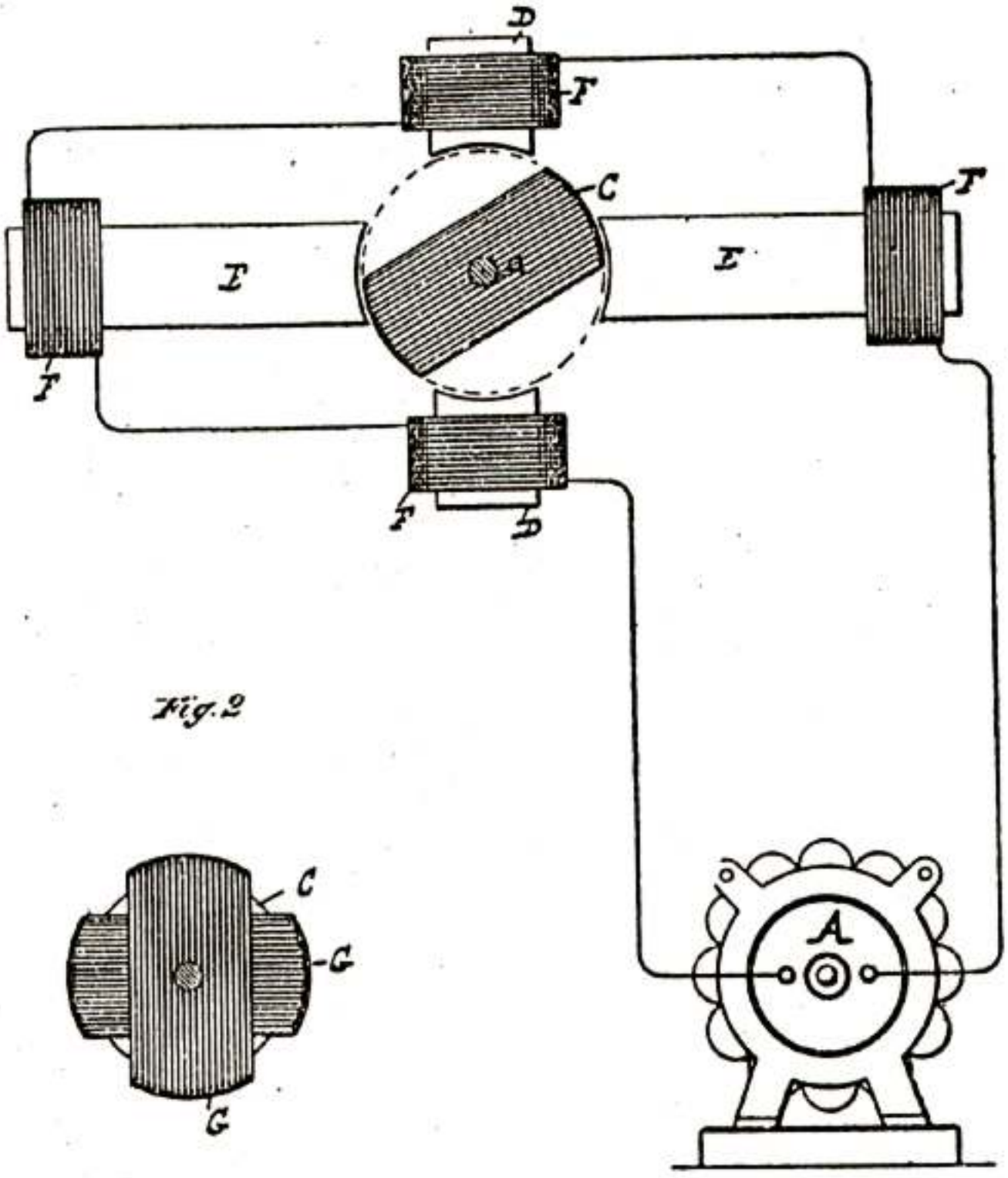

Fig. 2

WITNESSES:
Frank E. Hartley
Frank B. Mumford.

Nikola Tesla INVENTOR
BY
Duncan, Curtis & Page
ATTORNEYS

UNITED STATES PATENT OFFICE.

NIKOLA TESLA, OF NEW YORK, N. Y., ASSIGNOR TO THE TESLA ELECTRIC COMPANY, OF SAME PLACE.

ELECTRO-MAGNETIC MOTOR.

SPECIFICATION forming part of Letters Patent No. 405,858, dated June 25, 1889.

Application filed January 8, 1889. Serial No. 295,745. (No model.)

To all whom it may concern:

Be it known that I, NIKOLA TESLA, from Smiljan, Lika, border country of Austria-Hungary, a subject of the Emperor of Austria, residing at New York, in the county and State of New York, have invented certain new and useful Improvements in Electro-Magnetic Motors, of which the following is a specification, reference being had to the drawings accompanying and forming a part of the same.

In order to define more clearly the relations which the motor forming the subject of my present application bears to others of the class to which it pertains, I will recapitulate briefly the forms of alternating-current motors invented by me and described more in detail in my prior patents and applications. Of these there are two principal types or forms: first, those containing two or more energizing-circuits through which are caused to pass alternating currents differing from one another in phase to an extent sufficient to produce a continuous progression or shifting of the poles or points of greatest magnetic effect, in obedience to which the movable element of the motor is maintained in rotation; second, those containing poles or parts of different magnetic susceptibility, which under the energizing influence of the same current or two currents coinciding in phase will exhibit differences in their magnetic periods or phases. In the first class of motors the torque is due to the magnetism established in different portions of the motor by currents from the same or from independent sources, and exhibiting time differences in phase. In the second class the torque results from the energizing effects of a current upon parts of the motor which differ in magnetic susceptibility—in other words, parts which respond to the same relative degree to the action of a current, not simultaneously, but after different intervals of time. In my present invention, however, the torque, instead of being solely the result of a time difference in the magnetic periods or phases of the poles or attractive parts to whatever cause due, is produced by an angular displacement of the parts which, though movable with respect to one another, are magnetized simultaneously, or approximately so, by the same currents. This principle of operation I have embodied practically in a motor in which I obtain the necessary angular displacement between the points of greatest magnetic attraction in the two elements of the motor—the armature and field—by the direction of the lamination of the magnetic cores of said elements, and the best means of accomplishing this result of which I am at present aware I have shown in the accompanying drawings.

Figure 1 is a side view of the motor with a portion of its armature-core exposed. Fig. 2 is an end or edge view of the same. Fig. 3 is a central cross-section of the same, the armature being shown mainly in elevation.

Let A A designate two plates built up of thin sections or laminæ of soft iron insulated more or less from one another and held together by bolts *a* or any other suitable means and secured to a base B. The inner faces of these plates contain recesses or grooves in which a coil or coils D are secured obliquely to the direction of the laminations. Within the coils D is a disk E, preferably composed of a spirally-wound iron wire or ribbon or a series of concentric rings and mounted on a shaft F, having bearings in the plates A A. Such a device when acted upon by an alternating current is capable of rotation and constitutes a motor, the operation of which I explain in the following manner: A current or current-impulse traversing the coils D tends to magnetize the cores A A and E, all of which are within the influence of the magnetic field of the coils. The poles thus established would naturally lie in the same line at right angles to the coils D, but in the plates A they are deflected by reason of the direction of the laminations and appear at or near the extremities of said plates. In the disk, however, where these conditions are not present, the poles or points of greatest attraction are on a line at right angles to the plane of the coils; hence there will be a torque established by this angular displacement of the poles or magnetic lines, which starts the disk in rotation, the magnetic lines of the armature and field tending toward a position of paral-

lelism This rotation is continued and maintained by the reversals of the current in coils D D, which change alternately the polarity of the field-cores A A. This rotary tendency or effect will be greatly increased by winding the disk with conductors G, closed upon themselves and having a radial direction, whereby the magnetic intensity of the poles of the disk will be greatly increased by the energizing effect of the currents induced in the coils G by the alternating currents in coils D. The plan of winding and the principle of operation have been fully explained in my patent, No. 382,279, of May 1, 1888

The cores of the disk and field may or may not be of different magnetic susceptibility—that is to say, they may both be of the same kind of iron, so as to be magnetized at approximately the same instant by the coils D; or one may be of soft iron and the other of hard, in order that a certain time may elapse between the periods of their magnetization. In either case rotation will be produced; but unless the disk is provided with the closed energizing-coils it is desirable that the above-described difference of magnetic susceptibility be utilized to assist in its rotation.

The cores of the field and armature may be made in various ways, as will be well understood, it being only requisite that the laminations in each be in such direction as to secure the necessary angular displacement of the points of greatest attraction. Moreover, since the disk may be considered as made up of an infinite number of radial arms, it is obvious that what is true of a disk holds, under well-understood conditions, for many other forms of armature, and my invention in this respect is in no sense limited to the specific form of armature shown

It will be understood that the specific ways of carrying out this invention are almost without number, and that, therefore, I do not limit myself to the precise form of motor which I have herein shown

I believe that I am the first to produce rotation of an armature, at least such as could be utilized for any general or practicable purposes, by means of an alternating current passing through a single coil or several coils acting as one, and which have a direct magnetizing effect upon the cores of both armature and field, and this I claim in its broadest sense.

I further believe that I am the first to impart directly, by means of an alternating current, magnetism to the cores of the two elements of a motor, and by the direction of the lamination of one or both of the same to produce an angular displacement of the poles or lines of magnetic force of the cores, respectively.

What I therefore claim is—

1. An electro-magnetic motor consisting of a field-magnet, a rotary armature, and a single coil adapted to be connected to a source of alternating currents and to impart magnetism to both the armature and the field-magnet with angular displacement of the maximum points, as set forth.

2. In an electro-magnetic motor, the combination, with a coil adapted to be connected with a source of alternating currents, of a field-magnet and rotary armature the cores of which are in such relation to the coil as to be energized thereby and subdivided or laminated in such manner as to produce an angular displacement of their poles or the magnetic lines therein, as set forth

3. In an electro-magnetic motor, the combination, with a coil adapted to be connected with a source of alternating currents, of field-magnets with laminations lying obliquely to the plane of said coil and a circular or disk armature mounted to rotate between the field-magnets, both field and armature being under the magnetizing influence of the coil, as set forth.

4. In an electro-magnetic motor, the combination, with a coil adapted to be connected with a source of alternating currents, of field-magnets with laminations lying obliquely to the plane of the coil and a circular or disk armature with spiral or concentric laminations mounted between the field-magnets, both field and armature being under the magnetizing influence of the coil, as set forth.

5. In an electro-magnetic motor, the combination, with a coil adapted to be connected to a source of alternating currents, of a field-magnet and a rotary armature with closed coils thereon, both the field and the armature being under the magnetizing influence of said coil and laminated to produce an angular displacement of the poles of the two cores.

NIKOLA TESLA

Witnesses.
EDWARD T. EVANS.
GEORGE N. MONRO.

P-70

(No Model.)

N TESLA.

ELECTRO MAGNETIC MOTOR.

No. 405,858. Patented June 25, 1889.

Fig. 1

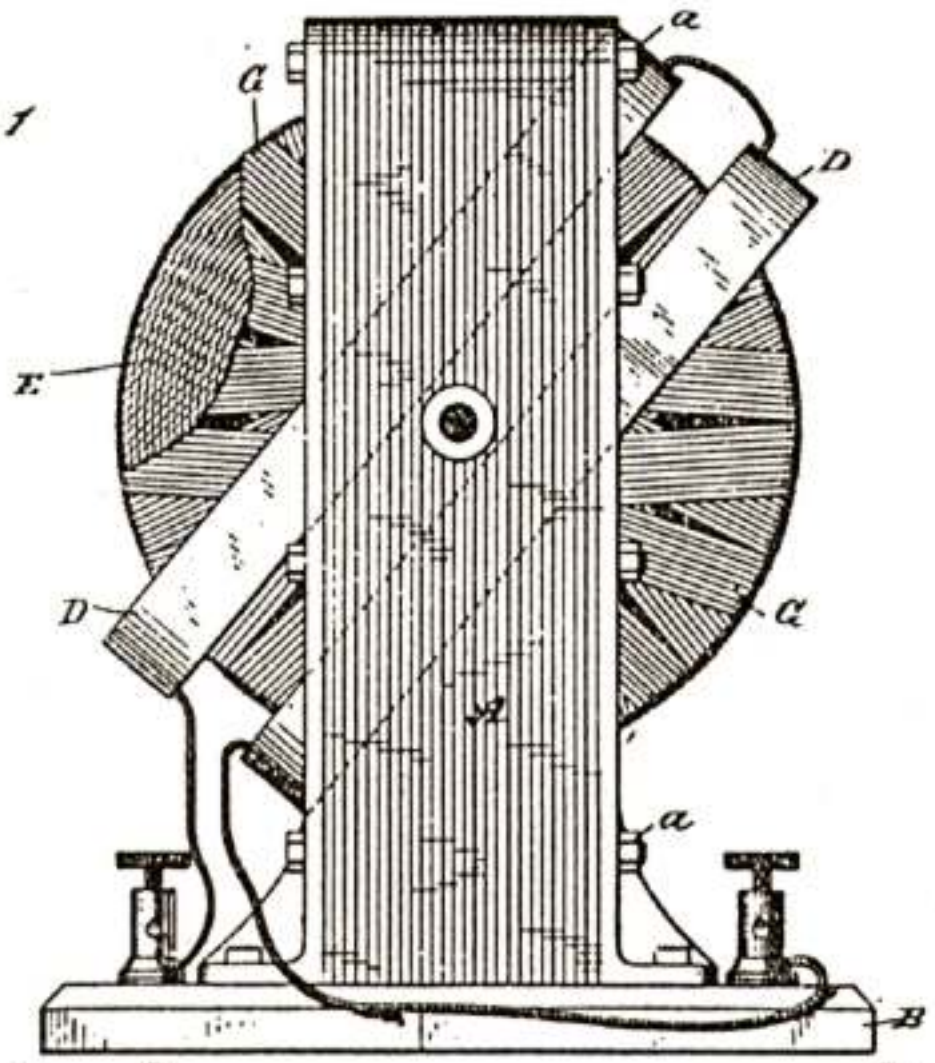

Fig. 2

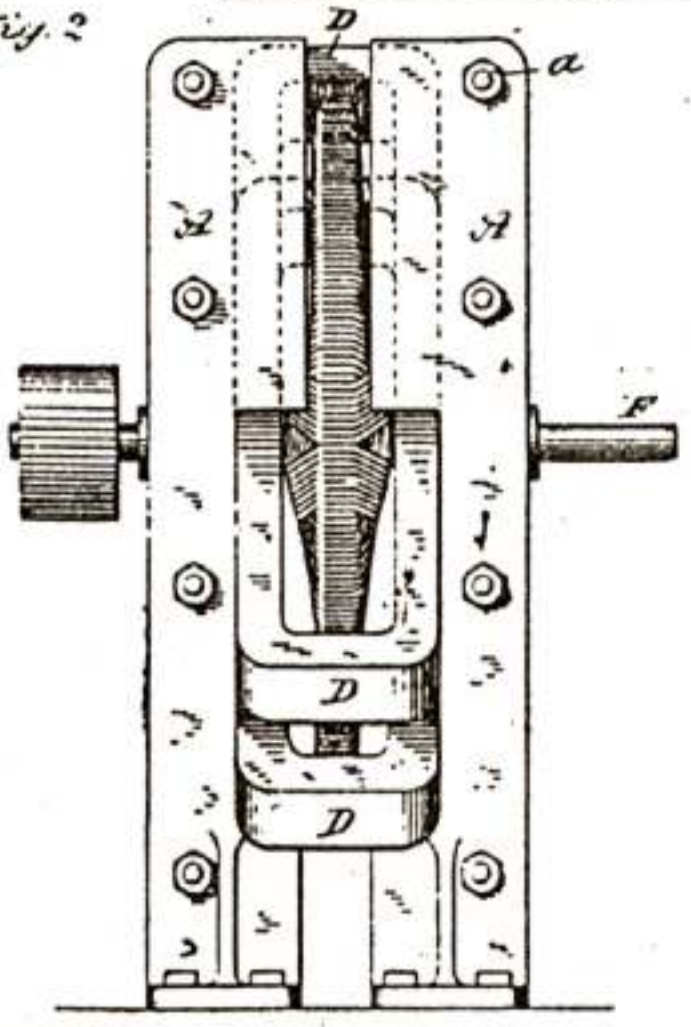

Fig. 3

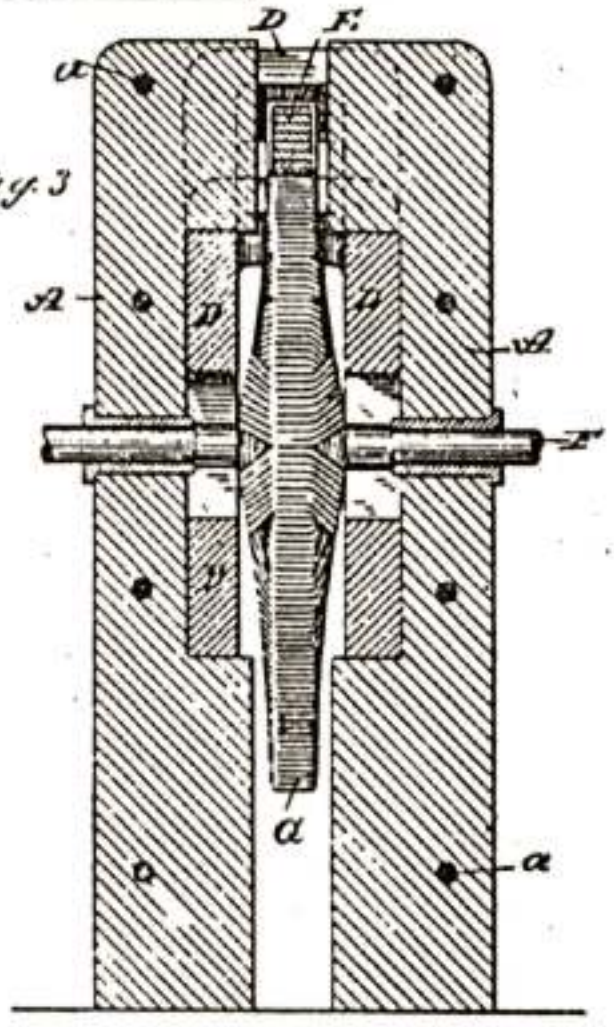

WITNESSES

Raphael Netter

Robt. F. Gaylord

INVENTOR

Nikola Tesla

BY

Duncan, Curtis & Page

ATTORNEYS

UNITED STATES PATENT OFFICE.

NIKOLA TESLA, OF NEW YORK, N. Y.

METHOD OF OPERATING ELECTRO-MAGNETIC MOTORS.

SPECIFICATION forming part of Letters Patent No. 401,520, dated April 16, 1889.

Application filed February 18, 1889. Serial No. 300,220. (No model.)

To all whom it may concern:

Be it known that I, NIKOLA TESLA, a subject of the Emperor of Austria, from Smiljan, Lika, border country of Austria-Hungary, and residing at New York, in the county and State of New York, have invented certain new and useful Improvements in Methods of Operating Electro-Magnetic Motors, of which the following is a specification, reference being had to the drawings accompanying and forming a part of the same.

As is well known, certain forms of alternating-current machines have the property, when connected in circuit with an alternating-current generator, of running as a motor in synchronism therewith; but, while the alternating current will run the motor after it has attained a rate of speed synchronous with that of the generator, it will not start it. Hence, in all instances heretofore where these "synchronizing-motors," as they are termed, have been run some means have been adopted to bring the motors up to synchronism with the generator, or approximately so, before the alternating current of the generator is applied to drive them. In some instances mechanical appliances have been utilized for this purpose. In others special and complicated forms of motor have been constructed. I have discovered a much more simple method or plan of operating synchronizing-motors, which requires practically no other apparatus than the motor itself. In other words, by a certain change in the circuit-connections of the motor I convert it at will from a double-circuit motor, or such as I have described in prior patents and applications, and which will start under the action of an alternating current into a synchronizing-motor, or one which will be run by the generator only when it has reached a certain speed of rotation synchronous with that of the generator. In this manner I am enabled to very greatly extend the applications of my system and to secure all the advantages of both forms of alternating-current motor.

The expression "synchronous with that of the generator," is used herein in its ordinary acceptation—that is to say, a motor is said to synchronize with the generator when it preserves a certain relative speed determined by its number of poles and the number of alternations produced per revolution of the generator. Its actual speed, therefore, may be faster or slower than that of the generator; but it is said to be synchronous so long as it preserves the same relative speed.

In carrying out my invention I construct a motor which has a strong tendency to synchronism with the generator. The construction which I prefer for this is that in which the armature is provided with polar projections. The field-magnets are wound with two sets of coils, the terminals of which are connected to a switch mechanism, by means of which the line-current may be carried directly through the said coils or indirectly through paths by which its phases are modified. To start such a motor, the switch is turned onto a set of contacts which includes in one motor-circuit a dead resistance, in the other an inductive resistance, and, the two circuits being in derivation, it is obvious that the difference in phase of the current in such circuits will set up a rotation of the motor. When the speed of the motor has thus been brought to the desired rate, the switch is shifted to throw the main current directly through the motor-circuits, and although the currents in both circuits will now be of the same phase the motor will continue to revolve, becoming a true synchronous motor. To secure greater efficiency, I wind the armature or its polar projections with coils closed on themselves. There are various modifications and important features of this method or plan; but the main principle of the invention will be understood from the foregoing.

In the drawings, to which I now refer, I have illustrated by the diagrams the general features of construction and operation which distinguish my invention, Figure 1 being drawn to illustrate the details of the plan above set forth, and Figs. 2 and 3 modifications of the same.

Referring to Fig. 1, let A designate the field-magnets of a motor, the polar projections of which are wound with coils B C included in independent circuits, and D the armature with polar projections wound with coils E closed upon themselves, the motor in these respects being similar in construction to those described in my patent, No. 382,279, dated May 1, 1888, but having, by reason of the

polar projections on the armature-core or other similar and well-known features, the properties of a synchronizing-motor.

L L′ represent the conductors of a line from an alternating-current generator G.

Near the motor is placed a switch the action of which is that of the one shown in the drawings, which is constructed as follows: F F′ are two conducting plates or arms, pivoted at their ends and connected by an insulating cross-bar, H, so as to be shifted in parallelism. In the path of the bars F F′ is the contact 2, which forms one terminal of the circuit through coils C, and the contact 4, which is one terminal of the circuit through coils B. The opposite end of the wire of coils C is connected to the wire L or bar F′, and the corresponding end of coils B is connected to wire L′ and bar F; hence if the bars be shifted so as to bear on contacts 2 and 4 both sets of coils B C will be included in the circuit L L′ in multiple arc or derivation. In the path of the levers F F′ are two other contact-terminals, 1 and 3. The contact 1 is connected to contact 2 through an artificial resistance, I, and contact 3 with contact 4 through a self-induction coil, J, so that when the switch-levers are shifted onto the points 1 and 3 the circuits of coils B and C will be connected in multiple arc or derivation to the circuit L L′, and will include the resistance and self-induction coil, respectively. A third position of the switch is that in which the levers F and F′ are shifted out of contact with both sets of points. In this case the motor is entirely out of circuit.

The purpose and manner of operating the motor by these devices are as follows: The normal position of the switch, the motor being out of circuit, is off the contact-points. Assuming the generator to be running, and that it is desired to start the motor, the switch is shifted until its levers rest upon points 1 and 3. The two motor-circuits are thus connected with the generator-circuit; but by reason of the presence of the resistance I in one and the self-induction coil J in the other the coincidence of the phases of the current is disturbed sufficiently to produce a progression of the poles, which starts the motor in rotation. When the speed of the motor has run up to synchronism with the generator, or approximately so, the switch is shifted over onto the points 2 and 4, thus cutting out the coils I and J, so that the currents in both circuits have the same phase; but the motor now runs as a synchronous motor, which is well known to be a very desirable and efficient means of converting and transmitting power.

It will be understood that when brought up to speed the motor will run with only one of the circuits B or C connected with the main or generator circuit, or the two circuits may be connected in series. This latter plan is preferable when a current having a high number of alternations per unit of time is employed to drive the motor. In such case the starting of the motor is more difficult and the dead and inductive resistances must take up a considerable proportion of the electro-motive force of the circuits. Generally I so adjust the conditions that the electro-motive force used in each of the motor-circuits is that which is required to operate the motor when its circuits are in series. The plan which I follow in this case is illustrated in Fig. 2. In this diagram the motor has twelve poles and the armature has polar projections D wound with closed coils E. The switch used is of substantially the same construction as that shown in the previous figure. There are, however, five contacts, which I have designated by the figures 5, 6, 7, 8, and 9. The motor-circuits B C, which include alternate field-coils, are connected to the terminals in the following order: One end of circuit C is connected to contact 9 and to contact 5 through a dead resistance, I. One terminal of circuit B is connected to contact 7 and to contact 6 through a self-induction coil, J. The opposite terminals of both circuits are connected to contact 8.

One of the levers, as F, of the switch is made with an extension, *f*, or otherwise, so as to cover both contacts 5 and 6 when shifted into the position to start the motor. It will be observed that when in this position and with lever F′ on contact 8 the current divides between the two circuits B C, which from their difference in electrical character produce a progression of the poles that starts the motor in rotation. When the motor has attained the proper speed, the switch is shifted so that the levers cover the contacts 7 and 9, thereby connecting circuits B and C in series. I have found that by this disposition the motor is maintained in rotation in synchronism with the generator. This principle of operation, which consists in converting by a change of connections or otherwise a double-circuit motor or one operating by a progressive shifting of the poles into an ordinary synchronizing-motor may be carried out in many other ways. For instance, instead of using the switch shown in the previous figures, I may use a temporary ground-circuit between the generator and motor, in order to start the motor, in substantially the manner indicated in Fig. 3. Let G in this figure represent an ordinary alternating-current generator with, say, two poles, M M′, and an armature wound with two coils, N N′, at right angles and connected in series. The motor has, for example, four poles wound with coils B C, which are connected in series and an armature with polar projections D wound with closed coils E E. From the common joint or union between the two circuits of both the generator and the motor an earth-connection is established, while the terminals or ends of the said circuits are connected to the line. Assuming that the motor is a synchronizing-motor or one that has the capability of running in synchronism with the generator, but not of start-

ing, it may be started by the above-described apparatus by closing the ground connection from both generator and motor. The system thus becomes one with a two-circuit generator and motor, the ground forming a common return for the currents in the two circuits L and L'. When by this arrangement of circuits the motor is brought to speed, the ground-connection is broken between the motor or generator, or both, and ground, switches P P' being employed for this purpose. The motor then runs as a synchronizing-motor.

In describing those features which constitute my invention I have omitted illustrations of the appliances used in conjunction with the electrical devices of similar systems—such, for instance, as driving-belts, fixed and loose pulleys for the motor, and the like; but these are matters well understood.

In describing my invention by reference to specific constructions I do not wish to be understood as limiting myself to the constructions shown; and in explanation of my intent in this respect I would say that I may in such forms of apparatus as I have shown in Figs. 1 and 2 include the dead resistance and self-induction coil in either circuit, or use only a dead resistance or a self-induction coil, as in the various ways shown in my application, No. 293,052, filed December 8, 1888. I may also use any form of switch, whether manual or automatic, that will by its manipulation or operation effect the required change of connections, and in order to secure the necessary difference of phase in the two motor-circuits on starting I may employ any of the known means for this purpose.

I believe that I am the first to operate electro-magnetic motors by alternating currents in any of the ways herein suggested or described—that is to say, by producing a progressive movement or rotation of their poles or points of greatest magnetic attraction by the alternating currents until they have reached a given speed, and then by the same currents producing a simple alternation of their poles, or, in other words, by a change in the order or character of the circuit-connections to convert a motor operating on one principle to one operating on another, for the purpose described.

I do not claim herein of itself the method of or apparatus for operating a motor which forms a part of this invention and which involves the principle of varying or modifying the currents passing through the energizing-circuits, so as to produce between such currents a difference of phase, as these matters are described and claimed by me in other applications, but with the object of securing, broadly, the method as a whole which I have herein set forth.

What I claim is—

1. The method of operating an alternating-current motor herein described by first progressively shifting or rotating its poles or points of greatest attraction and then, when the motor has attained a given speed, alternating the said poles, as described.

2. The method of operating an electro-magnetic motor herein described, which consists in passing through independent energizing-circuits of the motor alternating currents differing in phase and then, when the motor has attained a given speed, alternating currents coinciding in phase, as described.

3. The method of operating an electro-magnetic motor herein described, which consists in starting the motor by passing alternating currents differing in phase through independent energizing-circuits and then, when the motor has attained a given speed, joining the energizing-circuits in series and passing an alternating current through the same.

4. The method of operating a synchronizing-motor, which consists in passing an alternating current through independent energizing-circuits of the motor and introducing into such circuits a resistance and self-induction coil, whereby a difference of phase between the currents in the circuits will be obtained, and then, when the speed of the motor synchronizes with that of the generator, withdrawing the resistance and self-induction coil, as set forth.

NIKOLA TESLA.

Witnesses:
GEO. M. MONRO,
WM. H. LEMON.

P-74

(No Model.)

N. TESLA.

METHOD OF OPERATING ELECTRO MAGNETIC MOTORS.

No. 401,520. Patented Apr. 16, 1889.

Fig. 1

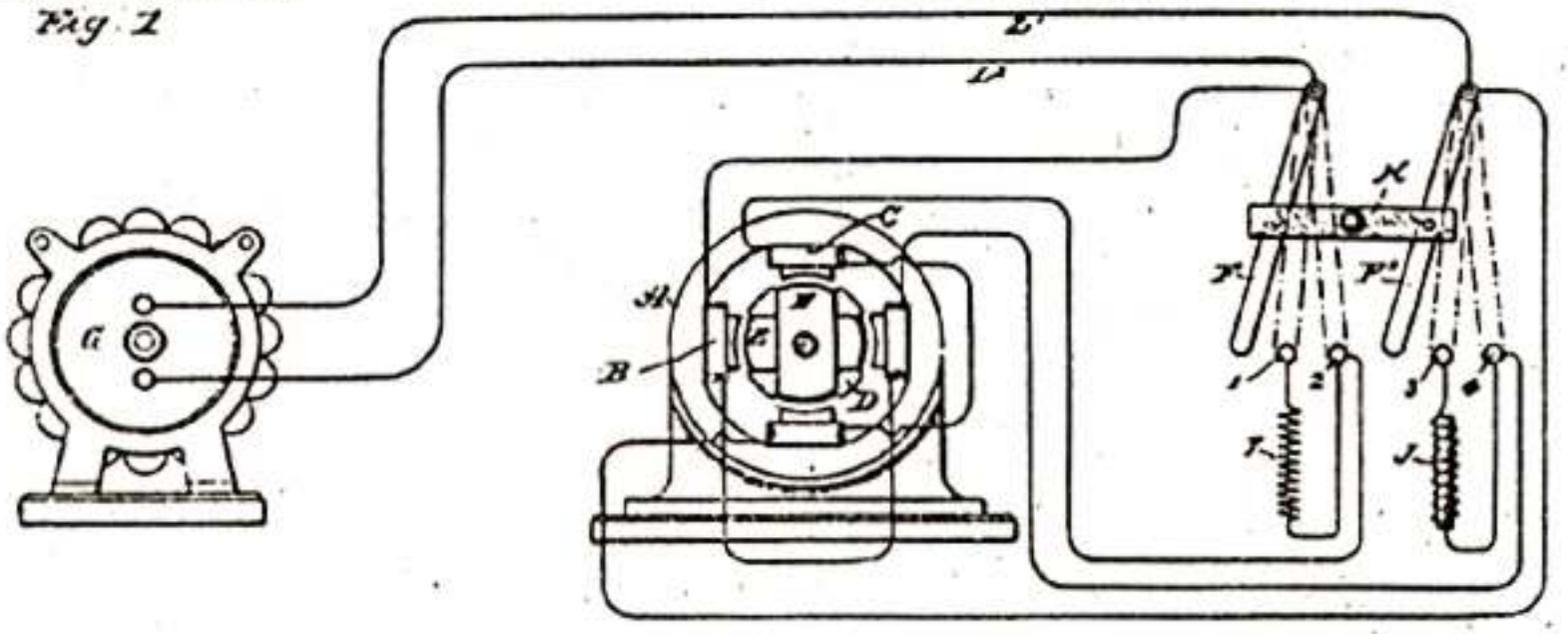

Fig. 2

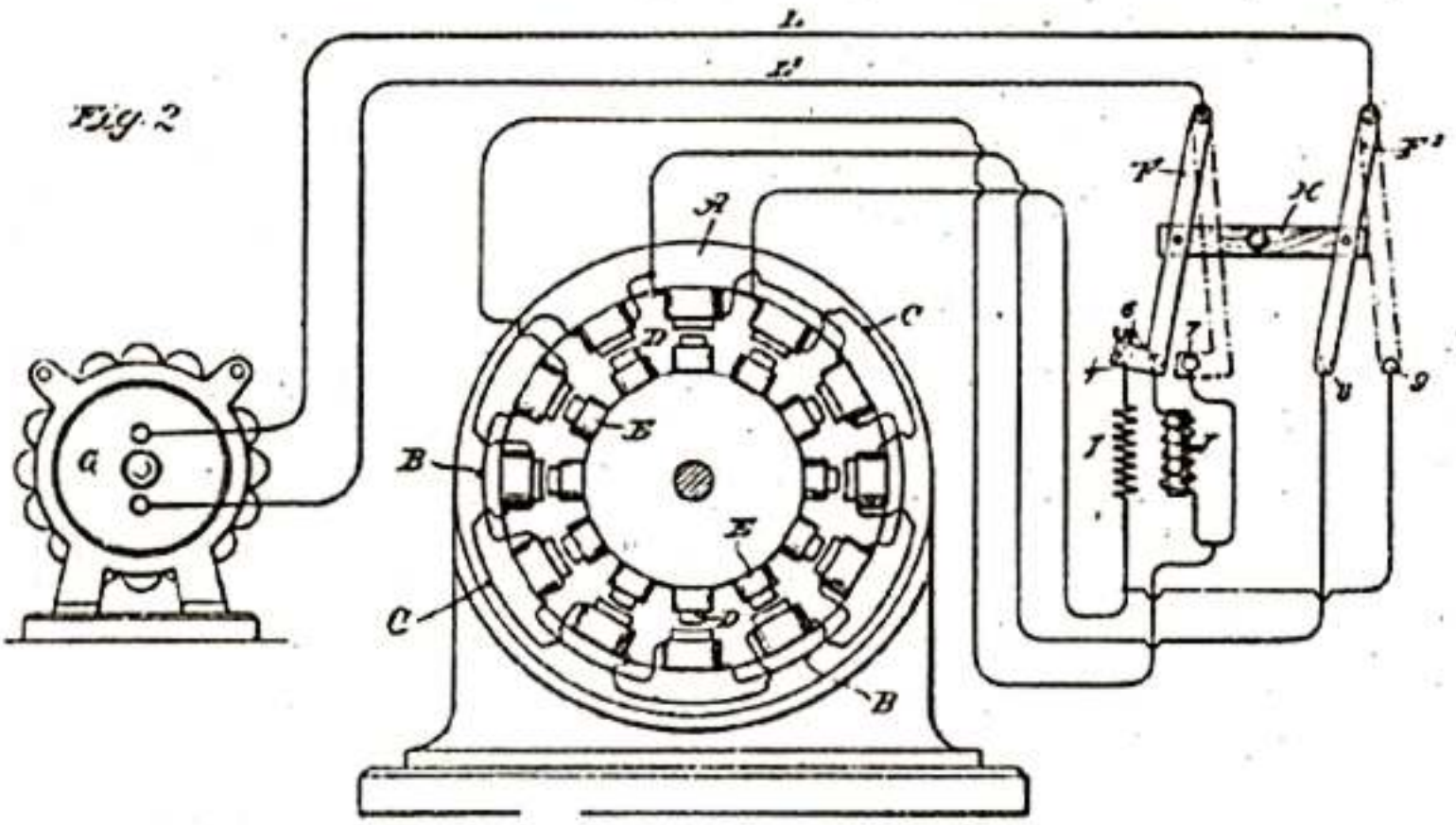

Fig. 3

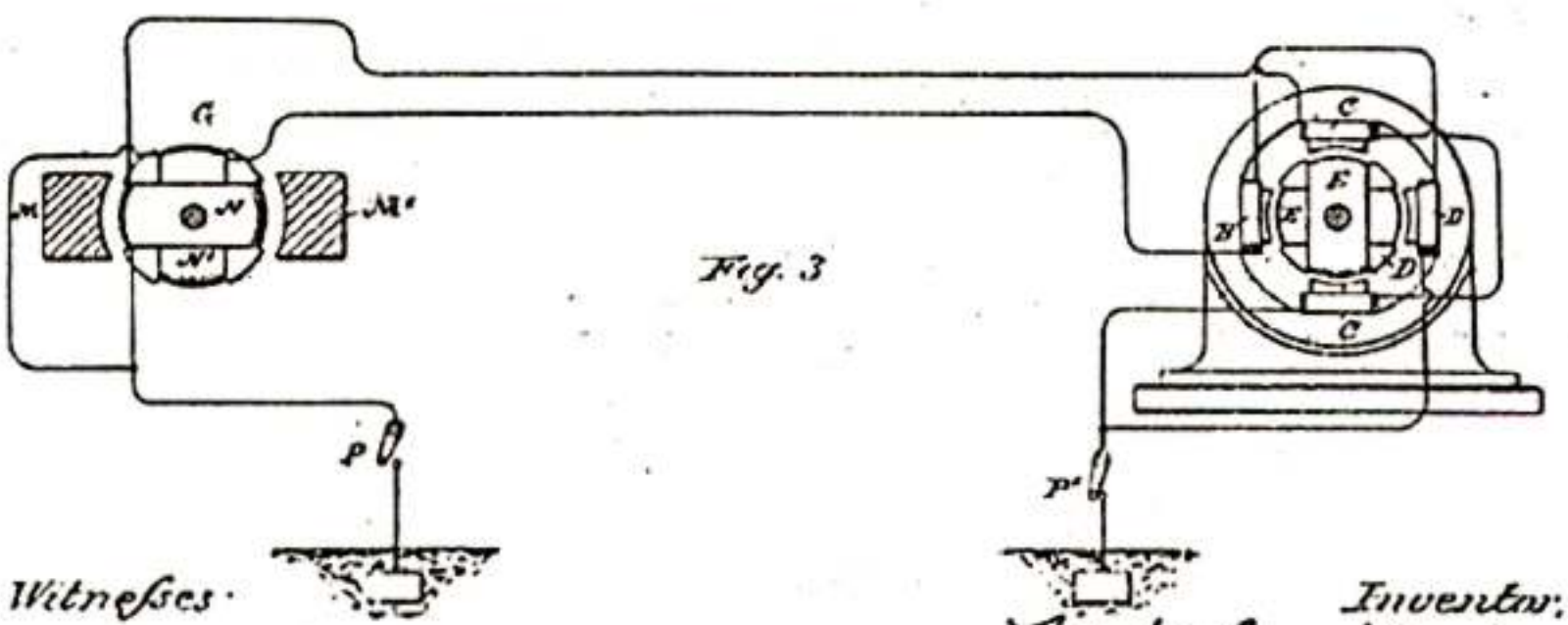

Witnesses:
Raymond Notter
Ernest Hopkinson

Inventor:
Nikola Tesla
by
Duncan, Curtis & Page.
Attorneys.

UNITED STATES PATENT OFFICE.

NIKOLA TESLA, OF NEW YORK, N. Y., ASSIGNOR OF TWO-THIRDS TO CHARLES F. PECK, OF ENGLEWOOD, NEW JERSEY, AND ALFRED S. BROWN, OF NEW YORK, N. Y

DYNAMO-ELECTRIC MACHINE.

SPECIFICATION forming part of Letters Patent No. 400,068, dated July 16, 1889.

Application filed March 23, 1889. Serial No. 304,493. (No model.)

To all whom it may concern:

Be it known that I, NIKOLA TESLA, from Smiljan, Lika, border country of Austria-Hungary, a subject of the Emperor of Austria, and a resident of New York, in the county and State of New York, have invented certain new and useful Improvements in Dynamo or Magneto Electric Machines, of which the following is a specification, reference being had to the accompanying drawings.

This invention relates to that class of electrical generators known as "unipolar," in which a disk or cylindrical conductor is mounted between magnetic poles adapted to produce an approximately-uniform field. In the first-named or disk armature machines the currents induced in the rotating conductor flow from the center to periphery, or conversely, according to the direction of rotation or the lines of force as determined by the signs of the magnetic poles, and these currents are taken off usually by connections or brushes applied to the disk at points on its periphery and near its center. In the case of the cylindrical armature-machine the currents developed in the cylinder are taken off by brushes applied to the sides of the cylinder at its ends.

In order to develop economically an electromotive force available for practicable purposes, it is necessary either to rotate the conductor at a very high rate of speed or to use a disk of large diameter or cylinder of great length; but in either case it becomes difficult to secure and maintain a good electrical connection between the collecting-brushes and the conductor, owing to the high peripheral speed.

It has been proposed to couple two or more disks together in series with the object of obtaining a higher electro-motive force; but with the connections heretofore used and using other conditions of speed and dimension of disk necessary to securing good practicable results this difficulty is still felt to be a serious obstacle to the use of this kind of generator. These objections I have sought to avoid; and for this purpose I construct a machine with two fields, each having a rotary conductor mounted between its poles, but the same principle is involved in the case of both forms of machine above described, and as I prefer to use the disk form I shall confine the description herein to that machine. The disks are formed with flanges, after the manner of pulleys, and are connected together by flexible conducting bands or belts.

I prefer to construct the machine in such manner that the direction of magnetism or order of the poles in one field of force is opposite to that in the other, so that rotation of the disks in the same direction develops a current in one from center to circumference and in the other from circumference to center. Contacts applied therefore to the shafts upon which the disks are mounted form the terminals of a circuit the electro-motive force in which is the sum of the electro-motive forces of the two disks.

I would call attention to the obvious fact that if the direction of magnetism in both fields be the same the same result as above will be obtained by driving the disks in opposite directions and crossing the connecting-belts. In this way the difficulty of securing and maintaining good contact with the peripheries of the disks is avoided and a cheap and durable machine made which is useful for many purposes—such as for an exciter for alternating-current generators, for a motor, and for any other purpose for which dynamo-machines are used.

The specific construction of the machine which I have just generally described I have illustrated in the accompanying drawings, in which—

Figure 1 is a side view, partly in section, of my improved machine. Fig. 2 is a vertical section of the same at right angles to the shafts.

In order to form a frame with two fields of force, I cast a support A with two pole-pieces B B′ integral with it. To this I join by bolts E a casting D, with two similar and corresponding pole-pieces C C′. The pole-pieces B B′ are wound or connected to produce a field of force of given polarity, and the pole-pieces C C′ are wound or connected to produce a

field of opposite polarity. The driving-shafts F G pass through the poles and are journaled in insulating-bearings in the casting A D, as shown.

H K are the disks or generating-conductors. They are composed of copper, brass, or iron and are keyed or secured to their respective shafts. They are provided with broad peripheral flanges J. It is of course obvious that the disks may be insulated from their shafts, if so desired. A flexible metallic belt L is passed over the flanges of the two disks, and, if desired, may be used to drive one of the disks. I prefer, however, to use this belt merely as a conductor, and for this purpose may use sheet steel, copper, or other suitable metal. Each shaft is provided with a driving-pulley M, by which power is imparted from a counter-shaft.

N N are the terminals. For sake of clearness they are shown as provided with springs P, that bear upon the ends of the shafts. This machine, if self-exciting, would have copper bands around its poles, or conductors of any kind—such as the wires shown in the drawings—may be used.

I do not limit my invention to the special construction herein shown. For example, it is not necessary that the parts be constructed in one machine or that the materials and proportions herein given be strictly followed. Furthermore, it is evident that the conducting belt or band may be composed of several smaller bands and that the principle of connection herein described may be applied to more than two machines.

What I claim is—

1. An electrical generator consisting of the combination, with two rotary conductors mounted in unipolar fields, of a flexible conductor or belt passing around the peripheries of said conductors, as herein set forth.

2. The combination, with two rotary conducting-disks having peripheral flanges and mounted in unipolar fields, of a flexible conducting belt or band passing around the flanges of both disks, as set forth.

3. The combination of independent sets of field-magnets adapted to maintain unipolar fields, conducting-disks mounted to rotate in said fields, independent driving mechanism for each disk, and a flexible conducting belt or band passing around the peripheries of the disks, as set forth.

NIKOLA TESLA.

Witnesses:
PARKER W. PAGE,
ROBT. F. GAYLORD.

(No Model.)

N. TESLA.

DYNAMO ELECTRIC MACHINE.

No. 406,968. Patented July 16, 1889.

Fig. 1

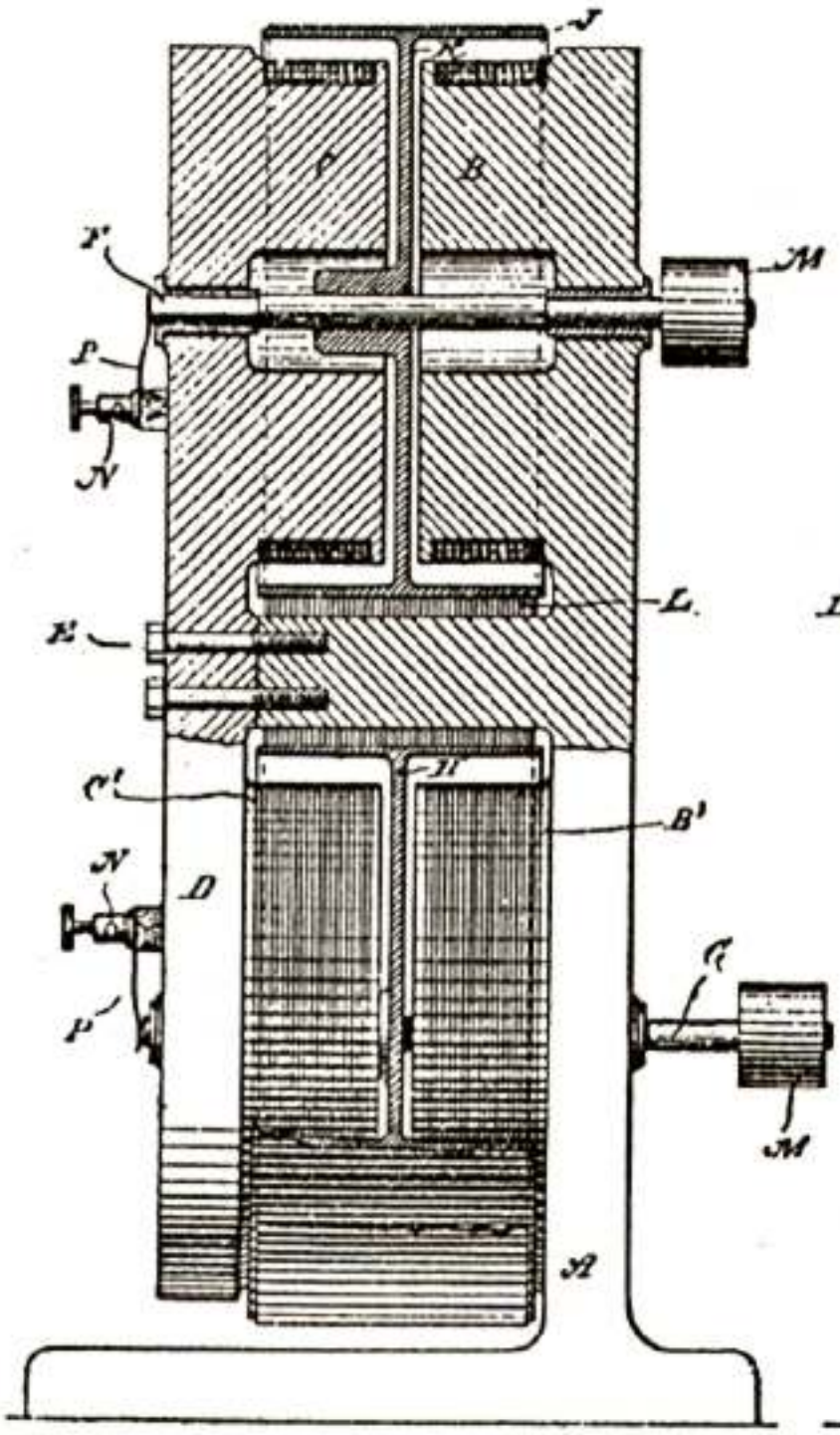

Fig. 2

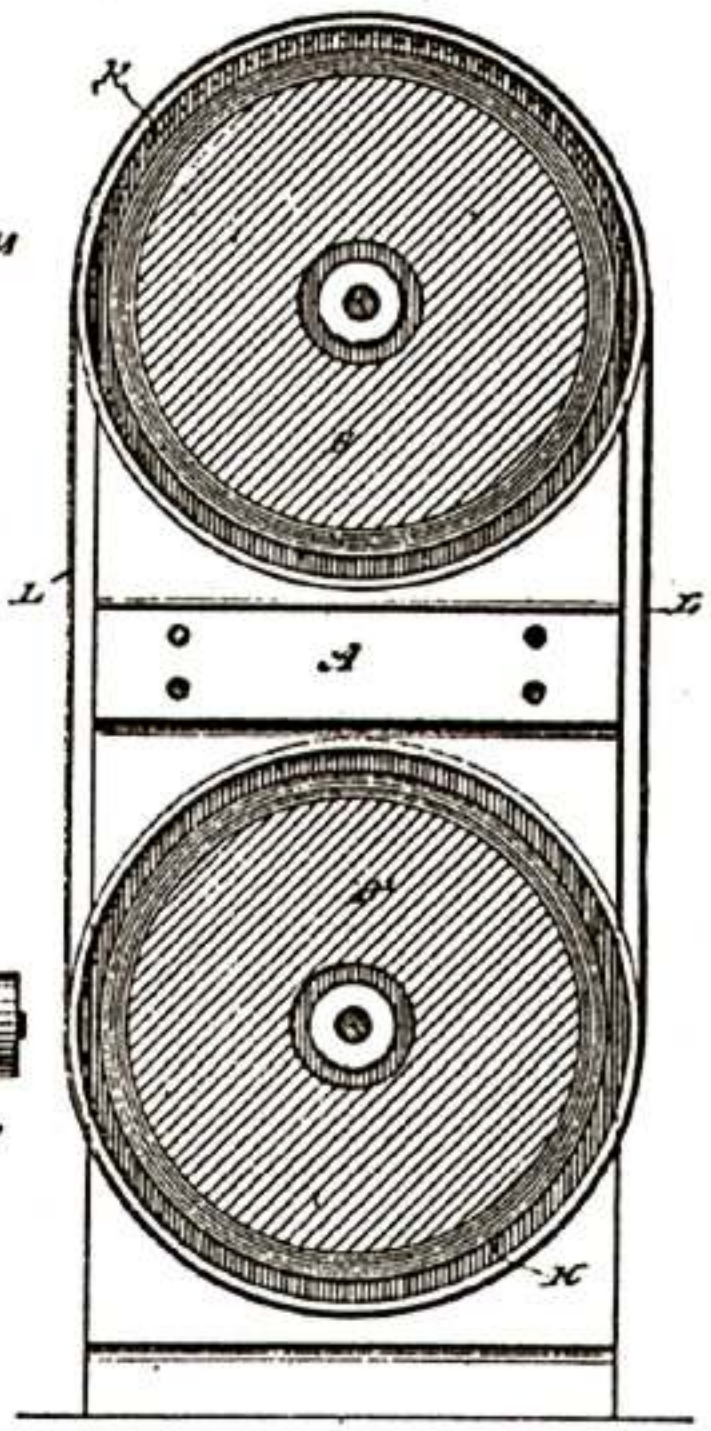

Witnesses:
Robt. F. Gaylord
Ernest Hopkinson

Inventor
Nikola Tesla
by
Duncan, Curtis & Page.
Attorneys.

UNITED STATES PATENT OFFICE.

NIKOLA TESLA, OF NEW YORK, N. Y., ASSIGNOR TO THE TESLA ELECTRIC COMPANY, OF SAME PLACE.

ELECTRO-MAGNETIC MOTOR.

SPECIFICATION forming part of Letters Patent No. 459,772, dated September 22, 1891.

Application filed April 6, 1889. Serial No. 306,165. (No model.)

To all whom it may concern:

Be it known that I, NIKOLA TESLA, a subject of the Emperor of Austria, from Smiljan, Lika, border country of Austria-Hungary, residing at New York, in the county and State of New York, have invented certain new and useful Improvements in Electro-Magnetic Motors, of which the following is a specification, reference being had to the drawings accompanying and forming a part of the same.

As is well known, certain forms of alternating-current machines have the property, when connected in circuit with an alternating-current generator, of running as a motor in synchronism therewith; but while the alternating current will run the motor after it has attained a rate of speed synchronous with that of the generator it will not start it. Hence in all instances heretofore when these "synchronizing motors," as they are termed, have been run, some means have been adopted to bring the motors up to synchronism with the generator, or approximately so, before the alternating current of the generator is applied to drive them.

In an application filed February 18, 1889, Serial No. 300,220, I have shown and described an improved system of operating this class of motors, which consists, broadly, in winding or arranging the motor in such manner that by means of suitable switches it could be started as a multiple-circuit motor, or one operating by a progression of its magnetic poles, and then, when up to speed, or nearly so, converted into an ordinary synchronizing motor, or one in which the magnetic poles were simply alternated. In some cases, as when a large motor is used and when the number of alternations is very high, there is more or less difficulty in bringing the motor to speed as a double or multiple-circuit motor, for the plan of construction which renders the motor best adapted to run as a synchronizing motor impairs its efficiency as a torque or double-circuit motor under the assumed conditions on the start. This will be readily understood, for in a large synchronizing motor the length of the magnetic circuit or the polar projections and their mass are so great that apparently considerable time is required for magnetization and demagnetization. Hence with a current of a very high number of alternations the motor may not respond properly. To avoid this objection and to start up a synchronizing motor in which these conditions obtain is the object of my present invention. I have therefore combined two motors, one a synchronizing motor, the other a multiple-circuit or torque motor, and by the latter I bring the first named up to speed, and then either throw the whole current into the synchronizing motor or operate jointly both of the motors.

This invention involves several novel and useful features. It will be observed, in the first place, that both motors are run without commutators of any kind, and, secondly, that the speed of the torque motor may be higher than that of the synchronizing motor, as will be the case when it contains a fewer number of poles or sets of poles, so that the motor will be more readily and easily brought up to speed. Thirdly, the synchronizing motor may be constructed so as to have a much more pronounced tendency to synchronism without lessening the facility with which it is started.

In the drawings I have illustrated the invention.

Figure 1 is a part sectional view of the two motors; Fig. 2, an end view of the synchronizing motor; Fig. 3, an end view and part section of the torque or double-circuit motor; Fig. 4, a diagram of the circuit connections employed; and Figs. 5, 6, 7, 8, and 9 are diagrams of modified dispositions of the two motors.

Inasmuch as neither motor is doing any work while the current is acting upon the other, I prefer to rigidly connect the two armatures. I therefore mount both upon the same shaft A, the field-magnets B of the synchronizing and C of the torque motor being secured to the same base D. The preferably larger synchronizing motor has polar projections on its armature, which rotate in very close proximity to the poles of the field, and in other respects it conforms to the conditions, now well understood, that are necessary to secure synchronous action. I prefer, however, to wind the pole-pieces of the armature with closed coils E, as this obviates the employment of sliding contacts. The smaller or

torque motor, on the other hand, has, preferably, a cylindrical armature F, without polar projections and wound with closed coils G, as I have described in my previous patents, notably No. 382,279, dated May 1, 1888. The field-coils of the torque motor are connected up in two series H and I, and the alternating current from the generator is directed through or divided between these two circuits in any manner to produce a progression of the poles or points of maximum magnetic effect. I secure this result in a convenient way by connecting the two motor-circuits in derivation with the circuit from the generator, inserting in one motor-circuit a dead resistance and in the other a self-induction coil, by which means a difference in phase between the two divisions of the current is secured. If both motors have the same number of field-poles, the torque motor for a given number of alternations will tend to run at double the speed of the other, for, assuming the connections to be such as to give the best results, its poles are divided into two series and the number of poles is virtually reduced one-half, which being acted upon by the same number of alternations tend to rotate the armature at twice the speed. By this means the main armature is more easily brought to or above the required speed. When the speed necessary for synchronism is imparted to the main motor, the current is shifted from the torque motor into the other.

A convenient arrangement for carrying out this invention is shown in Fig. 4. In said figure J J are the field-coils of the sychronizing, and H I the field-coils of the torque, motor. L L′ are the conductors of the main line. One end of, say, coils H is connected to wire L through a self-induction coil M. One end of the other set of coils I is connected to the same wire through a dead resistance N. The opposite ends of these two circuits are connected to the contact *m* of a switch the handle or lever of which is in connection with the line-wire L′. One end of the field-circuit of the synchronizing motor is connected to the wire L. The other terminates in the switch-contact *n*. From the diagram it will be readily seen that if the lever P be turned onto contact *m* the torque motor will start by reason of the difference of phase between the currents in its two energizing-circuits. Then when the desired speed is attained if the lever P be shifted onto contact *n* the entire current will pass through the field-coils of the synchronizing motor and the other will be doing no work.

The torque motor may be constructed and operated in various ways, many of which I have described in other applications; but I do not deem it necessary in illustration of the principle of construction and mode of operation of my present invention to describe these further herein. It is not necessary that one motor be cut out of circuit while the other is in, for both may be acted upon by the current at the same time, and I have devised various dispositions or arrangements of the two motors for accomplishing this. Some of these arrangements are illustrated in Figs. 5 to 9.

Referring to Fig. 5, let T designate the torque or multiple-circuit motor and S the synchronizing motor, L L′ being the line-wires from a source of alternating current. The two circuits of the torque motor of different degrees of self-induction, and designated by N M, are connected in derivation to the wire L. They are then joined and connected to the energizing-circuit of the synchronizing motor, the opposite terminal of which is connected to wire L′. The two motors are thus in series. To start them I short-circuit the synchronizing motor by a switch P′, throwing the whole current through the torque motor. Then when the desired speed is reached the switch P′ is opened, so that the current passes through both motors. In such an arrangement as this it is obviously desirable for economical and other reasons that a proper relation between the speeds of the two motors should be observed.

In Fig. 6 another disposition is illustrated. S is the synchronizing motor and T the torque motor, the circuits of both being in parallel. W is a circuit also in derivation to the motor-circuits and containing a switch P″. S′ is a switch in the synchronizing-motor circuit. On the start the switch S′ is opened, cutting out the motor S. Then P″ is opened, throwing the entire current through the motor T, giving it a very strong torque. When the desired speed is reached, switch S′ is closed and the current divides between both motors. By means of switch P″ both motors may be cut out.

In Fig. 7 the arrangement is substantially the same, except that a switch T″ is placed in the circuit which includes the two circuits of the torque motor.

Fig. 8 shows the two motors in series, with a shunt around both containing a switch S T. There is also a shunt around the synchronizing motor S, with a switch P′.

In Fig. 9 the same disposition is shown; but each motor is provided with a shunt, in which are switches P′ and T″, as shown.

The manner of operating the systems will be understood from the foregoing descriptions.

I do not claim herein the torque motor nor any part thereof, except in so far as they enter into the combination which forms the subject of this application, for I have made the distinguishing features of said motor the subject of other applications

What I now claim is—

1. An alternating-current non-synchronizing electric motor coupled with a synchronizing alternating-current motor, substantially as set forth, whereby the former starts the latter, and throws it into synchronism with

its actuating-current, and switch mechanism for directing the current through either or both of the motors, as set forth.

2. The combination of two motors the armatures of which are mounted upon the same shaft, one of said motors being an alternating-current torque motor, or one in which the magnetic points or poles are progressively shifted by the action of the energizing-current, the other motor being an alternating-current synchronizing motor, and switch mechanism for directing the current through either or both of said motors, as set forth.

3. The combination, with an alternating-current synchronizing motor having one energizing-field, of an alternating-current torque motor having a plurality of energizing-circuits and adapted to be operated by currents differing in phase, and a switch for directing the alternating current or currents through the several circuits of one motor or the single circuit of the other, as and for the purpose set forth.

4. The combination, with an alternating-current motor having field-cores wound with coils adapted to be connected to a source of alternating currents and an armature wound with induced coils closed upon themselves, of a starting device for bringing said motor into synchronism with the generator with which it is connected.

5. The combination, with an alternating-current motor composed of a multipolar alternating field-magnet, and an armature having poles wound with coils closed upon themselves, of a starting device, as set forth.

6. In an alternating-current motor, the combination of a field-magnet having poles wound with coils adapted when connected with a source of alternating current to produce simultaneously opposite magnetic polarities and an armature provided with poles or projections and wound with coils connected in a continuously-closed unconnected circuit, as set forth.

7. The herein-described method of operating alternating-current motors, which consists in actuating a motor by an alternating current to bring a second alternating-current motor up to synchronizing speed relative to the actuating-current and then switching the synchronizing motor into circuit.

NIKOLA TESLA.

Witnesses:
GEORGE N. MONRO,
EDWARD T. EVANS.

(No Model.) 2 Sheets—Sheet 1

N TESLA.

ELECTRO MAGNETIC MOTOR.

No. 459,772. Patented Sept. 22, 1891.

Fig. 1.

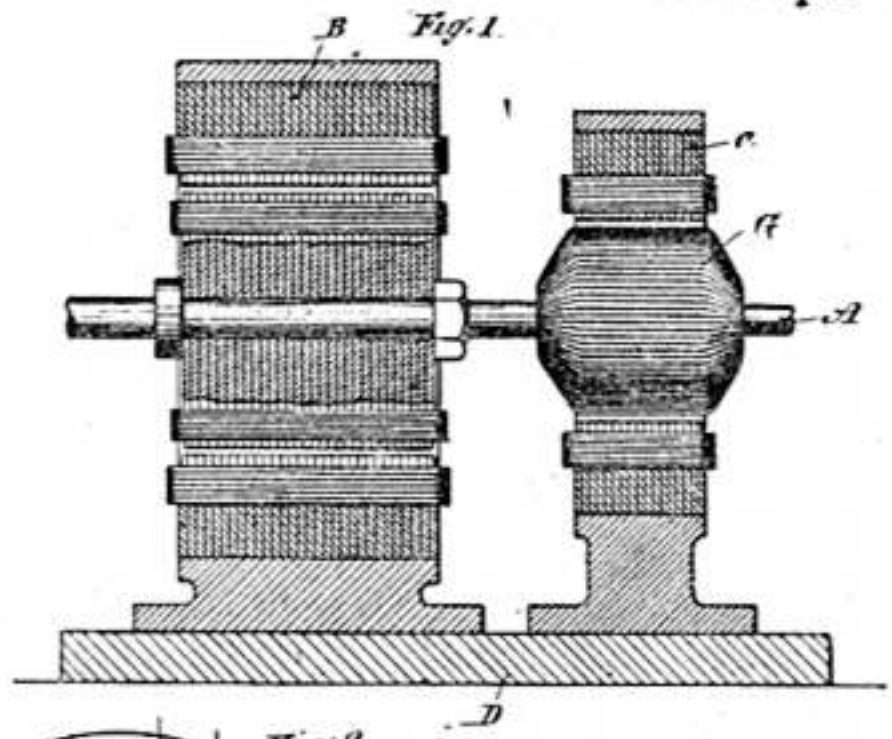

Fig. 2

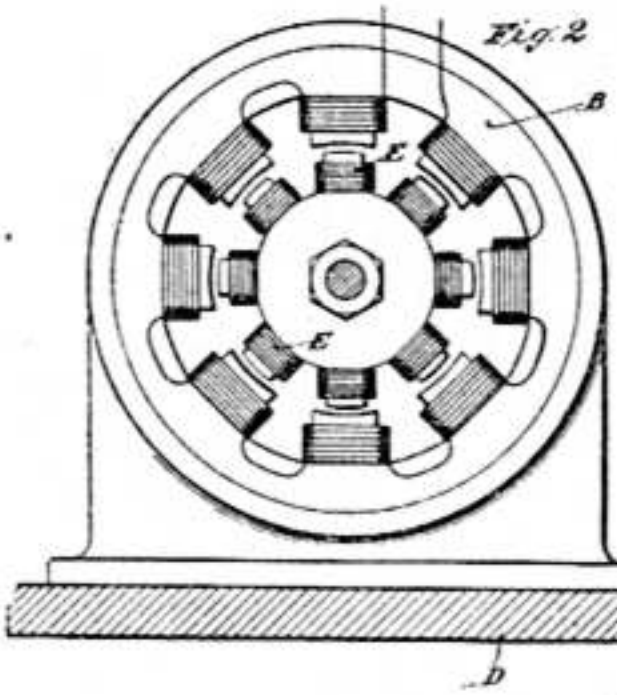

Fig. 3

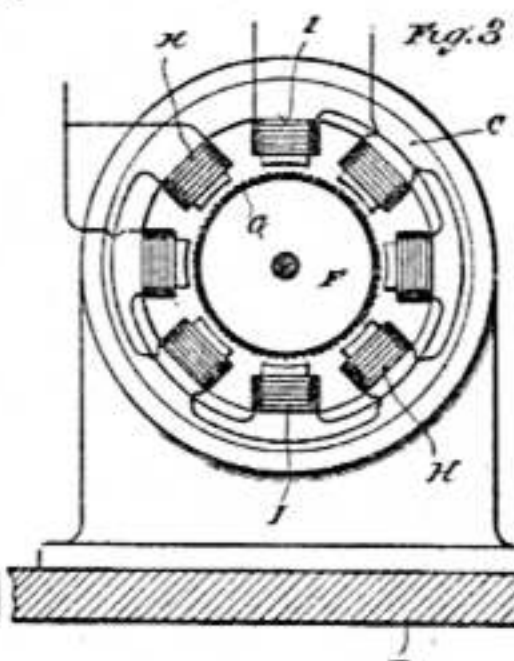

Fig. 4

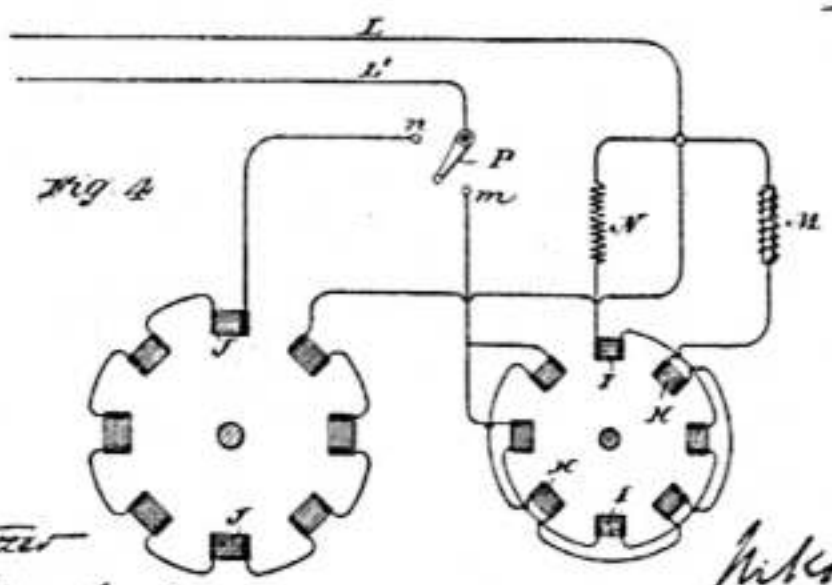

Witnesses:
Raphael Netter
Robt F. Gaylord

Inventor
Nikola Tesla
By
Duncan, Curtis & Page
Attorneys

P-82

(No Model.)

2 Sheets—Sheet 2.

N. TESLA.

ELECTRO MAGNETIC MOTOR.

No. 459,772. Patented Sept. 22, 1891.

Fig 5

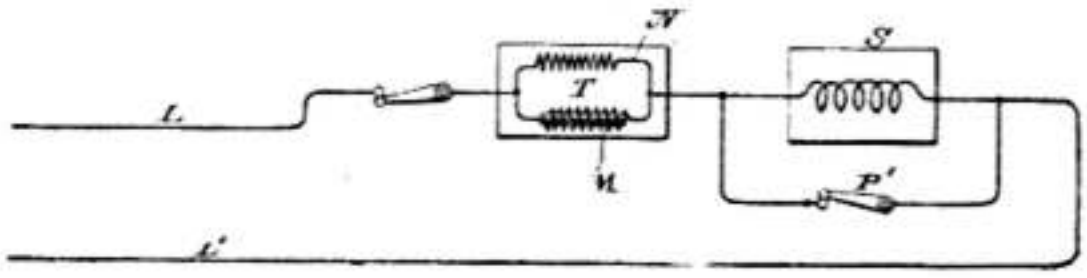

Fig. 6

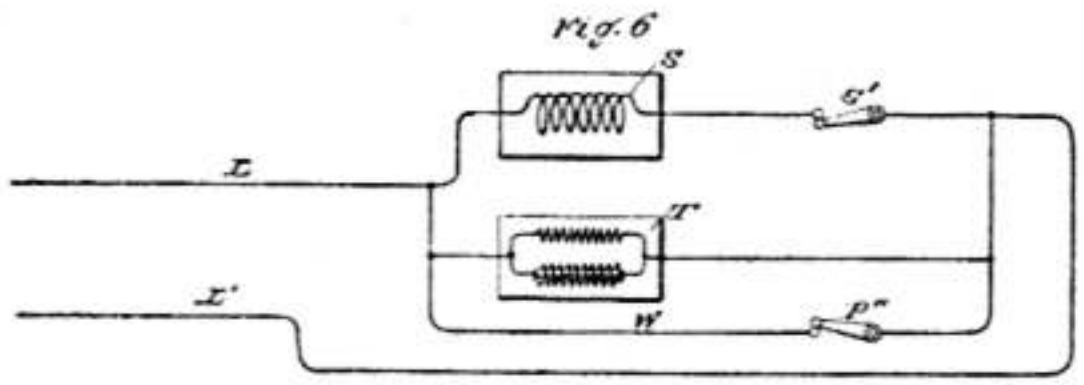

Fig. 7

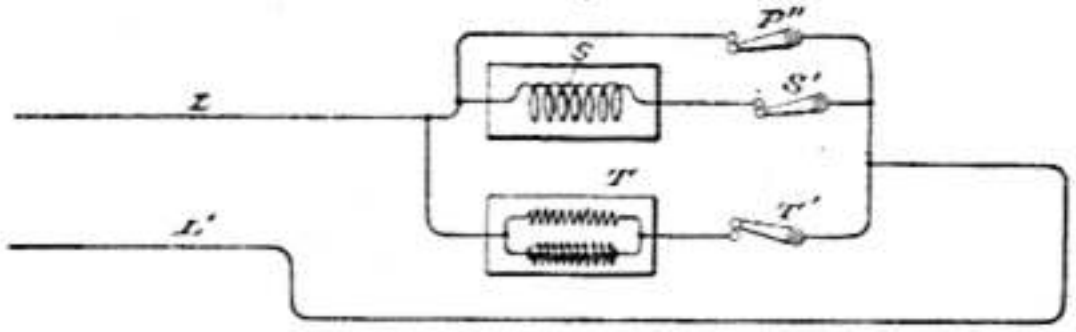

Fig 8

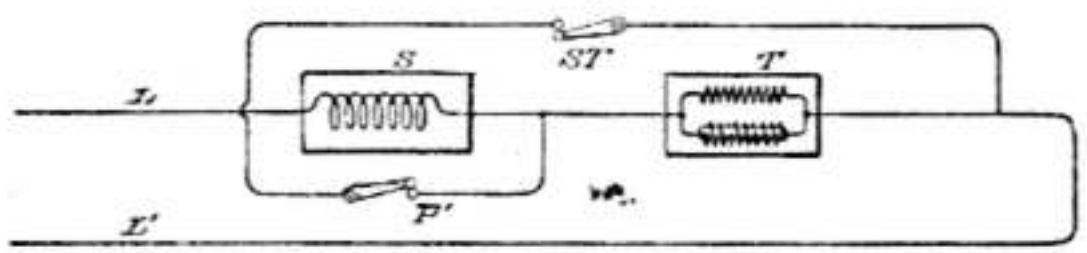

Fig 9

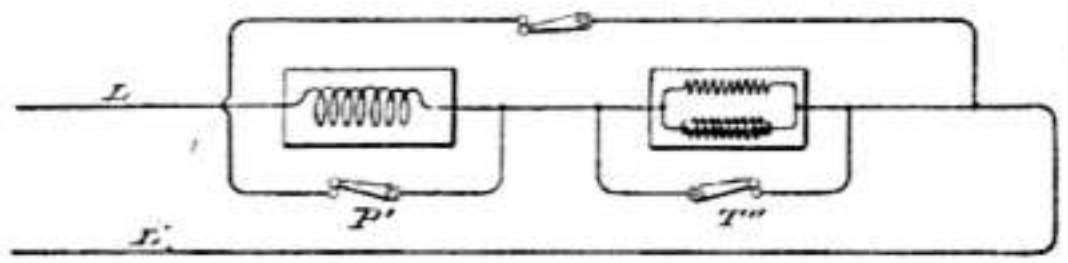

Witnesses:
Raphael Netter
Robt. F. Gaylord

Inventor
Nikola Tesla
by
Duncan, Curtis & Page.
Attorneys.

UNITED STATES PATENT OFFICE.

NIKOLA TESLA, OF NEW YORK, N. Y., ASSIGNOR TO THE TESLA ELECTRIC COMPANY, OF SAME PLACE

ELECTRO-MAGNETIC MOTOR

SPECIFICATION forming part of Letters Patent No. 416,191, dated December 3, 1889

Application filed May 20, 1889. Serial No. 311,413. (No model.)

To all whom it may concern

Be it known that I, NIKOLA TESLA, a subject of the Emperor of Austria, from Smiljan, Lika, border country of Austria-Hungary, residing at New York, in the county and State of New York, have invented certain new and useful Improvements in Electro-Magnetic Motors, of which the following is a specification, reference being had to the drawings accompanying and forming a part of the same.

This invention pertains to that class of electro-magnetic motors invented by me in which two or more independent energizing-circuits are employed, and through which alternating currents differing in phase are passed to produce the operation or rotation of the motor.

One of the general ways which I have followed in carrying out this invention is to produce practically independent currents differing primarily in phase and pass these through the motor-circuits. Another way is to produce a single alternating current, to divide it between the motor-circuits, and to effect artificially a lag in one of the said circuits or branches, as by giving to the circuits different self-inductive capacity, and in other ways. In the former case, in which the necessary difference of phase is primarily effected in the generation of currents, I have, in some instances, passed the currents through the energizing-coils of both elements of the motor—the field and armature; but I have made the discovery that a new and useful result is or may be obtained by doing this under the conditions hereinafter specified in the case of motors in which the lag, as above stated, is artificially secured. In this my present invention resides.

In illustration of the nature of this invention I shall refer to the accompanying drawings, in which—

Figures 1 to 6, inclusive, are diagrams of different ways in which the invention is or may be carried out; and Fig. 7, a side view of a form of motor which I have used for this purpose.

The diagrams in detail will be described separately.

A B in Fig. 1 indicate the two energizing-circuits of a motor, and C D two circuits on the armature. Circuit or coil A is connected in series with circuit or coil C, and the two circuits B D are similarly connected. Between coils A and C is a contact-ring *e*, forming one terminal of the latter, and a brush *a*, forming one terminal of the former. A ring *d* and brush *c* similarly connect coils B and D. The opposite terminals of the field-coils connect to one binding-post *h* of the motor, and those of the armature-coils are similarly connected to the opposite binding-post 1 through a contact-ring *f* and brush *g*. Thus each motor-circuit while in derivation to the other includes one armature and one field-coil. These circuits are of different self-induction, and may be made so in various ways. For the sake of clearness I have shown in one of these circuits an artificial resistance R and in the other a self-induction coil S. When an alternating current is passed through this motor it divides between its two energizing-circuits. The higher self-induction of one circuit produces a greater retardation or lag in the current therein than in the other. The difference of phase between the two currents effects the rotation or shifting of the points of maximum magnetic effect that secures the rotation of the armature. In certain respects this plan of including both armature and field coils in circuit is a marked improvement. Such a motor has a good torque at starting; yet it has also considerable tendency to synchronism, owing to the fact that when properly constructed the maximum magnetic effects in both armature and field coincide—a condition which in the usual construction of these motors with closed armature-coils is not readily attained. The motor thus constructed exhibits, too, a better regulation of current from no load to load, and there is less difference between the apparent and real energy expended in running it. The true synchronous speed of this form of motor is that of the generator when both are alike—that is to say, if the number of the coils on the armature and on the field is *x*, the motor will run normally at the same speed as a generator driving it if the number of field-magnets or poles of the same be also *x*.

Fig. 2 shows a somewhat modified arrangement of circuits. There is in this case but one armature-coil E, the winding of which main-

tains effects corresponding to the resultant poles produced by the two field-circuits.

Fig. 3 represents a disposition in which both armature and field are wound with two sets of coils, all in multiple arc to the line or main circuit. The armature-coils are wound to correspond with the field-coils with respect to their self-induction. A modification of this plan is shown in Fig. 4—that is to say, the two field-coils and two armature-coils are in derivation to themselves and in series with one another. The armature-coils in this case, as in the previous figure, are wound for different self-induction to correspond with the field-coils.

Another modification is shown in Fig. 5. In this case only one armature-coil, as D, is included in the line-circuit, while the other, as C, is short-circuited.

In such a disposition as that shown in Fig. 2, or where only one armature-coil is employed, the torque on the start is somewhat reduced, while the tendency to synchronism is somewhat increased. In such a disposition, as shown in Fig. 5, the opposite conditions would exist. In both instances, however, there is the advantage of dispensing with one contact-ring.

In Fig. 5 the two field-coils and the armature-coil D are in multiple arc. In Fig. 6 this disposition is modified, coil D being shown in series with the two field-coils.

Fig. 7 is an outline of the general form of motor in which I have embodied this improvement. The circuit-connections between the armature and field coils are made, as indicated in the previous figures, through brushes and rings, which are not shown.

In the above description I have made use of the terms "armature" and "field;" but it will be understood that these are in this case convertible terms, for what is true of the field is equally so of the armature, except that one is stationary, the other capable of rotation.

I do not claim in this application the method or means of operating a double-circuit motor by making its circuits of different self-induction or in any way retarding the phases of current in one circuit more than in another, having made these features subject of other applications; but

What I claim is—

1. In an alternating-current motor, the combination, with field-circuits of different self-inductive capacity, of corresponding armature-circuits electrically connected therewith, as set forth.

2. In an alternating-current motor, the combination, with independent field-coils of different self-induction, of independent armature-coils, one or more in circuit with the field-coils and the others short-circuited, as set forth.

NIKOLA TESLA.

Witnesses:
ROBT. F. GAYLORD,
FRANK E. HARTLEY.

(No Model.), 2 Sheets—Sheet 1

N. TESLA.

ELECTRO MAGNETIC MOTOR.

No. 416,191. Patented Dec. 3, 1889.

Fig. 1

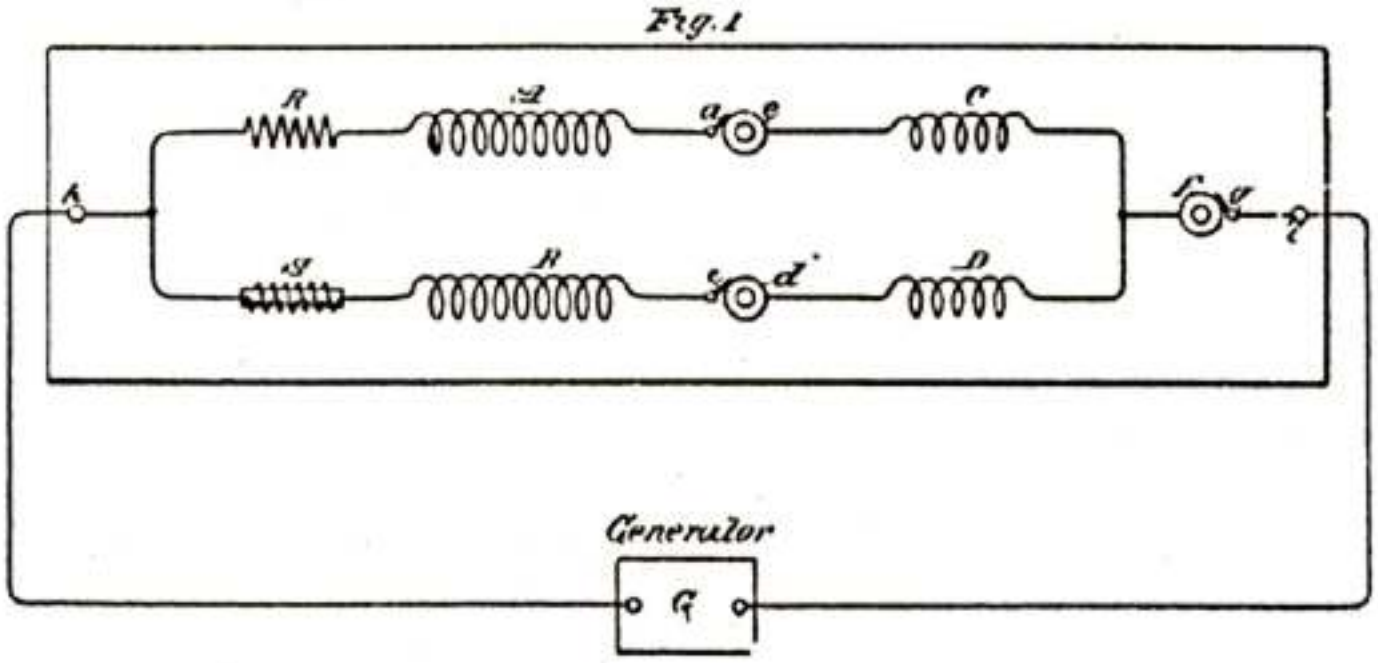

Fig. 2

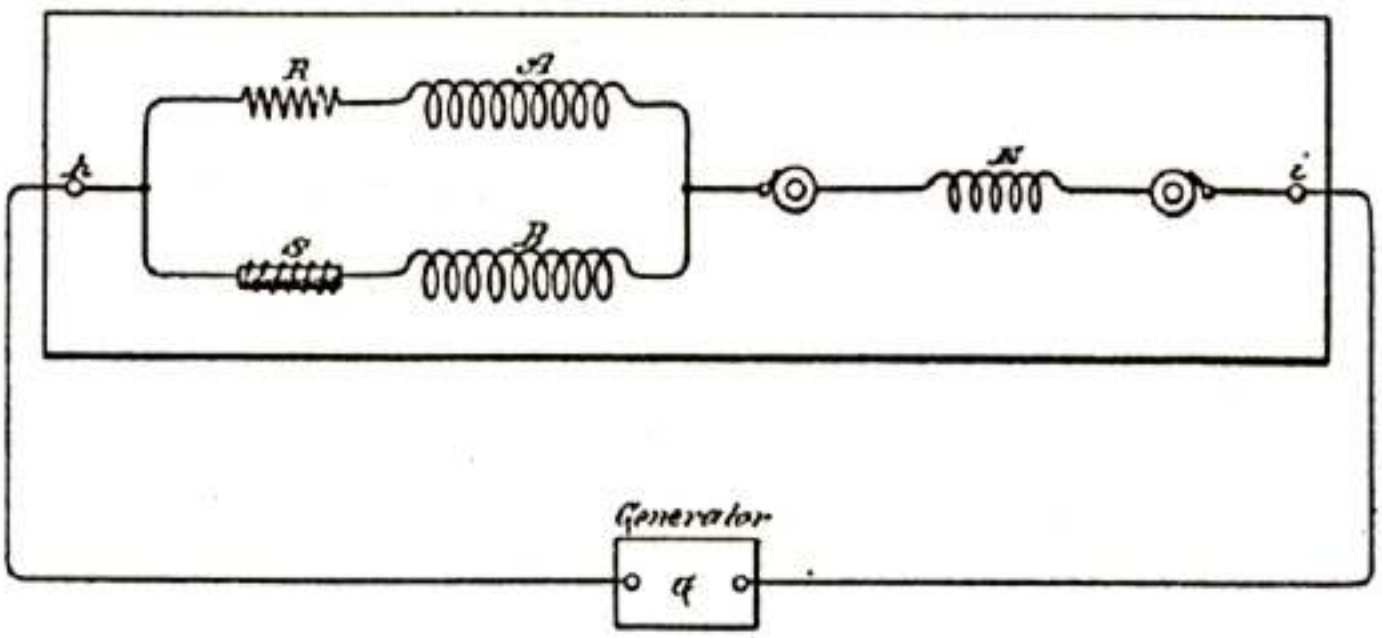

Fig. 3

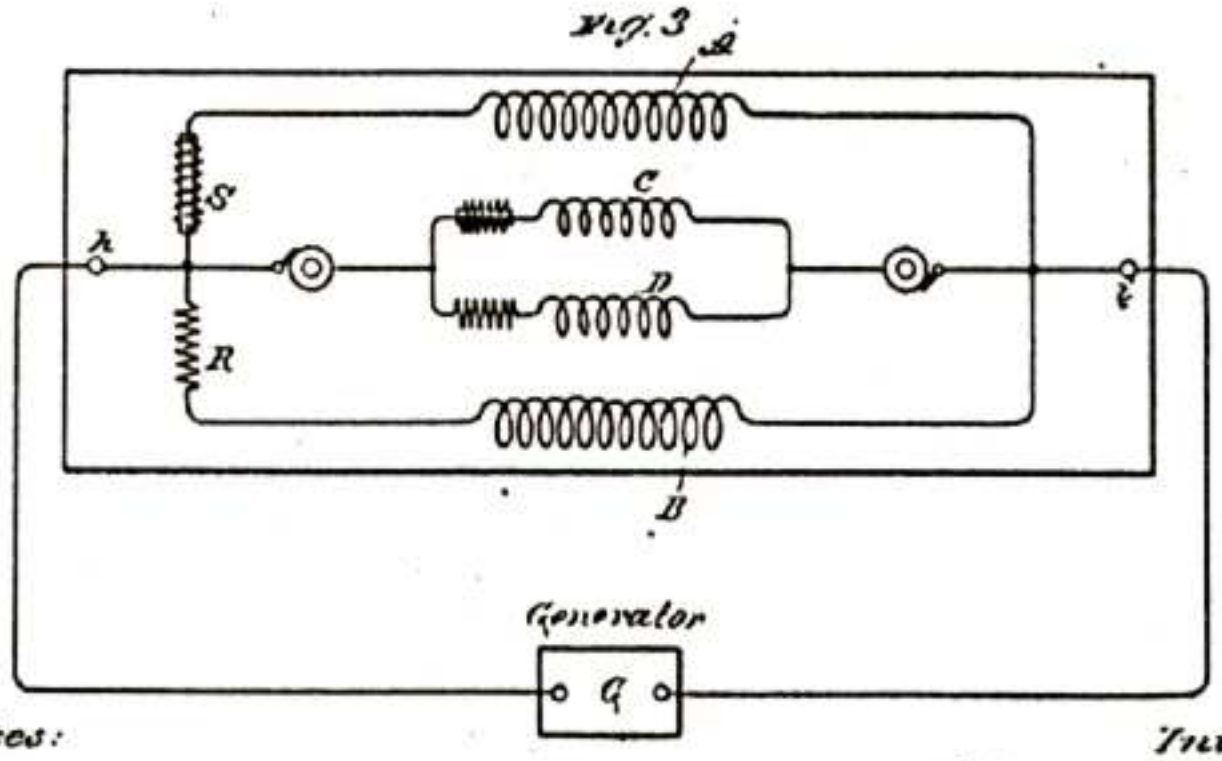

Witnesses:
Raphael Netter
Robt. F. Gaylord

Inventor
Nikola Tesla
By
Duncan, Curtis & Page,
Attorneys.

P-86

(No Model.) 2 Sheets—Sheet 2.

N. TESLA.

ELECTRO MAGNETIC MOTOR.

No. 416,191. Patented Dec. 3, 1889.

Fig. 4.

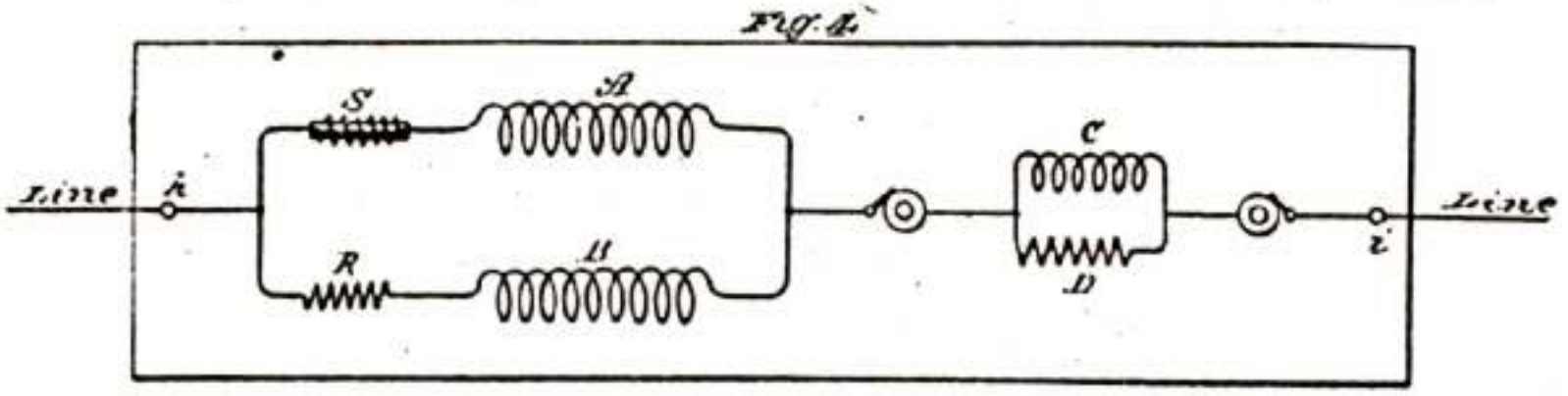

Fig. 5.

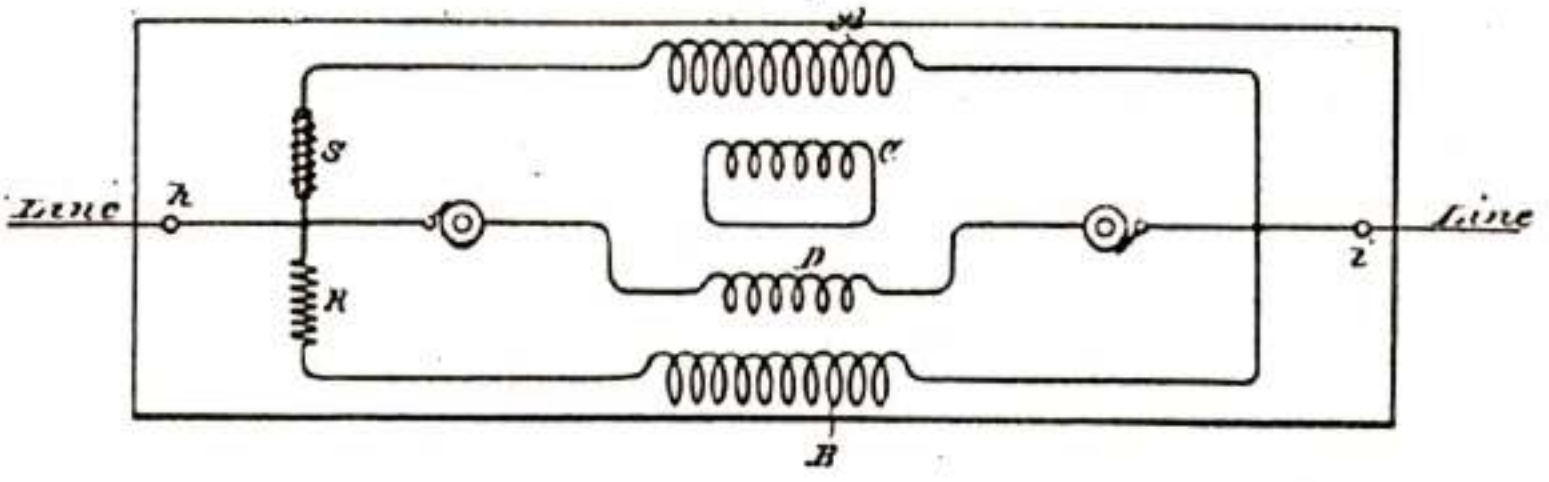

Fig. 6

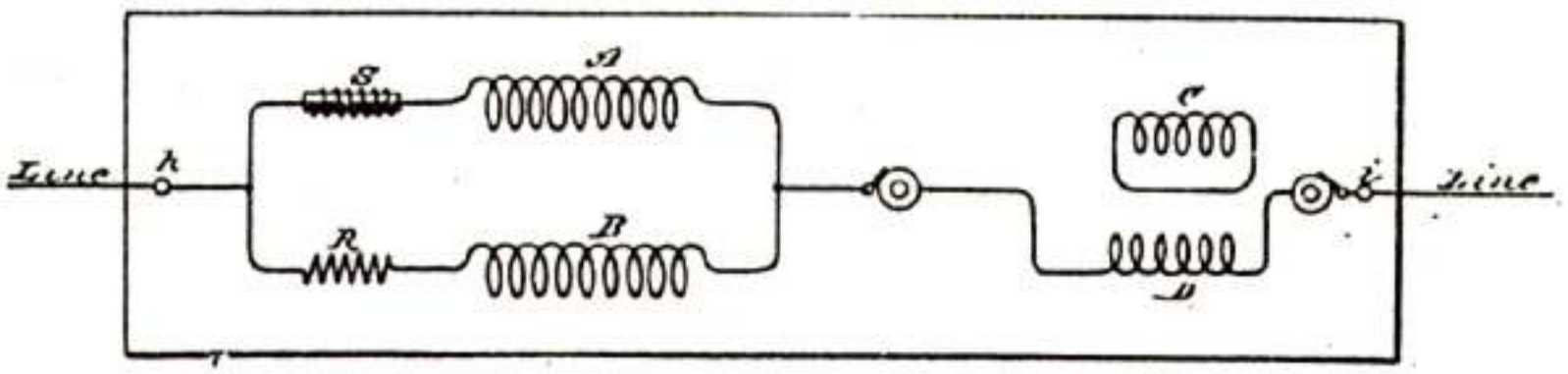

Fig. 7.

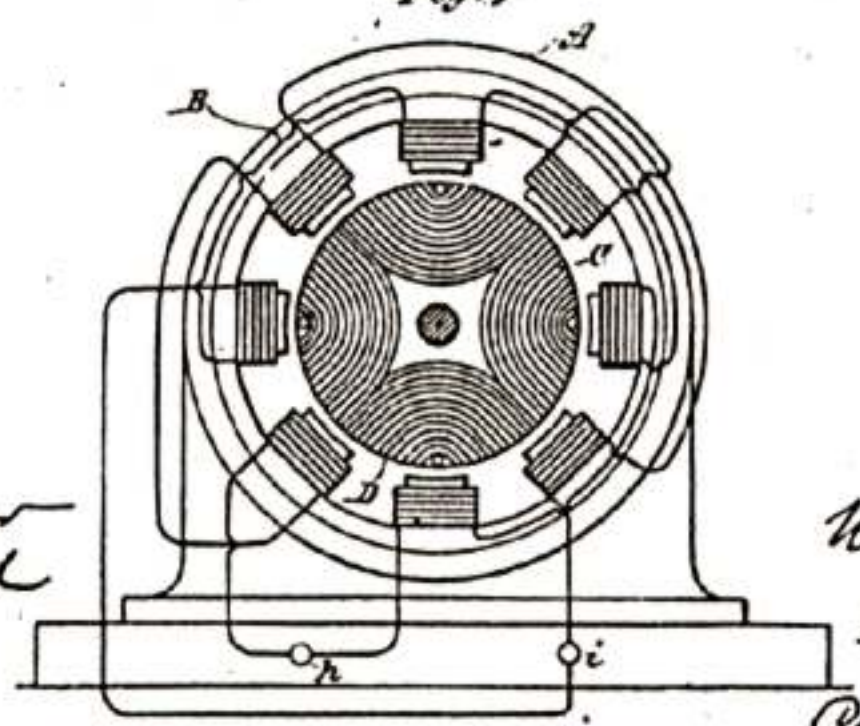

Witnesses:
Konrad Netter
Robt. F. Gaylord

Inventor
Nikola Tesla
By Duncan, Curtis & Page.
Attorneys.

UNITED STATES PATENT OFFICE.

NIKOLA TESLA, OF NEW YORK, N. Y., ASSIGNOR TO THE TESLA ELECTRIC COMPANY, OF SAME PLACE.

METHOD OF OPERATING ELECTRO-MAGNETIC MOTORS.

SPECIFICATION forming part of Letters Patent No. 416,192, dated December 3, 1889.

Application filed May 20, 1889. Serial No. 311,414. (No model.)

To all whom it may concern:

Be it known that I, NIKOLA TESLA, a subject of the Emperor of Austria, from Smiljan, Lika, border country of Austria-Hungary, and a resident of New York, in the county and State of New York, have invented certain new and useful Improvements in Methods of Operating Electro-Magnetic Motors, of which the following is a specification, reference being had to the drawings accompanying and forming a part of the same.

In a patent granted to me April 16, 1889, No. 401,520, I have shown and described a method of starting and operating synchronizing motors which involved the transformation of the motor from a torque to a synchronizing motor. This I have heretofore done by a change of the circuit-connections, whereby on the start the poles or resultant attraction of the field-magnets of the motor were shifted or rotated by the action of the current until the motor reached synchronous speed, after which the poles were merely alternated. The present application is based upon another way of accomplishing this result, the main features being as follows: If an alternating current be passed through the field-coils only of a motor having two energizing-circuits of different self-induction and the armature-coils be short-circuited, the motor will have a strong torque, but little or no tendency to synchronism with the generator; but if the same current which energizes the field be passed also through the armature-coils the tendency to remain in synchronism is very considerably increased. This is due to the fact that the maximum magnetic effects produced in the field and armature more nearly coincide. This principle discovered by me I have utilized in the operation of motors. In other words, I construct a motor having independent field-circuits of different self-induction, which are joined in derivation to a source of alternating currents. The armature I wind with one or more coils, which are connected with the field-coils through contact rings and brushes, and around the armature-coils I arrange a shunt with means for opening or closing the same. In starting this motor I close the shunt around the armature-coils, which will therefore be in closed circuit. When the current is directed through the motor, it divides between the two circuits, (it is not necessary to consider any case where there are more than two circuits used,) which, by reason of their different self-induction, secure a difference of phase between the two currents in the two branches that produces a shifting or rotation of the poles. By the alternations of current other currents are induced in the closed—or short-circuited—armature-coils and the motor has a strong torque. When the desired speed is reached, the shunt around the armature-coils is opened and the current directed through both armature and field coils. Under these conditions the motor has a strong tendency to synchronism.

In the drawings hereto annexed I have illustrated several modifications of the plan above set forth for operating motors. The figures are diagrams, and will be explained in their order.

Figure 1: A and B designate the field-coils of the motor. As the circuits including these coils are of different self-induction, I have represented this by a resistance-coil R in circuit with A, and a self-induction coil S in circuit with B. The same result may of course be secured by the winding of the coils. C is the armature-circuit, the terminals of which are rings *a b*. Brushes *c d* bear on these rings and connect with the line and field circuits. D is the shunt or short circuit around the armature. E is the switch therein. The operation of these devices I have stated above.

It will be observed that in such a disposition as is illustrated in Fig. 1, the field-circuits A and B being of different self-induction, there will always be a greater lag of the current in one than the other, and that, generally, the armature phases will not correspond with either, but with the resultant of both. It is therefore important to observe the proper rule in winding the armature. For instance, if the motor have eight poles—four in each circuit—there will be four resultant poles, and hence the armature-winding should be such as to produce four poles, in order to constitute a true synchronizing motor.

Fig 2: This diagram differs from the previous one only in respect to the order of connections. In the present case the armature-coil. instead of being in series with the field-

coils, is in multiple arc therewith. The armature-winding may be similar to that of the field—that is to say, the armature may have two or more coils wound or adapted for different self-induction and adapted, preferably, to produce the same difference of phase as the field-coils. On starting the motor the shunt is closed around both coils. This is shown in Fig. 3, in which the armature-coils are F G. To indicate their different electrical character, I have shown in circuit with them, respectively, the resistance R′ and the self-induction coil S′. The two armature coils are in series with the field-coils and the same disposition of the shunt or short circuit D is used. It is of advantage in the operation of motors of this kind to construct or wind the armature in such manner that when short-circuited on the start it will have a tendency to reach a higher speed than that which synchronizes with the generator. For example, a given motor having, say, eight poles should run, with the armature-coil short-circuited, at two thousand revolutions per minute to bring it up to synchronism. It will generally happen, however, that this speed is not reached, owing to the fact that the armature and field currents do not properly correspond, so that when the current is passed through the armature (the motor not being quite up to synchronism) there is a liability that it would not "hold on," as it is termed. I therefore prefer to so wind or construct the motor that on the start, when the armature-coils are short-circuited, the motor will tend to reach a speed higher than the synchronous—as, for instance, double the latter. In such case the difficulty above alluded to is not felt, for the motor will always hold up to synchronism if the synchronous speed—in the case supposed of two thousand revolutions—is reached or passed. This may be accomplished in various ways; but for all practical purposes the following will suffice: I wind on the armature two sets of coils. On the start I short-circuit one only, thereby producing a number of poles on the armature, which will tend to run the speed up above the synchronous limit. When such limit is reached or passed, the current is directed through the other coil, which, by increasing the number of armature-poles, tends to maintain synchronism. In Fig. 4 such a disposition is shown. The motor having, say, eight poles contains two field-circuits A and B, of different self-induction. The armature has two coils F and G. The former is closed upon itself, the latter connected with the field and line through contact-rings *a b*, brushes *c d*, and a switch E. On the start the coil F alone is active and the motor tends to run at a speed above the synchronous; but when the coil G is connected to the circuit the number of armature-poles is increased, while the motor is made a true synchronous motor. This disposition has the advantage that the closed armature-circuit imparts to the motor torque when the speed falls off, but at the same time the conditions are such that the motor comes out of synchronism more readily. To increase the tendency to synchronism, two circuits may be used on the armature, one of which is short-circuited on the start and both connected with the external circuit after the synchronous speed is reached or passed. This disposition is shown in Fig. 5. There are three contact-rings *a b e*, and three brushes *c d f*, which connect the armature-circuits with the external circuit. On starting, the switch H is turned to complete the connection between one binding-post P′ and the field-coils. This short-circuits one of the armature-coils, as G. The other coil F is out of circuit and open. When the motor is up to speed, the switch H is turned back, so that the connection from binding-post P′ to the field-coils is through the coil G, and switch K is closed, thereby including coil F in multiple arc with the field-coils. Both armature-coils are thus active.

From the above-described instances it is evident that many other dispositions for carrying out the invention are possible.

I do not claim herein the method and means described and shown for operating a motor by producing artificially a difference of current phase in its independent energizing-circuits; nor do I claim, broadly, a motor having independent energizing-circuits of different self-induction and armature-circuits connected therewith, as these features are made subjects of other applications which I have filed.

What I claim is—

1. The method herein described of operating alternating-current motors having independent energizing-circuits, which consists in short-circuiting the armature circuit or circuits until the motor has reached or passed a synchronizing speed and then connecting said armature-circuits with the external circuit, as set forth.

2. The method of operating alternating-current motors having field-coils of different self-induction, which consists in directing alternating currents from an external source through the field-circuits only until the motor has reached a given speed and then directing said currents through both the field circuits and one or more of the armature-circuits, as set forth.

3. The method of operating alternating-current motors having field-coils of different self-induction, which consists in directing alternating currents from an external source through the field-circuits and short-circuiting a part of the armature-circuits, and then when the motor has attained a given speed directing the alternating currents through both the field and one or more of the armature-circuits, as set forth.

NIKOLA TESLA.

Witnesses:
ROBT. F. GAYLORD,
FRANK E. HARTLEY.

(No Model.) (2 Sheets—Sheet 1.

N. TESLA

METHOD OF OPERATING ELECTRO MAGNETIC MOTORS.

No. 416,192. Patented Dec. 3,.1889

Fig. 1.

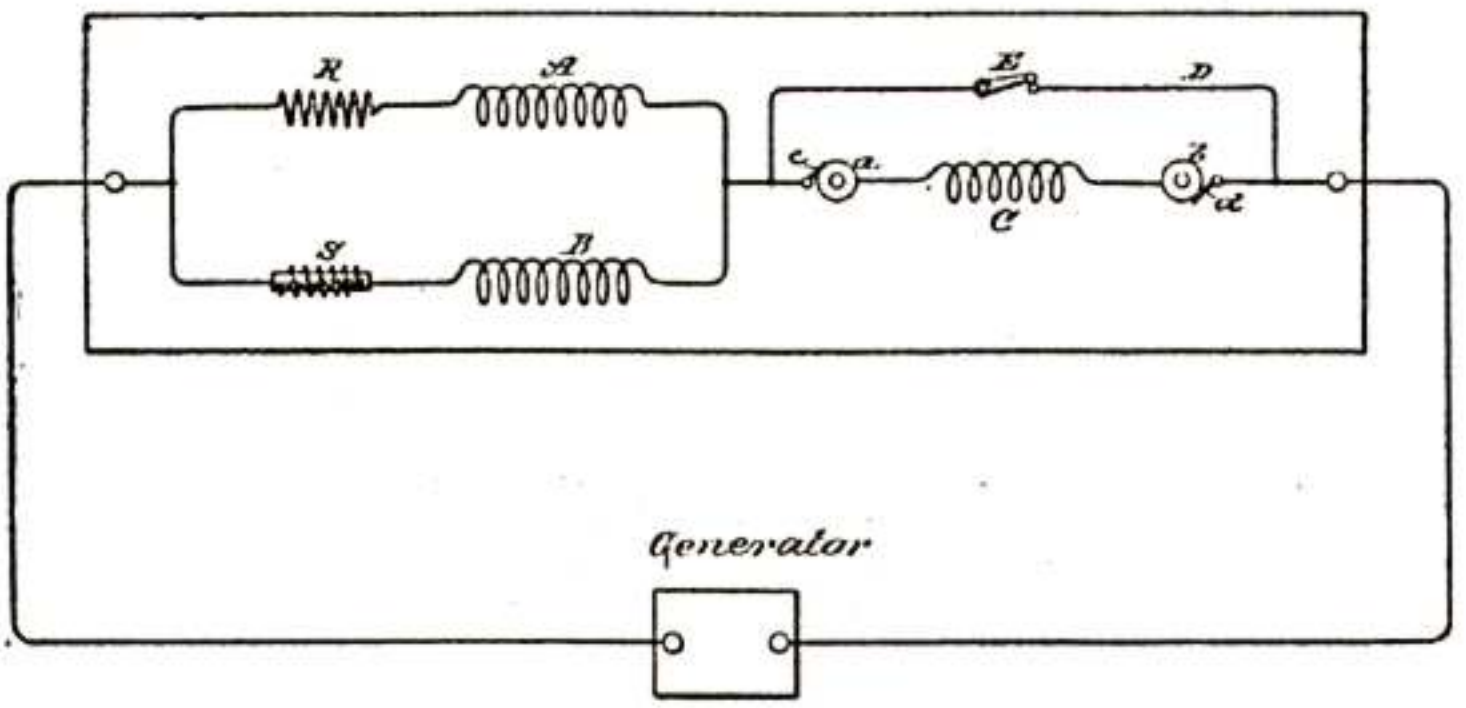

Fig. 2

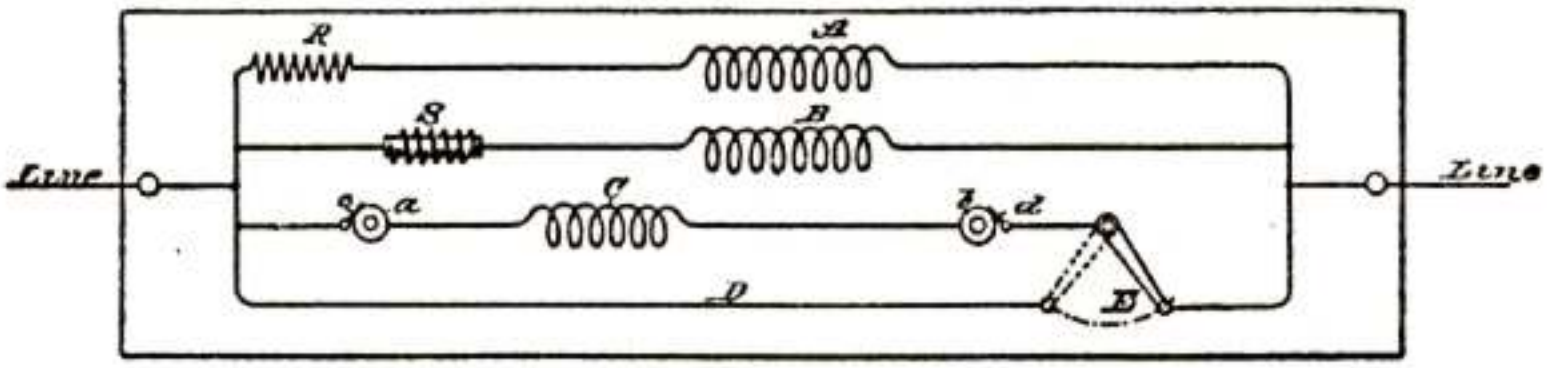

Fig. 3

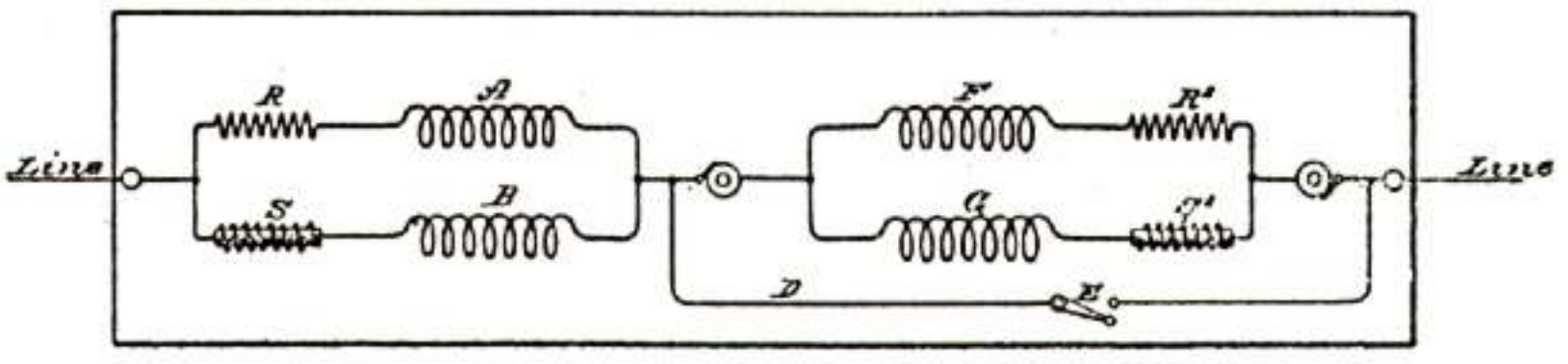

Witnesses:
Raphael Netter
Robt. F. Gaylord

Inventor
Nikola Tesla
By Duncan, Curtis & Page
Attorneys.

P-90

(No Model.) 2 Sheets—Sheet 2.

N. TESLA.

METHOD OF OPERATING ELECTRO MAGNETIC MOTORS.

No. 416,192. Patented Dec. 3, 1889.

Fig. 4

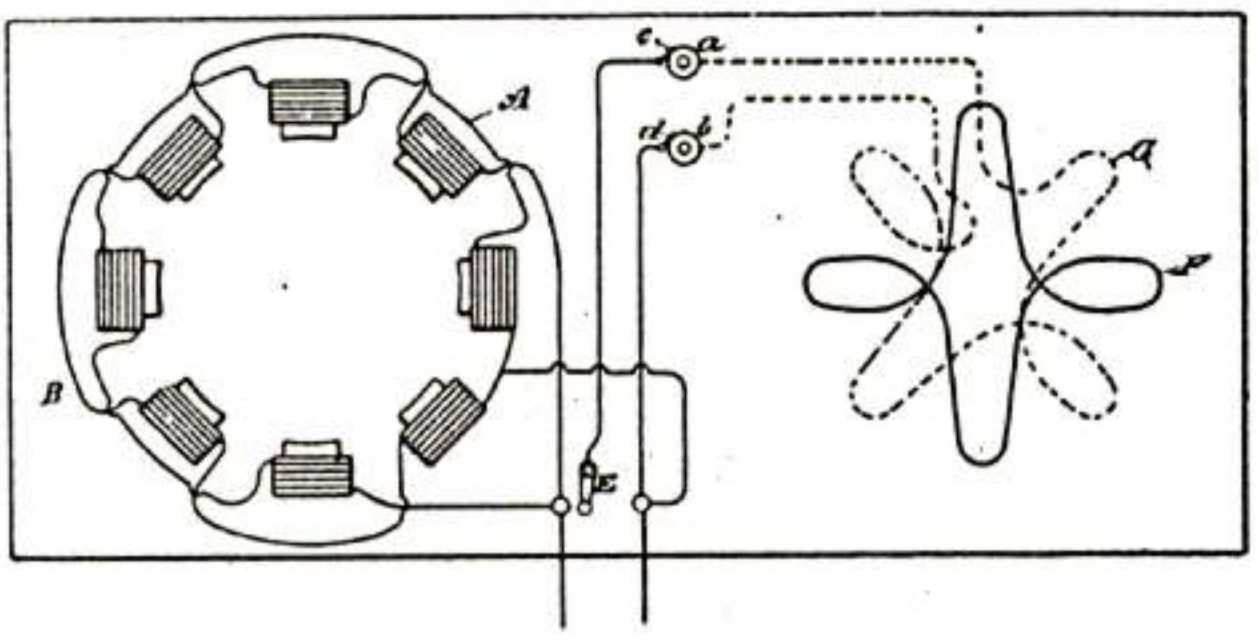

Fig 5

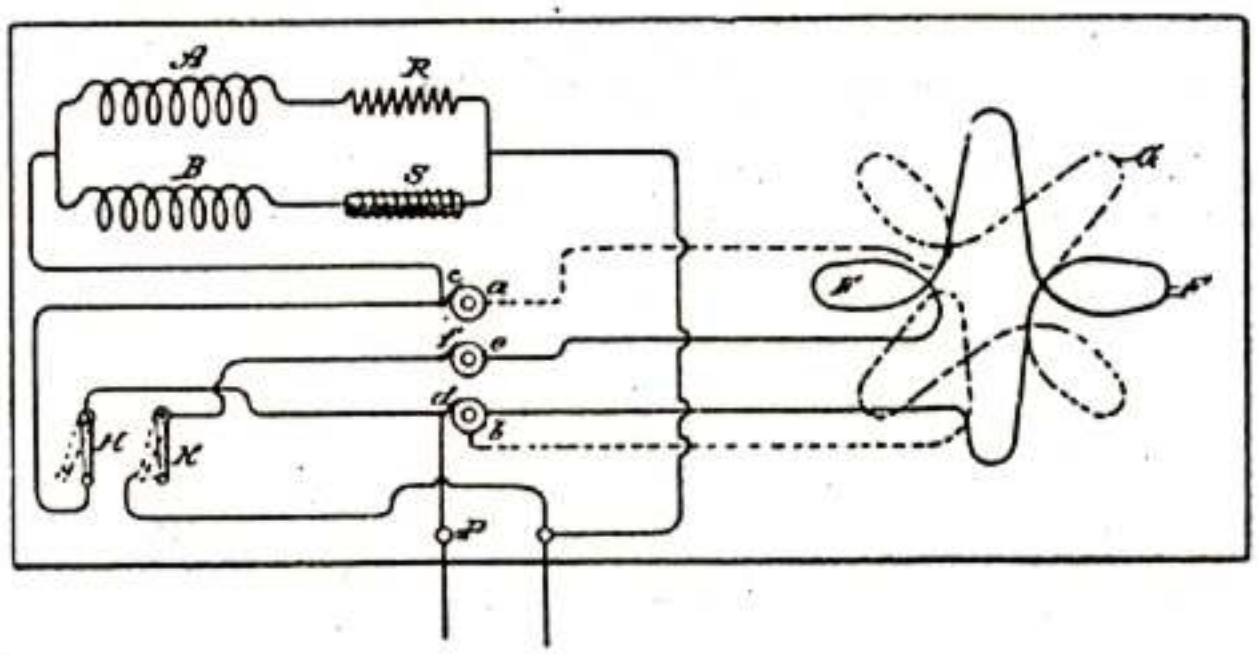

Witnesses:
Raphael Netter
Frank R. Hartley

Inventor:
Nikola Tesla
By Duncan Curtis & Page
Attorneys.

UNITED STATES PATENT OFFICE.

NIKOLA TESLA, OF NEW YORK, N. Y., ASSIGNOR TO THE TESLA ELECTRIC COMPANY, OF SAME PLACE.

ELECTRO-MAGNETIC MOTOR.

SPECIFICATION forming part of Letters Patent No. 416,193, dated December 3, 1889.

Application filed May 20, 1889. Serial No. 311,415. (No model.)

To all whom it may concern:

Be it known that I, NIKOLA TESLA, a subject of the Emperor of Austria, from Smiljan, Lika, border country of Austria-Hungary, residing at New York, in the county and State of New York, have invented certain new and useful Improvements in Electro-Magnetic Motors, of which the following is a specification, reference being had to the accompanying drawings.

This invention relates to alternating-current motors of the general description invented by me, and in which two or more energizing-circuits are employed, through which alternating currents differing in phase are passed, with the result of producing a progressive shifting or rotation of the poles or points of maximum attractive effect.

In prior patents and applications I have shown and described various forms of motors of this kind. Among them are motors in which both energizing-circuits are electrically alike—that is to say, both have the same or approximately the same electrical resistance and self-induction—in the operation of which the alternating currents used are primarily of different phase. In others the difference of phase is artificially produced—as, for instance, in cases where the motor-circuits are of different resistance and self-induction, so that the same current divided between them will be retarded in one to a greater extent than in the other, and the requisite phase difference secured in this way. To this latter class generally my present invention relates.

The lag or rotation of the phases of an alternating current is directly proportional to the self-induction and inversely proportional to the resistance of the circuit through which the current flows. Hence, in order to secure the proper difference of phase between the two motor-circuits, it is desirable to make the self-induction in one much higher and the resistance much lower than the self-induction and resistance, respectively, in the other. At the same time the magnetic quantities of the two poles or sets of poles which the two circuits produce should be approximately equal. These requirements, which I have found to exist in motors of this kind, have led me to the invention of a motor having the following general characteristics: The coils which are included in that energizing-circuit which is to have the higher self-induction I make of coarse wire, or a conductor of relatively low resistance, and I use the greatest possible length or number of turns. In the other set of coils I use a comparatively few turns of finer wire or a wire of higher resistance. Furthermore, in order to approximate the magnetic quantities of the poles excited by these coils, I use in the self-induction circuit cores much longer than those in the other or resistance circuit. I have shown in the drawings a motor embodying these features.

Figure 1 is a part-sectional view of the motor at right angles to the shaft. Fig. 2 is a diagram of the field-circuits.

In Fig. 2, let A represent the coils in one motor-circuit, and B those in the other. The circuit A is to have the higher self-induction. I therefore use a long length or a large number of turns of coarse wire in forming the coils of this circuit. For the circuit B, I use a smaller conductor, or a conductor of a higher resistance than copper, such as German silver or iron, and wind the coils with fewer turns. In applying these coils to a motor I build up a field-magnet of plates C, of iron or steel, secured together in the usual manner by bolts D. Each plate is formed with four (more or less) long cores E, around which is a space to receive the coil and an equal number of short projections F to receive the coils of the resistance-circuit. The plates are generally annular in shape, having an open space in the center for receiving the armature G, which I prefer to wind with closed coils. An alternating current divided between the two circuits is retarded as to its phases in the circuit A to a much greater extent than in the circuit B. By reason of the relative sizes and disposition of the cores and coils the magnetic effect of the poles E and F upon the armature closely approximate. These conditions are well understood and readily secured by one skilled in the art.

An important result secured by the construction herein shown of the motor is, that these coils which are designed to have the

higher self-induction are almost completely surrounded by iron, by which the retardation is considerably increased.

I do not claim herein, broadly, the method and means of securing rotation by artificially producing a greater lag of the current in one motor-circuit than in the other, nor the use of poles or cores of different magnetic susceptibility, as these are features which I have specially claimed in other applications filed by me.

What I claim is—

1. An alternating-current motor having two or more energizing-circuits, the coils of one circuit being composed of conductors of large size or low resistance and those of the other of fewer turns of wire of smaller size or higher resistance, as set forth.

2. In an alternating-current motor, the combination, with long and short field-cores, of energizing-coils included in independent circuits, the coils on the longer cores containing an excess of copper or conductor over that in the others, as set forth.

3. The combination, with a field-magnet composed of magnetic plates having an open center and pole-pieces or cores of different length, of coils surrounding said cores and included in independent circuits, the coils on the longer cores containing an excess of copper over that in the others, as set forth.

4. The combination, with a field-magnet composed of magnetic plates having an open center and pole-pieces or cores of different length, of coils surrounding said cores and included in independent circuits, the coils on the longer cores containing an excess of copper over that in the others and being set in recesses in the iron core formed by the plates, as set forth.

NIKOLA TESLA.

Witnesses:
ROBT. F. GAYLORD,
FRANK E. HARTLEY.

(No Model.)

N. TESLA.

ELECTRO MAGNETIC MOTOR.

No. 416,193. Patented Dec. 3, 1889.

Fig. 1

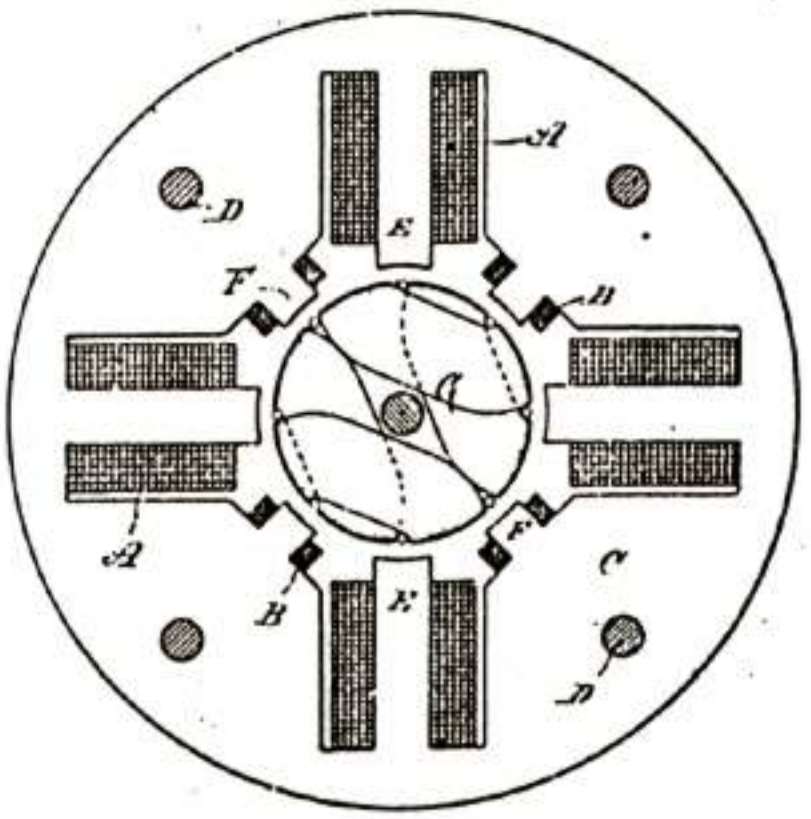

Fig. 2

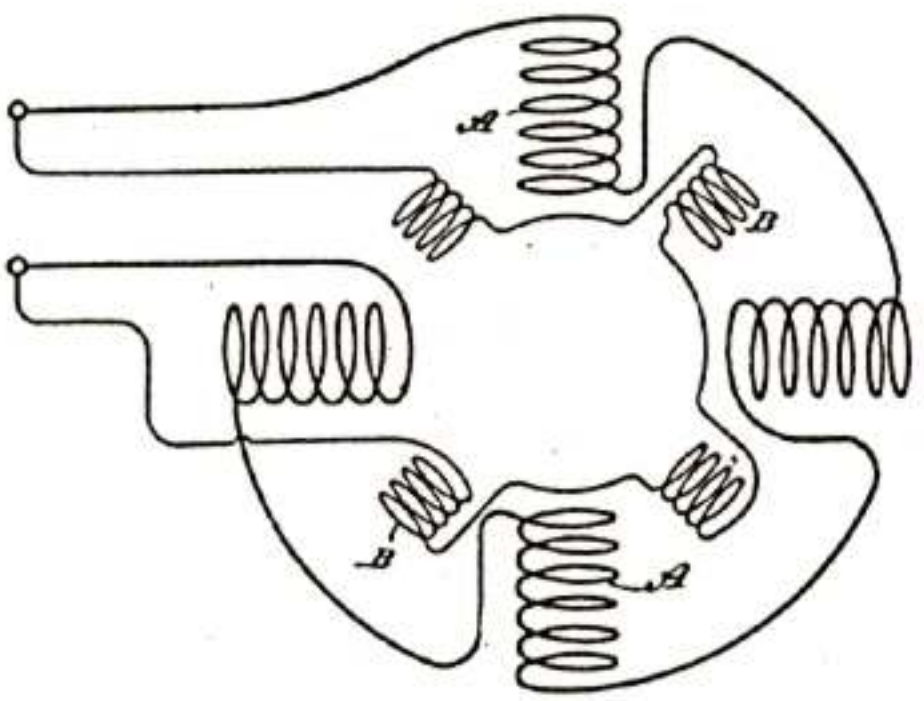

Witnesses:
Raphael Netter
Robt. F. Paylord

Inventor
Nikola Tesla
By
Duncan, Curtis & Page
Attorneys.

UNITED STATES PATENT OFFICE.

NIKOLA TESLA, OF NEW YORK, N. Y., ASSIGNOR TO THE TESLA ELECTRIC COMPANY, OF SAME PLACE.

ELECTRIC MOTOR.

SPECIFICATION forming part of Letters Patent No. 416,194, dated December 3, 1889.

Application filed May 20, 1889. Serial No. 311,418. (No model.)

To all whom it may concern:

Be it known that I, NIKOLA TESLA, a subject of the Emperor of Austria, from Smiljan, Lika, border country of Austria-Hungary, residing at New York, in the county and State of New York, have invented certain new and useful Improvements in Electro-Magnetic Motors, of which the following is a specification.

This invention relates to the alternating-current electro-magnetic motors invented by me, in which a progressive shifting or rotation of the poles or points of maximum magnetic effect is produced by the action of the alternating currents. These motors I have constructed in a great variety of ways. As instances, I have built motors with two or more energizing-circuits, which I connected up with corresponding circuits of a generator so that the motor will be energized by alternating currents differing primarily in phase. I have also built motors with independent energizing-circuits of different electrical character or self-induction, through which I have passed an alternating current the phases of which were artificially distorted by the greater retarding effect of one circuit over another. I have also constructed other forms of motor operating by magnetic or electric lag, which it is not necessary to describe herein in detail, although my present invention is applicable thereto. In such motors I use an armature wound with a coil or coils, which is sometimes connected with the external circuit and sometimes closed upon itself, and to both forms the present invention applies. In these motors the total energy supplied to effect their operation is equal to the sum of the energies expended in the armature and the field. The power developed, however, is proportionate to the product of these quantities. This product will be greatest when these quantities are equal; hence in constructing a motor I determine the mass of the armature and field cores and the windings of both and adapt the two so as to equalize as nearly as possible the magnetic quantities of both. In motors which have closed armature-coils this is only approximately possible, as the energy manifested in the armature is the result of inductive action from the other element; but in motors in which the coils of both armature and field are connected with the external circuit the result can be much more perfectly obtained.

In further explanation of my object let it be assumed that the energy as represented in the magnetism in the field of a given motor is ninety and that of the armature ten. The sum of these quantities, which represents the total energy expended in driving the motor, is one hundred; but, assuming that the motor be so constructed that the energy in the field is represented by fifty and that in the armature by fifty, the sum is still one hundred; but while in the first instance the product is nine hundred, in the second it is two thousand five hundred, and as the energy developed is in proportion to these products it is clear that those motors are the most efficient—other things being equal—in which the magnetic energies developed in the armature and field are equal. These results I obtain by using the same amount of copper or ampere turns in both elements when the cores of both are equal, or approximately so, and the same current energizes both; or in cases where the currents in one element are induced to those of the other I use in the induced coils an excess of copper over that in the primary element or conductor.

While I know of no way of illustrating this invention by a drawing such as will meet the formal requirements of an application for patent, I have appended for convenience a conventional figure of a motor such as I employ. I would state, however, that I believe that with the problem before him which I have herein stated, and the solution which I have proposed, any one skilled in the art will be able to carry out and apply this invention without difficulty.

Generally speaking, if the mass of the cores of armature and field be equal, the amount of copper or ampère turns of the energizing-coils on both should also be equal; but these conditions will be modified in well-understood ways in different forms of machine. It will be understood that these results are most advantageous when existing under the conditions presented when the motor is running

with its normal load, and in carrying out the invention this fact should be taken into consideration.

Referring to the drawing, A is the field-magnet, B the armature, C the field-coils, and D the armature-coils, of the motor.

The motors described in this application, except as to the features specifically pointed out in the claims, are described and claimed in prior patents granted to and applications filed by me, and are not herein claimed

What I claim is—

1. An electro-magnetic motor having field and armature magnets of equal strength or magnetic quantity when energized by a given current, as set forth.

2. In an alternating-current motor, the combination, with field and armature cores of equal mass, of energizing-coils containing equal amounts of copper, as herein set forth.

NIKOLA TESLA.

Witnesses:
ROBT. F. GAYLORD,
FRANK E. HARTLEY.

P-96

(No Model.)

N. TESLA.

ELECTRIC MOTOR.

No. 416,194. Patented Dec. 3, 1889.

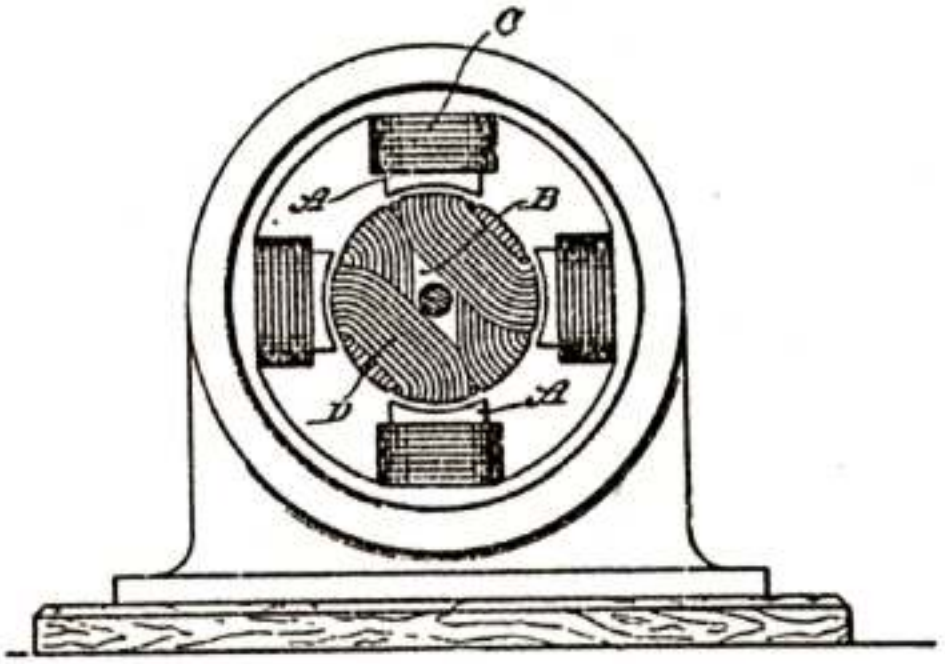

Witnesses:
Raphael Netter
Robt. F. Gaylord

Inventor
Nikola Tesla
By
Duncan, Curtis & Page
Attorneys.

UNITED STATES PATENT OFFICE.

NIKOLA TESLA, OF NEW YORK, N. Y., ASSIGNOR TO THE TESLA ELECTRIC COMPANY, OF SAME PLACE.

ELECTRO-MAGNETIC MOTOR.

SPECIFICATION forming part of Letters Patent No. 416,195, dated December 3, 1889.

Application filed May 20, 1889. Serial No. 311,419. (No model.)

To all whom it may concern:

Be it known that I, NIKOLA TESLA, a subject of the Emperor of Austria, from Smiljan, Lika, border country of Austria-Hungary, residing at New York, in the county and State of New York, have invented certain new and useful Improvements in Electro-Magnetic Motors, of which the following is a specification, reference being had to the drawings accompanying and forming a part of the same.

This invention relates to that form of alternating-current motor invented by me, in which there are two or more energizing-circuits through which alternating currents differing in phase are caused to pass. I have in prior patents and applications shown various forms or types of this motor—first, motors having two or more energizing-circuits of the same electrical character, and in the operation of which the currents used differ primarily in phase; second, motors with a plurality of energizing-circuits of different electrical character, in or by means of which the difference of phase is produced artificially, and, third, motors with a plurality of energizing-circuits, the currents in one being induced from currents in another. I shall hereinafter show the application of my present invention to these several types. Considering the structural and operative conditions of any one of them—as, for example, that first-named—the armature which is mounted to rotate in obedience to the co-operative influence or action of the energizing-circuits has coils wound upon it which are closed upon themselves and in which currents are induced by the energizing-currents with the object and result of energizing the armature-core; but under any such conditions as must exist in these motors it is obvious that a certain time must elapse between the manifestations of an energizing-current impulse in the field-coils, and the corresponding magnetic state or phase in the armature established by the current induced thereby; consequently a given magnetic influence or effect in the field which is the direct result of a primary-current impulse will have become more or less weakened or lost before the corresponding effect in the armature indirectly produced has reached its maximum. This is a condition unfavorable to efficient working in certain cases—as, for instance, when the progress of the resultant poles or points of maximum attraction is very great, or when a very high number of alternations is employed—for it is apparent that a stronger tendency to rotation will be maintained if the maximum magnetic attractions or conditions in both armature and field coincide, the energy developed by a motor being measured by the product of the magnetic quantities of the armature and field.

The object, therefore, in this invention is to so construct or organize these motors that the maxima of the magnetic effects of the two elements—the armature and field—shall more nearly coincide. This I accomplish in various ways, which I may best explain by reference to the drawings, in which various plans for accomplishing the desired results are illustrated.

Figure 1 is a diagrammatic illustration of a motor system such as I have described in my prior patents, and in which the alternating currents proceed from independent sources and differ primarily in phase.

A designates the field-magnet or magnetic frame of the motor; B B, oppositely-located pole-pieces adapted to receive the coils of one energizing-circuit; and C C, similar pole-pieces for the coils of the other energizing-circuit. These circuits are designated, respectively, by D E, the conductor D'' forming a common return to the generator G. Between these poles is mounted an armature—for example, a ring or annular armature, wound with a series of coils F, forming a closed circuit or circuits. The action or operation of a motor thus constructed is now well understood. It will be observed, however, that the magnetism of poles B, for example, established by a current-impulse in the coils thereon, precedes the magnetic effect set up in the armature by the induced current in coils F. Consequently the mutual attraction between the armature and field-poles is considerably reduced. The same conditions will be found to exist if, instead of assuming the poles B or C as acting independently, we regard the ideal resultant of both acting together, which is the real condition. To remedy this, I construct the motor-

field with secondary poles B′ C′, which are situated between the others. These pole-pieces I wind with coils D′ E′, the former in derivation to the coils D, the latter to coils E. The main or primary coils D and E are wound for a different self-induction from that of the coils D′ and E′, the relations being so fixed that if the currents in D and E differ, for example, by a quarter-phase, the currents in each secondary coil, as D′ E′, will differ from those in its appropriate primary D or E by, say, forty-five degrees, or one-eighth of a period.

I explain the action of this motor as follows: Assuming that an impulse or alternation in circuit or branch E is just beginning while in the branch D it is just falling from maximum, the conditions of a quarter-phase difference. The ideal resultant of the attractive forces of the two sets of poles B C therefore may be considered as progressing from poles B to poles C while the impulse in E is rising to maximum and that in D is falling to zero or minimum. The polarity set up in the armature, however, lags behind the manifestations of field magnetism, and hence the maximum points of attraction in armature and field, instead of coinciding, are angularly displaced. This effect is counteracted by the supplemental poles B′ C′. The magnetic phases of these poles succeed those of poles B C by the same, or nearly the same, period of time as elapses between the effect of the poles B C and the corresponding induced effect in the armature; hence the magnetic conditions of poles B′ C′ and of the armature more nearly coincide and a better result is obtained. As poles B′ C′ act in conjunction with the poles in the armature established by poles B C, so in turn poles C B act similarly with the poles set up by B′ C′, respectively. Under such conditions the retardation of the magnetic effect of the armature and that of the secondary poles will bring the maximum of the two more nearly into coincidence and a correspondingly-stronger torque or magnetic attraction secured.

In such a disposition as is shown in Fig. 1 it will be observed that as the adjacent pole-pieces of either circuit are of like polarity they will have a certain weakening effect upon one another. I therefore prefer to remove the secondary poles from the direct influence of the others. This I may do by constructing a motor with two independent sets of fields, and with either one or two armatures electrically connected, or by using two armatures and one field. These modifications will be illustrated hereinafter.

Fig. 2 is a diagrammatic illustration of a motor and system in which the difference of phase is artificially produced. There are two coils D D in one branch and two coils E E in the other branch of the main circuit from the generator G. These two circuits or branches are of different self-induction, one, as D, being higher than the other. For convenience I have indicated this by making coils D much larger than coils E. By reason of this difference in the electrical character of the two circuits the phases of current in one are retarded to a greater extent than the other. Let this difference be thirty degrees. A motor thus constructed will rotate under the action of an alternating current; but as happens in the case previously described the corresponding magnetic effects of the armature and field do not coincide owing to the time that elapses between a given magnetic effect in the armature and the condition of the field that produces it. I therefore employ the secondary or supplemental poles B′ C′. There being thirty degrees difference of phase between the currents in coils D E, the magnetic effects of poles B′ C′ should correspond to that produced by a current differing from the current in coils D or E by fifteen degrees. This I may accomplish by winding each supplemental pole B′ C′ with two coils H H′. The coils H are included in a derived circuit having the same self induction as circuit D, and coils H′ in a circuit having the same self-induction as circuit E, so that if these circuits differ by thirty degrees the magnetism of poles B′ C′ will correspond to that produced by a current differing from that in either D or E by fifteen degrees. This is true in all other cases. For example, if in Fig. 1 the coils D′ E′ be replaced by the coils H H′ included in derived circuits, the magnetism of the poles B′ C′ will correspond in effect or phase, if it may be so termed, to that produced by a current differing from that in either circuit D or E by forty-five degrees, or one-eighth of a period.

This invention as applied to a derived-circuit motor is illustrated in Figs. 3 and 4. The former is an end view of the motor with the armature in section and a diagram of connections, and Fig. 4 a vertical section through the field. These figures are also drawn to show one of the dispositions of two fields that may be adopted in carrying out the invention. The poles B B C C are in one field, the remaining poles in the other. The former are wound with primary coils I J and secondary coils I′ J′, the latter with coils K L. The primary coils I J are in derived circuits, between which, by reason of their different self-induction, there is a difference of phase, say, of thirty degrees. The coils I′ K are in circuit with one another, as also are coils J′ L, and there should be a difference of phase between the currents in coils K and L and their corresponding primaries of, say, fifteen degrees. If the poles B C are at right angles, the armature-coils should be connected directly across, or a single armature-core wound from end to end may be used; but if the poles B C be in line there should be an angular displacement of the armature-coils, as will be well understood.

The operation will be understood from the foregoing. The maximum magnetic condition

of a pair of poles, as B' B', coincides closely with the maximum effect in the armature, which lags behind the corresponding condition in poles B B.

There are many other ways of carrying out this invention, but they all involve the same broad principle of construction and operation.

In using expressions herein to indicate a coincidence of the magnetic phases or effects in one set of field-magnets with those set up in the armature by the other I refer only to approximate results; but this of course will be understood.

What I claim is—

1. In an alternating-current motor, the combination, with an armature wound with closed coils, of main and supplemental field magnets or poles, one set of which is adapted to exhibit their maximum magnetic effect simultaneously with that set up in the armature by the action of the other, as set forth.

2. In an electro-magnetic motor, the combination, with an armature, of a plurality of field or energizing coils included, respectively, in main circuits adapted to produce a given difference of phase and supplemental or secondary circuits adapted to produce an intermediate difference of phase, as set forth.

NIKOLA TESLA.

Witnesses:
R. J. STONEY, Jr.,
JOHN GILLESPIE.

P-100

(No Model)

3 Sheets—Sheet 1

N. TESLA.

ELECTRO MAGNETIC MOTOR.

No. 416,195. Patented Dec. 3, 1889.

FIG 1

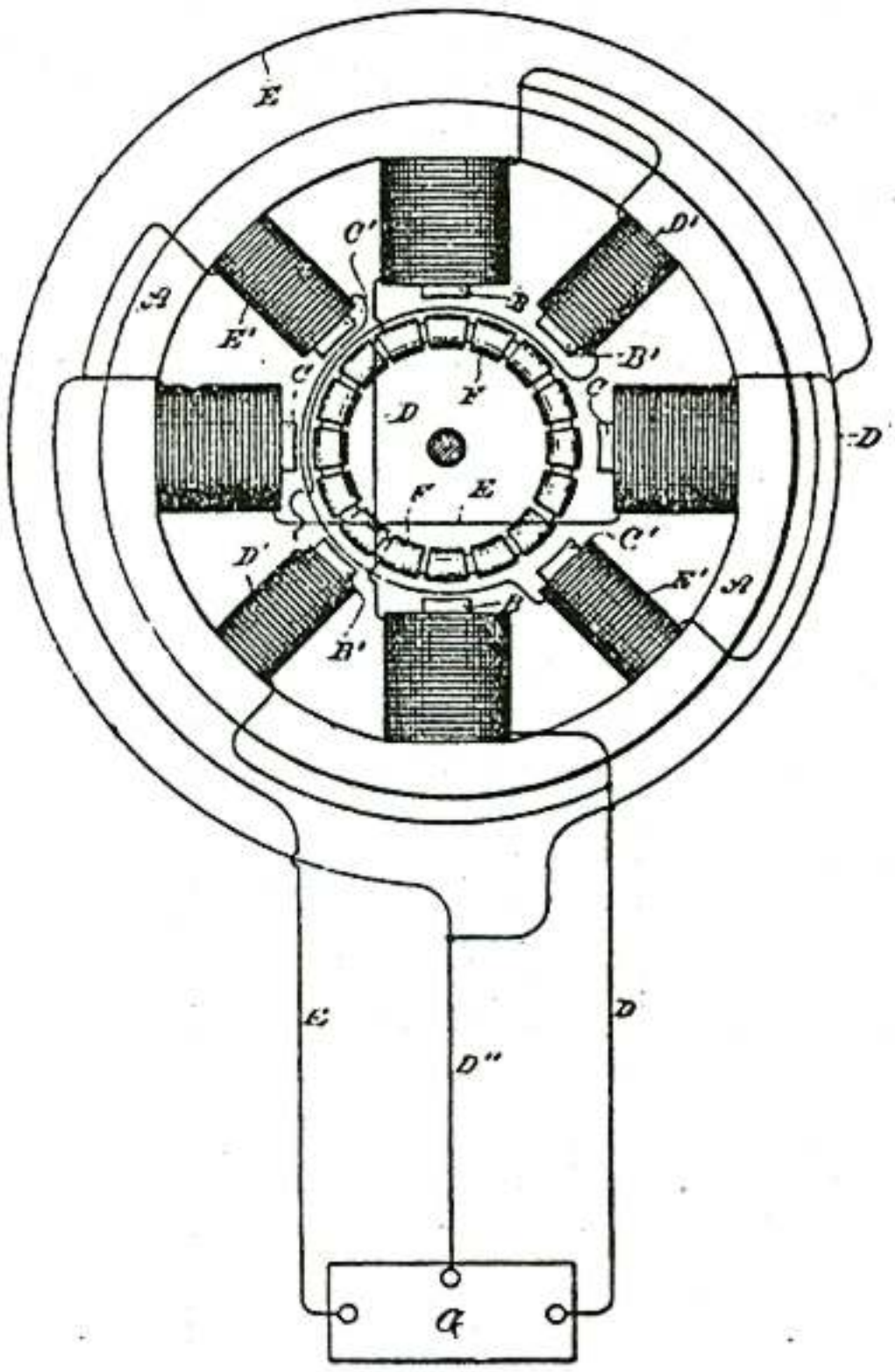

Witnesses:
Raphael Netter
Robt. F. Gaylord

Inventor
Nikola Tesla

By
Duncan Curtis & Page
Attorneys.

P-101

(No Model.) 3 Sheets—Sheet 2.

N. TESLA.

ELECTRO MAGNETIC MOTOR.

No. 416,195. Patented Dec. 3, 1889.

Fig. 2.

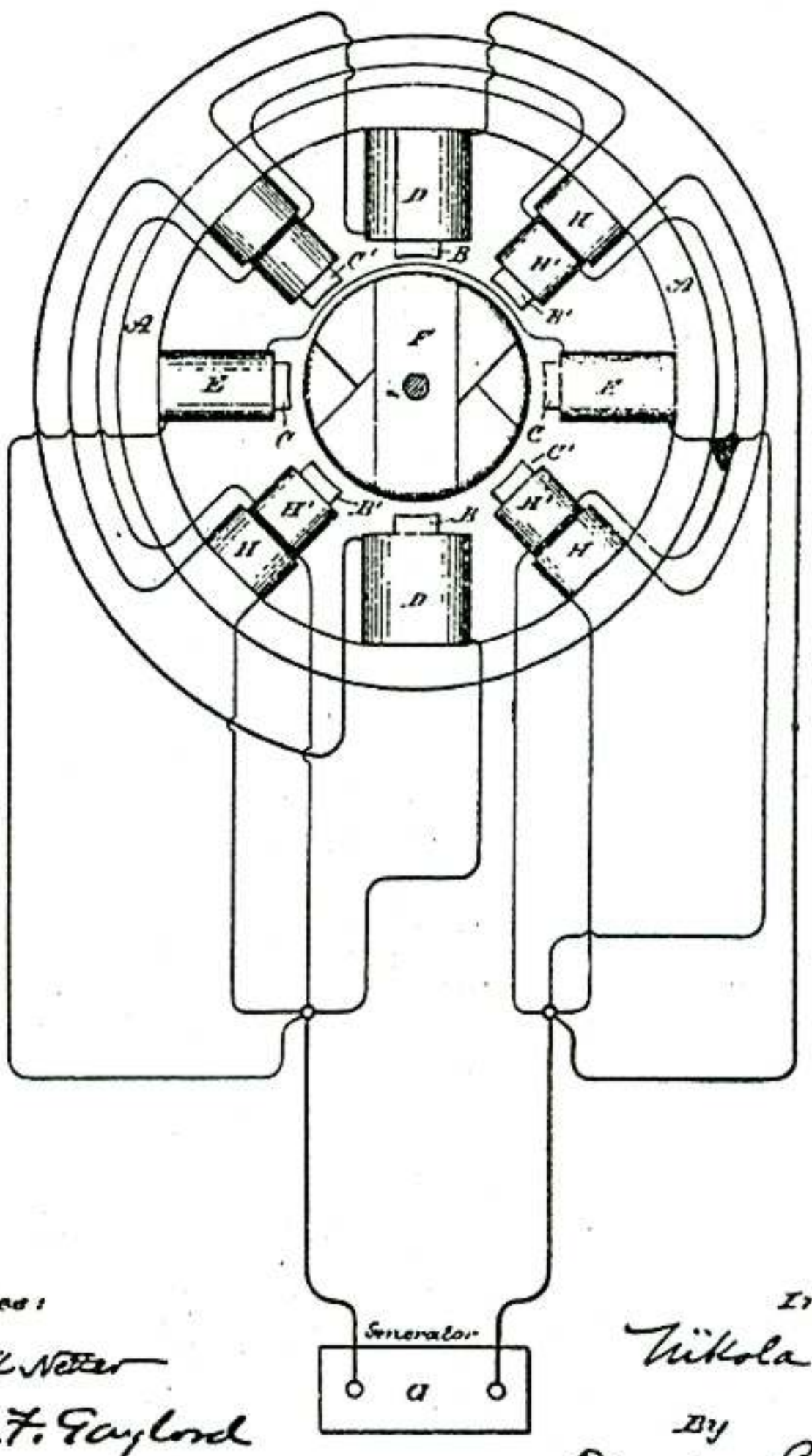

Witnesses:
Raphael Netter
Robt. F. Gaylord

Inventor
Nikola Tesla
By
Duncan, Curtis & Sáy.
Attorneys.

P-102

(No Model.) 3 Sheets—Sheet 3

N. TESLA.

ELECTRO MAGNETIC MOTOR.

No. 416,195 Patented Dec. 3, 1889.

Fig. 3

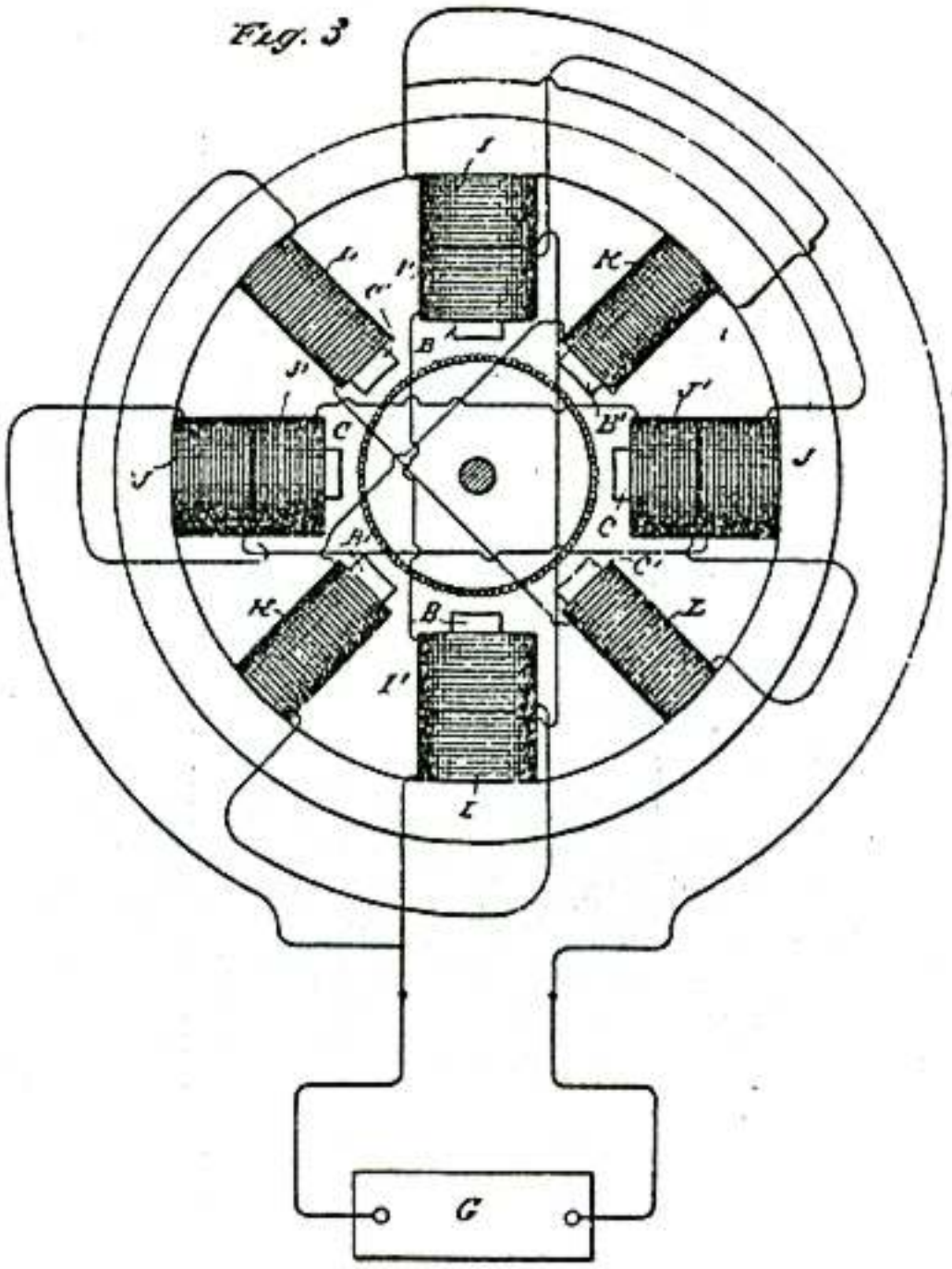

Fig. 4

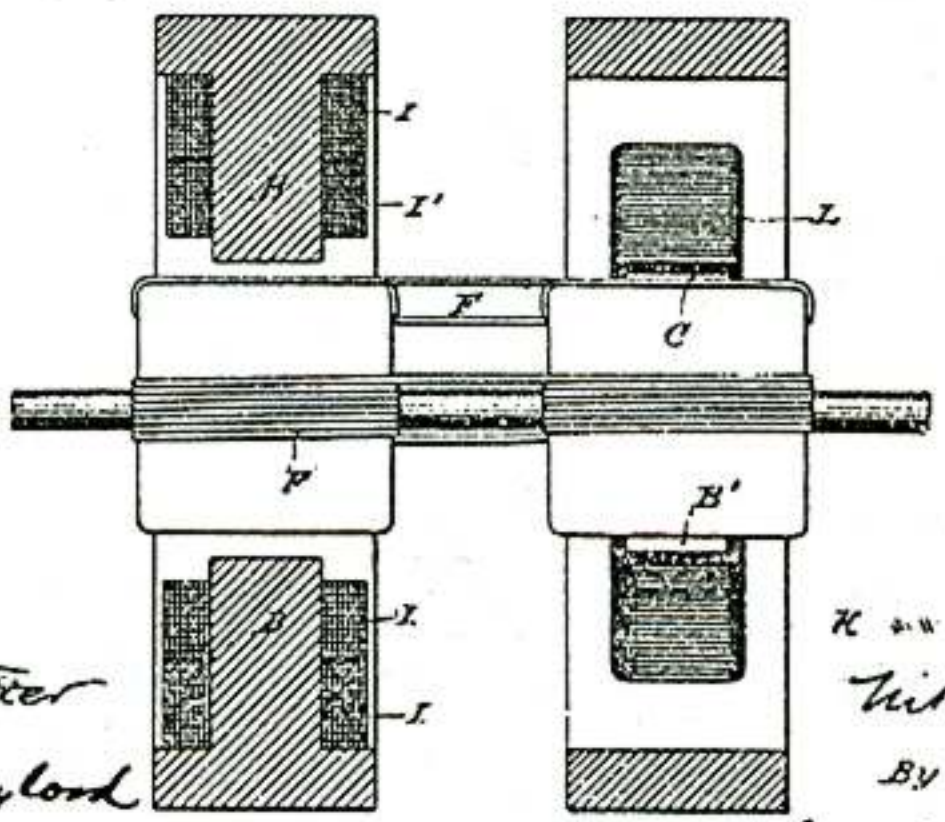

Witnesses:
Raphael Netter
Robt. F. Gaylord

Inventor
Nikola Tesla
By
Duncan, Curtis & Page
Attorneys.

UNITED STATES PATENT OFFICE.

NIKOLA TESLA, OF NEW YORK, N. Y., ASSIGNOR TO THE TESLA ELECTRIC COMPANY, OF SAME PLACE.

ELECTRO-MAGNETIC MOTOR.

SPECIFICATION forming part of Letters Patent No. 418,248, dated December 31, 1889.

Application filed May 20, 1889. Serial No. 311,420. (No model.)

To all whom it may concern:

Be it known that I, NIKOLA TESLA, a subject of the Emperor of Austria-Hungary, formerly of Smiljan, Lika, border country of Austria-Hungary, but now residing at New York, in the county and State of New York, have invented certain new and useful Improvements in Methods of Operating Electro-Magnetic Motors, of which the following is a specification, reference being had to the drawing accompanying and forming a part of the same.

In a patent granted to me April 16, 1889, No. 401,520, I have shown and described a method of operating alternating-current motors by first shifting or rotating their magnetic poles until they had reached or passed a synchronous speed and then alternating the poles, or, in other words, by transforming the motor by a change of circuit-connections from one operated by the action of two or more independent energizing-currents to a motor operated by a single current or several acting as one.

The present invention is a specific way of carrying out the same invention; and it consists in the following method: On the start I progressively shift the magnetic poles of one element or field of the mo' by alternating currents differing in phase a passed through independent energizing-circuits and short-circuit the coils of the other element. When the motor thus started reaches or passes the limit of speed synchronous with the generator, I connect up the coils previously short-circuited with a source of direct current and by a change of the circuit-connections produce a simple alternation of the poles. The motor then continues to run in synchronism with the generator. There are many specifically-different ways in which this may be carried out, but I have selected one for illustrating the principle. This is illustrated in the annexed drawing, which is a side view of a motor with a diagram of the circuits and devices used in the system.

The motor shown is one of the ordinary forms, with field-cores either laminated or solid and with a cylindrical laminated armature wound, for example, with the coils A B at right angles. The shaft of the armature carries three collecting or contact rings C D E. (Shown, for better illustration, as of different diameters.)

One end of coil A connects to one ring, as C, and one end of coil B connects with ring D. The remaining ends are connected to ring E. Collecting springs or brushes F G H bear upon the rings and lead to the contacts of a switch, to be hereinafter described. The field-coils have their terminals in binding-posts K K, and may be either closed upon themselves or connected with a source of direct current L by means of a switch M. The main or controlling switch has five contacts *a b c d e* and two levers *f g*, pivoted and connected by an insulating cross-bar *h*, so as to move in parallelism. These levers are connected to the line-wires from a source of alternating currents N. Contact *a* is connected to brush G and coil B through a dead-resistance R and wire P. Contact *b* is connected with brush F and coil A through a self-induction coil S and wire O. Contacts *c* and *e* are connected to brushes G F, respectively, through the wires P O, and contact *d* is directly connected with brush H. The lever *f* has a widened end, which may span the contacts *a b*. When in such position and with lever *g* on contact *d*, the alternating currents divide between the two motor-coils, and by reason of their different self-induction a difference of current-phase is obtained that starts the motor in rotation. In starting, as I have above stated, the field-coils are short-circuited.

When the motor has attained the desired speed, the switch is shifted to the position shown in dotted lines—that is to say, with the levers *f g* resting on points *c e*. This connects up the two armature-coils in series, and the motor will then run as a synchronous motor. The field-coils are thrown into circuit with the direct-current source when the main switch is shifted.

What I claim herein as my invention is—

1. The method of operating electro-magnetic motors, which consists in first progressively shifting or rotating the magnetic poles of one element until it has reached a synchronous speed and then alternating said poles and passing a direct current through the coils of the other element, as herein set forth.

2. The method of operating electro-mag-

netic motors, which consists in short-circuiting the coils of one element, as the field-magnet, and passing through the energizing-coils of the other element, as the armature, alternating currents differing in phase, and then when the motor has attained a given speed, passing through the field-coils a direct current and through the armature-coils alternating currents coinciding in phase.

NIKOLA TESLA.

Witnesses:
R. J. STONEY, Jr.,
E. P. COFFIN.

(No Model.)

N. TESLA.

ELECTRO MAGNETIC MOTOR

No. 418,248. Patented Dec. 31, 1889.

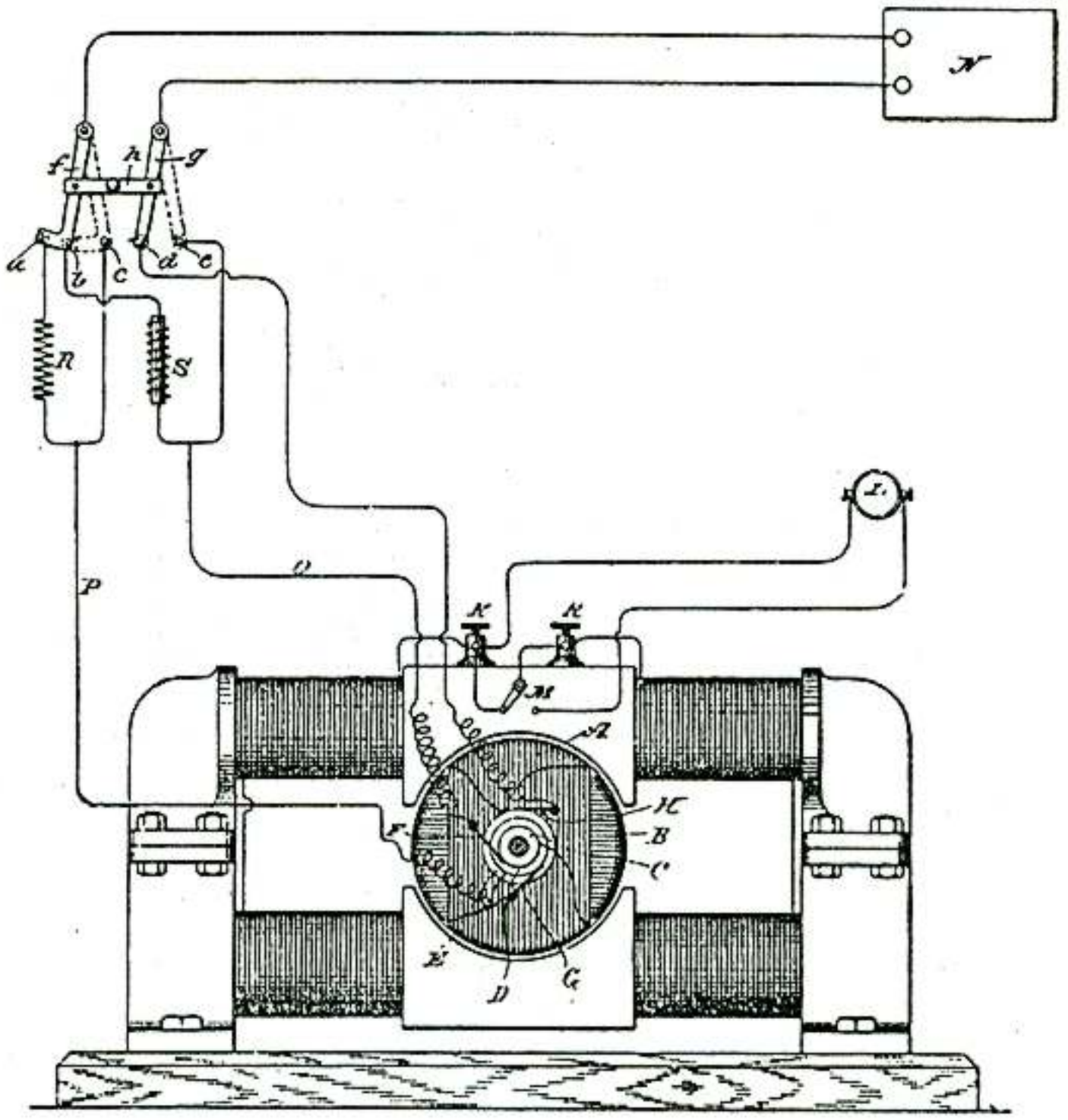

Witnesses:
Raphael Netter
Robt. F. Gaylord

Inventor
Nikola Tesla
By
Duncan, Curtis & Page
Attorneys

THE NORRIS PETERS CO., WASHINGTON, D. C.

UNITED STATES PATENT OFFICE.

NIKOLA TESLA, OF NEW YORK, N. Y., ASSIGNOR TO THE TESLA ELECTRIC COMPANY, OF SAME PLACE.

ELECTRO-MAGNETIC MOTOR.

SPECIFICATION forming part of Letters Patent No. 424,036, dated March 25, 1890.

Application filed May 20, 1889. Serial No. 311,418. (No model.)

To all whom it may concern:

Be it known that I, NIKOLA TESLA, a subject of the Emperor of Austria-Hungary, from Smiljan, Lika, border country of Austria-Hungary, residing at New York, in the county and State of New York, have invented certain new and useful Improvements in Electro-Magnetic Motors, of which the following is a specification, reference being had to the drawings accompanying and forming a part of the same.

I have invented and elsewhere described an electro-magnetic motor operated or adapted to be operated by an alternating electric current, and which is now commonly designated, whether correctly or not, a "magnetic-lag" motor. The main distinguishing features of this motor are the following: An armature is mounted within the magnetizing influence of a certain number of field magnets or poles of different magnetic susceptibility—that is to say, poles of unequal length, mass, or composition—and wound with coils adapted in the operation of the motor to be connected to a source of alternating currents. When an alternating current is passed through the coils of such a motor, the field magnets or poles do not appear to manifest their attractive effect upon the armature simultaneously, the magnetic attraction of some appearing to lag behind that of others, with the result of producing a torque and rotation of the motor. Generally I have made such motors with closed armature-coils.

I have invented another form of motor, which, for similar reasons, may be called a "magnetic-lag" motor; but in operation it differs from that which I have above described in that the attractive effects or phases of the poles, while lagging behind the phases of current which produce them, are manifested simultaneously and not successively.

To carry out this invention I employ a motor embodying the principle of construction of a motor described and claimed in an application filed by me January 8, 1889, No. 295,745, to the extent that both the armature and field receive their magnetism from a single energizing-coil or a plurality of coils acting as one.

A motor which embodies my invention, with certain modifications thereof, is illustrated in the accompanying drawings.

Figure 1 is a side view of the motor in elevation. Fig. 2 is a part-sectional view at right angles to Fig. 1. Fig. 3 is an end view in elevation and part section of a modification, and Fig. 4 is a similar view of another modification.

In Figs. 1 and 2, A designates a base or stand, and B B the supporting-frame of the motor. Bolted to the said supporting-frame are two magnetic cores or pole-pieces C C', of iron or soft steel. These may be subdivided or laminated, in which case hard iron or steel plates or bars should be used, or they should be wound with closed coils. D is a circular disk-armature built up of sections or plates of iron and mounted in the frame between the pole-pieces C C', which latter are preferably curved to conform to the circular shape thereof. I may wind this disk with a number of closed coils E. F F are the main energizing-coils, supported in any convenient manner by the supporting-frame, or otherwise, but so as to include within their magnetizing influence both the pole-pieces C C' and the armature D. The pole-pieces C C' project out beyond the coils F F on opposite sides, as indicated in the drawings. If an alternating current be passed through the coils F F, rotation of the armature will be produced, and this rotation I explain by the following apparent action or mode of operation: An impulse of current in the coils F F establishes two polarities in the motor. The protruding end of pole-piece C, for instance, will be of one sign, and the corresponding end of pole-piece C' will be of the opposite sign. The armature also exhibits two poles at right angles to the coils F F, like poles to those in the pole-pieces being on the same side of the coils. While the current is flowing there is no appreciable tendency to rotation developed; but after each current impulse ceases or begins to fall the magnetism in the armature and in the ends of the pole-pieces C C' lags or continues to manifest itself, which produces a rotation of the armature by the repellent force between the more closely approximating points of maximum magnetic effect. This effect is continued by the reversal of current, the polarities of field and armature being simply reversed. One or both of the elements—the armature or field—may be wound with closed

induced coils to intensify this effect, although in the drawings I have shown but one of the fields, each element of the motor really constitutes a field, wound with the closed coils, the currents being induced mainly in those convolutions or coils which are parallel to the coils F F. A modified form of this motor is shown in Fig. 3. In this form G is one of two standards that support the bearings for the armature-shaft. H H are uprights or sides of a frame, preferably magnetic, the ends C C' of which are bent, substantially as shown, to conform to the shape of the armature D and form field-magnet poles. The construction of the armature may be the same as in the previous figure, or it may be simply a magnetic disk or cylinder, as shown, and a coil or coils F F are secured in position to surround both the armature and the poles C C'. The armature is detachable from its shaft, the latter being passed through the armature after it has been inserted in position. The operation of this form of motor is the same in principle as that previously described and needs no further explanation.

One of the most important features in alternating-current motors is that they should be adapted to and capable of running efficiently in the alternating systems in present use, in which almost without exception the generators yield a very high number of alternations. Such a motor I have designed by a development of the principle of the motor shown in Fig. 3, making a multipolar motor, which is illustrated in Fig. 4. In the construction of this motor I employ an annular magnetic frame J, with inwardly-extending ribs or projections K, the ends of which all bend or turn in one direction and are generally shaped to conform to the curved surface of the armature. Coils F F are wound from one part K to the one next adjacent, the ends or loops of each coil or group of wires being carried over toward the shaft, so as to form U-shaped groups of convolutions at each end of the armature. The pole-pieces C C', being substantially concentric with the armature, form ledges, along which the coils are laid and should project to some extent beyond the coils, as shown. The cylindrical or drum armature D is of the same construction as in the other motors described, and is mounted to rotate within the annular frame J and between the U-shaped ends or bends of the coils F. The coils F are connected in multiple or in series with a source of alternating currents, and are so wound that with a current or current impulse of given direction they will make the alternate pole-pieces C of one polarity and the other pole-pieces C' of the opposite polarity. The principle of the operation of this motor is the same as the other herein described, for, considering any two pole-pieces C C', a current impulse passing in the coil which bridges them or is wound over both tends to establish polarities in their ends of opposite sign and to set up in the armature-core between them a polarity of the same sign as that of the nearest pole-piece C. Upon the fall or cessation of the current impulse that established these polarities the magnetism which lags behind the current phase, and which continues to manifest itself in the polar projections C C' and the armature, produces by repulsion a rotation of the armature. The effect is continued by each reversal of the current. What occurs in the case of one pair of pole-pieces occurs simultaneously in all, so that the tendency to rotation of the armature is measured by the sum of all the forces exerted by the pole-pieces, as above described. In this motor also the magnetic lag or effect is intensified by winding one or both cores with closed induced coils. The armature-core is shown as thus wound. When closed coils are used, the cores should be laminated.

It is evident that a pulsatory as well as an alternating current might be used to drive or operate the motors herein described; but I prefer to use alternating currents.

It will be understood that the degree of subdivision, the mass of the iron in the cores, their size, and the number of alternations in the current employed to run the motor must be taken into consideration in order to properly construct this motor. In other words, in all such motors the proper relations between the number of alternations and the mass, size, or quality of the iron must be preserved in order to secure the best results. These are matters, however, that are well understood by those skilled in the art.

What I claim is—

1. In an alternating-current motor, the combination, with the armature and field-cores, of stationary energizing-coils enveloping the said cores and adapted to produce polarities or poles in both, the field-cores extending out from the coils and constructed so as to exhibit the magnetic effect imparted to them after the fall or cessation of current impulse producing such effect, as set forth.

2. In an alternating-current motor, the combination, with an armature-core circular in configuration, of a supporting-frame, field-cores extending therefrom over portions of the periphery of the armature, and energizing-coils surrounding said armature and parts of the field-cores, as set forth.

3. The combination, with the rotatably-mounted armature, of the circular frame J, the ribs K, with polar extensions extending over portions of the armature, and the energizing-coils F, wound over portions of the pole-pieces and carried in loops over the ends of the armature, as herein set forth.

NIKOLA TESLA.

Witnesses:
R. J. STONEY, Jr.,
E. P. COFFIN.

P-108

(No Model.) 2 Sheets—Sheet 1

N. TESLA

ELECTRO MAGNETIC MOTOR.

No 424,036. Patented Mar. 25, 1890.

Fig 1

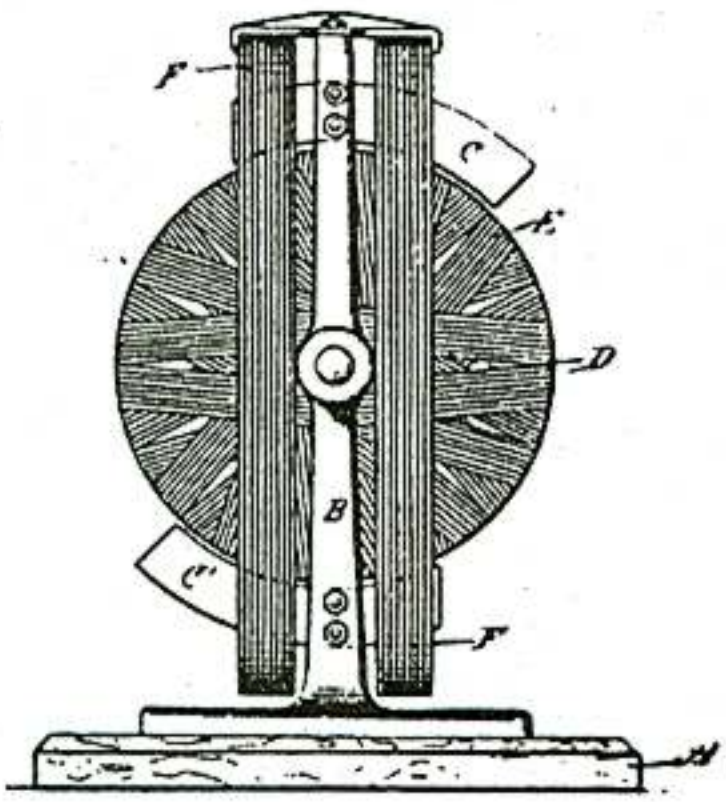

Fig 2

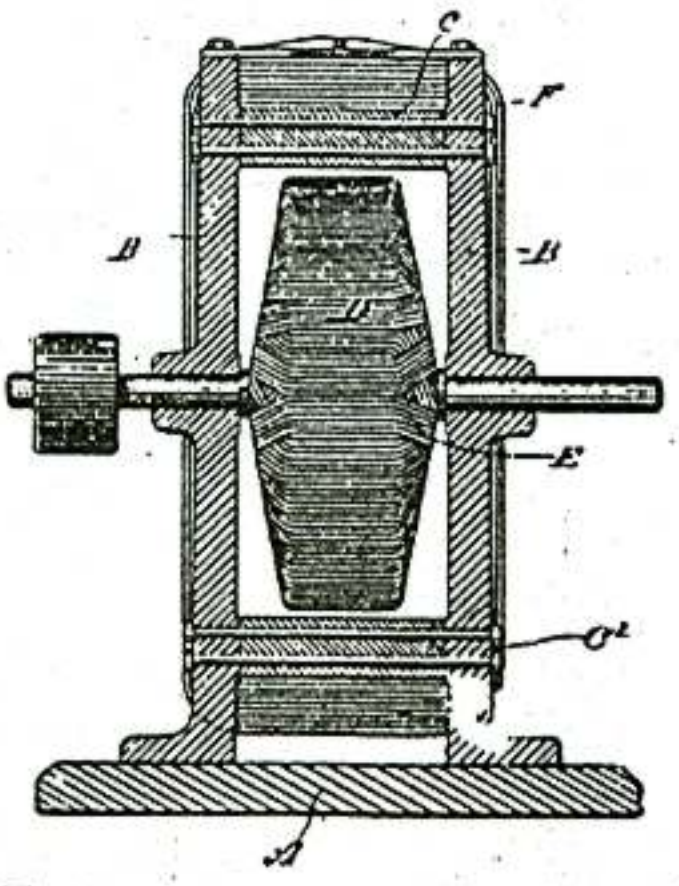

Witnesses
Raphael Netter
Frank E. Hartley

Inventor
Nikola Tesla
By
Duncan Curtis & Page
Attorneys

(No Model.) 2 Sheets—Sheet 2

N. TESLA.

ELECTRO MAGNETIC MOTOR.

No. 424,036. Patented Mar. 25, 1890.

Fig. 3

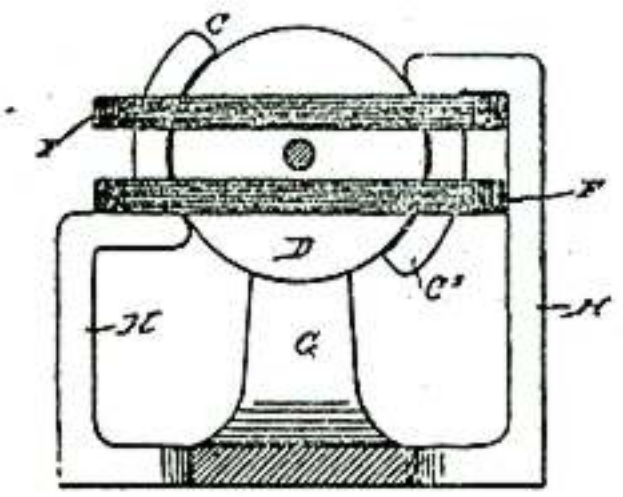

Fig. 4

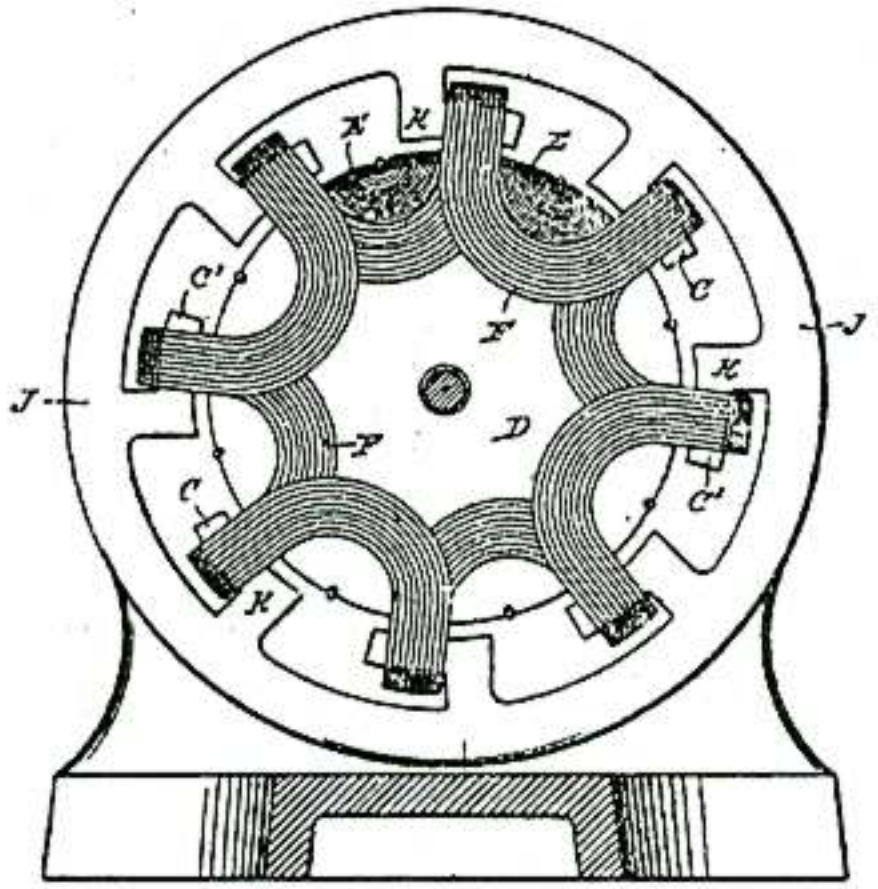

Witnesses
Raphael Netter
Frank P. Hartley

Inventor
Nikola Tesla
By
Duncan, Curtis & Page
Attorneys

THE NORRIS PETERS CO., PHOTO-LITHO., WASHINGTON, D. C.

UNITED STATES PATENT OFFICE.

NIKOLA TESLA, OF NEW YORK, N. Y., ASSIGNOR TO THE TESLA ELECTRIC COMPANY, OF SAME PLACE.

ELECTRO-MAGNETIC MOTOR.

SPECIFICATION forming part of Letters Patent No. 445,207, dated January 27, 1891.

Application filed May 20, 1889. Serial No. 311,417. (No model.)

To all whom it may concern:

Be it known that I, NIKOLA TESLA, a subject of the Emperor of Austria-Hungary, from Smiljan, Lika, border country of Austria-Hungary, residing at New York, in the county and State of New York, have invented certain new and useful Improvements in Electro-Magnetic Motors, of which the following is a specification, reference being had to the drawings accompanying and forming a part of the same.

Among the various forms of alternating-current motors invented by me is one which I have described in other applications, and which is constructed as follows: I build a field-core with, say, four poles, between which is mounted an armature that is generally wound with closed coils. On two of the opposite poles of the field I wind primary coils, which are connected up in the main circuit. On the same cores I also wind secondary coils, which are closed through coils on the other pair or set of poles. In this motor when an alternating current is caused to pass through the primary coils it energizes directly one set of poles and induces currents in the secondary coils, which act to energize the other poles; but the phases of the current in the secondary coils may differ in time from those of the primary current, and hence a rotation or shifting of the poles is effected that imparts rotation to the motor.

These motors may be constructed in many other ways; but for purposes of this case it is only necessary to consider the specific form which I have thus generally described, as my improvements relate mainly to such form.

The object of my present invention is to render this form of motor more efficient and to improve its action or mode of operation.

In the motors constructed in accordance with this principle I bring two energizing-circuits into inductive relation in the motor itself—that is to say, the secondary currents which energize one set of the field-cores are induced in the motor itself, and the employment of an external induction-device is thus avoided. The operation of these motors, however, is dependent upon the existence of a certain difference of phase between the currents in the primary and secondary coils. To obtain a difference of phase or lag that is suited to working conditions is the specific object of my present invention.

The following explanations will serve to illustrate the principle upon which said invention is based. Let it be assumed that an ordinary alternating-current generator is connected up in a circuit of practically no self-induction, such, for example, as a circuit containing incandescent lamps only. On the operation of the machine alternating currents will be developed in the circuit, and the phases of these currents will theoretically coincide with the phases of the impressed electro-motive force. Such currents may be regarded and designated as the "unretarded currents."

It will be understood, of course, that in practice there is always more or less self-induction in the circuit, which modifies to a corresponding extent these conditions; but for convenience this may be disregarded in the consideration of the principle of operation, since the same laws apply. Assume next that a path of currents be formed across any two points of the above circuit, consisting, for example, of the primary of an induction device. The phases of the currents passing through the primary, owing to the self-induction of the same, will not coincide with the phases of the impressed electro-motive force, but will lag behind the same, such lag being directly proportional to the self-induction and inversely proportional to the resistance of the said coil. The insertion of this coil will also cause a lagging or retardation of the currents traversing and delivered by the generator behind the impressed electro-motive force, such lag being the mean or resultant of the lag of the current through the primary alone and that of what I have designated the "unretarded current" in the entire working-circuit. Next consider the conditions imposed by the association in inductive relation with the primary coil of a secondary coil. The current generated in the secondary coil will react upon the primary current, modifying the retardation of the same, according to the amount of self-induction and resistance in the secondary circuit. If the secondary circuit have but little self-induction—as, for instance, when it contains incandescent lamps only—it will increase the

actual difference of phase between its own and the primary current, first, by diminishing the lag between the primary current and the impressed electro-motive force, and, second, by its own lag or retardation behind the impressed electro-motive force. On the other hand, if the secondary circuit have a high self-induction its lag behind the current in the primary is directly increased, while it will be still further increased if the primary have a very low self-induction. The better results are obtained when the primary has a low self-induction. I apply these principles to the construction of a motor which I shall now describe.

The details of the improvements are illustrated in the drawings, in which—

Figure 1 is a diagram of a motor exhibiting my invention. Fig. 2 is a similar diagram of a modification of the same.

In Fig. 1 let A designate the field-magnet of a motor which, as in all these motors, is built up of sections or plates. B C are polar projections upon which the coils are wound. Upon one pair of these poles, as C, I wind primary coils D, which are directly connected to the circuit of an alternating-current generator G. On the same poles I also wind secondary coils F, either side by side or over or under the primary coils, and these I connect with other coils E, which surround the poles B B. The currents in both primary and secondary coils in such a motor will be retarded or will lag behind the impressed electro-motive force; but to secure a proper difference in phase between the primary and secondary currents themselves I increase the resistance of the circuit of the secondary and reduce as much as practicable its self-induction. I do this by using for the secondary circuit, particularly in the coils E, wire of comparatively small diameter and having but few turns around the cores; or I use some conductor of higher specific resistance, such as German silver; or I may introduce at some point in the secondary circuit an artificial resistance R. Thus the self-induction of the secondary is kept down and its resistance increased with the result of decreasing the lag between the impressed electro-motive force and the current in the primary coils and increasing the difference of phase between the primary and secondary currents.

In the disposition shown in Fig. 2 the lag in the secondary is increased by increasing the self-induction of that circuit, while the increased tendency of the primary to lag is counteracted by inserting therein a dead resistance. The primary coils D in this case have a low self-induction and high resistance, while the coils E F, included in the secondary circuit, have a high self-induction and low resistance. This may be done by the proper winding of the coils, or in the circuit including the secondary coils E F, I may introduce a self-induction coil S, while in the primary circuit from the generator G and including coils D, I may insert a dead resistance R. By this means the difference of phase between the primary and secondary is increased. It is evident that both means of increasing the difference of phase—namely, by the special winding as well as by the supplemental or external inductive and dead resistance—may be employed conjointly.

In the operation of this motor the current impulses in the primary coils induce currents in the secondary coils, and by the conjoint action of the two the points of greatest magnetic attraction are shifted or rotated.

In practice I have found it desirable to wind the armature with closed coils in which currents are induced by the action thereon of the primaries.

I do not claim, broadly, herein the method of operating motors by inducing in one circuit currents by means of those in another, nor the other features herein not specifically pointed out in the claims, having personally filed applications for such features.

What I claim is—

1. The combination, in a motor, of a primary energizing-circuit adapted to be connected with the circuit of a generator and a secondary energizing-circuit in inductive relation thereto, the two circuits being of different electrical character or resistance, as set forth.

2. The combination, in a motor, of a primary energizing-circuit adapted to be connected with the circuit of a generator and a secondary energizing-circuit in inductive relation thereto, the two circuits being of different self-induction, as herein set forth.

3. The combination, in a motor, of primary energizing-coils adapted to be connected to a source of current and secondary energizing-coils in a circuit in inductive relation thereto, one set of said coils being formed by conductors of small size and few turns, the other by conductors of larger size, as set forth.

NIKOLA TESLA.

Witnesses:
R. J. STONEY, Jr.,
E. P. COFFIN.

P-112

N. TESLA.

ELECTROMAGNETIC MOTOR.

No. 445,207. Fig. 1 Patented Jan. 27, 1891

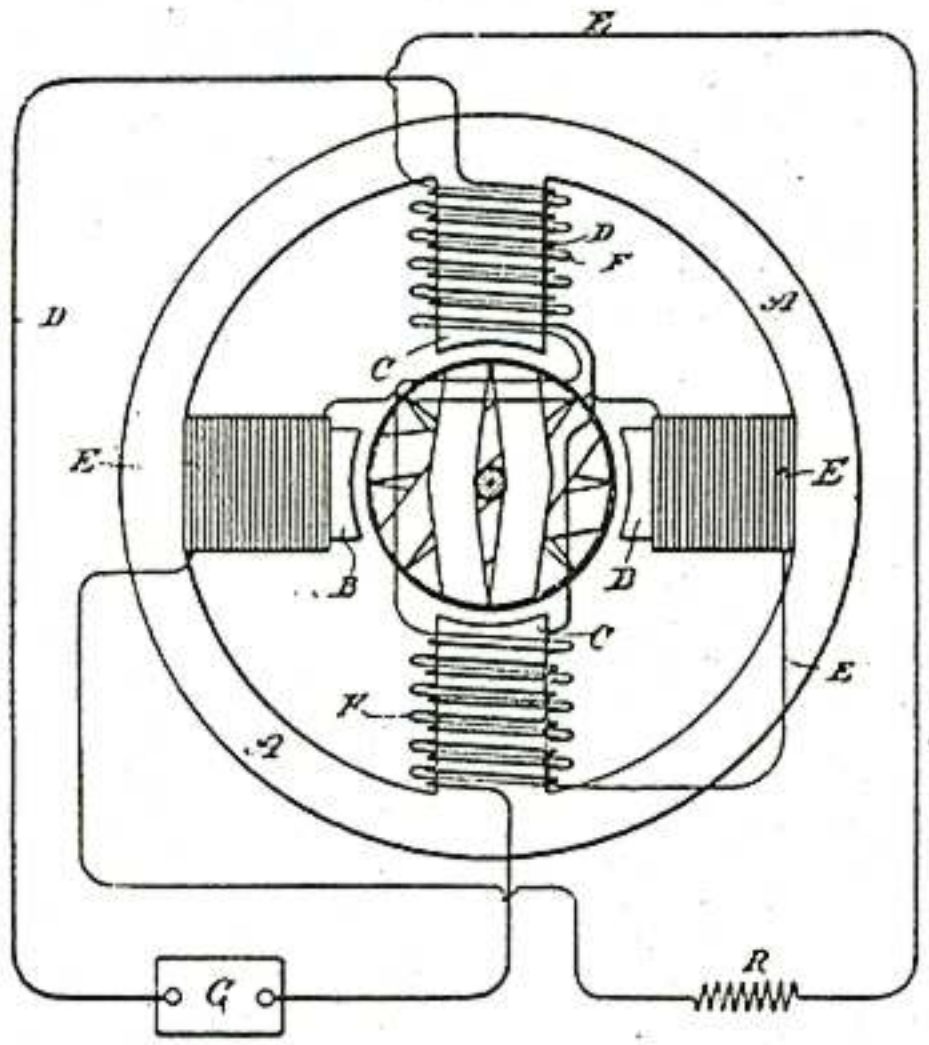

Fig. 2

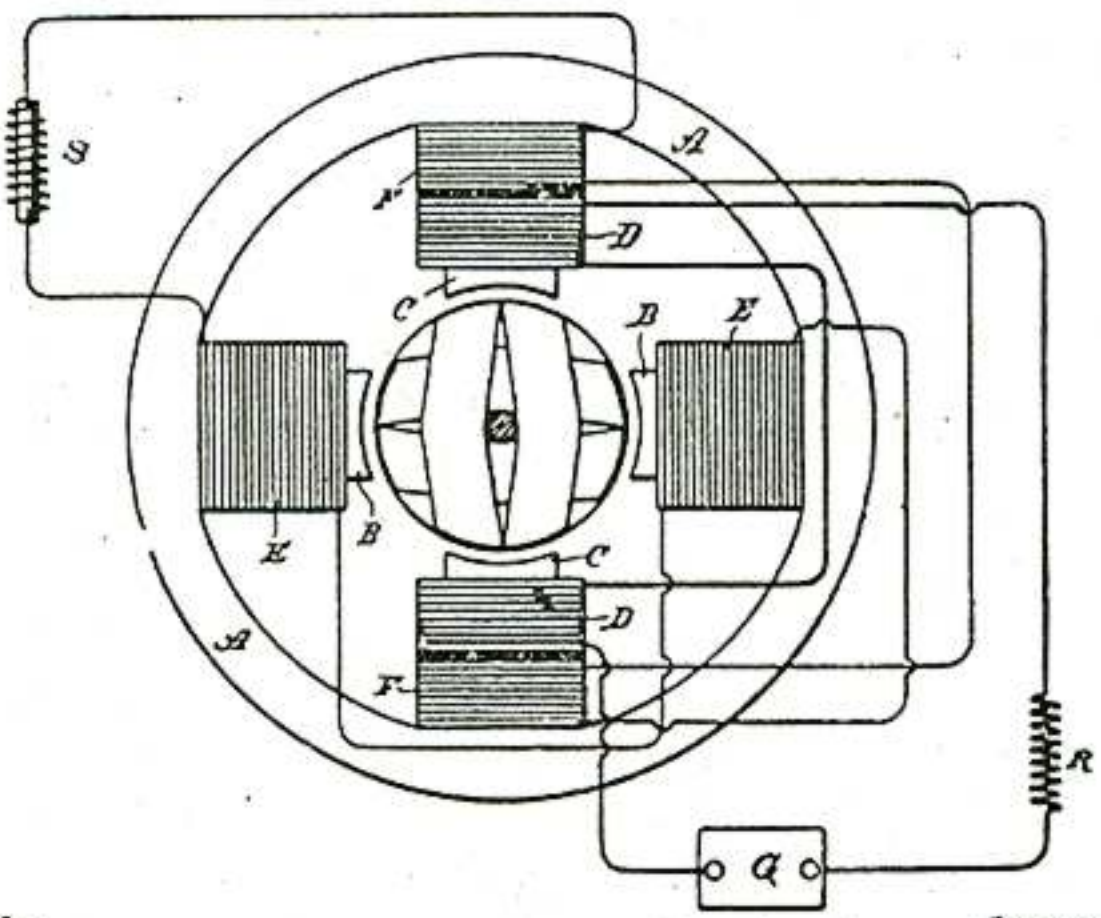

Witnesses:
Raphael Netter
Frank E. Hartley

Inventor
Nikola Tesla
By
Duncan, Curtis & Page.
Attorneys.

UNITED STATES PATENT OFFICE.

ALBERT SCHMID, OF ALLEGHENY, AND NIKOLA TESLA, OF PITTSBURG, ASSIGNORS TO THE WESTINGHOUSE ELECTRIC COMPANY, OF PITTSBURG, PENNSYLVANIA.

ARMATURE FOR ELECTRIC MACHINES.

SPECIFICATION forming part of Letters Patent No. 417,794, dated December 24, 1889.

Application filed June 23, 1889. Serial No. 315,937. (No model.)

To all whom it may concern:

Be it known that we, ALBERT SCHMID and NIKOLA TESLA, citizens, respectively, of the Republic of Switzerland and Smiljan, Lika, border country of Austria-Hungary, now residing in Allegheny and Pittsburg, both in the county of Allegheny and State of Pennsylvania, have invented a certain new and useful Improvement in Armatures for Electric Machines, (Case No. 310,) of which the following is a specification.

The invention relates to the construction of armatures for electric generators and motors, and the object is to provide an electrically-efficient armature, the construction of which is simple and economical, and in which the coils of insulated conducting wire or ribbon may be conveniently wound or formed into bobbins so located with reference to the body of the armature as to afford as good results as possible.

For certain purposes it is desirable to construct the armatures of electric generators and motors with their cores of magnetizable material projecting through the coils into close proximity to the field-magnet poles. When armatures are constructed in this manner, some means are necessary for holding the coils in position and preventing them from being thrown out by centrifugal force.

This invention aims to provide such means in an armature having polar projections, and also to form an armature in such manner as to expose a large area of core-surface to the field-magnet poles.

The invention consists, in general terms, in forming an armature-core which is preferably built up of laminæ of magnetizable material insulated from each other, with diverging slots or openings for receiving the armature wire or ribbon, which slots are connected with the exterior of the armature by openings through which the wire may be laid in the slots, and in placing the wire in such slots in the proper manner.

We are aware of the United States Patents No. 327,797, granted to Immisch, and No. 292,077, granted to Wenstrom, and the British patent of Coerper, No. 9,013 of 1887, and do not claim the constructions shown and described therein.

The invention will be described more particularly in connection with the accompanying drawings, in which—

Figure 1 is an end view, partly in section, of an armature embodying the features of the invention, and Fig. 2 is a plan of the armature.

Referring to the figures, F F indicate field-magnet poles, and A represents the body or core of an armature composed, in this instance, of laminæ of magnetizable material built up in any suitable manner, the laminæ being preferably separated by intervening strata of insulating material. The individual plates or laminæ are constructed with radial openings *c*, extending a short distance from the surface, and with slots or openings *b*, which extend in different directions from the openings *c*. The slots diverge from each other at such angles as to cause the two slots upon the opposite sides of each web *e* thus formed to lie in the same chord of the circle of the armature. The plates may also be stamped or formed with openings G to remove the unnecessary metal. After the plates are formed they are laid up in the proper manner to form the entire armatur-core, the slots *b* being placed opposite each other to form continuous openings through the entire length of the armature. These openings may be lined by pockets *h* of insulating material—such, for instance, as vulcanized fiber—and the wires are then wound into the slots from the openings *c* and around the respective webs *e*. Winding-clips *k* may be placed at the respective ends of the armature opposite each web *e* to hold the wires in the proper positions as they are wound in the slots and down upon the armature ends.

The wires having been wound into their proper positions, they may be held more securely in position by means of blocks K of non-magnetic material, placed at intervals or extending through the entire slots or openings *c* and projecting into the slots *b*.

An armature constructed in the manner

described is found to be very efficient in its operations and at the same time simple in its construction.

The connections between the armature-coils and the conductors or collecting-plates may be made in any usual well-known manner, according to the purposes desired to be served.

We claim as our invention—

1. A core for electrical machines, composed of plates of magnetizable material separated by insulation, said plates having diverging slots for receiving the armature-conductors and an opening to the exterior of the plate at the origin of the diverging slots.

2. A core-plate for electrical machines, stamped with diverging slots at intervals near its periphery and an opening to the periphery at the angle formed by each two diverging slots.

3. A core for electrical machines, composed of plates of magnetizable material separated by insulation, said plates having diverging slots for receiving the armature-conductors and an opening to the exterior of the plate at the origin of the diverging slots, the width of such openings being approximately equal to the width of the slot.

4. An armature-core for electric machines, consisting of plates of magnetizable material separated by insulation, having radial openings at intervals, slots diverging from said openings for receiving armature-coils, and winding blocks or clips at the ends of the core.

5. An armature-core for electrical apparatus, composed of plates of magnetizable material separated by insulation and having radial openings at intervals, slots extending in opposite directions from said openings for receiving wires, and insulating-linings for said slots.

6. An armature for electric machines, consisting of a laminated core formed with diverging slots for receiving the wires, said slots leaving intervening webs, and coils of wire wound in said slots.

7. An armature for electric machines, consisting of a laminated core formed with diverging slots for receiving the wires, said slots leaving intervening webs, coils of wire wound in said slots, and non-magnetizable material closing the openings of the adjacent slots outside the wires, substantially as described.

8. An armature for electric machines, consisting of a core having its outer surface continuous except for narrow longitudinal openings at intervals and having slots diverging from said openings armature-coils wound in said slots, and blocks or strips of non-magnetizable material closing the openings and forming with the metal of the armature a practically continuous surface.

In testimony whereof we have hereunto subscribed our names this 25th day of June, A. D. 1889.

ALBERT SCHMID
NIKOLA TESLA.

Witnesses:
W. D. UPTEGRAFF,
CHARLES A. TERRY.

(No Model.) 2 Sheets—Sheet 1

A. SCHMID & N. TESLA.

ARMATURE FOR ELECTRIC MACHINES.

No. 417,794. Patented Dec. 24, 1889.

Fig. 1.

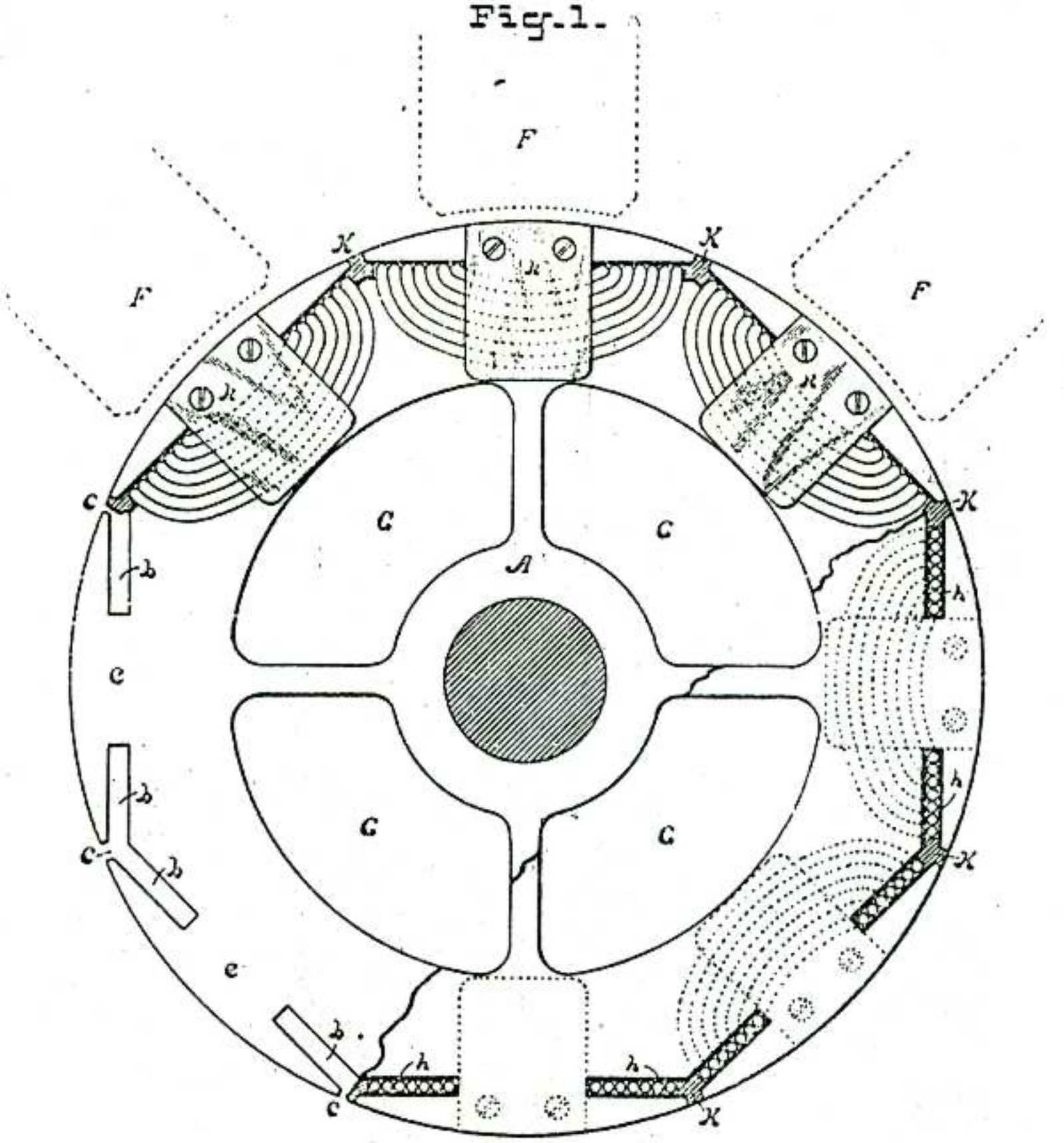

WITNESSES

George Brown Jr.

P. Wm Smith

INVENTOR

Albert Schmid.

Nikola Tesla.

Charles a. Terry

Att'y.

20*

P-116

(No Model.) 2 Sheets—Sheet 2

A. SCHMID & N. TESLA.

ARMATURE FOR ELECTRIC MACHINES.

No. 417,794. Patented Dec. 24, 1889.

Fig. 2.

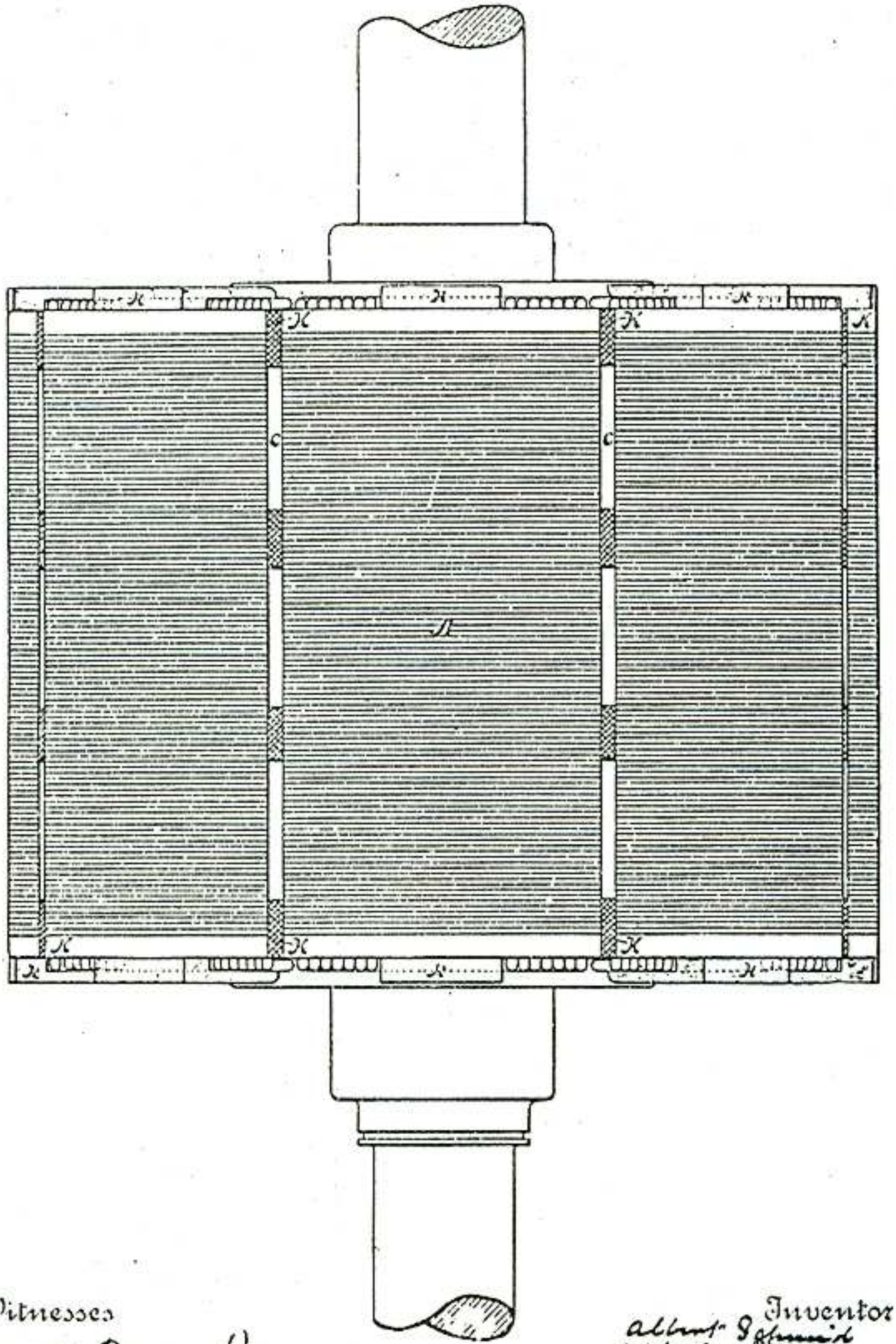

Witnesses
George Brown Jr.
J. Wm. Smith

Inventor
Albert Schmid
Nikola Tesla
By their Attorney
Charles A. Terry

UNITED STATES PATENT OFFICE.

NIKOLA TESLA, OF NEW YORK, N. Y., ASSIGNOR TO THE TESLA ELECTRIC COMPANY, OF SAME PLACE.

ALTERNATING-CURRENT ELECTRO-MAGNETIC MOTOR.

SPECIFICATION forming part of Letters Patent No. 433,700, dated August 5, 1890.

Application filed March 26, 1890. Serial No. 345,388. (No model.)

To all whom it may concern:

Be it known that I, NIKOLA TESLA, a subject of the Emperor of Austria-Hungary, from Smiljan, Lika, border country of Austria-Hungary, residing at New York, in the county and State of New York, have invented certain new and useful Improvements in Alternating-Current Electro-Magnetic Motors, of which the following is a specification, reference being had to the drawings accompanying and forming a part of the same.

This invention is an improvement in that class of electro-magnetic motors in which the rotation is produced by the progressive movement or effect of the maximum magnetic points or poles produced by the conjoint action or effect of two energizing-circuits through which are passed alternating currents, or currents of rapidly-varying strength of a kindred nature.

The improvements subject of this application are more particularly applicable to that class of motors in which two or more sets of energizing-magnets are employed, and in which by artificial means a certain interval of time is made to elapse between the respective maximum or minimum periods or phases of their magnetic attraction or effect. This interval or difference in phase between the two sets of magnets, when artificially produced, is limited in extent. It is desirable, however, for the economical working of such motors that the strength or attraction of one set of magnets should be maximum at the time when that of the other set is minimum and conversely; but these conditions have not heretofore been realized except in cases where the two currents have been obtained from independent sources in the same or different machines.

The object of the present invention is to establish conditions more nearly approaching the theoretical requirements of perfect working, or, in other words, to produce artificially a difference of magnetic phase by means of a current from a single primary source sufficient in extent to meet the requirements of practical and economical working.

In carrying out my invention I employed motor with two sets of energizing or field magnets, each wound with coils connected with a source of alternating or rapidly-varying currents, but forming two separate paths or circuits. The magnets of one set I protect to a certain extent from the energizing action of the current by means of a magnetic shield or screen interposed between the magnet and its energizing-coil. This shield is properly adapted to the conditions of particular cases, so as to shield or protect the main core from magnetization until it has become itself saturated and no longer capable of containing all the lines of force produced by the current. By this means it will be seen that the energizing action begins in the protected set of magnets a certain arbitrarily-determined period of time later than in the other, and that by this means alone or in conjunction with other means or devices heretofore employed a practically-economical difference of magnetic phase may readily be secured.

The nature and operation of the invention will be more fully explained by reference to the accompanying drawings.

Figure 1 is a view of a motor, partly in section, with a diagram illustrating the invention. Fig. 2 is a similar view of a modification of the same.

In Fig. 1, which exhibits the simplest form of the invention, A A is the field-magnet of a motor, having, say, eight poles or inwardly-projecting cores B and C. The cores B form one set of magnets and are energized by coils D. The cores C, forming the other set, are energized by coils E, and the coils are connected, preferably, in series with one another, in two derived or branched circuits F G, respectively, from a suitable source of current. Each coil E is surrounded by a magnetic shield H, which is preferably composed of an annealed, insulated, or oxidized iron wire wrapped or wound on the coils in the manner indicated, so as to form a closed magnetic circuit around the coils and between the same and the magnetic cores C. Between the pole pieces or cores B C is mounted the armature K, which, as is usual in this type of machines, is wound with coils L closed upon themselves. The operation resulting from this disposition is as follows: If a current impulse be di-

rects through the two circuits of the motor, it will quickly energize the cores B, but not so the cores C, for the reason that in passing through the coils E there is encountered the influence of the closed magnetic circuits formed by the shields H. The first effect is to effectively retard the current impulse in circuit G, while at the same time the proportion of current which does pass does not magnetize the cores C, which are shielded or screened by the shields H. As the increasing electro-motive force then urges more current through the coils E, the iron wire H becomes magnetically saturated and incapable of carrying all the lines of force, and hence ceases to protect the cores C, which become magnetized, developing their maximum effect after an interval of time subsequent to the similar manifestation of strength in the other set of magnets, the extent of which is arbitrarily determined by the thickness of the shield H, and other well-understood conditions.

From the above it will be seen that the apparatus or device acts in two ways. First, by retarding the current, and, second, by retarding the magnetization of one set of the cores, from which its effectiveness will readily appear.

Many modifications of the principle of this invention are possible. One useful and efficient application of the invention is shown in Fig. 2. In said figure a motor is shown similar in all respects to that above described, except that the iron wire H, which is wrapped around the coils E, is in this case connected in series with the coils D. The iron-wire coils H, are connected and wound, so as to have little or no self-induction, and being added to the resistance of the circuit F the action of the current in that circuit will be accelerated, while in the other circuit G it will be retarded. The shield H may be made in many forms, as will be understood, and used in different ways, as appears from the foregoing description. I do not, however, limit myself to any specific form or arrangement; but

What I claim is—

1. In an alternating-current motor having two energizing-circuits, the combination, with the magnetic cores and coils of one of the circuits, of interposed magnetic shields or screens for retarding the magnetization of said cores, as set forth.

2. In an alternating-current motor having two energizing-circuits, the combination, with the magnetic cores and the coils of one of the circuits wound thereon, of magnetic shields or coils wound around said coils at right angles to their convolutions, as set forth.

3. In an alternating-current motor having two energizing-circuits, the combination, with the magnetic cores and the coils of one of the circuits which energize the said cores, of magnetic shields forming closed magnetic circuits around the coils and interposed between the coils and cores, as set forth.

4. In an alternating-current motor having two energizing-circuits derived from the same source, the combination, with the cores and the coils of one of the circuits that energizes the same, of insulated iron-wire coils wound on the said energizing-coils at right angles to their convolutions and connected up in series with the coils of the other energizing-circuit, as set forth.

NIKOLA TESLA.

Witnesses:
ROBT. F. GAYLORD,
PARKER W. PAGE

(No Model.)

N. TESLA.

ALTERNATING CURRENT ELECTRO MAGNETIC MOTOR.

No. 433,700. Patented Aug. 5, 1890.

Fig. 1

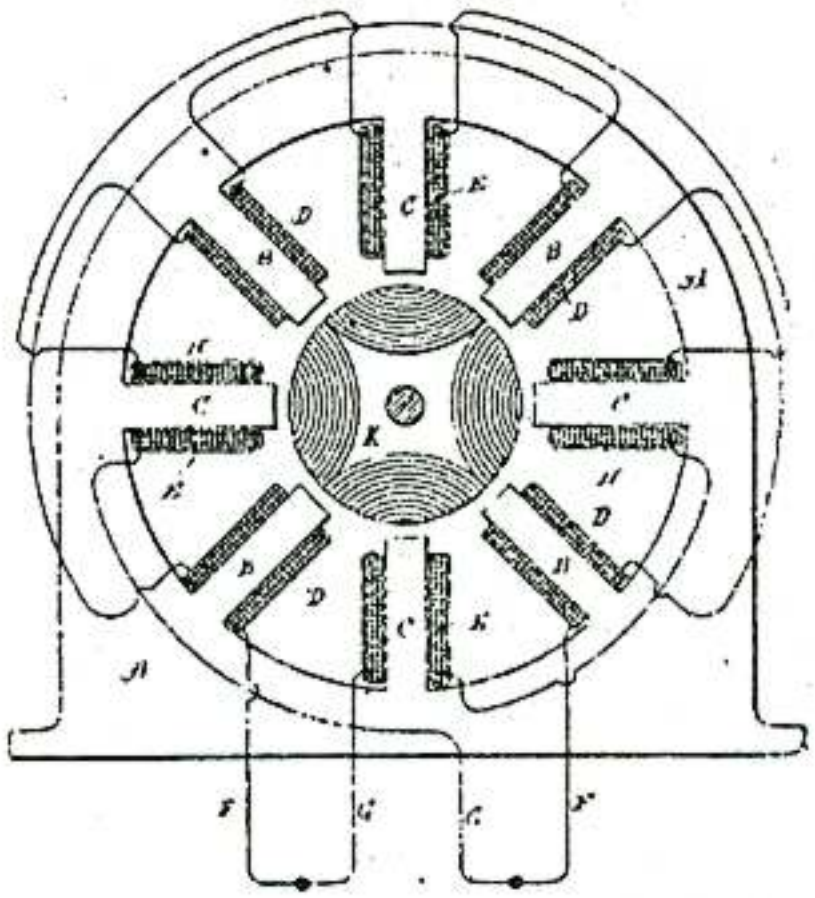

Fig. 2

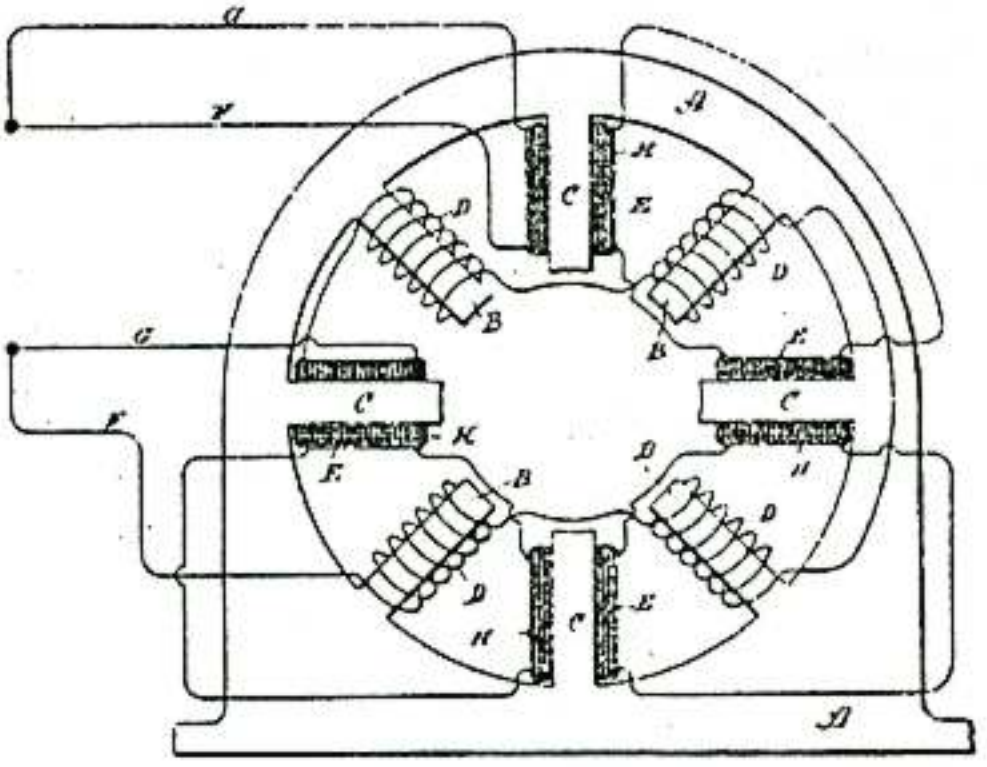

Witnesses:
Raphael Netter
Ernest Hopkinson

Inventor
Nikola Tesla
by Duncan, Curtis & Page
Attorneys.

UNITED STATES PATENT OFFICE.

NIKOLA TESLA, OF NEW YORK, N. Y., ASSIGNOR TO THE TESLA ELECTRIC COMPANY, OF SAME PLACE.

ALTERNATING-CURRENT MOTOR.

SPECIFICATION forming part of Letters Patent No. 433,701, dated August 5, 1890.

Application filed March 26, 1890. Serial No. 345,339. (No model.)

To all whom it may concern:

Be it known that I, NIKOLA TESLA, a subject of the Emperor of Austria-Hungary, from Smiljan, Lika, border country of Austria-Hungary, residing at New York, in the county and State of New York, have invented certain new and useful Improvements in Alternating-Current Motors, of which the following is a specification, reference being had to the drawings accompanying and forming a part of the same.

This invention relates to that class of alternating-current motors in which the field-magnets are energized by coils connected up in two circuits derived from the same source and having different degrees of self-induction, whereby the currents in one circuit or branch are retarded more than in the other, with the result of producing a progressive advance or rotation of the points of maximum magnetic effect in the field that maintains the armature in rotation. In motors of this kind I have employed, among other means, a self-induction coil in one circuit and a dead-resistance in the other, or I have secured the same result by the special character of the winding of the two circuits, and in still another instance I have so constructed the motor that the retarded-current coils were nearly inclosed by iron, whereby the self-induction of such coils was very greatly increased.

The invention subject of this application is an improvement on this last-named plan.

In carrying out the invention I construct a field-magnet having two sets of poles or inwardly-projecting cores and placed side by side, so as practically to form two fields of force and alternately disposed—that is to say, with the poles of one set or field opposite the spaces between the other. I then connect the free ends of one set of poles by means of laminated-iron bands or bridge-pieces of considerably smaller cross-section than the cores themselves, whereby the cores will all form parts of complete magnetic circuits. When the coils on each set of magnets are connected in multiple circuits or branches from a source of alternating currents, electro-motive forces are set up in or impressed upon each circuit simultaneously; but the coils on the magnetically bridged or shunted cores will have, by reason of the closed magnetic circuits, a high self-induction, which retards the current, permitting at the beginning of each impulse but little current to pass. On the other hand, no such opposition being encountered in the other set of coils, the current passes freely through them, magnetizing the poles on which they are wound. As soon, however, as the laminated bridges become saturated and incapable of carrying all the lines of force, which the rising electro-motive force, and consequently increased current, produce, free poles are developed at the ends of the cores, which, acting in conjunction with the others, produce rotation of the armature.

The construction in detail by which this invention is illustrated is shown in the accompanying drawings.

Figure 1 is a view in side elevation of a motor embodying the invention. Fig. 2 is a vertical cross-section of the same.

A is the frame of the motor, which is preferably built up of sheets of iron punched out to the desired shape and bolted together with insulation of a proper character between the sheets. When complete, the frame makes a field-magnet with inwardly-projecting pole-pieces B and C. To adapt them to the requirements of this particular case these pole-pieces are out of line with one another, those marked B surrounding one end of the armature and the others, as C, the opposite end, and they are disposed alternately—that is to say, the pole-pieces of one set occur in line with the spaces between those of the other sets.

The armature D is of cylindrical form, and is also laminated in the usual way and is wound longitudinally with coils closed upon themselves. The pole-pieces C are connected or shunted by bridge-pieces E. These may be made independently and attached to the pole-pieces, or they may be parts of the forms or blanks stamped or punched out of sheet-iron. Their size or mass is determined by various conditions, such as the strength of the current to be employed, the mass or size of the cores to which they are applied, and other well-understood conditions.

Coils F surround the pole-pieces B, and other coils G are wound on the pole-pieces C.

These coils are connected in series in two circuits, which are braches of a circuit from a generator of alternating currents, and they may be so wound, or the respective circuits in which they are included may be so arranged, that the circuit of coils G will have independently of the particular construction herein described a higher self-induction than the other circuit or branch.

The function of the shunts or bridges E is that they shall form with the cores C a closed magnetic circuit for a current up to a predetermined strength, so that when saturated by such current and unable to carry more lines of force than such a current produces they will to no further appreciable extent interfere with the development by a stronger current of free magnetic poles at the ends of the cores C.

In such a motor the current is so retarded in the coils G and the manifestation of the free magnetism in the poles C is delayed beyond the period of maximum magnetic effect in poles B that a strong torque is produced and the motor operates with approximately the power developed in a motor of this kind energized by independently-generated currents differing by a full-quarter phase.

What I claim in this application is

1. In an alternating-current motor having two sets or series of pole-pieces, the combination, with one of such sets or series, of magnetic shunts or bridges connecting their free ends, as herein set forth.

2. In an alternating-current motor having two sets or series of pole-pieces energized by coils in independent circuits from the same source, the combination, with one of the sets or series of pole-pieces, of magnetic shunts or bridges connecting their free ends, as described.

3. In an alternating-current motor having a laminated or subdivided field-magnet provided with two sets or series of cores or pole-pieces, the combination, with such pole-pieces, of energizing-coils connected, respectively, in two circuits derived from the same source of alternating currents and laminated or subdivided iron shunts or bridges of smaller cross-section than the pole-pieces and joining the free ends of all the cores or pole-pieces of one set to form closed magnetic circuits, as set forth.

4. In an alternating-current motor, the combination, with a set or series of field-poles and energizing-coils wound thereon, of an intermediate set of pole-pieces forming portions of closed magnetic circuits and coils thereon in a circuit derived from the same source of alternating currents as the other, as set forth.

NIKOLA TESLA.

Witnesses:
ROBT. F. GAYLORD,
PARKER W. PAGE.

P-122

(No Model.)

N. TESLA.

ALTERNATING CURRENT MOTOR.

No. 433,701 Patented Aug. 5, 1890.

Fig. 1

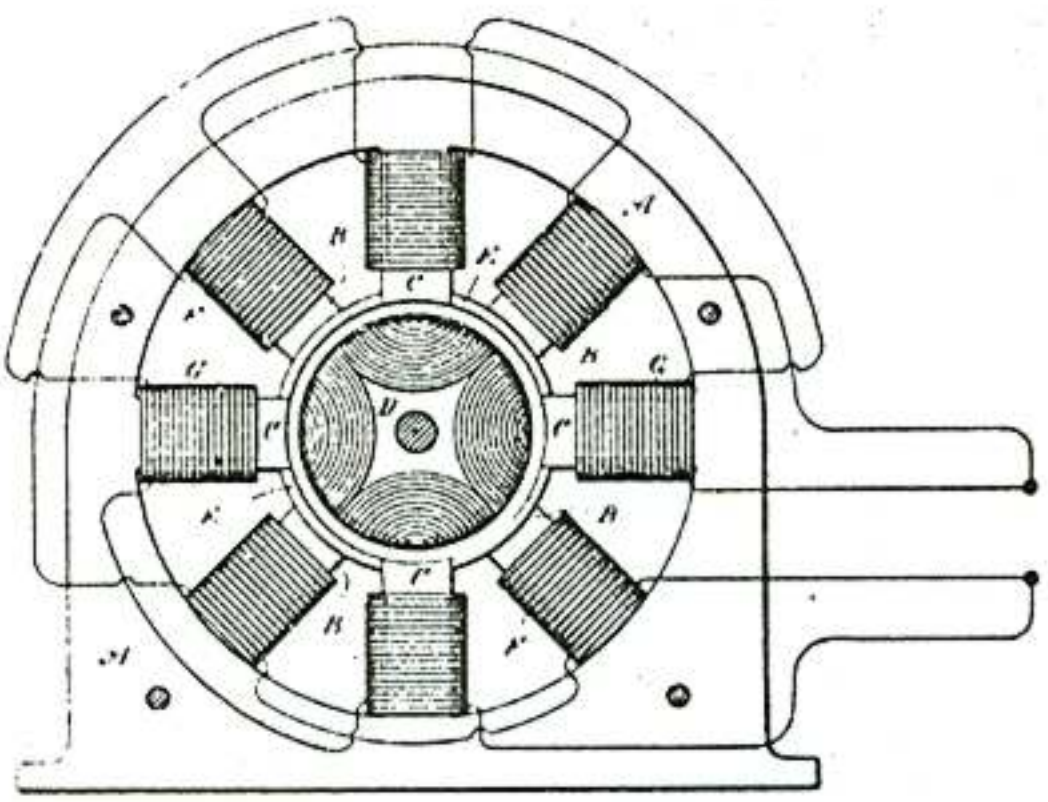

Fig. 2

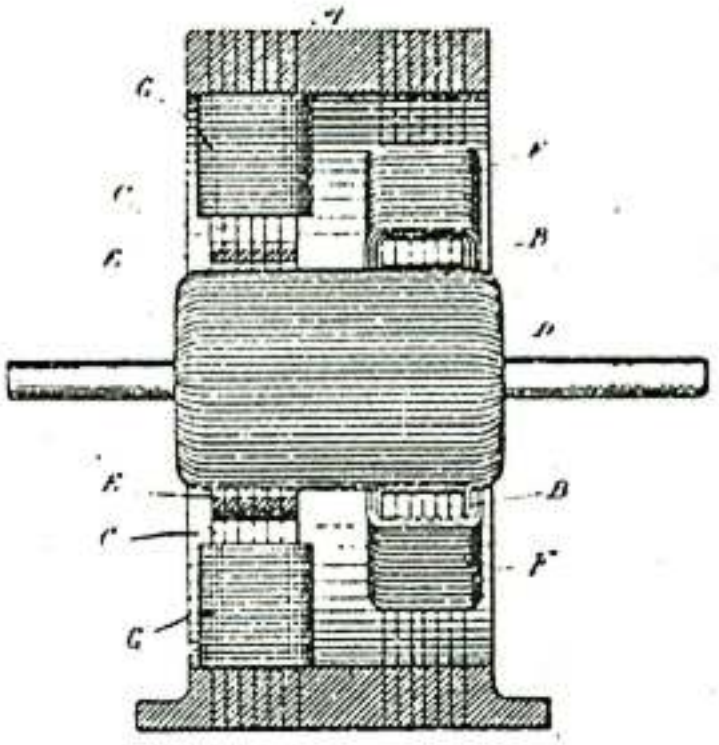

Witnesses.
Raphael Netter
Ernest Hopkinson

Inventor
Nikola Tesla
by
Duncan Curtis & Page
Attorneys.

UNITED STATES PATENT OFFICE.

NIKOLA TESLA, OF NEW YORK, N. Y., ASSIGNOR TO THE TESLA ELECTRIC COMPANY, OF SAME PLACE.

ELECTRICAL TRANSFORMER OR INDUCTION DEVICE.

SPECIFICATION forming part of Letters Patent No. 433,702, dated August 5, 1890.

Application filed March 26, 1890. Serial No. 345,390. (No model.)

To all whom it may concern:

Be it known that I, NIKOLA TESLA, a subject of the Emperor of Austria-Hungary, from Smiljan, Lika, border country of Austria-Hungary, residing at New York, in the county and State of New York, have invented certain new and useful Improvements in Electrical Transformers or Induction Devices, of which the following is a specification, reference being had to the drawings accompanying and forming a part of the same.

This invention is an improvement in electrical transformers or converters, and has for its main objects the provision of means for securing, first, a phase difference between the primary and secondary currents adapted to the operation of my alternating-current motors and other like purposes, and, second, a constant current for all loads imposed upon the secondary.

In transformers as constructed now and heretofore it will be found that the electro-motive force of the secondary very nearly coincides with that of the primary, being, however, of opposite sign. At the same time the currents, both primary and secondary, lag behind their respective electro-motive forces; but as this lag is practically or nearly the same in the case of each it follows that the maximum and minimum of the primary and secondary currents will nearly coincide, but differ in sign or direction, provided the secondary be not loaded or if it contain devices having the property of self-induction. On the other hand, the lag of the primary behind the impressed electro-motive force may be diminished by loading the secondary with a non-inductive or dead resistance—such as incandescent lamps—whereby the time interval between the maximum or the minimum periods of the primary and secondary currents is increased. This time interval, however, is limited, and the results obtained by phase difference in the operation of such devices as my alternating-current motors can only be approximately realized by such means of producing or securing this difference, as above indicated, for it is desirable in such cases that there should exist between the primary and secondary currents, or those which, however produced, pass through the two circuits of the motor, a difference of phase of ninety degrees; or, in other words, the current in one circuit should be maximum when that in the other circuit is minimum. To more perfectly attain to this condition I obtain or secure an increased retardation of the secondary current in the following manner: Instead of bringing the primary and secondary coils or circuits of a transformer into the closest possible relations, as has hitherto been done, I protect in a measure the secondary from the inductive action or effect of the primary by surrounding either the primary or the secondary with a comparatively-thin magnetic shield or screen. Under these conditions or circumstances, as long as the primary current has a small value, the shield protects the secondary; but as soon as the primary current has reached a certain strength, which is arbitrarily determined, the protecting magnetic shield becomes saturated and the inductive action upon the secondary begins. It results, therefore, that the secondary current begins to flow at a certain fraction of a period later than it would without the interposed shield, and since this retardation may be obtained without necessarily retarding the primary current also, an additional lag is secured, and the time interval between the maximum or minimum periods of the primary and secondary currents is increased. I have further discovered that such a transformer may, by properly proportioning its several elements and determining in a manner well understood the proper relations between the primary and secondary windings, the thickness of the magnetic shield, and other conditions, be constructed to yield a constant current at all loads. No precise rules can be given for the specific construction and proportions for securing the best results, as this is a matter determined by experiment and calculation in particular cases; but the general plan of construction which I have described will be found under all conditions to conduce to the attainment of this result.

In the accompanying drawings I have illustrated the construction above set forth.

Figure 1 is a cross-section of a transformer embodying my improvement. Fig. 2 is a simi-

lar view of a modified form of transformer, showing diagrammatically the manner of using the same.

A A is the main core of the transformer, composed of a ring of soft annealed and insulated or oxidized iron wire. Upon this core is wound the secondary circuit or coil B B. This latter is then covered with a layer or layers of annealed and insulated iron wires C C, wound in a direction at right angles to said secondary coil. Over the whole is then wound the primary coil or wire D D. From the nature of this construction it will soon be obvious that as long as the shield formed by the wires C is below magnetic saturation the secondary coil or circuit is effectually protected or shielded from the inductive influence of the primary, although I would state that on open circuit it may exhibit some electro-motive force. When the strength of the primary reaches a certain value, the shield C, becoming saturated, ceases to protect the secondary from inductive action, and current is in consequence developed therein. For similar reasons, when the primary current weakens, the weakening of the secondary is retarded to the same or approximately the same extent.

The specific construction of the transformer is largely immaterial. In Fig. 2, for example, the core A is built up of thin insulated iron plates or disks. The primary circuit D is wound next the core A. Over this is applied the shield C, which in this case is made up of thin strips or plates of iron properly insulated and surrounding the primary, forming a closed magnetic circuit. The secondary B is wound over the shield C. In Fig. 2, also, E is a source of alternating or rapidly changing currents. The primary of the transformer is connected with the circuit of the generator.

F is a two circuit alternating-current motor, one of the circuits being connected with the main circuit from the source E, and the other being supplied with currents from the secondary of the transformer.

Having now described my invention, what I claim is—

1. In an electrical transformer or induction device, the combination, with the main magnetic core and the primary and secondary coils or circuits, of a magnetic shield or screen interposed between said coils, as herein set forth.

2. In an electrical transformer or inductive device, the combination, with the magnetic core and the primary and secondary coils or circuits, of a magnetic shield or screen surrounding one of said coils only, as set forth.

3. In an electrical transformer or induction device, the combination, with the magnetic core and the primary and secondary coils wound thereon, of a magnetic shield or screen wound on or built up around one only of said coils, as described.

4. In an electrical transformer or induction device, the combination, with a main laminated magnetic core and primary and secondary coils thereon, of a subdivided or laminated magnetic shield or screen interposed between the coils, as set forth.

5. In an electrical transformer, the combination, with a magnetic core and primary and secondary coils wound thereon, of a magnetic shield or screen interposed between said coils and surrounding one of them and adapted to be or capable of being magnetically saturated by a predetermined current strength below the maximum in the primary, as set forth

NIKOLA TESLA.

Witnesses:
ROBT. F GAYLORD.
PARKER W PAGE

(No Model.)

N. TESLA

ELECTRICAL TRANSFORMER OR INDUCTION DEVICE.

No. 433,702. Patented Aug. 5, 1890.

Fig. 1

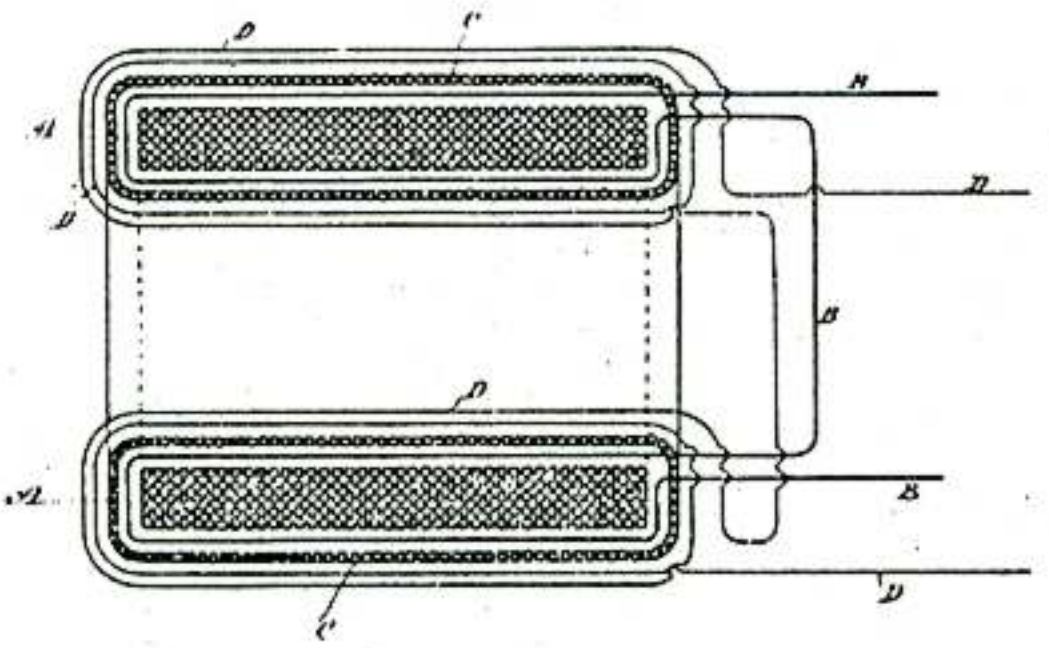

Fig. 2

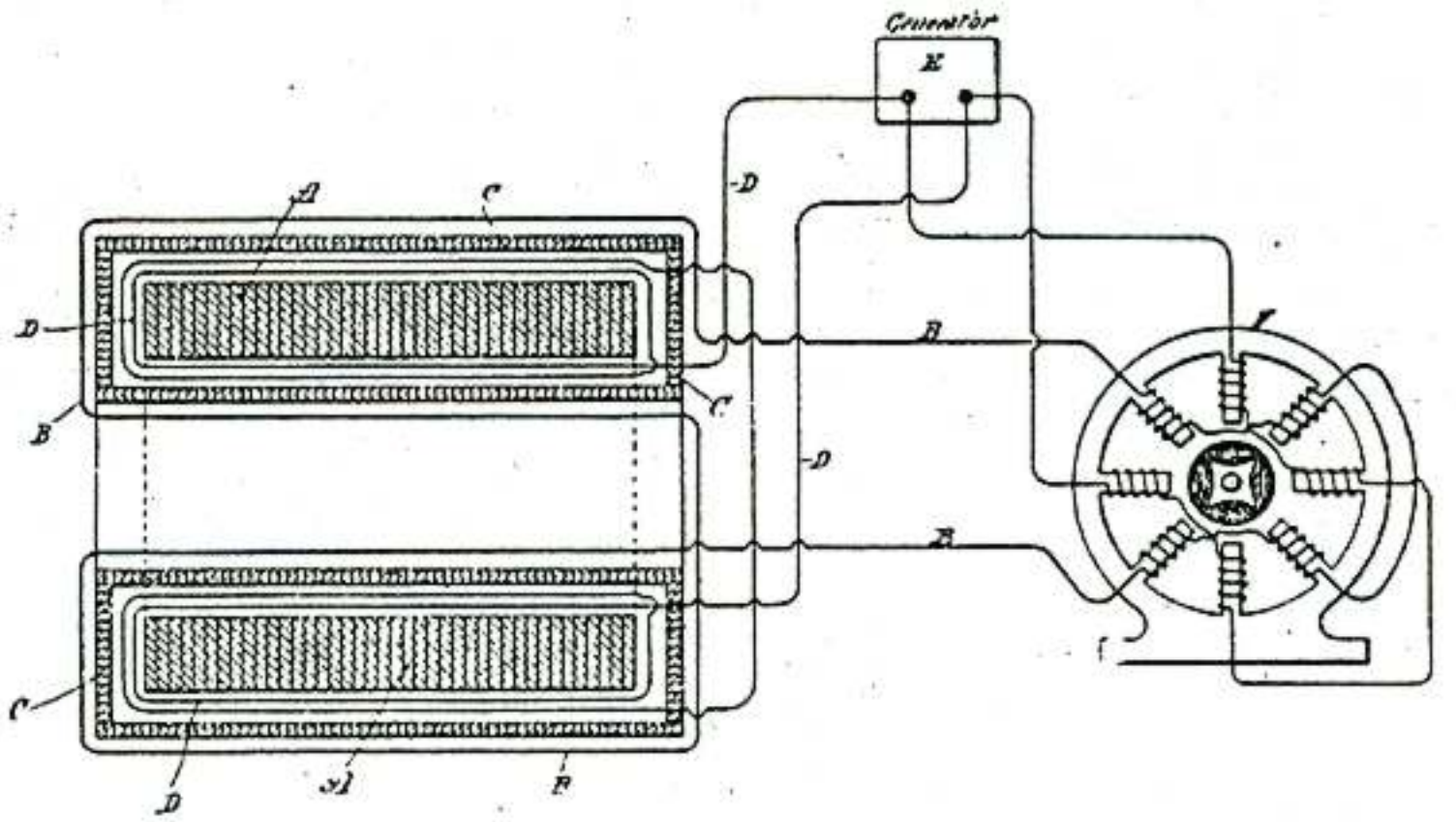

Witnesses:
Raphael Netter
Ernest Hopkinson

Inventor.
Nikola Tesla
by
Duncan Curtis & Page
Attorneys.

UNITED STATES PATENT OFFICE.

NIKOLA TESLA, OF NEW YORK, N. Y., ASSIGNOR TO THE TESLA ELECTRIC COMPANY, OF SAME PLACE.

ELECTRO-MAGNETIC MOTOR.

SPECIFICATION forming part of Letters Patent No. 433,703, dated August 5, 1890.

Application filed April 4, 1890. Serial No. 346,603. (No model.)

To all whom it may concern.

Be it known that I, NIKOLA TESLA, a subject of the Emperor of Austria-Hungary, from Smiljan, Lika, border country of Austria-Hungary, residing at New York, in the county and State of New York, have invented certain new and useful Improvements in Electro-Magnetic Motors, of which the following is a specification, reference being had to the drawings accompanying and forming a part of the same.

This invention is an improvement in alternating-current motors, and has for its general object to produce a single-circuit alternating-current torque-motor of economical and simple construction.

The nature of the invention will be understood from the following statement.

It is well known that if a magnetic core, even if laminated or subdivided, be wound with an insulated coil and a current of electricity directed through the coil the magnetization of the entire core does not immediately ensue, the magnetizing effect not being exhibited in all parts simultaneously. This I attribute to the fact that the action of the current is to energize first those laminæ or parts of the core nearest the surface and adjacent to the exciting-coil, and from thence the action progresses toward the interior. A certain interval of time therefore elapses between the manifestation of magnetism in the external and the internal sections or layers of the core. If the core be thin or of small mass, this effect may be inappreciable; but in the case of a thick core, or even of a comparatively thin one, if the number of alternation or rate of change of the current strength be very great the time interval occurring between the manifestations of magnetism in the interior of the core and in those parts adjacent to the coil is more marked, and in the construction of such apparatus as motors which are designed to be run by alternating or equivalent currents—such as pulsating or undulating currents generally—I have found it desirable and even necessary to give due consideration to this phenomenon and to make special provisions in order to obviate its consequences. The specific object of my present invention is to take advantage of this action or effect, and by rendering it more pronounced to utilize it in the operation of motors in general. This object I attain by constructing a field-magnet in which the parts of the core or cores that exhibit at different intervals of time the magnetic effect imparted to them by alternating or equivalent currents in an energizing coil or coils are so placed with relation to a rotating armature as to exert thereon their attractive effect successively in the order of their magnetization. By this means I secure a similar result to that which I have heretofore attained in other forms or types of motor in which by means of one or more alternating currents I have produced a rotation or progression of the magnetic poles or points of maximum attraction of the field of force.

In the drawings I have shown a simple form of motor, which will serve to demonstrate the principle of the mode of operation, which I have above described in general terms.

Figure 1 is a side elevation of such motor. Fig. 2 is a side elevation of a more practicable and efficient embodiment of the invention. Fig. 3 is a central vertical section of the same in the plane of the axis of rotation.

Referring to Fig. 1, let X represent a large iron core, which may be composed of a number of sheets or laminæ of soft iron or steel. Surrounding this core is a coil Y, which is connected with a source E of rapidly-varying currents. Let us consider now the magnetic conditions existing in this core at any point, as *b*, at or near the center, and any other point, as *a*, nearer the surface. When a current-impulse is started in the magnetizing-coil Y, the section or part at *a*, being close to the coil, is immediately energized, while the section or part at *b*, which, to use a convenient expression, is "protected" by the intervening sections or layers between *a* and *b*, does not at once exhibit its magnetism. However, as the magnetization of *a* increases, *b* becomes also affected, reaching finally its maximum strength some time later than *a*. Upon the weakening of the current the magnetization of *a* first diminishes, while *b* still exhibits its maximum strength; but the continued weakening of *a* is attended by a subsequent weakening of *b*. Assuming the cur-

ront to be an alternating one, *a* will now be reversed, while *b* still continues of the first-imparted polarity. This action continues the magnetic condition of *b*, following that of *a* in the manner above described. If an armature—for instance, a simple disk F, mounted to rotate freely on an axis—be brought into proximity to the core, a movement of rotation will be imparted to the disk, the direction depending upon its position relatively to the core, the tendency being to turn the portion of the disk nearest to the core from *a* to *b*, as indicated in Fig. 1. This action or principle of operation I have embodied in a practicable form of motor, which is illustrated in Fig. 2. Let A in said figure represent a circular frame of iron, from diametrically-opposite points of the interior of which the cores project. Each core is composed of three main parts B, B, and C, and they are similarly formed with a straight portion or body *e*, around which the energizing-coil is wound, a curved arm or extension *c*, and an inwardly-projecting pole or end *d*. Each core is made up of two parts B B, with their polar extensions reaching in one direction and a part C between the other two and with its polar extension reaching in the opposite direction. In order to lessen in the cores the circulation of currents induced therein, the several sections are insulated from one another in the manner usually followed in such cases. These cores are wound with coils D, which are connected in the same circuit, either in parallel or series, and supplied with an alternating or a pulsating current, preferably the former, by a generator E, represented diagrammatically. Between the cores or their polar extensions is mounted a cylindrical or similar armature F, wound with magnetizing-coils G, that are closed upon themselves, as is usual in motors of this general class.

The operation of this motor is as follows: When a current impulse or alternation is directed through the coils D, the sections B B of the cores, being on the surface and in close proximity to the coils, are immediately energized. The sections C, on the other hand, are protected from the magnetizing influence of the coil by the interposed layers of iron B B. As the magnetism of B B increases, however, the sections C are also energized; but they do not attain their maximum strength until a certain time subsequent to the exhibition by the sections B B of their maximum. Upon the weakening of the current the magnetic strength of B B first diminishes, while the sections C have still their maximum strength; but as B B continue to weaken the interior sections are similarly weakened. B B may then begin to exhibit an opposite polarity, which is followed later by a similar change on C, and this action continues. B B and C may therefore be considered as separate field-magnets, being extended so as to act on the armature in the most efficient positions, and the effect is similar to that in my other forms of motor—viz., a rotation or progression of the maximum points of the field of force. Any armature—such, for instance, as a disk—mounted in this field would rotate from the pole first to exhibit its magnetism to that which exhibits it later.

It is evident that the principle herein described may be carried out in conjunction with other means, such as I have elsewhere set forth, for securing a more favorable or efficient action of the motor. For example, the polar extensions of the sections C may be wound or surrounded by closed coils L, as indicated by dotted lines in Fig. 2. The effect of these coils will be to still more effectively retard the magnetization of the polar extensions of C.

I do not wish to be understood as limiting myself to any particular construction of this form of motor, as the same principle of action or operation may be carried out in a great variety of forms.

What I claim is—

1. In an alternating-current motor, the combination, with an energizing-coil and a core composed of two parts, one protected from magnetization by the other interposed between it and the coil, of an armature mounted with the influence of the fields of force produced by said parts, as set forth.

2. The combination, in an alternating-current motor, of a rotating armature, a field-magnet composed of a coil and a core with two sections in proximity to the coil and an inner section between the same, the sections being formed or provided with polar projections extending in opposite directions over or around the armature, as set forth.

3. The combination, in an alternating-current motor, of a rotating armature, a frame and field-magnets thereon, each composed of an energizing-coil wound around a core made up of outer and inner or protected magnetic sections, each of which is formed or provided with independent laterally-extended pole pieces or projections, as herein described.

NIKOLA TESLA.

Witnesses:
ROBT. F. GAYLORD,
PARKER W. PAGE.

P-128

(No Model.)

N TESLA

ELECTRO MAGNETIC MOTOR

No 433,703 Patented Aug. 5, 1890.

Fig. 1

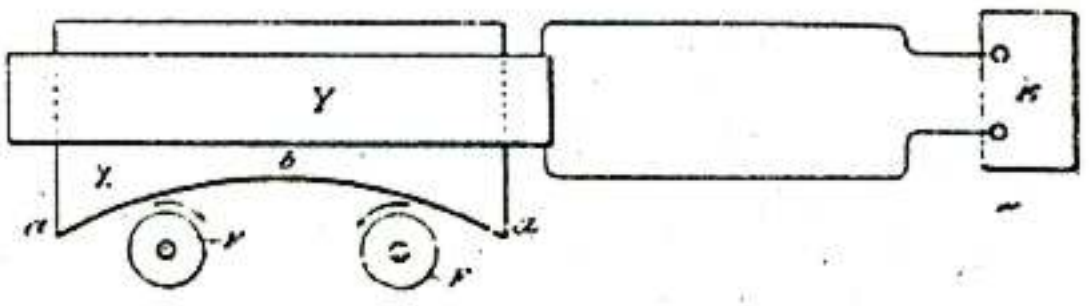

Fig 2

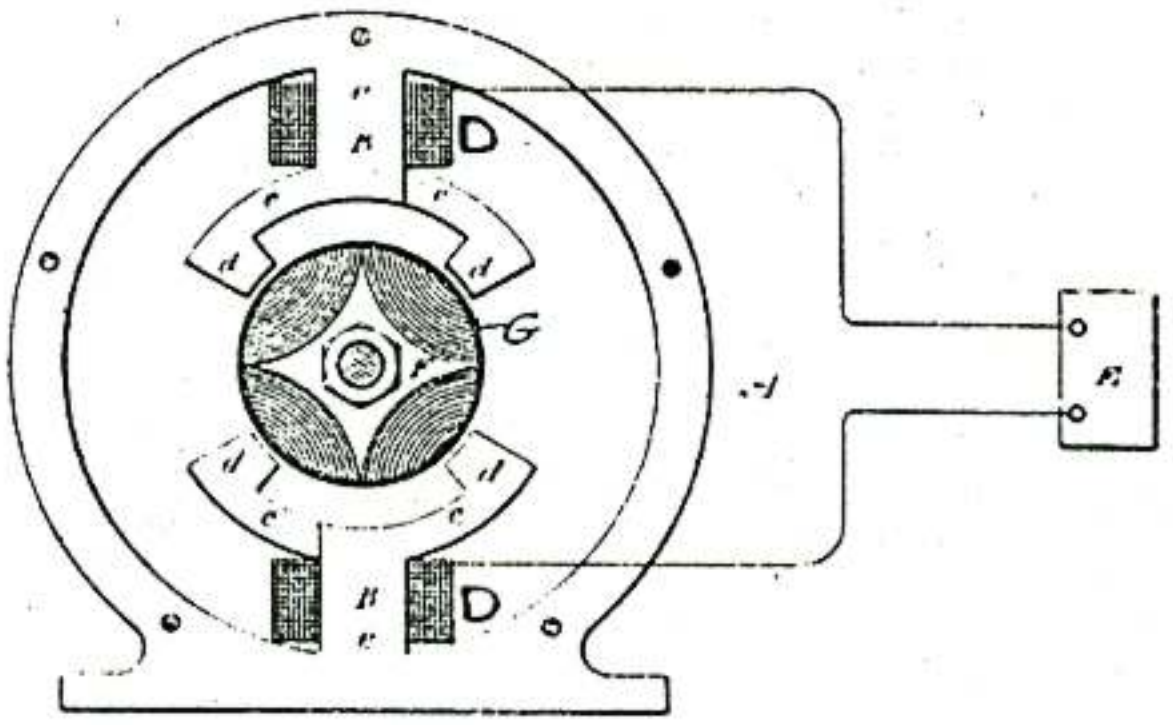

Fig. 3

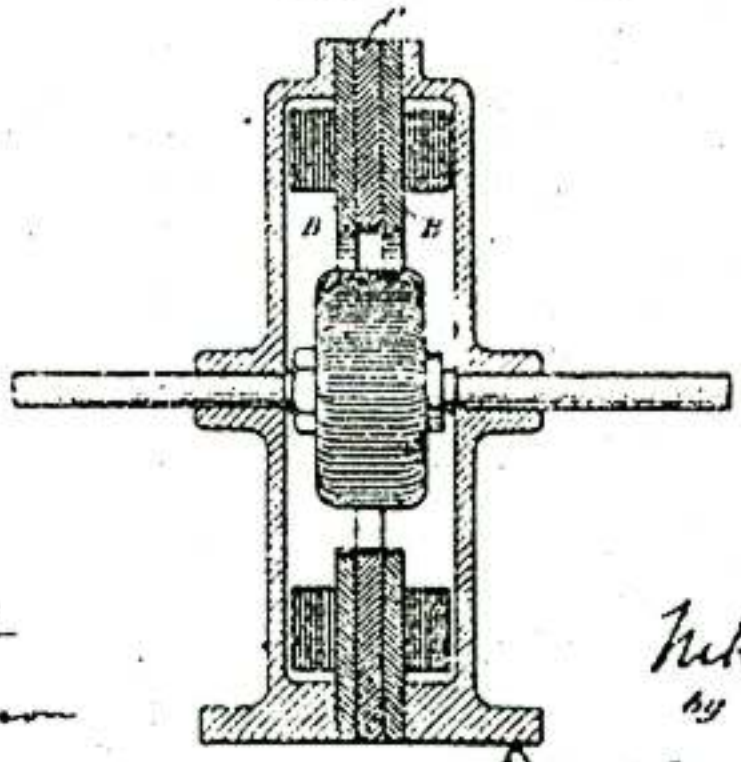

Witnesses:
Raphael Netter
Ernest Hopkinson

Inventor
Nikola Tesla
by
Duncan Curtis & Page
Attorneys.

UNITED STATES PATENT OFFICE.

NIKOLA TESLA, OF NEW YORK, N. Y

ALTERNATING-ELECTRIC-CURRENT GENERATOR.

SPECIFICATION forming part of Letters Patent No. 447,921, dated March 10, 1891.

Application filed November 16, 1890. Serial No. 371,554. (No model.)

To all whom it may concern:

Be it known that I, NIKOLA TESLA, a subject of the Emperor of Austria, from Smiljan, Lika, border country of Austria-Hungary, residing at New York, in the county and State of New York, have invented certain new and useful Improvements in Alternating-Current Machines, of which the following is a specification, reference being had to the accompanying drawings.

In the systems of distribution of electrical energy from alternating-current generators in present use the generators give ordinarily from one to three hundred alternations of current per second. I have recognized and demonstrated in practice that it is of great advantage, on many accounts, to employ in such systems generators capable of producing a very much greater number of alternations per second—say fifteen thousand per second or many more. To produce such a high rate of alternation, it is necessary to construct a machine with a great number of poles or polar projections; but such construction, on this account, in order to be efficient, is rendered difficult. If an armature without polar projections be used, it is not easy to obtain the necessary strength of field, mainly in consequence of the comparatively great leakage of the lines of force from pole to pole. If, on the contrary, an armature-core formed or provided with polar projections be employed, it is evident that a limit is soon reached at which the iron is not economically utilized, being incapable of following without considerable loss the rapid reversals of polarity. To obviate these and other difficulties, I have devised a form of machine embodying the following general features of construction

I provide a field-magnet core made up of two independent parts formed with grooves for the reception of one or more energizing-coils. The energizing coil, or coils, is completely surrounded by the iron core, except on one side, where occurs the opening between the polar faces of the core, which opening is made as narrow as the conditions of the machine will permit. The polar faces of the core of the field are not smooth, but formed with a great many projections or serrations, the points of which in one side or polar face are preferably exactly opposite those in the other. Between the faces so formed I mount or support the armature coil or coils and provide either for rotating the field-magnet or the armature, or both, and I arrange the said armature-coil or conductor so that it will be symmetrically disposed with respect to the field—that is to say, so that when one portion of the conductor is passing through the strongest portion of the field the other portion, which forms the return for the former, is passing through the weakest points or parts of the field. The strongest points of the field, it will be understood, are those between the projections or points on the polar faces, while the weakest points lie midway between them.

A field-magnet, when constructed as above described, produces, when the energizing-coil is traversed by a continuous current, a field of great strength, and one which may be made to vary greatly in intensity at points not farther distant from one another than the eighth of an inch. In a machine thus constructed there is comparatively little of that effect which is known as "magnetic leakage," and there is also but a slight armature reaction. Either the armature-conductor or the field-magnet may be stationary while the other rotates, and as it is often desirable to maintain the conductors stationary and to rotate the field-magnet I have made a special modification of the construction of the machine for this purpose, and with a view in such case of still further simplifying the machine and rendering it more easy to maintain in operation I arrange the armature-conductors and the frame or supports therefor so as to support also a fixed coil or coils for energizing the rotating field magnet thus obviating the employment of all sliding contacts.

In the accompanying drawings I have illustrated the two typical forms of my machine above referred to.

Figure 1 is a vertical central section of the machine, taken on lines x x of Fig. 2; and Fig. 2 is a horizontal section on line y y of Fig. 1. The machine in these two figures is one in which the armature-conductor and the field-coil are stationary while the field-magnet core revolves. Fig. 3 is a vertical central section of a machine embodying the same plan of construction, but having a stationary field-

magnet and rotating armature. Fig. 4 is a diagram illustrating the peculiar configuration of the polar faces and the relation of the armature conductor or conductors thereto.

In Figs. 1 and 2, A A designate two cylindrical castings provided with bracket-arms B B, in which latter are bushings C for the rotating shaft. The conductor in which the currents are induced may be constructed or arranged in various ways; but I prefer to form it in the following manner: I take an annular plate of copper D and by means of a saw or other cutting-tool cut in it radial slots from one edge nearly through to the other, beginning alternately from opposite edges. In this way a continuous zigzag conductor is formed. To the inner edge of this plate are secured two rings of non-magnetic metal E, which are insulated from the copper conductor, but held firmly thereto, as by means of bolts F. Within the rings E is then placed an annular coil G, which is the energizing-coil for the field-magnet. The conductor D and the parts attached thereto are supported by means of the cylindrical shell or casting A A, the two parts of which are brought together and clamped by bolts F' to the outer edge of the conductor D. The conductor D is also insulated from the shell A.

The core for the field-magnet is built up of two circular parts H H, formed with annular grooves I, which, when the two parts are brought together, form a space for the reception of the energizing-coil G. The central parts or hubs of the cores H H are trued off, so as to fit closely against one another, while the outer portions or flanges which form the polar faces J J are reduced somewhat in thickness to make room for the conductor D, and are serrated on their faces or provided in any other convenient way with polar projections. The two parts of the core H H are mounted on and fixed to the shaft K, and are bound together by bolts L. The number of serrations in the polar faces is arbitrary; but there must exist between them and the radial portions of the conductor D a certain relation, which will be understood by reference to Fig. 4, in which N N represent the projections or points on one face of the core of the field, and S S the points of the other face. The conductor D is shown in this figure in section, a a' designating the radial portions of the conductor, and b the insulating-divisions between the same. The relative width of the parts a a' and the space between any two adjacent points N N or S S is such that when the radial portions a of the conductor are passing between the opposite points N S, where the field is strongest, the intermediate radial portions a' are passing through the widest spaces midway between such points and where the field is weakest. Since the core on one side is of opposite polarity to the part facing it, all the points or projections of one polar face will be of opposite polarity to those of the other face. Hence, although the space between any two adjacent points on the same face may be extremely small, there will be no leakage of the magnetic lines between any two points of the same name; but the lines of force will pass across from one set of points to the other. The construction followed obviates to a great degree the distortion of the magnetic lines by the action of the current in the conductor D, in which it will be observed the current is flowing at any given time from the center toward the periphery in one set of radial parts a and in the opposite direction in the adjacent parts a'.

In order to connect the energizing-coil G with a source of continuous current, I have found it convenient to utilize two adjacent radial portions of the conductor D for connecting the terminals of the coil G with two binding-posts M. For this purpose the plate D is cut entirely through, as shown, and the break thus made is bridged over by a short conductor c.

At any convenient point the plate D is cut through to form two terminals d, which are connected to binding-posts N.

The core H H, when rotated by the driving-pulley P, generates in the conductors D an alternating current, which is taken off from the binding-posts N. It will be observed that from the nature of the construction described this machine is capable of producing an alternating current of an enormously high rate of alternations.

When it is desired to rotate the conductor between the faces of a stationary field-magnet, I adopt the construction shown in Fig. 3. The conductor D in this case is or may be made in substantially the same manner as above described by slotting an annular conducting-plate and supporting it between two heads O, held together by bolts o and fixed to the driving-shaft K. The inner edge of the plate or conductor D is preferably flanged to secure a firmer union between it and the heads O. It is insulated from said head. The field-magnet in this case consists of two annular parts H H, provided with annular grooves I for the reception of the coils. The flanges or faces surrounding the annular groove are brought together, while the inner flanges are serrated, as in the previous case, and form the polar faces. The two parts H H are formed with a base R, upon which the machine rests.

S S are non-magnetic bushings secured or set in the central opening of the cores.

The conductor D is cut entirely through at one point to form terminals, from which insulated conductors T are led through the shaft to collecting-rings V

What I claim is—

1. The combination, in an annular field of force formed by opposing polar faces with radial grooves or serrations and with said poles, of a connected series of radial conductors so disposed with relation to the serrations that while one portion of the radial conduct-

ors is passing between the strongest parts of the field, or the points where the two poles most nearly approach, the adjacent or intermediate conductors will pass through the weakest parts of the field, or the points where the two poles are most remote, as set forth.

2. The combination, with a connected series of radial conductors forming an annular coil, of a stationary two-part supporting-frame clamped to and insulated from the outer ends of said conductors, a ring formed in two parts clamped to the inner ends of the same, an energizing-coil contained in said ring, and a field-core made in two parts and inclosing said energizing-coil and presenting annular polar faces to the series of radial conductors, as described.

3. The combination, with the annular conducting-plate slotted to form a connected series of radial conductors, a sectional supporting-frame secured to and insulated from the outer edge of the slotted plate, a sectional ring secured to and insulated from the inner edge of said plate, a hollow energizing-coil contained in said ring, and a field-core composed of two parts bolted together and recessed to inclose the energizing-coil, said cores being mounted in a rotating shaft, as set forth.

4. The combination, with two annular polar faces of opposite magnetic polarity and formed with opposite points, projections, or serrations, of a conductor turned back upon itself in substantially radial convolutions and mounted in the annular field, whereby a rotation of the field or said conductor will develop therein an alternating current, as set forth.

5. The combination, with a polar face of given polarity formed with grooves or serrations, of a polar face of opposite polarity with corresponding grooves or serrations, the two polar faces being placed with their grooves opposite to each other, and a conductor or coil mounted between said faces with the capability of movement across the lines of force in a direction at right angles to that of the grooves or serrations, as set forth.

6. In a magneto-electric machine, the combination of a sectional frame, a field-magnet core composed of two connected parts, a rotating shaft on which said core is mounted, a conductor in which currents are to be induced, the convolutions of which are radially disposed between the polar faces of the field-core and secured to and supported by the frame, and an energizing-coil for the field-core supported by the induced-current coil and contained in an annular recess formed by grooves in the faces of the two sections of the field-core.

7. The combination, with opposing field-magnet poles formed with projections or serrations in their faces, the highest parts or prominences of one face being opposite to those of the other, of a conductor the convolutions of which are adapted to pass at right angles through the magnetic lines between the opposing prominences, as set forth.

8. The combination, with a rotating field-magnet core having two opposing and annular polar faces with radial grooves or serrations therein systematically disposed, so that the highest parts or prominences of one face lie opposite to those of the other, of a stationary conductor with radial convolutions and mounted between the polar faces, as set forth.

NIKOLA TESLA.

Witnesses:
ROBT. F. GAYLORD,
PARKER N. PAGE.

P-132

(No Model.) 2 Sheets—Sheet 1.

N. TESLA.

ALTERNATING ELECTRIC CURRENT GENERATOR.

No. 447,921. Patented Mar. 10, 1891.

Fig. 1

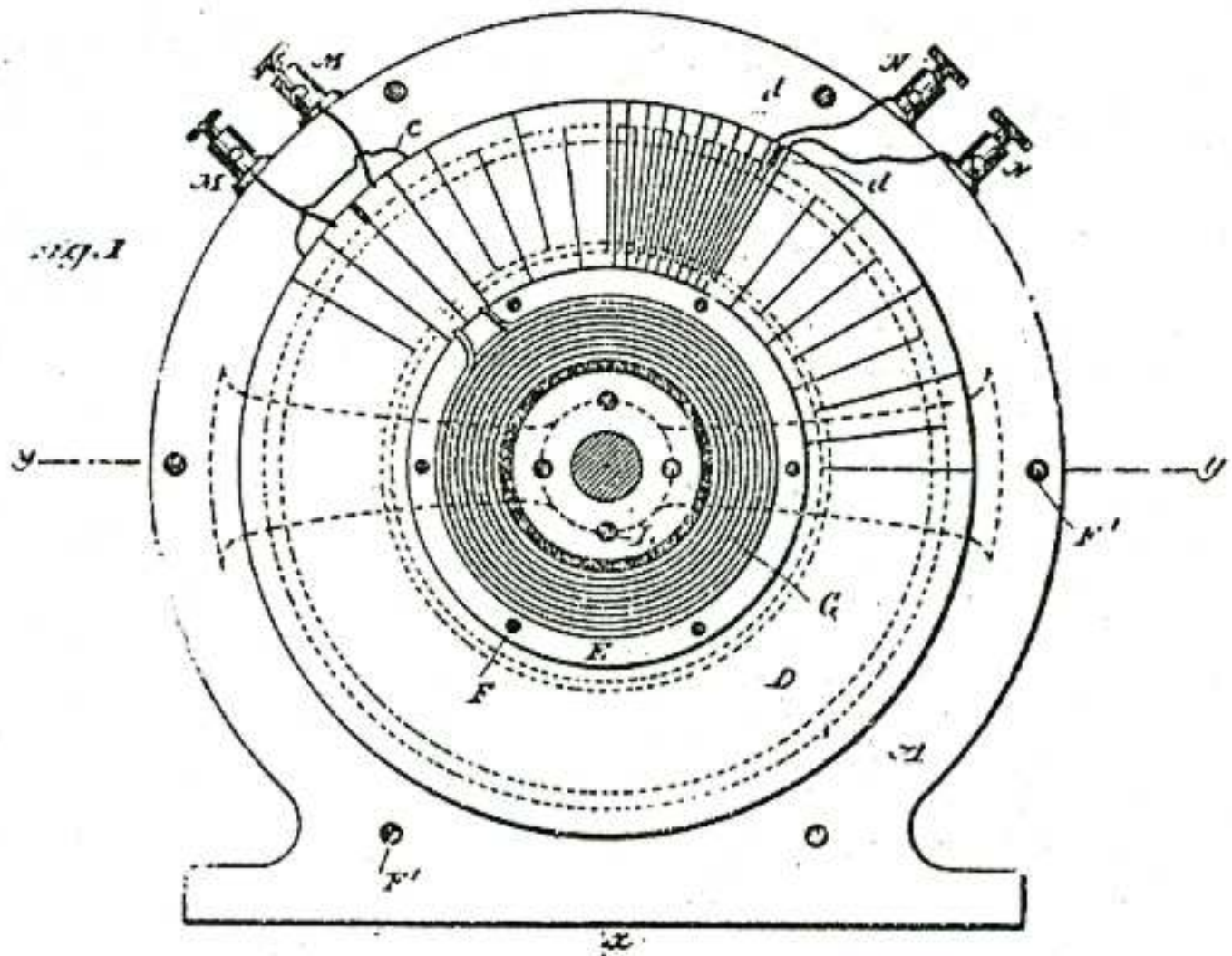

Fig. 2

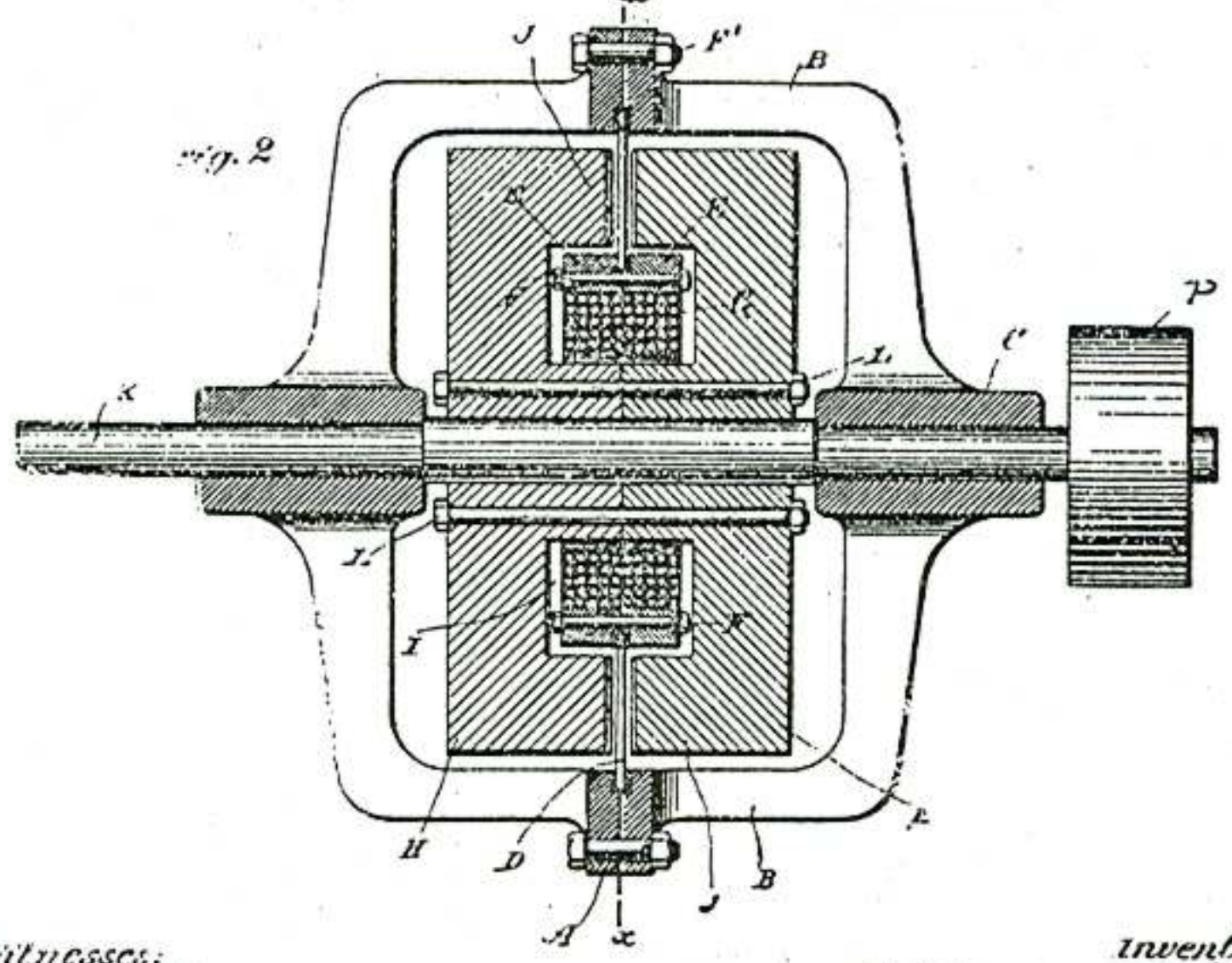

Witnesses:
Ernest Hopkinson
Frank B. Murphy.

Inventor
Nikola Tesla
by
Duncan & Page
Attorneys.

(No Model.) 2 Sheets—Sheet 2

N. TESLA.

ALTERNATING ELECTRIC CURRENT GENERATOR.

No. 447,921. Patented Mar. 10, 1891.

Fig. 3

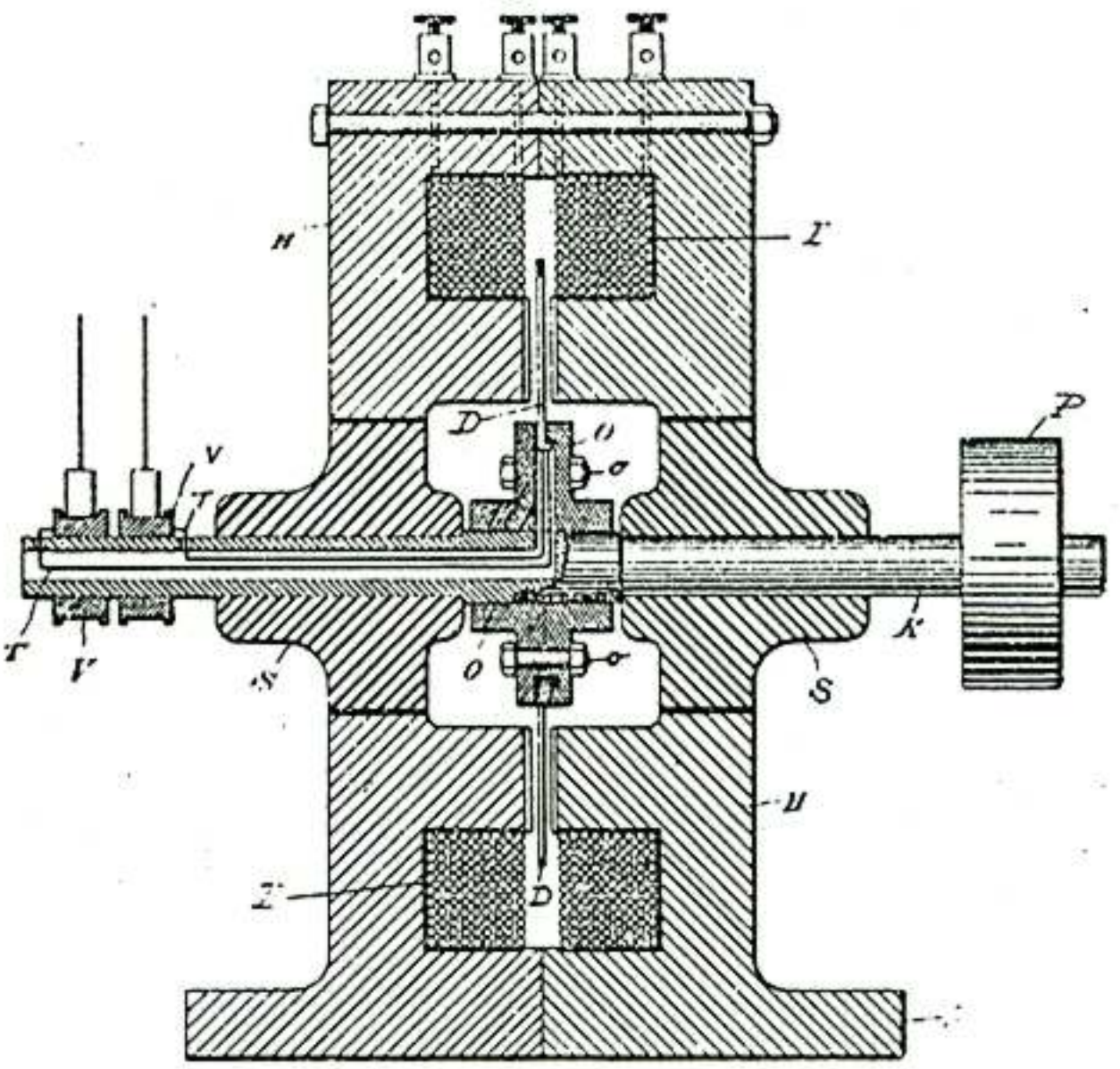

Fig. 4

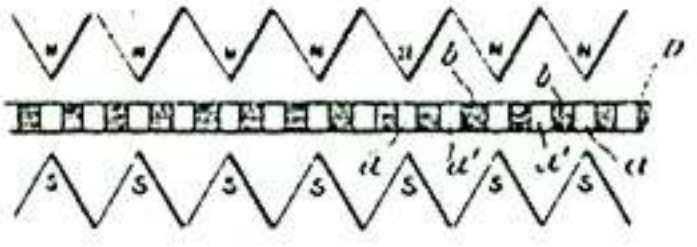

Witnesses.
Ernest Hopkinson
Frank B. Murphy.

Inventor
Nikola Tesla
by
Duncan & Page
Attorneys.

UNITED STATES PATENT OFFICE.

NIKOLA TESLA, OF NEW YORK, N. Y.

ELECTRO-MAGNETIC MOTOR.

SPECIFICATION forming part of Letters Patent No. 455,067, dated June 30, 1891.

Application filed January 27, 1891. Serial No. 379,251. (No model.)

To all whom it may concern:

Be it known that I, NIKOLA TESLA, a subject of the Emperor of Austria, from Smiljan, Lika, border country of Austria-Hungary, and residing at New York, in the county and State of New York, have invented certain new and useful Improvements in Electro-Magnetic Motors, of which the following is a specification, reference being had to the accompanying drawings.

The subject of my present invention is an improvement primarily designed for application to alternating-current motors of the special type invented by me, and of which the operation is due to the action of alternating currents differing in phase and directed through or developed in independent energizing-circuits in the motor, and causing a shifting or rotation of the magnetic poles or their resultant attractive forces upon the rotating element or armature.

My improvements are based upon certain laws governing the action or effects produced by a condenser when connected to an electric circuit through which an alternating or in general an undulating current is made to pass. Some of these effects, and those most important in connection with my invention, are as follows: First, if the terminals or plates of a condenser be connected with two points of a circuit, the potentials of which are made to rise and fall in rapid succession, the condenser allows the passage or, more strictly speaking, the transferrence of a current, although its plates or armatures may be so carefully insulated as to prevent almost completely the passage of a current of unvarying strength or direction and of moderate electro-motive force; second, if a circuit the terminals of which are connected with the plates of the condenser possess a certain self-induction, the condenser will overcome or counteract to a greater or less degree, dependent upon well-understood conditions, the effects of such self-induction; third, if two points of a closed or complete circuit through which a rapidly rising and falling current flows be shunted or bridged by a condenser, a variation in the strength of the currents in the branches and also a difference of phase of the currents therein is produced. These effects I have utilized and applied in a variety of ways in the construction and operation of my motors, as by producing a difference in phase in the two energizing-circuits of an alternating-current motor by connecting the two circuits in derivation and connecting up a condenser in series in one of the circuits; but such applications seem to be obvious to one familiar with my motors and the facts above enumerated.

My present improvements, however, possess certain novel features of practical value and involve a knowledge of facts less generally known. These improvements comprise the use of a condenser or condensers in connection with the induced or armature circuit of a motor and certain details of the construction of such motors. In an alternating-current motor of the type to which I have particularly referred above, or in any other which has an armature coil or circuit closed upon itself, the latter represents not only an inductive resistance, but one which is periodically varying in value, both of which facts complicate and render difficult the attainment of the conditions best suited to the most efficient working of the motors. The most efficient working conditions, in other words, require, first, that for a given inductive effect upon the armature there should be the greatest possible current through the armature or induced coils, and, second, that there should always exist between the currents in the energizing and the induced circuits a given relation of phase. Hence whatever tends to decrease the self-induction and increase the current in the induced circuits will, other things being equal, increase the output and efficiency of the motor, and the same will be true of causes that operate to maintain the mutual attractive effect between the field-magnets and armature at its maximum. I secure these results by connecting with the induced circuit or circuits a condenser, in the manner hereinafter described, and I also, with this purpose in view, construct the motor in a special manner.

Referring to the drawings for a particular description of the invention, Figure 1 is a view, mainly diagrammatic, of an alternating-current motor to which my present invention is applied. Fig. 2 is a central section, in line with the shaft, of a special form of armature-core adapted to the invention. Fig. 3 is a

similar section of a modification of the same. Fig. 4 is one of the sections of the core detached. Fig. 5 is a diagram showing a modified disposition of armature or induced circuits.

The general plan of the invention is illustrated in Fig. 1. A A in this figure represent the frame and field-magnets of an alternating-current motor, the poles or projections of which are wound with coils B and C, forming independent energizing-circuits connected either to the same or to independent sources of alternating currents, as is now well understood, so that the currents flowing through the circuits, respectively, will have a difference of phase. Within the influence of this field is an armature-core D, wound with coils E. In my motors of this description heretofore these coils have been closed upon themselves, or connected in a closed series; but in the present case each coil or the connected series of coils terminates in the opposite plates of a condenser F. For this purpose the ends of the series of coils are brought out through the shaft to collecting-rings G, which are connected to the condenser by contact-brushes H and suitable conductors, the condenser being independent of the machine. The armature-coils are wound or connected in such manner that adjacent coils produce opposite poles.

The action of this motor and the effect of the plan followed in its construction are as follows: The motor being started in operation and the coils of the field-magnets being traversed by alternating currents, currents are induced in the armature-coils by one set of field-coils, as B, and the poles thus established are acted upon by the other set, as C. The armature-coils, however, have necessarily a high self-induction, which opposes the flow of the currents thus set up. The condenser F not only permits the passage or transferrence of these currents, but also counteracts the effects of self-induction, and by a proper adjustment of the capacity of the condenser, the self-induction of the coils, and the periods of the currents the condenser may be made to overcome entirely the effect of the self-induction.

It is preferable on account of the undesirability of using sliding contacts of all kinds to associate the condenser with the armature directly, or make it a part of the armature. In some cases I build up the armature of annular plates K K, held by bolts L between heads M, which are secured to the driving-shaft, and in the hollow space thus formed I place a condenser F, generally by winding the two insulated plates thereof spirally around the shaft. In other cases I utilize the plates of the core itself as the plates of the condenser. For example, in Figs. 3 and 4, N is the driving-shaft, M M are the heads of the armature-core, and K K′ the iron plates of which the core is built up. These plates are insulated from the shaft and from one another, and are held together by rods or bolts L. The bolts pass through a large hole in one plate and a small hole in the one next adjacent, and so on, connecting electrically all of plates K, as one armature of a condenser, and all of plates K′ as the other.

To either of the condensers above described the armature-coils may be connected, as explained by reference to Fig. 1.

In motors in which the armature-coils are closed upon themselves—as, for example, in any form of alternating-current motor in which one armature coil or set of coils is in the position of maximum induction with respect to the field coils or poles, while the other is in the position of minimum induction—the coils are preferably connected in one series, and two points of the circuit thus formed are bridged by a condenser. This is illustrated in Fig. 5, in which E represents one set of armature-coils and E′ the other. Their points of union are joined through a condenser F. It will be observed that in this disposition the self-induction of the two branches E and E′ varies with their position relatively to the field-magnet, and that each branch is alternately the predominating source of the induced current. Hence the effect of the condenser F is twofold. First, it increases the current in each of the branches alternately, and, secondly, it alters the phrase of the currents in the branches, this being the well-known effect which results from such a disposition of a condenser with a circuit, as above described. This effect is favorable to the proper working of the motor, because it increases the flow of current in the armature-circuits due to a given inductive effect, and also because it brings more nearly into coincidence the maximum magnetic effects of the coacting field and armature-poles.

It will be understood, of course, that the causes that contribute to the efficiency of condensers when applied to such uses as above must be given due consideration in determining the practicability and efficiency of the motors. Chief among these is, as is well known, the periodicity of the current, and hence the improvements which I have herein described are more particularly adapted to systems in which a very high rate of alternation or change is maintained.

Although this invention has been illustrated herein in connection with a special form of motor, it will be understood that it is equally applicable to any other alternating-current motor in which there is a closed armature-coil wherein the currents are induced by the action of the field, and, furthermore, I would state that the feature of utilizing the plates or sections of a magnetic core for forming the condenser, I regard as applicable, generally, to other kinds of alternating-current apparatus.

Having now described my invention, what I claim is—

1. In an alternating-current motor, the com-

bination, with the field-magnets and energizing-circuit, of an armature-circuit and a core adapted to be energized by currents induced in its circuit by the currents in the field-circuit, and a condenser connected with the armature-circuit only, as set forth

2. In an alternating-current motor, the combination, with armature-coils in inductive relation to the field and connected in a closed circuit, of a condenser bridging said circuit, as set forth.

3. In an alternating-current motor, the combination, with an armature and two energizing-circuits formed by coils wound thereon in different inductive relations to the field and joined in a continuous or closed series, of a condenser the plates of which are connected, respectively, to the junctions of the circuits or coils as set forth.

4. In an alternating-current motor, the combination, with the induced energizing coil or coils of the armature, of a condenser connected therewith and made a part of the armature or rotating element of the motor.

5. In an alternating-current motor, the combination, with an armature-core composed of insulated conducting-plates alternately connected to form a condenser, of an induced energizing coil or coils wound thereon and connected to the plates or armatures of the said condenser.

6. A magnetic core for alternating-current apparatus, composed of plates or sections insulated from each other and alternately connected to form the two parts or armatures of a condenser.

NIKOLA TESLA.

Witnesses:

PARKER W PAGE,

FRANK B MURPHY.

P-137

(No Model.)

N. TESLA.

ELECTRO MAGNETIC MOTOR.

No. 455,067 Patented June 30, 1891.

Fig. 1

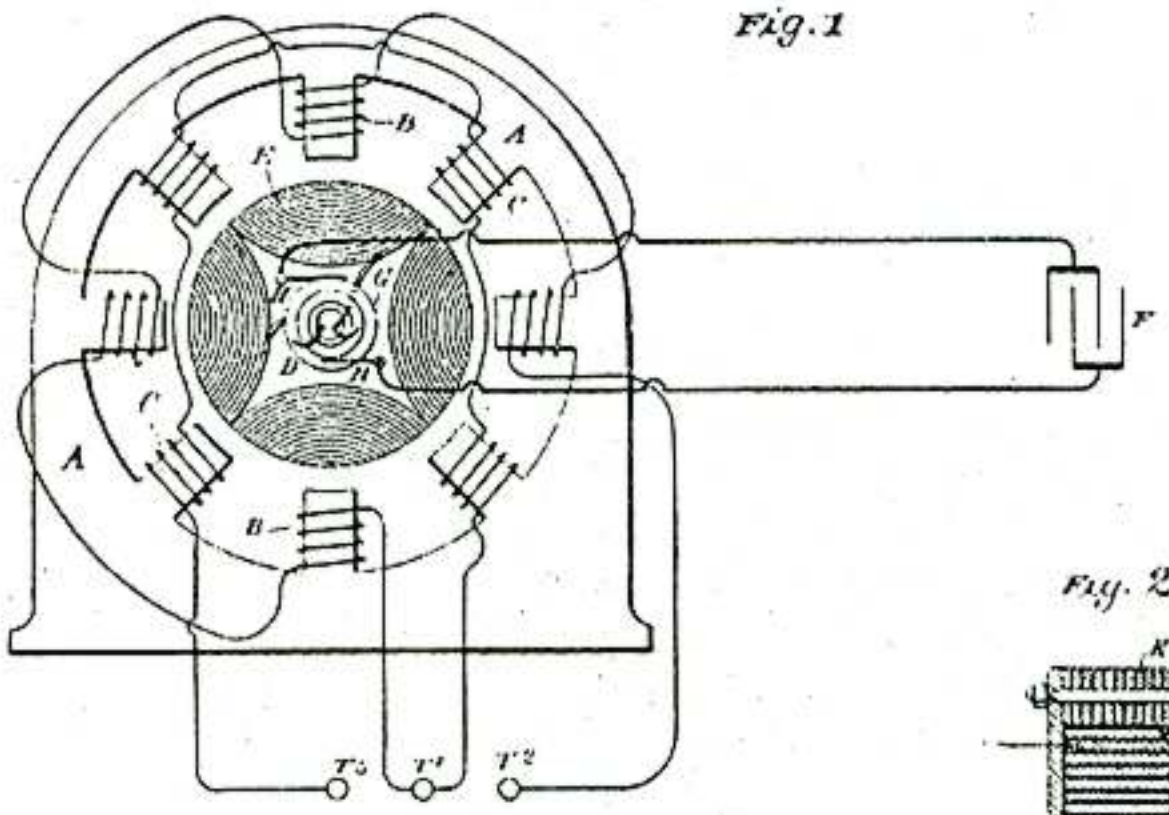

Fig. 2

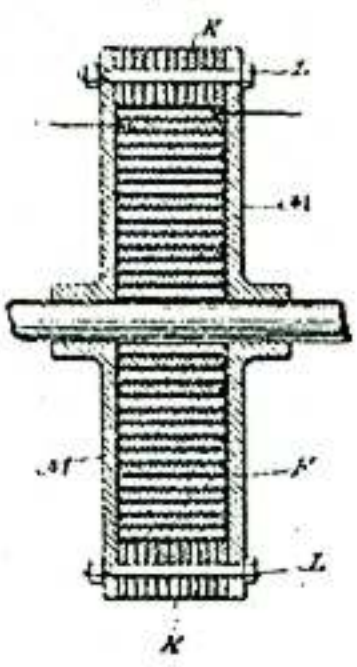

Fig. 4

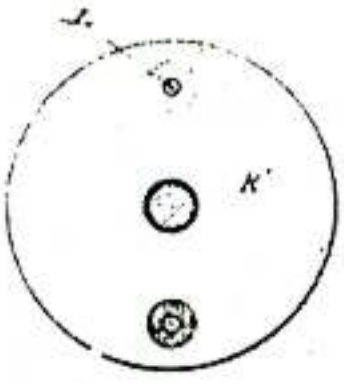

Fig 3

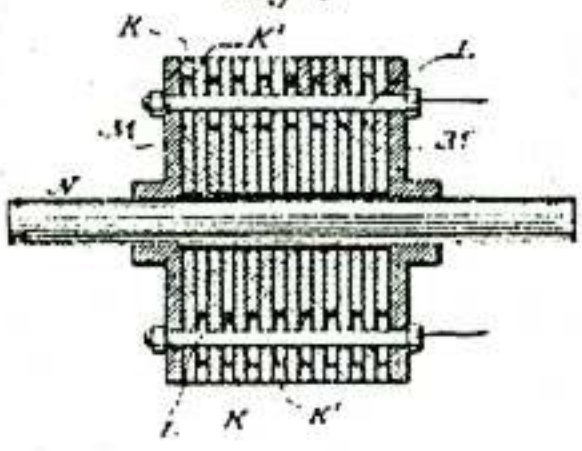

Fig. 5.

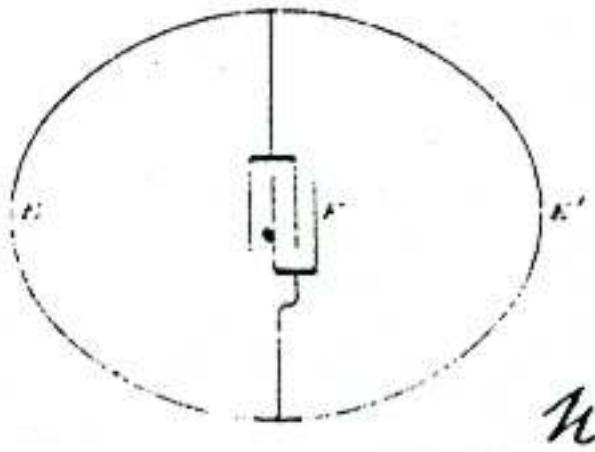

Witnesses
Raphael Netter
Frank B. Murphy

Inventor
Nikola Tesla
by
Duncan & Page.
Attorneys.

UNITED STATES PATENT OFFICE.

NIKOLA TESLA, OF NEW YORK, N. Y.

ELECTRO-MAGNETIC MOTOR.

SPECIFICATION forming part of Letters Patent No. 464,666, dated December 8, 1891.

Application filed July 13, 1891. Serial No. 399,312. (No model.)

To all whom it may concern:

Be it known that I, NIKOLA TESLA, a subject of the Emperor of Austria, from Smiljan, Lika, border country of Austria-Hungary, residing at New York, in the county and State of New York, have invented certain new and useful Improvements in Electro-Magnetic Motors, of which the following is a specification, reference being had to the drawing accompanying and forming a part of the same.

The general object of my present invention is to secure artificially a difference of a quarter of a phase between the currents in the two energizing-circuits of an alternating-current electro-magnetic motor of that general class invented by me, in which the action or operation is dependent upon the inductive influence upon a rotating armature of independent field magnets or coils exerted successively and not simultaniously.

It is a well-known fact that if the field or energizing circuits of such a motor be both derived from the same source of alternating currents and a condenser of proper capacity be included in one of the same, approximately the desired difference of phase may be obtained between the currents flowing directly from the source and those flowing through the condenser; but the great size and expense of condensers for this purpose that would meet the requirements of the ordinary systems of comparatively low potential are practically prohibitory to their employment.

Another now well-known method or plan of securing a difference of phase between the energizing-currents of motors of this kind is to induce by the currents in one circuit those in the other circuit or circuits; but no means have heretofore been proposed that would secure in this way between the phases of the primary or inducing and the secondary or induced currents that difference—theoretically ninety degrees—that is best adapted for practical and economical working.

I have devised a means which renders practicable both the above-described plans or methods, and by which I am enabled to obtain an economical and efficient alternating-current motor, my invention consisting in placing a condenser in the secondary or induced circuit of the motor above described and raising the potential of the secondary currents to such a degree that the capacity of the condenser, which is in part dependent on the potential, need be quite small. The value of this condenser will be determined in a well-understood manner with reference to the self-induction and other conditions of the circuit, so as to cause the currents which pass through it to differ from the primary currents by a quarter-phase.

The drawing is a partly-diagrammatic illustration of a motor embodying my invention.

I have illustrated the invention as embodied in a motor in which the inductive relation of the primary and secondary circuits is secured by winding them inside the motor partly upon the same cores; but it will be understood that the invention applies, generally, to other forms of motor in which one of the energizing-currents is induced in any way from the other.

Let A B represent the poles of an alternating-current motor, of which C is the armature wound with coils D, closed upon themselves, as is now the general practice in motors of this kind. The poles A, which alternate with poles B, are wound with coils of ordinary or coarse wire E in such direction as to make them of alternate north and south polarity, as indicated in the diagram by the characters N S. Over these coils or in other inductive relation to the same are wound long fine-wire coils F F and in the same direction throughout as the coils E. These coils are secondaries, in which currents of very high potential are induced. I prefer to connect all the coils E in one series and all the secondaries F in another.

On the intermediate poles B are wound fine-wire energizing-coils G, which are connected in series with one another and also with the series of secondary coils F, the direction of winding being such that a current-impulse induced from the primary coils E imparts the same magnetism to the poles B as that produced in poles A by the primary impulse. This condition is indicated by the characters N′ S′.

In the circuit formed by the two sets of coils F and G is introduced a condenser H; otherwise the said circuit is closed upon itself, while the free ends of the circuit of coils E are connected to a source of alternating cur-

rents. As the condenser capacity which is needed in any particular motor of this kind is dependent upon the rate of alternation or the potential, or both, its size or cost, as before explained, may be brought within economical limits for use with the ordinary circuits if the potential of the secondary circuit in the motor be sufficiently high. By giving to the condenser proper values any desired difference of phase between the primary and secondary energizing-circuits may be obtained.

What I claim is—

1. In an alternating-current motor provided with two or more energizing or field circuits, one of which is adapted for connection with a source of currents and the other or others in inductive relation thereto, the combination, with the secondary or induced circuit or circuits, of a condenser interposed in the same, as set forth.

2. In an alternating-current motor, the combination of two energizing-circuits, one connected or adapted for connection with a source of alternating currents, the other constituting a high-potential secondary circuit in inductive relation to the first, and a condenser interposed in said secondary circuit, as set forth.

NIKOLA TESLA.

Witnesses:
ROBT. F. GAYLORD,
ERNEST HOPKINSON.

P-140

(No. Model.)

N. TESLA.

ELECTRO MAGNETIC MOTOR.

No. 464,666. Patented Dec. 8, 1891.

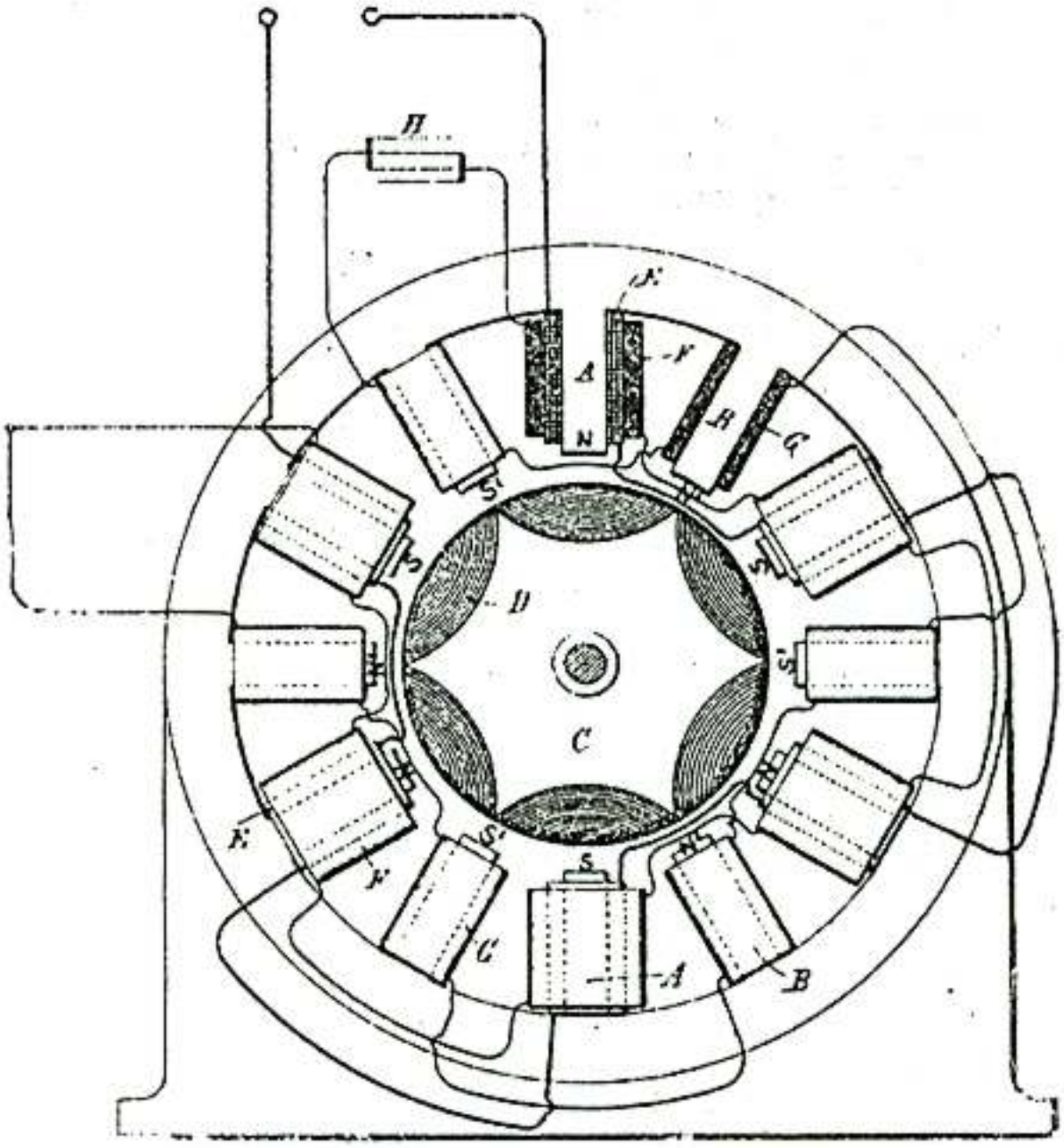

Witnesses:
Raphael Netter
Frank B. Murphy

Inventor
Nikola Tesla
by
Duncan & Page.
Attorneys

UNITED STATES PATENT OFFICE.

NIKOLA TESLA, OF NEW YORK, N. Y.

ELECTRIC GENERATOR.

SPECIFICATION forming part of Letters Patent No. 511,916, dated January 2, 1894.

Application filed August 18, 1893. Serial No. 483,562. (No model.)

To all whom it may concern:

Be it known that I, NIKOLA TESLA, a citizen of the United States, residing at New York, in the county and State of New York, have invented certain new and useful Improvements in Electric Generators, of which the following is a specification, reference being had to the drawings accompanying and forming a part of the same.

In an application of even date herewith, Serial No. 483,563, I have shown and described a form of engine invented by me, which, under the influence of an applied force such as the elastic tension of steam or a gas under pressure, yields an oscillation of constant period.

In order that my present invention may be more readily understood I will explain the conditions which are to be observed in order to secure this result.

It is a well known mechanical principle that if a spring possessing a sensible inertia be brought under tension, as by being stretched, and then freed, it will perform vibrations which are isochronous, and as to period, in the main, dependent upon the rigidity of the spring, and its own inertia or that of the system of which it may form an immediate part. This is known to be true in all cases where the force which tends to bring the spring or movable system into a given position is proportionate to the displacement.

In the construction of my engine above referred to I have followed and applied this principle, that is to say, I employ a cylinder and a piston which in any suitable manner I maintain in reciprocation by steam or gas under pressure. To the moving piston or to the cylinder, in case the latter reciprocate and the piston remain stationary, a spring is connected so as to be maintained in vibration thereby, and whatever may be the inertia of the piston or of the moving system and the rigidity of the spring relatively to each other, provided, the practical limits within which the law holds true that the forces which tend to bring the moving system to a given position are proportionate to the displacement, are not exceeded, the impulses of the power impelled piston and the natural vibrations of the spring will always correspond in direction and coincide in time. In the case of the engine referred to, the ports are so arranged that the movement of the piston within the cylinder in either direction ceases when the force tending to impel it and the momentum which it has acquired are counterbalanced by the increasing pressure of the steam or compressed air in that end of the cylinder toward which it is moving, and as in its movement the piston has shut off at a given point, the pressure that impelled it and established the pressure that tends to return it, it is then impelled in the opposite direction, and this action is continued as long as the requisite pressure is applied. The length of the stroke will vary with the pressure, but the rate or period of reciprocation is no more dependent upon the pressure applied to drive the piston, than would be the period of oscillation of a pendulum permanently maintained in vibration, upon the force which periodically impels it, the effect of variations in such force being merely to produce corresponding variations in the length of stroke or amplitude of vibration respectively.

In practice I have found that the best results are secured by the employment of an air spring, that is, a body of confined air or gas which is compressed and rarefied by the movements of the piston, and in order to secure a spring of constant rigidity I prefer to employ a separate chamber or cylinder containing air at the normal atmospheric pressure, although it might be at any other pressure, and in which works a plunger connected with or carried by the piston rod. The main reason why no engine heretofore has been capable of producing results of this nature is that it has been customary to connect with the reciprocating parts a heavy fly-wheel or some equivalent rotary system of relatively very great inertia, or in other cases where no rotary system was employed, as in certain reciprocating engines or tools, no regard has been paid to the obtainment of the conditions essential to the end which I have in view, nor would the pressure of such conditions in said devices appear to result in any special advantage.

Such an engine as I have described affords a means for accomplishing a result heretofore unattained, the continued production of electric currents of constant period, by imparting the movements of the piston to a core or

coil in a magnetic field. It should be stated however, that in applying the engine for this purpose certain conditions are encountered which should be taken into consideration in order to satisfactorily secure the desired result. When a conductor is moved in a magnetic field and a current caused to circulate therein, the electro-magnetic reaction between it and the field, might disturb the mechanical oscillation to such an extent as to throw it out of isochronism. This, for instance, might occur when the electro-magnetic reaction is very great in comparison to the power of the engine, and there is a retardation of the current so that the electro-magnetic reaction might have an effect similar to that which would result from a variation of the tension of the spring, but if the circuit of the generator be so adjusted that the phases of the electromotive force and current coincide in time, that is to say, when the current is not retarded, then the generator driven by the engine acts merely as a frictional resistance and will not, as a rule, alter the period of the mechanical vibration, although it may vary its amplitude. This condition may be readily secured by properly proportioning the self induction and capacity of the circuit including the generator. I have, however, observed the further fact in connection with the use of such engines as a means for running a generator, that it is advantageous that the period of the engine and the natural period of electrical vibration of the generator should be the same, as in such case the best conditions for electrical resonance are established and the possibility of disturbing the period of mechanical vibrations is reduced to a minimum. I have found that even if the theoretical conditions necessary for maintaining a constant period in the engine itself are not exactly maintained, still the engine and generator combined will vibrate at a constant period. For example, if instead of using in the engine an independent cylinder and plunger, as an air spring of practically constant rigidity, I cause the piston to impinge upon air cushions at the ends of its own cylinder, although the rigidity of such cushions or springs might be considerably affected and varied by the variations of pressure within the cylinder, still by combining with such an engine a generator which has a period of its own approximately that of the engine constant vibration may be maintained even through a considerable range of varying pressure, owing to the controlling action of the electro-magnetic system. I have even found that under certain conditions the influence of the electro-magnetic system may be made so great as to entirely control the period of the mechanical vibration within wide limits of varying pressure. This is likely to occur in those instances where the power of the engine while fully capable of maintaining a vibration once started, is not sufficient to change its rate. So, for the sake of illustration, if a pendulum is started in vibration, and a small force applied periodically in the proper direction to maintain it in motion, this force would have no substantial control over the period of the oscillation, unless the inertia of the pendulum be small in comparison to the impelling force, and this would be true no matter through what fraction of the period the force may be applied. In the case under consideration the engine is merely an agent for maintaining the vibration once started, although it will be understood that this does not preclude the performance of useful work which would simply result in a shortening of the stroke. My invention, therefore, involves the combination of a piston free to reciprocate under the influence of steam or a gas under pressure and the movable element of an electric generator which is in direct mechanical connection with the piston, and it is more especially the object of my invention to secure from such combination electric currents of a constant period. In the attainment of this object I have found it preferable to construct the engine so that it of itself controls the period, but as I have stated before, I may so modify the elements of the combination that the electro-magnetic system may exert a partial or even complete control of the period.

In illustration of the manner in which the invention is carried out I now refer to the accompanying drawings.

Figure 1 is a central sectional view of an engine and generator embodying the invention. Fig. 2 is a modification of the same.

Referring to Fig. 1 A is the main cylinder in which works a piston B. Inlet ports C C pass through the sides of the cylinder opening at the middle portion thereof and on opposite sides. Exhaust ports D D extend through the walls of the cylinder and are formed with branches that open into the interior of the cylinder on each side of the inlet ports and on opposite sides of the cylinder. The piston B is formed with two circumferential grooves E F which communicate through openings G in the piston with the cylinder on opposite sides of said piston respectively.

The particular construction of the cylinder, the piston and the ports controlling it may be very much varied, and is not in itself material, except that in the special case now under consideration it is desirable that all the ports, and more especially the exhaust ports should be made very much larger than is usually the case so that no force due to the action of the steam or compressed air will tend to retard or affect the return of the piston in either direction. The piston B is secured to a piston rod H which works in suitable stuffing boxes in the heads of the cylinder A. This rod is prolonged on one side and extends through bearings V in a cylinder I suitably mounted or supported in line with the first, and within which is a disk or plunger J carried by the rod H. The cylinder I is without ports of any kind and is air-tight except as a

small leakage may occur through the bearings V, which experience has shown need not be fitted with any very considerable accuracy. The cylinder I is surrounded by a jacket K which leaves an open space or chamber around it. The bearings V in the cylinder I, extend through the jacket K to the outside air and the chamber between the cylinder and jacket is made steam or air-tight as by a suitable packing. The main supply pipe L for steam or compressed air leads into this chamber, and the two pipes that lead to the cylinder A run from the said chamber, oil cups M being conveniently arranged to deliver oil into the said pipes for lubricating the piston. In the particular form of engine shown, the jacket K which contains the cylinder I is provided with a flange N by which it is screwed to the end of the cylinder A. A small chamber O is thus formed which has air vents P in its sides and drip pipes Q leading out from it through which the oil which collects in it is carried off.

To explain now the operation of the engine described, in the position of the parts shown, or when the piston is at the middle point of its stroke, the plunger J is at the center of the cylinder I and the air on both sides of the same is at the normal pressure of the outside atmosphere. If a source of steam or compressed air be then connected to the inlet ports C C of the cylinder A and a movement be imparted to the piston as by a sudden blow, the latter is caused to reciprocate in a manner well understood. The movements of the piston compress and rarefy the air in the cylinder I at opposite ends of the same alternately. A forward stroke compresses the air ahead of the plunger J which acts as a spring to return it. Similarly on the back stroke the air is compressed on the opposite side of the plunger J and tends to drive it forward. The compressions of the air in the cylinder I and the consequent loss of energy due mainly to the imperfect elasticity of the air, give rise to a very considerable amount of heat. This heat I utilize by conducting the steam or compressed air to the engine cylinder through the chamber formed by the jacket surrounding the air-spring cylinder. The heat thus taken up and used to raise the temperature of the steam or air acting upon the piston is availed of to increase the efficiency of the engine. In any given engine of this kind the normal pressure will produce a stroke of determined length, and this will be increased or diminished according to the increase of pressure above or the reduction of pressure below the normal.

In constructing the apparatus proper allowance is made for a variation in the length of stroke by giving to the confining cylinder I of the air spring properly determined dimensions. The greater the pressure upon the piston, the higher the degree of compression of the air-spring, and the consequent counteracting force upon the plunger. The rate or period of reciprocation of the piston, however, is mainly determined as described above by the rigidity of the air spring and the inertia of the moving system, and any period of oscillation within very wide limits may be secured by properly portioning these factors, as by varying the dimensions of the air chamber which is equivalent to varying the rigidity of the spring, or by adjusting the weight of the moving parts. These conditions are all readily determinable, and an engine constructed as herein described may be made to follow the principle of operation above stated and maintain a perfectly uniform period through very wide limits of pressure.

The pressure of the air confined in the cylinder when the plunger I is in its central position will always be practically that of the surrounding atmosphere, for while the cylinder is so constructed as not to permit such sudden escape of air as to sensibly impair or modify the action of the air spring there will still be a slow leakage of air into or out of it around the piston rod according to the pressure therein, so that the pressure of the air on opposite sides of the plunger will always tend to remain at that of the outside atmosphere.

To the piston rod H is secured a conductor or coil of wire D' which by the movements of the piston is oscillated in the magnetic field produced by two magnets B' B' which may be permanent magnets or energized by coils C' C' connected with a source of continuous currents E'. The movement of the coil D' across the lines of force established by the magnets gives rise to alternating currents in the coil. These currents, if the period of mechanical oscillation be constant will be of constant period, and may be utilized for any purpose desired.

In the case under consideration it is assumed as a necessary condition that the inertia of the movable element of the generator and the electro magnetic reaction which it exerts will not be of such character as to materially disturb the action of the engine.

Fig. 2 is an example of a combination in which the engine is not of itself capable of determining entirely the period of oscillation, but in which the generator contributes to this end. In this figure the engine is the same as in Fig. 1. The exterior air spring is however omitted and the air spaces at the ends of the cylinder A relied on for accomplishing the same purpose. As the pressure in these spaces is liable to variations from variations in the steam or gas used in impelling the piston they might affect the period of oscillation, and the conditions are not as stable and certain as in the case of an engine constructed as in Fig. 1. But if the natural period of vibration of the elastic system be made to approximately accord with the average period of the engine such tendencies to variation are very largely overcome and the engine will preserve its period even through a considerable range of variations of pressure. The

generator in this case is composed of a magnetic casing F' in which a laminated core G' secured to the piston rod H is caused to vibrate. Surrounding the plunger are two exciting coils C' C', and one or more induced coils D' D'. The coils C' C' are connected with a generator of continuous currents E' and are wound to produce consequent poles in the core G'. Any movement of the latter will therefore shift the lines of force through coils D' D' and produce currents therein.

In the circuit of coils D' is shown a condenser H'. It need only be said that by the use of a proper condenser the self induction of this circuit may be neutralized. Such a circuit will have a certain natural period of vibration, that is to say that when the electricity therein is disturbed in any way an electrical or electro-magnetic vibration of a certain period takes place, and as this depends upon the capacity and self induction, such period may be varied to approximately accord with the period of the engine.

In case the power of the engine be comparatively small, as when the pressure is applied through a very small fraction of the total stroke, the electrical vibration will tend to control the period, and it is clear that if the character of such vibration be not very widely different from the average period of vibration of the engine under ordinary working conditions such control may be entirely adequate to produce the desired results.

Having now described my invention, what I claim is—

1. The combination with the piston or equivalent element of an engine which is free to reciprocate under the action thereon of steam or a gas under pressure, of the moving conductor or element of an electric generator in direct mechanical connection therewith.

2. The combination with the piston or equivalent element of an engine which is free to reciprocate under the action of steam or a gas under pressure, of the moving conductor or element of an electric generator in direct mechanical connection therewith, the engine and generator being adapted by their relative adjustment with respect to period to produce currents of constant period, as set forth.

3. The combination with an engine comprising a piston which is free to reciprocate under the action of steam or a gas under pressure, and an electric generator having inducing and induced elements one of which is capable of oscillation in the field of force, the said movable element being carried by the piston rod of the engine, as set forth.

4. The combination with an engine operated by steam or a gas under pressure and having a constant period of reciprocation, of an electric generator, the moving element of which is carried by the reciprocating part of the engine, the generator and its circuit being so related to the engine with respect to the period of electrical vibration as not to disturb the period of the engine, as set forth.

5. The combination with a cylinder and a piston reciprocated by steam or a gas under pressure of a spring maintained in vibration by the movement of the piston, and an electric generator, the movable conductor or element of which is connected with the piston, these elements being constructed and adapted in the manner set forth for producing a current of constant period.

6. The method of producing electric currents of constant period herein described which consists in imparting the oscillations of an engine to the moving element of an electric generator and regulating the period of mechanical oscillation by an adjustment of the reaction of the electric generator, as herein set forth.

NIKOLA TESLA.

Witnesses:
PARKER W. PAGE,
R. F. GAYLORD.

(No Model.)

2 Sheets—Sheet 1.

N. TESLA.

ELECTRIC GENERATOR.

No. 511,916. Patented Jan. 2, 1894.

Fig. 1

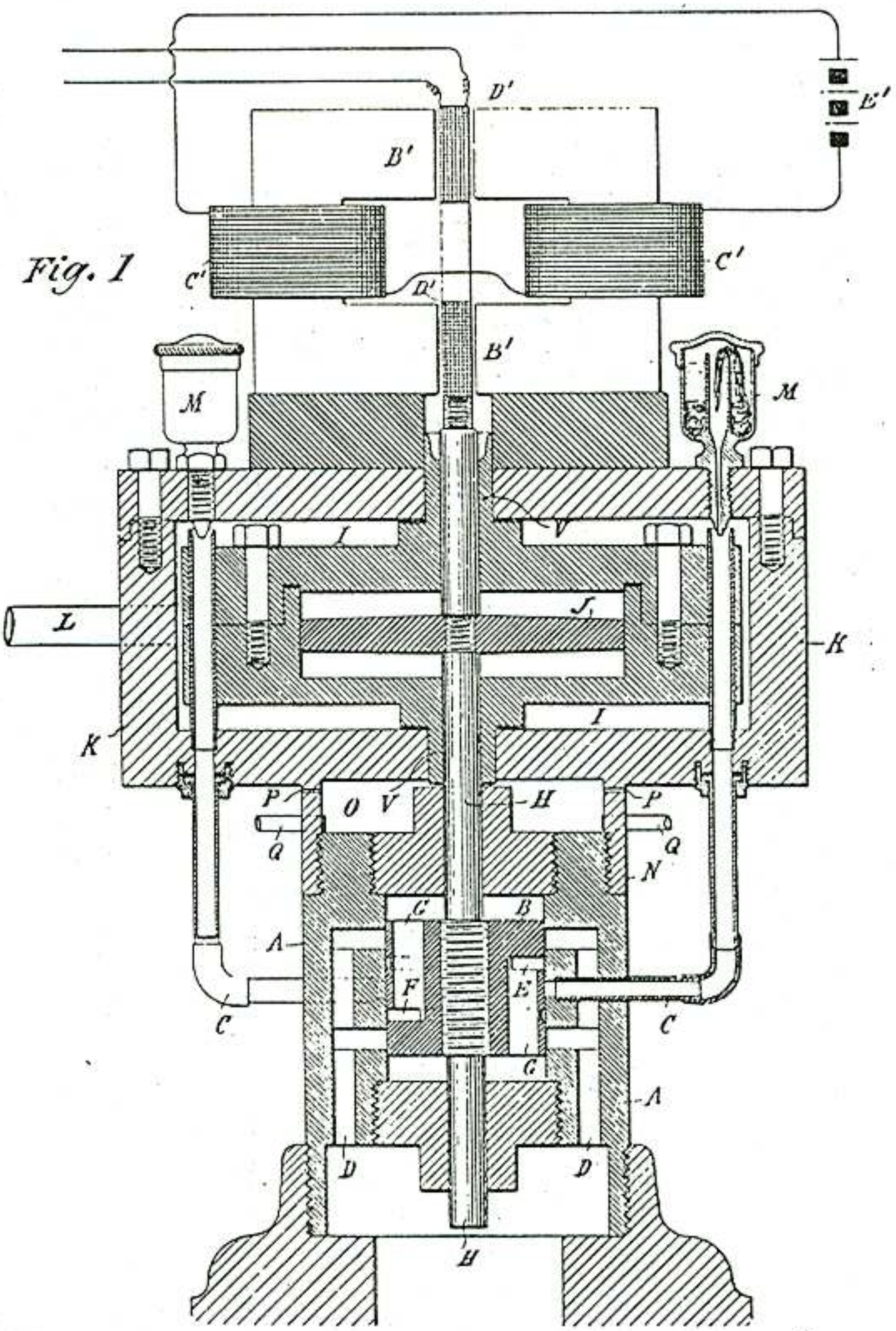

Witnesses
Raphael Netter
R. F. Gaylord

Inventor
Nikola Tesla
By his Attorneys
Duncan & Page

P-146

(No Model.) 2 Sheets—Sheet 2.

N. TESLA.

ELECTRIC GENERATOR.

No. 511,916. Patented Jan. 2, 1894.

Fig. 2

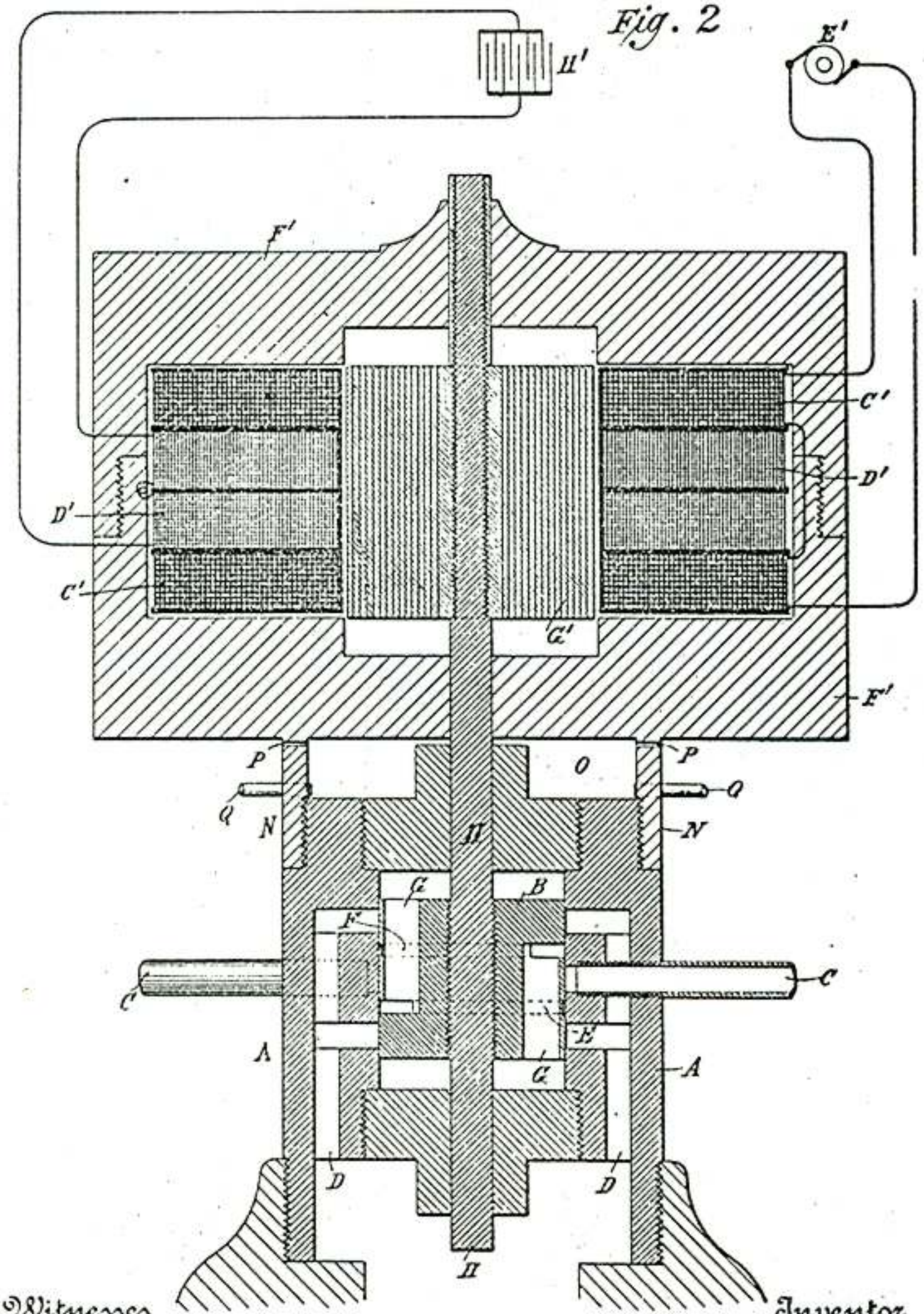

Witnesses
Raphael Netter
R. F. Gaylord

Inventor
Nikola Tesla
By his Attorneys
Duncan & Page.

II

TRANSMISSION OF ELECTRIC POWER

UNITED STATES PATENT OFFICE.

NIKOLA TESLA, OF NEW YORK, N. Y.

ELECTRICAL TRANSMISSION OF POWER.

SPECIFICATION forming part of Letters Patent No. 382,280, dated May 1, 1888.

Original application filed October 12, 1887. Serial No. 252,132. Divided and this application filed March 9, 1888. Serial No. 266,755. (No model.)

To all whom it may concern:

Be it known that I, NIKOLA TESLA, from Smiljan, Lika, border country of Austria-Hungary, and residing in the city, county, and State of New York, have invented certain new and useful Improvements in the Transmission of Power, of which the following is a specification, reference being had to the drawings accompanying and forming a part of the same.

This application is a division of an application filed by me October 12, 1887, No. 252,132.

The practical solution of the problem of the electrical conversion and transmission of mechanical energy involves certain requirements which the apparatus and systems heretofore employed have not been capable of fulfilling. Such a solution primarily demands a uniformity of speed in the motor irrespective of its load within its normal working limits. On the other hand, it is necessary, to attain a greater economy of conversion than has heretofore existed, to construct cheaper and more reliable and simple apparatus, and such that all danger from the use of currents of high tension, which are necessary to an economical transmission, may be avoided.

My present invention is a new method or mode of effecting the transmission of power by electrical agency, whereby many of the present objections are overcome and great economy and efficiency secured.

In carrying out my invention I employ a motor in which there are two or more independent energizing-circuits, through which I pass, in the manner hereinafter described, alternating currents, effecting thereby a progressive shifting of the magnetism or of the "lines of force," which, in accordance with well-known theories, produces the action of the motor.

It is obvious that a proper progressive shifting of the lines of force may be utilized to set up a movement or rotation of either element of the motor, the armature, or the field-magnet, and that if the currents directed through the several circuits of the motor are in proper direction no commutator for the motor will be required; but to avoid all the usual commutating appliances in the system I connect the motor-circuits directly with those of a suitable alternating-current generator. The practical results of such a system, its economical advantages, and the mode of its construction and operation will be described more in detail by reference to the accompanying diagrams and drawings.

Figures 1 to 8 and 1ª to 8ª, inclusive, are diagrams illustrating the principle of the action of my invention. The remaining figures are views of the apparatus in various forms by means of which the invention may be carried into effect, and which will be described in their order.

Referring first to Fig. 9, which is a diagrammatic representation of a motor, a generator, and connecting-circuits in accordance with my invention, M is the motor, and G the generator for driving it. The motor comprises a ring or annulus, R, preferably built up of thin insulated iron rings or annular plates, so as to be as susceptible as possible to variations in its magnetic condition. This ring is surrounded by four coils of insulated wire symmetrically placed and designated by C C C' C'. The diametrically-opposite coils are connected up so as to co-operate in pairs in producing free poles on diametrically-opposite parts of the ring. The four free ends thus left are connected to terminals T T T' T', as indicated. Near the ring, and preferably inside of it, there is mounted on an axis or shaft a magnetic disk, C, generally circular in shape, but having two segments, cut away as shown. This disk is mounted so as to turn freely within the ring R. The generator G is of any ordinary type, that shown in the present instance having field-magnets N S and a cylindrical armature-core, A, wound with the two coils B B'. The free ends of each coil are carried through the shaft *a'* and connected, respectively, to insulated contact-rings *b b b' b'*. Any convenient form of collector or brush bears on each ring and forms a terminal by which the current to and from a ring is conveyed. These terminals are connected to the terminals of the motor by the wires L and L' in the manner indicated, whereby two complete circuits are formed, one including, say, the coils B of the generator and C C of the motor and the other the remaining coils B' and C' C' of the generator and the motor.

It remains now to explain the mode of operation of this system, and for this purpose I

refer to the diagrams, Figs. 1 to 8 and 1ª to 8ª, for an illustration of the various phases through which the coils of the generator pass when in operation, and the corresponding and resultant magnetic changes produced in the motor. The revolution of the armature of the generator between the field magnets N S obviously produces in the coils B B' alternating currents the intensity and direction of which depend upon well-known laws. In the position of the coils indicated in Fig. 1 the current in the coil B is practically *nil*, whereas the coil B' at the same time is developing its maximum current, and by the means indicated in the description of Fig. 9 the circuit including this coil may also include, say, the coils C C of the motor, Fig. 1ª. The result, with the proper connections, would be the magnetization of the ring R, the poles being on the line N S. The same order of connections being observed between the coil B and the coil C', the latter when traversed by a current tend to fix the poles at right angles to the line N S of Fig. 1ª. It results, therefore, that when the generator-coils have made one-eighth of a revolution, reaching the position shown in Fig. 2, both pairs of coils, C and C', will be traversed by current and act in opposition in so far as the location of the poles is concerned. The position of the poles will therefore be the resultant of the magnetizing forces of the coils—that is to say, it will advance along the ring to a position corresponding to one-eighth of the revolution of the armature of the generator.

In Fig. 3 the armature of the generator has progressed to one-fourth of a revolution. At the point indicated the current in the coil B is maximum, while in B' it is *nil*, the latter coil being in its neutral position. The poles of the ring R in Fig. 3ª will in consequence be shifted to a position ninety degrees from that at the start, as shown. I have in like manner shown the conditions existing at each successive eighth of one revolution in the remaining figures. A short reference to these figures will suffice to an understanding of their significance.

Figs. 4 and 4ª illustrate the conditions which exist when the generator-armature has completed three-eighths of a revolution. Here both coils are generating currents; but the coil B', having now entered the opposite field, is generating a current in the opposite direction having the opposite magnetizing effect; hence the resultant pole will be on the line N S, as shown.

In Fig. 5 one-half of one revolution of the armature of the generator has been completed, and the resulting magnetic condition of the ring is shown in Fig. 5ª. In this phase coil B is in the neutral position, while coil B' is generating its maximum current, which is in the same direction as in Fig. 4. The poles will consequently be shifted through one half of the ring.

In Fig. 6 the armature has completed five-eighths of a revolution. In this position coil B' develops a less powerful current, but in the same direction as before. The coil B, on the other hand, having entered a field of opposite polarity, generates a current of opposite direction. The resultant poles will therefore be in the line N S, Fig. 6ª; or, in other words, the poles of the ring will be shifted along five-eighths of its periphery.

Figs. 7 and 7ª in the same manner illustrate the phases of the generator and ring at three-quarters of a revolution, and Figs. 8 and 8ª the same at seven eighths of a revolution of the generator-armature. These figures will be readily understood from the foregoing.

When a complete revolution is accomplished, the conditions existing at the start are re-established, and the same action is repeated for the next and all subsequent revolutions, and in general it will now be seen that every revolution of the armature of the generator produces a corresponding shifting of the poles or lines of force around the ring. This effect I utilize in producing the rotation of a body or armature in a variety of ways—for example, applying the principle above described to the apparatus shown in Fig. 9. The disk D, owing to its tendency to assume that position in which it embraces the greatest possible number of the magnetic lines, is set in rotation, following the motion of the lines or the points of greatest attraction.

The disk D in Fig. 9 is shown as cut away on opposite sides; but this I have found is not essential to effecting its rotation, as a circular disk, as indicated by dotted lines, is also set in rotation. This phenomenon I attribute to a certain inertia or resistance inherent in the metal to the rapid shifting of the lines of force through the same, which results in a continuous tangential pull upon the disk, causing its rotation. This seems to be confirmed by the fact that a circular disk of steel is more effectively rotated than one of soft iron, for the reason that the former is assumed to possess a greater resistance to the shifting of the magnetic lines.

In illustration of other forms of apparatus by means of which I carry out my invention, I shall now describe the remaining figures of the drawings.

Fig. 10 is a view in elevation and part vertical section of a motor. Fig. 12 is a top view of the same with the field in section and a diagram of connections. Fig. 11 is an end or side view of a generator with the fields in section. This form of motor may be used in place of that shown.

D is a cylindrical or drum armature-core, which, for obvious reasons, should be split up as far as practicable to prevent the circulation within it of currents of induction. The core is wound longitudinally with two coils, E and E', the ends of which are respectively connected to insulated contact-rings *d d' d' d'*, carried by the shaft *a*, upon which the armature is mounted.

The armature is set to revolve within an

iron shell, R, which constitutes the field-magnet or other element of the motor. This shell is preferably formed with a slot or opening, *r*; but it may be continuous, as shown by the dotted lines, and in this event it is preferably made of steel. It is also desirable that this shell should be divided up similarly to the armature, and for similar reasons. As a generator for driving this motor, I may use the device shown in Fig. 11. This represents an annular or ring armature, A, surrounded by four coils, F F F' F', of which those diametrically opposite are connected in series, so that four free ends are left, which are connected to the insulated contact-rings *b b b' b'*. The ring is suitably mounted on a shaft, *a'*, between the poles N S. The contact-rings of each pair of generator coils are connected to those of the motor, respectively, by means of contact-brushes and the two pairs of conductors, L L and L' L', as indicated diagrammatically in Fig. 13.

Now, it is obvious from a consideration of the preceding figures that the rotation of the generator-ring produces currents in the coils F F', which, being transmitted to the motor-coils, impart to the core of the latter magnetic poles constantly shifting or whirling around the core. This effect sets up a rotation of the armature, owing to the attractive force between the shell and the poles of the armature; but inasmuch as the coils in this case move relatively to the shell or field-magnet the movement of the coils is in the opposite direction to the progressive shifting of the poles.

Other arrangements of the coils of both generator and motor are possible, and a greater number of circuits may be used, as will be seen in the two succeeding figures.

Fig. 13 is a diagrammatic illustration of a motor and a generator connected and constructed in accordance with my invention. Fig. 14 is an end view of the generator with its field-magnets in section.

The field of the motor M is produced by six magnetic poles, G' G', secured to or projecting from a ring or frame, H. These magnets or poles are wound with insulated coils, those diametrically opposite to each other being connected in pairs, so as to produce opposite poles in each pair. This leaves six free ends, which are connected to the terminals T T T' T' T'' T''. The armature which is mounted to rotate between the poles is a cylinder or disk, D, of wrought-iron, mounted on the shaft *a*. Two segments of the same are cut away, as shown. The generator for this motor has in this instance an armature, A, wound with three coils, K K' K'', at sixty degrees apart. The ends of these coils are connected, respectively, to insulated contact rings *e e e' e' e'' e''*. These rings are connected to those of the motor in proper order by means of collecting-brushes and six wires, forming three independent circuits. The variations in the strength and direction of the currents transmitted through these circuits and traversing the coils of the motor produce a steadily-progressive shifting of the resultant attractive force exerted by the poles G' upon the armature D, and consequently keep the armature rapidly rotating. The peculiar advantage of this disposition is in obtaining a more concentrated and powerful field. The application of this principle to systems involving multiple circuits generally will be understood from this apparatus.

Referring now to Figs. 15 and 16, Fig. 15 is a diagrammatic representation of a modified disposition of my invention. Fig. 16 is a horizontal cross-section of the motor. In this case a disk, D, of magnetic metal, preferably cut away at opposite edges, as shown in dotted lines in the figure, is mounted so as to turn freely inside two stationary coils, N' N'', placed at right angles to one another. The coils are preferably wound on a frame, O, of insulating material, and their ends are connected to the fixed terminals T T T' T'. The generator G is a representative of that class of alternating-current machines in which a stationary induced element is employed. That shown consists of a revolving permanent or electro-magnet, A, and four independent stationary magnets, P P', wound with coils, those diametrically opposite to each other being connected in series and having their ends secured to the terminals *t t t' t'*. From these terminals the currents are led to the terminals of the motor, as shown in the drawings. The mode of operation is substantially the same as in the previous cases, the currents traversing the coils of the motor having the effect to turn the disk D. This mode of carrying out the invention has the advantage of dispensing with the sliding contacts in the system.

In the forms of motor above described only one of the elements—the armature or the field-magnet—is provided with energizing-coils. It remains, then, to show how both elements may be wound with coils. Reference is therefore had to Figs. 17, 18, and 19. Fig. 17 is an end view of such a motor. Fig. 18 is a similar view of the generator, with the field-magnets in section; and Fig. 19 is a diagram of the circuit-connections. In Fig. 17 the field-magnet of the motor consists of a ring, R, preferably of thin insulated iron sheets or bands, with eight pole-pieces, G, and corresponding recesses in which four pairs of coils, V, are wound. The diametrically-opposite pairs of coils are connected in series and the free ends connected to four terminals, *w*, the rule to be followed in connecting being the same as hereinbefore explained. An armature, D, with two coils, E E', at right angles to each other, is mounted to rotate inside of the field-magnet R. The ends of the armature-coils are connected to two pairs of contact-rings, *d d d' d'*. The generator for this motor may be of any suitable kind to produce currents of the desired character. In the present instance it consists of a field-magnet, N S, and an armature, A, with two coils at right angles, the ends of which are connected to four contact-

rings, b b' b', carried by its shaft. The circuit-connections are established between the rings on the generator-shaft and those on the motor-shaft by collecting brushes and wires, as previously explained. In order to properly energize the field-magnet of the motor, however, the connections are so made with the armature-coils by wires leading thereto that while the points of greatest attraction or greatest density of magnetic lines of force upon the armature are shifted in one direction those upon the field-magnet are made to progress in an opposite direction. In other respects the operation is identically the same as in the other cases cited. This arrangement results in an increased speed of rotation.

In Figs. 17 and 19, for example, the terminals of each set of field-coils are connected with the wires to the two armature-coils in such a way that the field-coils will maintain opposite poles in advance of the poles of the armature.

In the drawings the field-coils are in shunts to the armature; but they may be in series or in independent circuits.

It is obvious that the same principle may be applied to the various typical forms of motor hereinbefore described.

Having now described the nature of my invention and some of the various ways in which it is or may be carried into effect, I would call attention to certain characteristics which the applications of the invention possess, and the advantages which it offers.

In my motor, considering, for convenience, that represented in Fig. 9, it will be observed that since the disk D has a tendency to follow continuously the points of greatest attraction, and since these points are shifted around the ring once for each revolution of the armature of the generator, it follows that the movement of the disk D will be synchronous with that of the armature A. This feature by practical demonstration I have found to exist in all other forms in which one revolution of the armature of the generator produces a shifting of the poles of the motor through three hundred and sixty degrees.

In the particular modification shown in Fig. 15, or in others constructed on a similar plan, the number of alternating impulses resulting from one revolution of the generator-armature is double as compared with the preceding cases, and the polarities in the motor are shifted around twice by one revolution of the generator-armature. The speed of the motor will therefore be twice that of the generator. The same result is evidently obtained by such a disposition as that shown in Fig. 17, where the poles of both elements are shifted in opposite directions.

Again, considering the apparatus illustrated by Fig. 9 as typical of the invention, it is obvious that since the attractive effect upon the disk D is greatest when the disk is in its proper relative position to the poles developed in the ring R—that is to say, when its ends or poles immediately follow those of the ring—the speed of the motor for all loads within the normal working limits of the motor will be practically constant.

It is clearly apparent that the speed can never exceed the arbitrary limit as determined by the generator, and also that within certain limits, at least, the speed of the motor will be independent of the strength of the current.

It will now be more readily seen from the above description how far the requirements of a practical system of electrical transmission of power are realized in my invention. I secure, first, a uniform speed under all loads within the normal working limits of the motor without the use of any auxiliary regulator; second, synchronism between the motor and the generator; third, greater efficiency by the more direct application of the current, no commutating devices being required on either the motor or the generator; fourth, cheapness and simplicity of mechanical construction; fifth, the capability of being very easily managed or controlled, and, sixth, diminution of danger from injury to persons and apparatus.

These motors may be run in series—multiple arc or multiple series—under conditions well understood by those skilled in the art.

I am aware that it is not new to produce the rotations of a motor by intermittently shifting the poles of one of its elements. This has been done by passing through independent energizing-coils on one of the elements the current from a battery or other source of direct or continuous currents, reversing such current by suitable mechanical appliances, so that it is directed through the coils in alternately opposite directions. In such cases, however, the potential of the energizing-currents remains the same, their direction only being changed. According to my invention, however, I employ true alternating currents; and my invention consists in the discovery of the mode or method of utilizing such currents.

The difference between the two plans and the advantages of mine are obvious. By producing an alternating current each impulse of which involves a rise and fall of potential I reproduce in the motor the exact conditions of the generator, and by such currents and the consequent production of resultant poles the progression of the poles will be continuous and not intermittent. In addition to this, the practical difficulty of interrupting or reversing a current of any considerable strength is such that none of the devices at present could be made to economically or practically effect the transmission of power by reversing in the manner described a continuous or direct current. In so far, then, as the plan of acting upon one element of the motor is concerned, my invention involves the use of an alternating as distinguished from a reversed current, or a current which, while continuous and direct, is shifted from coil to coil by any form of commutator, reverser, or interrupter. With regard to that part of the invention which consists in acting upon both elements of the motor

simultaneously, I regard the use of either alternating or reversed currents as within the scope of the invention, although I do not consider the use of reversed currents of any practical importance.

What I claim is—

The method herein described of electrically transmitting power, which consists in producing a continuously-progressive shifting of the polarities of either or both elements (the armature or field magnet or magnets) of a motor by developing alternating currents in independent circuits, including the magnetizing-coils of either or both elements, as herein set forth.

NIKOLA TESLA

Witnesses:
FRANK B. MURPHY,
FRANK E. HARTLEY.

P-154

(No Model.) 4 Sheets—Sheet 1.

N. TESLA.

ELECTRICAL TRANSMISSION OF POWER.

No. 382,280. Patented May 1, 1888.

Fig 1

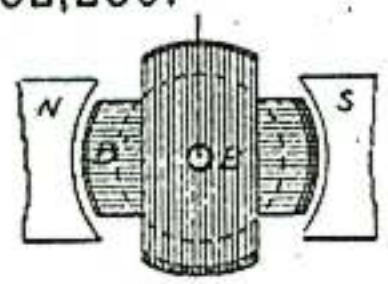

Fig. 2

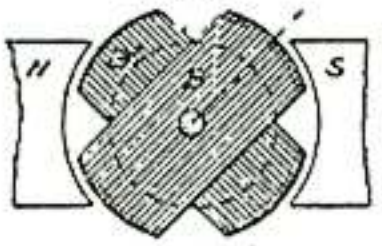

Fig. 3

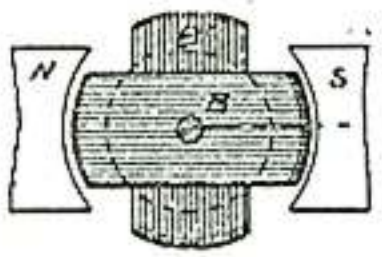

Fig. 4

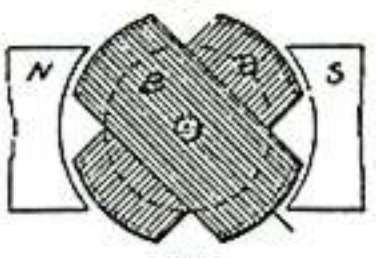

Fig. 5

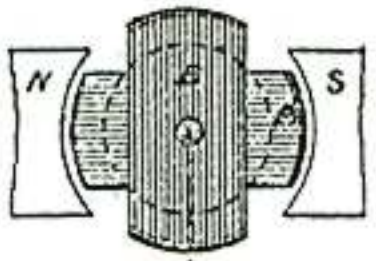

Fig. 6

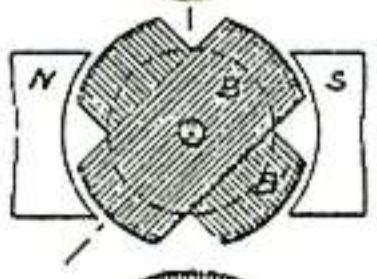

Fig. 7

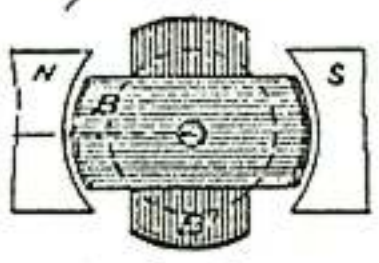

Fig. 8

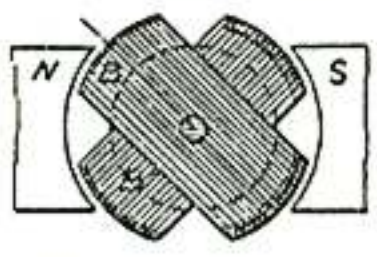

Fig 1a

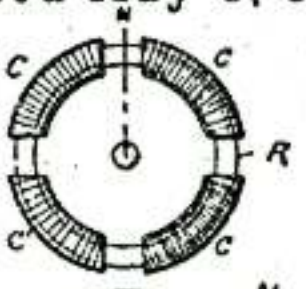

Fig 2a

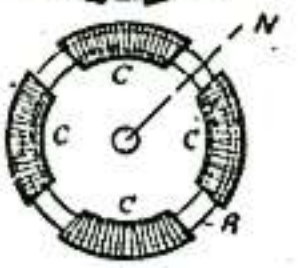

Fig 3a

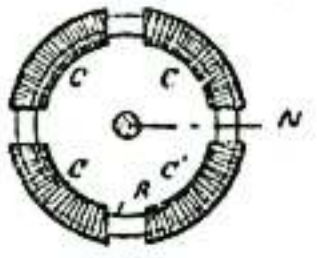

Fig. 4a

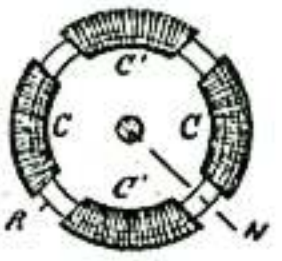

Fig 5a

Fig. 6a

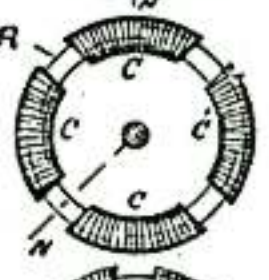

Fig. 7a

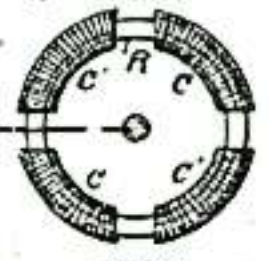

Fig 8a

WITNESSES:

D.H Sherman

Marcus A. Curtis.

INVENTOR.

Nikola Tesla

BY

Duncan, Curtis & Page

ATTORNEYS.

(No Model.) 4 Sheets—Sheet 2.

N. TESLA.

ELECTRICAL TRANSMISSION OF POWER.

No. 382,280 Patented May 1, 1888.

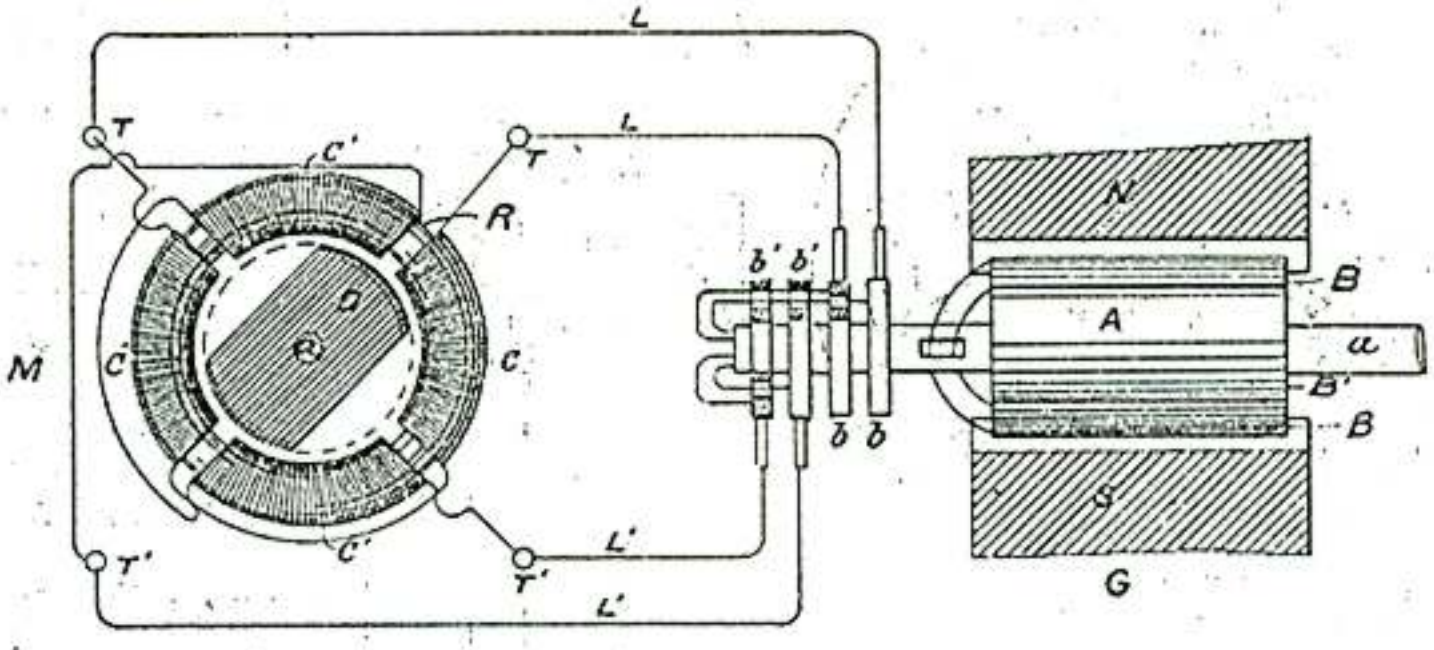

Fig. 9

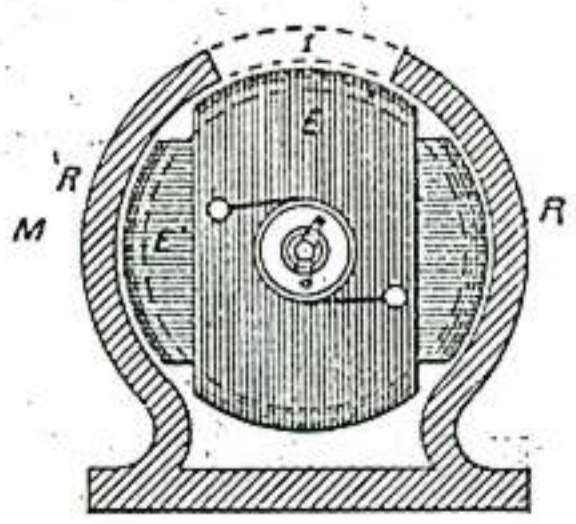

Fig. 10

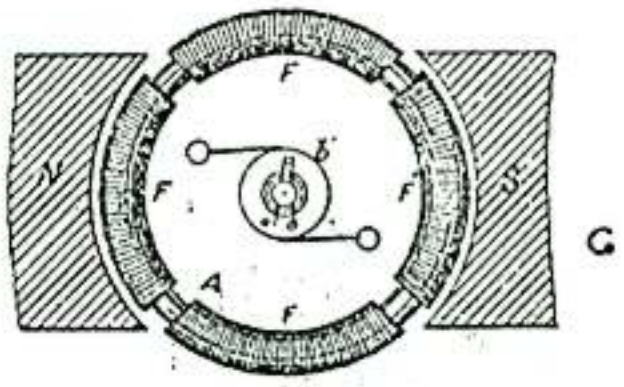

Fig. 11

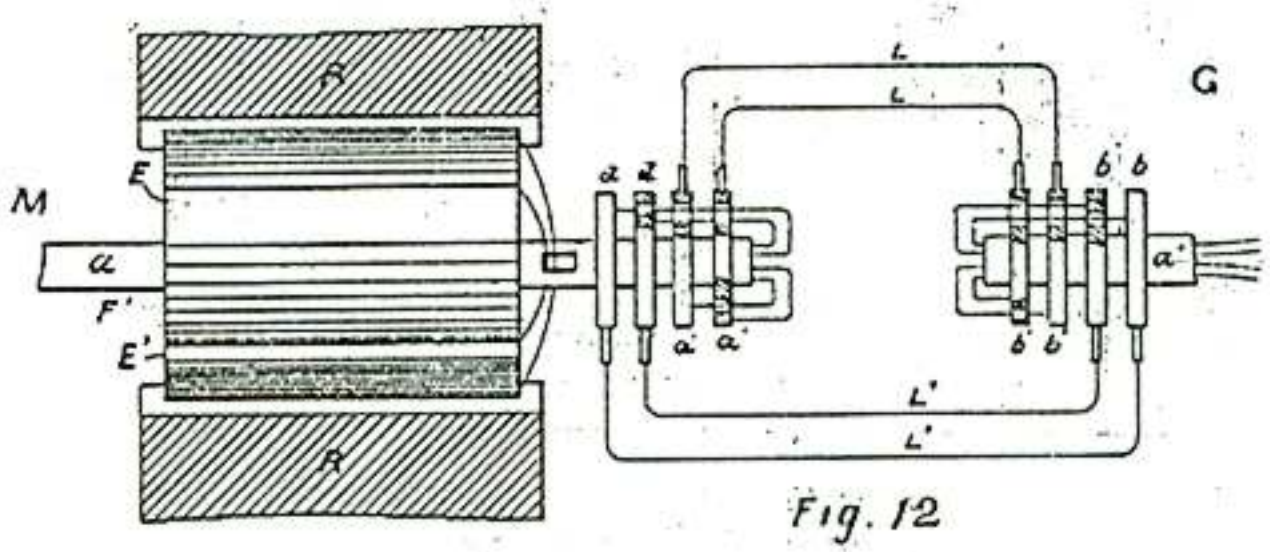

Fig. 12

WITNESSES:
D. H. Sherman.
Marvin A. Curtis.

INVENTOR.
Nikola Tesla.
BY
Duncan, Curtis & Page.
ATTORNEYS.

P-156

(No Model.)

4 Sheets—Sheet 3.

N. TESLA.

ELECTRICAL TRANSMISSION OF POWER.

No. 382,280. Patented May 1, 1888.

Fig. 13

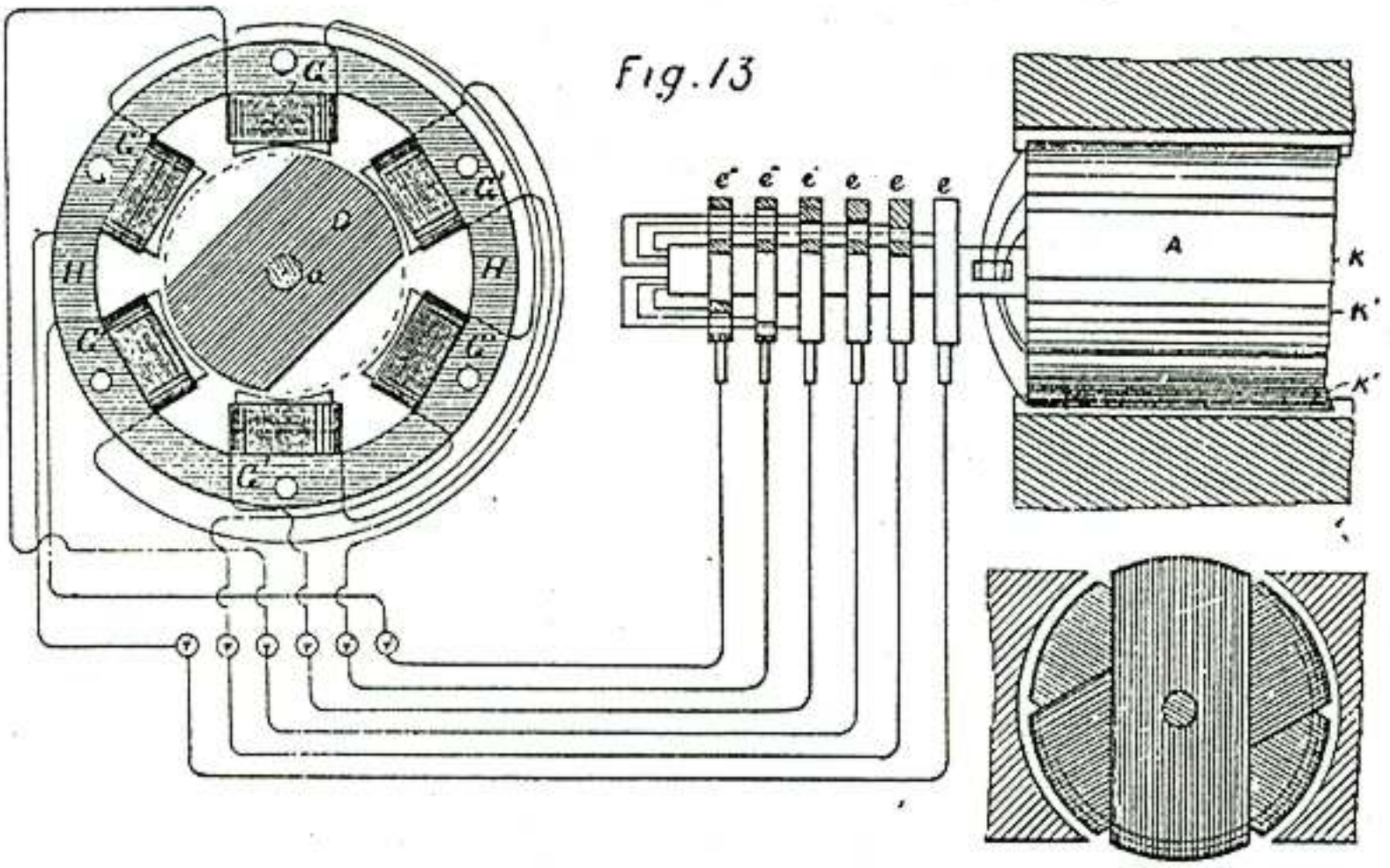

Fig. 14

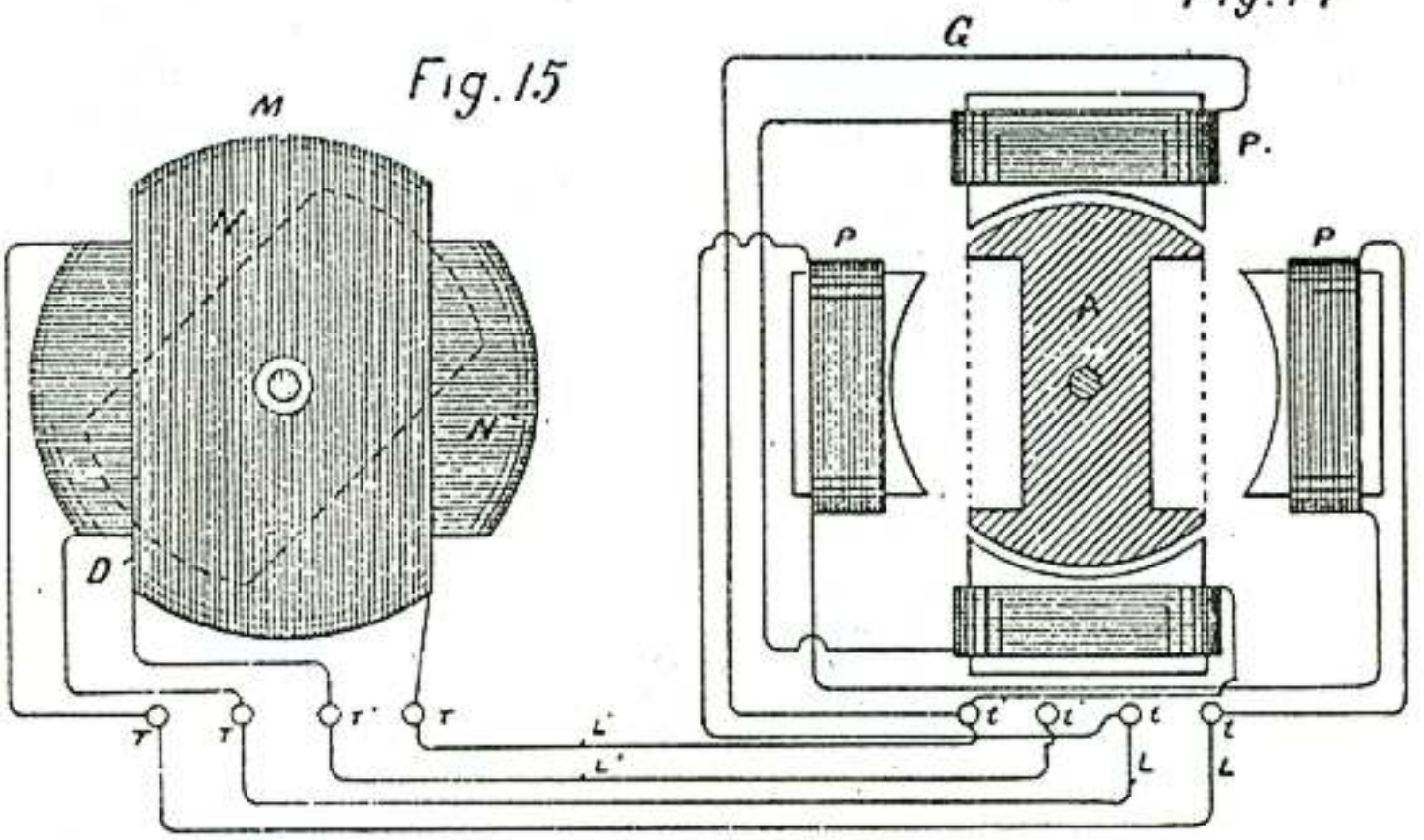

Fig. 15

Fig. 16

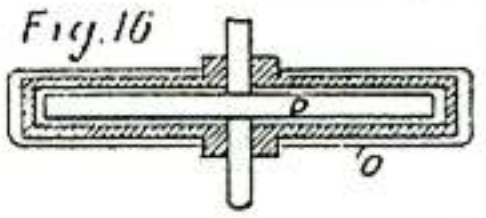

WITNESSES:

D. H. Sturman

Marvin A. Curtis.

INVENTOR.

Nikola Tesla.

BY

Duncan, Curtis & Page

ATTORNEYS.

(No Model.) 4 Sheets—Sheet 4.

N. TESLA.

ELECTRICAL TRANSMISSION OF POWER.

No. 382,280. Patented May 1, 1888.

Fig. 17

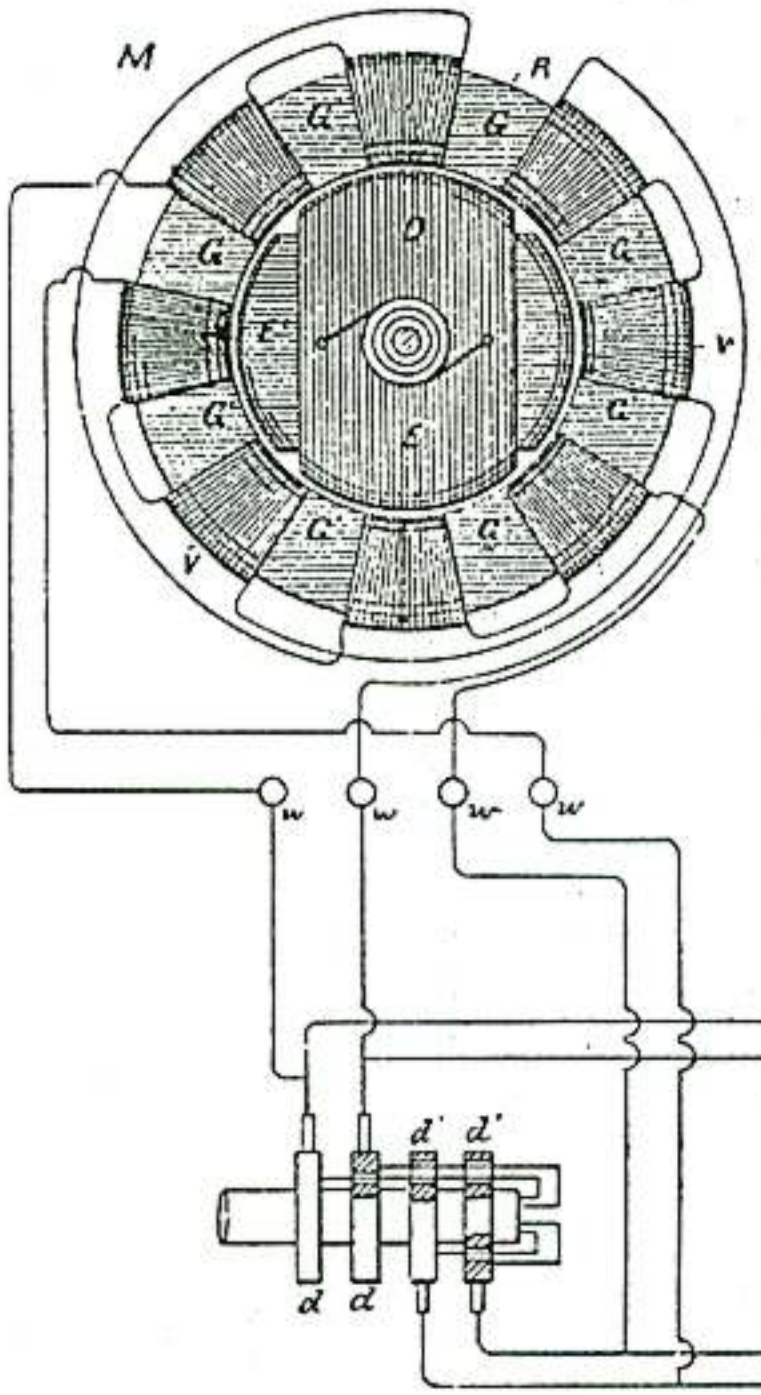

Fig. 18

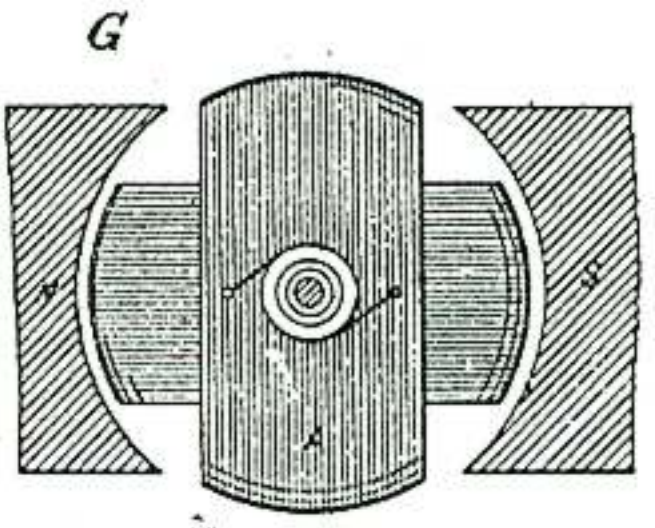

Fig. 19

WITNESSES:
D. H. Sherman.
Marvin A. Curtis.

INVENTOR.
Nikola Tesla.
BY
Duncan, Curtis & Page
ATTORNEYS.

UNITED STATES PATENT OFFICE.

NIKOLA TESLA, OF NEW YORK, N. Y.

ELECTRICAL TRANSMISSION OF POWER.

SPECIFICATION forming part of Letters Patent No. 382,281, dated May 1, 1888.

Original application filed November 30, 1887, Serial No. 256,562. Divided and this application filed March 9, 1888. Serial No. 266,736. (No model.)

To all whom it may concern:

Be it known that I, NIKOLA TESLA, from Smiljan, Lika, border country of Austria-Hungary, and residing in the city, county, and State of New York, have invented certain new and useful Improvements in the Electric Transmission of Power, of which the following is a specification, this application being a division of an application filed by me November 30, 1887, Serial No. 256,562.

In a previous application filed by me—viz., No. 252,132, filed October 12, 1887—I have set forth an improvement in motors and in the mode or method of operating the same, which, generally stated, consists in progressively and continuously shifting the poles or lines of maximum magnetic effect of either the field-magnets or armature, or both, of a motor, and thereby producing a movement of rotation in the motor. The means which I have shown for effecting this, while varying in detail, are exemplified in the following system, which, for present purposes, it will be sufficient to consider as a typical embodiment of the invention.

The motor is wound with coils forming independent energizing-circuits on the armature, which is a cylinder or disk mounted to rotate between two opposite magnetic poles. These coils are connected up with corresponding induced or current-producing circuits in an alternating-current generator. As a result of this, when the generator is set in motion, currents of alternately-opposite direction are directed through the energizing-coils of the motor in such manner as to produce a progressive shifting or rotation of the magnetic poles of the motor-armature. This movement of the poles of the armature obviously tends to rotate the armature in the opposite direction to that in which the movement of the poles takes place, owing to the attractive force between said poles and the field-magnets, and the speed of rotation increases from the start until it equals that of the generator, supposing both motor and generator to be alike.

As the magnetic poles of the armature are shifted in a direction opposite to that in which the armature rotates, it will be apparent that when the normal speed is attained the poles of the armature will assume a fixed position relatively to the field-magnets, and that in consequence the field-magnets will be energized by magnetic induction, exhibiting two distinct poles, one on each of the pole-pieces. In starting the motor, however, the speed of the armature being comparatively slow, the pole-pieces are subjected to rapid reversals of magnetic polarity; but as the speed increases these reversals become less and less frequent and finally cease, when the movement of the armature becomes synchronous with that of the generator. This being the case, the field-cores or the pole-pieces of the motor become a magnet, but by induction only.

I have found that advantageous results are secured by winding the field-magnets with a coil or coils and passing a continuous current through them, thus maintaining a permanent field, and in this feature my present invention consists.

I shall now describe the apparatus which I have devised for carrying out this invention and explain the mode of using or operating the same.

Figure 1 is an end view in elevation of my improved motor. Fig. 2 is a part horizontal central section, and Fig. 3 is a diagrammatic representation of the motor and generator combined and connected for operation.

Let A A in Fig. 1 represent the legs or pole-pieces of a field-magnet, around which are coils B B, included in the circuit of a continuous-current generator, C, which is adapted to impart magnetism to the said poles in the ordinary manner.

D D′ are two independent coils wound upon a suitable cylindrical or equivalent armature-core, which, like all others used in a similar manner, should be split or divided up into alternate magnetic and insulating parts in the usual way. This armature is mounted in non-magnetic cross-bars E E, secured to the poles of the field-magnet. The terminals of the armature-coils D D′ are connected to insulated sliding contact rings *a a b b*, carried by the armature-shaft, and brushes *c c* bear upon these rings to convey to the coils the currents which operate the motor.

The generator for operating this motor is or

may be of precisely identical construction, and for convenience of reference I have marked in Fig. 3 its parts, as follows: F F, the field-magnets energized by a continuous current passing in its field-coils G G; H H', the coils carried by the cylindrical armature; *d d e e*, the friction or collecting rings carried by the armature-shaft and forming the terminals of the armature-coils; and *f f* the collecting-brushes which deliver the currents developed in the armature-coils to the two circuits *g g'*, which connect the generator with the motor.

The operation of this system will be understood from the foregoing. The action of the generator by causing a progressive shifting of the poles in the motor-armature sets up in the latter a rotation opposite in direction to that in which the poles move. If, now, the continuous current be directed through the field-coils so as to strongly energize the magnet A A, the speed of the motor, which depends upon that of the generator, will not be increased, but the power which produces its rotation will be increased in proportion to the energy supplied through the coils B B. It is characteristic of this motor that its direction of rotation is not reversed by reversing the direction of the current through its field-coils, for the direction of rotation depends not upon the polarity of the field, but upon the direction in which the poles of the armature are shifted. To reverse the motor the connections of either of the circuits *g g'* must be reversed.

I have found that if the field-magnet of the motor be strongly energized by its coils B B, and the circuits through the armature-coils closed, assuming the generator to be running at a certain speed, the motor will not start; but if the field be but slightly energized, or in general in such condition that the magnetic influence of the armature preponderates in determining its magnetic condition, the motor will start, and with sufficient current will reach its maximum or normal speed. For this reason it is desirable to keep at the start, and until the motor has attained its normal speed, or nearly so, the field-circuit open, or to permit but little current to pass through it. I have found, however, if the fields of both the generator and motor be strongly energized that starting the generator starts the motor, and that the speed of the motor is increased in synchronism with the generator.

Motors constructed and operated on this principle maintain almost absolutely the same speed for all loads within their normal working limits, and in practice I have observed that if the motor be overloaded to such an extent as to check its speed the speed of the generator, if its motive power be not too great, is diminished synchronously with that of the motor.

I have in other applications shown how the construction of these or similar motors may be varied in certain well-known ways—as, for instance, by rotating the field about a stationary armature or rotating conductors within the field—but I do not illustrate these features further herein, as with the illustration which I have given I regard the rest as within the power of a person skilled in the art to construct.

I am aware that a device embodying the characteristics of a motor and having a permanently-magnetized field-magnet has been operated by passing through independent coils on its armature a direct or continuous current in opposite directions. Such a system, however, I do not regard as capable of the practical applications for which my invention is designed, nor is it the same in principle or mode of operation, mainly in that the shifting of the poles is intermittent and not continuous, and that there is necessarily involved a waste of energy.

In my present application I do not limit myself to any special form of motor, nor of the means for producing the alternating currents as distinguished from what are called "reversed currents," and I may excite or energize the field of the motor and of the generator by any source of current which will produce the desired result.

What I claim is—

The method herein described of transmitting power by electro-magnetic motors, which consists in continuously and progressively shifting the poles of one element of the motor by alternating currents and magnetizing the other element by a direct or continuous current, as set forth.

NIKOLA TESLA.

Witnesses:
FRANK B. MURPHY,
FRANK E. HARTLEY.

may be of precisely identical construction, and for convenience of reference I have marked in Fig. 3 its parts, as follows: F F, the field-magnets energized by a continuous current passing in its field-coils G G; H H', the coils carried by the cylindrical armature; *d d e e*, the friction or collecting rings carried by the armature-shaft and forming the terminals of the armature-coils; and *f f* the collecting-brushes which deliver the currents developed in the armature-coils to the two circuits *g g'*, which connect the generator with the motor.

The operation of this system will be understood from the foregoing. The action of the generator by causing a progressive shifting of the poles in the motor-armature sets up in the latter a rotation opposite in direction to that in which the poles move. If, now, the continuous current be directed through the field-coils so as to strongly energize the magnet A A, the speed of the motor, which depends upon that of the generator, will not be increased, but the power which produces its rotation will be increased in proportion to the energy supplied through the coils B B. It is characteristic of this motor that its direction of rotation is not reversed by reversing the direction of the current through its field-coils, for the direction of rotation depends not upon the polarity of the field, but upon the direction in which the poles of the armature are shifted. To reverse the motor the connections of either of the circuits *g g'* must be reversed.

I have found that if the field-magnet of the motor be strongly energized by its coils B B, and the circuits through the armature-coils closed, assuming the generator to be running at a certain speed, the motor will not start; but if the field be but slightly energized, or in general in such condition that the magnetic influence of the armature preponderates in determining its magnetic condition, the motor will start, and with sufficient current will reach its maximum or normal speed. For this reason it is desirable to keep at the start, and until the motor has attained its normal speed, or nearly so, the field-circuit open, or to permit but little current to pass through it. I have found, however, if the fields of both the generator and motor be strongly energized that starting the generator starts the motor, and that the speed of the motor is increased in synchronism with the generator.

Motors constructed and operated on this principle maintain almost absolutely the same speed for all loads within their normal working limits, and in practice I have observed that if the motor be overloaded to such an extent as to check its speed the speed of the generator, if its motive power be not too great, is diminished synchronously with that of the motor.

I have in other applications shown how the construction of these or similar motors may be varied in certain well-known ways—as, for instance, by rotating the field about a stationary armature or rotating conductors within the field—but I do not illustrate these features further herein, as with the illustration which I have given I regard the rest as within the power of a person skilled in the art to construct.

I am aware that a device embodying the characteristics of a motor and having a permanently-magnetized field-magnet has been operated by passing through independent coils on its armature a direct or continuous current in opposite directions. Such a system, however, I do not regard as capable of the practical applications for which my invention is designed, nor is it the same in principle or mode of operation, mainly in that the shifting of the poles is intermittent and not continuous, and that there is necessarily involved a waste of energy.

In my present application I do not limit myself to any special form of motor, nor of the means for producing the alternating currents as distinguished from what are called "reversed currents," and I may excite or energize the field of the motor and of the generator by any source of current which will produce the desired result.

What I claim is—

The method herein described of transmitting power by electro-magnetic motors, which consists in continuously and progressively shifting the poles of one element of the motor by alternating currents and magnetizing the other element by a direct or continuous current, as set forth.

NIKOLA TESLA.

Witnesses:
FRANK B. MURPHY,
FRANK E. HARTLEY.

(No Model.) 2 Sheets—Sheet 2.

N. TESLA

ELECTRICAL TRANSMISSION OF POWER.

No. 382,281. Patented May 1, 1888

Fig. 3

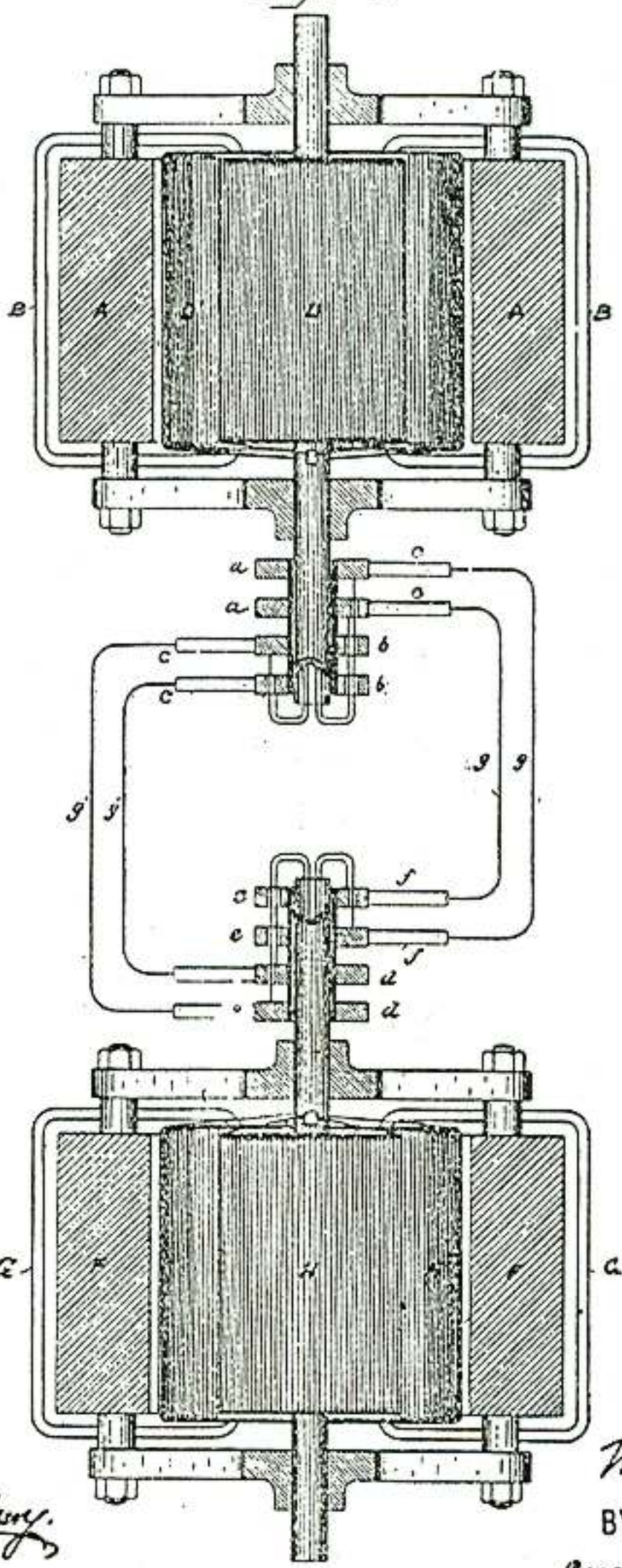

WITNESSES

Raphael Netter.

George L. Roberts.

INVENTOR

Nikola Tesla

BY Duncan, Curtis & Page

ATTORNEYS

UNITED STATES PATENT OFFICE.

NIKOLA TESLA, OF NEW YORK, N. Y., ASSIGNOR OF ONE-HALF TO CHARLES F. PECK, OF ENGLEWOOD, NEW JERSEY.

SYSTEM OF ELECTRICAL DISTRIBUTION.

SPECIFICATION forming part of Letters Patent No. 381,970, dated May 1, 1888.

Application filed December 23, 1887. Serial No. 258,787. (No model.)

To all whom it may concern:

Be it known that I, NIKOLA TESLA, from Smiljan Lika, border country of Austria-Hungary, now residing at New York, in the county and State of New York, have invented certain new and useful Improvements in Systems of Electrical Distribution, of which the following is a specification, reference being had to the drawings accompanying and forming a part of the same.

This invention relates to those systems of electrical distribution in which a current from a single source of supply in a main or transmitting circuit is caused to induce by means of suitable induction apparatus a current or currents in an independent working circuit or circuits.

The main objects of the invention are the same as have been heretofore obtained by the use of these systems—viz., to divide the current from a single source, whereby a number of lamps, motors, or other translating devices may be independently controlled and operated by the same source of current, and in some cases to reduce a current of high potential in the main circuit to one of greater quantity and lower potential in the independent consumption or working circuit or circuits.

The general character of the devices employed in these systems is now well understood. An alternating-current magneto-machine is used as the source of supply. The current developed thereby is conducted through a transmission circuit to one or more distant points at which the transformers are located. These consist of induction-machines of various kinds. In some cases ordinary forms of induction-coil have been used with one coil in the transmitting-circuit and the other in a local or consumption circuit, the coils being differently proportioned according to the work to be done in the consumption-circuit—that is to say, if the work requires a current of higher potential than that in the transmission-circuit the secondary or induced coil is of greater length and resistance than the primary, while, on the other hand, if a quantity current of lower potential is wanted the longer coil is made the primary. In lieu of these devices various forms of electro-dynamic induction-machines, including the combined motors and generators, have been devised. For instance, a motor is constructed in accordance with well-understood principles, and on the same armature are wound induced coils which constitute a generator. The motor-coils are generally of fine wire and the generator-coils of coarser wire, so as to produce a current of greater quantity and lower potential than the line-current, which is of relatively high potential, to avoid loss in long transmission. A similar arrangement is to wind coils corresponding to those described in a ring or similar core, and by means of a commutator of suitable kind to direct the current through the inducing-coils successively, so as to maintain a movement of the poles of the core and of the lines of force which set up the currents in the induced coils.

Without enumerating the objections to these systems in detail, it will suffice to say that the theory or the principle of the action or operation of these devices has apparently been so little understood that their proper construction and use have up to the present time been attended with various difficulties and great expense. The transformers are very liable to be injured and burned out, and the means resorted to for curing this and other defects have almost invariably been at the expense of efficiency.

The form of converter or transformer which I have devised appears to be largely free from the defects and objections to which I have alluded. While I do not herein advance any theory as to its mode of operation, I would state that, in so far as the principal of construction is concerned, it is analogous to those transformers which I have above described as electro-dynamic induction-machines, except that it involves no moving parts whatever, and is hence not liable to wear or other derangement, and requires no more attention than the other and more common induction-machines.

In carrying out my invention I provide a series of inducing-coils and corresponding induced coils, which, by preference, I wind upon a core closed upon itself—such as an annulus or ring subdivided in the usual manner. The

two sets of coils are wound side by side or superposed or otherwise placed in well-known ways to bring them into the most effective relations to one another and to the core. The inducing or primary coils wound on the core are divided into pairs or sets by the proper electrical connections, so that while the coils of one pair or set to co-operate in fixing the magnetic poles of the core at two given diametrically-opposite points, the coils of the other pair or set—assuming, for sake of illustration, that there are but two—tend to fix the poles ninety degrees from such points. With this induction device I use an alternating-current generator with coils or sets of coils to correspond with those of the converter, and by means of suitable conductors I connect up in independent circuits the corresponding coils of the generator and converter. It results from this that the different electrical phases in the generator are attended by corresponding magnetic changes in the converter; or, in other words, that as the generator-coils revolve the points of greatest magnetic intensity in the converter will be progressively shifted or whirled around. This principle I have applied under variously-modified conditions to the operation of electro-magnetic motors, and in previous applications, notably in those having Serial Nos. 252,132 and 256,561, I have described in detail the manner of constructing and using such motors. In the present application my object is to describe the best and most convenient manner of which I am at present aware of carrying out the invention as applied to a system of electrical distribution; but one skilled in the art will readily understand from the description by the modifications proposed in said applications, wherein the form of both the generator and converter in the present case may be modified.

In illustration therefore of the details of construction which my present invention involves, I now refer to the accompanying drawings.

Figure 1 is a diagrammatic illustration of the converter and the electrical connections of the same. Fig. 2 is a horizontal central cross-section of Fig. 1. Fig. 3 is a diagram of the circuits of the entire system, the generator being shown in section.

I use a core, A, which is closed upon itself—that is to say, of an annular cylindrical or equivalent form—and as the efficiency of the apparatus is largely increased by the subdivision of this core I make it of thin strips, plates, or wires of soft iron electrically insulated as far as practicable. Upon this core, by any well-known method, I wind, say, four coils, B B B′ B′, which I use as primary coils, and for which I use long lengths of comparatively fine wire. Over these coils I then wind shorter coils of coarser wire, C C C′ C′, to constitute the induced or secondary coils. The construction of this or any equivalent form of converter may be carried further, as above pointed out, by inclosing these coils with iron—as, for example, by winding over the coils a layer or layers of insulated iron wire.

The device is provided with suitable binding-posts, to which the ends of the coils are led. The diametrically-opposite coils B B and B′ B′ are connected, respectively, in series, and the four terminals are connected to the binding posts 1 2 3 4. The induced coils are connected together in any desired manner. For example, as shown in Fig. 3, C C may be connected in multiple arc when a quantity current is desired—as for running a group of incandescent lamps, D—while C′ C′ may be independently connected in series in a circuit including arc lamps or the like. The generator in this system will be adapted to the converter in the manner illustrated. For example, in the present case I employ a pair of ordinary permanent or electro magnets, E E, between which is mounted a cylindrical armature on a shaft, F, and wound with two coils, G G′. The terminals of these coils are connected, respectively, to four insulated contact or collecting rings, H H H′ H′, and the four line circuit-wires L connect the brushes K, bearing on these rings, to the converter in the order shown. Noting the results of this combination, it will be observed that at a given point of time the coil G is in its neutral position and is generating little or no current, while the other coil, G′, is in a position where it exerts its maximum effect. Assuming coil G to be connected in circuit with coils B B of the converter, and coil G′ with coils B′ B′, it is evident that the poles of the ring A will be determined by coils B′ B′ alone; but as the armature of the generator revolves, coil G develops more current and coil G′ less, until G reaches its maximum and G′ its neutral position. The obvious result will be to shift the poles of the ring A through one-quarter of its periphery. The movement of the coils through the next quarter of a turn, during which coil G′ enters a field of opposite polarity and generates a current of opposite direction and increasing strength, while coil G, in passing from its maximum to its neutral position generates a current of decreasing strength and same direction as before, causes a further shifting of the poles through the second quarter of the ring. The second half-revolution will obviously be a repetition of the same action. By the shifting of the poles of the ring A a powerful dynamic inductive effect on the coils C C is produced. Besides the currents generated in the secondary coils by dynamo-magnetic induction other currents will be set up in the same coils in consequence of any variations in the intensity of the poles in the ring A. This should be avoided by maintaining the intensity of the poles constant, to accomplish which care should be taken in designing and proportioning the generator and in distributing the coils in the ring A and balancing their effect. When this is

done, the currents are produced by dynamo-magnetic induction only, the same result being obtained as though the poles were shifted by a commutator with an infinite number of segments.

The modifications which are applicable to other forms of converter are in many respects applicable to this. I refer more particularly to the form of the core, the relative lengths and resistances of the primary and secondary coils, and the arrangements for running or operating the same.

The new method of electrical conversion which this system involves I have made the subject of another application, and I do not claim it therefore herein.

Without limiting myself therefore to any specific form, what I claim is—

1. The combination, with a core closed upon itself, inducing or primary coils wound thereon and connected up in independent pairs or sets, and induced or secondary coils wound upon or near the primary coils, of a generator of alternating currents and independent connections to the primary coils, whereby by the operation of the generator a progressive shifting of the poles of the core is effected, as set forth.

2. The combination, with an annular or similar magnetic core and primary and secondary coils wound thereon, of an alternating-current generator having induced or armature coils corresponding to the primary coils, and independent circuits connecting the primary coils with the corresponding coils of the generator, as herein set forth.

3. The combination, with independent electric transmission-circuits, of transformers consisting of annular or similar cores wound with primary and secondary coils, the opposite primary coils of each transformer being connected to one of the transmission-circuits, an alternating-current generator with independent induced or armature coils connected with the transmission-circuits, whereby alternating currents may be directed through the primary coils of the transformers in the order and manner herein described

NIKOLA TESLA.

Witnesses:
ROBT. H. DUNCAN,
ROBT. F. GAYLORD.

(No Model.) 2 Sheets—Sheet 1.

N. TESLA

SYSTEM OF ELECTRICAL DISTRIBUTION.

No. 381,970. Patented May 1, 1888.

Fig: 1

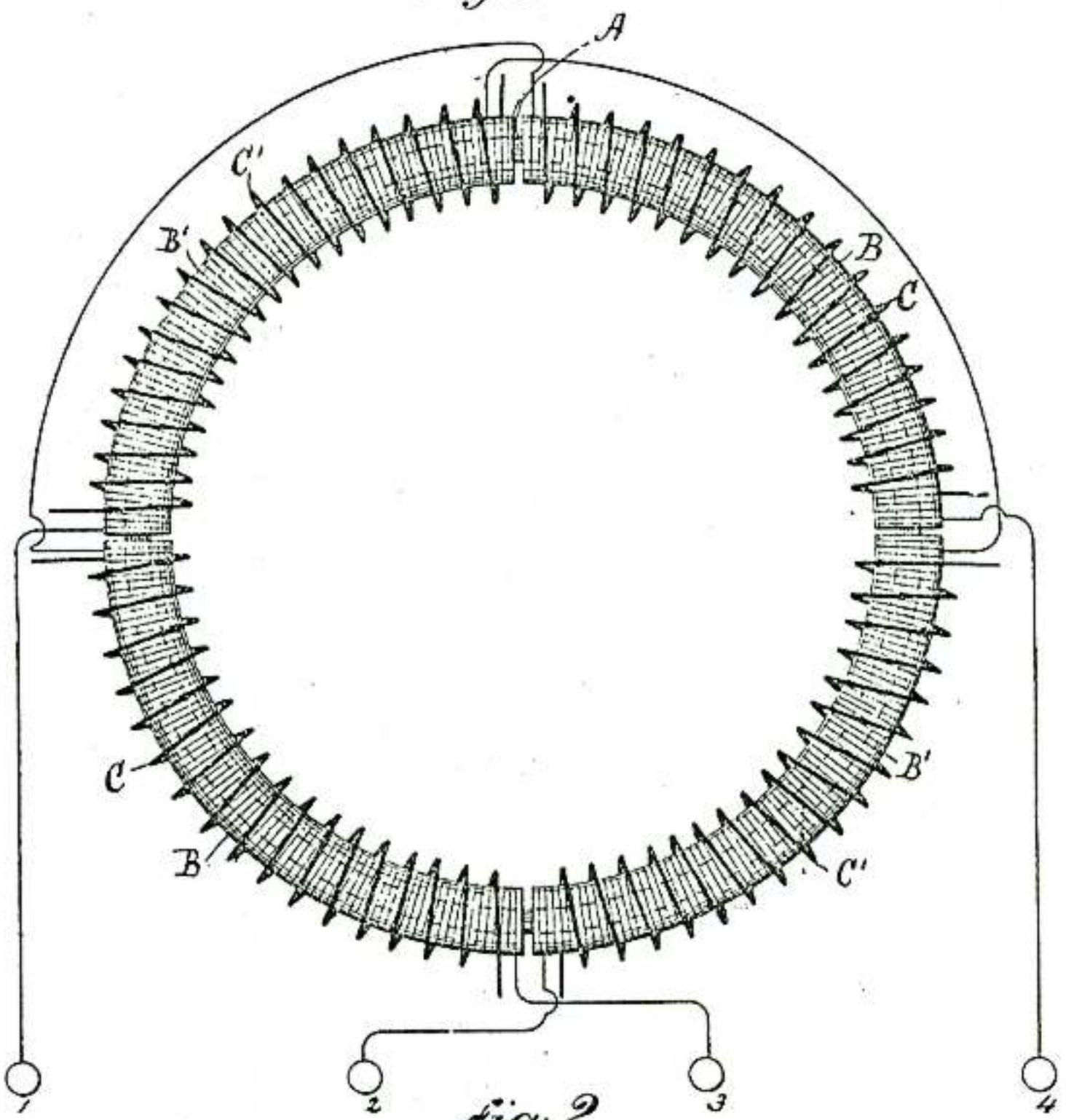

Fig: 2

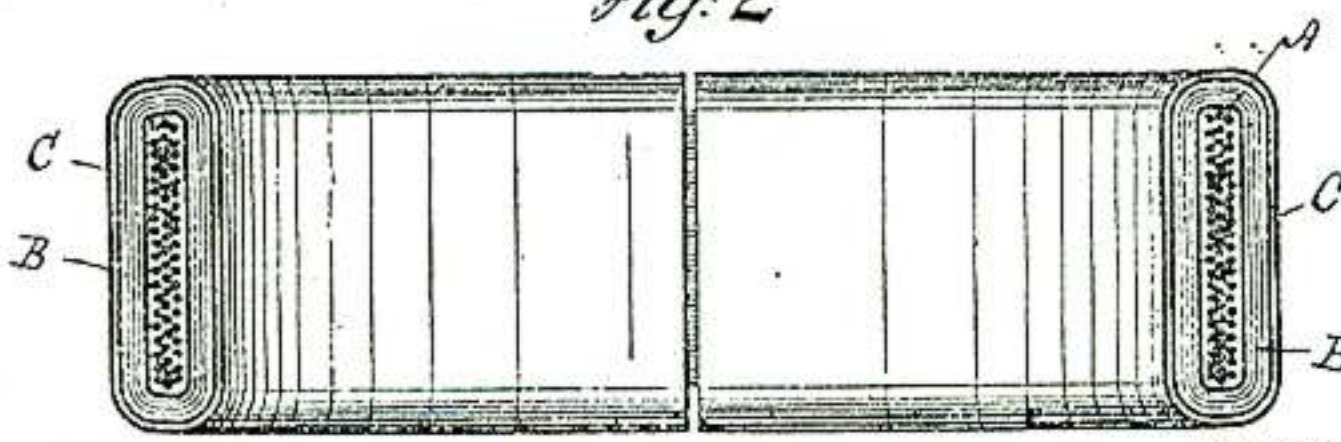

WITNESSES:

Robt. N. Duncan.

Robt. F. Gaylord

INVENTOR.

Nikola Tesla.

BY

Duncan, Curtis & Page

His ATTORNEYS

P-166

(No Model.) 4 Sheets—Sheet 2.

N. TESLA.

SYSTEM OF ELECTRICAL DISTRIBUTION.

No. 381,970. Patented May 1, 1888.

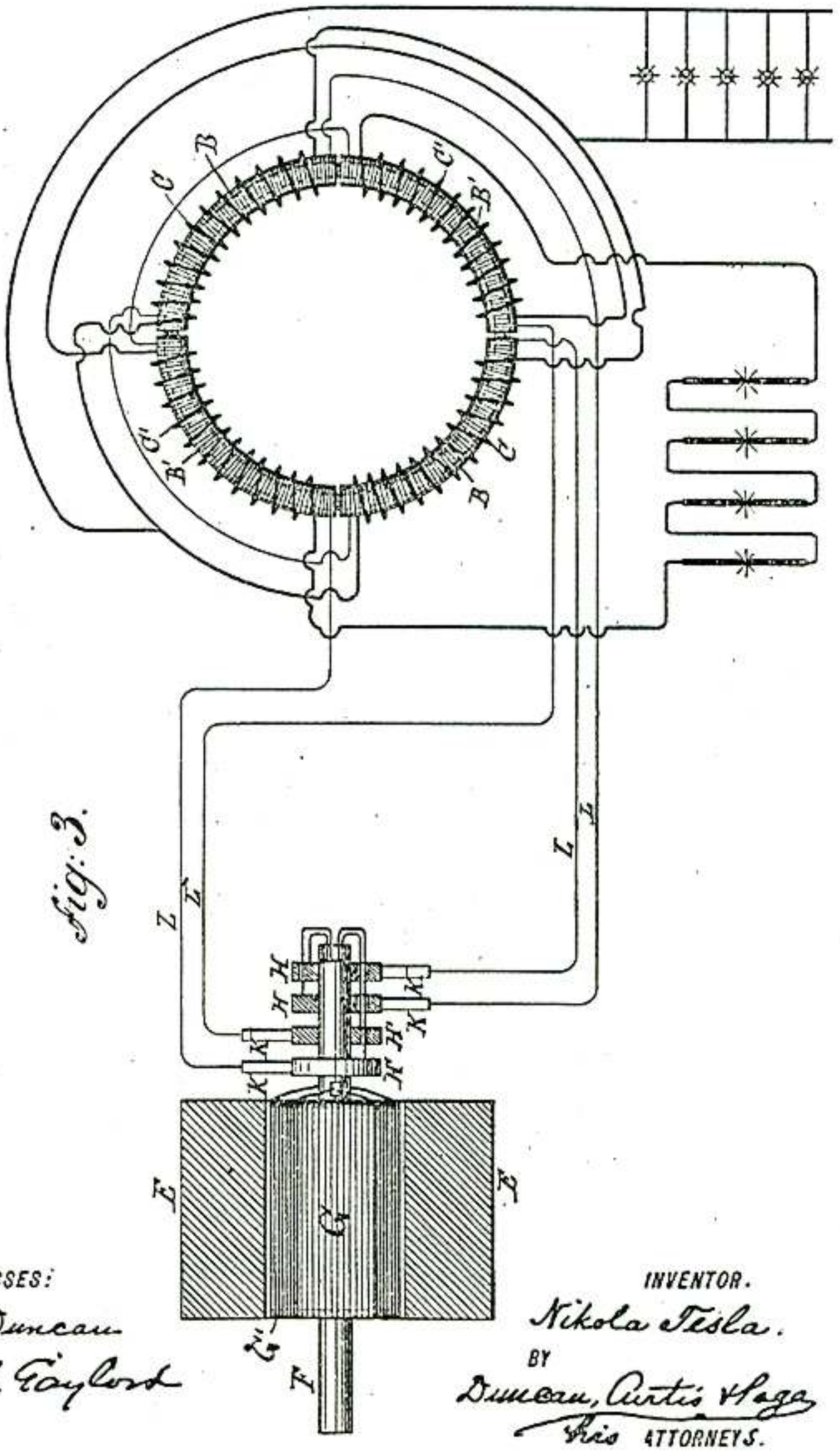

Fig: 3.

WITNESSES:

Robt. H. Duncan

Robt. F. Gaylord

INVENTOR.

Nikola Tesla.

BY

Duncan, Curtis & Page

ATTORNEYS.

UNITED STATES PATENT OFFICE.

NIKOLA TESLA, OF NEW YORK, N. Y., ASSIGNOR TO THE TESLA ELECTRIC COMPANY, OF SAME PLACE.

SYSTEM OF ELECTRICAL DISTRIBUTION.

SPECIFICATION forming part of Letters Patent No. 390,413, dated October 2, 1888.

Application filed April 10, 1888. Serial No. 270,187. (No model.)

To all whom it may concern:

Be it known that I, NIKOLA TESLA, a subject of the Emperor of Austria, from Smiljan, Lika, border country of Austria-Hungary, residing in the city, county, and State of New York, have invented certain new and useful Improvements in Systems of Electrical Distribution, of which the following is a specification, reference being had to the drawings accompanying and forming a part of the same.

In previous applications for patents made by me I have shown and described electrical systems for the transmission of power and the conversion and distribution of electrical energy, in which the motors and the transformers contain two or more coils or sets of coils, which were connected up in independent circuits with corresponding coils of an alternating-current generator, the operation of the system being brought about by the co-operation of the alternating currents in the independent circuits in progressively moving or shifting the poles or points of maximum magnetic effect of the motors or converters. In these systems, as I have described them, two independent conductors were employed for each of the independent circuits connecting the generator with the devices for converting the transmitted currents into mechanical energy or into electric currents of another character; but I have found that this is not always necessary, and that the two or more circuits may have a single return path or wire in common, with a loss, if any, which is so extremely slight that it may be disregarded entirely. For sake of illustration, if the generator have two independent coils and the motor two coils or two sets of coils in corresponding relations to its operative elements one terminal of each generator-coil is connected to the corresponding terminals of the motor coils through two independent conductors, while the opposite terminals of the respective coils are both connected to one return-wire.

This invention is applicable to my system in various ways, as will be seen by reference to the drawings, in which—

Figure 1 is a diagrammatic illustration of a generator and single motor constructed and electrically connected in accordance with the invention. Fig. 2 is a diagram of the system as it is used in operating motors or converters, or both, in parallel or multiple arc. Fig. 3 illustrates diagrammatically the manner of operating two or more motors or converters, or both, in series.

It is obvious that for purposes of this invention motors or transformers, which may be all designated as "converters," are the same, and that either or both may be operated by the same system or arrangement of circuits.

Referring to Fig. 1, A A designate the poles of the field-magnets of an alternating-current generator, the armature of which, being in this case cylindrical in form and mounted on a shaft, C, is wound longitudinally with coils B B'. The shaft C carries three insulated contact-rings, *a b c*, to two of which, as *b c*, one terminal of each coil, as *e d*, is connected. The remaining terminals, *f g*, are both connected to the third ring, *a*.

A motor in this case is shown as composed of a ring, H, wound with four coils, I I J J, electrically connected, so as to co-operate in pairs, with a tendency to fix the poles of the ring at four points ninety degrees apart. Within the magnetic ring H is a disk or cylindrical core wound with two coils, G G', which may be connected to form two closed circuits. The terminals *j k* of the two sets or pairs of coils are connected, respectively, to the binding-posts E' F', and the other terminals, *h i*, are connected to a single binding-post, D'. To operate the motor, three line-wires are used to connect the terminals of the generator with those of the motor.

So far as the apparent action or mode of operation of this arrangement is concerned, the single wire D, which is, so to speak, a common return-wire for both circuits, may be regarded as two independent wires. In illustration, with the order of connection shown, coil B' of the generator is producing its maximum current and coil B its minimum; hence the current which passes through wire *e*, ring *b*, brush *b'*, line-wire E, terminal E', wire *j*, coils I I, wire or terminal D', line-wire D, brush *a'*, ring *a*, and wire *f*, fixes the polar line of the motor midway between the two coils I I; but as the coil B' moves from the po-

sition indicated it generates less current, while coil B, moving into the field, generates more. The current from coil B passes through the devices and wires designated by the letters *d*, *c*, *d'*, F, F', *k*, J J, *i*, D', D, *a'*, *a*, and *g*, and the position of the poles of the motor will be due to the resultant effect of the currents in the two sets of coils—that is, it will be advanced in proportion to the advance or forward movement of the armature coils. The movement of the generator-armature through one quarter of a revolution will obviously bring coil B' into its neutral position and coil B into its position of maximum effect, and this shifts the poles ninety degrees, as they are fixed solely by coils B. This action is repeated for each quarter of a complete revolution.

When more than one motor or other device is employed, they may be run either in parallel or series. In Fig. 2 the former arrangement is shown. The electrical device is shown as a converter, L, constructed as I have described in my application Serial No. 258,787, filed December 23, 1887. The two sets of primary coils *p r* are connected, respectively, to the mains F E, which are electrically connected with the two coils of the generator. The cross-circuit wires *l m*, making these connections, are then connected to the common return-wire D. The secondary coils *p' p''* are in circuits *n o*, including, for example, incandescent lamps. Only one converter is shown entirein this figure, the others being illustrated diagrammatically.

When motors or converters are to be run in series, the two wires E F are led from the generator to the coils of the first motor or converter, then continued on to the next, and so on through the whole series, and are then joined to the single wire D, which completes both circuits through the generator. This is shown in Fig. 3, in which J I represent the two coils or sets of coils of the motors.

Obviously it is immaterial to the operation of the motor or equivalent device in Fig. 1 what order of connections is observed between the respective terminals of the generator or motor.

I have described the invention in its best and most practicable form of which I am aware; but there are other conditions under which it may be carried out. For example, in case the motor and generator each has three independent circuits, one terminal of each circuit is connected to a line-wire and the other three terminals to a common return conductor. This arrangement will secure similar results to those attained with a generator and motor having but two independent circuits, as above described.

When applied to such machines and motors as have three or more induced circuits with a common electrical joint, the three or more terminals of the generator would be simply connected to those of the motor. Such forms of machines, when adapted in this manner to my system, I have, however, found to be less efficient than the others.

The invention is applicable to machines and motors of various types, and according to circumstances and conditions readily understood, with more or less efficient results. I do not therefore limit myself to any of the details of construction of the apparatus herein shown.

What I claim is—

1. The combination, with a generator having independent current-generating circuits and a converter or converters having independent and corresponding circuits, of independent conductors connecting one terminal of each generator-circuit with a corresponding terminal of the motor and a single conductor connecting the remaining generator and converter terminals, as set forth.

2. The combination, with a generator having independent current-generating circuits and a converter or converters having independent and corresponding circuits, of independent line or connecting circuits formed in part through a conductor common to all, as set forth.

3. The system of electrical distribution herein set forth, consisting of the combination, with an alternating-current generator having independent generating circuits and electro-magnetic motors or converters provided with corresponding energizing-circuits, of line wires or conductors connecting the coils of the motors or converters, respectively, in series with one terminal of each circuit of the generator, and a single return wire or conductor connecting the said conductors with the other terminals of the generator, as set forth.

NIKOLA TESLA.

Witnesses:
ROBT. F. GAYLORD,
FRANK E. HARTLEY.

P-169

(No Model.) 3 Sheets—Sheet 1.

N. TESLA.

SYSTEM OF ELECTRICAL DISTRIBUTION.

No. 390,413. Patented Oct. 2, 1888.

Fig. 1

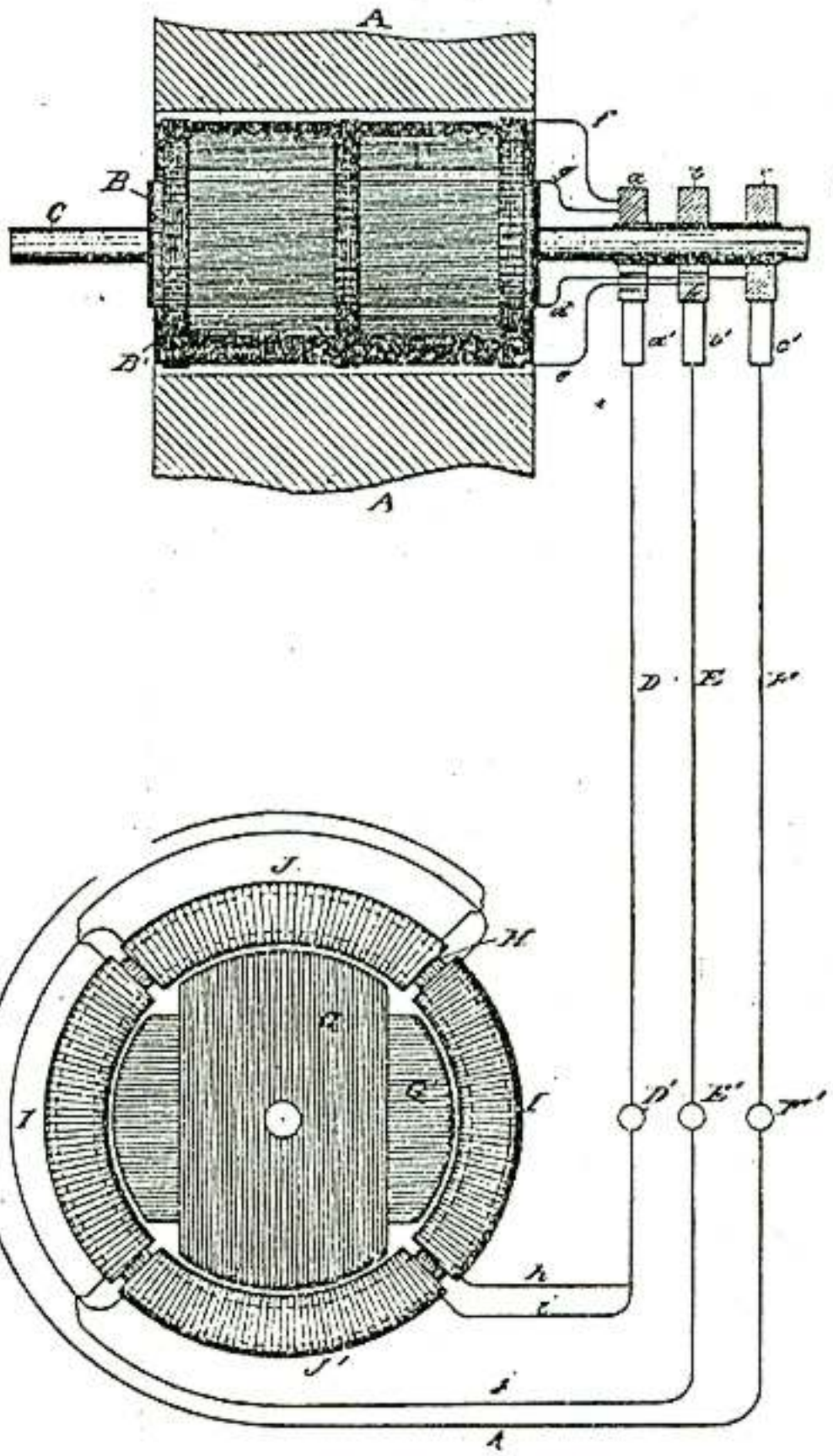

WITNESSES:

Raphael Netter

Frank P. Murdock.

INVENTOR

Nikola Tesla

BY

Duncan, Curtis & Page

ATTORNEY

P-170

(No Model.)

3 Sheets—Sheet 2.

N. TESLA

SYSTEM OF ELECTRICAL DISTRIBUTION.

No. 390,413. Patented Oct. 2, 1888.

Fig. 2.

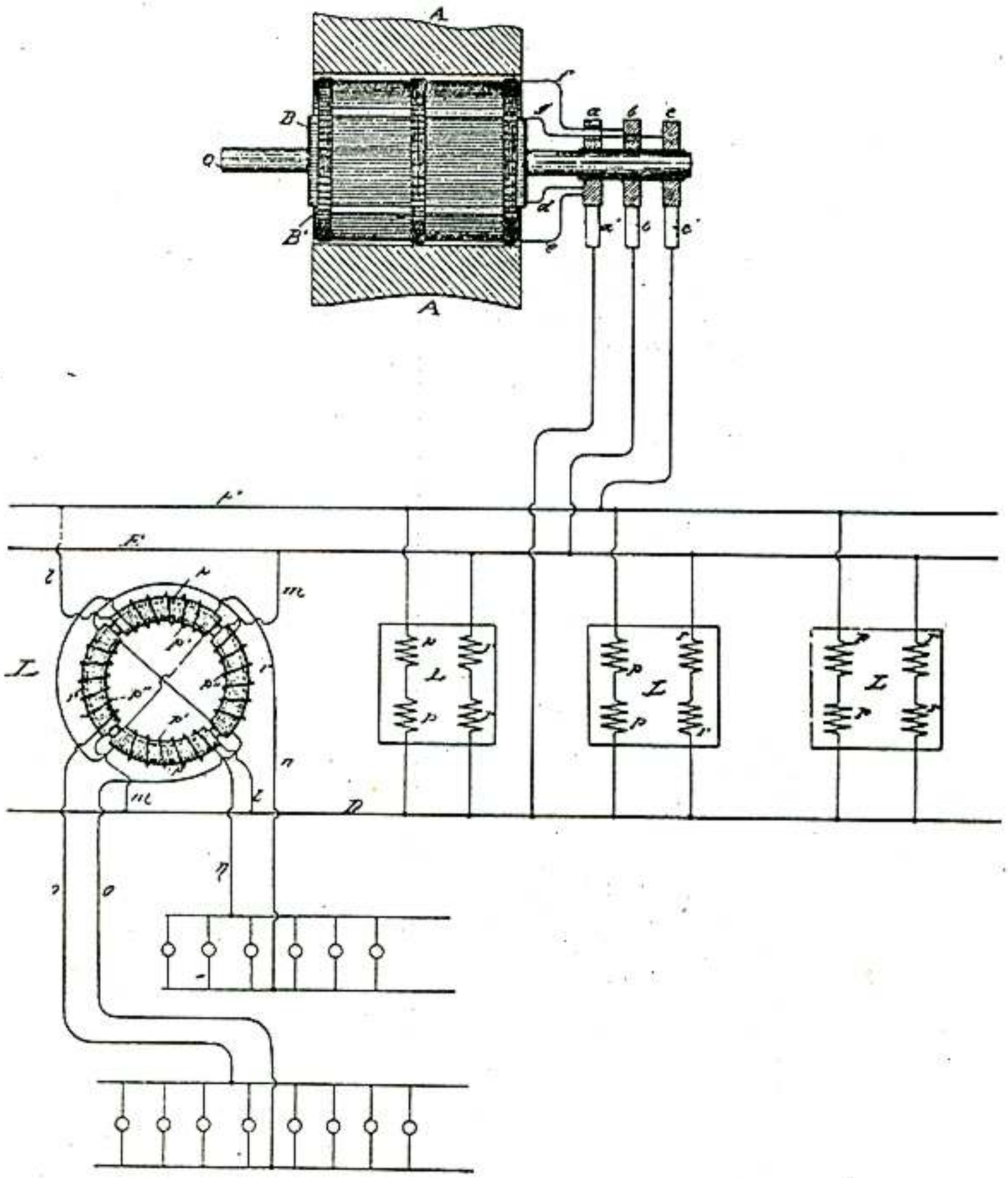

WITNESSES:

Raphael Netter

Francis T. Murphy.

INVENTOR

Nikola Tesla.

BY

Duncan Curtis & Page

ATTORNEYS

(No Model.) 3 Sheets—Sheet 3.

N. TESLA.

SYSTEM OF ELECTRICAL DISTRIBUTION.

No. 390,413. Patented Oct. 2, 1888.

Fig 3

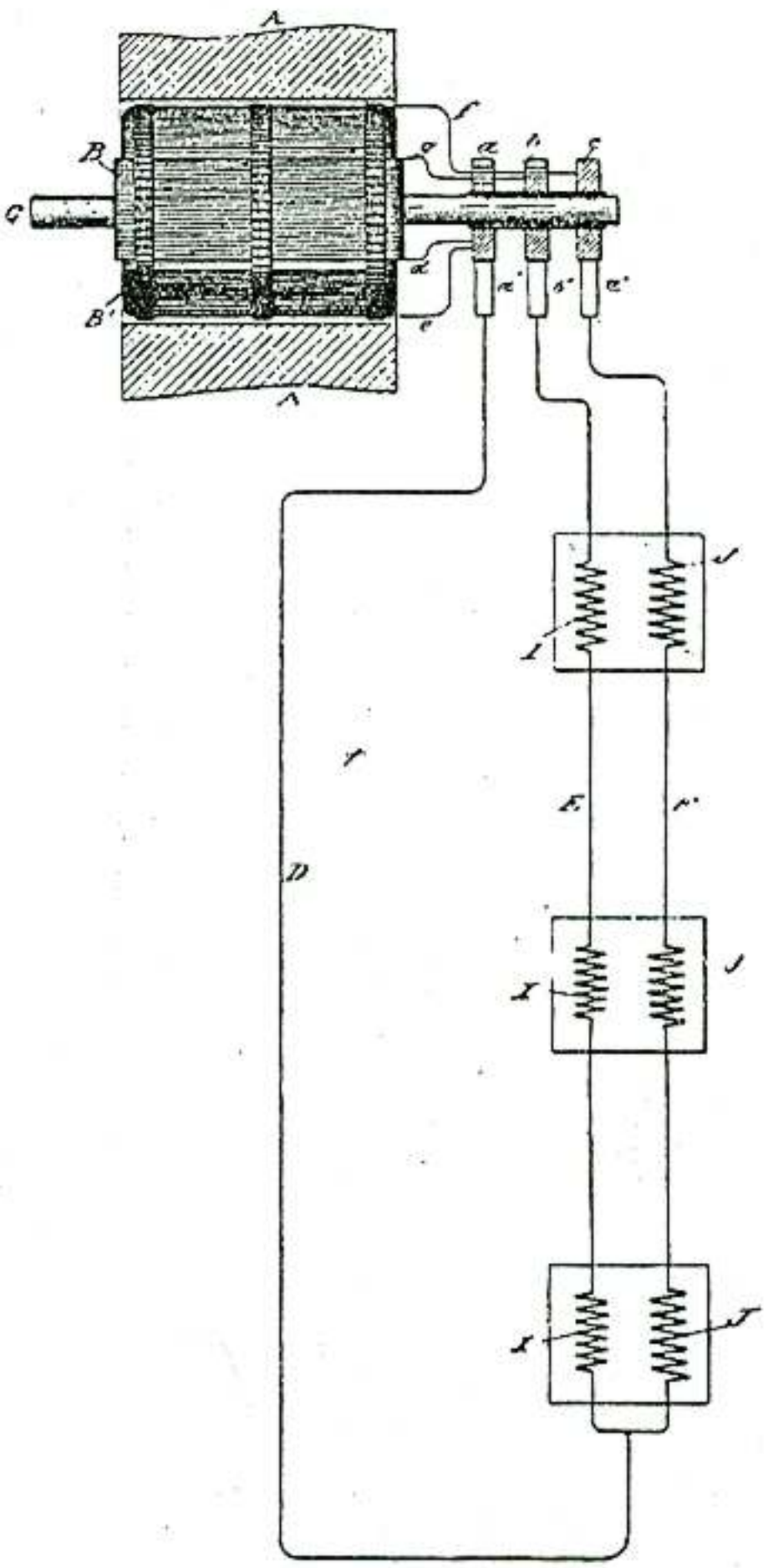

WITNESSES

Raphael Netter.
Frank B Murphy.

INVENTOR

Nikola Tesla

BY

Duncan, Curtis & Page

ATTORNEYS.

UNITED STATES PATENT OFFICE.

NIKOLA TESLA, OF NEW YORK, N. Y., ASSIGNOR TO THE TESLA ELECTRIC COMPANY, OF SAME PLACE.

SYSTEM OF ELECTRICAL TRANSMISSION OF POWER.

SPECIFICATION forming part of Letters Patent No. 487,706, dated December 13, 1892.

Application filed May 15, 1888. Serial No. 273,992. (No model.)

To all whom it may concern:

Be it known that I, NIKOLA TESLA, a subject of the Emperor of Austria-Hungary, formerly of Smiljan, Lika, border country of Austria-Hungary, but now residing at New York, in the county and State of New York, have invented certain new and useful Improvements in Systems for the Electrical Transmission of Power, of which the following is a specification, reference being had to the drawings accompanying and forming a part of the same.

This invention is an improvement in systems of electrical distribution of power wherein are employed motors having two or more independent energizing-circuits, through which are passed alternating currents differing in phase that are produced by a magneto-electric machine having independent induced circuits, or that are obtained from any other suitable source or by any other suitable means. In illustration of the various conditions which I regard as most important to an attainment of the best results from the use of motors of this character, I have heretofore used generally forms of generator in which the relations of the induced or current-generating coils and field-magnets were such that but two impulses or current are produced in each coil by a single revolution of the armature or field cores. The rate, therefore, at which the different phases or impulses of current in the line-circuits succeeded one another was so little greater than that at which the armature of the generator revolved that without special provision the generator required to be run at very high speed to obtain the best results. It is well known that the most efficient results are secured in the operation of such motors when they are run at high speeds; but as the practicable rate of speed is much limited by mechanical conditions, particularly in the case of large generators, which would be required when a number of motors are run from a single source, I have sought to produce a greater number of current impulses by a slow or slower speed than that at which the ordinary bipolar machines may be economically operated. I therefore adapt to my system any of the various types of multipolar alternating-current machines which yield a considerable number of current reversals or impulses for each revolution of the armature by observing the main condition essential to the operation of my system that the phases of the currents in the independent induced circuits of the generator should not coincide, but exhibit a sufficient difference in phase to produce the desired results. I may accomplish this in a variety of ways, which, however, vary only in detail, since they are based upon the same underlying principle. For example, to adapt a given type of alternating-current generator I may couple rigidly two complete machines, securing them so that the requisite difference in phase between the currents produced by each will be obtained, or I may secure two armatures to the same shaft within the influence of the same field and with an angular displacement that will produce the proper difference in phase between the two currents, or I may secure two armatures to the same shaft with their coils symmetrically disposed, and place two sets of field-magnets at such angle as to secure the same result, or, finally, I may wind on the same armature the two sets of coils alternately, or in such manner that they will develop currents, the phases of which differ in time sufficiently to produce rotation of the motor.

Another feature of my invention is in the plan which I have devised for utilizing generators and motors of this type, whereby a single generator may be caused to run a number of motors either at the same speed as its own or all at different speeds. This I accomplish by constructing the motors with fewer poles than the generator, in which case their speed will be greater than that of the generator, the rate of speed being higher as the number of their poles is relatively less. This will be understood from an example. Suppose the generator has two independent generating-coils which revolve between two pole-pieces oppositely magnetized and that the motor has energizing-coils that produce at any given time two magnetic poles in one element that tend to set up a rotation of the motor. A generator thus constructed yields four impulses or reversals of current by each revolution, two in each of its independent

circuits, and I have demonstrated that the effect upon a motor such as that mentioned is to shift the magnetic poles through three hundred and sixty degrees. It is obvious that if the four reversals in the same order could be produced by each half-revolution of the generator the motor would make two revolutions to the generator's one. This would be readily accomplished by adding two intermediate poles to the generator or altering it in any of the other equivalent ways above indicated. The same rule applies to generators and motors with multiple poles. For instance, if a generator be constructed with two circuits, each of which produces twelve reversals of current to a revolution, and these currents be directed through the independent energizing-coils of a motor, the coils of which are so applied as to produce twelve magnetic poles at all times, the rotation of the two will be synchronous; but if the motor-coils produce but six poles the movable element will be rotated twice while the generator rotates once, or if the motor have four poles its rotation will be three times as fast as that of the generator.

These features, so far as it is necessary to an understanding of the invention, are illustrated in the accompanying drawings.

Figure 1 is a diagrammatic illustration of a generator constructed in accordance with my invention. Fig. 2 is a similar view of a correspondingly-constructed motor. Fig. 3 is a diagram of a generator of modified construction. Fig. 4 is a diagram of a motor of corresponding character. Fig. 5 is a diagram of a system containing a generator and several motors adapted to run at various speeds.

In Fig. 1, let C represent a cylindrical armature-core wound longitudinally with insulated coils A A, which are connected up in series, the terminals of the series being connected to collecting-rings *a a* on the shaft G. By means of this shaft the armature is mounted to rotate between the poles of an annular field-magnet D, formed with polar projections wound with coils E, that magnetize the said projections. The coils E are included in the circuit of a generator F, by means of which the field-magnet is energized. If thus constructed, the machine is a well-known form of alternating-current generator. To adapt it to my system, however, I wind on armature C a second set of coils B B intermediate to the first, or, in other words, in such positions that while the coils of one set are in the relative positions to the poles of the field-magnet to produce the maximum current those of the other set will be in the position in which they produce the minimum current. The coils B are connected, also, in series and to two collecting-rings *b b*, secured generally to the shaft at the opposite end of the armature.

The motor shown in Fig 2 has an annular field-magnet H, with four pole-pieces wound with coils I. The armature is constructed similarly to that of the generator, but with two sets of two coils in closed circuits to correspond with the reduced number of magnetic poles in the field.

From the foregoing it is evident that one revolution of the armature of the generator producing eight current impulses in each circuit will produce two revolutions of the motor-armature.

The application of the principle of this invention is not confined to any particular form of machine. In Figs. 3 and 4 a generator and motor of another well-known type are shown. In Fig. 3, J J are magnets disposed in a circle and wound with coils K, which are in circuit with a generator which supplies the current that maintains the field of force. In the usual construction of these machines the armature-conductor L is carried by a suitable frame, so as to be rotated in face of the magnets J J or between these magnets and another similar set in face of them. The magnets are energized so as to be of alternately-opposite polarity throughout the series, so that as the conductor C is rotated the current impulses combine or are added to one another, those produced by the conductor in any given position being all in the same direction. To adapt such a machine to my system, I add a second set of induced conductors M, in all respects similar to the first, but so placed with reference to it that the currents produced in each will differ by a quarter-phase. With such relations it is evident that as the current decreases in conductor L it increases in conductor M, and conversely, and that any of the forms of motor invented by me for use in this system may be operated by such generator.

Fig. 4 is intended to show a motor corresponding to the machine in Fig. 3. The construction of the motor is identical with that of the generator, and if coupled thereto it will run synchronously therewith. J' J' are the field-magnets, and K' the coils thereon. L' is one of the armature-conductors and M' the other.

Fig. 5 shows in diagram other forms of machine. The generator N in this case is shown as consisting of a stationary ring O, wound with twenty-four coils P P', alternate coils being connected in series in two circuits. Within this ring is a disk or drum Q, with projections Q' wound with energizing-coils included in circuit with a generator R. By driving this disk or cylinder alternating currents are produced in the coils P and P', which are carried off to run the several motors.

The motors are composed of a ring or annular field-magnet S, wound with two sets of energizing-coils T T', and armatures U, having projections U' wound with coils V, all connected in series in a closed circuit or each closed independently on itself.

Suppose the twelve generator-coils P are wound alternately in opposite directions, so that any two adjacent coils of the same set

tend to produce a free pole in the ring O between them and the twelve coils P′ to be similarly wound. A single revolution of the disk or cylinder Q, the twelve polar projections of which are of opposite polarity, will therefore produce twelve current impulses in each of the circuits W W′ Hence the motor X, which has sixteen coils or eight free poles, will make one and a half turns to the generator's one. The motor Y, with twelve coils or six poles, will rotate with twice the speed of the generator, and the motor Z, with eight coils or four poles, will revolve three times as fast as the generator. These multipolar motors have a peculiarity which may be often utilized to great advantage. For example, in the motor X, Fig. 5, the eight poles may be either alternately opposite or there may be at any given time alternately two like and two opposite poles. This is readily attained by making the proper electrical connections. The effect of such a change, however, would be the same as reducing the number of poles one-half, and thereby doubling the speed of any given motor. In these and other respects it will be seen that the invention involves many important and valuable features.

It is obvious that the electrical transformers described in prior patents to me and which have independent primary currents may be used with the generators herein described.

It may be stated with respect to the devices hereinafter set forth that the most perfect and harmonious action of the generators and motors is obtained when the numbers of the poles of each are even and not odd. If this is not the case, there will be a certain unevenness of action which is the less appreciable as the number of poles is greater; but even this may be in a measure corrected by special provisions which it is not here necessary to explain. It also follows, as a matter of course, and from the above it is obvious, that if the number of the poles of the motor be greater than that of the generator the motor will revolve at a slower speed than the generator.

What I claim as my invention is—

1. The combination, with an alternating-current generator comprising independent armature-circuits formed by conductors alternately disposed, so that the currents developed therein will differ in phase, and field-magnet poles in excess of the number of armature-circuits, of a motor having independent energizing-circuits connected to the armature-circuits of the generator substantially as set forth.

2. The combination, with a source of alternating currents which differ in phase and comprising a rotating magneto-electric machine yielding a given number of current impulses or alternations for each turn or revolution, of a motor or motors having independent energizing-circuits through which the said currents are caused to flow, and poles which in number are less than the number of current impulses produced in each motor-circuit by one turn or revolution of the magneto-machine, as set forth.

3. The combination, with a multipolar alternating-current machine having independent induced or current-generating circuits, of motors having independent energizing-circuits and a smaller number of poles than the generator, as set forth.

4. The combination, with an alternating-current generator having independent induced circuits and constructed or adapted to produce a given number of current impulses or alternations for each turn or revolution, of motors having corresponding energizing-circuits and poles which in number are less than the number of current impulses produced in each circuit in a turn or revolution of the generator, as set forth.

NIKOLA TESLA.

Witnesses:
FRANK E. HARTLEY,
FRANK B. MURPHY.

(No Model.) 3 Sheets—Sheet 1.

N. TESLA.

SYSTEM OF ELECTRICAL TRANSMISSION OF POWER.

No. 487,796 Patented Dec. 13, 1892.

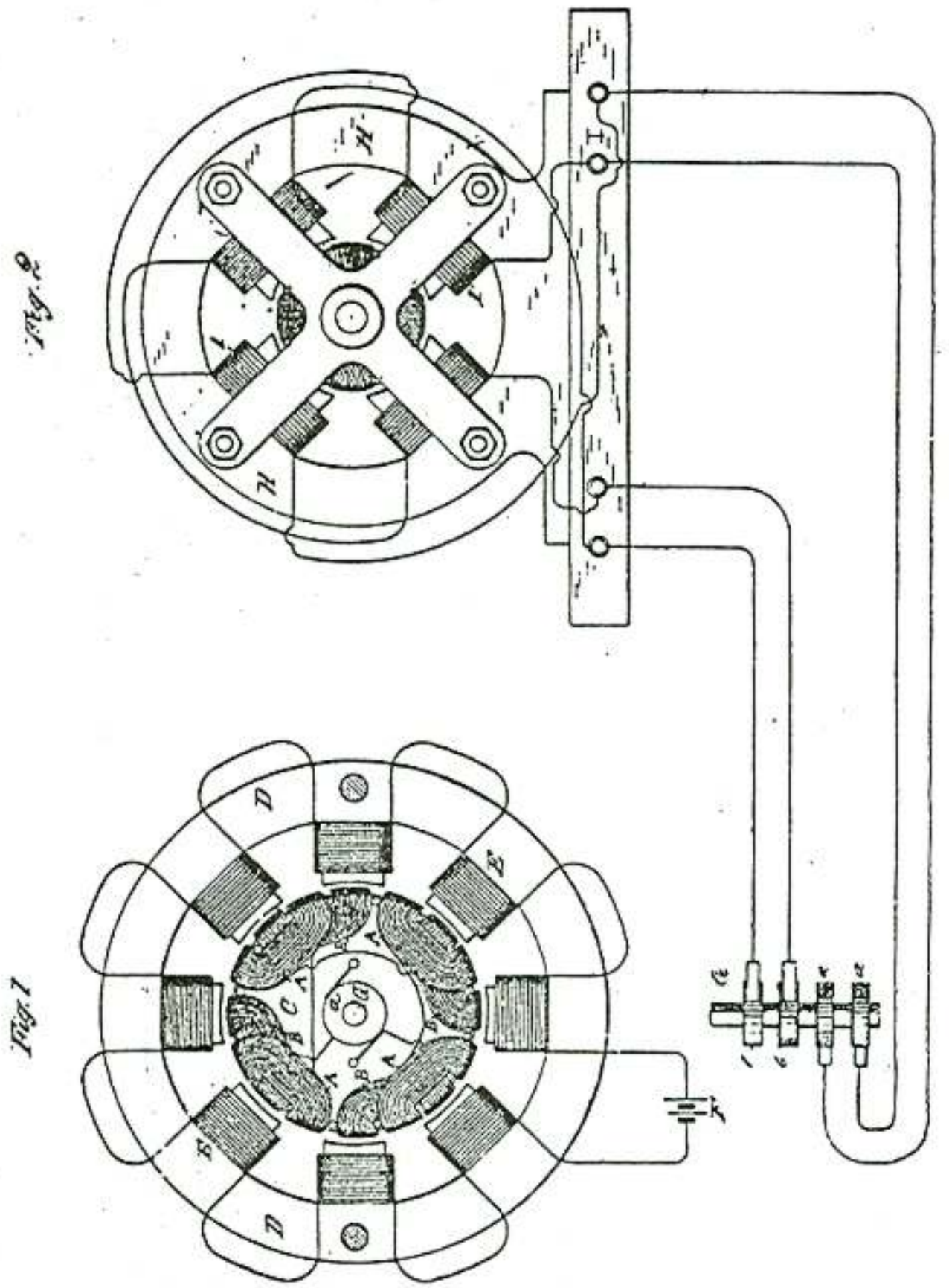

Fig. 1.

WITNESSES:

Raphael Netter

Robt. F. Gaylord

INVENTOR

Nikola Tesla

BY

Duncan Curtis & Page

ATTORNEYS

P-176

(No Model.) 3 Sheets—Sheet 2

N TESLA.

SYSTEM OF ELECTRICAL TRANSMISSION OF POWER.

No. 487 796 Patented Dec. 13, 1892.

Fig 4.

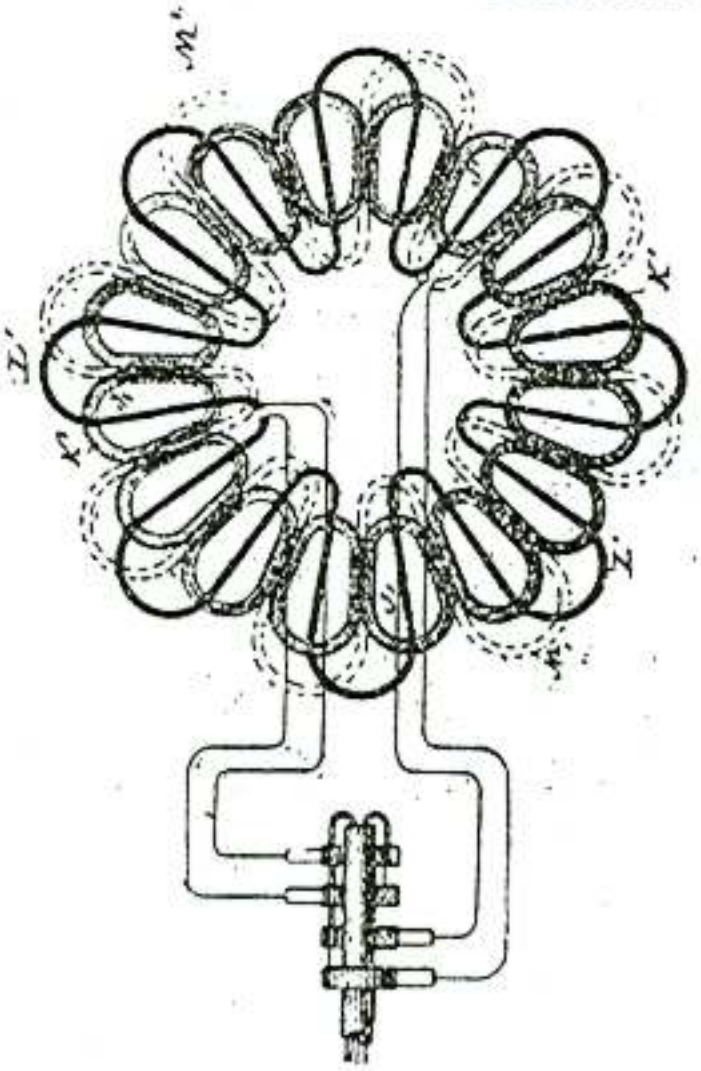

Fig 3.

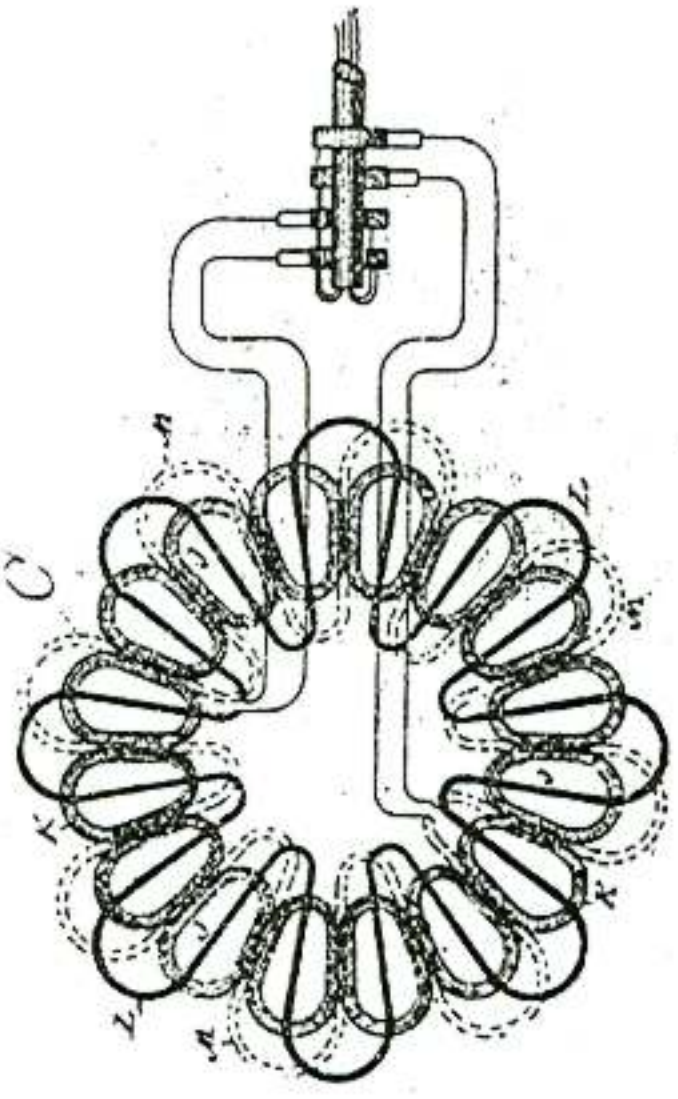

WITNESSES:

Raphael Netter

Allan W. Paige

INVENTOR

Nikola Tesla

BY

Duncan Curtis & Page

ATTORNEYS

(No Model.) 3 Sheets—Sheet 3.

N. TESLA.

SYSTEM OF ELECTRICAL TRANSMISSION OF POWER.

No. 487,796 Patented Dec. 13, 1892.

Fig. 5

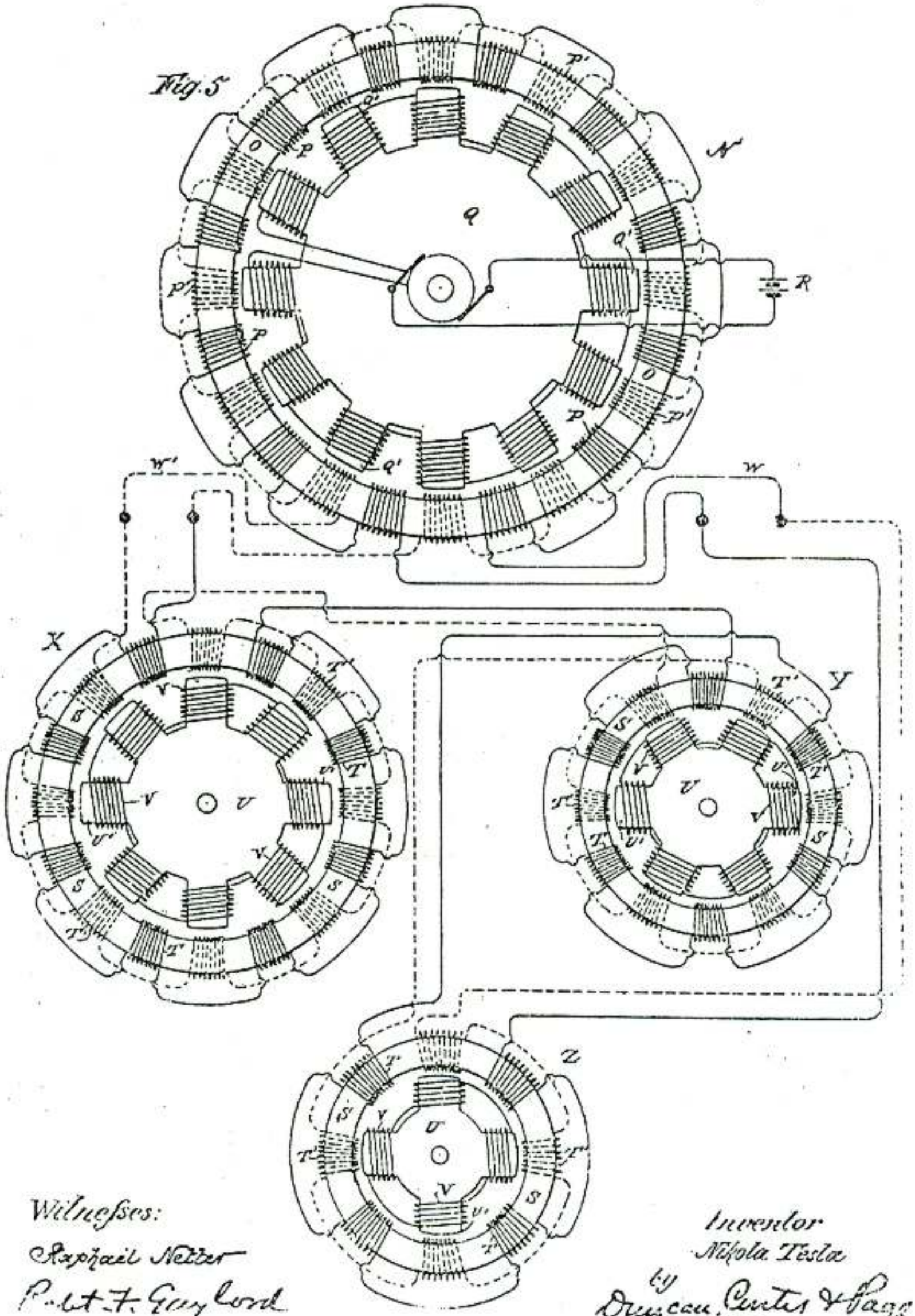

Witnesses:
Raphael Netter
Robt. F. Gaylord

Inventor
Nikola Tesla
by Duncan, Curtis & Page
Attorneys.

UNITED STATES PATENT OFFICE.

NIKOLA TESLA, OF NEW YORK, N. Y., ASSIGNOR TO THE TESLA ELECTRIC COMPANY, OF SAME PLACE.

ELECTRICAL TRANSMISSION OF POWER.

SPECIFICATION forming part of Letters Patent No. 511,915, dated January 2, 1894.

Original application filed May 15, 1888, Serial No. 273,993. Divided and this application filed December 3, 1888. Serial No. 292,476. (No model.)

To all whom it may concern:

Be it known that I, NIKOLA TESLA, from Smiljan, Lika, border country of Austria-Hungary, a subject of the Emperor of Austria-Hungary, residing at New York, in the county and State of New York, have invented a new and useful Method of Electrical Transmission of Power, of which the following is a description, this application being a division of an application filed by me on May 15, 1888, Serial No. 273,993, and for the method of operating motors contained in such application.

In former patents granted to me I have shown and described a system for the electrical transmission of power characterized by the following particulars: The motor contains independent energizing circuits and the generator has corresponding induced or current generating circuits which are connected by independent line circuits with those of the motor. The disposition of the generator coils is such that the currents developed in the circuits including them will have a certain difference of phase, for example, that the maximum periods of the currents generated in one of its circuits coincide with the minimum periods of the currents produced in the other circuit, and the corresponding energizing circuits of the motor are so arranged that the two currents co-operate to effect a progressive shifting of the magnetic poles or the points of maximum magnetic effect in the motor in consequence of which a rotation of its movable element is maintained.

My present invention involves this system of electrical power transmission; its distinguishing characteristic being the mode or method of generating or producing the alternating currents which run or operate the motor.

This invention is carried out in the following way: Instead of generating directly the alternating currents in each of the circuits which include the energizing coils of the motor, as by means of the induced coils of a magneto electric machine, I generate or produce an alternating current in but one of such circuits directly and by means of such current induce the proper current in the other energizing motor circuit. When the independent currents are both produced in the magneto machine it will be observed that the two line or transmitting circuits will of necessity extend the entire distance from the generator to the motor, but that by the method herein provided, one line circuit may be dispensed with as one circuit or that from the generator may be brought into the proper inductive relation to the other at any desired point.

The following is illustrative of the manner in which I carry out this invention: I employ as a motor, for example, a subdivided annular field magnet within which is mounted a suitable armature, such as a cylinder or disk wound with two coils at right angles, each of which is closed upon itself. On opposite sides of the annular field magnet I wind two coils of insulated wire of a size adapted to carry the current from the generator. Over these coils or close to them in any of the well understood ways I wind secondary coils. I also wind on the annular field magnet midway between the first mentioned coils a pair of coils which I connect up in circuit with the secondary coils. The last pair of coils I make of finer wire than the main or line and secondary coils and with a greater number of convolutions that they may have a greater relative magnetizing and retarding effect than either of the others. By connecting up the main coils in circuit with a generator of alternating currents the armature of the motor will be rotated. It is probable that this action is explained by the following theory: A current impulse on the line passing through the main coils establishes the magnetic poles of the annular field magnets at points midway between said coils. But this impulse produces in the secondary coils a current which, circulating through the second pair of energizing coils tends to establish the poles at points ninety degrees removed from their first position with the result of producing a movement or shifting of the poles in obedience to the combined magnetizing effect of the two sets of coils. This shifting continued by each successive current impulse establishes what may be termed a rotary effort and operates to maintain the armature in rotation.

In the drawings annexed I have shown in Figure 1 an alternating current generator connected with a motor, shown diagrammatically and constructed in accordance with my invention, and in Fig. 2 a diagram of a modified form of motor.

A designates any ordinary form of alternating current generator and B B the line wires for connecting the same with the motor.

C is the annular field magnet of the motor.

D D are two main coils wound on opposite sides of the ring or annular field and connected up with the line, and having a tendency to magnetize the ring C with opposite poles midway between the two coils.

E E are two other magnetizing coils wound midway between coils D D, but having a stronger magnetizing influence for a current of given strength than coils D D.

F F are the secondary coils which are associated with the main coils D D. They are in circuits which include the coils E E respectively, the connections being made in such order that currents induced in coils F and circulating in coils E will act in opposition to those in coils D in so far only as the location of the magnetic poles in the ring C is concerned

The armature may be of any of the forms used by me in my alternating current system and is shown as wound with two closed coils G H at right angles to each other.

In order to prolong the magnetizing effect of the induced currents in producing a shifting of the poles, I have carried the principle of the construction exhibited in Fig. 1 farther, thereby obtaining a stronger and better rotary effect.

Referring to Fig. 2, C is an annular field magnet having three pairs or oppositely located sets of polar projections K L M. Upon one pair of these projections, as K, the main energizing coils D are wound. Over these are wound the secondary oils E. On the next polar projections L L are wound the second energizing coils F which are in circuit with coils E. Tertiary induced coils E′ are then wound over the coils F and on the remaining polar projections M the third energizing coils F′ are wound and connected up in the circuit of the tertiary coils E′. The cylindrical or disk armature core N in this motor has polar projections wound with coils O forming closed circuits. My object in constructing the motor in this way is to effect more perfectly a shifting of the points of maximum magnetic effect. For assuming the operation of the motor to be due to the action above set forth—the first effect of a current impulse in this motor will be to magnetize the pole pieces K K, but the current thereby induced in coils E magnetizes the pole pieces L and the current induced in turn in coils E′ magnetizes the pole pieces M. The pole pieces are not magnetized, at least to their full extent, simultaneously by this means, but there is enough of a retardation or delay to produce a rotary effect or influence upon the armature. The application of this principle is not limited to the special forms of motor herein shown, as any of the double circuit alternating current motors invented by me and described in former Letters Patent to me may be adapted to the same purpose. This method or mode of producing the currents in the independent energizing circuits of the motor may be carried out in various ways, and it is not material to the invention broadly considered, what devices be employed in effecting the result, viz: the induction from or by the current from the generator or source, of the current or currents which co-operate therewith in producing the rotation of the motor.

I would state that in using the word generator, I mean either a primary generator, such as a magneto machine, or a secondary generator, such as an electrical converter, and in claiming protection for inducing the current in one set of energizing coils by the current which circulates in another, I would be understood as including the induction of the secondary current from the current from the same source as that which traverses the motor coils whether it be flowing in the same branch or part of the circuit or not.

What I claim is—

1. The method of operating electro-magnetic motors having independent energizing circuits, as herein described, which consists in passing an alternating current through one of the energizing circuits and inducing by such current the current in the other energizing circuit of the motor, as set forth.

2. The method of operating electro-magnetic motors having independent energizing circuits as herein described, which consists in developing an alternating current in one of said energizing circuits and inducing thereby currents in the other energizing circuit or circuits, as herein set forth.

NIKOLA TESLA.

Witnesses:
GEO. N. MONRO,
EDWARD T. EVANS.

P-180

(No Model.)

N. TESLA.

ELECTRICAL TRANSMISSION OF POWER.

No. 511,915. Patented Jan. 2, 1894.

Fig. 1

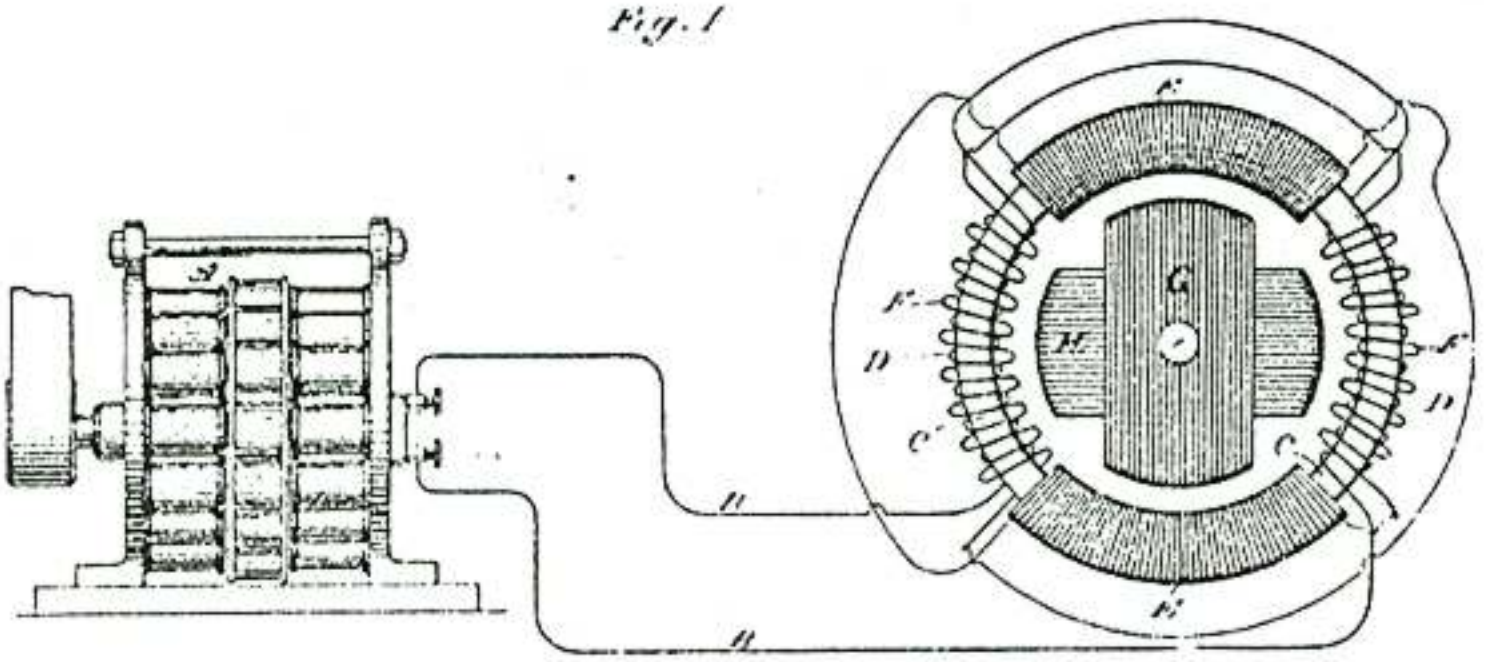

Fig. 2

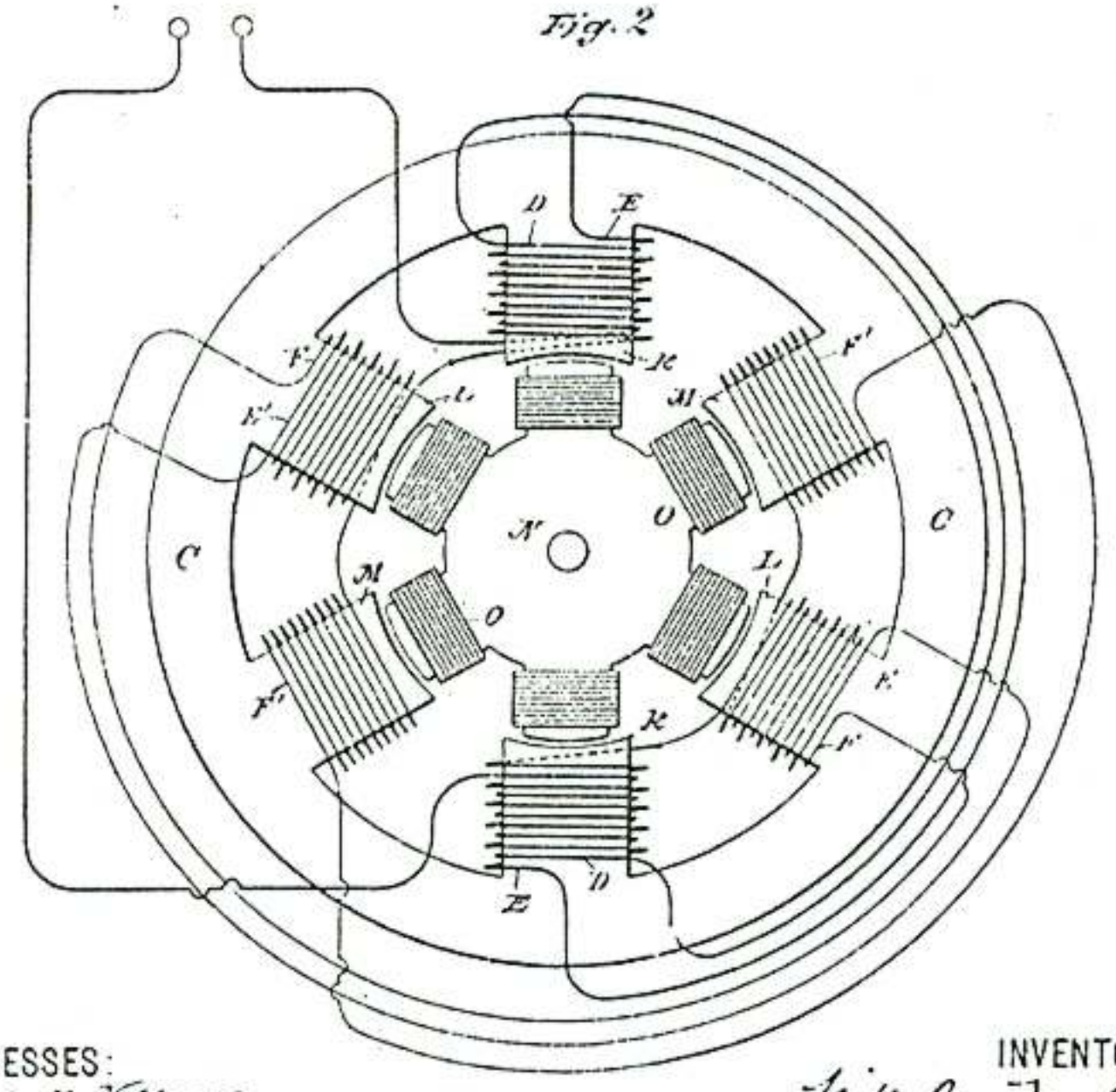

WITNESSES:
Raphael Netter
Ed. F. Newbury

INVENTOR
Nikola Tesla
BY
Duncan, Curtis & Page
ATTORNEYS.

UNITED STATES PATENT OFFICE.

NIKOLA TESLA, OF NEW YORK, N. Y., ASSIGNOR TO THE TESLA ELECTRIC COMPANY, OF SAME PLACE

ELECTRICAL TRANSMISSION OF POWER.

SPECIFICATION forming part of Letters Patent No. 511,559, dated December 26, 1893.

Application filed December 8, 1888. Serial No. 293,051. (No model.)

To all whom it may concern:

Be it known that I, NIKOLA TESLA, a subject of the Emperor of Austria-Hungary, from Smiljan, Lika, border country of Austria-Hungary, residing at New York, in the county and State of New York, have invented certain new and useful Improvements in the Electrical Transmission of Power, of which the following is a specification, reference being had to the drawings accompanying and forming a part of the same.

In certain patents heretofore granted, I have shown and described a system of electrical power transmission, in which each motor contained two or more independent energizing circuits through which were caused to pass alternating currents, having in each circuit such a difference of phase that by their combined or resultant action they produced a rotary progression of the poles or points of maximum magnetic effect of the motor and thereby maintained the rotation of its movable element. In the system referred to and described in said patents, the production or generation of the alternating currents upon the combined or resulant action of which the operation of the system depends, is effected by the employment of an alternating current generator with independent induced circuits which, by reason of the winding or other construction of the generator produced currents differing in phase, and these currents were conveyed directly from the generator to the corresponding motor coils by independent lines or circuits. I have, however, discovered another method of operating these motors, which dispenses with one of the line circuits and enables me to run the motors by means of alternating currents from a single original source.

Broadly stated this invention consists in passing alternating currents, obtained from one original source, through both of the energizing circuits of the motor, and retarding the phases of the current in one circuit to a greater or less extent than in the other.

The distribution of current between the two motor circuits may be effected by induction or by derivation. In other words, I may pass the alternating current from the source through one energizing circuit and induce by such current a second current in the other energizing circuit. Or, on the other hand, I may connect up the two energizing circuits of the motor in derivation or multiple arc with the main circuit from the source. In either event I make due provision for maintaining a difference of phase between the currents in the two circuits or branches.

In carrying out my invention I have used various means for securing this result. For example, when I induce a current in one of the circuits from the current flowing in the other, I employ a form of converter or bring the two circuits into such inductive relations as will produce the necessary difference of phase. Or, when I obtain the two energizing currents by derivation, I make the two circuits of different degrees of self induction by inserting a resistance or a self induction coil in one of said circuits, or I combine these devices in different ways as I shall more specifically describe hereinafter.

The accompanying drawings to which I now refer in further illustration of my invention, are a series of diagrams illustrating, not the specific construction of the particular devices which I may or may not have used, but rather, the electrical connections and relations to be adopted in carrying out the present system by means of devices which are now well known.

Figure 1 is a diagram illustrating the method of operating the motors by inducing one of the energizing currents by the other. Fig. 2 is a similar diagram of the method of operating the motors where the two energizing currents are obtained by derivation from a single source. Fig. 3 is a modified application of this principle.

Referring to Fig. 1 let A represent the source of alternating currents which are to be utilized in operating the motor or motors. It will be understood that considered as a source of current it may be either a primary or secondary generator.

B B designate the conductors of the circuit which convey the alternating currents to one or more motors. The motor has two energizing circuits or sets of coils C D. One of these circuits as C is connected directly with the circuit B. The other set of coils as D, is con-

nected up in the secondary circuit of an electrical transformer or induction coil T. The primary coil P of this transformer, is included in the circuit B. The alternations of current in the circuit B tend to establish in their passage through the coils C, a polarity at right angles to that set up by the coils D, and if the currents in the two sets of coils accorded in their phases, no rotary effect would be produced. But the secondary current developed in the coil P' of the transformer, will lag behind that in the primary which lag or retardation may be increased as I have shown in another application, to-a sufficient extent to practically obtain the same result as though two independent alternating currents were used to energize the motor.

In Fig. 2 the two energizing circuits of the motor are shown connected in multiple arc to the circuit B B, and in one of these circuits is a resistance R. Assuming the two motor circuits to have the same self induction and resistance no rotary effect will be produced by the passage through them of an alternating current from the source A. But if one of the motor circuits, as C, be varied or modified by the introduction of a dead resistance R, the self-induction of that circuit or branch is reduced, and the phases of current therein retarded to a correspondingly less extent. The relative degree of retardation of the phases of the current in the two motor circuits with respect to those of the unretarded current in the circuit B thus produced, will set up a rotation of the motor which may be practically utilized for many purposes.

In Fig. 3, the arrangement of the parts is similar to that shown in Fig. 2, except that a self-induction coil as S is introduced into one branch or energizing circuit of the motor. The effect of thus increasing the self-induction in one of the circuits is to retard the phases of the current passing therein to a greater extent than in the other circuit, and in this way to secure the necessary difference in phase between the two energizing currents to produce the rotation of the motor.

In an application filed, of even date herewith, I have shown and described other ways of accomplishing this result, among which may be noted the introduction of a resistance capable of variation in each motor circuit, or the use of a resistance in one circuit and a self-induction coil in the other.

In the above description I have referred mainly to motors with two energizing circuits, but it is evident that the invention applies equally to those in which there are more than two of such circuits, the adaptation of the same being a matter well understood by those skilled in the art.

I do not claim in this application the specific devices employed by me in carrying out the invention, having made these the subjects of other applications.

What I claim herein is—

1. The method of operating motors having independent energizing circuits, as herein set forth, which consists in passing alternating currents through both of the said circuits and retarding the phases of the current in one circuit to a greater or less extent than in the other.

2. The method of operating motors having independent energizing circuits, as herein set forth, which consists in directing an alternating current from a single source through both circuits of the motor and varying or modifying the relative resistance or self-induction of the motor circuits and thereby producing in the currents differences of phase, as set forth.

NIKOLA TESLA.

Witnesses:
FRANK E. HARTLEY,
FRANK B. MURPHY.

P-183

(No Model.)

N. TESLA.

ELECTRICAL TRANSMISSION OF POWER.

No. 511,559. Patented Dec. 26, 1893.

Fig. 1

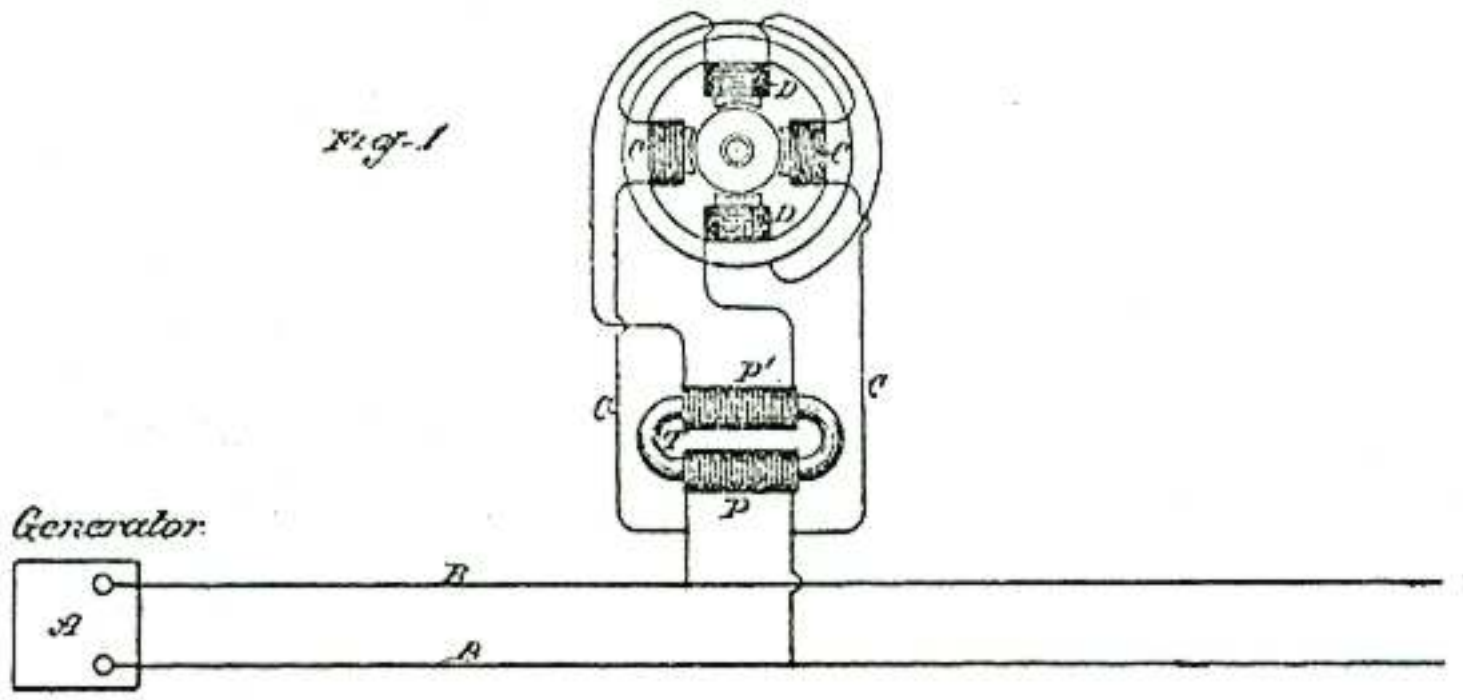

Fig. 2

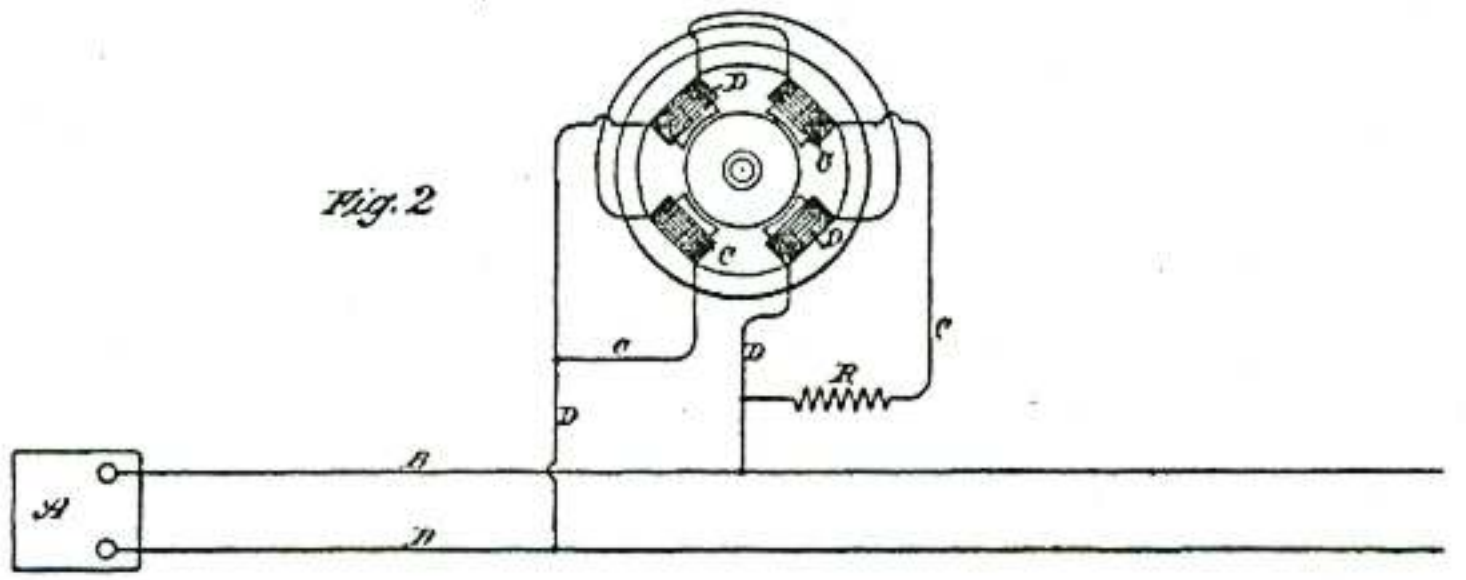

Fig. 3

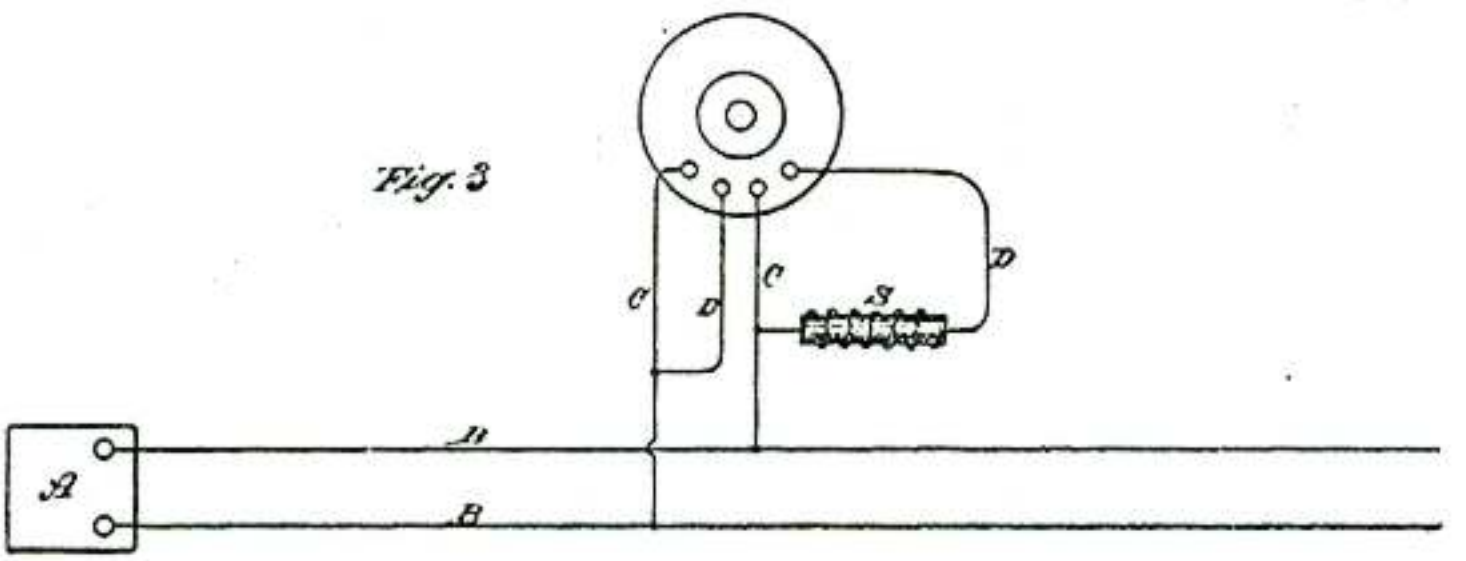

WITNESSES:
Raphael Netter
Ernest Hopkinson

INVENTOR
Nikola Tesla
BY
Duncan, Curtis & Page
ATTORNEYS.

UNITED STATES PATENT OFFICE.

NIKOLA TESLA, OF NEW YORK, N. Y., ASSIGNOR TO THE TESLA ELECTRIC COMPANY, OF SAME PLACE

SYSTEM OF ELECTRICAL POWER TRANSMISSION.

SPECIFICATION forming part of Letters Patent No. 511,560, dated December 26, 1893.

Application filed December 8, 1888. Serial No. 293,052. (No model.)

To all whom it may concern.

Be it known that I, NIKOLA TESLA, a subject of the Emperor of Austria-Hungary, from Smiljan, Lika, border country of Austria-Hungary, residing at New York, in the county and State of New York, have invented certain new and useful Improvements in Systems of Electrical Power Transmission, of which the following is a specification, reference being had to the drawings accompanying and forming a part of the same.

In certain patents heretofore granted, I have shown and described a system of electrical power transmission in which each motor contained two or more independent energizing circuits through which were caused to pass alternating currents having in each circuit such difference of phase that by their combined or resultant action they produced a rotary progression of the poles or points of maximum magnetic effect of the motor and thereby maintained the rotation of its movable element. In the system referred to and described in the said patents the production or generation of the alternating currents, upon the combined or resultant effect of which the operation of the system depends, is effected by the employment of an alternating current generator with independent induced circuits which, by reason of the winding or other construction of the generator, produces currents differing in phase, and these currents are conveyed directly from the generator to the corresponding motor coils by independent lines or circuits. I have, however, discovered that I may produce the same or a similar result by an alternating current from a single original source using between the generator and motors but one line or transmission circuit. Broadly stated, this system or method involves a source of alternating or equivalent currents, a single transmission circuit, a motor having independent energizing circuits connected with or adapted for connection with the transmission circuit, means for rendering the magnetic effects due to the energizing circuits of different phase, and an armature within the influence of the energizing circuits; the means for accomplishing this result being of such a nature as to retard the current in one energizing circuit to a greater or less extent than in the other. The distribution of the main or original current through the two motor circuits may be effected by induction or by derivation. In other words, I may pass the alternating current from the source through one energizing circuit, and induce by such current a second current in the other energizing circuit. Or, on the other hand, I may connect up the two energizing circuits of the motor in derivation or multiple arc with the main circuit from the source. In either event I make due provision for maintaining a difference of phase between the currents in the two circuits or branches.

In an application filed by me May 15, 1888, Serial No. 273,993, I have shown and described the means which I have employed for securing this result by inducing one energizing current from the other.

My present application relates to the means employed when the two energizing currents are obtained from a single original source by derivation.

In explanation of what appears to be the principle of the operation of my invention and of the functions of the several instrumentalities comprised thereby, let it be assumed that the two energizing circuits of an alternating current motor, such, for example, as I have described in my Patent No. 382,280, dated May 1, 1888, are connected up in derivation or multiple arc with the conductors of a circuit including an alternating current generator. It is obvious that if both circuits are alike and offer the same resistance to the passage of the current no rotary effect will be produced, for although the periods of the currents in both circuits will lag or be retarded to a certain extent with respect to an unretarded current from the main circuit, their phases will coincide. If, however, the coils of one circuit have a greater number of convolutions around the cores, or a self induction coil be included in one of the circuits, the phases of the current in that circuit are retarded by the increased self induction. The degree of retardation may readily be secured by these means which will produce the difference in electrical phase between the two currents necessary for the practical operation of the motor. If in lieu of increasing the

self induction of one circuit a dead resistance be inserted, the self induction of such circuit exerts a correspondingly diminished effect, and the phases of the current flowing in that branch are brought more nearly in unison with those of an unretarded current from the main line and the necessary difference of phase between the currents in the two energizing circuits thus secured. I take advantage of these results in several ways. For example, I may insert variable resistances in both branches or energizing circuits and by varying one or the other so as to bring the phases of the two currents more or less in unison with those of the unretarded current, I may thus vary the direction of the rotation of the motor. In lieu of resistances I may employ variable self induction coils, in both circuits. Or I may use a resistance in one and a self induction coil in the other and vary either or both. This system or means of operating the motors is rendered of great practical value by employing an armature wound with energizing coils closed upon themselves, in which currents are induced by the alternating currents passing in the field coils that serve to greatly increase the mutual attractive effect between the armature and the field magnets. This use of the armature with closed coils I regard as an important feature of my invention. These several features of the invention I shall now describe more in detail by reference to the accompanying drawings.

Figure 1 is a diagram of the system in which the motor coils or energizing circuits are in derivation to the main line with a dead resistance inserted in one circuit. Fig. 2 is a diagram showing dead resistances in both motor circuits. Fig. 3 is a diagram showing a self induction coil in one motor circuit. Fig. 4 is a diagram showing a dead resistance in one circuit and a self induction coil in the other. Fig. 5 in like manner shows a self induction coil in each motor circuit. Fig. 6 is a diagram showing the two motor circuits of different electrical character. Fig. 7 is a diagram illustrating means for varying at will the electrical character of the motor circuits.

Referring to Fig. 1, A designates a suitable source of alternating currents and B B the line wires running therefrom. It will be understood that the generator A may be a primary or secondary generator, and the line B B may be the main transmission circuit or a local circuit from a transformer connected at any point in the line of a main or transmission circuit. For convenience in this case, it will be considered as a line from a given source of current to one or more motors. The motor contains a given number of pole pieces wound with two sets of coils C and D. The armature is wound with permanently closed energizing coils E in which currents are developed by inductive action when the motor is in operation which magnetize the armature core and greatly increase the efficiency of the motor. Assuming the two motor circuits to have the same degree of self induction and resistance no rotary effect will be produced by the passage through them of an alternating current from the source A. But if in one of the motor circuits, as D, a dead resistance represented by R be introduced, the self induction of that circuit or branch is reduced and the phases of current therein retarded to a correspondingly less extent. The relative degrees of retardation of the phases of the current in the two motor circuits with respect to those of an unretarded current from the circuit B thus produced will set up a rotation of the motor which may be practically utilized for many purposes.

If, as in Fig. 2, a dead resistance R, R' be introduced into each motor circuit, no rotary effect will be produced as long as the resistances are equal, but by varying the resistance in one circuit the retardation of the current in that circuit will be varied, and corresponding effects produced. For example, a reduction of the resistance in one circuit imparts to the motor rotation in one direction while a reduction of the resistance in the other circuit will produce a rotation in the opposite direction. By means of the two resistances, therefore, capable of variation or of being bodily withdrawn from or inserted in the circuits by any well known means, a perfect regulation of the motors is secured.

In Fig. 3 the arrangement of all the parts is similar to that shown in Fig. 1 except that a self induction coil as S is introduced into one branch or energizing circuit of the motor. The effect of thus increasing the self induction in one of the circuits is to retard the phases of the current passing therein to a greater extent than in the other circuit and in this way to secure the necessary difference in phase between the two energizing currents to produce the rotation of the motor.

In Fig. 4 a self induction coil S is included in one of the motor circuits and a dead resistance R in the other. The increased self induction in one circuit thus produced acts to increase the difference of phase between the current in such motor circuit and the unretarded current in the main line B. On the other hand, the introduction of the dead resistance in the other motor circuit reduces the retardation and brings the phases of the current therein more closely in accord with those of the unretarded current, thus producing a correspondingly greater difference of phase between the two currents in the energizing circuits C and D

In Fig. 5, two self induction coils S, S' are shown, one in each motor or energizing circuit. One of these coils as S' is much smaller than the other and has less self induction or counter electro motive force than the other, so that the phases of current will be retarded to a less extent than in the other. The two self induction coils may be of the same character or size if it is desired to use but one at

a time for the purpose of reversing the motor, or if they be constructed in well known ways so that they may be varied.

In Fig. 7 the usual means for varying the resistance or self-induction of the motor circuits at will are indicated by the lever M sliding over a series of resistance plates, and by a core N which is adapted to be moved in and out of the induction coil S.

Similar results may be secured by such a construction or organization of the motor as will yield the necessary differences of phase. For example, one set of energizing coils may be of finer wire than the other, or have a greater number of convolutions, or each circuit may contain the same number of convolutions, but composed of different conductors, as, for instance, one of copper, the other of German silver. I have represented this in Fig. 6, in which the coils C are indicated by closer lines than coils D.

There are other ways of varying the retardation due to the self induction in the two energizing circuits. For example, the motor coils may be all alike, but those of one energizing circuit connected in parallel while the others are connected in series, or the connection in each energizing circuit may be alike, but the currents directed through them may be of different strength, as when one of the currents is supplied from a source of higher electro-motive force.

In the above description I have referred mainly to motors with two energizing circuits, but it is evident that the invention applies equally to those in which there are more than two of such circuits, the adaptation of the same being a matter well understood by those skilled in the art.

In using in the claims the term active resistance as applied to the motor circuits in this case, it will be understood that the term refers to the opposing or retarding force existing in the circuits to the passage of the alternating currents. Thus, the two circuits may have the same dead resistance, but different degrees of self induction.

What I claim as my invention is—

1. The combination with a source of alternating currents, and a circuit from the same, of a motor having independent energizing circuits connected with the said circuit, and means for rendering the magnetic effects due to said energizing circuits of different phase and an armature within the influence of said energizing circuits.

2. The combination with a source of alternating currents and a circuit from the same, of a motor having independent energizing circuits connected in derivation or multiple arc with the said circuit, the motor or energizing circuits being of different electrical character whereby the alternating currents therein will have a difference of phase, as set forth.

3. The combination with a source of alternating currents and a circuit from the same, of a motor having independent energizing circuits connected in derivation or multiple arc with the said circuit and of different active resistance, as set forth.

4. In an alternating current motor, the combination with field magnets, of independent energizing circuits, adapted to be connected in multiple arc with the conductors of the line or transmission circuit and a resistance or self induction coil in one or both of the said motor circuits, as set forth.

5. In an alternating current motor, the combination with the field magnets or cores of independent energizing coils adapted to be connected in multiple arc with the line or transmission circuit, and a variable resistance or self induction coil included in one or both of the motor circuits as set forth.

6. In an alternating current motor, the combination with the field magnets or cores and independent energizing circuits of different active resistance and adapted to be connected with the line or transmission circuit, of an armature wound with closed energizing coils or conductors, as set forth.

7. The combination of a generator of alternating currents, a pair of mains connected thereto, a multiple circuit differential phase, and an electric motor having one circuit connected directly to said mains, and the other circuit connected to said mains through an interposed electro-motive phase-changing device adapted to change the time period of the currents passing through it.

NIKOLA TESLA.

Witnesses:
FRANK E. HARTLEY,
FRANK B. MURPHY.

Correction in Letters Patent No. 511,560

It is hereby certified that in Letters Patent No. 511,560, granted December 26, 1893, upon the application of Nikola Tesla, of New York, N. Y., for an improvement in "Systems of Electrical Power Transmission," an error appears in the printed specification requiring correction, as follows: In line 95, page 3, the words "and an" should be stricken out; and that the said Letters Patent should be read with this correction therein that the same may conform to the record of the case in the Patent Office.

Signed and sealed this 9th day of June, A. D., 1903.

[SEAL.]

F. I. ALLEN,
Commissioner of Patents.

(No Model.) 3 Sheets—Sheet 1

N. TESLA.

SYSTEM OF ELECTRICAL POWER TRANSMISSION.

No. 511,560. Patented Dec. 26, 1893.

Fig. 1

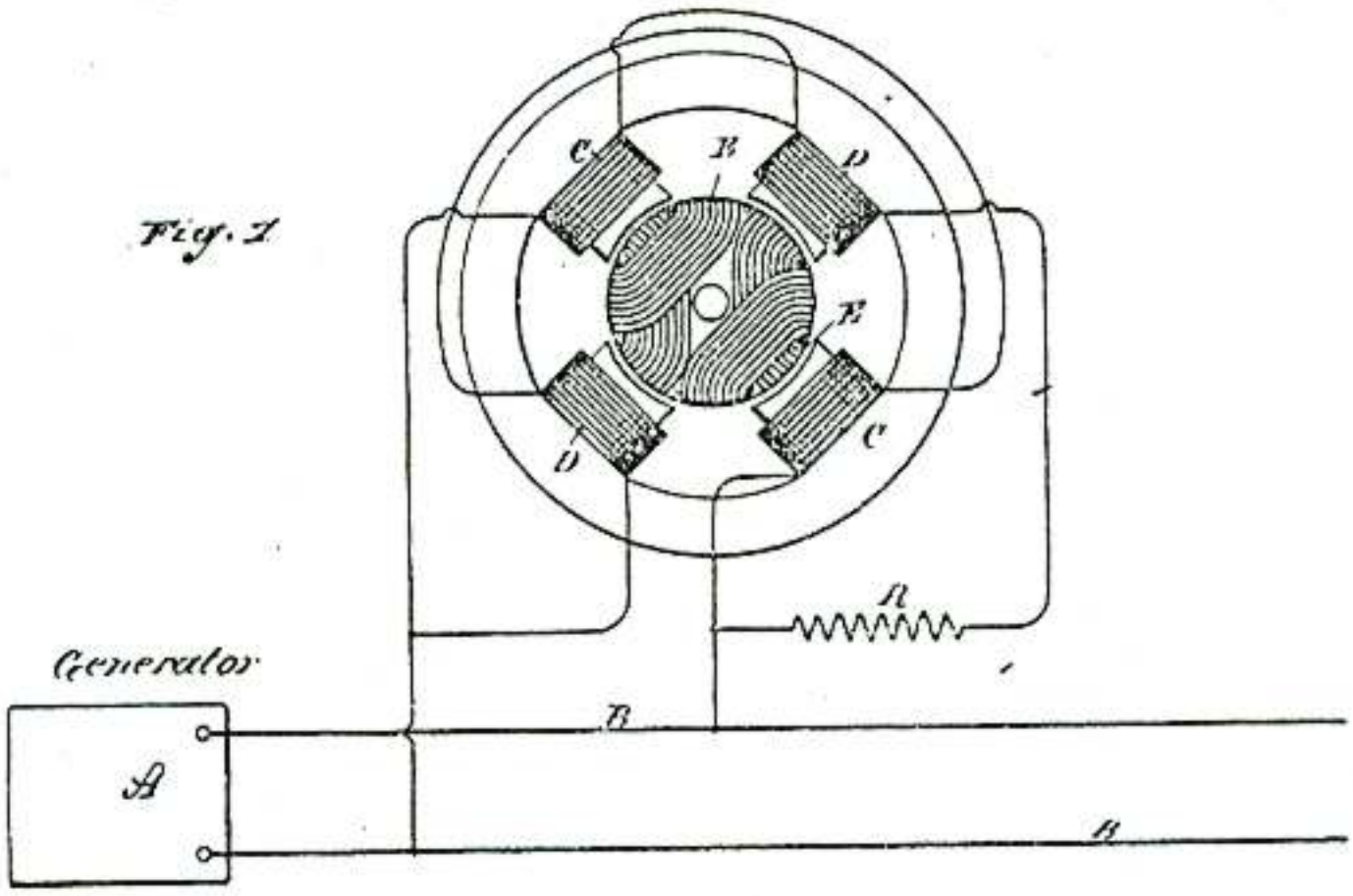

Fig. 2

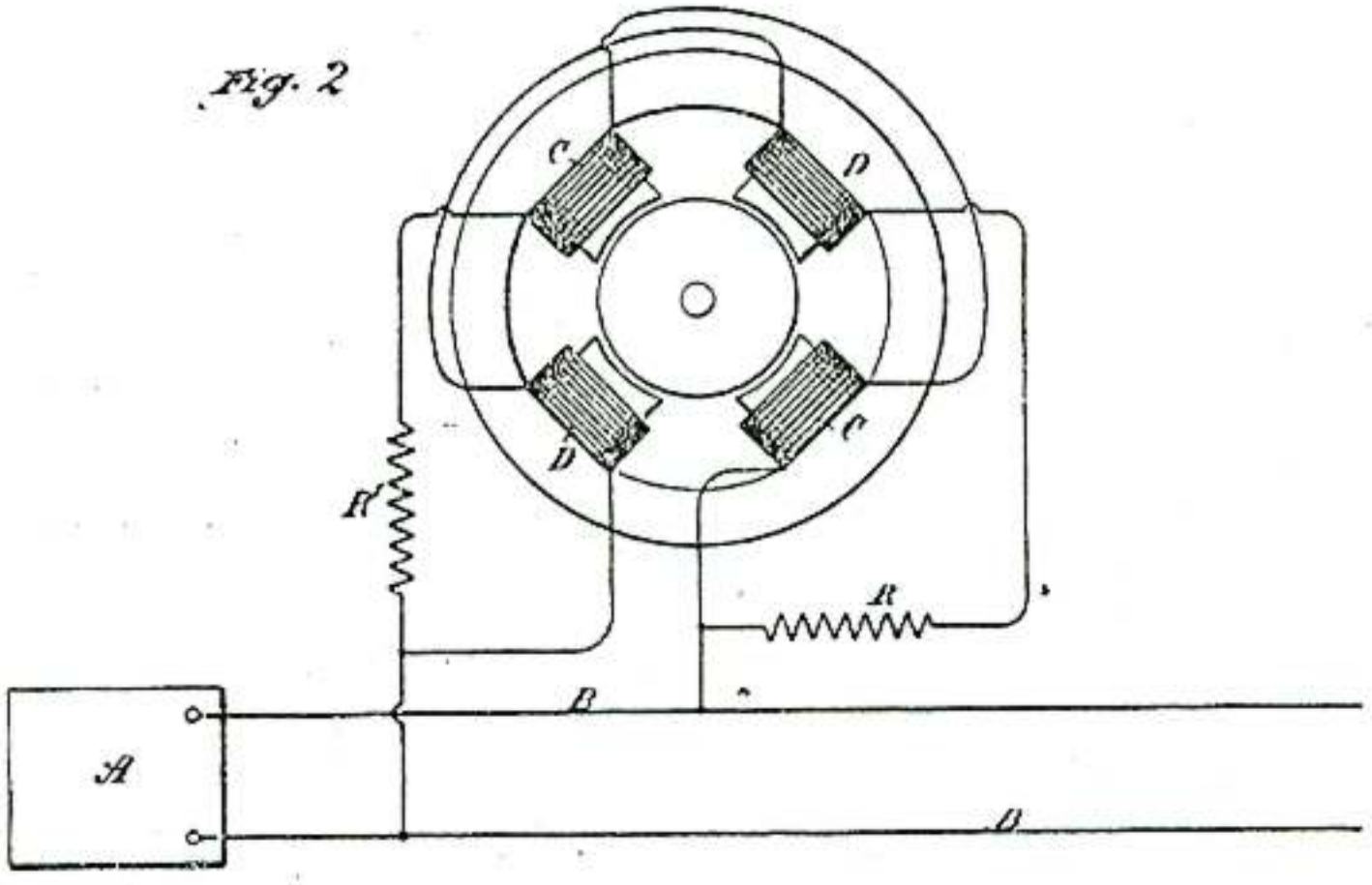

WITNESSES:
Raphael Netter
Ernest Hopkinson

INVENTOR
Nikola Tesla
BY
Duncan, Curtis & Page
ATTORNEYS.

P-188

(No Model.) 3 Sheets—Sheet 2.

N. TESLA.

SYSTEM OF ELECTRICAL POWER TRANSMISSION.

No. 511,560. Patented Dec. 26, 1893.

Fig. 3

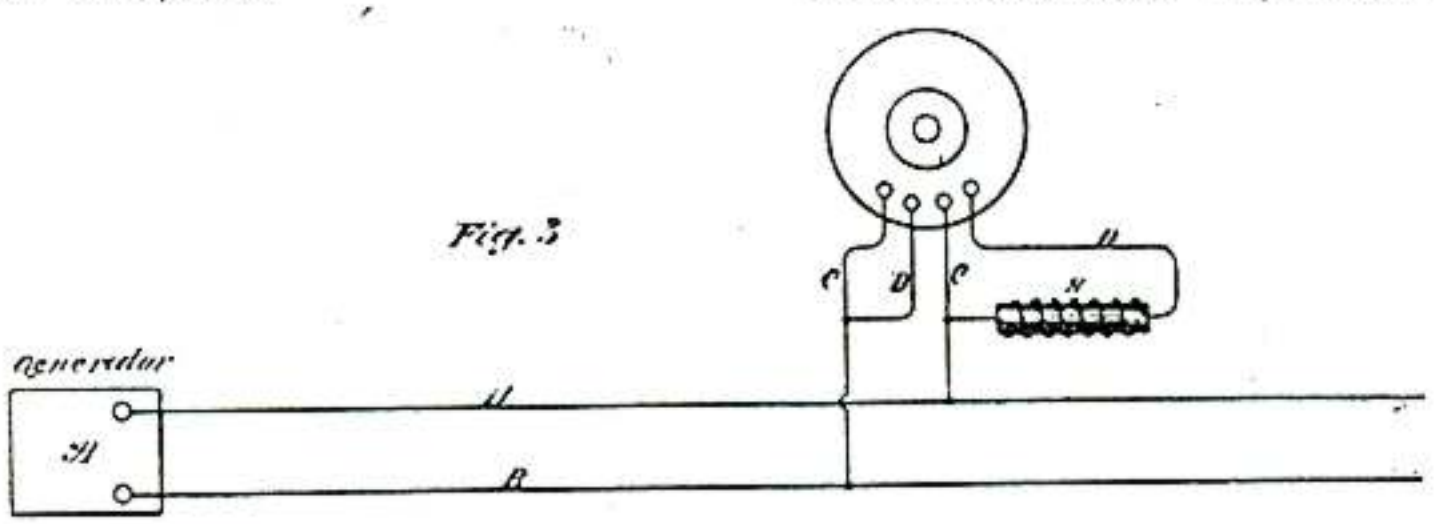

Fig. 4.

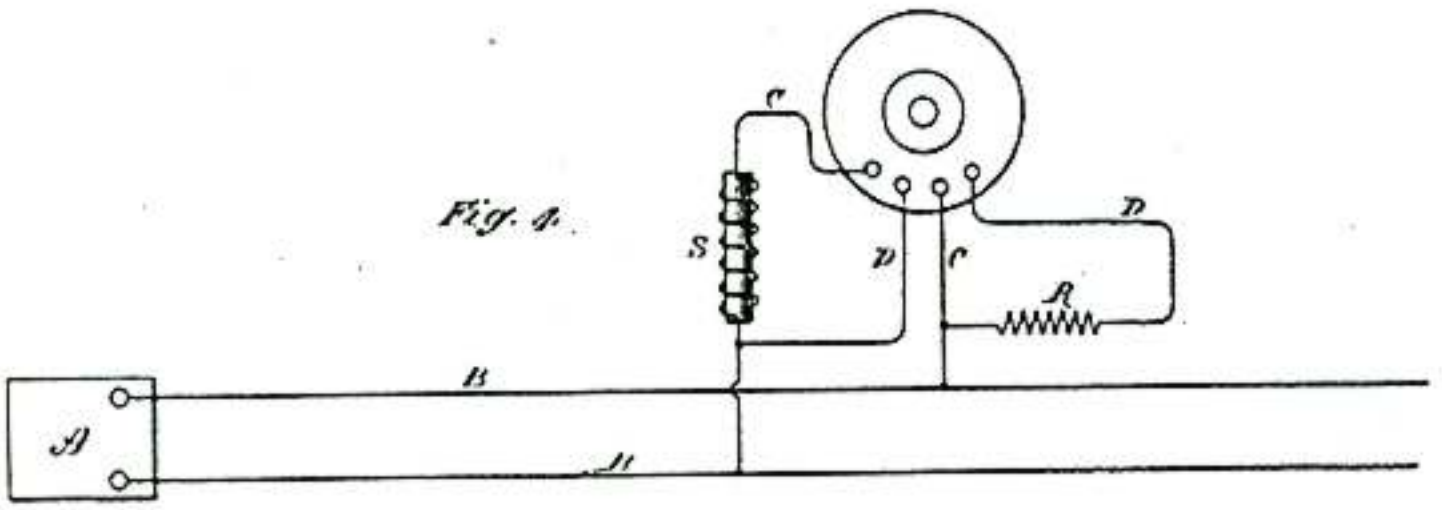

Fig. 5

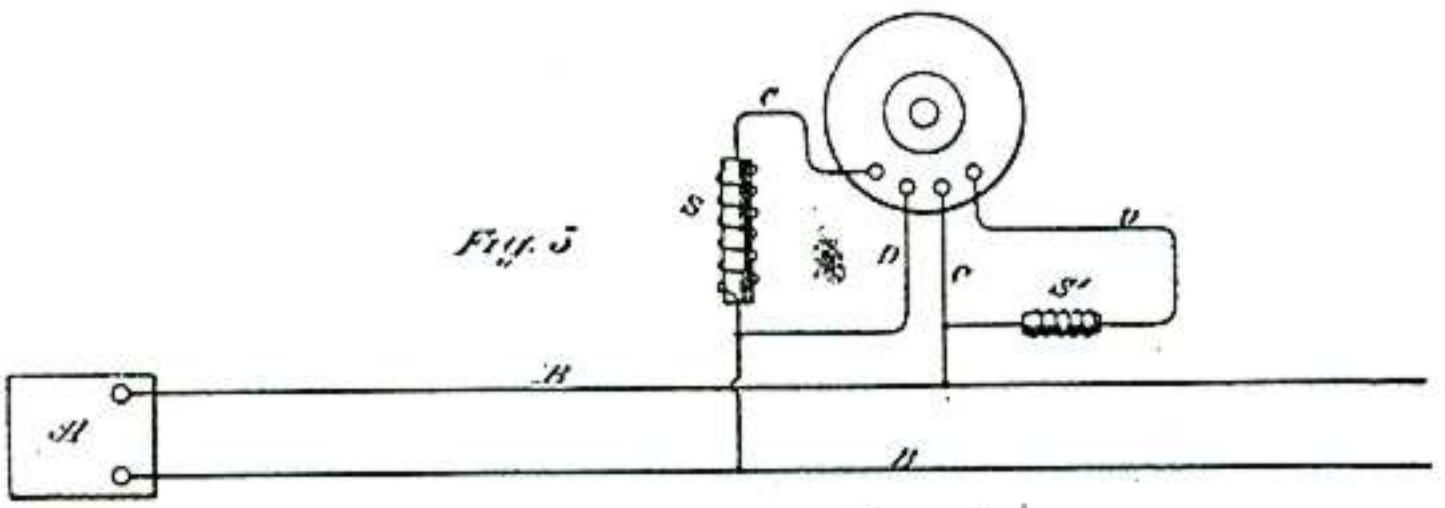

Fig. 6

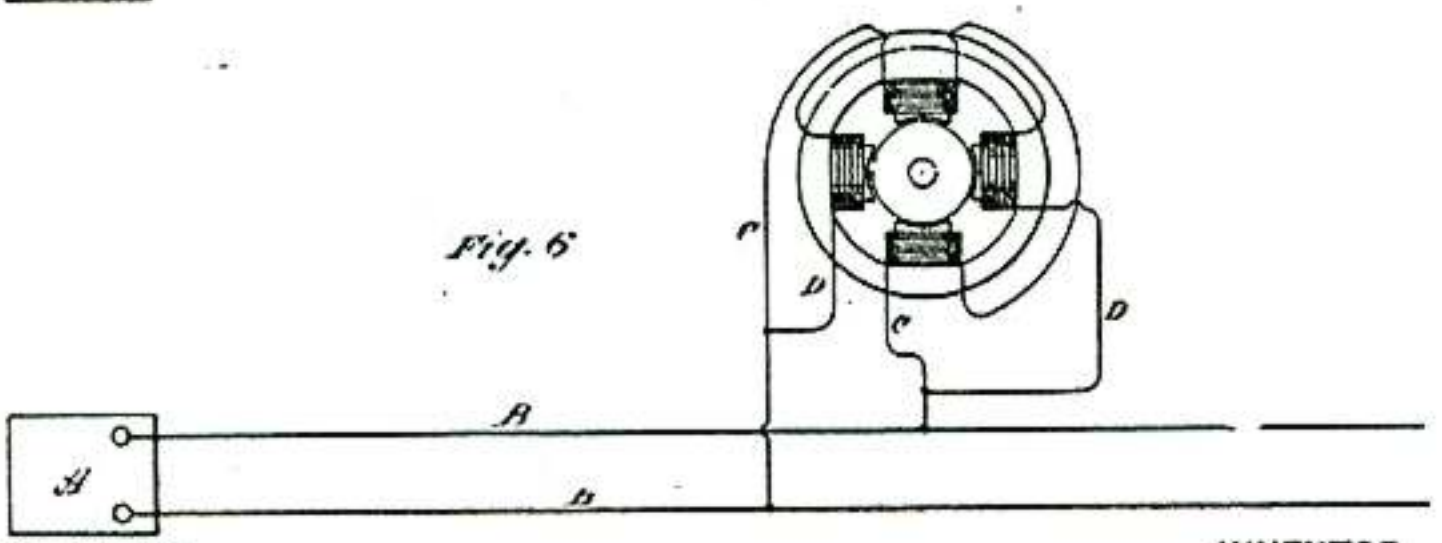

WITNESSES:
Raphael Netter
Ernest Hopkinson

INVENTOR
Nikola Tesla
BY
Duncan, Curtis & Page
ATTORNEYS.

(No Model.) 3 Sheets—Sheet 3

N. TESLA

SYSTEM OF ELECTRICAL POWER TRANSMISSION.

No. 511,560 Patented Dec. 26, 1893.

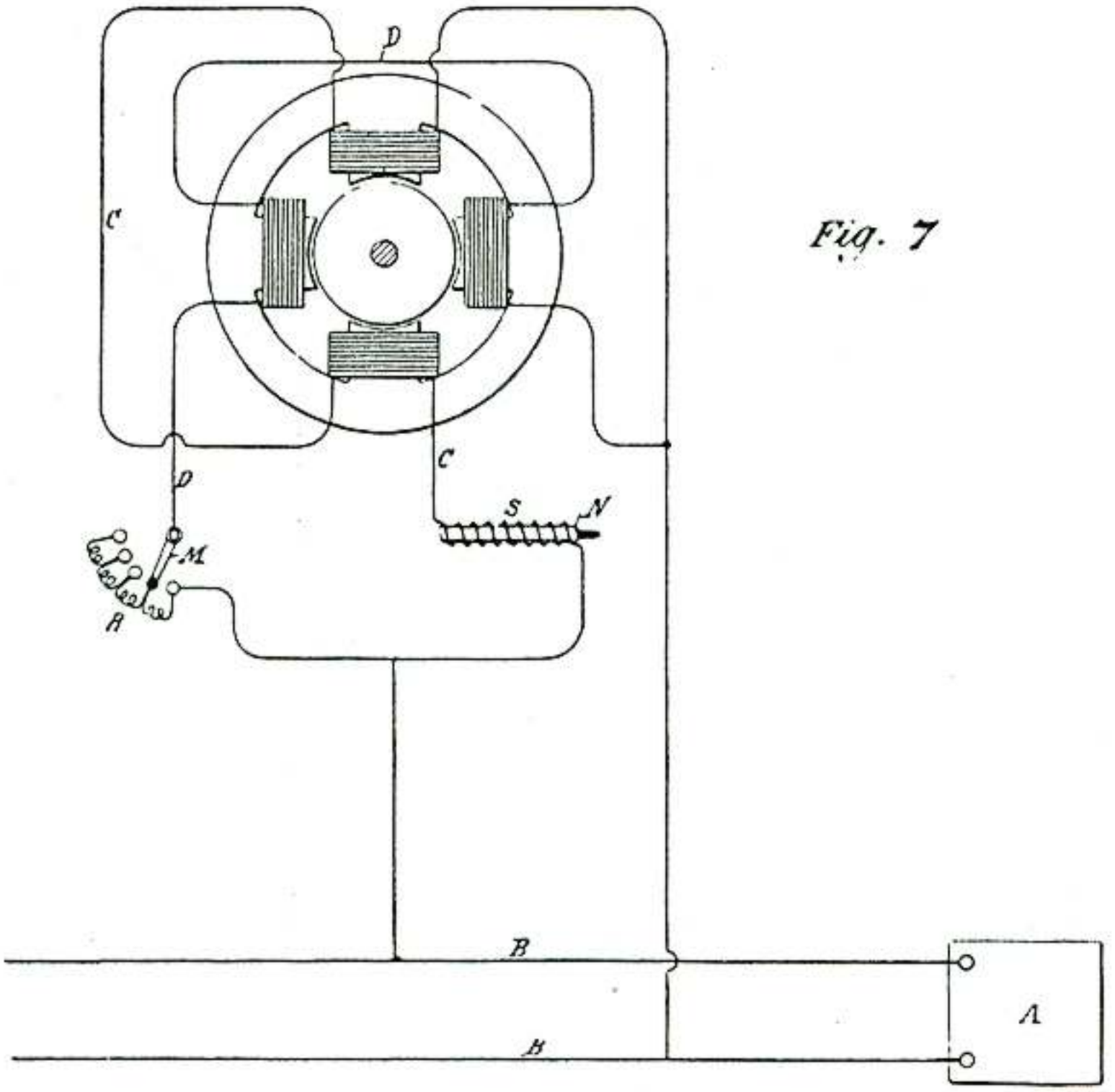

Fig. 7

WITNESSES

Raphael Netter

James H. Caitlin

INVENTOR

Nikola Tesla

BY

Duncan & Page

ATTORNEYS

UNITED STATES PATENT OFFICE.

NIKOLA TESLA, OF NEW YORK, N. Y., ASSIGNOR TO THE TESLA ELECTRIC COMPANY, OF SAME PLACE

METHOD OF ELECTRICAL POWER TRANSMISSION.

SPECIFICATION forming part of Letters Patent No. 405,859, dated June 25, 1889.

Application filed March 14, 1889. Serial No. 303,251. (No model.)

To all whom it may concern:

Be it known that I, NIKOLA TESLA, a subject of the Emperor of Austria, from Smiljan, Lika, border country of Austria-Hungary, residing at New York, in the county and State of New York, have invented certain new and useful Improvements in Methods of Electrical Power Transmission, of which the following is a specification, reference being had to the drawing accompanying and forming a part of the same.

This application is for a specific method of transmitting power electrically, shown and described in, and covered broadly by the claims of, an application filed by me February 18, 1889, No. 300,220.

As is well known, certain forms of alternating-current machines have the property, when connected in circuit with an alternating-current generator, of running as a motor in synchronism therewith; but, while the alternating current will run the motor after it has attained a rate of speed synchronous with that of the generator, it will not start it; hence, in all instances heretofore where these "synchronizing motors," as they are termed, have been run, some means have been employed to bring the motors up to synchronism with the generator, or approximately so, before the alternating current of the generator is applied to drive them. In some instances mechanical appliances have been utilized for this purpose. In others special and complicated forms of motor have been constructed.

My present invention is an improvement in methods of operating these motors and involves a new and improved plan of bringing the motor up to the proper rate of speed, that it may be run in synchronism with the generator.

The expression "synchronism with the generator" is used herein in its ordinary acceptation—that is to say, a motor is said to synchronize with the generator when it preserves a certain relative speed determined by its number of poles and the number of alternations produced per revolution of the generator. Its actual speed, therefore, may be faster or slower than that of the generator, but it is said to be synchronous so long as it preserves the same relative speed.

In carrying out my present invention I construct a generator with two coils or sets of coils and a motor with corresponding energizing coils or sets of coils. By means of two line-wires one terminal of each generator-coil or set of coils is connected to one terminal of its corresponding motor-coil or set of coils, while the opposite terminals of the generator-coils are joined together and likewise those of the motor.

To start the motor I establish temporarily an electrical connection between the points of connection between the coils in the generator and those in the motor, so that the system becomes an ordinary double-circuit system identical with that described in my patent, No. 390,413, of October 2, 1888, except that the generator and motor are constructed in any well-known way with a strong tendency to synchronize. When by this plan of connection the motor has attained the desired speed, the earth-connection is severed, by which means the system becomes an ordinary single-circuit synchronizing system.

In the drawing I have illustrated this method by a diagram.

Let G represent an ordinary alternating-current generator having four field-poles A, permanently or artificially magnetized, and an armature wound with two coils C connected together in series.

Let M represent an alternating-current motor with, say, four poles D, the coils on which are connected in pairs and the pairs connected in series. The motor-armature should have polar projections and closed coils E.

From the common joint or union between the two coils or sets of coils of both the generator and motor an earth-connection F is established, while the terminals or ends of the said coils or circuits which they form are connected to the line-conductors I I.

Assuming that the motor is a synchronizing motor, or one that has the capability of running in synchronism with the generator, but not of starting, it may be started by the above-described plan by closing the ground-connection from both generator and motor. The system thus becomes one with a two-circuit generator and motor, the ground forming a common return for the currents in the two

wires II II. When by this arrangement of circuits the motor is brought to speed, the ground-connection is broken between the generator or motor or both and ground, switches K K being employed for this purpose. The motor then runs as a synchronizing motor.

This system is capable of various useful applications which it is not necessary to describe in detail; but it will be enough to say that the convertibility of the system from double circuit to single circuit is a feature in itself of great value and utility.

I do not wish to be understood as confining myself to the precise arrangement or order of connections herein set forth, as these may be obviously varied in many respects.

What I claim is—

1. The method of operating synchronizing motors herein described, which consists in electrically connecting intermediate points of the inducing-circuit of the generator and the energizing-circuit of the motor until the motor has reached a desired speed and then interrupting such connection, as set forth.

2. The method herein described of starting or operating synchronizing motors, which consists in electrically connecting intermediate points of the inducing-circuit of the generator and the energizing-circuit of the motor to earth until the motor has reached the desired speed and then interrupting either or both of the ground-connections, as set forth.

NIKOLA TESLA.

Witnesses:
EDWARD T. EVANS,
E. C. UPSTILL

P-192

(No Model.)

N. TESLA.

METHOD OF ELECTRICAL POWER TRANSMISSION.

No. 405,859. Patented June 25, 1889.

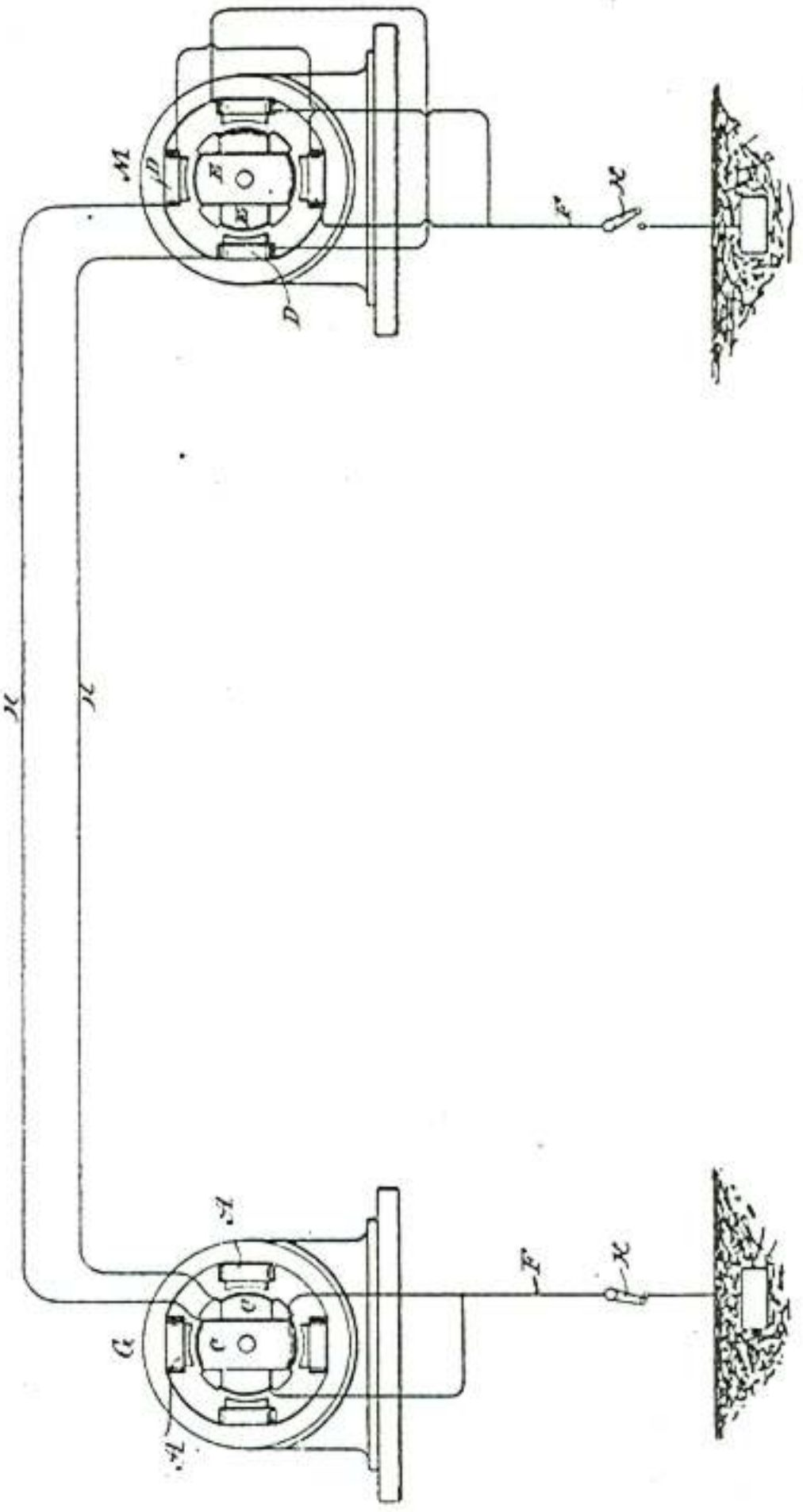

Witnesses:
Raphael Netter
Robt. F. Gaylord

Inventor
Nikola Tesla
By
Duncan, Curtis & Page
Attorneys.

III
LIGHTING

UNITED STATES PATENT OFFICE.

NIKOLA TESLA, OF SMILJAN LIKA, AUSTRIA-HUNGARY, ASSIGNOR TO THE TESLA ELECTRIC LIGHT AND MANUFACTURING COMPANY, OF RAHWAY, NEW JERSEY.

ELECTRIC-ARC LAMP.

SPECIFICATION forming part of Letters Patent No. 335,786, dated February 9, 1886.

Application filed March 30, 1885. Serial No. 160,574. (No model.)

To all whom it may concern:

Be it known that I, NIKOLA TESLA, of Smiljan Lika, border country of Austria-Hungary, have invented certain new and useful Improvements in Electric-Arc Lamps, of which the following is a specification.

My invention relates more particularly to those arc lamps in which the separation and feed of the carbon electrodes or their equivalents is accomplished by means of electro-magnets or solenoids in connection with suitable clutch-mechanism; and it is designed to remedy certain faults common to the greater part of the lamps heretofore made.

The objects of my invention are to prevent the frequent vibrations of the movable electrode and flickering of the light arising therefrom, to prevent the falling into contact of the electrodes, to dispense with the dash-pot, clock-work, or gearing and similar devices heretofore used, and to render the lamp extremely sensitive, and to feed the carbon almost imperceptibly, and thereby obtain a very steady and uniform light.

In that class of lamps where the regulation of the arc is effected by forces acting in opposition on a free movable rod or lever directly connected with the electrode, all or some of the forces being dependent on the strength of the current, any change in the electrical condition of the circuit causes a vibration and a corresponding flicker in the light. This difficulty is most apparent when there are only a few lamps in circuit. To lessen this difficulty, lamps have been constructed in which the lever or armature, after the establishing of the arc, is kept in a fixed position and cannot vibrate during the feed operation, the feed mechanism acting independently; but in these lamps, when a clamp is employed, it frequently occurs that the carbons come into contact and the light is momentarily extinguished, and, frequently, parts of the circuit are injured. In both these classes of lamps it has been customary to use dash-pot, clock-work, or equivalent retarding devices; but these are generally unreliable and objectionable, and increase the cost of construction.

My invention is intended to effect the desired objects and to remedy the before-mentioned defects. I combine two electro-magnets—one of low resistance in the main or lamp circuit, and the other of comparatively high resistance in a shunt around the arc—a movable armature-lever, and a novel feed mechanism, the parts being arranged so that in the normal working position of the armature-lever the same is kept almost rigidly in one position, and is not effected even by considerable changes in the electric circuit; but if the carbons fall into contact the armature will be actuated by the magnets so as to move the lever and start the arc, and hold the carbons until the arc lengthens and the armature-lever returns to the normal position. After this the carbon-rod holder is released by the action of the feed mechanism, so as to feed the carbon and restore the arc to its normal length.

My invention consists, mainly, in the particular manner in which the armature is combined with the magnets and acted upon by them and in the feed-controlling mechanism.

In the drawings, Figure 1 is an elevation of the mechanism made use of in the electric lamp. Fig. 2 is a plan view of the same below the line *x x*. Fig. 3 is an elevation of the balancing lever and spring, and Fig. 4 is a detached plan view of the pole-pieces and armatures upon the friction-clamp, and Fig. 5 is a section of the clamping-tube.

M is a helix of coarse wire in a circuit from the lower-carbon holder to the negative binding-screw —.

N is a helix of fine wire in a shunt between the positive binding-screw + and the negative binding-screw —. The upper-carbon holder S is a parallel rod sliding through the plates $S' S^2$ of the frame of the lamp, and hence the electric current passes from the positive binding-post + through the plate S^2, carbon-holder S, and upper carbon to the lower carbon, and thence by the holder and a metallic connection to the helix M.

The carbon-holders are of any desired character, and to insure electric connections the springs *l* are made use of to grasp the upper-carbon holding rod S, but to allow the rod to

slide freely through the same. These springs *l* may be adjusted in their pressure by the screw *m*, and the spring *l* may be sustained upon any suitable support. I have shown them as connected with the upper end of the core of the magnet N.

Around the carbon-holding rod S, between the plates S' S', there is a tube, R, which forms a clamp. This tube is counterbored, as seen in the section Fig. 5, so that it bears upon the rod S at its upper end and near the middle, and at the lower end of this tubular clamp R there are armature-segments *r* of soft iron. A frame or arm, *n*, extending, preferably, from the core N', supports the lever A by a fulcrum-pin, *o*. This lever A has a hole, through which the upper end of the tubular clamp R passes freely, and from the lever A is a link, *q*, to the lever *t*, which lever is pivoted at *y* to a ring upon one of the columns S'. This lever *t* has an opening or bow surrounding the tubular clamp R, and there are pins or pivotal connections *w* between the lever *t* and this clamp R, and a spring, r^2, serves to support or suspend the weight of the parts and balance the same, or nearly so. This spring is preferably adjustable.

At one end of the lever A is a soft iron armature block, *a*, over the core M' of the helix M, and there is preferably a limiting-screw, *c*, passing through this armature-block *a*, and at the other end of the lever A is a soft-iron armature-block, *b*, with the end tapering or wedge-shaped, and the same comes close to and in line with the lateral projection *e* on the core N'. The lower ends of the cores M' N' are made with lateral projecting pole-pieces M^2 N^2, respectively, and these pole-pieces are concave at their outer ends, and are at opposite sides of the armature segments *r* at the lower end of the tubular clamp R.

The operation of these devices is as follows: In the condition of inaction the upper carbon rests upon the lower one, and when the current is turned on the electricity passes freely, by the frame and spring *l*, through the rod S and carbons to the coarse wire and helix M, and to the negative binding-post V, and the core M' thereby is energized. The pole-piece M^2 attracts the armature *r*, and by the lateral pressure causes the clamp R to grasp the rod S', and the lever A is simultaneously moved from the position shown by dotted lines, Fig. 1, to the normal position shown in full lines, and in so doing the link *q* and lever *t* are raised, lifting the clamp R and rod S, separating the carbons and forming the arc. The magnetism of the pole-piece *e* tends to hold the lever A level, or nearly so, the core N^2 being energized by the current in the shunt which contains the helix N. In this position the lever A is not moved by ordinary variation in the electric current because the armature *b* is strongly attracted by the magnetism of *e*, and these parts are closed to each other, and the magnetism of *e* acts at right angles to the magnetism of the core M'. If, now, the arc becomes too long, the current through the helix M is lessened, and the magnetism of the core N^2 is increased by the greater current passing through the shunt, and this core N^2 attracting the segmental armature *r* lessens the hold of the clamp R upon the rod S, allowing the latter to slide and lessen the length of the arc, which instantly restores the magnetic equilibrium and causes the clamp R to hold the rod S. If it happens that the carbons fall into contact, then the magnetism of N^2 is lessened so much that the attraction of the magnet M will be sufficient to move the armature *a* and lever A so that the armature *b* passes above the normal position, so as to separate the carbons instantly; but when the carbons burn away a greater amount of current will pass through the shunt until the attraction of the core N^2 will overcome the attraction of the core M' and bring the armature-lever A again into the normal horizontal position, and this occurs before the feed can take place. The segmental armature pieces *r* are shown as nearly semicircular. They may be square or of any other desired shape, the ends of the pole-pieces M^2 N^2 being made to correspond in shape.

I claim as my invention—

1. The combination, in an electric-arc lamp, of the electro-magnets in the main and shunt circuits, respectively, an armature-lever and connection to the movable carbon holder, the core of the shunt magnet passing across the end of the armature lever, substantially as set forth, so that the two magnets act in conjunction on the armature lever in moving the carbon to form the arc and in opposition to each other beyond the normal position of the armature-lever, substantially as specified.

2. The combination, with the carbon-holders, of two magnets, one in the main circuit and the other in a shunt circuit, and an armature-lever to draw the arc, and a feeding mechanism and pole-pieces upon the electro-magnets to act upon the feeding mechanism substantially as specified.

3. The combination, with the carbon holders, of two magnets, one in the main circuit and the other in a shunt-circuit, and an armature-lever between two poles of such electro magnets to draw the arc, and a feeding mechanism and pole-pieces upon the other two poles of the electro-magnets to act upon the feeding mechanism, substantially as specified.

4. The combination, with the carbon-holding rod in an electric arc lamp, of the clamp R, lever *t*, spring r^2, armature-lever A, and electro-magnets M N in the main and shunt circuits, respectively, the pole pieces M^2 N^2, and armature-segments *r*, substantially as set forth.

5. The combination, with the carbon holder, of a tubular clamp surrounding the same, an armature-lever connected to said tubular clamp, and electro magnets in the main and shunt circuits, respectively, and armature-seg

ments upon the tubular clamp adjacent to the lateral poles of the electro-magnets, substantially as set forth.

6. In an electric-arc lamp, the combination, with the carbon-holding rod, of a clamp, two armatures upon the clamp, and electro-magnets in the main and shunt circuits, respectively, the poles of which act upon the armatures of the clamp for bringing the same into action or releasing it, substantially as set forth.

Signed by me this 25th day of March, A. D. 1885.

NIKOLA TESLA.

Witnesses:
GEO. T. PINCKNEY,
CHAS. H. SMITH.

P-198

(No Model.) 2 Sheets—Sheet 1.

N. TESLA.

ELECTRIC ARC LAMP.

No. 335,786. Patented Feb. 9, 1886.

Fig. 1.

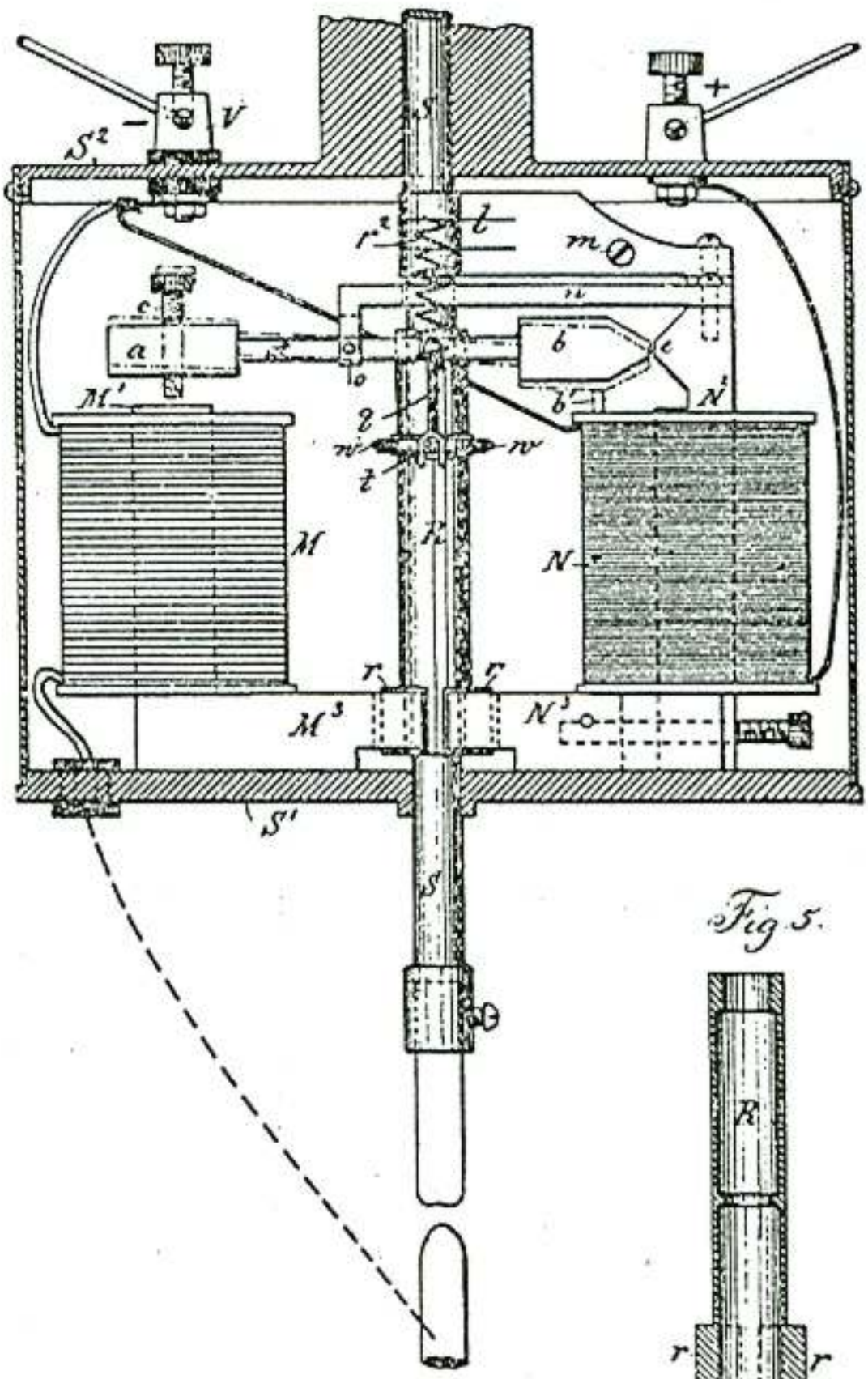

Fig. 5.

Fig. 4

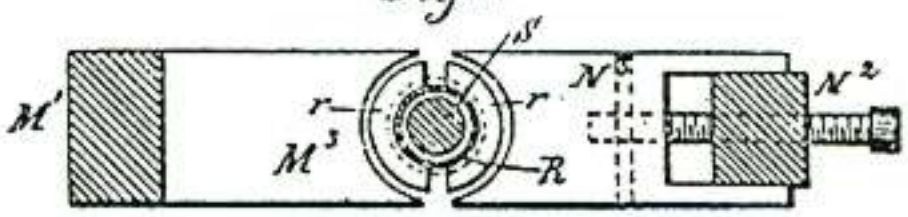

Witnesses:
I. Stair
Chas. A. Smith

Inventor
Nikola Tesla
per: Lemuel W. Serrell
atty

P-199

(No Model.)

2 Sheets—Sheet 2.

N. TESLA.

ELECTRIC ARC LAMP.

No. 335,786. Patented Feb. 9, 1886.

Fig 2

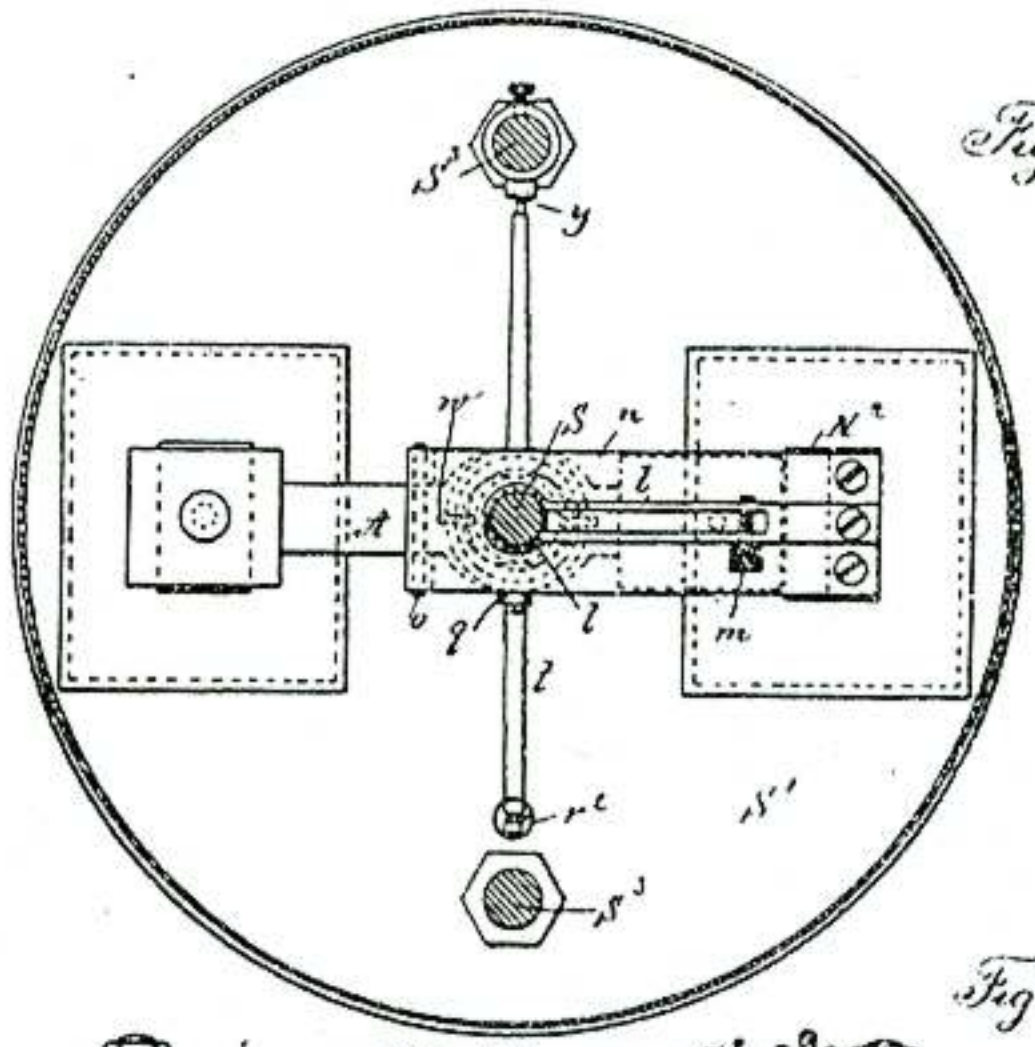

Fig 1

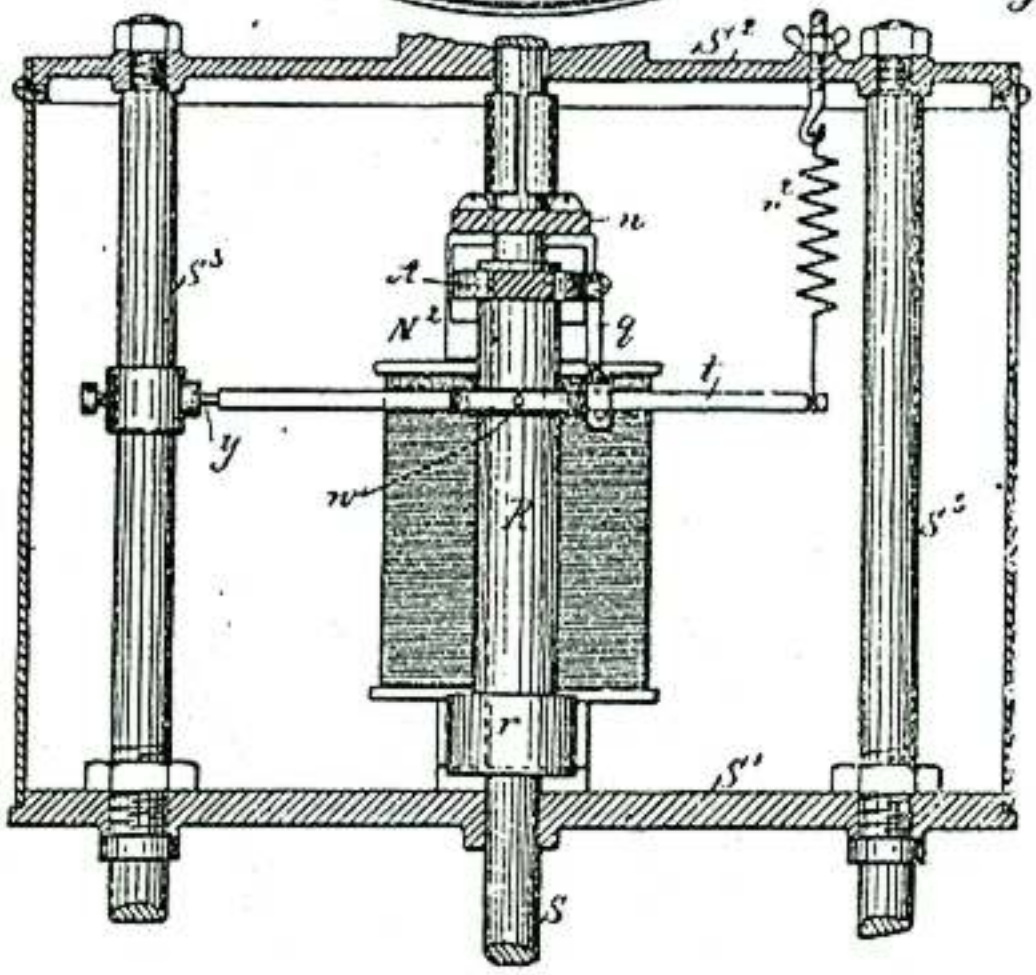

Witnesses
I Stahl
Chas. N. Smith

Inventor
Nikola Tesla
per Lemuel W. Serrell
Atty

UNITED STATES PATENT OFFICE.

NIKOLA TESLA, OF SMILJAN LIKA, AUSTRIA-HUNGARY, ASSIGNOR TO THE TESLA ELECTRIC LIGHT AND MANUFACTURING COMPANY, OF RAHWAY, NEW JERSEY.

ELECTRIC-ARC LAMP.

SPECIFICATION forming part of Letters Patent No. 335,787, dated February 9, 1886.

Application filed July 13, 1885. Serial No. 171,416. (No model.)

To all whom it may concern:

Be it known that I, NIKOLA TESLA, of Smiljan Lika, border country of Austria-Hungary, have invented certain Improvements in Electric-Arc Lamps, of which the following is a specification.

In another application, No. 160,574, filed by me March 30, 1885, I have shown and described a lamp having two magnets, in the main and shunt circuits, respectively, an armature-lever, and feed-mechanism connected to the armature-lever.

My present invention consists in some modifications of and improvements upon the devices shown in the application referred to.

In my present invention I further provide means for automatically withdrawing a lamp from the circuit, or cutting out the same, when, from a failure of the feed, the arc reaches an abnormal length, and also means for automatically reinserting such lamp in the circuit when the rod drops and the carbons come into contact.

My invention will be understood with reference to the accompanying drawings.

In the drawings, Figure 1 is an elevation of the lamp with the case in section. Fig. 2 is a sectional plan at the line *x x*. Fig. 3 is an elevation, partly in section, of the lamp at right angles to Fig. 1. Fig. 4 is a sectional plan at the line *y y* of Fig. 1. Fig. 5 is a section of the clamp in about full size. Fig. 6 is a detached section illustrating the connection of the spring to the lever that carries the pivots of the clamp, and Fig. 7 is a diagram showing the circuit-connections of the lamp.

In the drawings, Fig. 1, M represents the main and N the shunt magnet, both securely fastened to the base A, which, with its side columns, S S, is preferably cast in one piece of brass or other diamagnetic material. To the magnets are soldered or otherwise fastened the brass washers or disks *a a a a*. Similar washers, *b b*, of fiber or other insulating material, serve to insulate the wires from the brass washers.

The magnets M and N are made very flat, so that their width exceeds three times their thickness, or even more. In this way a comparatively small number of convolutions is sufficient to produce the required magnetism, besides a greater surface is offered for cooling off the wires.

The upper pole-pieces, *m n*, of the magnets are curved, as indicated in the drawings, Fig. 1. The lower pole-pieces, *m' n'*, are brought near together, tapering toward the armature *g*, as shown in Figs. 2 and 4. The object of this taper is to concentrate the greatest amount of the developed magnetism upon the armature, and also to allow the pull to be exerted always upon the middle of the armature *g*. This armature *g* is a piece of iron in the shape of a hollow cylinder, having on each side a segment cut away, the width of which is equal to the width of the pole-pieces *m' n'*.

The armature is soldered or otherwise fastened to the clamp *r*, which is formed of a brass tube, provided with gripping-jaws *e e*, Fig. 5. These jaws are arcs of a circle of the diameter of the rod R, and are made of some hard metal, preferably of hardened German silver. I also make the guides *f f*, through which the carbon-holding rod R slides, of the same material. This has the advantage to reduce greatly the wear and corrosion of the parts coming in frictional contact with the rod, which frequently causes trouble. The jaws *e e* are fastened to the inside of the tube *r*, so that one is a little lower than the other. The object of this is to provide a greater opening for the passage of the rod when the same is released by the clamp. The clamp *r* is supported on bearings *w w*, Figs. 1, 3 and 5, which are just in the middle between the jaws *e e*. I find this disposition to be the best. The bearings *w w* are carried by a lever, *t*, one end of which rests upon an adjustable support, *q*, of the side columns, S, the other end being connected by means of the link *e'* to the armature-lever L. The armature-lever L is a flat piece of iron in Z shape, having its ends curved so as to correspond to the form of the upper pole-pieces of the magnets M and N. It is hung upon the pivots *v v*, Fig. 2, which are in the jaw *x* of the top plate, B. This plate B, with the jaw, is preferably cast in one piece and screwed to the side columns, S S, that extend up from the base A. To partly balance the overweight of the moving parts a spring, *s'*,

Figs. 2 and 6, is fastened to the top plate, B, and hooked to the lever *t*. The hook *o* is toward one side of the lever or bent a little sidewise, as seen in Fig. 6. By this means a slight tendency is given to swing the armature toward the pole-piece *m'* of the main magnet.

The binding-posts K K' are preferably screwed to the base A. A manual switch, for short-circuiting the lamp when the carbons are renewed, is also to be fastened to the base. This switch is of ordinary character, and is not shown in the drawings.

The rod R is electrically connected to the lamp-frame by means of a flexible conductor or otherwise. The lamp-case receives a removable ornamental cover, *s'*, around the same to inclose the parts.

The electrical connections are as indicated diagrammatically in Fig. 7.

The wire in the main magnet consists of two parts, *x'* and *p'*. These two parts may be in two separated coils or in one single helix, as shown in the drawings. The part *x'* being normally in circuit, is, with the fine wire upon the shunt-magnet, wound and traversed by the current in the same direction, so as to tend to produce similar poles, *n n* or *s s*, on the corresponding pole-pieces of the magnets M and N. The part *p'* is only in circuit when the lamp is cut out, and then the current being in the opposite direction produces in the main magnet magnetism of the opposite polarity.

The operation is as follows: At the start the carbons are to be in contact, and the current passes from the positive binding-post K to the lamp-frame, carbon-holder, upper and lower carbon, insulated return-wire in one of the side rods, and from there through the part *x'* of the wire on the main magnet to the negative binding-post. Upon the passage of the current the main magnet is energized and attracts the clamping-armature *g*, swinging the clamp and gripping the rod by means of the gripping-jaws *c c*. At the same time the armature-lever L is pulled down and the carbons separated. In pulling down the armature-lever L the main magnet is assisted by the shunt-magnet N, the latter being magnetized by magnetic induction from the magnet M.

It will be seen that the armatures L and *g* are practically the keepers for the magnets M and N, and owing to this fact both magnets with either one of the armatures L and *g* may be considered as one horseshoe-magnet, which we might term a "compound magnet." The whole of the soft-iron parts *m*, *m'*, *g*, *n'*, *n*, and L form a compound magnet.

The carbons being separated, the fine wire receives a portion of the current. Now, the magnetic induction from the magnet M is such as to produce opposite poles on the corresponding ends of the magnet N; but the current traversing the helices tends to produce similar poles on the corresponding ends of both magnets, and therefore as soon as the fine wire is traversed by sufficient current the magnetism of the whole compound magnet is diminished.

With regard to the armature *g* and the operation of the lamp, the pole *m'* may be termed as the "clamping" and the pole *n'* as the "releasing" pole.

As the carbons burn away, the fine wire receives more current and the magnetism diminishes in proportion. This causes the armature-lever L to swing and the armature *g* to descend gradually under the weight of the moving parts until the end *p*, Fig. 1, strikes a stop on the top plate, B. The adjustment is such that when this takes place the rod R is yet gripped securely by the jaws *c c*. The further downward movement of the armature-lever being prevented, the arc becomes longer as the carbons are consumed, and the compound magnet is weakened more and more until the clamping-armature *g* releases the hold of the gripping-jaws *c c* upon the rod R, and the rod is allowed to drop a little, shortening thus the arc. The fine wire now receiving less current, the magnetism increases, and the rod is clamped again and slightly raised, if necessary. This clamping and releasing of the rod continues until the carbons are consumed. In practice the feed is so sensitive that for the greatest part of the time the movement of the rod cannot be detected without some actual measurement. During the normal operation of the lamp the armature-lever L remains stationary, or nearly so, in the position shown in Fig. 1.

Should it arise that, owing to an imperfection in the rod, the same and the carbons drop too far, so as to make the arc too short, or even bring the carbons in contact, then a very small amount of current passes through the fine wire, and the compound magnet becomes sufficiently strong to act as on the start in pulling the armature-lever L down and separating the carbons to a greater distance.

It occurs often in practice that the rod sticks in the guides. In this case the arc reaches a great length, until it finally breaks. Then the light goes out, and frequently the fine wire is injured. To prevent such an accident, I provide my lamp with an automatic cut-out. This cut out operates as follows: When, upon a failure of the feed, the arc reaches a certain predetermined length, such an amount of current is diverted through the fine wire that the polarity of the compound magnet is reversed. The clamping-armature *g* is now moved against the shunt-magnet N until it strikes the releasing-pole *n'*. As soon as the contact is established, the current passes from the positive binding-post over the clamp *r*, armature *g*, insulated shunt-magnet, and the helix *p'* upon the main magnet M to the negative binding-post. In this case the current passes in the opposite direction and changes the polarity of the magnet M, at the same time maintaining by magnetic induction in the core of shunt-magnet the required magnetism without reversal of polarity, and the armature *g* remains

against the shunt-maguet pole n'. The lamp is thus cut out as long as the carbons are separated. The cut-out may be used in this form without any further improvement; but I prefer to arrange it so that if the rod drops and the carbons come in contact the arc is started again. For this purpose I proportion the resistance of the part p' and the number of the convolutions of the wire upon the main magnet so that when the carbons come in contact a sufficient amount of current is diverted through the carbons and the part x' to destroy or neutralize the magnetism of the compound magnet. Then the armature g, having a slight tendency to approach to the clamping-pole m', comes out of contact with the releasing pole n'. As soon as this happens, the current through the part p' is interrupted, and the whole current passes through the part x. The magnet M is now strongly magnetized, the armature g is attracted, and the rod clamped. At the same time the armature-lever L is pulled down out of its normal position and the arc started. In this way the lamp cuts itself out automatically when the arc gets so long, and reinserts itself automatically in the circuit if the carbons drop together.

It will be seen that the cut-out may be modified without departing from the spirit of my invention, as long as the shunt-magnet closes a circuit including a wire upon the main magnet and continues to keep the contact closed, being magnetized by magnetic induction from the main magnet. It is also obvious to say that the magnets and armatures may be of any desired shape.

I claim as my invention—

1. The combination, in an arc-lamp, of a main and a shunt magnet, an armature lever to draw the arc, a clamp, and an armature to act upon the clamp, a clamping-pole and a releasing-pole upon the respective cores, the cores, poles, armature-lever, and clamping-armature forming a compound electro-maguet, substantially as set forth.

2. The combination, in an electric arc lamp, of a carbon-holder and its rod, a clamp for such carbon-holder, a clamping-armature connected to the clamp, a compound electro-magnet controlling the action of the clamping-armature, and electric-circuit connections, substantially as set forth, for lessening the magnetism of the compound magnet when the arc between the carbons lengthens and augmenting the magnetism of the same when the arc is shortened, substantially as described.

3. The combination, with the carbon-holders in an electric lamp, of a clamp around the rod of the upper-carbon holder, the clamping-armature connected with said clamp, the armature-lever and connection from the same to the clamp, the main and shunt magnets, and the respective poles of the same to act upon the clamping armature and armature-lever, respectively, substantially as set forth.

4. In an electric-arc lamp, a cut-out consisting of a main magnet, an armature, and a shunt-magnet having an insulated pole-piece, and the cut-out circuit-connections through the pole piece and armature, substantially as set forth.

5. In an electric-arc lamp, the combination, with the carbon-holder and magnets, of the armatures L and g, link c', clamp r, and lever l, and the spring s', for the purpose set forth.

6. In an electric arc lamp, the combination, with two upright magnets in the main and shunt circuits, respectively, having curved pole-pieces on one end and converging pole-pieces on the other end, of a flat Z-shaped armature-lever between the curved pole-pieces and a clamping-armature between the convergent-pole pieces, substantially as described.

7. The combination, in an electric-arc lamp, of an electro-magnet in the main circuit and an electro magnet in the shunt-circuit, an armature under the influence of the poles of the respective magnets, and circuit-connections controlled by such armature to cut out or shunt the lamp, substantially as specified, whereby the branch circuit is closed by the magnetism of the shunt-magnet, and then kept closed by induced magnetism from the main magnet, substantially as set forth.

8. The combination, with the carbon-holder and rod and the main and shunt magnets, of a feeding-clamp, an armature for the same, clamping and releasing poles upon the cores of the respective magnets, and circuit-connections through the clamping armature, substantially as specified, for shunting the current when the electric arc between the carbons becomes abnormally long, substantially as set forth.

9. The combination, with the carbon-holding rod and a clamp for the same, of an armature upon the clamp, a shunt-maguet the pole of which acts to release the clamp, and a main magnet with a two-part helix, one portion being in the main circuit and the other portion in a shunt or cut-out circuit, the clamping armature acting to close said cut-out circuit when the arc becomes too long and to break the shunt-circuit when the carbons come together, substantially as set forth.

Signed by me this 11th day of July, A. D. 1885.

NIKOLA TESLA.

Witnesses:
GEO. T. PINCKNEY,
WILLIAM G. MOTT.

P-203

(No Model.) 2 Sheets—Sheet 1.

N. TESLA.

ELECTRIC ARC LAMP.

No. 335,787. Patented Feb. 9, 1886.

Fig 1.

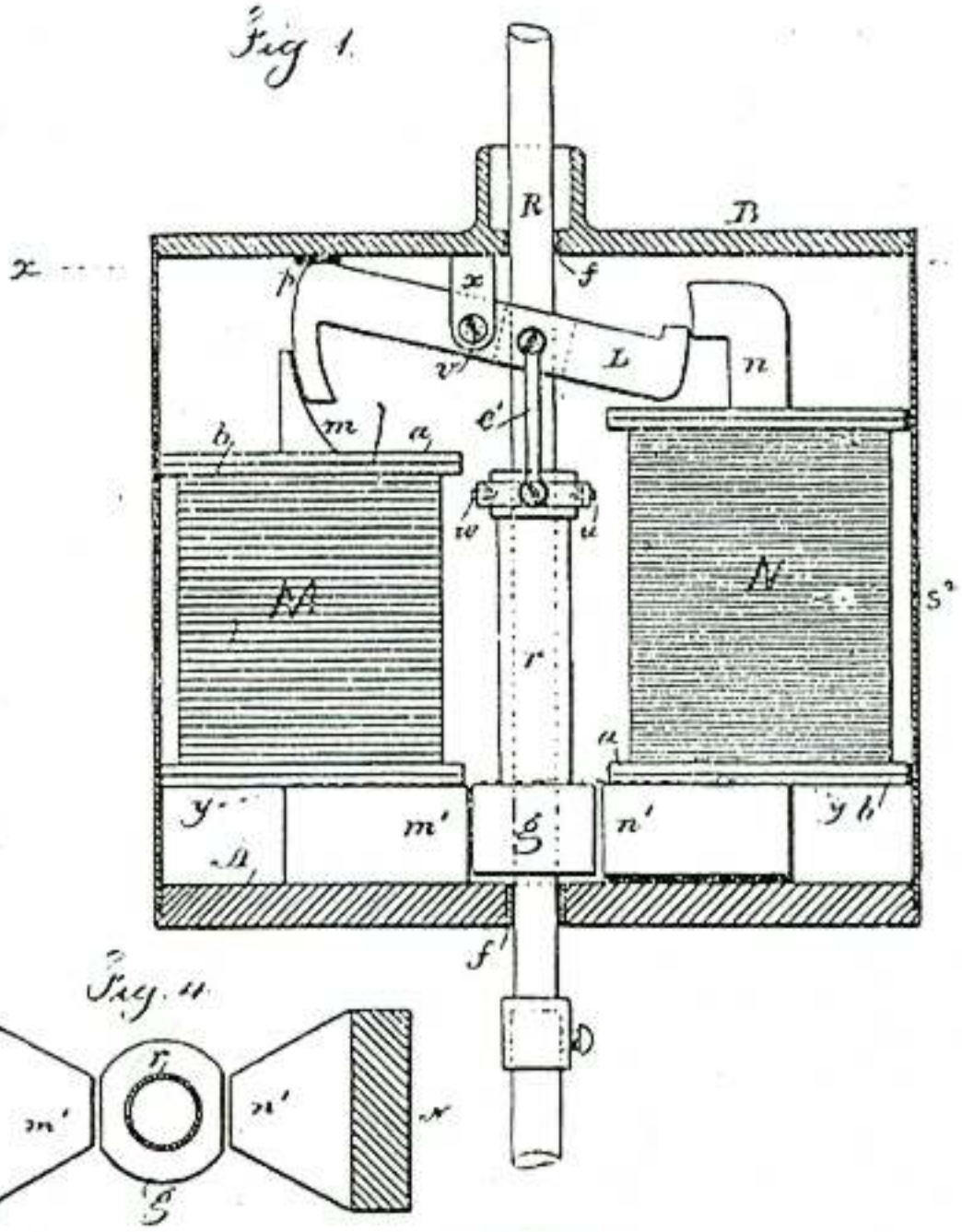

Fig 6.

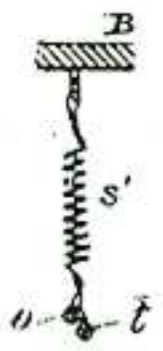

Fig. 11

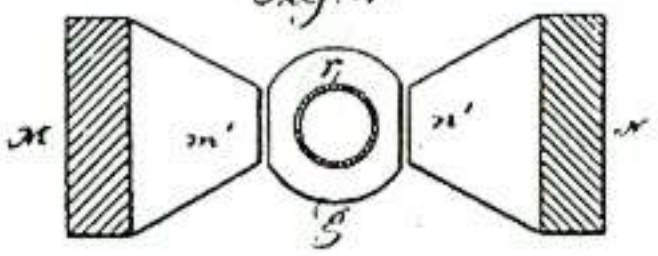

Fig. 12

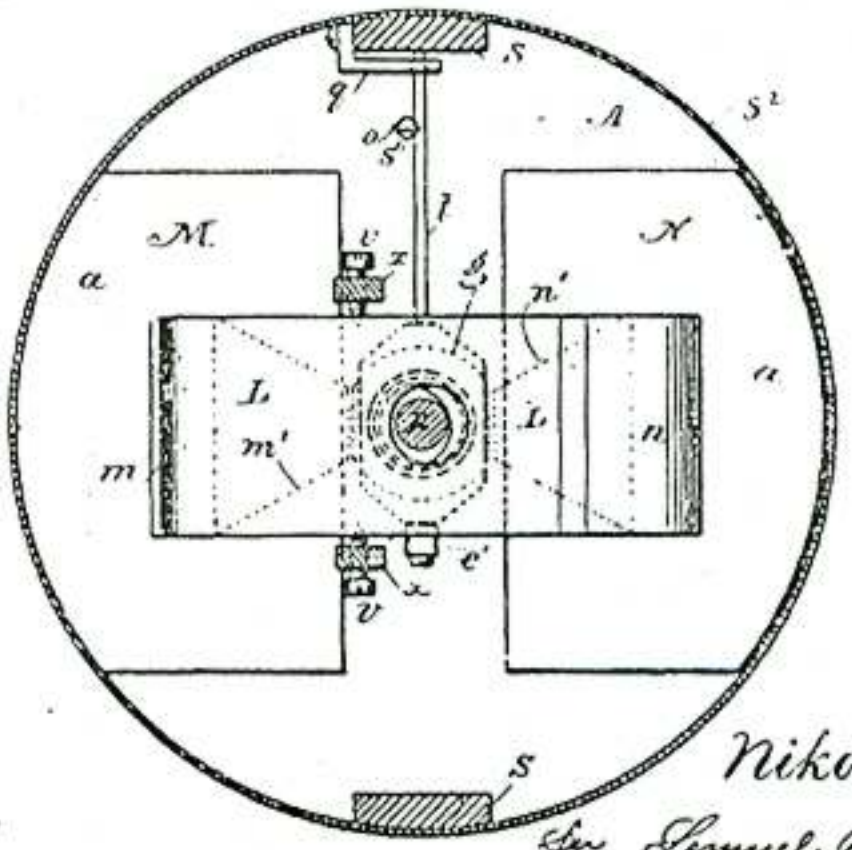

Witnesses

Chas H. Smith

Geo T Pinckney

Inventor

Nikola Tesla

per Lemuel W. Serrell

atty

P-204

(No Model.) 2 Sheets--Sheet 2

N. TESLA.

ELECTRIC ARC LAMP.

No. 335,787. Patented Feb. 9, 1886.

Fig 5

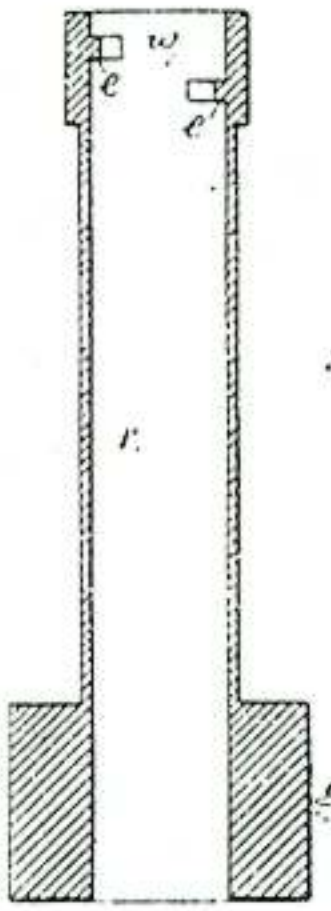

Fig 3

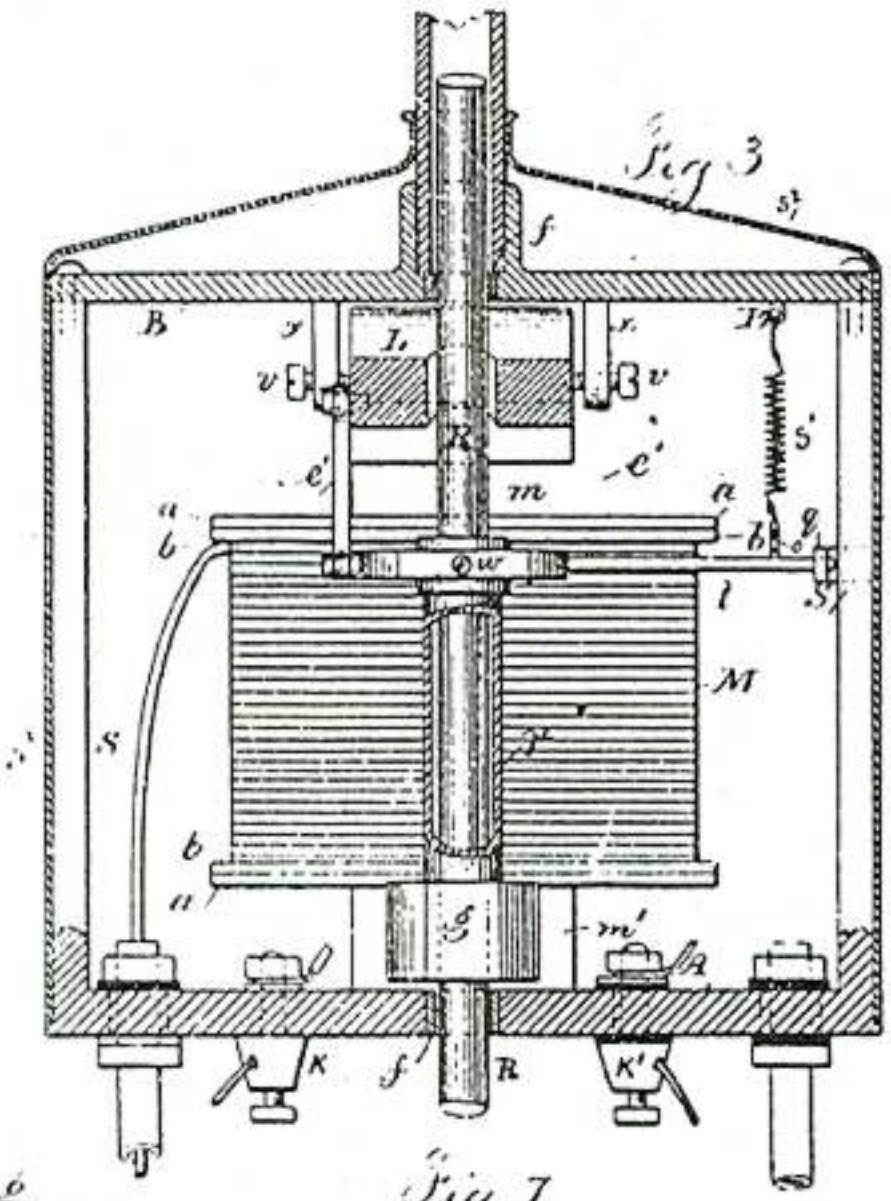

Fig 7

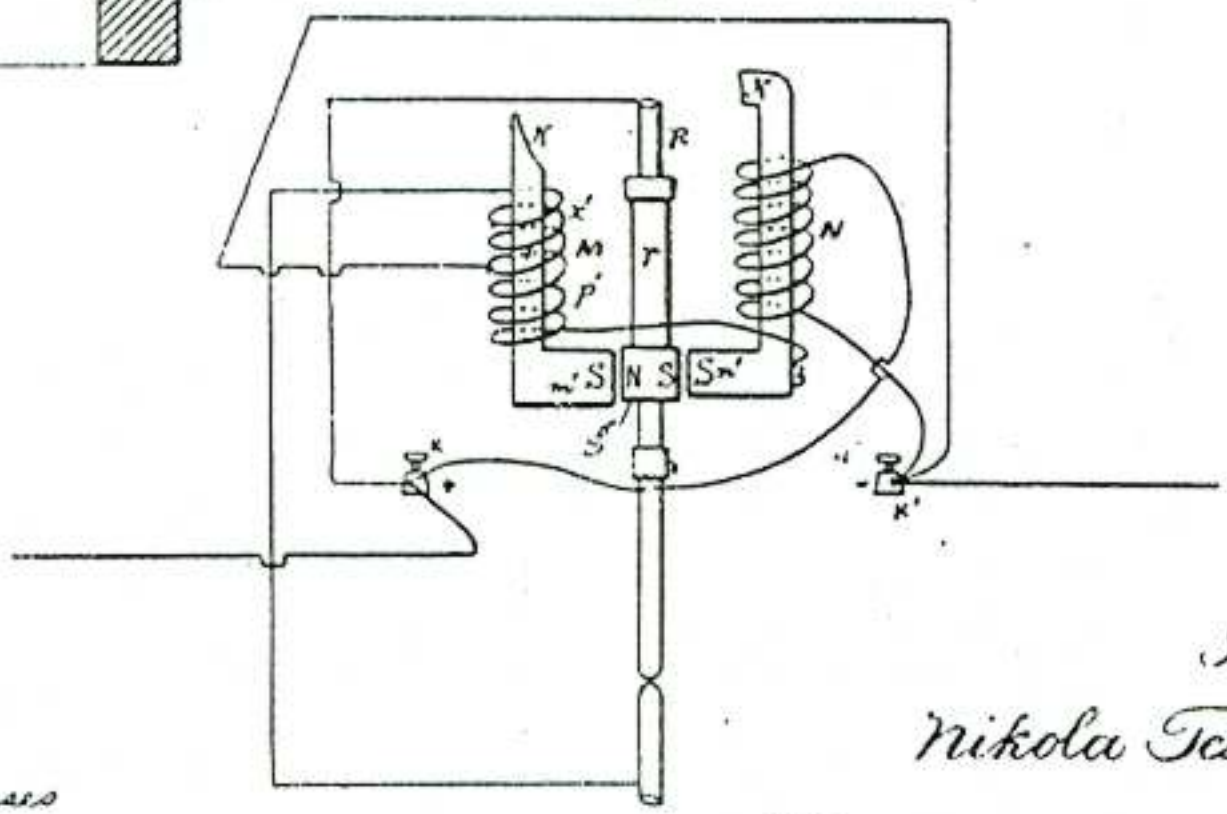

Witnesses

Chas. H. Smith
Geo. T. Pinckney

Inventor

Nikola Tesla

per Samuel W. Serrell

a15

UNITED STATES PATENT OFFICE.

NIKOLA TESLA, OF NEW YORK, N. Y.

METHOD OF OPERATING ARC LAMPS.

SPECIFICATION forming part of Letters Patent No. 447,920, dated March 10, 1891.

Application filed October 1, 1890. Serial No. 366,734. (No model.)

To all whom it may concern.

Be it known that I, NIKOLA TESLA, a subject of the Emperor of Austria-Hungary, residing at New York, in the county and State of New York, have invented certain new and useful Improvements in Methods of Operating Arc Lamps, of which the following is a specification.

This invention consists in an improved method of operating electric-arc lamps which are supplied with alternating or pulsating currents.

It has now become a common practice to run arc lamps by alternating or pulsating as distinguished from continuous currents; but an objection to such systems exists in the fact that the arcs emit a pronounced sound, varying with the rate of the alternations or pulsations of current, but under any circumstances constituting an objectionable and disagreeable feature, for which heretofore no effective remedy has been found or proposed. This noise is probably due to the rapidly alternating heating and cooling and consequent expansion and contraction of the gaseous matter forming the arc which corresponds with the periods or impulses of the current, for I have succeeded in abating it and producing quiet and smoothly-acting lamps by increasing, per unit of time, the number of alternations or pulsations of the current producing the arc to such an extent that the rate of the vibrations or changes in the arc producing the noise approximately equals or exceeds that which is generally regarded as the limit of audition. For example, I may use a generator which produces ten thousand or more alternations of current per second. In such a case the periodical heating and cooling of the arc would occur with such rapidity as to produce little or no perceptible effect upon the ear.

There are a number of ways in which the current may be varied at a rate exceeding the limit of audition, but probably the most practicable known to me at present is by the use of an alternating-current generator with a large number of poles, and specially constructed for the purpose. Such a generator, for the purpose of the illustration of this case, I have shown in the accompanying drawings.

Figure 1 is a view of the generator in side elevation. Fig. 2 is a vertical cross-section of the same with a diagram of the circuit-connections. Fig. 3 is an enlarged view, in side elevation, of a part of the machine. Fig. 4 is an enlarged sectional detail of the armature and field. Fig. 5 is a detail section of the field-magnets exhibiting the plan of winding.

A is an annular magnetic frame supported by the cross-bars or brackets B, provided with feet C, upon which the machine rests. The interior of the annulus A is provided with a large number of projections or pole-pieces D. These may be formed or applied in a variety of ways—as, for example, by milling transverse grooves E.

Owing to the very large number and small size of the poles and the spaces between them, I apply the exciting or field coils by winding an insulated conductor F zigzag through the grooves, as shown in Fig. 5, carrying said wire around the annulus to form as many layers as is desired. In this way the pole-pieces D will be energized with alternately opposite polarity around the entire ring.

For the armature I employ a spider or circular frame G on a driving-shaft H, mounted in bearings in the brackets B. This spider carries a ring J, turned down, except at its edges, to form a trough like receptacle for a mass of fine annealed iron wires K, which are wound in the groove to form the core proper for the armature-coils. Pins L are set in the sides of the ring J, and the coils M are wound over the periphery of the armature-structure and around the pins. The coils M are connected together in series, and these terminals N carried through the hollow shaft H to contact-rings P P, from whence the currents are taken off by brushes O. In this way a machine with a very large number of poles may be constructed. It is easy, for instance, to obtain in this manner three hundred and seventy-five to four hundred poles in a machine that may be safely driven at a speed of fifteen hundred or sixteen hundred revolutions per minute, which will produce ten thousand or eleven thousand alternations of current per second. Arc lamps R R are shown in diagram as connected up in series with the machine in Fig. 2. If such a current be applied to running arc lamps, the sound produced by or in the arc becomes practically inaudible, for by increasing the rate of change

in the current, and consequently the number of vibrations per unit of time of the gaseous material of the arc up to or beyond ten thousand or eleven thousand per second, or to what is regarded as the limit of audition, the sound due to such vibrations will not be audible. The exact number of changes or undulations necessary to produce this result will vary somewhat according to the size of the arc—that is to say, the smaller the arc the greater the number of changes that will be required to render it inaudible within certain limits. Of course, as the rate of alternations or undulations for a given size of arc becomes very high the sound produced is less perceptible, and hence for some purposes the actual limit of audition may only be approached, provided the sound be rendered practically inaudible.

Another advantage gained by increasing as above set forth the number of alternations is that the arc acts more like that produced by a continuous current, in that it is more persistent, owing to the fact that the time interval between undulations is so small that the gaseous matter cannot cool down so far as to increase very considerably in resistance.

I claim—

The method of abating or rendering inaudible the sound emitted by arc lamps supplied with or operated by an alternating or pulsating current by increasing the rate of such alternations or pulsations up to that of the limit of audition, as set forth.

NIKOLA TESLA.

Witnesses:

FRANK B. MURPHY,

RAPHAËL NETTER.

(No Model.)

N. TESLA.

METHOD OF OPERATING ARC LAMPS.

No. 447,920. Patented Mar. 10, 1891.

Fig. 1

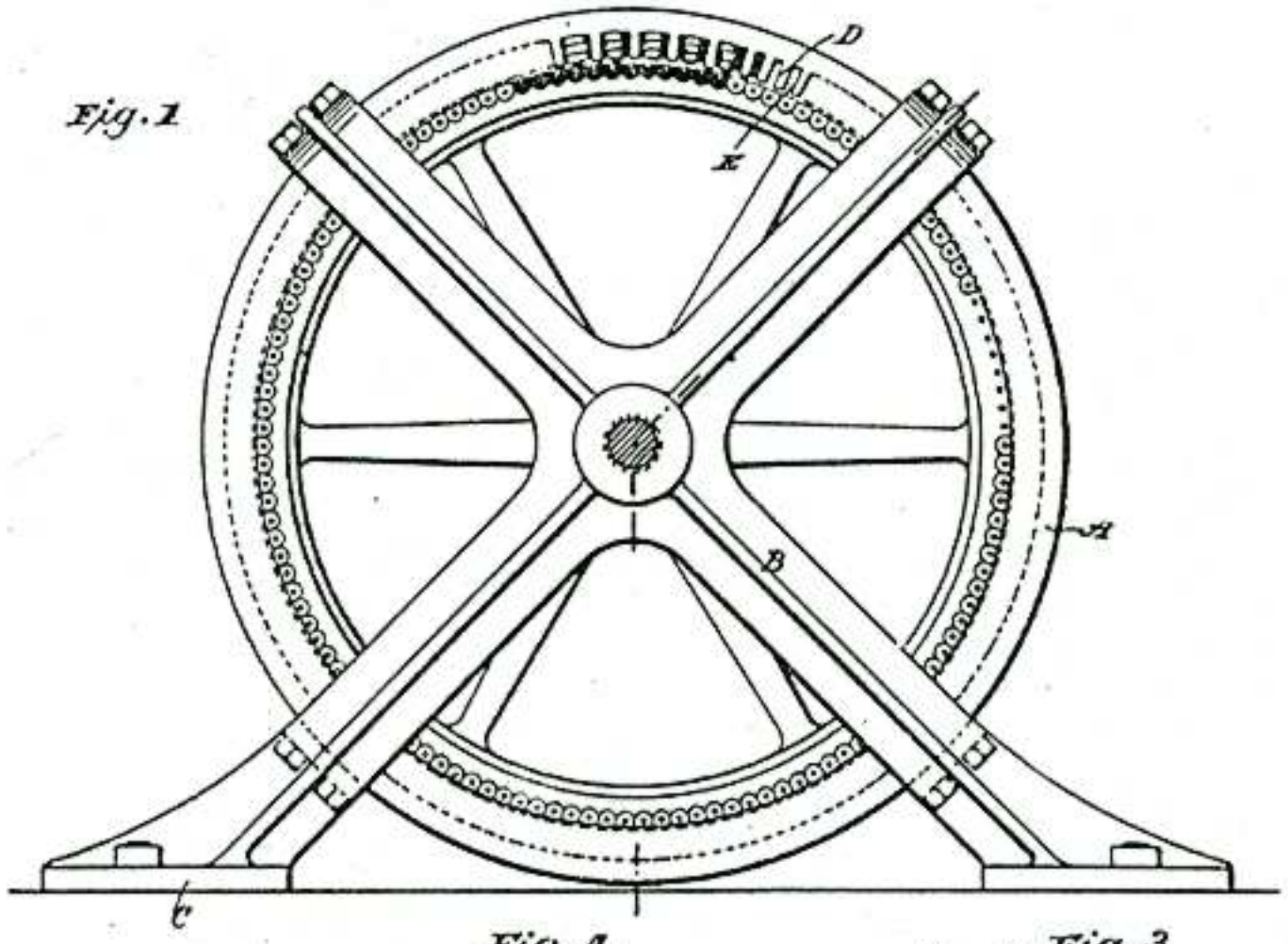

Fig. 4

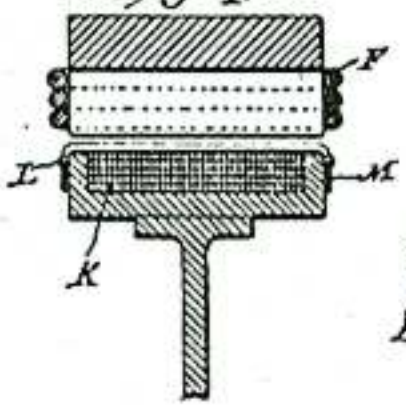

Fig. 3

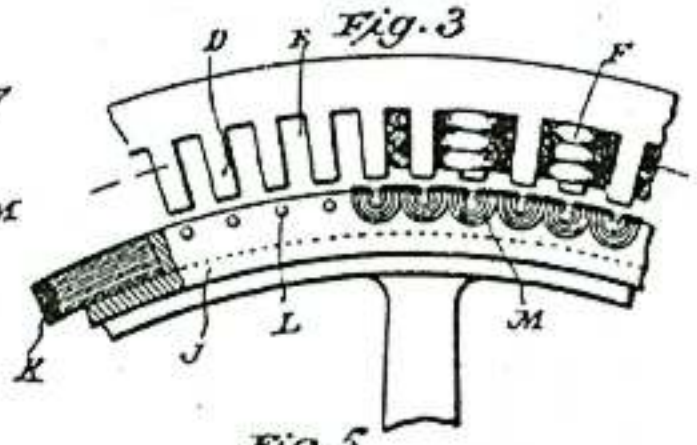

Fig. 5

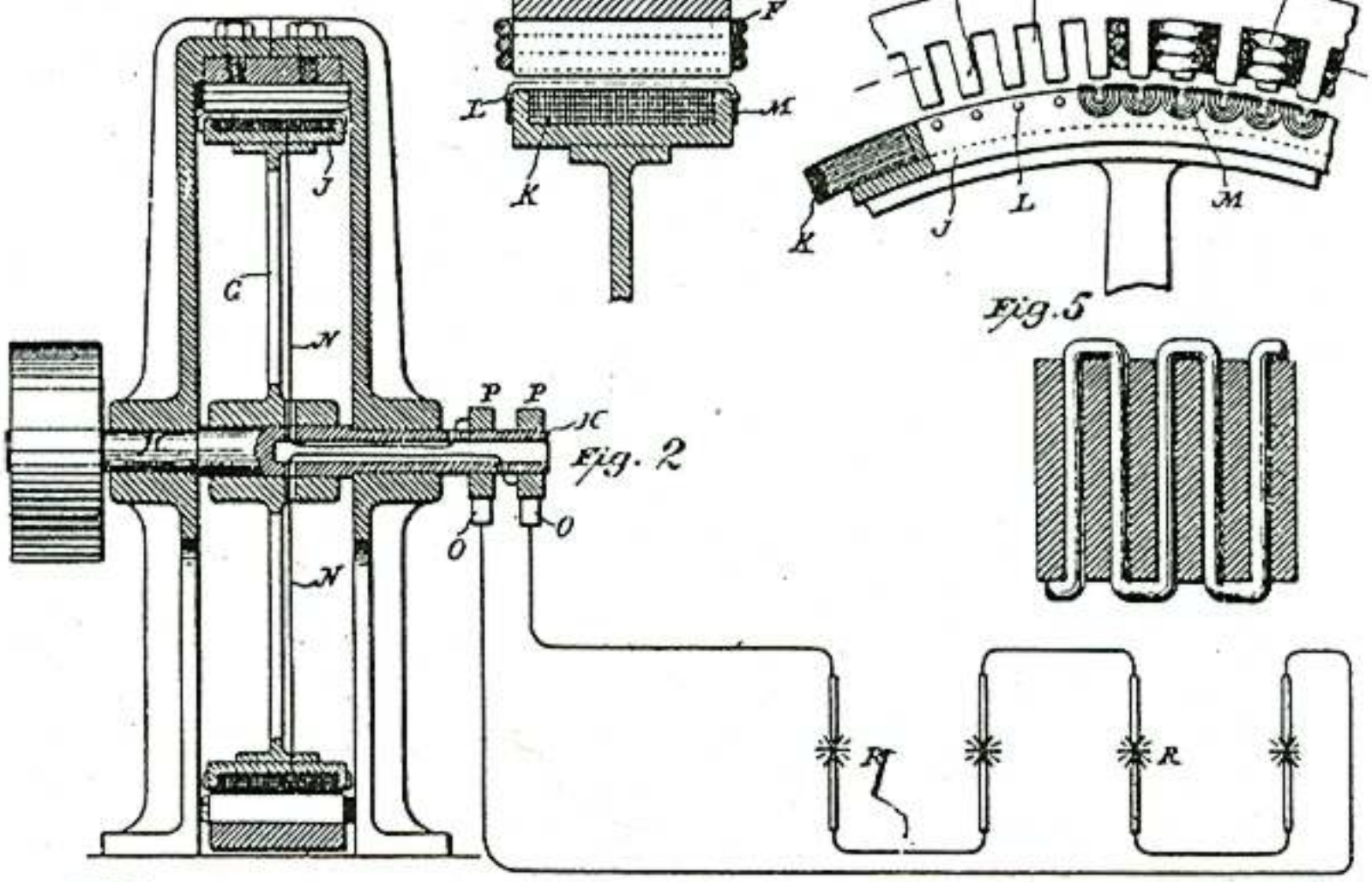

Fig. 2

Witnesses:
Raphael Netter
M. G. Tracy

Inventor
Nikola Tesla
by
Duncan & Page
Attorneys.

UNITED STATES PATENT OFFICE.

NIKOLA TESLA, OF NEW YORK, N. Y.

SYSTEM OF ELECTRIC LIGHTING.

SPECIFICATION forming part of Letters Patent No. 454,622, dated June 23, 1891.

Application filed April 25, 1891. Serial No. 390,414. (No model.)

To all whom it may concern.

Be it known that I, NIKOLA TESLA, a subject of the Emperor of Austria-Hungary, from Smiljan, Lika, border country of Austria-Hungary, and a resident of New York, in the county and State of New York, have invented certain new and useful Improvements in Methods of and Apparatus for Electric Lighting, of which the following is a specification, reference being had to the drawings accompanying and forming a part of the same.

This invention consists in a novel method of and apparatus for producing light by means of electricity.

For a better understanding of the invention it may be stated, first, that heretofore I have produced and employed currents of very high frequency for operating translating devices, such as electric lamps, and, second, that currents of high potential have also been produced and employed for obtaining luminous effects, and this, in a broad sense, may be regarded for purposes of this case as the prior state of the art; but I have discovered that results of the most useful character may be secured under entirely practicable conditions by means of electric currents in which both the above-described conditions of high frequency and great difference of potential are present. In other words, I have made the discovery that an electrical current of an excessively small period and very high potential may be utilized economically and practicably to great advantage for the production of light.

It is difficult for me to define the exact limits of frequency and potential within which my discovery is comprised, for the results obtained are due to both conjointly; but I would make it clear that as to the inferior limits of both, the lowest frequency and potential that I contemplate using are far above what have heretofore been regarded as practicable. As an instance of what I regard as the lowest practicable limits I would state that I have obtained fairly good results by a frequency as low as fifteen thousand to twenty thousand per second and a potential of about twenty thousand volts. Both frequency and potential may be enormously increased above these figures, the practical limits being determined by the character of the apparatus and its capability of standing the strain. I do not mean by the term "excessively small period" and similar expressions herein to imply that I contemplate any number of pulsations or vibrations per second approximating to the number of light-waves, and this will more fully appear from the description of the nature of invention which is hereinafter contained.

The carrying out of this invention and the full realization of the conditions necessary to the attainment of the desired results involve, first, a novel method of and apparatus for producing the currents or electrical effects of the character described; second, a novel method of utilizing and applying the same for the production of light, and, third, a new form of translating device or light-giving appliance. These I shall now describe.

To produce a current of very high frequency and very high potential, certain well-known devices may be employed. For instance, as the primary source of current or electrical energy a continuous-current generator may be used, the circuit of which may be interrupted with extreme rapidity by mechanical devices, or a magneto-electric machine specially constructed to yield alternating currents of very small period may be used, and in either case, should the potential be too low, an induction-coil may be employed to raise it; or, finally, in order to overcome the mechanical difficulties, which in such cases become practically insuperable before the best results are reached, the principle of the disruptive discharge may be utilized. By means of this latter plan I produce a much greater rate of change in the current than by the other means suggested, and in illustration of my invention I shall confine the description of the means or apparatus for producing the current to this plan, although I would not be understood as limiting myself to its use. The current of high frequency, therefore, that is necessary to the successful working of my invention I produce by the disruptive discharge of the accumulated energy of a condenser maintained by charging said condenser from a suitable source and discharging it into or through a circuit under proper relations of self-induction, capacity, resistance, and period in well-understood ways. Such a discharge is

known to be, under proper conditions, intermittent or oscillating in character, and in this way a current varying in strength at an enormously rapid rate may be produced. Having produced in the above manner a current of excessive frequency, I obtain from it by means of an induction-coil enormously high potentials—that is to say, in the circuit through which or into which the disruptive discharge of the condenser takes place I include the primary of a suitable induction-coil, and by a secondary coil of much longer and finer wire I convert to currents of extremely high potential. The differences in the length of the primary and secondary coils in connection with the enormously rapid rate of change in the primary current yield a secondary of enormous frequency and excessively high potential. Such currents are not, so far as I am aware, available for use in the usual ways; but I have discovered that if I connect to either of the terminals of the secondary coil or source of current of high potential the leading-in wires of such a device, for example, as an ordinary incandescent lamp, the carbon may be brought to and maintained at incandescence, or, in general, that any body capable of conducting the high-tension current described and properly inclosed in a rarefied or exhausted receiver may be rendered luminous or incandescent, either when connected directly with one terminal of the secondary source of energy or placed in the vicinity of such terminals so as to be acted upon inductively.

Without attempting a detailed explanation of the causes to which this phenomenon may be ascribed, I deem it sufficient to state that, assuming the now generally accepted theories of scientists to be correct, the effects thus produced are attributable to molecular bombardment, condenser action, and electric or etheric disturbances. Whatever part each or any of these causes may play in producing the effects noted, it is, however, a fact that a strip of carbon or a mass of any other shape, either of carbon or any more or less conducting substance in a rarefied or exhausted receiver and connected directly or inductively to a source of electrical energy such as I have described, may be maintained at incandescence if the frequency and potential of the current be sufficiently high.

I would here state that by the terms "currents of high frequency and high potential" and similar expressions which I have used in this description I do not mean, necessarily, currents in the usual acceptance of the term, but, generally speaking, electrical disturbances or effects such as would be produced in the secondary source by the action of the primary disturbance or electrical effect.

It is necessary to observe in carrying out this invention that care must be taken to reduce to a minimum the opportunity for the dissipation of the energy from the conductors intermediate to the source of current and the light-giving body. For this purpose the conductors should be free from projections and points and well covered or coated with a good insulator.

The body to be rendered incandescent should be selected with a view to its capability of withstanding the action to which it is exposed without being rapidly destroyed, for some conductors will be much more speedily consumed than others.

I now refer to the accompanying drawings, in which—

Figure 1 is a diagram of one of the special arrangements that I have employed in carrying out my discovery, and Figs. 2 and 3 are vertical sectional views of modified forms of light-giving devices that I have devised for use with the system.

I would state that as all of the apparatus herein shown, with the exception of certain special forms of lamp invented by me, is or may be of well-known construction and in common use for other purposes, I have indicated such well-known parts therefor by conventional representations.

G is the primary source of current or electrical energy. I have explained above how various forms of generator might be used for this purpose; but in the present illustration I assume that G is an alternating-current generator of comparatively low electro-motive force. Under such circumstances I raise the potential of the current by means of an induction-coil having a primary P and a secondary S. Then by the current developed in this secondary I charge a condenser C, and this condenser I discharge through or into a circuit A, having an air-gap *a*, or, in general, means for maintaining a disruptive discharge. By the means above described a current of enormous frequency is produced. My object is next to convert this into a working-circuit of very high potential, for which purpose I connect up in the circuit A the primary P′ of an induction-coil having a long fine wire secondary S′. The current in the primary P′ develops in the secondary S′ a current or electrical effect of corresponding frequency, but of enormous difference of potential, and the secondary S′ thus becomes the source of the energy to be applied to the purpose of producing light.

The light-giving devices may be connected to either terminal of the secondary S′. If desired, one terminal may be connected to a conducting-wall W of a room or space to be lighted and the other arranged for connection of the lamps therewith. In such case the walls should be coated with some metallic or conducting substance in order that they may have sufficient conductivity.

The lamps or light-giving devices may be an ordinary incandescent lamp; but I prefer to use specially-designed lamps, examples of which I have shown in detail in the draw-

P-210

ings. This lamp consists of a rarefied or exhausted bulb or globe which incloses a refractory conducting body, as carbon, of comparatively small bulk and any desired shape. This body is to be connected to the secondary by one or more conductors sealed in the glass, as in ordinary lamps, or is arranged to be inductively connected thereto. For this last-named purpose the body is in electrical contact with a metallic sheet in the interior of the neck of the globe, and on the outside of said neck is a second sheet which is to be connected with the source of current. These two sheets form the armatures of a condenser, and by them the currents or potentials are developed in the light-giving body. As many lamps of this or other kinds may be connected to the terminal of S' as the energy supplied is capable of maintaining at incandescence.

In Fig. 3, *b* is a rarefied or exhausted glass globe or receiver, in which is a body of carbon or other suitable conductor *c*. To this body is connected a metallic conductor *f*, which passes through and is sealed in the glass wall of the globe, outside of which it is united to a copper or other wire *g*, by means of which it is to be electrically connected to one pole or terminal of the source of current. Outside of the globe the conducting-wires are protected by a coating of insulation *h*, of any suitable kind, and inside the globe the supporting-wire is inclosed in and insulated by a tube or coating *k* of a refractory insulating substance, such as pipe-clay or the like. A reflecting-plate *l* is shown applied to the outside of the globe *b*. This form of lamp is a type of those designed for direct electrical connection with one terminal of the source of current; but, as above stated, there need not be a direct connection, for the carbon or other illuminating body may be rendered luminous by inductive action of the current thereon, and this may be brought about in several ways. The preferred form of lamp for this purpose, however, is shown in Fig. 2. In this figure the globe *b* is formed with a cylindrical neck, within which is a tube or sheet *m* of conducting material on the side and over the end of a cylinder or plug *n* of any suitable insulating material. The lower edges of this tube are in electrical contact with a metallic plate *o*, secured to the cylinder *n*, all the exposed surfaces of such plate and of the other conductors being carefully coated and protected by insulation. The light-giving body *c*, in this case a straight stem of carbon, is electrically connected with the said plate by a wire or conductor similar to the wire *f*, Fig. 3, which is coated in like manner with a refractory insulating material *k*. The neck of the globe fits into a socket composed of an insulating tube or cylinder *p*, with a more or less complete metallic lining *s*, electrically connected by a metallic head or plate *r* with a conductor *a*, that is to be attached to one pole of the source of current. The metallic lining *s* and the sheet *m* thus compose the plates or armatures of a condenser.

This invention is not limited to the special means described for producing the results hereinabove set forth, for it will be seen that various plans and means of producing currents of very high frequency are known, and also means for producing very high potentials; but I have only described herein certain ways in which I have practically carried out the invention.

What I claim is—

1. The improvement in the art of electric lighting herein described, which consists in generating or producing for the operation of the lighting devices currents of enormous frequency and excessively high potential, substantially as herein described.

2. The method of producing an electric current for practical application, such as for electric lighting, which consists in generating or producing a current of enormous frequency and inducing by such current in a working circuit, or that to which the lighting devices are connected, a current of corresponding frequency and excessively high potential, as set forth.

3. The method of producing an electric current for practical application, such as for electric lighting, which consists in charging a condenser by a given current, maintaining an intermittent or oscillatory discharge of said condenser through or into a primary circuit, and producing thereby in a secondary working circuit in inductive relation to the primary very high potentials, as set forth.

4. The method of producing electric light by incandescence by electrically or inductively connecting a conductor inclosed in a rarefied or exhausted receiver to one of the poles or terminals of a source of electric energy or current of a frequency and potential sufficiently high to render said body incandescent, as set forth.

5. A system of electric lighting, consisting in the combination, with a source of electric energy or current of enormous frequency and excessively high potential, of an incandescent lamp or lamps consisting of a conducting body inclosed in a rarefied or exhausted receiver and connected directly or inductively to one pole or terminal of the source of energy, as set forth.

6. In a system of electric lighting, the combination, with a source of currents of enormous frequency and excessively high potential, of incandescent lighting devices, each consisting of a conducting body inclosed in a rarefied or exhausted receiver, said conducting body being connected directly or inductively to one pole or terminal of the source of current, and a conducting body or bodies in the vicinity of said lighting devices connected to the other pole or terminal of said source, as set forth.

7. In a system of electric lighting, the combination, with a source of currents of enormous frequency of excessively high potential, of lighting devices, each consisting of a conducting body inclosed in a rarefied or exhausted receiver and connected by conductors directly or inductively with one of the terminals of said source, all parts of the conductors intermediate to the said source and the light-giving body being insulated and protected to prevent the dissipation of the electric energy, as herein set forth.

NIKOLA TESLA.

Witnesses:
PARKER W. PAGE,
M. G. TRACY.

P-212

(No Model.)

N TESLA

SYSTEM OF ELECTRIC LIGHTING

No 454,622 Patented June 23, 1891.

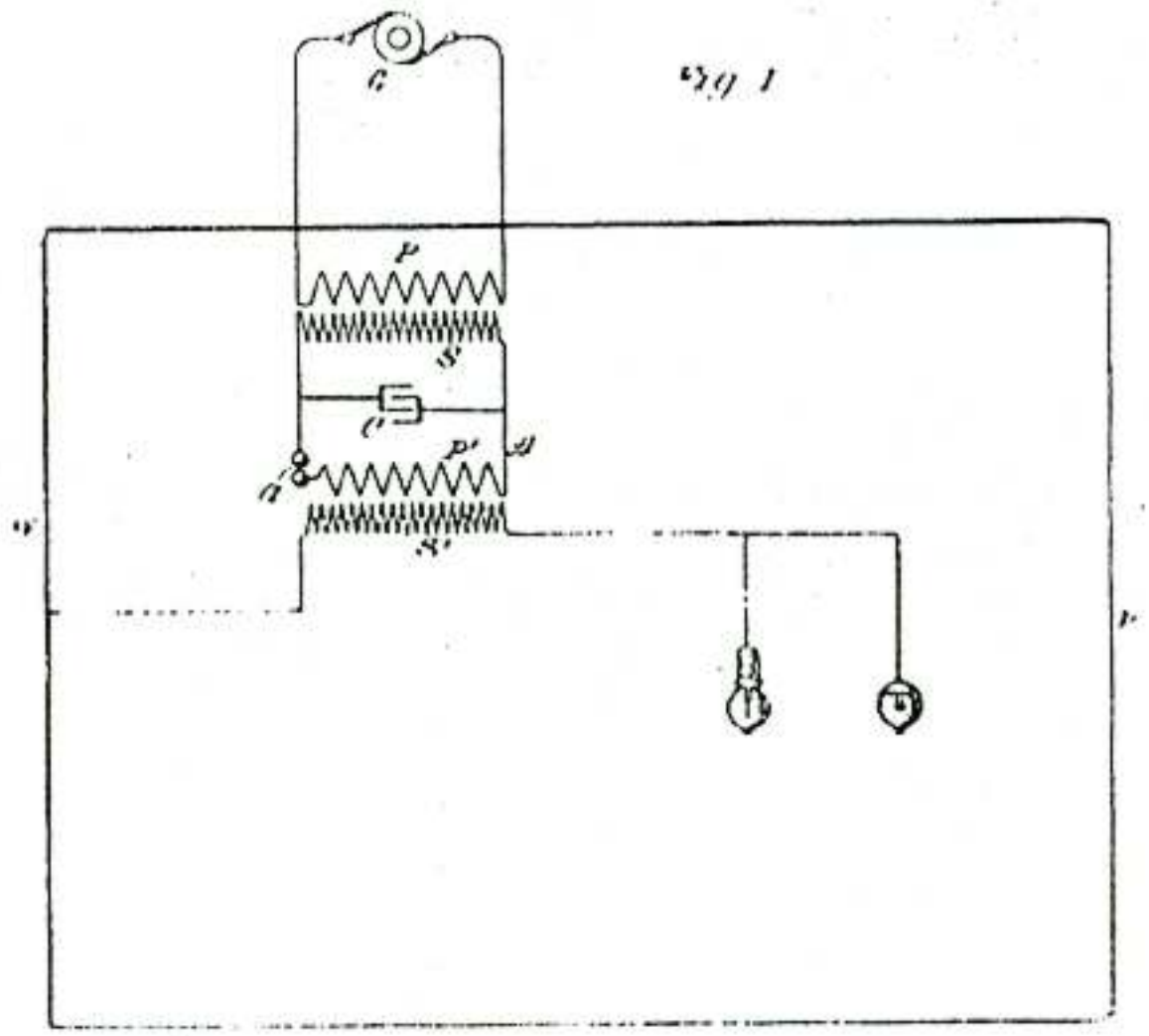

Fig. 1

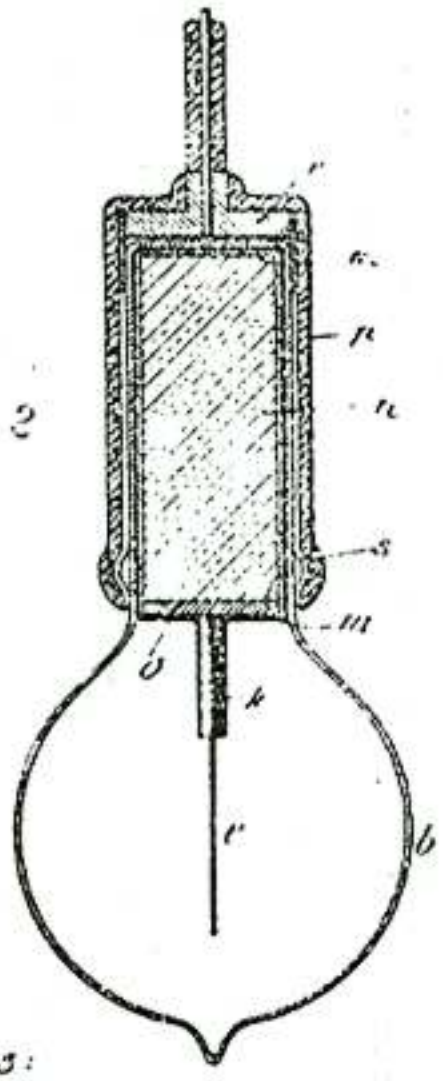

Fig. 2

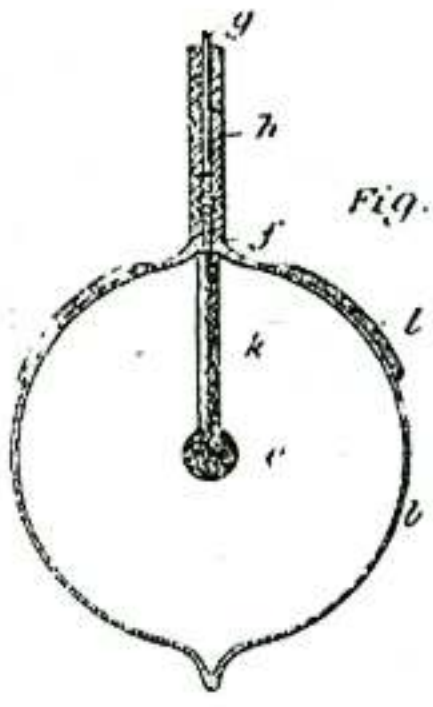

Fig. 3

Witnesses:
Raphael Netter
Chas. F. Hopkinson

Inventor
Nikola Tesla
by Duncan & Page,
Attorneys

UNITED STATES PATENT OFFICE.

NIKOLA TESLA, OF NEW YORK, N. Y.

ELECTRIC INCANDESCENT LAMP.

SPECIFICATION forming part of Letters Patent No. 455,069, dated June 30, 1891.

Application filed May 14, 1891. Serial No. 392,669. (No model.)

To all whom it may concern:

Be it known that I, NIKOLA TESLA, a subject of the Emperor of Austria, from Smiljan, Lika, border country of Austria-Hungary, residing at New York, in the county and State of New York, have invented certain new and useful Improvements in Electric Incandescent Lamps, of which the following is a specification, reference being had to the drawings accompanying and forming a part of the same.

My invention is a new form of lamp for giving light by the incandescence of carbon or other suitable refractory conductor produced by electrical energy.

In order to more distinctly point out those features which distinguish my invention, I would state that heretofore electric lamps have been made, first, by mounting a refractory conductor on metallic supporting-wires leading into a hermetically-sealed receiver from which the air has been exhausted or replaced by an inert gas, and, second, by placing two independent conductors in a receiver or globe and partially exhausting the air therefrom. In the first case the carbon or other conductor is rendered incandescent by the actual flow or passage of a current through it, while in the second the luminous effects, as heretofore produced, or, in fact, the only luminous effects that could be produced by any means heretofore known, were due to an actual discharge of current from one conductor to the other across the intermediate space of rarefied air or gas.

It may be further remarked that in various forms of Geissler or vacuum tubes the terminals or points within the tube become or have a tendency to become heated by the action of the high-tension secondary discharge. In such tubes, however, the degree of exhaustion is comparatively low, as a high vacuum prevents the well-known Geissler discharge or effect. Moreover, with such low degrees of exhaustion the points or wires, if heated and allowed to become incandescent, are speedily destroyed.

I have discovered that two conducting-bodies mounted in a very highly exhausted receiver may be rendered incandescent and practically utilized as a source of light if connected directly or inductively to the terminals of a source of current of very great frequency and very high potential.

The practical requirements of this invention are widely different from those employed in producing any of the phenomena heretofore observed, such differences being mainly in respect to the current, which must be one of enormous frequency and of excessively high potential, and also to the degree of exhaustion of the globe or receiver, which must be carried at least beyond the point at which a spark will pass, or to the condition known as a "non-striking vacuum," and it may be as much farther as possible.

This application is confined to a particular form of lamp which I employ in a new system invented by me, which system involves, as one of its essential characteristics, the employment of currents or electric effects of a novel kind. In an application filed by me April 25, 1891, No. 390,414, I have shown and described this system in detail, and I therefore deem it sufficient for the present case to say that the lamps herein described, while utterly inoperative on any of the circuits now, or, so far as I am aware, heretofore employed become highly efficient sources of light if the frequency of the current by which they are operated be sufficiently great and the potential sufficiently high. To produce such currents, any known means may be utilized of the plan described in my said application followed of disruptively discharging the accumulated energy in a condenser into or through a primary circuit to produce a current of very high frequency, and inducing from this current a secondary current of a very much higher potential.

I now refer to the drawings in illustration of the invention.

Figure 1 is a vertical sectional view of a lamp constructed with leading-in wires for direct connection with a circuit or source of current. Fig. 2 is a similar view of a form of lamp arranged for inductive connection with such source.

The common methods or steps followed in the manufacture of the ordinary incandescent lamps and Geissler tubes may be employed in the manufacture of these improved lamps as far as applicable.

A is a glass globe or receiver with a neck

or base B. Conducting-wires C C enter this globe and are sealed in the walls thereof. The entering wires C are surrounded by small tubes or cups D. The joints between the wires C and the incandescing conductors are made within these cups in any ordinary manner, and the lower parts of the cups are filled with bronze-powder E or other suitable material to effect a good electrical connection. The cups are then filled up with fire-clay or other refractory non-conductor F, which is molded around the carbons G. The carbons or other refractory conductors or semi-conductors G are completely isolated from one another. They are here shown as slender strips; but they may have any other desired shape. Lamps thus made are attached to a vacuum-pump in the usual way. After the process of exhaustion has been carried on for some time they are brought to incandescence by a suitable current, by which the fire-clay is thoroughly baked and the occluded gases are driven off. The exhaustion is carried to the highest possible point, and the globe finally sealed off at H. Inasmuch as there is a tendency to sparking when the current is turned on before the exhaustion has been carried very high, it is well, when the character of the carbon admits of it, to cause their ends to approach, in order that the sparks may leap across between such points, whereby the danger of injury to the carbons or the lamp is lessened. The conductors outside the globe, as well as all those which convey the current from the source, should be carefully insulated to prevent the dissipation of the current.

In lieu of connecting the two carbons directly to the circuit through leading-in wires, provision may be made for inductively connecting them, as by means of condensers. Fig. 2 shows a form of lamp of this description that I have employed. The globe A has two extended tubular portions B B'. Inside of these tubular extensions are condenser-coatings K K'.

J J are plugs of fire-clay or the like contained in the extensions B B'. The two conductors G G are supported by these plugs and connected by metallic strips M with the condenser-coatings K K', respectively. Over the outside of the extensions B B' are fitted insulating-caps N N', having metallic linings O O', with terminals adapted for connection with the circuit-wires. With such currents as are employed to operate these lamps condensers of small capacity, such as those thus made, transmit the energy from the outside circuit to the carbons within the globe with little loss. This lamp is exhausted and sealed off from the pump in the same manner as that first described. There is no electrical connection at any time between the two carbons of this lamp and no visible discharge or transfer of current from one to the other through the highly-rarefied medium between them. The fact, therefore, of their being rendered incandescent by the action of such a current as I have described seems to be mainly attributable to condenser action.

The carbons, or whatever substance may be used in their stead, may be of any desired form and may be placed in different relative positions.

The manner of making the lamp and the general form of the lamp as a whole may be varied in numberless ways. I have merely shown herein typical forms which embody the principle of the invention and which by experience I have demonstrated to be practical lamps.

As the lamps which I employ and which are made as above described are absolutely inoperative in any system from which the hereinbefore-described conditions of potential and frequency are absent, so the various lamps heretofore devised for use with high-potential currents, in which the exhaustion, of necessity, has not been carried to or beyond the non-striking point, are practically worthless in my new system, and this is the distinguishing feature of novelty in my lamps—viz., that they are exhausted to or beyond the non-striking point.

What I claim as my invention is—

1. An incandescent lamp consisting of two isolated refractory conductors contained in a non-striking vacuum and adapted to produce light by incandescence, each being provided with a terminal for connection with a source of electrical energy, as set forth.

2. The combination, with a globe or receiver exhausted to the non-striking point, of two isolated bodies of refractory conducting material adapted to emit light by incandescence and mounted within said globe, and means for connecting said bodies with the two poles or terminals, respectively, of a source of electrical energy.

3. In an incandescent electric lamp, the combination, with a globe or receiver exhausted to the non-striking point, of metallic wires sealed therein, a refractory body mounted on or electrically connected to each wire, the said wires within the globe and such parts of the refractory body as are not to be rendered incandescent being coated or covered with insulation, as set forth.

4. The combination, with a globe or receiver exhausted to the non-striking point, of metallic wires sealed therein, a refractory conductor united to each of said wires within the globe, an insulating-covering around the wires and joint, and a refractory insulating-body surrounding the refractory conductors near the joint, as set forth.

NIKOLA TESLA.

Witnesses:
ROBT. F. GAYLORD,
PARKER W. PAGE.

P-215

(No Model.)

N. TESLA.

ELECTRIC INCANDESCENT LAMP.

No. 455,069. Patented June 30, 1891

Fig. 1

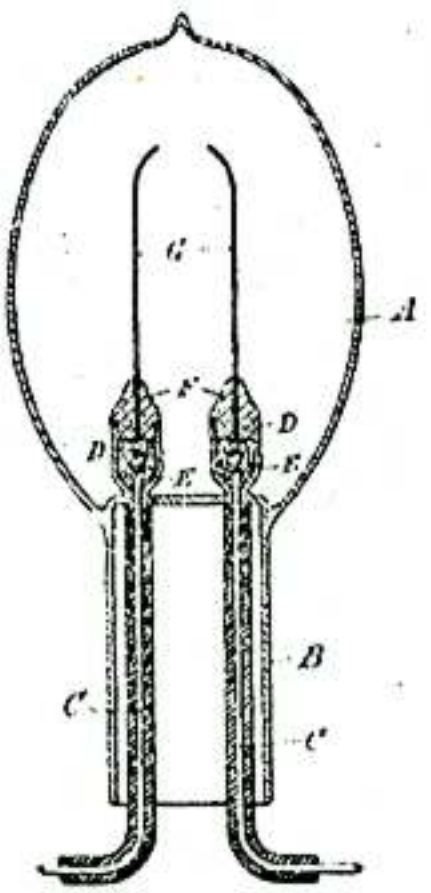

Fig. 2

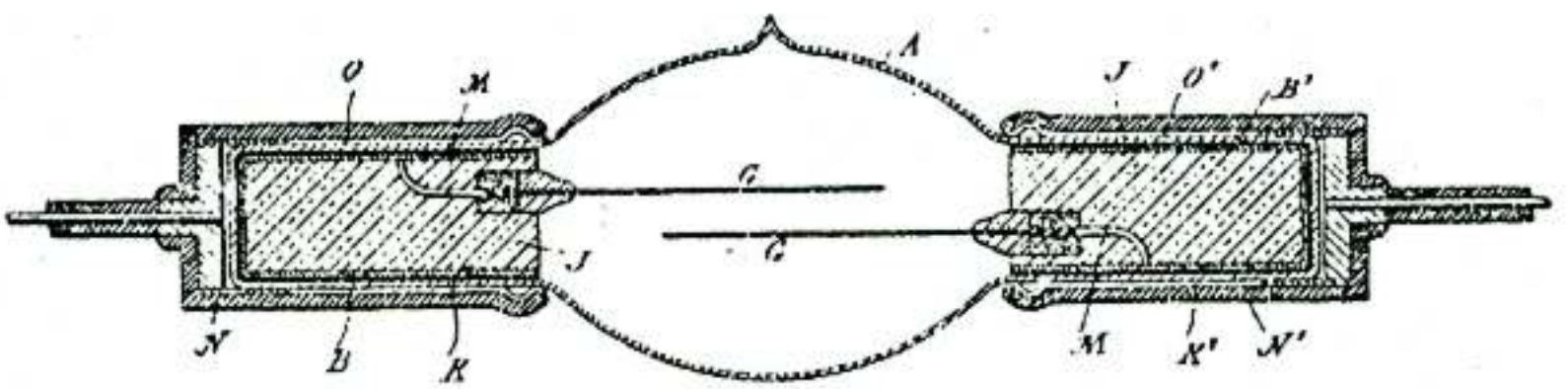

Witnesses:
Raphael Netter
Frank B. Murphy.

Inventor
Nikola Tesla
by
Duncan & Page
Attorneys.

UNITED STATES PATENT OFFICE.

NIKOLA TESLA, OF NEW YORK, N. Y.

INCANDESCENT ELECTRIC LIGHT.

SPECIFICATION forming part of Letters Patent No. 514,170, dated February 6, 1894.

Application filed January 2, 1892. Renewed December 15, 1893. Serial No. 493,776. (No model.)

To all whom it may concern:

Be it known that I, NIKOLA TESLA, a citizen of the United States, residing at New York, in the county and State of New York, have invented a certain new and useful Improvement in Incandescent Electric Lamps, of which the following is a specification, reference being had to the drawings accompanying and forming a part of the same.

This invention is an improvement in the particular class of electric lamps or lighting devices invented by me and for which I have heretofore obtained Letters Patent, notably No. 454,622, dated June 23, 1891.

The invention applies more particularly to that form of lamp in which a small body or button of refractory material is supported by a conductor entering a very highly exhausted globe or receiver, but is also applicable generally to other forms of lamp adapted for use with similar systems in which currents of very high potential and great frequency are employed. I have found in the practical applications of this system that a considerable dissipation of energy takes place from the conductors conveying the currents of great potential and frequency, even when such conductors are thoroughly insulated both within and without the lamp globes, and the subject of my present invention is a means for preventing such dissipation within the lamp, or rather for confining it to the particular parts or part of the conductor which is designed to give light. This object I find I may readily accomplish by surrounding the leading-in and supporting conductors with a conductor which acts as a static screen. By this means the light-giving body or button which lies beyond the influence of the screen is quickly and efficiently brought to and maintained at higher incandescence by a suitable electrical current or effect, by reason of the fact that the electrical action to which the incandescence is due is confined mainly to the button.

A description of the ordinary form of lamp which I employ will serve to illustrate the principle and nature of this improvement, and for such description I now refer to the drawings which show such lamp in central vertical section.

A is a glass globe of the usual form, in the base of which is sealed a very thin conducting wire B, passing up through a stem of glass or other refractory insulator C. To the upper or inner end of this wire is united, as by means of a mass of carbon paste D, a carbon or other refractory stem E, that supports or carries a small button of carbon or other suitable substance F. Over the stem C is passed, at any convenient stage in the manufacture of the lamp and in any well understood way, a metallic tube G. I prefer to use for this purpose a very thin cylinder or tube of aluminum and it should entirely surround all parts of the conductor within the globe except the button itself, extending to or nearly up to the point of union of the stem E with the button F. Such a device by reason of its electrostatic action reduces the loss of energy supplied to the bulb, preventing its radiation or dissipation into space except through the exposed or unprotected button. The tube or screen G is entirely insulated from the conductors within the globe and from all external conductors or bodies. The globe, by means of a suitable air pump, is exhausted to as high a degree as practicable, or until a non-striking vacuum is attained. It is connected with the pump by the usual tube which is sealed off at K.

The lamp may be made in different forms and in different ways, and the invention, as may be readily understood from its above described nature and purpose, is not confined to the specific form of lamp herein shown.

What I claim is—

1. In an incandescent electric lamp, the combination of an exhausted globe, a refractory light-giving body therein, a conductor leading into the globe and connected to or supporting the said body, and a conducting screen surrounding the said conductor, as set forth.

2. In an incandescent electric lamp, the combination of an exhausted globe, a refractory light-giving body or button therein, a conducting support for said button within the

globe, and a metallic tube surrounding or inclosing the said conductor up to the point of union with the button, as set forth.

3. In an incandescent electric lamp, the combination of an exhausted globe, a wire sealed therein, and coated with or embedded in a glass stem, a carbon stem united with the wire, a refractory conductor mounted on said stem, and a conducting tube or cylinder surrounding the wire and carbon stem, as and for the purpose set forth.

NIKOLA TESLA.

Witnesses:
ERNEST HOPKINSON,
PARKER W. PAGE.

P-218

(No Model.)

N. TESLA.

INCANDESCENT ELECTRIC LIGHT.

No. 514,170. Patented Feb. 6, 1894.

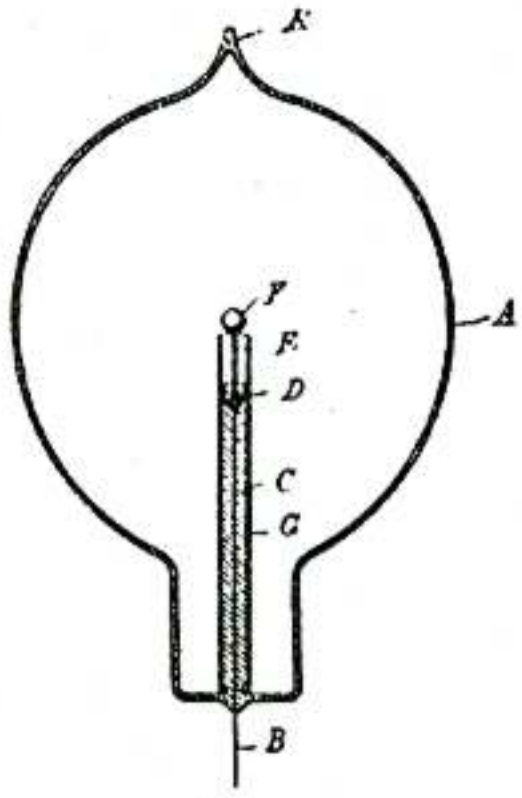

Witnesses:
Raphael Netter
A. R. Thomas

Inventor
Nikola Tesla
by Duncan & Page
Attorneys

IV

HIGH FREQUENCY APPARATUS AND CIRCUIT CONTROLLERS

UNITED STATES PATENT OFFICE.

NIKOLA TESLA, OF NEW YORK, N. Y.

METHOD OF AND APPARATUS FOR ELECTRICAL CONVERSION AND DISTRIBUTION.

SPECIFICATION forming part of Letters Patent No. 462,418, dated November 3, 1891.

Application filed February 4, 1891. Serial No. 380,182. (No model.)

To all whom it may concern:

Be it known that I, NIKOLA TESLA, a subject of the Emperor of Austria, from Smiljan, Lika, border country of Austria-Hungary, residing at New York, in the county and State of New York, have invented certain new and useful Improvements in Methods of and Apparatus for Electrical Conversion and Distribution, of which the following is a specification, reference being had to the drawings accompanying and forming a part of the same.

This invention is an improvement in methods of and apparatus for electrical conversion, designed for the better and more economical distribution and application of electrical energy for general useful purposes.

My invention is based on certain electrical phenomena which have been observed by eminent scientists and recognized as due to laws which have been in a measure demonstrated, but which, so far as I am aware, have not hitherto been utilized or applied with any practically useful results. Stated briefly, these phenomena are as follows: First, if a condenser or conductor possessing capacity be charged from a suitable generator and discharged through a circuit, the discharge under certain conditions will be of an intermittent or oscillatory character; second, if two points in an electric circuit through which a current rapidly rising and falling in strength is made to flow be connected with the plates or armatures of a condenser, a variation in the current's strength in the entire circuit or in a portion of the same only may be produced; third, the amount or character of such variation in the current's strength is dependent upon the condenser capacity, the self-induction and resistance of the circuit or its sections, and the period or time rate of change of the current. It may be observed, however, that these several factors—the capacity, the self-induction, resistance, and period—are all related in a manner well understood by electricians; but to render such conversion as may be effected by condensers practically available and useful it is desirable, chiefly on account of the increased output and efficiency and reduced cost of the apparatus, to produce current-impulses succeeding each other with very great rapidity, or, in other words, to render the duration of each impulse, alternation, or oscillation of the current extremely small. To the many difficulties in the way of effecting this mechanically, as by means of rotating switches or interrupters, is perhaps due the failure to realize practically, at least to any marked degree, the advantages of which such a system is capable. To obviate these difficulties, I have in my present invention taken advantage of the fact above referred to, and which has been long recognized, that if a condenser or a conductor possessing capacity be charged from a suitable source and be discharged through a circuit the discharge under certain conditions, dependent on the capacity of the condenser or conductor, the self-induction and resistance of the discharging circuit, and the rate of supply and decay of the electrical energy, may be effected intermittently or in the form of oscillations of extremely small period.

Briefly stated in general terms, the plan which I pursue in carrying out my invention is as follows:

I employ a generator, preferably, of very high tension and capable of yielding either direct or alternating currents. This generator I connect up with a condenser or conductor of some capacity and discharge the accumulated electrical energy disruptively through an air-space or otherwise into a working circuit containing translating devices and, when required, condensers. These discharges may be of the same direction or alternating and intermittent, succeeding each other more or less rapidly or oscillating to and fro with extreme rapidity. In the working circuit, by reason of the condenser action, the current impulses or discharges of high tension and small volume are converted into currents of lower tension and greater volume. The production and application of a current of such rapid oscillations or alternations (the number may be many millions per second) secures, among others, the following exceptional advantages: First, the capacity of the condensers for a given output is much diminished; second, the efficiency of the condensers is increased and the tendency to become heated reduced, and, third, the range of conversion is enlarged. I have thus succeeded in producing a system or method of conversion

radically different from what has been done heretofore—first, with respect to the number of impulses, alternations, or oscillations of current per unit of time, and, second, with respect to the manner in which the impulses are obtained. To express this result, I define the working current as one of an excessively small period or of an excessively large number of impulses or alternations or oscillations per unit of time, by which I mean not a thousand or even twenty or thirty thousand per second, but many times that number, and one which is made intermittent, alternating, or oscillating of itself without the employment of mechanical devices.

I now proceed to an explanation somewhat more in detail of the nature of my invention, referring to the accompanying drawings.

The two figures are diagrams, each representing a generating-circuit, a working circuit, means for producing an intermittent or oscillating discharge, and condensers arranged or combined as contemplated by my invention.

In Figure 1, A represents a generator of high tension; B B, the conductors which lead out from the same. To these conductors are connected the conductors C of a working circuit containing translating devices, such as incandescent lamps or motors G. In one or both conductors B is a break D, the two ends being separated by an air-space or a film of insulation, through which a disruptive discharge takes place. F is a condenser, the plates of which are connected to the generating-circuit. If this circuit possess itself sufficient capacity, the condenser F may be dispensed with.

In Fig. 2 the generating-circuit B B contains a condenser F and discharges through the air-gaps D into the working circuit C, to any two points of which is connected a condenser E. The condenser E is used to modify the current in any part of the working circuit, such as L.

It may conduce to a better understanding of the invention to consider more in detail the conditions existing in such a system as is illustrated in Fig. 1. Let it be assumed, therefore, that in the system there shown the rate of supply of the electrical energy, the capacity, self-induction, and the resistance of the circuits are so related that a disruptive, intermittent, or oscillating discharge occurs at D. Assume that the first-named takes place. This will evidently occur when the rate of supply from the generator is not adequate to the capacity of the generator, conductors B B, and condenser F. Each time the condenser F is charged to such an extent that the potential or accumulated charge overcomes the dielectric strength of the insulating-space at D the condenser is discharged. It is then recharged from the generator A, and this process is repeated in more or less rapid succession. The discharges will follow each other the more rapidly the more nearly the rate of supply from the generator equals the rate at which the circuit including the generator is capable of taking up and getting rid of the energy. Since the resistance and self-induction of the working circuit C and the rapidity of the successive discharges may be varied at will, the current strength in the working and generating circuit may bear to one another any desired relation.

To understand the action of the local condenser E in Fig. 2, let a single discharge be first considered. This discharge has two paths offered—one to the condenser E, the other through the part L of the working circuit C. The part L, however, by virtue of its self-induction, offers a strong opposition to such a sudden discharge, while the condenser, on the other hand, offers no such opposition. The result is that practically no current passes at first through the branch L, but presumably opposite electricities rush to the condenser-coatings, this storing for the moment electrical energy in the condenser. Time is gained by this means, and the condenser then discharges through the branch L, this process being repeated for each discharge occurring at D. The amount of electrical energy stored in the condenser at each charge is dependent upon the capacity of the condenser and the potential of its plates. It is evident, therefore, that the quicker the discharges succeed each other the smaller for a given output need be the capacity of the condenser and the greater is also the efficiency of the condenser. This is confirmed by practical results.

The discharges occurring at D, as stated, may be of the same direction or may be alternating, and in the former case the devices contained in the working circuit may be traversed by currents of the same or alternately-opposite direction. It may be observed, however, that each intermittent discharge occurring at D may consist of a number of oscillations in the working circuit or branch L.

A periodically-oscillating discharge will occur at D in Fig. 1 when the quantities concerned bear a certain relation expressed in well-known formulæ and ascertained by simple experiment. In this case it is demonstrated in theory and practice that the ratio of the strength of the current in the working to that in the generating circuits is the greater the greater the self-induction, and the smaller the resistance of the working circuit the smaller the period of oscillation.

I do not limit myself to the use of any specific forms of the apparatus described in connection with this invention nor to the precise arrangement of the system with respect to its details herein shown. In the drawings return-wires are shown in the circuit; but it will be understood that in any case the ground may be conveniently used in lieu of the return-wire.

What I claim is—

1. The method of electrical conversion herein described, which consists in charging a con-

denser or conductor possessing capacity and maintaining a succession of intermittent or oscillating disruptive discharges of said conductor into a working circuit containing translating devices.

2. In a system of electrical conversion, the combination of a generator or source of electricity and a line or generating circuit containing a condenser or possessing capacity, and a working circuit operatively connected with the generating-circuit through one or more air-gaps or breaks in the conducting medium, the electrical conditions being so adjusted that an intermittent or oscillating disruptive discharge from the generating into the working circuit will be maintained, as set forth.

NIKOLA TESLA

Witnesses:
ROBT. F. GAYLORD,
PARKER W. PAGE.

P-224

(No Model.)

N. TESLA

METHOD OF AND APPARATUS FOR ELECTRICAL CONVERSION AND DISTRIBUTION

No. 462,415 Patented Nov. 3, 1891

Fig. 1

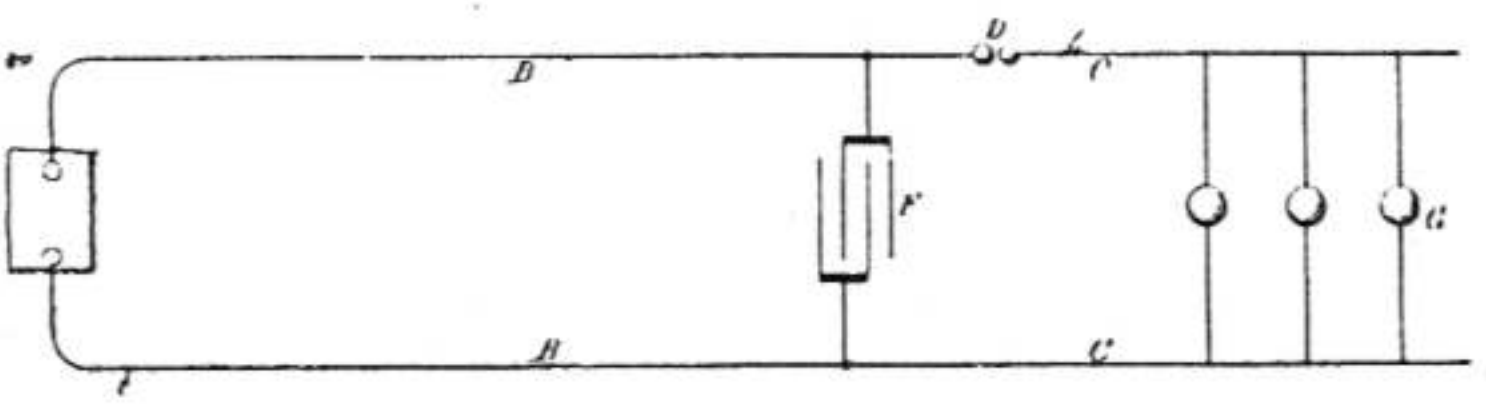

Fig. 2

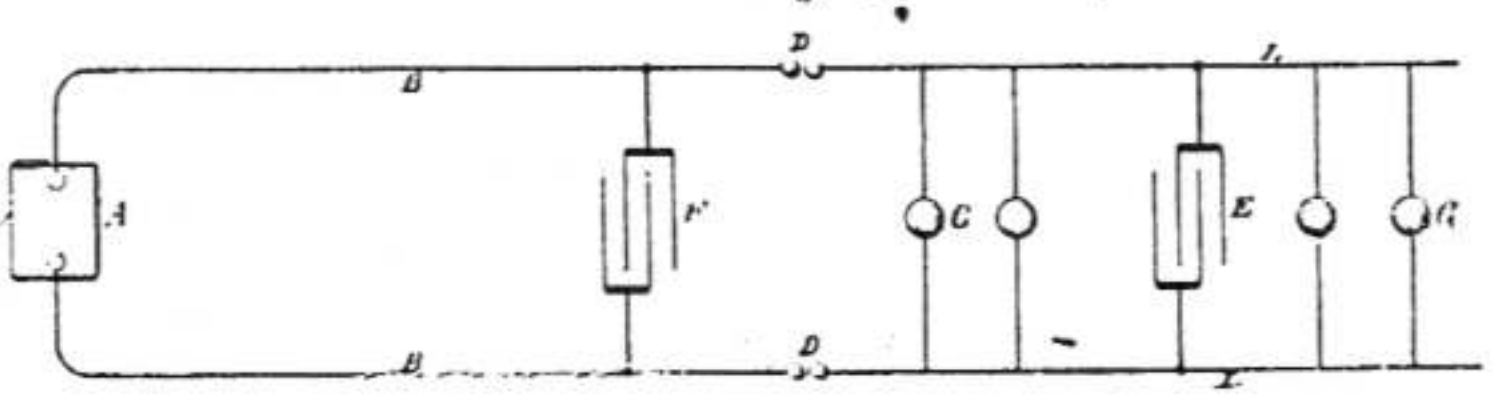

Witnesses.
Raphael Netter
Frank B. Murphy.

Inventor
Nikola Tesla,
by Duncan & Page.
Attorneys.

UNITED STATES PATENT OFFICE.

NIKOLA TESLA, OF NEW YORK, N. Y.

MEANS FOR GENERATING ELECTRIC CURRENTS.

SPECIFICATION forming part of Letters Patent No. 514,168, dated February 6, 1894.

Application filed August 2, 1893. Serial No. 482,184. (No model.)

To all whom it may concern:

Be it known that I, NIKOLA TESLA, a citizen of the United States, residing at New York, in the county and State of New York, have invented certain new and useful Improvements in Means for Generating Electric Currents, of which the following is a specification, reference being had to the drawings accompanying and forming a part of the same.

The invention, subject of my present application, is an improvement applicable more especially to the method or system of generating and utilizing electrical energy, heretofore discovered by me, and more fully set forth in Letters Patent No. 454,622, of June 23, 1891, and No. 462,418, of November 3, 1891, and which involves the maintenance of an intermittent or oscillatory discharge of a condenser or circuit of suitable capacity into a working circuit containing translating devices. In systems of this character when the high frequency of the currents employed is due to the action of a disruptive or intermittent discharge across an air gap or break at some point of the circuit, I have found it to be of advantage not only to break up or destroy the least tendency to continuity of the arc or discharge, but also to control the period of the re establishment of the same, and from investigations made by me with this object in view I have found that greatly improved results are secured by causing the discharge to take place in and through an insulating liquid, such as oil, and instead of allowing the terminal points of the break to remain at a uniform distance from each other, to vary such distance by bringing them periodically in actual contact or sufficiently near to establish the discharge and then separating them, or what is the equivalent of this, throwing in and out of the gap or break a conducting bridge at predetermined intervals. To obtain the best results, moreover, I find it essential to maintain at the point of discharge a flow of the insulating medium, or, in general, such a circulation of the same as will constantly operate to cut off or break up the discharge as fast as it is established. The accomplishment of this latter result involves the employment of some mechanism for maintaining the flow or circulation of the insulating medium past the points of discharge, and I take advantage of the presence of such mechanism to accomplish a further and beneficial result which is the maintenance of a flow or circulation of the insulating liquid in which I immerse the converter coils used for raising the potential of the current, and also the condenser plates when such are required and used. By this means the insulating liquid surrounding the said coils and plates may be prevented from heating, either by its circulation alone or by the application to it while in motion of a cooling medium, and its requisite qualities preserved for an indefinite time.

Broadly considered the plan contemplated is entirely independent of the special means for carrying it into execution, but in illustration of the preferred manner in which the invention is or may be carried out, I now refer to the drawings which are hereto annexed.

Figure 1 is a diagram of the system and devices employed by me. Fig. 2 is a sectional view of a detail of mechanism.

G represents an electric generator, as for instance, an ordinary alternator, in the circuit of which is the primary P' of a transformer, of which S represents the secondary, which is usually of much longer and finer wire than the primary. To the secondary circuit, if it have not of itself sufficient capacity for the purpose herein contemplated, are connected the plates of a condenser C, and at any point in said circuit is a break or gap at which occurs the disruptive discharge. In a portion of the secondary circuit, preferably in series with the condenser, as shown in the drawings, is a primary coil P' with which is associated a secondary S', which latter constitutes the ultimate source of currents for a working circuit D in which or with which are connected translating devices E. Under the conditions assumed it will be understood that by the oscillation or change caused by the action of the discharge, the condenser is charged and discharged setting up in the primary P' an electrical disturbance of enormous frequency, as has been explained in my patent referred to, and as is now well understood. Instead of employing two terminals at a fixed distance, however, for the gap across which the discharge takes place, I vary the distance between them, or what is practically the same

thing, I interpose between said terminals a conductor or a series of conductors successively by means of which the effective distance or length of the path of discharge is or may be varied at will. This I accomplish in the following manner:

A is a pipe or tube that leads into a tank B. To the end of this tube is secured an extension E of insulating material and the two terminals G' G' are caused to project through the sides of the same, as indicated in Fig. 2. Within the extension I secure two cross-bars H which afford bearings for the spindle of a small metallic turbine I, the blades of which, as the turbine revolves, bridge the space between the two terminals, nearly or quite touching the terminals in their movement. If now the tank B be filled with oil and the latter is drawn off or permitted to flow off through the tube A, the turbine will be rotated by the flow, the rate of rotation being dependent upon the rate of flow. By this means the arc or discharge is periodically established through a flow of oil, which secures in the most satisfactory manner the conditions best adapted for practical results.

The further objects of the invention are secured by placing the transformer P' S' in the body of oil in the tank B, and the condenser in a closed receptacle L. Then in order to maintain a circulation of the oil and to provide for the requisite flow which rotates the turbine, I connect the tank B with the condenser box L by means of the pipe A. I also run a pipe M from the box L to a small rotary pump N, and another pipe O from the latter back to the tank B.

When necessary or desirable I may insert in the pipe O a coil R, which is contained in a jacket T through which a cooling medium is passed.

The flow of oil is regulated by the speed at which the pump N is driven, and by this means the period of re-establishment of the arc is controlled.

Having now described my invention and the best means of which I am aware in which the same is or may be carried into effect, what I claim is--

1. In an electric system of the kind described, the combination with the points or terminals between which occurs the intermittent or oscillating discharge of means for maintaining between said points and in the path of the discharge a flow of insulating liquid, as set forth.

2. In an electrical system of the kind described, the combination with a transformer, and the points or terminals between which occurs the intermittent or oscillating discharge, of a body of insulating liquid surrounding the same, and means for maintaining a flow or circulation of the same, as set forth.

3. In an electrical system of the kind described, the combination with a transformer and the points or terminals between which occurs the intermittent or oscillating discharge, of receptacles inclosing the same and containing oil and means for maintaining a flow of the oil through said receptacles and around the devices therein, as set forth.

4. In an electrical system of the kind described, the combination with the points or terminals between which occurs the intermittent or oscillating discharge, of a means for maintaining a flow of insulating liquid between the discharge points, and means for varying the length of the path of discharge through such fluid, dependent for operation upon the flow of the same, as set forth.

5. The combination with discharge points immersed in oil, of means for periodically varying the length of the path of discharge between them, as described.

6. The combination with discharge points immersed in oil, of a conductor adapted to periodically bridge the space between such points, as set forth.

7. The combination with discharge points immersed in oil, means for causing a flow of the oil between said points and a metallic turbine mounted between the points and adapted by the rotation produced by the flowing oil to bridge with its vanes or blades the space between the said points.

NIKOLA TESLA.

Witnesses:
ROBT. F. GAYLORD,
PARKER W. PAGE.

P-227

(No Model.)

N. TESLA.

MEANS FOR GENERATING ELECTRIC CURRENTS.

No. 514,168. Patented Feb. 6, 1894.

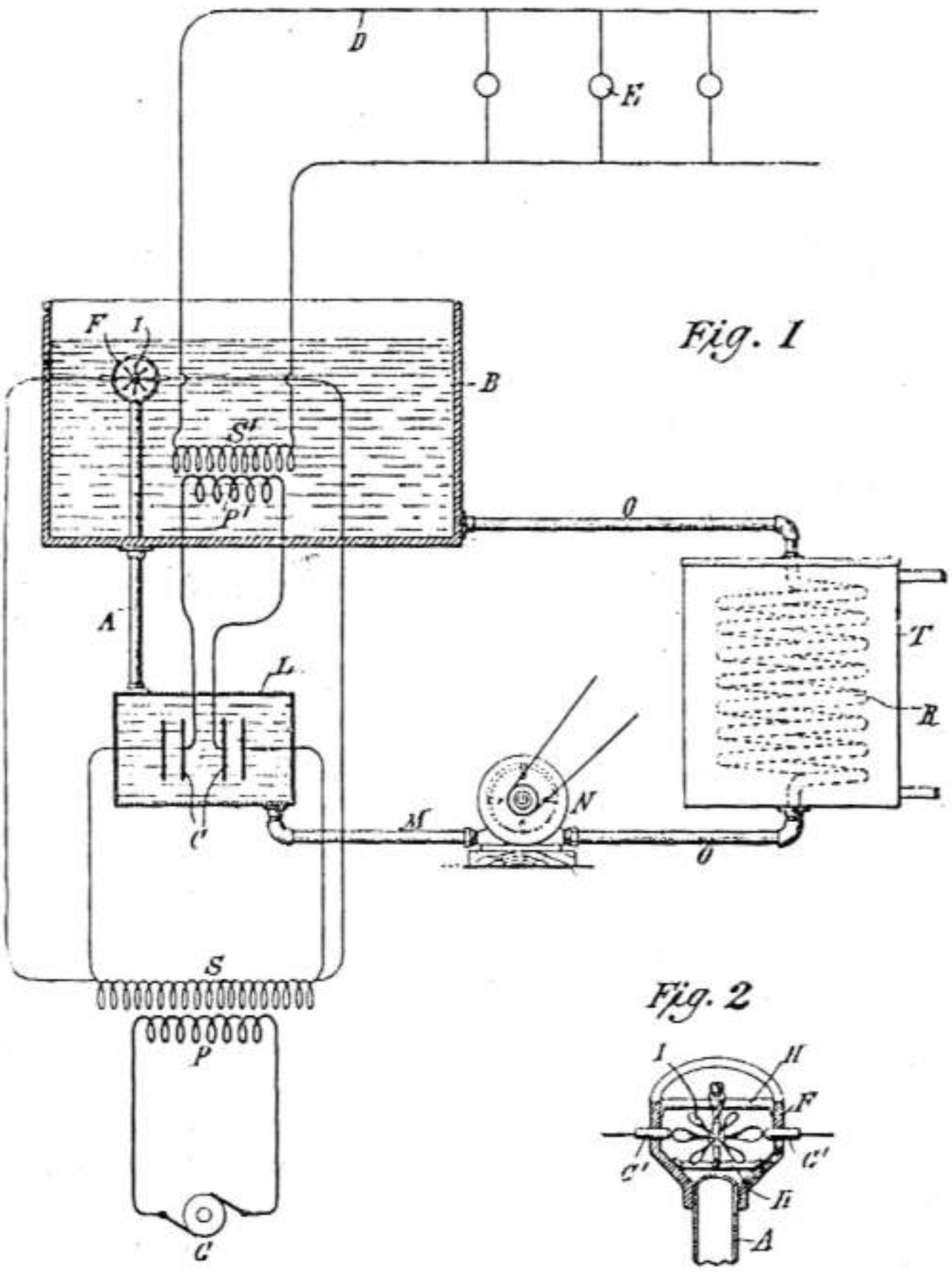

Fig. 1

Fig. 2

Witnesses
Raphael Netter
James H Gallaher

Inventor:
Nikola Tesla
By his Attorneys
Duncan & Page

UNITED STATES PATENT OFFICE.

NIKOLA TESLA, OF NEW YORK, N. Y.

METHOD OF REGULATING APPARATUS FOR PRODUCING CURRENTS OF HIGH FREQUENCY.

SPECIFICATION forming part of Letters Patent No. 568,178, dated September 22, 1896.

Application filed June 20, 1896. Serial No. 590,262. (No model.)

To all whom it may concern:

Be it known that I, NIKOLA TESLA, a citizen of the United States, residing at New York, in the county and State of New York, have invented certain new and useful Improvements in Methods of Regulating Apparatus for Producing Currents of High Frequency, of which the following is a specification, reference being had to the drawings accompanying and forming a part of the same.

In previous patents and applications I have shown and described a method of and apparatus for generating electric currents of high frequency suitable for the production of various novel phenomena, such as illumination by means of vacuum-tubes, the production of ozone, Roentgen shadows, and other purposes. The special apparatus of this character which I have devised for use with circuits carrying currents in the nature of those classed as direct, or such as are generally obtainable from the ordinary circuits used in municipal systems of incandescent lighting, is based upon the following principles:

The energy of the direct-current supply is periodically directed into and stored in a circuit of relatively high self-induction, and in such form is employed to charge a condenser or circuit of capacity, which, in turn, is caused to discharge through a circuit of low self-induction containing means whereby the intermittent current of discharge is raised to the potential necessary for producing any desired effect.

Considering the conditions necessary for the attainment of these results, there will be found, as the essential elements of the system, the supply-circuit, from which the periodic impulses are obtained, and what may be regarded as the local circuits, comprising the circuit of high self-induction for charging the condenser and the circuit of low self-induction into which the condenser discharges and which itself may constitute the working circuit, or that containing the devices for utilizing the current, or may be inductively related to a secondary circuit which constitutes the working circuit proper. These several circuits, it will be understood, may be more or less interconnected; but for purposes of illustration they may be regarded as practically distinct, with a circuit-controller for alternately connecting the condenser with the circuit by which it is charged and with that into which it discharges, and with a primary of a transformer in the latter circuit having its secondary in that which contains the devices operated by the current.

To this system or combination the invention, subject of my present application, pertains, and has for its object to provide a proper and economical means of regulation therefor.

It is well known that every electric circuit, provided its ohmic resistance does not exceed certain definite limits, has a period of vibration of its own analogous to the period of vibration of a weighted spring. In order to alternately charge a given circuit of this character by periodic impulses impressed upon it and to discharge it most effectively, the frequency of the impressed impulses should bear a definite relation to the frequency of vibration possessed by the circuit itself. Moreover, for like reasons the period or vibration of the discharge-circuit should bear a similar relation to the impressed impulses or the period of the charging-circuit. When the conditions are such that the general law of harmonic vibrations is followed, the circuits are said to be in resonance or in electromagnetic synchronism, and this condition I have found in my system to be highly advantageous. Hence in practice I adjust the electrical constants of the circuits so that in normal operation this condition of resonance is approximately attained. To accomplish this, the number of impulses of current directed into the charging-circuit per unit time is made equal to the period of the charging-circuit itself, or, generally, to a harmonic thereof, and the same relations are maintained between the charging and discharge circuit. Any departure from this condition will result in a decreased output, and this fact I take advantage of in regulating such output by varying the frequencies of the impulses or vibrations in the several circuits.

Inasmuch as the period of any given circuit depends upon the relations of its resistance, self-induction, and capacity, a variation of any one or more of these may result in a variation in its period. There are therefore various ways in which the frequencies of

vibration of the several circuits in the system referred to may be varied, but the most practicable and efficient ways of accomplishing the desired result are the following: (*a*) varying the rate of the impressed impulses of current, or those which are directed from the source of supply into the charging-circuit, as by varying the speed of the commutator or other circuit-controller; (*b*) varying the self-induction of the charging-circuit; (*c*) varying the self-induction or capacity of the discharge-circuit.

To regulate the output of a single circuit which has no vibration of its own by merely varying its period would evidently require, for any extended range of regulation, a very wide range of variation of period; but in the system described a very wide range of regulation of the output may be obtained by a very slight change of the frequency of one of the circuits when the above-mentioned rules are observed.

In illustration of my invention I have shown by diagrams in the accompanying drawings some of the more practicable means for carrying out the same. The figures, as stated, are diagrammatic illustrations of the system in its typical form provided with regulating devices of different specific character. These diagrams will be described in detail in their order.

In each of the figures, A B designate the conductors of a supply-circuit of continuous current; C, a motor connected therewith in any of the usual ways and driving a current-controller D, which serves to alternately close the supply-circuit through the motor or through a self-induction coil E and to connect such motor-circuit with a condenser F, the circuit of which contains a primary coil G, in proximity to which is a secondary coil H, serving as the source of supply to the working circuit, or that in which are connected up the devices K K for utilizing the current.

The circuit-controller, it may be stated, is any device which will permit of a periodic charging of the condenser F by the energy of the supply-circuit, and its discharging into a circuit of low self-induction supplying directly or indirectly the translating devices. Inasmuch as the source of supply is generally of low potential, it is undesirable to charge the condenser directly therefrom, as a condenser of large capacity will in such cases be required. I therefore employ a motor of high self-induction, or in place of or in addition to such motor a choking or self-induction coil E, to store up the energy of the supply-current directed into it and to deliver it in the form of a high-potential discharge when its circuit is interrupted and connected to the terminals of the condenser.

In order to secure the greatest efficiency in a system of this kind, it is essential, as I have before stated, that the circuits, which, mainly as a matter of convenience, I have designated as the "charging" and the "discharge" circuits, should be approximately in resonance or electromagnetic synchronism. Moreover, in order to obtain the greatest output from a given apparatus of this kind, it is desirable to maintain as high a frequency as possible.

The electrical conditions, which are now well understood, having been adjusted to secure, as far as practical considerations will permit, these results, I effect the regulation of the system by adjusting its elements so as to depart in a greater or less degree from the above conditions with a corresponding variation of output. For example, as in Figure 1, I may vary the speed of the motor, and consequently of the controller, in any suitable manner, as by means of a rheostat L in a shunt to such motor or by shifting the position of the brushes on the main commutator M of the motor or otherwise. A very slight variation in this respect, by disturbing the relations between the rate of impressed impulses and the vibration of the circuit of high self-induction into which they are directed, causes a marked departure from the condition of resonance and a corresponding reduction in the amount of energy delivered by the impressed impulses to the apparatus.

A similar result may be secured by modifying any of the constants of the local circuits, as above indicated. For example, in Fig. 2 the choking-coil E is shown as provided with an adjustable core N, by the movement of which into and out of the coil the self-induction, and consequently the period of the circuit containing such coil, may be varied.

As an example of the way in which the discharge-circuit, or that into which the condenser discharges, may be modified to produce the same result I have shown in Fig. 3 an adjustable self-induction coil R in the circuit with the condenser, by the adjustment of which the period of vibration of such circuit may be changed.

The same result would be secured by varying the capacity of the condenser; but if the condenser were of relatively large capacity this might be an objectionable plan, and a more practicable method is to employ a variable condenser in the secondary or working circuit, as shown in Fig. 4. As the potential in this circuit is raised to a high degree, a condenser of very small capacity may be employed, and if the two circuits, primary and secondary, are very intimately and closely connected the variation of capacity in the secondary is similar in its effects to the variation of the capacity of the condenser in the primary. I have illustrated as a means well adapted for this purpose two metallic plates S S, adjustable to and from each other and constituting the two armatures of the condenser.

I have confined the description herein to a source of supply of direct current, as to such the invention more particularly applies, but it will be understood that if the system be supplied by periodic impulses from any

source which will effect the same results the regulation of the system may be effected by the method herein described, and this my claims are intended to include.

What I claim is—

1. The method of regulating the energy delivered by a system for the production of high-frequency currents and comprising a supply-circuit, a condenser, a circuit through which the same discharges and means for controlling the charging of the condenser by the supply-circuit and the discharging of the same, the said method consisting in varying the relations of the frequencies of the impulses in the circuits comprising the system, as set forth.

2. The method of regulating the energy delivered by a system for the production of high-frequency currents comprising a supply-circuit of direct currents, a condenser adapted to be charged by the supply-circuit and to discharge through another circuit, the said method consisting in varying the frequency of the impulses of current from the supply-circuit, as set forth.

3. The method of producing and regulating electric currents of high frequency which consists in directing impulses from a supply-circuit into a charging-circuit of high self-induction, charging a condenser by the accumulated energy of such charging-circuit, discharging the condenser through a circuit of low self-induction, raising the potential of the condenser discharge and varying the relations of the frequencies of the electrical impulses in the said circuits, as herein set forth.

NIKOLA TESLA.

Witnesses:
M. LAWSON DYER,
DRURY W. COOPER.

(No Model.) 2 Sheets—Sheet 1.

N. TESLA.

METHOD OF REGULATING APPARATUS FOR PRODUCING CURRENTS OF HIGH FREQUENCY.

No. 568,178. Patented Sept. 22, 1896.

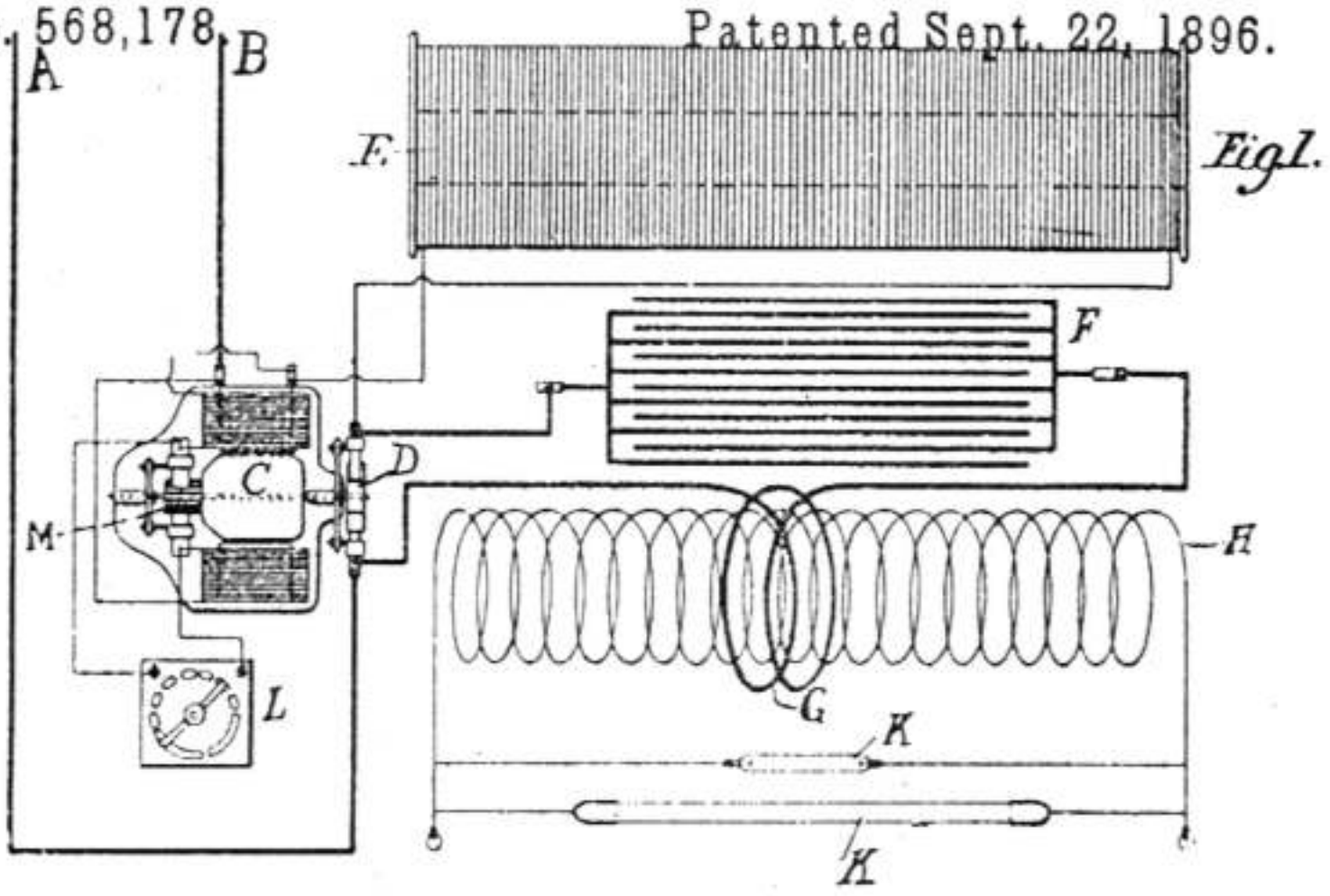

Fig. 1.

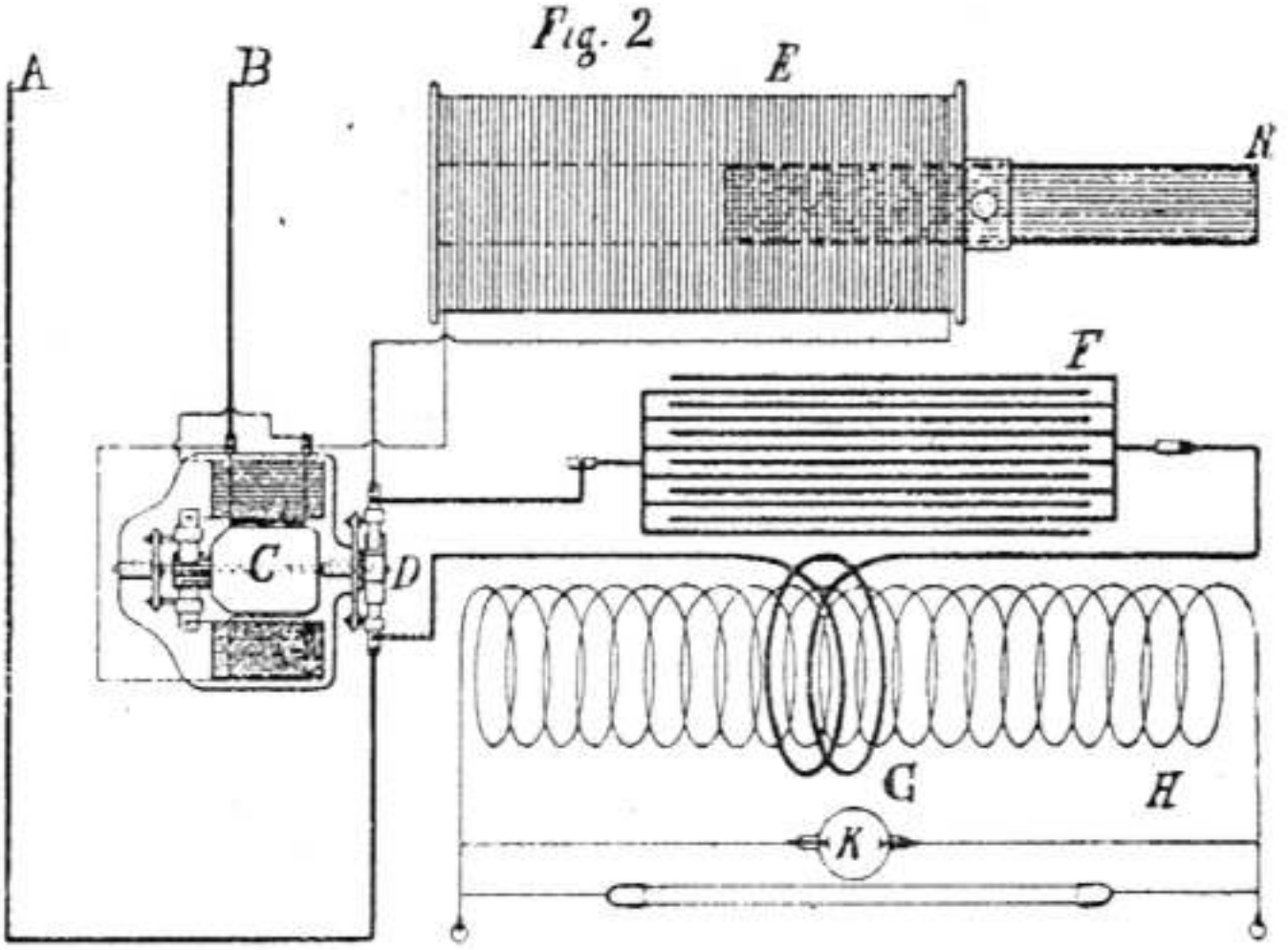

Fig. 2

WITNESSES

Edward B. Hopkinson
M. Lawson Dyer

INVENTOR

Nikola Tesla

BY

Kerr, Curtis & Page

ATTORNEYS

P-232

(No Model.) 2 Sheets—Sheet 2

N. TESLA.

METHOD OF REGULATING APPARATUS FOR PRODUCING CURRENTS OF HIGH FREQUENCY.

No. 568,178. Patented Sept. 22, 1896.

Fig. 3.

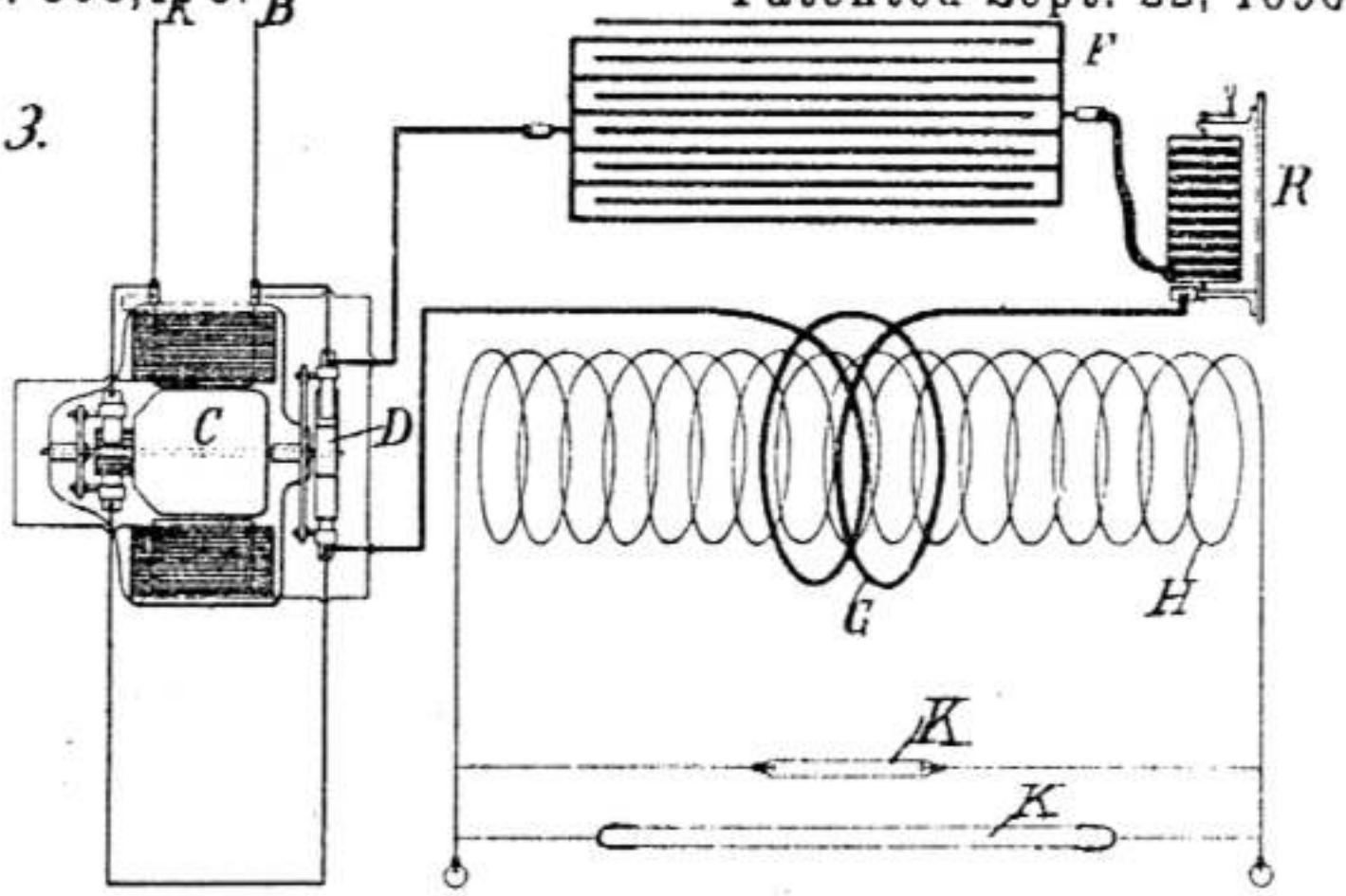

Fig. 4.

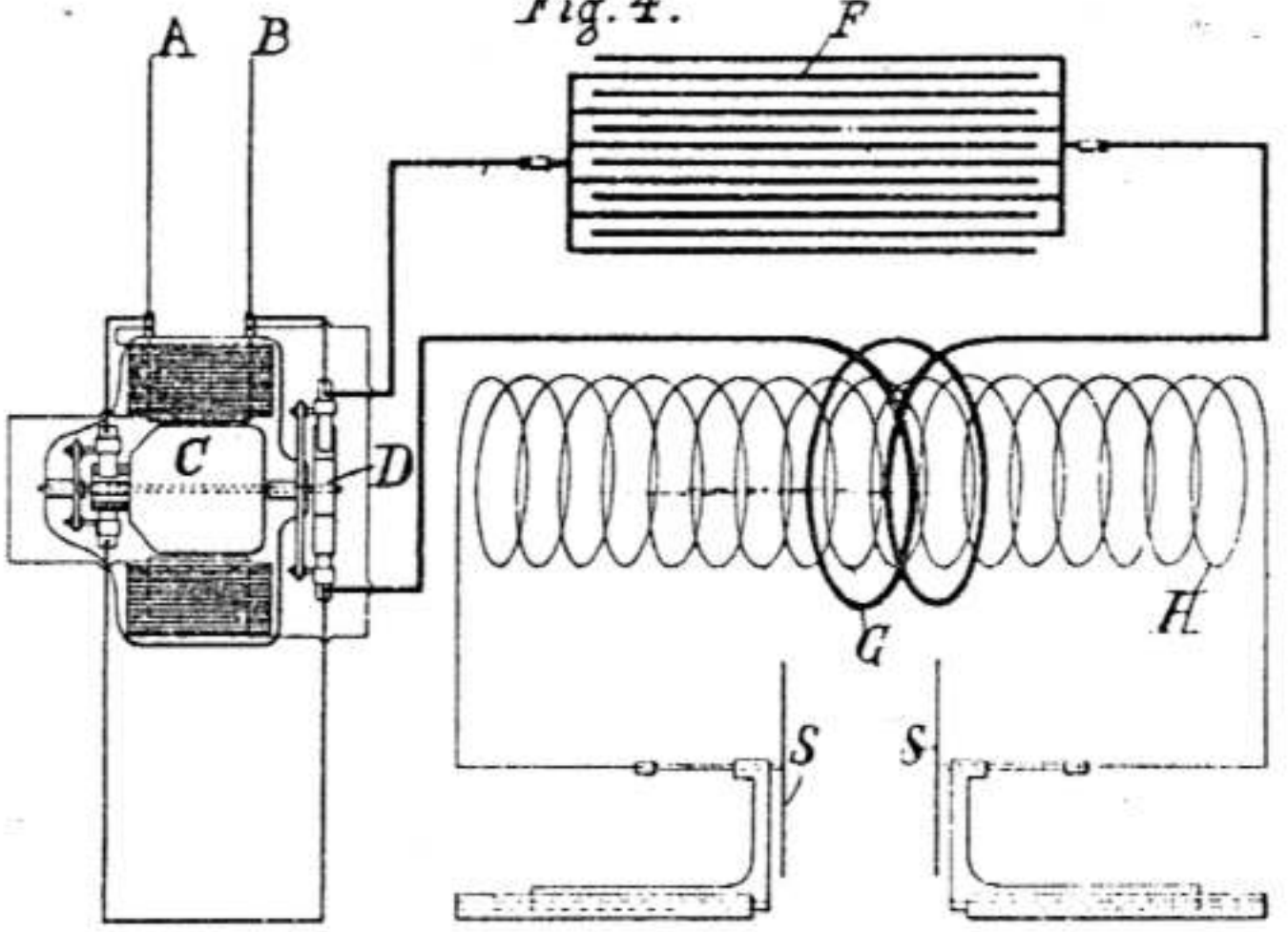

WITNESSES.
Edwin B. Hopkinson.
W. Lawson Dyer.

INVENTOR
Nikola Tesla
BY
Kerr, Curtis & Page
ATTORNEYS

UNITED STATES PATENT OFFICE.

NIKOLA TESLA, OF NEW YORK, N. Y.

APPARATUS FOR PRODUCING ELECTRIC CURRENTS OF HIGH FREQUENCY AND POTENTIAL.

SPECIFICATION forming part of Letters Patent No. 568,176, dated September 22, 1896.

Application filed April 22, 1895. Serial No. 546,534. (No model.)

To all whom it may concern:

Be it known that I, NIKOLA TESLA, a citizen of the United States, residing at New York, in the county and State of New York, have invented certain new and useful Improvements in Apparatus for the Production of Electric Currents of High Frequency and Potential, of which the following is a specification, reference being had to the drawings accompanying and forming a part of the same.

The invention which forms the subject of my present application is embodied in an improvement on an electrical apparatus invented by me and described in prior Letters Patent, notably in United States Patents No. 462,418, dated November 3, 1891, and No. 454,622, dated June 23, 1891. This apparatus was devised for the purpose of converting and supplying electrical energy in a form suited for the production of certain novel electrical phenomena which require currents of higher frequency and potential than can readily or even possibly be developed by generators of the ordinary types or by such mechanical appliances as were theretofore known. The apparatus, as a whole, involves means for utilizing the intermittent or oscillating discharge of the accumulated electrical energy of a condenser or a circuit possessing capacity in what may be designated the "working" circuit, or that which contains the translating devices or those which are operated by such currents.

The object of my present improvements is to provide a simple, compact, and effective apparatus for producing these effects, but adapted more particularly for direct application to and use with existing circuits carrying direct currents, such as the ordinary municipal incandescent-lighting circuits. The way in which I accomplish this, so as to meet the requirements of practical and economical operation under the conditions present, will be understood from a general description of the apparatus which I have devised. In any given circuit, which for present purposes may be considered as conveying direct currents or those of substantially the character of direct or continuous currents and which for general purposes of illustration may be assumed to be a branch or derived circuit across the mains from any ordinary source, I interpose a device or devices in the nature of a choking-coil in order to give to the circuit a high self-induction. I also provide a circuit-controller of any proper character that may be operated to make and break said circuit. Around the break or point of interruption I place a condenser or condensers to store the energy of the discharge-current, and in a local circuit and in series with such condenser I place the primary of a transformer, the secondary of which then becomes the source of the currents of high frequency. It will be apparent from a consideration of the conditions involved that were the condenser to be directly charged by the current from the source and then discharged into the working circuit a very large capacity would ordinarily be required, but by the above arrangement the current of high electromotive force which is induced at each break of the main circuit furnishes the proper current for charging the condenser, which may therefore be small and inexpensive. Moreover, it will be observed that since the self-induction of the circuit through which the condenser discharges, as well as the capacity of the condenser itself, may be given practically any desired value, the frequency of the discharge-current may be adjusted at will.

The object sought in this invention may be realized by specifically different arrangements of apparatus, but in the drawings hereto annexed I have illustrated forms which are typical of the best and most practicable means for carrying out the invention of which I am at present aware.

Figure 1 is a diagrammatic illustration of the apparatus, and Fig. 2 a modification of the same.

Referring to Fig. 1, A designates any source of direct current. In any branch of the circuit from said source, such, for example, as would be formed by the conductors A'' A'' from the mains A' and the conductors K K, are placed self-induction or choking coils B B and a circuit-controller C. This latter may be an ordinary metallic disk or cylinder with teeth or separated segments D D E E, of which one or more pairs, as E E, diametrically opposite, are integral or in electrical contact with the body of the cylinder, so that when the controller is in the position in which the

two brushes F F bear upon two of said segments E E the circuit through the choking-coils B will be closed. The segments D D are insulated, and while shown in the drawings as of substantially the same length of arc as the segments E E this latter relation may be varied at will to regulate the periods of charging and discharging.

The controller C is designed to be rotated by any proper device, such, for example, as an electromagnetic motor, as shown in Fig. 2, receiving current either from the main source or elsewhere. Around the controller C, or in general in parallel therewith, is a condenser H, and in series with the latter the primary K of a transformer, the secondary L of which constitutes the source of the currents of high frequency which may be applied to many useful purposes, as for electric illumination, the operation of Crooke's tubes, or the production of high vacua.

L' indicates the circuit from the secondary, which may be regarded as the working circuit.

A more convenient and simplified arrangement of the apparatus is shown in Fig. 2. In this case the small motor G, which drives the controller, has its field-coils in derivation to the main circuit, and the controller C and condenser H are in parallel in the field-circuit between the two coils. In such case the field-coils M take the place of the choking-coils B. In this arrangement, and in fact generally, it is preferable to use two condensers or a condenser in two parts and to arrange the primary coil of the transformer between them. The interruptions of the field-circuit of the motor should be so rapid as to permit only a partial demagnetization of the cores. These latter, however, should in this specific arrangement be laminated.

The apparatus, as will now be seen, comprises, as essential elements, choking-coils, a circuit-controller, means for rotating the same, a condenser, and a transformer. These elements may be mechanically associated in any convenient and compact form, but so far as their general arrangement and relations are concerned I prefer the relative disposition illustrated, mainly because, by reason of their symmetrical arrangement in the circuit, the liability of injury to the insulation of any of the devices is reduced to a minimum.

I do not mean to imply by the terms employed in describing my improvements that I limit myself to the use of the precise devices commonly designated by such terms. For instance, the choking-coil as a distinctive device may be wholly dispensed with, provided the circuit in which it must otherwise be placed have a sufficiently high self-induction produced in other ways. So, too, the necessity of a condenser, strictly speaking, is avoided when the circuit itself possesses sufficient capacity to accomplish the desired result.

Having now described my invention and the manner in which the same is or may be carried into practical effect, what I claim is—

1. The apparatus herein described for converting direct currents into currents of high frequency, comprising in combination a circuit of high self-induction, a circuit-controller adapted to make and break such circuit, a condenser into which the said circuit discharges when interrupted, and a transformer through the primary of which the condenser discharges as set forth.

2. The combination of a source of direct current and a circuit therefrom, choking-coils in said circuit, means for making and breaking the circuit through said coils, a condenser around the point of interruption in the said circuit and a transformer having its primary in circuit with the condenser as set forth.

3. The combination with a circuit of high self-induction and means for making and breaking the same, of a condenser around the point of interruption in the said circuit, and a transformer the primary of which is in the condenser-circuit as described.

4. The combination with a circuit of direct current and having a high self-induction, of a circuit-controller for making and breaking said circuit, a motor for driving the controller, a condenser in a circuit connected with the first around the point of interruption therein, and a transformer the primary of which is in circuit with the condenser as set forth.

5. The combination with a circuit of direct current, a controller for making and breaking the same, a motor having its field-magnets in said circuit and driving the said controller, a condenser connected with the circuit around the point of interruption therein and a transformer the primary of which is in circuit with the condenser as set forth.

NIKOLA TESLA

Witnesses:
EDWIN B. HOPKINSON,
M. LAWSON DYER.

(No Model.) 2 Sheets—Sheet 1

N. TESLA

APPARATUS FOR PRODUCING ELECTRIC CURRENTS OF HIGH FREQUENCY AND POTENTIAL.

No. 568,176 Patented Sept. 22, 1896.

Fig. 1

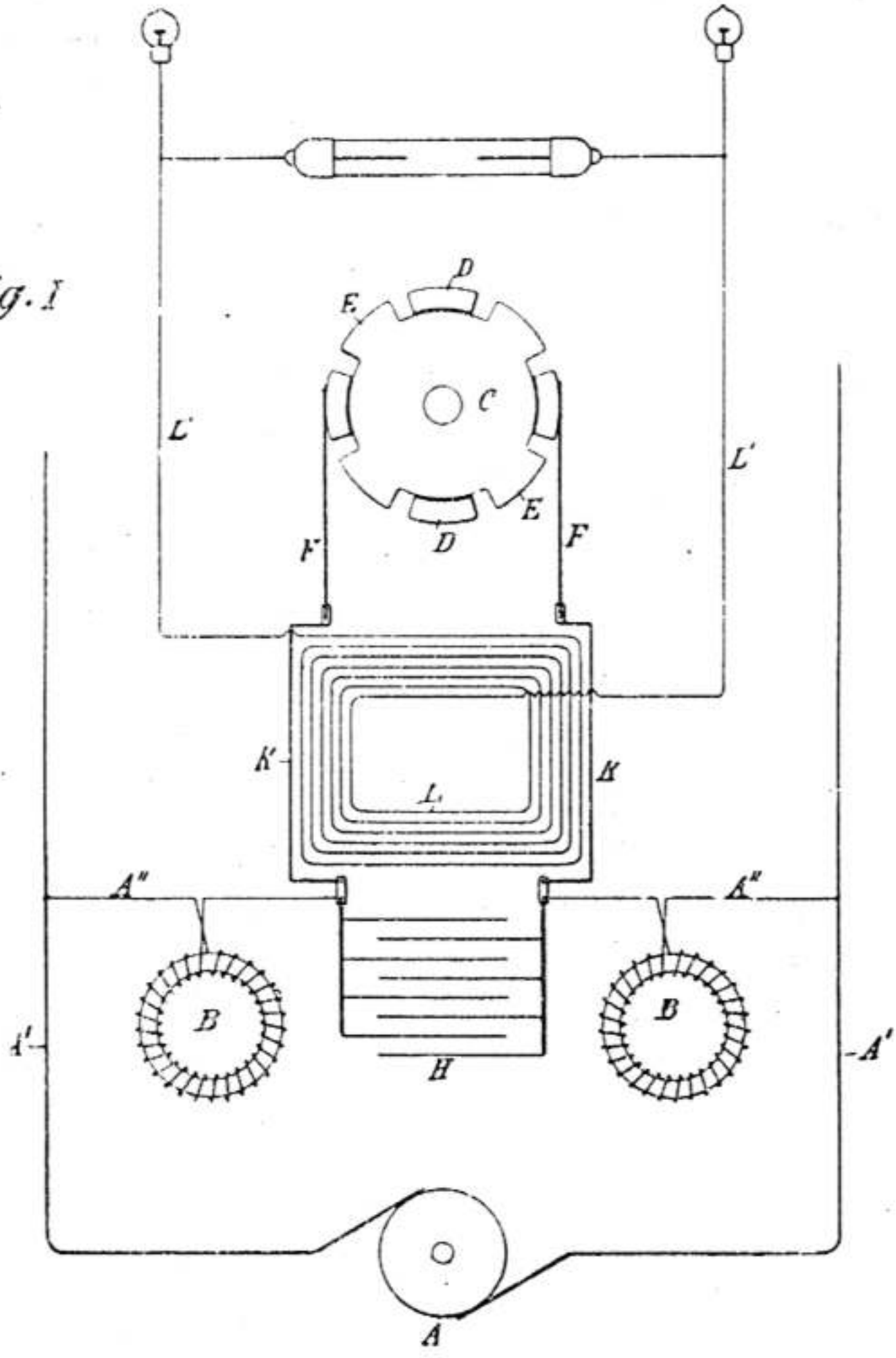

Witnesses:
Raphael Netter
Drury W. Cooper

Nikola Tesla, Inventor
by Kerr, Curtis & Page.
Attys

P-236

(No Model.) 2 Sheets—Sheet 2.

N. TESLA.

APPARATUS FOR PRODUCING ELECTRIC CURRENTS OF HIGH FREQUENCY AND POTENTIAL.

No. 568,176. Patented Sept. 22, 1896.

Fig. 2

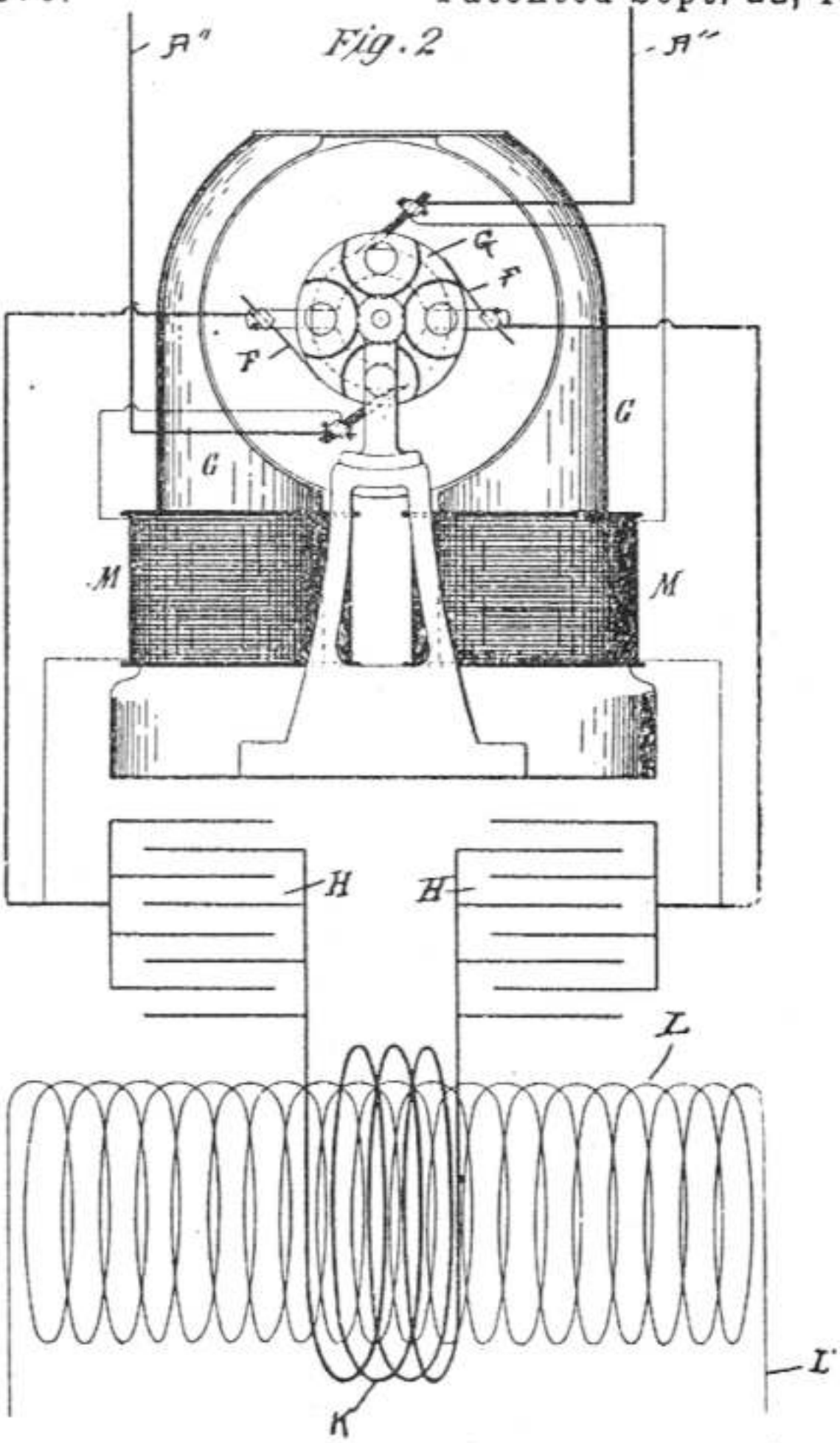

WITNESSES:
M. Lawson Dyer
Edwin B. Hopkinson.

Nikola Tesla INVENTOR

BY
Kerr, Curtis & Page
ATTORNEYS

UNITED STATES PATENT OFFICE.

NIKOLA TESLA, OF NEW YORK, N. Y.

METHOD OF AND APPARATUS FOR PRODUCING CURRENTS OF HIGH FREQUENCY.

SPECIFICATION forming part of Letters Patent No. 568,179, dated September 22, 1896.

Application filed July 6, 1896. Serial No. 598,130. (No model.)

To all whom it may concern:

Be it known that I, NIKOLA TESLA, a citizen of the United States, residing at New York, in the county and State of New York, have invented certain new and useful Improvements in Methods of and Apparatus for Producing Currents of High Frequency, of which the following is a specification, reference being had to the drawings accompanying and forming a part of the same.

The apparatus for producing electrical currents of very high frequency in which is embodied the invention of my present application involves as its chief element means for the periodic charging of a condenser or circuit possessing capacity by the energy of a given source and the discharge of the same through a circuit of low self-induction, whereby the rapid succession of impulses characteristic of a condenser discharge under such circumstances is made available for many practical and useful purposes.

The general arrangement of circuits and apparatus which I prefer for ordinary applications of this invention I have shown and described in an application filed by me April 22, 1896, Serial No. 588,534, as comprising a local circuit of high self-induction connected with a source of supply, a condenser, a discharge-circuit of low self-induction, and a circuit-controller operating to alternately effect the charging of the condenser by the energy stored in the circuit of high self-induction and its discharge through that of low self-induction. I have shown, however, in the application referred to as the source of supply a continuous-current generator, or in general a source of direct currents, and while the principle of operation and the general character of the apparatus remain the same whether the current of the source be direct or alternating, yet the economical utilization of the latter involves certain special principles and appliances which it is my present object to illustrate as the basis for the claims of invention made herein.

When the potential of the source periodically rises and falls, whether with reversals or not is immaterial, it is essential to economical operation that the intervals of interruption of the charging-current should bear a definite time relation to the period of the current, in order that the effective potential of the impulses charging the condenser may be as high as possible. I therefore provide, in case an alternating or equivalent electromotive force be employed as the source of supply, a circuit-controller which will interrupt the charging-circuit at instants predetermined with reference to the variations of potential therein. The most practicable means for accomplishing this of which I am aware is to employ a synchronous motor connected with the source of supply and operating a circuit-controller which interrupts the charging-current at or about the instant of highest potential of each wave and permits the condenser to discharge the energy stored in it through its appropriate circuit. This apparatus, which may be considered as typical of the means employed for carrying out the invention, I have illustrated in the accompanying drawings.

The figures are diagrammatic illustrations of the system in slightly-modified forms, and will be described in detail in their order.

Referring to Figure 1, A designates any source of alternating or equivalent current, from which lead off mains A' A. At any point where it is desired to produce the high-frequency currents a branch circuit B is taken off from the mains, and in order to raise the potential of the current a transformer is employed, represented by the primary C and secondary D. The circuit of the secondary includes the energizing-coils of a synchronous motor E and a circuit-controller, which, in the present instance, in Fig. 1 is shown as composed of a metal disk F with insulated segments F' in its periphery and fixed to the shaft of the motor. An insulating-arm G, stationary with respect to the motor-shaft and adjustable with reference to the poles of the fixed magnets, carries two brushes H H, which bear upon the periphery of the disk. With the parts thus arranged the secondary circuit is completed through the coils of the motor whenever the two brushes rest upon the uninsulated segments of the disk and interrupted through the motor at other times. Such a motor, if properly constructed, in well-understood ways, maintains very exact synchronism with the alterations of the source, and the arm G may therefore be adjusted to

interrupt the current at any determined point in its waves. It will be understood that by the proper relations of insulated and conducting segments and the motor-poles the current may be interrupted twice in each complete wave at or about the points of highest potential. The self-induction of the circuit containing the motor and controller should be high, and the motor itself will usually be constructed in such manner that no other self-induction device will be needed. The energy stored in this circuit is utilized at each break therein to charge a condenser K. With this object the terminals of the condenser are connected to the two brushes H H or to points of the circuit adjacent thereto, so that when the circuit through the motor is interrupted the terminals of the motor-circuit will be connected with the condenser, whereby the latter will receive the high-potential inductive discharge from the motor or secondary circuit.

The condenser discharges into a circuit of low self-induction, one terminal of which is connected directly to a condenser-terminal and the other to the brush H opposite to that connected with the other condenser-terminal, so that the discharge-circuit of the condenser will be completed simultaneously with the motor-circuit and interrupted while the motor-circuit is broken and the condenser being charged.

The discharge-circuit contains a primary M of a few turns, and this induces in a secondary N impulses of high potential, which by reason of their great freqnency are available for the operation of vacuum-tubes P, single terminal-lamps R, and other novel and useful purposes.

It is obvious that the supply-current need not be alternating, provided it be converted or transformed into an alternating current before reaching the controller. For example, the present improvements are applicable to various forms of rotary transformers, as is illustrated in Figs. 2 and 3

E' designates a continuous-current motor, here represented as having four field-poles wound with coils E'' in shunt to the armature. The line-wires B B connect with the brushes *b b*, bearing on the usual commutator.

On an extension of the motor-shaft is a circuit-controller composed of a cylinder the surface of which is divided into four conducting-segments *c* and four insulating-segments *d*, the former being diametrically connected in pairs, as shown in Fig. 3.

Through the shaft run two insulated conductors *e e* from any two commutator-segments ninety degrees apart, and these connect with the two pairs of segments *c*, respectively. With such arrangement it is evident that any two adjacent segments *c c* become the terminals of an alternating-current source, so that if two brushes H H be applied to the periphery of the cylinder they will take off current during such portion of the wave as the width of segment and position of the brushes may determine. By adjusting the position of the brushes relatively to the cylinder, therefore, the alternating current delivered to the segments *c c* may be interrupted at any point in its waves.

While the brushes H H are on the conducting-segments the current which they collect stores energy in a circuit of high self-induction formed by the wires *f f*, self-induction coils S S, the conductors B B, the brushes, and commutator. When this circuit is interrupted by the brushes H H passing onto the insulating-segments of the controller, the high-potential discharge of this circuit charges the condensers K K, which then discharge through the circuit of low self-induction containing the primary M. The secondary circuit N contains any devices, as P R, for utilizing the current.

The mechanical construction of the circuit-controller may be greatly varied, and in other respects the details shown and described are merely given as typical illustrations of the nature and purpose of the invention.

What I claim is—

1. The method herein described of producing electric currents of high frequency, which consists in generating an alternating current, charging a condenser thereby during determinate intervals of each wave of said current, and discharging the condenser through a circuit of low self-induction, as herein set forth.

2. The combination with a source of alternating current, a condenser, a circuit-controller adapted to direct the current during determinate intervals of each wave into the condenser for charging the same, and a circuit of low self-induction into which the condenser discharges, as set forth.

3. The combination with a source of alternating current, a synchronous motor operated thereby, a circuit-controller operated by the motor and adapted to interrupt the circuit through the motor at determinate points in each wave, a condenser connected with the motor-circuit and adapted on the interruption of the same to receive the energy stored therein, and a circuit into which the condenser discharges, as set forth.

4. The combination with a source of alternating current, a charging-circuit in which the energy of said current is stored, a circuit-controller adapted to interrupt the charging-circuit at determinate points in each wave, a condenser for receiving, on the interruption of the charging-circuit, the energy accumulated therein, and a circuit into which the condenser discharges when connected therewith by the circuit-controller, as set forth.

NIKOLA TESLA

Witnesses:
M. LAWSON DYER,
DRURY W. COOPER.

(No Model.,) 2 Sheets—Sheet 1

N. TESLA.

METHOD OF AND APPARATUS FOR PRODUCING CURRENTS OF HIGH FREQUENCY.

No. 568,179. Patented Sept. 22, 1896.

Fig. 1

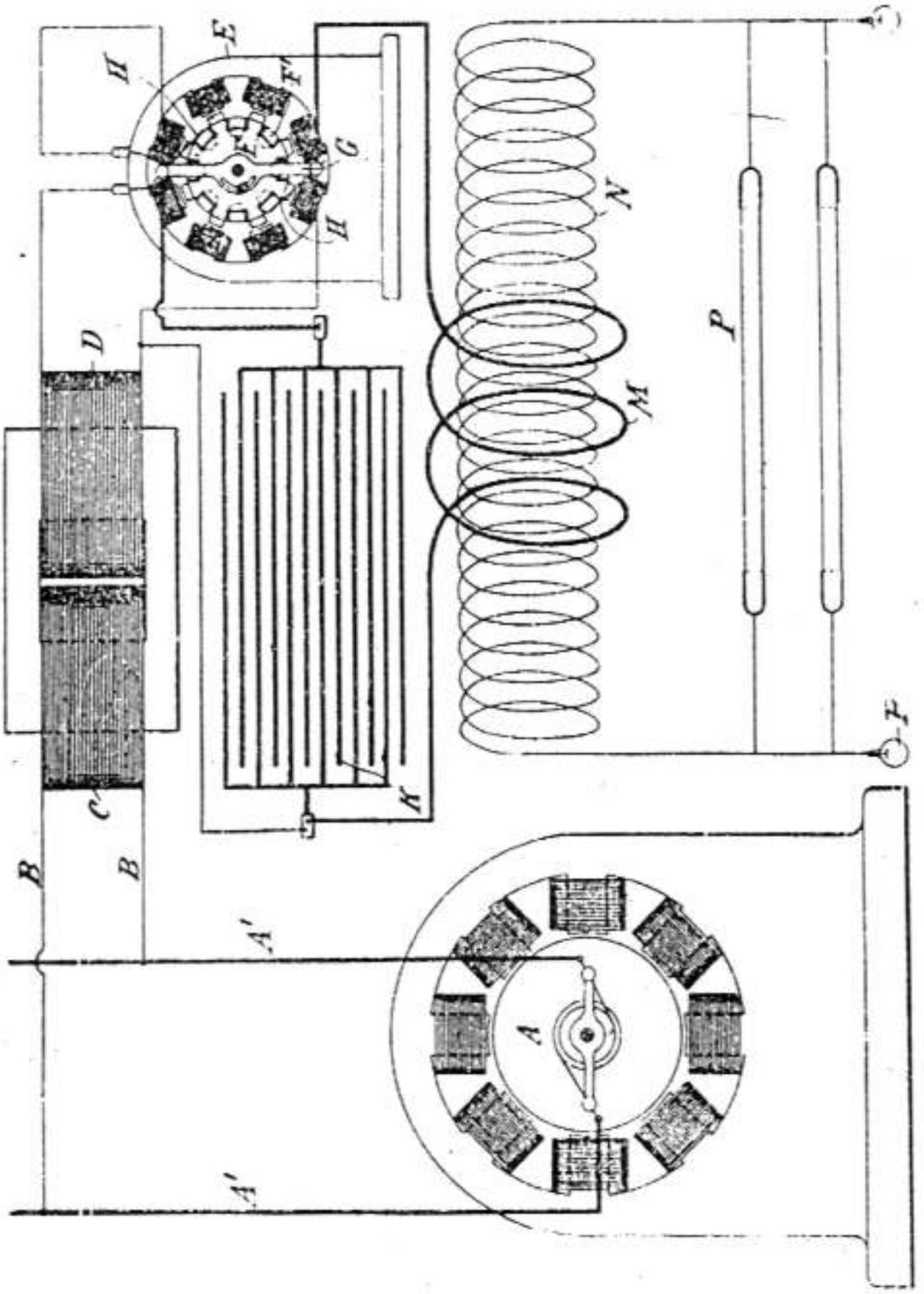

WITNESSES

Drury W. Cooper

Edwin B. Hopkinson.

INVENTOR

Nikola Tesla

BY

Kerr, Curtis & Page

ATTORNEYS

P-240

(No Model.) 2 Sheets—Sheet 2

N. TESLA.

METHOD OF AND APPARATUS FOR PRODUCING CURRENTS OF HIGH FREQUENCY.

No. 568,179. Patented Sept. 22, 1896.

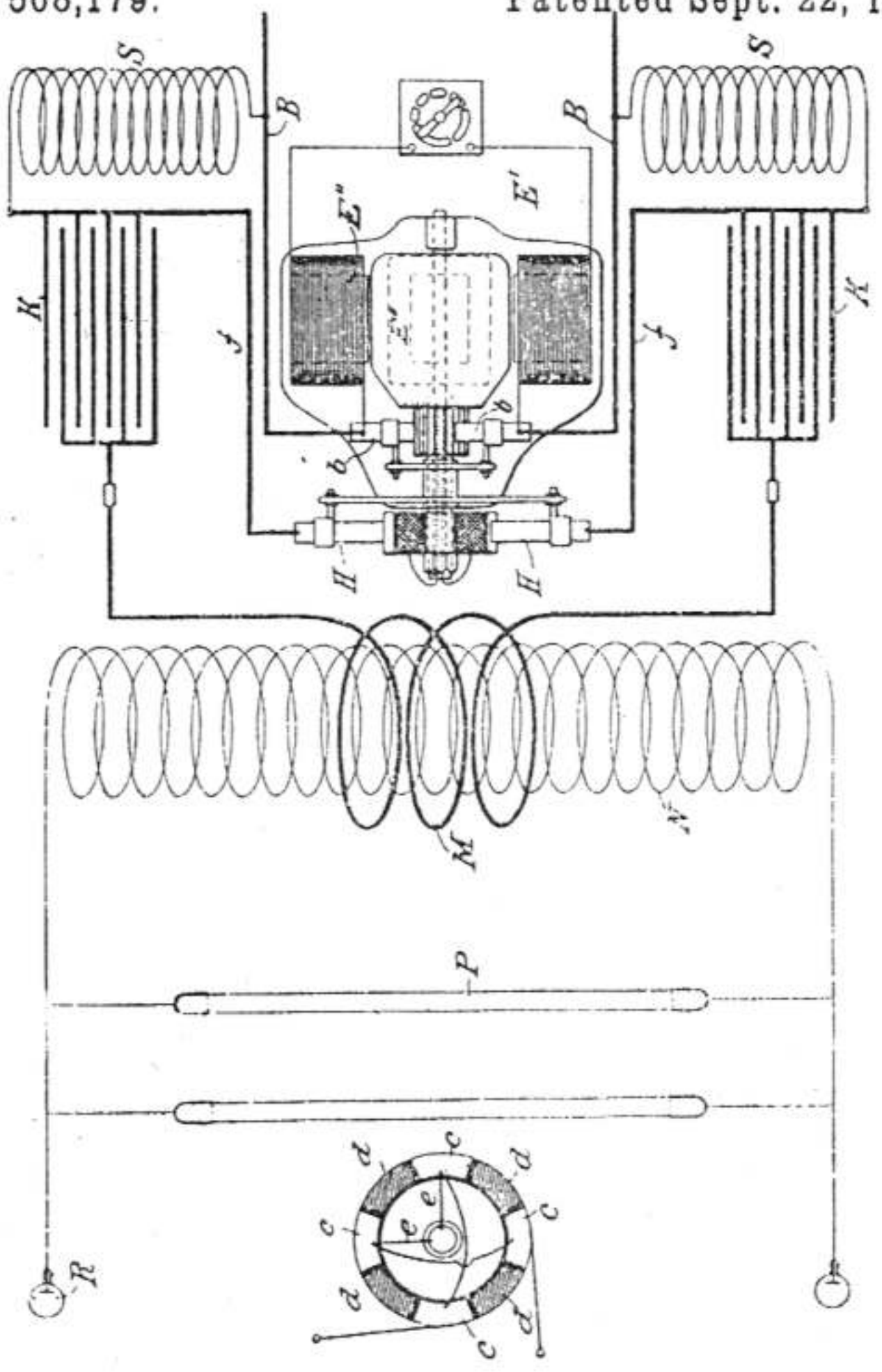

FIG. 2

WITNESSES

Drury W. Cooper

Edwin B. Hopkinson.

INVENTOR

Nikola Tesla,

BY

Kerr, Curtis & Page

ATTORNEYS

UNITED STATES PATENT OFFICE.

NIKOLA TESLA, OF NEW YORK, N. Y.

APPARATUS FOR PRODUCING ELECTRICAL CURRENTS OF HIGH FREQUENCY.

SPECIFICATION forming part of Letters Patent No. 568,180, dated September 22, 1896.

Application filed July 9, 1896. Serial No. 598,552. (No model.)

To all whom it may concern:

Be it known that I, NIKOLA TESLA, a citizen of the United States, residing at New York, in the county and State of New York, have invented certain new and useful Improvements in Apparatus for Producing Electrical Currents of High Frequency, of which the following is a specification, reference being had to the drawings accompanying and forming a part of the same.

This invention is an improvement in apparatus for producing electrical currents of high frequency in accordance with the general plan heretofore invented and practiced by me and based upon the principle of charging a condenser or circuit possessing capacity and discharging the same through a circuit of low self-induction, so that rapid electrical oscillations are obtained. To secure this result, I employ some means for intermittently charging the condenser and for discharging it through the circuit of low self-induction; and among the means which I have heretofore employed for this purpose was a mechanical contact device which controlled both the charging and the discharge-circuit in such manner that the condenser was alternately charged by the former and discharged into the latter.

My present improvement consists in an apparatus for effecting the same result by the use of a circuit-controller of special character in which the continuity of the paths for the current is established at intervals by the passage of sparks across a dielectric.

In carrying out my present improvement I employ a circuit-controller containing two terminals or sets of terminals movable with respect to each other into and out of proximity, and I provide means whereby the intervals between the periods of close approximation, during which the spark passes, may be adjusted so that when used in a system supplied by a source of alternating current the periods of make and break may be timed with reference to a phase of the current wave or impulse.

Referring to the drawings, which illustrate in its preferred form the improvement above referred to, Figure 1 is a view, partly in elevation and partly in section, of a generator arranged to give an alternating current with the circuit-controller mounted on its shaft. Fig. 2 is a section of the controller of Fig. 1 on line $x\,x$ of said figure. Fig. 3 is a diagram illustrating the system or apparatus as a whole. Figs. 4 and 5 are sectional views of a modified form of circuit-controller.

A designates in Fig. 1 a generator having a commutator A' and brushes A'' bearing thereon, and also collecting-rings B B, from which an alternating current is taken by brushes B' in the well-understood manner.

The circuit-controller is mounted in part on an extension of the shaft C of the generator, and in part on the frame of the same, or on a stationary sleeve surrounding the shaft. Its construction in detail is as follows: D is a metal plate with a central hub D', which is keyed or clamped to the shaft C. The plate is formed with segmental extensions corresponding in number to the waves of current which the generator delivers. These segments are preferably cut away, leaving only rims or frames, to one of the radial sides of which are secured bent metal plates E, which serve as vanes to maintain a circulation of air when the device is in operation. The segmental disk and vanes are contained within a close insulated box or case F, mounted on the bearing of the generator, or in any other proper way, but so as to be capable of angular adjustment around the shaft. To facilitate such adjustment, a screw-rod F', provided with a knob or handle, is shown as passing through the wall of the box. The latter may be adjusted by this rod, and when in proper position may be held therein by screwing the rod down into a depression in the sleeve or bearing, as shown in Fig. 1. Air-passages G G are provided at opposite ends of the box, through which air is maintained in circulation by the action of the vanes. Through the sides of the box F and through insulating-gaskets H, when the material of the box is not a sufficiently good insulator, extend metallic terminal plugs K K, with their ends in the plane of the conducting segmental disk D and adjustable radially toward and from the edges of the segments. This or similar devices are employed to carry out the invention above referred to in the manner illustrated in Fig. 3. A in this figure represents any source of alternating current

the potential of which is raised by a transformer, of which *a* is the primary and *b* the secondary. The ends of the secondary circuit S are connected to the terminal plugs K K of an apparatus similar to that of Figs. 1 and 2 and having segments rotating in synchronism with the alternations of the current source, preferably, as above described, by being mounted on the shaft of the generator when the conditions so permit. The plugs K K are then adjusted radially, so as to approach more or less the path of the outer edges of the segmental disk, and so that during the passage of each segment in front of a plug a spark will pass between them, which completes the secondary circuit S. The box or the support for the plugs K is adjusted angularly, so as to bring the plugs and segments into proximity at the desired instants with reference to any phase of the current-wave in the secondary circuit and fixed in position in any proper manner. To the plugs K K are also connected the terminals of a condenser or condensers L, so that at the instant of the rupture of the secondary circuit S by the cessation of the sparks the energy accumulated in such circuit will rush into and charge the condenser. A path of low self-induction and resistance, including a primary M of a few turns, is provided to receive the discharge of the condenser, when the circuit S is again completed by the passage of sparks, the discharge being manifested as a succession of extremely rapid impulses. The potential of these impulses may be raised by a secondary T, which constitutes the source of current for the working circuit or that containing the devices R for utilizing the current.

By means of this apparatus effects of a novel and useful character are obtainable, but to still further increase the efficiency of the discharge or working current I have in some instances provided a means for further breaking up the individual sparks themselves. A device for this purpose is shown in Figs. 4 and 5. The box or case F in these figures is fixedly secured to the frame or bearing of the generator or motor which rotates the circuit-controller in synchronism with the alternating source. Within said box is a disk D, fixed to the shaft C, with projections *d'* extending from its edge parallel with the axis of the shaft. A similar disk D'' on a spindle *d*, in face of the first, is mounted in a bearing in the end of the box F with a capability of rotary adjustment. The ends of the projections *d'* are deeply serrated or several pins or narrow projections placed side by side, as shown in Fig. 4, so that as those of the opposite disks pass each other a rapid succession of sparks will pass from the projections of one disk to those of the other.

What I claim as my invention is—

1. The combination with a source of current, of a condenser adapted to be charged thereby, a circuit into which the condenser discharges in a series of rapid impulses, and a circuit-controller for effecting the charging and discharge of said condenser, composed of conductors movable into and out of proximity with each other, whereby a spark may be maintained between them and the circuit closed thereby during determined intervals, as set forth.

2. The combination with a source of alternating current, of a condenser adapted to be charged thereby, a circuit into which the condenser discharges in a series of rapid impulses, and a circuit-controller for effecting the charging and discharge of said condenser, composed of conductors movable into and out of proximity with each other in synchronism with the alternations of the source, as set forth.

3. A circuit-controller for systems of the kind described, comprising in combination a pair of angularly-adjustable terminals and two or more rotating conductors mounted to pass in proximity to the said terminals, as set forth.

4. A circuit-controller for systems of the kind described, comprising in combination two sets of conductors, one capable of rotation and the other of angular adjustment whereby they may be brought into and out of proximity to each other, at determinate points, and one or both being subdivided so as to present a group of conducting-points, as set forth.

NIKOLA TESLA.

Witnesses:
M. LAWSON DYER,
DRURY W. COOPER.

P-243

(No Model.) 2 Sheets—Sheet 1

N TESLA.

APPARATUS FOR PRODUCING ELECTRICAL CURRENTS OF HIGH FREQUENCY.

No. 568,180. Patented Sept. 22, 1896.

Fig. 2.

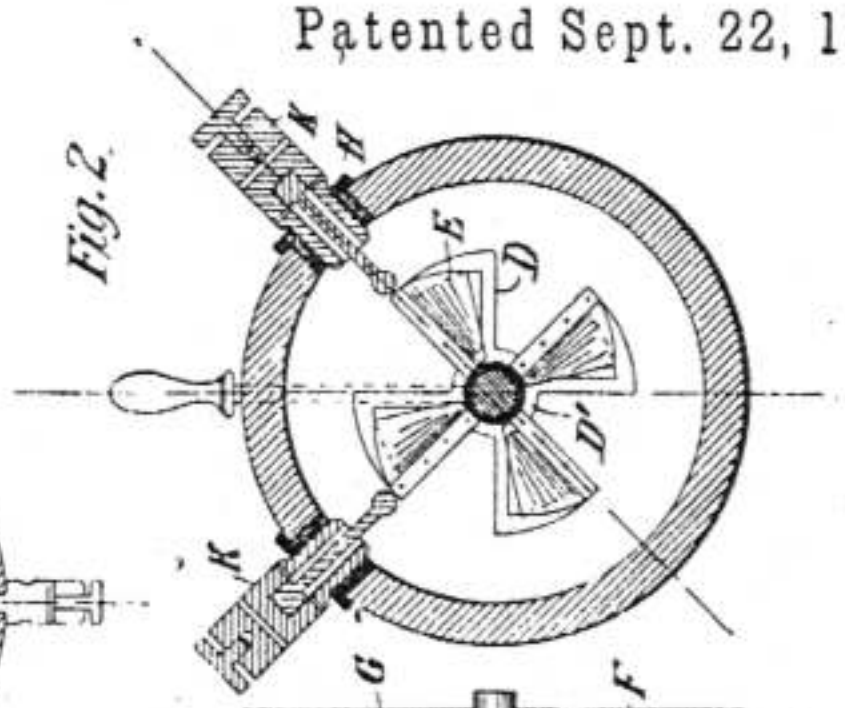

Fig. 5.

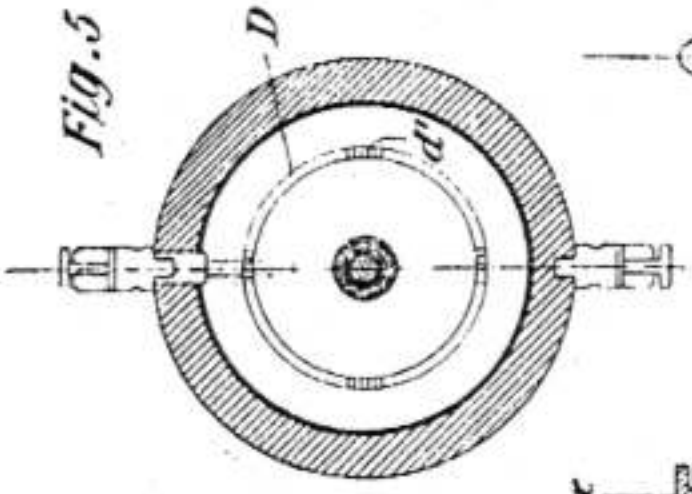

Fig. 1.

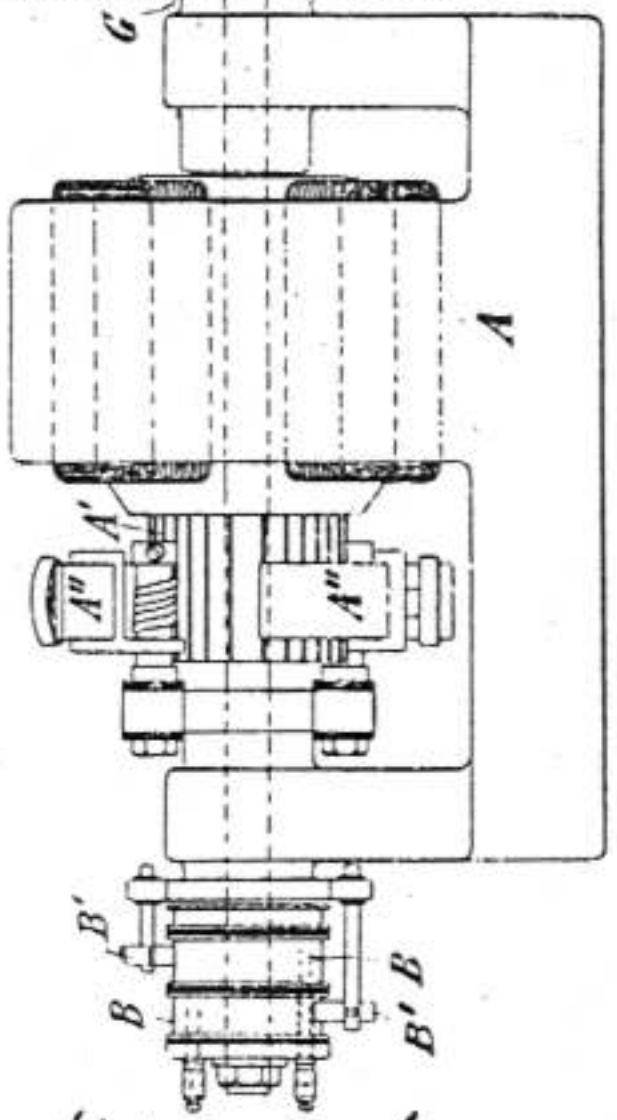

Fig. 4.

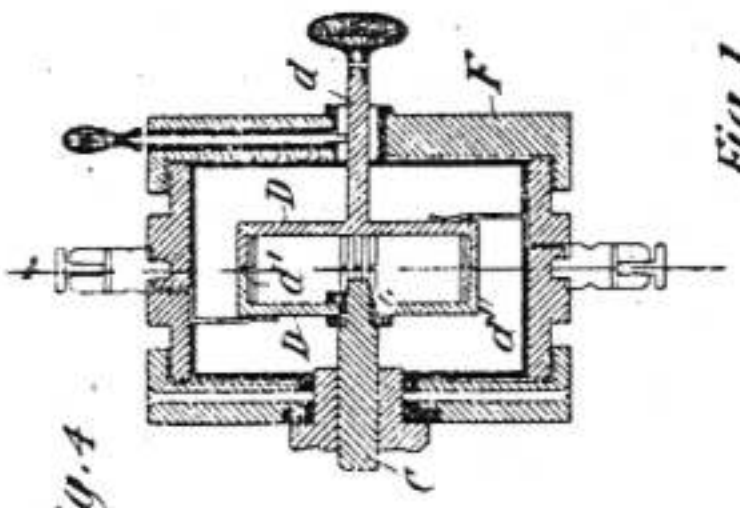

WITNESSES:

Edwin B Hopkinson.

Benjamin Barker

Nikola Tesla, INVENTOR

BY

Kerr, Curtis & Page, ATTORNEYS

P-244

(No Model.) 2 Sheets—Sheet 2

N. TESLA.

APPARATUS FOR PRODUCING ELECTRICAL CURRENTS OF HIGH FREQUENCY.

No. 568,180. Patented Sept. 22, 1896.

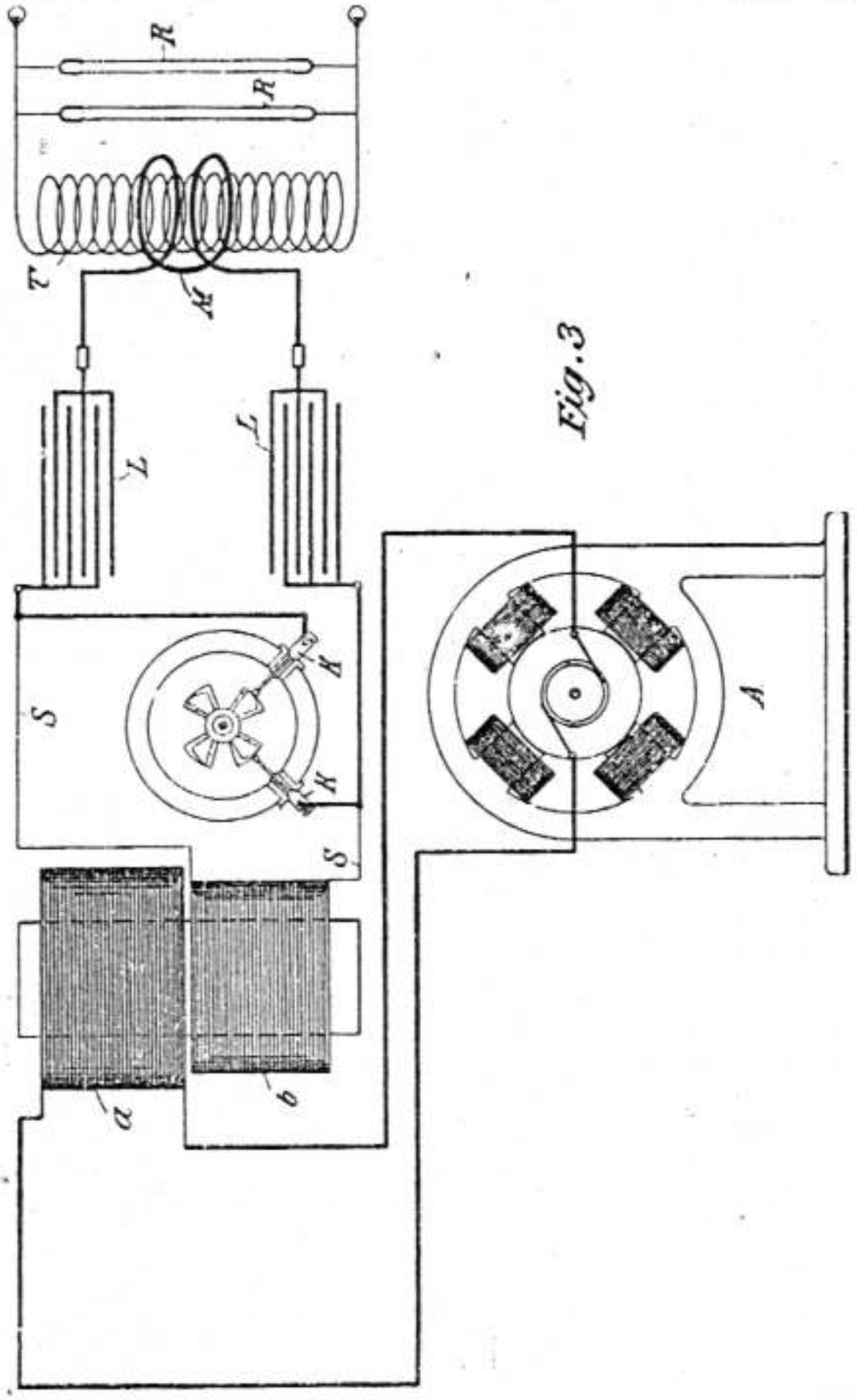

Fig. 3

WITNESSES:

Edwin B. Hopkinson.

Benjamin Barker Jr.

Nikola Tesla INVENTOR

BY

Kerr, Curtis & Page, ATTORNEYS.

UNITED STATES PATENT OFFICE.

NIKOLA TESLA, OF NEW YORK, N. Y.

APPARATUS FOR PRODUCING ELECTRIC CURRENTS OF HIGH FREQUENCY.

SPECIFICATION forming part of Letters Patent No. 577,070, dated February 23, 1897.

Application filed September 3, 1896. Serial No. 604,723. (No model.)

To all whom it may concern:

Be it known that I, NIKOLA TESLA, a citizen of the United States, residing at New York, in the county and State of New York, have invented certain new and useful Improvements in Apparatus for Producing Electric Currents of High Frequency, of which the following is a specification, reference being had to the drawings accompanying and forming a part of the same.

The apparatus for converting electric currents of ordinary character into those of high frequency, which I have heretofore shown and described in applications for Letters Patent, has usually comprised a condenser and a circuit-controller operated by a suitable motive device and acting to alternately charge the condenser from a suitable source of supply and discharge it through a circuit of such character as to render the discharge one of very high frequency. For many purposes it has been found advantageous to construct the circuit-controller with insulating and conducting segments of equal length, so that the condenser is connected with its discharge-circuit during one-half of the time only. It follows from this that the working circuit, or that in which the high-frequency currents are developed in form for practical application, receives such currents during only one-half the time.

For certain purposes it is desirable for economical operation that there should be no cessation of the flow of such currents, and my present improvements have been devised with the object of increasing the output of a given apparatus by providing means by which, without material additions to or complication of such apparatus, high-frequency currents may be produced thereby continuously or without periods of rest.

Broadly stated, the improvement consists in the combination of two condensers with a circuit-controller of such character and so operated by a single motive device as to charge and discharge said condensers alternately, whereby one will be discharging while the other is being charged, and conversely.

In the drawings hereto annexed, Figure 1 is a diagrammatic illustration of the arrangement and circuit connections of the invention. Fig. 2 is a sectional view of a part of the commutator employed; and Fig. 3 is a diagram similar to that of Fig. 1, illustrative of a modified embodiment of the invention.

Let A B designate the two conductors of any circuit from which the energy is derived that is to be converted into a current of high frequency.

C is a circuit controller or commutator, a portion only for convenience being shown in the figures. It is designed to be rotated by any suitable motive device, of which, however, the shaft D only is shown, and its plan of construction is as follows:

The letters *c c'* designate two metal heads or castings with projecting portions *d d'*, which, when the two heads are brought together and secured to a hub or shaft, intermesh, as shown in the drawings.

The spaces between two adjacent projections or bars *d d'* are equal in arc to the width of one of said bars and are filled in with blocks *e*, preferably of metal, insulated from the other conducting portions of the device. By the interposition of mica or other suitable insulating material the two heads or castings *c c'* are insulated from each other. Upon the periphery of this commutator bear three brushes G G' H, the two former resting upon the continuous metallic portions of the two heads, respectively, the latter being in position to bear upon the projections *d d'* and blocks *e* alternately.

In order that the brushes may be capable of carrying any current which the operation of the apparatus may demand, they are made of large cross-section, the brush H being approximately equal in width to one of the projections or segments *d d'*, or to the space between adjacent segments, so that in passing from one it comes into contact with the next.

The brush H is connected to the main B through a primary coil K of low self-induction in inductive relation to a secondary L, which constitutes the ultimate source of the current of high frequency which the apparatus is designed to develop and which feeds a circuit containing vacuum-tubes M, single terminal lamps M', or other suitable devices. The brushes G G' are connected with the main B through condensers N N', respectively, and to the main A through self-induction or choking coils O O', these latter being used in order

P-246

that the inductive discharge of the accumulated energy therein may be taken advantage of in charging the condensers.

The operation of the apparatus thus described is as follows: By the rotation of the commutator C the brush H is caused to pass over the projections *d*, closing the circuits through the primary K and the two condensers alternately. These two circuits are so adjusted as to have the same capacity, self-induction, and resistance. When said brush is in electrical connection with any projection *d'* from the part *c'*, the circuit is closed between mains A and B through coil O', brush G', brush H, and coil K. Energy is therefore accumulated in the coil O'. At the same time the condenser N' is short-circuited through the brush G', brush H, and coil K, and discharges through this circuit the energy stored in it, the discharge being in the form of a series of impulses which induce in the secondary L corresponding impulses of high potential. When brush H breaks the circuit through coil O', the high-potential discharge or "kick" from the latter rushes into and recharges the condenser N', but as soon as the brush H has passed over the intervening block *e* and reached the next segment *d* it closes the circuit through coil O and short-circuits the condenser N, so that high-frequency currents from either one or the other of the two condensers are flowing through the primary K practically without interruption. Thus without increasing the size or power of the motive device or complicating in any material degree the commutator these devices are made to perform double duty and the output of the apparatus as a whole greatly increased.

In Fig. 3 I have illustrated a modified form of commutator for this apparatus, which comprises a disk E, of metal, but insulated from its shaft. The periphery of this disk is divided into conducting and insulated segments by the insertion therein of insulated metal blocks *f*. The circumferential width of these blocks is three times that of the conducting-segments *f'*. A brush F bears upon a continuous metallic portion of the disk or upon a continuous ring in electrical connection with the segments *f'* and is connected with one terminal of the primary K. Brushes F' F'' bear upon the periphery of the disk E and are connected to the main B through the two condensers, respectively. These brushes are capable of angular adjustment, so that they may be set to bear upon the disk at any two desired points.

From the explanation of the operation already given it is evident that when the two brushes F' F'' are set so that one leaves a segment *f'* at the instant that the other comes in contact with a segment *f'* the effect in charging and discharging the condensers is the same as in the previous instance. The capability of varying the relations of the brushes, however, which this form possesses has the advantage of permitting not only an alternate charging and discharge of the condensers, but their simultaneous charging and discharge in multiple arc, whereby the frequency of the current of discharge is reduced.

It is also evident that all phase differences in the charging and discharging of the condensers may in like manner be secured and the frequency varied within wide limits. Of course the same motor and circuit-controller might be made to charge more than two condensers in succession and to discharge them in the same order.

What I claim is—

1. The combination with a source of electric energy, of a plurality of condensers and a discharge-circuit therefor, a motive device and a circuit-controller operated thereby and adapted to direct the energy of the source into the condensers and connect them with the discharge-circuit successively and in alternation, as set forth.

2. The combination with a source of electric energy, of a motive device, two condensers, a circuit-controller adapted to direct the energy of the source alternately into the said condensers, and a discharge-circuit through which, by the operation of said circuit-controller one condenser discharges while the other is being charged, as set forth.

NIKOLA TESLA.

Witnesses:
M. LAWSON DYER,
DRURY W. COOPER.

(No Model.) 2 Sheets—Sheet 1

N. TESLA.

APPARATUS FOR PRODUCING ELECTRIC CURRENTS OF HIGH FREQUENCY

No. 577,670. Patented Feb. 23, 1897.

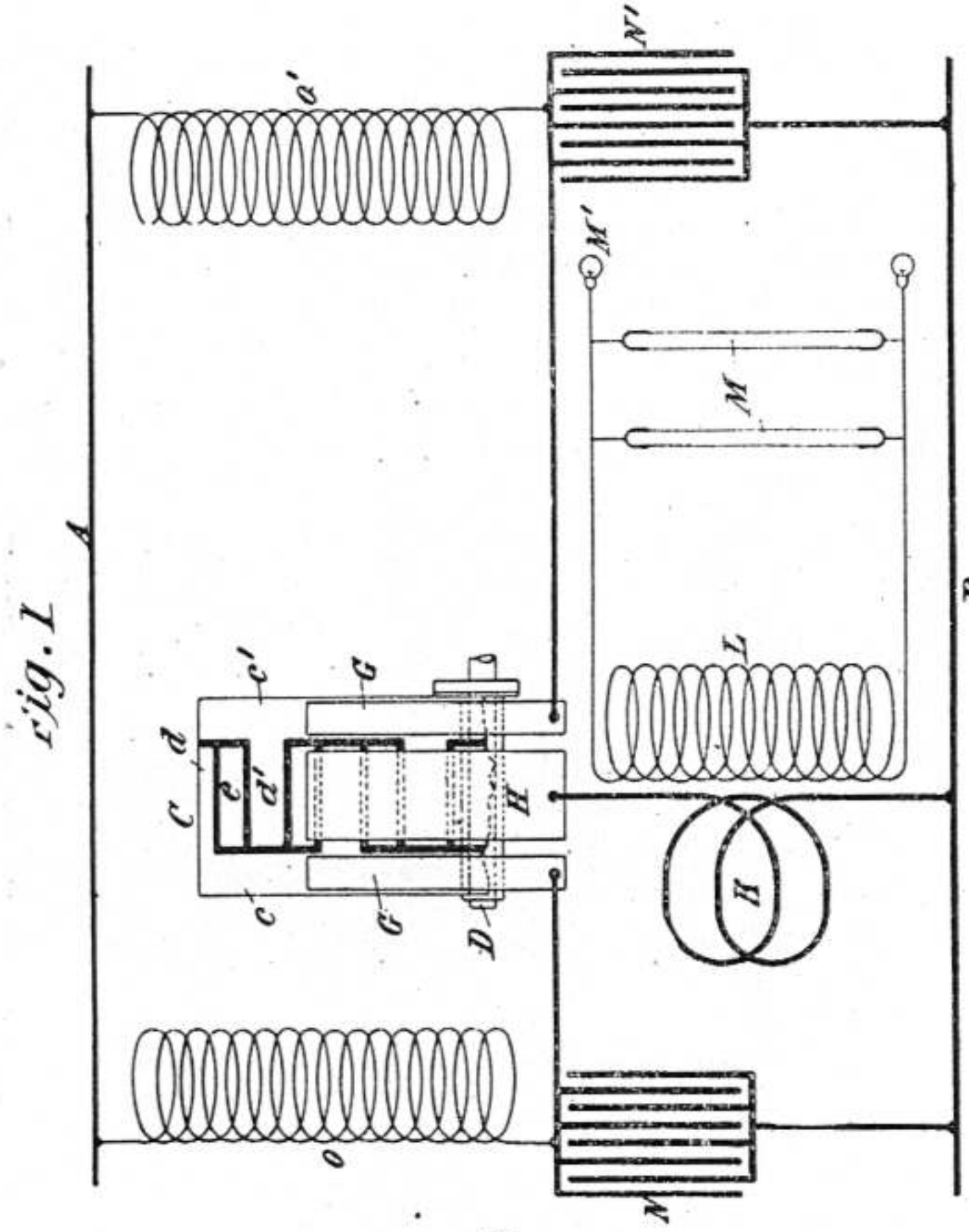

Fig. 2.

Witnesses:
Edwin B. Hopkinson.
M. Lawson Byrn

Nikola Tesla
Inventor
by Kerr. Curtis & Page.
Attys.

P-248

(No Model.) 2 Sheets—Sheet 2

N. TESLA.

APPARATUS FOR PRODUCING ELECTRIC CURRENTS OF HIGH FREQUENCY.

No. 577,670. Patented Feb. 23, 1897.

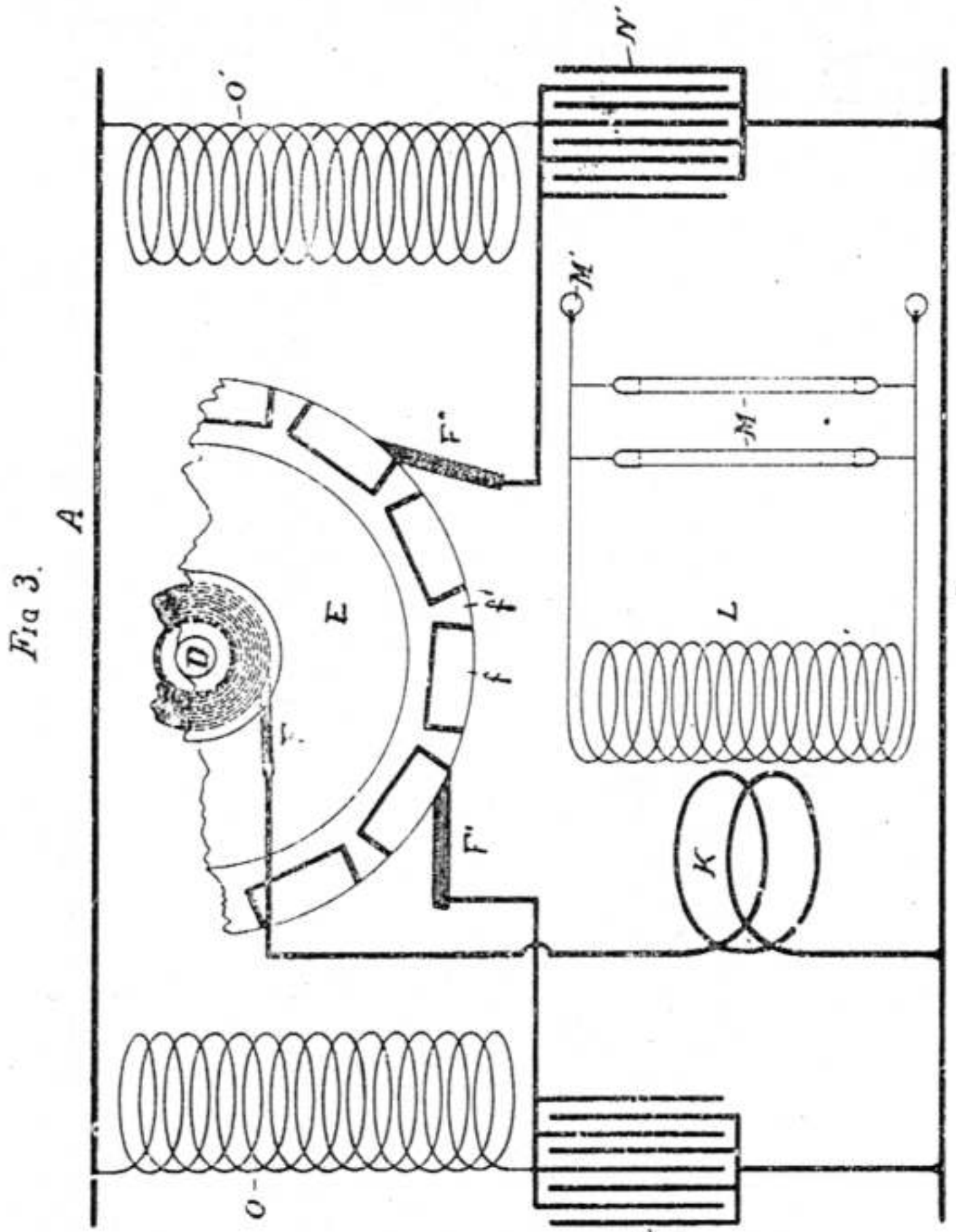

WITNESSES

W. Lawson Dyer

Edwin B Hopkinson.

Nikola Tesla INVENTOR

BY

Kerr, Curtis & Page ATTORNEYS

UNITED STATES PATENT OFFICE.

NIKOLA TESLA, OF NEW YORK, N. Y.

APPARATUS FOR PRODUCING CURRENTS OF HIGH FREQUENCY.

SPECIFICATION forming part of Letters Patent No. 583,953, dated June 8, 1897.

Application filed October 19, 1896. Serial No. 609,292. (No model.)

To all whom it may concern:

Be it known that I, NIKOLA TESLA, a citizen of the United States, residing at New York, in the county and State of New York, have invented certain new and useful Improvements in Apparatus for Producing Currents of High Frequency, of which the following is specification, reference being had to the drawings accompanying and forming a part of the same.

The invention upon which my present application is based is an improvement in apparatus for the conversion of electrical currents of ordinary character—such, for instance, as are obtainable from the mains of municipal electric light and power systems and either continuous or alternating—into currents of very high frequency and potential.

The improvement is applicable generally to apparatus of the kind heretofore invented by me and more particularly described in United States Letters Patent granted to me on September 22, 1896, No. 568,176; but in the description of the invention which follows the illustration is confined to a form of apparatus designed for converting a continuous or direct current into one of high frequency. In the several forms of apparatus for this purpose which I have devised and heretofore described I have employed a circuit of high self-induction connected with the mains from a suitable source of current and containing some form of circuit-controller for periodically interrupting it. Around the break or point of interruption I have arranged a condenser, into which the circuit discharges when interrupted, and this condenser is in turn made to discharge through a circuit containing the primary of a transformer, and of such character that the condenser-discharge will be in the form of an extremely rapid succession of impulses.

Now in order to secure in an apparatus of this kind as high frequency as possible and the advantages resulting therefrom I subdivide the condenser necessary for storing the energy required into integral parts or provide independent condensers, and employ means for charging said condensers in multiple and discharging them in series through the primary of the transformer. To secure this result without unduly complicating the apparatus is a matter of very considerable difficulty, but I have accomplished it by means of the apparatus which I shall now proceed to describe by reference to the drawings.

Figure 1 is a side elevation of the apparatus which I employ, and Fig. 2 is a diagram of the circuit connections.

Referring to Fig. 1, A is a box or case containing the condensers, of which the terminals are *a a b b*, respectively. On this case is mounted a small electromagnetic motor B, by the shaft of which is operated the circuit-controller C. Upon the said controller bear brushes, as shown at D D′ D″ D‴.

F F are self-induction coils placed beside the motor. Above these is the transformer, composed, essentially, of a primary G and a secondary H. These devices are intended to be inclosed in a suitable box or case, and may be very greatly modified in construction and relative arrangement. The circuit-controller, however, should conform in general principle of construction to that hereinafter described in so far as may be necessary to secure the operation pointed out.

Referring now to Fig. 2, L L designate the mains from a suitable source of supply, between which a circuit is formed, including the self-induction coils F F and the circuit-controller C. A switch *d* may be employed to bring either or both of the coils F F into this circuit, as may be desired.

The circuit-controller is built up of insulated plates or segments, upon which the positive and negative brushes bear, and these plates may be considered as belonging to three sets or classes, first, the plates *m* for what may be considered as the positive brushes D D′ in one row, electrically connected together, and the corresponding plates *n* for what may similarly be considered as the negative brushes E E′ in the other row; second, the plates *o*, which lie in both rows, and hence are conveniently made in single pieces extending across the controller, and, third, the idle or spacing plates *p*, which are interposed in each row between the other two sets. The angle between adjacent plates of the same set is equal to the angle of displacement between adjacent brushes of the same sign, and obviously there may be two or more of each. The brush D of one set is connected with one

main through the coils F, and each one of the brushes of the same set is connected to one of the terminals of the condensers M N, respectively. Similarly the brush E of the other set of brushes is connected to the opposite main and each of the brushes of said set to the opposite condenser terminals through the primary or strands of a primary G. In the diagram, Fig. 2, I have shown but two brushes in each set and two condensers, but more than this number may be used, the same plan of connections shown and described being followed out.

In the position of the parts shown in Fig. 2, in which two positive and two negative brushes are shown, the brushes are bearing on plates *m m* and *n n*. Consequently the circuit through the coils F F is through the condensers in multiple, and, assuming that energy has been stored in said coils, the condensers will thus be charged. If now by the movement of the controller plates or brushes the latter are shifted across the idle or spacing plates *p* onto the long or cross-connected plates *o* two results follow: The mains are short-circuited through the coils F F, which therefore store energy, while the condensers are connected in series through the primary coil or coils G. These actions are repeated by the further movement of the controller, the condensers being charged in parallel when the brushes are on plates *m n* and discharged in series when the brushes pass onto plates *o*. The motor may be run by an independent source or by current derived from the mains, and the apparatus may be employed to supply current for any suitable devices S T, connected with the secondary coil H.

As stated above, the specific construction of the circuit-controller may be very greatly varied without departure from the invention. In the drawings the plates are assumed to be associated in the form of a cylinder which revolves with respect to brushes bearing on its periphery; but it will be understood that this is merely a typical illustration of any form of terminals or contacts and conductors, whether rotary or reciprocating, which constitute a circuit-controller capable of effecting the same result.

The advantages resulting from the subdivision of the condenser or the employment of a plurality of condensers are mainly that a high frequency is obtainable in apparatus of any size; that the current of discharge through the sliding contacts is greatly reduced and injury to such contacts thereby avoided and a great saving in wire in the secondary effected.

What I claim is—

1. In an apparatus of the kind described, the combination with a set of contacts, one of which is adapted for connection with one of the mains from a source of current, and each of which is connected to one of the terminals of a series of condensers, and a second set of contacts similarly connected to the opposite main and condenser terminals, respectively, of electrically-connected plates or segments upon which the contacts of the first set bear, similarly-connected plates upon which the contacts of the second set bear, and isolated plates common to the two sets of contacts, the said plates being arranged in the manner described, whereby the condensers will be alternately charged in multiple and discharged in series, as set forth.

2. In an apparatus of the kind described, the combination with a set of positive brushes, one of which is adapted for connection with one of the mains from a source of current, and each of which is connected to one of the terminals of a series of condensers, and negative brushes similarly connected to the opposite main and condenser terminals, respectively, of a cylinder composed of electrically-connected segments upon which the positive brushes only bear, similarly-connected segments upon which the negative brushes only bear, and isolated plates upon which both sets of brushes simultaneously bear, the said plates being arranged in the manner described, whereby the condensers will be alternately charged in multiple and discharged in series, as set forth.

NIKOLA TESLA

Witnesses:
M. LAWSON DYER,
DRURY W COOPER

(No Model.)

N. TESLA

APPARATUS FOR PRODUCING CURRENTS OF HIGH FREQUENCY.

No. 583,953. Patented June 8, 1897.

Fig. 2.

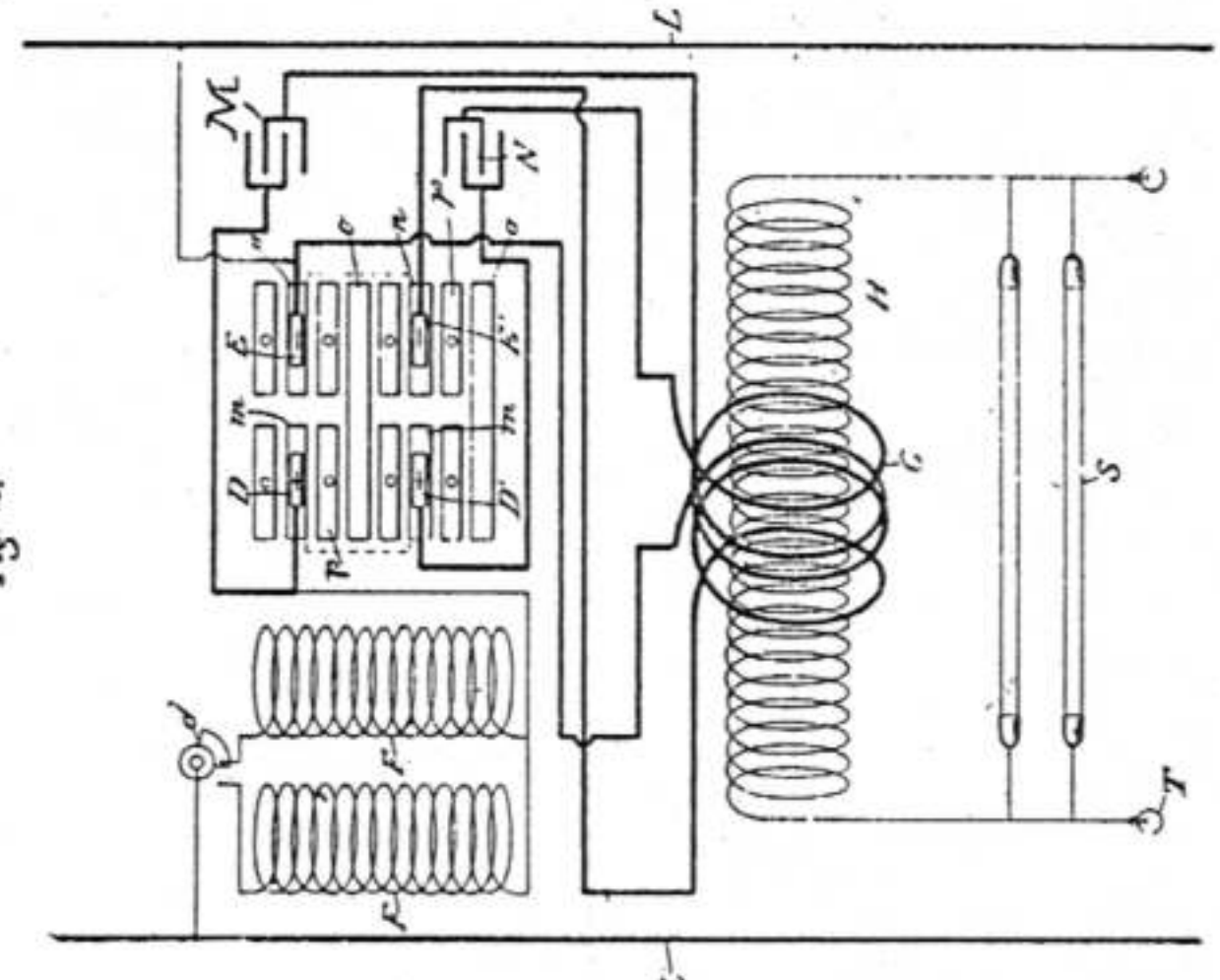

Fig. 1.

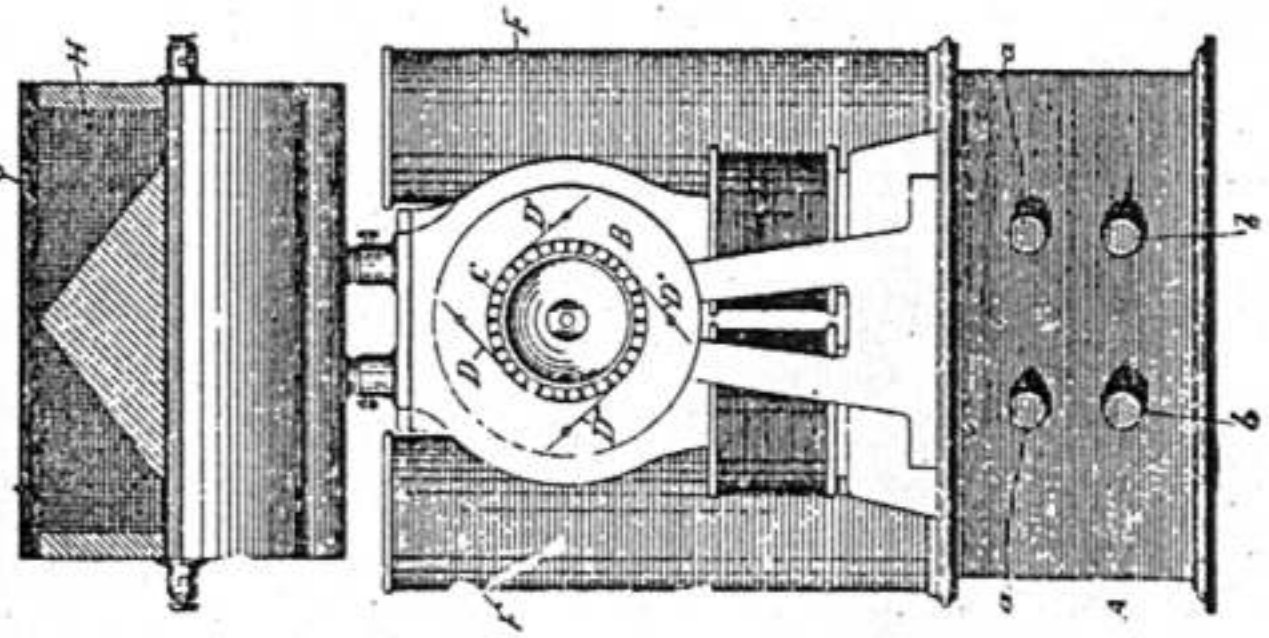

WITNESSES

G. B. Lewis

Edwin B Hopkinson

INVENTOR

Nikola Tesla

BY

Kerr, Curtis & Page

ATTORNEYS.

UNITED STATES PATENT OFFICE.

NIKOLA TESLA, OF NEW YORK, N. Y.

ELECTRICAL TRANSFORMER.

SPECIFICATION forming part of Letters Patent No. 593,138, dated November 2, 1897.

Application filed March 20, 1897. Serial No. 628,453. (No model.)

To all whom it may concern:

Be it known that I, NIKOLA TESLA, a citizen of the United States, residing at New York, in the county and State of New York, have invented certain new and useful Improvements in Electrical Transformers, of which the following is a specification, reference being had to the drawings accompanying and forming a part of the same.

The present application is based upon an apparatus which I have devised and employed for the purpose of developing electrical currents of high potential, which transformers or induction-coils constructed on the principles heretofore followed in the manufacture of such instruments are wholly incapable of producing or practically utilizing, at least without serious liability of the destruction of the apparatus itself and danger to persons approaching or handling it.

The improvement involves a novel form of transformer or induction-coil and a system for the transmission of electrical energy by means of the same in which the energy of the source is raised to a much higher potential for transmission over the line than has ever been practically employed heretofore, and the apparatus is constructed with reference to the production of such a potential and so as to be not only free from the danger of injury from the destruction of insulation, but safe to handle. To this end I construct an induction-coil or transformer in which the primary and secondary coils are wound or arranged in such manner that the convolutions of the conductor of the latter will be farther removed from the primary as the liability of injury from the effects of potential increases, the terminal or point of highest potential being the most remote, and so that between adjacent convolutions there shall be the least possible difference of potential.

The type of coil in which the last-named features are present is the flat spiral, and this form I generally employ, winding the primary on the outside of the secondary and taking off the current from the latter at the center or inner end of the spiral. I may depart from or vary this form, however, in the particulars hereinafter specified.

In constructing my improved transformers I employ a length of secondary which is approximately one-quarter of the wave length of the electrical disturbance in the circuit including the secondary coil, based on the velocity of propagation of electrical disturbances through such circuit, or, in general, of such length that the potential at the terminal of the secondary which is the more remote from the primary shall be at its maximum. In using these coils I connect one end of the secondary, or that in proximity to the primary, to earth, and in order to more effectually provide against injury to persons or to the apparatus I also connect it with the primary.

In the accompanying drawings, Figure 1 is a diagram illustrating the plan of winding and connection which I employ in constructing my improved coils and the manner of using them for the transmission of energy over long distances. Fig. 2 is a side elevation, and Fig. 3 a side elevation and part section, of modified forms of induction-coil made in accordance with my invention.

A designates a core, which may be magnetic when so desired.

B is the secondary coil, wound upon said core in generally spiral form.

C is the primary, which is wound around in proximity to the secondary. One terminal of the latter will be at the center of the spiral coil, and from this the current is taken to line or for other purposes. The other terminal of the secondary is connected to earth and preferably also to the primary.

When two coils are used in a transmission system in which the currents are raised to a high potential and then reconverted to a lower potential, the receiving-transformer will be constructed and connected in the same manner as the first—that is to say, the inner or center end of what corresponds to the secondary of the first will be connected to line and the other end to earth and to the local circuit or that which corresponds to the primary of the first. In such case also the line-wire should be supported in such manner as to avoid loss by the current jumping from line to objects in its vicinity and in contact with earth—as, for example, by means of long insulators, mounted, preferably, on metal poles, so that in case of leakage from the line it will pass harmlessly to earth. In Fig. 1, where such a system is illustrated, a dynamo G is con-

veniently represented as supplying the primary of the sending of "step-up" transformer, and lamps H and motors K are shown as connected with the corresponding circuit of the receiving or "step-down" transformer.

Instead of winding the coils in the form of a flat spiral the secondary may be wound on a support in the shape of a frustum of a cone and the primary wound around its base, as shown in Fig. 2.

In practice for apparatus designed for ordinary usage the coil is preferably constructed on the plan illustrated in Fig. 3. In this figure L L are spools of insulating material upon which the secondary is wound—in the present case, however, in two sections, so as to constitute really two secondaries. The primary C is a spirally-wound flat strip surrounding both secondaries B.

The inner terminals of the secondaries are led out through tubes of insulating material M, while the other or outside terminals are connected with the primary.

The length of the secondary coil B or of each secondary coil when two are used, as in Fig. 3, is, as before stated, approximately one-quarter of the wave length of the electrical disturbance in the secondary circuit, based on the velocity of propagation of the electrical disturbance through the coil itself and the circuit with which it is designed to be used—that is to say, if the rate at which a current traverses the circuit, including the coil, be one hundred and eighty-five thousand miles per second, then a frequency of nine hundred and twenty-five per second would maintain nine hundred and twenty-five stationary waves in a circuit one hundred and eighty-five thousand miles long, and each wave length would be two hundred miles in length. For such a frequency I should use a [illegible]fty miles in length, so that at one terminal the potential would be zero and at the other maximum.

Coils of the character herein described have several important advantages. As the potential increases with the number of turns the difference of potential between adjacent turns is comparatively small, and hence a very high potential, impracticable with ordinary coils, may be successfully maintained.

As the secondary is electrically connected with the primary the latter will be at substantially the same potential as the adjacent portions of the secondary, so that there will be no tendency for sparks to jump from one to the other and destroy the insulation. Moreover, as both primary and secondary are grounded and the line-terminal of the coil carried and protected to a point remote from the apparatus the danger of a discharge through the body of a person handling or approaching the apparatus is reduced to a minimum.

I am aware that an induction-coil in the form of a flat spiral is not in itself new, and this I do not claim; but

What I claim as my invention is—

1. A transformer for developing or converting currents of high potential, comprising a primary and secondary coil, one terminal of the secondary being electrically connected with the primary, and with earth when the transformer is in use, as set forth.

2. A transformer for developing or converting currents of high potential, comprising a primary and secondary wound in the form of a flat spiral, the end of the secondary adjacent to the primary being electrically connected therewith and with earth when the transformer is in use, as set forth.

3. A transformer for developing or converting currents of high potential comprising a primary and secondary wound in the form of a spiral, the secondary being inside of, and surrounded by, the convolutions of the primary and having its adjacent terminal electrically connected therewith and with earth when the transformer is in use, as set forth.

4. In a system for the conversion and transmission of electrical energy, the combination of two transformers, one for raising, the other for lowering, the potential of the currents, the said transformers having one terminal of the longer or fine-wire coils connected to line, and the other terminals adjacent to the shorter coils electrically connected therewith and to the earth, as set forth.

NIKOLA TESLA.

Witnesses:
M. LAWSON DYER
G. W. MARTLING

P-254

(No Model.)

2 Sheets—Sheet 1.

N. TESLA.

ELECTRICAL TRANSFORMER.

No. 593,138. Patented Nov. 2, 1897.

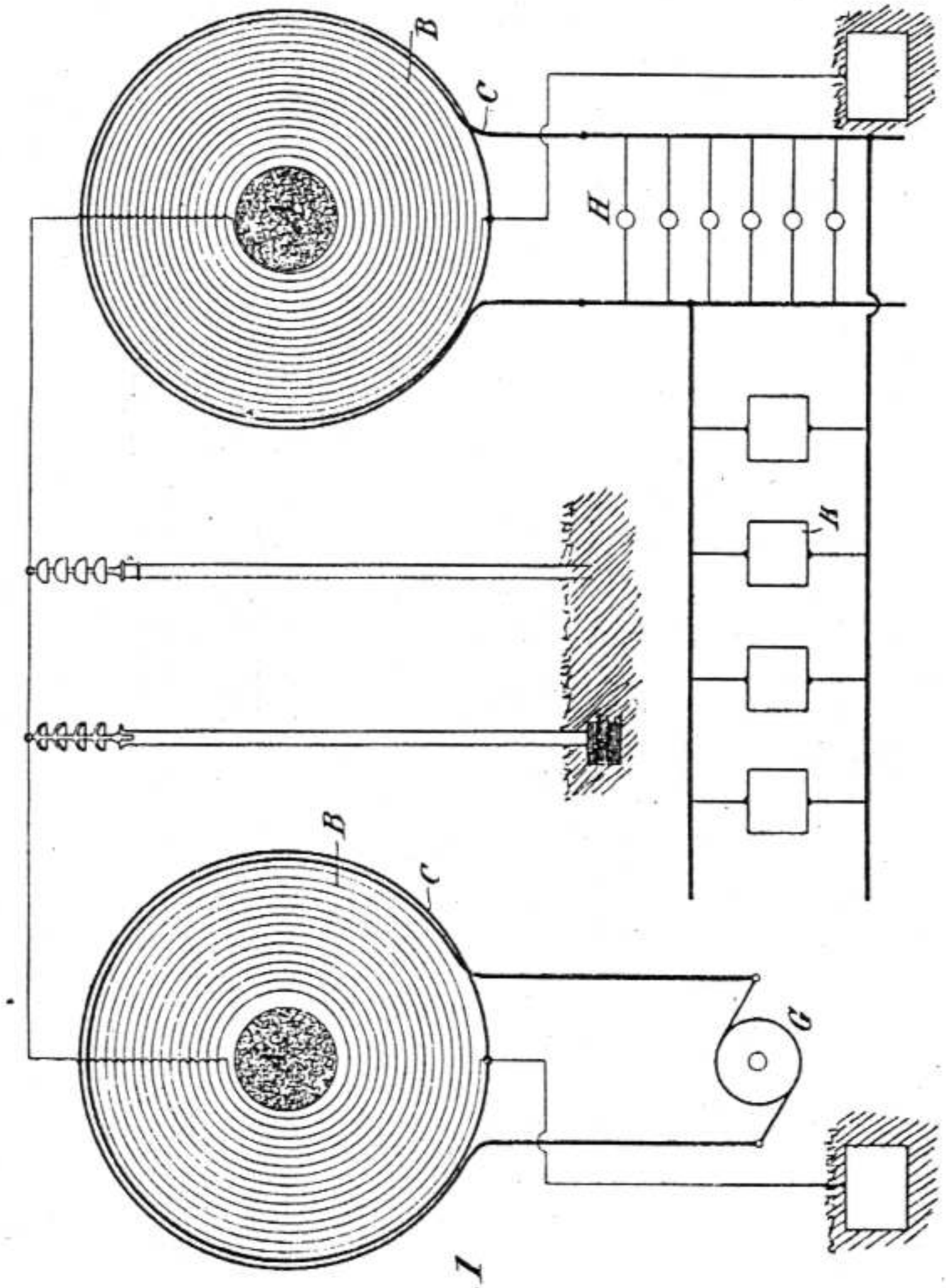

Fig. 1

WITNESSES

Y. B. Lewis.

Edwin B. Hopkinson.

INVENTOR

Nikola Tesla

BY

Kerr, Curtis & Page.

ATTORNEY

P-255

(No Model.) 2 Sheets—Sheet 2

N. TESLA.

ELECTRICAL TRANSFORMER.

No. 593,138. Patented Nov. 2, 1897.

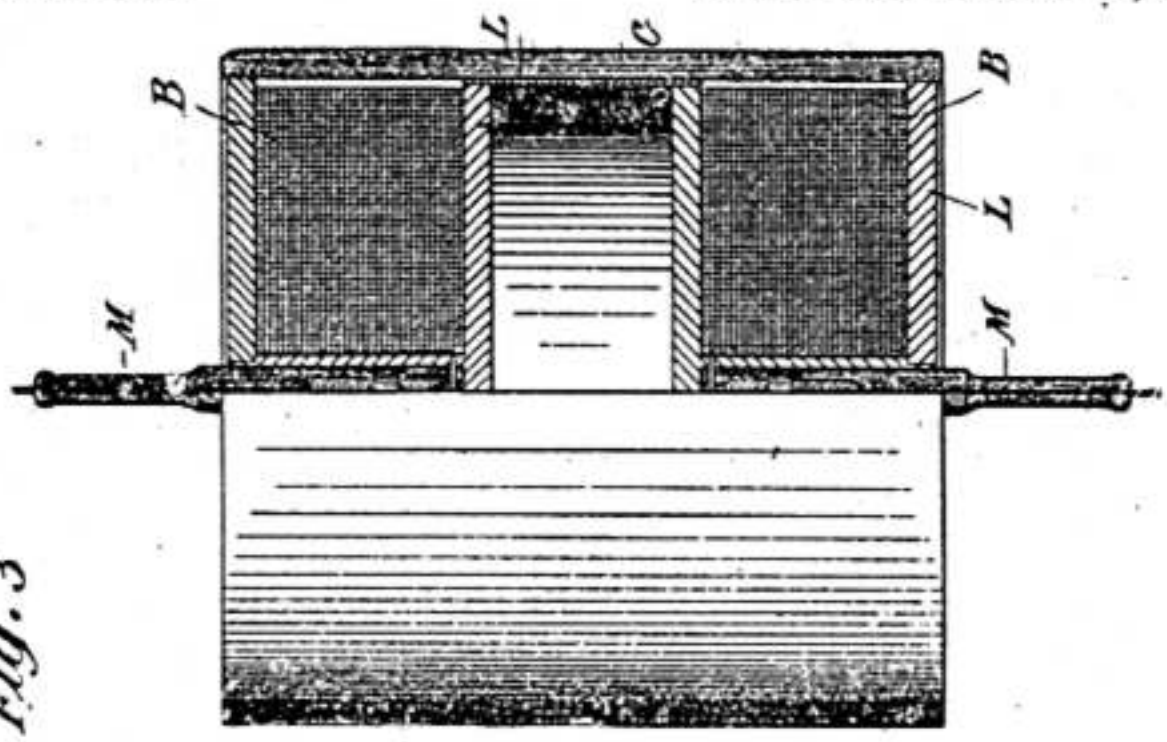

Fig. 3

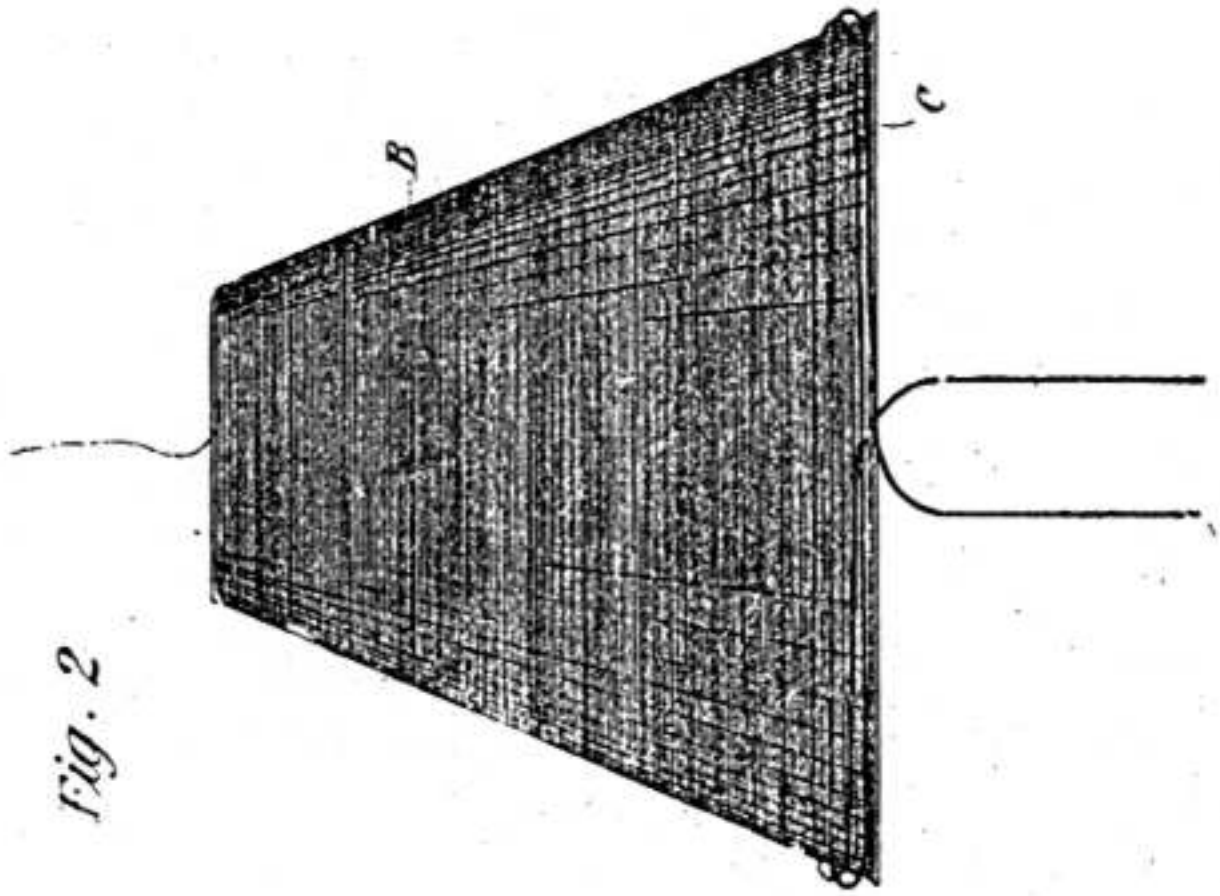

Fig. 2

WITNESSES

G. B. Lyon

Edwin B. Hopkinson

INVENTOR

Nikola Tesla

BY

Kerr, Curtis & Page

ATTORNEYS.

UNITED STATES. PATENT OFFICE.

NIKOLA TESLA, OF NEW YORK, N. Y.

ELECTRIC-CIRCUIT CONTROLLER.

SPECIFICATION forming part of Letters Patent No. 609,251, dated August 16, 1898.

Application filed June 3, 1897. Renewed June 15, 1898. Serial No. 683,525. (No model.)

To all whom it may concern:

Be it known that I, NIKOLA TESLA, a citizen of the United States, residing at New York, in the county and State of New York, have invented certain new and useful Improvements in Electric-Circuit Controllers, of which the following is a specification, reference being had to the drawings accompanying and forming a part of the same.

In previous patents granted to me I have shown and described methods and apparatus for the conversion and utilization of electrical currents of very high frequency based upon the principle of charging a condenser or a circuit possessing capacity and discharging the same generally through the primary of a transformer, the secondary of which constituted the source of working current and under such conditions as to yield a vibrating or rapidly-intermittent current.

In some of the forms of apparatus which I have heretofore devised for carrying out this invention I have employed a mechanism for making and breaking an electric circuit or branch thereof for the purpose of charging and discharging the condenser, and my present application is based upon a novel and improved form of device for this purpose, which may be generally styled a "circuit-controller."

In order that the full advantages of my system may be realized and the best practical results secured, the said circuit-controller should be capable of fulfilling certain requirements, the most important among which is the capability of effecting an extremely-rapid interruption and completion of the circuit. It is also of importance that such makes and breaks, and more especially the former, should be positive and abrupt, and from considerations of economy and practicability it is essential that the apparatus should be cheaply constructed, not liable to derangement, and capable of prolonged use without attention or adjustment. With the object of attaining these results, which have never heretofore been fully attained in any form of mechanical circuit-controller of which I am aware, I devised and developed the circuit-controller which forms the subject of my present application and which may in general terms be described as follows:

The device in its typical embodiment comprises as essential elements two terminals—one with peripheral contacts alternating with insulating-spaces, such as is exemplified in a stelliform disk and which is capable of rotation, and the other a rotatable receptacle containing a fluid in which more or less of the first-named terminal is immersed.

In the preferred construction of the apparatus the receptacle contains both a conducting and a non-conducting fluid, the former being the heavier, and I maintain the terminals in such relations that the electrical connection between them is made and broken by the successive immersion of the contact-points into and their withdrawal from the conducting through the non-conducting fluid. These relations are best maintained by such construction of the receptacle that the distribution of the two fluids necessary for the proper operation of the device may be preserved by centrifugal action and the rotation of the other terminal effected by the movement of the fluid or fluids relatively thereto.

To secure the conditions necessary for the accomplishment of the objects of the invention, various mechanical expedients may be resorted to; but the best and most practicable device for the purpose of which I am aware is a hollow wheel or drum mounted so as to be rotated at any desired speed and containing a conducting fluid, such as mercury or an electrolyte, which by the rotation of the drum is thrown by centrifugal force outward to the inner periphery of the same, and a sufficient quantity of a lighter non-conducting or poorly-conductive fluid, such as water or oil, which by the centrifugal action is maintained on the surface of the heavier conducting fluid and tends to prevent the occurrence of arcs between the contact-points and the conducting fluid.

A central opening is formed in one side of the drum, through which enters an arm carrying a disk with peripheral projections or vanes which when the drum is rotated project to a sufficient extent toward or into the conducting fluid to effect the makes and breaks of the circuit.

The motion of the fluid within the drum causes the disk to rotate and its projections or vanes to make and break the circuit with

a rapidity which may be very great. In fact, when the drum is rotated at a high rate of speed the fluid conductor may become in its effect similar to a solid body, upon which the conducting-disk rolls, so that the conducting fluid might be dispensed with, although I find it preferable to use it.

In order to insure the proper immersion of the projections into the fluid to compensate for wear and at the same time to secure a yielding pressure between the fluid and the disk, it is desirable to employ, for the disk some form of spring connection or support which will exert a force tending to force it in contact with the fluid.

I have also devised certain details of construction which add to the efficiency and practicability of the apparatus which will be more conveniently described by reference to the accompanying drawings.

Figure 1 is a side elevation of a complete apparatus for producing currents of high frequency and to which my present invention is applied. Fig. 2 is a central vertical section of the improved circuit-controller of Fig. 1; Fig. 3, an end view of the same; Fig. 4, a modified form of the circuit-controller, showing it in connection with the remaining parts of the apparatus illustrated diagrammatically; and Fig. 5, a side view of the same with the receptacle in section.

As the apparatus as a whole is now well known, a brief description of the same will suffice for an understanding of its character.

The various parts or devices are preferably mounted on a base B, which contains the condenser, and comprise a transformer A with primary and secondary coils, one or more self-induction coils C, a small electromagnetic motor D, and the circuit-controller, which is driven by the motor. The circuit connections will be described in connection with Fig. 5.

In general plan of construction and arrangement the apparatus is essentially the same as that described and shown in a patent granted to me September 22, 1896, No. 568,176.

The shaft of the motor D extends through a stationary disk E, and to its end is keyed a hollow wheel or drum F, which rotates with it. Two standards G are secured to the disk E and connected by a cross-bar H, from which extends an arm K into the interior of the drum F through a central opening in its side.

To the end of the arm K is secured an arm L, carrying at its free end a disk M with peripheral teeth or projections N, as shown in Fig. 3. The disk is mounted on any suitable bearings in the arm L, so as to be capable of free rotation.

It is desirable that the disk should admit of adjustment with respect to the inner peripheral surface of the drum, and for this purpose I secure the arm K to a rod O, which passes through supports in the cross-bar H and is adjustable therein by means of threaded nuts P.

The interior of the drum F is formed by preference in substantially the manner shown in Fig. 2—that is to say, it is tapered or contracted toward the periphery so as to form a narrow trough in which the fluid is confined when the drum is rotated.

R designates the conducting fluid, and S the lighter non-conducting fluid, which are used in the drum. If the proper quantities and proportions of these fluids be introduced into the drum and the latter set in rapid rotation, the two fluids will distribute themselves under the action of centrifugal force around the drum in the manner indicated in Fig. 2. The arm K is adjusted so that the teeth or projections on the disk M will just enter the conducting fluid, and by the action of either or both the disk will be rapidly rotated. Its teeth are so arranged that no two are simultaneously in contact with the conducting fluid, but come into the same successively. If, therefore, one part of the circuit be connected to the drum, as by a contact strip or brush T, and the other part to the disk M, or to any part, as the standards G, which are insulated from the frame of the apparatus and in metallic connection with the disk M, the circuit will be made and broken with a rapidity which may obviously be made enormously high. The presence of the non-conducting fluid on the surface of the other operates to prevent the occurrence of sparks as the teeth N leave the latter and also to prevent the current from leaping across the space between the teeth and the conductor as the two approach.

In illustration of the modifications of which the improvement is susceptible I now refer to Figs. 4 and 5, in which also certain novel and useful details of construction applicable generally to the invention are shown.

In the modification shown in Figs. 4 and 5 two rigid arms L and L', each carrying a disk M, are shown, and this number may be increased, if so desired. The rotating disks in this case are mounted on spindles at right angles to the axis of rotation of the drum F, and the contact points or projections are formed as vanes, with faces inclined to the plane of rotation, so as to be rotated by the movement of the fluid in the manner of turbine wheels.

In order to provide a means for automatically adjusting the disks to compensate for any wear and keep the ends of the vanes or points properly immersed in the fluids, each disk-carrying arm is impelled by a spring or weight in the direction of the periphery of the drum. A convenient way to accomplish this is to form racks on the arms L L' and to provide a pinion *b* in engagement therewith. From the shaft of the pinion extends an arm *c*, the end of which is connected to an adjustable stop *d* by a spiral spring *e*, the tendency of which is to turn the pinion and force both arms L and L' toward the periphery of the drum.

In some applications of the invention it is practicable to prevent the occurrence of arcs

still more effectively or even entirely by using in addition to the non-conducting fluid a somewhat heavier fluid W, which is a comparatively poor conductor and which takes up a position between the conducting and non-conducting fluids.

When two or more disks or equivalent devices are used, they may be connected either in series or multiple. In the present illustration they are shown as in series, and as the arms L and L' are insulated from each other and each connected with a terminal of the source of current the circuit is completed only when a vane of each disk is immersed in the conducting fluid and interrupted at all other times.

The diagram of circuit connections will serve to illustrate the purpose and mode of operation of the device. Let *f f* be the conductors from a source of current, each including a self-induction coil C C' and connected with the arms L and L' and with two conductors B' B'', respectively. Then during the periods when the circuit is completed between the two arms L L' the coils C C' store energy, which on the interruption of said circuit rushes into and charges the condensers. These latter during the periods when the circuit is closed between arms L and L' discharge through the primary A' and induce by such discharge currents in the secondary A'', which are utilized for any purpose for which they may be suited, as in operating vacuum-tubes X or suitable lamps Y.

It will be understood that the rotating drum may be mounted in a horizontal or other plane and from the nature and objects of the results which are attained by the particular apparatus described the construction of this apparatus may be very greatly varied without departure from my invention.

Without therefore limiting myself to the details of construction and arrangement shown herein in illustration of the manner in which my invention is or may be carried out, what I claim is—

1. A circuit-controller comprising, in combination, a receptacle containing a fluid, means for rotating the receptacle, and a terminal supported independently of the receptacle and adapted to make and break electric connection with the receptacle through the fluid, as set forth.

2. A circuit-controller comprising in combination a receptacle containing a conducting fluid and a non-conducting fluid, means for rotating the receptacle and a terminal adapted to make and break electrical connection with the conducting fluid within or under the non-conducting fluid, as set forth..

3. A circuit-controller comprising in combination a terminal capable of rotation and formed or provided with peripheral contacts, a receptacle comprising the opposite terminal and containing a fluid into which the said contacts extend, and means for rotating the receptacle, as set forth.

4. A circuit-controller, comprising, in combination, a terminal capable of rotation and formed or provided with peripheral projections, a receptacle containing a fluid conductor into which the points or projections of the said conductor extend, and means for rotating the said receptacle, as set forth.

5. A circuit-controller comprising, in combination, a terminal capable of rotation and formed or provided with peripheral projections, a centrifugal drum or wheel containing a fluid conductor into which the points or projections of the said conductor extend, and means for rotating the said drum, as set forth.

6. A circuit-controller comprising, in combination, a terminal capable of rotation and formed or provided with peripheral projections, a centrifugal drum or wheel containing a fluid conductor into which the points of the said terminal extend, and means for adjusting the latter with relation to the surface of the fluid, as set forth.

7. A circuit-controller comprising, in combination, a terminal having peripheral projections and capable of rotation, a centrifugal drum or receptacle containing a conducting and a lighter non-conducting fluid, the said terminal being arranged so that its points or projections extend through the non-conducting into the conducting fluid, when the fluids are distributed in the drum under the action of centrifugal force, as set forth.

8. The combination with a hollow centrifugal drum or wheel containing a conducting fluid, a motor for rotating the same, a support extending through an opening into the drum, and a rotatable terminal having peripheral projections, mounted on said support in position in which its projections extend into the fluid when displaced by centrifugal action, as set forth.

9. The combination with a receptacle containing a fluid and means for rotating the same, a terminal with peripheral projections capable of rotation, and a spring connection or support for said terminal tending to force it toward the periphery of the receptacle, as set forth.

10. The combination with a hollow centrifugal drum or wheel containing a conducting fluid and a lighter non-conducting fluid, means for rotating the said drum, a support extending through an opening into the drum, and a rotatable terminal having peripheral projections, mounted on said support in position in which the projections extend through the non-conducting into the conducting fluid when the fluids are displaced by centrifugal action, as set forth.

11. The combination with a centrifugal drum containing a conducting and a non-conducting fluid, means for rotating the drum, a terminal capable of rotation and having peripheral projections, mounted within the drum on a stationary support, and a spring or its equivalent acting on the said terminal

and tending to force its projections toward the inner periphery of said drum, as set forth.

12. The combination with a receptacle containing a conducting fluid, a lighter fluid of low conductivity and a non-conducting fluid lighter than the others, and means for rotating the receptacle, of a terminal adapted to make and break the circuit by movements between the conducting and non-conducting fluid through the intermediate fluid of low conductivity, as set forth.

NIKOLA TESLA.

Witnesses:
M. LAWSON DYER,
PARKER W. PAGE.

P-260

No. 609,251. Patented Aug. 16, 1898.

N. TESLA.

ELECTRIC CIRCUIT CONTROLLER.

(Application filed June 3, 1897. Renewed June 15, 1898.)

(No Model.) 2 Sheets—Sheet 1.

Fig. 3

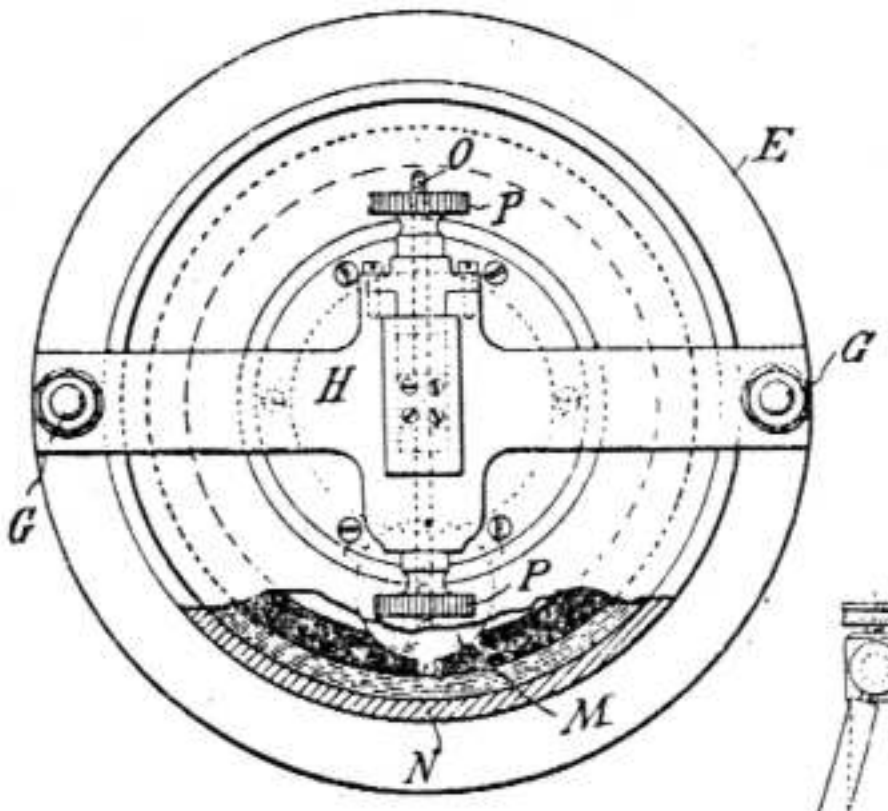

Fig. 2

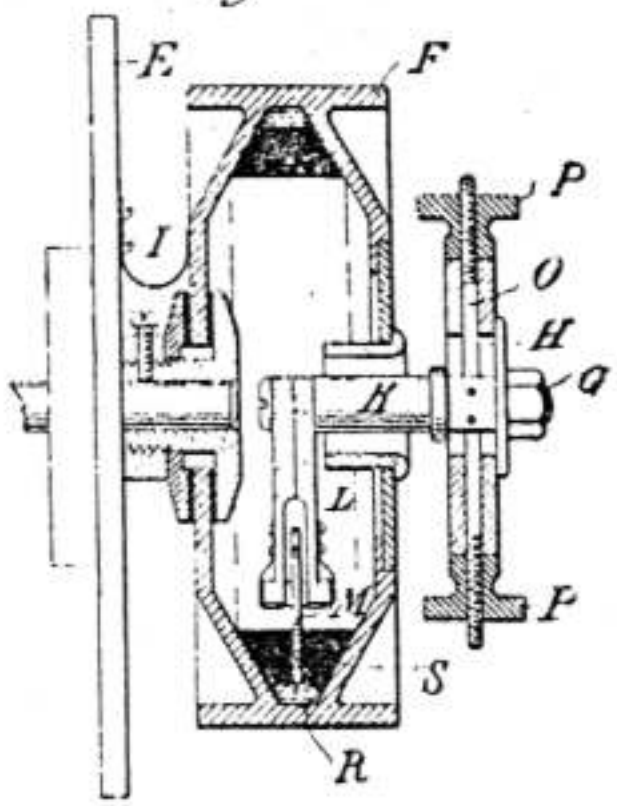

Fig. 1

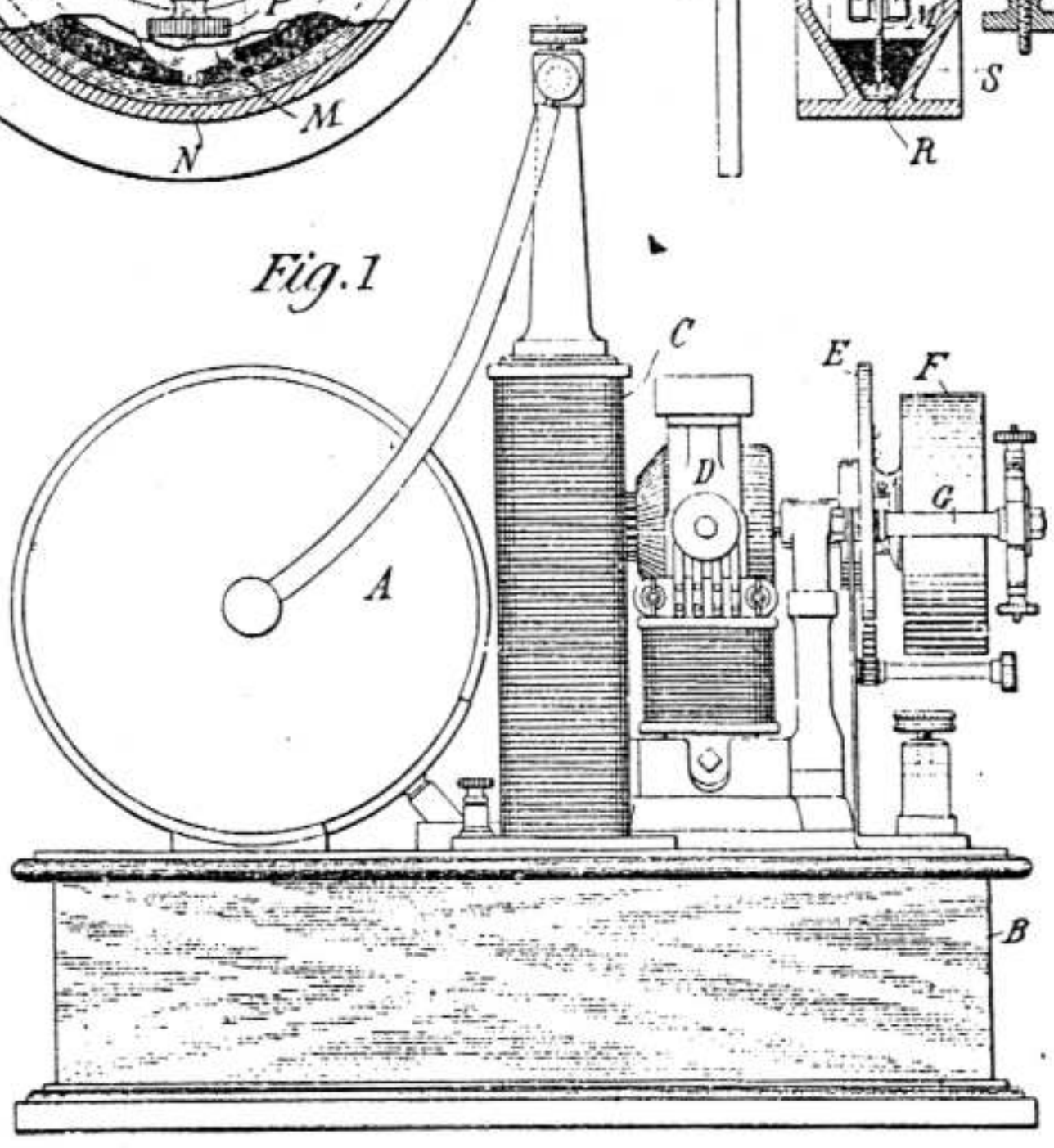

Witnesses:
Raphael Netter
Edwin B Hopkinson.

Inventor
Nikola Tesla
by Rector Curtis & Page Attys

No. 609,251. Patented Aug. 16, 1898.

N. TESLA.

ELECTRIC CIRCUIT CONTROLLER.

(Application filed June 3, 1897. Renewed June 15, 1898.)

2 Sheets—Sheet 2

Fig. 4

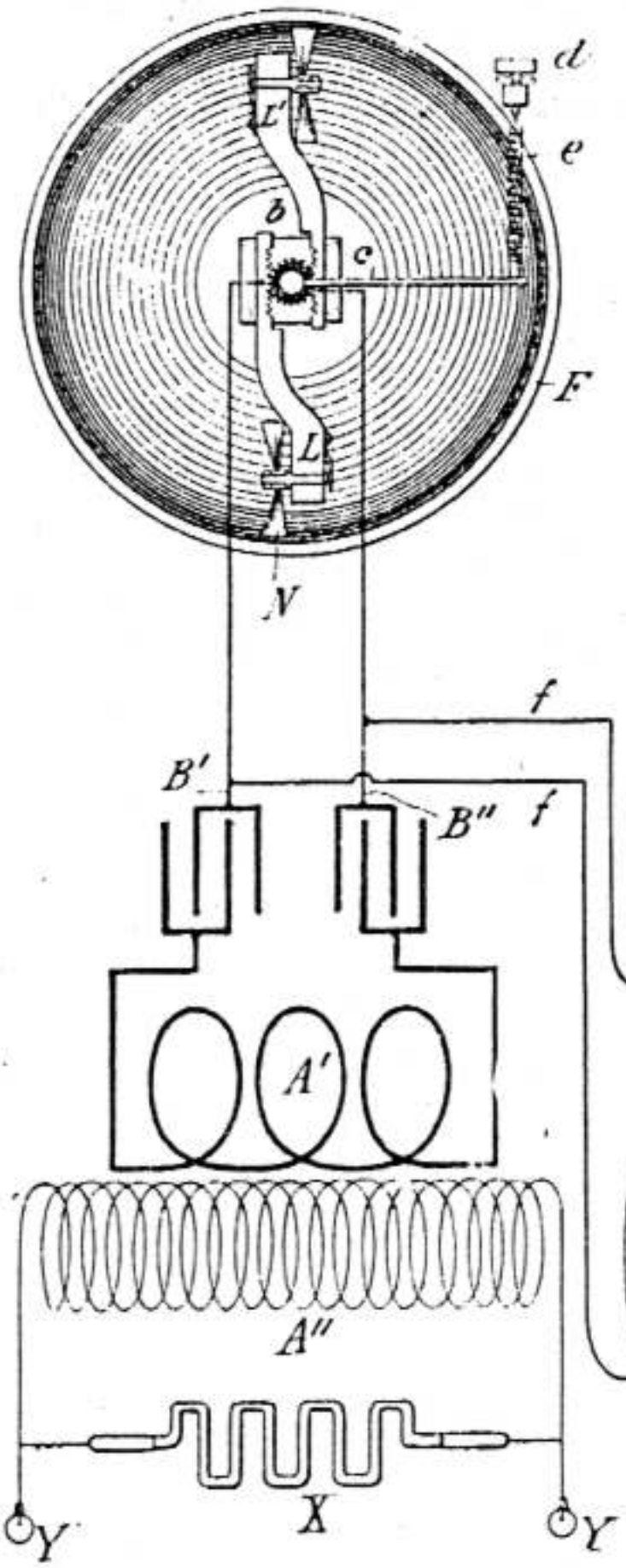

Fig. 5

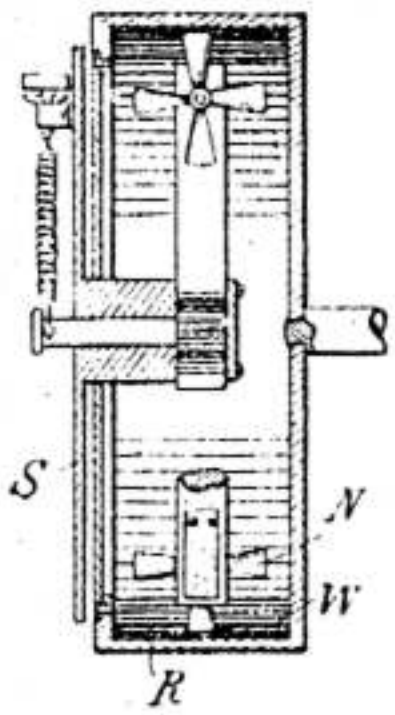

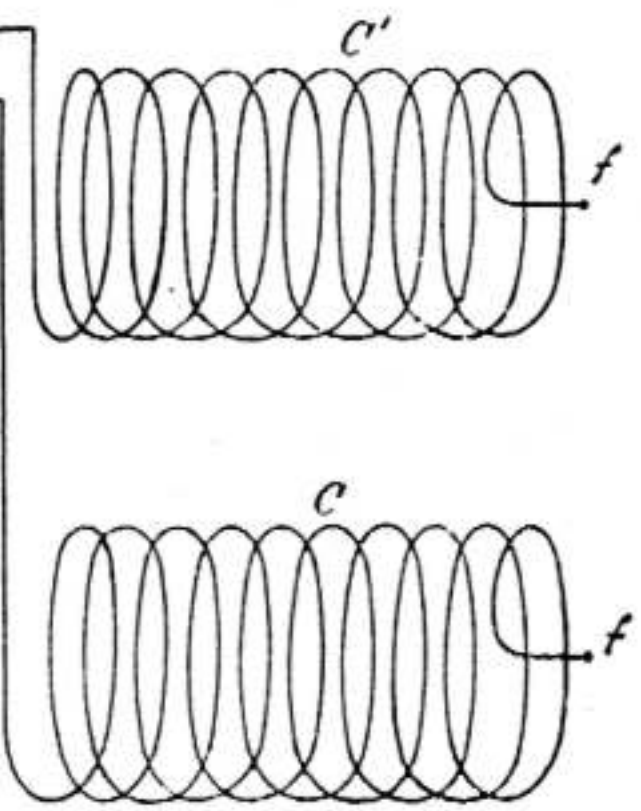

WITNESSES

Edwin B. Hopkinson.

G. B. Lowe

INVENTOR

Nikola Tesla

BY

Kerr, Curtis & Page

ATTORNEYS.

UNITED STATES PATENT OFFICE.

NIKOLA TESLA, OF NEW YORK, N. Y.

ELECTRICAL-CIRCUIT CONTROLLER.

SPECIFICATION forming part of Letters Patent No. 609,245, dated August 16, 1898.

Application filed December 3, 1897. Serial No. 660,518. (No model.)

To all whom it may concern:

Be it known that I, NIKOLA TESLA, residing at New York, in the county and State of New York, have invented certain new and useful Improvements in Electrical-Circuit Controllers, of which the following is a specification, reference being had to the drawings accompanying and forming a part of the same.

In every form of electrical apparatus involving a means for making and breaking, more or less abruptly, a circuit a waste of energy occurs during the periods of make or break, or both, due to the passage of the current through an arc formed between the receding or approaching terminals or contacts, or, more generally, through a path of high resistance. The tendency of the current to persist after the actual disjunction or to precede the conjunction of the terminals exists in varying degrees in different forms of apparatus, according to the special conditions present. For example, in the case of an ordinary induction-coil the tendency to the formation of an arc at the break is, as a rule, the greater, while in certain forms of apparatus I have invented in which the discharge of a condenser is utilized this tendency is greatest at the instant immediately preceding the conjunction of the contacts of the circuit-controller which effects the discharge of the condenser.

The loss of energy occasioned by the causes mentioned may be very considerable and is generally such as to greatly restrict the use of the circuit-controller and render impossible a practical and economical conversion of considerable amounts of electrical energy by its means, particularly in cases in which a high frequency of the makes and breaks is required.

Extended experiment and investigation conducted with the aim of discovering a means for avoiding the loss incident to the use of ordinary forms of circuit-controllers have led me to recognize certain laws governing the waste of energy and making it dependent chiefly on the velocity with which the terminals approach and recede from one another and also more or less on the form of the current-wave. Briefly stated, from both theoretical considerations and practical experiment it appears that the loss of energy in any device for making and breaking a circuit, other conditions being the same, is inversely proportional rather to the square than to the first power of the speed or relative velocity of the terminals in approaching and receding from one another in an instance in which the current-curve is not so steep as to materially depart from one which may be represented by a sine function of the time; but such a case seldom obtains in practice. On the contrary, the current-curve resulting from a make and break is generally very steep and particularly so when, as in my system, the circuit-controller effects the charging and discharging of a condenser, and consequently the loss of energy is still more rapidly reduced by increased velocity of approach and separation. The demonstration of these facts and the recognition of the impossibility of attaining the desired results by using ordinary forms of circuit-controllers led me to invent new and essentially different means for making and breaking a circuit in which I have utilized a conducting fluid, such as mercury, as the material for one or both of the terminals and devised novel means for effecting a rapidly-intermittent contact between the fluid and a conductor or series of conductors forming the other terminal.

With a view, however, to securing a more practical and efficient circuit-controller in which not only the relative speed of the terminals but also the frequency of the makes and breaks should be very high I devised the the form of instrument described in an application filed by me June 3, 1897, Serial No. 639,227, in which a receptacle is rotated to impart a rapid movement to a body of conducting fluid contained therein, which is brought in rapidly-intermittent contact with a conductor having peripheral projections extending into the fluid, the movement of the latter being conveniently utilized to rotate the conductor. Such a device, though meeting fully many requirements in practice, is nevertheless subject to certain limitations in the matter of attaining a high relative speed of approach and separation of the terminals, since the path of movement of the conducting projections is not directly away from and toward the fluid, but more or less tangential to the surface of the latter, the velocity of

approach and separation being of course the smaller the greater the diameter of the rotated conductor or terminal.

With the object of securing a greater relative speed of the terminals and a consequently more efficient form of circuit-controller of this type I devised the modified form of apparatus which constitutes the subject of my present application.

In this apparatus one of the members or terminals is a conducting fluid which is caused to issue from an orifice against a series of spaced conductors in rapid succession. For this purpose the series of conductors, or it may be a single conductor, is moved transversely through the stream or jet of fluid, or the jet is moved so as to impinge upon the conductors, or both jet and conductors are moved. This is preferably accomplished by mounting the conductors and the tube or duct from which the fluid issues concentrically and revolving one or both.

The chief feature of novelty which distinguishes the apparatus and in which my improvement resides is the plan adopted for maintaining the stream or jet of conducting fluid. This consists in utilizing the same power that actuates or drives the circuit-controller in effecting the necessary relative movement of its terminals to maintain the proper circulation of the conducting fluid by combining the two mechanisms (the controller and the means for maintaining a circulation of the conducting fluid) in one. This feature is of great practical advantage and may be effected in many ways. A typical arrangement for this purpose is to provide a tube or duct having an orifice at one end directed toward the spaced conductors and its other end in a position to take up a portion of the rapidly-rotating body of conducting fluid, divert it through the duct, and discharge it against the conductors. With this object when a closed receptacle is used a holder for the tube is employed, mounted within the receptacle and concentrically therewith, and this holder, when the receptacle is revolved, is held or influenced by any suitable means, as by magnetic attraction exerted from the outside or otherwise, in such manner as to keep it either in a fixed position or impress upon it a velocity different from that of the rotated fluid.

Such other improvements in details as I have devised and applied to the construction and operation of my improved circuit-controller will be more fully hereinafter described; but from the above general statement of the nature of the device it will be observed that by means of the same the velocity of relative movement of the two parts or elements may be enormously increased and the duration of the arc or discharge between them at the periods of make and break thereby greatly reduced without material increase in the power required to effect it and without impairing the quality of contact or deteriorating the terminals.

In the drawings hereto annexed, Figure 1 is a diagram illustrating the system for which the improvement was more especially designed. Fig. 2 is a top plan view of the circuit-controller. Fig. 3 is a view showing the induction-coil of Fig. 1 with its condenser-case in side elevation and the circuit-controller in vertical central section.

The general scheme of the system for use with which my improved circuit-controller is more especially designed will be understood by a brief reference to Fig. 1. In said figure, A A represent the terminals of a source of current. A′ is a self-induction or choking coil included in one branch of the circuit and permanently connected to one side of a condenser A″. The opposite terminal of this condenser is connected to the other terminal of the source through the primary B of a transformer, the secondary B′ of which supplies the working circuit containing any suitable translating devices, as B″.

The circuit-controller C, which is represented conventionally, operates to make and break a bridge from one terminal of the source to a point between the choking-coil A′ and the condenser A″, from which it will result that when the circuit is completed through the controller the choking-coil A′ is short-circuited and stores energy which is discharged into the condenser when the controller-circuit is broken, to be in turn discharged from the condenser through the primary B when these two are short-circuited by the subsequent completion of the controller-circuit.

I refer now to Figs. 2 and 3 for an illustration of the more important and typical features of my improved circuit-controller. The parts marked *a* compose a closed receptacle of cylindrical form having a dome or extension of smaller diameter. The receptacle is secured to the end of a spindle *c*, which is mounted vertically in bearings of any character suitable for the purpose. As it is intended to impart a rapid rotation to the receptacle *a*, I have shown a convenient device for this purpose comprising a field-magnet *d*, secured to the base or frame *e*, and an annular armature *f*, secured to the receptacle *a*. The coils of the armature are connected with the plates *g* of a commutator secured to the receptacle *a* and made in cylindrical form, so as to surround the socket in which the spindle *c* is stepped. A body of magnetic material *h*, which serves as an armature, is mounted on antifriction-bearings on an extension of the spindle *c*, so that the receptacle and the body *h* may have freely independent movements of rotation. Surrounding the dome *b*, in which the armature *h* is contained, is a core with pole-pieces *o*, which are magnetized by coils *p*, wound on the core. The said core is stationary, being

supported by arms *r*, Fig. 3, independently of the receptacle, so that when the receptacle is rotated and the core energized the attractive force exerted by the poles *o* upon the armature *h* within the receptacle *a* holds the said armature against rotation. To prevent loss from currents set up in the shell of the dome *b*, the latter should be made of German silver or other similar precaution taken. An arm *i* is secured to the armature *h* within the receptacle *a* and carries at its end a short tube *k*, bent, as shown in Fig. 2, so that one open end is tangential to the receptacle-wall and the other directed toward the center of the same. Secured to the top plate of the receptacle *a* are a series of conducting-plates *l*. The part of the top plate *s* from which said conducting-plates *l* depend is insulated from the receptacle proper by insulating packing-rings *t*, but is electrically connected with the dome *b*, and in order to maintain electrical connection from an external circuit to the conductors *l* a mercury-cup *w* is set in the top of the dome, into which cup extends a stationary terminal plug *n*. A small quantity of a conducting fluid, such as mercury, is put into the receptacle *a*, and when the latter is rotated the mercury by centrifugal action is forced out toward its periphery and rises up along its inner wall. When it reaches the level of the open-mouthed tube *k*, a portion is taken up by the latter, which is stationary, and forced by its momentum through the tube and discharged against the conductors *l* as the latter pass in rapid succession by the orifice of said tube. In this way the circuit between the receptacle and the conductors *l* is completed during the periods in which the stream or jet of mercury impinges upon any of the conductors *l* and broken whenever the stream is discharged through the spaces between the conductors.

From the nature of the construction and mode of operation of the above-described apparatus it is evident that the relative speed of separation and approach of the two elements or terminals (the jet and the conductors *l*) may be extremely high, while such increased speed affects in no material respect the quality of contact.

A circuit-controller of the kind described is applicable and useful in many other systems and apparatus than that particularly described herein, and may be greatly modified in construction without departure from the invention.

I am aware that a jet or stream of conducting fluid has heretofore been employed as a means for completing an electric circuit, and I do not claim, broadly, the employment of a conducting fluid in such form as a contact or terminal; but so far as I am aware both the purpose for which I employ such form of contact or terminal and the manner in which I apply it are wholly of my invention, neither having been heretofore proposed.

What I claim is—

1. The combination with a receptacle of a conductor or series of spaced conductors, a nozzle or tube for directing a jet or stream of fluid against the same, the nozzle and conductor being capable of movement relatively to each other, and means for maintaining a circulation of conducting fluid, contained in the receptacle, through the said nozzle, and dependent for operation upon such relative movement, as set forth.

2. The combination with a closed receptacle of a conductor or series of spaced conductors, a nozzle or tube for directing a jet or stream of fluid against the same, and means for forcing a conducting fluid contained in the receptacle through the said nozzle, these parts being associated within the receptacle and adapted to be operated by the application of a single actuating power, as set forth.

3. The combination with a receptacle containing a series of spaced conductors, a duct within the receptacle having one of its ends directed toward the said conductors, means for maintaining a rapid movement of relative rotation between the said end and the conductors and means for maintaining a circulation of a conducting fluid contained in the receptacle through the duct against the conductors, the said conductors and jet constituting respectively the terminals or elements of an electric-circuit controller.

4. The combination with a receptacle capable of rotation and containing a series of spaced conductors, a duct within the receptacle having an orifice directed toward the said conductors, and an open end in position to take up a conducting fluid from a body of the same contained in the receptacle, when the latter is rotated, and direct it against the conductors, the said conductors and the fluid constituting the terminals or elements of an electric-circuit controller.

5. The combination with a receptacle for containing a conducting fluid and a series of spaced conductors thereon, of a duct having an orifice directed toward the said conductors and forming a conduit through which the fluid when the receptacle is rotated is forced and thrown upon the conductors.

6. The combination with a receptacle capable of rotation, and a series of conductors mounted therein, of a duct having an orifice directed toward the conductors, a holder for said duct mounted on bearings within the receptacle which permit of a free relative rotation of said receptacle and holder, and means for opposing the rotation of the said holder in the direction of the movement of the fluid while the receptacle is rotated, whereby the conducting fluid within the receptacle will be caused to flow through the duct against the conductors.

7. The combination with a receptacle and a motor for rotating the same, of a magnetic body mounted in the receptacle, a magnet exterior to the receptacle for maintaining the body stationary while the receptacle rotates,

a series of conductors in the receptacle and a duct carried by the said magnetic body and adapted to take up at one end a conducting fluid in the receptacle when the latter rotates and to direct such fluid from its opposite end against the series of conductors.

8. The combination with a receptacle for containing a conducting fluid, a series of spaced conductors within the same, and a motor, the armature of which is connected with the receptacle so as to impart rotation thereto, a magnetic body capable of turning freely within the receptacle about an axis concentric with that of the latter, a duct carried by the said body having one end in position to take up the conducting fluid and the other in position to discharge it against the spaced conductors, and a magnet exterior to the receptacle for holding the magnetic body stationary when the receptacle is rotated.

NIKOLA TESLA.

Witnesses:
M. LAWSON DYER,
G. W. MARTLING.

P-266

No. 609,245. Patented Aug. 16, 1898.

N. TESLA.

ELECTRICAL CIRCUIT CONTROLLER.

(Application filed Dec. 2, 1897.)

(No Model.)

Fig. 1

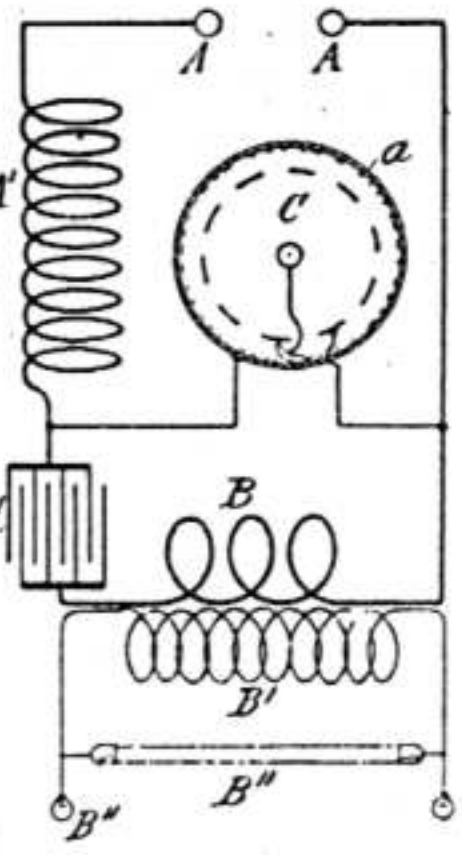

Fig. 2

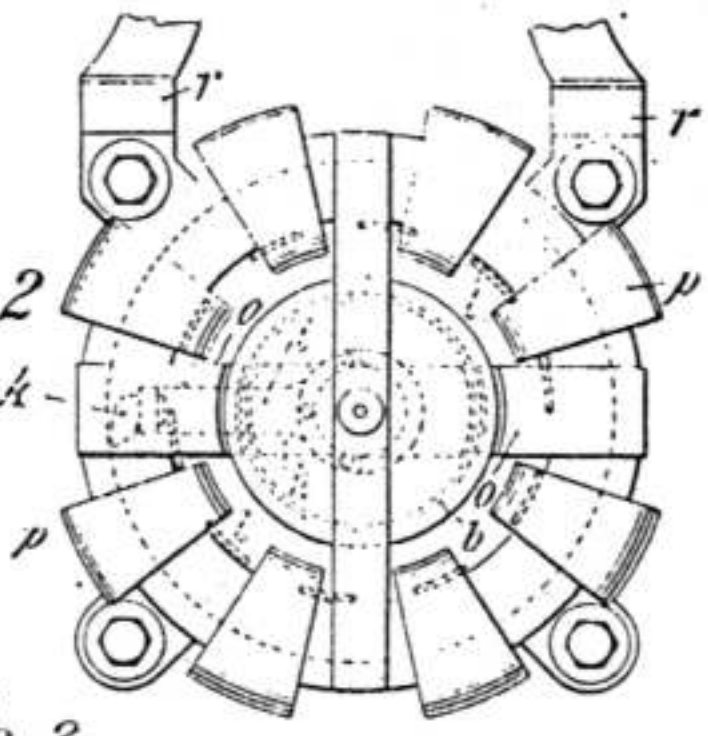

Fig. 3

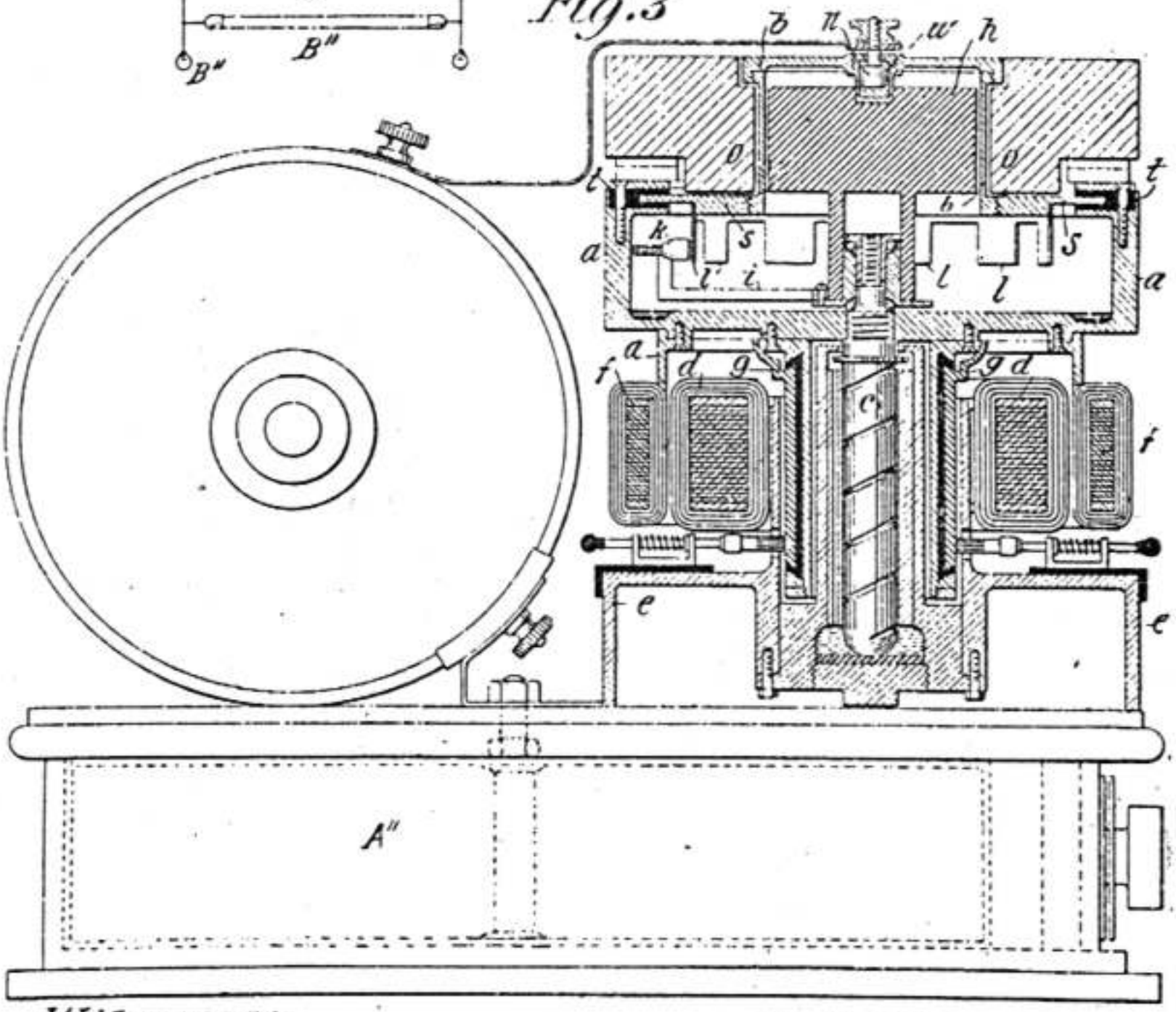

Witnesses:
Raphael Netter
H. Lawton Byrn.

Nikola Tesla, Inventor
by Kerr, Curtis & Page Attys.

UNITED STATES PATENT OFFICE.

NIKOLA TESLA, OF NEW YORK, N. Y.

ELECTRICAL-CIRCUIT CONTROLLER.

SPECIFICATION forming part of Letters Patent No. 611,719, dated October 4, 1898.

Application filed December 10, 1897. Serial No. 661,403. (No model.)

To all whom it may concern:

Be it known that I, NIKOLA TESLA, residing at New York, in the county and State of New York, have invented certain new and useful Improvements in Electrical-Circuit Controllers, of which the following is a specification, reference being had to the drawings accompanying and forming part of the same.

In order to secure a more efficient working of circuit-controllers, particularly in their use in connection with my system of electrical-energy conversion by means of condenser discharges, I have devised certain novel forms of such appliances, comprising as essential elements a body of conducting fluid constituting one of the terminals, a conductor or series of conductors forming the other terminal, and means for bringing the two into rapidly-intermittent contact with each other. These devices possess many desirable qualities, particularly that of being eminently adapted for making and breaking at a very rapid rate an electric circuit and thus reducing to a minimum the time of passage of the current through an arc or path of high resistance and diminishing thereby the losses incident to the closure and interruption of the circuit. Continued experimentation with these appliances has led me to make further important improvements by causing the make-and-break to be effected in an inert medium of very high insulating power.

It is a fact, which was fully demonstrated by Poggendorff and utilized by him to improve the operation of induction-coils, that when the contact-points of a circuit-breaker are inclosed in a vessel and the latter exhausted to a high degree the interruption of the current is rendered more sudden, as if a condenser were connected around the break. Furthermore, my own investigations have shown that under such conditions the closure also is more sudden, and this to even a greater degree than the break, which result I attribute to the high insulating quality of the vacuous space, in consequence of which the electrodes may be brought in very close proximity before an arc can be formed between them. Obviously these facts may be utilized in connection with my novel circuit-controllers; but inasmuch as only a very moderate improvement is secured in this manner and as the high vacuum required is quickly destroyed and cannot be maintained, unless by a continuous process of rarefaction and other inconvenient measures, I have found it desirable to employ more effective and practical means to increase the efficiency of the devices in question. The measures I have adopted for this purpose have resulted from my recognition of certain ideal qualifications of the medium wherein to effect a make-and-break. These may be summed up as follows: First, the medium by which the contact-points are surrounded should have as high an insulating quality as possible, so that the terminals may be approached to an extremely short distance before the current leaps across the intervening space; second, the closing up or repair of the injured dielectric, or, in other words, the restoration of the insulating power, should be instantaneous in order to reduce to a minimum the time during which the waste principally occurs; third, the medium should be chemically inert, so as to diminish as much as possible the deterioration of the electrodes and to prevent chemical processes which might result in the development of heat or, in general, in loss of energy; fourth, the giving way of the medium under the application of electrical pressure should not be of a yielding nature, but should be very sudden and in the nature of a crack, similar to that of a solid, such as a piece of glass when squeezed in a vise, and, fifth, most important, the medium ought to be such that the arc when formed is restricted to the smallest possible linear dimensions and is not allowed to spread or expand. As a step in the direction of these theoretical requirements I have employed in some of my circuit-controlling devices a fluid of high insulating qualities, such as liquid hydrocarbon, and caused the same to be forced, preferably with great speed, between the approaching and receding contact-points of the circuit-controller. By the use of such liquid insulator a very marked advantage was secured; but while some of the above requirements are attained in this manner certain defects still exist, notably that due to the fact that the insulating liquid, in common with a vacuous space, though in a less degree, permits the arc to expand in length and

thickness, and thus pass through all degrees of resistance and causing a more or less considerable waste of energy. To overcome this defect and to still more nearly attain the theoretical conditions required for most efficient working of the circuit-controlling devices, I have been finally led to use a fluid insulating medium subjected to great pressure.

The application of great pressure to the medium in which the make-and-break is made secures a number of specific advantages. One of these may be obviously inferred from well-established experimental facts, which demonstrate that the striking distance of an arc is approximately inversely proportional to the pressure of gaseous medium in which it occurs; but in view of the fact that in most cases occurring in practice the striking distance is very small, since the difference of potential between the electrodes is usually not more than a few hundred volts, the economical advantages resulting from the reduction of the striking distance, particularly on approach of the terminals, are not of very great practical consequence. By far the more important gain I have found to result from an effect which I have observed to follow from the action of such a medium when under pressure upon the arc—namely, that the cross-section of the latter is reduced approximately in an inverse ratio to the pressure. As under conditions in other respects the same the waste of energy in an arc is proportional to its cross-section, a very important gain in economy generally results. A feature of great practical value lies also in the fact that the insulating power of the compressed medium is not materially impaired even by considerable increase in temperature, and, furthermore, that variations of pressure between wide limits do not interfere notably with the operation of the circuit-controller, whereas such conditions are fatal drawbacks when, for instance, Poggendorff's method of insulating the terminals is used. In many other respects, however, a gas under great compression nearly fulfils the ideal requirements above mentioned, as in the sudden breaking down and quick restoration of the insulating power, and also in chemical inertness, which by proper selection of the gas is easily secured.

In carrying out my invention the medium under pressure may be produced or maintained in any proper manner, the improvement not being limited in this particular to any special means for the purpose. I prefer, however, to secure the desired result by inclosing the circuit-controller, or at least so much of the same as shall include the terminals, in a chamber or receptacle with which communicates a small reservoir containing a liquefied gas. For purpose of illustration this particular manner of carrying out the invention is described herein.

While the improvement is applicable generally to circuit-controllers, the best results will be secured by the use of devices in which a high relative speed between the terminals is obtainable, and with this special object in view I have devised a novel circuit-controller which, though belonging to the class of which I have shown a typical form in my application for patent filed December 2, 1897, Serial No. 660,518, differs in certain particulars of construction, which will be understood from the following comparison: In the previously-described form of said circuit-controllers a rotary receptacle, carrying within it a series of spaced conductors, is driven at a high speed by a suitable motor. Mounted within and concentrically with the receptacle, but capable of free independent rotation with respect thereto, is a body which during the rotation of the receptacle is retarded or restrained against rotation by the application of a suitable force. This body carries a tube or duct which takes up at one end a fluid conductor contained in the receptacle and rotating with the same and discharges it from the other end against the rotating spaced conductors.

While an apparatus thus constructed is very efficient and performs the work required of it in a highly-satisfactory manner, it is nevertheless subject to certain limitations, arising mainly from the amount of work which the conducting fluid is required to perform and which increases with the speed. With the object of overcoming objections that might lie to this form of circuit-controller in the particular referred to, I devised the form of instrument shown herein. The features which more particularly distinguish this form are the following: I employ a closed stationary receptacle within which is mounted a body that is capable of being rotated in any way—as, for example, by the drag or pull upon it of an external field of force or a magnet rotated bodily. The rotary body imparts rotation to a series of spaced conductors within the receptacle and also operates as a pump to maintain a flow of conducting fluid through one or more stationary ducts and from the same against the rotating conductors.

The details of this apparatus will be described by reference to the accompanying drawing, which is a vertical central section of the circuit-controller complete.

A is a receptacle, of iron, steel, or other proper material, with a head B, secured by a gas-tight insulating-joint. Within this receptacle is contained the circuit-controller, which, in so far as the main feature of my present invention is concerned, may be of any desired construction, but which, for the reason stated above, is of the special character shown. A spindle C is screwed or otherwise secured centrally in the head B, and on this is mounted on antifriction-bearings a body to which rotary motion may be imparted. The construction of the device in this particular and the means for imparting rotation to the said body may be greatly varied; but a convenient means for accomplishing this is to secure to the rotary sleeve D a laminated

magnetic core E and place around the portion of the head B which contains it a core F, provided with coils and constituting the primary element of a motor capable of producing a rotary field of force which will produce a rapid rotation of the secondary element or core E. To the depending end of the sleeve D is secured a conductor G, usually in the form of a disk with downwardly-extending teeth or peripheral projections H. To the sleeve or the disk G is also attached, but insulated therefrom, a shaft T, having a spiral blade and extending down into a well or cylindrical recess in the bottom of the receptacle. One or more ducts or passages J lead from the bottom of this well to points near the path of the conducting-teeth H, so that by the rotation of the screw I a conducting fluid, which runs into the well from the receptacle, will be forced up through the duct or ducts, from which it issues in a jet or jets against the rotating conductor. To facilitate this operation, the well is surrounded by a flange K, containing passages L, which permit the conducting fluid to flow from the receptacle into the well, and having beveled sides which serve as a shield to deflect the fluid expelled from the ducts through the spaces in the conductor to the bottom of the receptacle.

M is any suitable reservoir communicating with the interior of the main receptacle and containing a liquefied gas, such as ammonia, which maintains a practically inert atmosphere under pressure in the receptacle.

Preferably, though mainly as a matter of convenience, the receptacle M is a metal cup with a hollow central stem N, the opening for the passage of gas being controlled by a screw-valve in the top of the cup. The said cup is screwed onto the end of the spindle C, through which is a passage O, leading into the interior of the receptacle A.

The receptacle A and the conducting fluid, which is generally mercury, being normally insulated from the head B and the parts attached and supported thereby, are connected to one part of the circuit to be controlled. The other circuit connection is made by a conductor P to any part of the head, so that when the core E and conductor G are rotated the circuit will be completed between the two insulated parts of the receptacle through the jet or jets of conducting fluid whenever they impinge upon the said conductor.

To insure a good electrical connection between the sleeve D and the spindle C, I provide in the former a small chamber R, which contains mercury, and into this the end of the spindle C extends.

The special advantages of this particular form of circuit-controller heretofore referred to will now more readily appear. The mass and weight of the rotating parts are greatly reduced and a very high speed of rotation obtained with small expenditure of energy. The power required to maintain the jets of conducting fluid is, moreover, very small.

Having now described my invention, what I claim is—

1. The combination with a closed receptacle, of a circuit-controller contained therein and surrounded by an inert insulating medium under pressure.

2. The combination with a closed receptacle, of a circuit-controller contained therein and means for maintaining within said receptacle an inert atmosphere under pressure.

3. The combination with a closed receptacle, of a circuit-controller contained therein, and a vessel containing a liquefied inert gas, and communicating with the interior of the receptacle.

4. The combination with a circuit-controlling mechanism, one part or terminal of which is a conducting fluid, such as mercury, of a receptacle inclosing the same and means for maintaining an inert gas under pressure in the receptacle.

5. The combination with a conductor or series of conductors constituting one terminal of a circuit-controller, means for maintaining a stream or jet of conducting fluid as the other terminal with which the conductor makes intermittent contact, a close receptacle containing the terminals, and means for maintaining an inert atmosphere under pressure in the receptacle.

6. A device for making and breaking an electric circuit comprising, in combination, means for maintaining a jet or stream of conducting fluid which constitutes one terminal, a conductor or conductors making intermittent contact with the jet and constituting the other terminal and a receptacle inclosing and excluding oxygen from the said terminals.

7. The combination with a receptacle, of a conductor or series of spaced conductors mounted therein, a motive device for rotating said conductors, one or more nozzles for directing a stream or jet of fluid against the conductor, and a force-pump in direct connection with the conductor for maintaining a circulation of conducting fluid contained in the receptacle through the nozzle or nozzles, the conductor and the fluid constituting respectively the terminals of a circuit-controller.

8. The combination of a casing, a conductor or series of spaced conductors mounted therein, a motor for rotating the same, one or more ducts or channels from a receptacle containing a conducting fluid and directed toward the conductors, and a screw operated by the motor for forcing the conducting fluid through the duct or ducts against the conductors, the conductors and the fluid constituting the terminals of an electric-circuit controller.

9. The combination with a receptacle containing a conducting fluid, of a conductor mounted within the receptacle, means for rotating the same, a screw rotating with the conductor and extending into a well in which

the fluid collects, and a duct or ducts leading from the well to points from which the fluid will be directed against the rotating conductor.

10. The combination with the receptacle, of a spindle secured to its head or cover, a magnetic core mounted on the spindle within the receptacle, means for rotating said core, a conductor rotated by the core, and a pumping device, such as a screw rotated by the core and operating to maintain a jet or jets of conducting fluid, against the conductor, when in rotation.

NIKOLA TESLA.

Witnesses:
M. LAWSON DYER,
G. W. MARTLING.

P-271

No. 611,719. Patented Oct. 4, 1898.

N. TESLA.

ELECTRICAL CIRCUIT CONTROLLER.

(Application filed Dec. 10, 1897

(No Model.)

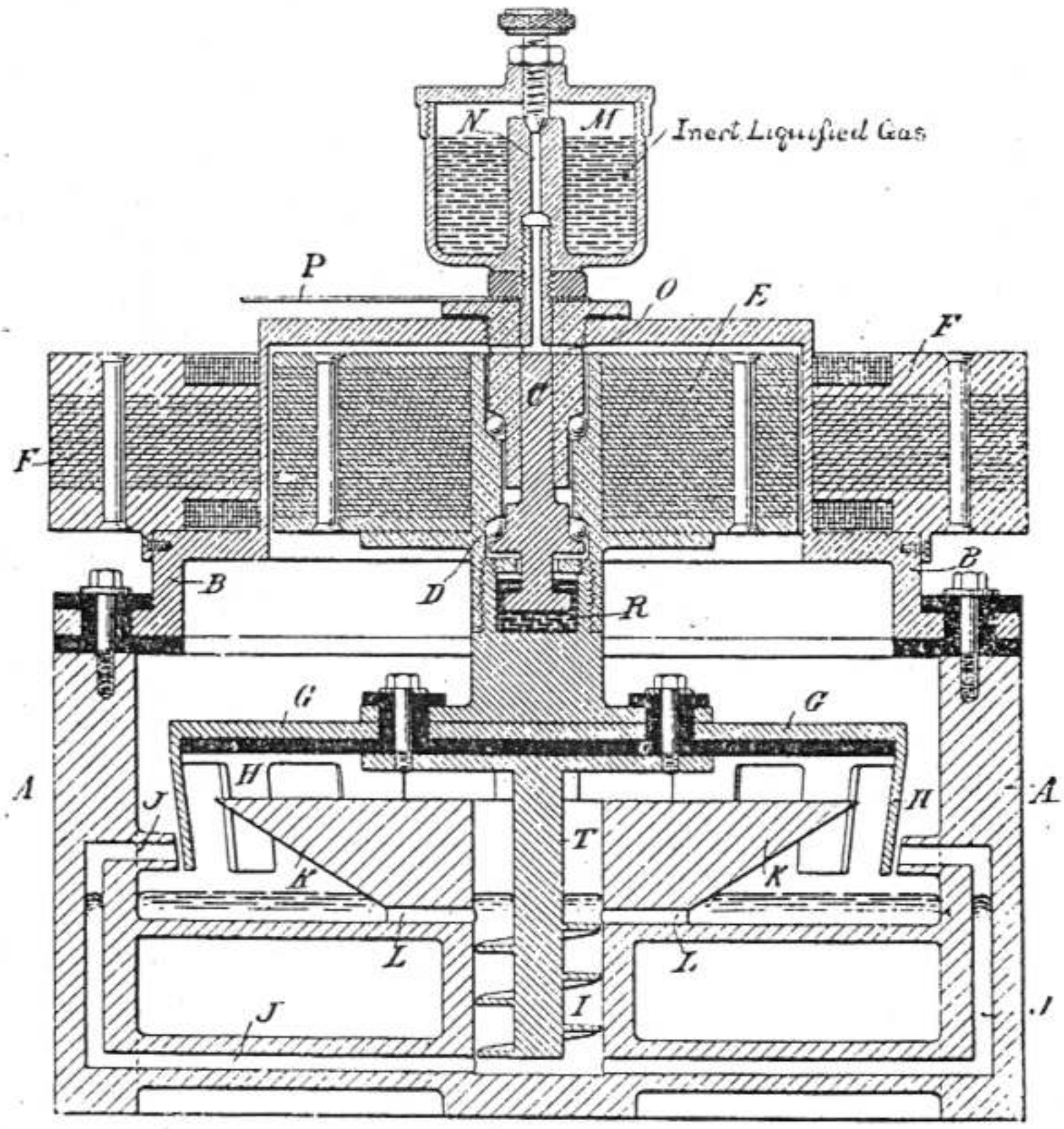

Witnesses:
Raphaël Netter
Edwin B. Hopkinson.

Nikola Tesla, Inventor
by Kerr, Curtis & Page Attys

UNITED STATES PATENT OFFICE.

NIKOLA TESLA, OF NEW YORK, N. Y.

ELECTRIC-CIRCUIT CONTROLLER

SPECIFICATION forming part of Letters Patent No. 609,246, dated August 16, 1898

Application filed February 28, 1898. Serial No. 671,897. (No model.)

To all whom it may concern

Be it known that I, NIKOLA TESLA, a citizen of the United States, residing in the borough of Manhattan, in the city, county, and State of New York, have invented certain new and useful Improvements in Electric-Circuit Controllers, of which the following is a specification, reference being had to the drawing accompanying and forming a part of the same.

The invention which forms the subject of my present application is an improvement in a novel class of circuit-controlling appliances heretofore invented by me and more especially designed to be used with my now well-known apparatus for the production of electric currents of high frequency by means of condenser-discharges, but applicable generally as a means for making and breaking an electric circuit.

In the circuit-controllers of the particular class or type to which my present improvement pertains I have utilized a conducting liquid as one of the terminals and have employed as the other terminal a solid conductor and provided various means for bringing the two into rapidly-intermittent contact.

The distinguishing feature of my present improvement lies chiefly in the use of a conducting liquid for both the terminals under conditions which permit of a rapidly-intermittent contact between them, as will be herein set forth.

The accompanying drawing illustrates an apparatus embodying the principle of my said improvement.

The figure is a central vertical section of the circuit-controller.

In the drawing is shown a receptacle composed of two cylindrical metallic portions A A', secured together by bolts B and nuts C, but insulated from each other. The receptacle is journaled, by means of trunnions formed on or secured to its ends, in standards D D, and any suitable means is employed to impart rotation to it. This is conveniently effected by constructing or organizing the receptacle in such manner that it may serve as the rotating element of an electromagnetic motor in conjunction with a surrounding stationary element E E. The abutting ends of the two parts of the receptacle are formed with inwardly-extending flanges F, which divide the peripheral portions of the receptacle into two compartments G G'. Into one of these compartments, as G, extends a spindle H, having its bearing in the end of the part A and the trunnion secured to or extending therefrom. Into the other compartment G' extends a spindle H', similarly journaled in the end of part A' and its trunnion. Each spindle carries or is formed with a weighted arm K, which, remaining in a vertical position, holds its spindle stationary when the receptacle is revolved.

To the weighted arm of spindle H is secured a standard L, carrying a tube L', with one open end in close proximity to the inner peripheral wall of the compartment G and the other directed toward the axis, but inclined toward the opposite compartment. To the weighted arm of spindle H' is similarly secured a standard M, which is hollow and constitutes a portion of a duct or passage which extends through a part of the spindle and opens through a nozzle M' into a circular chamber N in the wall of the part A'. From this chamber run passages N' to nozzles O, in position to discharge jets or streams of liquid in such directions as to intersect, when the nozzles are rotated, a stream issuing from the end of tube L'.

In each portion or compartment of the receptacle is placed a quantity of a conducting liquid, such as mercury, and the ends of the tubes L' and M are provided with openings which take up the mercury when on the rotation of the receptacle it is carried by centrifugal force against the peripheral wall. The mercury when taken up by the tube L' issues in a stream or jet from the inner end of said tube and is projected into the compartment G'. The mercury taken up by the tube M runs into the circular chamber N, from which it is forced through the passages N' to the nozzles O, from which it issues in jets or streams directed into the compartment G. As the nozzles O revolve with the receptacle the streams which issue from them will therefore be carried across the path of the stream which issues from the tube L' and which is stationary, and the circuit between the two compartments will be completed by

the streams whenever they intersect and interrupted at all other times.

The continuity of the jets or streams is not preserved ordinarily to any great distance beyond the orifices from which they issue, and hence they do not serve as conductors to electrically connect the two sides of the receptacle beyond their point of intersection with each other.

It will be understood that so far as the broad feature of maintaining the terminal jets is concerned widely-different means may be employed for the purpose and that the spindles mounted in free bearings concentrically with the axis of rotation of the receptacle and held against rotation by the weighted arms constitute but one specific way of accomplishing this result. This particular plan, however, has certain advantages and may be applied to circuit-controllers of this class generally whenever it is necessary to maintain a stationary or nearly stationary body within a rotating receptacle. It is further evident from the nature of the case that it is not essential that the jet or jets in one compartment or portion of the instrument should be stationary and the others rotating, but only that there should be such relative movement between them as to cause the two sets to come into rapidly-intermittent contact in the operation of the device.

The number of jets, whether stationary or rotating, is purely arbitrary; but since the conducting fluid is directed from one compartment into the other the aggregate amount normally discharged from the compartments should be approximately equal. However, since there always exists a tendency to project a greater quantity of the fluid from that compartment which contains the greater into that which contains the lesser amount no difficulty will be found in this respect in maintaining the proper conditions for the satisfactory operation of the instrument.

A practical advantage, especially important when a great number of breaks per unit of time is desired, is secured by making the number of jets in one compartment even and in the other odd and placing each jet symmetrically with respect to the center of rotation. Preferably the difference between the number of jets should be one. By such means the distances between the jets of each set are made the greatest possible and hurtful short-circuits are avoided.

For the sake of illustration let the number of jets or nozzles L' in one compartment be nine and the number of those marked O in the other compartment ten. Then by one revolution of the receptacle there will be ninety makes and breaks. To attain the same result with only one jet, as L', it would be necessary to employ ninety jets O in the other compartment, and this would be objectionable, not only because of the close proximity of the jets, but also of the great quantity of fluid required to maintain them.

In the use of the instrument as a circuit-controller it is merely necessary to connect the two insulated parts of the receptacle to the two parts of the circuit, respectively, as by causing brushes X Y, connected with circuit-wires, to bear at any suitable points on the said two parts A A'.

In instruments of this character in which both terminals are formed by a liquid element there is no wear or deterioration of the terminals and the contact between them is more perfect. The durability and efficiency of the devices are thus very greatly increased.

Having now described my invention, what I claim is—

1. A circuit-controller comprising in combination means for producing streams or jets of conducting liquid forming the terminals, and means for bringing the jets or streams of the respective terminals into intermittent contact with each other, as set forth.

2. In a circuit-controller, the combination with two sets of orifices adapted to discharge jets in different directions, means for maintaining jets of conducting liquid through said orifices, and means for moving said orifices relatively to each other so that the jets from those of one set will intermittently intersect those from the other, as set forth.

3. The combination in a circuit-controller of ducts and means for discharging therefrom streams or jets of conducting fluid in electrical contact with the two parts of the circuit respectively, the orifices of said ducts being capable of movement relatively to each other, whereby the streams discharged therefrom will intersect at intervals during their relative movement, and make and break the electric circuit, as set forth.

4. In a circuit-controller the combination with one or more stationary nozzles and means for causing a conducting fluid forming one terminal to issue therefrom, of one or more rotating tubes or nozzles, means for causing a conducting liquid forming the other terminal to issue therefrom, the said rotating nozzles being movable through such a path as to cause the liquid issuing therefrom to intersect that from the stationary nozzles as set forth.

5. The combination with a rotating receptacle divided into two insulated compartments, a spindle in one compartment with its axis concentric with that of the receptacle, means for opposing the rotation of said spindle, and a tube or duct carried by the spindle and adapted to take up a conducting fluid at one end from the inner periphery of the compartment when the receptacle is rotated and direct it from the other end into the other compartment, of a similar spindle in the other compartment and means for opposing its rotation, a tube carried by the spindle and having an opening at one end near the inner periphery of the compartment and discharging into a chamber from which lead one or more passages to nozzles fixed to the rotating re-

ceptacle and adapted to discharge across the path of the jet from the stationary nozzle, as set forth.

6. In a circuit-controller the combination with a rotating receptacle of a body mounted therein and formed or provided with a weighted portion eccentric to its axis which opposes its rotation and a tube or duct carried by said body and adapted to take up a conducting fluid from the rotating receptacle as set forth.

7. In a circuit-controller the combination of two sets of nozzles and means for projecting from the same, jets of conducting fluid which constitute respectively the terminals of the controller, means for moving the nozzles relatively to each other so that the jets of the two sets are brought successively into contact, the nozzles of each set being arranged symmetrically about an axis of rotation, there being one more nozzle in one set than in the other.

NIKOLA TESLA.

Witnesses:
M. LAWSON DYER,
G. W. MARTLING.

P-275

No 609,246 Patented Aug. 16, 1898.

N. TESLA.

ELECTRIC CIRCUIT CONTROLLER

(Application filed Feb 25, 1898.)

(No Model.)

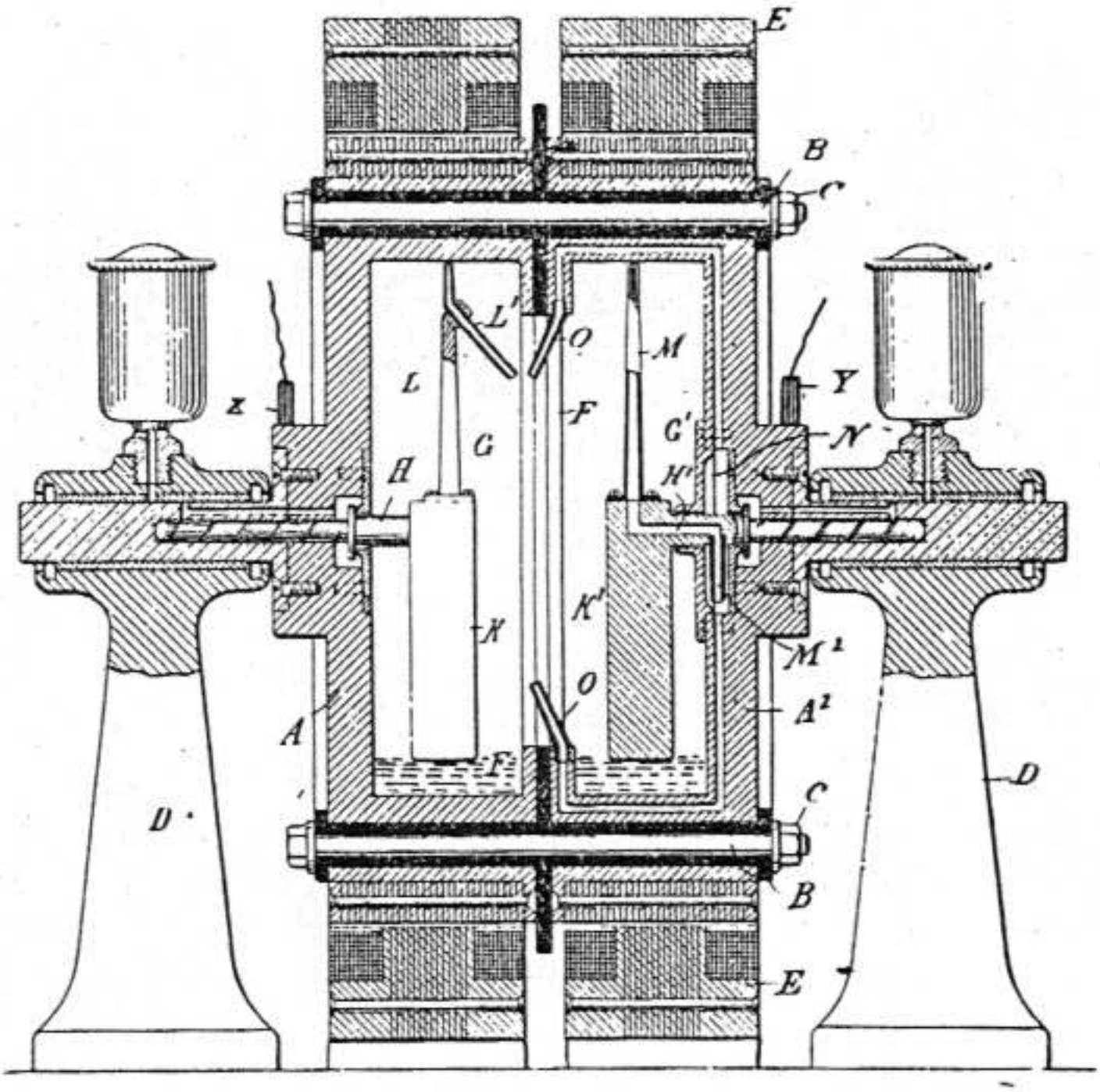

Witnesses:
Benjamin Mieler
Augustus Fenton

Inventor
Nikola Tesla
Kerr, Curtis & Page
by Attys

30*

UNITED STATES PATENT OFFICE.

NIKOLA TESLA, OF NEW YORK, N. Y.

ELECTRIC-CIRCUIT CONTROLLER.

SPECIFICATION forming part of Letters Patent No. 609,247, dated August 16, 1898.

Application filed March 12, 1898. Serial No. 673,558. (No model.)

To all whom it may concern:

Be it known that I, NIKOLA TESLA, of the borough of Manhattan, in the city, county, and State of New York, have invented certain new and useful Improvements in Circuit-Controllers, of which the following is a specification, reference being had to the drawings accompanying and forming a part of the same.

In an application filed by me on June 3, 1897, Serial No. 639,227, I have shown and described a device for making and breaking an electric circuit comprising a rotary receptacle containing a conducting fluid and a terminal mounted within but independently of the receptacle and caused by the rotation of the latter to make and break electrical contact with the fluid.

The invention on which my present application is based is an improvement in devices of this particular class, and has primarily as its object the production of a circuit-controller in which an independently-mounted terminal operated in a similar manner by a rotating body of conducting fluid may be inclosed within a gas-tight receptacle.

The invention comprises features of construction by which this object is practically secured and certain improvements applicable to this and other analogous devices, as will be more fully hereinafter set forth.

In the accompanying drawings, Figure 1 is vertical central section of the improved circuit-controller, and Fig. 2 a top plan view of the same with the top or cover of the receptacle removed.

The operative portions of the circuit-controlling mechanism are contained in a closed cylindrical receptacle A, of iron or steel, mounted on a spindle B in a suitable socket or support C to permit it to be freely and rapidly rotated. The socket C is secured to or forms a part of a base or stand D.

As a means of producing the proper rotation of the receptacle A, I have shown a field-magnet E, mounted on or secured to the base D, and an armature F, supported by a bracket G from the under side of the receptacle A. The same bracket also carries a series of commutator-segments H, upon which bear brushes I, these parts being arranged to constitute an electromagnetic motor with stationary field and rotating armature. It may be stated that any other suitable means may be employed to rotate the receptacle and the fluid.

In the spindle B and concentric with its axis is a spindle J in bearings specially constructed to reduce friction in order that the spindle J may be as little as possible influenced by the rotation of the main spindle and receptacle carried thereby. A suitable provision is made to oppose or prevent the rotation of the spindle J during the rotation of the receptacle. I have devised for this purpose the following:

The spindle B is held by its bearings at an angle to the vertical, and a weight K is secured eccentrically to the spindle J and tends to hold the said spindle always in one position. The inclination of the axes of rotation necessary for this result may be substantially that shown and should not be materially greater, for the reason that it is especially advantageous to preserve the spindles and bearings as nearly as practicable vertical on account of lesser friction and easier lubrication.

Attached to the spindle J or weight K is an insulated bracket L, carrying a standard or socket M, in which is mounted on antifriction-bearings a spindle N. Secured to this latter is a plate with radial arms O, from which depend vanes or blades P, with projections Q extending radially therefrom. A shield or screen R incloses the vanes, except on the side adjacent to the inner periphery of the receptacle A.

A small quantity of a conducting fluid S is placed in the receptacle, and in order to secure a good electrical connection between the vanes P and a terminal on the outside of the receptacle a small mercury-cup T, in metallic contact with the vanes through the bracket L and socket M, is secured to the weight K. A metal stud V, set in an insulated bolt W, projects into the cup T through a packed opening in its cover. One terminal of the circuit-controlling mechanism will thus be any part of the metal receptacle and the other the insulated bolt W. The apparatus may be connected up in circuit by connecting the wires of the circuit to a brush X, bearing on the bolt W, and to a binding-post Y in contact with the base D.

To operate the apparatus, the receptacle is

set in rotation, and as its speed increases the mercury or other conducting fluid which it contains is carried by centrifugal force up the sides of the inner wall, over which it spreads in a layer. When this layer rises sufficiently to encounter the projections Q on the blades or vanes P, the latter are set in rapid rotation, and the electrical connection between the terminal of the apparatus is thereby made and broken, it may be, with very great rapidity.

The projections Q are preferably placed at different heights on the vanes P, so as to secure greater certainty of good contact with the mercury film when in rapid rotation.

As to the forms of the circuit-controller heretofore referred to and upon which my present invention is an improvement the blades or vanes P may be regarded in a broad sense as typical of any device—such, for example, as a stelliform disk—which will be set and maintained in rotation by that of the receptacle. So, also, having regard to the feature of my invention which provides for maintaining such a device in operation in a receptacle which may be hermetically sealed, so as to be capable of containing an inert medium under pressure in which the makes and breaks occur and which medium is practically essential to a long-continued and economical operation of the device, I may employ other and widely-different means for opposing or preventing the rotation of the part carrying such vanes in the direction of the rotation of the receptacle and fluid.

Having now described my invention, what I claim is—

1. A circuit-controller comprising, in combination, a closed receptacle containing a fluid, means for rotating the receptacle, a support mounted within the receptacle, means for opposing or preventing its movement in the direction of rotation of the receptacle, and a conductor carried by said support and adapted to make and break electric connection with the receptacle through the fluid, as set forth.

2. A circuit-controller comprising, in combination, a terminal capable of rotation and formed or provided with radiating contacts, a closed receptacle containing a fluid which constitutes the opposite terminal, means for rotating the receptacle, a support therein for the rotating terminal, and means for opposing or preventing the rotation of the support in the direction of the rotation of the receptacle, as set forth.

3. In a circuit-controller, the combination with a receptacle capable of rotation about an axis inclined to the vertical and containing a fluid which constitutes one terminal, a second terminal mounted within the receptacle, on a support capable of free rotation relatively to the receptacle, and a weight eccentric to the axis of rotation of the support for said terminal for opposing or preventing its movement in the direction of the rotation of the said receptacle, as set forth.

4. The combination with a receptacle mounted to revolve about an axis inclined to the vertical, of a spindle within the receptacle and concentric with its axis, a weight eccentric to the spindle, and a terminal carried by the said spindle, and adapted to be rotated by a body of conducting fluid contained in the receptacle when the latter is rotated, as set forth.

5. The combination with a receptacle mounted to rotate about an axis inclined to the vertical, a spindle within the receptacle and concentric with its axis, a weighted arm attached to said spindle, a bracket or arm also secured to said spindle, a rotary terminal with radiating contact arms or vanes mounted on said bracket in position to be rotated by a body of conducting fluid contained in said receptacle when said fluid is displaced by centrifugal action, as set forth.

NIKOLA TESLA.

Witnesses:
M. LAWSON DYER,
G. W. MARTLING

P-278

No. 609,247. Patented Aug. 16, 1898.

N. TESLA.

ELECTRIC CIRCUIT CONTROLLER.

(Application filed Mar. 12, 1898.)

(No Model.)

Fig. 1

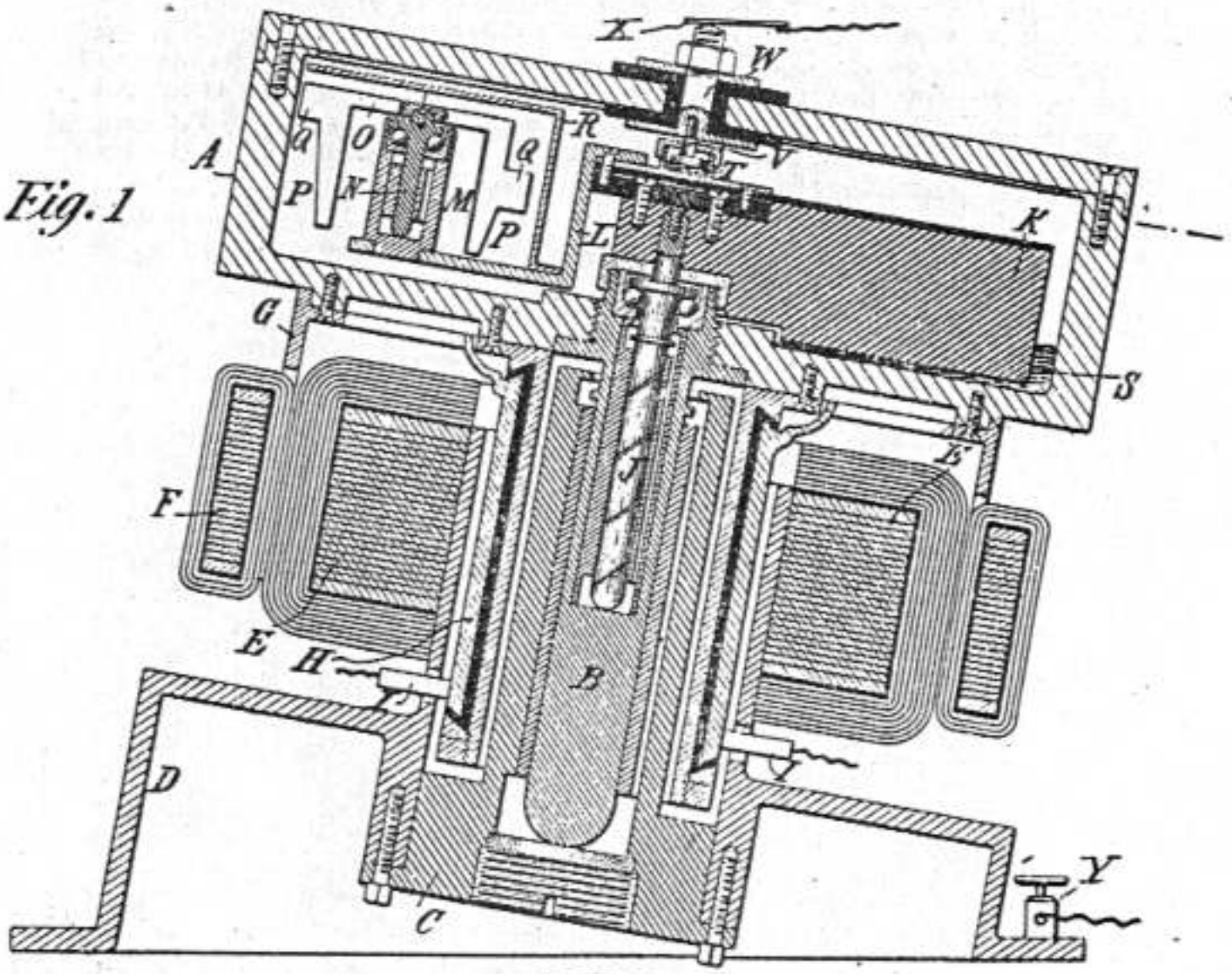

Fig. 2

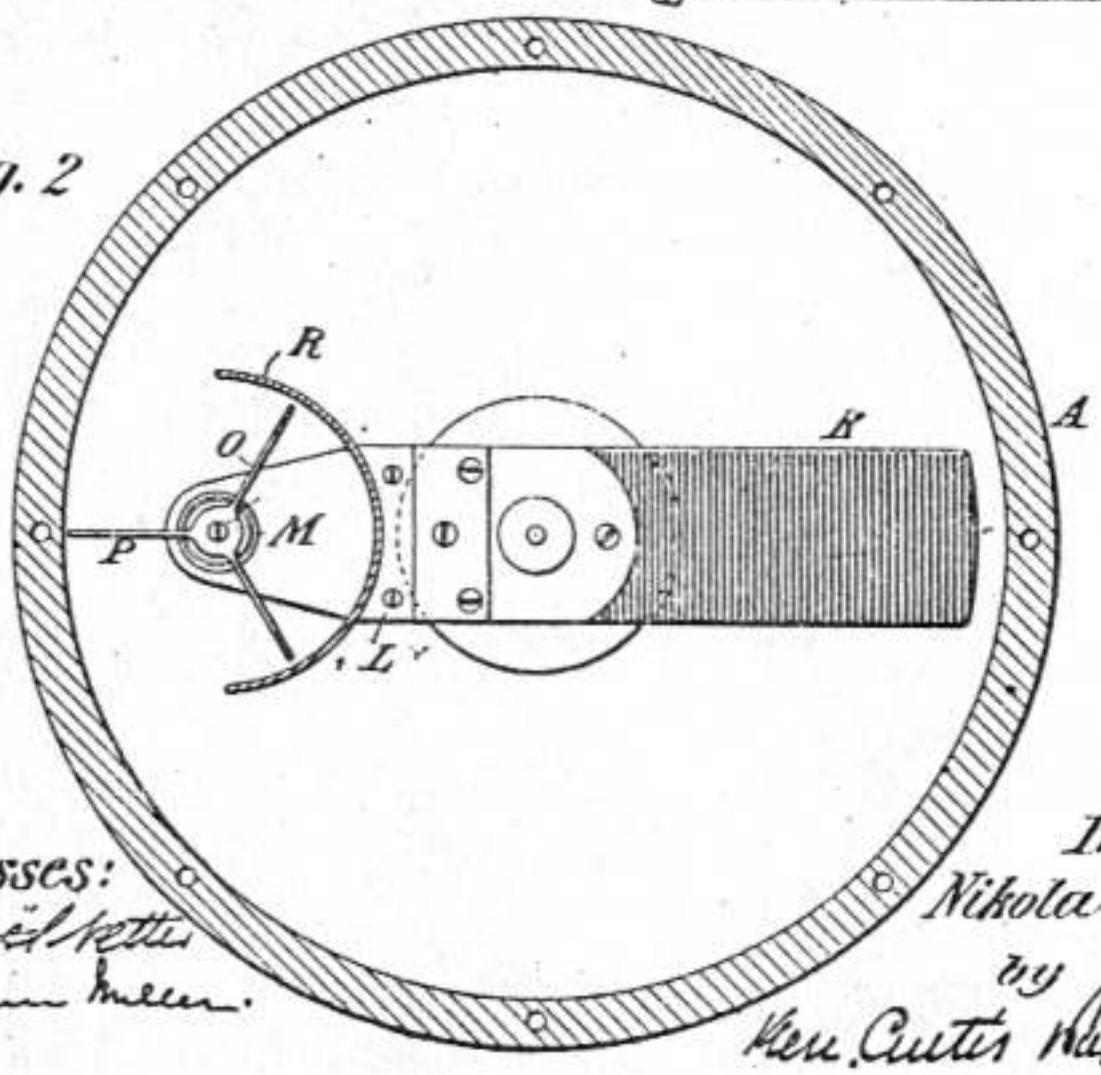

Witnesses:
Raphael Netter
Benjamin Mellen.

Inventor
Nikola Tesla
by
Kerr, Curtis & Page Attys

UNITED STATES PATENT OFFICE.

NIKOLA TESLA, OF NEW YORK, N. Y.

ELECTRIC-CIRCUIT CONTROLLER.

SPECIFICATION forming part of Letters Patent No. 609,248, dated August 16, 1898.

Application filed March 12, 1898. Serial No. 673,559. (No model.)

To all whom it may concern.

Be it known that I, NIKOLA TESLA, of the borough of Manhattan, in the city, county, and State of New York, have invented certain new and useful Improvements in Circuit-Controllers, of which the following is a specification, reference being had to the drawing accompanying and forming a part of the same.

In previous applications filed by me, notably in Serial No. 660,518, filed December 2, 1897, and others, I have shown and described various forms of electric-circuit controllers in which a conducting fluid is used for one or both of the terminals. These contrivances, while applicable generally as a means of making and breaking an electric circuit with great rapidity, were devised by me more especially for use in my now well-known system of electrical conversion by means of condenser-discharges and for this reason have been designed with especial reference to the peculiar and exceptional conditions which obtain in such systems. My present invention is an improvement in circuit-controllers of this kind, and in order that the object and nature of the improvement may be more readily understood and appreciated I may refer briefly to the more essential characteristics of the devices described before upon which the present improvement is based. As it was primarily essential that these controllers be capable of making and breaking the circuit at a very rapid rate and as such a result could not be secured practically or economically by any of the ordinary devices employing rigid contacts or terminals I was led to invent apparatus in which the circuit connections were established and broken between a rigid terminal and a fluid conductor or between two fluid conductors in the form of jets or streams. In the forms of apparatus employing a rigid or solid conductor as one terminal and a fluid as the other the makes and breaks of course occur always between a solid and a fluid terminal, and although the operative parts of my improved circuit-controllers were usually contained in air or gas tight receptacles and in an inert medium, both for the purpose of improving their action and preventing deterioration of the terminals, there is still a liability to wear of the rigid or solid terminal.

Under certain conditions, as when the circuit-controller is operated from a source of direct current, the deterioration of the solid terminal may be materially reduced by connecting it to the negative pole of the generator. Nevertheless, there will be always a slow wearing away of the metal, which to overcome entirely in a novel manner is the object of my present improvement. To do this, I effect the closure of the circuit through two parts of conducting fluid; but instead of breaking the circuit by the movement of these two parts or terminals, as before, I separate them periodically by the interposition of an insulator which is preferably solid and refractory. For example, I provide a plate or disk with teeth or projections—preferably of glass, lava, or the like—which are caused by the rotation of the disk to pass through the fluid conductor, jet, or whatever it may be, and thus effect a make and break of the circuit.

By means of such a device the breaks always occur between fluid terminals, and hence deterioration and consequent impairment of the qualities of the apparatus are avoided.

A preferred form of my improved circuit-controller is illustrated in the accompanying drawing, which shows a central vertical section of the same.

The two terminals are contained in an air-tight receptacle A, of iron or steel, which is mounted on a spindle B in a suitable socket or support C, so as to rotate freely. The socket C is secured to or forms part of a base or stand D. Any suitable means may be employed for effecting the rotation of the receptacle, and in illustration of a convenient and practicable means for this purpose I have shown an armature E, secured to a cylindrical extension of the receptacle that surrounds the socket C, and a field-magnet F, which is supported independently and is stationary. The armature-coils are connected with the segments S of a commutator on which bear brushes G.

In the spindle B and concentric with its axis is a spindle H, supported on ball-bearings or otherwise arranged to have a free movement of rotation relatively to the spindle B, so as to be as little as possible influenced by the rotation of the latter.

Any convenient means is provided to oppose or prevent the rotation of the spindle H

during the rotation of the receptacle. In the particular arrangement here shown for this purpose a weight or weighted arm J is secured to the spindle II and eccentrically to the axis of the latter, and as the bearing for the spindle B holds the same at an angle to the vertical this weight acts by gravity to hold the spindle II stationary.

Secured to the top or cover of the receptacle A by a stud K, which passes through an insulating-bushing in said cover and is held by a nut L, is a circular disk M, of conducting material, preferably iron or steel, having its edge turned downwardly and then inwardly to provide a peripheral trough on the under side of the disk.

To the under side of the disk M is secured a second disk N, having downwardly-inclined peripheral projections O O, of insulating and preferably refractory material, in a circle concentric with the disk M.

A tube or duct P is mounted on the spindle II or the weight J and is so arranged that the orifice at one end is directed outwardly toward the trough of the disk M, while the other lies close to the inner peripheral wall of the receptacle, so that if a quantity of mercury or other conducting fluid be placed in the receptacle and the latter rotated the tube or duct P, being held stationary, will take up the fluid which is carried by centrifugal action up the side of the receptacle and deliver it in a stream or jet against the trough or flange of the disk M or against the inner surfaces of the projections O of disk N, as the case may be.

Obviously, since the two disks M and N rotate with respect to the jet or stream of fluid issuing from the duct P, the electrical connection between the receptacle and the disk M through the fluid will be completed by the jet when the latter passes to the disk M between the projections O and will be interrupted whenever the jet is intercepted by the said projections.

The rapidity and the relative duration of the makes and breaks is determined by the speed of rotation of the receptacle and the number and width of the intercepting projections O.

By forming that portion of the disk M with which the jet makes contact as a trough, which will retain when in rotation a portion of the fluid directed against it, a very useful feature is secured. The fluid under the action of centrifugal force accumulates in and is distributed along the trough and forms a layer over the surface upon which the jet impinges. By this means a very perfect contact is always secured and all deterioration of the terminal surfaces avoided.

The principle of interrupting the circuit by intermittently passing an insulator through a fluid conductor may be carried out by many specifically-different forms of apparatus, and in this respect I do not limit myself to the particular form herein shown.

What I claim is—

1. In an electrical-circuit controller, the combination with a conductor forming one of the terminals, of means for maintaining a jet or stream of conducting fluid forming the other terminal, and directing it against said conductor, and a body adapted to be intermittently moved through and to intercept the jet or stream, as set forth.

2. In an electrical-circuit controller, the combination with a rigid terminal, of means for directing against such terminal a jet or stream of conducting fluid in electrical connection with the other terminal, and a body adapted to be intermittently moved through and to intercept the jet or stream, as set forth.

3. In an electrical-circuit controller, the combination with a rigid terminal, of means for directing against such terminal a jet or stream of conducting fluid in electrical connection with the other terminal, a body having a series of radial projections and means for rotating the same so that the said projections will intermittently intercept the stream or jet, as set forth.

4. In a circuit-controller, the combination with a rotary conductor forming one terminal, means for directing against such terminal a jet or stream of conducting fluid in electrical connection with the other terminal, and a body with spaced projections mounted to rotate in a path that intercepts the jet or stream of fluid, as set forth.

5. In a circuit-controller, the combination with a rotary conductor forming one terminal, and means for directing intermittently against such terminal a jet or stream of fluid in electrical connection with the other terminal, the part of said rotary conductor upon which the jet or stream impinges being formed so as to retain, by centrifugal force, a portion of the fluid directed against it, as set forth.

6. The combination of the receptacle, the conducting-disk secured within it, the insulated disk with peripheral projections and the stationary tube or duct for directing a stream or jet of conducting fluid toward the conducting-disk and across the path of the projections O, as set forth.

7. The combination of the receptacle, the conducting-disk with a peripheral trough-shaped flange, the insulated disk with peripheral projections O, and the stationary tube or duct for directing a stream or jet of conducting fluid into the trough-shaped flange of the conducting-disk and across the path of the projections O, as set forth.

NIKOLA TESLA.

Witnesses:
M. LAWSON DYER,
G. W. MARTLING.

P-281

No. 609,248. Patented Aug. 16, 1898.

N. TESLA.

ELECTRIC CIRCUIT CONTROLLER.

(Application filed Mar. 12, 1898.)

(No Model.)

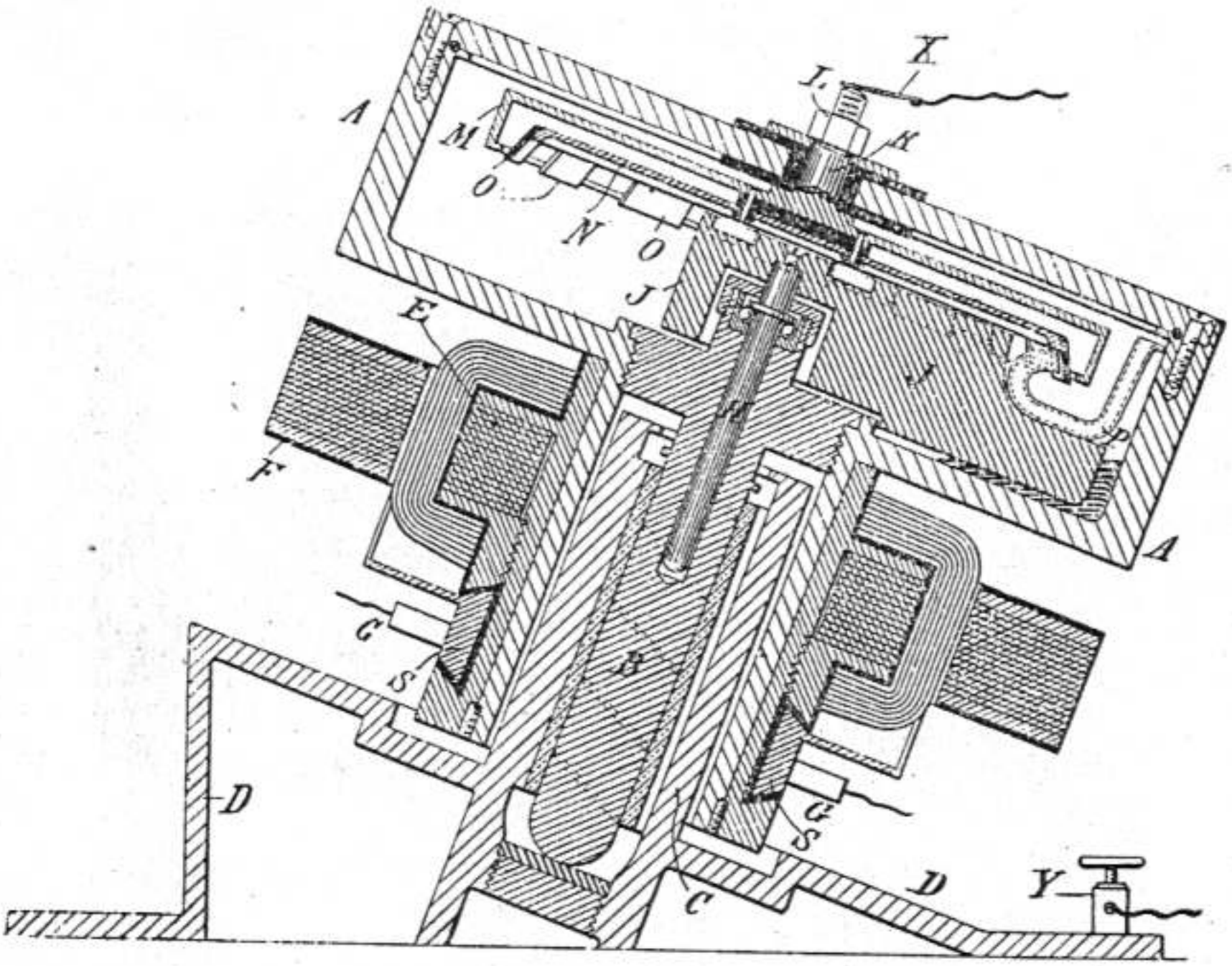

Witnesses:
Raphael Netter
Benjamin Mueller

Nikola Tesla, Inventor

by Kerr, Curtis & Page Attys.

UNITED STATES PATENT OFFICE.

NIKOLA TESLA, OF NEW YORK, N. Y.

ELECTRIC-CIRCUIT CONTROLLER.

SPECIFICATION forming part of Letters Patent No. 609,249, dated August 16, 1898.

Application filed March 12, 1898. Serial No. 673,560. (No model.)

To all whom it may concern:

Be it known that I, NIKOLA TESLA, of the borough of Manhattan, in the city, county, and State of New York, have invented certain new and useful Improvements in Electrical-Circuit Controllers, of which the following is a specification, reference being had to the drawing accompanying and forming part of the same.

The present application is based upon improvements in electrical-circuit controllers of the kind heretofore invented by me and described in previous applications, notably in an application filed December 2, 1897, Serial No. 660,518. The chief distinguishing features of these devices are the use of a conducting fluid for one or both of the terminals under conditions which permit of a very rapid succession of makes and breaks and a construction or arrangement which allows the inclosing of the terminals in an air-tight receptacle in which an inert medium may be maintained. My efforts to meet the practical requirements of apparatus of this kind have led me to adopt expedients and to invent mechanisms entirely novel in such devices. For example, in order to effect a rapidly-intermittent contact between two terminals by the use of a jet or jets in a closed receptacle it is obviously necessary to employ special means which will operate to hold one part of the apparatus stationary while the other rotates or to rotate both the essential parts or terminals in opposite directions or, as the case may be, in the same direction at different speeds.

The present invention is embodied in a device for securing the proper relative movement of the two parts or terminals of the circuit-controller and involves two salient features of novelty, one that it provides for maintaining in a rotating receptacle a stationary jet or jets which by impinging on a rigid conductor maintain the latter in rotation, thereby securing the requisite rapidly-intermittent contact between the two, and the other that it utilizes the rotation of such rigid conductor as a means for opposing or preventing the movement of its own supports in the direction of rotation of the receptacle, thereby securing, among other things, an approximately constant relative movement between the parts, a feature which in devices of this kind is often very desirable.

In the drawing hereto annexed I have illustrated the preferred form of apparatus which I have devised for carrying out these improvements. The figure is a central vertical cross-section of a circuit-controller.

A designates a receptacle, usually of iron or steel and mounted in any suitable manner, as by trunnions B B, having bearings in standards C C, so as to be capable of rapid rotation about a horizontal axis.

In the particular form of device under consideration the receptacle is divided into two parts insulated by a washer D and held together by insulated bolts E with nuts F. These two parts are electrically connected, respectively, with the two terminals of the apparatus, as hereinafter described, and by means of brushes X Y, bearing at any suitable points on the two parts of the receptacle, the circuit-controller is connected with the wires of a circuit.

Any convenient means may be employed to rotate the receptacle; but a simple way to effect this is to surround the same with a field-magnet G and to make the receptacle itself the armature of an electric motor or also to secure to it armature-cores, as H.

A body I is supported by trunnions J, having bearings in the ends of the receptacle and concentric with the axis of rotation of the same. The weight of the body I being eccentric to this axis tends to oppose its turning about the axis when the receptacle is rotated.

Upon the body or support I, but insulated therefrom, is secured a vertical standard K, in which there is a freely-rotatable spindle L, carrying a disk M, with radial arms inclined to the plane of the disk, so as to form vanes N. Arms O P are also secured to the body I and are formed with or carry at their ends ducts or tubes Q, with one end directed toward and opening upon the vanes N and the other end close to the inner wall of the receptacle and opening in the direction opposite to that of the rotation of the receptacle.

A suitable quantity of mercury R is placed in the receptacle before the latter is sealed or closed.

The operation of the device is as follows:

The receptacle is started in rotation, and as it acquires a high velocity the mercury or other conducting fluid R is caused by centrifugal action to distribute itself in a layer over the inner peripheral surface of the receptacle. As the tubes or ducts Q do not take part in the rotation of the fluid, being held at the start by the weighted body I, they take up the mercury as soon as it is carried to the points where the ducts open and discharge it upon the vanes of the disk M. By this means the disk is set in rapid rotation, establishing the contact between the two sides of the receptacle which constitute the two terminals of the circuit-controller whenever the two streams or jets of fluid are simultaneously in contact with the vanes, but breaking the contact whenever the jets discharge through the spaces between the vanes. The chief object of employing more than one insulated jet is to secure a higher velocity of approach and separation, and in respect to the number of jets thus employed the device may be obviously modified as desired without departure from the invention. The disk M, having acquired a very rapid rotation, operates to prevent by gyrostatic action any tendency of the body I to rotate or oscillate, as such movement would change the plane of rotation of the disk. The movement of the parts, therefore, and the operation of the device as a whole are very steady and uniform, and a material practical advantage is thereby secured. The speed of the disk will be chiefly dependent on the velocity of the streams and pitch of the blades, and it is of course necessary in order to produce a constant speed of rotation of the disk that the velocity of the streams be constant. This is accomplished by rotating the receptacle with a constant speed; but when this is impracticable and the uniformity of motion of the disk very desirable I resort to special means to secure this result, as by providing overflowing-reservoirs V V, as indicated by dotted lines, from which the fluid issues upon the vanes with constant velocity, though the speed of the receptacle may vary between wide limits.

It may be stated that the jets can be produced in any other known ways and that they may be utilized in any desired manner to produce rotation of the disk.

Having now described my invention, what I claim is—

1. The combination in a circuit-controller with a closed rotary receptacle, of a rigid conductor mounted within the same and through which the circuit is intermittently established, and means for directing a jet or stream of a fluid which is contained in the receptacle, against the said body so as to effect its rotation independently of the receptacle, as set forth.

2. In an electric-circuit controller, the combination of a closed rotary receptacle, a conducting body therein adapted to be rotated independently of the receptacle by the impingement thereon of a jet or stream of conducting fluid, and means for maintaining such a jet and directing it upon the said conductor, as set forth.

3. In a circuit-controller, the combination with a rotary receptacle of a body or part mounted within the receptacle and concentrically therewith, a conducting-terminal supported by said body and capable of rotation in a plane at an angle to the plane of rotation of the receptacle so as to oppose, by gyrostatic action, the rotation of the support, and means for directing a jet of conducting fluid against the said terminal, as set forth.

4. In a circuit-controller, the combination with a rotary receptacle of a support for a conductor mounted thereon concentrically with the receptacle and a gyrostatic disk carried by the support and adapted, when rotating, to oppose its movement in the direction of rotation of the receptacle, as set forth.

5. In a circuit-controller, the combination with a rotary receptacle containing a conducting fluid, a support mounted within the receptacle, means for opposing or preventing its movement in the direction of rotation of the receptacle, one or more tubes or ducts carried thereby and adapted to take up the fluid from the rotating receptacle and discharge the same in jets or streams, and a conductor mounted on the support and adapted to be rotated by the impingement thereon of said jet or jets, as set forth.

6. The combination in a circuit-controller of a rotary receptacle, one or more tubes or ducts and a support therefor capable of rotation independently of the receptacle, a conductor mounted on said support in a plane at an angle to that of rotation of the receptacle, and adapted to be maintained in rotation by a jet of fluid taken up from the receptacle by and discharged upon it from the said tube or duct, when the receptacle is rotated.

7. The combination with a rotary receptacle of one or more tubes or ducts, a holder or support therefor mounted on bearings within the receptacle, which permit of a free relative rotation of said receptacle and holder, a disk with a bearing on the said holder and having its plane of rotation at an angle to that of the receptacle, the disk being formed or provided with conducting-vanes, upon which a jet of conducting fluid, taken up by the tube or duct from the receptacle when in rotation, is directed.

NIKOLA TESLA.

Witnesses:
M. LAWSON DYER,
G. W. MARTLING.

P-284

No. 609,249 Patented Aug. 16, 1898.

N. TESLA.

ELECTRIC CIRCUIT CONTROLLER.

(Application filed Mar. 12, 1898.)

(No Model.)

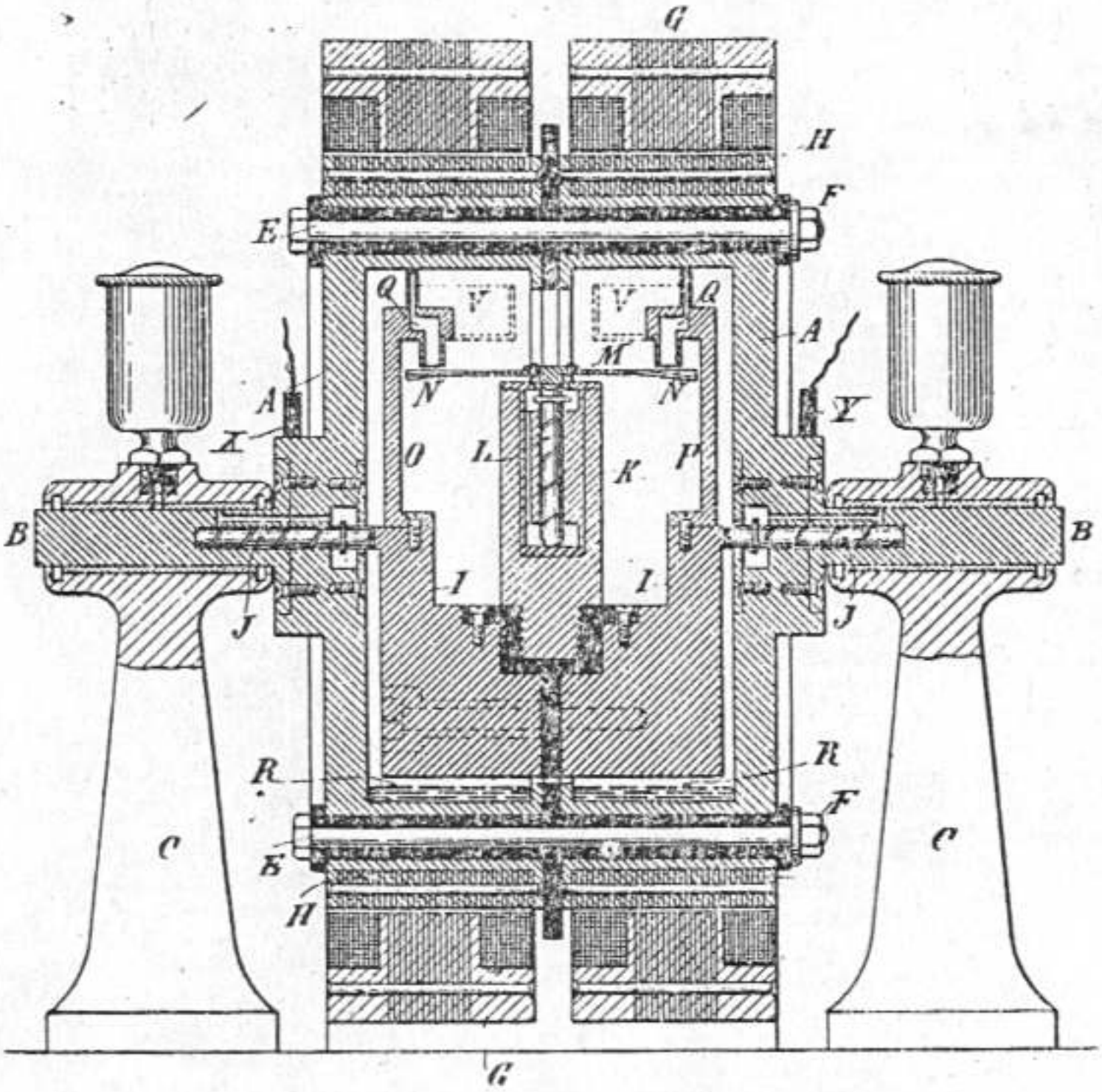

Witnesses:
Raphael Netter
Benjamin Miller.

Nikola Tesla, Inventor
by Kerr, Curtis & Page Attys

UNITED STATES PATENT OFFICE.

NIKOLA TESLA, OF NEW YORK, N. Y.

ELECTRIC-CIRCUIT CONTROLLER.

SPECIFICATION forming part of Letters Patent No. 613,735, dated November 8, 1898.

Application filed April 10, 1898. Serial No. 676,127. (No model.)

To all whom it may concern:

Be it known that I, NIKOLA TESLA, residing at New York, in the county and State of New York, have invented certain new and useful Improvements in Electrical-Circuit Controllers, of which the following is a specification, reference being had to the drawings accompanying and forming a part of the same.

In the electrical system or combination of apparatus for the conversion of electrical energy by means of the discharges of a condenser invented and heretofore described by me the means employed for making and breaking the electric circuit, though performing a subordinate function, may from the peculiar conditions which exist become a highly important consideration, not only as regards their practicability and durability, but also the economy in the operation of the system or apparatus. Of such importance is this consideration that for the most efficient and reliable operation of my said system I have found it necessary to devise special appliances for making and breaking the circuit which differ materially in construction and mode of operation from any previously-existing devices of this character of which I am aware. In the forms of such apparatus which I have produced at least one of the terminals is a conducting fluid, while the other is usually a solid conductor or series of conductors, both being preferably inclosed in a gas-tight receptacle and brought by rotary movement into rapidly intermittent contact. I have shown and described typical forms of such circuit-controllers in applications Serial No. 660,518, filed December 2, 1897; Serial No. 639,227, filed June 3, 1897, and Serial No. 671,897, filed February 28, 1898.

The invention, subject of my present application, pertains to apparatus of this class and involves certain improvements in the construction and mode of operation of the same which have primarily for their object to secure a greater relative speed between the two terminals, whereby the periods of make-and-break, during which occurs the chief loss of energy, may be materially shortened and also a higher frequency of current impulses secured. A brief consideration of the forms of circuit-controller of this general kind which I have heretofore shown and described will conduce to a better understanding of the principles followed in the construction of the apparatus upon which my present application is based and of the primary object which I have in view—to increase the relative speed of the two terminals in approaching and receding from each other.

In some forms of the circuit-controllers heretofore described by me I employ a closed receptacle capable of being maintained in rapid rotation. Within this receptacle is mounted a body the rotation of which is retarded or prevented and which carries a tube or duct which takes up a conducting fluid from the receptacle when the latter is rotated and directs the said fluid against a conductor or series of spaced conductors carried by the rotating receptacle. This apparatus, while effective to a high degree and possessing many advantages over previously-existing forms, is nevertheless subject to certain limitations as to efficiency, having regard to the speed at which the receptacle is rotated, for not only may an undue loss of energy result from rotating the receptacle, but also from the unnecessarily-rapid movement of the conducting fluid. With a view to improving the apparatus in these particulars I devised forms in which the receptacle was stationary and the interior terminal conductor rotated, and by this means I reduced the mass and weight of the moving parts. I also employed a device in the nature of a pump, which formed a part of the circuit-controller proper and was operated by the motor used for rotating the conductor, and thus maintained a flow of conducting fluid from ducts in the receptacle against the rotating conductor with no greater speed than required for efficient operation. By such an apparatus it is not only possible to secure a higher relative speed between the two terminals, but to do this with a smaller expenditure of mechanical energy. To still further increase the relative speed of the terminals, I now provide for rotating each of the terminals with respect to the other, so that the rate of mutual contact is very greatly increased.

Obviously various means may be employed for rotating the conductors, or, in general, the two essential parts which by their movement

produce a make and break; but in the annexed drawings I have only shown such forms of the apparatus as best illustrate the present improvement.

Figure 1 is a central vertical section of a circuit-controller comprising a conductor or series of conductors forming one terminal and means for maintaining a jet or jets of conducting fluid constituting the other terminal, which are arranged to be rotated in opposite directions. Fig. 2 is a similar view of a modified form of circuit-controller.

A designates a casting of cylindrical form within which is a standard or socket B, in which is mounted a vertical spindle C, carrying the circuit-controlling mechanism. The said mechanism is contained in a receptacle D, of iron or steel, the top or cover of which is composed of an annular plate E and a cap or dome F, the latter being of insulating material or of a metal of comparatively high specific resistance, such as German silver. The receptacle D as a whole is made air-tight and any suitable means may be employed to effect its rotation, the particular device shown for this purpose being an electromagnetic motor, one element, G, of which is secured to the spindle C or receptacle D and the other, H, to the box or case A. Within the receptacle D and secured to the top of the same, but insulated therefrom, is a circular conductor K, with downwardly-extending projections or teeth L. This conductor is maintained in electrical connection with a plate M outside of the receptacle by means of screws or bolts N, passing through insulated gaskets in the top of the receptacle D. Within the latter is a standard or socket O, in which is mounted a spindle P, concentric with the axis of the receptacle.

Any suitable means may be provided for rotating the spindle P independently of the receptacle D; but for this purpose I again employ an electromagnetic motor, one element, Q, of which is secured to the spindle P within the receptacle D and the other, R, is secured to the box A and surrounds the cap or dome F, within which is mounted the armature Q.

Depending from the spindle P or the armature Q is a cylinder S, to which are secured arms T T, extending radially therefrom and supporting short tubes or ducts V between the peripheral walls of the receptacle D and the series of teeth or projections L.

The tubes V have openings at one end in close proximity to the inner wall of the receptacle D and turned in a direction opposite to that in which the latter is designed to rotate and at the other end orifices which are adapted to direct a stream or jet of fluid against the projections L.

To operate the apparatus, the receptacle D, into which a suitable quantity of conducting fluid, such as mercury, is first poured, and the spindles P are both set in rotation by their respective motors and in opposite directions. By the rotation of receptacle D the conducting fluid is carried by centrifugal force up the sides or walls of the same and is taken up by the tubes or ducts V and discharged against the rotating conductors L. If, therefore, one terminal of the circuit be connected with any part of the receptacle D or the metal portions of the instrument in electrical connection therewith and the other terminal be connected to the plate M, the circuit between these terminals will be completed whenever a jet from one of the ducts V is discharged against one of the projections L and interrupted when the jets are discharged through the spaces between such projections. I have indicated the necessary circuit connections by wires X and X', connected, respectively, with a brush M', bearing upon the circular plate M, and a binding-post X'', set in the frame or casing A.

In Fig. 2 a modified form of apparatus is shown and by means of which similar results are obtained. In this device the top and bottom A' of the receptacle are metal plates, while the cylindrical portion or sides A'' is of insulating material, such as porcelain. Within the receptacle and preferably integral with the side walls A'' are two annular troughs W W', which contain a conducting fluid B', such as mercury. Terminals C' C'', passing through the bottom of the receptacle through insulating and packed sleeves, afford a means of connecting the mercury in the two troughs with the conductors of the circuit. Surrounding that portion of the device in which the troughs W W' lie is a core D', wound with coils D'' arranged in any suitable and well-known manner to produce, when energized by currents of different phase, a rotating magnetic field in the space occupied by the two bodies of mercury. To intensify the action, a circular laminated core E' is placed within the receptacle. If by this or any other means the mercury is set in motion and caused to flow around in the troughs, and if a conductor be mounted in position to be rotated by the mercury, and when so rotated to make intermittent contact therewith, a circuit-controller may be obtained of novel and distinctive character and capable of many useful applications independently of the other features which are embodied in the complete device which is illustrated. For the present purpose I provide in the center of the receptacle a socket in which is mounted a spindle P', carrying a disk G'. Depending from said disk are arms H', which afford bearings for a shaft K', supporting two star-shaped wheels L' L'', arranged to make contact with the mercury in the two troughs, respectively. The shaft K' is mounted in insulated bearings, so that when both wheels are in contact with mercury the circuit connecting the terminals C' C' will be closed. The disk G' carries an annular core N', which is adapted to be maintained in rotation by a core O' and coils O'', supported outside of the receptacle and preferably of the same character as those used for

imparting rotation to the mercury; but the direction of rotation should be opposite to that of the mercury. The rate of rotation of the wheels L' L'' depends upon the rate of relative movement of the mercury, and hence if the mercury be caused to flow in one direction and the wheels be carried bodily in the opposite direction the rate of rotation, and consequently the frequency of the makes and breaks, will be very greatly increased over that which would be obtained if the wheels L' L'' were supported in a stationary bearing.

It is obvious that by means of devices of the character described a rapid interruption of the circuit may be effected, while all the practical advantages which may be derived from inclosing the terminals or contacts in a closed receptacle are readily realized to the fullest extent.

Having now described my invention, what I claim is—

1. In a circuit-controller, the combination with rigid and fluid conductors adapted to be brought intermittently into contact with each other, thereby making and breaking the electric circuit, of means for imparting rotary motion to both of said conductors, as set forth.

2. In a circuit-controller, the combination with a receptacle containing a conducting fluid, means for imparting a movement of rotation to the fluid, and a conductor adapted to be rotated by the movement of said fluid and to thereby make and break electric connection with the fluid, as set forth.

NIKOLA TESLA.

Witnesses:
M. LAWSON DYER,
G. W. MARTLING.

P-288

No. 613,735. Patented Nov. 8, 1898.

N. TESLA.

ELECTRIC CIRCUIT CONTROLLER.

(Application filed Apr. 10, 1896.)

(No Model.) 2 Sheets—Sheet 1.

Fig. 1.

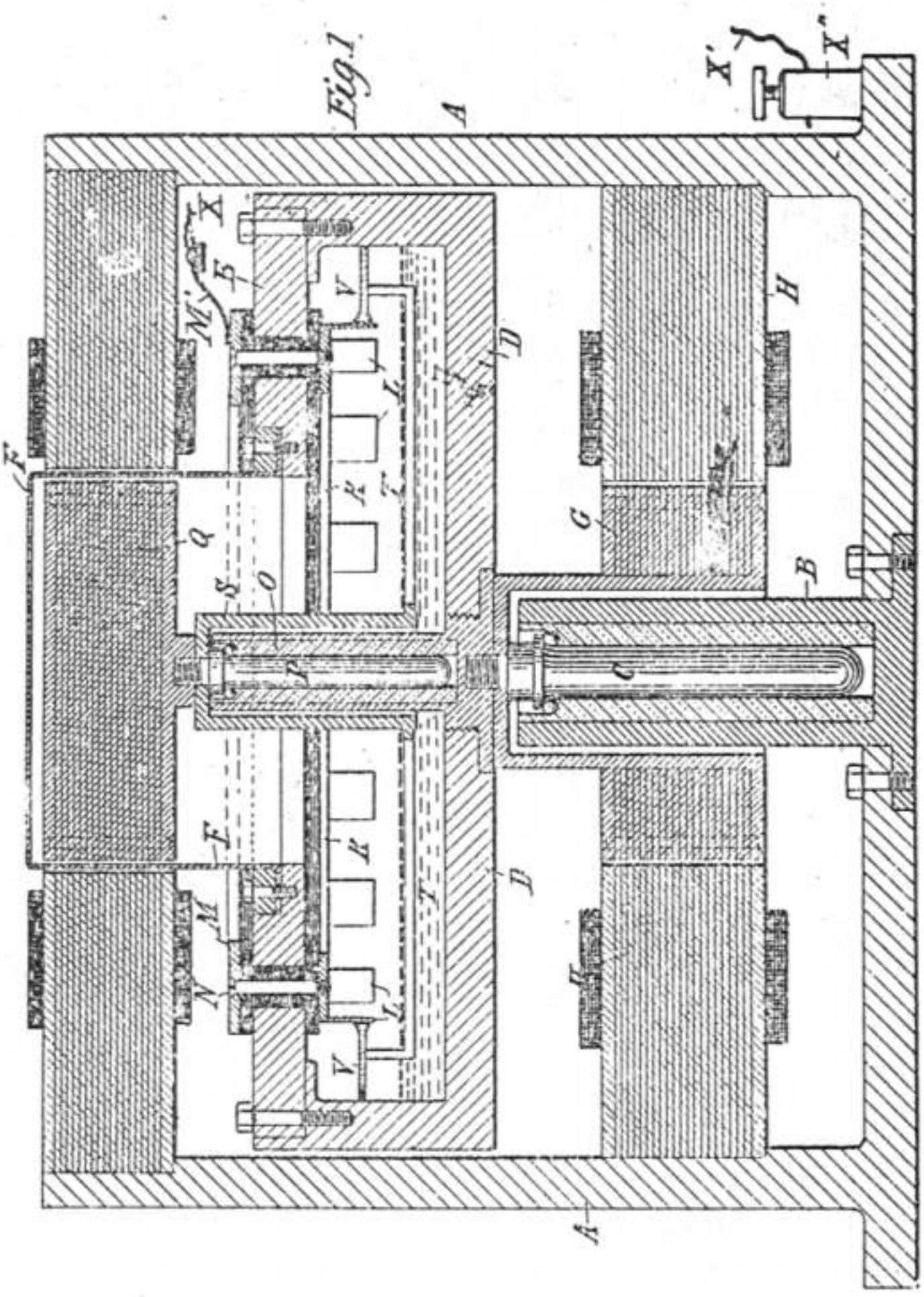

Witnesses:
Raphael Netter
Benjamin Miller

Nikola Tesla, Inventor.
Kerr, Curtis & Page Attys.

P-289

No. 613,735. Patented Nov. 8, 1898.

N. TESLA.

ELECTRIC CIRCUIT CONTROLLER.

(Application filed Apr. 19, 1898.)

(No Model.) 2 Sheets—Sheet 2.

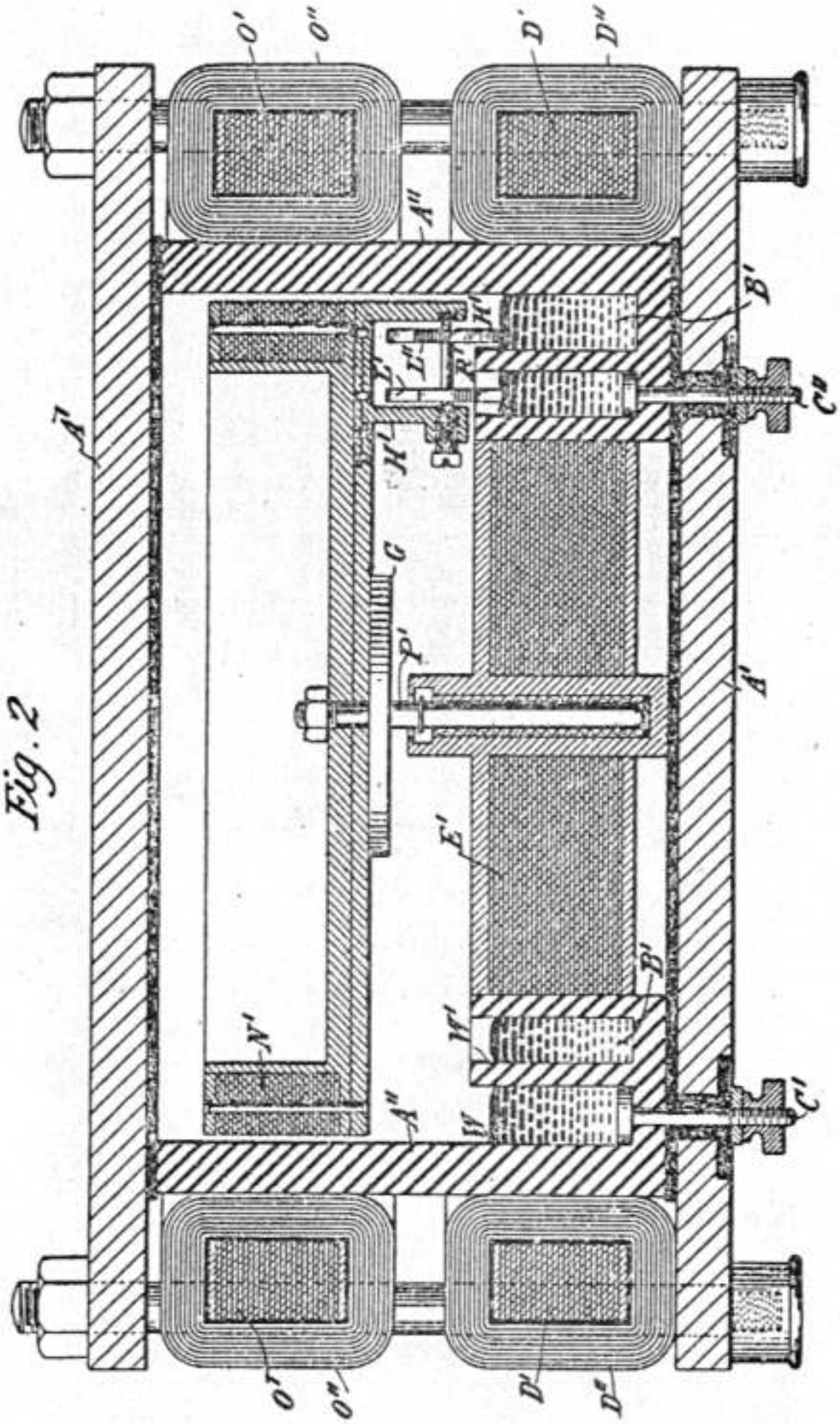

Fig. 2.

Witnesses:
Raphael Netter
Benjamin Miller.

Nikola Tesla, Inventor
by Kerr, Curtis & Page Attys

V
RADIO

UNITED STATES PATENT OFFICE.

NIKOLA TESLA, OF NEW YORK, N. Y.

APPARATUS FOR TRANSMISSION OF ELECTRICAL ENERGY.

SPECIFICATION forming part of Letters Patent No. 649,621, dated May 15, 1900.

Original application filed September 2, 1897, Serial No. 650,343. Divided and this application filed February 19, 1900. Serial No. 5,780. (No model.)

To all whom it may concern:

Be it known that I, NIKOLA TESLA, a citizen of the United States, residing at the borough of Manhattan, in the city of New York, county and State of New York, have invented certain new and useful Improvements in Apparatus for the Transmission of Electrical Energy, of which the following is a specification, reference being had to the drawing accompanying and forming a part of the same.

This application is a division of an application filed by me on September 2, 1897, Serial No. 650,343, entitled "Systems of transmissions of electrical energy," and is based upon new and useful features and combinations of apparatus shown and described in said application for carrying out the method therein disclosed and claimed.

The invention which forms the subject of my present application comprises a transmitting coil or conductor in which electrical currents or oscillations are produced and which is arranged to cause such currents or oscillations to be propagated by conduction through the natural medium from one point to another remote therefrom and a receiving coil or conductor at such distant point adapted to be excited by the oscillations or currents propagated from the transmitter.

This apparatus is shown in the accompanying drawing, which is a diagrammatic illustration of the same.

A is a coil, generally of many turns and of a very large diameter, wound in spiral form either about a magnetic core or not, as may be desired. C is a second coil formed by a conductor of much larger size and smaller length wound around and in proximity to the coil A.

The apparatus at one point is used as a transmitter, the coil A in this case constituting a high-tension, secondary, and the coil C the primary, of much lower tension, of a transformer. In the circuit of the primary C is included a suitable source of current G. One terminal of the secondary A is at the center of the spiral coil, and from this terminal the current is led by a conductor B to a terminal D, preferably of large surface, formed or maintained by such means as a balloon at an elevation suitable for the purposes of transmission. The other terminal of the secondary A is connected to earth, and, if desired, to the primary also, in order that the latter may be at substantially the same potential as the adjacent portions of the secondary, thus insuring safety. At the receiving-station a transformer of similar construction is employed; but in this case the longer coil A' constitutes the primary, and the shorter coil C' the secondary, of the transformer. In the circuit of the latter are connected lamps L, motors M, or other devices for utilizing the current. The elevated terminal D' connects with the center of the coil A', and the other terminal of said coil is connected to earth and preferably, also, to the coil C' for the reasons above stated.

The length of the thin wire coil in each transformer should be approximately one-quarter of the wave length of the electric disturbance in the circuit, this estimate being based on the velocity of propagation of the disturbance through the coil itself and the circuit with which it is designed to be used. By way of illustration, if the rate at which the current traverses the circuit including the coil be one hundred and eighty-five thousand miles per second then a frequency of nine hundred and twenty-five per second would maintain nine hundred and twenty-five stationary moves in a circuit one hundred and eighty-five thousand miles long and each wave would be two hundred miles in length.

For such a low frequency, which would be resorted to only when it is indispensable for the operation of motors of the ordinary kind under the conditions above assumed, I would use a secondary of fifty miles in length. By such an adjustment or proportioning of the length of wire in the secondary coil or coils the points of highest potential are made to coincide with the elevated terminals D D', and it should be understood that whatever length be given to the wires this requirement should be complied with in order to obtain the best results.

It will be readily understood that when the above-prescribed relations exist the best conditions for resonance between the transmit-

ting and receiving circuits are attained, and owing to the fact that the points of highest potential in the coils or conductors A A' are coincident with the elevated terminals the maximum flow of current will take place in the two coils, and this, further, necessarily implies that the capacity and inductance in each of the circuits have such values as to secure the most perfect condition of synchronism with the impressed oscillations.

When the source of current G is in operation and produces rapidly pulsating or oscillating currents in the circuit of coil C, corresponding induced currents of very much higher potential are generated in the secondary coil A, and since the potential in the same gradually increases with the number of turns toward the center and the difference of potential between the adjacent turns is comparatively small a very high potential impracticable with ordinary coils may be successively obtained.

As the main object for which the apparatus is designed is to produce a current of excessively-high potential, this object is facilitated by using a primary current of very considerable frequency; but the frequency of the currents is in a large measure arbitrary, for if the potential be sufficiently high and the terminals of the coils be maintained at the proper elevation where the atmosphere is rarefied the stratum of air will serve as a conducting medium for the current produced and the latter will be transmitted through the air, with, it may be, even less resistance than through an ordinary conductor

As to the elevation of the terminals D D', it is obvious that this is a matter which will be determined by a number of things, as by the amount and quality of the work to be performed, by the condition of the atmosphere, and also by the character of the surrounding country. Thus if there be high mountains in the vicinity the terminals should be at a greater height, and generally they should always be at an altitude much greater than that of the highest objects near them. Since by the means described practically any potential that is desired may be produced, the currents through the air strata may be very small, thus reducing the loss in the air.

The apparatus at the receiving-station responds to the currents propagated from the transmitter in a manner which will be well understood from the foregoing description. The primary circuit of the receiver—that is, the thin wire coil A'—is excited by the currents propagated by conduction through the intervening natural medium from the transmitter, and these currents induce in the secondary coil C' other currents which are utilized for operating the devices included in the circuit thereof.

Obviously the receiving-coils, transformers, or other apparatus may be movable—as, for instance, when they are carried by a vessel floating in the air or by a ship at sea. In the former case the connection of one terminal of the receiving apparatus to the ground might not be permanent, but might be intermittently or inductively established without departing from the spirit of my invention.

It is to be noted that the phenomenon here involved in the transmission of electrical energy is one of true conduction and is not to be confounded with the phenomena of electrical radiation which have heretofore been observed and which from the very nature and mode of propagation would render practically impossible the transmission of any appreciable amount of energy to such distances as are of practical importance.

What I now claim as my invention is—

1. The combination with a transmitting coil or conductor connected to ground and to an elevated terminal respectively, and means for producing therein electrical currents or oscillations, of a receiving coil or conductor similarly connected to ground and to an elevated terminal, at a distance from the transmitting-coil and adapted to be excited by currents caused to be propagated from the same by conduction through the intervening natural medium, a secondary conductor in inductive relation to the receiving-conductor and devices for utilizing the current in the circuit of said secondary conductor, as set forth.

2. The combination with a transmitting coil or conductor having its ends connected to ground and to an elevated terminal respectively, a primary coil in inductive relation thereto and a source of electrical oscillations in said primary circuit, of a receiving conductor or coil having its ends connected to ground and to an elevated terminal respectively and adapted to be excited by currents caused to be propagated from the transmitter through the natural medium and a secondary circuit in inductive relation to the receiving-circuit and receiving devices connected therewith, as set forth.

3. The combination with a transmitting instrument comprising a transformer having its secondary connected to ground and to an elevated terminal respectively, and means for impressing electrical oscillations upon its primary, of a receiving instrument comprising a transformer having its primary similarly connected to ground and to an elevated terminal, and a translating device connected with its secondary, the capacity and inductance of the two transformers having such values as to secure synchronism with the impressed oscillations, as set forth.

4. The combination with a transmitting instrument comprising an electrical transformer having its secondary connected to ground and to an elevated terminal respectively, and means for impressing electrical oscillations upon its primary, of a receiving instrument comprising a transformer having its primary similarly connected to ground and to an elevated terminal, and a translat-

ing device connected with its secondary, the capacity and inductance of the secondary of the transmitting and primary of the receiving instruments having such values as to secure synchronism with the impressed oscillations, as set forth.

5. The combination with a transmitting coil or conductor connected to ground and an elevated terminal respectively, and means for producing electrical currents or oscillations in the same, of a receiving coil or conductor similarly connected to ground and to an elevated terminal and synchronized with the transmitting coil or conductor, as set forth.

6. The combination with a transmitting instrument comprising an electrical transformer, having its secondary connected to ground and to an elevated terminal respectively, of a receiving instrument comprising a transformer, having its primary similarly connected to ground and to an elevated terminal, the receiving-coil being synchronized with that of the transmitter, as set forth.

7. The combination with a transmitting coil or conductor connected to ground and to an elevated terminal respectively, and means for producing electrical currents or oscillations in the same, of a receiving coil or conductor similarly connected to ground and to an elevated terminal, the said coil or coils having a length equal to one-quarter of the wave length of the disturbance propagated, as set forth.

8. The combination with a transmitting coil or conductor connected to ground and to an elevated terminal respectively, and adapted to cause the propagation of currents or oscillations by conduction through the natural medium, of a receiving-circuit similarly connected to ground and to an elevated terminal, and of a capacity and inductance such that its period of vibration is the same as that of the transmitter, as set forth.

9. The transmitting or receiving circuit herein described, connected to ground and an elevated terminal respectively, and arranged in such manner that the elevated terminal is charged to the maximum potential developed in the circuit, as set forth.

10. The combination with a transmitting coil or conductor connected to ground and to an elevated terminal respectively of a receiving-circuit having a period of vibration corresponding to that of the transmitting-circuit and similarly connected to ground and to an elevated terminal and so arranged that the elevated terminal is charged to the highest potential developed in the circuit, as set forth.

NIKOLA TESLA.

Witnesses:
PARKER W. PAGE,
MARCELLUS BAILEY.

P-296

No. 649,621. Patented May 15, 1900

N. TESLA.

APPARATUS FOR TRANSMISSION OF ELECTRICAL ENERGY.

(Application filed Feb. 19, 1900.)

(No Model.)

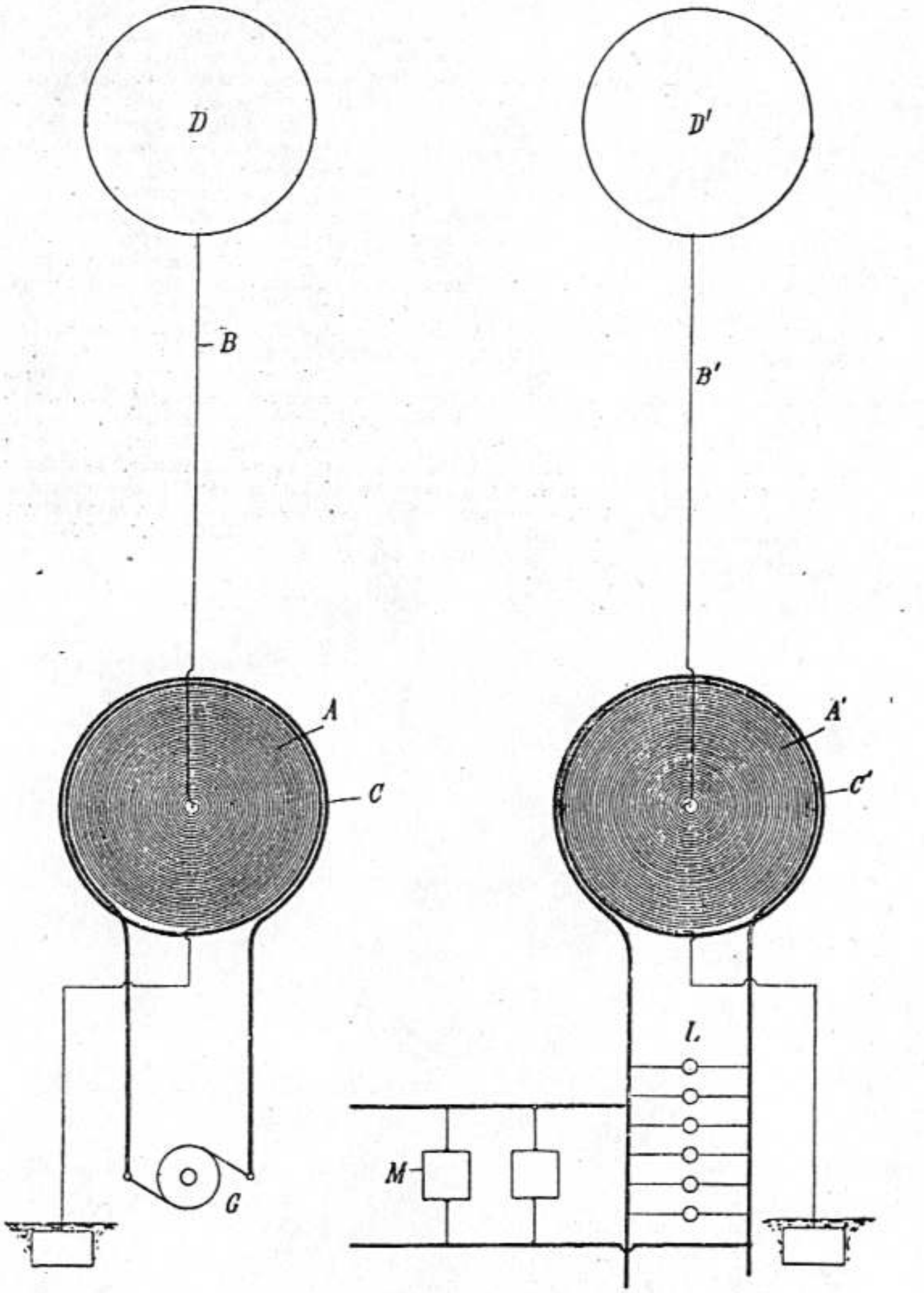

Witnesses:
Benjamin Miller
A. H. Hertting

Nikola Tesla, Inventor
by Kerr, Page & Cooper
Attys

UNITED STATES PATENT OFFICE.

NIKOLA TESLA, OF NEW YORK, N. Y.

METHOD OF INTENSIFYING AND UTILIZING EFFECTS TRANSMITTED THROUGH NATURAL MEDIA.

SPECIFICATION forming part of Letters Patent No. 685,953, dated November 5, 1901.

Application filed June 24, 1899. Renewed May 20, 1901. Serial No. 62,315. (No model.)

To all whom it may concern:

Be it known that I, NIKOLA TESLA, a citizen of the United States, residing at New York, in the county and State of New York, have invented a new and useful Improvement in Methods of Intensifying and Utilizing Effects Transmitted Through the Natural Media, of which the following is a specification, reference being had to the accompanying drawings, which form a part of the same.

The subject of my present invention is an improvement in the art of utilizing effects transmitted from a distance to a receiving device through the natural media; and it consists in a novel method by means of which results hitherto unattainable may be secured.

Several ways or methods of transmitting electrical disturbances through the natural media and utilizing them to operate distant receivers are now known and have been applied with more or less success for accomplishing a variety of useful results. One of these ways consists in producing by a suitable apparatus rays or radiations—that is, disturbances—which are propagated in straight lines through space, directing them upon a receiving or recording apparatus at a distance, and thereby bringing the latter into action. This method is the oldest and best known and has been brought particularly into prominence in recent years through the investigations of Heinrich Hertz. Another method consists in passing a current through a circuit, preferably one inclosing a very large area, inducing thereby in a similar circuit situated at a distance another current and affecting by the same in any convenient way a receiving device. Still another way, which has also been known for many years, is to pass in any suitable manner a current through a portion of the ground, as by connecting to two points of the same, preferably at a considerable distance from each other, the two terminals of a generator and to energize by a part of the current diffused through the earth a distant circuit which is similarly arranged and grounded at two points widely apart and which is made to act upon a sensitive receiver. These various methods have their limitations, one especially, which is common to all, being that the receiving circuit or instrument must be maintained in a definite position with respect to the transmitting apparatus, which often imposes great disadvantages upon the use of the apparatus.

In several applications filed by me and patents granted to me I have disclosed other methods of accomplishing results of this nature, which may be briefly described as follows: In one system the potential of a point or region of the earth is varied by imparting to it intermittent or alternating electrifications through one of the terminals of a suitable source of electrical disturbances which, to heighten the effect, has its other terminal connected to an insulated body, preferably of large surface and at an elevation. The electrifications communicated to the earth spread in all directions through the same, reaching a distant circuit which generally has its terminals arranged and connected similarly to those of the transmitting source and operates upon a highly-sensitive receiver. Another method is based upon the fact that the atmospheric air which behaves as an excellent insulator to currents generated by ordinary apparatus becomes a conductor under the influence of currents or impulses of enormously-high electromotive force which I have devised means for generating. By such means air strata, which are easily accessible, are rendered available for the production of many desired effects at distances, however great. This method, furthermore, allows advantage to be taken of many of those improvements which are practicable in the ordinary systems of transmission involving the use of a metallic conductor.

Obviously whatever method be employed it is desirable that the disturbances produced by the transmitting apparatus should be as powerful as possible, and by the use of certain forms of high-frequency apparatus which I have devised and which are now well known important practical advantages are in this respect secured. Furthermore, since in most cases the amount of energy conveyed to the distant circuit is but a minute fraction of the total energy emanating from the source it is necessary for the attainment of the best results that whatever the character of the receiver and the nature of the disturbances as much as possible of the energy conveyed should be made available for the operation

of the receiver, and with this object in view I have heretofore among other means employed a receiving-circuit of high self-induction and very small resistance and of a period such as to vibrate in synchronism with the disturbances, whereby a number of separate impulses from the source were made to coöperate, thus magnifying the effect exerted upon and insuring the action of the receiving device. By these means decided advantages have been secured in many instances; but very often the improvement is either not applicable at all or, if so, the gain is very slight. Evidently when the source is one producing a continuous pressure or delivering impulses of long duration it is impracticable to magnify the effects in this manner and when, on the other hand, it is one furnishing short impulses of extreme rapidity of succession the advantage obtained in this way is insignificant, owing to the radiation and the unavoidable frictional waste in the receiving-circuit These losses reduce greatly both the intensity and the number of the coöperative impulses, and since the initial intensity of each of these is necessarily limited only an insignificant amount of energy is thus made available for a single operation of the receiver. As this amount is consequently dependent on the energy conveyed to the receiver by one single impulse it is evidently necessary to employ either a very large and costly, and therefore objectionable, transmitter or else to resort to the equally objectionable use of a receiving device too delicate and too easily deranged. Furthermore, the energy obtained through the coöperation of the impulses is in the form of extremely rapid vibrations and, because of this, unsuitable for the operation of ordinary receivers, the more so as this form of energy imposes narrow restrictions in regard to the mode and time of its application to such devices.

To overcome these and other limitations and disadvantages which have heretofore existed in such systems of transmission of signals or intelligence is the main object of my present invention, which comprises a novel method of accomplishing these ends.

The method, briefly stated, consists in producing arbitrarily-varied or intermittent disturbances or effects, transmitting such disturbances or effects through the natural media to a distant receiving-station, utilizing energy derived from such disturbances or effects at the receiving-station to charge a condenser, and using the accumulated potential energy so obtained to operate a receiving device.

An apparatus by means of which this method may be practiced is illustrated in the drawings hereto annexed, in which—

Figure 1 is a diagrammatic illustration of the apparatus, and Fig. 2 is a modified form or arrangement of the same.

In the practical application of my method I usually proceed as follows: At any two points in the transmitting medium between which there exists or may be obtained in any manner through the action of the disturbances or effects to be investigated or utilized a difference of electrical potential of any magnitude I arrange two plates or electrodes so that they may be oppositely charged through the agency of such effects or disturbances, and I connect these electrodes to the terminals of a highly-insulated condenser, generally of considerable capacity. To the condenser-terminals I also connect the receiver to be operated in series with a device of suitable construction, which performs the function of periodically discharging the condenser through the receiver at and during such intervals of time as may be best suitable for the purpose contemplated. This device may merely consist of two stationary electrodes separated by a feeble dielectric layer of minute thickness or it may comprise terminals one or more of which are movable and actuated by any suitable force and are adapted to be brought into and out of contact with each other in any convenient manner. It will now be readily seen that if the disturbances of whatever nature they may be cause definite amounts of electricity of the same sign to be conveyed to each of the plates or electrodes above mentioned, either continuously or at intervals of time which are sufficiently long, the condenser will be charged to a certain potential, and an adequate amount of energy being thus stored during the time determined by the device effecting the discharge of the condenser the receiver will be periodically operated by the electrical energy so accumulated; but very often the character of the impulses and the conditions of their use are such that without further provision not enough potential energy would be accumulated in the condenser to operate the receiving device. This is the case when, for example, each of the plates or terminals receives electricity of rapidly-changing sign or even when each receives electricity of the same sign, but only during periods which are short as compared with the intervals separating them. In such instances I resort to the use of a special device which I insert in the circuit between the plates and the condenser for the purpose of conveying to each of the terminals of the latter electrical charges of the proper quality and order of succession to enable the required amount of potential energy to be stored in the condenser.

There are a number of well-known devices, either without any moving parts or terminals or with elements reciprocated or rotated by the application of a suitable force, which offer a more ready passage to impulses of one sign or direction than to those of the other, or permit only impulses of one kind or order of succession to traverse a path, and any of these or similar devices capable of fulfilling the requirements may be used in carrying my invention into practice. One such device of

familiar construction which will serve to convey a clear understanding of this part of my invention and enable a person skilled in the art to apply the same is illustrated in the annexed drawings. It consists of a cylinder A of insulating material, which is moved at a uniform rate of speed by clockwork or other suitable motive power and is provided with two metal rings B B', upon which bear brushes a and a', which are connected, respectively, in the manner shown to the terminal plates P and P', above referred to. From the rings B B' extend narrow metallic segments s and s', which by the rotation of the cylinder A are brought alternately into contact with double brushes b and b', carried by and in contact with conducting-holders h and h', which are adjustable longitudinally in the metallic supports D and D', as shown. The latter are connected to the terminals T and T' of a condenser C, and it should be understood that they are capable of angular displacement, as ordinary brush-supports. The object of using two brushes, as b and b', in each of the holders h and h' is to vary at will the duration of the electric contact of the plates P and P' with the terminals T and T', to which is connected a receiving-circuit including a receiver R and a device d of the kind above referred to, which performs the duty of closing the receiving-circuit at predetermined intervals of time and discharging the stored energy through the receiver. In the present case this device consists of a cylinder d, made partly of conducting and partly of insulating material e and e', respectively, which is rotated at the desired rate of speed by any suitable means. The conducting part e is in good electrical connection with the shaft S and is provided with tapering segments f f, upon which slides a brush k, supported on a conducting-rod l, capable of longitudinal adjustment in a metallic support m. Another brush n is arranged to bear upon the shaft S, and it will be seen that whenever one of the segments f comes in contact with the brush k the circuit, including the receiver R, is completed and the condenser discharged through the same. By an adjustment of the speed of rotation of the cylinder d and a displacement of the brush k along the cylinder the circuit may be made to open and close in as rapid succession and remain open or closed during such intervals of time as may be desired. The plates P and P', through which the electrifications are conveyed to the brushes a and a', may be at a considerable distance from each other and both in the ground or both in the air, or one in the ground and the other in the air, preferably at some height, or they may be connected to conductors extending to some distance or to the terminals of any kind of apparatus supplying electrical energy which is obtained from the energy of the impulses or disturbances transmitted from a distance through the natural media.

In illustration of the operation of the devices described let it be assumed that alternating electrical impulses from a distant generator, as G, are transmitted through the earth and that it is desired to utilize those impulses in accordance with my method. This may be the case, for example, when such a generator is used for purposes of signaling in one of the ways before enumerated, as by having its terminals connected to two points of the earth distant from each other. In this case the plates P and P' are first connected to two properly-selected points of the earth. The speed of rotation of the cylinder A is varied until it is made to turn in synchronism with the alternate impulses of the generator, and, finally, the position of the brushes b and b' is adjusted by angular displacement, as usual, or in other ways, so that they are in contact with the segments s and s' during the periods when the impulses are at or near the maximum of their intensity. Only ordinary electrical skill and knowledge are required to make these adjustments, and a number of devices for effecting synchronous movement being well known, and it being the chief object of my present application to set forth a novel method of utilizing or applying a principle, a detailed description of such devices is not considered necessary. I may state, however, that for practical purposes in the present case it is only necessary to shift the brushes forward or back until the maximum effect is secured. The above requirements being fulfilled, electrical charges of the same sign will be conveyed to each of the condenser-terminals as the cylinder A is rotated, and with each fresh impulse the condenser will be charged to a higher potential. The speed of rotation of the cylinder d being adjustable at will, the energy of any number of separate impulses may thus be accumulated in potential form and discharged through the receiver R upon the brush k coming in contact with one of the segments f. It will be of course understood that the capacity of the condenser should be such as to allow the storing of a much greater amount of energy than is required for the ordinary operation of the receiver. Since by this method a relatively great amount of energy and in a suitable form may be made available for the operation of a receiver, the latter need not be very sensitive; but of course when the impulses are very feeble, as when coming from a great distance or when it is desired to operate a receiver very rapidly, then any of the well-known devices capable of responding to very feeble influences may be used in this connection.

If instead of the alternating impulses short impulses of the same direction are conveyed to the plates P and P', the apparatus described may still readily be used, and for this purpose it is merely necessary to shift the brushes b and b' into the position indicated by the dotted lines while maintaining the

same conditions in regard to synchronism as before, so that the succeeding impulses will be permitted to pass into the condenser, but prevented from returning to the ground or transmitting medium during the intervals between them, owing to the interruption during such intervals of the connections leading from the condenser-terminals to the plates.

Another way of using the apparatus with impulses of the same direction is to take off one pair of brushes, as *b*, disconnect the plate P from brush *a* and join it directly to the terminal T of the condenser, and to connect brush *a* with brush *a'*. The apparatus thus modified would appear as shown in Fig. 2. Operated in this manner and assuming the speed of rotation of cylinder A to be the same, the apparatus will now be evidently adapted for a number of impulses per unit of time twice as great as in the preceding case. In all cases it is evidently important to adjust the duration of contact of segments *s* and *s'* with brushes *b b'* in the manner indicated.

When the method and apparatus I have described are used in connection with the transmission of signals or intelligence, it will of course be understood that the transmitter is operated in such a way as to produce disturbances or effects which are varied or intermitted in some arbitrary manner—for example, to produce longer and shorter successions of impulses corresponding to the dashes and dots of the Morse alphabet—and the receiving device will respond to and indicate these variations or intermittences, since the storage device will be charged and discharged a number of times corresponding to the duration of the successions of impulses received.

Obviously the special appliances used in carrying out my invention may be varied in many ways without departing from the spirit of the same.

It is to be observed that it is the function of the cylinder A, with its brushes and connections, to render the electrical impulses coming from the plates P and P' suitable for charging the condenser (assuming them to be unsuitable for this purpose in the form in which they are received) by rectifying them when they are originally alternating in direction or by selecting such parts of them as are suitable when all are not, and any other device performing this function will obviously answer the purpose. It is also evident that a device such as I have already referred to which offers a more ready passage to impulses of one sign or permits only impulses of the same sign to pass may also be used to perform this selective function in many cases when alternating impulses are received. When the impulses are long and all of the same direction, and even when they are alternating, but sufficiently long in duration and sustained in electromotive force, the brushes *b* and *b'* may be adjusted so as to bear on the parts B B' of the cylinder A, or the cylinder and its brushes may be omitted and the terminals of the condenser connected directly to the plates P and P'.

It will be seen that by the use of my invention results hitherto unattainable in utilizing disturbances or effects transmitted through natural media may be readily attained, since however great the distance of such transmission and however feeble or attenuated the impulses received enough energy may be accumulated from them by storing up the energy of succeeding impulses for a sufficient interval of time to render the sudden liberation of it highly effective in operating a receiver. In this way receivers of a variety of forms may be made to respond effectively to impulses too feeble to be detected or to be made to produce any sensible effect in any other way of which I am aware, a result of great value in various applications to practical use.

I do not claim herein an apparatus by means of which the above-described method is or may be practiced either in the special form herein shown or in other forms which are possible, having made claims to such apparatus in another application, Serial No. 729,812, filed September 8, 1899, as a division of the present case.

What I claim as my invention, and desire to secure by Letters Patent, is—

1. The method of transmitting and utilizing electrical energy herein described, which consists in producing arbitrarily varied or intermitted electrical disturbances or effects, transmitting the same to a distant receiving-station, charging, for succeeding and predetermined periods of time a condenser with energy derived from such effects or disturbances, and operating a receiving device by discharging at arbitrary intervals, the accumulated potential energy so obtained, as set forth.

2. The method of transmitting and utilizing electrical energy herein described, which consists in producing electrical disturbances or effects capable of being transmitted to a distance through the natural media, charging a condenser at a distant receiving-station with energy derived from such effects or disturbances, and using for periods of time, predetermined as to succession and duration, the potential energy so obtained to operate a receiving device.

3. The method of transmitting and utilizing electrical energy herein described, which consists in producing electrical disturbances or effects capable of being transmitted to a distance through the natural media, charging a condenser at a distant receiving-station for succeeding and predetermined periods of time, with energy derived from such effects or disturbances, and using for periods of time predetermined as to succession and duration, the accumulated energy so obtained to operate a receiving device.

4. The method hereinbefore described of producing arbitrarily varied or intermitted

electrical disturbances or effects, transmitting such disturbances or effects through the natural media to a distant receiving-station, storing in a condenser energy derived from a succession of such disturbances or effects for periods of time which correspond in succession to such effects or disturbances and are predetermined as to duration, and using the accumulated potential energy so obtained to operate a receiving device.

5. The method herein described of producing arbitrarily varied or intermitted electrical disturbances or effects, transmitting such disturbances or effects through the natural media to a distant receiving-station, establishing thereby a flow of electrical energy in a circuit at such station, charging a condenser with energy from such circuit, and using the accumulated potential energy so obtained to operate a receiving device.

6. The method herein described of producing arbitrarily varied or intermitted electrical disturbances or effects, transmitting such disturbances or effects through the natural media to a distant receiving-station, establishing thereby a flow of electrical energy in a circuit at such station, charging a condenser with electrical energy from such circuit, and discharging the accumulated potential energy so obtained into or through a receiving device at arbitrary intervals of time.

7. The method herein described of producing arbitrarily varied or intermitted electrical disturbances or effects, transmitting such disturbances or effects to a distant receiving-station, establishing thereby a flow of electrical energy in a circuit at such station, selecting or directing the impulses in said circuit so as to render them suitable for charging a condenser, charging a condenser with the impulses so selected or directed, and discharging the accumulated potential energy so obtained into, or through a receiving device.

8. The method herein described of producing arbitrarily varied or intermitted electrical disturbances or effects, transmitting such disturbances or effects through the natural media to a distant receiving-station, establishing thereby a flow of electrical energy in a circuit at such station, selecting or directing the impulses in said circuit so as to render them suitable for charging a condenser, charging a condenser with the impulses so selected or directed, and discharging the accumulated potential energy so obtained into, or through a receiving device at arbitrary intervals of time.

9. The method hereinbefore described of transmitting signals or intelligence, which consists in producing at the sending-station arbitrarily varied or intermitted disturbances or effects, transmitting such disturbances or effects through the natural media to a receiving-station, utilizing energy derived from such disturbances or effects at the receiving-station to charge a condenser and using the accumulated potential energy so obtained to operate a receiving device.

10. The method hereinbefore described of transmitting signals or intelligence through the natural media from a sending-station to a receiving-station, which consists in producing at the sending-station, arbitrarily varied or intermitted electrical effects or disturbances, transmitting the same through the natural media to the receiving-station, utilizing the energy derived from such disturbances or effects at the receiving-station to charge a condenser, and discharging the accumulated potential energy so obtained through a receiving device at arbitrary intervals of time.

11. The method hereinbefore described of transmitting signals or intelligence from a sending to a distant receiving station, which consists in producing at the former, arbitrarily varied or intermitted electrical disturbances or effects, transmitting the same to the receiving-station, charging by the energy derived from such disturbances or effects at the receiving-station a condenser, and using for periods of time predetermined as to succession and duration, the potential energy so obtained to operate a receiving device, as set forth.

NIKOLA TESLA.

Witnesses:
LEONARD E. CURTIS,
A. E. SKINNER.

P-302

No. 685,953. Patented Nov. 5, 1901.

N. TESLA.

METHOD OF INTENSIFYING AND UTILIZING EFFECTS TRANSMITTED THROUGH NATURAL MEDIA.

(Application filed June 24, 1899. Renewed May 20, 1901.)

(No Model.)

Fig. 1.

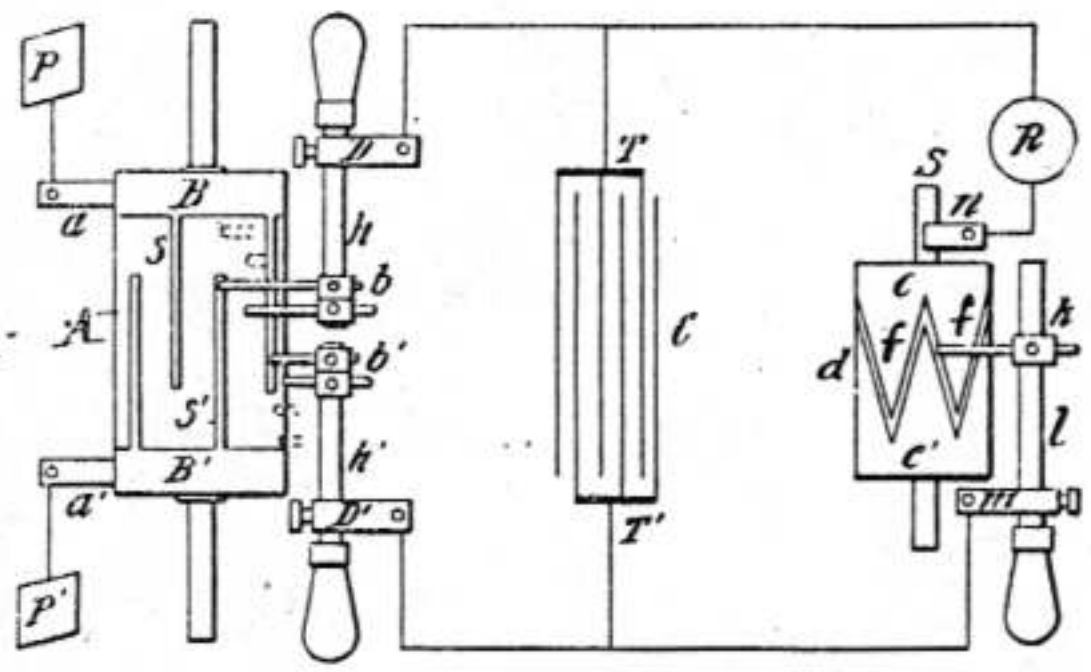

Fig. 2.

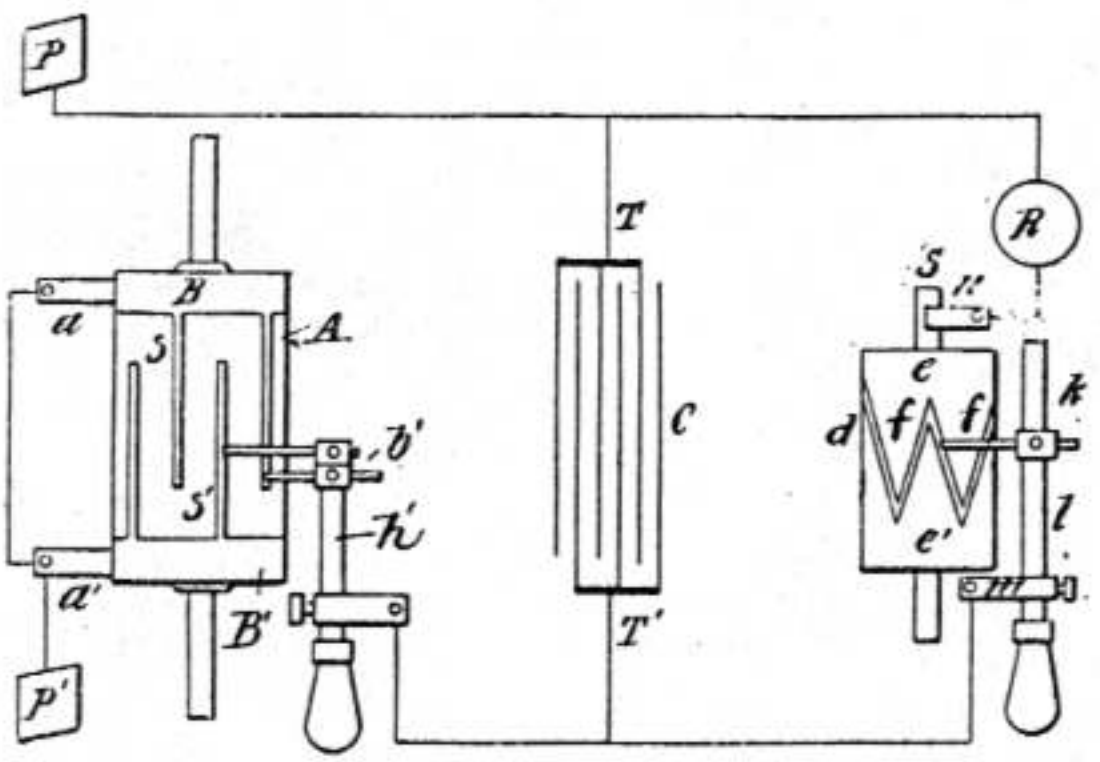

Witnesses:
by B. Lenox
Hillary C. Messmer

Nikola Tesla, Inventor
by Kerr, Page & Cooper
Att'ys

UNITED STATES PATENT OFFICE.

NIKOLA TESLA, OF NEW YORK, N. Y.

METHOD OF UTILIZING EFFECTS TRANSMITTED THROUGH NATURAL MEDIA.

SPECIFICATION forming part of Letters Patent No. 685,954, dated November 5, 1901.

Application filed August 1, 1899. Renewed May 29, 1901. Serial No. 62,318. (No model.)

To all whom it may concern:

Be it known that I, NIKOLA TESLA, a citizen of the United States, residing at New York city, in the county and State of New York, have invented a new and useful Improvement in Methods of Utilizing Effects Transmitted from a Distance to a Receiving Device Through the Natural Media, of which the following is a specification, reference being had to the accompanying drawings, which form a part of the same.

The subject of my present invention is an improvement in the art of utilizing effects transmitted from a distance to a receiving device through the natural media; and it consists in a novel method hereinafter described.

My invention is particularly useful in connection with methods and apparatus for operating distant receiving devices by means of electrical disturbances produced by proper transmitters and conveyed to such receiving devices through the natural media; but it obviously has a wider range of applicability and may be employed, for example, in the investigation or utilization of terrestrial, solar, or other disturbances produced by natural causes.

Several ways or methods of transmitting electrical disturbances through the natural media and utilizing them to operate distant receivers are now known and have been applied with more or less success for accomplishing a variety of useful results. One of these ways consists in producing by a suitable apparatus rays or radiations—that is, disturbances—which are propagated in straight lines through space, directing them upon a receiving or recording apparatus at a distance, and thereby bringing the latter into action. This method is the oldest and best known and has been brought particularly into prominence in recent years through the investigations of Heinrich Hertz. Another method consists in passing a current through a circuit, preferably one inclosing a very large area, inducing thereby in a similar circuit situated at a distance another current and affecting by the same in any convenient way a receiving device. Still another way, which has also been known for many years, is to pass in any suitable manner a current through a portion of the ground, as by connecting to two points of the same, preferably at a considerable distance from each other, the two terminals of a generator and to energize by a part of the current diffused through the earth a distant circuit, which is similarly arranged and grounded at two points widely apart and which is made to act upon a sensitive receiver. These various methods have their limitations, one especially, which is common to all, being that the receiving circuit or instrument must be maintained in a definite position with respect to the transmitting apparatus, which often imposes great disadvantages upon the use of the apparatus.

In several applications filed by me and patents granted to me I have disclosed other methods of accomplishing results of this nature which may be briefly described as follows: In one system the potential of a point or region of the earth is varied by imparting to it intermittent or alternating electrifications through one of the terminals of a suitable source of electrical disturbances, which to heighten the effect has its other terminal connected to an insulated body, preferably of large surface and at an elevation. The electrifications communicated to the earth spread in all directions through the same, reaching a distant circuit, which generally has its terminals arranged and connected similarly to those of the transmitting source and operates upon a highly-sensitive receiver. Another method is based upon the fact that the atmospheric air, which behaves as an excellent insulator to currents generated by ordinary apparatus, becomes a conductor under the influence of currents or impulses of enormously high electromotive force which I have devised means for generating. By such means air strata, which are easily accessible, are rendered available for the production of many desired effects at distances however great. This method, furthermore, allowed advantage to be taken of many of those improvements which are practicable in the ordinary systems of transmission involving the use of a metallic conductor.

Obviously whatever method be employed it is desirable that the disturbances produced by the transmitting apparatus should be as powerful as possible, and by the use of certain forms of high-frequency apparatus which

I have devised and which are now well known important practical advantages are in this respect secured. Furthermore, since in most cases the amount of energy conveyed to the distant circuit is but a minute fraction of the total energy emanating from the source it is necessary for the attainment of the best results that whatever the character of the receiver and the nature of the disturbances as much as possible of the energy conveyed should be made available for the operation of the receiver, and with this object in view I have heretofore, among other means, employed a receiving-circuit of high self-induction and very small resistance and of a period such as to vibrate in synchronism with the disturbances, whereby a number of separate impulses from the source were made to cooperate, thus magnifying the effect exerted upon and insuring the action of the receiving device. By these means decided advantages have been secured in many instances; but very often the improvement is either not applicable at all, or if so the gain is very slight. Evidently when the source is one producing a continuous pressure or delivering impulses of long duration it is impracticable to magnify the effects in this manner, and when, on the other hand, it is one furnishing short impulses of extreme rapidity of succession the advantage obtained in this way is insignificant, owing to the radiation and the unavoidable frictional waste in the receiving-circuit. These losses reduce greatly both the intensity and the number of the coöperative impulses, and since the initial intensity of each of these is necessarily limited only an insignificant amount of energy is thus made available for a single operation of the receiver. As this amount is consequently dependent on the energy conveyed to the receiver by one single impulse, it is evidently necessary to employ either a very large and costly and therefore objectionable transmitter or else to resort to the equally objectionable use of a receiving device too delicate and too easily deranged. Furthermore, the energy obtained through the coöperation of the impulses is in the form of extremely-rapid vibrations and because of this unsuitable for the operation of ordinary receivers, the more so as this form of energy imposes narrow restrictions in regard to the mode and time of its application to such devices. To overcome these and other limitations and disadvantages that have heretofore existed in such systems of transmission of signals or intelligence and to render possible an investigation of impulses or disturbances propagated through the natural media from any kind of source and their practical utilization for any purpose to which they are applicable, I have devised a novel method, which I have described in a pending application filed June 24, 1899, Serial No. 721,790, and which, broadly stated, consists in effecting during any desired time interval a storage of energy derived from such impulses and utilizing the potential energy so obtained for operating a receiving device.

My present invention is intended for the same general purposes, and it comprises a modified method and apparatus by means of which similar results may be obtained.

The chief feature which distinguishes my present from my former invention just referred to is that the energy stored is not, as in the former instance, obtained from the energy of the disturbances or effects transmitted from a distance, but from an independent source.

Expressed generally, my present method consists in charging a storage device with energy from an independent source controlling the charging of said device by the action of the effects or disturbances transmitted through the natural media and coincidentally using the stored energy for operating a receiving device.

A great variety of disturbances produced either by suitably-constructed transmitters or by natural causes are at present known to be propagated through the natural media, and there are also a variety of means or devices enabling energy to be stored, and in view of this I wish to say that I consider the utilization of any such disturbances and the employment of any of these means as within the scope of my present invention so long as the use of the general method hereinbefore stated is involved.

The best way of carrying out my invention which I at present know is to store electrical energy obtained from a suitable electrical generator in a condenser and to control the storage or the application of this energy by means of a sensitive device acted upon by the effects or disturbances, and thereby cause the operation of the receiver.

In the practical application of this method I usually proceed as follows: At any point where I desire to investigate or to utilize for any purpose effects or disturbances propagated through the natural media from any kind of source I provide a suitable generator of electricity—as, for example, a battery and a condenser—which I connect to the poles of the generator in series with a sensitive device capable of being modified in its electrical resistance or other property by the action of the disturbances emitted from the source. To the terminals of the condenser I connect the receiver which is to be operated in series with another device of suitable construction which performs the function of periodically discharging the condenser through the receiver at and during such intervals of time as may be best suitable for the purpose contemplated. This latter device may merely consist of two stationary electrodes separated by a feeble dielectric layer of minute thickness, but sufficient to greatly reduce or practically interrupt the current in the circuit under normal conditions, or it may comprise terminals one or more of which are movable

and actuated by any suitable force and are adapted to be brought into and out of contact with each other in any convenient manner. The sensitive device may be any of the many devices of this kind which are known to be affected by the disturbances, impulses, or effects propagated through the media, and it may be of such a character that normally—that is, when not acted upon—it entirely prevents the passage of electricity from the generator to the condenser, or it may be such that it allows a gradual leaking through of the current and a charging of the condenser at a slow rate. In any case it will be seen that if the disturbances, of whatever nature they may be, cause an appreciable diminution in the electrical resistance of the sensitive device the current from the battery will pass more readily into the condenser, which will be charged at a more rapid rate, and consequently each of its discharges through the receiver, periodically effected by the special device before referred to which performs this function, will be stronger than normally—that is, when the sensitive device is not acted upon by the disturbances. Evidently, then, if the receiver be so adjusted that it does not respond to the comparatively feeble normal discharges of the condenser, if they should occur, but only to those stronger ones which take place upon the diminution of the resistance of the sensitive device, it will be operated only when this device is acted upon by the disturbances, thus making it possible to investigate and to utilize the latter for any desired purpose.

The general principle underlying my invention and the operation of the various devices used will be clearly understood by reference to the accompanying drawings, in which—

Figure 1 is a diagram illustrating a typical arrangement of apparatus which may be used in carrying my method into practice, and Figs. 2, 3, 4, and 5 similar diagrams of modified arrangements of apparatus for the same purpose.

In Fig. 1, C is a condenser, to the terminals T and T' of which is connected a charging-circuit including a battery B, a sensitive device *a*, and a resistance *r*, all connected in series, as illustrated. The battery should be preferably of very constant electromotive force and of an intensity carefully determined to secure the best results. The resistance *r*, which may be a frictional or an inductive one, is not absolutely necessary; but it is of advantage to use it in order to facilitate adjustment, and for this purpose it may be made variable in any convenient and preferably continuous manner. Assuming that the disturbances which are to be investigated or utilized for some practical end are rays identical with or resembling those of ordinary light, the sensitive device *a* may be a selenium cell properly prepared, so as to be highly susceptible to the influence of the rays, the action of which should be intensified by the use of a reflector A, shown in the drawings. It is well known that when cells of this kind are exposed to such rays of greatly-varying intensity they undergo corresponding modifications of their electrical resistance; but in the ways they have been heretofore used they have been of very limited utility. In addition to the circuit including the sensitive device or cell *a* another circuit is provided, which is likewise connected to the terminals T T' of the condenser. This circuit, which may be called the "receiving-circuit," includes the receiver R and in series with it a device *d*, before referred to, which performs the duty of periodically discharging the condenser through the receiver. It will be noted that, as shown in Fig. 1, the receiving-circuit is in permanent connection with the battery and condenser terminal T, and it should be stated that it is sometimes desirable to entirely insulate the receiving-circuit at all times except the moments when the device *d* operates to discharge the condenser, thus preventing any disturbing influence which might otherwise be caused in this circuit by the battery or the condenser during the period when the receiver should not be acted upon. In such a case two devices, as *d*, may be used—one in each connection from the condenser to the receiving-circuit—or else one single device of this kind, but of a suitably-modified construction, so that it will make and break simultaneously and at proper intervals of time both of the connections of this circuit with the condenser T and T'.

From the foregoing the operation of the apparatus as illustrated in Fig. 1 will be at once understood. Normally—that is, when it is not influenced by the rays at all or very slightly—the cell *a* being of a comparatively high resistance permits only a relatively feeble current to pass from the battery into the condenser, and hence the latter is charged at too slow a rate to accumulate during the time interval between two succeeding operations of the device *d* sufficient energy to operate the receiver or, generally speaking, to produce the required change in the receiving-circuit. This condition is readily secured by a proper selection and adjustment of the various devices described, so that the receiver will remain unresponsive to the feeble discharges of the condenser which may take place when the cell *a* is acted upon but slightly or not at all by the rays or disturbances; but if now new rays are permitted to fall upon the cell or if the intensity of those already acting upon it be increased by any cause then its resistance will be diminished and the condenser will be charged by the battery at a more rapid rate, enabling sufficient potential energy to be stored in the condenser during the period of inaction of the device *d* to operate the receiver or to bring about any desired change in the receiving-circuit when the device *d* acts. If the rays acting upon the

cell or sensitive device *a* are varied or intermitted in any arbitrary manner, as when transmitting intelligence in the usual way from a distant station by means of short and long signals, the apparatus may readily be made to record or to enable an operator to read the message, since the receiver, supposing it to be an ordinary magnetic relay, for example, will be operated by each signal from the sending-station a certain number of times having some relation to the duration of each signal. It will be readily seen, however, that if the rays are varied in any other way, as by impressing upon them changes in intensity, the succeeding condenser discharges will undergo corresponding changes in intensity, which may be indicated or recorded by a suitable receiver and distinguished irrespectively of duration.

With reference to Fig. 1, it may be useful to state that the electrical connections of the various devices illustrated may be made in many different ways. For instance, the sensitive device instead of being in series, as shown, may be in a shunt to the condenser, this modification being illustrated in Fig. 3, in which the devices already described are indicated by similar letters to correspond with those of Fig. 1. In this case it will be observed that the condenser which is being charged from the battery B through the resistance *r*, preferably inductive and properly related to the capacity of the condenser, will store less energy when the sensitive device *a* is energized by the rays and its resistance thereby diminished. The adjustment of the various instruments may then be such that the receiver will be operated only when the rays are diminished in intensity or interrupted and entirely prevented from falling upon the sensitive cell, or the sensitive device may be placed, as shown in Fig. 4, in a shunt to the resistance *r* or inserted in any suitable way in the circuit containing the receiver—for example, as illustrated in Fig. 5—in both of which figures the various devices are lettered to correspond with those in Fig. 1, so that the figures become self-explanatory. Again, the several instruments may be connected in the manner of a Wheatstone bridge, as will be hereinafter explained with reference to Fig. 2, or otherwise connected or related; but in each case the sensitive device will have the same duty to perform—that is, to control the energy stored and utilized in some suitable way for causing the operation of the receiver in correspondence with the intermittences or variations of the effects or disturbances, and in each instance by a judicious selection of the devices and careful adjustment the advantages of my method may be more or less completely secured. I find it preferable, however, to follow the plan which I have illustrated and described.

It will be observed that the condenser is an important element in the combination. I have shown that by reason of its unique properties it greatly adds to the efficacy of this method. It allows the energy accumulated in it to be discharged instantaneously, and therefore in a highly-effective manner. It magnifies in a large degree the current supplied from the battery, and owing to these features it permits energy to be stored and discharged at practically any rate desired, and thereby makes it possible to obtain in the receiving-circuit very great changes of the current strength by impressing upon the battery-current very small variations. Other means of storage possessing these characteristics to a useful degree may be employed without departing from the broad spirit of my invention; but I prefer to use a condenser, since in these respects it excels any other storage device of which I have knowledge.

In Fig. 2 a modified arrangement of apparatus is illustrated which is particularly adapted for the investigation and utilization of very feeble impulses or disturbances, such as may be used in conveying signals or producing other desired effects at very great distances. In this case the energy stored in the condenser is passed through the primary of a transformer the secondary circuit of which contains the receiver, and in order to render the apparatus still more suitable for use in detecting feeble impulses in addition to the sensitive device which is acted upon by the impulses another such device is included in the secondary circuit of the transformer. The scheme of connections is in the main that of a Wheatstone bridge the four branches of which are formed by the sensitive device *a* and resistances L, L′, and L″, all of which should be preferably inductive and also adjustable in a continuous manner or at least by very small steps. The condenser C′, which is generally made of considerable capacity, is connected to two opposite points of the bridge, while a battery B, in series with a continuously-adjustable non-inductive resistance *r*′, is connected to the other pair of opposite points, as usual. The four resistances included in the branches of the bridge—namely, *a*, L, L′, and L″—are of a suitable size and so proportioned that under normal conditions—that is, when the device *a* is not influenced at all or only slightly by the disturbances—there will be no difference of potential or in any case the minimum of the same at the terminals T and T′ of the condenser It is assumed in the present instance that the disturbances to be investigated or utilized are such as will produce a difference of electric potential, however small, between two points or regions in the natural media—as the earth, the water, or the air—and in order to apply this potential difference effectively to the sensitive device *a* the terminals of the same are connected to two plates P and P′, which should be of as large a surface as practicable and so located in the media that the largest possible difference of potential will be produced by the disturbances between the terminals of

the sensitive device. This device is in the present case one of familiar construction, consisting of an insulating-tube, which is indicated by the heavy lines in the drawings and which has its ends closed tightly by two conducting-plugs with reduced extensions, upon which bear two brushes *b b*, through which the currents are conveyed to the device. The tubular space between the plugs is partially filled with a conducting sensitive powder, as indicated, the proper amount of the same and the size of its grains being determined and adjusted beforehand by experiment. This tube I rotate by clockwork or other means at a uniform and suitable rate of speed, and under these conditions I find that this device behaves toward disturbances of the kind before assumed in a manner similar to that of a stationary cell of celenium toward rays of light. Its electrical resistance is diminished when it is acted upon by the disturbances and is automatically restored upon the cessation of their influence. It is of advantage to employ round grains of powder in the tube, and in any event it is important that they should be of as uniform size and shape as possible and that provision should be made for maintaining an unchanging and very dry atmosphere in the tube. To the terminals T and T' of the condenser C' is connected a coil *p*, usually consisting of a few turns of a conductor of very small resistance, which is the primary of the transformer before referred to, in series with a device *d*, which effects the discharge of the condenser through the coil *p* at predetermined intervals of time. In the present case this device consists of a cylinder made partly of conducting and partly of insulating material *e* and *e'*, respectively, which is rotated at the desired rate of speed by any suitable means. The conducting part *e* is in good electrical connection with shaft S and is provided with tapering segments, as *f*, upon which slides a brush *k*, which should preferably be capable of longitudinal adjustment along the cylinder. Another brush *b'*, which is connected to the condenser-terminal T', being arranged to bear upon the shaft S, it will be seen that whenever the brush *k* comes in contact with a conducting-segment *f* the circuit including the primary *p* will be completed and the condenser, if energized, discharged through the same. By an adjustment of the speed of rotation of the cylinder and a displacement of the brush *k* along the axis of the same the circuit may be made to open and close in as rapid succession and remain open or closed during such intervals of time as may be desired. In inductive relation to the primary *p* is a secondary coil *s*, usually of much thinner wire and of many more turns than the former, to which are connected in a series a receiver R, (illustrated as an ordinary magnetic relay,) a continuously-adjustable non-inductive resistance *r''*, a battery B' of a properly determined and very constant electromotive force, and finally a sensitive device *a'* of the same or similar construction as *a*, which is likewise rotated at a uniform speed and which with its brushes *b'' b''* closes the secondary circuit. The electromotive force of the battery B' is so graduated by means of the adjustable resistance *r''* that the dielectric layers in the sensitive device *a'* are strained very nearly to the point of breaking down and give way upon a slight increase of the electrical pressure on the terminals of the device. It will of course be understood that the resistance *r''* is used mainly because of convenience and that it may be dispensed with, in which case the adjustment may be effected in many other ways, as by determining the proper amount or coarseness of the sensitive powder or by varying the distance apart of the metallic plugs in the ends of the tube. The same may be said of the resistance *r'*, which is in series with the battery B and serves to graduate the force of the latter, so that the dielectric layers of the sensitive device *a* are subjected to a similar strain and maintained in a state of delicate poise. The various instruments being connected and adjusted in the manner described, it will now be readily seen from the foregoing that under normal conditions, the device *a* being unaffected by the disturbances, or practically so, and there being no or only a very insignificant amount of energy stored in the condenser, the periodical closure of the primary circuit of the transformer through the operation of the device *d* will have no appreciable effect upon the primary coil *p*, and hence no currents will be generated in the secondary coil *s*, at least not such as would disturb the state of delicate balance existing in the secondary circuit including the receiver, and therefore the latter will not be actuated by the battery B'; but when, owing to the disturbances or impulses propagated through the media from a distant source, an additional electromotive force, however small, is created between the terminals of the device *a* the dielectric layers in the same, unable to support the increased strain, give way and allow the current of the battery B to pass through, thus causing a difference of potential at the terminals T and T' of the condenser. A sufficient amount of energy being now stored in this instrument during the time interval between each two succeeding operations of the device *d*, each closure of the primary circuit by the latter results in the passage of a sudden current impulse through the coil *p*, which induces a corresponding current of relatively high electromotive force in the secondary coil *s*. Owing to this the dielectric in the device *a'* gives way, and the current of the battery B' being allowed to pass the receiver R is operated, but only for a moment, since by the rotation of the devices *a*, *a'*, and *d*, which may be all driven from the same shaft, the original conditions are restored, assuming, of course, that the electromotive force set up by the disturbances

at the terminals of the sensitive device *a* is only momentary or of a duration not longer than the time of closure of the primary circuit; otherwise the receiver will be actuated a number of times and so long as the influence of the disturbances upon the device *a* continues. In order to render the discharged energy of the condenser more effective in causing the operation of the receiver, the resistance of the primary circuit should be very small and the secondary coil *s* should have a number of turns many times greater than that of the primary coil *p*. It will be noted that since the condenser under the above assumptions is always charged in the same direction the strongest current impulse in the secondary coil, which is induced at the moment when the brush *k* comes in contact with segment *f*, is also of unchanging direction, and for the attainment of the best results it is necessary to connect the secondary coil so that the electromotive force of this impulse will be added to that of the battery and will momentarily strengthen the same. However, under certain conditions, which are well understood by those skilled in the art, the devices will operate whichever way the secondary be connected. It is preferable to make the inductive resistances L and L' relatively large, as they are in a shunt to the device *a* and might if made too small impair its sensitiveness. On the other hand, the resistance L'' should not be too large and should be related to the capacity of the condenser and the number of makes and breaks effected by the device *d* in well-known ways. Similar considerations apply, of course, to the circuits including the primary *p* and secondary *s*, respectively.

By carefully observing well-known rules of scientific design and adjustment of the instruments the apparatus may be made extremely sensitive and capable of responding to the feeblest influences, thus making it possible to utilize impulses or disturbances transmitted from very great distances and too feeble to be detected or utilized in any of the ways heretofore known, and on this account the method here described lends itself to many scientific and practical uses of great value. Obviously the character of the devices and the manner in which they are connected or related may be greatly varied without departing from the spirit of my invention.

What I claim as new, and desire to secure by Letters Patent, is—

1. The method hereinbefore described of utilizing effects or disturbances transmitted through the natural media, which consists in charging a storage device with energy from an independent source, controlling the charging of said device by the action of the effects or disturbances, and coincidently using the stored energy for operating a receiving device.

2. The method hereinbefore described of utilizing effects or disturbances transmitted from a distant source, which consists in charging the storage device with electrical energy from an independent source, controlling the charging of said device by the action of the effects or disturbances, and coincidently using the stored electrical energy for operating the receiving device.

3. The method hereinbefore described of utilizing effects or disturbances transmitted through the natural media, which consists in controlling, by means of such effects or disturbances, the charging of an electrical storage device from an independent source and discharging the stored energy through a receiving-circuit.

4. The method hereinbefore described of utilizing effects or disturbances transmitted through the natural media, which consists in controlling, by means of such effects or disturbances, the charging of an electrical condenser from an independent source, and discharging the stored energy through a receiving-circuit.

5. The method hereinbefore described of utilizing effects or disturbances transmitted through the natural media, which consists in effecting a storage during any desired time interval and under control of such effects or disturbances, of energy derived from an independent source, and utilizing the potential energy so obtained for operating a receiving device.

6. The method hereinbefore described of utilizing effects or disturbances transmitted through the natural media, which consists in effecting a storage, during any desired time interval and under the control of such disturbances or effects of electrical energy derived from an independent source, and utilizing the potential energy so obtained for operating a receiving device.

7. The method hereinbefore described of utilizing effects or disturbances transmitted through the natural media, which consists in effecting a storage in a condenser during any desired time interval and under the control of such disturbances or effects, of electrical energy derived from an independent source, and utilizing the potential energy so obtained for operating a receiving device.

8. The method hereinbefore described of utilizing effects or disturbances transmitted through the natural media from a distant source, which consists in storing, during succeeding intervals of time determined by means of such effects or disturbances, electrical energy derived from an independent source, and utilizing the potential energy so accumulated to operate a receiving device.

9. The method hereinbefore described of utilizing effects or disturbances transmitted through the natural media from a distant source, which consists in storing in a condenser during succeeding intervals of time determined by means of such effects or disturbances, electrical energy derived from an independent source, and utilizing the poten-

tial energy so accumulated to operate a receiving device.

10. The method hereinbefore described of utilizing effects or disturbances transmitted through the natural media from a distant source, which consists in storing, during succeeding intervals of time determined by means of such effects or disturbances, electrical energy derived from an independent source, and using, for periods of time predetermined as to succession and duration, the accumulated energy so obtained to operate a receiving device.

11. The method hereinbefore described of utilizing effects or disturbances transmitted through the natural media from a distant source, which consists in storing in a condenser during succeeding intervals of time determined by means of such effects or disturbances, electrical energy derived from an independent source, and using, for periods of time predetermined as to succession and duration, the accumulated energy so obtained to operate a receiving device.

12. The method hereinbefore described of utilizing electrical effects or disturbances transmitted through the natural media from a distant source, which consists in effecting by means of such disturbances or effects a storage in a storage device of electrical energy derived from an independent source for periods of time corresponding in succession and duration to such disturbances or effects, and discharging the electrical energy so accumulated into or through a receiving device at predetermined intervals of time.

13. The method hereinbefore described of utilizing electrical effects or disturbances transmitted from a distant source, which consists in effecting by means of such disturbances or effects a storage in a condenser of electrical energy derived from an independent source for periods of time corresponding in succession and duration to such disturbances or effects, and discharging the electrical energy so accumulated into or through a receiving device at predetermined intervals of time.

14. The method hereinbefore described of utilizing electrical effects or disturbances transmitted from a distant source, which consists in producing, by means of such effects or disturbances, variations of resistance in a circuit including an independent electrical source and a device adapted to be charged with electrical energy therefrom, thereby causing the storage device to be charged with energy from such independent source, and using the potential electrical energy so accumulated to operate a receiving device.

15. The method hereinbefore described of utilizing effects or disturbances transmitted through the natural media from a distant source, which consists in producing, by means of such effects or disturbances, variations of resistance in a circuit including an independent electrical source and a condenser, thereby causing the condenser to be charged with energy from the independent source, and using the potential electrical energy so accumulated to operate a receiving device.

16. The method hereinbefore described of utilizing effects or disturbances transmitted through the natural media from a distant source, which consists in causing, by means of such effects or disturbances, electrical energy from an independent source to be stored in a storage device, using the electrical energy so accumulated to operate a transformer and employing the secondary currents from such transformer to operate a receiving device.

17. The method hereinbefore described of utilizing effects or disturbances transmitted through the natural media from a distant source, which consists in causing, by means of such effects or disturbances, electrical energy from an independent source to be stored in a condenser, using the electrical energy so accumulated to operate a transformer and employing the secondary currents from such transformer to operate a receiving device.

18. The method hereinbefore described of utilizing effects or disturbances transmitted through the natural media from a distant source, which consists in causing, by means of such disturbances, variations of resistance in a circuit including an independent source of electricity and a storage device and thereby causing the storage device to be charged from such independent source, discharging the energy so accumulated in the storage device through the primary of a transformer at predetermined intervals of time, and operating a receiver by the currents so developed in the secondary of the transformer.

19. The method hereinbefore described of utilizing effects or disturbances transmitted through the natural media from a distant source, which consists in causing, by means of such disturbances, variations of resistance in a circuit including an independent source of electricity and a condenser and thereby causing the condenser to be charged from such independent source, discharging the energy so accumulated in the condenser through the primary of a transformer at predetermined intervals of time and operating a receiver by the currents so developed in the secondary of the transformer.

NIKOLA TESLA.

Witnesses:
F. LÖWENSTEIN,
E. A. SUNDERLIN

P-310

No. 685,954. Patented Nov. 5, 1901.

N. TESLA.

METHOD OF UTILIZING EFFECTS TRANSMITTED THROUGH NATURAL MEDIA.

(Application filed Aug. 1, 1899. Renewed May 20, 1901.)

(No Model.) 2 Sheets—Sheet 1.

Fig 1.

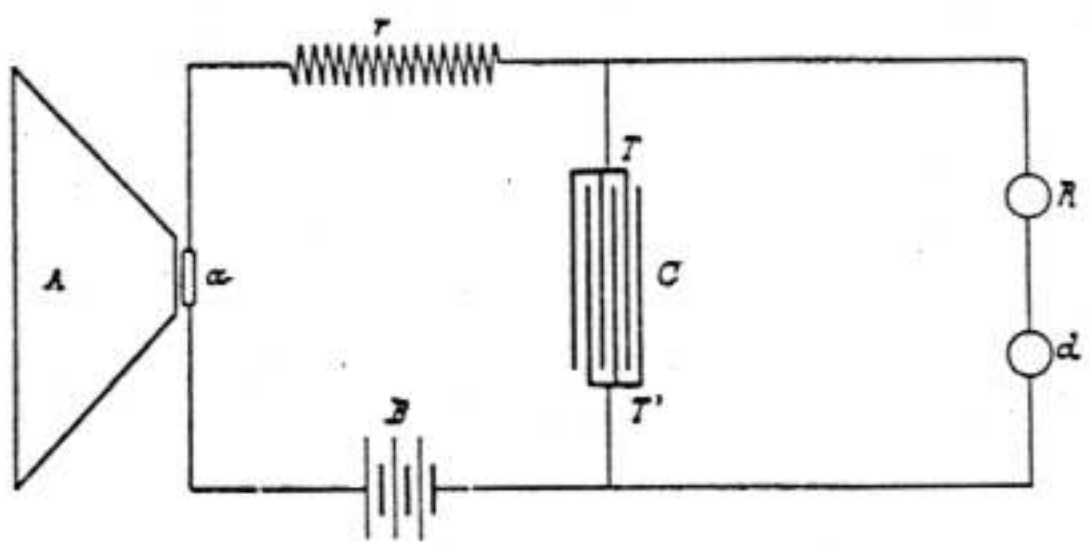

Fig 2.

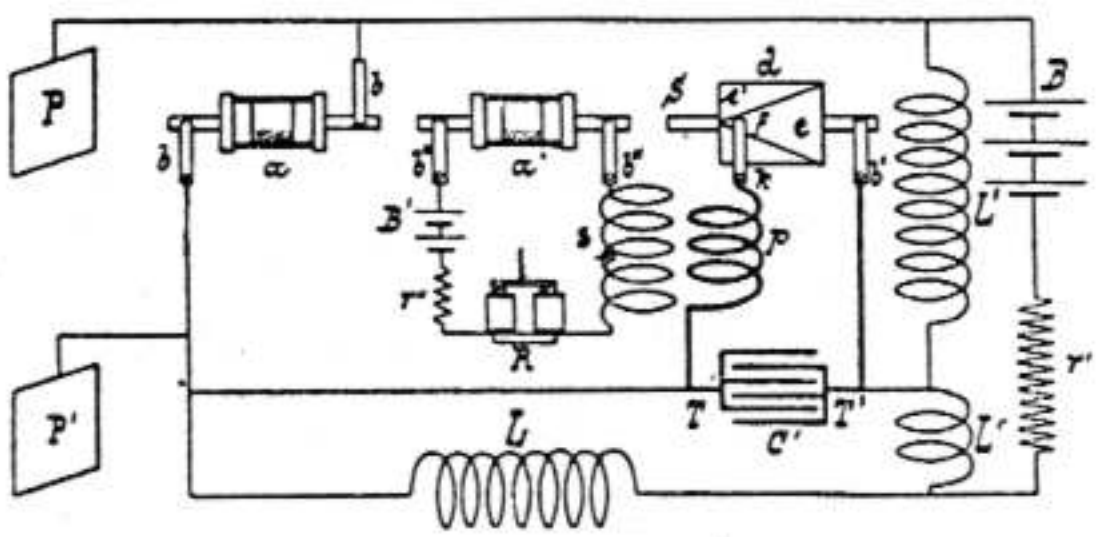

WITNESSES

Benjamin Miller

M Lawson Dyer.

INVENTOR

Nikola Tesla

BY

Kerr, Page & Cooper

ATTORNEYS.

P-311

No. 685,954. Patented Nov. 5, 1901.

N. TESLA.

METHOD OF UTILIZING EFFECTS TRANSMITTED THROUGH NATURAL MEDIA.

(Application filed Aug. 1, 1899 Renewed May 29, 1901.)

(No Model.) 2 Sheets—Sheet 2.

Fig. 3

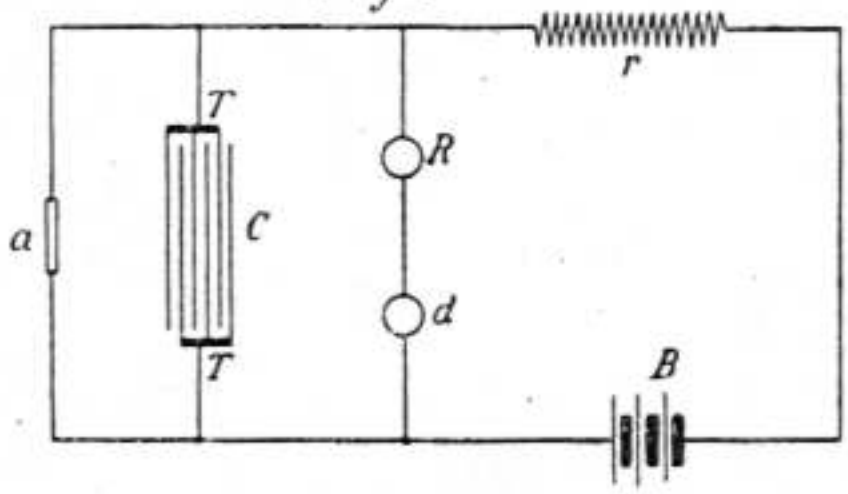

Fig. 4

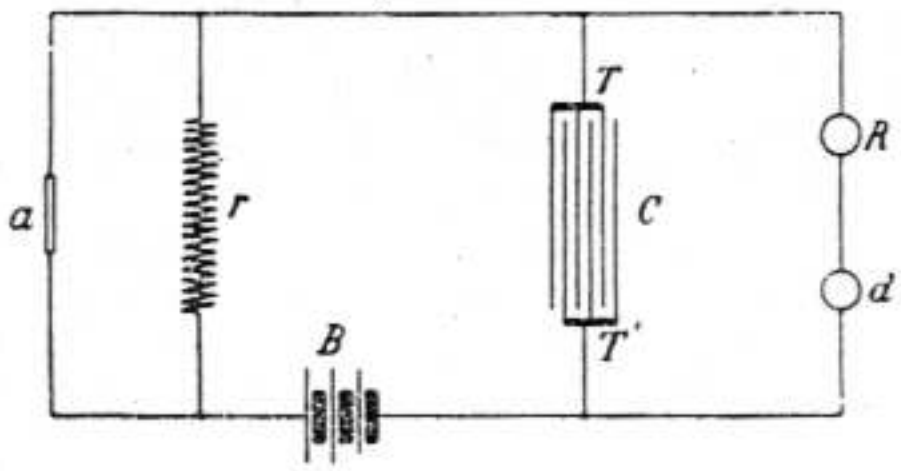

Fig. 5

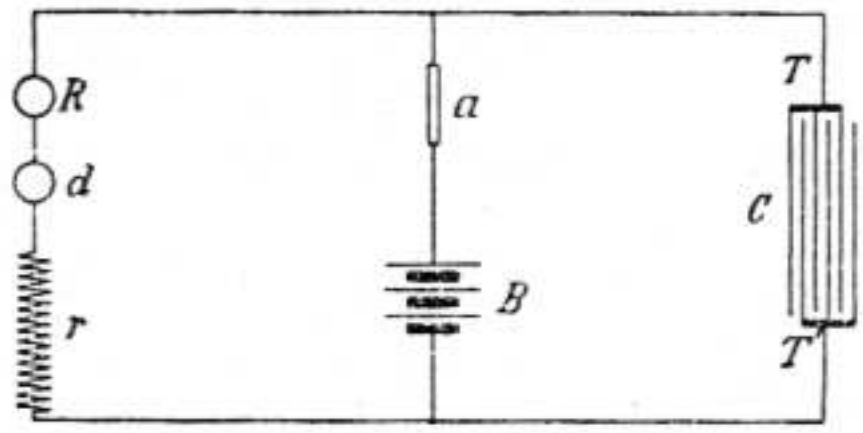

Witnesses:
Raphael Netter
Benjamin Miller.

Nikola Tesla Inventor
by Kerr, Page & Cooper Attys

UNITED STATES PATENT OFFICE.

NIKOLA TESLA, OF NEW YORK, N. Y.

APPARATUS FOR UTILIZING EFFECTS TRANSMITTED FROM A DISTANCE TO A RECEIVING DEVICE THROUGH NATURAL MEDIA.

SPECIFICATION forming part of Letters Patent No. 685,955, dated November 5, 1901.

Original application filed June 24, 1899. Serial No. 721,790. Divided and this application filed September 8, 1899. Renewed May 29, 1901. Serial No. 62,317. (No model.)

To all whom it may concern:

Be it known that I, NIKOLA TESLA, a citizen of the United States, residing at the borough of Manhattan, in the city, county, and State of New York, have invented certain new and useful Improvements in Apparatus for Utilizing Effects Transmitted from a Distance to a Receiving Device Through the Natural Media, of which the following is a specification, reference being had to the accompanying drawings, which form a part of the same.

This application is a division of an application filed by me June 24, 1899, Serial No. 721,790, in which a method of utilizing effects or disturbances transmitted through the natural media from a distant source is described and made the subject of the claims. The invention of my present application consists in the apparatus hereinafter described and claimed, by the use of which the method claimed in my said prior application may be practiced and by means of which results hitherto unattainable may be secured.

Several ways of methods of transmitting electrical disturbances through the natural media and utilizing them to operate distant receivers are now known and have been applied with more or less success for accomplishing a variety of useful results. One of these ways consists in producing by a suitable apparatus rays or radiations—that is, disturbances—which are propagated in straight lines through space, directing them upon a receiving or recording apparatus at a distance, and thereby bringing the latter into action. This method is the oldest and best known, and has been brought particularly into prominence in recent years through the investigations of Heinrich Hertz. Another method consists in passing a current through a circuit, preferably one inclosing a very large area, inducing thereby in a similar circuit, situated at a distance, another current and affecting by the same in any convenient way a receiving device. Still another way, which has also been known for many years, is to pass in any suitable manner a current through a portion of the ground, as by connecting to two points of the same, preferably at a considerable distance from each other, the two terminals of a generator and to energize by a part of the current diffused through the earth a distant circuit, which is similarly arranged and grounded at two points widely apart and which is made to act upon a sensitive receiver. These various methods have their limitations, one, especially, which is common to all, being that the receiving circuit or instrument must be maintained in a definite position with respect to the transmitting apparatus, which often imposes great disadvantages upon the use of the apparatus.

In several applications filed by me and patents granted to me I have disclosed other methods of accomplishing results of this nature, which may be briefly described as follows: In one system the potential of a point or region of the earth is varied by imparting to it intermittent or alternating electrifications through one of the terminals of a suitable source of electrical disturbances, which to heighten the effect has its other terminal connected to an insulated body, preferably of large surface and at an elevation. The electrifications communicated to the earth spread in all directions through the same, reaching a distant circuit, which generally has its terminals arranged and connected similarly to those of the transmitting source, and operates upon a highly-sensitive receiver. Another method is based upon the fact that the atmospheric air, which behaves as an excellent insulator to currents generated by ordinary apparatus, becomes a conductor under the influence of currents of impulses of enormously high electromotive force which I have devised means for generating. By such means air strata, which are easily accessible, are rendered available for the production of many desired effects at distances, however great. This method, furthermore, allows advantage to be taken of many of those improvements which are practicable in the ordinary systems of transmission involving the use of a metallic conductor.

Obviously whatever method be employed it is desirable that the disturbances produced by the transmitting apparatus should be as powerful as possible, and by the use of certain forms of high-frequency apparatus which

I have devised and which are now well known important practical advantages are in this respect secured. Furthermore, since in most cases the amount of energy conveyed to the distant circuit is but a minute fraction of the total energy emanating from the source, it is necessary for the attainment of the best results that whatever the character of the receiver and the nature of the disturbances as much as possible of the energy conveyed should be made available for the operation of the receiver, and with this object in view I have heretofore, among other means, employed a receiving-circuit of high self-induction and very small resistance and of a period such as to vibrate in synchronism with the disturbances, whereby a number of separate impulses from the source were made to coöperate, thus magnifying the effect exerted upon and insuring the action of the receiving device. By these means decided advantages have been secured in many instances; but very often the improvement is either not applicable at all or if so the gain is very slight. Evidently when the source is one producing a continuous pressure or delivering impulses of long duration it is impracticable to magnify the effects in this manner, and when, on the other hand, it is one furnishing short impulses of extreme rapidity of succession the advantage obtained in this way is insignificant, owing to the radiation and the unavoidable frictional waste in the receiving-circuit. These losses reduce greatly both the intensity and the number of the coöperative impulses, and since the initial intensity of each of these is necessarily limited only an insignificant amount of energy is thus made available for a single operation of the receiver. As this amount is consequently dependent on the energy conveyed to the receiver by one single impulse, it is evidently necessary to employ either a very large and costly, and therefore objectionable transmitter, or else resort to the equally objectionable use of a receiving device too delicate and too easily deranged. Furthermore, the energy obtained through the coöperation of the impulses is in the form of extremely-rapid vibrations and because of this unsuitable for the operation of ordinary receivers the more so as this form of energy imposes narrow restrictions in regard to the mode and time of its application to such devices. To overcome these and other limitations and disadvantages which have heretofore existed in such systems of transmission of signals or intelligence is the object of my invention, which comprises a novel form of apparatus for accomplishing these results.

The apparatus which is employed at the receiving-station, described in general terms, consists in the combination of a storage device included in a circuit connecting points at a distance from the source of the disturbances and between which a difference of potential is created by such disturbances, a receiving-circuit connected with the storage device, a receiver included in such receiving-circuit, and means for closing the receiving-circuit at any desired moment, and thereby causing the receiver to be operated by the energy with which the storage device has been charged.

The best form of apparatus for carrying out my invention of which I am now aware and the manner of using the same will be understood from the following description and the accompanying drawings, in which—

Figure 1 is a diagrammatic illustration of such apparatus, and Fig. 2 a modified form or arrangement of the same.

At any two points in the transmitting medium between which there exists or may be obtained in any manner through the action of the disturbances or effects to be investigated or utilized a difference of electrical potential of any magnitude I arrange two plates or electrodes so that they may be oppositely charged through the agency of such effects or disturbances, and I connect these electrodes to the terminals of a highly-insulated condenser, generally of considerable capacity. To the condenser-terminals I also connect the receiver to be operated in series with a device of suitable construction which performs the function of periodically discharging the condenser through the receiver at and during such intervals of time as may be best suitable for the purpose contemplated. This device may merely consist of two stationary electrodes separated by a feeble dielectric layer of minute thickness, or it may comprise terminals one or more of which are movable and actuated by any suitable force and are adapted to be brought into and out of contact with each other in any convenient manner. It will now be readily seen that if the disturbances, of whatever nature they may be, cause definite amounts of electricity of the same sign to be conveyed to each of the plates or electrodes above mentioned either continuously or at intervals of time which are sufficiently long the condenser will be charged to a certain potential and an adequate amount of energy being thus stored during the time determined by the device effecting the discharge of the condenser the receiver will be periodically operated by the electrical energy so accumulated; but very often the character of the impulses and the conditions of their use are such that without further provision not enough potential energy would be accumulated in the condenser to operate the receiving device. This is the case when, for example, each of the plates or terminals receives electricity of rapidly-changing sign or even when each receives electricity of the same sign, but only during periods which are short as compared with the intervals separating them. In such instances I resort to the use of a special device which I insert in the circuit between the plates and the condenser for the purpose of conveying to each of the terminals of the latter electrical charges

of the proper quanty and order of succession to enable the required amount of potential energy to be stored in the condenser.

There are a number of well-known devices, either without any moving parts or terminals or with elements reciprocated or rotated by the application of a suitable force, which offer a more ready passage to impulses of one sign or direction than to those of the other or permit only impulses of one kind or order of succession to traverse a path, and any of these or similar devices capable of fulfilling the requirements may be used in carrying my invention into practice. One such device of familiar construction which will serve to convey a clear understanding of this part of my invention and enable a person skilled in the art to apply the same is illustrated in the annexed drawings. It consists of a cylinder A, of insulating material, which is moved at a uniform rate of speed by clockwork or other suitable motive power and is provided with two metal rings B B', upon which bear brushes *a* and *a'*, which are connected, respectively, in the manner shown to the terminal plates P and P', above referred to. From the rings B B' extend narrow metallic segments *s* and *s'*, which by the rotation of the cylinder A are brought alternately into contact with double brushes *b* and *b'*, carried by and in contact with conducting-holders *h* and *h'*, which are adjustable longitudinally in the metallic supports D and D', as shown. The latter are connected to the terminals T and T' of a condenser C, and it should be understood that they are capable of angular displacement as ordinary brush-supports. The object of using two brushes, as *b* and *b'*, in each of the holders *h* and *h'* is to vary at will the duration of the electric contact of the plates P and P' with the terminals T and T', to which is connected a receiving-circuit, including a receiver R and a device *d* of the kind above referred to, which performs the duty of closing the receiving-circuit at predetermined intervals of time and discharging the stored energy through the receiver. In the present case this device consists of a cylinder made partly of conducting and partly of insulating material *e* and *e'*, respectively, which is rotated at the desired rate of speed by any suitable means. The conducting part *e* is in good electrical connection with the shaft S and is provided with tapering segments *f f*, upon which slides a brush *k*, supported on a conducting-rod *l*, capable of longitudinal adjustment in a metallic support *m*. Another brush *n* is arranged to bear upon the shaft S, and it will be seen that whenever one of the segments *f* comes in contact with the brush *k* the circuit including the receiver R is completed and the condenser discharged through the same. By an adjustment of the speed of rotation of the cylinder *d* and a displacement of the brush *k* along the cylinder the circuit may be made to open and close in as rapid succession and remain open or closed during such intervals of time as may be desired. The plates P and P' through which the electrifications are conveyed to the brushes *a* and *a'* may be at a considerable distance from each other and both in the ground or both in the air or one in the ground and the other in the air, preferably at some height, or they may be connected to conductors extending to some distance or to the terminals of any kind of apparatus supplying electrical energy which is obtained from the energy of the impulses or disturbances transmitted from a distance through the natural media.

In illustration of the operation of the devices described let it be assumed that alternating electrical impulses from a distant generator, as G, are transmitted through the earth and that it is desired to utilize these impulses in accordance with my method. This may be the case, for example, when such a generator is used for purposes of signaling in one of the ways before enumerated, as by having its terminals connected at two points of the earth distant from each other. In this case the plates P and P' are first connected to two properly-selected points of the earth, the speed of rotation of the cylinder A is varied until it is made to turn in synchronism with the alternate impulses of the generator, and, finally, the position of the brushes *b* and *b'* is adjusted by angular displacement, as usual, or in other ways, so that they are in contact with the segments *s* and *s'* during the periods when the impulses are at or near the maximum of their intensity. Only ordinary electrical skill and knowledge are required to make these adjustments, and a number of devices for effecting synchronous movement being well known and it being the chief object of my present application to set forth a novel apparatus embodying a general principle a detailed description of such devices is not considered necessary. I may state, however, that for practical purposes in the present case it is only necessary to shift the brushes back and forth until the maximum effect is secured. The above requirements being fulfilled, electrical charges of the same sign will be conveyed to each of the condenser-terminals as the cylinder A is rotated, and with each fresh impulse the condenser will be charged to a higher potential. The speed of rotation of the cylinder *d* being adjustable at will, the energy of any number of separate impulses may thus be accumulated in potential form and discharged through the receiver R upon the brush *k* coming in contact with one of the segments *f*. It will be of course understood that the capacity of the condenser should be such as to allow the storing of a much greater amount of energy than is required for the ordinary operation of the receiver. Since by this method a relatively great amount of energy and in a suitable form may be made available for the operation of a receiver, the latter need not be very sensitive but of course when the im-

pulses are very feeble, as when coming from a great distance or when it is desired to operate a receiver very rapidly, then any of the well-known devices capable of responding to very feeble influences may be used in this connection.

If instead of the alternating impulses short impulses of the same direction are conveyed to the plates P and P', the apparatus described may still readily be used, and for this purpose it is merely necessary to shift the brushes *b* and *b'* into the position indicated by the dotted lines, while maintaining the same conditions in regard to synchronism as before, so that the succeeding impulses will be permitted to pass into the condenser, but prevented from returning to the ground or transmitting medium during the intervals between them, owing to the interruption during such intervals of the connections leading from the condenser-terminals to the plates.

Another way of using the apparatus with impulses of the same direction is to take off one pair of brushes, as *b*, disconnect the plate P from brush *a* and join it directly to the terminal T of the condenser, and to connect brush *a* with brush *a'*. When thus modified, the apparatus appears as shown in Fig. 2. Operated in this manner and assuming the speed of rotation of cylinder A to be the same, the apparatus will now be evidently adapted for a number of impulses per unit of time twice as great as in the preceding case. In all cases it is evidently important to adjust the duration of contact of segments *s* and *s'* with brushes *b b'* in the manner indicated.

When the apparatus I have described is used in connection with the transmission of signals or intelligence, it will of course be understood that the transmitter is operated in such a way as to produce disturbances or effects which are varied or intermitted in some arbitrary manner—for example, to produce longer and shorter successions of impulses, corresponding to the dashes and dots of the Morse alphabet—and the receiving device will respond to and indicate these variations or intermittences, since the storage device will be charged and discharged a number of times corresponding to the duration of the successions of impulses received.

Obviously the special appliances used in carrying out my invention may be varied in many ways without departing from the spirit of the same.

It is to be observed that it is the function of the cylinder A, with its brushes and connections, to render the electrical impulses coming from the plates P and P' suitable for charging the condenser (assuming them to be unsuitable for this purpose in the form in which they are received) by rectifying them when they are originally alternating in direction or by selecting such parts of them as are suitable when all are not, and any other device performing this function will obviously answer the purpose. It is also evident that a device such as I have already referred to which offers a more ready passage to impulses of one sign or permits only impulses of the same sign to pass may also be used to perform this selective function in many cases when alternating impulses are received. When the impulses are long and all of the same direction, and even when they are alternating but sufficiently long in duration and sustained in electromotive force, the brushes *b* and *b'* may be adjusted so as to bear on the parts B B' of the cylinder A, or the cylinder and its brushes may be omitted and the terminals of the condenser connected directly to the plates P and P'.

It will be seen that by the use of my invention results hitherto unattainable in utilizing disturbances or effects transmitted through natural media may be readily attained, since however great the distance of such transmission and however feeble or attenuated the impulses received enough energy may be accumulated from them by storing up the energy of succeeding impulses for a sufficient interval of time to render the sudden liberation of it highly effective in operating a receiver. In this way receivers of a variety of forms may be made to respond effectively to impulses too feeble to be detected or to be made to produce any sensible effect in any other way of which I am aware—a result of great value in scientific research as well as in various applications to practical use.

What I claim as my invention, and desire to secure by Letters Patent, is—

1. In an apparatus for utilizing electrical effects or disturbances transmitted through the natural media, the combination with a source of such effects or disturbances of a charging-circuit adapted to be energized by the action of such effects or disturbances, a storage device included in the charging-circuit and adapted to be charged thereby, a receiver, and means for causing the receiver to be operated by the energy accumulated in the storage device at arbitrary intervals of time, substantially as described.

2. In an apparatus for utilizing electrical effects or disturbances transmitted through the natural media, the combination with a source of such effects or disturbances of a charging-circuit adapted to be energized by the action of such effects or disturbances, a storage device included in the charging-circuit and adapted to be charged thereby, means for commutating, directing or selecting the current impulses in the charging-circuit, a receiving-circuit, and means for discharging the storage device through the receiving-circuit, substantially as described.

3. In an apparatus for utilizing electrical effects or disturbances transmitted through the natural media, the combination with a source of such effects or disturbances of a charging-circuit adapted to be energized by the action of such effects or disturbances, a condenser included in the charging-circuit

and adapted to be charged thereby, means for commutating, directing or selecting the current impulses in the charging-circuit, a receiving-circuit, and means for discharging the condenser through the receiving-circuit, substantially as described.

4. In an apparatus for utilizing electrical effects or disturbances transmitted through the natural media, the combination with a source of such effects or disturbances of a charging-circuit adapted to be energized by the action of such effects or disturbances, a storage device included in the charging-circuit and adapted to be charged thereby, means for commutating, directing or selecting the current impulses in the charging-circuit so as to render them suitable for charging the storage device, a receiving-circuit, and means for discharging the storage device through the receiving-circuit, substantially as described.

5. In an apparatus for utilizing electrical effects or disturbances transmitted through the natural media, the combination with a source of such effects or disturbances of a charging-circuit adapted to be energized by the action of such effects or disturbances, a condenser included in the charging-circuit and adapted to be charged thereby, means for commutating, directing or selecting the current impulses in the charging-circuit so as to render them suitable for charging the condenser, a receiving-circuit, and means for discharging the condenser through the receiving-circuit, substantially as described.

6. In an apparatus for utilizing electrical effects or disturbances transmitted through the natural media, the combination with a source of such effects or disturbances of a charging-circuit adapted to be energized by the action of such effects or disturbances, a storage device included in the charging-circuit and adapted to be charged thereby, means for commutating, directing or selecting the current impulses in the charging-circuit so as to render them suitable for charging the storage device, a receiving-circuit, and means for discharging the storage device through the receiving-circuit at arbitrary intervals of time, substantially as described.

7. In an apparatus for utilizing electrical effects or disturbances transmitted to a distant receiving-station, the combination with a source of such effects or disturbances of a circuit distant from the source and adapted to have current impulses set up in it by the action of the effects or disturbances, a storage device, means for commutating, directing or selecting the impulses and connecting the circuit with the storage device at succeeding intervals of time synchronizing with the impulses, a receiving-circuit, and means for periodically discharging the storage device through the receiving-circuit, substantially as described.

8. In an apparatus for utilizing electrical effects or disturbances transmitted to a distant receiving-station, the combination with a source of such effects or disturbances of a circuit distant from the source and adapted to have current impulses set up in it by the action of the effects or disturbances, a condenser, means for commutating, directing or selecting the impulses and connecting the circuit with the condenser at succeeding intervals of time synchronizing with the impulses, a receiving-circuit, and means for periodically discharging the condenser through the receiving-circuit, substantially as described.

9. In an apparatus for utilizing electrical effects or disturbances transmitted through the natural media, the combination with a source of such effects or disturbances of a circuit connecting points at a distance from the source between which a difference of potential is created by such effects or disturbances, a storage device included in such circuit and adapted to be charged with the energy supplied by the same, a receiving-circuit connected with the storage device, a receiver included in such receiving-circuit, and means for closing the receiving-circuit and thereby causing the receiver to be operated by the energy accumulated in the storage device, substantially as described.

10. In an apparatus for utilizing electrical effects or disturbances transmitted through the natural media, the combination with a source of such effects or disturbances of a circuit at a distance from the source which is energized by such effects or disturbances, a storage device adapted to be charged with the energy supplied by such circuit, means for connecting the storage device with the said circuit for periods of time predetermined as to succession and duration, a receiving-circuit connected with the storage device, a receiver included in such receiving-circuit, and means for closing the receiving-circuit and thereby causing the receiver to be operated by the energy accumulated in the storage device, substantially as described.

11. In an apparatus for utilizing electrical effects or disturbances transmitted through the natural media, the combination of a circuit connecting points at a distance from the source between which a difference of potential is created by such effects or disturbances, a storage device included in such circuit and adapted to be charged with the energy supplied by the same, a receiving-circuit, a receiver included in such circuit, and means for connecting the receiving-circuit with the storage device for periods of time predetermined as to succession and duration and thereby causing the receiver to be operated by the energy accumulated in the storage device, substantially as described.

12. In an apparatus for utilizing electrical effects or disturbances transmitted through the natural media, the combination of a circuit connecting points at a distance from the source between which a difference of potential is created by such effects or disturbances, a

storage device adapted to be charged with the energy supplied by such circuit for succeeding and predetermined periods of time, a receiving-circuit, a receiver included in the receiving-circuit, and means for connecting the receiving-circuit with the storage device for periods of time predetermined as to succession and duration and thereby causing the receiver to be operated by the energy accumulated in the storage device, substantially as described.

13. In an apparatus for utilizing electrical effects or disturbances transmitted through the natural media, the combination of a circuit connecting points at a distance from the source, between which a difference of potential is created by such effects or disturbances, a condenser included in such circuit and adapted to be charged by the current in the same, a receiving-circuit connected with the condenser, a receiver included in such receiving-circuit, and a device adapted to close the receiving-circuit at arbitrary intervals of time and thereby cause the receiver to be operated by the electrical energy accumulated in the condenser, substantially as described.

14. In an apparatus for utilizing electrical effects or disturbances transmitted through the natural media, the combination of a charging-circuit distant from the source and energized by the effects or disturbances, a storage device included in the charging-circuit, means included in the charging-circuit and acting in synchronism with the impulses therein for commutating, directing or selecting the impulses, a receiving-circuit and means for periodically discharging the storage device through the receiving-circuit, substantially as described.

15. In an apparatus for utilizing electrical effects or disturbances transmitted through the natural media, the combination of a charging-circuit distant from the source and energized by the effects or disturbances, a condenser included in the charging-circuit, means included in the charging-circuit and acting in synchronism with the impulses therein for commutating, directing or selecting the impulses, a receiving-circuit and means for periodically discharging the condenser through the receiving-circuit, substantially as described.

16. In an apparatus for transmitting signals or intelligence through the natural media from a sending-station to a distant point, the combination of a generator or transmitter adapted to produce arbitrarily varied or intermitted electrical disturbances or effects in the natural media, a charging-circuit at the distant point adapted to receive corresponding electrical impulses or effects from the disturbances or effects so produced, a storage device included in the charging-circuit, means included in the charging-circuit and acting in synchronism with the impulses therein for commutating, directing or selecting the impulses so as to render them suitable for charging the storage device, a receiving-circuit and means for periodically discharging the storage device through the receiving-circuit, substantially as described.

17. In an apparatus for transmitting signals or intelligence through the natural media from a sending-station to a distant point, the combination of a generator or transmitter adapted to produce arbitrarily varied or intermitted electrical disturbances or effects in the natural media, a charging-circuit at the distant point adapted to receive corresponding electrical impulses or effects from the disturbances or effects so produced, a condenser included in the charging-circuit, means included in the charging-circuit and acting in synchronism with the impulses therein for commutating, directing or selecting the impulses so as to render them suitable for charging the condenser, a receiving-circuit and means for periodically discharging the condenser through the receiving-circuit, substantially as described.

18. In an apparatus for transmitting signals or intelligence through the natural media from a sending-station to a distant point, the combination of a generator or transmitter adapted to produce arbitrarily varied or intermitted electrical disturbances or effects in the natural media, a circuit at the distant point adapted to receive corresponding electrical impulses or disturbances from the disturbances or effects so transmitted, a storage device included in such circuit and adapted to be charged thereby, a receiving-circuit connected with the storage device, a receiver included in the receiving-circuit and a device for closing the receiving-circuit at arbitrary intervals of time and thereby causing the receiver to be operated by the energy accumulated in the storage device, substantially as described.

NIKOLA TESLA.

Witnesses
C. E. TITUS,
LEONARD E. CURTIS.

P-318

No. 685,955. Patented Nov. 5, 1901.

N. TESLA.

APPARATUS FOR UTILIZING EFFECTS TRANSMITTED FROM A DISTANCE TO A RECEIVING DEVICE THROUGH NATURAL MEDIA.

(Application filed Sept. 8, 1899. Renewed May 29, 1901.)

(No Model.)

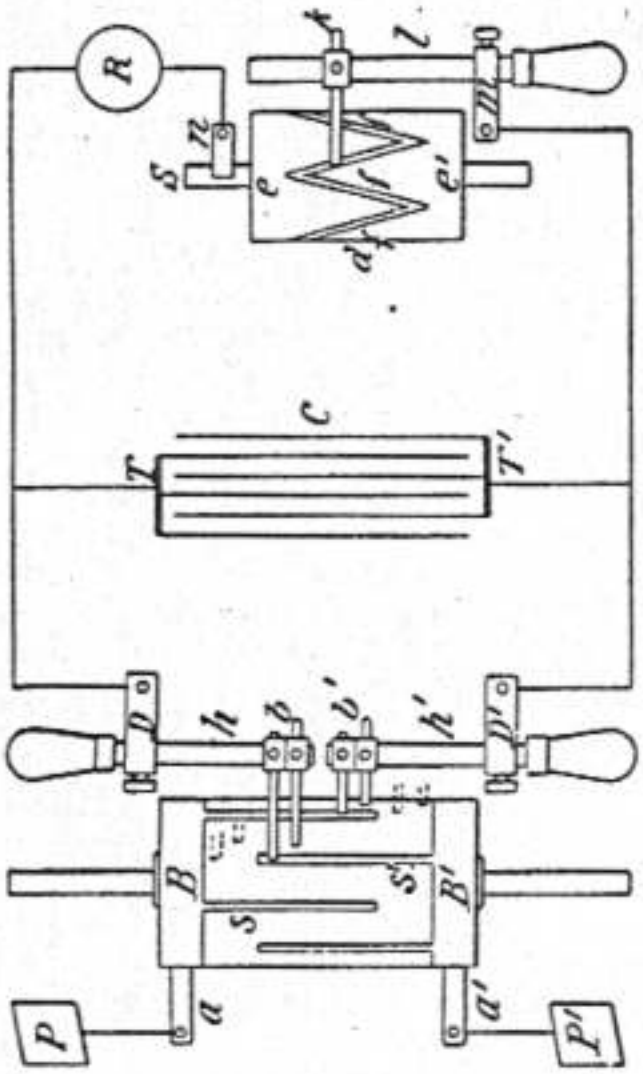

Fig. 1

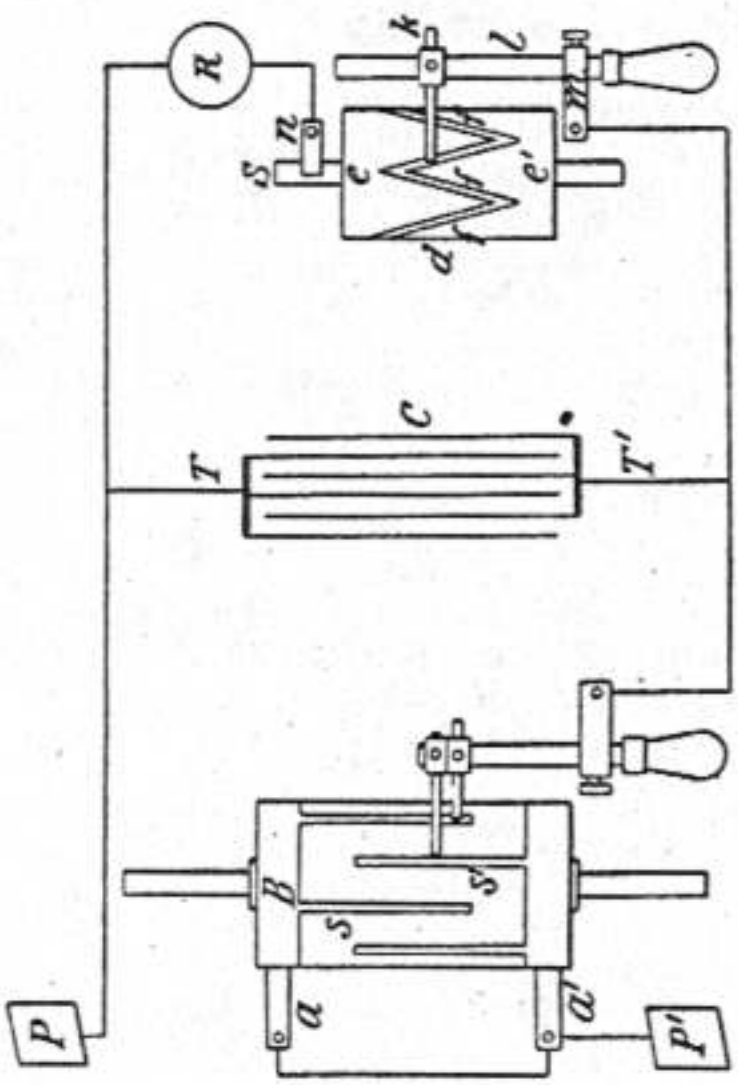

Fig. 2

Witnesses:
G. B. Lamb.
Hillary C. Messimer

Nikola Tesla, Inventor
by Kerr, Page & Cooper.
Att'ys

UNITED STATES PATENT OFFICE.

NIKOLA TESLA, OF NEW YORK, N. Y.

APPARATUS FOR UTILIZING EFFECTS TRANSMITTED THROUGH NATURAL MEDIA.

SPECIFICATION forming part of Letters Patent No. 685,956, dated November 5, 1901.

Original application filed August 1, 1899, Serial No. 725,749. Divided and this application filed November 2, 1899. Renewed May 29, 1901. Serial No. 62,318. (No model.)

To all whom it may concern:

Be it known that I, NIKOLA TESLA, a citizen of the United States, residing at New York city, in the county and State of New York, have invented a new and useful Improvement in Apparatus for Utilizing Effects Transmitted from a Distance to a Receiving Device Through the Natural Media, of which the following is a specification, reference being had to the accompanying drawings, which form a part of the same.

The subject of my present invention is an improvement in the art of utilizing effects transmitted from a distance to a receiving device through the natural media; and it consists in the novel apparatus hereinafter described.

This application is a division of one filed by me August 1, 1899, Serial No. 725,749, and based upon and claiming the method herein described and which may be practiced by the use of the apparatus forming the subject of this application.

My invention is particularly useful in connection with methods and apparatus for operating distant receiving devices by means of electrical disturbances produced by proper transmitters and conveyed to such receiving devices through the natural media; but it obviously has a wider range of applicability and may be employed, for example, in the investigation or utilization of terrestrial, solar, or other disturbances produced by natural causes.

Several ways or methods of transmitting electrical disturbances through the natural media and utilizing them to operate distant receivers are now known and have been applied with more or less success for accomplishing a variety of useful results. One of these ways consists in producing by a suitable apparatus rays or radiations—that is, disturbances—which are propagated in straight lines through space, directing them upon a receiving or recording apparatus at a distance, and thereby bringing the latter into action. This method is the oldest and best known and has been brought particularly into prominence in recent years through the investigations of Heinrich Hertz. Another method consists in passing a current through a circuit, preferably one inclosing a very large area, inducing thereby in a similar circuit situated at a distance another current and affecting by the same in any convenient way a receiving device. Still another way, which has also been known for many years, is to pass in any suitable manner a current through a portion of the ground, as by connecting to two points of the same, preferably at a considerable distance from each other, the two terminals of a generator and to energize by a part of the current diffused through the earth a distant circuit, which is similarly arranged and grounded at two points widely apart and which is made to act upon a sensitive receiver. These various methods have their limitations, one especially, which is common to all, being that the receiving circuit or instrument must be maintained in a definite position with respect to the transmitting apparatus, which often imposes great disadvantages upon the use of the apparatus.

In several applications filed by me and patents granted to me I have disclosed other methods of accomplishing results of this nature, which may be briefly described as follows: In one system the potential of a point or region of the earth is varied by imparting to it intermittent or alternating electrifications through one of the terminals of a suitable source of electrical disturbances, which, to heighten the effect, has its other terminal connected to an insulated body, preferably of large surface and at an elevation. The electrifications communicated to the earth spread in all directions through the same, reaching a distant circuit, which generally has its terminals arranged and connected similarly to those of the transmitting source and operates upon a highly-sensitive receiver. Another method is based upon the fact that the atmospheric air, which behaves as an excellent insulator to currents generated by ordinary apparatus, becomes a conductor under the influence of currents or impulses of enormously high electromotive force, which I have devised means for generating. By such means air strata, which are easily accessible, are rendered available for the production of many desired effects at distances however great. This method, furthermore, allows ad-

vantage to be taken of many of those improvements which are practicable in the ordinary systems of transmission involving the use of a metallic conductor.

Obviously whatever method be employed it is desirable that the disturbances produced by the transmitting apparatus should be as powerful as possible, and by the use of certain forms of high-frequency apparatus, which I have devised and which are now well known, important practical advantages are in this respect secured. Furthermore, since in most cases the amount of energy conveyed to the distant circuit is but a minute fraction of the total energy emanating from the source it is necessary for the attainment of the best results that whatever the character of the receiver and the nature of the disturbances as much as possible of the energy conveyed should be made available for the operation of the receiver, and with this object in view I have heretofore, among other means, employed a receiving-circuit of high self-induction and very small resistance and of a period such as to vibrate in synchronism with the disturbances, whereby a number of separate impulses from the source were made to coöperate, thus magnifying the effect exerted upon and insuring the action of the receiving device. By these means decided advantages have been secured in many instances; but very often the improvement is either not applicable at all, or, if so, the gain is very slight. Evidently when the source is one producing a continuous pressure or delivering impulses of long duration it is impracticable to magnify the effects in this manner, and when, on the other hand, it is one furnishing short impulses of extreme rapidity of succession the advantage obtained in this way is insignificant, owing to the radiation and the unavoidable frictional waste in the receiving-circuit. These losses reduce greatly both the intensity and the number of the coöperative impulses, and since the initial intensity of each of these is necessarily limited only an insignificant amount of energy is thus made available for a single operation of the receiver. As this amount is consequently dependent on the energy conveyed to the receiver by one single impulse, it is evidently necessary to employ either a very large and costly, and therefore objectionable, transmitter, or else to resort to the equally objectionable use of a receiving device too delicate and too easily deranged. Furthermore, the energy obtained through the coöperation of the impulses is in the form of extremely rapid vibrations and because of this unsuitable for the operation of ordinary receivers, the more so as this form of energy imposes narrow restrictions in regard to the mode and time of its application to such devices. To overcome these and other limitations and disadvantages that have heretofore existed in such systems of transmission of signals or intelligence and to render possible an investigation of impulses or disturbances propagated through the natural media from any kind of source and their practical utilization for any purpose to which they are applicable, I have devised a novel method, which I have described in a pending application, filed June 24, 1899, Serial No. 721,790, and which, broadly stated, consists in effecting during any desired time interval a storage of energy derived from such impulses and utilizing the potential energy so obtained for operating a receiving device.

My present invention is intended for the same general purposes, and it comprises another apparatus by means of which similar results may be obtained.

The chief feature which distinguishes the method of my present from that of my former invention, just referred to, is that the energy stored is not, as in the former instance, obtained from the energy of the disturbances or effects transmitted from a distance, but from an independent source.

Expressed generally, the present method consists in charging a storage device with energy from an independent source, controlling the charging of said device by the action of the effects or disturbances transmitted through the natural media, and coincidently using the stored energy for operating a receiving device.

A great variety of disturbances, produced either by suitably-constructed transmitters or by natural causes, are at present known to be propagated through the natural media, and there are also a variety of means or devices enabling energy to be stored, and in view of this I wish to say that I consider the utilization of any such disturbances and the employment of any of these means as within the scope of my present invention so long as the use of the general method hereinbefore stated is involved.

The best way of carrying out my invention which I at present know is to store electrical energy obtained from a suitable electrical generator in a condenser and to control the storage or the application of this energy by means of a sensitive device acted upon by the effects or disturbances, and thereby cause the operation of the receiver.

In the practical application of this method I usually proceed as follows: At any point where I desire to investigate or to utilize for any purpose effects or disturbances propagated through the natural media from any kind of source I provide a suitable generator of electricity—as, for example, a battery and a condenser—which I connect to the poles of the generator in series with a sensitive device capable of being modified in its electrical resistance or other property by the action of the disturbances emitted from the source. To the terminals of the condenser I connect the receiver which is to be operated in series with another device of suitable construction, which performs the function of periodically discharging the condenser through

the receiver at and during such intervals of time as may be best suitable for the purpose contemplated. This latter device may merely consist of two stationary electrodes separated by a feeble dielectric layer of minute thickness, but sufficient to greatly reduce or practically interrupt the current in the circuit under normal conditions, or it may comprise terminals one or more of which are movable and actuated by any suitable force and are adapted to be brought into and out of contact with each other in any convenient manner. The sensitive device may be any of the many devices of this kind which are known to be affected by the disturbances, impulses, or effects propagated through the media, and it may be of such a character that normally—that is, when not acted upon—it entirely prevents the passage of electricity from the generator to the condenser, or it may be such that it allows a gradual leaking through of the current and a charging of the condenser at a slow rate. In any case it will be seen that if the disturbances, of whatever nature they may be, cause an appreciable diminution in the electrical resistance of the sensitive device the current from the battery will pass more readily into the condenser, which will be charged at a more rapid rate, and consequently each of its discharges through the receiver, periodically effected by the special device before referred to which performs this function, will be stronger than normally—that is, when the sensitive device is not acted upon by the disturbances. Evidently then if the receiver be so adjusted that it does not respond to the comparatively feeble normal discharges of the condenser, if they should occur, but only to those stronger ones which take place upon the diminution of the resistance of the sensitive device it will be operated only when this device is acted upon by the disturbances, thus making it possible to investigate and to utilize the latter for any desired purpose.

The general principle underlying my invention and the operation of the various devices used will be clearly understood by reference to the accompanying drawings, in which—

Figure 1 is a diagram illustrating a typical arrangement of apparatus which may be used in carrying my method into practice, and Figs. 2, 3, 4, and 5 similar diagrams of modified arrangements of apparatus for the same purpose.

In Fig. 1, C is a condenser, to the terminals T and T' of which is connected a charging-circuit, including a battery B, a sensitive device *a*, and a resistance *r*, all connected in series, as illustrated. The battery should be preferably of very constant electromotive force and of an intensity carefully determined to secure the best results. The resistance *r*, which may be a frictional or an inductive one, is not absolutely necessary; but it is of advantage to use it in order to facilitate adjustment, and for this purpose it may be made variable in any convenient and preferably continuous manner. Assuming that the disturbances which are to be investigated or utilized for some practical end are rays identical with or resembling those of ordinary light, the sensitive device *a* may be a selenium cell properly prepared, so as to be highly susceptible to the influence of the rays, the action of which should be intensified by the use of a reflector A. (Shown in the drawings.) It is well known that when cells of this kind are exposed to such rays of greatly-varying intensity they undergo corresponding modifications of their electrical resistance; but in the ways they have been heretofore used they have been of very limited utility.

In addition to the circuit including the sensitive device or cell *a* another circuit is provided, which is likewise connected to the terminals T T' of the condenser. This circuit, which may be called the "receiving-circuit," includes the receiver R and in series with it a device *d*, before referred to, which performs the duty of periodically discharging the condenser through the receiver. It will be noted that, as shown in Fig. 1, the receiving-circuit is in permanent connection with the battery and condenser-terminal T, and it should be stated that it is sometimes desirable to entirely insulate the receiving-circuit at all times, except the moments when the device *d* operates to discharge the condenser, thus preventing any disturbing influence which might otherwise be caused in this circuit by the battery or the condenser during the period when the receiver should not be acted upon. In such a case two devices, as *d*, may be used, one in each connection from the condenser to the receiving-circuit, or else one single device of this kind, but of a suitably-modified construction, so that it will make and break simultaneously and at proper intervals of time both of the connections of this circuit with the condenser T and T'.

From the foregoing the operation of the apparatus, as illustrated in Fig. 1, will be at once understood. Normally—that is, when it is not influenced by the rays at all or very slightly—the cell *a*, being of a comparatively high resistance, permits only a relatively feeble current to pass from the battery into the condenser, and hence the latter is charged at too slow a rate to accumulate during the time interval between two succeeding operations of the device *d* sufficient energy to operate the receiver or, generally speaking, to produce the required change in the receiving-circuit. This condition is readily secured by a proper selection and adjustment of the various devices described, so that the receiver will remain unresponsive to the feeble discharges of the condenser which may take place when the cell *a* is acted upon but slightly or not at all by the rays or disturbances; but if now new rays are permitted to fall upon the cell or if the intensity of those already acting upon it be increased by any cause then

its resistance will be diminished and the condenser will be charged by the battery at a more rapid rate, enabling sufficient potential energy to be stored in the condenser during the period of inaction of the device *d* to operate the receiver or to bring about any desired change in the receiving-circuit when the device *d* acts. If the rays acting upon the cell or sensitive device *a* are varied or intermitted in any arbitrary manner, as when transmitting intelligence in the usual way from a distant station by means of short and long signals, the apparatus may readily be made to record or to enable an operator to read the message, since the receiver—supposing it to be an ordinary magnetic relay, for example—will be operated by each signal from the sending-station a certain number of times, having some relation to the duration of each signal. It will be readily seen, however, that if the rays are varied in any other way, as by impressing upon them changes in intensity, the succeeding condenser discharges will undergo corresponding changes in intensity, which may be indicated or recorded by a suitable receiver and distinguished irrespectively of duration.

With reference to Fig. 1 it may be useful to state that the electrical connections of the various devices illustrated may be made in many different ways. For instance, the sensitive device instead of being in series, as shown, may be in a shunt to the condenser, this modification being illustrated in Fig. 3, in which the devices already described are indicated by similar letters to correspond with those of Fig. 1. In this case it will be observed that the condenser, which is being charged from the battery B through the resistance *r*, preferably inductive and properly related to the capacity of the condenser, will store less energy when the sensitive device *a* is energized by the rays, and its resistance thereby diminished. The adjustment of the various instruments may then be such that the receiver will be operated only when the rays are diminished in intensity or interrupted and entirely prevented from falling upon the sensitive cell, or the sensitive device may be placed, as shown in Fig. 4, in a shunt to the resistance *r* or inserted in any suitable way in the circuit containing the receiver—for example, as illustrated in Fig. 5—in both of which figures the various devices are lettered to correspond with those in Fig. 1, so that the figures become self-explanatory. Again, the several instruments may be connected in the manner of a Wheatstone bridge, as will be hereinafter explained with reference to Fig. 2, or otherwise connected or related; but in each case the sensitive device will have the same duty to perform—that is, to control the energy stored and utilized in some suitable way for causing the operation of the receiver in correspondence with the intermittances or variations of the effects or disturbances—and in each instance by a judicious selection of the devices and careful adjustment the advantages of my method may be more or less completely secured. I find it preferable, however, to follow the plan which I have illustrated and described.

It will be observed that the condenser is an important element in the combination. I have shown that by reason of its unique properties it greatly adds to the efficacy of this method. It allows the energy accumulated in it to be discharged instantaneously, and therefore in a highly effective manner. It magnifies in a large degree the current supplied from the battery, and owing to these features it permits energy to be stored and discharged at practically any rate desired, and thereby makes it possible to obtain in the receiving-circuit very great changes of the current strength by impressing upon the battery-current very small variations. Other means of storage possessing these characteristics to a useful degree may be employed without departing from the broad spirit of my invention; but I prefer to use a condenser, since in these respects it excels any other storage device of which I have knowledge.

In Fig. 2 a modified arrangement of apparatus is illustrated which is particularly adapted for the investigation and utilization of very feeble impulses or disturbances, such as may be used in conveying signals or producing other desired effects at very great distances. In this case the energy stored in the condenser is passed through the primary of a transformer, the secondary circuit of which contains the receiver, and in order to render the apparatus still more suitable for use in detecting feeble impulses, in addition to the sensitive device which is acted upon by the impulses, another such device is included in the secondary circuit of the transformer. The scheme of connections is in the main that of a Wheatstone bridge; the four branches of which are formed by the sensitive device *a* and resistances L, L′, and L″, all of which should be preferably inductive and also adjustable in a continuous manner, or at least by very small steps. The condenser C′, which is generally made of considerable capacity, is connected to two opposite points of the bridge, while a battery B, in series with a continuously-adjustable non-inductive resistance *r*′, is connected to the other pair of opposite points, as usual. The four resistances included in the branches of the bridge—namely, *a*, L, L′, and L″—are of a suitable size and so proportioned that under normal conditions—that is, when the device *a* is not influenced at all or only slightly by the disturbances—there will be no difference of potential, or, in any case, the minimum of the same at the terminals T and T′ of the condenser. It is assumed in the present instance that the disturbances to be investigated or utilized are such as will produce a difference of electric potential, however small, between two points or regions in the natural media, as the earth, the water,

or the air, and in order to apply this potential difference effectively to the sensitive device *a* the terminals of the same are connected to two plates P and P', which should be of as large a surface as practicable and so located in the media that the largest possible difference of potential will be produced by the disturbances between the terminals of the sensitive device. This device is in the present case one of familiar construction, consisting of an insulating-tube, which is indicated by the heavy lines in the drawings and which has its ends closed tightly by two conducting-plugs with reduced extensions, upon which bear two brushes *b b*, through which the currents are conveyed to the device. The tubular space between the plugs is partially filled with a conducting sensitive powder, as indicated, the proper amount of the same and the size of its grains being determined and adjusted beforehand by experiment. This tube I rotate by clockwork or other means at a uniform and suitable rate of speed, and under these conditions I find that this device behaves toward disturbances of the kind before assumed in a manner similar to that of a stationary cell of celenium toward rays of light. Its electrical resistance is diminished when it is acted upon by the disturbances and is automatically restored upon the cessation of their influence. It is of advantage to employ round grains of powder in the tube, and in any event it is important that they should be of as uniform size and shape as possible and that provision should be made for maintaining an unchanging and very dry atmosphere in the tube. To the terminals T and T' of the condenser C' is connected a coil *p*, usually consisting of a few turns of a conductor of very small resistance, which is the primary of the transformer before referred to; in series with a device *d*, which effects the discharge of the condenser through the coil *p* at predetermined intervals of time. In the present case this device consists of a cylinder made partly of conducting and partly of insulating material *e* and *e'*, respectively, which is rotated at the desired rate of speed by any suitable means. The conducting part *e* is in good electrical connection with shaft S and is provided with tapering segments, as *f*, upon which slides a brush *k*, which should preferably be capable of longitudinal adjustment along the cylinder. Another brush *b'*, which is connected to the condenser-terminal T', being arranged to bear upon the shaft S, it will be seen that whenever the brush *k* comes in contact with a conducting-segment *e* the circuit including the primary *p* will be completed and the condenser, if energized, discharged through the same. By an adjustment of the speed of rotation of the cylinder and a displacement of the brush *k* along the axis of the same the circuit may be made to open and close in as rapid succession and remain open or closed during such intervals of time as may be desired. In inductive relation to the primary *p* is a secondary coil *s*, usually of much thinner wire and of many more turns than the former, to which are connected in a series a receiver R, illustrated as an ordinary magnetic relay, a continuously-adjustable non-inductive resistance *r''*, a battery B' of a properly-determined and very constant electromotive force, and finally a sensitive device *a'* of the same or similar construction as *a*, which is likewise rotated at a uniform speed and which, with its brushes *b' b''*, closes the secondary circuit. The electromotive force of the battery B' is so graduated by means of the adjustable resistance *r''* that the dielectric layers in the sensitive device *a'* are strained very nearly to the point of breaking down and give way upon a slight increase of the electrical pressure on the terminals of the device. It will of course be understood that the resistance *r''* is used mainly because of convenience and that it may be dispensed with, in which case the adjustment may be effected in many other ways, as by determining the proper amount or coarseness of the sensitive powder or by varying the distance apart of the metallic plugs in the ends of the tube. The same may be said of the resistance *r'*, which is in series with the battery B and serves to graduate the force of the latter, so that the dielectric layers of the sensitive device *a* are subjected to a similar strain and maintained in a state of delicate poise.

The various instruments being connected and adjusted in the manner described, it will now be readily seen from the foregoing that under normal conditions, the device *a* being unaffected by the disturbances, or practically so, and there being no or only a very insignificant amount of energy stored in the condenser, the periodical closure of the primary circuit of the transformer through the operation of the device *d* will have no appreciable effect upon the primary coil *p*, and hence no currents will be generated in the secondary coil *s*, at least not such as would disturb the state of delicate balance existing in the secondary circuit including the receiver, and therefore the latter will not be actuated by the battery B'; but when, owing to the disturbances or impulses propagated through the media from a distant source, an additional electromotive force, however small, is created between the terminals of the device *a* the dielectric layers in the same, unable to support the increased strain, give way and allow the current of the battery B to pass through, thus causing a difference of potential at the terminals T and T' of the condenser. A sufficient amount of energy being now stored in this instrument during the time interval between each two succeeding operations of the device *d*, each closure of the primary circuit by the latter results in the passage of a sudden current impulse through the coil *p*, which induces a corresponding current of relatively high electromotive force in

the secondary coil *s*. Owing to this the dielectric in the device *a'* gives way, and the current of the battery B' being allowed to pass the receiver R is operated, but only for a moment, since by the rotation of the devices *a*, *a'*, and *d*, which may be all driven from the same shaft, the original conditions are restored, assuming, of course, that the electromotive force set up by the disturbances at the terminals of the sensitive device *a* is only momentary or of a duration not longer than the time of closure of the primary circuit; otherwise the receiver will be actuated a number of times and so long as the influence of the disturbances upon the device *a* continues. In order to render the discharged energy of the condenser more effective in causing the operation of the receiver, the resistance of the primary circuit should be very small and the secondary coil *s* should have a number of turns many times greater than that of the primary coil *p*. It will be noted that since the condenser under the above assumptions is always charged in the same direction the strongest current impulse in the secondary coil, which is induced at the moment when the brush *k* comes in contact with segment *e*, is also of unchanging direction, and for the attainment of the best results it is necessary to connect the secondary coil so that the electromotive force of this impulse will be added to that of the battery and will momentarily strengthen the same. However, under certain conditions, which are well understood by those skilled in the art, the devices will operate whichever way the secondary be connected. It is preferable to make the inductive resistances L and L' relatively large, as they are in a shunt to the device *a* and might, if made too small, impair its sensitiveness. On the other hand, the resistance L'' should not be too large and should be related to the capacity of the condenser and the number of makes and breaks effected by the device *d* in well-known ways. Similar considerations apply, of course, to the circuits including the primary *p* and secondary *s*, respectively.

By carefully observing well-known rules of scientific design and adjustment of the instruments the apparatus may be made extremely sensitive and capable of responding to the feeblest influences, thus making it possible to utilize impulses or disturbances transmitted from very great distances and too feeble to be detected or utilized in any of the ways heretofore known, and on this account the method here described lends itself to many scientific and practical uses of great value.

Obviously the character of the devices and the manner in which they are connected or related may be greatly varied without departing from the spirit of my invention.

What I claim as new, and desire to secure by Letters Patent, is—

1. In an apparatus for utilizing effects or disturbances transmitted through the natural media from a distant source, the combination of an electrical storage device, a charging-circuit connected therewith and including a device sensitive to the action of the effects or disturbances and determining under their control the flow of current in the charging-circuit, a receiving-circuit including a receiver, and means for periodically discharging the storage device through the receiving-circuit, substantially as described.

2. In an apparatus for utilizing effects or disturbances transmitted through the natural media from a distant source, the combination of a condenser, a charging-circuit connected therewith and including a source of electricity and a device sensitive to the action of the effects or disturbances and determining under their control the flow of current in the charging-circuit, a receiving-circuit including a receiver, and means for periodically discharging the condenser through the receiving-circuit, substantially as described.

3. In an apparatus for utilizing effects or disturbances transmitted through the natural media from a distant source, the combination of a circuit including a source of electricity, a storage device adapted to be charged thereby and a device normally of very high resistance but adapted to have its resistance reduced when acted upon by the effects or disturbances, with a receiving-circuit connected with the storage device and including a receiver and a device adapted to open and close the receiving-circuit at predetermined intervals of time, substantially as described.

4. In an apparatus for utilizing effects or disturbances transmitted through the natural media from a distant source, the combination of a circuit including a source of electricity, a condenser and a device normally of very high resistance but adapted to have its resistance reduced when acted upon by the effects or disturbances, with a receiving-circuit connected with the condenser and including a receiver and a device adapted to open and close the receiving-circuit at predetermined intervals of time, substantially as described.

5. In an apparatus for utilizing effects or disturbances transmitted from a distant source, the combination of a circuit including a source of electricity, a storage device adapted to be charged thereby and a device, normally of very high resistance but adapted to have its resistance reduced when acted upon by the effects or disturbances, with a receiving-circuit connected with the storage device and including the primary of a transformer and a device adapted to open and close such second circuit at predetermined intervals of time, and a receiver included in the secondary of the transformer, substantially as described.

6. In an apparatus for utilizing effects or disturbances transmitted from a distant source, the combination of an electrical storage device, a charging-circuit connected therewith and including a device sensitive to the

action of the effects or disturbances and determining under their control the flow of the current in the charging-circuit, and a receiving-circuit supplied with energy from the storage device and including a receiver and a device sensitive to electrical variations in the receiving-circuit, substantially as described.

7. In an apparatus for utilizing effects or disturbances transmitted through the natural media from a distant source, the combination of a condenser, a charging-circuit connected therewith and including a device sensitive to the action of the effects or disturbances and determining under their control the flow of the current in the charging-circuit, and a receiving-circuit supplied with energy from the condenser and including a receiver and a device sensitive to electrical variations in the receiving-circuit, substantially as described.

8. In an apparatus for utilizing effects or disturbances transmitted through the natural media from a distant source, the combination of a circuit, an independent local source of electricity included therein, a storage device connected with the said circuit and adapted to receive energy from the said source, a device normally of very high resistance, but adapted to have its resistance reduced when acted upon by the effects or disturbances, a receiving-circuit connected with the storage device, a transformer, the primary of which is included in said receiving-circuit, a device adapted to open and close the receiving-circuit at predetermined intervals of time, a receiver, and a device, normally of very high resistance, but adapted to have its resistance reduced when acted upon by the effects or disturbances, and included in the secondary circuit of the transformer, as set forth.

9. In an apparatus for utilizing effects or disturbances transmitted from a distant source, the combination with a storage device and an independent source of energy for charging the same, of a receiving-circuit connected with the storage device, a device sensitive to the effects or disturbances and determining under their control the flow of current in the receiving-circuit, substantially as set forth.

10. In an apparatus for utilizing effects or disturbances transmitted through the natural media from a distant source, the combination with a storage device and an independent source of energy for charging the same, of a receiving-circuit connected with the storage device, a device sensitive to the effects or disturbances and adapted to have its resistance varied by the action thereon of such effects or disturbances and determining under their control the flow of current in the receiving-circuit, substantially as set forth.

11. In an apparatus for utilizing effects or disturbances transmitted from a distant source, the combination of a storage device, a battery or similar independent source of energy for charging the same, a sensitive device adapted to have its resistance varied under the influence of the effects or disturbances, a receiver adapted to be operated by the discharge of the storage device, the sensitive device being in one branch of a Wheatstone bridge, the storage device in one of the cross connections between two opposite points of the bridge, and the battery in the other cross connection, and resistances L, L' and L'' in the three remaining branches of the bridge, as set forth.

12. In an apparatus for utilizing effects or disturbances transmitted through the natural media from a distant source, the combination of a storage device, a battery or like independent source of energy for charging the same, a sensitive device adapted to have its resistance varied under the influence of the effects or disturbances, a circuit connected with the terminals of the storage device, a transformer having its primary in said circuit and a receiver in the secondary circuit of the transformer, the sensitive device being in one branch of a Wheatstone bridge, the storage device in one of the cross connections between opposite points of the bridge and the battery in the other cross connection, and resistances L, L' and L'' in the three remaining branches of the bridge, as set forth.

NIKOLA TESLA.

Witnesses:
E. A. SUNDERLIN,
D. D. LORD.

P-326

No. 685,956. Patented Nov. 5, 1901.

N. TESLA.

APPARATUS FOR UTILIZING EFFECTS TRANSMITTED THROUGH NATURAL MEDIA.

(Application filed Nov 2, 1899. Renewed May 29, 1901.)

(No Model.)

Fig 1

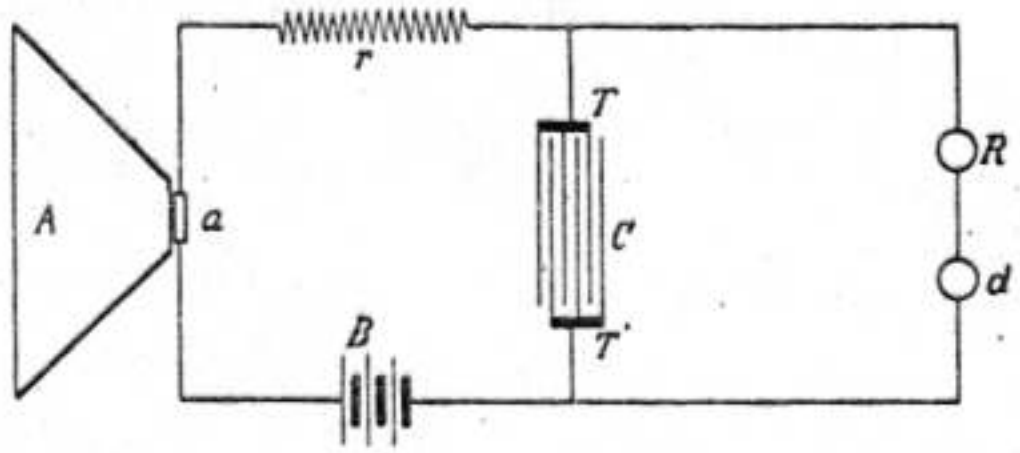

Fig 2

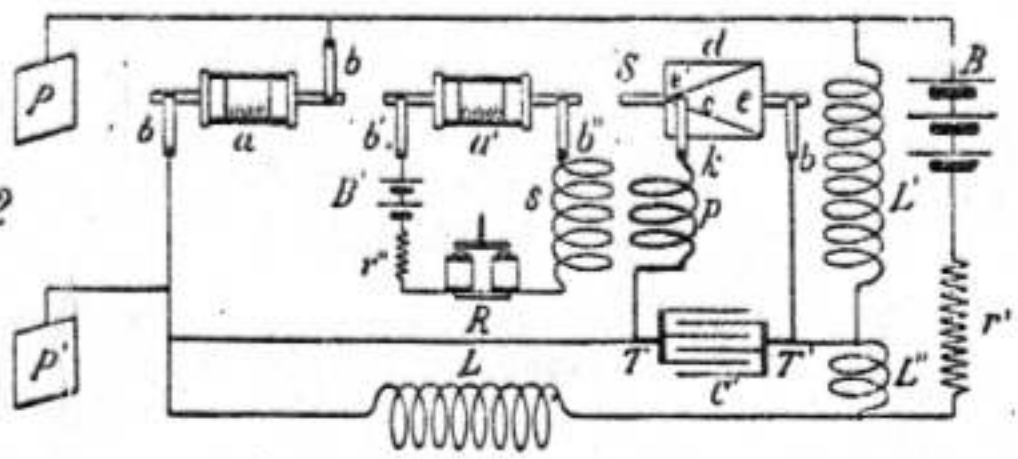

Fig 3

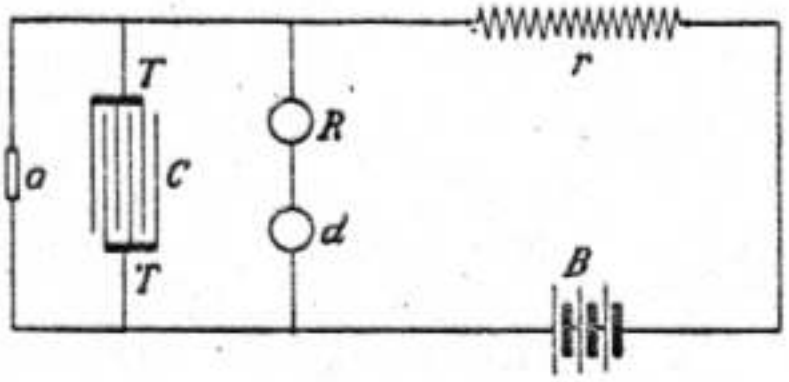

Fig 4

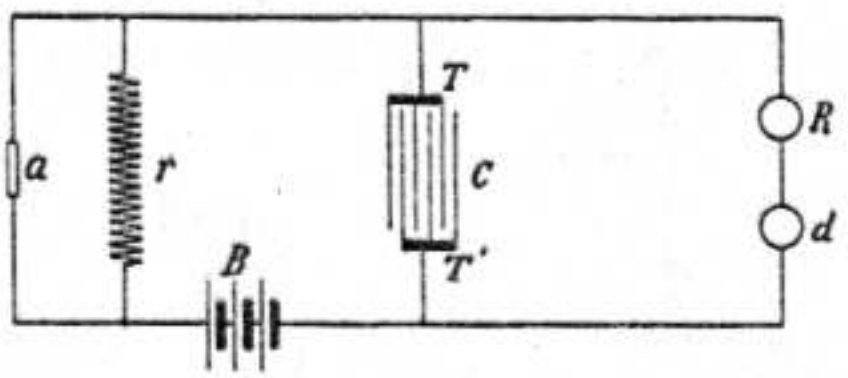

Fig 5

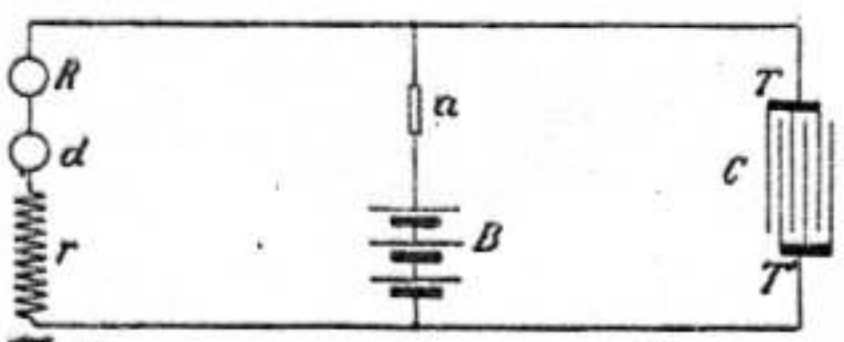

Witnesses:
Raphael Netter
M. Lawson Dyer.

Inventor
Nikola Tesla
by Kerr, Page & Cooper, Attorneys.

UNITED STATES PATENT OFFICE

NIKOLA TESLA, OF NEW YORK, N. Y.

MEANS FOR INCREASING THE INTENSITY OF ELECTRICAL OSCILLATIONS.

SPECIFICATION forming part of Letters Patent No. 685,012, dated October 22, 1901.

Application filed March 21, 1900. Renewed July 3, 1901. Serial No. 66,980. (No model.)

To all whom it may concern:

Be it known that I, NIKOLA TESLA, a citizen of the United States, residing at the borough of Manhattan, in the city, county, and State of New York, have invented certain new and useful Improvements in Means for Increasing the Intensity of Electrical Oscillations, of which the following is a specification, reference being had to the drawings accompanying and forming part of the same.

In many scientific and practical uses of electrical impulses or oscillations—as, for example, in systems of transmitting intelligence to distant points—it is of great importance to intensify as much as possible the current impulses or vibrations which are produced in the circuits of the transmitting and receiving instruments, particularly of the latter.

It is well known that when electrical impulses are impressed upon a circuit adapted to oscillate freely the intensity of the oscillations developed in the same is dependent on the magnitude of its physical constants and the relation of the periods of the impressed and of the free oscillations. For the attainment of the best result it is necessary that the periods of the impressed should be the same as that of the free oscillations, under which conditions the intensity of the latter is greatest and chiefly dependent on the inductance and resistance of the circuit, being directly proportionate to the former and inversely to the latter. In order, therefore, to intensify the impulses or oscillations excited in the circuit—in other words, to produce the greatest rise of current or electrical pressure in the same—it is desirable to make its inductance as large and its resistance as small as practicable. Having this end in view I have devised and used conductors of special forms and of relatively very large cross-section; but I have found that limitations exist in regard to the increase of the inductance as well as to the diminution of the resistance. This will be understood when it is borne in mind that the resonant rise of current or pressure in a freely-oscillating circuit is proportionate to the frequency of the impulses and that a large inductance in general involves a slow vibration. On the other hand, an increase of the section of the conductor with the object of reducing its resistance is, beyond a certain limit, of little or no value, principally because electrical oscillations, particularly those of high frequency, pass mainly through the superficial conducting layers, and while it is true that this drawback may be overcome in a measure by the employment of thin ribbons, tubes, or stranded cables, yet in practice other disadvantages arise, which often more than offset the gain.

It is a well-established fact that as the temperature of a metallic conductor rises its electrical resistance increases, and in recognition of this constructors of commercial electrical apparatus have heretofore resorted to many expedients for preventing the coils and other parts of the same from becoming heated when in use, but merely with a view to economizing energy and reducing the cost of construction and operation of the apparatus.

Now I have discovered that when a circuit adapted to vibrate freely is maintained at a low temperature the oscillations excited in the same are to an extraordinary degree magnified and prolonged, and I am thus enabled to produce many valuable results which have heretofore been wholly impracticable.

Briefly stated, then, my invention consists in producing a great increase in the intensity and duration of the oscillations excited in a freely-vibrating or resonating circuit by maintaining the same at a low temperature.

Ordinarily in commercial apparatus such provision is made only with the object of preventing wasteful heating, and in any event its influence upon the intensity of the oscillations is very slight and practically negligible, for as a rule impulses of arbitrary frequency are impressed upon a circuit, irrespective of its own free vibrations, and a resonant rise is expressly avoided.

My invention, it will be understood, does not primarily contemplate the saving of energy, but aims at the attainment of a distinctly novel and valuable result—that is, the increase to the greatest practicable degree of the intensity and duration of free oscillations. It may be usefully applied in all cases when this special object is sought, but offers exceptional advantages in those instances in which the freely-oscillating discharges of a condenser are utilized.

The best and most convenient manner of

carrying out the invention of which I am now aware is to surround the freely-vibrating circuit or conductor, which is to be maintained at a low temperature, with a suitable cooling medium, which may be any kind of freezing mixture or agent, such as liquid air, and in order to derive the fullest benefit from the improvement the circuit should be primarily constructed so as to have the greatest possible self-induction and the smallest practicable resistance, and other rules of construction which are now recognized should be observed. For example, when in a system of transmission of energy for any purpose through the natural media the transmitting and receiving conductors are connected to earth and to an insulated terminal, respectively, the lengths of these conductors should be one-quarter of the wave length of the disturbance propagated through them.

In the accompanying drawing I have shown graphically a disposition of apparatus which may be used in applying practically my invention.

The drawing illustrates in perspective two devices, either of which may be the transmitter, while the other is the receiver. In each there is a coil of few turns and low resistance, (designated in one by A and in the other by A'.) The former coil, supposed to be forming part of the transmitter, is to be connected with a suitable source of current, while the latter is to be included in circuit with a receiving device. In inductive relation to said coils in each instrument is a flat spirally-wound coil B or B', one terminal of which is shown as connected to a ground-plate C, while the other, leading from the center, is adapted to be connected to an insulated terminal, which is generally maintained at an elevation in the air. The coils B B' are placed in insulating-receptacles D, which contain the freezing agent and around which the coils A and A' are wound.

Coils in the form of a flat spiral, such as those described, are eminently suited for the production of free oscillations; but obviously conductors or circuits of any other form may be used, if desired.

From the foregoing the operation of the apparatus will now be readily understood. Assume, first, as the simplest case that upon the coil A of the transmitter impulses or oscillations of an arbitrary frequency and irrespective of its own free vibrations are impressed. Corresponding oscillations will then be induced in the circuit B, which, being constructed and adjusted, as before indicated, so as to vibrate at the same rate, will greatly magnify them, the increase being directly proportionate to the product of the frequency of the oscillations and the inductance of circuit B and inversely to the resistance of the latter. Other conditions remaining the same, the intensity of the oscillations in the resonating-circuit B will be increased in the same proportion as its resistance is reduced. Very often, however, the conditions may be such that the gain sought is not realized directly by diminishing the resistance of the circuit. In such cases the skilled expert who applies the invention will turn to advantage the reduction of resistance by using a correspondingly longer conductor, thus securing a much greater self-induction, and under all circumstances he will determine the dimensions of the circuit, so as to get the greatest value of the ratio of its inductance to its resistance, which determines the intensity of the free oscillations. The vibrations of coil B, greatly strengthened, spread to a distance and on reaching the tuned receiving-conductor B' excite corresponding oscillations in the same, which for similar reasons are intensified, with the result of inducing correspondingly stronger currents or oscillations in circuit A', including the receiving device. When, as may be the case in the transmission of intelligible signals, the circuit A is periodically closed and opened, the effect upon the receiver is heightened in the manner above described not only because the impulses in the coils B and B' are strengthened, but also on account of their persistence through a longer interval of time. The advantages offered by the invention are still more fully realized when the circuit A of the transmitter instead of having impulses of an arbitrary frequency impressed upon it is itself permitted to vibrate at its own rate, and more particularly so if it be energized by the freely-oscillating high-frequency discharges of a condenser. In such a case the cooling of the conductor A, which may be effected in any suitable manner, results in an extraordinary magnification of the oscillation in the resonating-circuit B, which I attribute to the increased intensity as well as greater number of the high-frequency oscillations obtained in the circuit A. The receiving-coil B' is energized stronger in proportion and induces currents of greater intensity in the circuit A'. It is evident from the above that the greater the number of the freely-vibrating circuits which alternately receive and transmit energy from one to another the greater, relatively, will be the gain secured by applying my invention.

I do not of course intend to limit myself to the specific manner and means described of artificial cooling, nor to the particular forms and arrangements of the circuits shown. By taking advantage of the facts above pointed out and of the means described I have found it possible to secure a rise of electrical pressure in an excited circuit very many times greater than has heretofore been obtainable, and this result makes it practicable, among other things, to greatly extend the distance of transmission of signals and to exclude much more effectively interference with the same than has been possible heretofore.

Having now described my invention, what I claim is—

1. The combination with a circuit adapted

to vibrate freely, of means for artificially cooling the same to a low temperature, as herein set forth.

2. In an apparatus for transmitting or receiving electrical impulses or oscillations, the combination with a primary and a secondary circuit, adapted to vibrate freely in response to the impressed oscillations, of means for artificially cooling the same to a low temperature, as herein set forth.

3. In a system for the transmission of electrical energy, a circuit upon which electrical oscillations are impressed, and which is adapted to vibrate freely, in combination with a receptacle containing an artificial refrigerant in which said circuit is immersed, as herein set forth.

4. The means of increasing the intensity of the electrical impulses or oscillations impressed upon a freely-vibrating circuit, consisting of an artificial refrigerant combined with and applied to such circuit and adapted to maintain the same at a low temperature.

5. The means of intensifying and prolonging the electrical oscillations produced in a freely-vibrating circuit, consisting of an artificial refrigerant applied to such circuit and adapted to maintain the same at a uniformly-low temperature.

6. In a system for the transmission of energy, a series of transmitting and receiving circuits adapted to vibrate freely, in combination with means for artificially maintaining the same at a low temperature, as set forth.

NIKOLA TESLA.

Witnesses:
JOHN C. KERR,
M. LAWSON DYER.

P-330

No. 685,012 Patented Oct. 22, 1901.

N. TESLA.

MEANS FOR INCREASING THE INTENSITY OF ELECTRICAL OSCILLATIONS.

(Application filed Mar. 21, 1900. Renewed July 3, 1901.)

(No Model.)

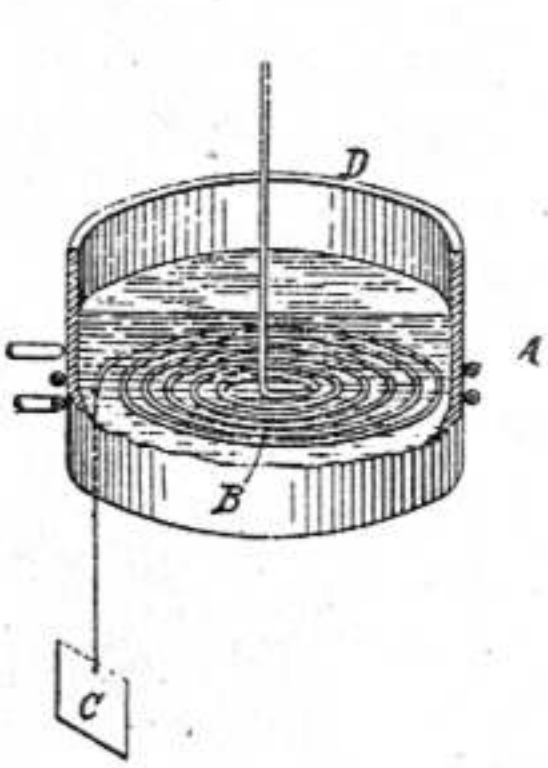

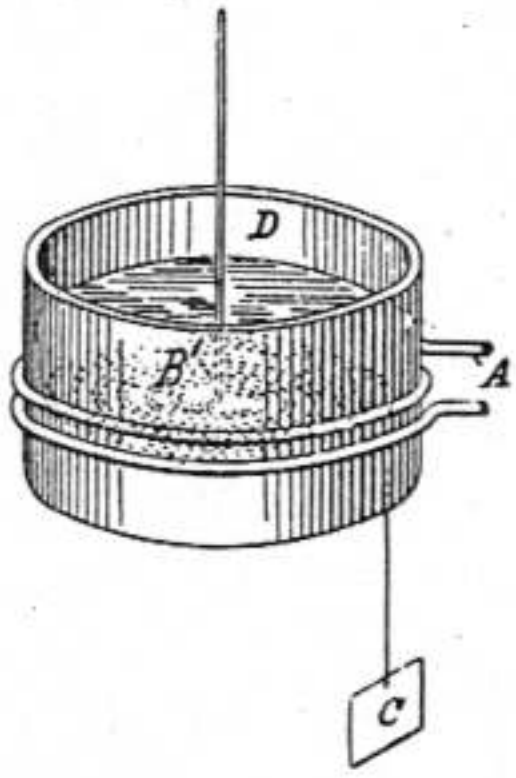

Witnesses:
Raphael Netter
Benjamin Miller

Nikola Tesla, Inventor
by Kerr, Page & Cooper Attys

THE NORRIS PETERS CO. PHOTO-LITHO. WASHINGTON, D. C.

No. 787,412. Patented April 18, 1905.

UNITED STATES PATENT OFFICE.

NIKOLA TESLA, OF NEW YORK, N. Y.

ART OF TRANSMITTING ELECTRICAL ENERGY THROUGH THE NATURAL MEDIUMS.

SPECIFICATION forming part of Letters Patent No. 787,412, dated April 18, 1905.

Application filed May 16, 1900. Renewed June 17, 1902. Serial No. 112,034.

To all whom it may concern:

Be it known that I, NIKOLA TESLA, a citizen of the United States, residing in the borough of Manhattan, in the city, county, and State of New York, have discovered a new and useful Improvement in the Art of Transmitting Electrical Energy Through the Natural Media, of which the following is a specification, reference being had to the drawings accompanying and forming a part of the same.

It is known since a long time that electric currents may be propagated through the earth, and this knowledge has been utilized in many ways in the transmission of signals and the operation of a variety of receiving devices remote from the source of energy, mainly with the object of dispensing with a return conducting-wire. It is also known that electrical disturbances may be transmitted through portions of the earth by grounding only one of the poles of the source, and this fact I have made use of in systems which I have devised for the purposes of transmitting through the natural media intelligible signals or power and which are now familiar; but all experiments and observations heretofore made have tended to confirm the opinion held by the majority of scientific men that the earth, owing to its immense extent, although possessing conducting properties, does not behave in the manner of a conductor of limited dimensions with respect to the disturbances produced, but, on the contrary, much like a vast reservoir or ocean, which while it may be locally disturbed by a commotion of some kind remains unresponsive and quiescent in a large part or as a whole. Still another fact now of common knowledge is that when electrical waves or oscillations are impressed upon such a conducting-path as a metallic wire reflection takes place under certain conditions from the ends of the wire, and in consequence of the interference of the impressed and reflected oscillations the phenomenon of "stationary waves" with maxima and minima in definite fixed positions is produced. In any case the existence of these waves indicates that some of the outgoing waves have reached the boundaries of the conducting-path and have been reflected from the same. Now I have discovered that notwithstanding its vast dimensions and contrary to all observations heretofore made the terrestrial globe may in a large part or as a whole behave toward disturbances impressed upon it in the same manner as a conductor of limited size, this fact being demonstrated by novel phenomena, which I shall hereinafter describe.

In the course of certain investigations which I carried on for the purpose of studying the effects of lightning discharges upon the electrical condition of the earth I observed that sensitive receiving instruments arranged so as to be capable of responding to electrical disturbances created by the discharges at times failed to respond when they should have done so, and upon inquiring into the causes of this unexpected behavior I discovered it to be due to the character of the electrical waves which were produced in the earth by the lightning discharges and which had nodal regions following at definite distances the shifting source of the disturbances. From data obtained in a large number of observations of the maxima and minima of these waves I found their length to vary approximately from twenty-five to seventy kilometers, and these results and certain theoretical deductions led me to the conclusion that waves of this kind may be propagated in all directions over the globe and that they may be of still more widely differing lengths, the extreme limits being imposed by the physical dimensions and properties of the earth. Recognizing in the existence of these waves an unmistakable evidence that the disturbances created had been conducted from their origin to the most remote portions of the globe and had been thence reflected, I conceived the idea of producing such waves in the earth by artificial means with the object of utilizing them for many useful purposes for which they are or might be found applicable. This problem was rendered extremely difficult owing to the immense dimensions of the planet, and consequently enormous movement of electricity or rate at which electrical energy had to be delivered in order to approximate, even in a remote degree, movements or rates which are manifestly attained in the displays of elec-

trical forces in nature and which seemed at first unrealizable by any human agencies; but by gradual and continuous improvements of a generator of electrical oscillations, which I have described in my Patents Nos. 645,576 and 649,621, I finally succeeded in reaching electrical movements or rates of delivery of electrical energy not only approximating, but, as shown in many comparative tests and measurements, actually surpassing those of lightning discharges, and by means of this apparatus I have found it possible to reproduce whenever desired phenomena in the earth the same as or similar to those due to such discharges. With the knowledge of the phenomena discovered by me and the means at command for accomplishing these results I am enabled not only to carry out many operations by the use of known instruments, but also to offer a solution for many important problems involving the operation or control of remote devices which for want of this knowledge and the absence of these means have heretofore been entirely impossible. For example, by the use of such a generator of stationary waves and receiving apparatus properly placed and adjusted in any other locality, however remote, it is practicable to transmit intelligible signals or to control or actuate at will any one or all of such apparatus for many other important and valuable purposes, as for indicating wherever desired the correct time of an observatory or for ascertaining the relative position of a body or distance of the same with reference to a given point or for determining the course of a moving object, such as a vessel at sea, the distance traversed by the same or its speed, or for producing many other useful effects at a distance dependent on the intensity, wave length, direction or velocity of movement, or other feature or property of disturbances of this character.

I shall typically illustrate the manner of applying my discovery by describing one of the specific uses of the same—namely, the transmission of intelligible signals or messages between distant points—and with this object reference is now made to the accompanying drawings, in which—

Figure 1 represents diagrammatically the generator which produces stationary waves in the earth, and Fig. 2 an apparatus situated in a remote locality for recording the effects of these waves.

In Fig. 1, A designates a primary coil forming part of a transformer and consisting generally of a few turns of a stout cable of inappreciable resistance, the ends of which are connected to the terminals of a source of powerful electrical oscillations, diagrammatically represented by B. This source is usually a condenser charged to a high potential and discharged in rapid succession through the primary, as in a type of transformer invented by me and not well known; but when it is desired to produce stationary waves of great lengths an alternating dynamo of suitable construction may be used to energize the primary A. C is a spirally-wound secondary coil within the primary having the end nearer to the latter connected to the ground E' and the other end to an elevated terminal E. The physical constants of coil C, determining its period of vibration, are so chosen and adjusted that the secondary system E' C E is in the closest possible resonance with the oscillations impressed upon it by the primary A. It is, moreover, of the greatest importance in order to still further enhance the rise of pressure and to increase the electrical movement in the secondary system that its resistance be as small as practicable and its self-induction as large as possible under the conditions imposed. The ground should be made with great care, with the object of reducing its resistance. Instead of being directly grounded, as indicated, the coil C may be joined in series or otherwise to the primary A, in which case the latter will be connected to the plate E'; but be it that none or a part or all of the primary or exciting turns are included in the coil C the total length of the conductor from the ground-plate E' to the elevated terminal E should be equal to one-quarter of the wave length of the electrical disturbance in the system E' C E or else equal to that length multiplied by an odd number. This relation being observed, the terminal E will be made to coincide with the points of maximum pressure in the secondary or excited circuit, and the greatest flow of electricity will take place in the same. In order to megnify the electrical movement in the secondary as much as possible, it is essential that its inductive connection with the primary A should not be very intimate, as in ordinary transformers, but loose, so as to permit free oscillation—that is to say, their mutual induction should be small. The spiral form of coil C secures this advantage, while the turns near the primary A are subjected to a strong inductive action and develop a high initial electromotive force. These adjustments and relations being carefully completed and other constructive features indicated rigorously observed, the electrical movement produced in the secondary system by the inductive action of the primary A will be enormously magnified, the increase being directly proportionate to the inductance and frequency and inversely to the resistance of the secondary system. I have found it practicable to produce in this manner an electrical movement thousands of times greater than the initial—that is, the one impressed upon the secondary by the primary A—and I have thus reached activities or rates of flow of electrical energy in the system E' C E measured by many tens of thousands of horsepower. Such immense movements of elec-

tricity give rise to a variety of novel and striking phenomena, among which are those already described. The powerful electrical oscillations in the system E' C E being communicated to the ground cause corresponding vibrations to be propagated to distant parts of the globe, whence they are reflected and by interference with the outgoing vibrations produce stationary waves the crests and hollows of which lie in parallel circles relatively to which the ground-plate E' may be considered to be the pole. Stated otherwise, the terrestrial conductor is thrown into resonance with the oscillations impressed upon it just like a wire. More than this, a number of facts ascertained by me clearly show that the movement of electricity through it follows certain laws with nearly mathematical rigor. For the present it will be sufficient to state that the planet behaves like a perfectly smooth or polished conductor of inappreciable resistance with capacity and self induction uniformly distributed along the axis of symmetry of wave propagation and transmitting slow electrical oscillations without sensible distortion and attenuation.

Besides the above three requirements seem to be essential to the establishment of the resonating condition.

First. The earth's diameter passing through the pole should be an odd multiple of the quarter wave length—that is, of the ratio between the velocity of light—and four times the frequency of the currents.

Second. It is necessary to employ oscillations in which the rate of radiation of energy into space in the form of hertzian or electromagnetic waves is very small. To give an idea, I would say that the frequency should be smaller than twenty thousand per second, though shorter waves might be practicable. The lowest frequency would appear to be six per second, in which case there will be but one node, at or near the ground-plate, and, paradoxical as it may seem, the effect will increase with the distance and will be greatest in a region diametrically opposite the transmitter. With oscillations still slower the earth, strictly speaking, will not resonate, but simply act as a capacity, and the variation of potential will be more or less uniform over its entire surface.

Third. The most essential requirement is, however, that irrespective of frequency the wave or wave-train should continue for a certain interval of time, which I have estimated to be not less than one-twelfth or probably 0.08484 of a second and which is taken in passing to and returning from the region diametrically opposite the pole over the earth's surface with a mean velocity of about four hundred and seventy-one thousand two hundred and forty kilometers per second.

The presence of the stationary waves may be detected in many ways. For instance, a circuit may be connected directly or inductively to the ground and to an elevated terminal and tuned to respond more effectively to the oscillations. Another way is to connect a tuned circuit to the ground at two points lying more or less in a meridian passing through the pole E' or, generally stated, to any two points of a different potential.

In Fig. 2 I have shown a device for detecting the presence of the waves such as I have used in a novel method of magnifying feeble effects which I have described in my Patents Nos. 685,953 and 685,955. It consists of a cylinder D, of insulating material, which is moved at a uniform rate of speed by clockwork or other suitable motive power and is provided with two metal rings F F', upon which bear brushes a and a', connected, respectively, to the terminal plates P and P'. From the rings F F' extend narrow metallic segments x and x', which by the rotation of the cylinder D are brought alternately into contact with double brushes b and b', carried by and in contact with conducting-holders h and h', supported in metallic bearings G and G', as shown. The latter are connected to the terminals T and T' of a condenser H, and it should be understood that they are capable of angular displacement as ordinary brush-supports. The object of using two brushes, as b and b', in each of the holders h and h' is to vary at will the duration of the electric contact of the plates P and P' with the terminals T and T', to which is connected a receiving-circuit including a receiver R and a device d, performing the duty of closing the receiving-circuit at predetermined intervals of time and discharging the stored energy through the receiver. In the present case this device consists of a cylinder made partly of conducting and partly of insulating material e and e', respectively, which is rotated at the desired rate of speed by any suitable means. The conducting part e is in good electrical connection with the shaft S and is provided with tapering segments f f', upon which slides a brush k, supported on a conducting-rod l, capable of longitudinal adjustment in a metallic support m. Another brush, n, is arranged to bear upon the shaft S, and it will be seen that whenever one of the segments f' comes in contact with the brush k the circuit including the receiver R is completed and the condenser discharged through the same. By an adjustment of the speed or rotation of the cylinder d and a displacement of the brush k along the cylinder the circuit may be made to open and close in as rapid succession and remain open or closed during such intervals of time as may be desired. The plates P and P', through which the electrical energy is conveyed to the brushes a and a', may be at a considerable distance from each other in the ground or one in the ground and the other in the air, preferably at some height. If but one plate is connected to earth and the other maintained at an

elevation, the location of the apparatus must be determined with reference to the position of the stationary waves established by the generator, the effect evidently being greatest in a maximum and zero in a nodal region. On the other hand, if both plates be connected to earth the points of connection must be selected with reference to the difference of potential which it is desired to secure, the strongest effect being of course obtained when the plates are at a distance equal to half the wave length.

In illustration of the operation of the system let it be assumed that alternating electrical impulses from the generator are caused to produce stationary waves in the earth, as above described, and that the receiving apparatus is properly located with reference to the position of the nodal and ventral regions of the waves. The speed of rotation of the cylinder D is varied until it is made to turn in synchronism with the alternate impulses of the generator, and the position of the brushes *b* and *b'* is adjusted by angular displacement or otherwise, so that they are in contact with the segments S and S' during the periods when the impulses are at or near the maximum of their intensity. These requirements being fulfilled, electrical charges of the same sign will be conveyed to each of the terminals of the condenser, and with each fresh impulse it will be charged to a higher potential. The speed of rotation of the cylinder *d* being adjustable at will, the energy of any number of separate impulses may thus be accumulated in potential form and discharged through the receiver R upon the brush *k* coming in contact with one of the segments *f'*. It will be understood that the capacity of the condenser should be such as to allow the storing of a much greater amount of energy than is required for the ordinary operation of the receiver. Since by this method a relatively great amount of energy and in a suitable form may be made available for the operation of a receiver, the latter need not be very sensitive; but when the impulses are very weak or when it is desired to operate a receiver very rapidly any of the well-known sensitive devices capable of responding to very feeble influences may be used in the manner indicated or in other ways. Under the conditions described it is evident that during the continuance of the stationary waves the receiver will be acted upon by current impulses more or less intense, according to its location with reference to the maxima and minima of said waves; but upon interrupting or reducing the flow of the current the stationary waves will disappear or diminish in intensity. Hence a great variety of effects may be produced in a receiver, according to the mode in which the waves are controlled. It is practicable, however, to shift the nodal and ventral regions of the waves at will from the sending-station, as by varying the length of the waves under observance of the above requirements. In this manner the regions of maximum and minimum effect may be made to coincide with any receiving station or stations. By impressing upon the earth two or more oscillations of different wave length a resultant stationary wave may be made to travel slowly over the globe, and thus a great variety of useful effects may be produced. Evidently the course of a vessel may be easily determined without the use of a compass, as by a circuit connected to the earth at two points, for the effect exerted upon the circuit will be greatest when the plates P P' are lying on a meridian passing through ground-plate E' and will be *nil* when the plates are located at a parallel circle. If the nodal and ventral regions are maintained in fixed positions, the speed of a vessel carrying a receiving apparatus may be exactly computed from observations of the maxima and minima regions successively traversed. This will be understood when it is stated that the projections of all the nodes and loops on the earth's diameter passing through the pole or axis of symmetry of the wave movement are all equal. Hence in any region at the surface the wave length can be ascertained from simple rules of geometry. Conversely, knowing the wave length, the distance from the source can be readily calculated. In like ways the distance of one point from another, the latitude and longitude, the hour, &c., may be determined from the observation of such stationary waves. If several such generators of stationary waves, preferably of different length, were installed in judiciously-selected localities, the entire globe could be subdivided in definite zones of electric activity, and such and other important data could be at once obtained by simple calculation or readings from suitably-graduated instruments. Many other useful applications of my discovery will suggest themselves, and in this respect I do not wish to limit myself. Thus the specific plan herein described of producing the stationary waves might be departed from. For example, the circuit which impresses the powerful oscillations upon the earth might be connected to the latter at two points. In this application I have advanced various improvements in means and methods of producing and utilizing electrical effects which either in connection with my present discovery or independently of the same may be usefully applied.

I desire it to be understood that such novel features as are not herein specifically claimed will form the subjects of subsequent applications.

What I now claim is—

1. The improvement in the art of transmitting electrical energy to a distance which consists in establishing stationary electrical waves in the earth, as set forth.

2. The improvement in the art of transmit-

ting electrical energy to a distance which consists in impressing upon the earth electrical oscillations of such character as to produce stationary electrical waves therein, as set forth.

3. The improvement in the art of transmitting and utilizing electrical energy which consists in establishing stationary electrical waves in the natural conducting media, and operating thereby one or more receiving devices remote from the source of energy, as set forth.

4. The improvement in the art of transmitting and utilizing electrical energy which consists in establishing in the natural conducting media, stationary electrical waves of predetermined length and operating thereby one or more receiving devices remote from the source of energy and properly located with respect to the position of such waves, as herein set forth.

5. The improvement in the art of transmitting and utilizing electrical energy, which consists in establishing in the natural conducting media, stationary electrical waves, and varying the length of such waves, as herein set forth.

6. The improvement in the art of transmitting and utilizing electrical energy, which consists in establishing in the natural conducting media stationary electrical waves and shifting the nodal and ventral regions of these waves, as described.

NIKOLA TESLA.

Witnesses:
M. LAWSON DYER,
BENJAMIN MILLER

P-336

No. 787,412. PATENTED APR. 18, 1905.

N. TESLA.

ART OF TRANSMITTING ELECTRICAL ENERGY THROUGH THE NATURAL MEDIUMS.

APPLICATION FILED MAY 16, 1900. RENEWED JUNE 17, 1902.

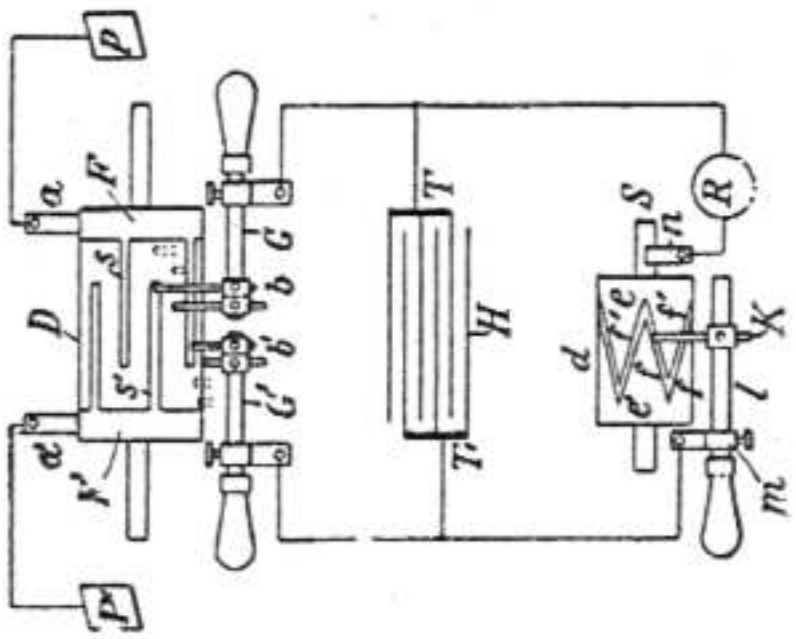

Fig. 2

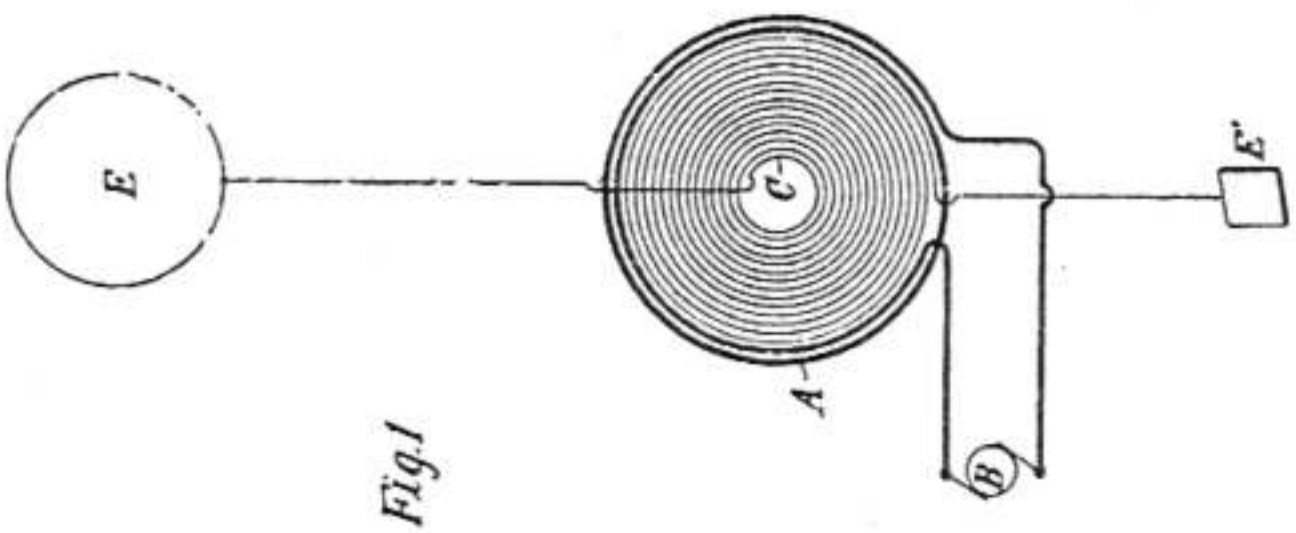

Fig. 1

Witnesses:
Raphael Netter
M. Lawson Byer.

Nikola Tesla Inventor
by Kerr, Page & Cooper Attys

UNITED STATES PATENT OFFICE

NIKOLA TESLA, OF NEW YORK, N. Y.

SYSTEM OF SIGNALING.

SPECIFICATION forming part of Letters Patent No. 725,605, dated April 14, 1903.

Application filed July 16, 1900. Serial No. 23,847. (No model.)

To all whom it may concern:

Be it known that I, NIKOLA TESLA, a citizen of the United States, residing in the borough of Manhattan, in the city, county, and State of New York, have invented certain new and useful Improvements in Systems of Signaling, of which the following is a specification, reference being had to the drawings accompanying and forming a part of the same.

In certain systems for transmitting intelligible messages or governing the movements and operations of distant automata electrical impulses or disturbances produced by suitable apparatus are conveyed through the natural media to a distant receiving-circuit capable of responding to the impulses, and thereby effecting the control of other appliances. Generally a special device highly sensitive is connected to the receiving-circuit, which in order to render it still more susceptible and to reduce the liability of its being affected by extraneous disturbances is carefully adjusted so as to be in tune with the transmitter. By a scientific design of the sending and receiving circuits and other apparatus and skilful adjustment of the same these objects may be in a measure attained; but in long experience I have found that notwithstanding all constructive advantages and experimental resources this method is in many cases inadequate. Thus while I have succeeded in so operating selectively under certain favorable conditions more than one hundred receivers in most cases it is practicable to work successfully but a few, the number rapidly diminishing as, either owing to great distance or other causes, the energy available in the tuned circuits becomes smaller and the receivers necessarily more delicate. Evidently a circuit however well constructed and adjusted to respond exclusively to vibrations of one period is apt to be affected by higher harmonics and still more so by lower ones. When the oscillations are of a very high frequency, the number of the effective harmonics may be large, and the receiver consequently easily disturbed by extraneous influences to such an extent that when very short waves, such as those produced by Hertzian spark apparatus, are used little advantage in this respect is derived from tuning the circuits. It being an imperative requirement in most practical applications of such systems of signaling or intelligence transmission that the signals or messages should be exclusive or private, it is highly desirable to do away with the above limitations, especially in view of the fact, which I have observed, that the influence of powerful electrical disturbances upon sensitive receivers extends, even on land, to distances of many hundreds of miles, and consequently in accordance with theory still farther on sea. To overcome these drawbacks and to enable a great number of transmitting and receiving stations to be operated selectively and exclusively and without any danger of the signals or messages being disturbed, intercepted, or interfered with in any way is the object of my present invention.

Broadly stated, this invention consists in the combination of means for generating and transmitting two or more kinds or classes of disturbances or impulses of distinctive character with respect to their effect upon a receiving-circuit and a distant receiver which comprises two or more circuits of different electrical character or severally tuned, so as to be responsive to the different kinds or classes of impulses and which is dependent for operation upon the conjoint or resultant action of the two or more circuits or the several instrumentalities controlled or operated thereby. By employing only two kinds of disturbances or series of impulses instead of one, as has heretofore been done to operate a receiver of this kind, I have found that safety against the disturbing influences of other sources is increased to such an extent that I believe this number to be amply sufficient in most cases for rendering the exchange of signals or messages reliable and exclusive; but in exceptional instances a greater number may be used and a degree of safety against mutual and extraneous interference attained, such as is comparable to that afforded by a combination-lock. The liability of a receiver being affected by disturbances emanating from other sources, as well as that of the signals or messages being received by instruments for which they are not intended, may, however, be reduced not

only by an increased number of the coöperative disturbances or series of impulses, but also by a judicious choice of the same and the order in which they are made to act upon the receiver.

Evidently there are a great many ways of generating impulses or disturbances of any wave length, wave form, number or order of succession, or of any special character such as will be capable of fulfilling the requirements above stated, and there are also many ways in which such impulses or disturbances may be made to coöperate and to cause the receiver to be actuated, and inasmuch as the skill and practical knowledge in these novel fields can only be acquired by long experience the degree of safety and perfection attained will necessarily depend upon the ability and resource of the expert who applies my invention; but in order to enable the same to be successfully practiced by any person possessed only of the more general knowledge and experience in these branches I shall describe the simplest plan of carrying it out which is at present known to me.

For a better understanding of the subject reference is now made to the accompanying drawings, in which—

Figures 1 and 2 represent diagrammatically the apparatus and circuit connections employed at the sending and receiving stations, respectively; and Figs. 3, 4, and 5 modified means which may be employed in the practical application of the invention.

In Fig. 1, S' and S² are two spirally-wound coils or conductors connected with their inner ends to elevated terminals D' and D², respectively, and with their outer ends to an earth-plate E. These two coils, conductors, or systems D' S' E and D² S² E have different and suitably-chosen periods of vibration, and, as pointed out in other patents relating to my system of energy and intelligence transmission, their lengths should be such that the points of maximum pressure developed therein coincide with the elevated terminals D' D². The two systems may have electrical oscillations impressed upon them in any desired manner, conveniently by energizing them through primaries P' and P², placed in proximity to them. Adjustable inductances L' and L² are preferably included in the primary circuits chiefly for the purpose of regulating the rates of the primary oscillations. In the drawings these primaries P' and P² surround the coils S' S² and are joined in series through the inductances L' L², conductor F, condensers C' and C², brush-holders B' and B², and a toothed disk D, which is connected to the conductor F and, if desired, also to the ground-plate E, as shown, two independent primary circuits being thus formed. The condensers C' and C² are of such capacity and the inductances L' and L² are so adjusted that each primary is in close resonance with its secondary system, as I have explained in other patents granted to me. The brush-holders B' and B² are capable independently of angular and, if necessary, also of lateral adjustment, so that any desired order of succession or any difference of time interval between the discharges occurring in the two primary circuits may be obtained. The condensers being energized from a suitable source S, preferably of high potential, and the disk D being rotated, its projections or teeth $p\ p$, coming at periodically-recurring intervals in very close proximity to or, as the case may be, in contact with conducting rods or brushes $n\ n$, cause the condensers to be discharged in rapid succession through their respective circuits. In this matter the two secondary systems D' S' E and D² S² E are set in vibration and oscillate freely, each at its proper rate, for a certain period of time at every discharge. The two vibrations are impressed upon the ground through the plate E and spread to a distance reaching the receiving-station, which has two similar circuits or systems $e\ s'\ d'$ and $e\ s^2\ d^2$ arranged and connected in the same manner and tuned to the systems at the sending-station, so that each responds exclusively to one of the two vibrations produced by the transmitting apparatus. The same rules of adjustment are observed with respect to the receiving-circuits, care being, furthermore, taken that the tuning is effected when all the apparatus is connected to the circuits and placed in position, as any change may more or less modify the vibration. Each of the receiving-coils s' and s^2 is shunted by a local circuit containing, respectively, sensitive devices $a'\ a^2$, batteries $b'\ b^2$, adjustable resistances $r'\ r^2$, and sensitive relays R' R², all joined in series, as shown. The precise connections and arrangements of the various receiving instruments are largely immaterial and may be varied in many ways. The sensitive devices $a'\ a^2$ may be any of the well-known devices of this kind—as, for example, two conducting-terminals separated by a minute air-gap or a thin film of dielectric which is strained or weakened by a battery or other means to the point of breaking down and gives way to the slightest disturbing influence. Its return to the normal sensitive state may be secured by momentarily interrupting the battery-circuit after each operation or otherwise. The relays R' R² have armatures $l'\ l^2$, which are connected by a wire w and when attracted establish electrical contacts at c' and c^2, thus closing a circuit containing a battery b^3, an adjustable resistance r^3, and a relay R³.

From the above description it will be readily seen that the relay R³ will be operated only when both contacts c' and c^2 are closed.

The apparatus at the sending-station may be controlled in any suitable manner—as, for instance, by momentarily closing the circuit of the source S, two different electric vibrations being emitted simultaneously or in

rapid succession, as may be desired, at each closure of the circuit. The two receiving-circuits at the distant station, each tuned to respond to the vibrations produced by one of the elements of the transmitter, affect the sensitive devices a' and a^2 and cause the relays R' and R^2 to be operated and contacts c' and c^2 to be closed, thus actuating the receiver or relay R^3, which in turn establishes a contact c^3 and brings into action a device a^3 by means of a battery d^4, included in a local circuit, as shown; but evidently if through any extraneous disturbance only one of the circuits at the receiving-station is affected the relay R^3 will fail to respond. In this way communication may be carried on with greatly-increased safety against interference and privacy of the messages may be secured. The receiving-station (shown in Fig. 2) is supposed to be one requiring no return message; but if the use of the system is such that this is necessary then the two stations will be similarly equipped and any well-known means, which it is not thought necessary to illustrate here, may be resorted to for enabling the apparatus at each station to be used in turn as transmitter and receiver. In like manner the operation of a receiver, as R^3, may be made dependent, instead of upon two, upon more than two such transmitting systems or circuits, and thus any desired degree of exclusiveness or privacy and safety against extraneous disturbances may be attained. The apparatus as illustrated in Figs. 1 and 2 permits, however, special results to be secured by the adjustment of the order of succession of the discharge of the primary circuits P' and P^2 or of the time interval between such discharges. To illustrate, the action of the relays R' R^2 may be regulated either by adjusting the weights of the levers l' l^2, or the strength of the batteries b' b^2, or the resistances r' r^2, or in other well-known ways, so that when a certain order of succession or time interval between the discharges of the primary circuits P' and P^2 exists at the sending-station the levers l' and l^2 will close the contacts c' and c^2 at the same instant, and thus operate the relay R^3; but it will fail to produce this result when the order of succession of or the time interval between the discharges in the primary circuits is another one. By these or similar means additional safety against disturbances from other sources may be attained and, on the other hand, the possibility afforded of effecting the operation of signaling by varying the order of succession of the discharges of the two circuits. Instead of closing and opening the circuit of the source S, as before indicated, for the purpose of sending distinct signals it may be convenient to merely alter the period of either of the transmitting-circuits arbitrarily, as by varying the inductance of the primaries.

Obviously there is no necessity for using transmitters with two or more distinct elements or circuits, as S' and S^2, since a succession of waves or impulses of different characteristics may be produced by an instrument having but one such circuit. A few of the many ways which will readily suggest themselves to the expert who applies my invention are illustrated in Figs. 3, 4, and 5. In Fig. 3 a transmitting system $e\,s^3\,d^3$ is partly shunted by a rotating wheel or disk D^3, which may be similar to that illustrated in Fig. 1 and which cuts out periodically a portion of the coil or conductor s^3 or, if desired, bridges it by an adjustable condenser C^3, thus altering the vibration of the system $e\,s^3\,d^3$ at suitable intervals and causing two distinct kinds or classes of impulses to be emitted in rapid succession by the sender. In Fig. 4 a similar result is produced in the system $e\,s^4\,d^4$ by periodically short-circuiting, through an induction-coil L^3 and a rotating disk D^4 with insulating and conducting segments, a circuit p^4 in inductive relation to said system. Again, in Fig. 5 three distinct vibrations are caused to be emitted by a system $e\,s^5\,d^5$, this result being produced by inserting periodically a suitable number of turns of an induction-coil L^4 in series with the oscillating system by means of a rotating disk B^5 with two projections p^5 p^5 and three rods or brushes n^5, placed at an angle of one hundred and twenty degrees relatively to each other. The three transmitting systems or circuits thus produced may be energized in the same manner as those of Fig. 1 or in any other convenient way. Corresponding to each of these cases the receiving-station may be provided with two or three circuits in an analogous manner to that illustrated in Fig. 2, it being understood, of course, that the different vibrations or disturbances emitted by the sender follow in such rapid succession upon each other that they are practically simultaneous, so far as the operation of such relays as R' and R^2 is concerned. Evidently, however, it is not necessary to employ two or more receiving-circuits; but a single circuit may be used also at the receiving-station constructed and arranged like the transmitting circuits or systems illustrated in Figs. 3, 4, and 5, in which case the corresponding disks, as D^3 D^4 D^5, at the sending will be driven in synchronism with those at the receiving stations as far as may be necessary to secure the desired result; but whatever the nature of the specific devices employed it will be seen that the fundamental idea in my invention is the operation of a receiver by the conjoint or resultant effect of two or more circuits each tuned to respond exclusively to waves, impulses, or vibrations of a certain kind or class produced either simultaneously or successively by a suitable transmitter.

It will be seen from a consideration of the nature of the method hereinbefore described that the invention is applicable not only in the special manner described, in which the transmission of the impulses is effected through natural media, but for the transmis-

sion of energy for any purpose and whatever the medium through which the impulses are conveyed.

What I claim is—

1. In a system for the transmission of electrical energy, the combination with means for producing two or more distinctive kinds of disturbances or impulses, of receiving-circuits, each tuned to respond to the waves or impulses of one kind only, and a receiving device dependent for operation upon the conjoint action of the several receiving-circuits, as set forth.

2. In a system for the transmission of electrical impulses and the operation or control, of signaling or other apparatus thereby, the combination with a transmitter adapted to produce two or more distinctive kinds or classes of disturbances or impulses, of sensitive receiving-circuits, each tuned to respond to the impulses or disturbances of one kind or class only, and a receiving device dependent for operation upon the conjoint action of the sensitive circuits, as set forth.

3. In a system for the transmission of electrical impulses, and the operation or control of signaling, or other apparatus thereby, the combination with a transmitter adapted to produce two or more distinctive kinds or classes of disturbances or impulses, of sensitive circuits at the receiving point or station, each tuned to respond to the impulses or disturbances of one kind or class only, a local circuit arranged to be completed by the conjoint action of the sensitive circuits and a receiving device connected therewith, as set forth.

4. In a system for the transmission of electrical impulses, and the operation or control of signaling or other apparatus thereby, the combination with a transmitting apparatus adapted to produce two or more distinctive kinds of disturbances or impulses, of means for varying the time intervals of the emission of the impulses of the several kinds, sensitive circuits each tuned to respond to the impulses or disturbances of one kind only, and a receiving apparatus dependent for operation upon the conjoint action of the sensitive circuits, as set forth.

5. In a system, such as herein described, the combination with a transmitter adapted to produce a plurality of distinctive kinds of electrical disturbances or impulses, of a receiving apparatus comprising a plurality of circuits, a sensitive device and a relay included in each circuit, and each said circuit being tuned to respond to the impulses or disturbances of one kind only, and a receiving apparatus in a local circuit controlled by the relays and adapted to be completed by the conjoint action of all of said relays, as set forth.

6. In a system of the kind described, the combination with a transmitter adapted to produce two or more series of electrical oscillations or impulses of different frequencies, of a receiving apparatus comprising a plurality of sensitive circuits each tuned to respond to the impulses of one of the series produced by the transmitter, and a signaling device dependent for its operation upon the conjoint action of said circuits, as set forth.

7. The combination with a plurality of transmitter elements, each adapted to produce a series of impulses or disturbances of a distinctive character, and means for controlling and adjusting the same, of a receiver having a plurality of sensitive circuits each tuned so as to be affected by one of the series of impulses only, and dependent for operation upon the conjoint action of all of said circuits, as set forth.

8. The combination with a transmitter adapted to produce series of electrical impulses or disturbances of distinctive character and in a given order of succession, of a receiving apparatus comprising tuned circuits responding to such impulses in a corresponding order, and dependent for operation upon the conjoint action of said elements, as set forth.

9. In a receiving apparatus, the combination with a plurality of sensitive circuits, severally turned to respond to waves or impulses of a different kind or class, a receiving-circuit controlled by the sensitive circuits and a device connected with the receiving-circuits adapted to be operated when said circuit is completed by the conjoint action of two or more of the sensitive circuits, as set forth.

10. A system for the transmission of electrical energy, having in combination means for producing and transmitting two or more impulses of different periodicities to form a signal in a predetermined order of succession, as set forth.

11. In a system for the transmission of electrical energy, the combination with a transmitting apparatus comprising one or more circuits, means for impressing therein oscillations or impulses of different character and a receiving apparatus comprising a plurality of circuits each tuned to respond to the impulses of one kind produced by the transmitter and a receiver dependent for operation upon the conjoint action of the receiving-circuits, as set forth.

12. In a system for the transmission of electrical energy, the combination with a transmitting apparatus comprising a transformer and means for impressing upon the secondary element of the same oscillations or impulses of different character, of a receiving apparatus comprising a plurality of circuits each tuned to the impulses of one kind emitted by the secondary of the transmitting-transformer, and a receiver dependent for operation upon the conjoint action of the receiving-circuits, as set forth.

13. In a system for the transmission of electrical energy, the combination with a transmitting apparatus comprising a transformer and means for impressing upon the secondary

elements of the same oscillations or impulses of different periodicities and in a given order of succession, of a receiving apparatus comprising a plurality of circuits each tuned to respond to the transmitted impulses of one period, and a receiver dependent for operation upon the conjoint action of the receiving-circuits, as set forth.

14. In a signaling system, the combination of means for generating a series of electrical impulses of different periodicities, receiving-circuits of differing electrical periods of vibration, and an indicating mechanism operated to give an intelligible indication only when currents are induced in the receiving-circuits in a predetermined order, as set forth.

15. In a system for the transmission of energy, the combination of two or more circuits differing with respect of one of their electrical constants, means for energizing said circuits, and an indicating mechanism operative only by conjoint action of two or more currents generated by waves from the sending-station, as set forth.

16. In a system for the transmission of electrical energy, the combination with a transmitter adapted to produce electrical waves or oscillations varying in character in a predetermined order, of a receiving instrument responsive to said oscillations and dependent for operation upon the action thereof in a corresponding order, as set forth.

NIKOLA TESLA.

Witnesses:
JOHN C. KERR,
RICHARD S. DONOVAN.

P-342

No. 725,605. PATENTED APR. 14, 1903.

N. TESLA.

SYSTEM OF SIGNALING.

APPLICATION FILED JULY 16, 1900.

NO MODEL.

Fig.2

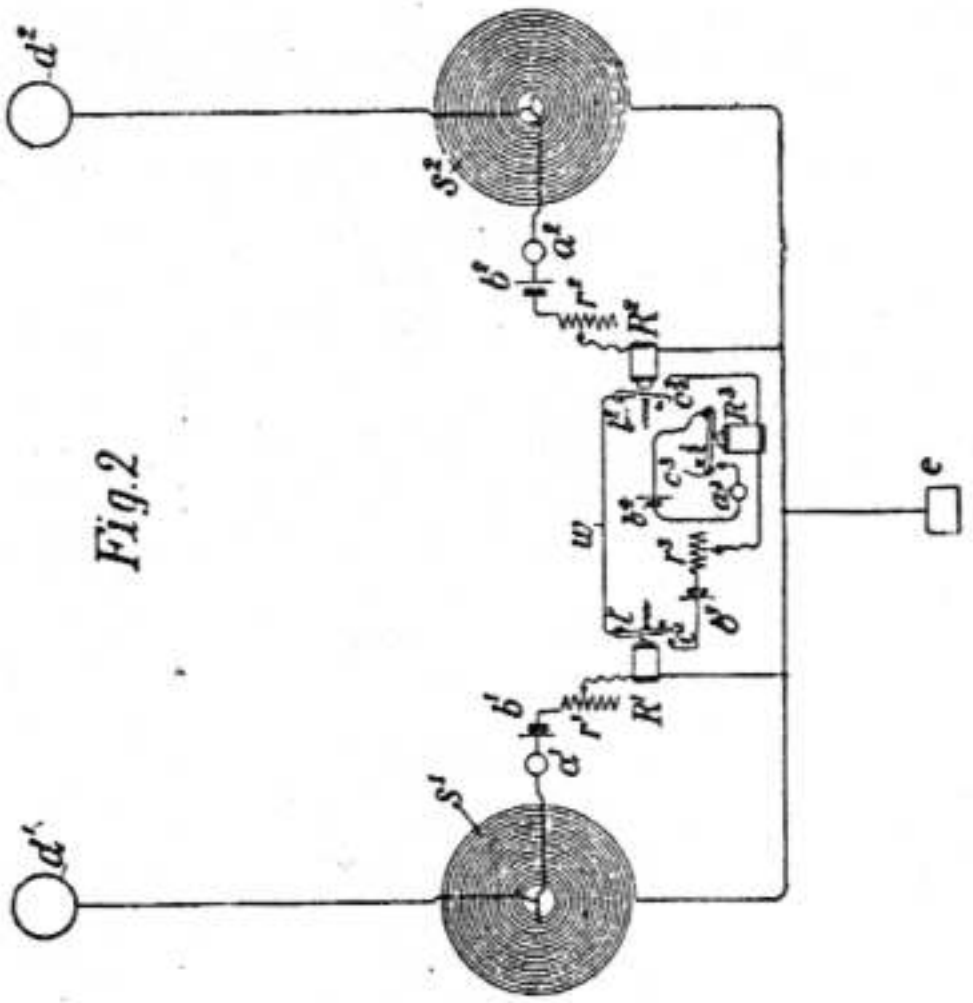

Fig.5

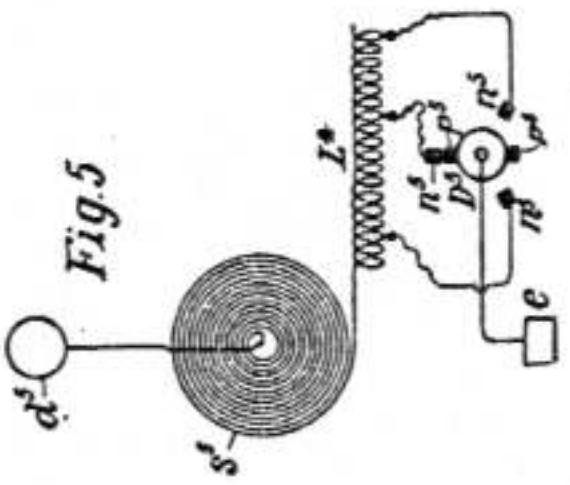

Fig.4

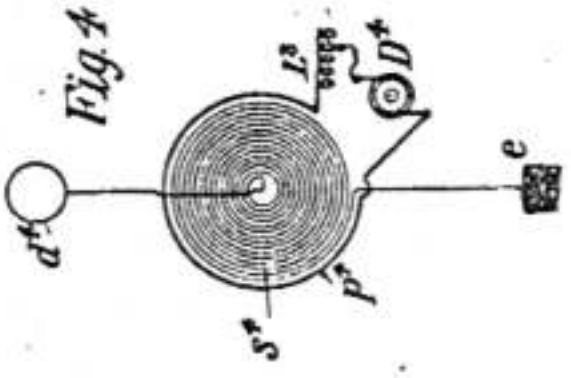

Fig.1

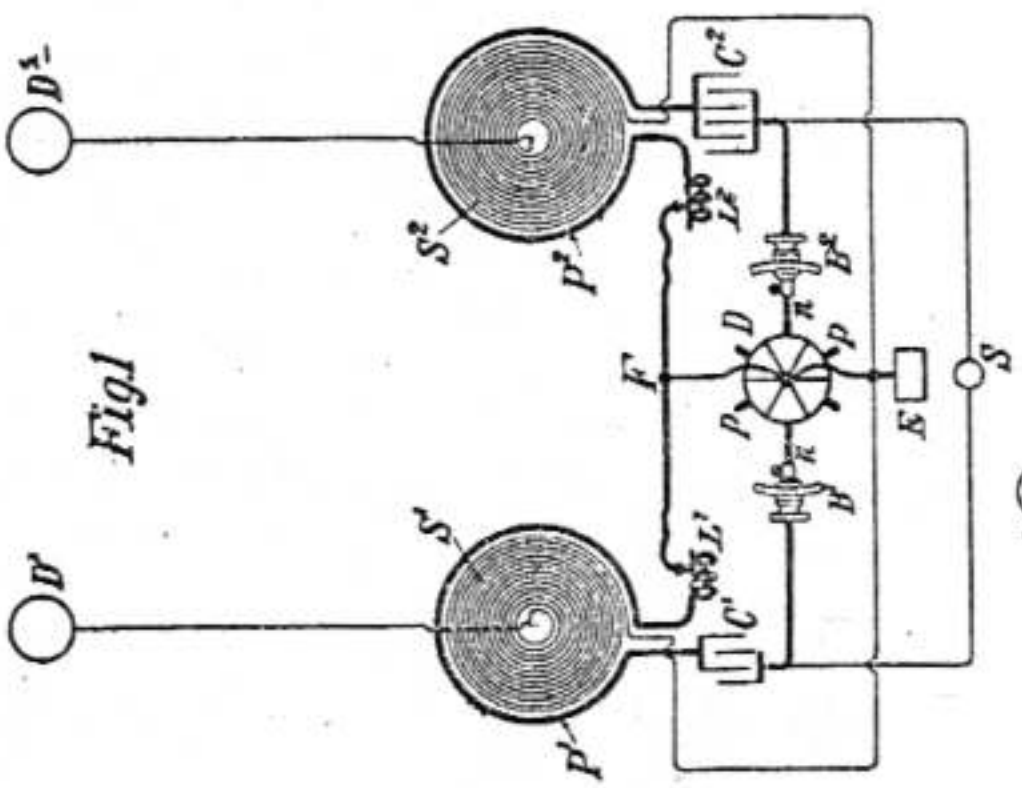

Fig.3

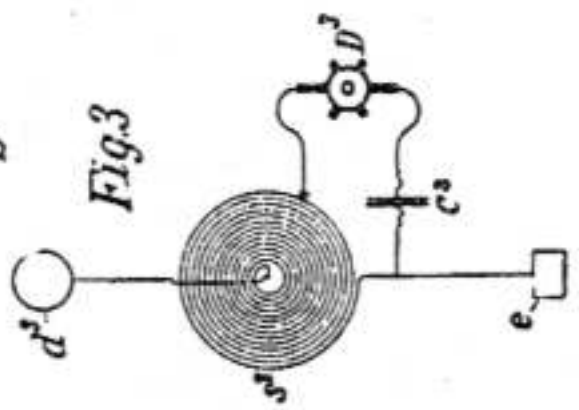

Witnesses:
Raphael Netter
C. D. Morrill

Nikola Tesla, Inventor

by Kerr, Page & Cooper Attys

UNITED STATES PATENT OFFICE.

NIKOLA TESLA, OF NEW YORK, N. Y.

APPARATUS FOR THE UTILIZATION OF RADIANT ENERGY.

SPECIFICATION forming part of Letters Patent No. 685,957, dated November 5, 1901.

Application filed March 21, 1901. Serial No. 52,158. (No model.)

To all whom it may concern:

Be it known that I, NIKOLA TESLA, a citizen of the United States, residing at the borough of Manhattan, in the city, county, and State of New York, have invented certain new and useful Improvements in Apparatus for the Utilization of Radiant Energy, of which the following is a specification, reference being had to the drawings accompanying and forming a part of the same.

It is well known that certain radiations—such as those of ultra-violet light, cathodic, Roentgen rays, or the like—possess the property of charging and discharging conductors of electricity, the discharge being particularly noticeable when the conductor upon which the rays impinge is negatively electrified. These radiations are generally considered to be ether vibrations of extremely small wave lengths, and in explanation of the phenomena noted it has been assumed by some authorities that they ionize or render conducting the atmosphere through which they are propagated. My own experiments and observations, however, lead me to conclusions more in accord with the theory heretofore advanced by me that sources of such radiant energy throw off with great velocity minute particles of matter which are strongly electrified, and therefore capable of charging an electrical conductor, or, even if not so, may at any rate discharge an electrified conductor either by carrying off bodily its charge or otherwise.

My present application is based upon a discovery which I have made that when rays or radiations of the above kind are permitted to fall upon an insulated conducting-body connected to one of the terminals of a condenser while the other terminal of the same is made by independent means to receive or to carry away electricity a current flows into the condenser so long as the insulated body is exposed to the rays, and under the conditions hereinafter specified an indefinite accumulation of electrical energy in the condenser takes place. This energy after a suitable time interval, during which the rays are allowed to act, may manifest itself in a powerful discharge, which may be utilized for the operation or control of mechanical or electrical devices or rendered useful in many other ways.

In applying my discovery I provide a condenser, preferably of considerable electrostatic capacity, and connect one of its terminals to an insulated metal plate or other conducting-body exposed to the rays or streams of radiant matter. It is very important, particularly in view of the fact that electrical energy is generally supplied at a very slow rate to the condenser, to construct the same with the greatest care. I use, by preference, the best quality of mica as dielectric, taking every possible precaution in insulating the armatures, so that the instrument may withstand great electrical pressures without leaking and may leave no perceptible electrification when discharging instantaneously. In practice I have found that the best results are obtained with condensers treated in the manner described in a patent granted to me February 23, 1897, No. 577,671. Obviously the above precautions should be the more rigorously observed the slower the rate of charging and the smaller the time interval during which the energy is allowed to accumulate in the condenser. The insulated plate or conducting-body should present as large a surface as practicable to the rays or streams of matter, I having ascertained that the amount of energy conveyed to it per unit of time is under otherwise identical conditions proportionate to the area exposed, or nearly so. Furthermore, the surface should be clean and preferably highly polished or amalgamated. The second terminal or armature of the condenser may be connected to one of the poles of a battery or other source of electricity or to any conducting body or object whatever of such properties or so conditioned that by its means electricity of the required sign will be supplied to the terminal. A simple way of supplying positive or negative electricity to the terminal is to connect the same either to an insulated conductor supported at some height in the atmosphere or to a grounded conductor, the former, as is well known, furnishing positive and the latter negative electricity. As the rays or supposed streams of mat-

ter generally convey a positive charge to the first condenser-terminal, which is connected to the plate or conductor above mentioned, I usually connect the second terminal of the condenser to the ground, this being the most convenient way of obtaining negative electricity, dispensing with the necessity of providing an artificial source. In order to utilize for any useful purpose the energy accumulated in the condenser, I furthermore connect to the terminals of the same a circuit including an instrument or apparatus which it is desired to operate and another instrument or device for alternately closing and opening the circuit. This latter may be any form of circuit-controller, with fixed or movable parts or electrodes, which may be actuated either by the stored energy or by independent means.

My discovery will be more fully understood from the following description and annexed drawings, to which reference is now made, and in which—

Figure 1 is a diagram showing the general arrangement of apparatus as usually employed. Fig. 2 is a similar diagram illustrating more in detail typical forms of the devices or elements used in practice, and Figs. 3 and 4 are diagrammatical representations of modified arrangements suitable for special purposes.

As illustrative of the manner in which the several parts or elements of the apparatus in one of its simplest forms are to be arranged and connected for useful operation, reference is made to Fig. 1, in which C is the condenser, P the insulated plate or conducting-body which is exposed to the rays, and P' another plate or conductor which is grounded, all being joined in series, as shown. The terminals T T' of the condenser are also connected to a circuit which includes a device R to be operated and a circuit-controlling device *d* of the character above referred to.

The apparatus being arranged as shown, it will be found that when the radiations of the sun or of any other source capable of producing the effects before described fall upon the plate P an accumulation of electrical energy in the condenser C will result. This phenomenon, I believe, is best explained as follows: The sun, as well as other sources of radiant energy, throws off minute particles of matter positively electrified, which, impinging upon the plate P, communicate continuously an electrical charge to the same. The opposite terminal of the condenser being connected to the ground, which may be considered as a vast reservoir of negative electricity, a feeble current flows continuously into the condenser, and inasmuch as these supposed particles are of an inconceivably small radius or curvature, and consequently charged to a relatively very high potential, this charging of the condenser may continue, as I have actually observed, almost indefinitely, even to the point of rupturing the dielectric. If the device *d* be of such character that it will operate to close the circuit in which it is included when the potential in the condenser has reached a certain magnitude, the accumulated charge will pass through the circuit, which also includes the receiver R, and operate the latter.

In illustration of a particular form of apparatus which may be used in carrying out my discovery I now refer to Fig. 2. In this figure, which in the general arrangement of the elements is identical to Fig. 1, the device *d* is shown as composed of two very thin conducting-plates *t t'*, placed in close proximity and very mobile, either by reason of extreme flexibility or owing to the character of their support. To improve their action, they should be inclosed in a receptacle, from which the air may be exhausted. The plates *t t'* are connected in series with a working circuit, including a suitable receiver, which in this case is shown as consisting of an electromagnet M, a movable armature *a*, a retractile spring *b*, and a ratchet-wheel *w*, provided with a spring-pawl *r*, which is pivoted to armature *a*, as illustrated. When the radiations of the sun or other radiant source fall upon plate P, a current flows into the condenser, as above explained, until the potential therein rises sufficiently to attract and bring into contact the two plates *t t'*, and thereby close the circuit connected to the two condenser-terminals. This permits a flow of current which energizes the magnet M, causing it to draw down the armature *a* and impart a partial rotation to the ratchet-wheel *w*. As the current ceases the armature is retracted by the spring *b*, without, however, moving the wheel *w*. With the stoppage of the current the plates *t t'* cease to be attracted and separate, thus restoring the circuit to its original condition.

Fig. 3 shows a modified form of apparatus used in connection with an artificial source of radiant energy, which in this instance may be an arc emitting copiously ultra-violet rays. A suitable reflector may be provided for concentrating and directing the radiations. A magnet R and circuit-controller *d* are arranged as in the previous figures; but in the present case the former instead of performing itself the whole work only serves the purpose of alternately opening and closing a local circuit, containing a source of current B and a receiving or translating device D. The controller *d*, if desired, may consist of two fixed electrodes separated by a minute air-gap or weak dielectric film, which breaks down more or less suddenly when a definite difference of potential is reached at the terminals of the condenser and returns to its original state upon the passage of the discharge.

Still another modification is shown in Fig. 4, in which the source S of radiant energy is a special form of Roentgen tube devised by

me, having but one terminal *k*, generally of aluminium, in the form of half a sphere, with a plain polished surface on the front side, from which the streams are thrown off. It may be excited by attaching it to one of the terminals of any generator of sufficiently high electromotive force; but whatever apparatus be used it is important that the tube be exhausted to a high degree, as otherwise it might prove entirely ineffective. The working or discharge circuit connected to the terminals T T of the condenser includes in this case the primary *p* of a transformer and a circuit-controller comprising a fixed terminal or brush *t* and a movable terminal *t'* in the shape of a wheel, with conducting and insulating segments, which may be rotated at an arbitrary speed by any suitable means. In inductive relation to the primary wire or coil *p* is a secondary *s*, usually of a much greater number of turns, to the ends of which is connected a receiver R. The terminals of the condenser being connected, as indicated, one to an insulated plate P and the other to a grounded plate P', when the tube S is excited rays or streams of matter are emitted from the same, which convey a positive charge to the plate P and condenser-terminal T, while terminal T' is continuously receiving negative electricity from the plate P'. This, as before explained results in an accumulation of electrical energy in the condenser, which goes on as long as the circuit including the primary *p* is interrupted. Whenever the circuit is closed owing to the rotation of the terminal *t'*, the stored energy is discharged through the primary *p*, this giving rise in the secondary *s* to induced currents, which operate the receiver R.

It is clear from what has been stated above that if the terminal T' is connected to a plate supplying positive instead of negative electricity the rays should convey negative electricity to plate P. The source S may be any form of Roentgen or Lenard tube; but it is obvious from the theory of action that in order to be very effective the electrical impulses exciting it should be wholly or at least preponderatingly of one sign. If ordinary symmetrical alternating currents are employed, provision should be made for allowing the rays to fall upon the plate P only during those periods when they are productive of the desired result. Evidently if the radiations of the source be stopped or intercepted or their intensity varied in any manner, as by periodically interrupting or rythmically varying the current exciting the source, there will be corresponding changes in the action upon the receiver R, and thus signals may be transmitted and many other useful effects produced. Furthermore, it will be understood that any form of circuit-closer which will respond to or be set in operation when a predetermined amount of energy is stored in the condenser may be used in lieu of the device specifically described with reference to Fig. 2 and also that the special details of construction and arrangement of the several parts of the apparatus may be very greatly varied without departure from the invention.

Having described my invention, what I claim is—

1. An apparatus for utilizing radiant energy, comprising in combination a condenser, one armature of which is subjected to the action of rays or radiations, independent means for charging the other armature, a circuit and apparatus therein adapted to be operated or controlled by the discharge of the condenser, as set forth.

2. An apparatus for utilizing radiant energy, comprising in combination, a condenser, one armature of which is subjected to the action of rays or radiations, independent means for charging the other armature, a local circuit connected with the condenser-terminals, a circuit-controller therein and means adapted to be operated or controlled by the discharge of the condenser when the local circuit is closed, as set forth.

3. An apparatus for utilizing radiant energy, comprising in combination, a condenser, one terminal of which is subjected to the action of rays or radiations, independent means for charging the other armature, a local circuit connected with the condenser-terminals, a circuit-controller therein dependent for operation on a given rise of potential in the condenser, and devices operated by the discharge of the condenser when the local circuit is closed, as set forth.

4. An apparatus for utilizing radiant energy, comprising in combination, a condenser, one terminal of which is subjected to the action of rays or radiations, and the other of which is connected with the ground, a circuit and apparatus therein adapted to be operated by the discharge of the accumulated energy in the condenser, as set forth.

5. An apparatus for utilizing radiant energy, comprising in combination, a condenser, one terminal of which is subjected to the action of rays or radiations and the other of which is connected with the ground, a local circuit connected with the condenser-terminals, a circuit-controller therein and means adapted to be operated by the discharge of the condenser when the local circuit is closed, as set forth.

6. An apparatus for utilizing radiant energy, comprising in combination, a condenser, one terminal of which is subjected to the action of rays or radiations and the other of which is connected with the ground, a local circuit connected with the condenser-terminals, a circuit-controller therein adapted to be operated by a given rise of potential in the condenser, and devices operated by the discharge of the condenser when the local circuit is closed, as set forth.

7. An apparatus for utilizing radiant en-

ergy, comprising a condenser, having one terminal connected to earth and the other to an elevated conducting-plate, which is adapted to receive the rays from a distant source of radiant energy, a local circuit connected with the condenser-terminals, a receiver therein, and a circuit-controller therefor which is adapted to be operated by a given rise of potential in the condenser, as set forth.

NIKOLA TESLA.

Witnesses:
M. LAWSON DYER,
RICHARD DONOVAN

No. 685,957 Patented Nov. 5, 1901.

N. TESLA.

APPARATUS FOR THE UTILIZATION OF RADIANT ENERGY.

(Application filed Mar. 21, 1901.)

(No Model.)

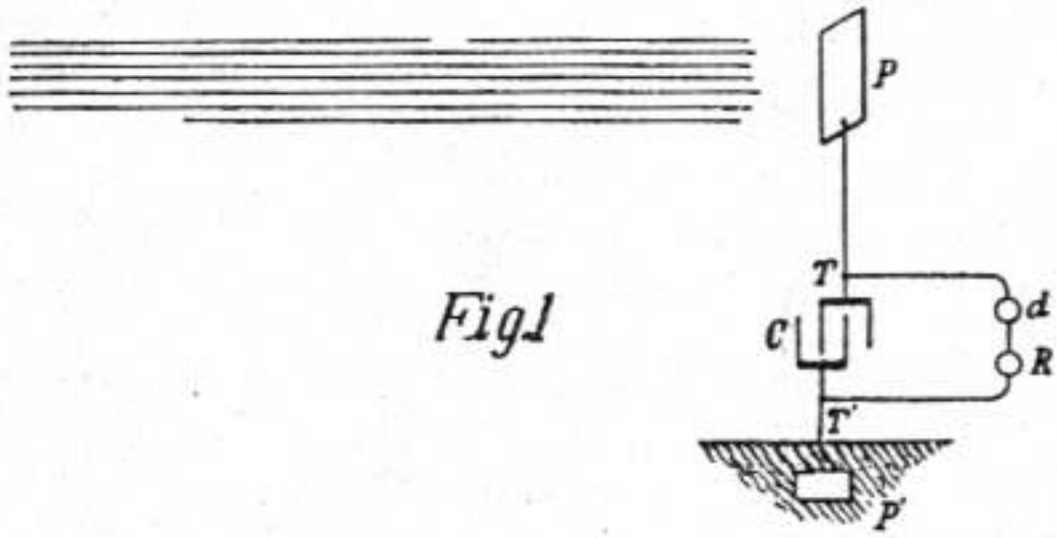

Fig.1

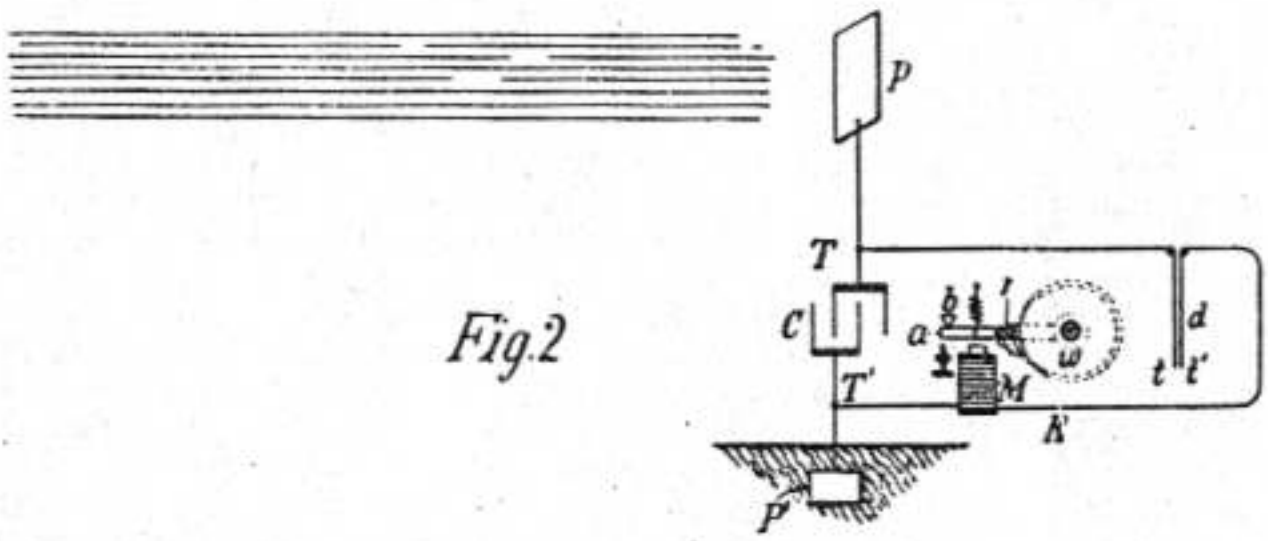

Fig.2

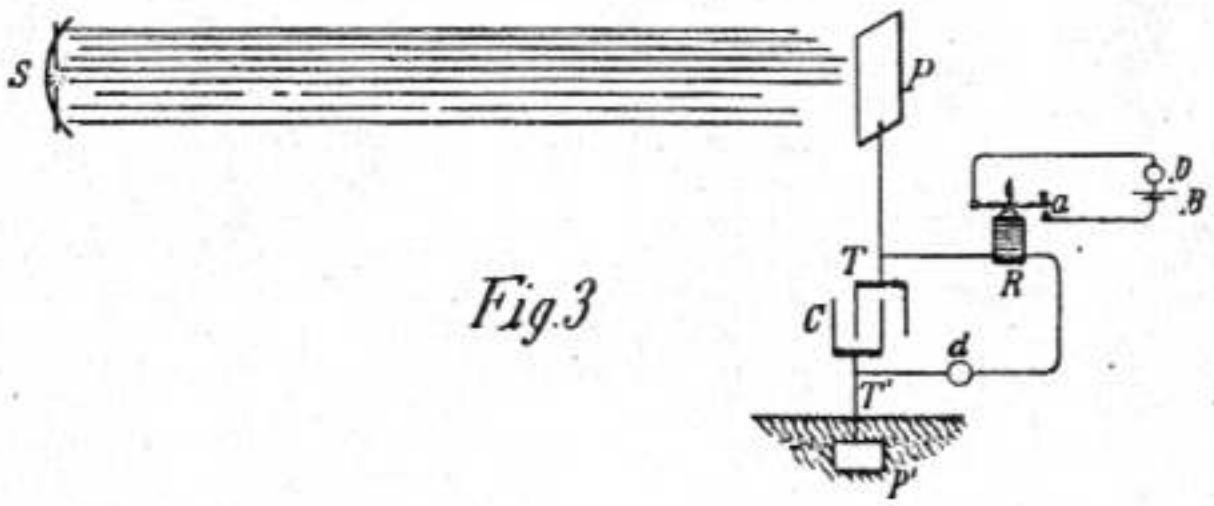

Fig.3

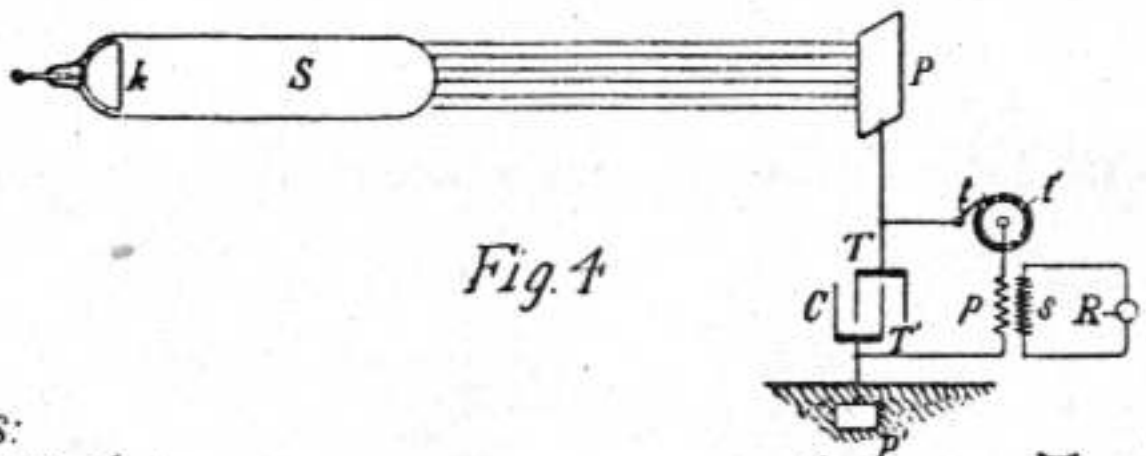

Fig.4

Witnesses:
Raphaël Netter
M. Lawson Dyer.

Inventor
Nikola Tesla
by Ken. Page & Cooper Attys.

UNITED STATES PATENT OFFICE.

NIKOLA TESLA, OF NEW YORK, N. Y.

METHOD OF UTILIZING RADIANT ENERGY.

SPECIFICATION forming part of Letters Patent No. 685,958, dated November 5, 1901.

Application filed March 21, 1901. Serial No. 52,154. (No model.)

To all whom it may concern:

Be it known that I, NIKOLA TESLA, a citizen of the United States, residing at the borough of Manhattan, in the city, county, and State of New York, have invented certain new and useful Improvements in Methods of Utilizing Radiant Energy, of which the following is a specification, reference being had to the drawings accompanying and forming a part of the same.

It is well known that certain radiations—such as those of ultra-violet light, cathodic, Roentgen rays, or the like—possess the property of charging and discharging conductors of electricity, the discharge being particularly noticeable when the conductor upon which the rays impinge is negatively electrified. These radiations are generally considered to be ether vibrations of extremely small wave lengths, and in explanation of the phenomena noted it has been assumed by some authorities that they ionize or render conducting the atmosphere through which they are propagated. My own experiments and observations, however, lead me to conclusions more in accord with the theory heretofore advanced by me that sources of such radiant energy throw off with great velocity minute particles of matter which are strongly electrified, and therefore capable of charging an electrical conductor, or even if not so may at any rate discharge an electrified conductor either by carrying off bodily its charge or otherwise.

My present application is based upon a discovery which I have made that when rays or radiations of the above kind are permitted to fall upon an insulated conducting body connected to one of the terminals of a condenser, while the other terminal of the same is made by independent means to receive or to carry away electricity, a current flows into the condenser so long as the insulated body is exposed to the rays, and under the conditions hereinafter specified an indefinite accumulation of electrical energy in the condenser takes place. This energy after a suitable time interval, during which the rays are allowed to act, may manifest itself in a powerful discharge, which may be utilized for the operation or control of mechanical or electrical devices or rendered useful in many other ways.

In applying my discovery I provide a condenser, preferably of considerable electrostatic capacity, and connect one of its terminals to an insulated metal plate or other conducting body exposed to the rays or streams of radiant matter. It is very important, particularly in view of the fact that electrical energy is generally supplied at a very slow rate to the condenser, to construct the same with the greatest care. I use by preference the best quality of mica as dielectric, taking every possible precaution in insulating the armatures, so that the instrument may withstand great electrical pressures without leaking and may leave no perceptible electrification when discharging instantaneously. In practice I have found that the best results are obtained with condensers treated in the manner described in a patent granted to me February 23, 1897, No. 577,671. Obviously the above precautions should be the more rigorously observed the slower the rate of charging and the smaller the time interval during which the energy is allowed to accumulate in the condenser. The insulated plate or conducting body should present as large a surface as practicable to the rays or streams of matter, I having ascertained that the amount of energy conveyed to it per unit of time is under otherwise identical conditions proportionate to the area exposed, or nearly so. Furthermore, the surface should be clean and preferably highly polished or amalgamated. The second terminal or armature of the condenser may be connected to one of the poles of a battery or other source of electricity or to any conducting body or object whatever of such properties or so conditioned that by its means electricity of the required sign will be supplied to the terminal. A simple way of supplying positive or negative electricity to the terminal is to connect the same either to an insulated conductor, supported at some height in the atmosphere, or to a grounded conductor, the former, as is well known, furnishing positive and the latter negative electricity. As the rays or supposed streams of matter generally convey a positive charge to the first condenser-terminal, which is connect-

ed to the plate or conductor above mentioned, I usually connect the second terminal of the condenser to the ground, this being the most convenient way of obtaining negative electricity, dispensing with the necessity of providing an artificial source. In order to utilize for any useful purpose the energy accumulated in the condenser, I furthermore connect to the terminals of the same a circuit including an instrument or apparatus which it is desired to operate and another instrument or device for alternately closing and opening the circuit. This latter may be any form of circuit-controller, with fixed or movable parts or electrodes, which may be actuated either by the stored energy or by independent means.

The rays or radiations which are to be utilized for the operation of the apparatus above described in general terms may be derived from a natural source, as the sun, or may be artificially produced by such means, for example, as an arc-lamp, a Roentgen tube, and the like, and they may be employed for a great variety of useful purposes.

My discovery will be more fully understood from the following detailed description and annexed drawings, to which reference is now made, and in which—

Figure 1 is a diagram showing typical forms of the devices or elements as arranged and connected in applying the method for the operation of a mechanical contrivance or instrument solely by the energy stored; and Fig. 2 is a diagrammatical representation of a modified arrangement suitable for special purposes, with a circuit-controller actuated by independent means.

Referring to Fig. 1, C is the condenser, P the insulated plate or conducting body, which is exposed to the rays, and P' another plate or conductor, all being joined in series, as shown. The terminals T T' of the condenser are also connected to a circuit including a receiver R, which is to be operated, and a circuit-controlling device *d*, which in this case is composed of two very thin conducting-plates *t t'*, placed in close proximity and very mobile, either by reason of extreme flexibility or owing to the charater of their support. To improve their action, they should be inclosed in a receptacle from which the air may be exhausted. The receiver R is shown as consisting of an electromagnet M, a movable armature *a*, a retractile spring *b*, and a ratchet-wheel *w*, provided with a spring-pawl *r*, which is pivoted to armature *a*, as illustrated. The apparatus being arranged as shown, it will be found that when the radiations of the sun or of any other source capable of producing the effects before described fall upon the plate P an accumulation of electrical energy in the condenser C will result. This phenomenon, I believe, is best explained as follows: The sun as well as other sources of radiant energy throw off minute particles of matter positively electrified, which, impinging upon the plate P, communicate an electrical charge to the same. The opposite terminal of the condenser being connected to the ground, which may be considered as a vast reservoir of negative electricity, a feeble current flows continuously into the condenser, and inasmuch as these supposed particles are of an inconceivably small radius or curvature, and consequently charged to a relatively very high poteutial, this charging of the condenser may continue, as I have found in practice, almost indefinitely, even to the point of rupturing the dielectric. Obviously whatever circuit-controller be employed it should operate to close the circuit in which it is included when the potential in the condenser has reached the desired magnitude. Thus in Fig. 2 when the electrical pressure at the terminals T T' rises to a certain predetermined value the plates *t t'*, attracting each other, close the circuit connected to the terminals. This permits a flow of current which energizes the magnet M, causing it to draw down the armature *a* and impart a partial rotation to the ratchet-wheel *w*. As the current ceases the armature is retracted by the spring *b* without, however, moving the wheel *w*. With the stoppage of the current the plates *t t'* cease to be attracted and separate, thus restoring the circuit to its original condition.

Many useful applications of this method of utilizing the radiations emanating from the sun or other source and many ways of carrying out the same will at once suggest themselves from the above description. By way of illustration a modified arrangement is shown in Fig. 2, in which the source S of radiant energy is a special form of Roentgen tube devised by me having but one terminal *k*, generally of aluminium, in the form of half a sphere with a plain polished surface on the front side, from which the streams are thrown off. It may be excited by attaching it to one of the terminals of any generator of sufficiently-high electromotive force; but whatever apparatus be used it is important that the tube be exhausted to a high degree, as otherwise it might prove entirely ineffective. The working or discharge circuit connected to the terminals T T' of the condenser includes in this case the primary *p* of a transformer and a circuit-controller comprising a fixed terminal or brush *t* and a movable terminal *t'* in the shape of a wheel with conducting and insulating segments which may be rotated at an arbitrary speed by any suitable means. In inductive relation to the primary wire or coil *p* is a secondary *s*, usually of a much greater number of turns, to the ends of which is connected a receiver R. The terminals of the condenser being connected as indicated, one to an insulated plate P and the other to a grounded plate P', when the tube S is excited rays or streams of matter are emitted from the same, which convey a positive charge to the plate P and condenser-terminal T, while terminal T' is continuously receiving negative electricity from the plate

P'. This, as before explained, results in an accumulation of electrical energy in the condenser, which goes on as long as the circuit including the primary *p* is interrupted. Whenever the circuit is closed, owing to the rotation of the terminal *t'*, the stored energy is discharged through the primary *p*, this giving rise in the secondary *s* to induced currents which operate the receiver R.

It is clear from what has been stated above that if the terminal T is connected to a plate supplying positive instead of negative electricity the rays should convey negative electricity to plate P. The source S may be any form of Roentgen or Lenard tube; but it is obvious from the theory of action that in order to be very effective the electrical impulses exciting it should be wholly or at least preponderatingly of one sign. If ordinary symmetrical alternating currents are employed, provision should be made for allowing the rays to fall upon the plate P only during those periods when they are productive of the desired result. Evidently if the radiations of the source be stopped or intercepted or their intensity varied in any manner, as by periodically interrupting or rythmically varying the current exciting the source, there will be corresponding changes in the action upon the receiver R, and thus signals may be transmitted and many other useful effects produced. Furthermore, it will be understood that any form of circuit-closer which will respond to or be set in operation when a predetermined amount of energy is stored in the condenser may be used in lieu of the device specifically described with reference to Fig. 1, and also that the special details of construction and arrangement of the several parts of the apparatus may be very greatly varied without departure from the invention.

Having described my invention, what I claim is—

1. The method of utilizing radiant energy, which consists in charging one of the armatures of a condenser by rays or radiations, and the other armature by independent means, and discharging the condenser through a suitable receiver, as set forth.

2. The method of utilizing radiant energy, which consists in simultaneously charging a condenser by means of rays or radiations and an independent source of electrical energy, and discharging the condenser through a suitable receiver, as set forth.

3. The method of utilizing radiant energy, which consists in charging one of the armatures of a condenser by rays or radiations, and the other by independent means, controlling the action or effect of said rays or radiations and discharging the condenser through a suitable receiver, as set forth.

4. The method of utilizing radiant energy, which consists in charging one of the armatures of a condenser by rays or radiations and the other by independent means, varying the intensity of the said rays or radiations and periodically discharging the condenser through a suitable receiver, as set forth.

5. The method of utilizing radiant energy, which consists in directing upon an elevated conductor, connected to one of the armatures of a condenser, rays or radiations capable of positively electrifying the same, carrying off electricity from the other armature by connecting the same with the ground, and discharging the accumulated energy through a suitable receiver, as set forth.

6. The method of utilizing radiant energy, which consists in charging one of the armatures of a condenser by rays or radiations, and the other by independent means, and effecting by the automatic discharge of the accumulated energy the operation or control of a suitable receiver, as set forth.

NIKOLA TESLA.

Witnesses:
M. LAWSON DYER,
RICHARD DONOVAN.

P-351

No. 685,958. Patented Nov. 5, 1901.

N. TESLA.

METHOD OF UTILIZING RADIANT ENERGY.

(Application filed Mar. 21, 1901.)

(No Model.)

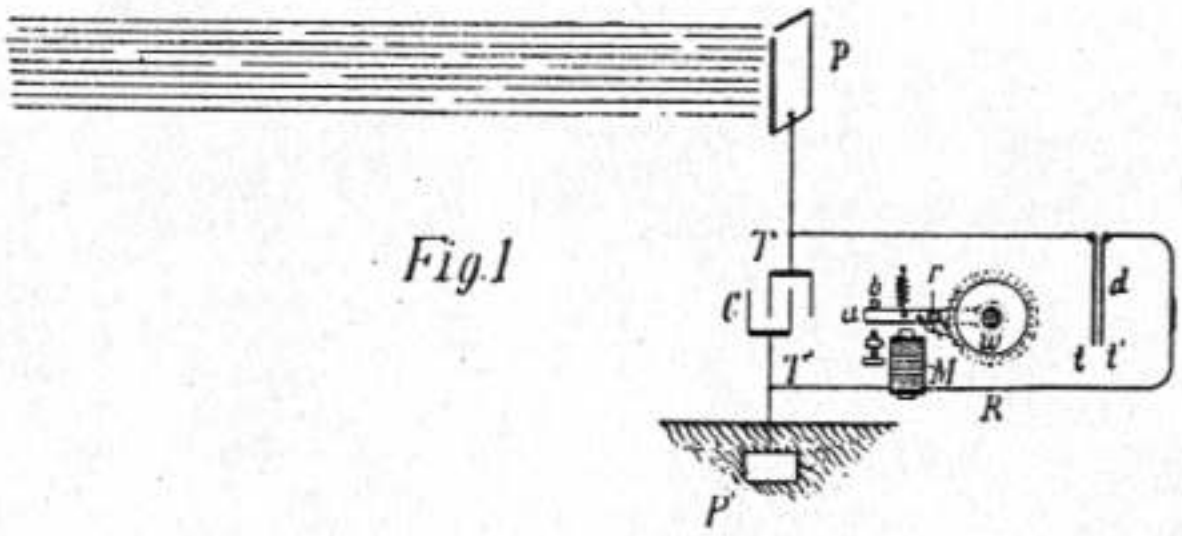

Fig.1

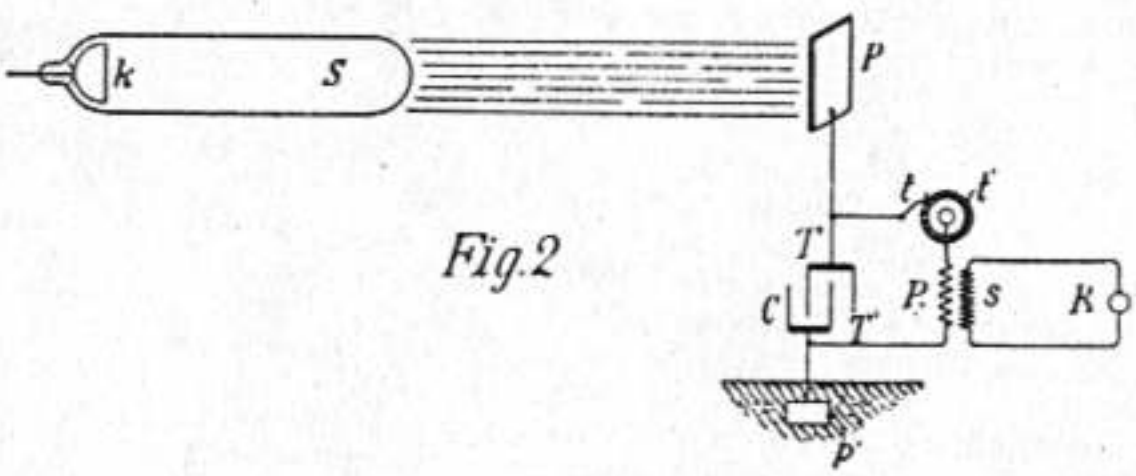

Fig.2

Witnesses:
Raphael Netter
M. Lamson Byrn

Nikola Tesla, Inventor
by Kerr, Page & Cooper
AB

UNITED STATES PATENT OFFICE.

NIKOLA TESLA, OF NEW YORK, N. Y.

METHOD OF SIGNALING.

SPECIFICATION forming part of Letters Patent No. 723,188, dated March 17, 1903

Original application filed July 16, 1900, Serial No. 23,847. Divided and this application filed June 14, 1901. Serial No. 64,522. (No model.)

To all whom it may concern:

Be it known that I, NIKOLA TESLA, a citizen of the United States, residing in the borough of Manhattan, in the city, county, and State of New York, have invented certain new and useful Improvements in Methods of Signaling, of which the following is a specification, reference being had to the drawings accompanying and forming a part of the same.

In certain systems for transmitting intelligible messages or governing the movements and operations of distant automata electrical impulses or disturbances produced by suitable apparatus are conveyed through the natural media to a receiving-circuit capable of responding to the impulses, and thereby effecting the control of other appliances. Generally a special device, highly sensitive, is connected to the receiving-circuit, which in order to render it still more susceptible and to reduce the liability of its being affected by extraneous disturbances is carefully adjusted so as to be in tune with the transmitter. By a scientific design of the sending and receiving circuits and other apparatus and skilful adjustment of the same these objects may be in a measure attained; but in long experience I have found that notwithstanding all constructive advantages and experimental resources this method is in many cases inadequate. Thus while I have succeeded in so operating selectively under certain favorable conditions more than one hundred receivers in most cases it is practicable to work successfully but a few, the number rapidly diminishing as, either owing to great distance or other causes, the energy available in the tuned circuits becomes smaller and the receivers necessarily more delicate. Evidently a circuit however well constructed and adjusted to respond exclusively to vibrations of one period is apt to be affected by higher harmonics and still more so by lower ones. When the oscillations are of a very high frequency, the number of the effective harmonics may be large and the receiver consequently easily disturbed by extraneous influences to such an extent that when very short waves, such as those produced by Hertzian spark apparatus, are used little advantage in this respect is to be derived from tuning the circuits. It being an imperative requirement in most practical applications of such systems of signaling or intelligence transmission that the signals or messages should be exclusive or private, it is highly desirable to do away with the above limitations, especially in view of the fact which I have observed that the influence of powerful electrical disturbances upon sensitive receivers extends even on land to distances of many hundreds of miles, and consequently, in accordance with theory still farther on sea. To overcome these drawbacks and to enable a great number of transmitting and receiving stations to be operated selectively and exclusively and without any danger of the signals or messages being disturbed, intercepted, or interfered with in any way is the object of my present invention.

Broadly stated, this invention consists in generating two or more kinds or classes of disturbances or impulses of distinctive character with respect to their effect upon a receiving-circuit and operating thereby a distant receiver which comprises two or more circuits, each of which is tuned to respond exclusively to the disturbances or impulses of one kind or class and so arranged that the operation of the receiver is dependent upon their conjoint or resultant action.

By employing only two kinds of disturbances or series of impulses instead of one, as has heretofore been done, to operate a receiver of this kind I have found that safety against the disturbing influences of other sources is increased to such an extent that I believe this number to be amply sufficient in most cases for rendering the exchange of signals or messages reliable and exclusive; but in exceptional instances a greater number may be used and a degree of safety against mutual and extraneous interference attained, such as is comparable to that afforded by a combination-lock. The liability of a receiver being affected by disturbances emanating from other sources, as well as that of the signals or messages being received by instruments for which they are not intended, may however, be reduced not only by an increased number of the cooperative disturbances or

series of impulses, but also by judicious choice of the same and order in which they are made to act upon the receiver.

Evidently there are a great many ways of generating impulses or disturbances at any wave length, wave form, number or order of succession, or of any special character, such as will be capable of fulfilling the requirements above stated, and there are also many ways in which such impulses or disturbances may be made to coöperate and to cause the receiver to be actuated, and inasmuch as the skill and practical knowledge in these novel fields can only be acquired by long experience the degree of safety and perfection attained will necessarily depend upon the ability and resource of the expert who applies my invention; but in order to enable the same to be successfully practiced by any person possessed only of the more general knowledge and experience in these branches I shall describe the simplest plan of carrying it out which is at present known to me.

For a better understanding of the subject reference is now made to the accompanying drawings, in which—

Figures 1 and 2 represent diagrammatically an apparatus and circuit connections employed at the sending and receiving stations, respectively, for the practice of my invention; and Figs. 3, 4, and 5, modified means which may be employed in the practical application of the invention.

In Fig. 1, S' S^2 are two spirally-wound coils or conductors connected with their inner ends to preferably elevated terminals D' and D^2, respectively, and with their outer ends to an earth-plate E. These two coils, conductors, or systems D' S' E and D^2 S^2 E have different and suitably-chosen periods of vibration, and, as pointed out in other patents relating to my system of energy and intelligence transmission, their lengths should be such that the points of maximum pressure developed therein coincide with the elevated terminals D' D^2. By suitably-chosen periods of vibration such periods are meant as will secure the greatest safety against interference, both mutual and extraneous. The two systems may have electrical oscillations impressed upon them in any desired manner conveniently by energizing them through primaries P' and P^2, placed in proximity to them. Adjustable inductances L' and L^2 are preferably included in the primary circuits chiefly for the purpose of regulating the rates of the primary oscillations. In the drawings these primaries P' and P^2 surround the coils S' S^2 and are joined in series through the inductances L' L^2, conductor F, condensers C' and C^2, brush-holders B' and B^2, and a toothed disk D, which is connected to the conductor F and, if desired, also to the ground-plate E, as shown, two independent primary circuits being thus formed. The condensers C' and C^2 are of such capacity and the inductances L' L^2 are so adjusted that each primary is in close resonance with its secondary system, as I have explained in other patents granted to me. The brush-holders B' and B^2 are capable independently of angular and, if necessary, also of lateral adjustment, so that any desired order of succession or any difference of time interval between the discharges occurring in the two primary circuits may be obtained. The condensers being energized from a suitable source S, preferably of high potential, and the disk D being rotated, its projections or teeth p p coming at periodically-recurring intervals in very close proximity to or, as the case may be, in contact with conducting rods or brushes n n cause the condensers to be discharged in rapid succession through their respective circuits. In this manner the two secondary systems D' S' E and D^2 S^2 E are set in vibration and oscillate freely each at its proper rate for a certain period of time at every discharge. The two vibrations are impressed upon the ground through the plate E and spread to a distance reaching the receiving-station, which has two similar circuits or systems e s' d' and e s^2 d^2, arranged and connected in the same manner and tuned to the systems at the sending-station, so that each responds exclusively to one of the two vibrations produced by the transmitting apparatus. The same rules of adjustment are observed with respect to the receiving-circuits, care being furthermore taken that the tuning is effected when all the apparatus is connected to the circuits and placed in position, as any change may more or less modify the vibration. Each of the receiving-coils s' and s^2 is shunted by a local circuit containing, respectively, sensitive devices a' a^2, batteries b' b^2, adjustable resistances r' r^2, and sensitive relays R' R^2, all joined in series, as shown. The precise connections and arrangements of the various receiving instruments are largely immaterial and may be varied in many ways. The sensitive devices a' a^2 may be any of the well-known devices of this kind—as, for example, two conducting-terminals separated by a minute air-gap or a thin film of dielectric which is strained or weakened by a battery or other means to the point of breaking down and gives way to the slightest disturbing influence. Its return to the normal sensitive state may be secured by momentarily interrupting the battery-circuits after each operation or otherwise. The relays R' R^2 have armatures l' l^2, which are connected by a wire w and when attracted establish electrical contact at c' and c^2, thus closing a circuit containing a battery b^3 and adjustable resistance r^3 and a relay R^3. From the above description it will be readily seen that the relay R^3 will be operated only when both contacts c' and c^2 are closed.

The apparatus at the sending-station may be controlled in any suitable manner—as, for instance, by momentarily closing the circuit of the source S, two different electrical vi-

brations being emitted simultaneously or in rapid succession, as may be desired, at each closure of the circuit. The two receiving-circuits at the distant station, each tuned to respond to the vibrations produced by one of the elements of the transmitter, affect the sensitive devices a' and a^2 and cause the relays R' and R^2 to be operated and contacts c' and c^2 to be closed, thus actuating the receiver or relay R^3, which in turn establishes a contact c^3 and brings into action a device a^3 by means of a battery d^4, included in a local circuit, as shown. But evidently if through any extraneous disturbance only one of the circuits at the receiving-station is affected the relay R^3 will fail to respond. In this way a communication may be carried on with greatly-increased safety against interference and privacy of the messages may be secured. The receiving-station shown in Fig. 2 is supposed to be one requiring no return message; but if the use of the system is such that this is necessary then the two stations will be similarly equipped, and any well-known means, which it is not thought necessary to illustrate here, may be resorted to for enabling the apparatus at each station to be used in turn as transmitter and receiver. In like manner the operation of a receiver, as R^3, may be made dependent instead of upon two upon more than two such transmitting systems or circuits, and thus any desired degree of exclusiveness or privacy and safety against extraneous disturbances may be attained. The apparatus as illustrated in Figs. 1 and 2 permits, however, special results to be secured by the adjustment of the order of succession of the discharges of the primary circuits P' and P^2 or of the time intervals between such discharges. To illustrate: The action of the relays R' R^2 may be regulated either by adjusting the weights of the levers l' l^2, or the strength of the batteries b' b^2, or the resistances r' r^2, or in other well-known ways, so that when a certain order of succession or time interval between the discharges of the primary circuits P' and P^2 exists at the sending-station the levers l' and l^2 will close the contacts c' and c^2 at the same instant, and thus operate the relay R^3, but will fail to produce this result when the order of succession of or the time interval between the discharges in the primary circuits is another one. By these or similar means additional safety against disturbances from other sources may be attained and, on the other hand, the possibility afforded of effecting the operation of signaling by varying the order of succession of the discharges of the two circuits. Instead of closing and opening the circuit of the source S', as before indicated, for the purpose of sending distinct signals it may be convenient to merely alter the period of either of the transmitting-circuits arbitrarily, as by varying the inductance of the primaries.

Obviously there is no necessity for using transmitters with two or more distinct elements or circuits, as S' and S^2, since a succession of waves or impulses of different characteristics may be produced by an instrument having but one such circuit. A few of the many ways which will readily suggest themselves to the expert who applies my invention are illustrated in Figs. 3, 4, and 5. In Fig. 3 a transmitting system $e\ s^3\ d^3$ is partly shunted by a rotating wheel or disk D^3, which may be similar to that illustrated in Fig. 1 and which cuts out periodically a portion of the coil or conductor s^3, or, if desired, bridges it by an adjustable condenser C^3, thus altering the vibration of the system $e\ s^3\ d^3$ at suitable intervals and causing two distinct kinds or classes of impulses to be emitted in rapid succession by the sender. In Fig. 4 a similar result is produced in the system $e\ s^4\ d^4$ by periodically short-circuiting, through an induction-coil L^3 and a rotating disk D^4 with insulating and conducting segments, a circuit p^6 in inductive relation to said system. Again, in Fig. 5 three distinct vibrations are caused to be emitted by a system $e\ s^5\ d^5$, this result being produced by inserting periodically a number of turns of an induction-coil L^4 in series with the oscillating system by means of a rotating disk B^5 with two projections $p^5\ p^5$ and three rods or brushes n^5, placed at an angle of one hundred and twenty degrees relatively to each other. The three transmitting systems or circuits thus produced may be energized in the same manner as those of Fig. 1 or in any other convenient way. Corresponding to each of these cases the receiving-station may be provided with two or three circuits in an analogous manner to that illustrated in Fig. 2, it being understood, of course, that the different vibrations or disturbances emitted by the sender follow in such rapid succession upon each other that they are practically simultaneous so far as the operation of such relays as R' and R^2 is concerned. Evidently, however, it is not necessary to employ two or more receiving-circuits, but a single circuit may be used also at the receiving-station constructed and arranged like the transmitting-circuits or systems illustrated in Figs. 3, 4, and 5, in which case the corresponding disks, as D^3 D^4 D^5, at the sending will be driven in synchronism with those at the receiving stations as far as may be necessary to secure the desired result; but whatever the nature of the specific devices employed it will be seen that the fundamental idea in my invention is the operation of a receiver by the conjoint or resultant effect of two or more circuits each tuned to respond exclusively to waves, impulses, or vibrations of a certain kind or class produced either simultaneously or successively by a suitable transmitter.

It will be seen from a consideration of the nature of the method hereinbefore described that the invention is applicable not only in the special manner described, in which the transmission of the impulses is effected through natural media, but for the transmis-

sion of energy for any purpose and whatever the medium through which the impulses are conveyed.

What I claim is—

1. The method of operating distant receivers which consists in producing and transmitting a plurality of kinds or classes of electrical impulses or disturbances, actuating by the impulses or disturbances of each kind or class one of a plurality of circuits tuned to respond to impulses of such kind or class and operating or controlling the operation of a receiver by the conjoint action of two or more of said circuits, as set forth.

2. The method of signaling, which consists in producing and transmitting a plurality of kinds or classes of electrical impulses or disturbances, developing by the impulses of each class a current in one of a plurality of receiving-circuits tuned to respond exclusively thereto and controlling by means of the conjoint action of such circuits a local circuit, as set forth.

3. The method of signaling which consists in producing a plurality of series of impulses or disturbances differing from each other in character and order of succession, exciting by the impulses of each series one of a plurality of receiving-circuits tuned to respond exclusively thereto and controlling by the conjoint action of such circuits a local circuit, as set forth.

4. The method of signaling which consists in producing a plurality of series of electrical impulses of different character, varying the time interval between the emission of such impulses, exciting by the impulses of each series one of a plurality of receiving-circuits tuned to respond exclusively thereto and controlling by the conjoint action of such circuits a local circuit, as set forth.

5. The method of transmitting electrical energy for conveying intelligible signals which consists in producing a plurality of electrical impulses of different character, developing by the impulses of each kind a current in one of a plurality of receiving-circuits tuned to respond exclusively thereto, controlling the action or effect of the transmitted impulses upon the receiving-circuits by varying the character of said impulses, and operating or controlling the operation of a receiver by the conjoint action of two or more of said receiving-circuits, as set forth.

6. The method of transmitting electrical energy which consists in producing a plurality of electrical waves or impulses of different periodicities, varying the order of transmission of the waves or impulses forming elements of the signal sent, according as one or another receiving-station is to be communicated with where (proper circuit-closing mechanism being provided at each receiving-station) the transmitted signal will be intelligible at and only at the intended receiving-station.

7. The method of transmitting intelligence, which consists in selecting and associating together in predetermined order of succession two or more electrically-generated impulses of different periodicity, forming elements of signals to be sent, and transmitting such selected impulses with reference to the conjoint action of both or all in the production of a signal at a distant point, substantially as set forth.

8. In a system of telegraphy, wherein signals or messages are sent by the use of a plurality of electrical impulses of different periodicities and in a predetermined order of succession, the method of ascertaining at any particular station the particular signal sent to that station, which consists in the selection, to form a signal, of certain transmitted impulses of different periodicities and of a predetermined order of succession to the exclusion of all others, as set forth.

9. The improvement in the art of transmitting electrical energy which consists in operating or controlling a receiving mechanism by a series or group of electrical impulses of different periodicities and of a predetermined order of sucession.

10. In a system for the transmission of electrical energy, for sending signals or messages to any one of two or more receiving-stations, the method of transmitting the message with reference to the intelligible receipt thereof at the desired station, which consists in the transmission of electrical waves or impulses of different periodicities in varying order of transmittal by a separate order or grouping of transmittal for each receiving-station.

NIKOLA TESLA.

Witnesses:
M. LAWSON DYER,
BENJAMIN MILLER.

P-356

No. 723,188. PATENTED MAR. 17, 1903.

N. TESLA.

METHOD OF SIGNALING.

APPLICATION FILED JUNE 14, 1901

NO MODEL.

Fig 2

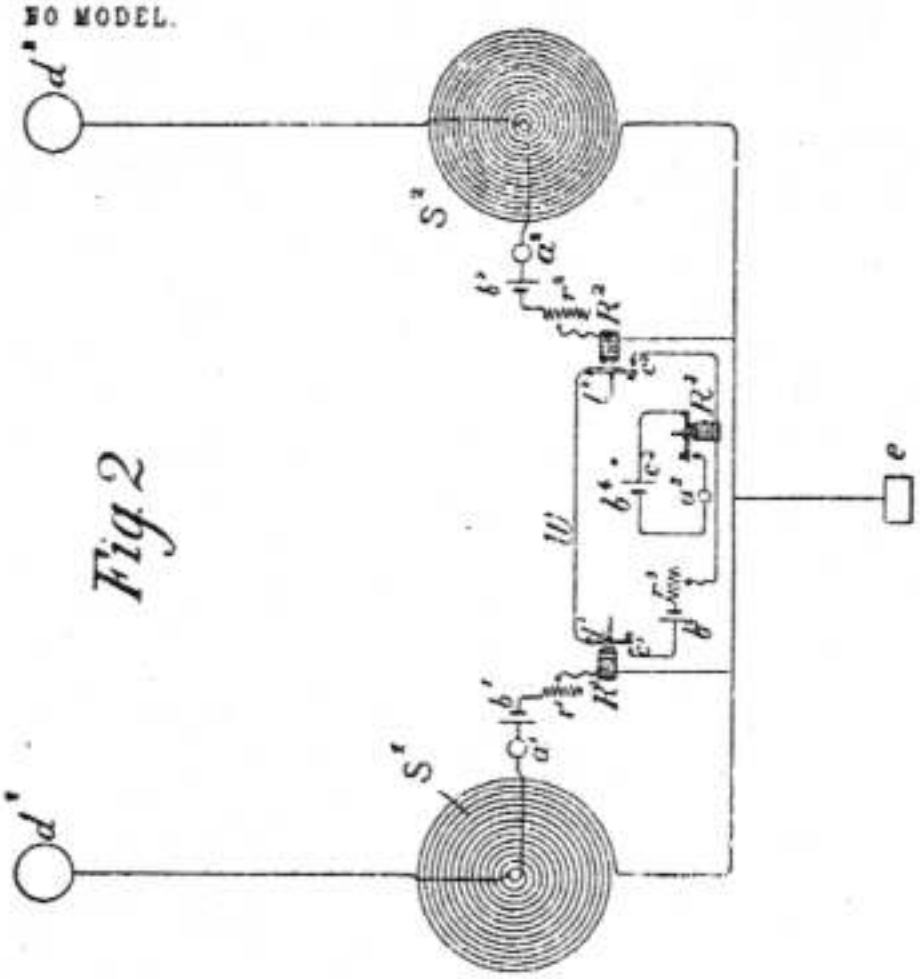

Fig 1

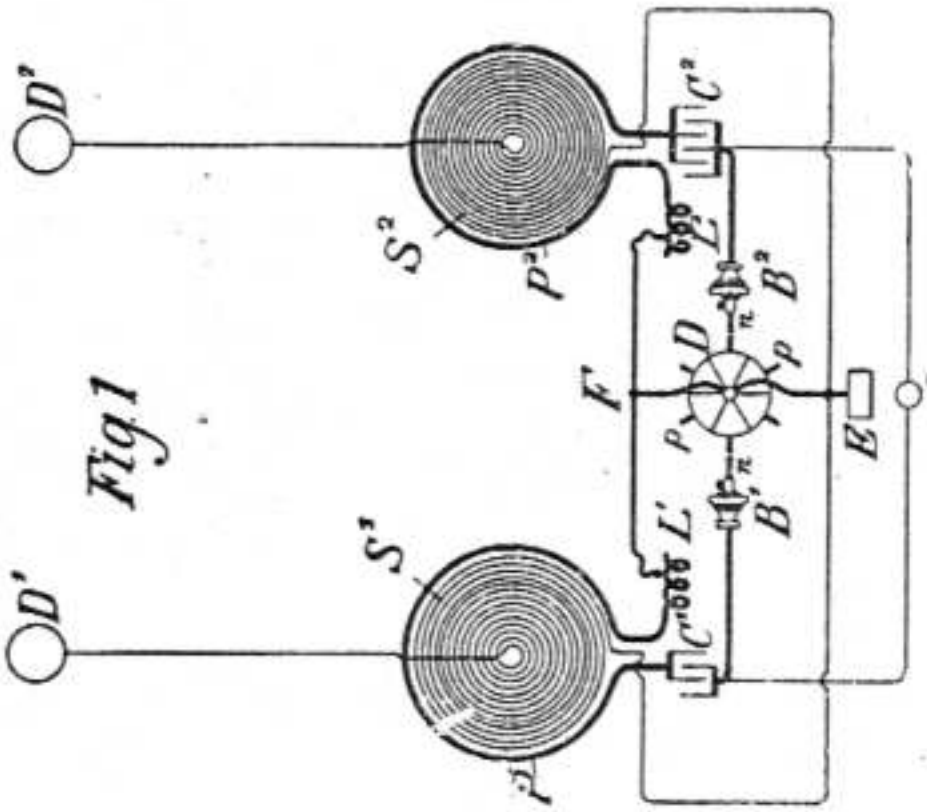

Fig.5

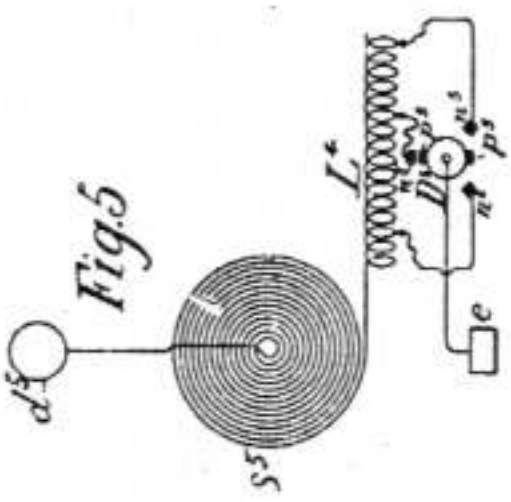

Fig.4

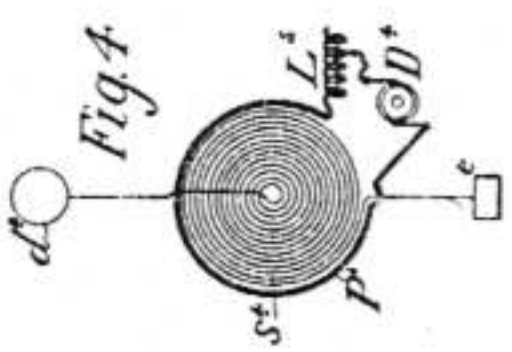

Fig3

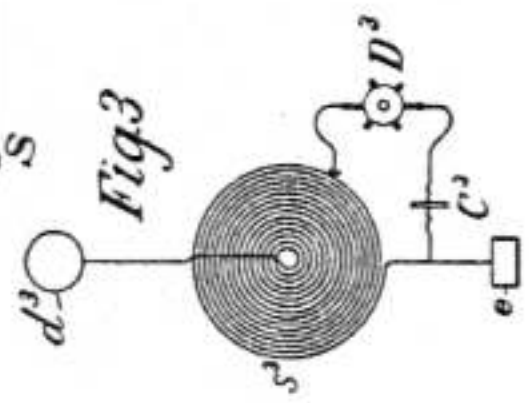

WITNESSES:

Benjamin Miller

Richard Lounsbury

INVENTOR.

Nikola Tesla

BY

Kerr, Page & Cooper

ATTORNEYS.

UNITED STATES PATENT OFFICE.

NIKOLA TESLA, OF NEW YORK, N. Y.

APPARATUS FOR TRANSMITTING ELECTRICAL ENERGY.

1,119,732. Specification of Letters Patent. Patented Dec. 1, 1914.

Application filed January 18, 1902. Serial No. 90,245. Renewed May 4, 1907. Serial No. 371,817.

To all whom it may concern:

Be it known that I, NIKOLA TESLA, a citizen of the United States, residing in the borough of Manhattan, in the city, county, and State of New York, have invented certain new and useful Improvements in Apparatus for Transmitting Electrical Energy, of which the following is a specification, reference being had to the drawing accompanying and forming a part of the same.

In endeavoring to adapt currents or discharges of very high tension to various valuable uses, as the distribution of energy through wires from central plants to distant places of consumption, or the transmission of powerful disturbances to great distances, through the natural or non-artificial media, I have encountered difficulties in confining considerable amounts of electricity to the conductors and preventing its leakage over their supports, or its escape into the ambient air, which always takes place when the electric surface density reaches a certain value.

The intensity of the effect of a transmitting circuit with a free or elevated terminal is proportionate to the quantity of electricity displaced, which is determined by the product of the capacity of the circuit, the pressure, and the frequency of the currents employed. To produce an electrical movement of the required magnitude it is desirable to charge the terminal as highly as possible, for while a great quantity of electricity may also be displaced by a large capacity charged to low pressure, there are disadvantages met with in many cases when the former is made too large. The chief of these are due to the fact that an increase of the capacity entails a lowering of the frequency of the impulses or discharges and a diminution of the energy of vibration. This will be understood when it is borne in mind, that a circuit with a large capacity behaves as a slackspring, whereas one with a small capacity acts like a stiff spring, vibrating more vigorously. Therefore, in order to attain the highest possible frequency, which for certain purposes is advantageous and, apart from that, to develop the greatest energy in such a transmitting circuit, I employ a terminal of relatively small capacity, which I charge to as high a pressure as practicable. To accomplish this result I have found it imperative to so construct the elevated conductor, that its outer surface, on which the electrical charge chiefly accumulates, has itself a large radius of curvature, or is composed of separate elements which, irrespective of their own radius of curvature, are arranged in close proximity to each other and so, that the outside ideal surface enveloping them is of a large radius. Evidently, the smaller the radius of curvature the greater, for a given electric displacement, will be the surface-density and, consequently, the lower the limiting pressure to which the terminal may be charged without electricity escaping into the air. Such a terminal I secure to an insulating support entering more or less into its interior, and I likewise connect the circuit to it inside or, generally, at points where the electric density is small. This plan of constructing and supporting a highly charged conductor I have found to be of great practical importance, and it may be usefully applied in many ways.

Referring to the accompanying drawing, the figure is a view in elevation and part section of an improved free terminal and circuit of large surface with supporting structure and generating apparatus.

The terminal D consists of a suitably shaped metallic frame, in this case a ring of nearly circular cross section, which is covered with half spherical metal plates P P, thus constituting a very large conducting surface, smooth on all places where the electric charge principally accumulates. The frame is carried by a strong platform expressly provided for safety appliances, instruments of observation, etc., which in turn rests on insulating supports F F. These should penetrate far into the hollow space formed by the terminal, and if the electric density at the points where they are bolted to the frame is still considerable, they may be specially protected by conducting hoods as H.

A part of the improvements which form the subject of this specification, the transmitting circuit, in its general features, is identical with that described and claimed in my original Patents Nos. 645,576 and 649,621. The circuit comprises a coil A which is in close inductive relation with a primary C, and one end of which is connected to a ground-plate E, while its other end is led through a separate self-induction coil B and a metallic cylinder B′ to the terminal D.

The connection to the latter should always be made at, or near the center, in order to secure a symmetrical distribution of the current, as otherwise, when the frequency is very high and the flow of large volume, the performance of the apparatus might be impaired The primary C may be excited in any desired manner, from a suitable source of currents G, which may be an alternator or condenser, the important requirement being that the resonant condition is established, that is to say, that the terminal D is charged to the maximum pressure developed in the circuit, as I have specified in my original patents before referred to. The adjustments should be made with particular care when the transmitter is one of great power, not only on account of economy, but also in order to avoid danger. I have shown that it is practicable to produce in a resonating circuit as E A B B' D immense electrical activities, measured by tens and even hundreds of thousands of horse-power, and in such a case, if the points of maximum pressure should be shifted below the terminal D, along coil B, a ball of fire might break out and destroy the support F or anything else in the way. For the better appreciation of the nature of this danger it should be stated, that the destructive action may take place with inconceivable violence This will cease to be surprising when it is borne in mind, that the entire energy accumulated in the excited circuit, instead of requiring, as under normal working conditions, one quarter of the period or more for its transformation from static to kinetic form, may spend itself in an incomparably smaller interval of time, at a rate of many millions of horse power The accident is apt to occur when, the transmitting circuit being strongly excited, the impressed oscillations upon it are caused, in any manner more or less sudden, to be more rapid than the free oscillations. It is therefore advisable to begin the adjustments with feeble and somewhat slower impressed oscillations, strengthening and quickening them gradually, until the apparatus has been brought under perfect control To increase the safety. I provide on a convenient place, preferably on terminal D, one or more elements or plates either of somewhat smaller radius of curvature or protruding more or less beyond the others (in which case they may be of larger radius of curvature) so that, should the pressure rise to a value, beyond which it is not desired to go, the powerful discharge may dart out there and lose itself harmlessly in the air. Such a plate, performing a function similar to that of a safety valve on a high pressure reservoir, is indicated at V.

Still further extending the principles underlying my invention, special reference is made to coil B and conductor B' The latter is in the form of a cylinder with smooth or polished surface of a radius much larger than that of the half spherical elements P P, and widens out at the bottom into a hood H, which should be slotted to avoid loss by eddy currents and the purpose of which will be clear from the foregoing. The coil B is wound on a frame or drum D' of insulating material, with its turns close together I have discovered that when so wound the effect of the small radius of curvature of the wire itself is overcome and the coil behaves as a conductor of large radius of curvature, corresponding to that of the drum. This feature is of considerable practical importance and is applicable not only in this special instance, but generally. For example, such plates at P P, of terminal D, though preferably of large radius of curvature, need not be necessarily so, for provided only that the individual plates or elements of a high potential conductor or terminal are arranged in proximity to each other and with their outer boundaries along an ideal symmetrical enveloping surface of a large radius of curvature, the advantages of the invention will be more or less fully realized The lower end of the coil B—which, if desired, may be extended up to the terminal D—should be somewhat below the uppermost turn of coil A. This, I find, lessens the tendency of the charge to break out from the wire connecting both and to pass along the support F'

Having described my invention, I claim

1. As a means for producing great electrical activities a resonant circuit having its outer conducting boundaries, which are charged to a high potential, arranged in surfaces of large radii of curvature so as to prevent leakage of the oscillating charge, substantially as set forth

2. In apparatus for the transmission of electrical energy a circuit connected to ground and to an elevated terminal and having its outer conducting boundaries, which are subject to high tension, arranged in surfaces of large radii of curvature substantially as, and for the purpose described

3 In a plant for the transmission of electrical energy without wires, in combination with a primary or exciting circuit a secondary connected to ground and to an elevated terminal and having its outer conducting boundaries, which are charged to a high potential, arranged in surfaces of large radii of curvature for the purpose of preventing leakage and loss of energy, substantially as set forth

4. As a means for transmitting electrical energy to a distance through the natural media a grounded resonant circuit, comprising a part upon which oscillations are impressed and another for raising the ten-

sion, having its outer conducting boundaries on which a high tension charge accumulates arranged in surfaces of large radii of curvature, substantially as described.

5. The means for producing excessive electric potentials consisting of a primary exciting circuit and a resonant secondary having its outer conducting elements which are subject to high tension arranged in proximity to each other and in surfaces of large radii of curvature so as to prevent leakage of the charge and attendant lowering of potential, substantially as described.

6. A circuit comprising a part upon which oscillations are impressed and another part for raising the tension by resonance, the latter part being supported on places of low electric density and having its outermost conducting boundaries arranged in surfaces of large radii of curvature, as set forth.

7. In apparatus for the transmission of electrical energy without wires a grounded circuit the outer conducting elements of which have a great aggregate area and are arranged in surfaces of large radii of curvature so as to permit the storing of a high charge at a small electric density and prevent loss through leakage, substantially as described.

8. A wireless transmitter comprising in combination a source of oscillations as a condenser, a primary exciting circuit and a secondary grounded and elevated conductor the outer conducting boundaries of which are in proximity to each other and arranged in surfaces of large radii of curvature, substantially as described.

9. In apparatus for the transmission of electrical energy without wires an elevated conductor or antenna having its outer high potential conducting or capacity elements arranged in proximity to each other and in surfaces of large radii of curvature so as to overcome the effect of the small radius of curvature of the individual elements and leakage of the charge, as set forth.

10. A grounded resonant transmitting circuit having its outer conducting boundaries arranged in surfaces of large radii of curvature in combination with an elevated terminal of great surface supported at points of low electric density, substantially as described.

NIKOLA TESLA.

Witnesses:
M. LAMSON DYER,
RICHARD DONOVAN.

Copies of this patent may be obtained for five cents each, by addressing the "Commissioner of Patents, Washington, D. C."

P-360

N. TESLA.

APPARATUS FOR TRANSMITTING ELECTRICAL ENERGY.

APPLICATION FILED JAN. 18, 1902. RENEWED MAY 4, 1907.

1,119,732. Patented Dec. 1, 1914

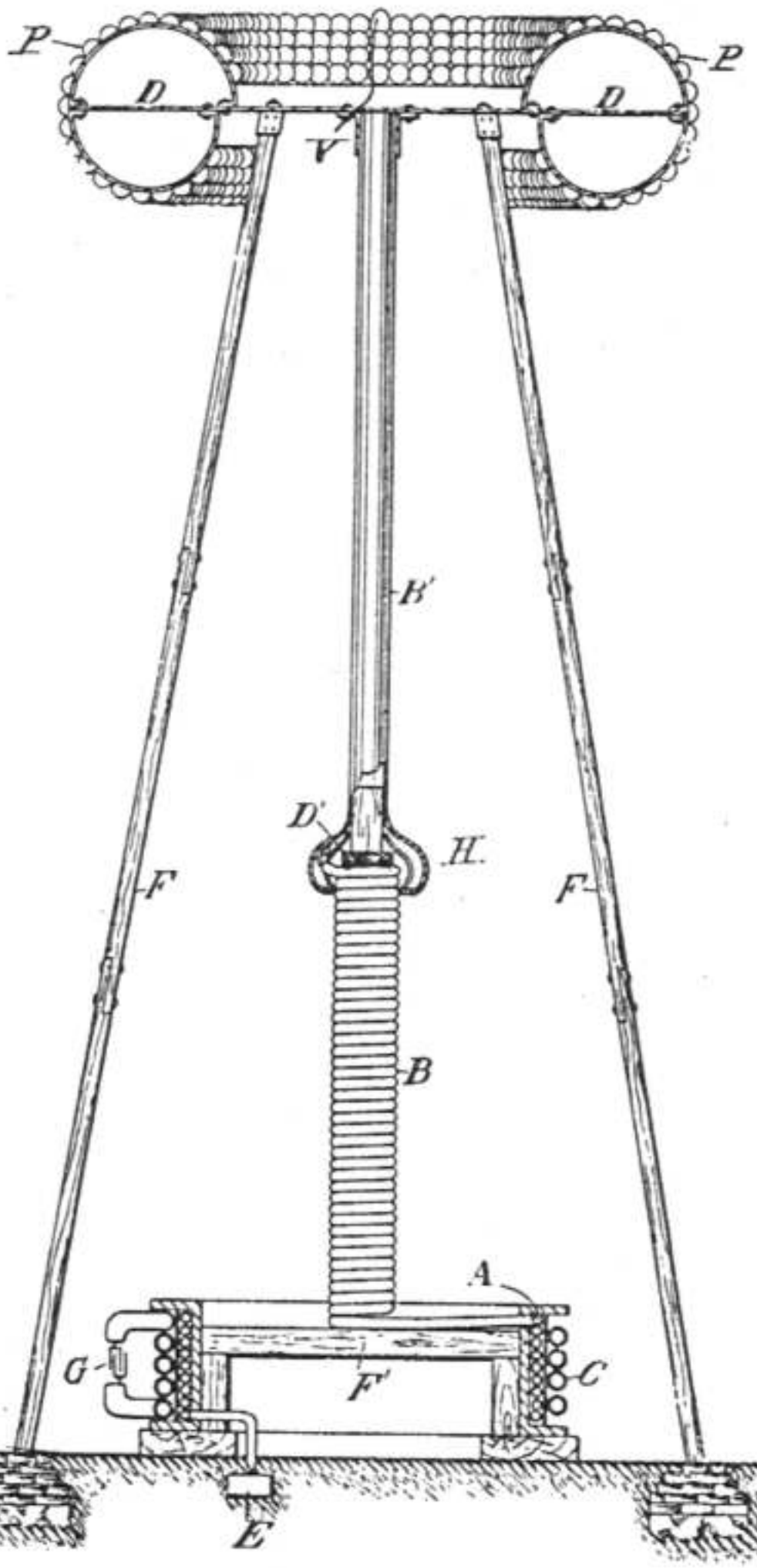

WITNESSES

W. Lawson Dyer

Benjamin Miller

INVENTOR,

Nikola Tesla,

BY Kerr, Page & Cooper,

his ATTORNEYS.

VI
TELEMECHANICS

UNITED STATES PATENT OFFICE.

NIKOLA TESLA, OF NEW YORK, N. Y.

METHOD OF AND APPARATUS FOR CONTROLLING MECHANISM OF MOVING VESSELS OR VEHICLES

SPECIFICATION forming part of Letters Patent No. 613,809, dated November 8, 1898.

Application filed July 1, 1898. Serial No. 684,934. (No model.)

To all whom it may concern:

Be it known that I, NIKOLA TESLA, a citizen of the United States, residing at New York, in the county and State of New York, have invented certain new and useful improvements in methods of and apparatus for controlling from a distance the operation of the propelling-engines, the steering apparatus, and other mechanism carried by moving bodies or floating vessels, of which the following is a specification, reference being had to the drawings accompanying and forming part of the same.

The problem for which the invention forming the subject of my present application affords a complete and practicable solution is that of controlling from a given point the operation of the propelling-engines, the steering apparatus, and other mechanism carried by a moving object, such as a boat or any floating vessel, whereby the movements and course of such body or vessel may be directed and controlled from a distance and any device carried by the same brought into action at any desired time. So far as I am aware the only attempts to solve this problem which have heretofore met with any measure of success have been made in connection with a certain class of vessels the machinery of which was governed by electric currents conveyed to the controlling apparatus through a flexible conductor; but this system is subject to such obvious limitations as are imposed by the length, weight, and strength of the conductor which can be practically used, by the difficulty of maintaining with safety a high speed of the vessel or changing the direction of movement of the same with the desired rapidity, by the necessity for effecting the control from a point which is practically fixed, and by many well-understood drawbacks inseparably connected with such a system. The plan which I have perfected involves none of these objections, for I am enabled by the use of my invention to employ any means of propulsion, to impart to the moving body or vessel the highest possible speed, to control the operation of its machinery and to direct its movements from either a fixed point or from a body moving and changing its direction however rapidly, and to maintain this control over great distances without any artificial connections between the vessel and the apparatus governing its movements and without such restrictions as these must necessarily impose.

In a broad sense, then, my invention differs from all of those systems which provide for the control of the mechanism carried by a moving object and governing its motion in that I require no intermediate wires, cables, or other form of electrical or mechanical connection with the object save the natural media in space. I accomplish, nevertheless, similar results and in a much more practicable manner by producing waves, impulses, or radiations which are received through the earth, water, or atmosphere by suitable apparatus on the moving body and cause the desired actions so long as the body remains within the active region or effective range of such currents, waves, impulses, or radiations.

The many and difficult requirements of the object here contemplated, involving peculiar means for transmitting to a considerable distance an influence capable of causing in a positive and reliable manner these actions, necessitated the designing of devices and apparatus of a novel kind in order to utilize to the best advantage various facts or results, which, either through my own investigations or those of others, have been rendered practically available.

As to that part of my invention which involves the production of suitable waves or variations and the conveying of the same to a remote receiving apparatus capable of being operated or controlled by their influence, it may be carried out in various ways, which are at the present time more or less understood. For example, I may pass through a conducting-path, preferably inclosing a large area, a rapidly-varying current and by electromagnetic induction of the same affect a circuit carried by the moving body. In this case the action at a given distance will be the stronger the larger the area inclosed by the conductor and the greater the rate of change of the current. If the latter were generated in the ordinary ways, the rate of change, and consequently the distance at which the action would be practically available for the present purpose, would be very small; but by adopting such means as I have devised—that is,

either by passing through the conducting-path currents of a specially-designed high-frequency alternator or, better still, those of a strongly-charged condenser—a very high rate of change may be obtained and the effective range of the influence thus extended over a vast area, and by carefully adjusting the circuit on the moving body so as to be in exact electromagnetic synchronism with the primary disturbances this influence may be utilized at great distances.

Another way to carry out my invention is to direct the currents or discharges of a high-frequency machine or condenser through a circuit one terminal of which is connected directly or inductively with the ground and the other to a body, preferably of large surface and at an elevation. In this case if the circuit on the moving body be similarly arranged or connected differences of potential on the terminals of the circuit either by conduction or electrostatic induction are produced and the same object is attained. Again, to secure the best action the receiving-circuit should be adjusted so as to be in electromagnetic synchronism with the primary source, as before; but in this instance it will be understood by those skilled in the art that if the number of vibrations per unit of time be the same the circuit should now have a length of conductor only one-half of that used in the former case

Still another way is to pass the currents simply through the ground by connecting both the terminals of the source of high-frequency currents to earth at different and remote points and to utilize the currents spreading through the ground for affecting a receiving-circuit properly placed and adjusted. Again, in this instance if only one of the terminals of the receiving-circuit be connected to the ground, the other terminal being insulated, the adjustment as to synchronism with the source will require that under otherwise equal conditions the length of wire be half of that which would be used if both the terminals be connected or, generally, if the circuit be in the form of a closed loop or coil. Obviously also in the latter case the relative position of the receiving and transmitting circuits is of importance, whereas if the circuit be of the former kind—that is, open—the relative position of the circuits is, as a rule, of little or no consequence.

Finally, I may avail myself, in carrying out my invention, of electrical oscillations which do not follow any particular conducting-path, but propagate in straight lines through space, of rays, waves, pulses, or disturbances of any kind capable of bringing the mechanism of the moving body into action from a distance and at the will of the operator by their effect upon suitable controlling devices.

In the following detailed description I shall confine myself to an explanation of that method and apparatus only which I have found to be the most practical and effectual; but obviously my invention in its broad features is not limited to the special mode and appliances which I have devised and shall here describe.

In any event—that is to say, whichever of the above or similar plans I may adopt—and particularly when the influence exerted from a distance upon the receiving-circuit be too small to directly and reliably affect and actuate the controlling apparatus I employ auxiliary sensitive relays or, generally speaking, means capable of being brought into action by the feeblest influences in order to effect the control of the movements of the distant body with the least possible expenditure of energy and at the greatest practicable distance, thus extending the range and usefulness of my invention.

A great variety of electrical and other devices more or less suitable for the purpose of detecting and utilizing feeble actions are now well known to scientific men and artisans and need not be all enumerated here. Confining myself merely to the electrical as the most practicable of such means and referring only to those which, while not the most sensitive, are perhaps more readily available from the more general knowledge which exists regarding them, I may state that a contrivance may be used which has long been known and used as a lightning-arrester in connection with telephone-switchboards for operating annunciators and like devices, comprising a battery the poles of which are connected to two conducting-terminals separated by a minute thickness of dielectric. The electromotive force of the battery should be such as to strain the thin dielectric layer very nearly to the point of breaking down in order to increase the sensitiveness. When an electrical disturbance reaches a circuit so arranged and adjusted, additional strain is put upon the insulating-film, which gives way and allows the passage of a current which can be utilized to operate any form of circuit-controlling apparatus.

Again, another contrivance capable of being utilized in detecting feeble electrical effects consists of two conducting plates or terminals which have, preferably, wires of some length attached to them and are bridged by a mass of minute particles of metal or other conducting material. Normally these particles lying loose do not connect the metal plates; but under the influence of an electrical disturbance produced at a distance, evidently owing to electrostatic attraction, they are pressed firmly against each other, thus establishing a good electrical connection between the two terminals. This change of state may be made use of in a number of ways for the above purpose.

Still another modified device, which may be said to embody the features of both the former, is obtained by connecting the two conducting plates or terminals above referred to permanently with the poles of a battery

which should be of very constant electromotive force. In this arrangement a distant electrical disturbance produces a twofold effect on the conducting particles and insulating-films between them. The former are brought nearer to each other in consequence of the sudden increase of electrostatic attraction, and the latter, owing to this, as well as by being reduced in thickness or in number, are subjected to a much greater strain, which they are unable to withstand.

It will be obviously noted from the preceding that whichever of these or similar contrivances be used the sensitiveness and, what is often still more important, the reliability of operation is very materially increased by a close adjustment of the periods of vibration of the transmitting and receiving circuits, and, although such adjustment is in many cases unnecessary for the successful carrying out of my invention, I nevertheless make it a rule to bestow upon this feature the greatest possible care, not only because of the above-mentioned advantages, which are secured by the observance of the most favorable conditions in this respect, but also and chiefly with the object of preventing the receiving-circuit from being affected by waves or disturbances emanating from sources not under the control of the operator. The narrower the range of vibrations which are still capable of perceptibly affecting the receiving-circuit the safer will the latter be against extraneous disturbances. To secure the best result, it is necessary, as is well known to experts, to construct the receiving-circuit or that part of the same in which the vibration chiefly occurs so that it will have the highest possible self-induction and at the same time the least possible resistance. In this manner I have demonstrated the practicability of providing a great number of such receiving-circuits—fifty or a hundred, or more—each of which may be called up or brought into action whenever desired without the others being interfered with. This result makes it possible for one operator to direct simultaneously the movements of a number of bodies as well as to control the action of a number of devices located on the same body, each of which may have a distinct duty to fulfil. In the following description, however, I shall show a still further development in this direction—namely, how, by making use of merely one receiving-circuit, a great variety of devices may be actuated and any number of different functions performed at the will and command of the distant operator

It should be stated in advance in regard to the sensitive devices above mentioned, which may be broadly considered as belonging to one class, inasmuch as the operation of all of them involves the breaking down of a minute thickness of highly-strained dielectric, that it is necessary to make some provision for automatically restoring to the dielectric its original unimpaired insulating qualities in order to enable the device to be used in successive operations. This is usually accomplished by a gentle tapping or vibration of the electrodes or particles or continuous rotation of the same; but in long experience with many forms of these devices I have found that such procedures, while suitable in simple and comparatively unimportant operations, as ordinary signaling, when it is merely required that the succeeding effects produced in the receiving-circuit should differ in regard to their relative duration only, in which case it is of little or no consequence if some of the individual effects be altered or incomplete or even entirely missed, do not yield satisfactory results in many instances, when it may be very important that the effects produced should all be exactly such as desired and that none should fail. To illustrate, let it be supposed that an official directing the movements of a vessel in the manner described should find it necessary to bring into action a special device on the latter or to perform a particular operation, perhaps of vital moment, at an instant's notice and possibly when, by design or accident, the vessel itself or any mark indicating its presence is hidden from his view. In this instance a failure or defective action of any part of the apparatus might have disastrous consequences and such cases in which the sure and timely working of the machinery is of paramount importance may often present themselves in practice, and this consideration has impressed me with the necessity of doing away with the defects in the present devices and procedures and of producing an apparatus which while being sensitive will also be most reliable and positive in its action. In the arrangement hereinafter described these defects are overcome in a most satisfactory manner, enabling thousands of successive operations, in all respects alike, being performed by the controlling apparatus without a single irregularity or miss being recorded. For a better understanding of these and other details of the invention as I now carry them out I would refer to the accompanying drawings, in which—

Figure 1 is a plan view of a vessel and mechanism within the same. Fig. 2 is a longitudinal section of the same, showing the interior mechanism in side elevation. Fig. 3 is a plan view, partially diagrammatical, of the vessel, apparatus, and circuit connections of the same. Fig. 4 is a plan view, on an enlarged scale, of a portion of the controlling mechanism. Fig. 5 is an end view of the same. Fig. 6 shows the same mechanism in side elevation. Fig. 7 is a side view of a detail of the mechanism. Fig. 8 is a central sectional view, on a larger scale, of a sensitive device forming part of the receiving-circuit. Fig. 9 is a diagrammatic illustration of the system in its preferred form. Fig. 10 is a view of the various mechanisms employed, but on a larger scale, and leaving out or indi

cating conventionally certain parts of well-understood character.

Referring to Figs. 1 and 2, A designates any type of vessel or vehicle which is capable of being propelled and directed, such as a boat, a balloon, or a carriage. It may be designed to carry in a suitable compartment B objects of any kind, according to the nature of the uses to which it is to be applied. The vessel—in this instance a boat—is provided with suitable propelling machinery, which is shown as comprising a screw-propeller C, secured to the shaft of an electromagnetic motor D, which derives its power from storage batteries E E E E. In addition to the propelling engine or motor the boat carries also a small steering-motor F, the shaft of which is extended beyond its bearings and provided with a worm which meshes with a toothed wheel G. This latter is fixed to a sleeve *b*, freely movable on a vertical rod H, and is rotated in one or the other direction, according to the direction of rotation of the motor F.

The sleeve *b* on rod H is in gear, through the cog-wheels H' and H'', with a spindle G, mounted in vertical bearings at the stem of the boat and carrying the rudder F'.

The apparatus by means of which the operation of both the propelling and steering mechanisms is controlled involves, primarily, a receiving-circuit, which for reasons before stated is preferably both adjusted and rendered sensitive to the influence of waves or impulses emanating from a remote source, the adjustment being so that the period of oscillation of the circuit is either the same as that of the source or a harmonic thereof.

The receiving-circuit proper (diagrammatically shown in Figs. 3 and 10) comprises a terminal E', conductor C', a sensitive device A', and a conductor A'', leading to the ground conveniently through a connection to the metal keel E'' of the vessel. The terminal E' should present a large conducting-surface and should be supported as high as practicable on a standard D', which is shown as broken in Fig. 2; but such provisions are not always necessary. It is important to insulate very well the conductor C' in whatever manner it be supported.

The circuit or path just referred to forms also a part of a local circuit, which latter includes a relay-magnet *a* and a battery *a'*, the electromotive force of which is, as before explained, so determined that although the dielectric layers in the sensitive device A' are subjected to a great strain, yet normally they withstand the strain and no appreciable current flows through the local circuit; but when an electrical disturbance reaches the circuit the dielectric films are broken down, the resistance of the device A' is suddenly and greatly diminished, and a current traverses the relay-magnet A.

The particular sensitive device employed is shown in general views and in detail in Figs. 4, 6, 7, and 8. It consists of a metal cylinder *c*, with insulating-heads *c'*, through which passes a central metallic rod *c''*. A small quantity of grains *d* of conducting material, such as an oxidized metal, is placed in the cylinder. A metallic strip *d'*, secured to an insulated post *d''*, bears against the side of the cylinder *c*, connecting it with the conductor C', forming one part of the circuit. The central rod *c''* is connected to the frame of the instrument and so to the other part of the circuit through the forked metal arm *e*, the ends of which are fastened with two nuts to the projecting ends of the rod, by which means the cylinder *c* is supported.

In order to interrupt the flow of battery-current which is started through the action of the sensitive device A', special means are provided, which are as follows: The armature *e'* of the magnet *a*, when attracted by the latter, closes a circuit containing a battery *b'* and magnet *f*. The armature-lever *f'* of this magnet is fixed to a rock-shaft *f''*, to which is secured an anchor-escapement *g*, which controls the movements of a spindle *g'*, driven by a clock-train K. The spindle *g'* has fixed to it a disk *g''* with four pins *b''*, so that for each oscillation of the escapement *g* the spindle *g'* is turned through one-quarter of a revolution. One of the spindles in the clock-train, as *h*, is geared so as to make one-half of a revolution for each quarter-revolution of spindle *g'*. The end of the former spindle extends through the side of the frame and carries an eccentric cylinder *h'*, which passes through a slot in a lever *h''*, pivoted to the side of the frame. The forked arm *e*, which supports the cylinder *c*, is pivoted to the end of eccentric *h'*, and the eccentric and said arm are connected by a spiral spring *l*. Two pins *i' i'* extend out from the lever *h''*, and one of these is always in the path of a projection on arm *e*. They operate to prevent the turning of cylinder *c* with the spindle *h* and the eccentric. It will be evident that a half-revolution of the spindle *h* will wind up the spring *i* and at the same time raise or lower the lever *h''*, and these parts are so arranged that just before the half-revolution of the spindle is completed the pin *i'*, in engagement with projection or stop-pin *p*, is withdrawn from its path, and the cylinder *c*, obeying the force of the spring *i*, is suddenly turned end for end, its motion being checked by the other pin *i'*. The adjustment relatively to armature *f'* of magnet *f* is furthermore so made that the pin *i'* is withdrawn at the moment when the armature has nearly reached its extreme position in its approach toward the magnet—that is, when the lever *l*, which carries the armature *f'*, almost touches the lower one of the two stops *s s*, Fig. 5—which limits its motion in both directions.

The arrangement just described has been the result of long experimenting with the object of overcoming certain defects in devices of this kind, to which reference has been made before. These defects I have found to

be due to many causes, as the unequal size, weight, and shape of the grains, the unequal pressure which results from this and from the manner in which the grains are usually agitated, the lack of uniformity in the conductivity of the surface of the particles owing to the varying thickness of the superficial oxidized layer, the varying condition of the gas or atmosphere in which the particles are immersed, and to certain deficiencies, well known to experts, of the transmitting apparatus as heretofore employed, which are in a large measure reduced by the use of my improved high-frequency coils. To do away with the defects in the sensitive device, I prepare the particles so that they will be in all respects as nearly alike as possible. They are manufactured by a special tool, insuring their equality in size, weight, and shape, and are then uniformly oxidized by placing them for a given time in an acid solution of predetermined strength. This secures equal conductivity of their surfaces and stops their further deterioration, thus preventing a change in the character of the gas in the space in which they are inclosed. I prefer not to rarefy the atmosphere within the sensitive device, as this has the effect of rendering the former less constant in regard to its dielectric properties, but merely secure an air-tight inclosure of the particles and rigorous absence of moisture, which is fatal to satisfactory working.

The normal position of the cylinder *c* is vertical, and when turned in the manner described the grains in it are simply shifted from one end to the other; but inasmuch as they always fall through the same space and are subjected to the same agitation they are brought after each operation of the relay to precisely the same electrical condition and offer the same resistance to the flow of the battery-current until another impulse from afar reaches the receiving-circuit.

The relay-magnet *a* should be of such character as to respond to a very weak current and yet be positive in its action. To insure the retraction of its armature *e'* after the current has been established through the magnet *f* and interrupted by the inversion of the sensitive device *c*, a light rod *k* is supported in guides on the frame in position to be lifted by an extension *k'* of the armature-lever *l* and to raise slightly the armature *e*. As a feeble current may normally flow through the sensitive device and the relay-magnet *a*, which would be sufficient to hold though not draw the armature down, it is well to observe this precaution.

The operation of the relay-magnet *a* and the consequent operation of the electromagnet *f*, as above described, are utilized to control the operation of the propelling-engine and the steering apparatus in the following manner: On the spindle *g'*, which carries the escapement-disk *g''*, Figs. 4 and 6, is a cylinder *j* of insulating material with a conducting plate or head at each end. From these two heads, respectively, contact plates or segments *j' j''* extend on diametrically opposite sides of the cylinder. The plate *j''* is in electrical connection with the frame of the instrument through the head from which it extends, while insulted strips or brushes J J' bear upon the free end or head of the cylinder and the periphery of the same, respectively. Three terminals are thus provided, one always in connection with plate *j'*, the other always in connection with the plate *j''*, and the third adapted to rest on the strips *j'* and *j''* in succession or upon the intermediate insulating-spaces, according to the position in which the commutator is brought by the clock-train and the anchor-escapement *g*.

K' K'', Figs. 1, 3, and 10, are two relay-magnets conveniently placed in the rear of the propelling-engine. One terminal of a battery *k''* is connected to one end of each of the relay-coils, the opposite terminal to the brush J', and the opposite ends of the relay-coils to the brush J and to the frame of the instrument, respectively. As a consequence of this arrangement either the relay K' or K'' will be energized as the brush J' bears upon the plate *j'* or *j''*, respectively, or both relays will be inactive while the brush J' bears upon an insulating-space between the plates *j'* and *j''*. While one relay, as K', is energized, its armature closes a circuit through the motor F, which is rotated in a direction to throw the rudder to port. On the other hand, when relay K'' is active another circuit through the motor F is closed, which reverses its direction of rotation and shifts the rudder to starboard. These circuits, however, are at the same time utilized for other purposes, and their course is, in part, through apparatus which I shall describe before tracing their course.

The fixed rod H carries an insulating disk or head L, Fig. 2, to the under side of which are secured six brushes, 1, 2, 3, 4, 5, and 6, Fig. 3. The sleeve *b*, which surrounds the rod and is turned by the steering-motor F, carries a disk L', upon the upper face of which are two concentric circles of conducting contact-plates. Brushes 1, 2, 3, and 4 bear upon the inner circle of contacts, while the brushes 5 and 6 bear upon the outer circle of contacts. The outer circle of contacts comprises two long plates 7 and 8 on opposite sides of the disk and a series of shorter plates 9, 10, 11, 12, 13, and 14 in the front and rear. Flexible conductors *l' l''* connect the plates 7 and 8 with the terminals of the propelling-motor D, and the poles of the main battery E are connected to the brushes 5 and 6, respectively, so that while the rudder is straight or turned up to a certain angle to either side the current is conveyed through the brushes 5 and 6 and segments 7 and 8 to the propelling-motor D. The steering-motor F is also driven by current taken from the main battery E in the following manner: conductor 15 from one pole of the bat[illegible]

leads to one of the commutator-brushes, and from the other brush runs a conductor 16 to one of the contacts of each relay K' K''. When one of these relays, as K'', is active, it continues this circuit through a wire 19 through one field-coil or set of coils on the motor F and thence to the brush 1. In a similar manner when the other relay K' is active the circuit is continued from wire 18 through a wire 20, the second or reversing set of field-coils, and to brush 2.

Both brushes 1 and 2 at all times when the rudder is not turned more than about forty-five degrees to one side are in contact with a long conducting-plate 21, and one brush in any position of the rudder is always in contact with said plate, and the latter is connected by a flexible conductor 22 with the opposite pole of the main battery. Hence the motor F may always be caused to rotate in one direction whatever may be the position of the rudder, and may be caused to rotate in either direction whenever the position of the rudder is less than a predetermined angle, conveniently forty-five degrees from the center position. In order, however, to prevent the rudder from being turned too far in either direction, the isolated plate 23 is used. Any movement of the rudder beyond a predetermined limit brings this plate under one or the other of the brushes 1 2 and breaks the circuit of motor F, so that the rudder can be driven no farther in that direction, but, as will be understood, the apparatus is in condition to turn the rudder over to the other side. In like manner the circuit of the propelling-motor D is controlled through brushes 5 and 6 and the segments on the outer circle of contacts of head L. If the short segments on either side of the circle are insulated, the motor D will be stopped whenever one of the brushes 5 or 6 passes onto one of them from the larger segments 7 8.

It is important to add that on all contact-points where a break occurs provision should be made to overcome the sparking and prevent the oscillation of electrical charges in the circuits, as such sparks and oscillations may affect the sensitive device. It is this consideration chiefly which makes it advisable to use the two relays K' K'', which otherwise might be dispensed with. They should be also placed as far as practicable from the sensitive device in order to guard the latter against any action of strong varying currents.

In addition to the mechanism described the vessel may carry any other devices or apparatus as might be required for accomplishing any special object of more or less importance. By way of illustration a small motor *m* is shown, Figs. 1 and 3, which conveniently serves for a number of purposes. This motor is shown connected in series with the armature of the steering-motor F, so that whenever either one of the circuits of the latter is closed through relays K' K'' the motor *m* is likewise rotated, but in all cases in the same direction. Its rotation is opposed by a spring *m'*, so that in normal operation, owing to the fact that the circuits of motor F are closed but a short time, the lever *m''*, which is fastened to one of the wheels of clockwork M, with which the armature of the motor is geared, will move but a short distance and upon cessation of the current return to a stop P; but if the circuits of the motor F are closed and opened rapidly in succession, which operation leaves the rudder unaffected, then the lever *m''* is moved to a greater angle, coming in contact with a metal plate *n*, and finally, if desired, with a post *n'*. Upon the lever *m''* coming in contact with plate *n* the current of the main battery passes either through one or other or both of the lights supported on standards *q q*, according to the position of brushes 3 and 4 relatively to the insulating-segment 23; but since the head L, carrying the segments, is geared to the rudder the position of the latter is in a general way determined by observing the lights. Both of the lights may be colored, and by flashing them up whenever desired the operator may guide at night the vessel in its course. For such purposes also the standards *r r* are provided, which should be painted in lively colors, so as to be visible by day at great distances. By opening and closing the circuits of motor F a greater number of times, preferably determined beforehand, the lever *m''* is brought in contact with post *n'*, thus closing the circuit of the main battery through a device *o* and bringing the latter into action at the moment desired. By similar contrivances or such as will readily suggest themselves to mechanicians any number of different devices may be operated.

Referring now to Fig. 9, which illustrates diagrammatically the system as practiced when directing the movements of a boat, in this figure S designates any source of electrical disturbance or oscillations the generation of which is controlled by a suitable switch contained in box T. The handle of the switch is movable in one direction only and stops on four points *l l' u u'*, so that as the handle passes from stop to stop oscillations are produced by the source during a very short time interval. There are thus produced four disturbances during one revolution and the receiving-circuit is affected four times; but it will be understood from the foregoing description of the controlling devices on the vessel that the rudder will be moved twice, once to right and once to left. Now I preferably place the handle of the switch so that when it is arrested on points *l l'*—that is, to the right or left of the operator—he is reminded that the vessel is being deflected to the right or left from its course, by which means the control is facilitated. The normal positions of the handle are therefore at *u u'* when the rudder is not acted upon, and it remains on the points *u u'* only so long as necessary. Since, as before stated, the working of the apparatus is

very sure, the operator is enabled to perform any such operations as provision is made for without even seeing the vessel.

The manner of using the apparatus and the operation of the several instrumentalities comprising the same is in detail as follows: Normally the plate L' is turned so that brush 2 rests upon the insulated segment 23 and brush 6 upon one of the insulated short segments in the rear of the circle. Under these conditions the rudder will be turned to starboard and the circuit of motor D interrupted between brushes 5 and 6. At the same time only one of the circuits of motor F—that controlled by relay K'—is capable of being closed, since brush 2, which connects with the other, is out of contact with the long segment 21. Assuming now that it is desired to start the vessel and direct it to a given point, the handle T is turned from its normal position on point *u'* to the point *l* on the switch-box. This sends out an electrical disturbance, which, passing through the receiving-circuit on the vessel, affects the sensitive device A' and starts the flow of current through the local circuit, including said device, the relay *a*, and the battery *a'*. This, as has been previously explained, turns the cylinder *j* and causes the brush J' to pass from insulation onto the contact *j''*. The battery *k''* is thus closed through relay K'', and the latter closes that circuit of the motor F which, starting from plate 22, which is permanently connected with one pole of the main battery, is completed through the brush 1, the field of motor F, wire 19, the armature of relay K'', wire 16, the motor *m*, the brushes and commutator of motor F, and wire 15 to the opposite terminal of the battery E. Motor F is thus set in operation to shift the rudder to port; but the movement of plate L' which follows brings the brush 6 back onto segment 8 and closes the circuit of the propelling-motor which starts the vessel. The motor F is permitted to run until the rudder has been turned sufficiently to steer the vessel in the desired direction, when the handle T is turned to the point *u*. This produces another action of the relay *a* and brush J' is shifted onto insulation and both relays K' and K'' are inactive. The rudder remains in the position to which it has been shifted by the motor F. If it be then desired to shift it to starboard, or in the opposite direction to that in which it was last moved, the handle T is simply turned to point *l'* and allowed to remain there until the motor F, which is now operated by relay K', the circuit of which is closed by strip J' coming into contact with plate *j''*, has done its work. The movement of handle T to the next point throws out both relays K' and K'', and the next movement causes a shifting of the rudder to port, and so on. Suppose, however, that after the rudder has been set at any angle to its middle position it be desired to shift it still farther in the same direction. In such case the handle is moved quickly over two points, so that the circuit which would move the rudder in the opposite direction is closed for too short a time interval to produce an appreciable effect and is allowed to rest on the third point until the rudder is shifted to the desired position, when the handle is moved to the next point, which again throws out both relays K' and K''. It will be understood that if the handle be held for a sufficiently long time upon either point *l* or *l'* the motor F will simply turn the plate L' in one direction or the other until the circuits of motors D and F are broken. It is furthermore evident that one relay K' or K'' will always be operative to start the motor F.

As previously explained, the longest period of operation of which the motor F is capable under ordinary conditions of use does not permit the motor *m* to shift the arm *m'* into contact with the plate *n*; but if the handle T be turned with a certain rapidity a series of current impulses will be directed through motor *m*; but as these tend to rotate the motor F in opposite directions they do not sensibly affect the latter, but act to rotate the motor *m* against the force of the coiled spring.

The invention which I have described will prove useful in many ways. Vessels or vehicles of any suitable kind may be used, as life, despatch, or pilot boats or the like, or for carrying letters, packages, provisions, instruments, objects, or materials of any description, for establishing communication with inaccessible regions and exploring the conditions existing in the same, for killing or capturing whales or other animals of the sea, and for many other scientific, engineering, or commercial purposes; but the greatest value of my invention will result from its effect upon warfare and armaments, for by reason of its certain and unlimited destructiveness it will tend to bring about and maintain permanent peace among nations.

Having now described my invention; what I claim is—

1. The improvement in the art of controlling the movements and operation of a vessel or vehicle herein described, which consists in producing waves or disturbances which are conveyed to the vessel by the natural media, actuating thereby suitable apparatus on the vessel and effecting the control of the propelling-engine, the steering and other mechanism by the operation of the said apparatus, as set forth.

2. The improvement in the art of controlling the movements and operation of a vessel or vehicle, herein described, which consists in establishing a region of waves or disturbances, and actuating by their influence exerted at a distance the devices on such vessel or vehicle, which control the propelling, steering and other mechanism thereon, as set forth

3. The improvement in the art of controlling the movements and operation of a vessel

or vehicle, herein described, which consists in establishing a region of electrical waves or disturbances, and actuating by their influence, exerted at a distance, the devices on said vessel or vehicle, which control the propelling, steering and other mechanism thereon, as set forth.

4. The improvement in the art of controlling the movements and operation of a vessel or vehicle, herein described, which consists in providing on the vessel a circuit controlling the propelling, steering and other mechanism, adjusting or rendering such circuit sensitive to waves or disturbances of a definite character, establishing a region of such waves or disturbances, and rendering by their means the controlling-circuit active or inactive, as set forth.

5. The combination with a source of electrical waves or disturbances of a moving vessel or vehicle, and mechanism thereon for propelling, steering or operating the same, and a controlling apparatus adapted to be actuated by the influence of the said waves or disturbances at a distance from the source, as set forth.

6. The combination with a source of electrical waves or disturbances of a moving vessel or vehicle, mechanism for propelling, steering or operating the same, a circuit and means therein for controlling said mechanism, and means for rendering said circuit active or inactive through the influence of the said waves or disturbances exerted at a distance from the source, as set forth.

7. The combination with a source of electrical waves or disturbances and means for starting and stopping the same, of a vessel or vehicle, propelling and steering mechanism carried thereby, a circuit containing or connected with means for controlling the operation of said mechanism and adjusted or rendered sensitive to the waves or disturbances of the source, as set forth.

8. The combination with a source of electrical waves or disturbances, and means for starting and stopping the operation of the same, of a vessel or vehicle, propelling and steering mechanism carried thereby, local circuits controlling said mechanisms, a circuit sensitive to the waves or disturbances of the source and means therein adapted to control the said local circuits, as and for the purpose set forth.

9. The sensitive device herein described comprising in construction a receptacle containing a material such as particles of oxidized metal forming a part of the circuit, and means for turning the same end for end when the material has been rendered active by the passage through it of an electric discharge, as set forth.

10. The sensitive device herein described, comprising in combination a receptacle containing a material such as particles of oxidized metal forming a part of an electric circuit, an electromagnet in said circuit, and devices controlled thereby for turning the receptacle end for end when said magnet is energized, as set forth.

11. The sensitive device herein described, comprising in combination a receptacle containing a material such as particles of oxidized metal forming part of an electric circuit, a motor for rotating the receptacle, an electromagnet in circuit with the material, and an escapement controlled by said magnet and adapted to permit a half-revolution of the receptacle when the said magnet is energized, as set forth.

12. The combination with a movable body or vehicle, of a propelling-motor, a steering-motor and electrical contacts carried by a moving portion of the steering mechanism, and adapted in certain positions of the latter to interrupt the circuit of the propelling-motor, a local circuit and means connected therewith for controlling the steering-motor, and a circuit controlling the local circuit and means for rendering said controlling-circuit sensitive to the influence of electric waves or disturbances exerted at a distance from their source, at set forth.

13. The combination with the steering-motor, a local circuit for directing current through the same in opposite directions, a controlling-circuit rendered sensitive to the influence of electric waves or disturbances exerted at a distance from their source, a motor in circuit with the steering-motor but adapted to run always in the same direction, and a local circuit or circuits controlled by said motor, as set forth.

NIKOLA TESLA.

Witnesses:
RAPHAËL NETTER,
GEORGE SCHERFF.

P-371

No. 613,809. Patented Nov. 8, 1898.

N. TESLA.

METHOD OF AND APPARATUS FOR CONTROLLING MECHANISM OF MOVING VESSELS OR VEHICLES.

(Application filed July 1, 1898.)

(No Model.) 5 Sheets—Sheet 1.

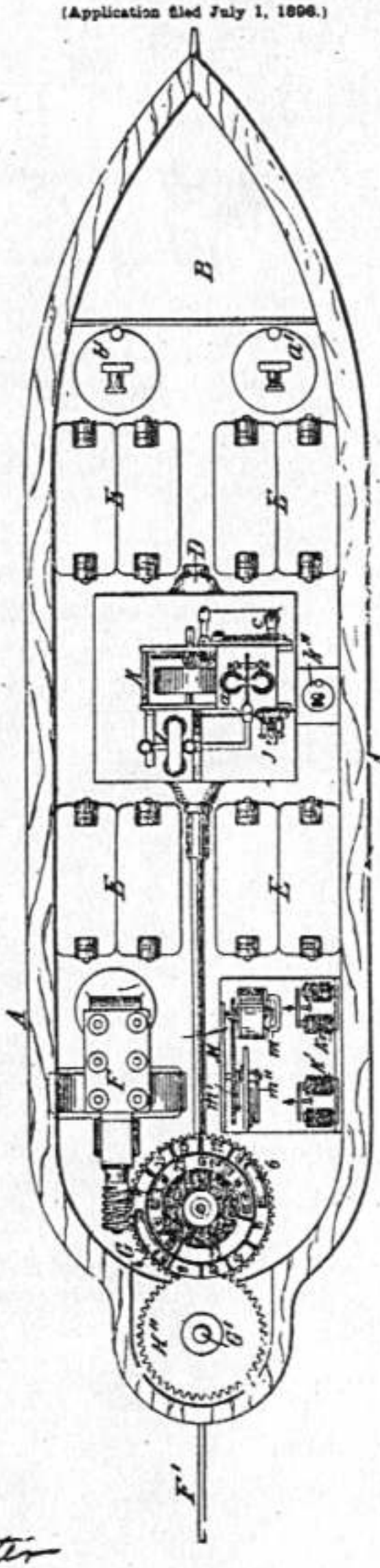

Fig. 1.

Witnesses:
Raphael Netter
George Scherff.

Inventor
Nikola Tesla

36*

P-372

No. 613,809 Patented Nov. 8, 1898.

N. TESLA.

METHOD OF AND APPARATUS FOR CONTROLLING MECHANISM OF MOVING VESSELS OR VEHICLES.

(Application filed July 1, 1898.)

(No Model.) 5 Sheets—Sheet 2.

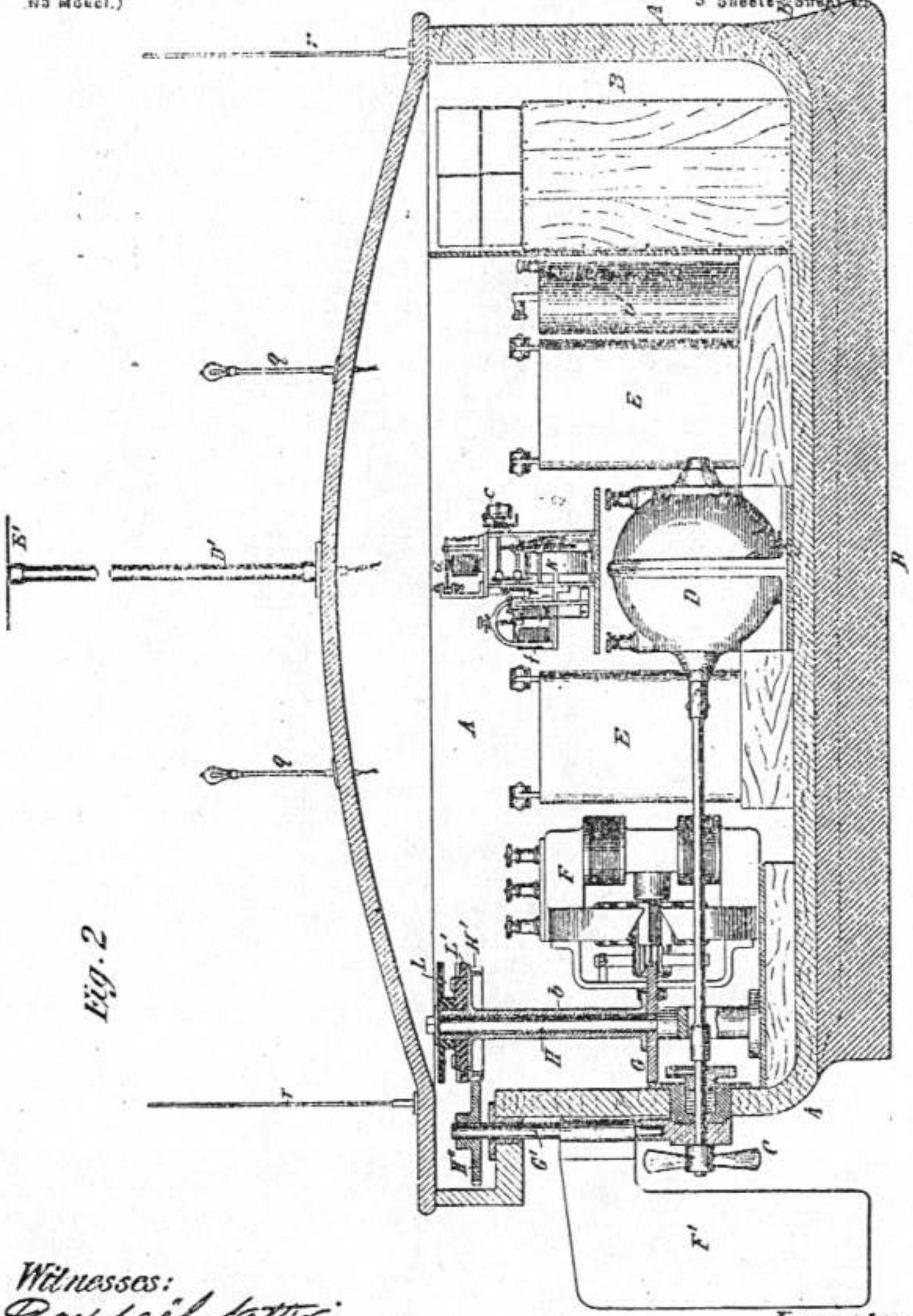

Fig. 2.

Witnesses:
Raphael Netter.
George Scherff

Inventor:
Nikola Tesla

P-373

No. 613,809. Patented Nov. 8, 1898.

N. TESLA.

METHOD OF AND APPARATUS FOR CONTROLLING MECHANISM OF MOVING VESSELS OR VEHICLES.

(Application filed July 1, 1898.)

(No Model.) 5 Sheets—Sheet 3.

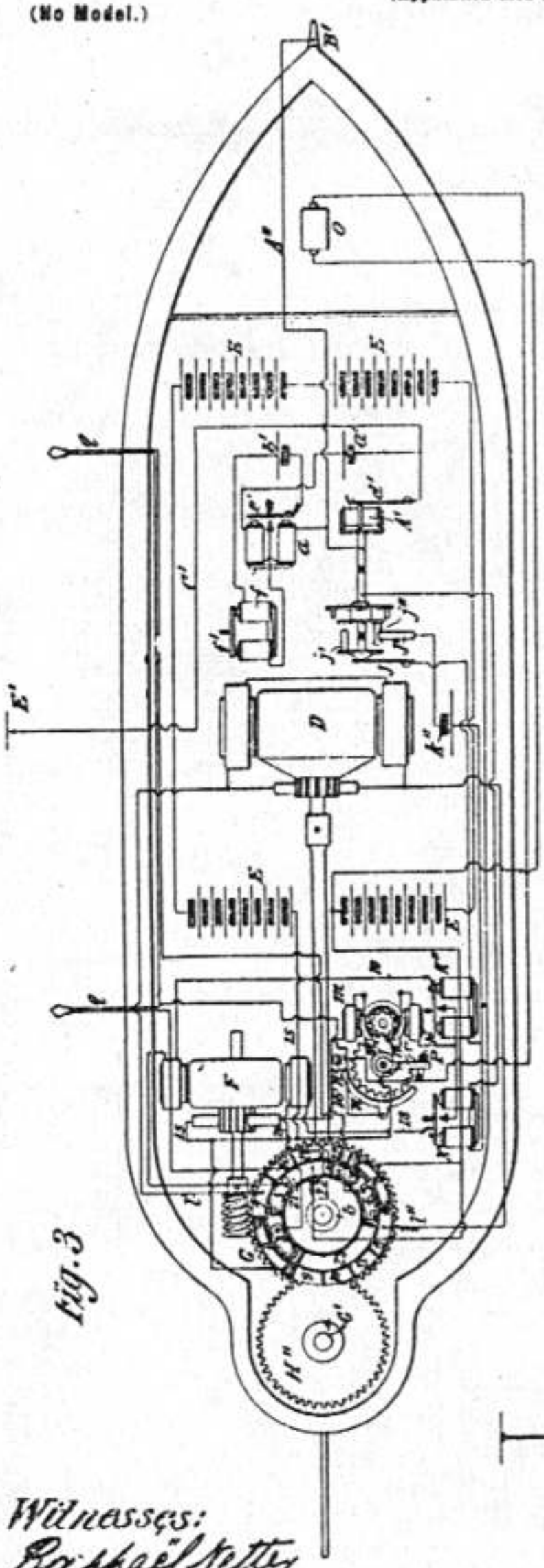

Fig. 3

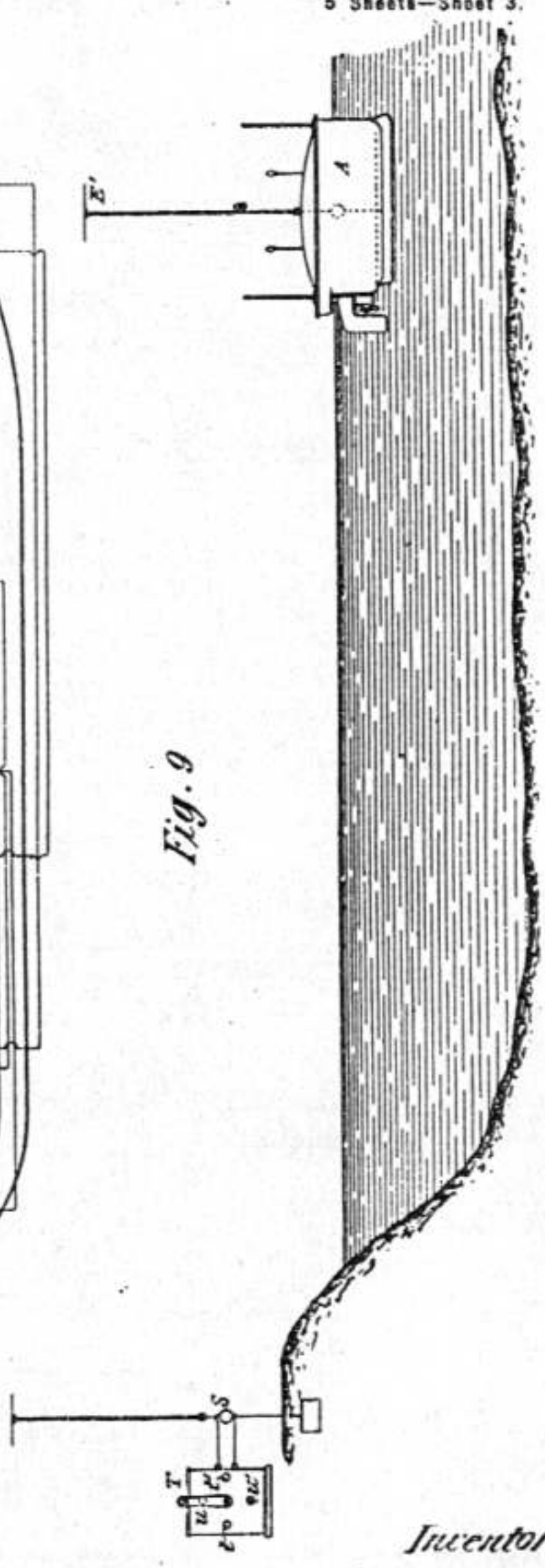

Fig. 9

Witnesses:
Raphael Netter
George Schieff

Inventor
Nikola Tesla

P-374

No. 613,809. Patented Nov. 8. 1898.

N. TESLA.

METHOD OF AND APPARATUS FOR CONTROLLING MECHANISM OF MOVING VESSELS OR VEHICLES.

(Application filed July 1, 1898.)

(No Model.) 5 Sheets—Sheet 4.

Fig. 5

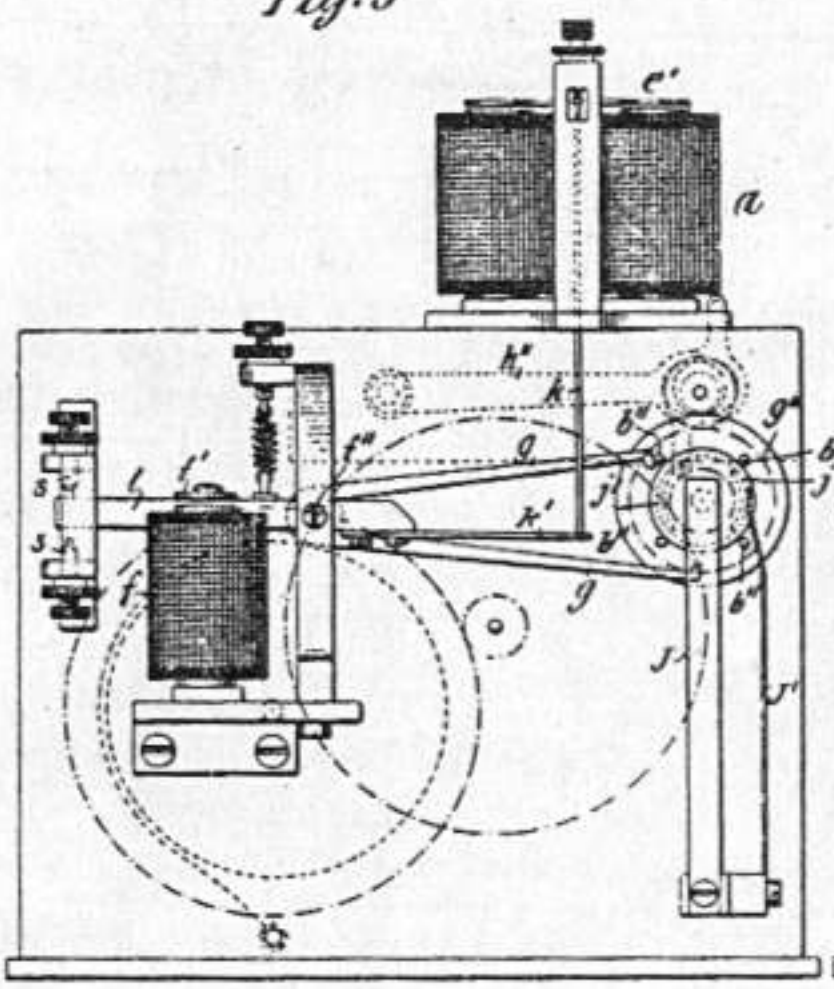

Fig. 6

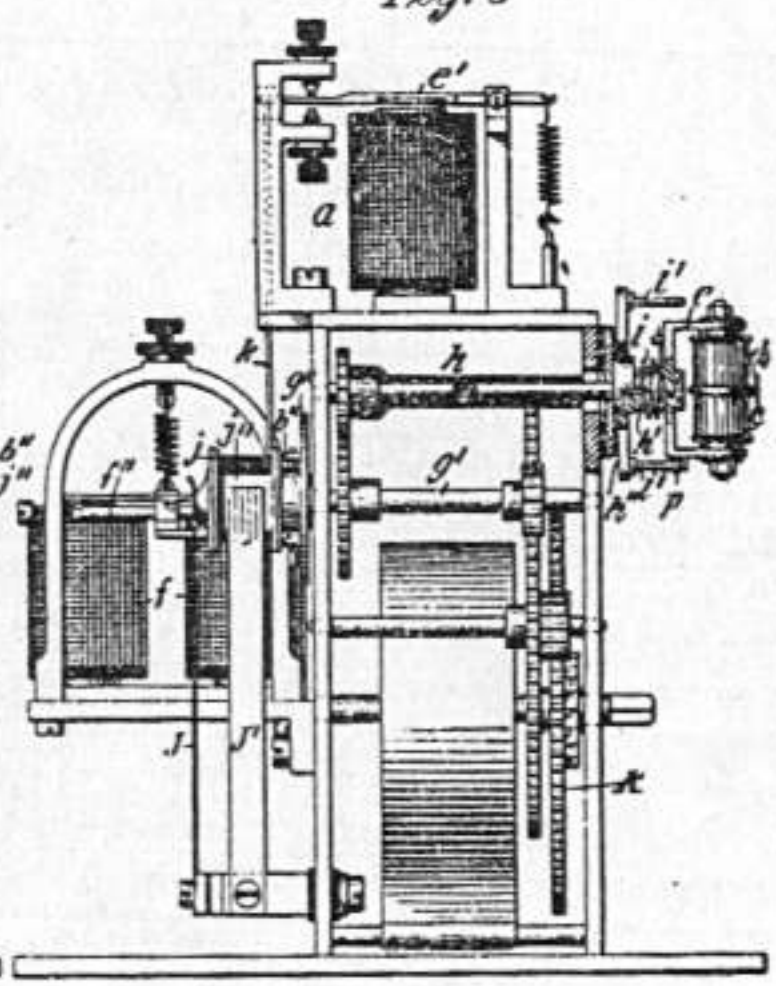

Fig. 4

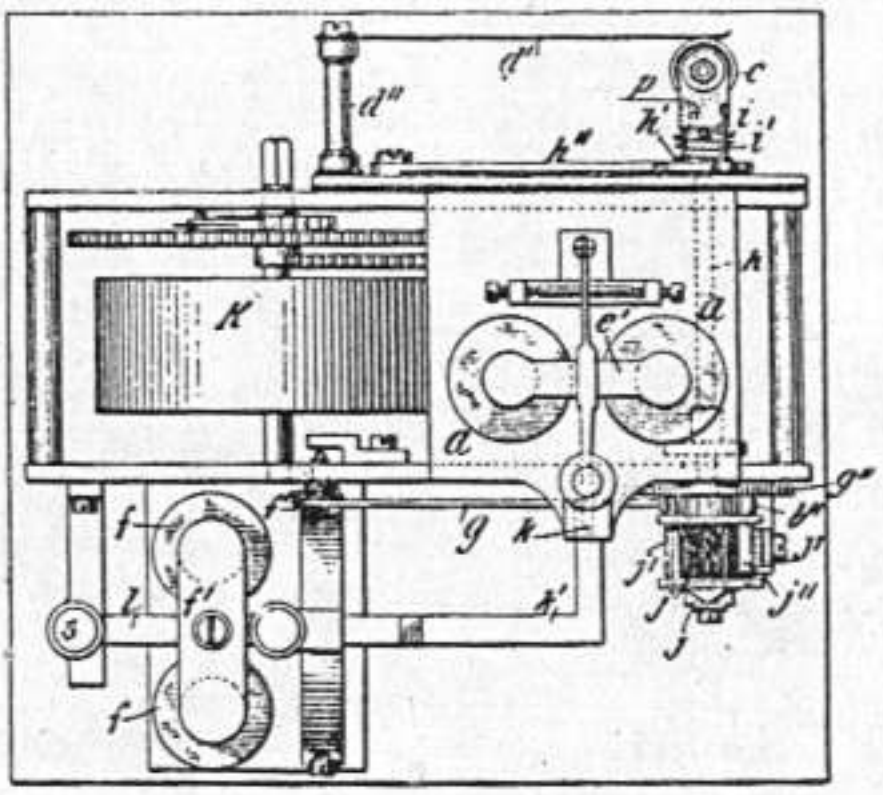

Fig. 8

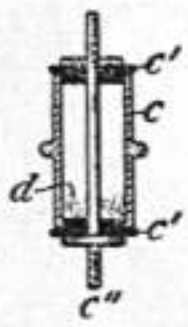

Fig. 7

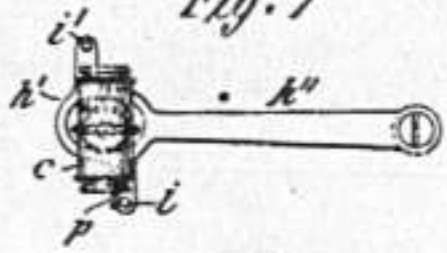

Witnesses:
Raphael Netter
George Scherff

Inventor:
Nikola Tesla

No. 613,809. Patented Nov. 8, 1898.

N. TESLA.

METHOD OF AND APPARATUS FOR CONTROLLING MECHANISM OF MOVING VESSELS OR VEHICLES.

(Application filed July 1, 1898.)

(No Model.) 5 Sheets—Sheet 5.

Fig. 10

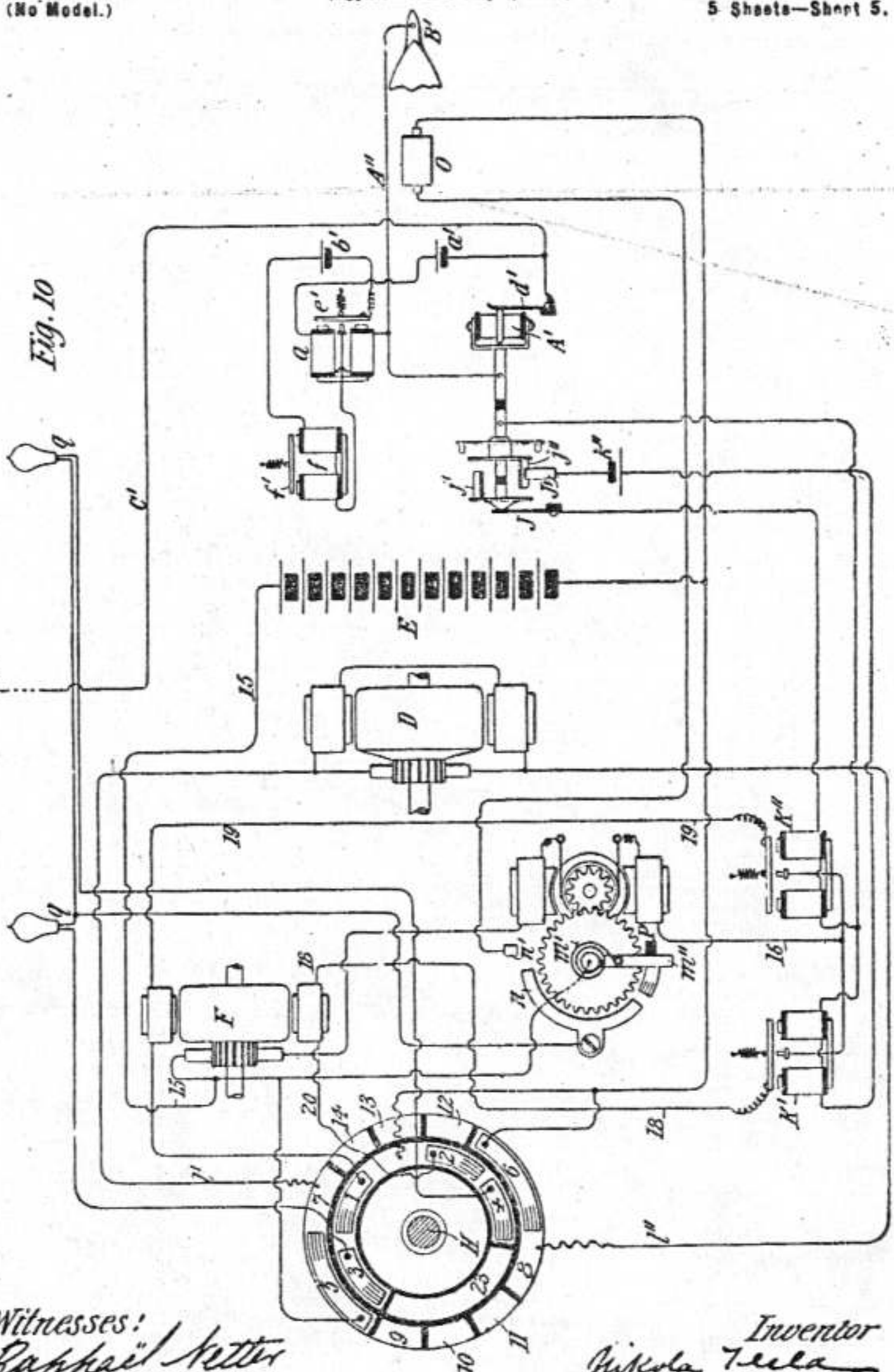

Witnesses!
Raphael Netter
H. Lawson Dyer.

Inventor
Nikola Tesla
By Kerr, Curtis & Page
attys.

VII
TURBINES AND SIMILAR APPARATUS

UNITED STATES PATENT OFFICE.

NIKOLA TESLA, OF NEW YORK, N. Y.

FLUID PROPULSION.

1,061,142. Specification of Letters Patent. Patented May 6, 1913.

Application filed October 21, 1909. Serial No. 523,832.

To all whom it may concern:

Be it known that I, NIKOLA TESLA, a citizen of the United States, residing at New York, in the county and State of New York, have invented certain new and useful Improvements in Fluid Propulsion, of which the following is a full, clear, and exact description.

In the practical application of mechanical power based on the use of a fluid as the vehicle of energy, it has been demonstrated that, in order to attain the highest economy, the changes in velocity and direction of movement of the fluid should be as gradual as possible. In the present forms of such apparatus more or less sudden changes, shocks and vibrations are unavoidable. Besides, the employment of the usual devices for imparting energy to a fluid, as pistons, paddles, vanes and blades, necessarily introduces numerous defects and limitations and adds to the complication, cost of production and maintenance of the machine.

The object of my present invention is to overcome these deficiencies in apparatus designed for the propulsion of fluids and to effect thereby the transmission and transformation of mechanical energy through the agency of fluids in a more perfect manner, and by means simpler and more economical than those heretofore employed. I accomplish this by causing the propelled fluid to move in natural paths or stream lines of least resistance, free from constraint and disturbance such as occasioned by vanes or kindred devices, and to change its velocity and direction of movement by imperceptible degrees, thus avoiding the losses due to sudden variations while the fluid is receiving energy.

It is well known that a fluid possesses, among others, two salient properties: adhesion and viscosity. Owing to these a body propelled through such a medium encounters a peculiar impediment known as "lateral" or "skin resistance" which is twofold; one arising from the shock of the fluid against the asperities of the solid substance, the other from internal forces opposing molecular separation. As an inevitable consequence, a certain amount of the fluid is dragged along by the moving body. Conversely, if the body be placed in a fluid in motion, for the same reasons, it is impelled in the direction of movement. These effects, in themselves, are of daily observation, but I believe that I am the first to apply them in a practical and economical manner for imparting energy to or deriving it from a fluid.

The subject of this application is an invention pertaining to the art of imparting energy to fluids, and I shall now proceed to describe its nature and the principles of construction of the apparatus which I have devised for carrying it out by reference to the accompanying drawings which illustrate an operative and efficient embodiment of the same.

Figure 1 is a partial end view, and Fig. 2 is a vertical cross section of a pump or compressor constructed and adapted to be operated in accordance with my invention.

In these drawings the device illustrated contains a runner composed of a plurality of flat rigid disks 1 of a suitable diameter, keyed to a shaft 2, and held in position by a threaded nut 3, a shoulder 4 and washers 5, of the requisite thickness. Each disk has a number of central openings 6, the solid portions between which form spokes 7, preferably curved, as shown, for the purpose of reducing the loss of energy due to the impact of the fluid. The runner is mounted in a two part volute casing 8, having stuffing boxes 9, and inlets 10 leading to its central portion. In addition a gradually widening and rounding outlet 11 is provided, formed with a flange for connection to a pipe as usual. The casing 8 rests upon a base 12, shown only in part, and supporting the bearings for the shaft 2, which, being of ordinary construction, are omitted from the drawings.

An understanding of the principle embodied in this device will be gained from the following description of its mode of operation. Power being applied to the shaft and the runner set in rotation in the direction of the solid arrow the fluid by reason of its properties of adherence and viscosity, upon entering through the inlets 10 and coming in contact with the disks 1 is taken hold of by the same and subjected to two forces, one acting tangentially in the direction of rotation, and the other radially outward. The combined effect of these tangential and centrifugal forces is to propel the fluid with continuously increasing velocity in a spiral path until it reaches the

outlet 11 from which it, is ejected. This spiral movement, free and undisturbed and essentially dependent on the properties of the fluid, permitting it to adjust itself to natural paths or stream lines and to change its velocity and direction by insensible degrees, is characteristic of this method of propulsion and advantageous in its application. While traversing the chamber inclosing the runner, the particles of the fluid may complete one or more turns, or but a part of one turn. In any given case their path can be closely calculated and graphically represented, but fairly accurate estimate of turns can be obtained simply by determining the number of revolutions required to renew the fluid passing through the chamber and multiplying it by the ratio between the mean speed of the fluid and that of the disks. I have found that the quantity of fluid propelled in this manner is, other conditions being equal, approximately proportionate to the active surface of the runner and to its effective speed. For this reason, the performance of such machines augments at an exceedingly high rate with the increase of their size and speed of revolution.

The dimensions of the device as a whole, and the spacing of the disks in any given machine will be determined by the conditions and requirements of special cases. It may be stated that the intervening distance should be the greater, the larger the diameter of the disks, the longer the spiral path of the fluid and the greater its viscosity. In general, the spacing should be such that the entire mass of the fluid, before leaving the runner, is accelerated to a nearly uniform velocity, not much below that of the periphery of the disks under normal working conditions and almost equal to it when the outlet is closed and the particles move in concentric circles. It may also be pointed out that such a pump can be made without openings and spokes in the runner, as by using one or more solid disks, each in its own casing, in which form the machine will be eminently adapted for sewage, dredging and the like, when the water is charged with foreign bodies and spokes or vanes especially objectionable.

Another application of this principle which I have discovered to be not only feasible, but thoroughly practicable and efficient, is the utilization of machines such as above described for the compression or rarefaction of air, or gases in general. In such cases it will be found that most of the general considerations obtaining in the case of liquids, properly interpreted, hold true. When, irrespective of the character of the fluid, considerable pressures are desired, staging or compounding may be resorted to in the usual way the individual runners being, preferably, mounted on the same shaft. It should be added that the same end may be attained with one single runner by suitable deflection of the fluid through rotative or stationary passages.

The principles underlying the invention are capable of embodiment also in that field of mechanical engineering which is concerned in the use of fluids as motive agents, for while in some respects the actions in the latter case are directly opposite to those met with in the propulsion of fluids, the fundamental laws applicable in the two cases are the same. In other words, the operation above described is reversible, for if water or air under pressure be admitted to the opening 11 the runner is set in rotation in the direction of the dotted arrow by reason of the peculiar properties of the fluid which traveling in a spiral path and with continuously diminishing velocity, reaches the orifices 6 and 10 through which it is discharged.

When apparatus of the general character above described is employed for the transmission of power, however, certain departures from structural similarity between transmitter and receiver may be necessary for securing the best result. I have, therefore, included that part of my invention which is directly applicable to the use of fluids as motive agents in a separate application filed January 17, 1911, Serial No. 603,049. It may be here pointed out, however, as is evident from the above considerations, that when transmitting power from one shaft to another by such machines, any desired ratio between the speeds of rotation may be obtained by proper selection of the diameters of the disks, or by suitably staging the transmitter, the receiver, or both. But it may be stated that in one respect, at least, the two machines are essentially different. In the pump, the radial or static pressure, due to centrifugal force, is added to the tangential or dynamic, thus increasing the effective head and assisting in the expulsion of the fluid. In the motor, on the contrary, the first named pressure, being opposed to that of supply, reduces the effective head and velocity of radial flow toward the center. Again, in the propelled machine a great torque is always desirable, this calling for an increased number of disks and smaller distance of separation, while in the propelling machine, for numerous economic reasons, the rotary effort should be the smallest and the speed the greatest practicable. Many other considerations, which will naturally suggest themselves, may affect the design and construction, but the preceding is thought to contain all necessary information in this regard.

It will be understood that the principles

of construction and operation above set forth, are capable of embodiment in machines of the most widely different forms, and adapted for the greatest variety of purposes. In the above, I have sought to describe and explain only the general and typical applications of the principle which I believe I am the first to realize and turn to useful account.

I do not claim in this application the method herein described of imparting energy to a fluid, having made that discovery the subject of a copending application Serial No. 735,914.

What I claim is:

1. A machine for propelling or imparting energy to fluids comprising in combination a plurality of spaced disks rotatably mounted and having plane surfaces, an inclosing casing, ports of inlet at the central portion of said casing and through which the fluid is adapted to be introduced to the axial portions of the disks, and ports of outlet at the peripheral portion of the casing through which the fluid, when the machine is driven by power, is adapted to be expelled, as set forth.

2. A machine for propelling or imparting energy to fluids, comprising in combination a volute casing provided with ports of inlet and outlet at its central and peripheral portions, respectively, and a runner mounted within the casing and composed of spaced disks with plane surfaces having openings adjacent to the axis of rotation.

3. A rotary pump, comprising in combination a plurality of spaced disks with plane surfaces mounted on a rotatable shaft and provided with openings adjacent thereto, a volute casing inclosing the said disks, means for admitting a fluid into that portion of the casing which contains the shaft and an outlet extending tangentially from the peripheral portion of said casing.

In testimony whereof I affix my signature in the presence of two subscribing witnesses.

NIKOLA TESLA.

Witnesses:
M. LAWSON DYER,
DRURY W. COOPER.

Copies of this patent may be obtained for five cents each, by addressing the "Commissioner of Patents, Washington, D. C."

P-382

N. TESLA.

FLUID PROPULSION.

APPLICATION FILED OCT. 21, 1909.

1,061,142. Patented May 6, 1913.

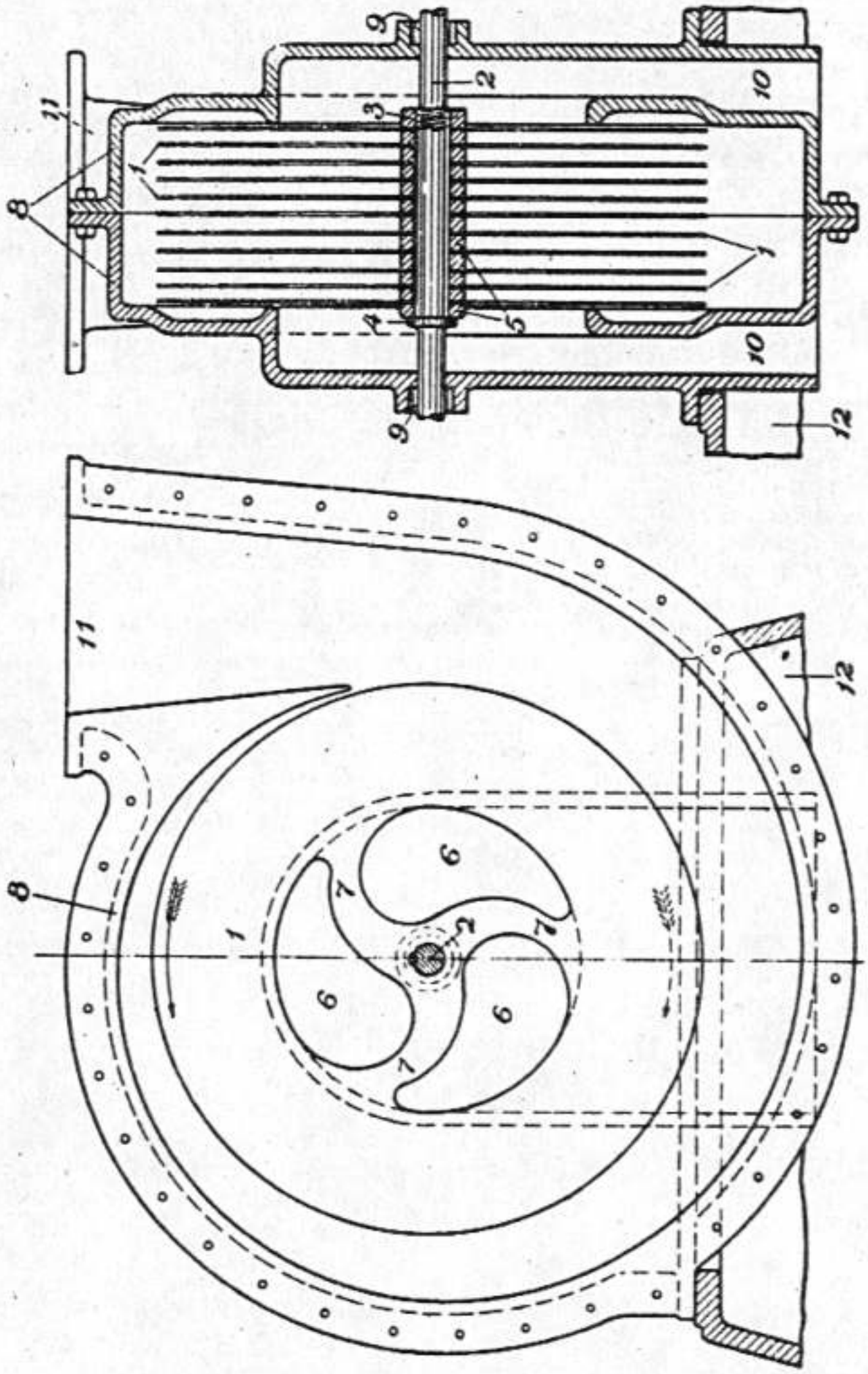

Fig 2

Fig 1

Witnesses.
R. Diaz Bentago
S. S. Dunham

Nikola Tesla,
Inventor

By his Attorneys
Kerr, Page, Cooper & Hayward

UNITED STATES PATENT OFFICE.

NIKOLA TESLA, OF NEW YORK, N. Y.

TURBINE.

1,061,206. Specification of Letters Patent. Patented May 6, 1913.

Original application filed October 21, 1909, Serial No. 523,832. Divided and this application filed January 17, 1911. Serial No. 603,049.

To all whom it may concern:

Be it known that I, NIKOLA TESLA, a citizen of the United States, residing at New York, in the county and State of New York, have invented certain new and useful Improvements in Rotary Engines and Turbines, of which the following is a full, clear, and exact description.

In the practical application of mechanical power, based on the use of fluid as the vehicle of energy, it has been demonstrated that, in order to attain the highest economy, the changes in the velocity and direction of movement of the fluid should be as gradual as possible. In the forms of apparatus heretofore devised or proposed, more or less sudden changes, shocks and vibrations are unavoidable. Besides, the employment of the usual devices for imparting to, or deriving energy from a fluid, such as pistons, paddles, vanes and blades, necessarily introduces numerous defects and limitations and adds to the complication, cost of production and maintenance of the machines.

The object of my invention is to overcome these deficiencies and to effect the transmission and transformation of mechanical energy through the agency of fluids in a more perfect manner and by means simpler and more economical than those heretofore employed. I accomplish this by causing the propelling fluid to move in natural paths or stream lines of least resistance, free from constraint and disturbance such as occasioned by vanes or kindred devices, and to change its velocity and direction of movement by imperceptible degrees, thus avoiding the losses due to sudden variations while the fluid is imparting energy.

It is well known that a fluid possesses, among others, two salient properties, adhesion and viscosity. Owing to these a solid body propelled through such a medium encounters a peculiar impediment known as "lateral" or "skin resistance," which is twofold, one arising from the shock of the fluid against the asperities of the solid substance, the other from internal forces opposing molecular separation. As an inevitable consequence a certain amount of the fluid is dragged along by the moving body. Conversely, if the body be placed in a fluid in motion, for the same reasons, it is impelled in the direction of movement. These effects, in themselves, are of daily observation, but I believe that I am the first to apply them in a practical and economical manner in the propulsion of fluids or in their use as motive agents.

In an application filed by me October 21st, 1909, Serial Number 523,832 of which this case is a division, I have illustrated the principles underlying my discovery as embodied in apparatus designed for the propulsion of fluids. The same principles, however, are capable of embodiment also in that field of mechanical engineering which is concerned in the use of fluids as motive agents, for while in certain respects the operations in the latter case are directly opposite to those met with in the propulsion of fluids, and the means employed may differ in some features, the fundamental laws applicable in the two cases are the same. In other words, the operation is reversible, for if water or air under pressure be admitted to the opening constituting the outlet of a pump or blower as described, the runner is set in rotation by reason of the peculiar properties of the fluid which, in its movement through the device, imparts its energy thereto.

The present application, which is a division of that referred to, is specially intended to describe and claim my discovery above set forth, so far as it bears on the use of fluids as motive agents, as distinguished from the applications of the same to the propulsion or compression of fluids.

In the drawings, therefore, I have illustrated only the form of apparatus designed for the thermo-dynamic conversion of energy, a field in which the applications of the principle have the greatest practical value.

Figure 1 is a partial end view, and Fig. 2 a vertical cross-section of a rotary engine or turbine, constructed and adapted to be operated in accordance with the principles of my invention.

The apparatus comprises a runner composed of a plurality of flat rigid disks 13 of suitable diameter, keyed to a shaft 16, and held in position thereon by a threaded nut 11, a shoulder 12, and intermediate washers 17. The disks have openings 14 adjacent to the shaft and spokes 15, which

may be substantially straight. For the sake of clearness, but a few disks, with comparatively wide intervening spaces, are illustrated.

The runner is mounted in a casing comprising two end castings 19, which contain the bearings for the shaft 16, indicated but not shown in detail; stuffing boxes 21 and outlets 20. The end castings are united by a central ring 22, which is bored out to a circle of a slightly larger diameter than that of the disks, and has flanged extensions 23, and inlets 24, into which finished ports or nozzles 25 are inserted. Circular grooves 26 and labyrinth packing 27 are provided on the sides of the runner. Supply pipes 28, with valves 29, are connected to the flanged extensions of the central ring, one of the valves being normally closed.

For a more ready and complete understanding of the principle of operation it is of advantage to consider first the actions that take place when the device is used for the propulsion of fluids for which purpose let it be assumed that power is applied to the shaft and the runner set in rotation say in a clockwise direction. Neglecting, for the moment, those features of construction that make for or against the efficiency of the device as a pump, as distinguished from a motor, a fluid, by reason of its properties of adherence and viscosity, upon entering through the inlets 20, and coming in contact with the disks 13, is taken hold of by the latter and subjected to two forces, one acting tangentially in the direction of rotation, and the other radially outward. The combined effect of these tangential and centrifugal forces is to propel the fluid with continuously increasing velocity in a spiral path until it reaches a suitable peripheral outlet from which it is ejected. This spiral movement, free and undisturbed and essentially dependent on the properties of the fluid, permitting it to adjust itself to natural paths or stream lines and to change its velocity and direction by insensible degrees, is a characteristic and essential feature of this principle of operation.

While traversing the chamber inclosing the runner, the particles of the fluid may complete one or more turns, or but a part of one turn, the path followed being capable of close calculation and graphic representation, but fairly accurate estimates of turns can be obtained simply by determining the number of revolutions required to renew the fluid passing through the chamber and multiplying it by the ratio between the mean speed of the fluid and that of the disks. I have found that the quantity of fluid propelled in this manner, is, other conditions being equal, approximately proportionate to the active surface of the runner and to its effective speed. For this reason, the performance of such machines augments at an exceedingly high rate with the increase of their size and speed of revolution.

The dimensions of the device as a whole, and the spacing of the disks in any given machine will be determined by the conditions and requirements of special cases. It may be stated that the intervening distance should should be the greater, the larger the diameter of the disks, the longer the spiral path of the fluid and the greater its viscosity. In general, the spacing should be such that the entire mass of the fluid, before leaving the runner, is accelerated to a nearly uniform velocity, not much below that of the periphery of the disks under normal working conditions, and almost equal to it when the outlet is closed and the particles move in concentric circles.

Considering now the converse of the above described operation and assuming that fluid under pressure be allowed to pass through the valve at the side of the solid arrow, the runner will be set in rotation in a clockwise direction, the fluid traveling in a spiral path and with continuously diminishing velocity until it reaches the orifices 14 and 20, through which it is discharged. If the runner be allowed to turn freely, in nearly frictionless bearings, its rim will attain a speed closely approximating the maximum of that of the adjacent fluid and the spiral path of the particles will be comparatively long, consisting of many almost circular turns. If load is put on and the runner slowed down, the motion of the fluid is retarded, the turns are reduced, and the path is shortened.

Owing to a number of causes affecting the performance, it is difficult to frame a precise rule which would be generally applicable, but it may be stated that within certain limits, and other conditions being the same, the torque is directly proportionate to the square of the velocity of the fluid relatively to the runner and to the effective area of the disks and, inversely, to the distance separating them. The machine will, generally, perform its maximum work when the effective speed of the runner is one-half of that of the fluid; but to attain the highest economy, the relative speed or slip, for any given performance, should be as small as possible. This condition may be to any desired degree approximated by increasing the active area of and reducing the space between the disks.

When apparatus of the kind described is employed for the transmission of power certain departures from similarity between transmitter and receiver are necessary for securing the best results. It is evident that, when transmitting power from one shaft to another by such machines, any desired ratio between the speeds of rotation may be obtained by a proper selection of the diameters of the disks, or by suitably staging the

transmitter, the receiver or both. But it may be pointed out that in one respect, at least, the two machines are essentially different. In the pump, the radial or static pressure, due to centrifugal force, is added to the tangential or dynamic, thus increasing the effective head and assisting in the expulsion of the fluid. In the motor, on the contrary, the first named pressure, being opposed to that of supply, reduces the effective head and the velocity of radial flow toward the center. Again. in the propelled machine a great torque is always desirable, this calling for an increased number of disks and smaller distance of separation, while in the propelling machine, for numerous economic reasons, the rotary effort should be the smallest and the speed the greatest practicable. Many other considerations, which will naturally suggest themselves, may affect the design and construction, but the preceding is thought to contain all necessary information in this regard.

In order to bring out a distinctive feature, assume, in the first place, that the motive medium is admitted to the disk chamber through a port, that is a channel which it traverses with nearly uniform velocity. In this case, the machine will operate as a rotary engine, the fluid continuously expanding on its tortuous path to the central outlet. The expansion takes place chiefly along the spiral path, for the spread inward is opposed by the centrifugal force due to the velocity of whirl and by the great resistance to radial exhaust. It is to be observed that the resistance to the passage of the fluid between the plates is, approximately, proportionate to the square of the relative speed, which is maximum in the direction toward the center and equal to the full tangential velocity of the fluid. The path of least resistance, necessarily taken in obedience to a universal law of motion is, virtually, also that of least relative velocity. Next, assume that the fluid is admitted to the disk chamber not through a port, but a diverging nozzle, a device converting wholly or in part, the expansive into velocity-energy. The machine will then work rather like a turbine, absorbing the energy of kinetic momentum of the particles as they whirl, with continuously decreasing speed, to the exhaust.

The above description of the operation, I may add, is suggested by experience and observation, and is advanced merely for the purpose of explanation. The undeniable fact is that the machine does operate, both expansively and impulsively. When the expansion in the nozzles is complete, or nearly so, the fluid pressure in the peripheral clearance space is small; as the nozzle is made less divergent and its section enlarged, the pressure rises, finally approximating that of the supply. But the transition from purely impulsive to expansive action may not be continuous throughout, on account of critical states and conditions and comparatively great variations of pressure may be caused by small changes of nozzle velocity.

In the preceding it has been assumed that the pressure of supply is constant or continuous, but it will be understood that the operation will be, essentially the same if the pressure be fluctuating or intermittent, as that due to explosions occurring in more or less rapid succession.

A very desirable feature, characteristic of machines constructed and operated in accordance with this invention, is their capability of reversal of rotation. Fig. 1, while illustrative of a special case, may be regarded as typical in this respect. If the right hand valve be shut off and the fluid supplied through the second pipe, the runner is rotated in the direction of the dotted arrow, the operation, and also the performance remaining the same as before, the central ring being bored to a circle with this purpose in view. The same result may be obtained in many other ways by specially designed valves, ports or nozzles for reversing the flow, the description of which is omitted here in the interest of simplicity and clearness. For the same reasons but one operative port or nozzle is illustrated which might be adapted to a volute but does not fit best a circular bore. It will be understood that a number of suitable inlets may be provided around the periphery of the runner to improve the action and that the construction of the machine may be modified in many ways.

Still another valuable and probably unique quality of such motors or prime movers may be described. By proper construction and observance of working conditions the centrifugal pressure, opposing the passage of the fluid, may, as already indicated, be made nearly equal to the pressure of supply when the machine is running idle. If the inlet section be large, small changes in the speed of revolution will produce great differences in flow which are further enhanced by the concomitant variations in the length of the spiral path. A self-regulating machine is thus obtained bearing a striking resemblance to a direct-current electric motor in this respect that, with great differences of impressed pressure in a wide open channel the flow of the fluid through the same is prevented by virture of rotation. Since the centrifugal head increases as the square of the revolutions, or even more rapidly, and with modern high grade steel great peripheral velocities are practicable, it is possible to attain that condition in a single stage machine, more readily if the runner be of large diameter. Obviously this problem is

facilitated by compounding, as will be understood by those skilled in the art. Irrespective of its bearing on economy, this tendency which is, to a degree, common to motors of the above description, is of special advantage in the operation of large units, as it affords a safeguard against running away and destruction. Besides these, such a prime mover possesses many other advantages, both constructive and operative. It is simple, light and compact, subject to but little wear, cheap and exceptionally easy to manufacture as small clearances and accurate milling work are not essential to good performance. In operation it is reliable, there being no valves, sliding contacts or troublesome vanes. It is almost free of windage, largely independent of nozzle efficiency and suitable for high as well as for low fluid velocities and speeds of revolution.

It will be understood that the principles of construction and operation above generally set forth, are capable of embodiment in machines of the most widely different forms, and adapted for the greatest variety of purposes. In my present specification I have sought to describe and explain only the general and typical applications of the principle which I believe I am the first to realize and turn to useful account.

What I claim is:

1. A machine adapted to be propelled by a fluid consisting in the combination with a casing having inlet and outlet ports at the peripheral and central portions, respectively, of a rotor having plane spaced surfaces between which the fluid may flow in natural spirals and by adhesive and viscous action impart its energy of movement to the rotor, as described.

2. A machine adapted to be propelled by a fluid, comprising a rotor composed of a plurality of plane spaced disks mounted on a shaft and open at or near the same, an inclosing casing with a peripheral inlet or inlets, in the plane of the disks, and an outlet or outlets in its central portion, as described.

3. A rotary engine adapted to be propelled by adhesive and viscous action of a continuously expanding fluid comprising in combination a casing forming a chamber, an inlet or inlets tangential to the periphery of the same, and an outlet or outlets in its central portion, with a rotor composed of spaced disks mounted on a shaft, and open at or near the same, as described.

4. A machine adapted to be propelled by fluid, consisting in the combination of a plurality of disks mounted on a shaft and open at or near the same, and an inclosing casing with ports or passages of inlet and outlet at the peripheral and central portions, respectively, the disks being spaced to form passages through which the fluid may flow, under the combined influence of radial and tangential forces, in a natural spiral path from the periphery toward the axis of the disks, and impart its energy of movement to the same by its adhesive and viscous action thereon, as set forth.

5. A machine adapted to be propelled by a fluid comprising in combination a plurality of spaced disks rotatably mounted and having plane surfaces, an inclosing casing and ports or passages of inlet and outlet adjacent to the periphery and center of the disks, respectively, as set forth.

6. A machine adapted to be propelled by a fluid comprising in combination a runner composed of a plurality of disks having plane surfaces and mounted at intervals on a central shaft, and formed with openings near their centers, and means for admitting the propelling fluid into the spaces between the disks at the periphery and discharging it at the center of the same, as set forth.

7. A thermo-dynamic converter, comprising in combination a series of rotatably mounted spaced disks with plane surfaces, an inclosing casing, inlet ports at the peripheral portion and outlet ports leading from the central portion of the same, as set forth.

8. A thermo-dynamic converter, comprising in combination a series of rotatably mounted spaced disks with plane surfaces and having openings adjacent to their central portions, an inclosing casing, inlet ports in the peripheral portion, and outlet ports leading from the central portion of the same, as set forth.

In testimony whereof I affix my signature in the presence of two subscribing witnesses

NIKOLA TESLA.

Witnesses:
M. Lawson Dyer,
Wm. Bohleber.

Copies of this patent may be obtained for five cents each, by addressing the "Commissioner of Patents, Washington, D. C."

P-387

N. TESLA.

TURBINE.

APPLICATION FILED JAN. 17, 1911.

1,061,206.

Patented May 6, 1913.

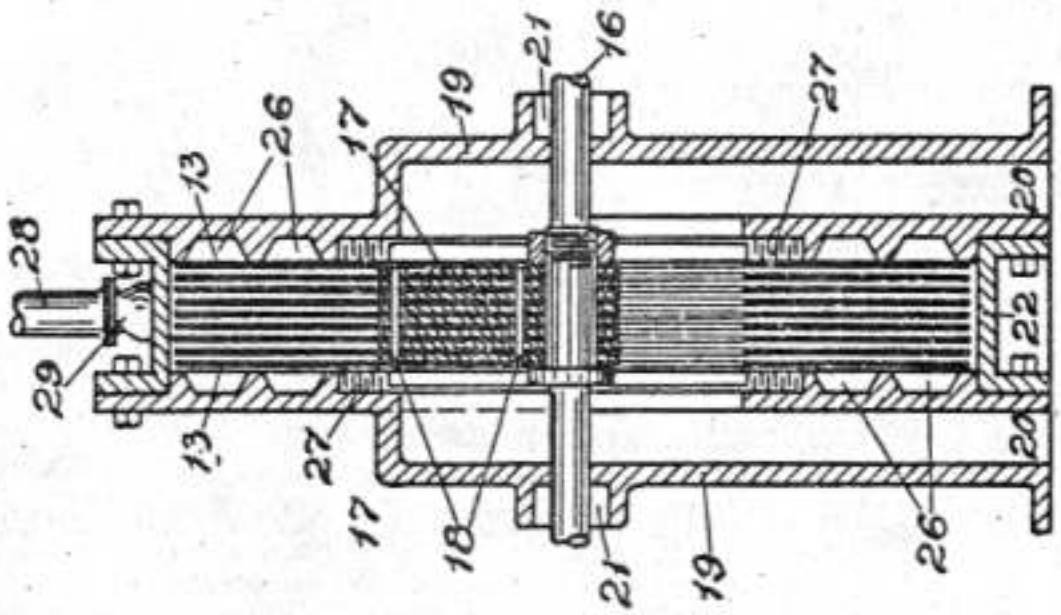

Fig. 2.

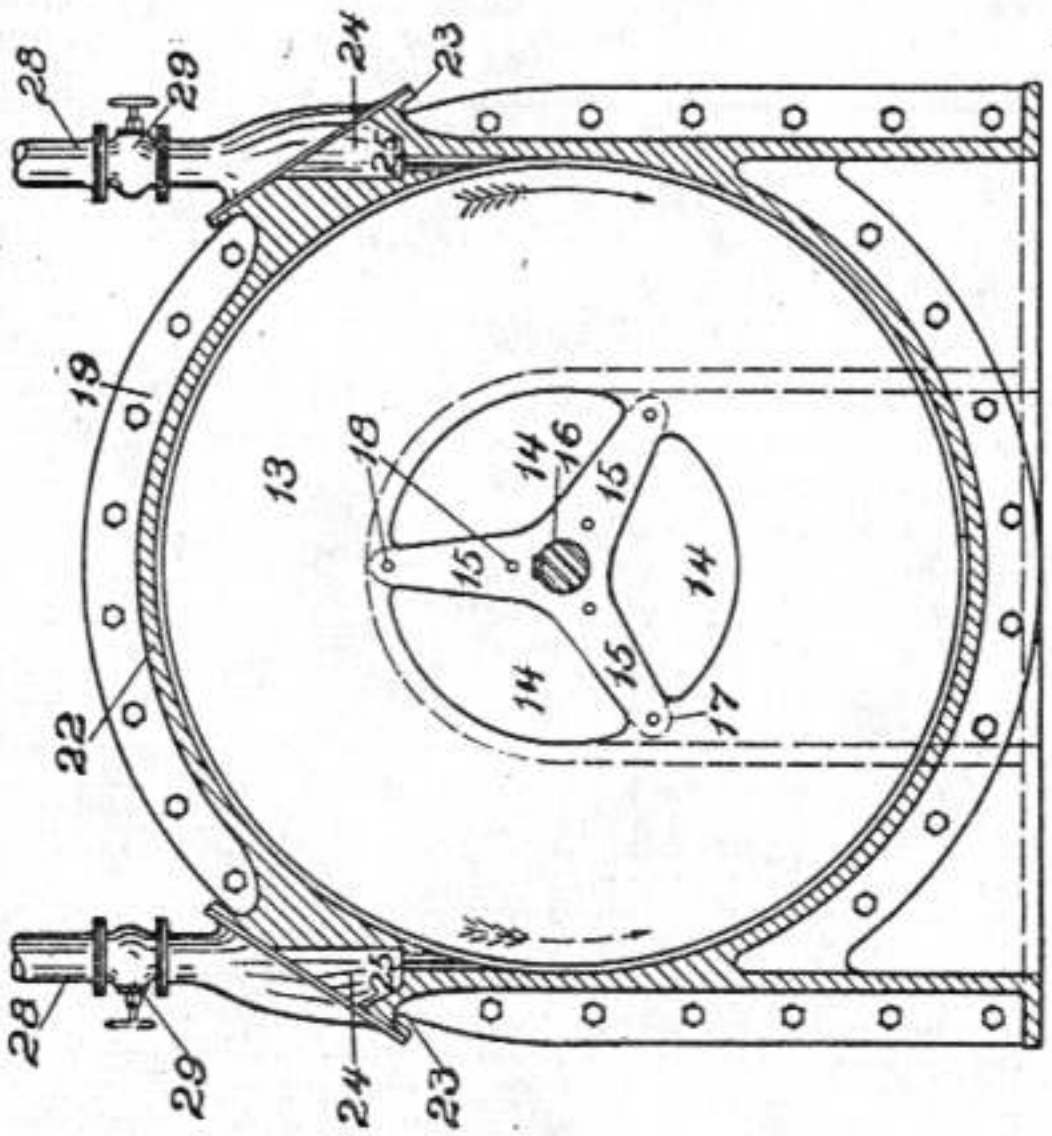

Fig. 1.

Witnesses:
R. Diaz Armitage
Wm. Bohleber

Nikola Tesla, Inventor

By his Attorneys
Kerr Page Cooper & Hayward

37*

UNITED STATES PATENT OFFICE.

NIKOLA TESLA, OF NEW YORK, N. Y., ASSIGNOR TO WALTHAM WATCH COMPANY, OF WALTHAM, MASSACHUSETTS, A CORPORATION OF MASSACHUSETTS.

SPEED-INDICATOR.

1,209,359. Specification of Letters Patent. Patented Dec. 19, 1916.

Application filed May 29, 1914. Serial No. 841,726.

To all whom it may concern:

Be it known that I, NIKOLA TESLA, a citizen of the United States, residing at New York, in the county and State of New York, have invented certain new and useful Improvements in Speed-Indicators, of which the following is a full, clear, and exact description.

In the provision of speed indicators, that give direct readings of rate of motion,—for example shaft speeds in terms of revolutions per minute or vehicle speeds in miles per hour—it is obviously important that the instrument be simple, inexpensive and durable, and that its indications be correct throughout a wide range of speed. Likewise it is very desirable that its operation shall be subject to little or no appreciable deviation from accuracy under normal or expected extraneous changes, such as those of atmospheric density, temperature, or magnetic influence, in order that the structure may be free from any complications incident to the employment of specific means compensating for such varying conditions.

My present invention supplies a speed measuring appliance amply satisfying commercial demands as above stated, in a structure wherein the adhesion and viscosity of a gaseous medium, preferably air, is utilized for torque-transmission between the driving and driven members.

More particularly, my invention provides a rotatable primary and a mechanically resistant or biased pivoted secondary element, coöperating through an intervening fluid medium to produce, inherently, without the use of compensating instrumentalities, angular displacements of the secondary element in linear proportion to the rate of rotation of the primary, so that the reading scale may be uniformly graduated. This latter advantage is secured through the application of novel principles, discovered by me, which will be presently elucidated.

In investigating the effects of fluids in motion upon rotative systems I have observed that under certain conditions to be hereafter defined, the drag or turning effort exerted by the fluid is exactly proportionate to its velocity relative to the system. This I have found to be true of gaseous and liquid media, with the distinction however, that the limits within which the law holds good are narrower for the latter, especially so when the specific gravity or the viscosity of the liquid is great.

Having determined the conditions under which the law of proportionality of torque to speed (rather than to the square of the speed or to some higher exponential function of the same) holds good, I have applied my discoveries in the production of new devices—essentially indicators of speed but having wider fields of use—which are, in many aspects, superior to other forms of speedometers.

Specifically I have devised rate-of-motion indicators which comprise driving and driven members with confronting, closely-adjacent, noncontacting, smooth, annular surfaces of large area, coacting in the transmission of torque through the viscosity and adhesion of interposed thin films of air,—mechanical structures offering numerous constructive and operative advantages. Furthermore, by properly designing and coordinating the essential elements of such instruments I have secured substantial linear proportionality between the deflections of the indicating or secondary element and the rate of rotation of the driving or primary member.

The conditions more or less indispensable for this most perfect embodiment of my invention—that is to say, embodiment in a speed indicator approximating rigorous linear proportionality of deflection to speed—are:

1. The arrangement should be such that the exchange of fluid acting on the system is effectively prevented or minimized. If new fluid were permitted to pass freely between the elements there would be, as in a pump, with the rise and fall of velocity, corresponding changes of quantity and the torque would not vary directly as the speed, but as an exponential function of the same. Broadly speaking, such provision as is commonly made in hydraulic brakes for free circulation of fluid with respect to the rotative system, with the attendant acceleration and retardation of the flow, will generally produce a torque varying as the square of the speed, subject however, in practice, to influences which may cause it to change according to still higher powers. For this reason confinement of the fluid intervening between the primary and secondary elements of the system so that such active, torque-

transmitting medium may remain resident, and not be constantly renewed, is vital to complete attainment of the desired linear proportionality.

2. The spaces or channels inclosing the active medium should be as narrow as practicable, although within limits this is relative, the range of effective separation increasing with the diameter of the juxtaposed rotative surfaces. My observations have established that when the spacing is so wide as to accommodate local spiral circulation in the resident fluid between the confronting areas, marked departures from rigorous proportionality of torque to speed occur. Therefore in small instruments with primary members of but few inches diameter, it is desirable that the channels should be as narrow as is mechanically feasible with due regard to the importance of maintaining the noncontacting relation of the rotative parts.

3. The velocity of the fluid relative to the system should be as small as the circumstances of the case will permit. When a gas such as air is the active medium, it may be 100 feet per second or even more, but with liquids speeds of that order cannot be used without detriment.

4. The bodies exposed to the action of the fluid should be symmetrically shaped and with smooth surfaces, devoid of corners or projections which give rise to destructive eddies that are particularly hurtful.

5. The system should be so shaped and disposed that no part of the moving fluid except that contained in the spaces or channels can effect materially the torque. If this rule is not observed the accuracy of the instrument may be impaired to an appreciable degree, for even though torque transmission between the confronting surfaces is proportional, there may yet be a component of the rotary effort (through the fluid coacting with the external surfaces) proportional to an exponential function of the speed. Hence it is desirable that by a closely investing casing, or other means, the torque-transmitting effect of fluid outside of the channels between the rotative parts be minimized.

6. In general the flow of the medium should be calm and entirely free from all turbulent action As soon as there is a break of continuity the law above stated is violated and the indications of the device cease to be rigorously precise.

These requirements can be readily fulfilled and the above discoveries applied to a great many valuable uses, as for indicating the speed of rotation or translation, respectively, of a shaft, or a vehicle, such as an automobile, locomotive, boat or aerial vessel; for determining the velocity of a fluid in motion; for measuring the quantity of flow in steam, air, gas, water or oil supply; for ascertaining the frequency of mechanical and electrical impulses or oscillations; for determining physical constants; and for numerous other purposes of scientific and practical importance.

The nature and object of the invention will be clearly understood from the succeeding description with reference to the accompanying drawings in which:

Figure 1 represents a vertical cross section of a speed indicator or hand tachometer embodying the above principles; Fig. 2 is a horizontal view of the instrument disclosing part of the scale, and Figs. 3 and 4 are diagrammatic illustrations showing modified constructions of the main parts in a similar device.

Referring to Fig. 1, 1 is a pulley-shaped metal disk from three to four inches in diameter constituting the freely-rotatable primary element. It is fastened to a driveshaft 2 which is turned to fit a hole in the central hub 3 of the casting 4. A ball bearing 5 set in a recess of the former, serves to take up the thrust against the shoulder 6 of the shaft and insures free running of the same. In close proximity to the disk 1 is the thin shell 7 in the form of a cup, this being the secondary element of the system. It is made of stiff and light material, as hard aluminum, and is fixed to a spindle 8, supported in nearly frictionless bearings or pivots 9 and 10. As before remarked the spacing between the two elements, (1 and 7), should best be as small as manufacturing conditions may make feasible. By way of example, a separation,—in an instrument of the diameter suggested,—of say .015″ to .025″ will be found effective for working purposes and also within a reasonable range of inexpensive mechanical attainment. Still smaller spacing is, however, theoretically desirable. One of the bearings aforesaid is screwed into the end of the shaft 2 and the other into a plug 11 in a slotted tubular extension 12 of a casting 13. The running bearing in the shaft, though not of perceptible influence on the indications, may be replaced by a stationary support behind and close to shell 7, as at 8. A torsional spring 14 is provided, for biasing the pivoted element 7, having its ends held in collars 15 and 16, which can be clamped, as by the set screws shown. the one to the spindle 8 and the other to the plug 11. The bearings 9 and 10 are capable of longitudinal adjustment and can be locked in any position by check nuts 17, and 18, but this refinement is generally unnecessary. The castings 4 and 13, in the construction specifically shown, when screwed together form a casing that closely invests the rotative system. This casing forms one available means for preventing communication of torque from the primary element 1 to the

secondary member 7 through the medium contacting with the external surfaces of both, to any extent sufficient for materially modifying the torque due to the films between the elements, but other means to this end may be substituted. The chamber inclosed within the casting should be airtight for highest accuracy in order that the density of the contained medium may remain constant, although in the vast majority of cases where air is used as the active agent, the slight effects of ordinary changes of temperature and density of the external atmosphere can be ignored, as they are in a measure neutralized by the concommitant variations in the resilience of the torsional spring and as they do not seriously affect the proportionality of deflections observed. However, when great precision is essential, a seal 19 of suitable packing, paste or amalgam may be employed. Obviously the working parts may be contained in a separate, perfectly tight reservoir filled with fluid of any desired character, the rotating member or disk 1 being driven by a magnet outside. This expedient has been adopted in numerous instances and is quite familiar. The casting 4 has a window or opening 20, closed by a piece of transparent substance, such as celluloid, for enabling the readings to be made on the scale which is engraved upon or glued to the rim of the indication-controlling element or shell 7. The shaft 2 is armed with a steel or rubber tip 21, and a handle 22 of fiber or other material is fastened to the central hub of casting 13, completing the hand tachometer.

Fig. 2 in which like numbers designate corresponding parts is self-explanatory.

Attention may be called to the pointed index 23 placed in the opening 20 and marking, when the instrument is not in use, zero on the scale. The latter can be readily put in proper position by turning the collar 16 to the desired angle.

As described the device is adapted for use in the manner of an ordinary hand tachometer. In taking the revolutions of a shaft, the tip 21 is placed firmly into the central cavity of the former, as usual, with the result of entraining the disk 1 and bringing it to full speed by friction. The active medium, preferably air, in the narrow channels between the rotating and pivoted members, by virture of its adhesion and viscosity, is set in circular motion by the primary element, and, giving up the momentum imparted to it on the light secondary shell 7, causes the latter to turn until the torque exerted is balanced by the retractile force of spring 14. Care should be taken to employ a spring the resistance of which increases linearly with displacement, so that the deflections are exactly proportionate to the torsional effect, as otherwise the indications will not be true to scale, even though the instrument be prefect in other respects. In order that the torque should vary rigorously as the speed, the fluid particles in the minute channels between the rotating and pivoted members should move in circles and not in spirals, as necessarily would be the case in a device in which pumping action could take place, and either by making both the primary and secondary elements effectively imperforate to prevent central admissio of air, or otherwise so constructed and conditioned that air may not freely pass from center to periphery between the elements of the moving system unchanging residence of a definite body of the active medium within the system is insured. Where pumping action,—that is to say, acceleration or retardation of fluid movement other than circularly with the primary element,—takes place the deflections increase more rapidly than the speed. It follows that centrifugal force, which is the essential active principle in pumping, must be negligible to avoid compression of the air at the peripherv which might result in a sensibly increased torque. To appreciate this, it should be borne in mind that the resistance of a circular strip of the active area would, under such conditions, be proportionate to the fourth power of the diameter so that a slight compression and attendant increase of density of the medium in the peripheral portion would cause a noticeable departure from rigorous proportionality. Experience has demonstrated that when the space is very narrow, as is indispensable for the fullest attainment of the desired proportionality, the centrifugal effect of the active fluid, be it gaseous or liquid, is so small as to be unobservable. The inference is that the acti ns in the narrow space between the rotative members are capillary or molecular and wholly different in principle from those taking place in a pumping device in which the fluid masses are alternately retarded and accelerated. The scale, which, as will be apparent from the preceding, is uniform in an instrument best embodying my invention, may be so graduated that each degree corresponds to a certain number of revolutions per unit of time, and for convenience, (in shaft-speed indicators as herein shown), the constant is made a round number, as 100. The establishment of this relation through the adjustment of the torsional spring is facilitated by varying the distance between the parts 1 and 7, thus modifying the torque and consequently the deflection, (the torque varying inversely as the distance) while always keeping within the range throughout which linear proportionality is attainable. In calibrating it is necessary to make but one observation comparative with some posi-

tive standard and to plot the balance of the scale accordingly. The conditions above set forth being realized, the reading will be accurately proportionate to the speed and the constant will be correct through the whole range contemplated in the design. Therein lies a very important advantage bearing on manufacture and introduction of devices of this character over those now in use which are based on an empirical scale, tedious to prepare, and unreliable. When desired, the instrument may be rendered dead beat through magnetic or mechanical damping, but by making the torque very great, and the inertia of the secondary element very small, such objectionable complication may be avoided. With a given separation the turning effort is proportionate to the product of the velocity of rotation, the density of the fluid and the aggregate area of the active surfaces, hence by increasing either of these factors the torsion can be augmented at will. It obviously follows that the pull exerted on a circular disk will be as the third power of the diameter and one way of attaining the object is to use a large plate. Other and better ways are illustrated in Figs. 3 and 4 in which the rotating and pivoted elements are composed of interleaved disks or cylinders. The first arrangement permits an indefinite increase of the torque, the second commends itself through the facility of adjustment of the force by varying the active area.

For many reasons it is decidedly advantageous to employ air as the agent in an instrument intended for popular purposes, especially those involving rough use and inexpert handling, since thereby the cost of manufacture may be kept low, the need for enscaling minimized and susceptibility of the parts to easy disassembling and replacement attained. It is, therefore, desirable that the annular confronting surface of the elements,—whether of disk or cylindrical form,—be sufficiently extensive for securing ample torque to make the instrument approximately dead beat and to minimize the percentage of error due to mechanical imperfections.

The foregoing description contains, I believe, all the information necessary for enabling an expert to carry my invention into successful practice. When using the indicator in the manner of an ordinary vehicle speedometer, as in an automobile, the shaft 2 is rigidly or flexibly geared to the driving axle or other suitable part and readings are made in miles per hour, as is customary. As will be apparent many other valuable uses may be served, since the primary element may be connected in suitable electrical or mechanical manner with any rotating part, the speed of which may be translated through a linearly proportionate constant into the desired terms of time and quantity, and the reading scale may be calibrated in such terms. It will also be evident that by accurate workmanship, following the teachings of my invention, instruments at once simple, rugged, and scientifically accurate may be constructed for a very wide range of uses in either huge or tiny sizes; and, since the commercial requirements of accuracy in many fields gives a reasonable range of permissive error, manufacturing considerations may lead to deviations from strict observance of some of the conditions that I have indicated as best attaining a rigorous proportionality of reading. The provision of simple mechanical elements, coöperating primarily only through the viscosity and adhesiveness of the air films intervening therebetween and substantially free from need for ensealing and from error caused by changes of extraneous conditions, especially temperature, affords striking commercial advantages unattainable in any form of speedometer of which I am aware. Therefore while I have described in detail for the purpose of full disclosure a specific and highly advantageous embodiment of my invention, it will be understood that wide variations in the mechanical development thereof may be made without departure from its spirit within the scope of the appended claims.

What I claim is:

1. In combination, fixed supporting means, disconnected alined driving and driven shafts rotatably mounted in said supporting means, relatively thin spaced rigid pieces of material rigidly connected to and arranged coaxially about said driven shaft with broad surfaces opposite each other, and other relatively thin spaced rigid pieces of material rigidly connected to and arranged coaxially with the driving shaft, and being alternated with the first-mentioned pieces between them and having their broad surfaces adjacent to and spaced from the broad surfaces of said other pieces, said pieces all arranged in air, through which torque is frictionally transmitted from the second-mentioned pieces to those first-mentioned.

2. In combination, in a speedometer, disconnected alined driving and driven shafts, a fixed support, said shafts being mounted in said support, a coiled spring having one end secured to said fixed support and the other end secured to said driven shaft, relatively thin spaced rigid pieces of material rigidly connected to and arranged coaxially about said driven shaft with their broad surfaces opposite each other, other relatively thin spaced rigid pieces of material rigidly connected to and arranged coaxially with the driving shaft, and being alternated between said first-mentioned pieces and spaced therefrom, and an air body filling

the spaces between said pieces and constituting the torque-transmitting friction medium therebetween.

3. In combination, in a speedometer, disconnected alined driving and driven shafts, a frame having bearings for said shafts, a coiled spring whose inner end is secured to said driven shaft and having its outer end secured to said frame, spaced rigid pieces of material rigidly connected to and arranged about said driven shaft, and other spaced rigid pieces of material rigidly connected to and arranged about said driving shaft, the former pieces being alternated between the latter pieces in spaced relation with their broad surfaces in close juxtaposition, and with the interspaces between said spaced pieces forming a convoluted air-containing channel therebetween open to the surrounding air.

4. In combination, disconnected alined driving and driven shafts, a fixed support, bearings therefor in said support, a coiled spring having one end secured to the driven shaft and its other end secured to said fixed support, a cup-shaped body secured to one end of said driving shaft coaxially, spaced rigid relatively thin plates secured to said body in parallel relation to each other, another cup-shaped body secured coaxially to said driven shaft and inclosing said plates at their outer edges in spaced relation thereto, other spaced rigid relatively thin plates secured to the second-mentioned body and extending between the first-mentioned plates in spaced relation thereto, and an air body filling the spaces between said pieces frictionally to transmit torque from the driving structure to the driven structure.

5. The combination with means for support and driving and driven shafts rotatably supported thereby, of means to transmit torque from the driving shaft to the driven shaft comprising opposed material-pieces respectively connected with the driving shaft and the driven shaft and arranged to present toward each other relatively-extensive, non-contacting, closely-adjacent surfaces, and a gaseous medium in which said pieces work, said gaseous medium serving frictionally to connect the said opposed material-pieces for transmission of torque from the driving shaft to the driven shaft.

6. In combination, driving and driven elements suitably supported and having confronted annuli always presenting to each other relatively-extensive, non-contacting, closely-adjacent surfaces, said surfaces disposed in a gaseous friction medium, whereby the driving member, by its rotation, induces rotary motion of the driven member through the drag of the gaseous medium intervening between said annuli.

7. In combination, driving and driven elements having in opposed, closely adjacent, non-contacting relation, relatively extensive friction surfaces, and an interposed gaseous body, through which the driving member frictionally drags the driven element.

8. In a speedometer, the combination with supporting means, separately-rotatable driving and driven shafts mounted therein, biasing means for the driven shaft, and means to indicate rotary displacement of the biased shaft in terms of speed, of pieces rotatively carried by said respective shafts, having relatively-extensive, non-contacting, closely-adjacent surfaces arranged to confront each other, and a gaseous medium intervening between said confronting surfaces to coact therewith frictionally to transmit torque from the driving shaft to the biased driven shaft.

9. In a speedometer, the combination of a primary element rotatable at varying speeds, having a plurality of spaced annuli, a biased secondary element, arranged for separate rotary movement and adapted and arranged to indicate speed variations by the extent of its displacement, said secondary element having a plurality of spaced, thin, light annuli, the annuli of said two elements interleaved in non-contacting, closely-adjacent relation always to present toward each other extensive friction surfaces, and an air body, through the films of which, intervening between said annuli, rotation of the primary element may induce speed-indicating displacement of the secondary element.

10. A speedometer wherein a primary, variable-speed element, and a biased, speed-indication-controlling secondary element, that are suitably supported for separate movement, have opposed extensive friction surfaces in non-contacting juxtaposition for frictional communication of power from the primary element to the secondary element through a gaseous medium that intervenes between said friction surfaces.

11. An air drag speedometer, wherein a primary, variable-speed element and a biased speed-indication-controlling secondary element, that are suitably mounted for separate rotary movement in an air-containing casing, have opposed, extensive friction-surfaces in non-contacting juxtaposition, for frictional communication of torque from the primary element to the secondary element through the medium of the casing-contained air.

12. In a speedometer, the combination of an air containing casing, a primary element and a secondary element mounted in said casing for separate movement, said elements having extensive surfaces exposed toward each other in closely contiguous but non-contacting relation for frictional communication of power to one from the other through the intervening air, means resiliently to resist displacement of the second-

ary element, and means to indicate displacement of the secondary element in terms of speed.

13. In combination, in a speedometer, disconnected shafts respectively carrying driving and driven elements that have annuli affording continuous extensive friction surfaces in always confronting non-contacting closely-spaced relation, the driven element being light and biased by a light spring, for ready response to torque transmitted frictionally by air, and the air film-spaces between the elements constituting an open tortuous channel; and an air containing casing inclosing the driving and driven elements, its contained air body forming the sole effective means of torque transmission between the elements.

14. In a speedometer, the combination of rotatable driving and driven elements having in opposed, closely-adjacent non-contacting relation, relatively extensive friction surfaces, means to bias the driven element, means to indicate rotary displacement of said driven element in terms of speed, a casing inclosing said elements and containing air, said contained air body extending in films between the friction surfaces, and forming the sole effective means of torque transmission between the driving and driven elements.

15. In combination, driving and driven elements having in opposed non-contacting relation relatively extensive friction surfaces so closely adjacent that through an interposed gaseous body the driving member frictionally drags the driven member with a torque linearly proportionate to the speed of the former.

16. A rate indicator wherein a freely-rotatable primary and a biased, indication-controlling secondary member, suitably supported for separate movement, have opposed, non-contacting surfaces in such close proximity that through an intervening viscous fluid medium torque is transmitted to the secondary member in linear proportion to the speed of the primary.

17. A rate indicator wherein a freely rotatable primary and a biased, indication-controlling secondary element, suitably supported for separate movement are operatively linked through an intervening viscous and adhesive air body, said elements having opposed, extensive non-contacting surfaces so closely adjacent that the torque transmitted to the secondary element through said air body is substantially in linear proportion to the speed of the primary element.

18. In a speed indicator the combination of two rotatively movable driving and driven members having opposed non-contacting extensive surfaces confining between them a practically constant body of torque-transmitting fluid medium, said surfaces being so closely proximate that the torque transmitted from the driving to the driven member is substantially proportional to the rate of rotation of the former.

19. A speed indicator comprising, in combination, a rotatable body, a second angularly movable body, means to resist displacement of the latter proportionately to the torque applied thereto, and a fluid medium interposed between them, said bodies having opposed annular surfaces in such close proximity that pumping of the medium therebetween is prevented and the deflections of the second body are made proportionate to the speed of the other.

20. A speed indicator, comprising, in combination, a rotatable, variable speed primary element, and a light, pivoted, torsionally-resisted, indication-controlling secondary element, suitably mounted for separate movement and operatively linked with the former through an interposed gaseous medium, said elements having opposed, annular, non-contacting surfaces so extensive and closely proximate that the whirling medium exerts a strong and steady turning effort upon the secondary element, substantially in linear proportion to the speed of the primary.

21. The combination, in a rate indicator, of a freely rotatable primary and a torsionally-resisted indication controlling secondary member mounted for separate movement, with their opposed non-contacting symmetrical surfaces confining therebetween a resident fluid body and arranged in such close proximity that the fluid, entrained in circles by the rotating primary exerts a torque on the secondary member in substantially linear proportion to the speed of the former.

22. In combination, in a speed-indicator, a rotatable primary element, a biased secondary element, a fluid body between and around them, said elements having opposed non-contacting extensive surfaces in such close proximity that the resident fluid body therebetween transmits torque to the secondary in substantially linear proportion to the speed of the primary element, and means for minimizing the rotary effort transmitted through the fluid around the elements.

23. A rate indicator comprising a structure confining a substantially unchanging body of fluid and including an extensive annular surface of a freely rotatable member, arranged to impart circular motion to the fluid, and a confronting annular surface of an indication-controlling angularly-displaceable member, arranged to take up momentum of the fluid, said surfaces being so closely proximate that the torque transmitted through the fluid is proportional to the speed of the rotatable member.

24. A speed indicator comprising two elements mounted for separate movement in a fluid medium, one of the elements being freely rotatable at varying speeds, and the other pivoted and biased against angular displacement, said elements having opposed non-contacting extensive symmetrical surfaces in such close proximity that torque is transmitted through the intervening fluid body in substantially linear proportion to the speed of the primary element, and a member surrounding said elements and minimizing the flow of the fluid along the exterior surfaces of said secondary element.

25. In a device of the character described, the combination of a rotatable primary element, a spring-biased secondary element, a casing surrounding the same and a fluid body filling the casing, said elements having opposed non-contacting annular surfaces in such close proximity that the rotary effort exerted through the fluid body on the secondary element is proportionate to the speed of the primary element, some parts of said casing being so closely proximate to said elements as to minimize torque-transmitting flow of the fluid along the exterior surfaces of the secondary element.

26. An air drag speedometer wherein a rotatable primary variable-speed element and a biased pivoted secondary element, mounted for separate movement in an air-containing casing, have opposed extensive smooth annular surfaces in such close juxtaposition that torque is transmitted through the air intervening between said surfaces in substantially linear proportion to the speed of the rotatable primary element.

27. A speed indicator comprising a closed fluid-filled casing, primary and secondary elements mounted therein, the one for rotation and the other for torsionally resisted angular displacement, said elements having opposed non-contacting extensive annular surfaces forming therebetween a smooth intervening channel wherein confined fluid may move in circles under the influence of the primary member, and between them and the interior surfaces of the casing surrounding channels wherein fluid contiguous to the secondary element may receive circular movement from the primary element, said surfaces being so closely proximate that torque transmission through the fluid is linearly proportionate to the speed of the primary element.

28. The combination, in a speed indicator, of a closed casing, a fluid body and two rotatively-movable members therein, means for rotating one of the members, means for resisting displacement of the other, and means controlled by the last named member for reading its displacement in terms of speed, said two members having opposed, non-contacting imperforate annular surfaces in such close proximity as to confine therebetween a film of fluid through which torque is transmitted to the resistant member in linear proportionality to the speed of the rotatable member.

29. The combination with a closed fluid containing casing, of a plurality of symmetrical bodies with smooth surfaces rotatably mounted therein, means for torsionally restraining some of said bodies, and means for rotating the others, said bodies being placed with their surfaces in such close proximity to each other and to the walls of the casing that the rotating bodies will cause an even and undisturbed circular motion of the fluid and transmit torque to the torsionally restrained bodies in proportion to the speed of the others.

30. In a speed measuring instrument, the combination of driving and driven members having in opposed closely adjacent non-contacting relation relatively extensive smooth friction surfaces, and an interposed gaseous body through which the driving member frictionally drags the driven member.

31. A tachometer comprising, in combination, a rotatably mounted shaft, a smooth annular body fixed thereto, a similar pivoted body, a torsion spring for the latter, indicating means movable with said pivoted body, and an air-containing casing, said bodies having their annular surfaces in such close, non-contacting proximity that the intervening air transmits torque to the pivoted body in substantially linear proportion to the speed of the rotatable body.

32. A tachometer comprising, in combination, a rotatably mounted shaft, a primary element carried thereby, a pivoted secondary element, a torsion spring therefor permitting its angular displacement substantially in proportion to the torque, indicating means operated by the pivoted element and graduated with substantial uniformity, and a fluid-containing casing closely investing part of said rotative system, the opposed surfaces of the elements being so closely proximate to each other and to part of the casing that the fluid-transmitted torque causing deflections of the pivoted body is substantially proportionate to the speed of the primary element.

In testimony whereof I affix my signature in the presence of two subscribing witnesses.

NIKOLA TESLA.

Witnesses
M. LAWSON DYER,
THOMAS J BYRNE.

P-395

N. TESLA.

SPEED INDICATOR.

APPLICATION FILED MAY 29, 1914.

1,209,359.

Patented Dec. 19, 1916.

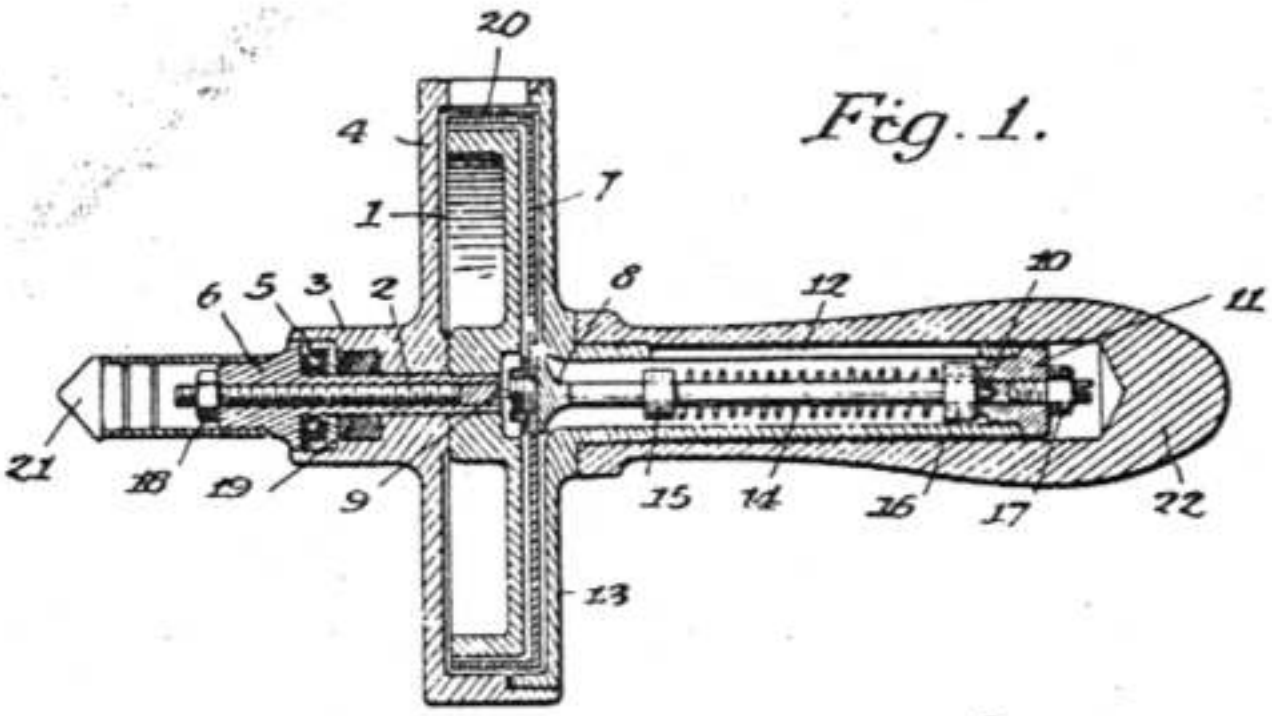

Fig. 1.

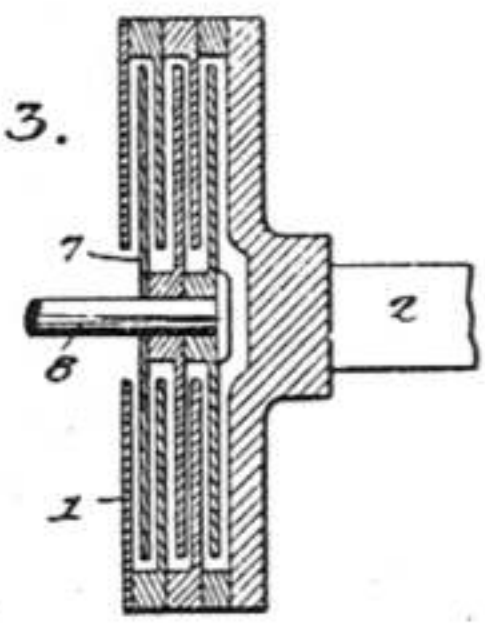

Fig. 3.

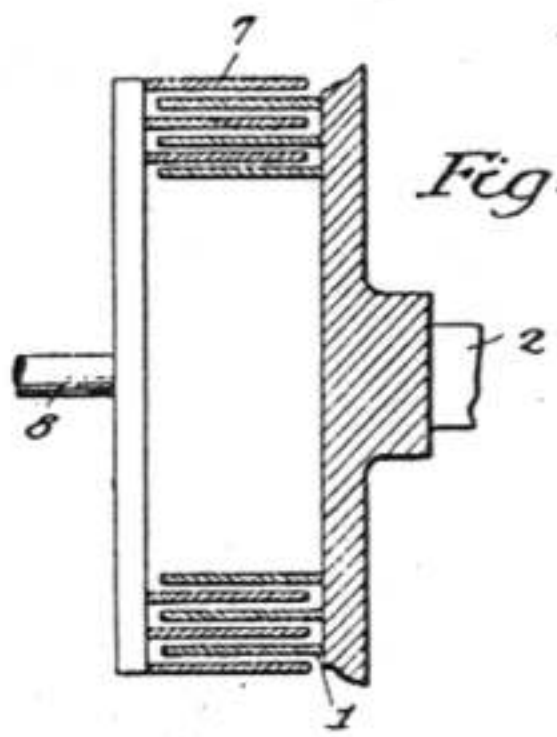

Fig. 4.

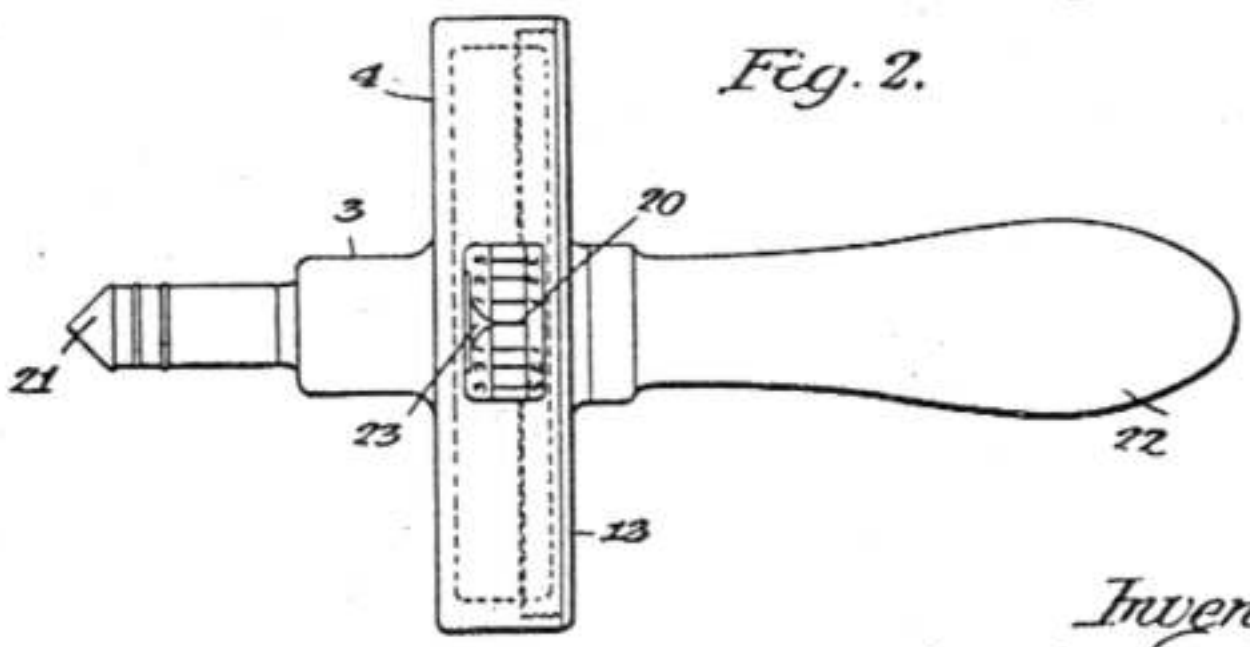

Fig. 2.

Inventor:
Nikola Tesla
Forie Rainaway
attorneys

UNITED STATES PATENT OFFICE.

NIKOLA TESLA, OF NEW YORK, N. Y., ASSIGNOR TO WALTHAM WATCH COMPANY, OF WALTHAM, MASSACHUSETTS, A CORPORATION OF MASSACHUSETTS.

FREQUENCY METER.

1,402,025. Specification of Letters Patent. Patented Jan. 3, 1922.

Application filed December 18, 1916. Serial No. 137,689.

To all whom it may concern:

Be it known that I, NIKOLA TESLA, a citizen of the United States, residing at New York, in the county and State of New York, have invented certain new and useful Improvements in Frequency Meters, of which the following is a full, clear, and exact description.

In many instances in practice it is very desirable and important to ascertain the frequency of periodic currents or electric oscillations and therefrom the speed of rotation or reciprocation of the generating or controlling apparatus.

The devices commonly used at present for this purpose and designated "frequency meters" generally consist of reeds or bars tuned to respond to impulses of definite periods, or a direct current dynamo coupled to the alternating generator or frequency controller and connected with an instrument, of voltmeter construction, graduated to indicate the instantaneous frequency of the current. Both of these forms are objectionable from many points of view, being subject to various limitations of practical availability and to disturbing influences, all so well known to experts as to dispense with the necessity of enlarging upon them on this occasion.

My invention has for its object to provide a frequency meter of great accuracy, structural simplicity, wide range of use, and low cost, all adequate to meet the pressing demand for a commercial and scientifically satisfactory instrument of improved form.

In the drawings, wherein I have illustrated a single embodiment of my invention for purposes of disclosure,—

Fig. 1 is a central vertical section through the frequency meter, with diagrammatic extension to indicate an available manner of connecting it to a two-phase generator;

Fig. 2 is an end view;

Fig. 3 is a side elevation with the cover in section, and Fig. 4 is a side elevation of the instrument from its reading side.

It will be understood that the specific construction of instruments embodying my invention may be modified in many ways according to the demands of the electrical or mechanical environment in which it is to be used, and while I shall describe in detail a specific construction, illustrated in the drawing, it is without intent to limit my invention in its broader aspects to matters of detail.

5 represents diagrammatically a two-phase generator, typifying the machine controlling the frequency to be measured, and having suitable connection by wires 6 with the synchronous-motor element of the frequency meter, indicated as a whole by 7. The motor, 8, will of course have field poles and armature bars appropriate to the character of the current supplied from the generator 5, the motor being of the split-phase, two-phase, or other type, as needed. A frame 10, having lugs 11, or other means of support, provides a cup-formed shell 12 with a top wall 13 furnished with a central bearing tube 14 and with suitable supporting means, as 15, for the stationary field structure 16. A cap 17, screw threaded at 18, and suitably packed, hermetically seals one side of the motor casing into which the connecting wires are led through any suitable sealing and insulating bushings 19.

For accuracy and promptness of response to frequency-variations, the armature structure 21, as a whole, with its attachments should be of very light weight and so equipped that its work is minimized. Hence it is important both that the construction of the armature element be designed with reference to smallness and consequent lightness of parts, and that its frequency-indicating equipment be of a character imposing the lightest load on the armature. Specifically, the armature laminæ 22 are carried on a light disk 23, fixed to the vertical shaft 24, that is supported by ball bearings 25 and 26, in tube 14, and, above the wall 13, carries the driving member of the indicator device 28. This appliance comprises, as its primary element, 29, a non-magnetic disk 30, of brass, say, having annular spaced, concentric walls 31, and as its secondary element, 32, a pivoted part including very light, annular walls 33 interleaved with the walls 31 and affording extensive smooth friction surfaces, very closely adjacent to, but not contacting with, the kindred surfaces of the primary member so that through the thin films of fluid, preferably air, intervening between them, torque may be transmitted from the primary to the secondary element in substantially linear proportion to the speed of the primary. Posts 35, mounted

in the top wall of the frame, support a bridge piece 36 that carries a bearing yoke 37, affording upper and lower jewel bearings 38 and 39, the former contained in a bushing 40 threaded for adjustment in the yoke and set by a nut 41, such bearings receiving the spindle 42 from which extends, rigidly, the arm 43 carrying the annular walls of the secondary element. A spiral spring 44, fixed at one end to the shaft 42 and at its other end clamped adjustably in the split stud 45 on bracket 37, permits rotary displacement of the secondary element, substantially in linear proportion to the force applied. A scale 48, printed on or otherwise affixed to the outermost wall of the secondary element, is graduated in units of frequency and its indication point is determined by a fixed pointer 49 that is fixed at the edge of a transparent sealed window 50 of the casing shell 51 of cup formation, that is secured in sealed relation to the wall 13 as by packed screws 52 engaging bosses 53 on the bridge piece 36 so to complete the hermetic enclosure of the chamber containing the indicating elements. Such hermetic closure is not necessary in many instances but may be desirable.

In my copending application Serial No 841,726 filed May 29th, 1914, Patent No 1,209,359 I have set forth in detail certain laws the observance of which results in attainment of rigorous proportionality of deflections to speed in an "air drag" instrument, and all of such conditions may be observed to advantage in constructing the indication-giving element of the frequency meter

It will be noted that an instrument as herein described has many structural and operative advantages. The translating instrument, giving the frequency-reading, when constructed for use of air as the transmitting medium, may be of size to give ample torque, but if desired the ensealed mechanism may be operated in air or other, preferably inert, gases of more than atmospheric density for increase of the torque. The air drag instrument is substantially unaffected in accuracy by temperature changes, without special compensating mechanism, and is therefore practically insensible to the heating effect of the subjacent motor, and the double-chamber construction segregating the motor and translating device prevents the latter from being affected by air-currents engendered by the motor-operation. Furthermore, the indicator structure may be made immune to magnetic influence and eddy currents, however intense, by making its secondary element of appropriate non-shrinkable, insulating material, as compressed fiber, although in many instances the partition 13, acting as a shield for the indicator obviates the necessity for such provision. The small size, low cost and ease of maintenance, due to the simplicity of the construction are especially desirable.

What I claim is:

1. In a frequency meter, the combination of a synchronous motor, and a speed-responsive device, having a primary element connected to the armature shaft, and a pivoted torsionally-restrained secondary element, deflectable in substantially linear proportion to the speed of the primary and calibrated in terms of electrical frequency.

2. In a frequency meter, the combination of a synchronous motor and a speed-responsive device, said motor having an armature of light construction and said speed-responsive device comprising a primary element carried in rotation by said armature, and a torsionally-restrained secondary element, these elements having extensive confronting, closely adjacent friction surfaces, co-operating through interposed films of a fluid medium for displacement of said secondary element in substantially linear proportion to the speed of rotation of the primary element.

3. In a frequency meter, the combination of a synchronous motor and a speed-responsive device, the former having an armature of light construction and the latter comprising a primary element, carried in rotation by said armature, and a torsionally-restrained secondary element, these elements having extensive confronting, closely adjacent friction surfaces, cooperating through interposed films of air for displacement of said secondary element in substantially linear proportion to the speed of rotation of the primary element, said secondary bearing a scale calibrated in terms of frequency.

4. A frequency meter comprising, in combination, a synchronous induction motor, having a shell carrying the field, and a rotatable armature within the chamber of said shell having its shaft extended through said shell; and a speed-responsive device, comprising a closed casing, a non-magnetic primary element mounted upon said armature shaft, a separately mounted secondary element pivoted and torsionally restrained, said elements having opposed, closely adjacent non-contacting surfaces, co-operating through interposed films of a fluid medium through which torque is transmitted to the secondary in approximately linear proportion to the speed of the primary member, and a visible scale uniformly graduated in terms of frequency carried by the secondary member.

5. A frequency meter comprising a sealed, air-containing casing divided into two compartments, a shaft extending into both compartments, a synchronous motor in one compartment adapted to drive said shaft and an indicating device in the other, said device having a primary rotatable element con-

nected with the shaft, a separately mounted, indication-controlling element and a spring restraining the latter, said elements having extensive, confronting, closely adjacent, non-contacting surfaces cooperating through the interposed air films for displacement of the secondary, at all ordinary temperatures, approximately in linear proportion to the speed of the primary element.

6. In a frequency meter, the combination of a synchronous motor having an armature of light construction, a speed-responsive device comprising a primary element carried in rotation by the said armature and a torsionally-restrained secondary element, said elements having extensive confronting closely adjacent friction surfaces cooperating through interposed films of air for displacement of said secondary element in substantially linear proportion to the speed of rotation of the primary element, and a wall interposed between the armature of the motor and the speed-responsive device for shielding the latter from air disturbance caused by rotation of the former.

7. A frequency meter comprising a casing divided into two compartments, a shaft extending into both thereof, a synchronous motor in one compartment adapted to drive said shaft and a speed-responsive device in the other having a primary element connected for rotation with said shaft, a separately mounted, torsionally-restrained indicating element, said elements having extensive confronting, closely adjacent, non-contacting surfaces cooperating through interposed gaseous films for displacement of the secondary, approximately in linear proportion to the speed of the primary element.

8. In a frequency meter, the combination of a synchronous motor and a speed-responsive device, said motor having a light armature and a shaft, and said speed responsive device comprising a primary element of non-magnetic material carried by the armature shaft and a torsionally-restrained secondary element, these elements having extensive confronting, closely adjacent, non-contacting surfaces cooperating through interposed films of a fluid medium for displacement of the secondary element in approximately linear proportion to the speed of the primary element, and a containing structure ensealing the speed responsive device.

9. In a frequency meter, the combination of a synchronous motor having an armature of light construction, a speed-responsive device comprising a primary element carried in rotation by the said armature and a torsionally-restrained secondary element, said elements having extensive confronting, closely adjacent friction surfaces cooperating through interposed films of air for displacement of said secondary element in substantially linear proportion to the speed of rotation of the primary element, and means interposed between the armature of the motor and the speed-responsive device for shielding the latter from air disturbance caused by rotation of the former.

In testimony whereof I affix my signature.

NIKOLA TESLA.

P-399

N. TESLA.

FREQUENCY METER.

APPLICATION FILED DEC. 18, 1916.

1,402,025.

Patented Jan. 3, 1922.

Fig. 3.

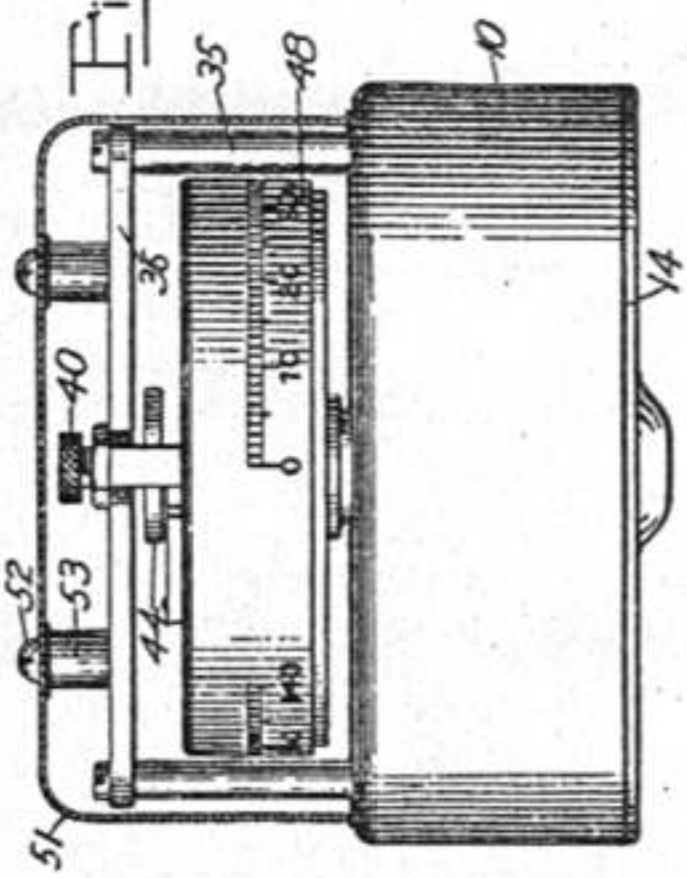

Fig. 4.

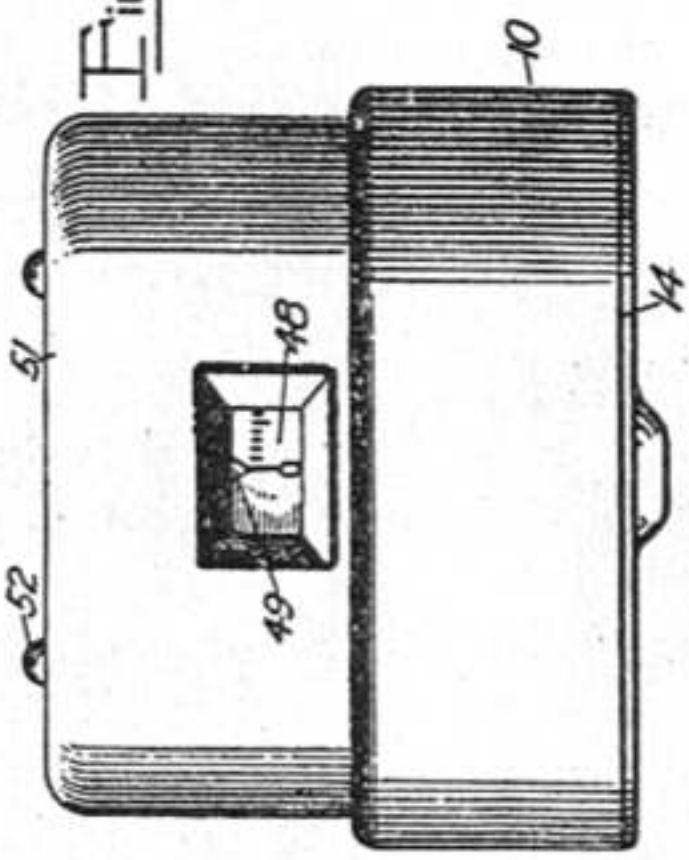

Fig. 1.

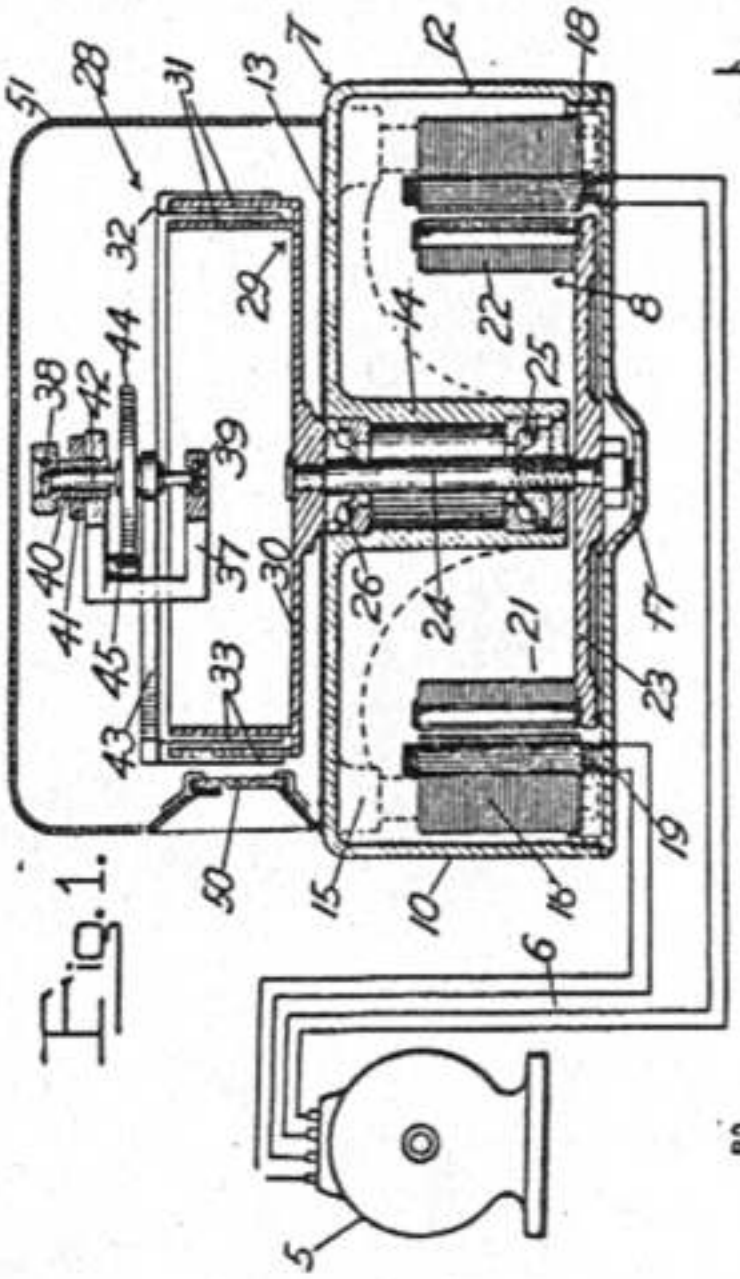

Fig. 2.

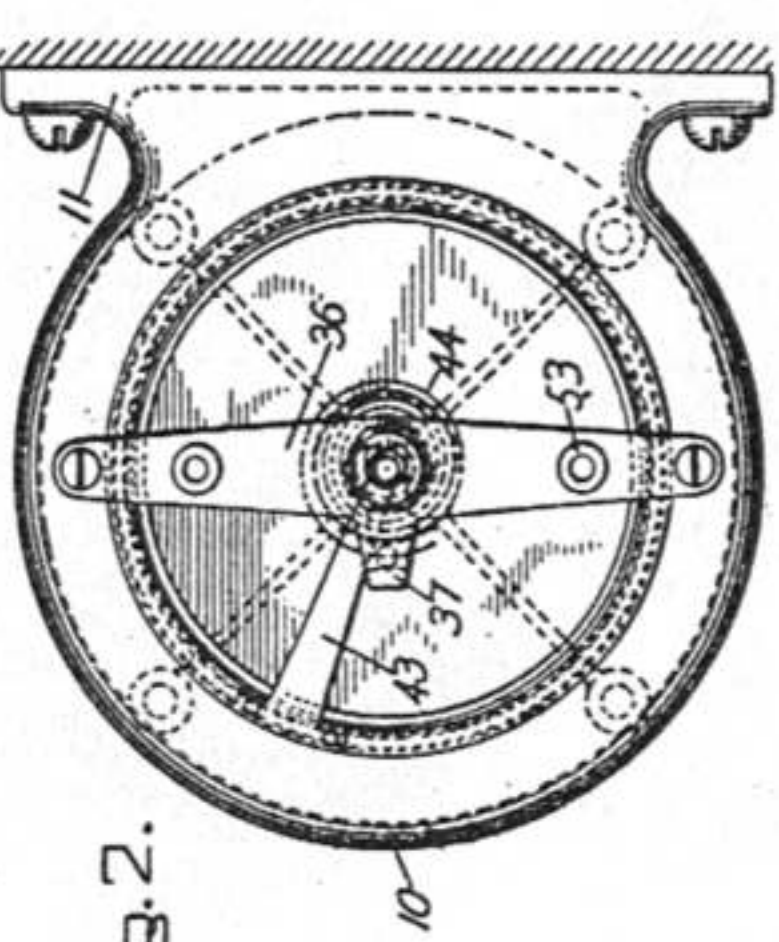

Inventor

Nikola Tesla

By his Attorneys:

Foster Freeman & Watson

UNITED STATES PATENT OFFICE.

NIKOLA TESLA, OF NEW YORK, N. Y., ASSIGNOR TO WALTHAM WATCH COMPANY, OF WALTHAM, MASSACHUSETTS, A CORPORATION OF MASSACHUSETTS.

SPEED-INDICATOR.

1,274,816. Specification of Letters Patent. Patented Aug. 6, 1918.

Application filed December 18, 1916. Serial No. 137,691.

To all whom it may concern:

Be it known that I, NIKOLA TESLA, a citizen of the United States, residing at New York, in the county and State of New York, have invented certain new and useful Improvements in Speed-Indicators, of which the following is a full, clear, and exact description.

Among the desiderata of speedometer construction are these: that the torque exerted upon the secondary, or indication-giving, element shall be linearly proportional to the speed of the primary member rather than to the square of the speed (as instanced in centrifugal speedometers); that the torsional effect at low speeds shall be strong and steady so that particular delicacy of construction may not be necessary and that minute causes of theoretical errors (such as bearing-friction, spring-inequalities and the like) may be negligible in effect; that the torque may be substantially unaffected by changes of extraneous conditions, as of temperature, atmospheric density and magnetic influence; that the instrument be inherently dead-beat and relatively insensible to mechanical vibration; and that ruggedness, simplicity and economy, for attendant durability, manufacturing facility and low cost, be attained. My present speedometer realizes these advantages and provides, also, an appliance that is suitable for great, as well as very small, velocities, exact in its readings, uniformly graduated as to scale, and unaffected by changes of temperature or pressure within as well as without.

In my Patent No. 1,209,359, dated December 19, 1916, I have described a new type of speed measuring instrument wherein the adhesion and viscosity of a gaseous medium, preferably air, is utilized for torque-transmission from a primary driving to a secondary pivoted and torsionally restrained member under conditions such that the rotary effort exerted upon the latter is linearly proportional to the rate of rotation of the former. The principles of that invention find place in my present construction. Such "air drag" speedometers have been found capable of meeting satisfactorily the commercial requirements for both large and small instruments respectively adapted to measure relatively high and low speeds, but nevertheless it is true that although such instruments, when built for high-speed indication, may be of sturdy construction, they must, when designed for low-speed measurement, be built with great precision and delicacy. This because the inertia of the secondary element must be kept extremely small for desirable promptness of response to very slow starting speeds and consequent feebleness of the turning effort. In some instances, therefore, it is highly desirable to employ a transmitting medium giving a much greater torque than air with concomitant extension of the low-range of accurate speed reading, quickness of response, practicable decrease of size of parts and lessening of sensitiveness to disturbances such as vibration of the instrument as a whole.

All of the stated objects I accomplish by employing as the torque-transmitting medium between the driving and driven elements a body of suitable liquid, (*e. g.*, mercury) under conditions (as set forth in my prior application referred to) proper to secure linear proportionality of deflections, and, further, by making provision automatically to compensate for the changes in the viscosity of the liquid that accompany variations of temperature. The latter equipment is unnecessary in my air-drag speedometer, but mercury and other liquids of relatively great density that might be employed for my present purposes have not the quality of approximate self-compensation for temperature changes that inheres in air, owing to the fact that the viscosity of such a liquid decreases rapidly as its temperature rises, and so to a successful "mercury-drag" instrument temperature compensation is requisite.

The underlying ideas of this invention can be carried out in various ways and are capable of many valuable uses, but for purposes of disclosure, specific reference to a form of speed indicator designed for use on an automobile is adequate.

As in the structure described in my stated prior application, I provide driving and driven members with confronting, closely-

adjacent, non-contacting, smooth, annular friction surfaces, co-acting for transmission of torque through the viscosity and adhesion of interposed thin films of a suitable medium—in this case mercury—under conditions to prevent free exchange of fluid acting on the system, to prevent its local circulation and eddying, to maintain its flow calm and non-turbulent, and to secure as low velocity of the medium with respect to the system as the circumstances of the case may make desirable. These conditions all aid in the attainment of rigorous linear proportionality of deflection of the secondary to the speed of rotation of the primary element under given temperature conditions. Additionally, by suitable construction I make it possible to obtain a nearly perfect compensation for temperature changes so that the deflections may be rigorously proportionate to speed within limits of temperature variation wider than I believe likely to occur in the practical use of the instrument. I attain this compensatory result by providing thermo-responsive means to vary the effective area of the secondary element upon which the medium acts in approximately inverse proportion to temperature-effected changes of viscosity of the medium, and as a preferred specific means to this end, I dispose a body of the liquid beyond, but communicating with, the active portion of the liquid medium and of such quantity that, in effectively the same measure as viscosity and, consequently, the torque is diminished or increased with temperature changes, the active liquid-contacting area of the secondary member is enlarged or reduced owing to the expansion or contraction of the fluid.

In the drawing Figure 1 is a top view of a speedometer;

Fig. 2 is a central vertical section therethrough;

Fig. 3 shows a spring adjusting arrangement; and

Fig. 4 and Fig. 5 are diagrams explanatory of the compensating principle.

In Fig. 4 the primary or driving member is a cup 10 carried by a freely rotatable vertical shaft 11. Within it the cylinder-formed secondary member 12 is mounted on a spindle 13, journaled in jewels 14 and 15 of negligible friction, for pivotal displacement against the restraint of a spiral spring 16, connected at its ends respectively to fixed support 17 and spindle-collar 18, so that by pivotal displacement of the secondary cylinder against the resisting spring tension, the torsional effort exerted on the secondary member may be measured. The spring is such that its displacements are linearly proportionate to the force applied. The lower portion 19, of the cup-chamber is a reservoir filled with the liquid, 20, as mercury, and the liquid normally extends part way up the very narrow interspace 21 between the two elements to contact with less than the whole of their confronting friction surfaces. With mercury as the medium, in an instrument with a secondary cup of one inch diameter I find an interspace-width of 0.05 inch to be satisfactory.

It will now be seen that when shaft 11 is rotated the mercury in the cup is entrained and in turn produces a drag upon the pivoted member 12, the torsional effort being directly proportionnte to the active area, viscosity of the fluid and the speed of rotation and, inversely, to the width of the interspace 21 or distance between the rotated and pivoted surfaces. If v be coefficient of viscosity, A the active area, s the speed and d the distance between the juxtaposed rotating and pivoted surfaces, all of the quantities being expressed in proper units, then the twisting force

$$F = \frac{vAs}{d} \text{ dynes.}$$

When, through changes in the external conditions or work performed on the fluid, the temperature of the same is raised, two effects, separate and distinct, are produced. In the first place, the viscosity is diminished according to a certain law, reducing correspondingly the torque, on the other hand, the fluid expands thereby enlarging the areas of the active, or liquid-contracting, surfaces of the elements with an attendant increase of rotary effort. Obviously, then, if it is possible so to relate these actions that they mutually annul each other upon any change of temperature, a complete compensation may be obtained. This result, I have ascertained, can be almost perfectly realized with a liquid, as mercury, by properly proportioning the volume of the chamber-contained, or compensating, component 20^c of the liquid and the component 20^a of the liquid in the interspace 21. With a view to simplifying this explanation, be it supposed that the force F is wholly due to the liquid component 20^a (the drag exerted on the bottom face of cylinder 12 being assumed to be negligible and the bearings to be frictionless). It will be evident that under these conditions the active area will increase as the volume of the fluid. Perfect compensation would require that upon a rise of temperature, the active area, and therefore the torsional effort, be augmented in the same ratio as viscosity is diminished. In other words, the percentage of decrease of viscosity divided by that of increase of area should be the same for all temperatures. Attention is called to the table below showing that, with mercury as the medium, the

value of this fraction at ordinary temperatures is about, or not far from, 20.

Temperature C.	Volume of fluid.	Viscosity of fluid.	Percentage of increase of V.	Percentage of decrease of v.	Value of ratio.
T	V	v	a	b	$\frac{b}{a}$
−20	0.996364	0.018406	−0.3636	−8.2718	22.75
−15	0.997273	0.018038	−0.2727	−6.1029	22.38
−10	0.998182	0.017681	−0.1818	−4.0074	22.04
− 5	0.999091	0.017335	−0.0909	−1.9722	21.70
0	1.000000	0.017000	0	0	21.35
5	1.000909	0.016663	0.0909	1.9107	21.02
10	1.001818	0.016361	0.1818	3.7603	20.68
15	1.002727	0.016057	0.2727	5.5505	20.35
20	1.003636	0.015762	0.3636	7.2708	20.00
25	1.004546	0.015477	0.4546	8.9564	19.70
30	1.005455	0.015202	0.5455	10.5750	19.38
35	1.006365	0.014937	0.6365	12.1410	19.07
40	1.007275	0.014680	0.7275	13.6470	18.75
45	1.008185	0.014433	0.8185	15.1031	18.45
50	1.009095	0.014194	0.9095	16.5073	18.15

This means to say that if the total volume of the liquid is twenty times that contained in the interspace between the elements, the two opposite effects, one increasing and the other reducing, the torque, will approximately balance. This fact is borne out by practical tests and measurements, which have demonstrated that by constructing for this volumetric ratio deflections very closely proportionate to the speed are obtained through a range of temperature variations far greater than ordinarily occurring. For commercial purposes it is quite sufficient to employ a ratio of approximately the stated value as the error involved in a small departure therefrom is inconsiderable. When necessary or desirable, greater precision can be obtained by taking into account four secondary effects, due to expansion or contraction of the walls, which slightly modify the torque; first, changes in the volume of the reservoir; second, in the distance between the opposed surfaces; third. in active area and, fourth, in velocity. Increase in the former two tend to diminish, the latter to augment, the viscous drag. A satisfactory ratio in a cylindrical type of instrument has been found to be about 24.

Fig. 5 illustrates a different arrangement, exemplifying the same principle of employing a reservoir-contained liquid body as the thermo-responsive means to compensate for viscosity changes of the active liquid. In this case a spindle-carried disk 12′ serves as a secondary element, while the primary member consists of a hollow shell 10′ with annular surfaces 23 confronting the disk surfaces and encompassed by an annular chamber 20′, so that under rotation the mercury body fills the chamber and occupies peripheral portions of the interspaces 21 between the flat confronting surfaces. It is hardly necessary to remark that since there are two such interspaces 21, the calculation of capacity of the reservoir or chamber 20′, beside considering the form of the device, must take account of the active mercury body in both interspaces.

In Figs. 1 to 3 a complete commercial instrument embodying my invention is shown. Specifically, 25 is a tube threaded at 26 and carrying at the top a casing head 27 the whole forming a housing for inclosure of the moving parts. The driving shaft 28 carries a cylindrical cup 29 in the bottom of which is screwed a plug 30, turned down as 31 for the purpose of providing the reservoir 32. The cup 29 is closed at its upper end by a tight fitting cover 33, having an upwardly extending shank 34, carrying a pinion 35 to drive suitable wheelwork 36 of the odometer contained in the lower part of the head 27. This structure, providing the primary element, is rotatable in ball-bearings 37 and 38 fixed in tube 25 and adjustable by means of nuts 39.

The secondary element is made of a very thin metal cup 40, inverted and secured to slender spindle 41 mounted in jeweled bearings 42 and 43, respectively carried in a cavity of plug 30 and by a frame arm 43′. A running bearing 42 can usually be employed without detriment, but a fixed bearing may be used if desired. The weight of the secondary member with its movable attachments should be so determined that the upward thrust against jewel 43 is very slight. The torsional twist of secondary cup 40 is resisted by a spiral spring 44 lodged in a turned recess of a frame plate 45, having one of its ends connected to collar 46 fast on the spindle 41 and the other to a split ring 47 spring-gripping the wall of the recess in plate 45. By inserting pincers in holes 48 (Fig. 5) and contracting the ring it is freed sufficiently for adjustment to bring the spindle-carried indicator 49 to point to zero of the graduated scale 50 that, if all of the principles of my invention are best embodied, may be made uniformly graduated. The scale is carried on plate 45 and, together with the support 43′, is held in place by a rim 53 that suitably carries the glass cover 52. The odometer may have any suitable number of indicating elements of different orders suitably geared, the two hands 54 and 55 sweeping over graduated dials 56 and 57, typifying any suitable construction.

It will be apparent that the high torque at low speed developed through the mercurial transmitting medium makes the instrument very effective as one for use on automobiles, and while it is true that with a heavy fluid, as mercury, the range of velocity of the medium throughout which proportionality of torque to speed, under the described conditions, is rigorously linear

falls below the range available where air is the medium, a construction presenting the friction surfaces of the elements in a cylinder-form as suggested in Figs. 2 and 4 permits of the use of a suitably constructed device with a small-diameter secondary to measure very high speeds without imparting to the medium a linear velocity beyond its stated range. For the successful use of mercury in the present described instrument (or other rotary devices) it is important that the mercury be pure, the surfaces contacting therewith smooth, clean and non-granular (preferably nickel-plated or made of non-corrosive, high grade steel) to minimize abrasion and keep the mercury clean, and that the linear velocity of the mercury be kept low, preferably below six feet per second, in order that it may not break up into minute droplets or apparently-powdered form.

What I claim is:

1. In combination, driving and driven elements, having opposed, closely-adjacent, non-contacting friction surfaces; a liquid body interposed between active areas thereof through which the driving element frictionally drags the driven one and thermo-responsive means for varying the active area of the secondary in approximately inverse proportion to the thermo-effected variations in viscosity of the liquid.

2. In a temperature-compensating speed indicator, the combination of variable speed primary and movement-restrained secondary elements that are suitably supported for separate movement and have opposed friction surfaces in close but non-contacting juxtaposition; an interposed liquid body contacting normally with active areas of said surfaces less than the whole thereof, and thermo-responsive means for varying the liquid-contacting areas of said elements approximately inversely to the thermo-effected variations of liquid viscosity.

3. In a temperature-compensating speed indicator, the combination of variable speed primary and movement-restrained secondary elements that are suitably supported for separate movement and have opposed closely-adjacent non-contacting friction surfaces; an interposed liquid body and thermo-responsive means for varying the active areas of said surfaces in predetermined proportion to thermally-effected changes of liquid viscosity.

4. In a temperature-compensating speed indicator, the combination of variable speed primary and movement-restrained secondary elements that are suitably supported for separate movement and have opposed closely-adjacent non-contacting friction surfaces; a liquid body partially filling the interspace between said surfaces, and thermo-responsive means for varying the liquid quantity within in said interspace in predetermined inverse ratio to thermo-effected changes of liquid viscosity.

5. The combination with driving and driven elements having opposed, closely-adjacent, non-contacting friction surfaces and an interposed liquid body contacting with active portions thereof, of a compensating liquid body communication with the said interposed or active one, and proportioned to vary the effective contact area of the active liquid approximately inversely to its temperature-effected viscosity changes.

6. The combination with freely movable driving and movement-resisted driven elements, having friction surfaces in opposed, closely-adjacent non-contacting relation, of means providing a reservoir, communicating with the interspace between said elements, and a liquid body having a reservoir-filling component and an active torque-transmitting component that normally, partly occupies said interspace, these components proportioned volumetrically for temperature-effected change of the contact area of the active component in approximately inverse ratio to the attendant changes of liquid viscosity.

7. In a temperature-compensating speed indicator, the combination of a freely rotatable cylindrical cup; a cylinder-formed member in the upper portion thereof, pivoted and spring-restrained; and a body of mercury filling the reservoir-portion of the cup below the pivoted member and extending partially in the narrow interspace between the cup and cylinder.

In testimony whereof I affix my signature.

NIKOLA TESLA.

P-404

N. TESLA.

SPEED INDICATOR.

APPLICATION FILED DEC. 18, 1916.

1,274,816. Patented Aug. 6, 1918.

Fig. 1.

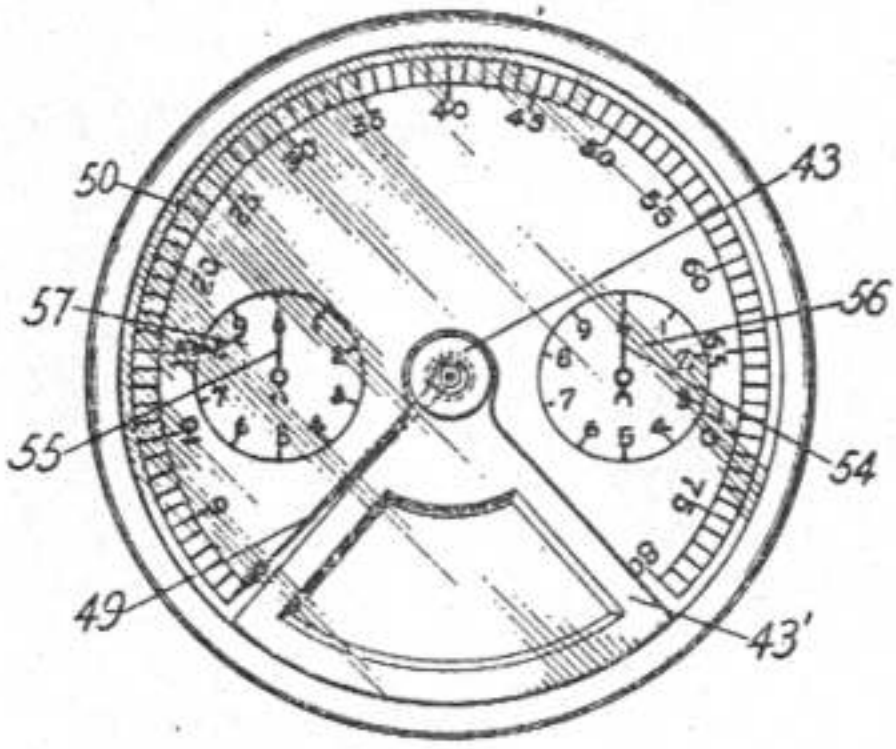

Fig. 3.

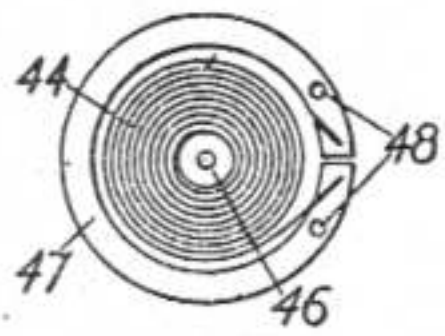

Fig. 2.

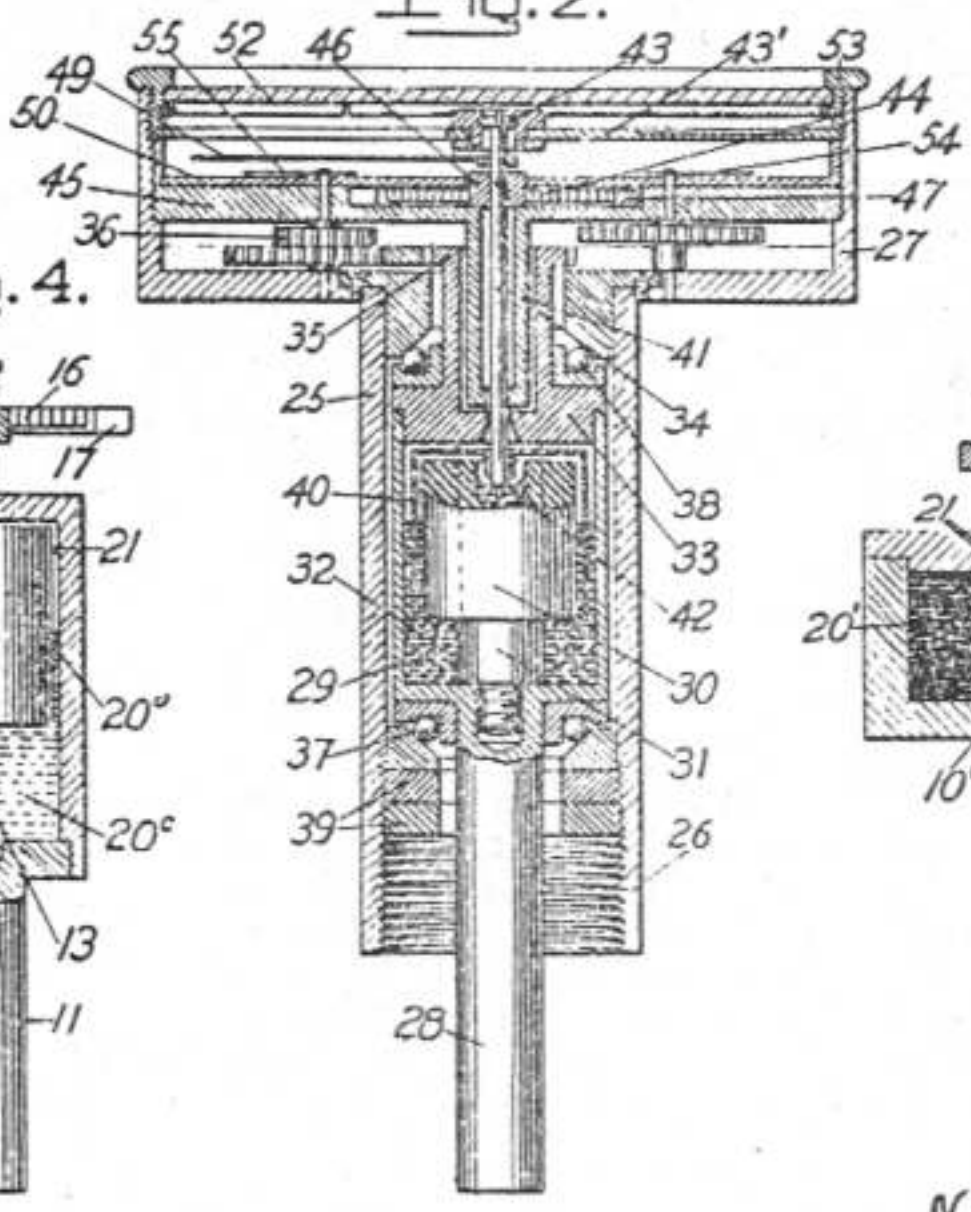

Fig. 4.

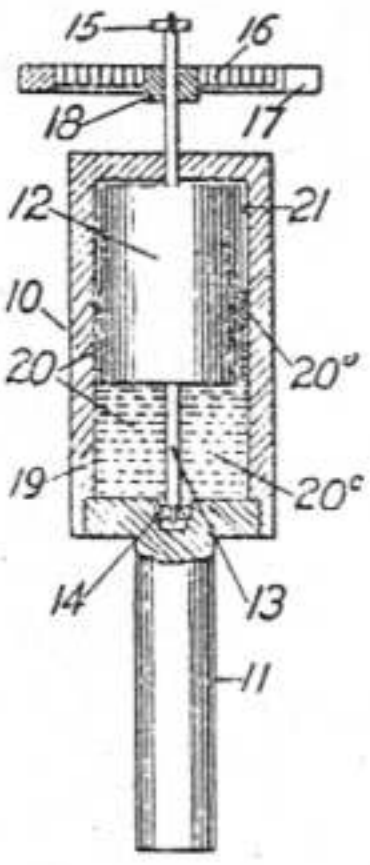

Fig. 5.

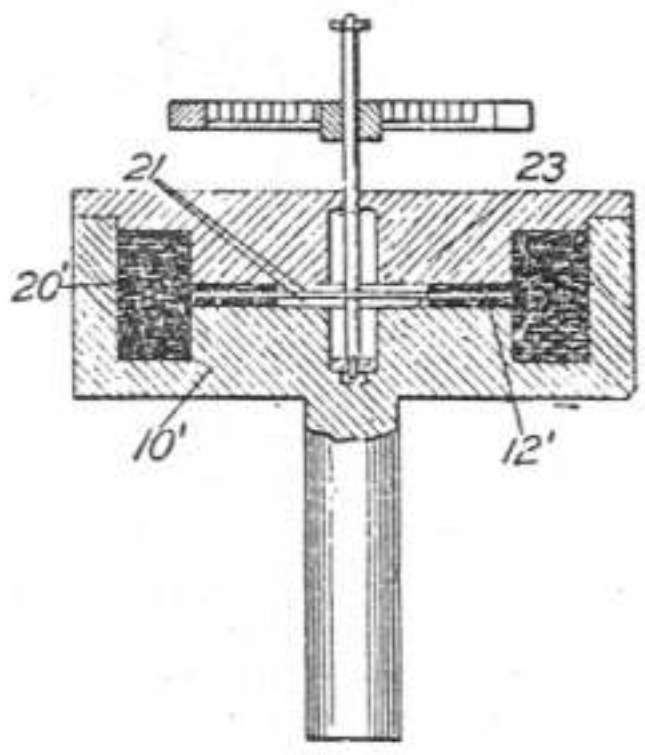

Inventor

Nikola Tesla

By his Attorneys-

Foster Bain & Mayo

UNITED STATES PATENT OFFICE.

NIKOLA TESLA, OF NEW YORK, N. Y., ASSIGNOR TO WALTHAM WATCH COMPANY, OF WALTHAM, MASSACHUSETTS, A CORPORATION OF MASSACHUSETTS.

SHIP'S LOG.

1,314,718. Specification of Letters Patent. Patented Sept. 2, 1919.

Application filed December 18, 1916. Serial No. 137,690.

To all whom it may concern:

Be it known that I, NIKOLA TESLA, a citizen of the United States, residing at New York, in the county and State of New York, have invented certain new and useful Improvements in Ships' Logs, of which the following is a full, clear, and exact description.

My invention provides a ship's log of novel and advantageous construction and operation, designed to give instantaneous rate-readings, as in knots, or miles per hour. The customary log is trailed astern, twisting the flexible connector that drives a revolution-counter on the vessel, and many disadvantages of such arrangement are obvious.

In my instrument I combine very advantageously a propeller rotatable proportionately to vessel-speed and a speed indicator driven by it and reading directly in the desired terms, preferably upon a substantially uniformly-graduated scale.

In the drawings, Figure 1 diagrams the log in use;

Fig. 2 shows it in vertical section;

Fig. 3 illustrates speed-indicator parts with the casing broken away;

Fig. 4 is a section on line 4—4 of Fig. 3;

Fig. 5 is a section on line 5—5 of Fig. 2.

Fig. 6 shows in section a turbine form of propeller, and

Fig. 7 is a section on line 7—7 of Fig. 6.

To the vessel 10, preferably near its bow, is suitably affixed a tube or barrel, 11, with a threaded plug 12 closing its lower end, where the tube preferably dips below the level of the boat's keel. At the top—near the deck or other point of observation—the speed-indicator 13 is mounted, its casing 14, that carries all of the moving parts being detachably secured, as by screws 15, to the top-flange 16 of the barrel. A boss 17 on the underside of casing 14 supports the ball bearing 18 for the primary element of the indicator and a seal 19 for its flexible drive-shaft 20 that connects preferably through a slip-joint squared union, 21, to a propeller-driven part. The propeller may be of common form as shown in Fig. 2, at 22, with its shaft 23 horizontally mounted in the bracket 24 spanning the tubular passage 25 of a housing 26 that fits neatly in the barrel and is held in register with ports 27 and 28 by guide-ribs 29. Such a propeller drives the shaft 20 through bevel gears 30.

More advantageously in some respects, however, a turbine propeller of simple construction may be employed, as shown in Figs. 6 and 7. The rotor in this instance has a vertical shaft 23′ and the wheel 22′ is formed of thin, parallel, closely-spaced disks each having a central opening. The wheel is arranged in a cylindrical housing 26′ that has inlet nozzles 31 and outlet ports 32 so disposed that the water enters the interspaces between the disks tangentially to rotate the wheel and finds escape through the ports 32 that communicate with the central orifices of the disks. This type of construction has many advantages due to its reliability and efficiency, but preferably it should be constructed to permit the disks and casing to be readily cleaned, casing 26′ being made in two horizontal sections bolted together as at 33, each section having a detachable head 34.

A flexible and longitudinally elastic sleeve, 35, of coiled strip metal is fastened at opposite ends by threaded caps 36 and 37 to the boss 17 and to a threaded part on the propeller casing, so that the propeller mechanism is supported from the indicator casing for removal therewith.

By suitably constructing the submerged parts of bronze, enameling them, or otherwise making them substantially immune to corrosion, adequate durability is attained, and the facility of removal for cleaning, oiling, repairs, etc., makes the under-water parts easy to maintain in good order. The pliant shaft, slip-connected at one end and its stout protective sleeve, strong yet flexible and extensible frees the bearings from strain and makes the connection uniformly efficient under changes of conditions as to temperature, etc.

The speed indicator 13 preferably provides as its primary element 41 a multiple-walled cup, fast on shaft 20, and as a secondary, or indication-giving, member a lightly-constructed pivoted, multiple-walled inverted cup structure 42, with the annular walls interleaved in closely adjacent non-contacting relation for transmission of turning effort from the one to the other through intervening films of the casing-contained fluid medium, as air, in approximately linear proportion to the speed of the primary. Specifically the secondary cups are dependent from an arm 43 projecting from

spindle 44, having jewel bearings in yoke 45 carried by bridge-piece, 46, that spans the casing 14, and the dial 47, calibrated according to a suitable constant to read in knots, or miles per hour or other units of rate, is borne by the cup-structure below a fixed hand 48 visible through the sealed cover-glass 49. A coiled spring 50, connected at its ends respectively to the pivoted secondary element and to a fixed support, resists the pivotal displacement of the indication-giving member. The light secondary element, quickly and accurately responsive approximately directly proportionately to the speed of the propeller-driven primary member, and little affected by tremors, temperature changes and other extraneous influences, gives adequately accurate readings in the desired terms, showing instantaneously changes of the vessel's speed.

What I claim is:

1. In ship's log, a barrel having water flow openings near its bottom, a speed-indicator detachably secured to one end of the barrel, a flexible shaft for the speed-indicator, a propeller connected to the shaft-end, a housing for the propeller, registering with the water-flow openings, and a sleeve surrounding the shaft uniting the housing and casing, for extraction of the propeller-parts when the speed-indicator is removed from the barrel.

2. In a ship's log, a barrel, a speed indicator having a casing secured detachably to the upper or observation end of the barrel, a propeller having a housing and adapted to pass through the barrel, a flexible shaft slip-fitted to connect the propeller and speed indicator, and a flexible sleeve connecting the propeller-housing and indicator-casing.

3. In a ship's log, the combination of a barrel having waterflow openings near its bottom, a speed indicator having a casing detachably secured to one end of the barrel, a shaft for said speed indicator extending centrally through the barrel, a propeller for the shaft end, a housing for the propeller, said housing being smaller than the barrel, and a sleeve surrounding the shaft uniting said housing and said indicator casing for effecting extraction of the propeller parts when the speed indicator is removed from the barrel.

4. In a ship's log, a barrel, a speed indicator having a casing secured detachably to the upper end of the barrel, a propeller having a housing and adapted to pass through the barrel, there being registering openings near the bottom of the barrel and in said housing for water-flow to the propeller, a flexible shaft connecting said propeller and speed indicator and making axially slidable connection with one thereof, and a flexible and axially expansible sleeve connecting the propeller housing and the indicator casing for extraction of the propeller parts when the speed indicator is removed from the barrel.

In testimony whereof I affix my signature.

NIKOLA TESLA.

N. TESLA.

SHIP'S LOG.

APPLICATION FILED DEC. 18, 1916.

1,314,718. Patented Sept. 2, 1919.

Fig. 6.

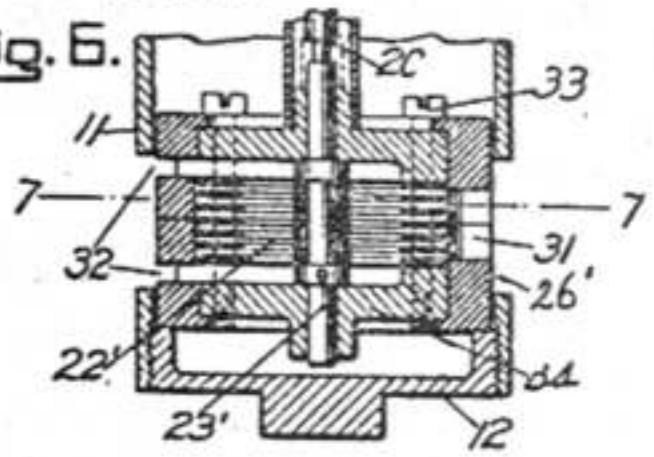

Fig. 1.

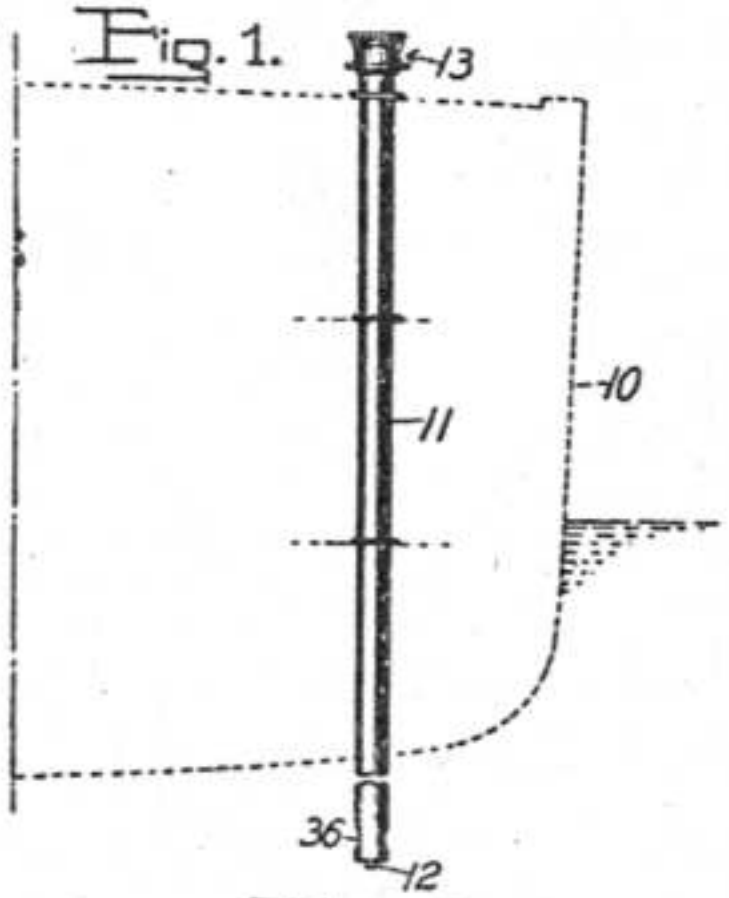

Fig. 7.

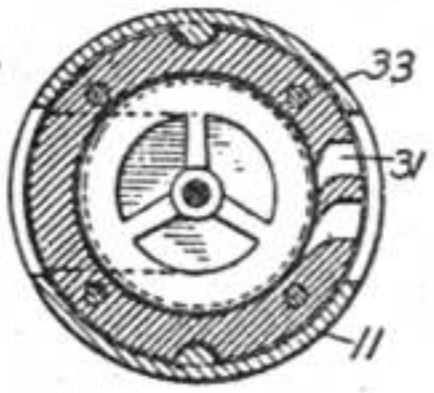

Fig. 3.

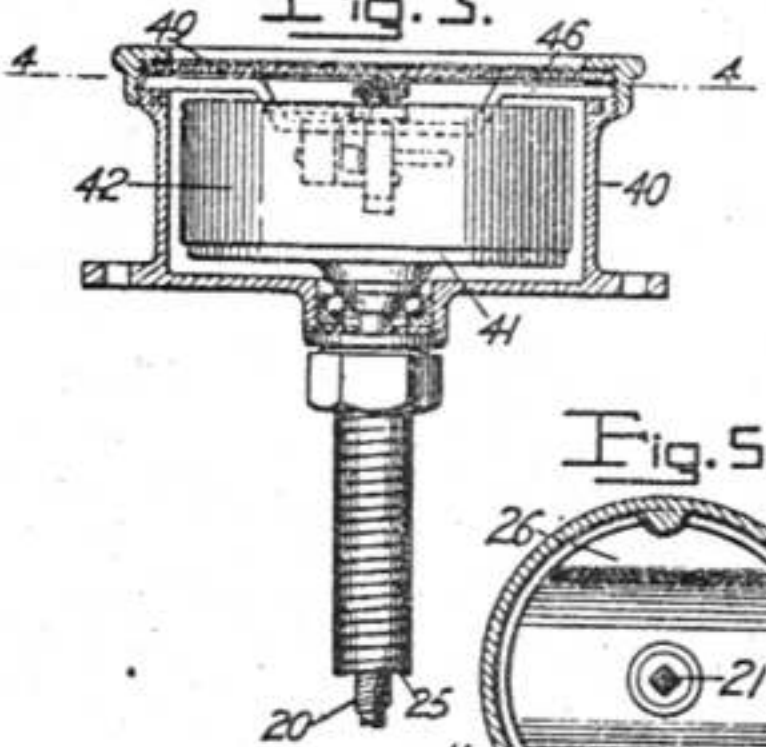

Fig. 2.

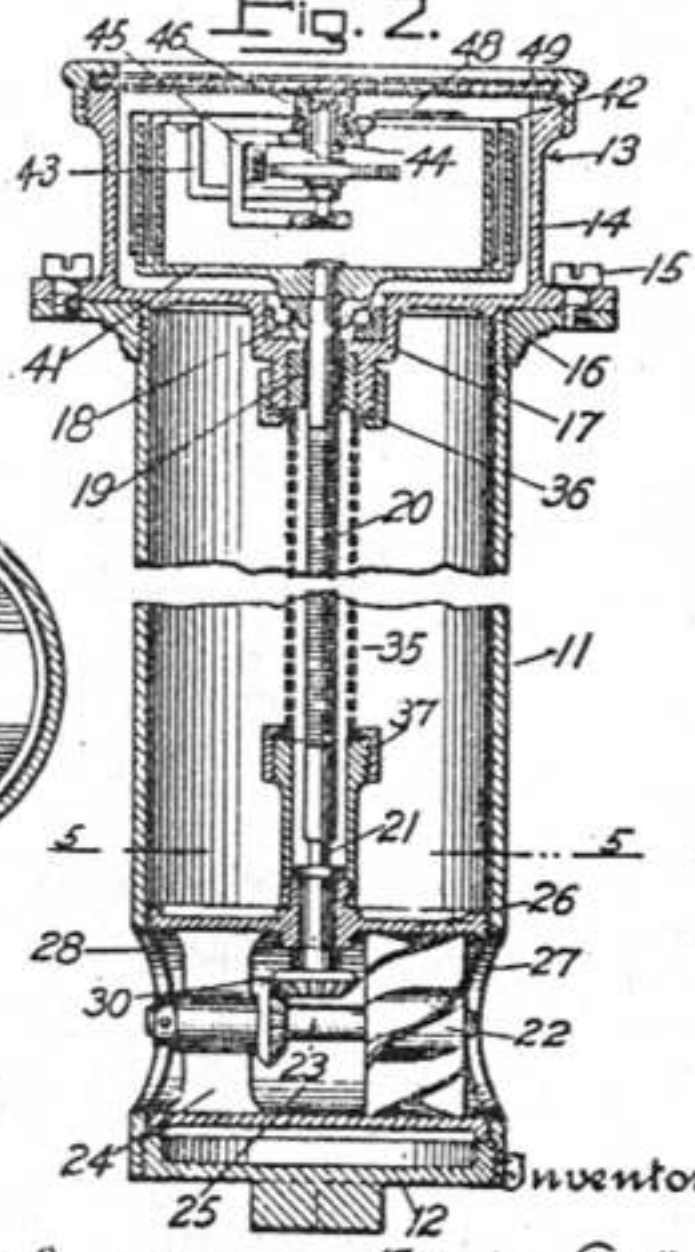

Fig. 5.

Fig. 4.

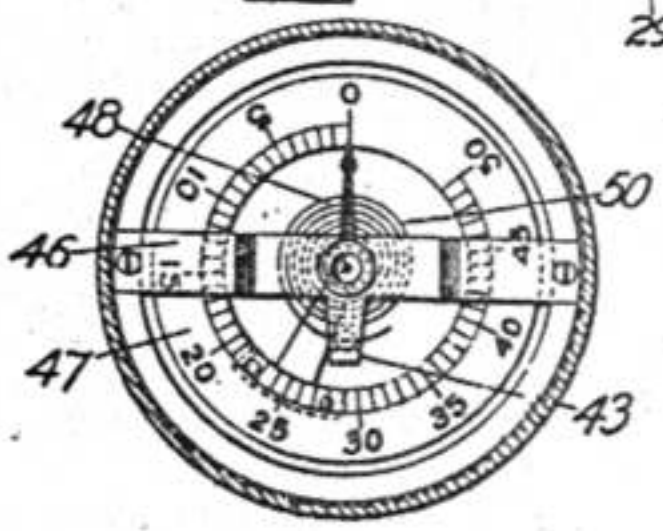

Inventor

By his Attorneys Nikola Tesla

Forrie Bainsmay.

UNITED STATES PATENT OFFICE.

NIKOLA TESLA, OF NEW YORK, N. Y., ASSIGNOR TO WALTHAM WATCH COMPANY, OF WALTHAM, MASSACHUSETTS, A CORPORATION OF MASSACHUSETTS.

FLOW-METER.

1,365,547. Specification of Letters Patent. Patented Jan. 11, 1921.

Application filed December 18, 1916. Serial No. 137,688.

To all whom it may concern:

Be it known that I, NIKOLA TESLA, a citizen of the United States, residing at New York, in the county and State of New York, have invented certain new and useful Improvements in Flow-Meters, of which the following is a full, clear, and exact description.

My invention relates to meters for measurement of velocity or quantity of fluid flow. Its chief object is to provide a novel structure, simple, inexpensive and efficient, directly applicable to a conduit through which the fluid flows, and arranged to give instantaneous readings in terms of velocity, or quantity.

In the drawings I have shown a single embodiment of my invention in desirable form, and therein—

Figure 1 is a central, vertical section showing the device in use;

Fig. 2 is a plan detail of the indicating instrument with parts in section;

Fig. 3 is a horizontal section on line 3—3 of Fig. 1, and

Fig. 4 is an enlarged section on line 4—4 of Fig. 1.

Assuming that the flow of liquid 10 through a main 11 is to be measured as in gallons per hour, or feet per second, the main is tapped as at 12 and into the threaded orifice is screwed the body-casting of the flow-meter 13. This casting has a threaded waist 14, centrally apertured to receive the bearing bushing 15, the upper portion of the casting being formed as a shell 16 for incasing the indicating mechanism, and its lower portion prolonged as a tube 17, terminating in a head 18 to receive the flow-driven element. The latter, I prefer, shall be a turbine of the type commonly identified by my name. Illustrating simply its essential elements, the rotor, 19, is made up of centrally apertured parallel disks 20, closely spaced and mounted on a shaft, 21, extending through a shell 22 confined within the head 18 above the plug 23 that closes the bottom of the head and carries an adjustable step-bearing screw 24. Inlet nozzles 25, in the wall of head 18, direct the liquid to the disks tangentially to set the latter in rotation and the water finds escape through the outlet passages 26 of the shell 22 and ports 27 of the head 18. Preferably the length of tube 17 should be such as to dispose the turbine rotor approximately at the center of the main, and of course the turbine will rotate at a rate linearly proportional to the velocity of the fluid at that point, according to a practically-determined constant.

Turbine shaft 21 connects with shaft 30 of the indicator, that preferably is of minimal diameter for the work to be done and that passes through the long bushing 15 for direct connection with the indicator 31. The primary element, 32, of this indicator, directly mounted on said shaft 30, preferably comprises a cup having multiple vertical walls 33 in concentric arrangement, these being interleaved with inverted cup walls 34 of a secondary element 35, that is pivoted and torsionally restrained and that bears a movable element of the reading scale. Specifically, the secondary element may have its inverted cup walls made of very thin aluminum mounted on arm 36, affixed to the spindle 37 that runs in jewel bearings carried by a yoke 38, supported on a bridge piece 39 spanning the casing 16. A coiled spring 40, at one end fast to the spindle 37 and its other end adjustably secured in split stud 41, on bracket 38, resists displacement of the secondary element which carries on its top a reading scale 43, graduated in terms of gallons per hour, feet per minute, or other units of measurement. This dial moves below the stationary pointer 44 that is visible through the sight-glass 45, carried by the cover cap 46 and tightly sealed. By constructing the indicator in accordance with principles fully explained in my Patent No. 1,209,359 the primary element, acting through the viscous or adhesive properties of air or other fluid medium filling the casing, is caused to displace the scale-bearing member against the tension of its spring substantially in linear proportion to the speed of rotation of the primary element, and by observing the conditions requisite to make the torque bear a rigorously linear proportion to the speed, and making the spring to permit deflections proportionate directly to the turning effort, the scale may be graduated uniformly without the employment of any compensating mechanism to this end.

The pressure or density of the gaseous fluid medium in the casing 60 should not be subject to change under varying conditions

of pressure within the main, or the readings might be seriously inaccurate; nor, obviously, should escape of the liquid from the main into the indicator casing be permitted. To seal the running bearing of shaft 30 adequately to withstand very considerable pressures, I make what I term a "mercury-lock" by the following provision: the shaft 30 is made of fine steel of great and uniform density and the bushing 15 is preferably of hard copper, these having diameters leaving a clearance of only a few thousandths of an inch,—much too small for the capillary admission of mercury. These surfaces are treated for amalgamation with mercury. The bearing-portion of the shaft 30 is thinly copper plated, and then both bearing surfaces are coated, in a quickening solution, with mercury, after which the mercury-filmed parts are assembled. In this way, as sought graphically and exaggeratedly to be represented in Fig. 4, the mercury body 50 is introduced into the very narrow clearance, and although it is a unitary seal in its resistance to the passage of air or water, it may practically be regarded as forming two mirror-surfaced films between the bushing 15 and the copper plating 51 on shaft 30. I have found such a mercury lock makes a very effective and enduring seal while permitting adequately free rotation of the shaft.

The combination of turbine rotor and air drag indicating mechanism as above described is especially advantageous in that the small turbine, developing a high shaft speed under even rather slow fluid flow, insures that the speeds of the primary element will be ample to result in high torque, so that the indicator may be of relatively rugged construction. Furthermore, the practical insensibility of the air drag instrument to temperature changes, without special compensating mechanism, makes a very simple construction available for many and variant uses. And since linear relationships exist between the rate of liquid flow, turbine-rotation and indicator-displacement, accurate marking of the scale in uniform graduations depends only upon the establishment of certain easily-ascertainable constants for any given conditions.

What I claim is:

1. A flow-meter comprising a body having a pipe engaging portion, a lower head of smaller diameter and an upper casing, a vertical shaft extending through said body, a disk-turbine in said head directly connected with said shaft, said head having inlet and outlet openings to the turbine disks, and indicating means comprising a rotatable primary element directly connected with said vertical shaft and a torsionally-restrained secondary element displaceable by the first and equipped to show its displacement in desired terms.

2. In a device of the character described, the combination of a body fitting having an intermediate part for pipe engagement, a lower head, and an upper shell, a shaft passing vertically from said shell to said head, a pressure-resisting seal for said shaft adjacent said pipe engaging portion of the body, an indicator in said shell comprising a rotatable primary member having a vertical axis and directly connected with the upper end of said shaft, a torsionally-restrained secondary element displaceable by the first, said secondary element associated with a scale for showing its deflections in desired terms, and a horizontal disk-turbine rotor in said head, said rotor directly connected with the bottom of said shaft, said head having inlet and outlet openings to the rotor disk.

In testimony whereof I affix my signature.

NIKOLA TESLA.

P-410

N. TESLA.

FLOW METER.

APPLICATION FILED DEC. 18, 1916.

1,365,547. Patented Jan. 11, 1921.

Fig. 2.

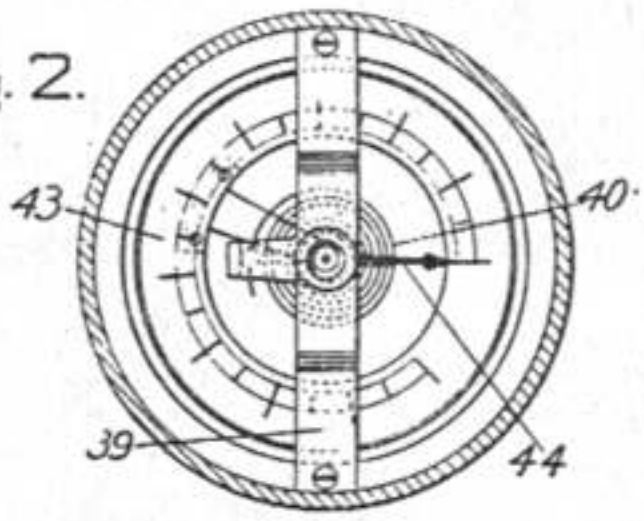

Fig. 3.

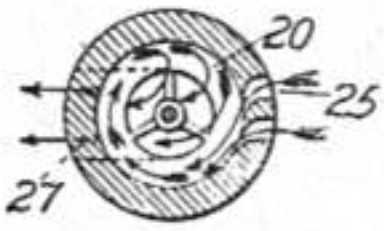

Fig. 4.

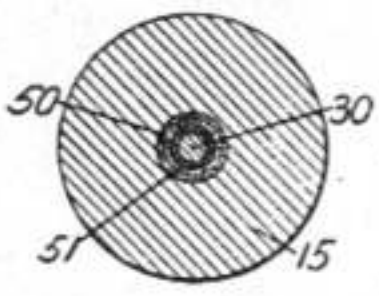

Fig. 1.

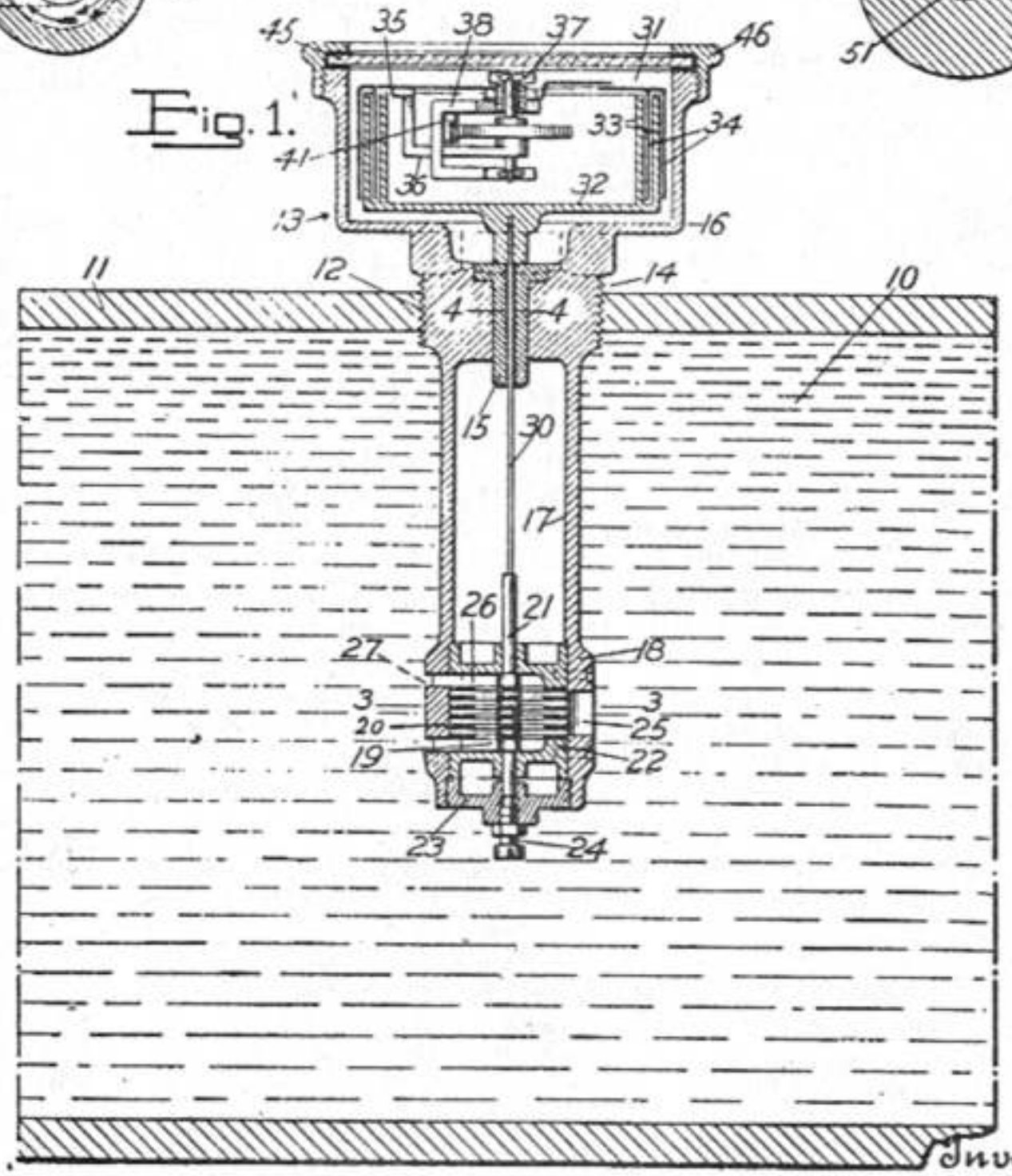

Inventor
Nikola Tesla
By his Attorneys
Foree Bain & May

VIII
VARIOUS PATENTS

UNITED STATES PATENT OFFICE.

NIKOLA TESLA, OF NEW YORK, N. Y., ASSIGNOR OF TWO-THIRDS TO ALFRED S. BROWN, OF SAME PLACE, AND CHARLES F. PECK, OF ENGLEWOOD, NEW JERSEY.

METHOD OF OBTAINING DIRECT FROM ALTERNATING CURRENTS.

SPECIFICATION forming part of Letters Patent No. 413,353, dated October 22, 1889

Application filed June 12, 1889. Serial No. 314,069. (No model.)

To all whom it may concern:

Be it known that I, NIKOLA TESLA, a subject of the Emperor of Austria, from Smiljan, Lika, border country of Austria-Hungary, temporarily residing in New York city, in the State of New York, have invented a certain new and useful Improvement in Methods of Obtaining Direct from Alternating Currents, of which the following is a specification, reference being had to the drawings accompanying and forming a part of the same.

In nearly all the more important industrial applications of electricity the current is produced by dynamo-electric machines driven by power, in the coils of which the currents developed are primarily in reverse directions or alternating; but as very many electrical devices and systems require direct currents, it has been usual to correct the current alternations by means of a commutator, instead of taking them off directly from the generating-coils.

The superiority of alternating-current machines in all cases where their currents can be used to advantage renders their employment very desirable, as they may be much more economically constructed and operated; and the object of this my present invention is to provide means for directing or converting at will at one or more points in a circuit alternating into direct currents.

Stated as broadly as I am able to express it, my invention consists in obtaining direct from alternating currents, or in directing the waves of an alternating current so as to produce direct or substantially direct currents by developing or producing in the branches of a circuit including a source of alternating currents, either permanently or periodically, and by electric, electro-magnetic, or magnetic agencies, manifestations of energy, or what may be termed active resistances of opposite electrical character, whereby the currents or current-waves of opposite sign will be diverted through different circuits, those of one sign passing over one branch and those of opposite sign over another.

I may consider herein only the case of a circuit divided into two paths, inasmuch as any further subdivision involves merely an extension of the general principle. Selecting, then, any circuit through which is flowing an alternating current, I divide such circuit at any desired point into two branches or paths. In one of these paths I insert some device to create an electro-motive force counter to the waves or impulses of current of one sign and a similar device in the other branch which opposes the waves of opposite sign. Assume, for example, that these devices are batteries, primary or secondary, or continuous-current dynamo-machines. The waves or impulses of opposite direction composing the main current have a natural tendency to divide between the two branches; but by reason of the opposite electrical character or effect of the two branches one will offer an easy passage to a current of a certain direction, while the other will offer a relatively high resistance to the passage of the same current. The result of this disposition is, that the waves of current of one sign will, partly or wholly, pass over one of the paths or branches, while those of the opposite sign pass over the other. There may thus be obtained from an alternating current two or more direct currents without the employment of any commutator such as it has been heretofore regarded as necessary to use. The current in either branch may be used in the same way and for the same purposes as any other direct current—that is, it may be made to charge secondary batteries, energize electro-magnets, or for any other analogous purpose.

In the drawings I have illustrated some of the various ways in which I may carry out this invention.

The several figures are diagrammatic in character, and will be described in detail in their order.

Figure 1 represents a plan of directing the alternating currents by means of devices purely electrical in character. Figs. 2, 3, 4, 5, 6, and 7 are diagrams illustrative of other ways of carrying out the invention, which will be hereinafter more particularly described.

In Fig. 1, A designates a generator of alternating currents, and B B the main or line circuit therefrom. At any given point in

this circuit at or near which it is desired to obtain direct currents I divide the circuit B into two paths or branches C D. In each of these branches I place an electrical generator, which for the present we will assume produces direct or continuous currents. The direction of the current thus produced is opposite in one branch to that of the current in the other branch, or, considering the two branches as forming a closed circuit, the generators E F are connected up in series therein, one generator in each part or half of the circuit. The electro motive force of the current sources E and F may be equal to or higher or lower than the electro-motive forces in the branches C D or between the points X and Y of the circuit B B. If equal, it is evident that current-waves of one sign will be opposed in one branch and assisted in the other to such an extent that all the waves of one sign will pass over one branch and those of opposite sign over the other. If, on the other hand, the electro-motive force of the sources E F be lower than that between X and Y, the currents in both branches will be alternating, but the waves of one sign will preponderate. One of the generators or sources of current E or F may be dispensed with; but it is preferable to employ both, if they offer an appreciable resistance, as the two branches will be thereby better balanced. The translating or other devices to be acted upon by the current are designated by the letters G, and they are inserted in the branches C D in any desired manner; but in order to better preserve an even balance between the branches due regard should be had to the number and character of the devices, as will be well understood.

Figs. 2, 3, 4, and 5 illustrate what may be termed "electro-magnetic" devices for accomplishing a similar result—that is to say, instead of producing directly by a generator an electro-motive force in each branch of the circuit, I may establish a field or fields of force and lead the branches through the same in such manner that an active opposition of opposite effect or direction will be developed therein by the passage or tendency to pass of the alternations of current. In Fig. 2, for example, A is the generator of alternating currents, B B the line-circuit, and C D the branches over which the alternating currents are directed. In each branch I include the secondary of a transformer or induction-coil, which, since they correspond in their functions to the batteries of the previous figure, I have designated by the letters E F. The primaries H H′ of the induction-coils or transformers are connected either in parallel or series with a source of direct or continuous currents I, and the number of convolutions is so calculated for the strength of the current from I that the cores J J′ will be saturated. The connections are such that the conditions in the two transformers are of opposite character—that is to say, the arrangement is such that a current wave or impulse corresponding in direction with that of the direct current in one primary, as H, is of opposite direction to that in the other primary H′; hence it results that while one secondary offers a resistance or opposition to the passage through it of a wave of one sign the other secondary similarly opposes a wave of opposite sign. In consequence the waves of one sign will, to a greater or less extent, pass by way of one branch, while those of opposite sign in like manner pass over the other branch.

In lieu of saturating the primaries by a source of continuous current, I may include the primaries in the branches C D, respectively, and periodically short-circuit by any suitable mechanical devices—such as an ordinary revolving commutator—their secondaries. It will be understood of course that the rotation and action of the commutator must be in synchronism or in proper accord with the periods of the alternations in order to secure the desired results. Such a disposition I have represented diagrammatically in Fig. 3. Corresponding to the previous figures, A is the generator of alternating currents, B B the line, and C D the two branches for the direct currents. In branch C are included two primary coils E E′, and in branch D are two similar primaries F F′. The corresponding secondaries for these coils and which are on the same subdivided cores J or J′ are in circuits the terminals of which connect to opposite segments K K′ and L L′, respectively, of a commutator. Brushes *b b* bear upon the commutator and alternately short-circuit the plates K and K′ and L and L′ through a connection *c*. It is obvious that either the magnets and commutator or the brushes may revolve.

The operation will be understood from a consideration of the effects of closing or short-circuiting the secondaries. For example, if at the instant when a given wave of current passes one set of secondaries be short-circuited, nearly all the current flows through the corresponding primaries; but the secondaries of the other branch being open-circuited the self-induction in the primaries is highest, and hence little or no current will pass through that branch. If, as the current alternates, the secondaries of the two branches are alternately short-circuited, the result will be that the currents of one sign pass over one branch and those of the opposite sign over the other. The disadvantages of this arrangement, which would seem to result from the employment of sliding contacts, are in reality very slight, inasmuch as the electro-motive force of the secondaries may be made exceedingly low, so that sparking at the brushes is avoided.

Fig. 4 is a diagram, partly in section, of another plan of carrying out the invention. The circuit B in this case is divided, as before, and each branch includes the coils of both the field and revolving armatures of two induction devices. The armatures O P are prefer-

ably mounted on the same shaft, and are adjusted relatively to one another in such manner that when the self-induction in one branch, as C, is maximum in the other branch D it is minimum. The armatures are rotated in synchronism with the alternations from the source A. The winding or position of the armature-coils is such that a current in a given direction passed through both armatures would establish in one poles similar to those in the adjacent poles of the field and in the other poles unlike the adjacent field-poles, as indicated by *n n s s* in the drawings. If the like poles are presented, as shown in circuit D, the condition is that of a closed secondary upon a primary, or the position of least inductive resistance; hence a given alternation of current will pass mainly through D. A half-revolution of the armatures produces an opposite effect, and the succeeding current impulse passes through C. Using this figure as an illustration, it is evident that the fields N M may be permanent magnets or independently excited and the armatures O P driven, as in the present case, so as to produce alternate currents, which will set up alternately impulses of opposite direction in the two branches D C, which in such case would include the armature-circuits and translating devices only.

In Fig. 5 a plan alternative with that shown in Fig. 3 is illustrated. In the previous case illustrated each branch C and D contained one or more primary coils, the secondaries of which were periodically short-circuited in synchronism with the alternations of current from the main source A, and for this purpose a commutator was employed. The latter may, however, be dispensed with and an armature with a closed coil substituted.

Referring to Fig. 5, in one of the branches, as C, are two coils M', wound on laminated cores, and in the other branches D are similar coils N'. A subdivided or laminated armature O', carrying a closed coil R', is rotatably supported between the coils M' N', as shown. In the position shown—that is, with the coil R' parallel with the convolutions of the primaries N' M'—practically the whole current will pass through branch D, because the self-induction in coils M' M' is maximum. If, therefore, the armature and coil be rotated at a proper speed relatively to the periods or alternations of the source A, the same results are obtained as in the case of Fig. 3.

Fig. 6 is an instance of what may be called, in distinction to the others, a "magnetic" means of securing the results arrived at in this invention. V and W are two strong permanent magnets provided with armatures V' W', respectively. The armatures are made of thin laminæ of soft iron or steel, and the amount of magnetic metal which they contain is so calculated that they will be fully or nearly saturated by the magnets. Around the armatures are coils E F, contained, respectively, in the circuits C and D. The connections and electrical conditions in this case are similar to those in Fig. 2, except that the current source I of Fig. 2 is dispensed with and the saturation of the core of coils E F obtained from the permanent magnets.

In the illustrations heretofore given I have in each instance shown the two branches or paths containing the translating or induction devices as in derivation one to the other; but this is not always necessary. For example, in Fig. 7, A is an alternating-current generator; B B, the line wires or circuit. At any given point in the circuit I form two paths, as D D', and at another point two paths, as C C'. Either pair or group of paths is similar to the previous dispositions with the electrical source or induction device in one branch only, while the two groups taken together form the obvious equivalent of the cases in which an induction device or generator is included in both branches. In one of the paths, as D, are included the devices to be operated by the current. In the other branch, as D', is an induction device that opposes the current impulses of one direction and directs them through the branch D. So, also, in branch C are translating devices G, and in branch C' an induction device or its equivalent that diverts through C impulses of opposite direction to those diverted by the device in branch D'. I have also shown a special form of induction device for this purpose. J J' are the cores, formed with pole-pieces, upon which are wound the coils M N. Between these pole-pieces are mounted at right angles to one another the magnetic armatures O P, preferably mounted on the same shaft and designed to be rotated in synchronism with the alternations of current. When one of the armatures is in line with the poles or in the position occupied by armature P, the magnetic circuit of the induction device is practically closed; hence there will be the greatest opposition to the passage of a current through coils N N. The alternation will therefore pass by way of branch D. At the same time, the magnetic circuit of the other induction device being broken by the position of the armature O, there will be less opposition to the current in coils M, which will shunt the current from branch C. A reversal of the current being attended by a shifting of the armatures, the opposite effect is produced.

There are many other modifications of the means or methods of carrying out my invention; but I have not deemed it necessary herein to specifically refer to more than those described, as they involve the chief modifications of the plan. In all of these it will be observed that there is developed in one or all of the branches of a circuit from a source of alternating currents an active (as distinguished from a dead) resistance or opposition to the currents of one sign, for the purpose of diverting the currents of that sign through the other or another path, but per-

mitting the currents of opposite sign to pass without substantial opposition.

Whether the division of the currents or waves of current of opposite sign be effected with absolute precision or not is immaterial to my invention, since it will be sufficient if the waves are only partially diverted or directed, for in such case the preponderating influence in each branch of the circuit of the waves of one sign secures the same practical results in many if not all respects as though the current were direct and continuous.

An alternating and direct current have been combined so that the waves of one direction or sign were partially or wholly overcome by the direct current; but by this plan only one set of alternations are utilized, whereas by my system the entire current is rendered available. By obvious applications of this discovery I am enabled to produce a self-exciting alternating dynamo, or to operate direct-current meters on alternating-current circuit, or to run various devices—such as arc lamps—by direct currents in the same circuit with incandescent lamps or other devices run by alternating currents.

It will be observed that if an intermittent counter or opposing force be developed in the branches of the circuit and of higher electro-motive force than that of the generator an alternating current will result in each branch, with the waves of one sign preponderating, while a constantly or uniformly acting opposition in the branches of higher electro-motive force than the generator would produce a pulsating current, which conditions would be under some circumstances the equivalent to those I have previously described.

What I claim as my invention is—

1. The method herein set forth of obtaining direct from alternating currents, which consists in developing or producing in one branch of a circuit from an alternating-current source an active resistance to the current impulses of one direction, whereby the said currents or waves of current will be diverted or directed through another branch.

2. The method of obtaining direct from alternating currents, which consists in dividing the path of an alternating current into branches, and developing in one of said branches, either permanently or periodically, an electrical force or active resistance counter to or opposing the currents or current-waves of one sign, and in the other branch a force counter to or opposing the currents or current-waves of opposite sign, as set forth.

3. The method of obtaining direct from alternating currents, which consists in dividing the path of an alternating current into branches, establishing fields of force and leading the said branches through the said fields of force in such relation to the lines of force therein that the impulses of current of one direction will be opposed in one branch and those of opposite direction in the other, as set forth.

NIKOLA TESLA.

Witnesses:
ROBT. F. GAYLORD,
F. B. MURPHY.

(No Model.) 3 Sheets—Sheet 1.

N. TESLA.

METHOD OF OBTAINING DIRECT FROM ALTERNATING CURRENTS.

No. 413,353. Patented Oct. 22, 1889.

Fig. 1

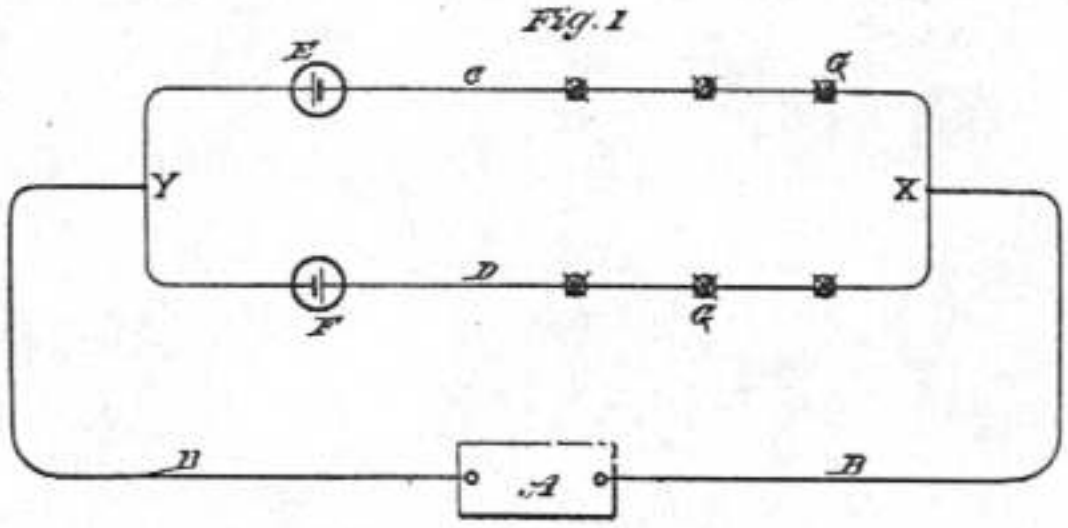

Fig. 2

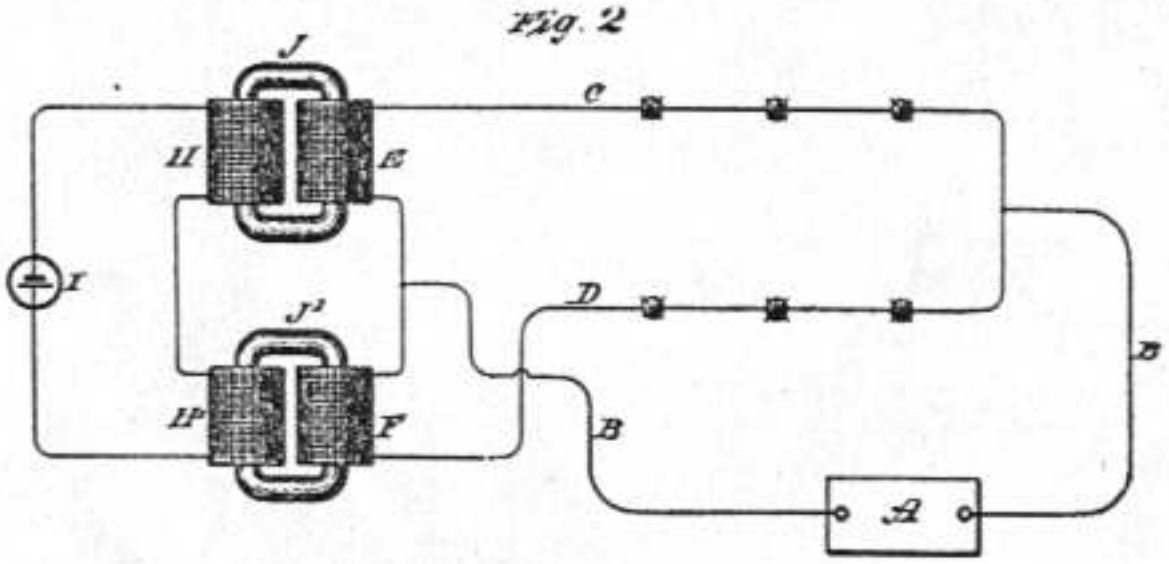

Fig. 3

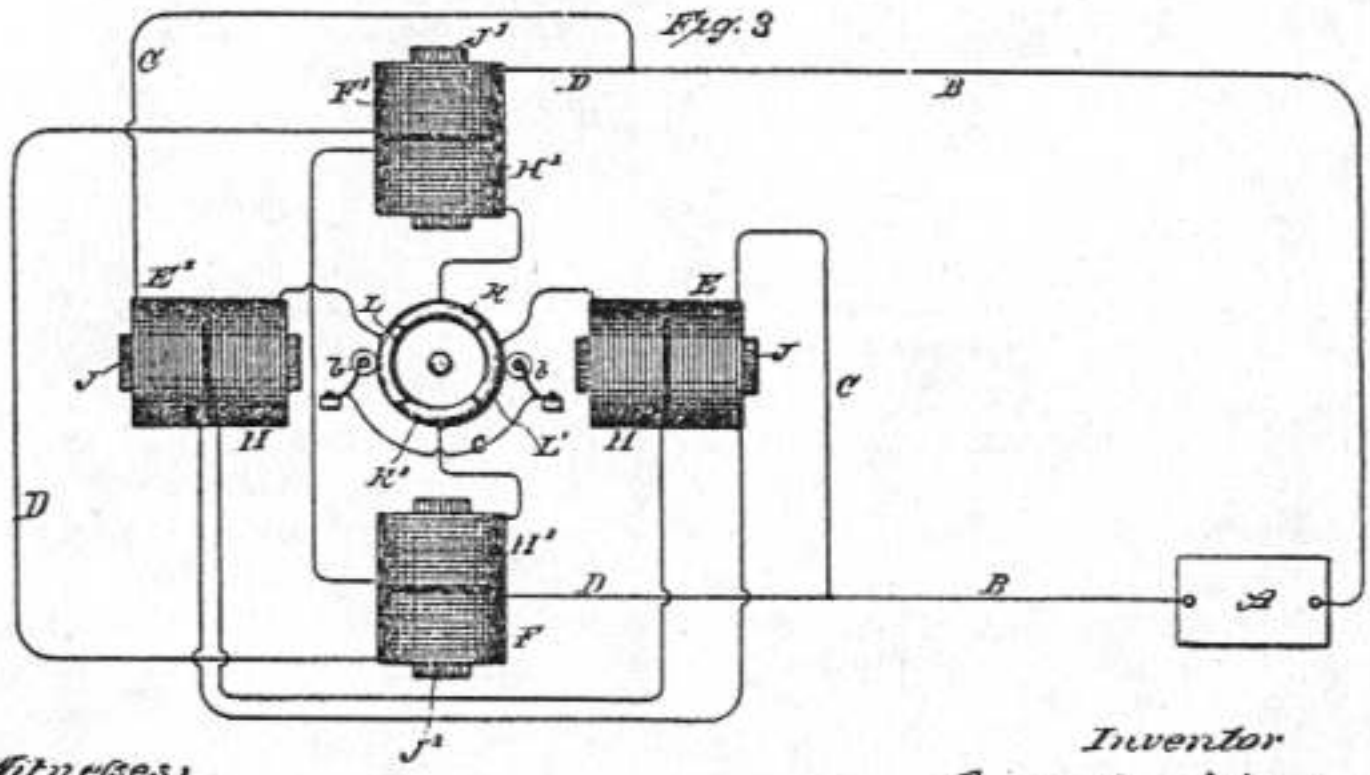

Witnesses:
Raphael Netter
Robt F. Gaylord

Inventor
Nikola Tesla
By
Duncan, Curtis & Page
Attorneys.

P-418

(No Model.) 3 Sheets—Sheet 2.

N. TESLA.

METHOD OF OBTAINING DIRECT FROM ALTERNATING CURRENTS.

No. 413,353. Patented Oct. 22, 1889.

Fig 4

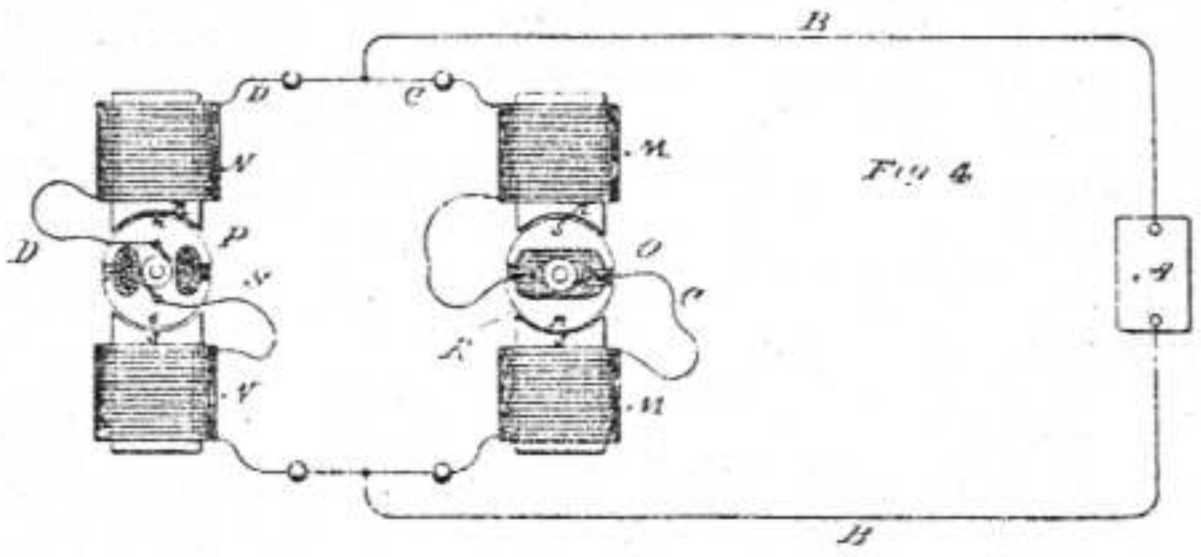

Fig 5

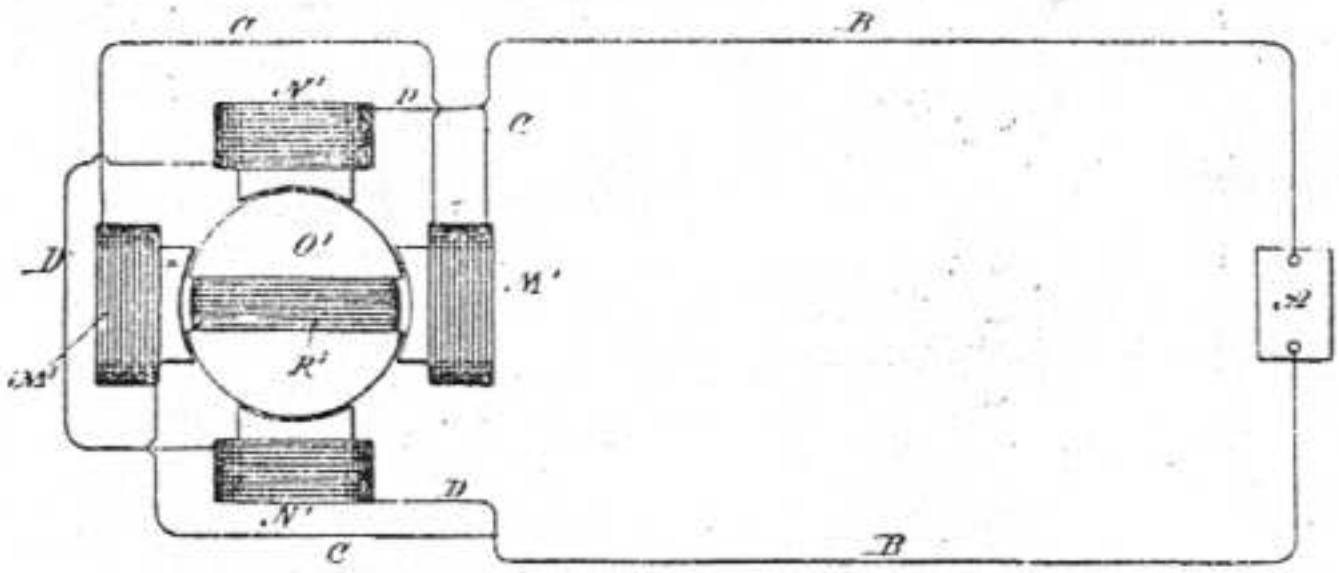

Fig 6

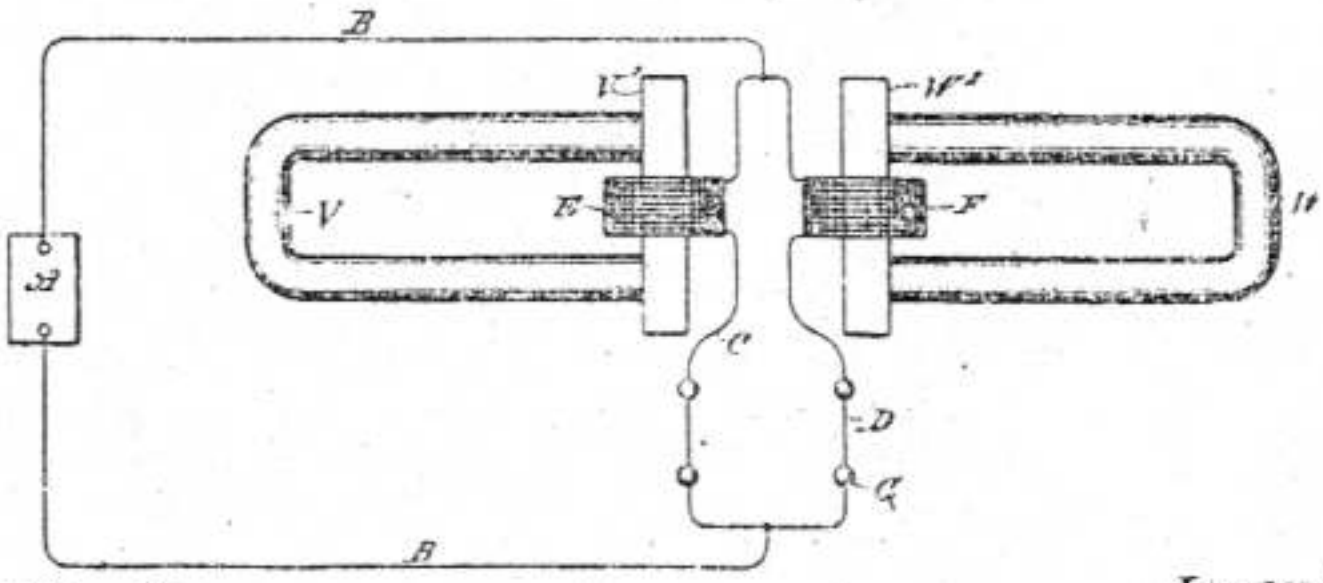

Witnesses:
Raphael Netter
Frank E. Hartley

Inventor
Nikola Tesla
By
Duncan, Curtis & Page
Attorneys.

(No Model.) 3 Sheets—Sheet 3.

N. TESLA.

METHOD OF OBTAINING DIRECT FROM ALTERNATING CURRENTS.

No. 413,353. Patented Oct. 22, 1889.

Fig. 7

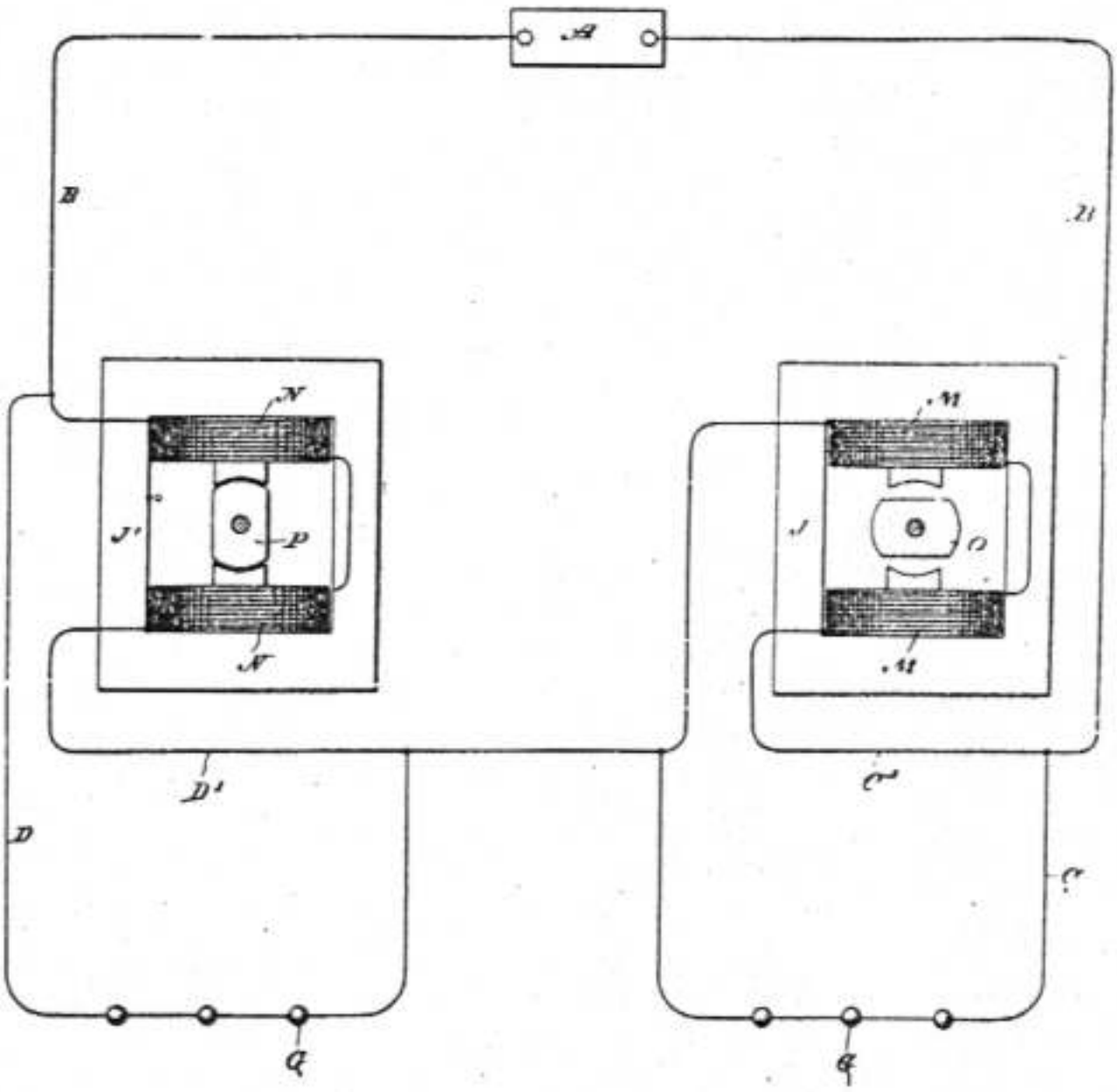

Witnesses:
Raphael Netter
Frank E Hartley

Inventor
Nikola Tesla
By
Duncan, Curtis & Page
Attorneys

UNITED STATES PATENT OFFICE.

NIKOLA TESLA, OF NEW YORK, N. Y.

ELECTRICAL METER.

SPECIFICATION forming part of Letters Patent No. 455,068, dated June 30, 1891.

Application filed March 27, 1891. Serial No. 386,666. No model.

To all whom it may concern:

Be it known that I, NIKOLA TESLA, a subject of the Emperor of Austria, from Smiljan, Lika, border country of Austria-Hungary, and a resident of New York, in the county and State of New York, have invented certain new and useful Improvements in Electrical Meters, of which the following is a specification, reference being had to the drawings accompanying and forming a part of the same.

My invention pertains to methods of and apparatus for estimating the electrical energy that has been expended in an electric circuit or any given portion of the same.

The principle of the invention is embodied in any form of apparatus in which a conductor immersed in an electrolytic solution is so arranged that metal may be deposited upon it or taken away from it in such manner that its electrical resistance is varied in a definite proportion to the strength of the current the energy of which is to be computed, whereby such variation in resistance may serve as a measure of the energy or may be utilized in various well-understood ways to bring into action suitable automatic registering mechanism when the resistance exceeds or falls below predetermined limits.

In carrying out my invention I prefer to employ an electrolytic cell, through which extend two conductors parallel and in close proximity to each other. I connect these conductors in series through a resistance, but in such manner that there is an equal difference of potential between them throughout their entire extent. The free ends or terminals of the conductors are connected either in series in the circuit supplying the current to the lamps or other devices or in parallel to a resistance in the said circuit and in series with the translating devices. Under such circumstances a current passing through the conductors establishes a difference of potential between them which is proportional to the strength of the current, in consequence of which there is a leakage of current from one conductor to the other across the solution. The strength of this leakage current is proportional to the difference of potential, and, therefore, in proportion to the strength of the current passing through the conductors. Moreover, as there is a constant difference of potential between the two conductors throughout the entire extent that is exposed to the solution, the current density through such solution is the same at all corresponding points, and hence the deposit is uniform along the whole of one of the conductors, while the metal is taken away uniformly from the other. The resistance of one conductor is by this means diminished, while that of the other is increased both in proportion to the strength of the current passing through the conductors. From such variation in the resistance of either or both of the conductors forming the positive and negative electrodes of the cell the current energy expended may be readily computed.

Other modified arrangements of the conductors are contemplated, as will be understood from the following description and reference to the drawings.

The figures are diagrams showing the meter in operative relations to a working-circuit and under slightly-modified arrangements.

In Fig. 1, G designates a suitable direct-current generator. L L are the conductors of the circuit extending therefrom and including and supplying lamps or other translating devices T. A is a tube, preferably of glass, the ends of which are sealed, as by means of insulating plugs or caps B B. C C' are two conductors extending through the tube A, their ends passing out through the plugs B to terminals thereon. These conductors may be corrugated or formed in other proper ways to offer the desired electrical resistance. R is a resistance connected in series with the two conductors C C', which by their free terminals are connected up in the circuit of one of the conductors L.

The method of using this device and computing by means thereof the energy of the current will be readily understood. First, the resistances of the two conductors C C', respectively, are accurately measured and noted. Then a known current is passed through the instrument for a given time, and by a second measurement the increase and diminution of the resistances of the two conductors respectively taken. From these data the constant is obtained—that is to say, for example, the increase of resistance of one conductor or the diminution of the resistance of the other per lamp-hour. These two meas-

urements evidently serve as a check, since the gain of one conductor should equal the loss of the other. A further check is afforded by measuring both wires in series with the resistance, in which case the resistance of the whole should remain constant.

In Fig. 2 the conductors C C′ are connected in parallel, the current device at X passing in one branch first through a resistance R′ and then through conductor C, while in the other branch it passes first through conductor C′, and then through resistance R″. The resistances R′ R″ are equal, as also are the resistances of the conductors C C′. It is, moreover, preferable that the respective resistances of the conductors C C′ should be a known and convenient fraction of the coils or resistances R′ R″. It will be observed that in the arrangement shown in Fig. 2 there is a constant potential difference between the two conductors C C′ throughout their entire length.

It will be seen that in both cases illustrated the proportionality of the increase or decrease of resistance to the current strength will always be preserved, for what one conductor gains the other loses, and the resistances of the conductors C C′ being small as compared with the resistances in series with them. It will be understood that after each measurement or registration of a given variation of resistance in one or both conductors the direction of the current should be changed or the instrument reversed, so that the deposit will be taken from the conductor which has gained and added to that which has lost. This principle is capable of many modifications. For instance, since there is a section of the circuit—to wit, the conductor C or C′—that varies in resistance in proportion to the current strength, such variation may be utilized, as is done in many analogous cases, to effect the operation of various automatic devices, such as registers. I prefer, however, for the sake of simplicity to compute the energy by measurements of resistance.

The chief advantages of this invention are, first, that it is possible to read off directly the amount of the energy expended by means of a properly-constructed ohm-meter and without resorting to weighing the deposit; second, it is not necessary to employ shunts, for the whole of the current to be measured may be passed through the instrument; third, the accuracy of the instrument and correctness of the indications are but slightly affected by changes in temperature. In addition to these advantages the invention possesses the merit of economy in the waste of energy and simplicity, compactness, and cheapness in construction.

What I claim is—

1. The method of computing the amount of electrical energy expended in a given time in an electric circuit, which consists in maintaining by the current a potential difference between two conductors in an electrolytic solution uniform throughout the whole extent of such conductors exposed to the solution and measuring the variation of the resistance in one or both of said conductors due to the gain or loss of metal by electro-deposition, as set forth.

2. The combination, with an electric circuit, of a meter composed of an electrolytic cell and two conductors passing through the same, the said conductors being in or connected with the main circuit and so that a potential difference uniform throughout the whole extent exposed to the solution will be maintained between them, as set forth.

3. The combination, with an electric circuit containing translating devices, of a meter composed of an electrolytic cell and two conductors passing through the same and connected in series with the translating devices, and one or more resistances connected therewith for establishing a potential difference between the two conductors through the solution of the cell, as set forth.

4. An electrical meter consisting of an electrolytic cell, two parallel conductors extending through the same, the said conductors being connected together in series through a resistance and having terminals at their free ends for connection with a circuit, these parts being combined in the manner substantially as set forth.

5. An electric meter consisting of a tubular cell containing an electrolytic solution and closed at the ends, two parallel conductors extending through the cell, a resistance-connection between the end of one conductor and the opposite end of the other, and terminals for the remaining ends of the respective conductors, these parts being combined as set forth.

NIKOLA TESLA.

Witnesses:
ROBT. F. GAYLORD,
PARKER W. PAGE.

P-422

(No Model.)

N. TESLA.

ELECTRICAL METER.

No. 455,068. Patented June 30, 1891.

Fig. 1

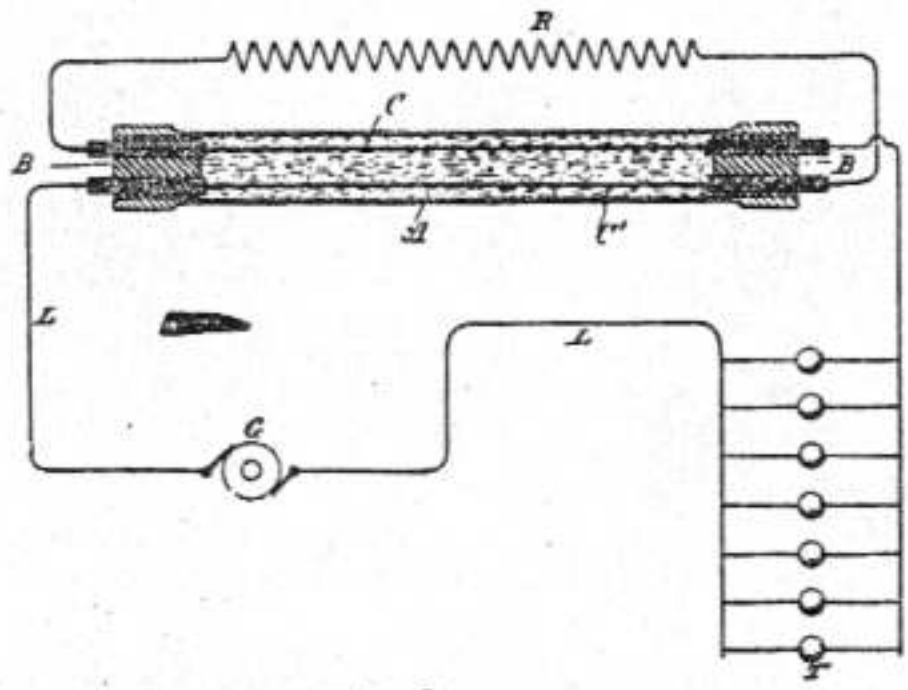

Fig. 2

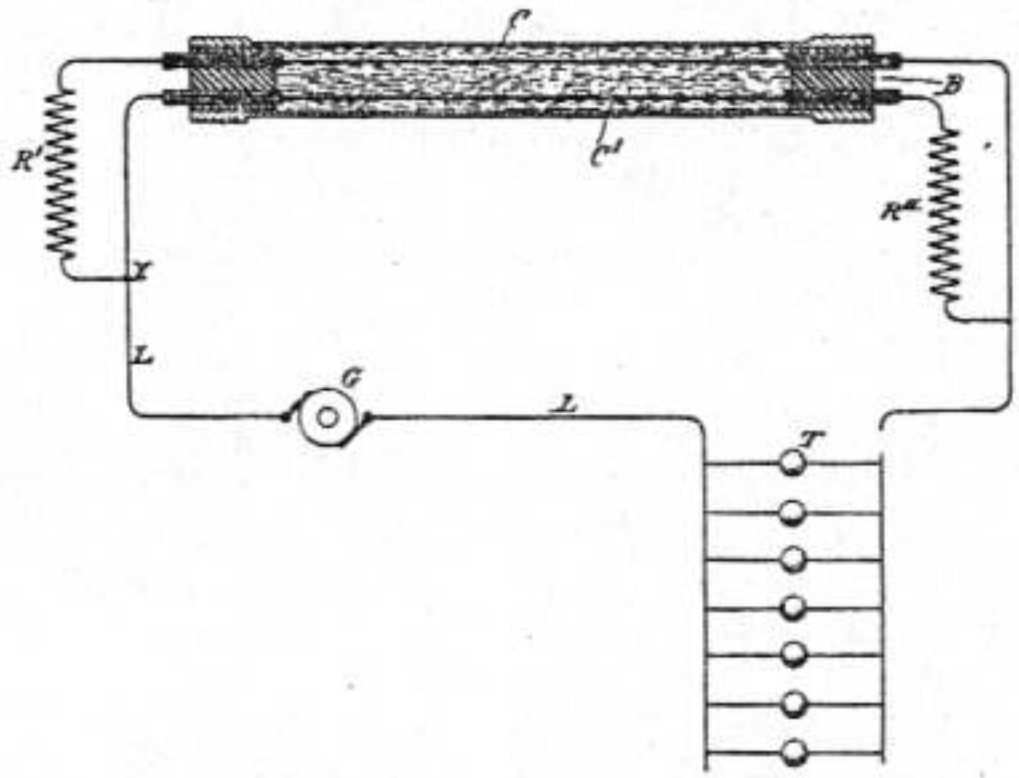

Witnesses:

Raphael Netter

Ernest Hopkinson

Inventor

Nikola Tesla

by

Duncan & Page.

Attorneys.

S. NATIONAL LITHOGRAPHING COMPANY,
WASHINGTON, D. C.

UNITED STATES PATENT OFFICE.

NIKOLA TESLA, OF NEW YORK, N. Y.

ELECTRICAL CONDENSER.

SPECIFICATION forming part of Letters Patent No. 464,667, dated December 8, 1891.

Application filed August 1, 1891. Serial No. 401,356. (No model.)

To all whom it may concern

Be it known that I, NIKOLA TESLA, a citizen of the United States, residing at New York, in the county and State of New York, have invented a certain new and useful Improvement in Electrical Condensers, of which the following is a specification, reference being had to the accompanying drawings.

The subject of my present application is a new and improved electrical condenser constructed with a view of obviating certain defects which I have observed to exist in the ordinary forms of such apparatus when employed in the system devised by me of producing light and other effects by means of currents of high frequency and high potential.

I have found that insulating material such as glass, mica, and, in general, those bodies which possess the highest specific inductive capacity are inferior as insulators in such devices when currents of the kind described are employed to those possessing high insulating power, together with a smaller specific inductive capacity, and I have also found that it is very desirable to exclude all gaseous matter from the apparatus, or any access to the same to the electrified surfaces, in order to prevent heating by molecular bombardment and the loss or injury consequent thereon. I have found that I may accomplish these results and produce highly efficient and reliable condensers by using oil as the dielectric, and in this my invention resides.

No special construction of the condenser is necessary to a demonstration of the invention; but the plan admits of a particular construction of condenser, in which the distance between the plates is adjustable, and of which I take advantage.

In the accompanying drawings, Figure 1 is a section of a condenser constructed in accordance with my invention and having stationary plates, and Fig. 2 is a similar view of a condenser with adjustable plates.

I use any suitable box or receptacle A to contain the plates or armatures. These latter are designated by B and C and are connected, respectively, to terminals D and E, which pass out through the sides of the case. The plates ordinarily are separated by strips of porous insulating material F, which are used merely for the purpose of maintaining them in position. The space within the can is filled with oil G. Such a condenser will prove highly efficient and will not become heated or permanently injured.

In many cases it is desirable to vary or adjust the capacity of a condenser, and this I provide for by securing the plates to adjustable supports—as, for example, to rods H—passing through stuffing-boxes K in the sides of the case A and furnished with nuts L, the ends of the rods being threaded for engagement with the nuts.

It is well known that oils possess insulating properties, and it has been a common practice to interpose a body of oil between two conductors for purposes of insulation; but I have discovered peculiar properties in oils which render them very valuable in this particular form of device, their employment in which has never heretofore and, so far as I am aware, been regarded as necessary or even desirable.

What I claim is—

1. An electric condenser composed of plates or armatures immersed in oil.

2. An electrical condenser composed of plates or armatures adjustable with respect to one another and immersed in oil

NIKOLA TESLA

Witnesses:
PARKER W. PAGE,
MARCELLA G. TRACY.

P-424

(No Model.)

N. TESLA.

ELECTRICAL CONDENSER.

No. 464,667. Patented Dec. 8, 1891

Fig. 1

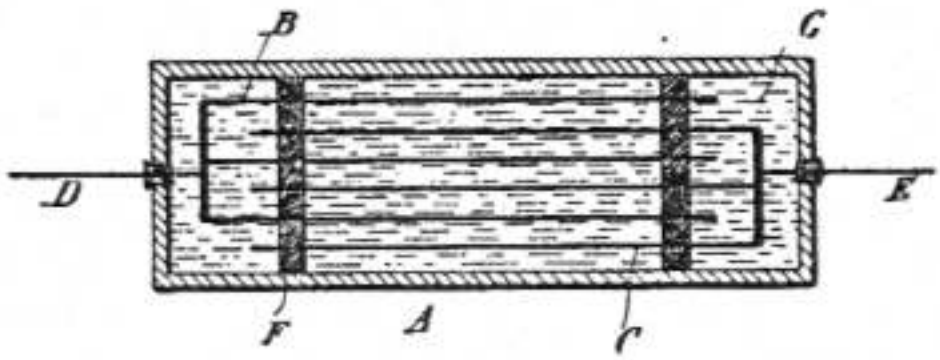

Fig 2

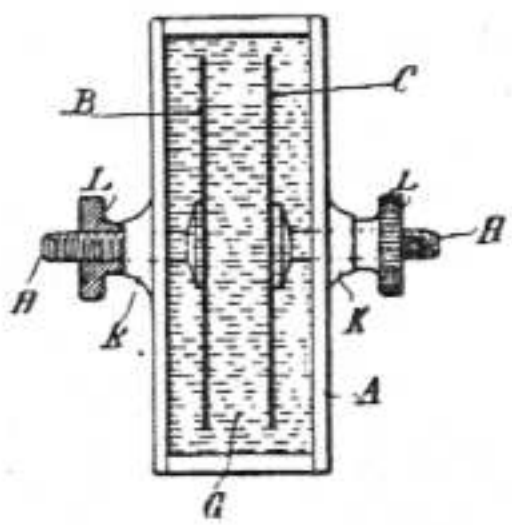

Witnesses:
Raphael Netter
Frank B Murphy.

Inventor
Nikola Tesla
by
Duncan & Page
Attorneys

UNITED STATES PATENT OFFICE.

NIKOLA TESLA, OF NEW YORK, N. Y.

ELECTRICAL CONDUCTOR.

SPECIFICATION forming part of Letters Patent No. 514,167, dated February 6, 1894.

Application filed January 2, 1892. Serial No. 416,773. (No model.)

To all whom it may concern:

Be it known that I, NIKOLA TESLA, a citizen of the United States, residing at New York, in the county and State of New York, have invented certain new and useful Improvements in Line Conductors for Systems of Electrical Distribution, of which the following is a specification, reference being had to the drawings accompanying and forming a part of the same.

In any system of electrical transmission or distribution in which currents of excessively high potential are employed, and more particularly, when the frequency is high, there is a dissipation of energy from the conductor or conductors of the line, due to the electrification of the atmosphere or other surrounding medium, or other causes.

Heretofore it has been usual, in order to prevent loss by dissipation or interference by induction on line conductors, to insulate the same and inclose them in a continuous conducting sheathing or cover which has been connected with the ground by a good conducting path.

The object of my invention is to prevent loss on line conductors in a system of electrical transmission and distribution, more particularly such as that described by me in patent of June 23, 1891, No. 454,622, but in any other system in which alternating or, generally speaking, varying currents of excessively high potential are employed.

I have found that in these systems the use of a conducting sheath or screen around the line conductors and well grounded, or even brought into proximity to external conductors or large bodies, is attended by an actual and generally a serious loss of energy. I therefore maintain the sheath either entirely isolated or connected directly or inductively to the ground, through a path which will practically prevent the passage of currents over it. I have also found that when a continuous insulated sheath or screen is employed, there is greater liability to loss of energy by inductive action, for unless the sheath or screen be considerably shorter than the current waves passing in the conductor, electromotive forces will be set up between different points in the sheath, which will result in the passage between such points of induced currents. I, therefore, divide up the sheath or screen into short lengths, very much shorter than the wave lengths of the current used, so that the grounding of any one of such lengths or the approach thereto of a large body will result in an inappreciable loss, or at most a small local draining of the energy, while the tendency of currents to flow between different points in the sheath is effectually overcome. The function of the sheath as a static screen for preventing the dissipation of the electric energy, however, requires for its complete effectiveness an uninterrupted conducting partition or screen around the conductor. I attain this respect in the case of a sectional screen, by causing the ends of the insulated divisions or sections of the same to overlap, interposing a suitable insulating material between the overlapping portions. By means of a conductor or conductors thus protected, I may transmit with slight loss and to great distances currents of very high potential and extremely high frequency.

The invention is illustrated in the accompanying drawings in which—

Figure 1 illustrates portions of the conductor with the earth connections above described. Fig. 2 is a sectional view of a portion of the conductor on an enlarged scale.

A is the central wire or conductor that carries the current.

B is an insulating coating.

C is a conducting sheathing or screen, which may be externally insulated, if so desired. This sheathing is divided up, as shown, into short lengths or sections, and the end of one section overlaps or telescopes with the end of the adjacent sections but is insulated therefrom by the material D.

It is well known that a static screen, to be entirely effective as such, should have a ground connection, but it has been usual in such cases to provide a good electrical connection from the screen to earth. When a current of excessively high potential, however, is used, or when the frequency of the current is very high, such a connection is impracticable on account of the loss which follows. In such cases, therefore, I obtain the

beneficial results of an earth connection while preventing the generally serious loss that would occur in the use of such currents, by providing between the sheath and the ground a path P of very high ohmic resistance or one containing a self-induction coil S properly determined with respect to the existing conditions so that it will effect the described result, or a condenser of very small capacity as shown at R. In such cases the sheathing or screen for practical purposes may be regarded as isolated from the ground, since by the character of the connection employed no appreciable loss results from the passage of current from the sheath to the ground.

No particular plan of construction need be followed in making up this conductor, and no special materials of the several kinds named need be used; the general construction and character of the conductor, apart from the particular features herein described, being entirely well understood by those skilled in the art.

What I claim is—

1. A conductor for electric circuits, composed of a wire for carrying the current, an insulated coating or covering and a surrounding conducting sheath or screen divided into insulated sections, as set forth.

2. A conductor for electric circuits, composed of a wire for carrying the current, a coating or covering of insulating material and a surrounding conducting sheath or screen divided into insulated sections, the ends of which overlap, as set forth.

3. The combination of a wire or conductor for conveying electric currents, an insulated coating or covering therefor, a conducting sheath or screen surrounding the insulating coating and a connection between said sheathing and the ground containing a condenser of very small capacity or its equivalent.

NIKOLA TESLA.

Witnesses:
ERNEST HOPKINSON,
PARKER W. PAGE.

P-427

(No Model.)

N. TESLA.

ELECTRICAL CONDUCTOR.

No. 514,167. Patented Feb. 6, 1894.

Fig. 1

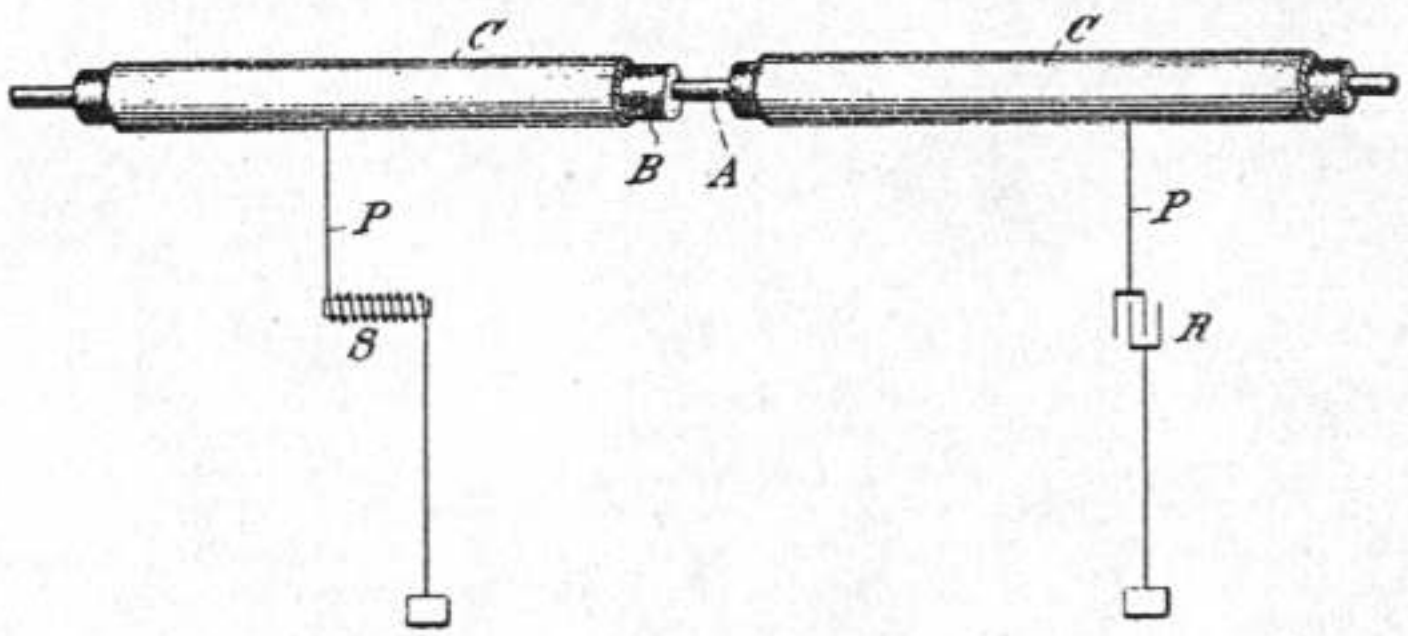

Fig. 2

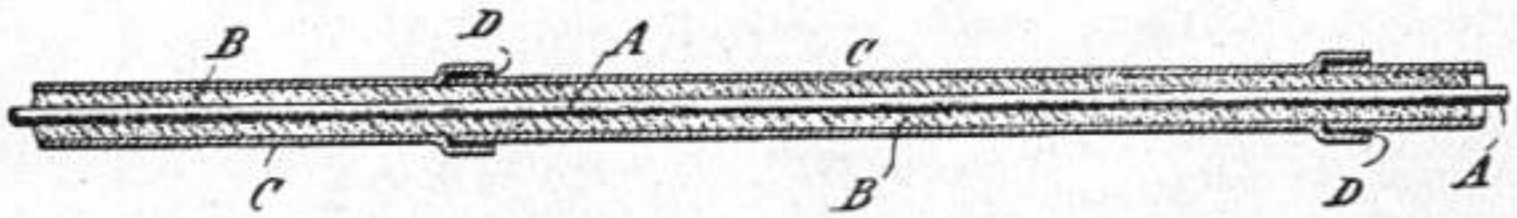

Witnesses:
Raphael Netter
Ernest Hopkinson

Inventor
Nikola Tesla
by Duncan & Page
Attorneys.

UNITED STATES PATENT OFFICE.

NIKOLA TESLA, OF NEW YORK, N. Y.

COIL FOR ELECTRO-MAGNETS.

SPECIFICATION forming part of Letters Patent No. 512,340, dated January 9, 1894.

Application filed July 7, 1893. Serial No. 479,804. (No model.)

To all whom it may concern:

Be it known that I, NIKOLA TESLA, a citizen of the United States, residing at New York, in the county and State of New York, have invented certain new and useful Improvements in Coils for Electro-Magnets and other Apparatus, of which the following is a specification, reference being had to the drawings accompanying and forming a part of the same.

In electric apparatus or systems in which alternating currents are employed the self-induction of the coils or conductors may, and, in fact, in many cases does operate disadvantageously by giving rise to false currents which often reduce what is known as the commercial efficiency of the apparatus composing the system or operate detrimentally in other respects. The effects of self-induction, above referred to, are known to be neutralized by proportioning to a proper degree the capacity of the circuit with relation to the self-induction and frequency of the currents. This has been accomplished heretofore by the use of condensers constructed and applied as separate instruments.

My present invention has for its object to avoid the employment of condensers which are expensive, cumbersome and difficult to maintain in perfect condition, and to so construct the coils themselves as to accomplish the same ultimate object.

I would here state that by the term coils I desire to include generally helices, solenoids, or, in fact, any conductor the different parts of which by the requirements of its application or use are brought into such relations with each other as to materially increase the self-induction.

I have found that in every coil there exists a certain relation between its self-induction and capacity that permits a current of given frequency and potential to pass through it with no other opposition than that of ohmic resistance, or, in other words, as though it possessed no self-induction. This is due to the mutual relations existing between the special character of the current and the self-induction and capacity of the coil, the latter quantity being just capable of neutralizing the self-induction for that frequency. It is well-known that the higher the frequency or potential difference of the current the smaller the capacity required to counteract the self-induction; hence, in any coil, however small the capacity, it may be sufficient for the purpose stated if the proper conditions in other respects be secured. In the ordinary coils the difference of potential between adjacent turns or spires is very small, so that while they are in a sense condensers, they possess but very small capacity and the relations between the two quantities, self-induction and capacity, are not such as under any ordinary conditions satisfy the requirements herein contemplated, because the capacity relatively to the self-induction is very small.

In order to attain my object and to properly increase the capacity of any given coil, I wind it in such way as to secure a greater difference of potential between its adjacent turns or convolutions, and since the energy stored in the coil—considering the latter as a condenser, is proportionate to the square of the potential difference between its adjacent convolutions, it is evident that I may in this way secure by a proper disposition of these convolutions a greatly increased capacity for a given increase in potential difference between the turns.

I have illustrated diagrammatically in the accompanying drawings the general nature of the plan which I adopt for carrying out this invention.

Figure 1 is a diagram of a coil wound in the ordinary manner. Fig. 2 is a diagram of a winding designed to secure the objects of my invention.

Let A, Fig. 1, designate any given coil the spires or convolutions of which are wound upon and insulated from each other. Let it be assumed that the terminals of this coil show a potential difference of one hundred volts, and that there are one thousand convolutions; then considering any two contiguous points on adjacent convolutions let it be assumed that there will exist between them a potential difference of one-tenth of a volt. If now, as shown in Fig. 2, a conductor B be wound parallel with the conductor A and insulated from it, and the end of A be connected with the starting point of B, the aggregate length of the two conductors being such that the assumed number of convolutions or turns is the same, viz., one thousand, then the po-

tential difference between any two adjacent points in A and B will be fifty volts, and as the capacity effect is proportionate to the square of this difference, the energy stored in the coil as a whole will now be two hundred and fifty thousand as great. Following out this principle, I may wind any given coil either in whole or in part, not only in the specific manner herein illustrated, but in a great variety of ways, well-known in the art, so as to secure between adjacent convolutions such potential difference as will give the proper capacity to neutralize the self-induction for any given current that may be employed. Capacity secured in this particular way possesses an additional advantage in that it is evenly distributed, a consideration of the greatest importance in many cases, and the results, both as to efficiency and economy, are the more readily and easily obtained as the size of the coils, the potential difference, or frequency of the currents are increased.

Coils composed of independent strands or conductors wound side by side and connected in series are not in themselves new, and I do not regard a more detailed description of the same as necessary. But heretofore, so far as I am aware, the objects in view have been essentially different from mine, and the results which I obtain even if an incident to such forms of winding have not been appreciated or taken advantage of.

In carrying out my invention it is to be observed that certain facts are well understood by those skilled in the art, viz: the relations of capacity, self-induction, and the frequency and potential difference of the current. What capacity, therefore, in any given case it is desirable to obtain and what special winding will secure it, are readily determinable from the other factors which are known

What I claim as my invention is—

1. A coil for electric apparatus the adjacent convolutions of which form parts of the circuit between which there exists a potential difference sufficient to secure in the coil a capacity capable of neutralizing its self-induction, as hereinbefore described.

2. A coil composed of contiguous or adjacent insulated conductors electrically connected in series and having a potential difference of such value as to give to the coil as a whole, a capacity sufficient to neutralize its self-induction, as set forth.

NIKOLA TESLA.

Witnesses:
ROBT. F. GAYLORD,
PARKER W. PAGE.

P-430

(No Model.)

N. TESLA.

COIL FOR ELECTRO MAGNETS.

No. 512,340. Patented Jan. 9, 1894.

Fig. 1

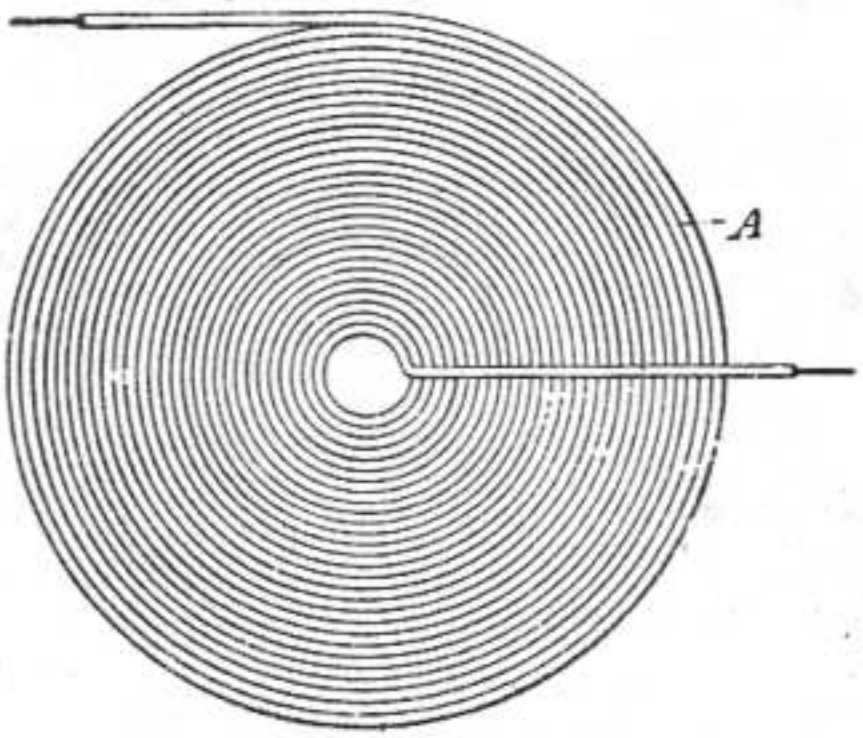

Fig. 2

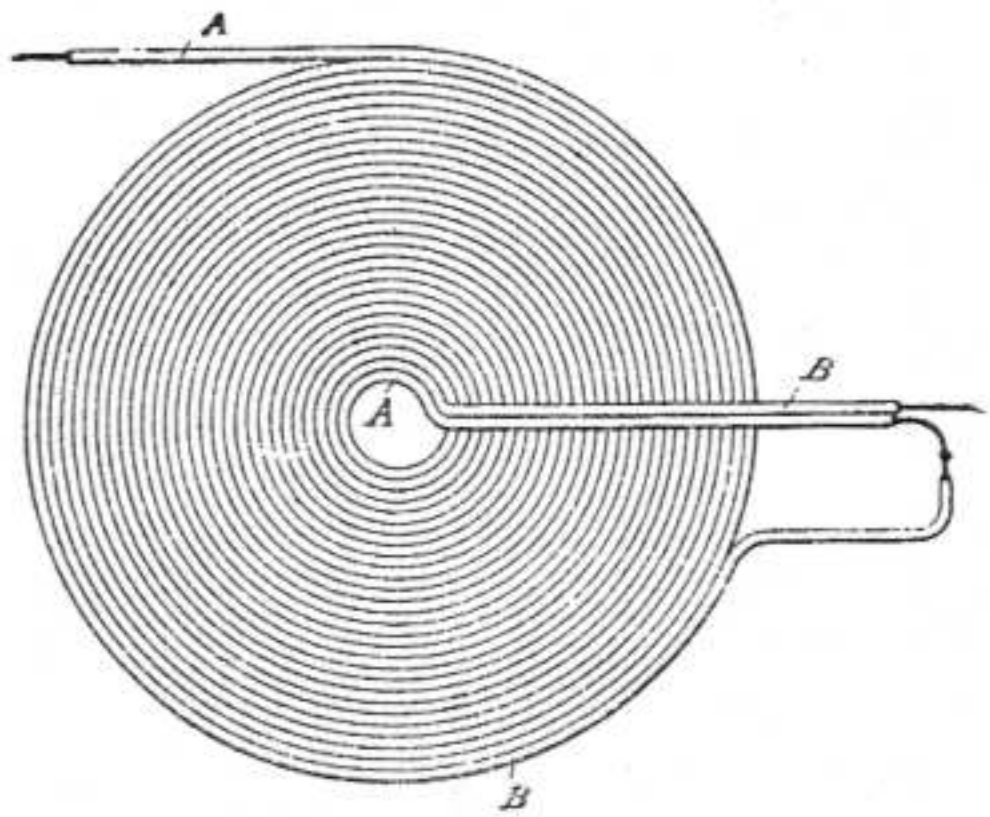

Witnesses
Raphael Netter
James H Castlow.

Inventor
Nikola Tesla.
By his Attorneys
Duncan & Page.

UNITED STATES PATENT OFFICE.

NIKOLA TESLA, OF NEW YORK, N. Y.

APPARATUS FOR PRODUCING OZONE.

SPECIFICATION forming part of Letters Patent No. 568,177, dated September 22, 1896.

Application filed June 17, 1896. Serial No. 595,927. (No model.)

To all whom it may concern:

Be it known that I, NIKOLA TESLA, a citizen of the United States, residing at New York, in the county and State of New York, have invented certain new and useful Improvements in Apparatus for Producing Ozone, of which the following is a specification, reference being had to the drawings accompanying and forming a part of the same.

The invention subject of my present application has primarily as its object to provide a simple, cheap, and effective apparatus for the production of ozone or such gases as are obtained by the action of high-tension electrical discharges, although in the application to such purposes of the apparatus heretofore invented by me and designed for the production of electric currents of high frequency and potential I have made certain improvements in such apparatus itself which are novel and useful in other and more general applications of the same. I have heretofore shown and described, notably in Patents No. 462,418, dated November 3, 1891, and No. 454,622, dated June 23, 1891, an apparatus devised for the purpose of converting and supplying electrical energy in a form suited for the production of certain novel electrical phenomena which require currents of higher frequency and potential than can readily or even possibly be developed by generators of the ordinary types or by such mechanical appliances as were theretofore known. This apparatus involved means for utilizing the intermittent or oscillating discharge of the accumulated electrical energy of a condenser or a circuit possessing capacity in what may be designated the "working" circuit or that which contains the translating devices or means for utilizing such currents. In my present improvement I have utilized appliances of this general character under conditions and in combination with certain instrumentalities, hereinafter described, which enable me to produce, without difficulty and at very slight expense, ozone in any desired quantities. I would state the apparatus which I have devised for this purpose is capable of other and highly important uses of a similar nature, but for purposes of the present case I deem it sufficient to describe its operation and effects when used for the purpose of generating ozone.

In the accompanying drawings, illustrative of the principle of construction and mode of operation of my improvement, Figure 1 is a diagrammatic illustration of the invention; and Fig. 2, a view, partly in side elevation and partly in section, of the apparatus as I construct it for practical use.

The device hereinafter described is especially designed for direct application to and use with existing circuits carrying direct currents, such as the ordinary municipal incandescent-lighting circuits.

Let A B designate the terminals from any given circuit of this character. In such circuit I connect up an electromagnetic motor C in any of the usual ways. That is to say, the coils of the field and armature may be in series or derivation or wholly independent, and either or both are connected up in the circuit. In the present instance one terminal, as B, is connected to one of the binding-posts, from which the circuit is led through one field-coil, D, the brushes and commutator E, the other field-coil, F, and thence to a brush G, which rests upon a circuit-controller H, consisting in general of a conducting disk or cylinder with insulating-sections in its periphery. The other terminal, as A, connects with a second brush K, bearing on the controller, so that the current which passes through and operates the motor is periodically interrupted. For this reason the iron cores of the motor should be laminated. Around the controller is formed a circuit of low self-induction, which includes a condenser L and the primary M of a transformer. The circuit including the motor is of relatively high self-induction, and this property is imparted to it by the coils of the motor, or, when these are not sufficient, by the addition of suitable choking-coils, so that at each break of the motor-circuit a current of high electromotive force will be developed for charging the condenser, which may therefore be small and inexpensive. The condenser discharges through the circuit which is completed through the brushes G K and the controller H, and since the self-induction of this circuit, as well as the capacity of the con-

denser itself, may be given practically any desired value the frequency of the discharge-current may be adjusted at will. The potential of the high-frequency discharge-current is raised by a secondary coil N in inductive relation to the primary M. The conductors of such secondary circuit are connected to two insulated conducting-plates P P, and when the apparatus is in operation a discharge in the form of streams will be maintained between such plates, as indicated by the wavy lines in the figures. If air be forced between the plates P during this discharge, the effectiveness of the apparatus is increased and ozone is generated in large quantities. In order to secure this result, I inclose the said plates P P in a casing R of any proper description, through which a current of air is maintained by a fan S, mounted on the shaft of the motor.

This apparatus may be constructed and combined in very compact form and small compass. Its operation involves but a small expenditure of energy, while it requires practically no care or attention for the continued production of ozone in unlimited amount.

What I claim as my invention is—

1. The combination with a circuit of direct currents, of a controller for making and breaking the same, a motor included in or connected with said circuit so as to increase its self-induction, and driving the said controller, a condenser in a circuit around the controller, and a transformer through the primary of which the condenser discharges, as set forth.

2. The combination with a circuit of direct currents, of a controller for making and breaking the same, a series-wound motor having its coils included in said circuit and driving the said controller, a condenser connected with the circuit around the point of interruption therein, and a transformer, the primary of which is in the discharge-circuit of the condenser, as set forth.

3. A device for producing ozone comprising in combination, surfaces between which an electrical discharge takes place, a transformer for producing the potential necessary for such discharge, a condenser in the primary circuit of the transformer, a charging-circuit, means for charging the condenser by such circuit and discharging it through the primary of the transformer, and a device for maintaining a current of air between the discharge-surfaces, as set forth.

4. A device for producing ozone comprising in combination, surfaces between which an electrical discharge takes place, a transformer for producing the potential necessary for such discharge, a condenser in the primary circuit of the transformer, a charging-circuit, means for charging the condenser by such circuit and discharging it through the primary of the transformer, a motor operated by the charging-circuit, and a device operated thereby for maintaining a current of air between the discharge-surfaces, as set forth.

5. A device for producing ozone comprising in combination, surfaces between which an electrical discharge takes place, a transformer for producing the potential necessary for such discharge, a condenser in the primary circuit of the transformer, a charging-circuit, a circuit-controller effecting the charging and discharging of the condenser, and a fan-motor connected with the charging-circuit and operating the circuit-controller and adapted to maintain a current of air between the discharge-surfaces, as set forth.

6. A device for producing ozone comprising in combination, means for charging a condenser, a circuit of low self-induction and resistance into which the condenser discharges, a coil for raising the potential of such discharge, and means for passing a current of air through the high-potential discharge, as set forth.

NIKOLA TESLA.

Witnesses:
DRURY W. COOPER,
M. LAWSON DYER.

P-433

(No Model.) 2 Sheets—Sheet 1

N. TESLA.

APPARATUS FOR PRODUCING OZONE.

No. 568,177 Patented Sept. 22, 1896.

Fig. 1.

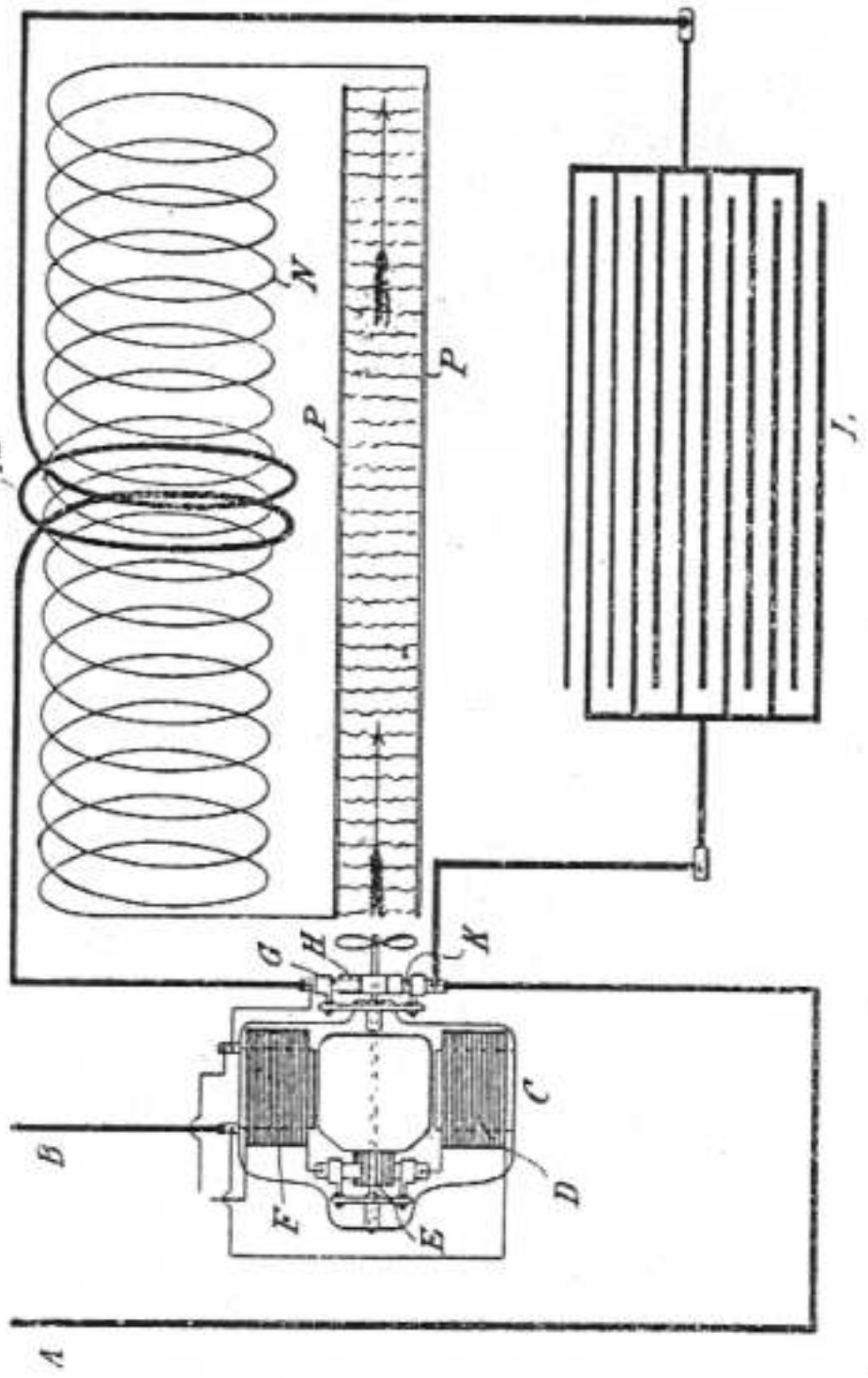

Witnesses:
Raphael Netter
Drury W. Cooper

Nikola Tesla, Inventor
by Kerr, Curtis & Page.
Attys.

P-434

(No Model.) 2 Sheets—Sheet 2.

N. TESLA.

APPARATUS FOR PRODUCING OZONE.

No. 568,177. Patented Sept. 22, 1896.

Fig. 2

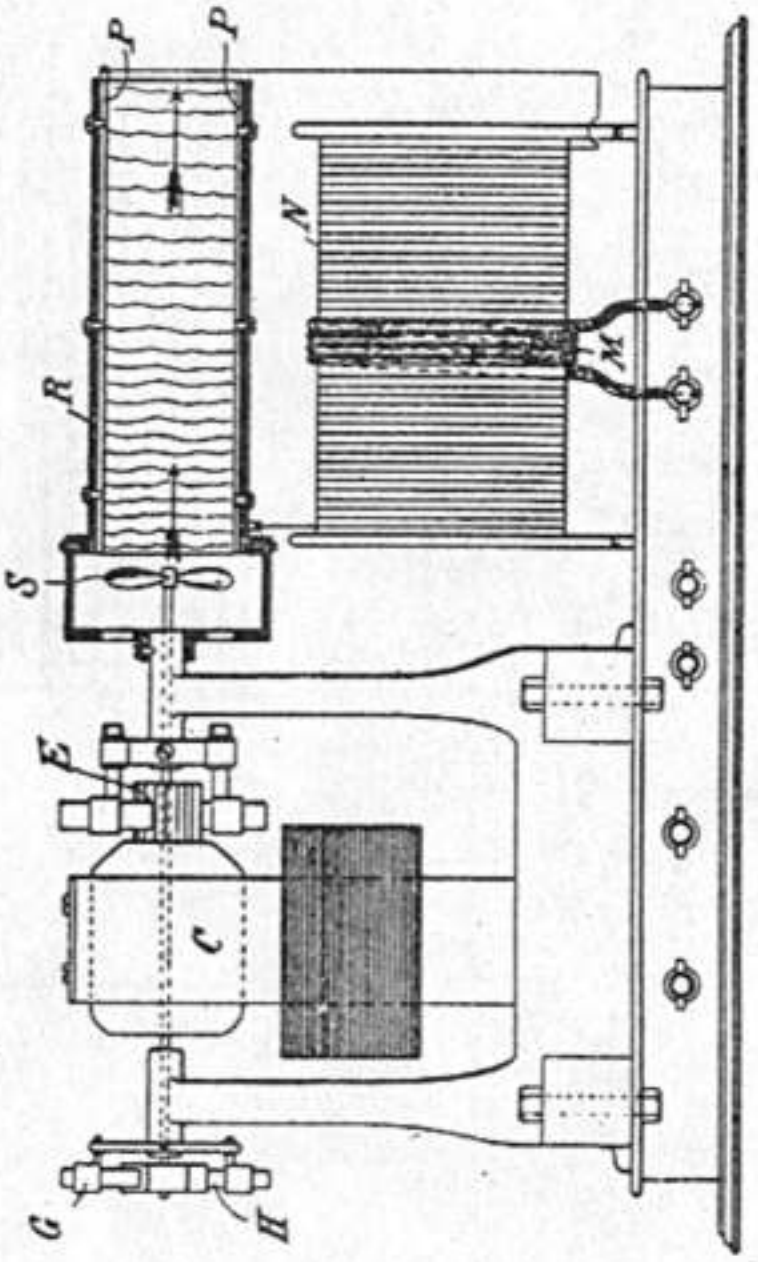

Witnesses:
Raphael Netter
Drury W. Cooper

Nikola Tesla, Inventor
by Kerr, Curtis & Page
Att'ys.

UNITED STATES PATENT OFFICE.

NIKOLA TESLA, OF NEW YORK, N. Y.

MANUFACTURE OF ELECTRICAL CONDENSERS, COILS, &c.

SPECIFICATION forming part of Letters Patent No. 577,671, dated February 23, 1897.

Application filed November 6, 1896. Serial No. 611,128. (No model.)

To all whom it may concern:

Be it known that I, NIKOLA TESLA, a citizen of the United States, residing at New York, in the county and State of New York, have invented certain new and useful Improvements in the Manufacture of Electrical Condensers, Coils, and Similar Devices, of which the following is a specification, reference being had to the drawing which accompanies and forms a part of the same.

My invention is an improvement in the manufacture of electrical condensers, coils, and other devices of a similar character in which conductors designed to form paths for currents of high potential are brought into close proximity with each other. Among such devices are included many forms of condensers, transformers, self-induction coils, rheostats, and the like.

It has heretofore been shown by me that the efficiency and practicability of such devices are very greatly enhanced by the exclusion of air or gas from the dielectric separating the conductors or remote portions of the same conductor; and the object of my present improvement is to secure such exclusion of air in as perfect a manner as possible in a convenient and practicable way. To this end I place the condenser or other device to be treated in a receptacle from which the air may be more or less perfectly exhausted, and while in vacuum I introduce an insulating substance, which liquefies when subjected to heat, such as paraffin, which surrounds the said device and finds its way into its interstices.

When the device has become thoroughly saturated with the insulating material, it is allowed to cool off usually until the material begins to solidify. Air is then admitted under pressure to the receptacle containing the device and the pressure maintained until the whole mass of insulating material has solidified. By this treatment the presence of air or vacuous spaces in the dielectric, which are otherwise liable to form by the contraction of the insulating material when cooling, is prevented.

Any plan may be followed or apparatus used for securing the two conditions necessary to the attainment of the desired result, that is to say, applying the fluid insulating material in vacuum and subsequently subjecting it to or solidifying it under pressure. The degree of exhaustion or of pressure may vary, very good results being secured by a vacuum of about twenty-nine inches and a pressure of about one hundred pounds. It may be stated, however, that when hydraulic pressure is applied very much higher pressures are readily secured and are of advantage.

In order to facilitate the carrying out of the process, I have devised a simple and useful apparatus, which is illustrated partly in section in the accompanying drawing. As the parts of said apparatus are all of well-known construction, the apparatus as a whole will be fully understood without a full description of its details.

A is a tank or receptacle that may be closed air-tight. Within this tank is a steam-coil C, surrounding a vessel B, preferably with slightly-sloping sides and provided with a tube or pipe D, opening into it near its base.

The condenser or other device to be treated is placed in the vessel B, and around the receptacle is packed a suitable insulating material in quantity sufficient when liquefied by heat to flow through the pipe D into the vessel B and fill the space in the latter up to the top of the condenser or other device placed therein.

It is desirable to run into the pipe D enough melted material to fill it before using the apparatus and to make the pipe of a poor heat-conducting material, so that a little time will elapse after the heat is applied to melt the material in the tank A before the flow through the pipe begins

When the apparatus has been thus prepared, the air from the interior of the tank A is withdrawn as completely as practicable by an air-pump E and steam is passed through the coil C. In order to prevent access of any of the volatile constituents of the insulating material to the pump, a condenser F, with a cooling-coil G, is interposed in the piping between the tank and pump. After a partial vacuum has been secured in the tank A and the liquefied insulating material has been run into the vessel B the pump may be stopped and the tank connected with a receiver H, from which the air has been exhausted, and the apparatus allowed to stand until all the interstices

of the condenser have been permeated with the insulating material. The steam is then shut off and cold water passed through the coil C. The connections with the pump are then reversed and air is forced into the tank and receiver H and the further cooling and solidification of the insulating material carried on under a pressure considerably greater than that of the atmosphere. After the insulating material has cooled and solidified the condenser or other device, with the adhering mass of insulating material, is removed from the receptacle and the superfluous insulating material taken off.

I have found that condensers, transformers, and similar apparatus treated by this process are of very superior quality and especially suited for circuits which convey currents of high frequency and potential.

I am aware that conductors covered with a more or less porous material have been treated by placing them in a closed receptacle, exhausting the air from the receptacle, then introducing a fluid insulating compound and subjecting the same to pressure, for the purpose of more perfectly incorporating the insulating compound with the surrounding coating or covering of the conductors and causing such compound to enter the interstices in said covering, and I apply this principle of exhausting the air and introducing the fluid insulating compound under pressure in carrying out my improvement. My process, however, differs from the foregoing mainly in this, that I seek not only to fill the pores of any porous material that may be interposed between the conductors of such a device as a condenser or coil, but to fill up all the spaces in the dielectric, whereby air or vacuous spaces, the presence of which in the dielectric is so deleterious to the device, may be effectually prevented. To this end I permit the insulating compound after its incorporation with the device, under exhaustion and pressure, to cool and solidify, so that not only is the air replaced by a solid insulating compound, but the formation of vacuous spaces by the contraction of the mass on cooling prevented.

What I claim is—

The improvement in the manufacture of electrical devices such as condensers, which consists in inclosing the device in an air-tight receptacle, exhausting the air from the receptacle, introducing into a vessel containing the device an insulating material rendered fluid by heat, and then when said material has permeated the interstices of the said device, subjecting the whole to pressure, and maintaining such pressure until the material has cooled and solidified, as set forth.

NIKOLA TESLA.

Witnesses:
M. LAMSON DYER,
PARKER W. PAGE.

(No Model.)

N. TESLA.

MANUFACTURE OF ELECTRICAL CONDENSERS, COILS, &c.

No. 577,671. Patented Feb. 23, 1897

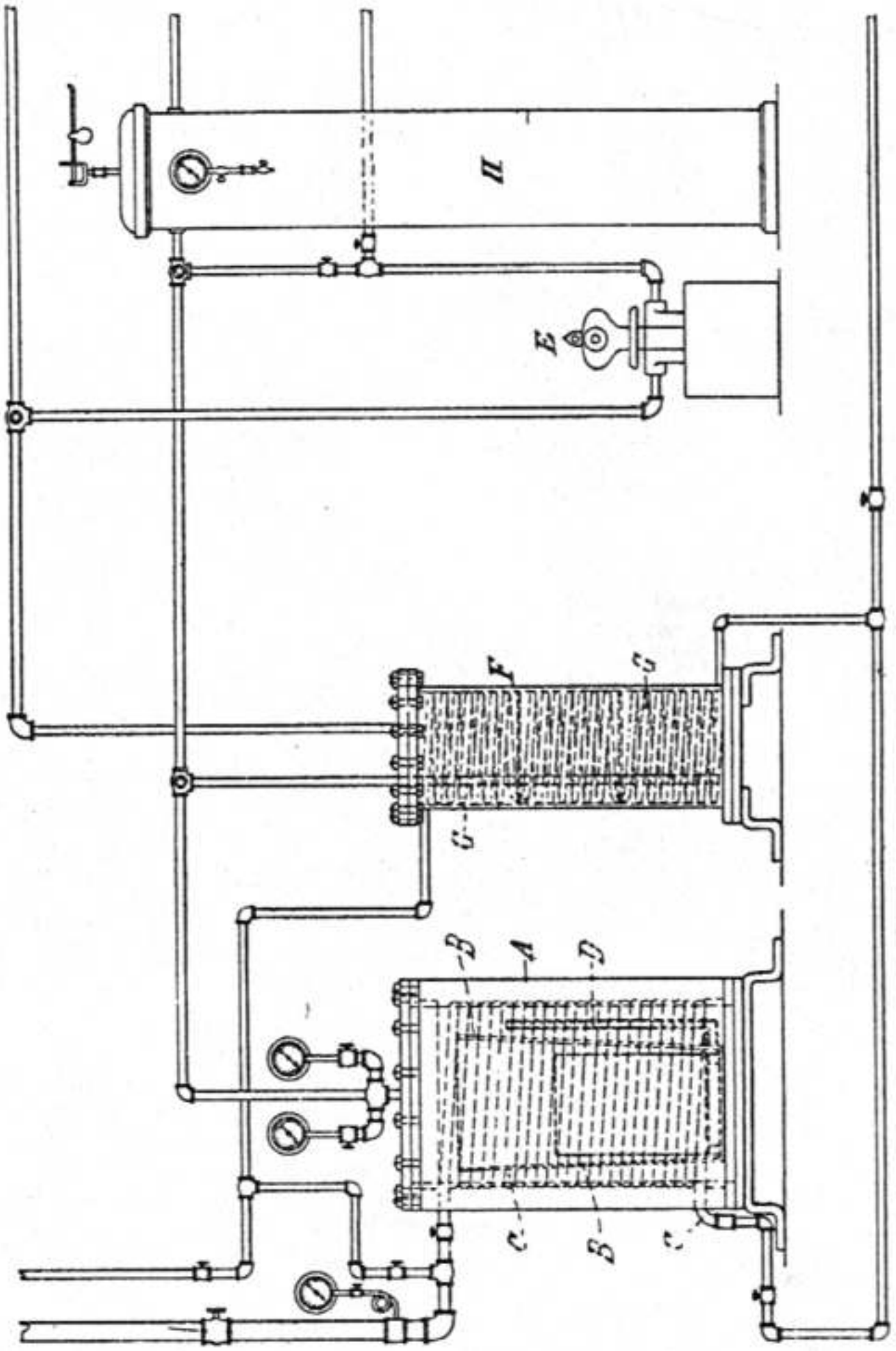

WITNESSES
Edwin B. Hopkinson,
Benjamin Miller,

INVENTOR
Nikola Tesla
BY
Kerr, Curtis & Page
ATTORNEYS.

UNITED STATES PATENT OFFICE.

NIKOLA TESLA, OF NEW YORK, N. Y.

ELECTRICAL IGNITER FOR GAS-ENGINES

SPECIFICATION forming part of Letters Patent No. 609,250, dated August 16, 1898.

Application filed February 17, 1897. Renewed June 15, 1898. Serial No. 683,524. (No model.)

To all whom it may concern:

Be it known that I, NIKOLA TESLA, a citizen of the United States, residing at New York, in the county and State of New York, have invented certain new and useful Improvements in Electrical Igniters for Gas-Engines and Analogous Purposes, of which the following is a specification, reference being had to the drawing accompanying and forming a part of the same.

In certain kinds of apparatus it is necessary for the operation of the machine itself or for effecting the object for which it is used to produce an electric spark or any other similar local effect at a given instant of time or at predetermined intervals. For example, in certain gas- or explosive engines a flame or spark is necessary for the ignition of an explosive mixture of air and gas under the piston, and the most effective way of igniting the gaseous mixture has been found to be the production in the cylinder at the proper moments of an electric spark. The only practicable device by which this has been accomplished heretofore is an induction-coil comprising a primary and secondary circuit with a buzzer or rapidly-acting automatic circuit-breaker in the primary and a circuit-controller, such as a switch or commutator, located also in the primary or battery circuit and operated by some moving portion of the apparatus to temporarily close such circuit at the proper time, and thereby set in operation the automatic circuit-breaker, which causes between secondary terminals in the cylinder the discharge which is necessary for the proper ignition of the explosive mixture. Instead of thus temporarily closing the primary circuit the automatic circuit-breaker might be permitted to operate continuously, and the secondary circuit normally broken, might be closed at the proper time to cause the spark to pass at any point. In either case the employment of a quick acting circuit-breaker is necessary, for unless the induction-coil be of large size and the source of current of considerable power a slow or gradual make and break of the primary of a simple transformer, such as would ordinarily be effected by a switch or commutator, would not effect a discharge of the character necessary for the proper ignition of the gas.

There is, however, no form of vibrating or quick-acting circuit-breaker of which I am aware that can be depended upon to operate with certainty to produce such a spark or which will continue to operate for any length of time without deterioration, and hence not only in the case of engines of the kind described, but in other forms of apparatus which involve the use of a high-tension induction-coil with a quick-acting circuit-breaker, the operation of the machine is contingent upon the proper operation of a comparatively insignificant but essential part.

The object of my invention is to provide a more certain and satisfactory means for use with and control by such machines or apparatus as I have mentioned for producing sparks or discharges of the desired character, and to this end I employ the following arrangement. Any suitable moving portion of the apparatus is caused to mechanically control the charging of a condenser and its discharge through a circuit in inductive relation to a secondary circuit leading to the terminals between which the discharge is to occur, so that at the desired intervals the condenser may be discharged through its circuit and induce in the other circuit a current of high potential which produces the desired spark or discharge.

One practical means of accomplishing this is to employ any proper form of switch or commutator operated directly or through suitable intermediate devices by a moving part of the apparatus and which is caused to complete an electric circuit which has been previously broken or interrupted for an appreciable time when the occurrence of the spark or discharge is necessary. The circuit thus closed includes a condenser, which by this operation of the switch is permitted to discharge, through the primary of a transformer, energy which it had previously received during the interruption of said circuit from a battery or discharge of a self-induction coil in series with the battery in the charging-circuit.

The ends of the secondary circuit of the transformer above mentioned are connected with the points or terminals in the machine between which the spark is to pass, and following the short-circuiting of the condenser by the closing of the switch a strong secondary discharge induced by the discharge of the

condenser through the primary will occur. It is possible by this means not only to produce a strong discharge of high tension, as in the form of a spark well adapted for the ignition of gas or other purposes for which sparks are employed, but to secure such result by apparatus very much less complicated and expensive than that heretofore employed for the purpose and which will be capable of certain and effective operation for an indefinite period of time.

I have illustrated the principle of my improvement and the manner in which the same is or may be carried out in the drawing hereto annexed. The invention is shown as used for effecting the operation of the piston of a gas-engine, the figure being a diagram.

A designates the cylinder of a gas-engine, B the piston, and C the piston-rod. Other parts of the engine are omitted from the illustration as unnecessary to an understanding of the invention.

On the piston-rod C is a commutator or circuit-controller upon which bear the terminals *a b* of an electric circuit D. This commutator comprises a continuous ring *c* and a split ring *d* side by side, so that when the terminals are on the latter the circuit is interrupted, but when on the former it is closed. The to-and-fro movement of the piston, therefore, operates to alternately make and break the circuit, the position of the commutator being such that the make occurs at the moment desired for the ignition of the explosive charge under the piston.

In the circuit D is a battery or other source of current E and the primary F of a transformer. Across the two conductors of the circuit, between the battery and the primary F, is a condenser G, which is charged by the battery when circuit D is interrupted at the commutator and which discharges through the primary when such circuit is closed.

In order that the condenser may receive a charge of high tension, a self-induction coil H is introduced in the circuit between itself and the battery, which coil stores up the energy of the battery when the circuit D is closed at the commutator and discharges it into the condenser when the circuit is broken.

The primary F is combined with a secondary K, the conductors from which lead, respectively, to an insulated terminal L within the cylinder A and to any other conducting-body in the vicinity of such point as to the cylinder itself. In consequence of this arrangement, when the piston reaches the proper point the circuit D is closed, the energy of the condenser is discharged through the primary with a sudden rush, and a strong and effective spark or flash is produced between the point L and the cylinder or piston which ignites the charge of explosive gas.

It will be understood from the preceding description that I do not limit myself to the specific construction or arrangement of the devices employed in carrying out my improvement and that these may be varied within wide limits.

What I claim is—

1. In an apparatus which depends for its operation or effect upon the production of a sudden electric discharge at a given instant, or at predetermined intervals of time, the combination with a moving part of said apparatus of a switch or commutator, a condenser, a charging-circuit for the same, a primary circuit through which the condenser discharges, and a secondary circuit in inductive relation to the said primary circuit and connected with the terminals at the point in the apparatus where the discharge is required, the switch or commutator being operated by the said moving part to effect the discharge of the condenser at the proper intervals, as set forth.

2. In an apparatus which depends for its operation or effect upon the production of a sudden electric discharge at a given instant, or at predetermined intervals of time, the combination with a moving part of said apparatus of a circuit and a circuit-controller adapted to close said circuit at the time when the occurrence of said discharge is desired, a source of current in said circuit, a condenser adapted to be charged by said source while the circuit is interrupted, and a transformer through the primary of which the condenser discharges when the circuit is closed, the secondary of the transformer being connected with the terminals at the point in the apparatus where the discharge is required, as set forth.

3. In an apparatus which depends for its operation or effect upon the production of an electric discharge, at a given instant, or at predetermined intervals of time, the combination with a moving part of said apparatus of a circuit and a circuit-controller adapted to close said circuit at the time when the occurrence of the spark is desired, a source of current in said circuit, a self-induction coil which stores the energy of the source while the circuit is closed, a condenser into which said coil discharges when the circuit is broken, and a transformer through the primary of which the condenser discharges, the secondary of said transformer being connected with separated terminals at the point where the discharge is required.

4. In a gas or explosive engine of the kind described, the combination with a moving part of said engine of a circuit-closer or switch controlling the charging and discharging of a condenser, separated terminals in the cylinder or explosive-chamber, and a transformer through the primary of which the condenser discharges, the secondary being connected with the terminals in the cylinder, as set forth.

NIKOLA TESLA.

Witnesses:
M. LAWSON DYER,
EDWIN B. HOPKINSON.

P-440

No. 609,250. Patented Aug. 16, 1898

N. TESLA.

ELECTRICAL IGNITER FOR GAS ENGINES.

(Application filed Feb. 17 1897 Renewed June 15. 1898.)

(No Model.)

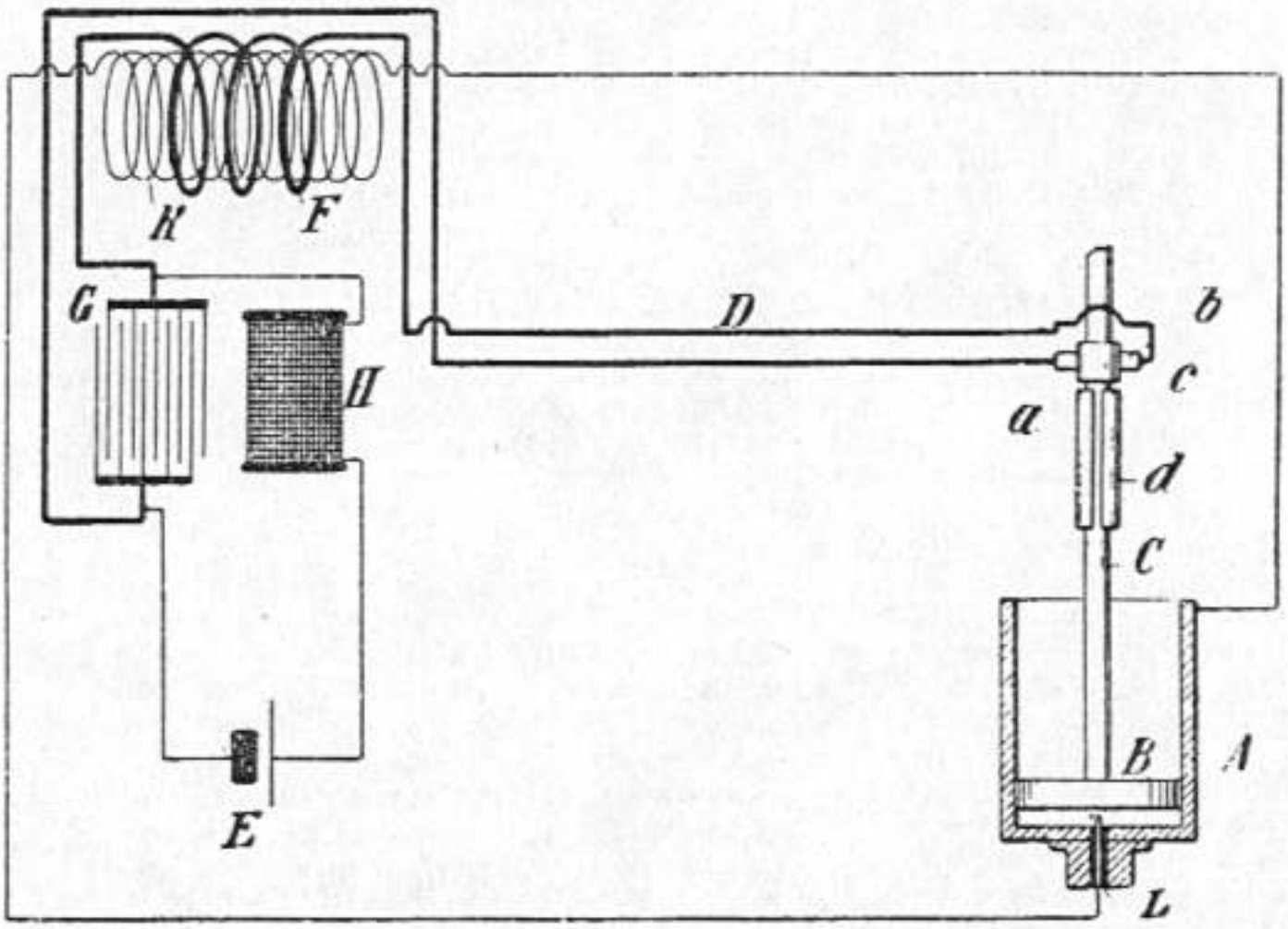

Witnesses:
H Lawrence Dyer
Edward B. Hopkinson

Nikola Tesla, Inventor
by Kerr, Curtis & Page Attys

UNITED STATES PATENT OFFICE.

NIKOLA TESLA, OF NEW YORK, N. Y.

FOUNTAIN.

1,113,716. Specification of Letters Patent. Patented Oct. 13, 1914.

Application filed October 28, 1913. Serial No. 797,718.

To all whom it may concern:

Be it known that I, NIKOLA TESLA, a citizen of the United States, residing at New York, borough of Manhattan, county and State of New York, have invented certain new and useful Improvements in Fountains, of which the following is a full, clear, and exact description.

It has been customary heretofore in fountains and aquarian displays, to project spouts, jets, or sprays of water from suitable fixtures, chiefly for decorative and beautifying purposes. Invariably, the quantity of the issuing fluid was small and the pleasing impression on the eye was solely the result of the more or less artistic arrangement of the streamlets and ornaments employed. The present invention is a departure from such practice in that it relies principally on the fascinating spectacle of a large mass of fluid in motion and the display of seemingly great power. Incidentally, it permits the realization of beautiful and striking views through illumination and the disposition of voluminous cascades which, moreover, may be applied to useful purposes in ways not practicable with the old and familiar devices. These objects are accomplished by the displacement of a great volume of fluid with a relatively small expenditure of energy in the production and maintenance of a veritable waterfall as distinguished from a mere spout, jet or spray.

The underlying idea of the invention can be carried out by apparatus of widely varied design, but in the present instance the simplest forms, of which I am aware, are shown as embodiments of the principle involved.

In the accompanying drawing, Figure 1 is a top plan and Fig. 2 a vertical central sectional view of an appliance which I have devised for the purpose. Fig. 3 and Fig. 4 illustrate corresponding views of a similar device of much simpler construction.

Referring to the first, 1 represents a receptacle of any suitable material, as metal, glass, porcelain, marble, cement or other compound, with a central hub 2 and a conical conduit 3, flared out at the top and provided with openings 4 at the bottom. In the hub 2 is inserted a shaft 5 rotatably supported on ball bearings 6 and carrying at its lower end a friction pulley or gear wheel 7. To the upper end of the shaft is fastened a casting 8, preferably of some non-corrosive alloy, with blades 9 constituting a screw which is shown in this instance as the best known propelling device; but it will be understood that other means may be employed. A motor 10 is suitably mounted so as to transmit through wheel 11, by friction or otherwise, power to the pulley or wheel 7. Openings 4 may be covered with removable strainers and receptacles 1 may be provided with convenient connections, respectively, for cleaning and renewing the liquid. It is thought unnecessary to show these attachments in the drawing.

The operation will be readily understood. Receptacle 1 being filled to the proper level with water or other fluid, and the power turned on, the propeller blades 9 are set in rotation and the fluid, drawn through the openings 4, is lifted to the horizontal flared out top of conduit 3 until it overflows in the form of a circular cascade.

In order to prevent the wetting of the bearings of shaft 5, the central hub 2 of receptacle 1 is made to project above conduit 3. The latter is funnel shaped for reasons of economy, and also for the purpose of reducing the speed and securing a smooth and even overflow. As the lift is inconsiderable, little power is needed to keep in motion a great volume of water and the impression produced on the observer is very striking. With the view of still further economizing energy, the bottom of receptacle 1 may be shaped as indicated by the dotted lines 12, in Fig. 2 so as to increase the velocity at the intake of the propeller.

To convey an idea of the results obtainable with a small apparatus, properly designed, it may be stated that by applying only 1/25 of a horse-power to the shaft and assuming a lift of eighteen inches, more than one hundred gallons per minute may be propelled, the depth of the fluid passing over the flared top of conduit 3, one foot in diameter, being nearly one-half inch. As the circulation is extremely rapid the total quantity of liquid required is comparatively small. About one tenth of that delivered per minute will be, generally, sufficient. Such a cascade presents a singularly attractive appearance and this feature may be still further enhanced by artistic grouping of plants or other objects around it, in which case the whole contrivance may be hidden from view. Particularly beautiful displays, however, are obtainable by illumination which may be carried out in many ways. To

heighten the effect, a colored, opalescent or phosphorescent fluid may be employed. Sterilizing, aromatic or radio-active liquids may also be used, when so desired. The usual fountains are objectionable in many places on account of the facility they afford for the breeding of insects. The apparatus described not only makes this impossible but is a very efficient trap. Unlike the old devices in which only a very small volume of water is set in motion, such a waterfall is is highly effective in cooling the surrounding atmosphere. To still improve this action the free end 13 of the rotating shaft may be utilized to carry any kind of fan. The water may, of course, be artificially cooled.

The device described may be modified in many ways and also considerably simplified. For example, the propeller may be fixed directly to the shaft of the motor and the latter supported conveniently from above when many of the parts illustrated in Fig. 1 and Fig. 2 may be dispensed with. In fact, receptacle 1 itself may be replaced by an independent tank or basin so that the entire apparatus will only consist of a funnel shaped conduit, motor and propeller as a unit. Such a construction is shown in Fig. 3 and Fig. 4 in which 3 is a conical vessel provided with intake openings 4 and resting on a substantial base. A motor 14, carrying on a strong shaft 5 a propeller 9, is fixed to supports 15 which extend from the inner side of conduit 3 and may be integral with the same. Obviously, to insure perfect working the weight of the moving parts and axial reaction of the propeller should be taken up or balanced as by a thrust bearing 16, or other means.

Apparatus of this description is especially intended for use in open basins or reservoirs in which it may be placed and put in action at short notice. When it is desired to produce large and permanent waterfalls the conduit 3 may be formed by masonry of appropriate architectural design.

The invention has an unlimited field of use in private dwellings, hotels, theaters, concert halls, hospitals, aquaria and, particularly, in squares, gardens and parks in which it may be carried out on a large scale so as to afford a magnificent spectacle far more captivating and stimulating to the public than the insignificant displays now in use.

I am well aware that artificial water falls have heretofore been exhibited and that fountains in which the same water is circulated are old and well known. But in all such cases independent pumps of small volumetric capacity were used to raise the water to an appreciable height which involved the expenditure of considerable energy, while the spectacle offered to the eye was uninteresting. In no instance, to my knowledge, has a great mass of fluid been propelled by the use of only such power as is required to lift it from its normal level through a relatively short space to that from which it overflows and descends as a cascade, nor have devices especially adapted for the purpose been employed.

What I claim is:

1. An artificial fountain consisting of an unobstructed conduit having an elevated overflow and adapted to be set in a body of water, and a propelling device for maintaining a rapid circulation of the water through the conduit.

2. An artificial fountain comprising in combination an unobstructed conduit having an elevated overflow and adapted to be set in a body of fluid, a propeller within the conduit for maintaining a rapid circulation of the fluid through the same, and a motor for driving the propeller.

3. The artificial fountain herein described, comprising in combination a receptacle, a central hollow conduit with an elevated overflow placed therein, a propeller within the conduit, and a motor for driving the propeller, so as to maintain a rapid circulation of fluid through the conduit.

4. The artificial fountain herein described, comprising in combination, a receptacle, a conduit with elevated overflow set therein, a central hub extending up through the conduit, a rotary shaft extending therethrough, and a propeller carried by the shaft for maintaining a rapid circulation of fluid through the conduit.

5. An artificial fountain comprising in combination with an unobstructed passage from the normal to the elevated fluid levels, of a propeller for maintaining a rapid circulation of the fluid through such passage and producing thereby a cascade with the expenditure of little energy.

6. An artificial fountain comprising a funnel shaped conduit adapted to be set in a body of fluid, and having openings near the lower end, and a propeller supported within the conduit and adapted when in operation to maintain a rapid circulation of water through the same.

In testimony whereof I affix my signature in the presence of two subscribing witnesses.

NIKOLA TESLA.

Witnesses:
M. Lawson Dyar,
Wm. Bohleber.

Copies of this patent may be obtained for five cents each, by addressing the "Commissioner of Patents, Washington, D. C."

P-443

N. TESLA.

FOUNTAIN.

APPLICATION FILED OCT. 28, 1913.

1,113,716.

Patented Oct. 13, 1914.

2 SHEETS—SHEET 1.

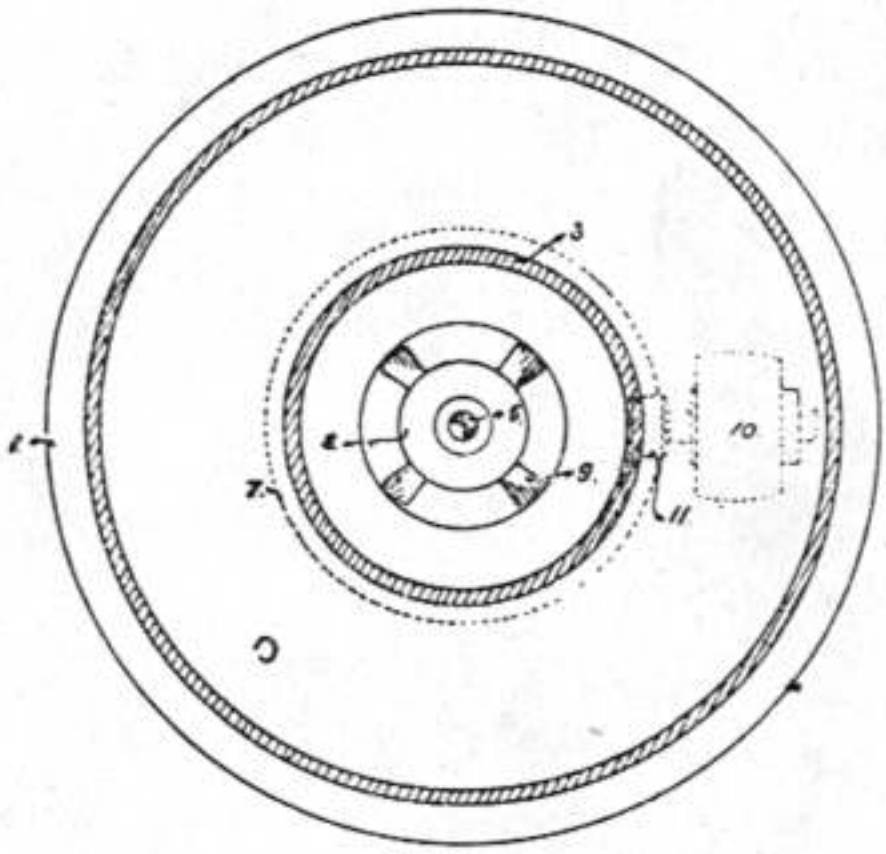

Fig 1

Fig 2

WITNESSES

Wm. Pohleber

INVENTOR.

Nikola Tesla

BY

Kerr Page Cooper & Hayward

ATTORNEYS

THE HARRIS PETER CO. PHOTO-LITHO. WASHINGTON, D. C.

P-444

N. TESLA

FOUNTAIN.

APPLICATION FILED OCT. 28, 1913.

1,113,716.

Patented Oct. 13, 1914

2 SHEETS-SHEET 2.

Fig. 3.

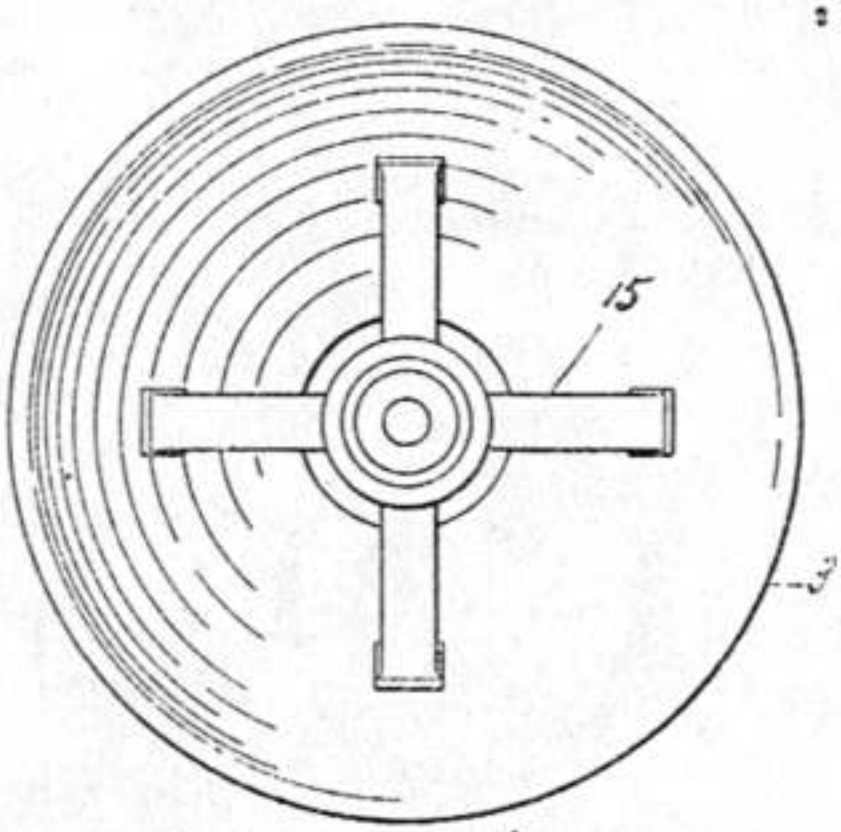

Fig. 4.

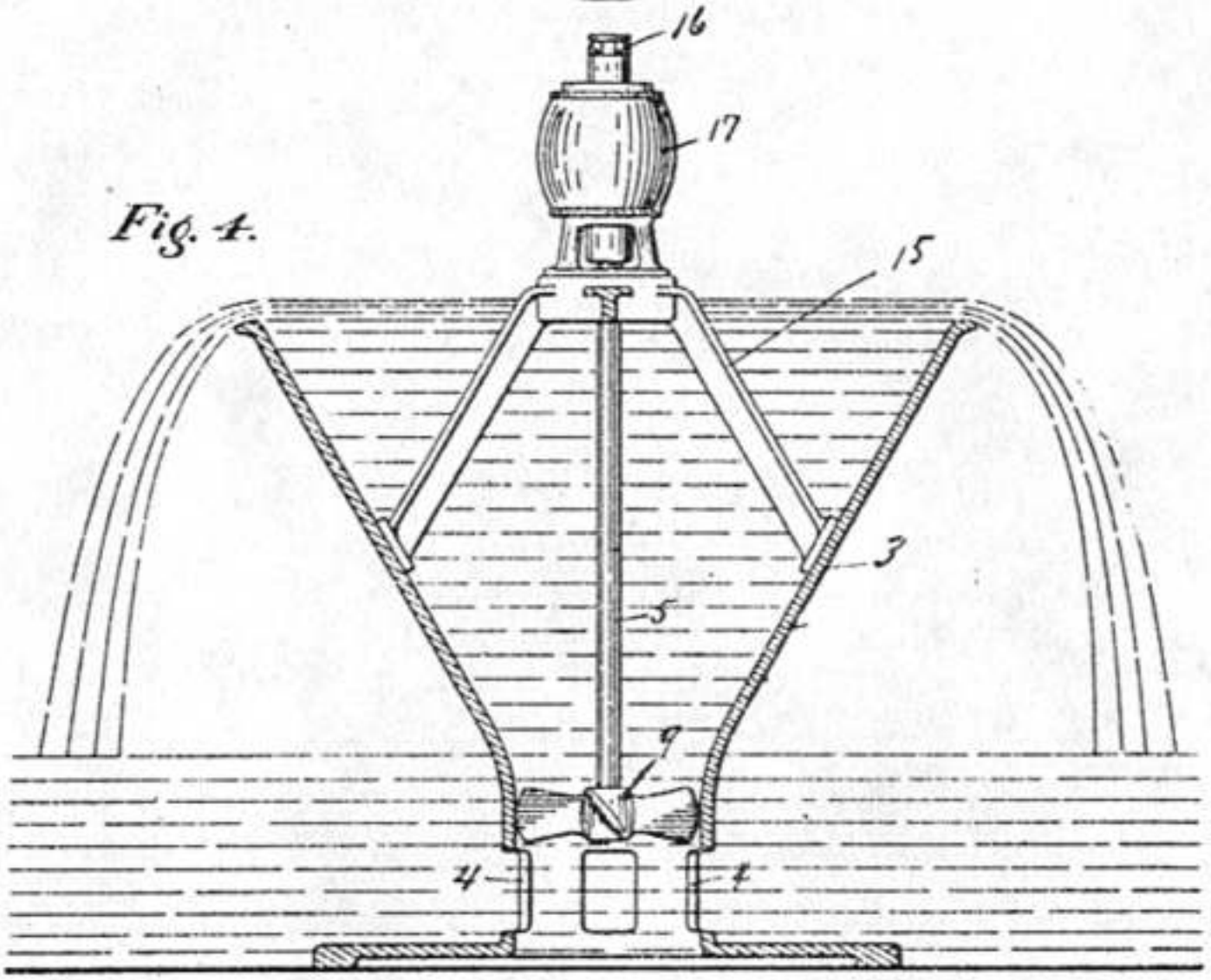

WITNESSES:

R. Diaz Quintrago

Wm Bohleber

INVENTOR.

Nikola Tesla

BY

Kerr Page Cooper & Hayward

ATTORNEYS

THE NORRIS PETERS CO. PHOTO-LITHO. WASHINGTON, D. C.

UNITED STATES PATENT OFFICE.

NIKOLA TESLA, OF NEW YORK, N. Y.

VALVULAR CONDUIT.

1,329,559. Specification of Letters Patent. Patented Feb. 3, 1920.

Application filed February 21, 1916. Serial No. 79,703. Renewed July 8, 1919. Serial No. 309,482.

To all whom it may concern:

Be it known that I, NIKOLA TESLA, a citizen of the United States, residing at New York, in the county and State of New York, have invented certain new and useful Improvements in Valvular Conduits, of which the following is a full, clear, and exact description.

In most of the machinery universally employed for the development, transmission and transformation of mechanical energy, fluid impulses are made to pass, more or less freely, through suitable channels or conduits in one direction while their return is effectively checked or entirely prevented This function is generally performed by devices designated as valves, comprising carefully fitted members the precise relative movements of which are essential to the efficient and reliable operation of the apparatus. The necessity of, and absolute dependence on these, limits the machine in many respects, detracting from its practical value and adding greatly to its cost of manufacture and maintenance. As a rule the valve is a delicate contrivance, very liable to wear and get out of order and thereby imperil ponderous, complex and costly mechanism and, moreover, it fails to meet the requirements when the impulses are extremely sudden or rapid in succession and the fluid is highly heated or corrosive.

Though these and other correlated facts were known to the very earliest pioneers in the science and art of mechanics, no remedy has as yet been found or proposed to date so far as I am aware, and I believe that I am the first to discover or invent any means, which permit the performance of the above function without the use of moving parts, and which it is the object of this application to describe.

Briefly expressed, the advance I have achieved consists in the employment of a peculiar channel or conduit charactized by valvular action.

The invention can be embodied in many constructions greatly varied in detail, but for the explanation of the underlying principle it may be broadly stated that the interior of the conduit is provided with enlargements, recesses, projections, baffles or buckets which, while offering virtually no resistance to the passage of the fluid in one direction, other than surface friction, constitute an almost impassable barrier to its flow in the opposite sense by reason of the more or less sudden expansions, contractions, deflections, reversals of direction, stops and starts and attendant rapidly succeeding transformations of the pressure and velocity energies.

For the full and complete disclosure of the device and of its mode of action reference is made to the accompanying drawings in which—

Figure 1 is a horizontal projection of such a valvular conduit with the top plate removed.

Fig. 2 is side view of the same in elevation.

Fig. 3 is a diagram illustrative of the application of the device to a fluid propelling machine such as, a reciprocating pump or compressor, and

Fig. 4 is a plan showing the manner in which the invention is, or may be used, to operate a fluid propelled rotary engine or turbine.

Referring to Fig. 1, 1 is a casing of metal or other suitable material which may be cast, milled or pressed from sheet in the desired form. From its side-walls extend alternatively projections terminating in buckets 2 which, to facilitate manufacture are congruent and spaced at equal distances, but need not be. In addition to these there are independent partitions 3 which are deemed of advantage and the purpose of which will be made clear. Nipples 4 and 5, one at each end, are provided for pipe connection. The bottom is solid and the upper or open side is closed by a fitting plate 6 as shown in Fig. 2. When desired any number of such pieces may be joined in series, thus making up a valvular conduit of such length as the circumstances may require

In elucidation of the mode of operation let it be assumed that the medium under pressure be admitted at 5. Evidently, its approximate path will be as indicated by the dotted line 7, which is nearly straight, that is to say, if the channel be of adequate cross-section, the fluid will encounter a very small resistance and pass through freely and undisturbed, at least to a degree. Not so if the entrance be at the opposite end 4. In this case the flow will not be smooth

and continuous, but intermittent, the fluid being quickly deflected and reversed in direction, set in whirling motion, brought to rest and again accelerated, these processes following one another in rapid succession. The partitions 3 serve to direct the stream upon the buckets and to intensify the actions causing violent surges and eddies which interfere very materially with the flow through the conduit. It will be readily observed that the resistance offered to the passage of the medium will be considerable even if it be under constant pressure, but the impediments will be of full effect only when it is supplied in pulses and, more especially, when the same are extremely sudden and of high frequency. In order to bring the fluid masses to rest and to high velocity in short intervals of time energy must be furnished at a rate which is unattainable, the result being that the impulse cannot penetrate very far before it subsides and gives rise to movement in the opposite direction. The device not only acts as a hinderment to the bodily return of particles but also, in a measure, as a check to the propagation of a disturbance through the medium. Its efficacy is chiefly determined; first, by the magnitude of the ratio of the two resistances offered to disturbed and to undisturbed flow, respectively, in the directions from 4 to 5 and from 5 to 4, in each individual element of the conduit; second, by the number of complete cycles of action taking place in a given length of the valvular channel and, third, by the character of the impulses themselves. A fair idea may be gained from simple theoretical considerations.

Examining more closely the mode of operation it will be seen that, in passing from one to the next bucket in the direction of disturbed flow, the fluid undergoes two complete reversals or deflections through 180 degrees while it suffers only two small deviations from about 10 to 20 degrees when moving in the opposite sense. In each case the loss of head will be proportionate to a hydraulic coefficient dependent on the angle of deflection from which it follows that, for the same velocity, the ratio of the two resistances will be as that of the two coefficients. The theoretical value of this ratio may be 200 or more, but must be taken as appreciably less although the surface friction too is greater in the direction of disturbed flow. In order to keep it as large as possible, sharp bonds should be avoided, for these will add to both resistances and reduce the efficiency. Whenever practicable, the piece should be straight; the next best is the circular form.

That the peculiar function of such a conduit is enhanced by increasing the number of buckets or elements and, consequently, cyclic processes in a given length is an obvious conclusion, but there is no direct proportionality because the successive actions diminish in intensity. Definite limits, however, are set constructively and otherwise to the number of elements per unit length of the channel, and the most economical design can only be evolved through long experience.

Quite apart from any mechanical features of the device the character of the impulses has a decided influence on its performance and the best results will be secured, when there are produced at 4, sudden variations of pressure in relatively long intervals, while a constant pressure is maintained at 5. Such is the case in one of its most valuable industrial applications which will be specifically described.

In order to conduce to a better understanding, reference may first be made to Fig. 3 which illustrates another special use and in which 8 is a piston fixed to a shaft 9 and fitting freely in a cylinder 10. The latter is closed at both ends by flanged heads 11 and 12 having sleeves or stuffing boxes 13 and 14 for the shaft. Connection between the two compartments, 15 and 16, of the cylinder is established through a valvular conduit and each of the heads is similarly equipped. For the sake of simplicity these devices are diagrammatically shown, the solid arrows indicating the direction of undisturbed flow. An extension of the shaft 9 carries a second piston 17 accurately ground to and sliding easily in a cylinder 18 closed at the ends by plates and sleeves as usual. Both piston and cylinder are provided with inlet and outlet ports marked, respectively, 19 and 20. This arrangement is familiar, being representative of a prime mover of my invention, termed "mechanical oscillator", with which it is practicable to vibrate a system of considerable weight many thousand times per minute.

Suppose now that such rapid oscillations are imparted by this or other means to the piston 8. Bearing in mind the proceeding, the operation of the apparatus will be understood at a glance. While moving in the direction of the solid arrow, from 12 to 11, the piston 8 will compress the air or other medium in the compartment 16 and expel it from the same, the devices in the piston and head 11 acting, respectively, as closed and open valves. During the movement of the piston in the opposite direction, from 11 to 12, the medium which has meanwhile filled the chamber 15 will be transferred to compartment 16, egress being prevented by the device in head 12 and that in the piston allowing free passage. These processes will be repeated in very quick succession. If the nipples 4 and 5 are put in communication with independent reservoirs, the oscilla-

tions of the piston 8 will result in a compression of the air at 4 and rarefaction of the same at 5. Obviously, the valvular channels being turned the other way, as indicated by dotted lines in the lower part of the figure, the opposite will take place. The devices in the piston have been shown merely by way of suggestion and can be dispensed with. Each of the chambers 15 and 16 being connected to two conduits as illustrated, the vibrations of a solid piston as 8 will have the same effect and the machine will then be a double acting pump or compressor. It is likewise unessential that the medium should be admitted to the cylinder through such devices for in certain instances ports, alternately closed and opened by the piston, may serve the purpose. As a matter of course, this novel method of propelling fluids can be extended to multistage working in which case a number of pistons will be employed, preferably on the same shaft and of different diameters in conformity with well established principles of mechanical design. In this way any desired ratio of compression or degree of rarefaction may be attained.

Fig. 4 exemplifies a particularly valuable application of the invention to which reference has been made above. The drawing shows in vertical cross section a turbine which may be of any type but is in this instance one invented and described by me and supposed to be familiar to engineers. Suffice it to state that the rotor 21 of the same is composed of flat plates which are set in motion through the adhesive and viscous action of the working fluid, entering the system tangentially at the periphery and leaving it at the center. Such a machine is a thermodynamic transformer of an activity surpassing by far that of any other prime mover, it being demonstrated in practice that each single disk of the rotor is capable of performing as much work as a whole bucket-wheel. Besides, a number of other advantages, equally important, make it especially adapted for operation as an internal combustion motor. This may be done in many ways, but the simplest and most direct plan of which I am aware is the one illustrated here. Referring again to the drawing, the upper part of the turbine casing 22 has bolted to it a separate casting 23, the central cavity 24 of which forms the combustion chamber. To prevent injury through excessive heating a jacket 25 may be used, or else water injected, and when these means are objectionable recourse may be had to air cooling, this all the more readily as very high temperatures are practicable. The top of casting 23 is closed by a plate 26 with a sparking or hot wire plug 27 and in its sides are screwed two valvular conduits communicating with the central chamber 24. One of these is, normally, open to the atmosphere while the other connects to a source of fuel supply as a gas main 28. The bottom of the combustion chamber terminates in a suitable nozzle 29 which consists of separate piece of heat resisting material. To regulate the influx of the explosion constituents and secure the proper mixture the air and gas conduits are equipped, respectively, with valves 30 and 31. The exhaust openings 32 of the rotor should be in communication with a ventilator, preferably carried on the same shaft and of any suitable construction. Its use, however, while advantageous, is not indispensable the suction produced by the turbine rotor itself being, in some cases at least, sufficient to insure proper working. This detail is omitted from the drawing as unessential to the understanding.

But a few words will be needed to make clear the mode of operation. The air valve 30 being open and sparking established across terminals 27, the gas is turned on slowly until the mixture in the chamber 24 reaches the critical state and is ignited. Both the conduits behaving, with respect to efflux, as closed valves, the products of combustion rush out through the nozzle 29 acquiring still greater velocity by expansion and, imparting their momentum to the rotor 21, start it from rest. Upon the subsidence of the explosion the pressure in the chamber sinks below the atmospheric owing to the pumping action of the rotor or ventilator and new air and gas is permitted to enter, cleaning the cavity and channels and making up a fresh mixture which is detonated as before, and so on, the successive impulses of the working fluid producing an almost continuous rotary effort. After a short lapse of time the chamber becomes heated to such a degree that the ignition device may be shut off without disturbing the established régime. This manner of starting the turbine involves the employment of an unduly large combustion chamber which is not commendable from the economic point of view, for not only does it entail increased heat losses but the explosions cannot be made to follow one another with such rapidity as would be desirable to insure the best valvular action. When the chamber is small an auxiliary means for starting, as compressed air, may be resorted to and a very quick succession of explosions can then be obtained. The frequency will be the greater the stronger the suction, and may, under certain conditions, reach hundreds and even thousands per second. It scarcely need be stated that instead of one several explosion chambers may be used for cooling purposes and also to increase the number of active pulses and the output of the machine.

Apparatus as illustrated in Fig. 4 presents the advantages of extreme simplicity,

cheapness and reliability, there being no compressor, buckets or troublesome valve mechanism. It also permits, with the addition of certain well-known accessories, the use of any kind of fuel and thus meets the pressing necessity of a self-contained, powerful, light and compact internal combustion motor for general work. When the attainment of the highest efficiency is the chief object, as in machines of large size, the explosive constituents will be supplied under high pressure and provision made for maintaining a vacuum at the exhaust. Such arrangements are quite familiar and lend themselves so easily to this improvement that an enlargement on this subject is deemed unnecessary.

The foregoing description will readily suggest to experts modifications both as regards construction and application of the device and I do not wish to limit myself in these respects. The broad underlying idea of the invention is to permit the free passage of a fluid through a channel in the direction of the flow and to prevent its return through friction and mass resistance, thus enabling the performance of valve functions without any moving parts and thereby extending the scope and usefulness of an immense variety of mechanical appliances.

I do not claim the methods of and apparatus for the propulsion of fluids and thermodynamic transformation of energy herein disclosed, as these will be made subjects of separate applications.

I am aware that asymmetrical conduits have been constructed and their use proposed in connection with engines, but these have no similarity either in their construction or manner of employment with my valvular conduit. They were incapable of acting as valves proper, for the fluid was merely arrested in pockets and deflected through 90°, this result having at best only 25% of the efficiency attained in the construction herein described. In the conduit I have designed the fluid, as stated above, is deflected in each cycle through 360°, and a co-efficient approximating 200 can be obtained so that the device acts as a slightly leaking valve, and for that reason the term "valvular" has been given to it in contrast to asymmetrical conduits, as heretofore proposed, which were not valvular in action, but merely asymmetrical as to resistance.

Furthermore, the conduits heretofore constructed were intended to be used in connection with slowly reciprocating machines, in which case enormous conduit-length would be necessary, all this rendering them devoid of practical value. By the use of an effective valvular conduit, as herein described, and the employment of pulses of very high frequency, I am able to condense my apparatus and secure such perfect action as to dispense successfully with valves in numerous forms of reciprocating and rotary engines.

The high efficiency of the device, irrespective of the character of the pulses, is due to two causes: first, rapid reversal of direction of flow and, second, great relative velocity of the colliding fluid columns. As will be readily seen each bucket causes a deviation through an angle of 180°, and another change of 180° occurs in each of the spaces between two adjacent buckets. That is to say, from the time the fluid enters or leaves one of the recesses to its passage into, or exit from, the one following a complete cycle, or deflection through 360°, is effected. Observe now that the velocity is but slightly reduced in the reversal so that the incoming and deflected fluid columns meet with a relative speed, twice that of the flow, and the energy of their impact is four times greater than with a deflection of only 90°, as might be obtained with pockets such as have been employed in asymmetrical conduits for various purposes. The fact is, however, that in these such deflection is not secured, the pockets remaining filled with comparatively quiescent fluid and the latter following a winding path of least resistance between the obstacles interposed. In such conduits the action cannot be characterized as "valvular" because some of the fluid can pass almost unimpeded in a direction opposite to the normal flow. In my construction, as above indicated, the resistance in the reverse may be 200 times that in the normal direction. Owing to this a comparatively very small number of buckets or elements is required for checking the fluid. To give a concrete idea, suppose that the leak from the first element is represented by the fraction $\frac{1}{X}$, then after the nth bucket is traversed, only a quantity $\left(\frac{1}{X}\right)^n$ will escape and it is evident that X need not be a large number to secure a nearly perfect valvular action.

What I claim is:

1. A valvular conduit having interior walls of such conformation as to permit the free passage of fluid through it in the direction of flow but to subject it to rapid reversals of direction when impelled in the opposite sense and thereby to prevent its return by friction and mass resistance.

2. A valvular conduit composed of a closed passageway having recesses in its walls so formed as to permit a fluid to pass freely through it in the direction of flow, but to subject it to rapid reversals of direction when impelled in an opposite sense and thereby interpose friction and mass resistance to the return passage of the same.

3. A valvular conduit composed of a tube

or passageway with rigid interior walls formed with a series of recesses or pockets with surfaces that reverse a fluid tending to flow in one direction therein and thereby check or prevent flow of the fluid in that direction.

4. A valvular conduit with rigid interior walls of such character as to offer substantially no obstacle to the passage through it of fluid impulses in one direction, but to subject the fluid to rapid reversals of direction and thereby oppose and check impulses in the opposite sense.

5. A valvular conduit with rigid interior walls formed to permit fluid impulses under pressure to pass freely through it in one direction, but to subject them to rapid reversals of direction through 360° and thereby check their progress when impelled in the opposite sense.

A valvular conduit with rigid interior walls which permit fluid impulses to flow through it freely in one direction, formed at a plurality of points to reverse such fluid impulses when impelled in the opposite direction and check their flow.

7. A valvular conduit with rigid interior walls having pockets or recesses, and transversely inclined intermediate baffles to permit the free passage of fluid impulses in one direction but to deflect and check them when impelled in the opposite direction.

In testimony whereof I affix my signature

NIKOLA TESLA.

P-450

N. TESLA.

VALVULAR CONDUIT.

APPLICATION FILED FEB. 21, 1916. RENEWED JULY 8, 1919.

1,329,559. Patented Feb. 3, 1920.

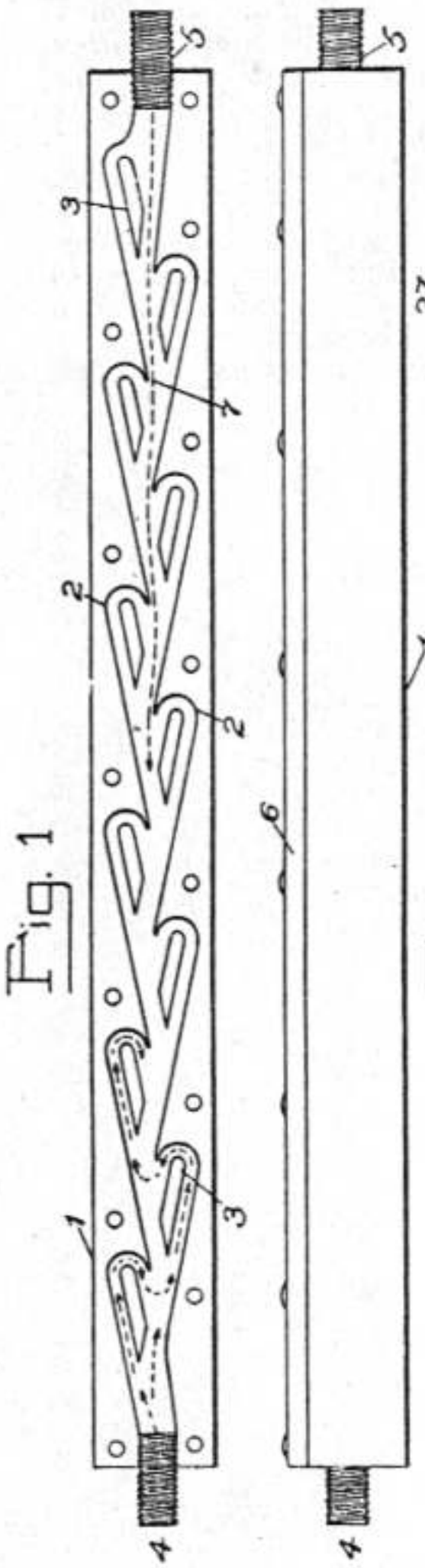

Fig. 1

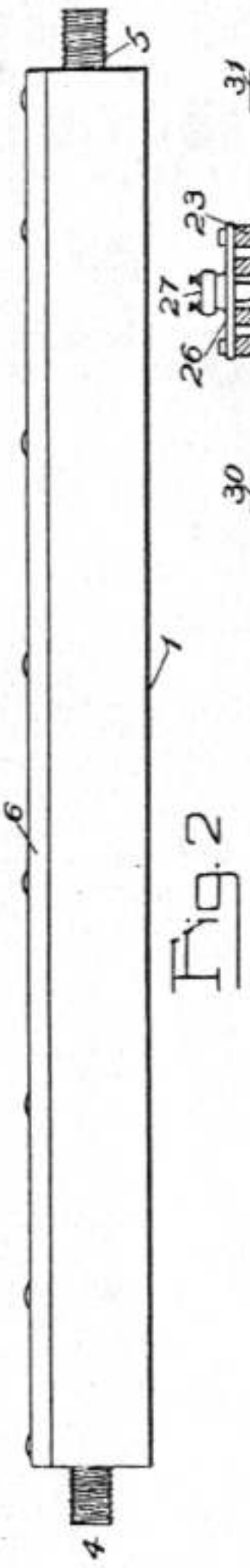

Fig. 2

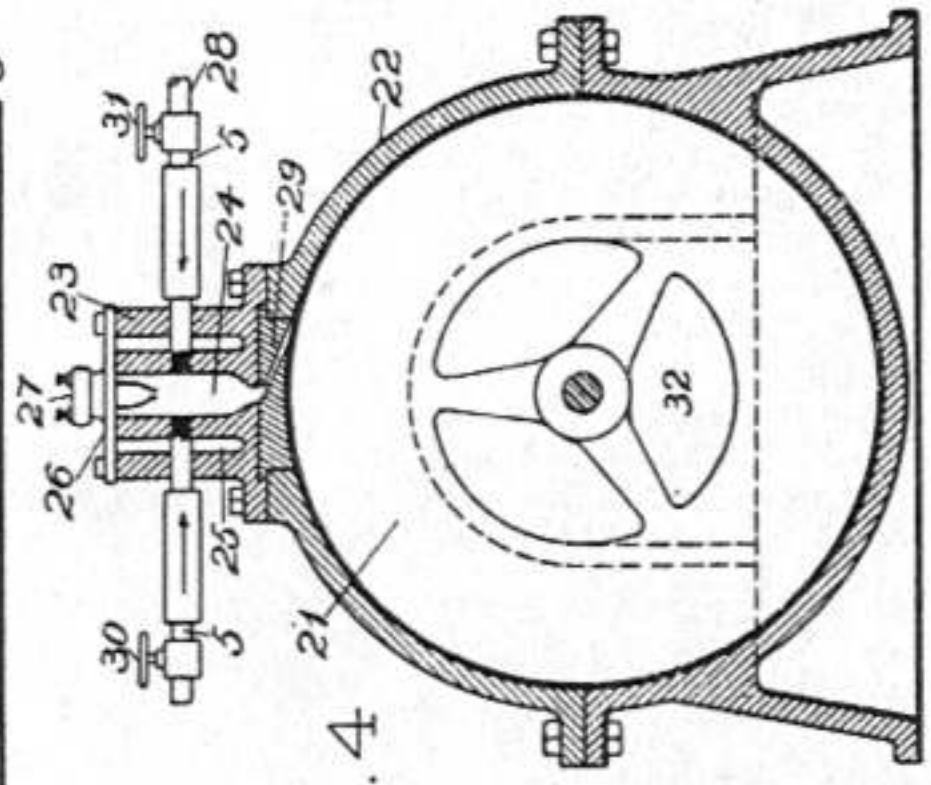

Fig. 4

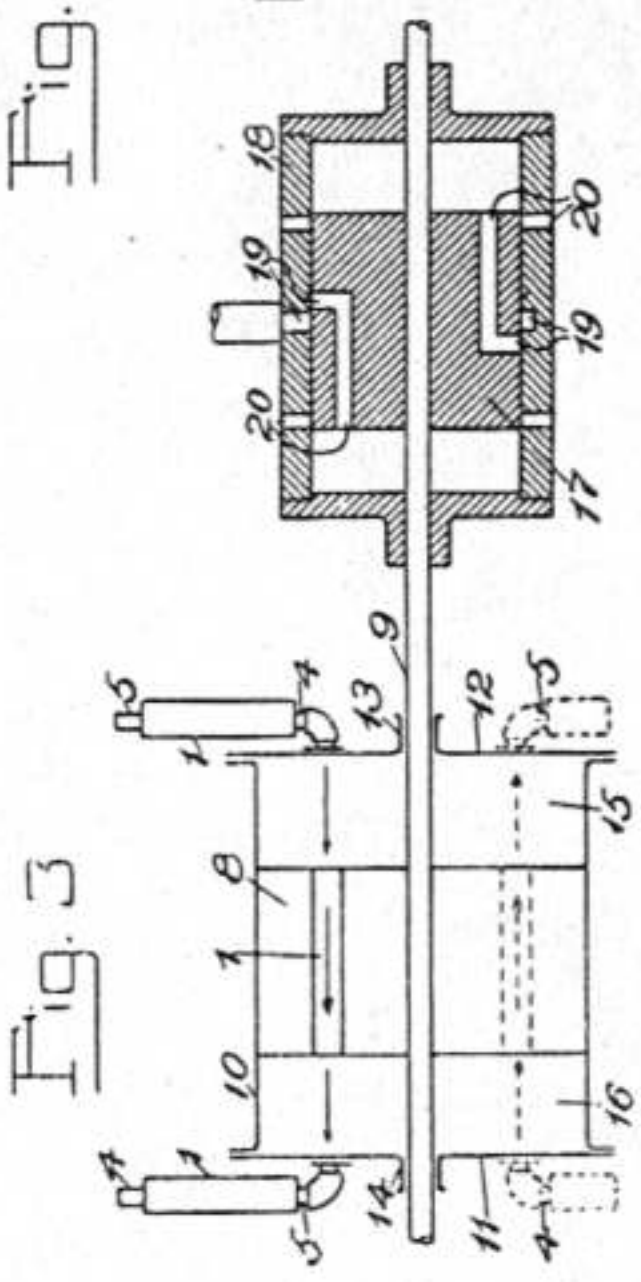

Fig. 3

INVENTOR

Nikola Tesla

BY

Howson, Sayre, Cooper & Hayward

ATTORNEY

UNITED STATES PATENT OFFICE.

NIKOLA TESLA OF NEW YORK, N. Y.

LIGHTNING-PROTECTOR.

1,266,175. Specification of Letters Patent Patented May 14, 1918.

Application filed May 6, 1916. Serial No 95,830

To all whom it may concern:

Be it known that I, NIKOLA TESLA, a citizen of the United States, residing at New York, in the county and State of New York, have invented certain new and useful Improvements in Lightning-Protectors, of which the following is a full, clear, and exact description.

The object of the present invention is to provide lightning protectors of a novel and improved design strictly in conformity with the true character of the phenomena, more efficient in action, and far more dependable in safe guarding life and property, than those heretofore employed.

To an understanding of the nature of my invention and its basic distinction from the lightning rods of common use, it is necessary briefly to explain the principles upon which my protector is designed as contrasted with those underlying the now-prevailing type of lightning rod.

Since the introduction of the lightning rod by Benjamin Franklin in the latter part of the eighteenth century, its adoption as a means of protection against destructive atmospheric discharges has been practically universal. Its efficacy, to a certain degree, has been unquestionably established through statistical records but there is generally prevalent, nevertheless, a singular theoretical fallacy as to its operation, and its construction is radically defective in one feature, namely its typical pointed terminal. In my lightning protector I avoid points, and use an entirely different type of terminal.

According to the prevailing opinion, the virtue of the Franklin type of lightning rod is largely based on the property of points or sharp edges to give off electricity into the air. As shown by Coulomb, the quantity of electricity per unit area, designated by him "electrical density" increases as the radius of curvature of the surface is reduced. Subsequently it was proved, by mathematical analysis, that the accumulated charge created an outward normal force equal to 2π times the square of the density, and experiment has demonstrated that when the latter exceeds approximately 20 C. G. S. units, a streamer or corona is formed From these observations and deductions it is obvious that such may happen at a comparatively low pressure if the conductor is of extremely small radius, or pointed, and it is pursuant to a misapplication of these, and other, truths that the commercial lightning rod of today is made very slender and pointed. My invention, on the contrary, while taking cognizance of these truths, correctly applies them in the provision of a lightning protector that distinctively affords an elevated terminal having its outer conducting boundaries arranged on surfaces of large radii of curvature on two dimensions. The principles which underlie my invention and correct application of which dictate the form and manner of installation of my protector, I will now explain in contrast with the conventional pointed lightning rod.

In permitting leakage into the air, the needle-shaped lightning-rod is popularly believed to perform two functions: one to drain the ground of its negative electricity, the other to neutralize the positive of the clouds. To some degree it does both. But a systematic study of electrical disturbances in the earth has made it palpably evident that the action of Franklin's conductor, as commonly interpreted, is chiefly illusionary. Actual measurement proves the quantity of electricity escaping even from many points, to be entirely insignificant when compared with that induced within a considerable terrestrial area, and of no moment whatever in the process of dissipation. But it is true that the negatively charged air in the vicinity of the rod, rendered conductive through the influence of the same, facilitates the passage of the bolt. Therefore it increases the probability of a lighting discharge in its vicinity. The fundamental facts underlying this type of lightning-rod are: First, it attracts lightning, so that it will be struck oftener than would be the building if it were not present; second, it renders harmless most, but not all, of the discharges which it receives; third, by rendering the air conductive, and for other reasons, it is sometimes the cause of damage to neighboring objects; and fourth, on the whole, its power of preventing injury predominates, more or less, over the hazards it invites.

My protector, by contrast, is founded on principles diametrically opposite. Its terminal has a large surface. It secures a very low density and preserves the insulating qualities of the ambient medium, thereby

minimizing leakage, and in thus acting as a quasi-repellant to increase enormously the safety factor.

For the best and most economical installation of protective devices according to my invention, those factors and phenomena that dictate size, number of protectors and physical qualities of the apparatus must be grasped by the installing engineer, and preliminarily, for full understanding of the principles of my invention, these should be briefly explained.

Economical installation, of course, demands that the protective capability of any given equipment be not needlessly greater than is required to meet the maximum expectancies under the conditions surrounding the particular building to be protected, and these depend, partially, as I shall show, upon the character of the landscape proximate to the building site.

In the drawings, Figures 1 to 4 inclusive, are diagrams requisite to illustration of the facts and conditions relevant to the determination of specific installations of my invention, and Figs. 5 to 8 illustrate construction and application of the protectors. Specifically:

Fig. 1 is a landscape suited for purpose of explanation; Figs. 2, 3 and 4 are theoretical diagrams; Figs. 5 and 6 illustrate forms of improved protectors; and Figs. 7 and 8 show buildings equipped with the same.

In Fig. 1, 1 represents Lord Kelvin's "reduced" area of the region, which is virtually part of the extended unruffled ocean-surface. (See "*Papers on Electrostatics and Magnetism*" by Sir William Thomson). Under ordinary weather conditions, when the sky is clear, the total amount of electricity distributed over the land is nearly the same as that which would be contained within its horizontal projection. But in times of storm, owing to the inductive action of the clouds, an immense charge may be accumulated in the locality, the density being greatest at the most elevated portions of the ground. Assuming this, under the conditions existing at any moment, let another spherical surface 2, concentric with the earth, be drawn—which may be called "electrical niveau"—such that the quantities stored over and under it are equal. In other words, their algebraic sum, taken relatively to the imaginary surface, in the positive and negative sense, is *nil*. Objects above the "niveau" are exposed to ever so much more risk than those below. Thus, a building at 3, on a site of excessive density, is apt to be hit sooner or later, while one in a depression 4, where the charge per unit area is very small, is almost entirely safe. It follows that the one building 3 requires more extensive equipment than does the other. In both instances, however, the probability of being struck is decreased by the presence of my protector, whereas it would be increased by the presence of the Franklin rod, for reasons that I will now explain.

An understanding of but part of the truths relative to electrical discharges, and their misapplication due to the want of fuller appreciation has doubtless been responsible for the Franklin lightning rod taking its conventional pointed form, but theoretical considerations, and the important discoveries that have been made in the course of investigations with a wireless transmitter of great activity by which arcs of a volume and tension comparable to those occurring in nature were obtained ("Problems of Increasing Human Energy" *Century Magazine* June 1900 and Patents 645,576, 649,621, 787,412 and 1,119,732) at once establish the fallacy of the hitherto prevailing notion on which the Franklin type of rod is based, show the distinctive novelty of my lightning protector, and guide the constructor in the use of my invention.

In Fig. 2, 5 is a small sphere in contact with a large one, 6, partly shown. It can be proved by the theory of electric images that when the two bodies are charged the mean density on the small one will be only

$$\frac{\pi^2}{6} = 1.64493$$

times greater than that on the other. (See "*Electricity and Magnetism*" by Clerk Maxwell). In Fig. 3, the two spheres 7 and 8 are placed some distance apart and connected through a thin wire 9. This system having been excited as before, the density on the small sphere is likely to be many times that on the large one. Since both are at the same potential it follows directly that the densities on them will be inversely as their radii of curvature. If the density of 7 be designated as d and the radius r, then the charge $q=4\pi r^2 d$, the potential $p=4\pi r d$ and the outward force, normal to the surface, $f=2\pi d^2$. As before stated, when d surpasses 20 C. G. S. units, the force f becomes sufficiently intense to break down the dielectric and a streamer or corona appears. In this case $p=80\pi r$. Hence, with a sphere of one centimeter radius disruption would take place at a potential $p=80\pi=251.328$ E. S. units, or 75,398.4 volts. In reality, the discharge occurs at a lower pressure as a consequence of uneven distribution on the small sphere, the density being greatest on the side turned away from the large one. In this respect the behavior of a pointed conductor is just the reverse. Theoretically, it might erroneously be inferred from the preceding, that sharp projections would permit electricity to escape at the lowest potentials, but this does not follow. The reason will be clear from an inspection of Fig.

4, in which such a needle-shaped conductor 10, is illustrated, a minute portion of its tapering end being marked 11. Were this portion removed from the large part 10 and electrically connected with the same through an infinitely thin wire, the charge would be given off readily. But the presence of 10 has the effect of reducing the capacity of 11, so that a much higher pressure is required to raise the density to the critical value. The larger the body, the more pronounced is this influence, which is also dependent on configuration, and is maximum for a sphere. When the same is of considerable size it takes a much greater electromotive force than under ordinary circumstances to produce streamers from the point. To explain this apparent anomaly attention is called to Fig. 3. If the radii of the two spheres, 7 and 8, be designated r and R respectively, their charges q and Q and the distance between their centers D, the potential at 7, due to Q is $\frac{Q}{D}$. But 7, owing to the metallic connection 9, is at the potential

$$\frac{Q}{R} = \frac{q}{r}.$$

When D is comparable to R, the medium surrounding the small sphere will ordinarily be at a potential not much different from that of the latter and millions of volts may have to be applied before streamers issue, even from sharp protruding edges. It is important to bear this in mind, for the earth is but a vast conducting globe. It follows that a pointed lightning-rod must be run far above ground in order to operate at all, and from the foregoing it will be apparent that the pointing of the end, for supposed emissive effect, is in part neutralized by the increasing size below the extreme end, and the larger the rod, for reduction of electrode resistance, the more pronounced is this counter-influence. For these reasons it is important to bear in mind that sufficient thickness of the rod for very low electrode-resistance is rather incompatible with the high emissive capability sought in the needle-like Franklin-rod, but, as hereinafter set forth, it is wholly desirable in the use of my invention, wherein the terminal construction is intended for suppression of charge-emission rather than to foster it.

The notion that Franklin's device would be effective in dissipating terrestrial charges may be traced to early experiments with static frictional machines, when a needle was found capable of quickly draining an insulated electrified body. But the inapplicability of this fact to the conditions of lightning protection will be evident from examination of the simple theoretical principles involved, which at the same time substantiate the desirability of establishing protection by avoiding such drainage. The density at the pointed end f should be inversely as the radius of curvature of the surface, but such a condition is unrealizable. Suppose Fig. 4 to represent a conductor of radius 100 times that of the needle; then, although its surface per unit length is greater in the same radio, the capacity is only double. Thus, while twice the quantity of electricity is stored, the density on the rod is but one-fiftieth of that on the needle, from which it follows that the latter is far more efficient. But the emissive power of any such conductor is circumscribed. Imagine that the "pointed" (in reality blunt or rounded) end be continuously reduced in size so as to approximate the ideal more and more. During the process of reduction, the density will be increasing as the radius of curvature gets smaller, but in a proportion distinctly less than linear; on the other hand, the area of the extreme end, that is, the section through which the charge passes out into the air, will be diminishing as the square of the radius. This relation alone imposes a definite limit to the performance of a pointed conductor, and it should be noticed that the electrode resistance would be augmented at the same time. Furthermore, the efficacy of the rod is much impaired through potential due to the charge of the ground, as has been indicated with reference to Fig. 3. Practical estimates of the electrical quantities concerned in natural disturbances show, moreover, how absolutely impossible are the functions attributed to the pointed lightning conductor. A single cloud may contain 2×10^{12} C. G. S. units, or more, inducing in the earth an equivalent amount, which a number of lightning rods could not neutralize in many years. Particularly to instance conditions that may have to be met, reference is made to the *Electrical World* of March 5, 1904, wherein it appears that upon one occasion approximately 12,000 strokes occurred within two hours within a radius of less than 50 kilometers from the place of observation.

But although the pointed lightning rod is quite ineffective in the one respect noted, it has the property of attracting lightning to a high degree, firstly on account of its shape and secondly because it ionizes and renders conductive the surrounding air. This has been unquestionably established in long continued tests with the wireless transmitter above-mentioned, and in this feature lies the chief disadvantage of the Franklin type of apparatus.

All of the foregoing serves to show that since it is utterly impracticable to effect an equalization of charges emissively through pointed lightning-rods under the conditions presented by the vast forces of nature, great

improvement lies in the attainment of a minimized probability of lightning stroke to the area to be protected coupled with adequate conductivity to render harmless those strokes that may, notwithstanding, occur.

Furthermore, a correct application of the truths that have thus been explained with reference to the familiar pointed type of lightning-rod not only substantiates the theoretical propriety of the form in which I develop my improved lightning protector, but will lead the installing engineer properly to take cognizance of those conditions due to location of the building, with respect to surrounding earth formations and other buildings, probabilities of maximum potential-differences and charge-densities to be expected under the prevailing atmospheric conditions of the site, and desirable electrode resistance and capacities of the protectors installed.

The improved protector, as above stated, behaves in a manner just opposite to the Franklin-type and is incomparably safer for this reason. The result is secured by the use of a terminal or conducting surface of large radius of curvature and sufficient area to make the density very small and thereby prevent the leakage of the charge and the ionization of the air. The device may be greatly varied in size and shape but it is essential that all its outer conducting elements should be disposed along an ideal enveloping surface of large radius and that they should have a considerable total area.

In Fig. 5, Fig. 6, Fig. 7 and Fig. 8, different kinds of such terminals and arrangements of same are illustrated. In Fig. 5, 12 is a cast or spun metal shell of ellipsoidal outlines, having on its under side a sleeve with a bushing 13 of porcelain or other insulating material, adapted to be slipped tightly on a rod 14, which may be an ordinary lightning conductor. Fig. 6 shows a terminal 15 made up of rounded or flat metal bars radiating from a central hub, which is supported directly on a similar rod and in electrical contact with the same. The special object of this type is to reduce the wind resistance, but it is essential that the bars have a sufficient area to insure small density, and also that they are close enough to make the aggregate capacity nearly equal to that of a continuous shell of the same outside dimensions. In Fig. 7 a cupola-shaped and earthed roof is carried by a chimney, serving in this way the twofold practical purpose of hood and protector. Any kind of metal may be used in its construction but it is indispensable that its outer surface should be free of sharp edges and projections from which streamers might emanate. In like manner mufflers, funnels and vents may be transformed into effective lightning protectors if equipped with suitable devices or designed in conformity with this invention. Still another modification is illustrated in Fig. 8 in which, instead of one, four grounded bars are provided with as many spun shells or attachments 18, with the obvious object of reducing the risk.

From the foregoing it will be clear that in all cases the terminal prevents leakage of electricity and attendant ionization of the air. It is immaterial to this end whether it is insulated or not. Should it be struck the current will pass readily to the ground either directly or, as in Fig. 5, through a small air-gap between 12 and 14. But such an accident is rendered extremely improbable owing to the fact that there are everywhere points and projections on which the terrestrial charge attains a high density and where the air is ionized. Thus the action of the improved protector is equivalent to a repellant force. This being so, it is not necessary to support it at a great height, but the ground connection should be made with the usual care and the conductor leading to it must be of as small a self-induction and resistance as practicable.

I claim as my invention:

1. A lightning protector consisting of an elevated terminal, having its outer conducting boundaries arranged on surfaces of large radii of curvature in both dimensions, and a grounded conductor of small self-induction, as set forth.

2. A lightning protector composed of a metallic shell of large radius of curvature, and a grounded conductor of small self-induction, as described.

3. Apparatus for protection against atmospheric discharges comprising an earth connection of small resistance, a conductor of small self-induction and a terminal carried by the same and having a large radius of curvature in two dimensions as, and for the purpose set forth.

4. In apparatus for protection against atmospheric discharges an insulated metallic shell of large radius of curvature supported by a grounded conductor and separated from the same through a small air-gap as, and for the purpose described.

5. A lightning protector comprising, in combination, an elevated terminal of large area and radius of curvature in two dimensions, and a grounded conductor of small self-induction, as set forth.

6. In apparatus for protection against lightning discharges, the combination of an elevated metallic roof of large area and radius of curvature in two dimensions, and a grounded conductor of small self-induction and resistance, as described.

7. As an article of manufacture a metallic shell of large radius of curvature provided with a sleeve adapted for attachment

to a lightning rod as, and for the purpose set forth.

8. A lightning protector comprising an ellipsoidal metallic shell and a grounded conductor of small self-induction, as set forth.

9. In apparatus for protection against atmospheric discharges a cupola-shaped metallic terminal of smooth outer surface, in combination with a grounded conductor of small self-induction and resistance, as described.

In testimony whereof I affix my signature.

NIKOLA TESLA.

Copies of this patent may be obtained for five cents each, by addressing the "Commissioner of Patents Washington, D. C."

P-456

N. TESLA.

LIGHTNING PROTECTOR.

APPLICATION FILED MAY 6, 1916.

1,266,175. Patented May 14, 1918.

Fig. 1.

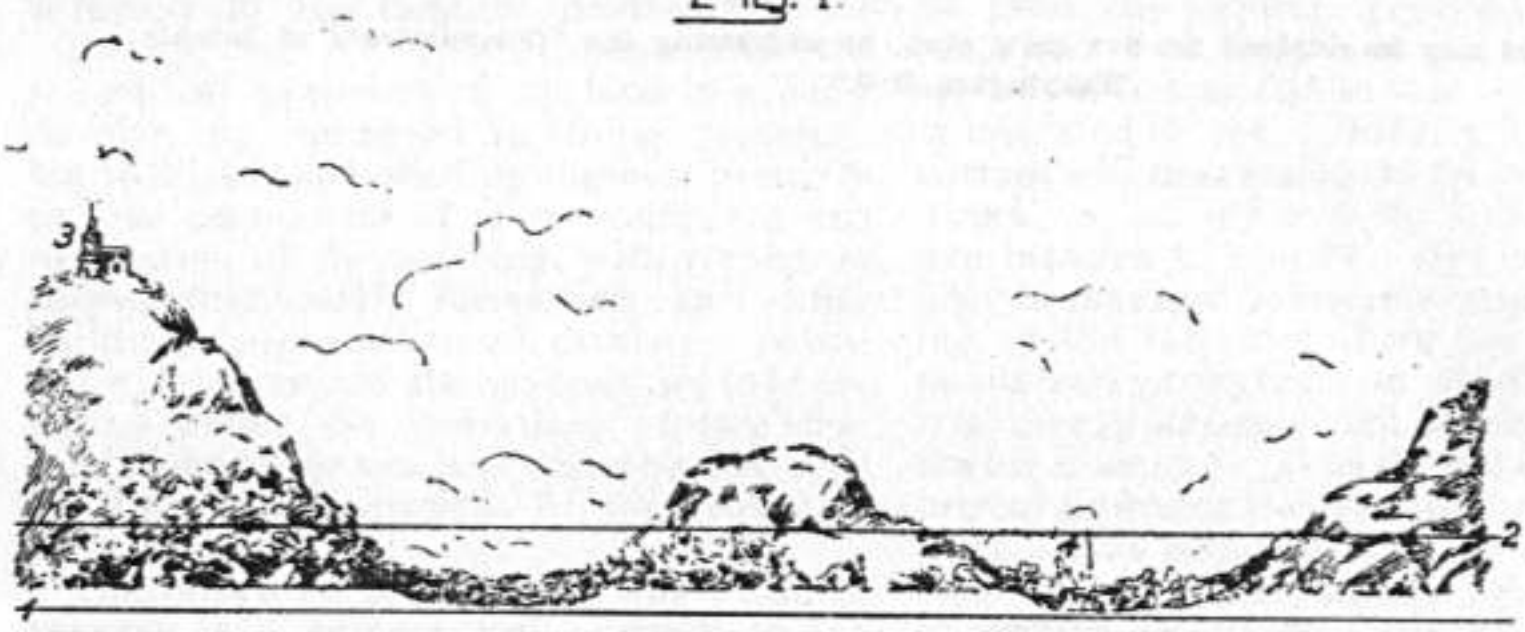

Fig. 3

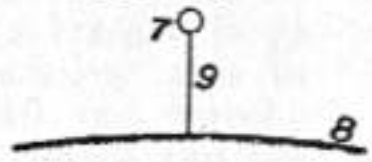

Fig. 2.

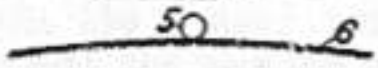

Fig. 4.

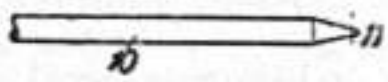

Fig 5.

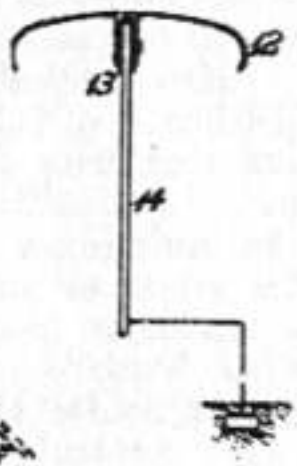

Fig. 6.

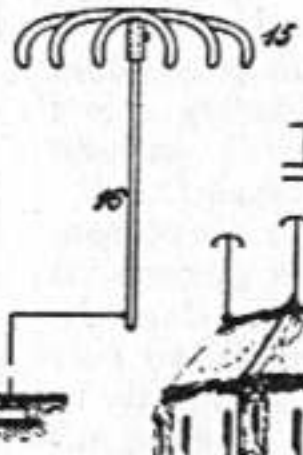

Fig. 7

Fig. 8.

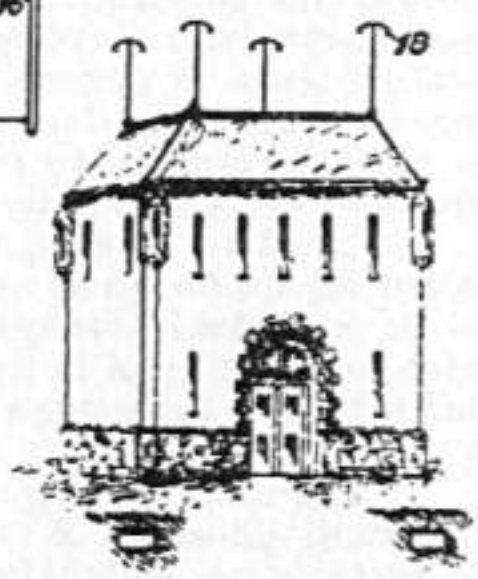

WITNESSES.
John B. McIlynne
William P. Johnson

INVENTOR
Nikola Tesla
BY
Kerr, Page, Cooper & Hayward
HIS ATTORNEYS

ARTICLES

PHENOMENA OF ALTERNATING CURRENTS OF VERY HIGH FREQUENCY*

Electrical journals are getting to be more and more interesting. New facts are observed and new problems spring up daily which command the attention of engineers. In the last few numbers of the English journals, principally in the Electrician there have been several new matters brought up which have attracted more than usual attention. The address of Professor Crookes has revived the interest in his beautiful and skilfully performed experiments, the effect observed on the Ferranti mains has elicited the expressions of opinion of some of the leading English electricians, and Mr. Swinburne has brought out some interesting points in connection with condensers and dynamo excitation.

The writer's own experiences have induced him to venture a few remarks in regard to these and other matters, hoping that they will afford some useful information or suggestion to the reader.

Among his many experiments Professor Crookes shows some performed with tubes devoid of internal electrodes, and from his remarks it must be inferred that the results obtained with these tubes are rather unusual. If this be so, then the writer must regret that Professor Crookes, whose admirable work has been the delight of every investigator, should not have availed himself in his experiments of a properly constructed alternate current machine — namely, one capable of giving, say 10,000 to 20,000 alternations per second. His researches on this difficult but fascinating subject would then have been even more complete. It is true that when using such a machine in connection with an induction coil the distinctive character of the electrodes — which is desirable, if not essential, in many experiments — is lost, in most cases both the electrodes behaving alike; but on the other hand, the advantage is gained that the effects may be exalted at will. When using a rotating switch or commutator the rate of change obtainable in the primary current is limited. When the commutator is more rapidly revolved the primary current diminishes, and if the current be increased, the sparking, which cannot be completely overcome by the condenser, impairs considerably the virtue of the apparatus. No such limitations exist when using an alternate current machine as any desired rate of change may be produced in the primary current. It is thus possible to obtain excessively high electromotive forces in the secondary circuit with a comparatively small primary current; moreover, the perfect regularity in the working of the apparatus may be relied upon.

The writer will incidentally mention that any one who attempts for the first time to construct such a machine will have a tale of woe to tell. He will first start out, as a matter of course, by making an armature with the required number of polar projections. He will then get the satisfaction of having produced an apparatus which is fit to accompany a thoroughly Wagnerian opera. It may besides possess the virtue of converting mechanical energy into heat in a nearly perfect manner. If there is a reversal in the polarity

* The Electrical World, Febr. 21, 1891

of the projections, he will get heat out of the machine; if there is no reversal, the heating will be less, but the output will be next to nothing. He will then adandon the iron in the armature, and he will get from the Scylla to the Charybdis. He will look for one difficulty and will find another, but, after a few trials, he may get nearly what he wanted.

Among the many experiments which may be performed with such a machine, of not the least interest are those performed with a high-tension induction coil. The character of the discharge is completely changed. The arc is established at much greater distances, and it is so easily affected by the slightest current of air that it often wriggles around in the most singular manner. It usually emits the rhythmical sound peculiar to the alternate current arcs, but the curious point is that the sound may be heard with a number of alternations far above ten thousand per second, which by many is considered to be about the limit of audition. In many respects the coil behaves like a static machine. Points impair considerably the sparking interval, electricity escaping from them freely, and from a wire attached to one of the terminals streams of light issue, as though it were connected to a pole of a powerful Toepler machine. All these phenomena are, of course, mostly due to the enormous differences of potential obtained. As a consequence of the self-induction of the coil and the high frequency, the current is minute while there is a corresponding rise of pressure. A current impulse of some strength started in such a coil should persist to flow no less than four ten-thousandths of a second. As this time is greater than half the period, it occurs that an opposing electromotive force begins to act while the current is still flowing. As a consequence, the pressure rises as in a tube filled with liquid and vibrated rapidly around its axis. The current is so small that, in the opinion and involuntary experience of the writer, the discharge of even a very large coil cannot produce seriously injurious effects, whereas, if the same coil were operated with a current of lower frequency, though the electromotive force would be much smaller, the discharge would be most certainly injurious. This result, however, is due in part to the high frequency. The writer's experiences tend to show that the higher the frequency the greater the amount of electrical energy which may be passed through the body without serious discomfort; whence it seems certain that human tissues act as condensers.

One is not quite prepared for the behavior of the coil when connected to a Leyden jar. One, of course, anticipates that since the frequency is high the capacity of the jar should be small. He therefore takes a very small jar, about the size of a small wine glass, but he finds that even with this jar the coil is practically short-circuited. He then reduces the capacity until he comes to about the capacity of two spheres, say, ten centimetres in diameter and two to four centimetres apart. The discharge then assumes the form of a serrated band exactly like a succession of sparks viewed in a rapidly revolving mirror; the serrations, of course, corresponding to the condenser discharges. In this case one may observe a queer phenomenon. The discharge starts at the nearest points, works gradually up, breaks somewhere near the top of the spheres, begins again at the bottom, and so on. This goes on so fast that several serrated bands are seen at once. One may be puzzled for a few minutes, but the explanation is simple enough. The discharge begins at the nearest points, the air is heated and carries the arc upward until it breaks, when it is re-established at the nearest points, etc. Since the current passes easily through a condenser of even small capacity, it will be found quite natural that connecting only one terminal to a body of the same size, no matter how well insulated, impairs considerably the striking distance of the arc.

Experiments with Geissler tubes are of special interest. An exhausted tube, devoid of electrodes of any kind, will light up at some distance from the coil. If a tube from a vacuum pump is near the coil the whole of the pump is brilliantly lighted. An incandescent lamp approached to the coil lights up and gets perceptibly hot. If a lamp

have the terminals connected to one of the binding posts of the coil and the hand is approached to the bulb, a very curious and rather unpleasant discharge from the glass to the hand takes place, and the filament may become incandescent. The discharge resembles to some extent the stream issuing from the plates of a powerful Toepler machine, but is of incomparably greater quantity. The lamp in this case acts as a condenser, the rarefied gas being one coating, the operator's hand the other. By taking the globe of a lamp in the hand, and by bringing the metallic terminals near to or in contact with a conductor connected to the coil, the carbon is brought to bright incandescence and the glass is rapidly heated. With a 100-volt 10 c.p. lamp one may without great discomfort stand as much current as will bring the lamp to a considerable brilliancy; but it can be held in the hand only for a few minutes, as the glass is heated in an incredibly short time. When a tube is lighted by bringing it near to the coil it may be made to go out by interposing a metal plate on the hand between the coil and tube; but if the metal plate be fastened to a glass rod or otherwise insulated, the tube may remain lighted if the plate be interposed, or may even increase in luminosity. The effect depends on the position of the plate and tube relatively to the coil, and may be always easily foretold by *assuming* that conduction takes place from one terminal of the coil to the other. According to the position of the plate, it may either divert from or direct the current to the tube.

In another line of work the writer has in frequent experiments maintained incandescent lamps of 50 or 100 volts burning at any desired candle power with both the terminals of each lamp connected to a stout copper wire of no more than a few feet in length. These experiments seem interesting enough, but they are not more so than the queer experiment of Faraday, which has been revived and made much of by recent investigators, and in which a discharge is made to jump between two points of a bent copper wire. An experiment may be cited here which may seem equally interesting. If a Geissler tube, the terminals of which are joined by a copper wire, be approached to the coil, certainly no one would be prepared to see the tube light up. Curiously enough, it does light up, and, what is more, the wire does not seem to make much difference. Now one is apt to think in the first moment that the impedance of the wire might have something to do with the phenomenon. But this is of course immediately rejected, as for this an enormous frequency would be required. This result, however, seems puzzling only at first; for upon reflection it is quite clear that the wire can make but little difference. It may be explained in more than one way, but it agrees perhaps best with observation to assume that conduction takes place from the terminals of the coil through the space. On this assumption, if the tube with the wire be held in any position, the wire can divert little more than the current which passes through the space occupied by the wire and the metallic terminals of the tube; through the adjacent space the current passes practically undisturbed. For this reason, if the tube be held in any position at right angles to the line joining the binding posts of the coil, the wire makes hardly any difference, but in a position more or less parallel with that line it impairs to a certain extent the brilliancy of the tube and its facility to light up. Numerous other phenomena may be explained on the same assumption. For instance, if the ends of the tube be provided with washers of sufficient size and held in the line joining the terminals of the coil, it will not light up, and then nearly the whole of the current, which would otherwise pass uniformly through the space between the washers, is diverted through the wire. But if the tube be inclined sufficiently to that line, it will light up in spite of the washers. Also, if a metal plate be fastened upon a glass rod and held at right angles to the line joining the binding posts, and nearer to one of them, a tube held more or less parallel with the line will light up instantly when one of the terminals touches the plate, and will go out when separated from the plate. The greater the surface of the plate, up to a certain limit, the easier the tube will light up. When

a tube is placed at right angles to the straight line joining the binding posts, and then rotated, its luminosity steadily increases until it is parallel with that line. The writer must state, however, that he does not favor the idea of a leakage or current through the space any more than as a suitable explanation, for he is convinced that all these experiments could not be performed with a static machine yielding a constant difference of potential, and that condenser action is largely concerned in these phenomena.

It is well to take certain precautions when operating a Ruhmkorff coil with very rapidly alternating currents. The primary current should not be turned on too long, else the core may get so hot as to melt the guta-percha or paraffin, or otherwise injure the insulation, and this may occur in a surprisingly short time, considering the current's strength. The primary current being turned on, the fine wire terminals may be joined without great risk, the impedance being so great that it is difficult to force enough current through the fine wire so as to injure it, and in fact the coil may be on the whole much safer when the terminals of the fine wire are connected than when they are insulated; but special care should be taken when the terminals are connected to the coatings of a Leyden jar, for with anywhere near the critical capacity, which just counteracts the self-induction at the existing frequency, the coil might meet the fate of St. Polycarpus. If an expensive vacuum pump is lighted up by being near to the coil or touched with a wire connected to one of the terminals, the current should be left on no more than a few moments, else the glass will be cracked by the heating of the rarefied gas in one of the narrow passages — in the writer's own experience *quod erat demonstrandum.*[1]

There are a good many other points of interest which may be observed in connection with such a machine. Experiments with the telephone, a conductor in a strong field or with a condenser or arc, seem to afford certain proof that sounds far above the usual accepted limit of hearing would be perceived. A telephone will emit notes of twelve to thirteen thousand vibrations per second; then the inability of the core to follow such rapid alternations begins to tell. If, however, the magnet and core be replaced by a condenser and the terminals connected to the high-tension secondary of a transformer, higher notes may still be heard. If the current be sent around a finely laminated core and a small piece of thin sheet iron be held gently against the core, a sound may be still heard with thirteen to fourteen thousand alternations per second, provided the current is sufficiently strong. A small coil, however, tightly packed between the poles of a powerful magnet, will emit a sound with the above number of alternations, and arcs may be audible with a still higher frequency. The limit of audition is variously estimated. In Sir William Thomson's writings it is stated somewhere that ten thousand per second, or nearly so, is the limit. Other, but less reliable, sources give it as high as twenty-four thousand per second. The above experiments have convinced the writer that notes of an incomparably higher number of vibrations per second would be perceived provided they could be produced with sufficient power. There is no reason why it should not be so. The condensations and rarefactions of the air would necessarily set the diaphragm in a corresponding vibration and some sensation would be produced, whatever — within certain limits — the velocity of transmission to their nerve centres, though it is probable that for want of exercise the ear would not be able to distinguish any such high note. With the eye it is different; if the sense of vision is based upon some resonance effect, as many believe, no amount of increase in the intensity of the ethereal vibration could extend our range of vision on either side of the visible spectrum.

---

[1]) It is thought necessary to remark that,although the induction coil may give quite a good result when operated with such rapidly alternating currents, yet its construction, quite irrespective of the iron core, makes it very unfit for such high frequencies, and to obtain the best results the construction should be greatly modified.

The limit of audition of an arc depends on its size. The greater the surface by a given heating effect in the arc, the higher the limit of audition. The highest notes are emitted by the high-tension discharges of an induction coil in which the arc is, so to speak, all surface. If R be the resistance of an arc, and C the current, and the linear dimensions be n times increased, then the resistance is $\frac{R}{n}$, and with the same current density the current would be n^2C; hence the heating effect is n^3 times greater, while the surface is only n^2 times as great. For this reason very large arcs would not emit any rhythmical sound even with a very low frequency. It must be observed, however, that the sound emitted depends to some extent also on the composition of the carbon. If the carbon contain highly refractory material, this, when heated, tends to maintain the temperature of the arc uniform and the sound is lessened; for this reason it would seem that an alternating arc requires such carbons.

With currents of such high frequencies it is possible to obtain noiseless arcs, but the regulation of the lamp is rendered extremely difficult on account of the excessively small attractions or repulsions between conductors conveying these currents.

An interesting feature of the arc produced by these rapidly alternating currents is its persistency. There are two causes for it, one of which is always present, the other sometimes only. One is due to the character of the current and the other to a property of the machine. The first cause is the more important one, and is due directly to the rapidity of the alternations. When an arc is formed by a periodically undulating current, there is a corresponding undulation in the temperature of the gaseous column, and, therefore, a corresponding undulation in the resistance of the arc. But the resistance of the arc varies enormously with the temperature of the gaseous column, being practically infinite when the gas between the electrodes is cold. The persistence of the arc, therefore, depends on the inability of the column to cool. It is for this reason impossible to maintain an arc with the current alternating only a few times a second. On the other hand, with a practically continuous current, the arc is easily maintained, the column being constantly kept at a high temperature and low. resistance. The higher the frequency the smaller the time interval during which the arc may cool and increase considerably in resistance. With a frequency of 10,000 per second or more in an arc of equal size excessively small variations of temperature are superimposed upon a steady temperature, like ripples on the surface of a deep sea. The heating effect is practically continuous and the arc behaves like one produced by a continuous current, with the exception, however, that it may not be quite as easily started, and that the electrodes are equally consumed; though the writer has observed some irregularities in this respect.

The second cause alluded to, which possibly may not be present, is due to the tendency of a machine of such high frequency to maintain a practically constant current. When the arc is lengthened, the electromotive force rises in proportion and the arc appears to be more persistent.

Such a machine is eminently adapted to maintain a constant current, but it is very unfit for a constant potential. As a matter of fact, in certain types of such machines a nearly constant current is an almost unavoidable result. As the number of poles or polar projections is greatly increased, the clearance becomes of great importance. One has really to do with a great number of very small machines. Then there is the impedance in the armature, enormously augmented by the high frequency. Then, again, the magnetic leakage is facilitated. If there are three or four hundred alternate poles, the leakage is so great that it is virtually the same as connecting, in a two-pole machine, the poles by a piece of iron. This disadvantage, it is true, may be obviated more or less by using a field throughout of the same polarity, but then one encounters difficulties of a different nature. All these things tend to maintain a constant current in the armature circuit.

In this connection it is interesting to notice that even to-day engineers are astonished at the performance of a constant current machine, just as, some years ago, they used to consider it an extraordinary performance if a machine was capable of maintaining a constant potential difference between the terminals. Yet one result is just as easily secured as the other. It must only be remembered that in an inductive apparatus of any kind, if constant potential is required, the inductive relation between the primary or exciting and secondary or armature circuit must be the closest possible; whereas, in an apparatus for constant current just the opposite is required. Furthermore, the opposition to the current's flow in the induced circuit must be as small as possible in the former and as great as possible in the latter case. But opposition to a current's flow may be caused in more than one way. It may be caused by ohmic resistance of self-induction. One may make the induced circuit of a dynamo machine or transformer of such high resistance that when operating devices of considerably smaller resistance within very wide limits a nearly constant current is maintained. But such high resistance involves a great loss in power, hence it is not practicable. Not so self-induction. Self-induction does not necessarily mean loss of power. The moral is, use self-induction instead of resistance. There is, however, a circumstance which favors the adoption of this plan, and this is, that a very high self-induction may be obtained cheaply by surrounding a comparatively small length of wire more or less completely with iron, and, furthermore, the effect may be exalted at will by causing a rapid undulation of the current. To sum up, the requirements for constant current are: Weak magnetic connection between the induced and inducing circuits, greatest possible self-induction with the least resistance, greatest practicable rate of change of the current. Constant potential, on the other hand, requires: Closest magnetic connection between the circuits, steady induced current, and, if possible, no reaction. If the latter conditions could be fully satisfied in a constant potential machine, its output would surpass many times that of a machine primarily designed to give constant current. Unfortunately, the type of machine in which these conditions may be satisfied is of little practical value, owing to the small electromotive force obtainable and the difficulties in taking off the current.

With their keen inventor's instinct, the now successful arc-light men have early recognized the desiderata of a constant current machine. Their arc light machines have weak fields, large armatures, with a great length of copper wire and few commutator segments to produce great variations in the current's strength and to bring self-induction into play. Such machines may maintain within considerable limits of variation in the resistance of the circuit a practically constant current. Their output is of course correspondingly diminished, and, perhaps with the object in view not to cut down the output too much, a simple device compensating exceptional variations is employed. The undulation of the current is almost essential to the commercial success of an arc-light system. It introduces in the circuit a steadying element taking the place of a large ohmic resistance, without involving a great loss in power, and, what is more important, it allows the use of simple clutch lamps, which with a current of a certain number of impulses per second, best suitable for each particular lamp, will, if properly attended to, regulate even better than the finest clock-work lamps. This discovery has been made by the writer — several years too late.

It has been asserted by competent English electricians that in a constant-current machine or transformer the regulation is effected by varying the phase of the secondary current. That this view is erroneous may be easily proved by using, instead of lamps, devices each possessing self-induction and capacity or self-induction and resistance — that is, retarding and accelerating components — in such proportions as to not affect materially the phase of the secondary current. Any number of such devices may be inserted or cut out, still it will be found that the regulation occurs, a constant current being maintained, while the electromotive force is varied with the number of the devices.

The change of phase of the secondary current is simply a result following from the changes in resistance, and, though secondary reaction is always of more or less importance, yet the real cause of the regulation lies in the existence of the conditions above enumerated. It should be stated, however, that in the case of a machine the above remarks are to be restricted to the cases in which the machine is independently excited. If the excitation be effected by commutating the armature current, then the fixed position of the brushes makes any shifting of the neutral line of the utmost importance, and it may not be thought immodest of the writer to mention that, as far as records go, he seems to have been the first who has successfully regulated machines by providing a bridge connection between a point of the external circuit and the commutator by means of a third brush. The armature and field being properly proportioned and the brushes placed in their determined positions, a constant current or constant potential resulted from the shifting of the diameter of commutation by the varying loads.

In connection with machines of such high frequencies, the condenser affords an especially interesting study. It is easy to raise the electromotive force of such a machine to four or five times the value by simply connecting the condenser to the circuit, and the writer has continually used the condenser for the purposes of regulation, as suggested by Blakesley in his book on alternate currents, in which he has treated the most frequently occurring condenser problems with exquisite simplicity and clearness. The high frequency allows the use of small capacities and renders investigation easy. But, although in most of the experiments the result may be foretold, some phenomena observed seem at first curious. One experiment performed three or four months ago with such a machine and a condenser may serve as an illustration. A machine was used giving about 20,000 alternations per second. Two bare wires about twenty feet long and two millimetres in diameter, in close proximity to each other, were connected to the terminals of the machine at the one end, and to a condenser at the other. A small transformer without an iron core, of course, was used to bring the reading within range of a Cardew voltmeter by connecting the voltmeter to the secondary. On the terminals of the condenser the electromotive force was about 120 volts, and from there inch by inch it gradually fell until at the terminals of the machine it was about 65 volts. It was virtually as though the condenser were a generator, and the line and armature circuit simply a resistance connected to it. The writer looked for a case of resonance, but he was unable to augment the effect by varying the capacity very carefully and gradually or by changing the speed of the machine. A case of pure resonance he was unable to obtain. When a condenser was connected to the terminals of the machine — the self-induction of the armature being first determined in the maximum and minimum position and the mean value taken — the capacity which gave the highest electromotive force corresponded most nearly to that which just counteracted the self-induction with the existing frequency. If the capacity was increased or diminished, the electromotive force fell as expected.

With frequencies as high as the above mentioned, the condenser effects are of enormous importance. The condenser becomes a highly efficient apparatus capable of transferring considerable energy.

The writer has thought machines of high frequencies may find use at least in cases when transmission at great distances is not contemplated. The increase of the resistance may be reduced in the conductors and exalted in the devices when heating effects are wanted, transformers may be made of higher efficiency and greater outputs and valuable results may be secured by means of condensers. In using machines of high frequency the writer has been able to observe condenser effects which would have otherwise escaped his notice. He has been very much interested in the phenomenon observed on the Ferranti main which has been so much spoken of. Opinions have been expressed by competent electricians, but up to the present all still seems to be conjecture. Undoubtedly in the views expressed the truth must be contained,

but as the opinions differ some must be erroneous. Upon seeing the diagram of M. Ferranti in the Electrician of Dec. 19 the writer has formed his opinion of the effect. In the absence of all the necessary data he must content himself to express in words the process which, in his opinion, must undoubtedly occur. The condenser brings about two effects: (1) It changes the phases of the currents in the branches; (2) it changes the strength of the currents. As regards the change in phase, the effect of the condenser is to accelerate the current in the secondary at Deptford and to retard it in the primary at London. The former has the effect diminishing the self-induction in the Deptford primary, and this means lower electromotive force on the dynamo. The retardation of the primary at London, as far as merely the phase is concerned, has little or no effect since the phase of the current in the secondary in London is not arbitrarily kept.

Now, the second effect of the condenser is to increase the current in both the branches. It is immaterial whether there is equality between the currents or not; but it is necessary to point out, in order to see the importance of the Deptford step-up transformer, that an increase of the current in both the branches produces opposite effects. At Deptford it means further lowering of the electromotive force at the primary, and at London it means increase of the electromotive force at the secondary. Therefore, all the things co-act to bring about the phenomenon observed. Such actions, at least, have been formed to take place under similar conditions. When the dynamo is connected directly to the main, one can see that no such action can happen.

The writer has been particularly interested in the suggestions and views expressed by Mr. Swinburne. Mr. Swinburne has frequently honored him by disagreeing with his views. Three years ago, when the writer, against the prevailing opinion of engineers, advanced an open circuit transformer, Mr. Swinburne was the first to condemn it by stating in the Electrician: "The (Tesla) transformer must be inefficient; it has magnetic poles revolving, and has thus an open magnetic circuit". Two years later Mr. Swinburne becomes the champion of the open circuit transformer, and offers to convert him. But, tempora mutantur, et nos mutamur in illis.

The writer cannot believe in the armature reaction theory as expressed in Industries, though undoubtedly there is some truth in it. Mr. Swinburne's interpretation, however, is so broad that it may mean anything.

Mr. Swinburne seems to have been the first who has called attention to the heating of the condensers. The astonishment expressed at that by the ablest electrician is a striking illustration of the desirability to execute experiments on a large scale. To the scientific investigator, who deals with the minutest quantities, who observes the faintest effects, far more credit is due than to one who experiments with apparatus on an industrial scale; and indeed history of science has recorded examples of marvelous skill, patience and keenness of observation. But however great the skill, and however keen the observer's perception, it can only be of advantage to magnify an effect and thus facilitate its study. Had Faraday carried out but one of his experiments on dynamic induction on a large scale it would have resulted in an incalculable benefit.

In the opinion of the writer, the heating of the condensers is due to three distinct causes: first, leakage or conduction; second, imperfect elasticity in the dielectric, and, third, surging of the charges in the conductor.

In many experiments he has been confronted with the problem of transferring the greatest possible amount of energy across a dielectric. For instance, he has made incandescent lamps the ends of the filaments being completely sealed in glass, but attached to interior condenser coatings so that all the energy required had to be transferred across the glass with a condenser surface of no more than a few centimetres square. Such lamps would be a practical success with sufficiently high frequencies. With alternations as high as 15,000 per second it was easy to bring the filaments to incandescence. With

lower frequencies this could also be effected, but the potential difference had, of course, to be increased. The writer has then found that the glass gets, after a while, perforated and the vacuum is impaired. The higher the frequency the longer the lamp can withstand. Such a deterioration of the dielectric always takes place when the amount of energy transferred across a dielectric of definite dimensions and by a given frequency is too great. Glass withstands best, but even glass is deteriorated. In this case the potential difference on the plates is of course too great and losses by conduction and imperfect elasticity result. If it is desirable to produce condensers capable to stand differences of potential, then the only dielectric which will involve no losses is a gas under pressure. The writer has worked with air under enormous pressures, but there are a great many practical difficulties in that direction. He thinks that in order to make the condensers of considerable practical utility, higher frequencies should be used: though such a plan has besides others the great disadvantage that the system would become very unfit for the operation of motors.

If the writer does not err Mr. Swinburne has suggested a way of exciting an alternator by means of a condenser. For a number of years past the writer has carried on experiments with the object in view of producing a practical self-exciting alternator. He has in a variety of ways succeeded in producing some excitation of the magnets by means of alternating currents, which were not commutated by mechanical devices. Nevertheless, his experiments have revealed a fact which stands as solid as the rock of Gibraltar. No practical excitation can be obtained with a single periodically varying and not commutated current. The reason is that the changes in the strength of the exciting current produce corresponding changes in the field strength, with the result of inducing currents in the armature; and these currents interfere with these produced by the motion of the armature through the field, the former being a quarter phase in advance of the latter. If the field be laminated, no excitation can be produced; if it be not laminated, some excitation is produced, but the magnets are heated. By combining two exciting currents — displaced by a quarter phase, excitation may be produced in both cases, and if the magnet be not laminated the heating effect is comparatively small, as a uniformity in the field strength is maintained, and, were it possible to produce a perfectly uniform field, excitation on this plan would give quite practical results. If such results are to be secured by the use of a condenser, as suggested by Mr. Swinburne, it is necessary to combine two circuits separated by a quarter phase; that is to say, the armature coils must be wound in two sets and connected to one or two independent condensers. The writer has done some work in that direction, but must defer the description of the devices for some future time.

AN ELECTROLYTIC CLOCK*

If a delicately and pivoted and well-balanced metal disc or cylinder be placed in a proper plating solution midway between the anode and cathode, one half of the disc becomes electro positive and the other half electro negative. Owing to this fact metal is deposited on one, and taken off from the other half, and the disc is caused to rotate under the action of gravity. As the amount of metal deposited and taken off is proportionate to the current strength, the speed of rotation, if it be small, is proportionate to the current.

The first device of this kind was operated by me early in 1888, in the endeavor to construct an electric meter. Upon learning, however, that I had been anticipated by others, as far as the principle is concerned, I devised the apparatus illustrated in the accompanying engraving. Here F is a rectangular frame of hard rubber which is fastened upon a wooden base. This frame is about $\frac{1}{2}$ inch thick, 6 inches long and 5 inches high. On both of its upright sides are fastened thick metal plates which serve as the electrodes. These plates are held firmly against the rubber frame by the binding posts T T and T_1 T_1. On the lateral sides of the frame are fastened the brass plates B and B_1, respectively, of the same shape as the rubber frame F. These brass plates serve to keep in place two plates of polished glass, and the vessel is hermetically sealed by placing a soft rubber washer under and above each of the glass plates. In this manner the plates may be screwed on tight without fear of breaking them.

The plating solution, which in this case is a concentrated solution of sulphate of copper, is poured in through an opening on the top of the rubber frame, which is closed by a plug R.

In the centre of the vessel is placed a light and delicately balanced copper disc D, the axis of which is supported by a capillary glass tube which is fixed to one of the glass plates by means of sealing wax, or other material not attacked by the liquid. To diminish the friction as much as possible, the capillary tube which serves as a bearing contains a drop of oil. The centre of disc should be equi-distant from both the electrodes. To one side of the axis of the disc is fastened a very light indicator or pointer consisting preferably of a thin glass thread. The glass plate next to this pointer has a circle with the usual hour divisions engraved upon it, as on a clock dial. This circle may be movable so that it can be put in any position relatively to the pointer. If the dial is not movable then a thin wire of annealed iron may be used as on a pointer. The wire should then be so placed that it is exactly in the centre of the solution. By means of a horse-shoe magnet the disc may then be rotated and set in proper position.

---

* The Electrical Engineer, May 6, 1891.

The copper solution being carefully poured in, and the plug R replaced, the terminals of a constant current battery are connected to the binding-posts T T¹, and from time to time the rotation of the disc is observed. A shunt is connected to the other two binding-posts T T¹, and by varying the resistance of this shunt, or other disc, the speed of rotation is regulated until it is made to correspond to the division of the dial; that is, until, for instance, one turn is made in 12 hours.

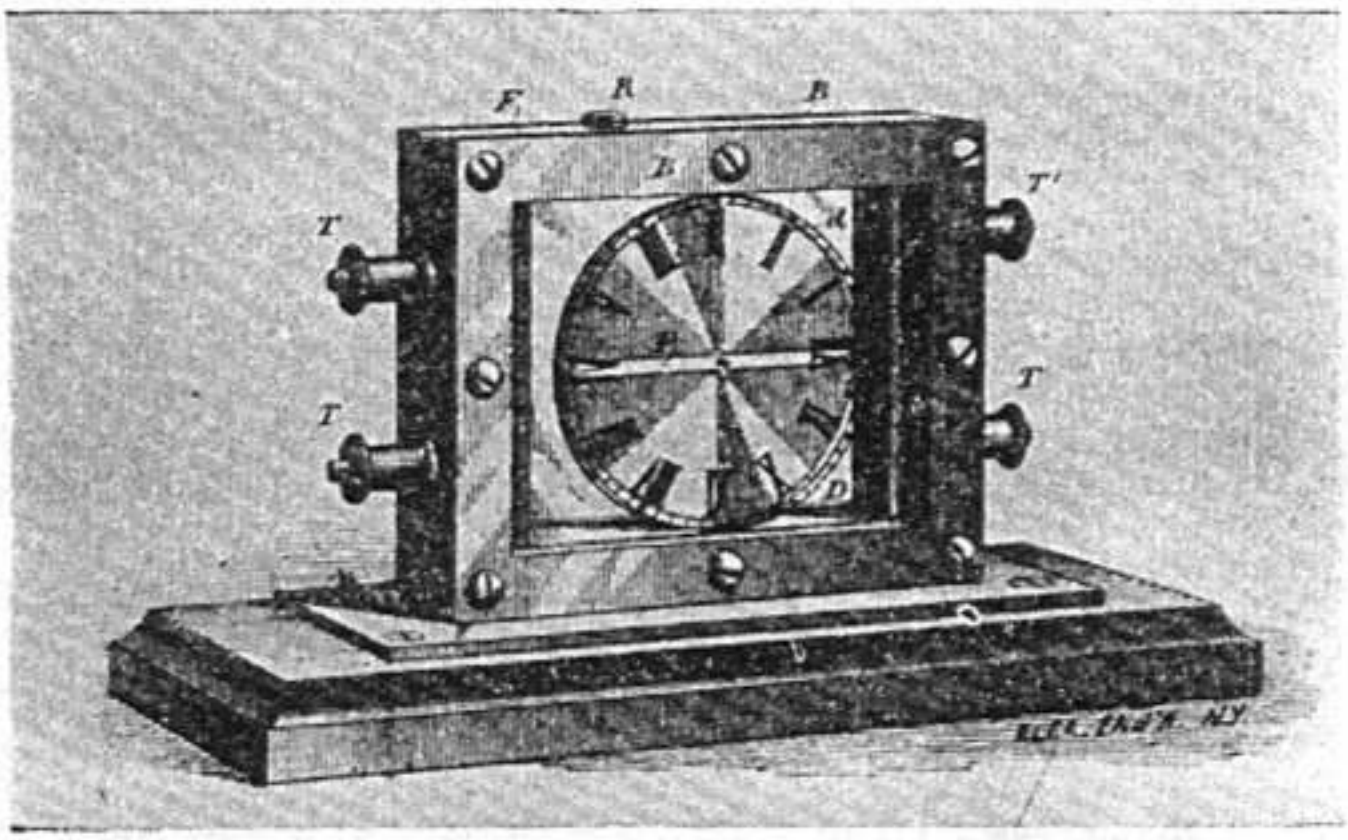

Obviously this instrument was not devised for a practical purpose. Neither will it be quite exact in its indications. There are certain errors, unavoidable from the principle; for instance, the friction, which cannot be completely overcome. But the device is interesting as a means of indicating time in a novel manner. It will, however, be found that by a careful construction, constant current, and a temperature compensator, it may be made to rotate with almost perfect uniformity. The current density should, of course, be very small to secure the best results, and the disc of about 3 inches diameter should turn once in 6 hours. It is probable that with a silver solution and a silver plate better results would be obtained.

It is very interesting to note the appearance of the solution and disc in such a narrow transparent vessel. The solution appears a clear blue, one side of the disc seems to be silver white in a certain position, and the other half is dark like tarnished silver. There is no line of demarcation, but the shades melt beautifully together.

ALTERNATE CURRENT ELECTROSTATIC INDUCTION APPARATUS*

About a year and a half ago while engaged in the study of alternate currents of short period, it occurred to me that such currents could be obtained by rotating charged surfaces in close proximity to conductors. Accordingly I devised various forms of experimental apparatus of which two are illustrated in the accompanying engravings.

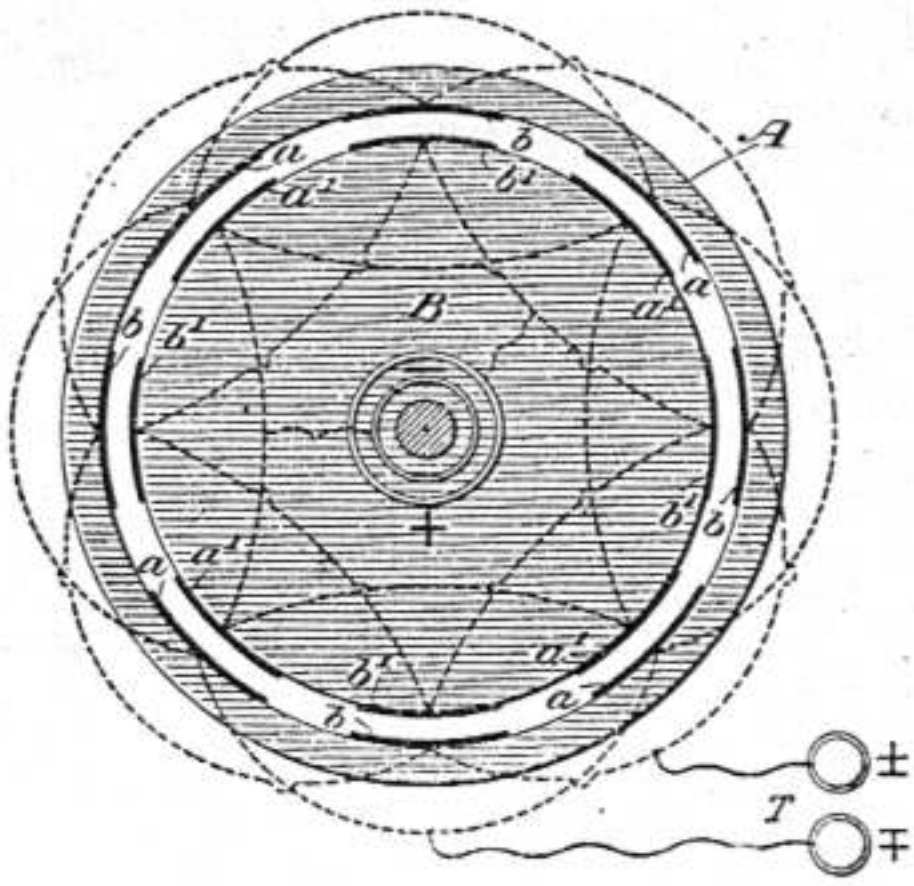

Fig. 1.

In the apparatus shown in Fig. 1, A is a ring of dry shellacked hard wood provided on its inside with two sets of tin-foil coatings, *a* and *b*, all the *a* coatings and all the *b* coatings being connected together, respectively, but independent from each other. These two sets of coatings are connected to two terminals, T. For the sake of clearness only a few coatings are shown. Inside of the ring A, and in close proximity to it there is arranged to rotate a cylinder B, likewise of dry, shellacked hard wood, and provided with two similar sets of coatings, a^1 and b^1, all the coatings a^1 being connected to one ring and all the others, b^1, to another marked + and —. These two sets, a^1 and b^1 are charged to a high potential by a Holtz or Wimshurst machine, and may be connected to a jar of some capacity. The inside of ring A is coated with mica in order to increase the induction and also to allow higher potentials to be used.

---

* The Electrical Engineer, N.Y., May 6, 1891

When the cylinder B with the charged coatings is rotated, a circuit connected to the terminals T is traversed by alternating currents. Another form of apparatus is illustrated in Fig. 2. In this apparatus the two sets of tin-foil coatings are glued on a plate of ebonite, and a similar plate which is rotated, and the coatings of which are charged as in Fig. 1, is provided.

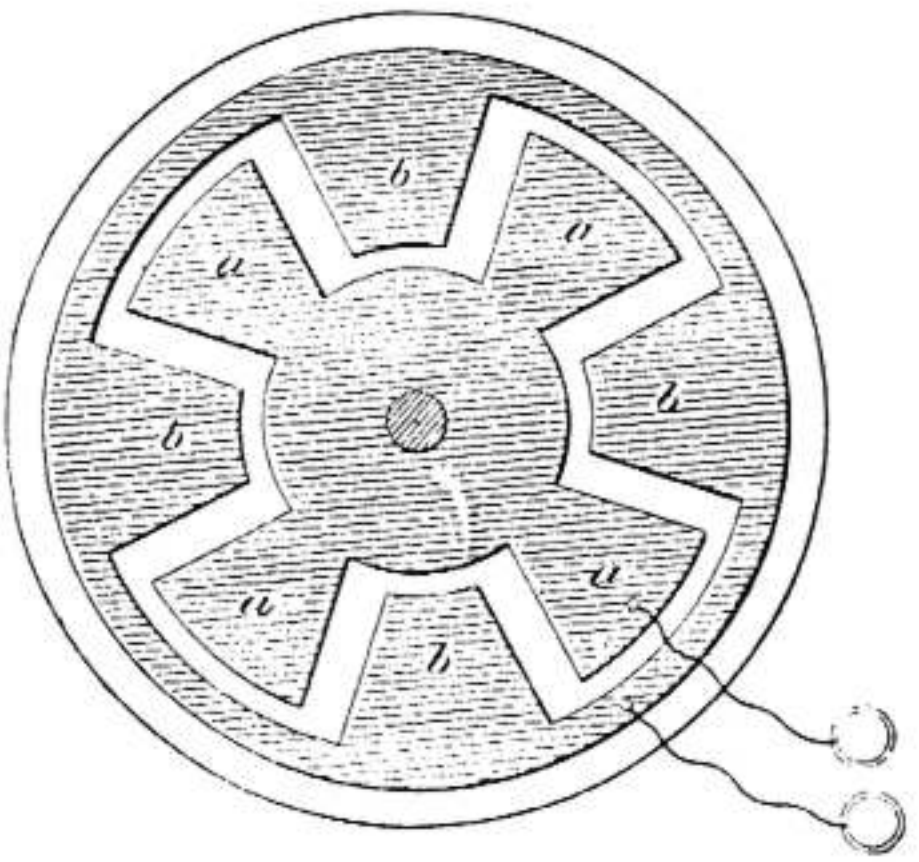

Fig. 2.

The output of such an apparatus is very small, but some of the effects peculiar to alternating currents of short periods may be observed. The effects, however, cannot be compared with those obtainable with an induction coil which is operated by an alternate current machine of high frequency, some of which were described by me a short while ago.

ELECTRIC DISCHARGE IN VACUUM TUBES*

In *The Electrical Engineer* of June 10 I have noted the description of some experiments of Prof. J. J. Thomson, on the "Electric Discharge in Vacuum Tubes," and in your issue of June 24 Prof. Elihu Thomson describes an experiment of the same kind. The fundamental idea in these experiments is to set up an electromotive force in a vacuum tube — preferably devoid of any electrodes — by means of electromagnetic induction, and to excite the tube in this manner.

As I view the subject I should think that to any experimenter who had carefully studied the problem confronting us and who attempted to find a solution of it, this idea must present itself as naturally as, for instance, the idea of replacing the tinfoil coatings of a Leyden jar by rarefied gas and exciting luminosity in the condenser thus obtained by repeatedly charging and discharging it. The idea being obvious, whatever merit there is in this line of investigation must depend upon the completeness of the study of the subject and the correctness of the observations. The following lines are not penned with any desire on my part to put myself on record as one who has performed similar experiments, but with a desire to assist other experimenters by pointing out certain peculiarities of the phenomena observed, which, to all appearances, have not been noted by Prof. J. J. Thomson, who, however, seems to have gone about systematically in his investigations, and who has been the first to make his results known. These peculiarities noted by me would seem to be at variance with the views of Prof. J. J. Thomson, and present the phenomena in a different light.

My investigations in this line occupied me principally during the winter and spring of the past year. During this time many different experiments were performed, and in my exchanges of ideas on this subject with Mr. Alfred S. Brown, of the Western Union Telegraph Company, various different dispositions were suggested which were carried out by me in practice. Fig. 1 may serve as an example of one of the many forms of apparatus used. This consisted of a large glass tube sealed at one end and projecting into an ordinary incandescent lamp bulb. The primary, usually consisting of a few turns of thick, well-insulated copper sheet was inserted within the tube, the inside space of the bulb furnishing the secondary. This form of apparatus was arrived at after some experimenting, and was used principally with the view of enabling me to place a polished reflecting surface on the inside of the tube, and for this purpose the last turn of the primary was covered with a thin silver sheet. In all forms of apparatus used there was no special difficulty in exciting a luminous circle or cylinder in proximity to the primary.

As to the number of turns, I cannot quite understand why Prof. J. J. Thomson should think that a few turns were "quite sufficient", but lest I should impute to him an opinion he may not have, I will add that I have gained this impression from the

---

* The Electrical Engineer. N.Y., July 1, 1891

reading of the published abstracts of his lecture. Clearly, the number of turns which gives the best result in any case, is dependent on the dimensions of the apparatus, and, were it not for various considerations, one turn would always give the best result.

I have found that it is preferable to use in these experiments an alternate current machine giving a moderate number of alternations per second to excite the induction coil for charging the Leyden jar which discharges through the primary — shown diagrammatically in Fig. 2, — as in such case, before the disruptive discharge takes place, the tube or bulb is slightly excited and the formation of the luminous circle is decidedly facilitated. But I have also used a Wimshurst machine in some experiments.

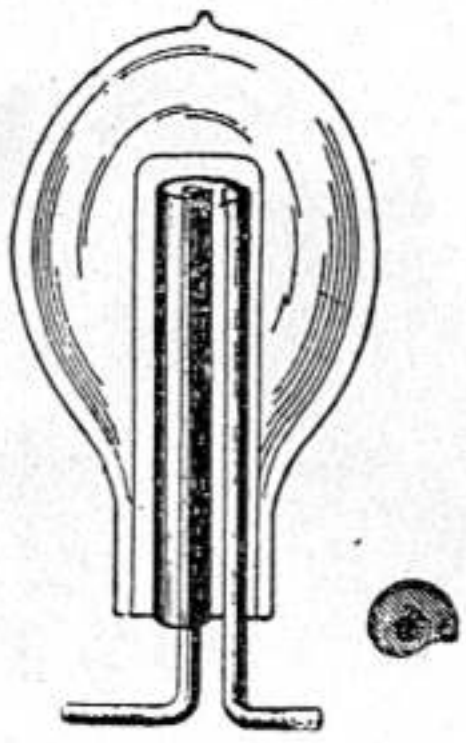

Fig. 1.

Prof. J. J. Thomson's view of the phenomena under consideration seems to be that they are wholly due to electro-magnetic action. I was, at one time, of the same opinion, but upon carefully investigating the subject I was led to the conviction that they are more of an electrostatic nature. It must be remembered that in these experiments we have to deal with primary currents of an enormous frequency or rate of change and of high potential, and that the secondary conductor consists of a rarefied gas, and that under such conditions electrostatic effects must play an important part.

In support of my view I will describe a few experiments made by me. To excite luminosity in the tube it is not absolutely necessary that the conductor should be closed. For instance, if an ordinary exhausted tube (preferably of large diameter) be surrounded by a spiral of thick copper wire serving as the primary, a feebly luminous spiral may be induced in the tube, roughly shown in Fig. 3. In one of these experiments a curious phenomenon was observed; namely, two intensely luminous circles, each of them close to a turn of the primary spiral, were formed inside of the tube, and I attributed this phenomenon to the existence of nodes on the primary. The circles were connected by a faint luminous spiral parallel to the primary and in close proximity to it. To produce this effect I have found it necessary to strain the jar to the utmost. The turns of the spiral tend to close and form circles, but this, of course, would be expected, and does not necessarily indicate an electro-magnetic effect; whereas the fact that a glow can be produced along the primary in the form of an open spiral argues for an electrostatic effect.

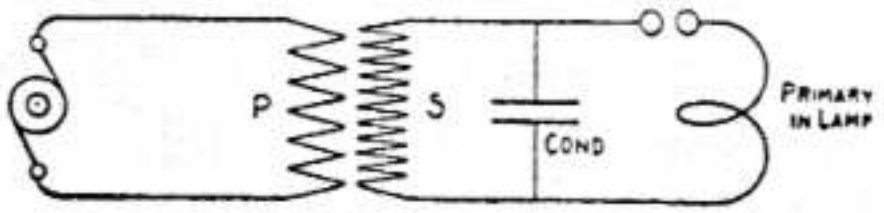

Fig. 2.

In using Dr. Lodge's recoil circuit, the electrostatic action is likewise apparent. The arrangement is illustrated in Fig. 4. In his experiments two hollow exhausted tubes H H were slipped over the wires of the recoil circuit and upon discharging the jar in the usual manner luminosity was excited in the tubes.

Another experiment performed is illustrated in Fig. 5. In this case an ordinary lamp-bulb was surrounded by one or two turns of thick copper wire P and the luminous circle L excited in the bulb by discharging the jar through the primary. The lamp-bulb was provided with a tinfoil coating on the side opposite to the primary and each time the tinfoil coating was connected to the ground or to a large object the luminosity of the circle was considerably increased. This was evidently due to electrostatic action.

In other experiments I have noted that when the primary touches the glass the luminous circle is easier produced and is more sharply defined; but I have not noted that, generally speaking, the circles induced were very sharply defined, as Prof. J. J. Thomson has observed; on the contrary, in my experiments they were broad and often the whole of the bulb or tube was illuminated; and in one case I have observed an intensely purplish glow, to which Prof. J. J. Thomson refers. But the circles were always in close proximity to the primary and were considerably easier produced when the latter was very close to the glass, much more so than would be expected assuming the action to be electromagnetic and considering the distance; and these facts speak for an electrostatic effect.

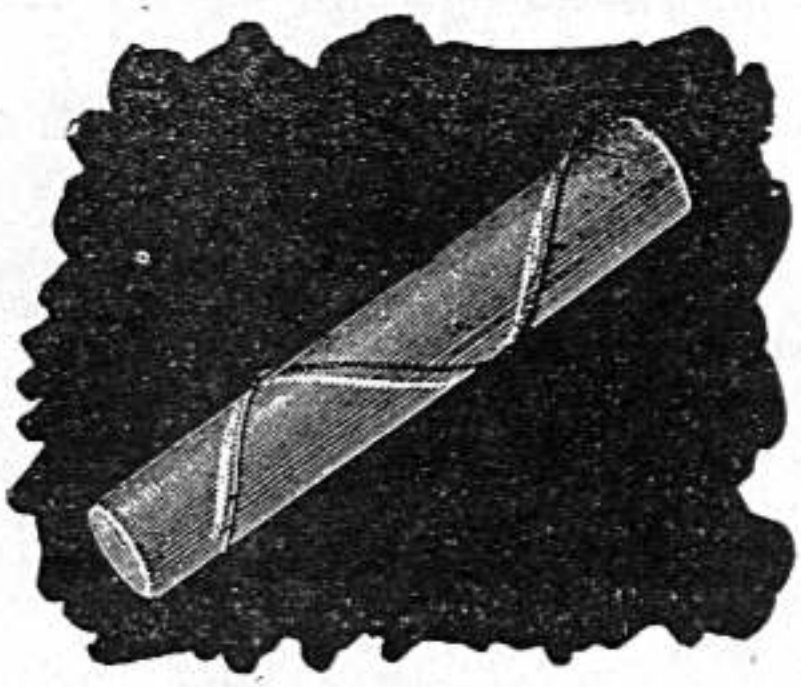

Fig. 3.

Furthermore I have observed that there is a molecular bombardment in the plane of the luminous circle at right angles to the glass — supposing the circle to be in the plane of the primary — this bombardment being evident from the rapid heating of the glass near the primary. Were the bombardment not at right angles to the glass the heating could not be so rapid. If there is a circumferential movement of the molecules constituing the luminous circle, I have thought that it might be rendered manifest by placing within the tube or bulb, radially to the circle, a thin plate of mica coated with some phosphorescent material and another such plate tangentially to the circle. If the molecules would move circumferentially, the former plate would be rendered more intensely phosphorescent. For want of time I have, however, not been able to perform the experiment.

Another observation made by me was that when the specific inductive capacity of the medium between the primary and secondary is increased, the inductive effect is augmented. This is roughly illustrated in Fig. 6. In this case luminosity was excited in an exhausted tube or bulb B and a glass tube T slipped between the primary and the bulb, when the effect pointed out was noted. Were the action wholly electromagnetic no change could possibly have been observed.

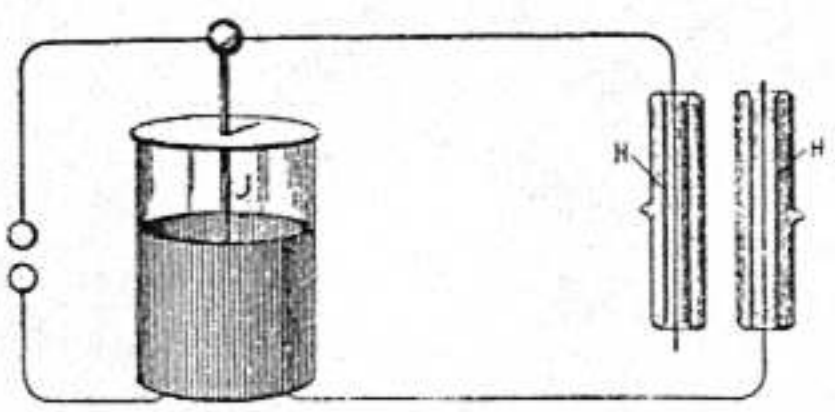

Fig. 4.

I have likewise noted that when a bulb is surrounded by a wire closed upon itself and in the plane of the primary, the formation of the luminous circle within the bulb is not prevented. But if instead of the wire a broad strip of tinfoil is glued upon the bulb, the formation of the luminous band was prevented, because then the action was distributed over a greater surface. The effect of the closed tinfoil was no doubt of an electrostatic nature, for it presented a much greater resistance than the closed wire and produced therefore a much smaller electromagnetic effect.

Some of the experiments of Prof. J. J. Thomson also would seem to show some electrostatic action. For instance, in the experiment with the bulb enclosed in a

bell jar, I should think that when the latter is exhausted so far that the gas enclosed reaches the maximum conductivity, the formation of the circle in the bulb and jar is prevented because of the space surrounding the primary being highly conducting; when the jar is further exhausted, the conductivity of the space around the primary diminishes and the circles appear necessarily first in the bell jar, as the rarefied gas is nearer to the primary. But were the inductive effect very powerful, they would probably appear in the bulb also. If, however, the bell jar were exhausted to the highest degree they would very likely show themselves in the bulb only, that is, supposing the vacuous space to be non-conducting. On the assumption that in these phenomena electrostatic actions are concerned we find it easily explicable why the

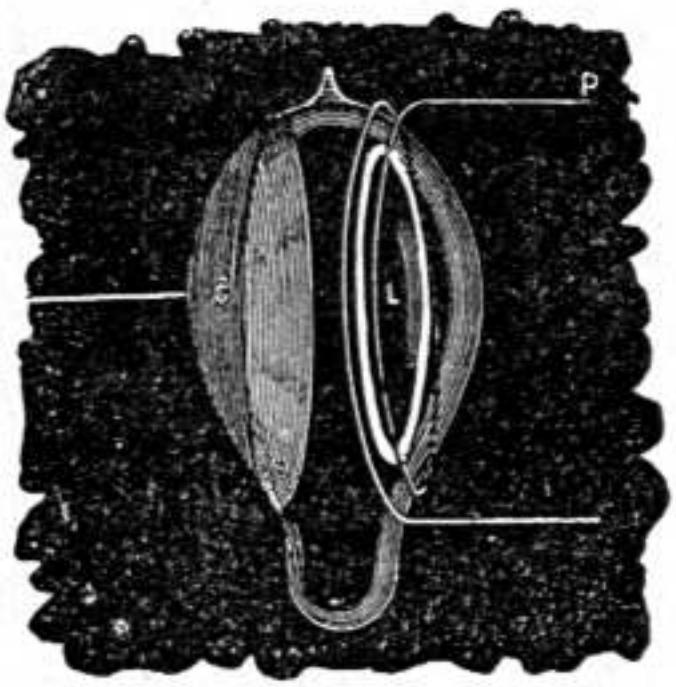

Fig. 5.

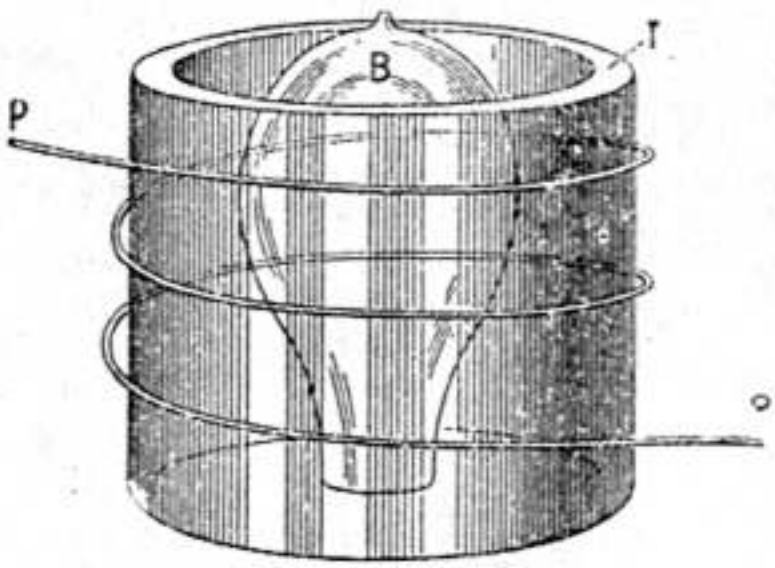

Fig. 6.

introduction of mercury or the heating of the bulb prevents the formation of the luminous band or shortens the after-glow; and also why in some cases a platinum wire may prevent the excitation of the tube. Nevertheless some of the experiments of Prof. J. J. Thomson would seem to indicate an electromagnetic effect. I may add that in one of my experiments in which a vacuum was produced by the Torricellian method, I was unable to produce the luminous band, but this may have been due to the weak exciting current employed.

My principal argument is the following: I have experimentally proved that if the same discharge which is barely sufficient to excite a luminous band in the bulb when passed through the primary circuit be so directed as to exalt the electrostatic inductive effect — namely, by converting upwards — an exhausted tube, devoid of electrodes, may be excited at a distance of several feet.

NOTE BY PROF. J. J. THOMSON IN THE LONDON *ELECTRICIAN*, JULY 24, 1891

"Mr. Tesla seems to ascribe the effects he observed to electrostatic action, and I have no doubt, from the description he gives of his method of conducting his experiments, that in them electrostatic action plays a very important part. He seems, however, to have misunderstood my position with respect to the cause of these discharges, which is not, as he implies, that luminosity in tubes without electrodes cannot be produced by electrostatic action, but that it can also be produced when this action is excluded. As a matter of fact, it is very much easier to get the luminosity when these electrostatic effects are operative than when they are not. As an illustration of this I may mention that the first experiment I tried with the discharge of a Leyden jar produced luminosity in the tube, but it was not until after six weeks' continuous

experimenting that I was able to get a discharge in the exhausted tube which I was satisfied was due to what is ordinarily called electrodynamic action. It is advisable to have a clear idea of what we mean by electrostatic action. If, previous to the discharge of the jar, the primary coil is raised to a high potential, it will induce over the glass of the tube a distribution of electricity. When the potential of the primary suddenly falls, this electrification will redistribute itself, and may pass through the rarefied gas and produce luminosity in doing so. Whilst the discharge of the jar is going on, it is difficult, and, from a theoretical point of view, undesirable, to separate the effect into parts, one of which is called electrostatic, the other electromagnetic; what we can prove is that in this case the discharge is not such as would be produced by electromotive forces derived from a potential function. In my experiments the primary coil was connected to earth, and, as a further precaution, the primary was separated from the discharge tube by a screen of blotting paper, moistened with dilute sulphuric acid, and connected to earth. Wet blotting paper is a sufficiently good conductor to screen off a stationary electrostatic effect, though it is not a good enough one to stop waves of alternating electromotive intensity. When showing the experiments to the Physical Society I could not, of course, keep the tubes covered up, but, unless my memory deceives me, I stated the precautions which had been taken against the electrostatic effect. To correct misapprehension I may state that I did not read a formal paper to the Society, my object being to exhibit a few of the most typical experiments. The account of the experiments in the *Electrician* was from a reporter's note, and was not written, or even read, by me. I have now almost finished writing out, and hope very shortly to publish, an account of these and a large number of allied experiments, including some analogous to those mentioned by Mr. Tesla on the effect of conductors placed near the discharge tube, which I find, in some cases, to produce a diminution, in others an increase, in the brightness of the discharge, as well as some on the effect of the presence of substances of large specific inductive capacity. These seem to me to admit of a satisfactory explanation, for which, however, I must refer to my paper."

REPLY TO J. J. THOMSON'S NOTE IN THE *ELECTRICIAN*, JULY 24, 1891.[1]

In *The Electrical Engineer* of August 12, I find some remarks of Prof. J. J. Thomson, which appeared originally in the London *Electrician* and which have a bearing upon some experiments described by me in your issue of July 1.

I did not, as Prof. J. J. Thomson seems to believe, misunderstand his position in regard to the cause of the phenomena considered, but I thought that in his experiments, as well as in my own, electrostatic effects were of great importance. It did not appear, from the meagre description of his experiments, that all possible precautions had been taken to exclude these effects. I did not doubt that luminosity could be excited in a closed tube when electrostatic action is completely excluded. In fact, at the outset, I myself looked for a purely electrodynamic effect and believed that I had obtained it. But many experiments performed at that time proved to me that the electrostatic effects were generally of far greater importance, and admitted of a more satisfactory explanation of most of the phenomena observed.

In using the term *electrostatic* I had reference rather to the nature of the action than to a stationary condition, which is the usual acceptance of the term. To express myself more clearly, I will suppose that near a closed exhausted tube be placed a small sphere charged to a very high potential. The sphere would act inductively upon the tube, and by distributing electricity over the same would undoubtedly produce luminosity (if the potential be sufficiently high), until a permanent condition would be reached. Assuming the tube to be perfectly well insulated, there would be only one instantaneous flash during the act of distribution. This would be due to the electrostatic action simply.

But now, suppose the charged sphere to be moved at short intervals with great speed along the exhausted tube. The tube would now be permanently excited, as the moving sphere would cause a constant redistribution of electricity and collisions of the molecules of the rarefied gas. We would still have to deal with an electrostatic effect, and in addition an electrodynamic effect would be observed. But if it were found that, for instance, the effect produced depended more on the specific inductive

[1] The Electrical Engineer, N.Y., August 26, 1891.

capacity than on the magnetic permeability of the medium — which would certainly be the case for speeds incomparably lower than that of light — then I believe I would be justified in saying that the effect produced was more of an electrostatic nature. I do not mean to say, however, that any similar condition prevails in the case of the discharge of a Leyden jar through the primary, but I think that such an action would be desirable.

It is in the spirit of the above example that I used the terms "more of an electrostatic nature," and have investigated the influence of bodies of high specific inductive capacity, and observed, for instance, the importance of the quality of glass of which the tube is made. I also endeavored to ascertain the influence of a medium of high permeability by using oxygen. It appeared from rough estimation that an oxygen tube when excited under similar conditions — that is, as far as could be determined — gives more light; but this, of course, may be due to many causes.

Without doubting in the least that, with the care and precautions taken by Prof. J. J. Thomson, the luminosity excited was due solely to electrodynamic action, I would say that in many experiments I have observed curious instances of the ineffectiveness of the screening, and I have also found that the electrification through the air is often of very great importance, and may, in some cases, determine the excitation of the tube.

In his original communication to the *Electrician,* Prof. J. J. Thomson refers to the fact that the luminosity in a tube near a wire through which a Leyden jar was discharged was noted by Hittorf. I think that the feeble luminous effect referred to has been noted by many experimenters, but in my experiments the effects were much more powerful than those usually noted.

NOTES ON A UNIPOLAR DYNAMO*

It is characteristic of fundamental discoveries, of great achievements of intellect, that they retain an undiminished power upon the imagination of the thinker. The memorable experiment of Faraday with a disc rotating between the two poles of a magnet, which has borne such magnificent fruit, has long passed into every-day experience; yet there are certain features about this embryo of the present dynamos and motors which even to-day appear to us striking, and are worthy of the most careful study.

Consider, for instance, the case of a disc of iron or other metal revolving between the two opposite poles of a magnet, and the polar surfaces completely covering both sides of the disc, and assume the current to be taken off or conveyed to the same by contacts uniformly from all points of the periphery of the disc. Take first the case of a motor. In all ordinary motors the operation is dependent upon some shifting or change of the resultant of the magnetic attraction exerted upon the armature, this process being effected either by some mechanical contrivance on the motor or by the action of currents of the proper character. We may explain the operation of such a motor just as we can that of a water-wheel. But ir the above example of the disc surrounded completely by the polar surfaces, there is no shifting of the magnetic action, no change whatever, as far as we know, and yet rotation ensues. Here, then, ordinary considerations do not apply; we cannot even give a superficial explanation, as in ordinary motors, and the operation will be clear to us only when we shall have recognized the very nature of the forces concerned, and fathomed the mystery of the invisible connecting mechanism.

Considered as a dynamo machine, the disc is an equally interesting object of study. In addition to its peculiarity of giving currents of one direction without the employment of commutating devices, such a machine differs from ordinary dynamos in that there is no reaction between armature and field. The armature current tends to set up a magnetization at right angles to that of the field current, but since the current is taken off uniformly from all points of the periphery, and since, to be exact, the external circuit may also be arranged perfectly symmetrical to the field magnet, no reaction can occur. This, however, is true only as long as the magnets are weakly energized, for when the magnets are more or less saturated, both magnetizations at right angles seemingly interfere with each other.

For the above reason alone it would appear that the output of such a machine should, for the same weight, be much greater than that of any other machine in which the armature current tends to demagnetize the field. The extraordinary output of the Forbes unipolar dynamo and the experience of the writer confirm this view.

Again, the facility with which such a machine may be made to excite itself is striking, but this may be due — besides to the absence of armature reaction — to the perfect smoothness of the current and non-existence of self-induction.

---

* The Electrical Engineer, N.Y., Sept. 2, 1891.

If the poles do not cover the disc completely on both sides, then, of course, unless the disc be properly subdivided, the machine will be very inefficient. Again, in this case there are points worthy of notice. If the disc be rotated and the field current interrupted, the current through the armature will continue to flow and the field magnets will lose their strength comparatively slowly. The reason for this will at once appear when we consider the direction of the currents set up in the disc.

Referring to the diagram Fig. 1, *d* represents the disc with the sliding contacts B B' on the shaft and periphery. N and S represent the two poles of a magnet. If the

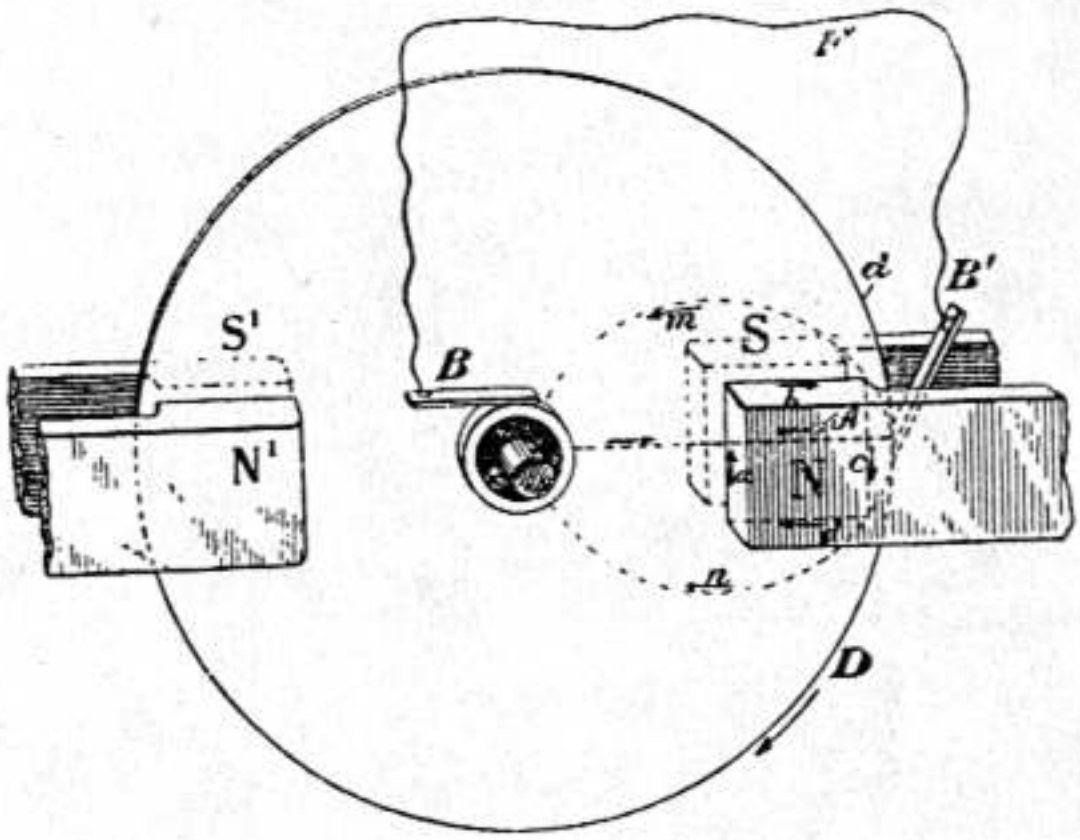

Fig. 1.

pole N be above, as indicated in the diagram, the disc being supposed to be in the plane of the paper, and rotating in the direction of the arrow D, the current set up in the disc will flow from the centre to the periphery, as indicated by the arrow A. Since the magnetic action is more or less confined to the space between the poles N S, the other portions of the disc may be considered inactive. The current set up will therefore not wholly pass through the external circuit F, but will close through the disc itself, and generally, if the disposition be in any way similar to the one illustrated, by far the greater portion of the current generated will not appear externally, as the circuit F is practically short-circuited by the inactive portions of the disc. The direction of the resulting currents in the latter may be assumed to be as indicated by the dotted lines and arrows *m* and *n*; and the direction of the energizing field current being indicated by the arrows *a b c d*, an inspection of the figure shows that one of the two branches of the eddy current, that is, A B' *m* B, will tend to demagnetize the field, while the other branch, that is, A B' *n* B, will have the opposite effect. Therefore, the branch A B' *m* B, that is, the one which is *approaching* the field, will repel the lines of the same, while branch A B' *n* B, that is, the one *leaving* the field, will gather the lines of force upon itself.

In consequence of this there will be a constant tendency to reduce the current flow in the path A B' *m* B, while on the other hand no such opposition will exist in path A B' *n* B, and the effect of the latter branch or path will be more or less preponderating over that of the former. The joint effect of both the assumed branch currents might be represented by that of one single current of the same direction as that energizing the field. In other words, the eddy currents circulating in the disc will energize the field magnet. This is a result quite contrary to what we might be led to

suppose at first, for we would naturally expect that the resulting effect of the armature currents would be such as to oppose the field current, as generally occurs when a primary and secondary conductor are placed in inductive relations to each other. But it must be remembered that this result from the peculiar disposition in this case, namely, two paths being afforded to the current, and the latter selecting that path which offers the least opposition to its flow. From this we see that the eddy currents flowing in the disc partly energize the field, and for this reason when the field current is interrupted the currents in the disc will continue to flow, and the field magnet will lose its strength with comparative slowness and may even retain a certain strength as long as the rotation of the disc is continued.

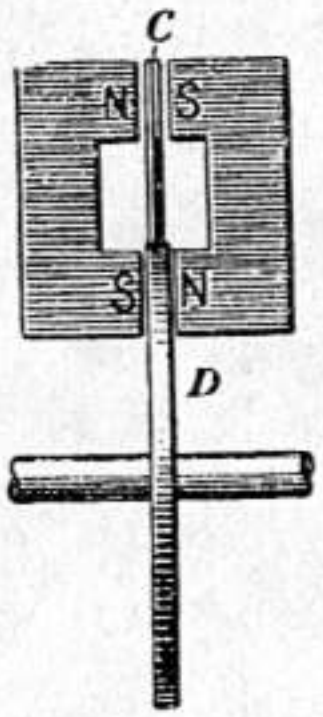

Fig. 2.

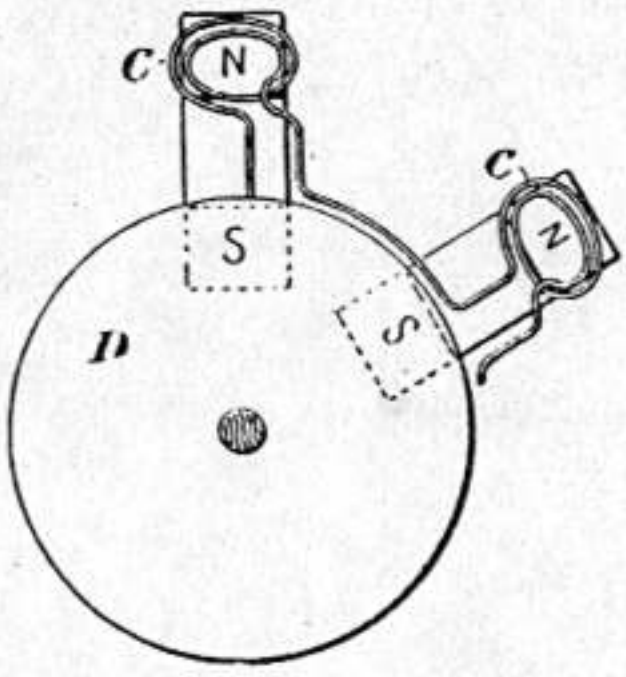

Fig. 3.

The result will, of course, largely depend on the resistance and geometrical dimensions of the path of the resulting eddy current and on the speed of rotation; these elements, namely, determine the retardation of this current and its position relative to the field. For a certain speed there would be a maximum energizing action; then at higher speeds, it would gradually fall off to zero and finally reverse, that is, the resultant eddy current effect would be to weaken the field. The reaction would be best demonstrated experimentally by arranging the fields N S, N' S', freely movable on an axis concentric with the shaft of the disc. If the latter were rotated as before in the direction of the arrow D, the field would be dragged in the same direction with a torque, which, up to a certain point, would go on increasing with the speed of rotation, then fall off, and, passing through zero, finally become negative; that is, the field would begin to rotate in opposite direction to the disc. In experiments with alternate current motors in which the field was shifted by currents of differing phase, this interesting result was observed. For very low speeds of rotation of the field the motor would show a torque of 900 lbs. or more, measured on a pulley 12 inches in diameter. When the speed of rotation of the poles was increased, the torque would diminish, would finally go down to zero, become negative, and then the armature would begin to rotate in opposite direction to the field.

To return to the principal subject; assume the conditions to be such that the eddy currents generated by the rotation of the disc strengthen the field, and suppose the latter gradually removed while the disc is kept rotating at an increased rate. The current, once started, may then be sufficient to maintain itself and even increase in strength, and then we have the case of Sir William Thomson's "current accumulator."

But from the above considerations it would seem that for the success of the experiment the employment of a disc *not subdivided* would be essential, for if there should be a radial subdivision, the eddy currents could not form and the self-exciting action would cease. If such a radially subdivided disc were used it would be necessary to connect the spokes by a conducting rim or in any proper manner so as to form a symmetrical system of closed circuits.

The action of the eddy currents may be utilized to excite a machine of any construction. For instance, in Figs. 2 and 3 an arrangement is shown by which a machine with a disc armature might be excited. Here a number of magnets, N S, N S, are placed radially on each side of a metal disc D carrying on its rim a set of insulated coils, C C. The magnets form two separate fields, an internal and an external one, the solid disc rotating in the field nearest the axis, and the coils in the field further from it. Assume the magnets slightly energized at the start; they could be strengthened by the action of the eddy currents in the solid disc so as to afford a stronger field for the peripheral coils. Although there is no doubt that under proper conditions a machine might be excited in this or a similar manner, there being sufficient experimental evidence to warrant such an assertion, such a mode of excitation would be wasteful.

But a unipolar dynamo or motor, such as shown in Fig. 1 may be excited in an efficient manner by simply properly subdividing the disc or cylinder in which the currents are set up, and it is practicable to do away with the field coils which are usually employed. Such a plan is illustrated in Fig. 4. The disc or cylinder D is supposed to be arranged to rotate between the two poles N and S of a magnet, which completely cover it on both sides, the contours of the disc and poles being represented by the

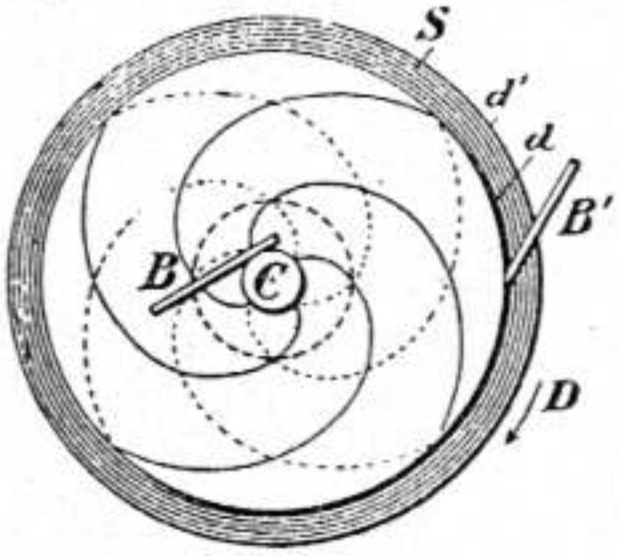

Fig. 4.

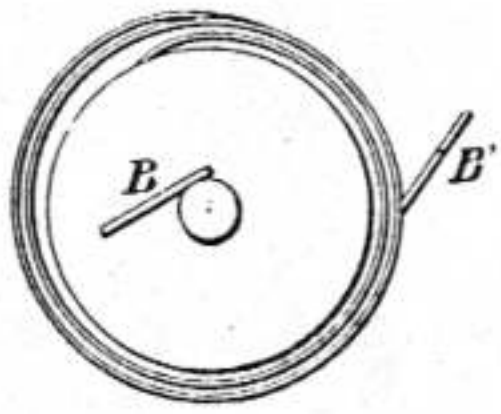

Fig. 5.

circles *d* and *d'* respectively, the upper pole being omitted for the sake of clearness. The cores of the magnet are supposed to be hollow, the shaft C of the disc passing through them. If the unmarked pole be below, and the disc be rotated screw fashion, the current will be, as before, from the centre to the periphery, and may be taken off by suitable sliding contacts, B B', on the shaft and periphery respectively. In this arrangement the current flowing through the disc and external circuit will have no appreciable effect on the field magnet.

But let us now suppose the disc to be subdivided, spirally, as indicated by the full or dotted lines, Fig. 4. The difference of potential between a point on the shaft and a point on the periphery will remain unchanged, in sign as well as in amount. The only difference will be that the resistance of the disc will be augmented and that there will be a greater fall of potential from a point on the shaft to a point on the periphery when the same current is traversing the external circuit. But since the current is forced to follow the lines of subdivision, we see that it will tend either to energize or de-energize

the field, and this will depend, other things being equal, upon the direction of the lines of subdivision. If the subdivision be as indicated by the full lines in Fig. 4, it is evident that if the current is of the same direction as before, that is, from centre to periphery, its effect will be to strengthen the field magnet; whereas, if the subdivision be as indicated by the dotted lines, the current generated will tend to weaken the magnet. In the former case the machine will be capable of exciting itself when the disc is rotated in the direction of arrow D; in the latter case the direction of rotation must be reversed. Two such discs may be combined, however, as indicated, the two discs rotating in opposite fields, and in the same or opposite direction.

Similar disposition may, of course, be made in a type of machine in which, instead of a disc, a cylinder is rotated. In such unipolar machines, in the manner indicated, the usual field coils and poles may be omitted and the machine may be made to consist only of a cylinder or of two discs enveloped by a metal casting.

Instead of subdividing the disc or cylinder spirally, as indicated in Fig. 4, it is more convenient to interpose one or more turns between the disc and the contact ring on the periphery, as illustrated in Fig. 5.

A Forbes dynamo may, for instance, be excited in such a manner. In the experience of the writer it has been found that instead of taking the current from two such discs by sliding contacts, as usual, a flexible conducting belt may be employed to advantage. The discs are in such case provided with large flanges, affording a very great contact surface. The belt should be made to bear on the flanges with spring pressure to take up the expansion. Several machines with belt contact were constructed by the writer two years ago, and worked satisfactorily; but for want of time the work in that direction has been temporarily suspended. A number of features pointed out above have also been used by the writer in connection with some types of alternating current motors.

ON ROENTGEN RAYS(1)*

One can not help looking at that little bulb of Crookes with a feeling akin to awe, when he considers all that it has done for scientific progress — first, the magnificent results obtained by its originator; next, the brilliant work of Lenard, and finally the wonderful achievements of Roentgen. Possibly it may still contain a grateful Asmodeus, who will be let out of his narrow prison cell by a lucky student. At times it has seemed to me as though I myself heard a whispering voice, and I have searched eagerly among my dusty bulbs and bottles. I fear my imagination has deceived me, but there they are still, my dusty bulbs, and I am still listening hopefully.

After repeating Professor Roentgen's beautiful experiments, I have devoted my energies to the investigation of the nature of the radiations and to the perfecting of the means for their production. The following is a brief statement which, I hope, will be useful, of the methods employed and of the most notable results arrived at in these two directions.

In order to produce the most intense effects we have first to consider that, whatever their nature, they depend necessarily on the intensity of the cathode streams. These again being dependent on the magnitude of the potential, it follows that the highest attainable electrical pressure is desirable.

To obtain high potentials we may avail ourselves of an ordinary induction coil, or of a static machine, or of a disruptive discharge coil. I have the impression that most of the results in Europe have been arrived at through the employment of a static machine or Ruhmkorff coil. But since these appliances can produce only a comparatively small potential, we are naturally thrown on the use of the disruptive discharge coil as the most effective apparatus. With this there is practically no limit to the spark length, and the only requirement is that the experimenter should possess a certain knowledge and skill in the adjustments of the circuits, particularly as to resonance, as I have pointed out in my earlier writings on this subject.

After constructing a disruptive coil suitable for any kind of current supply, direct or alternating the experimenter comes to the consideration as to what kind of bulb to employ. Clearly, if we put two electrodes in a bulb, or use one inside and another outside electrode, we limit the potential, for the presence not only of the anode but of any conducting object has the effect of reducing the practicable potential on the cathode. Thus, to secure the result aimed at, one is driven to the acceptance of a single electrode bulb, the other terminal being as far remote as possible.

Obviously, an inside electrode should be employed to get the highest velocity of the cathode streams, for the bulbs without inside terminals are much less efficient for this special object in consequence of the loss through the glass. A popular error seems to exist in regard to the concentration of the rays by concave electrodes. This, if anything, is a disadvantage. There are certain specific arrangements of the disruptive coil and

---

* Electrical Review, March 11, 1896.

circuits, condensers and static screens for the bulb, on which I have given full particulars on previous occasions.

Having selected the induction apparatus and type of bulb, the next important consideration is the vacuum. On this subject I am able to make known a fact with which I have long been acquainted, and of which I have taken advantage in the production of vacuum jackets and all sorts of incandescent bulbs, and which

Fig. 1.

I subsequently found to be of the utmost importance, not to say essential, for the production of intense Roentgen shadows. I refer to a method of rarefaction by electrical means to any degree desirable far beyond that obtainable by mechanical appliances.

Though this result can be reached by the use of a static machine as well as of an ordinary induction coil giving a sufficiently high potential, I have found that by far the most suitable apparatus, and one which secures the quickest action, is a disruptive coil. It is best to proceed in this way: The bulb is first exhausted by means of an ordinary vacuum pump to a rather high degree, though my experiences have shown that this is not absolutely necessary, as I have also found it possible to rarefy, beginning from low pressure. After being taken down from the pump, the bulb is attached to the terminal of the disruptive coil, preferably of high frequency of vibration, and usually the following phenomena are noted. First, there is a milky light spreading through the bulb, or possibly for a moment the glass becomes phosphorescent, if the bulb has been exhausted to a high degree. At any rate, the phosphorescence generally subsides quickly and the white light settles around the electrode, whereupon a dark space forms at some distance from the latter. Shortly afterward the light assumes a reddish color and

the terminal grows very hot. This heating, however, is observed only with powerful apparatus. It is well to watch the bulb carefully and regulate the potential at this stage, as the electrode might be quickly consumed.

After some time the reddish light subsides, the streams becoming again white, whereupon they get weaker and weaker, wavering around the electrode until they finally disappear. Meanwhile, the phosphorescence of the glass grows more and more intense, and the spot where the stream strikes the wall becomes very hot, while the phosphorescence around the electrode ceases and the latter cools down to such an extent that the glass near it may be actually icecold to the touch. The gas in the bulb has then reached the required degree of rarefaction. The process may be hastened by repeated heating and cooling and by the employment of a small electrode. It should be added that bulbs with external electrodes may be treated in the same way. It may be also of interest to state that under certain conditions, which I am investigating more closely, the pressure of the gas in a vessel may be augmented by electrical means.

I believe that the disintegration of the electrode, which invariably takes place, is connected with a notable diminution of the temperature. From the point on, when the electrode gets cool, the bulb is in a very good condition for producing the Roentgen shadows. Whenever the electrode is equally, if not hotter than the glass, it is a sure indication that the vacuum is not high enough, or else that the electrode is too small. For very effective working, the inside surface of the wall, where the cathode stream strikes, should appear as if the glass were in a fluid state.

As a cooling medium I have found best to employ jets of cold air. By this means it is possible to operate successfully a bulb with a very thin wall, while the passage of the rays is not materially impeded.

I may state here that the experimenter need not be deterred from using a glass bulb, as I believe the opacity of glass as well as the transparency of aluminum are somewhat exaggerated, inasmuch as I have found that a very thin aluminum sheet throws a marked shadow, while, on the other hand, I have obtained impressions through a thick glass plate.

The above method is valuable not only as a means of obtaining the high vacua desired, but it is still more important, because the phenomena observed throw a light on the results obtained by Lenard and Roentgen.

Though the phenomenon of rarefaction under above conditions admits of different interpretations, the chief interest centers on one of them, to which I adhere — that is, on the actual expulsion of the particles through the walls of the bulb. I have lately observed that the latter commences to act properly upon the sensitive plate only from the point when the exhaustion begins to be noticeable, and the effects produced are the strongest when the process of exhaustion is most rapid, even though the phosphorescence might not appear particularly bright. Evidently, then, the two effects are closely connected, and I am getting more and more convinced that we have to deal with a stream of material particles, which strike the sensitive plate with great velocities. Taking as a basis the estimate of Lord Kelvin on the speed of projected particles in a Crookes' bulb, we arrive easily by the employment of very high potentials to speeds of as much as a hundred kilometres a second. Now, again, the old question arises: Are the particles from the electrode or from the charged surface generally, including the case of an external electrode, projected through the glass or aluminum walls, or do they merely hit the inner surface and cause particles from the outside of the wall to fly off, acting in a purely mechanical way, as when a row of ivory balls is struck? So far, most of the phenomena indicate that they are projected through the wall of the bulb, of whatever material it may be, and I am seeking for still more conclusive evidence in this direction.

It may not be known that even an ordinary streamer, breaking out suddenly and under great pressure from the terminal of a disruptive coil, passes through a thick glass plate as though the latter were not present. Unquestionably, with such coils pressures are practicable which will project the particles in straight lines even under atmospheric pressure. I have obtained distinct impressions in free air, not by streamers, as some experimenters have done, using static machines or induction coils, but by actual projection, the formation of streamers being absolutely prevented by careful static screening.

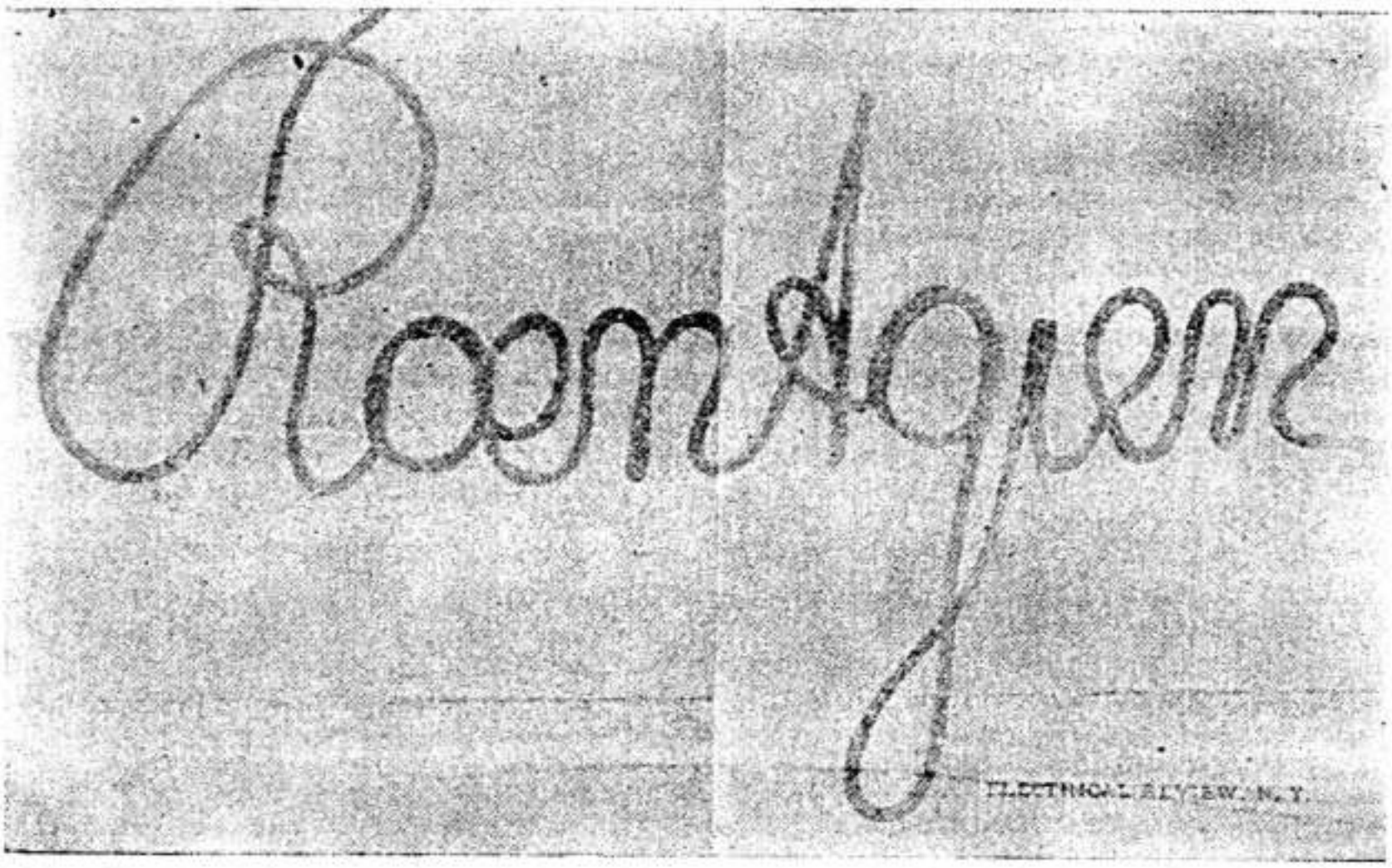

Fig. 2.

A peculiar thing about the Roentgen rays is that from low frequency to the highest obtainable there seems to be no difference in the quality of the effects produced, except that they are more intense when the frequency is higher, which is very likely due to the fact that in such case the maximum pressures on the cathode are likewise higher. This is only possible on the assumption that the effects on the sensitive plate are due to projected particles, or else to vibrations far beyond any frequency which we are able to obtain by means of condenser discharges. A powerfully excited bulb is enveloped in a cloud of violet light, extending for more than a foot around it, but outside of this visible phenomenon there is no positive evidence of the existence of waves similar to those of light. On the other hand, the fact that the opacity bears some proportion to the density of the substance speaks strongly for material streams, and the same may be said of the effect discovered by Prof. J. J. Thomson. It is to be hoped that all doubts will shortly be dispelled.

A valuable evidence of the nature of the radiations and progress in the direction of obtaining strong impressions on the plate might be arrived at by perfecting plates especially sensitive to mechanical shock or impact. There are chemicals suitable for this, and the development in this direction may lead to the abandonment of the present plate. Furthermore, if we have to deal with streams of material particles, it seems not impossible to project upon the plate a suitable substance to insure the best chemical action.

With apparatus as I have described, remarkable impressions on the plate are produced. An idea of the intensity of the effects may be gained when I mention that it is easy to obtain shadows with comparatively short exposures at distances of many feet, while at small distances and with thin objects, exposures of a few seconds are practicable. The annexed print is a shadow of a copper wire projected at a distance of 11 feet through a wooden cover over the sensitive plate. This was the first shadow taken with my improved apparatus in my laboratory. A similar impression was obtained through the body of the experimenter, a plate of glass, nearly three-sixteenths of an inch thick, a thickness of wood of fully two inches and through a distance of about four feet. I may remark, however, that when these impressions were taken, my apparatus was working under extremely unfavorable conditions, which admitted of so great improvements that I am hopeful to magnify the effects many times.

The bony structure of birds, rabbits and the like is shown within the least detail, and even the hollow of the bones is clearly visible. In a plate of a rabbit under exposure of an hour, not only every detail of the skeleton is visible, but likewise a clear outline of the abdominal cavity and the location of the lungs, the fur and many other features. Prints of even large birds show the feathers quite distinctly.

Clear shadows of the bones of human limbs are obtained by exposures ranging from a quarter of an hour to an hour, and some plates have shown such an amount of detail that it is almost impossible to believe that we have to deal with shadows only. For instance, a picture of a foot with a shoe on it was taken, and every fold of the leather, trousers, stocking, etc., is visible, while the flesh and bones stand out sharply. Through the body of the experimenter the shadows of small buttons and like objects are quickly obtained, while with an exposure of from one to one and a half hour the ribs, shoulder-bones and the bones of the upper arm appear clearly, as is shown in the annexed print. It is now demonstrated beyond any doubt that small metallic objects or bony or chalky deposits can be infallibly detected in any part of the body.

An outline of the skull is easily obtained with an exposure of 20 to 40 minutes. In one instance an exposure of 40 minutes gave clearly not only the outline, but the cavity of the eye, the chin and cheek and nasal bones, the lower jaw and connections to the upper one, the vertebral column and connections to the skull, the flesh and even the hair. By exposing the head to a powerful radiation strange effects have been noted. For instance, I find that there is a tendency to sleep and the time seems to pass away quickly. There is a general soothing effect, and I have felt a sensation of warmth in the upper part of the head. An assistant independently confirmed the tendency to sleep and a quick lapse of time. Should these remarkable effects be verified by men with keener sense of observation, I shall still more firmly believe in the existence of material streams penetrating the skull. Thus it may be possible by these strange appliances to project a suitable chemical into any part of the body.

Roentgen advanced modestly his results, warning against too much hope. Fortunately his apprehensions were groundless, for, although we have to all appearance to deal with mere shadow projections, the possibilities of the application of his discovery are vast. I am happy to have contributed to the development of the great art he has created.

ON ROENTGEN RAYS(2)*

— latest results —

To the Editior of Electrical Review

Permit me to say that I was slightly disappointed to note in your issue of March 11 the prominence you have deemed to accord to my youth and talent, while the ribs and other particulars of Fig. 1, which, with reference to the print accompanying my communication, I described as clearly visible, were kept modestly in the background. I also regretted to observe an error in one of the captions, the more so, as I must ascribe it to my own text. I namely stated on page 135, third column, seventh line: "A similar impression was obtained through the body of the experimenter, etc., through a distance of four feet." The impression here referred to was a similar one to that shown in Fig. 2, whereas the shadow in Fig. 1 was taken through a distance of 18 inches. I state this merely for the sake of correctness of my communication, but, as far as the general truth of the fact of taking such a shadow at the distance given is concerned, your caption might as well stand, for I am producing strong shadows at distances of 40 *feet*. I repeat, 40 feet and even more. Nor is this all. So strong are the actions on the film that provision must be made to guard the plates in my photographic department, located on the floor above, a distance of fully 60 feet, from being spoiled by long exposure to the stray rays. Though during my investigations I have performed many experiments which seemed extraordinary, I am deeply astonished observing these unexpected manifestations, and still more so, as even now I see before me the possibility, not to say certitude, of augmenting the effects with my apparatus at least tenfold! What may we then expect? We have to deal here, evidently, with a radiation of astonishing power, and the inquiry into its nature becomes more and more interesting and important. Here is an unlooked-for result of an action which, though wonderful in itself, seemed feeble and entirely incapable of such expansion, and affords a good example of the fruitfulness of original discovery. These effects upon the sensitive plate at so great a distance I attribute to the employment of a bulb with a single terminal, which permits the use of practically any desired potential and the attainment of extraordinary speeds of the projected particles. With such a bulb it is also evident that the action upon a fluorescent screen is proportionately greater than when the usual kind of tube is employed, and I have already observed enough to feel sure that great developments are to be looked for in this direction. I consider Roentgen's discovery, of enabling us to see, by the use of a fluorescent screen, through an opaque substance, even a more beautiful one than the recording upon the plate.

Since my previous communication to you I have made considerable progress, and can presently announce one more result of importance. I have lately obtained shadows by *reflected rays only*, thus demonstrating beyond doubt that the Roentgen rays possess this property. One of the experiments may be cited here. A thick copper tube, about a foot long, was taken and one of its ends tightly closed by the plate-holder containing

---

* Electrical Review, March 18, 1896

a sensitive plate, protected by a fiber cover as usual. Near the open end of the copper tube was placed a thick plate of glass at an angle of 45 degrees to the axis of the tube. A single-terminal bulb was then suspended above the glass plate at a distance of about eight inches, so that the bundle of rays fell upon the latter at an angle of 45 degrees, and the supposedly reflected rays passed along the axis of the copper tube. An exposure of 45 minutes gave a clear and sharp shadow of a metallic object. This shadow was produced by the reflected rays, as the direct action was absolutely excluded, it having been demonstrated that even under the severest tests with much stronger actions no impression whatever could be produced upon the film through a thickness of copper equal to that of the tube. Concluding from the intensity of the action by comparison with an equivalent effect due to the direct rays, I find that approximately two per cent of the latter were reflected from the glass plate in this experiment. I hope to be able to report shortly and more fully on this and other subjects.

In my attempts to contribute my humble share to the knowledge of the Roentgen phenomena, I am finding more and more evidence in support of the theory of moving material particles. It is not my intention, however, to advance at present any view as to the bearing of such a fact upon the present theory of light, but I merely seek to establish the fact of the existence of such material streams in so far as these isolated effects are concerned. I have already a great many indications of a bombardment occurring outside of the bulb, and I am arranging some crucial tests which, I hope, will be successful. The calculated velocities fully account for actions at distances of as much as 100 feet from the bulb, and that the projection through the glass takes place seems evident from the process of exhaustion, which I have described in my previous communication. An experiment which is illustrative in this respect, and which I intended to mention, is the following: If we attach a fairly exhausted bulb containing an electrode to the terminal of a disruptive coil, we observe small streamers breaking through the sides of the glass. Usually such a streamer will break through the seal and crack the bulb, whereupon the vacuum is impaired; but, if the seal is placed above the terminal, or if some other provision is made to prevent the streamer from passing through the glass at that point, it often occurs that the stream breaks out through the side of the bulb, producing a fine hole. Now, the extraordinary thing is that, in spite of the connection to the outer atmosphere, the air can not rush into the bulb as long as the hole is very small. The glass at the place where the rupture has occurred may grow very hot — to such a degree as to soften; but it will not collapse, but rather bulge out, showing that a pressure from the inside greater than that of the atmosphere exists. On frequent occasions I have observed that the glass bulges out and the hole, through which the streamer rushes out, becomes so large as to be perfectly discernible to the eye. As the matter is expelled from the bulb the rarefaction increases and the streamer becomes less and less intense, whereupon the glass closes again, hermetically sealing the opening. The process of rarefaction, nevertheless, continues, streamers being still visible on the heated place until the highest degree of exhaustion is reached, whereupon they may disappear. Here, then, we have a positive evidence that matter is being expelled through the walls of the glass.

When working with highly strained bulbs I frequently experience a sudden, and sometimes even painful, shock in the eye. Such shocks may occur so often that the eye gets inflamed, and one can not be considered overcautious if he abstains from watching the bulb too closely. I see in these shocks a further evidence of larger particles being thrown off from the bulb.

ON REFLECTED ROENTGEN RAYS*

In previous communications in regard to the effects discovered by Roentgen, I have confined myself to giving barely a brief outline of the most noteworthy results arrived at in the course of my investigations. To state truthfully, I have ventured to express myself, the first time, after some hesitation and consequent delay, and only when I had gained the conviction that the information I had to convey was a needful one; for, in common with others, I was not quite able to free myself of a certain feeling which one must experience when he is trespassing on ground not belonging to him. The discoverer would naturally himself arrive at most of the facts in due time, and a courteous restraint in the announcement of the results on the part of his co-workers would not be amiss. How many have sinned against me by proclaiming their achievements just as I was good and ready to do it myself! But these discoveries of Roentgen, exactly of the order of the telescope and microscope, his seeing through a great thickness of an opaque substance, his recording on a sensitive plate of objects otherwise invisible, were so beautiful and fascinating, so full of promise, that all restraint was put aside, and every one abandoned himself to the pleasures of speculation and experiment. Would but every new and worthy idea find such an echo! One single year would then equal a century of progress. A delight it would be to live in such age, but a discoverer I would not wish to be.

Amongst the facts, which I have had the honor to bring to notice, is one claiming a large share of scientific interest, as well as of practical importance. I refer to the demonstration of the property of reflection, on which I have dwelt briefly.

Having had opportunities to make many observations during my experience with vacuum bulbs and tubes, which could not be accounted for in any plausible way on any theory of vibration as far as I could judge, I began these investigations — disinclined, but expectant to find that the effects produced are due to a stream of material particles. I had many evidences of the existence of such streams. One of these I mentioned, describing the method of electrically exhausting a tube. Such exhaustion, I have found, takes place much quicker when the glass is very thin than when the walls are thick, I presume because of the easier passage of the ions. While a few minutes are sufficient when the glass is very thin, it often takes half an hour or more if the glass be thick or the electrode very large. In accordance with this idea I have, with a view of obtaining the most efficient action, selected the apparatus, and have found at each step my supposition confirmed and my conviction strengthened.

A stream of material particles, possessing a great velocity, must needs be reflected, and I was therefore quite prepared — assuming my original idea to be true — to demonstrate sooner or later this property. Considering that the reflection should be the more complete the smaller the angle of incidence, I adopted from the outset of my investigations a tube or bulb *b* of the form shown in Fig. 1. It was made of very thick glass, with a bottom blown as thin as possible, with the two obvious objects

* Electrical Review, April 1, 1896.

of restricting the radiation to the sides and facilitating the passage through the bottom. A single electrode *e*, in the form of a round disk of a diameter slightly less than that of the tube, was placed about an inch below the narrow neck *n* on the top. The leading-in conductor *c* was provided with a long wrapping *w*, so as to prevent cracking, by the formation of sparks at the point where the wire enters the bulb. It was found advantageous for a number of reasons to extend the wrapping a good distance beyond the neck, on the inside and outside as well, and to place the seal-off in the narrow neck. On other occasions I have dwelt on the employment of an electrostatic screen in connection with such single-terminal bulbs. In the present instance the screen was preferably formed by a bronze painting *s*. slightly above the aluminum electrode and extending to just a little below the wrapping of the wire, so as to allow seeing constantly the end of the wrapping. Or else a small aluminum plate *s*, Fig. 2, was supported in the inside of the bulb above the electrode. This static screen practically doubles the effect, as it prevented all action above it. Considering, further, that the radiation sideways was restricted by the use of a very thick glass and most of it was thrown to the bottom by reflection, as I then surmised, it became evident that such a tube should prove much more efficient than one of ordinary form. Indeed, I quickly found that its power upon the sensitive plate was very nearly four times as great as that of a spherical bulb with an equivalent area of impact. This kind of tube is also very well adapted for use with two terminals by placing an external electrode e_1 as indicated by the dotted lines in Fig. 1. When the glass is taken thick the stream is sensibly parallel and concentrated. Furthermore, by making the tube as long as one desired, it was possible to employ very high potentials, otherwise impracticable with short bulbs.

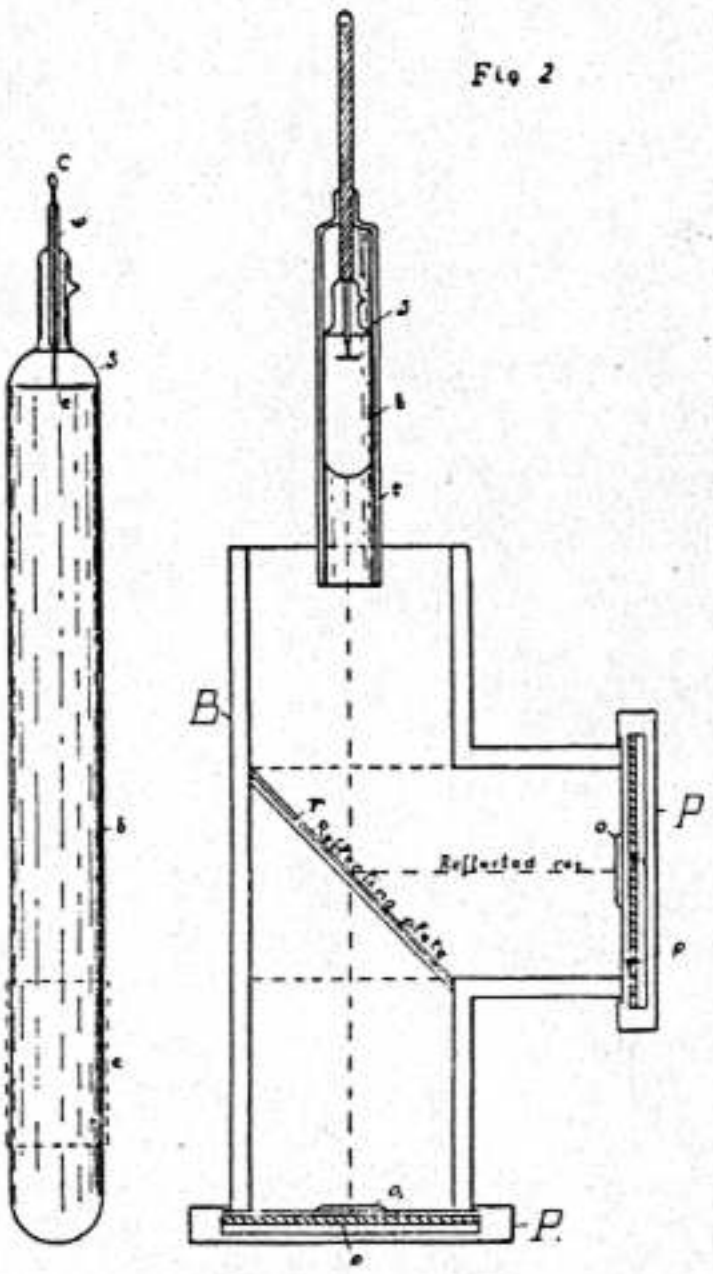

Figs. 1 and 2.

The use of high potentials is of great importance, as it allows shortening considerably the time of exposure, and affecting the plate at much greater distances. I am endeavoring to determine more exactly the relation of the potential to the effect produced upon the sensitive plate. I deem it necessary to remark that the electrode should be of aluminum, as a platinum electrode, which is still persistently employed, gives inferior results and the bulb is disabled in comparatively short time. Some experimenters might find trouble in maintaining a fairly constant vacuum, owing to a peculiar process of absorption in the bulb, which has been pointed out early by Crookes, in consequence of which, by continued use, the vacuum may increase. A convenient way to prevent this I have found to be the following: The screen or aluminum plate *s*, Fig. 2, is placed directly upon the wrapping of the leading-in conductor *c*, but some distance back from the end. The right distance can be only determined by experience. If it is properly chosen, then, during the action of the bulb, the wrapping gets warmer, and a small bright spark jumps from time to time from the wire *c* to the aluminum plate *s* through the wrapping *w*. The passage of this

spark causes gases to be formed, which slightly impair the vacuum, and in this manner, by a little skillful manipulation, the proper vacuum may be constantly maintained. Another way of getting the same result in a tube shown in Fig. 1 is to extend the wrapping so far inside that, when the bulb is normally working, the wrapping is heated sufficiently to free gases to the required amount. It is for this purpose convenient to let the screen of bronze painting *s* extend just a little below the wrapping, so that the spark may be observed. There are, however, many other ways of overcoming this difficulty, which may cause some annoyance to those working with inadequate apparatus.

In order to insure the best action the experimenter should note the various stages which I have pointed out before, and through which the bulb has to pass during the process of exhaustion. He will first observe that when the Crookes phenomena show themselves most prominently there is a reddish streamer issuing from the electrode, which in the beginning covers the latter almost entirely. Up to this point the bulb practically does not affect the sensitive plate, although the glass is very hot at the point of impact. Gradually the reddish streamer disappears, and just before it ceases to be visible the bulb begins to show better action, but still the effect upon the plate is very weak. Presently a white or even bluish stream is observed, and after some time the glass on the bottom of the bulb gets a glossy appearance. The heat is still more intense and the phosphorescence through the entire bulb is extremely brilliant. One should think that such a bulb must be effective, but appearances are often deceitful, and the beautiful bulb still does not work. Even when the white or bluish stream ceases, and the glass on the bottom is so hot as to be nearly melting, the effect on the plate is very weak. But at this stage there appears suddenly at the bottom of the tube a star-shaped changing design, as if the electrode would throw off drops of liquid. From this moment on the power of the bulb is tenfold, and at this stage it must always be kept to give the best results.

I may remark, however, that while it may be generally stated the Crookes vacuum is not high enough for the production of the Roentgen phenomena, this is not literally true. Nor are the Crookes phenomena produced at a particular degree of exhaustion, but manifest themselves even with poor vacua, provided the potential is high enough. This is likewise true of the Roentgen effects. Naturally, to verify this, provision must be made not to overheat the bulb when the potential is raised. This is easily done by reducing the number of impulses or their duration, when raising the potential. For such experiments, it will be found of advantage to use in connection with the ordinary induction coil a rotating commutator, instead of a vibrating brake. By changing the speed of the commutator, and also regulating the duration of contact, one is enabled to adjust the conditions to suit the degree of vacuum and potential employed.

In my experiments on reflection, presently considered, I have used the apparatus shown in Fig. 2. It consists of a T-shaped box throughout, of a square cross-section. The walls are made of lead over one-eighth of an inch thick, which, under the conditions of the experiments, was found to be entirely impervious, even by long exposures to the rays. On the top end was supported firmly the bulb *b*, inclosed in a glass tube *t* of thick Bohemian glass, which reached some distance into the lead box. The lower end of the box was tightly closed by a plate-holder P_1, containing the sensitive film p_1, protected as usual. Finally the side end was closed by a similar plate-holder P, with the sensitive protected film *p*. To obtain sharp images the objects *o* and o_1, exactly alike, were placed in the center of the fiber cover, protecting the sensitive plates. In the central portion of the box, provision was made for inserting a plate *r* of material, the reflective power of which was to be tested, and the dimensions of the box were such that the reflected ray and the direct one had to go through the same distance, the reflecting plate being at an angle of 45 degrees to the incident as well as reflected ray. Care was taken to exclude all possibility of action upon the plate *p*, except by reflected rays, and the reflecting plate *r* was made to fit tight all-around in the lead box,

so that no rays could reach the film p_1, except by passing through the plate to be tested. In my earliest experiments on reflection I observed only the effects of reflected rays, but in this instance, on the suggestion of Prof. Wm. A. Anthony, I provided the above means for simultaneously examining the action of the direct rays, which eventually passed through the reflecting plate. In this manner it was possible to compare the amount of the transmitted and reflected radiation. The glass tube *t* surrounding the bulb *b* served to render the stream-parallel and more intense. By taking impressions at various distances I found that through a considerable distance there was but little spreading of the bundle of rays or stream of particles.

To reduce the error which is caused unavoidably by too long exposures and very small distances, I reduced the exposure to an hour, and the total distance through which the rays had to pass before reaching the sensitive plates was 20 inches, the distance from the bottom of the bulb to the reflecting plate being 13 inches.

It is needless to remark that all the precautions in regard to the sensitive plates — constancy of potential, uniform working of the bulbs, and maintenance of the same conditions in general during these tests have been taken, as far as it was practicable. The plates to be tested were made of uniform size, so as to fit the space provided in the lead box. Of the conductors the following were tested: Brass, toolsteel, zinc, aluminum, copper, lead, silver, tin, and nickel, and of the insulators, lead-glass, ebonite, and mica. The summary of the observations is given in the following table:

Reflecting body.	Impression by transmitted rays.	Impression by reflected rays.
Brass.	Strong.	Fairly strong.
Toolsteel.	Barely perceptible.	Very feeble.
Zinc.	None.	Very strong.
Aluminum.	Very strong.	None.
Copper.	None.	Fairly strong, but much less than zinc.
Lead.	None.	Very strong, but a little weaker than zinc.
Silver.	Strong, a thin plate being used.	Weaker than copper.
Tin.	None.	Very strong; about like lead.
Nickel.	None.	About like copper.
Lead-glass.	Very strong.	Feeble.
Mica.	Very strong.	Very strong; about like lead.
Ebonite.	Strong.	About like copper.

By comparing, as in previous experiments, the intensity of the impression by reflected rays with an equivalent impression due to a direct exposure of the same bulb and at the same distance — that is, by calculating from the times of exposure under assumption that the action upon the plate was proportionate to the time — the following approximate results were obtained:

Reflecting body.	Impression by direct action.	Impression by reflected rays.
Brass	100	2
Toolsteel	100	0,5
Zinc	100	3
Aluminum	100	0
Copper	100	2
Lead	100	2,5
Silver	100	1,75
Tin	100	2,5
Nickel	100	2
Lead-glass	100	1
Mica	100	2,5
Ebonite	100	2

While these figures can be but rough approximations, there is, nevertheless, a fair probability that they are correct, in so far as the relative values of the impressions by reflected rays for the various bodies are concerned. Arranging the metals according to these values, and leaving for the moment the alloys or impure bodies out of question, we arrive at the following order: Zinc, lead, tin, copper, silver. The tin appears to reflect fully as well as lead, but, allowing for an error in the observation, we may assume that it reflects less, and in this case we find that this order is precisely the contact series of metals in air. If this proves true we shall be confronted with the most extraordinary fact. Why is zinc, for instance, the best reflector among the metals tested and why, at the same time, is it one of the foremost in the contact series? I have not as yet tried magnesium. The truth is that I was somewhat excited over these results. Magnesium should be even a better reflector than zinc, and sodium still better than magnesium. How can this singular relationship be explained? The only possible explanation seems to me at present that the bulb throws out streams of matter in some primary condition, and that the reflection of these streams is dependent upon some fundamental and electrical property of the metals. This would seem to lead to the inference that these streams must be of uniform electrification; that is, that they must be anodic or cathodic in character, but not both. Since the announcement, I believe in France for the first time, that the streams are anodic, I have investigated the subject and find that I can not agree with this contention. On the contrary, I find that anodic and cathodic streams both affect the plate, and, furthermore, I have been led to the conviction that the phosphorescence of the glass has nothing whatever to do with the photographic impressions. An obvious proof is that such impressions are produced with aluminum vessels when there is no phosphorescence, and, as regards the anodic or cathodic character, the simple fact that we can produce impressions by a luminous discharge excited by induction of a closed vessel, when there is neither anode nor cathode, would seem to dispose effectually of the assumption that the streams are issuing solely from one of the electrodes. It may, perhaps, be useful to point out here a simple fact in relation to the induction coils, which may lead an experimenter into an error. When a vacuum tube is attached to the terminals of an induction coil, both of the terminals are acted upon alike as long as the tube is not very highly exhausted. At a high degree of exhaustion both the electrodes act practically independently, and since they behave as bodies possessing considerable capacity, the consequence is that the coil is unbalanced. If the cathode, for instance, is very large, the pressure on the anode may rise considerably, and if the latter is made smaller, as is frequently the case, the electric density may be many times that on the cathode. It results from this that the anode gets very hot, while the cathode may be cool. Quite the opposite occurs if both of them are made exactly alike. But assuming the above conditions to exist, the hotter anode emits a more intense stream than the cool cathode, since the velocity of the particles is dependent on the electrical density, and likewise on the temperature.

From the previous tests an interesting observation can also be made in regard to the opacity. For instance, a brass plate one-sixteenth inch thick proved fairly transparent while plates of zinc and copper of the same thickness showed themselves to be entirely opaque.

Since I have investigated reflection and arrived to results in this direction, I have been able to produce stronger effects by employing proper reflectors. By surrounding a bulb with a very thick glass tube the effect may be augmented very considerably. The employment of a zinc reflector in one instance showed an increase of about 40 per cent in the impression produced. I attach great practical value to the employment of proper reflectors, because by means of them we can employ any quantity of bulbs, and so produce any intensity of radiation required.

One disappointment in the course of these investigations has been the entire failure of my efforts to demonstrate refraction. I have employed lenses of all kinds and tried a great many experiments, but could not obtain any positive result.

ON ROENTGEN RADIATIONS*

Having observed the unexpected behavior of the various metals in regard to the reflection of these radiations, (see Electrical Review of April 1, 1896) I have endeavored to settle several still doubtful points. As, for the present, it appeared chiefly desirable to establish the exact order of the metals, or conductors, in regard to their powers of reflection, leaving for further investigation the determination of the magnitude of the effects, I modified slightly the apparatus and procedure described in my communication just referred to. The reflecting plates were not made each of one metal, as before, but of two metals, the reflective power of which was to be compared. This was done by fastening upon a plate of lead the two metal plates to be investigated, so that the reflecting surface was divided in two halves by the joining line. Furthermore, to prevent any spreading and mingling of the rays reflected from both halves, I divided the lead box into two compartments by a thick lead plate through the middle. Care was taken that the density of the rays falling upon the reflecting surfaces was as uniform as possible, and with this object in view the glass tube surrounding the bulb was lifted up so as to just expose the half-spherical bottom of the latter. The bulb was placed as exactly as it was practicable in the center, so that both halves of the reflecting plate were equally exposed to the radiations.

Having failed to obtain, in former experiments, a record for iron owing to an oversight, I tried to ascertain its position in the series by comparing it with copper, using a plate made up of iron and copper. The experiments showed that iron reflected about as much as copper, but which metal reflected better was impossible to determine with safety by this metod. Next I endeavored to find whether tin or lead was a better reflector, by the same method. Three experiments were performed, and in each case the metals behaved nearly alike, but tin appeared just a trifle better. Finally I investigated the properties of magnesium as compared with zinc. In fact, the experiments showed that magnesium reflected a little better.

I am not yet satisfied, in view of the importance of this relation of the metals with the means employed, and will try to devise an apparatus which will do away with all the defects of the present. The time of the exposure I have found practicable to reduce to a few minutes by the help of a fluorescent paper.

In my previous communications I have barely hinted at the practical importance of the use of suitable refectors. One would be apt to conclude that, since under the conditions of the previously described experiments, zinc, for instance, reflected only three per cent of the incident rays, the gain secured by the employment of such zinc reflector would be small. This, of course, would be an erroneous conclusion. First of all it should be remembered that in the instances mentioned before the angle of incidence was 45 degrees, and that for larger angles a much greater portion of the rays would be reflected. The exact law of reflecton is still to be determined. Now, let us

---

* Electrical Review, April 8, 1896.

suppose the shadow of an object is taken at a distance, D. In order to get a sharp shadow we must take this distance not less than two feet, and I am finding it more and more necessary to adopt a still greater distance. If, for the sake of simplicity, we assume a spherical bulb and electrode, the radiation will be uniform on all sides, and any element of a surface of a sphere of radius *D,* drawn around the electrode, will receive an equal quantity of rays. The total surface of this sphere will be $4 \pi D_2$. The object, the shadow of which is to be taken, may have a small area *a,* which gets only an

insignificant part of the total rays emitted, this part being given by the proportion $\frac{a}{4 \pi D^2}$. In reality we can not assume less than $\frac{a}{D^2 \pi}$ as effective ratio, but even then, if *D* is very large and the object, that is, the area *a,* small, this ratio may be still so small that evidently, by the use of a proper reflector, we can easily concentrate upon the area *a* an amount of rays several times exceeding that which would fall upon it without the use of a reflector, in spite of the fact that we are able to reflect only a few per cent of the *total* incident rays.

As an evidence of the effectiveness of such a reflector, the annexed print of the shoulder and ribs of a man is shown. A funnel-shaped zinc reflector, two feet high, with an opening of five inches on the bottom and 23 inches at the top, was used in the experiment. A tube, similar in every respect to those previously described, was suspended in the funnel, so that just the static screen of the tube was above the former. The exact distance from the electrode to the sensitive plate was four and one-half feet. The distance from the end of the tube to the plate was three and one-half feet. The exposure

lasted 40 minutes. The plate showed very strongly and clearly every bone, and shoulder and ribs, but I can not tell how clearly they will appear in the print. I selected the same object as in my first report in your columns on this investigation, so as to give a better idea of the progress made. The advance will be best appreciated by stating that the distance in this case was much more than double, while the time of exposure was less than one-half. The chief importance of a reflector consists, however, in this, that it allows the use of many bulbs without sacrifice of precision and clearness, and also the concentration of a great quantity of radiation upon a very small area.

Since the use of phosphorescent or fluorescent bodies in connection with the sensitive film has been suggested by Professors Henry and Salvioni, I have found it an easy matter to shorten the time of exposure to a few minutes, or even seconds. So far, it seems that the tungstate of calcium, recently introduced by Edison, and manufactured by Messrs. Aylsworth & Jackson, is the most sensitive body. I obtained a sample of it and used it in a series of tests. It fluoresces decidedly better than barium-platino-cyanide, but, owing to the size of the crystals and necessarily uneven distribution on the paper, it does not leave a clean impression. For use in connection with the sensitive films, it should be ground very fine, and some way should be adopted of distributing it uniformly. The paper also must adhere firmly to the film all over the plate, so as to get fairly sharp outlines. The fluorescence of this body seems to depend on a peculiar radiation, because I tested several bulbs, which otherwise worked excellently, without producing a very good result, and I almost gained a false impression. One or two of the bulbs, however, effected it very powerfully. An impression of the hand was taken at a distance of about six feet from the bulb with an exposure of less than one minute, and even then it was found that the plate was overexposed. I then took an impression of the chest of a man at a distance of 12 feet from the end of the tube, exposing five minutes. The developed plate showed the ribs clearly, but the outlines were not sharp. Next, I employed a tube with a zinc reflector, as before described, taking an impression of the chest of an assistant at a distance of four feet from the bulb. The latter was strained a little too much in this experiment and exploded, in consequence of the great internal pressure against the bombarded spot. This accident will frequently occur when the bulb is strained too high, the preceding outward sign being an increased activity and vaporlike appearance of the gas in the bulb and rapid heating of the latter. The process causing the abnormal increase in the internal pressure against the glass wall seems to be due to some action opposite to that noted by Crookes and Spottiswoode, and is very rapid, and for this reason the experimenter should watch carefully for these ominous signs and instantly reduce the potential. Owing to the untimely end of the bulb in this last described experiment, the exposure lasted only one minute. Nevertheless, a very strong impression of the skeleton of the chest, showing the right and left ribs and other details, was obtained. The outlines, however, were again much less sharp than when the ordinary process without the phosphorescent intensifier was followed, although care was taken to press the fluorescent paper firmly against the film. From the foregoing it is evident that, when using the above means for shortening the time of exposure, the thickness of the object is not of very much consequence.

I obtained a still better idea of the quality of tungstate of calcium by observing the effect upon a fluorescent screen made of this chemical. Such a screen, together with a paper box, has been termed with the fanciful name "fluoroscope." It is really Salvioni's Cryptoscope with the lens omitted, which is a great disadvantage. To appreciate the performances of such a screen, it is necessary to work at night, when the eye has for a long time been used to the darkness, and made capable of noting the faint effects on the screen. In one instance the performance of this screen was particularly noteworthy. It was illuminated at a distance of 20 feet, and even at a distance of 40 feet I could still observe a faint shadow passing across the field of vision, when moving the hand

in front of the instrument. Looking at a distance of about three feet from the bulb through the body of an assistant, I could distinguish easily the spinal column in the upper part of the body, which was more transparent. In the lower part of the body the column and the rest were practically not perceptible. The ribs were only very faintly seen. The bones of the neck were plainly noticeable, and I could see through the body of the assistant very easily a square plate of copper, as it was moved up and down in front of the bulb. When looking through the head I could observe only the outline of the skull and the chin-bone, yet the field of vision was still bright. Everything else appeared indistinct. This shows that improving of fluorescence will not aid us very much in the examination of the internal parts of the body. The solution rather will come through the production of very powerful radiations, capable of producing very strong shadows. I believe I have indicated the right way to secure this result. Although it must be admitted that the performance of such a screen is remarkable with the appliances I have used, I have, nevertheless, convinced myself of its still limited value for the purpose of examination. We can distinguish the bones in the limbs, but not nearly as clearly as a photographic impression shows it. Eventually, however, with the help of strong radiations and good reflectors, such fluorescent screens may become valuable instruments for investigation. A few weeks ago, when I observed a small screen of barium-platino-cyanide flare up at a great distance from the bulb, I told some friends that it might be possible to observe by the aid of such a screen objects passing through a street. This possibility seems to me much nearer at present than it appeared then. Forty feet is a fair width for a street, and a screen lights up faintly at that distance from a single bulb. I mention this odd idea only as an illustration of how these scientific developments may even affect our morals and customs. Perhaps we shall shortly get so used to this state of things that nobody will feel the slightest embarrassment while he is conscious that his skeleton and other particulars are being scrutinized by indelicate observers.

Fluorescent screens afford some help in getting an idea of the condition of the bulb when working. I hoped to find some evidence of refraction by means of such a screen, placing a lens between it and the bulb, and varying the focal distance. To my disappointment, although the shadow of the lens was observable at a distance of 20 feet, I could see no trace of refraction. The use of the screen for the purpose of noting the effects of reflection and diffraction proved likewise futile.

ROENTGEN RAY INVESTIGATIONS*

Further investigations concerning the behavior of the various metals in regard to reflection of these radiations have given additional support to the opinion which I have before expressed; namely, that Volta's electric contact series in air is identical with that which is obtained when arranging the metals according to their powers of reflection, the most electro-positive metal being the best reflector. Confining myself to the metals easily experimented upon, this series is magnesium, lead, tin, iron, copper, silver, gold and platinum. The lastnamed metal should be found to be the poorest, and sodium one of the best, reflectors. This relation is rendered still more interesting and suggestive when we consider that this series is approximately the same which is obtained when arranging the metals according to their energies of combination with oxygen, as calculated from their chemical equivalents.

Should the above relation be confirmed by other physicists, we shall be justified to draw the following conclusions: *First,* the highly exhausted bulb emits material streams which, impinging on a metallic surface, are reflected; *second,* these streams are formed of matter in some primary or elementary condition; *third,* these material streams are probably the same agent which is the cause of the electro-motive tension between metals in close proximity or actual contact, and they may possibly, to some extent, determine the energy of combination of the metals with oxygen; *fourth,* every metal or conductor is more or less a source of such streams; *fifth,* these streams or radiations must be produced by some radiations which exist in the medium; and *sixth,* streams resembling the cathodic must be emitted by the sun and probably also by other sources of radiant energy, such as an arc light or Bunsen burner.

The first of these conclusions, assuming the above-cited fact to be correct, is evident and uncontrovertible. No theory of vibration of any kind would account for this singular relation between the powers of reflection and electric properties of the metals. Streams of projected matter coming in actual contact with the reflecting metal surface afford the only plausible explanation.

The second conclusion is likewise obvious, since no difference whatever is observed by employing various qualities of glass for the bulb, electrodes of different metals and any kind of residual gases. Evidently, whatever the matter constituting the streams may be, it must undergo a change in the process of expulsion, or, generally speaking, projection — since the views in this regard still differ — in such a way as to lose entirely the characteristics which it possessed when forming the electrode, or wall of the bulb, or the gaseous contents of the latter.

The existence of the above relation between the reflecting and contact series forces us likewise to the third conclusion, because a mere coincidence of that kind is, to say the least, extremely improbable. Besides, the fact may be cited that there is always a

---

* Electrical Review, April 22, 1896.

difference of potential set up between two metal plates at some distance and in the path of the rays issuing from an exhausted bulb.

Now, since there exists an electric pressure of difference of potential between two metals in close proximity or contact, we must, when considering all the foregoing, come to the fourth conclusion, namely, that the metals emit similar streams, and I therefore anticipate that, if a sensitive film be placed between two plates, say, of magnesium and copper, a true Roentgen shadow picture would be obtained after a very long exposure in the dark. Or, in general, such picture could be secured whenever the plate is placed near a metallic or conducting body, leaving for the present the insulators out of consideration. Sodium, one of the first of the electric contact series, but not yet experimented upon, should give out more of such streams than even magnesium.

Obviously, such streams could not be forever emitted, unless there is a continuous supply of radiation from the medium in some other form; or possibly the streams which the bodies themselves emit are merely reflected streams coming from other sources. But since all investigation has strengthened the opinion advanced by Roentgen that for the production of these radiations some impact is required, the former of the two possibilities is the more probable one, and we must assume that the radiations existing in the medium and giving rise to those here considered partake something of the nature of cathodic streams.

But if such streams exist all around us in the ambient medium, the question arises, whence do they come? The only answer is: From the sun. I infer, therefore, that the sun and other sources of radiant energy must, in a less degree, emit radiations or streams of matter similar to those thrown off by an electrode in a highly exhausted inclosure. This seems to be, at this moment, still a point of controversy. According to my present convictions a Roentgen shadow picture should, with very long exposures, be obtained from all sources of radiant energy, provided the radiations are permitted first to impinge upon a metal or other body.

The preceding considerations tend to show that the lumps of matter composing a cathodic stream in the bulb are broken up into incomparably smaller particles by impact against the wall of the latter, and, owing to this, are enabled to pass into the air. All evidence which I have so far obtained points rather to this than to the throwing off of particles of the wall itself under the violent impact of the cathodic stream. According to my convictions, then, the difference between Lenard and Roentgen rays, if there be any, lies solely in this, that the particles composing the latter are incomparably smaller and possess a higher velocity. To these two qualifications I chiefly attribute the non-deflectibility by a magnet which I believe will be disproved in the end. Both kinds of rays, however, affect the sensitive plate and fluorescent screen, only the rays discovered by Roentgen are much more effective. We know now that these rays are produced under certain exceptional conditions in a bulb, the vacuum being extremely high, and that the range of greatest activity is rather small.

I have endeavored to find whether the reflected rays possess certain distinctive features, and I have taken pictures of various objects with this purpose in view, but no marked difference was noted in any case. I therefore conclude that the matter composing the Roentgen rays does not suffer further degradation by impact against bodies. One of the most important tasks for the experimenter remains still to determine what becomes of the energy of these rays. In a number of experiments with rays reflected from and transmitted through a conducting of insulating plate, I found that only a small part of the rays could be accounted for. For instance, through a zinc plate, one-sixteenth of an inch thick, under an incident angle of 45 degrees, about two and one-half per cent were reflected and about three per cent transmitted through the plate, hence over 94 per cent of the total radiation remain to be accounted for. All the tests which I have been able to make have confirmed Roentgen's statement that these

rays are incapable of raising the temperature of a body. To trace this lost energy and account for it in a plausible way will be equivalent to making a new discovery.

Since it is now demonstrated that all bodies reflect more or less, the diffusion through the air is easily accounted for. Observing the tendency to scatter through the air, I have been led to increase the efficiency of reflectors by providing not one, but separated successive layers for reflection, by making the reflector of thin sheets of metal, mica or other substances. The efficiency of mica as a reflector I attribute chiefly to the fact that it is composed of many superimposed layers which reflect individually. These many successive reflections are, in my opinion, also the cause of the scattering through the air.

In my communication to you of April 1, I have for the first time stated that these rays are composed of matter in a "primary" or elementary condition or state. I have chosen this mode of expression in order to avoid the use of the word "ether", which is usually understood in the sense of the Maxwellian interpretation, which would not be in accord with my present convictions in regard to the nature of the radiations.

An observation which might be of some interest is the following: A few years ago I described on one occasion a phenomenon observed in highly exhausted bulbs. It is a brush or stream issuing from a single electrode under certain conditions, which rotates very rapidly in consequence of the action of the earth's magnetism. Now I have recently observed this same phenomenon in several bulbs which were capable of impressing the sensitive film and fluorescent screen very strongly. As the brush is rapidly twirling around I have conjectured that perhaps also the Lenard and Roentgen streams are rotating under the action of the earth's magnetism, and I am endeavoring to obtain an evidence of such motion by studying the action of a bulb in various positions with respect to the magnetic axis of the earth.

In so far as the vibrational character of the rays is concerned, I still hold that the vibration is merely that which is conditioned by the apparatus employed. With the ordinary induction coil we have almost exclusively to deal with a very low vibration impressed by the commutating device or brake. With the disruptive coil we usually have a very strong superimposed vibration in addition to the fundamental one, and it is easy to trace sometimes as much as the fourth octave of the fundamental vibration. But I can not reconcile myself with the idea of vibrations approximating or even exceeding those of light, and think that all these effects could be as well produced with a steady electrical pressure as from a battery, with the exclusion of all vibration which may occur, even in such instance, as has been pointed out by De La Rive. In my experiments I have tried to ascertain whether a greater difference between the shadows of the bones and flesh could be obtained by employing currents of extremely high frequency, but I have been unable to discover any such effect which would be dependent on the frequency of the currents, although the latter were varied between as wide limits as was possible. But it is a rule that the more intense the action the sharper the shadows obtained, provided that the distance is not too small. It is furthermore of the greatest importance for the clearness of the shadows that the rays should be passed through some tubular reflector, which renders them sensibly parallel.

In order then to bring out as much detail as possible on a sensitive plate, we have to proceed in precisely the same way as if we had to deal with flying bullets hitting against a wall composed of parts of different density with the problem before us of producing as large as possible a difference in the trajectories of the bullets which pass through the various parts of the wall. Manifestly, this difference will be the greater the greater the velocity of the bullets; hence, in order to bring out detail, very strong radiations are required. Proceeding on this theory I have employed exceptionally thick films and developed very slowly, and in this way clearer pictures have been obtained. The importance of slow development has been first pointed out by Professor Wright,

of Yale. Of course, if Professor Henry's suggestion of the use of a fluorescent body in contact with the sensitive film is made use of, the process is reduced to an ordinary quick photographic procedure, and the above consideration does not apply.

It being desirable to produce as powerful a radiation as possible, I have continued to devote my attention to this problem and have been quite successful. First of all, there existed limitations in the vacuum tube which did not permit the applying of as high a potential as I desired; namely, when a certain high degree of exhaustion was reached a spark would form behind the electrode, which would prevent straining the

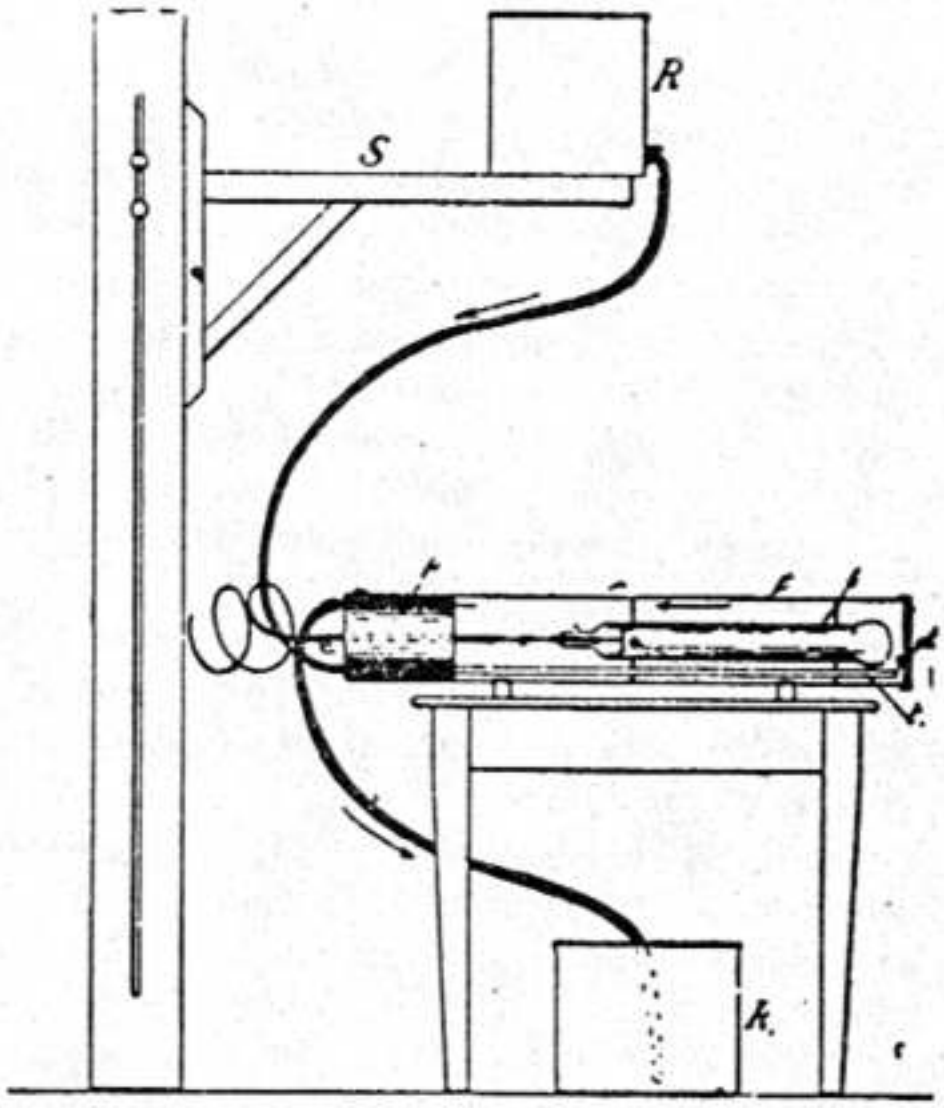

tube much higher. This inconvenience I have overcome entirely by making the wire leading to the electrode very long and passing it through a narrow channel, so that the heat from the electrode could not cause the formation of such sparks. Another limitation was imposed by streamers which would break out at the end of the tube when the potential was excessive. This latter inconvenience I have overcome either by the use of a cold blast of air along the tube, as I have mentioned before, or else by immersion of the tube in oil. The oil, as it is now well known, is a means of rendering impossible the formation of streamers by the exclusion of all air. The use of the oil in connection with the production of these radiations has been early advocated in this country by Professor Trowbridge. Originally I employed a wooden box made thoroughly tight with wax and filled with oil or other liquid, in which the tube was immersed. Observing certain specific actions, I modified and improved the apparatus, and in my later investigations I have employed an arrangement as shown in the annexed cut. A bulb *b*, of the kind described before, with a leading-in wire and neck much longer than here shown, was inserted into a large and thick glass tube *t*. The tube was closed in front by a diaphragm *d* of pergament, and by a rubber plug P in the back. The plug was provided with two holes, into the lower one of which a glass tube t_1, reaching to very nearly the end of the bulb, was inserted. Oil of some kind was made to flow through rubber tubes *r r* from a large reservoir R, placed on an adjustable support S, to the lower reservoir R_1, the path of the oil being clearly observable from the drawing.

By adjusting the difference of the level between the two reservoirs it was easy to maintain a permanent condition of working. The outer glass tube *t* served in part as a reflector, while at the same time it permitted the observation of the bulb *b* during the action. The plug P, in which the conductor *c* was tightly sealed, was so arranged that it could be shifted in and out of the tube *t*, so as to vary the thickness of the oil traversed by the rays.

I have obtained some results with this apparatus which clearly show the advantage of such disposition. For instance, at a distance of 45 feet from the end of the bulb my assistants and myself could observe clearly the fingers of the hand through a screen of tungstate of calcium, the rays traversing about two and one half inches of oil and the diaphragm *d*. It is practicable with such apparatus to make photographs of small objects at a distance of 40 feet, with only a few minutes exposure, by the help of Professor Henry's method. But, even without the use of a fluorescent powder, short exposures are practicable, so that I think the use of the above method is not essential for quick procedure. I rather believe that in the practical development of this principle, if it shall be necessary, Professor Salvioni's suggestion of a fluorescent emulsion, combined with a film, will have to be adopted. This is bound to give better results than an independent fluorescent screen, and will very much simplify the process. I may say, however, that, since my last communication, considerable improvement has been made in the screens. The manufacturers of Edison's tungstate of calcium are now furnishing screens which give fairly clean pictures. The powder is fine and it is more uniformly distributed. I consider, also, that the employment of a softer and thicker paper than before is of advantage. It is just to remark that the tungstate of calcium has also proved to be an excellent fluorescent in the bulb. I tested its qualities for such use immediately and find it so far unexcelled. Whether it will be so for a long time remains to be seen. News reaches us that several fluorescent bodies, better than the cyanides, have been discovered abroad.

Another improvement with a view of increasing the sharpness of the shadows has been proposed to me by Mr. E. R. Hewitt. He assumed that the absence of sharpness of the outlines in the shadows on the screen was due to the spread of the fluorescence from crystal to crystal. He proposed to avoid this by using a thin aluminum plate with many parallel grooves. Acting on this suggestion, I made some experiments with wire gauze and, furthermore, with screens made of a mixture of a fluorescent with a non-fluorescent powder. I found that the general brightness of the screen was dininished, but that with a strong radiation the shadows appeared sharper. This idea might be found capable of useful application.

By the use of the above apparatus I have been enabled to examine much better than before the body by means of the fluorescent screen. Presently the vertebral column can be seen quite clearly, even in the lower part of the body. I have also clearly noted the outlines of the hip bones. Looking in the region of the heart I have been able to locate in unmistakably. The background appeared much brighter, and this difference in the intensity of the shadow and surrounding has surprised me. The ribs I could now see on a number of occasions quite distinctly, as well as the shoulder bones. Of course, there is no difficulty whatever in observing the bones of all limbs. I noted certain peculiar effects which I attribute to the oil. For instance, the rays passed through plates of metal over one-eighth of an inch thick, and in one instance I could see quite clearly the bones of my hand through sheets of copper, iron and brass of a thickness of nearly one-quarter of an inch. Through glass the rays seemed to pass with such freedom that, looking through the screen in a direction at right angles to the axis of the tube, the action was most intense, although the rays had to pass through a great thickness of glass and oil. A glass slab nearly one-half of an inch thick, held in front of the screen, hardly dimmed the fluorescence. When holding the screen in front of the tube at

a distance of about three feet, the head of an assistant, thrust between the screen and the tube, cast but a feeble shadow. It appeared some times as if the bones and the flesh were equally transparent to the radiations passing through the oil. When very close to the bulb, the screen was illuminated through the body of an assistant so strongly that, when a hand was moved in front, I could clearly note the motion of the hand through the body. In one instance I could even distinguish the bones of the arm.

Having observed the extraordinary transparence of the bones in some instances, I at first surmised that the rays might be vibrations of high pitch, and that the oil had in some way absorbed a part of them. This view, however, became untenable when I found that at a certain distance from the bulb I obtained a sharp shadow of the bones. This latter observation led me to apply usefully the screen in taking impressions on the plate. Namely, in such case it is of advantage to first determine by means of the screen the proper distance at which the object is to be placed before taking the impression. It will be found that often the image is much clearer at a greater distance. In order to avoid any error when observing with the screen, I have surrounded the box with thick metal plates, so as to prevent the fluorescence, in consequence of the radiations, reaching the screen from the sides. I believe that such an arrangement is absolutely necessary if one wishes to make correct observations.

During my study of the behavior of oils and other liquid insulators, which I am still continuing, it has occurred to me to investigate the important effect discovered by Prof. J. J. Thomson. He announced some time ago that all bodies traversed by Roentgen radiations become conductors of electricity. I applied a sensitive resonance test to the investigation of this phenomenon in a manner pointed out in my earlier writings on high frequency currents. A secondary, preferably not in very close inductive relation to the primary circuit, was connected to the latter and to the ground, and the vibration through the primary was so adjusted that true resonance took place. As the secondary had a considerable number of turns, very small bodies attached to the free terminal produced considerable variations of potential on the latter. Placing a tube in a box of wood filled with oil and attaching it to the terminal, I adjusted the vibration through the primary so that resonance took place without the bulb radiating Roentgen rays to an appreciable extent. I then changed the conditions so that the bulb became very active in the production of the rays. The oil should have now, according to Prof. J. J. Thomson's statement, become a conductor and a very marked change in the vibration should have occurred. This was found not to be the case, so that we must see in the phenomenon discovered by J. J. Thomson only a further evidence that we have to deal here with streams of matter which, traversing the bodies, carry away electrical charges. But the bodies do not become conductors in the common acceptance of the term. The method I have followed is so delicate that a mistake is almost an impossibility.

AN INTERESTING FEATURE OF X-RAY RADIATIONS*

The following observations, made with bulbs emitting Roentgen radiations, may be of value in throwing additional light upon the nature of these radiations, as well as illustrating better properties already known. In the main these observations agree with the views which have forced themselves upon my mind from the outset, namely, that the rays consist of streams of minute material particles projected with great velocity. In numerous experiments I have found that the matter which, by impact within the bulb, causes the formation of the rays may come from either of the electrodes. Inasmuch as the latter are by continued use disintegrated to a marked degree, it seems more plausible to assume that the projected matter consists of parts of the electrodes themselves rather than of the residual gas. However, other observations, upon which I can not dwell at present, lead to this conclusion. The lumps of projected matter are by impact further disintegrated into particles so minute as to be able to pass through the walls of the bulb, or else they tear off such particles from the walls, or generally bodies, against which they are projected. At any rate, an impact and consequent shattering seems absolutely necessary for the production of Roentgen rays. The vibration, if there be any, is only that which is impressed by the apparatus, and the vibrations can only be longitudinal.

The principal source of the rays is invariably the place of first impact within the bulb, whether it be the anode, as in some forms of tube, or an inclosed insulated body, or the glass wall. When the matter thrown off from an electrode, after striking against an obstacle, is thrown against another body, as the wall of the bulb, for instance, the place of second impact is a very feeble source of the rays.

These and other facts will be better appreciated by referring to the annexed figure, in which a form of tube is shown used in a number of my experiments. The general form is that described on previous occasions. A single electrode *e*, consisting of a massive aluminium plate, is mounted on a conductor *c*, provided with a glass wrapping *w* as usual, and sealed in one of the ends of a straight tube *b*, about five centimetres in diameter and 30 centimetres long. The other end of the tube is blown out into a thin bulb of a slightly larger diameter, and near this end is supported on a glass stem *s* a funnel *f* of thin platinum sheet. In such bulbs I have used a number of different metals for impact with a view of increasing the intensity of the rays and also for the purpose of reflecting and concentrating them. Since, however, in a later contribution, Professor Roentgen has pointed out that platinum gives the most intense rays, I have used chiefly this metal, finding a marked increase in the effect upon the screen or sensitive plate. The particular object of the presently described construction was to ascertain whether the rays generated at the inner surface of the platinum funnel *f* would be brought to a focus outside of the bulb, and further, whether they would proceed in straight lines from that point. For this purpose the apex of the platinum cone was arranged to be about two centimetres outside of the bulb at *o*.

---

* Electrical Review, July 8, 1896.

When the bulb was properly exhausted and set in action, the glass wall below the funnel *f* became strongly phosphorescent, but not uniformly, as there was a narrow ring *r r* on the periphery brighter than the rest, this ring being evidently due to the rays reflected from the platinum sheet.

Placing a fluorescent screen in contact or quite close to the glass wall below the funnel, the portion of the screen in the immediate neighborhood of the phosphorescent patch was brightly illuminated, the outlines being entirely indistinct. Receding now with the screen from the bulb, the strongly illuminated spot became smaller and the outlines sharper, until, when the point *o* was reached, the luminous part had dwindled down to a small point. Moving the screen a few millimetres beyond *o* caused a small dark spot to appear, which widened into a circle and became larger and larger in the same measure as the distance from the bulb was increased (see S), until, at a sufficiently

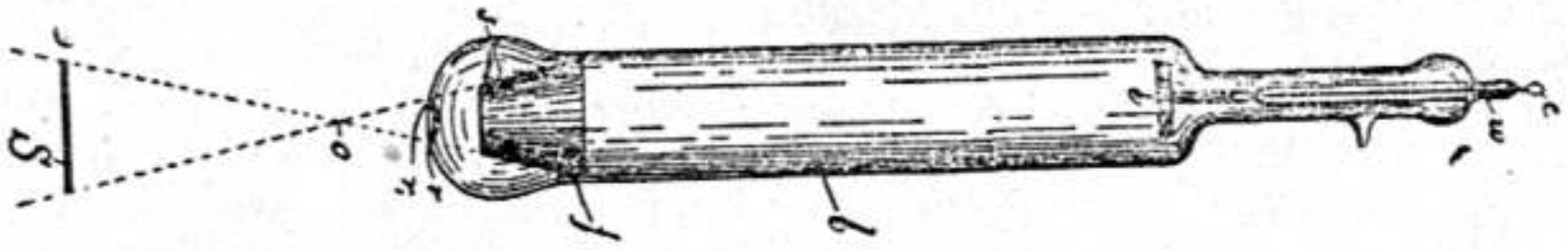

Diagram Illustrating The Experiment.

large distance, the dark circle covered the entire screen. This experiment illustrated in a beautiful way the propagation in straight lines, which Roentgen originally proved by pinhole photographs. But, besides this, an important point was noted; namely, that the fluorescent glass wall emitted practically no rays, whereas, had the platinum not been present, it would have been, under similar conditions, an efficient source of the rays, for the glass, even by weak excitation of the bulb, was strongly heated. I can only explain the absence of the radiation from the glass by assuming that the matter proceeding from the surface of the platinum sheet was already in a finely divided state when it reached the glass wall. A remarkable fact is, also, that, at least by a weak excitation of the bulb, the edges of the dark circle were very sharp, which speaks strongly against diffusion. By exciting the bulb very strongly, the background became brighter and the shadow S fainter, though it continued to be plainly visible even then.

From the preceding it is evident that, by a suitable construction of the bulb, the rays emanating from the latter may be concentrated upon any small area at some distance, and a practical advantage may be taken of this fact when producing impressions upon a plate or examining bodies by means of a fluorescent screen.

11

ROENTGEN RAYS OR STREAMS*

In the original report of his epochal discoveries, Roentgen expressed his conviction that the phenomena he observed were due to certain novel disturbances in the ether. This opinion deserves to be considered the more as it was probably formed in the first enthusiasm over the revelations, when the mind of the discoverer was capable of a much deeper insight into the nature of things.

It was known since long ago that certain dark radiations, capable of penetrating opaque bodies, existed, and when the rectilinear propagation, the action on a fluorescent screen and on a sensitive film was noted, an obvious and unavoidable inference was that the new radiations were transverse vibrations, similar to those known as light. On the other hand, it was difficult to resist certain arguments in favor of the less popular theory of material particles, especially as, since the researches of Lenard, it has become very probable that material streams, resembling the cathodic, existed in free air. Furthermore, I myself have brought to notice the fact that similar material streams — which were subsequently, upon Roentgen's announcement, found capable of producing impressions on a sensitive film — were obtainable in free air, even without the employment of a vacuum bulb, simply by the use of very high potentials, suitable for imparting to the molecules of the air or other particles a sufficiently high velocity. In reality, such puffs or jets of particles are formed in the vicinity of every highly charged conductor, the potential of which is rapidly varying, and I have shown that, unless they are prevented, they are fatal to every condenser or high-potential transformer, no matter how thick the insulation. They also render practically valueless any estimate of the period of vibration of an electro-magnetic system by the usual mode of calculation or measurement in a static condition in all cases in which the potential is very high and the frequency excessive.

It is significant that, with these and other facts before him, Roentgen inclined to the conviction that the rays he discovered were longitudinal waves of ether.

After a long and careful investigation, with apparatus excellently suited for the purpose, capable of producing impressions at great distances, and after examining the results pointed out by other experimenters, I have come to the conclusion which I have already intimated in my former contributions to your esteemed journal, and which I now find courage to pronounce without hesitation, that the original hypothesis of Roentgen will be confirmed in two particulars; first, in regard to the longitudinal character of the disturbances; second, in regard to the medium concerned in their propagation. The present expression of my views is made solely for the purpose of preserving a faithful record of what, to my mind, appears to be the true interpretation of these new and important manifestations of energy.

Recent observations of some dark radiations from novel sources by Becquerel and others, and certain deductions of Helmholtz, seemingly applicable to the explanation

* Electrical Review, August 12, 1896.

of the peculiarities of the Roentgen rays, have given additional weight to the arguments on behalf of the theory of transverse vibrations, and accordingly this interpretation of the phenomena is held in favor. But this view is still of a purely speculative character, being, as it is at present, unsupported by any conclusive experiment. Contrarily, there is considerable experimental evidence that some matter is projected with great velocity from the bulbs, this matter being in all probability the only cause of the actions discovered by Roentgen.

There is but little doubt at present that a cathodic stream within a bulb is composed of small particles of matter, thrown off with great velocity from the electrode. The velocity probably attained is estimable, and fully accountable for the mechanical and heating effects produced by the impact against the wall or obstacle within the bulb. It is, furthermore, an accepted view that the projected lumps of matter act as inelastic bodies, similarly to ever so many small lead bullets. It can be easily shown that the velocity of the stream may be as much as 100 kilometers a second, or even more, at least in bulbs with a single electrode, in which the practicable vacua and potentials are much higher than in the ordinary bulbs with two electrodes. But, now, matter moving with such great velocity must surely penetrate great thicknesses of the obstruction in its path, if the laws of mechanical impact are at all applicable to a cathodic stream. I have presently so much familiarized myself with this view that, if I had no experimental evidence, I would not question the fact that some matter is projected through the thin wall of a vacuum tube. The exit from the latter is, however, the more likely to occur, as the lumps of matter must be shattered into still much smaller particles by the impact. From my experiments on reflection of the Roentgen rays, before reported, which, with powerful radiations, may be shown to exist under all angles of incidence, it appears that the lumps or molecules are indeed shattered into fragments or constituents so small as to make them lose entirely some physical properties possessed before the impact. Thus, the material composing the electrode, the wall of the bulb or obstruction of any kind placed within the latter, are of absolutely no consequence, except in so far as the intensity of the radiations is concerned. It also appears, as I have pointed out, that no further disintegration of the lumps is attendant upon a second impact. The matter composing the cathodic stream is, to all evidence, reduced to matter of some primary form, heretofore not known, as such velocities and such violent impacts have probably never been studied or even attained before these extraordinary manifestations were observed. Is it not possible that the very ether vortexes which, according to Lord Kelvin's ideal theory, compose the lumps, are dissolved, and that in the Roentgen phenomena we may witness a transformation of ordinary matter into ether? It is in this sense that, I think, Roentgen's first hypothesis will be confirmed. In such case there can be, of course, no question of waves other than the longitudinal assumed by him, only, in my opinion, the frequency must be very small — that of the electro-magnetic vibrating system — generally not more than a few millions a second. If such process of transformation does take place, it will be difficult, if not impossible, to determine the amount of energy represented in the radiations, and the statement that this amount is very small should be received with some caution.

As to the rays exhaustively studied by Lenard, which have proved to be the nucleus of these great realizations, I hold them to be true cathodic streams, projected through the wall of the tube. Their deflectibility by a magnet shows to my mind simply that they differ but little from those within the bulb. The lumps of matter are probably large and the velocity small as compared with that of the Roentgen rays. They should, however be capable in a minor degree of all the actions of the latter. These actions I consider to be purely mechanical and obtainable by other means. So, for instance, I think that if a gun loaded with mercury were fired through a thin board, the projected mercury vapor would cast a shadow of an object upon a film made especially sensitive

to mechanical impact, or upon a screen of material capable of being rendered fluorescent by such impact.

The following observations made by myself and others speak more or less for the existence of the streams of matter.

I — PHENOMENA OF EXHAUSTION

On this subject I have expressed myself on another occasion. It is only necessary to once more point out that the effect observed by me should not be confounded with that noted by Spottiswoode and Crookes. I explain the latter phenomenon as follows: The first fluorescence appearing when the current is turned on, is due to some organic matter almost always introduced in the bulb in the process of manufacture. A minute layer of such matter on the wall produces invariably this first fluorescence, and the latter never takes place when the bulb has been exhausted under application of a high degree of heat or when the organic matter is otherwise destroyed. Upon the disappearance of the first fluorescence the rarefaction increases slowly, this being a necessary result of particles being projected from the electrode and fastening themselves upon the wall. These particles absorb a large portion of the residual gas. The latter can be again freed by the application of heat to the bulb or otherwise. So much of the effects observed by these investigators. In the instance observed by myself, there must be actual expulsion of matter, and for this speak following facts: (a) the exhaustion is quicker when the glass is thin; (b) when the potential is higher; (c) when the discharges are more sudden; (d) when there is no obstruction within the bulb; (e) the exhaustion takes place quickest with an aluminum or platinum electrode, the former metal giving particles moving with greatest velocity, the latter particles of greatest weight; (f) the glass wall, when softened by the heat, does not collapse, but bulges outwardly; (g) the exhaustion takes place, in some cases, even if a small perceptible hole is pierced through the glass; (h) all causes tending to impart a greater velocity to the particles hasten the process of exhaustion.

II — RELATION BETWEEN OPACITY AND DENSITY

The important fact pointed out early by Roentgen and confirmed by subsequent research, namely, that a body is the more opaque to the rays the denser it is, can not be explained as satisfactorily under any other assumption as that of the rays being streams of matter, in which case such simple relation between opacity and density would necessarily exist. This relation is the more important in its bearing upon the nature of the rays, as it does not at all exist in light-giving vibrations, and should consequently not be found to so marked a degree and under *all conditions with vibrations,* presumably similar to and approximating in frequency the light vibrations.

III — DEFINITION OF SHADOWS ON SCREEN OR PLATE

When taking impressions or observing shadows while varying the intensity of the radiations, but maintaining all other conditions as nearly as possible alike, it is found that the employment of more intense radiations secures little, if any, advantage, as regards the definition of the details. At first it was thought that all there was needed was to produce very powerful rays. But the experience was disappointing, for, while I succeeded in producing rays capable of impressing a plate at distances of certainly not less than 30 metres, I obtained but slightly better results. There was one advantage in using such intense rays, and this was that the plate could be further

removed from the source, and consequently a better shadow was obtained. But otherwise nothing to speak of was gained. The screen in the dark box would be at times rendered so bright as to allow reading at some distance plainly, but the shadow was not more distinct for all that. In fact, often a very strong radiation gave a poorer impression than a weak one. Now, a fact which I have repeatedly observed and to which I attach great importance in this connection, is the following: When taking impressions at a small distance with a tube giving very intense rays, no shadow, unless a scarcely perceptible one, is obtained. Thus, for instance, the flesh and bones of the hand appear equally transparent. Increasing presently gradually the distance, it is found that the bones cast a shadow, while the flesh leaves no impression. The distance still increased, the shadow of the flesh appears, while that of the bones grows deeper, and in this neighborhood a place can be found at which the definition of the shadow is clearest. If the distance is still further continually increased, the detail is lost, and finally only a vague shadow is perceptible, showing apparently the outlines of the hand.

This often-noted fact disagrees entirely with any theory of transverse vibrations, but can be easily explained on the assumption of material streams. When the hand is near and the velocity of the stream of particles very great, both bone and flesh are easily penetrated, and the effect due to the difference in the retardation of the particles passing through the heterogeneous parts can not be observed. The screen can fluoresce only up to a certain limited intensity, and the film can be affected only to a certain small degree. When the distance is increased, or, what is equivalent, when the intensity of the radiation is reduced, the more resisting bones begin to throw the shadow first. Upon a further increase of the distance the flesh begins likewise to stop enough of the particles to leave a trace on the screen. But in all cases, at a certain distance, manifestly that which under the conditions of the experiment gives the greatest difference in the trajectories of the particles within *the range perceptible on the screen or film,* the clearest shadow is secured.

IV — THE RAYS ARE ALL OF ONE KIND

The preceding explains the apparent existence of rays of different kind; that is, of different rates of vibration, as it is asserted. In my opinion, the velocity and possibly the size of the particles both are different, and this fully accounts for the discordant results obtained in regard to the transparency of various bodies to these rays. I found, for example, in many cases that aluminum was less transparent than glass, and in some instances brass appeared to be very transparent as compared with other metallic bodies. Such observations showed that it was necessary, in making the comparison, to take rigorously equal thicknesses of the bodies and place them as closely together as possible. They also showed the fallacy of comparing results obtained with different bulbs.

V — ACTION ON THE FILMS

Many experiments with films of different thicknesses show that decidedly more detail is obtainable with a thick film than with a thin one. This appears to me to be a further evidence in support of the above views, as the result can be easily explained when considering the preceding remarks.

VI — THE BEHAVIOR OF VARIOUS BODIES IN REFLECTING THE RAYS,

on which I have previously dwelt, will, if verified by other experimenters, leave no room for a doubt that the radiations are streams of some matter, or possibly of ether, as before observed.

VII — THE ENTIRE ABSENCE OF REFRACTION

and other features possessed by the light waves has, since Roentgen's announcement, not yet been satisfactorily explained. A trace at least of such an effect would be found if the rays were transverse vibrations.

VIII — THE DISCHARGE OF CONDUCTORS

by the rays shows, in so far as I have been able to follow the researches of others, that the electrical charge is taken off by the bodily carriers. It is also found that the opacity plays an important part, and the observations are mostly in accord with the above views.

IX — THE SOURCE OF THE RAYS

is, I find, always the place of the first impact of the cathodic stream, a second impact producing little or no rays. This fact would be difficult to account for unless streams of matter are assumed to exist.

X — SHADOWS IN SPACE OUTSIDE OF THE BULB

An almost crucial test of the existence of material streams is afforded by the formation of shadows in space at a distance from the bulb, to which I have called attention quite recently. I will presently refer to my preceding communication on this subject, and will only point out that such shadows could not be formed under the conditions described, except by streams of matter.

XI — ALL BODIES ARE TRANSPARENT TO VERY STRONG RAYS

Experiments establish this fact beyond any doubt. With very intense radiations, I obtain, easily, impressions through what may be considered a great thickness of any metal. It is impossible to explain this on any theory of transverse vibrations. We can show how one or other body might allow the rays to pass through, but such explanations are not applicable to *all* bodies without exception. On the contrary, assuming material streams, such a result is unavoidable.

A great many other observations and facts might be added to the above, as further evidence in support of the above views. I have noted certain peculiarities of bodies obstructing a cathodic stream within the bulb. I have observed that the same rays are produced at all degrees of exhaustion and using bodies of vastly different physical properties, and have found a number of features in regard to the pressure, the vacuum, the residual gas, the material of the electrode, etc., all of which observations are more or less in accord with what I have stated before. I hope, however, that there is enough in the present lines to enlist the attention of others.

ON THE ROENTGEN STREAMS.*

The following lines may contain some useful information for physicists and physicians. Those who, in the exercise of their professional duties are applying the discoveries of Roentgen to the relief of the suffering by determining the position of foreign objects or ascertaining the condition of local troubles of malformations in the organism, are apt to be disappointed in many instances. While it is perfectly easy to find the position of a foreign object in the head, neck and all soft tissues of the body, and detect some far gone trouble in the lungs, often the location of even such a large and opaque object as a bullet, when imbedded in certain bony parts of the trunk of the patient, may be attended with difficulties. Success will be invariably attained if the suggestions which are given below, and which are the outcome of a number of observations of such cases, are strictly followed.

In order to make the present statements self-contained and more useful, I deem it of advantage to say a few words in regard to the Roentgen rays. According to all evidences so far obtained by me, I entertain the view, which I have expressed on other occasions, that these rays are formed by streams of some matter projected with great velocity, and generally intermittently, from the walls of the tube. The intermittent character is only due to this feature of the apparatus usually employed for the production of the rays; but the oscillatory or intermittent discharge is not absolutely necessary, as I have produced unidirectional currents of high tension which are likewise capable of generating strong rays, and as a static machine may be used with a like result. The mode of formation of these rays or streams is, for the present purposes, of little importance. The small particles within the bulb, which are the original cause, may be ions, formed by a process of electrolysis, or they may be comparatively larger particles of the electrode, or perhaps molecules of the residual gas. At any rate, it is probable that the particles are very minute, and that, therefore, the velocities of the cathodic streams within the vessel are such and the impacts so violent as to cause a further disintegration of the cathodic matter to state probably never before studied by physicists. We may have to deal, as I have already suggested, with an actual breaking up of the ether-vortexes, which, according to Lord Kelvin's theory, compose the material particles, or we may be confronted with a dissolution of matter into some unknown primary form, the Akasa of the old Vedas. Experiments show that this matter is reflected, sometimes very well, sometimes poorly; but in all cases the various metals behave in a curious manner, which I have studied, and the results obtained, though probably not free of error, because of the great difficulties in getting an exact estimate in such an investigation, were, nevertheless, sufficiently positive as to lead me to the conviction that the same medium or element which is concerned in the setting up of the electro motive tension between metals in contact is present in the streams of Roentgen. It might have been proper to say; in the spirit of more modern views on contact electricity, that these streams

---

* Electrical Review, December 1, 1896.

are formed by ether, but I have preferred to use the term "primary matter," for, although the expression "ether" conveys a perfectly definite idea to the scientific mind, there exists, nevertheless, much vagueness as to the structure of this medium. The matter projected is not revealed by spectral analysis, and it does not seem to produce any appreciable mechanical nor even heating effects, nor is it deflected by a magnet, all of which facts tend to show that it can not be composed of molecules of any known substance. The streams exercise a powerful action upon a photographic plate or fluorescent screen, but I look upon these results as obvious consequences of the energetic impact.

Of the various more or less plausible views in regard to the formation of these streams outside of the vessel, the simplest, to my mind, is to assume an actual projection through the walls of the bulb of the disintegrated cathodic matter. Granted that there are particles sufficiently small within the bulb, then all velocities, up to many thousands of kilometers per second, are not only possible, but also probable; and, even if the particles would not be further disintegrated by the impact against the wall or other comparatively opaque body within the bulb, they surely would penetrate through great thicknesses of most substances. My experiments in this direction have shown that all the disintegration is practically accomplished in the first impact against the more or less impenetrable obstacle within the bulb, the second impact having seemingly little effect, as might be inferred from well established mechanical principles. I have also found that the place of first and most energetic impact, be it the anode, cathode or wall of the vessel, is invariably the principal source of the rays or streams. Again, quite in accordance with mechanical principles, the penetrative power of the streams is the greater the more complete the disintegration. Thus, for instance, rays which have traversed thick opaque objects, and are presumably further disintegrated, pass more freely through dense substances. An observation to this effect has likewise been made by Professor Wright, who was the first to publish definite results in the United States. I find that bulbs with thick walls give rays of greater penetrating power. It should be, of course, understood that I do not mean by this a greater outward effect. It is principally the above fact which makes it appear more probable that the matter projected is not a homogeneous stream, but consists of particles of varied magnitude moving with different velocities, for, were the former the case, the penetrative power would depend chiefly on the velocity. In the practical use of the Roentgen streams it would, therefore, seem very important to find a method of filtering and rendering them homogeneous, for only by such a method can we hope to obtain exact results in their investigation. Streams of perfectly uniform velocity and character, if produced, would no doubt be more suitable for the purposes of research.

Since the disintegration of the electrodes, especially if they are of aluminum, is so slow that no appreciable diminution of the weight results even after long use; it follows that the matter conveyed by the Roentgen streams is so minute as to escape detection. Some bulbs, which I have used for a number of months, showed that the bombarded spot of the glass was entirely permeated with particles of the aluminum electrode, but it would probably require years of constant use to accumulate any appreciable amount of matter outside. Referring to a tube with an electrode of aluminum, it is a noteworthy fact that, if properly managed, it does not impair in quality, but, on the contrary, seems to improve; whereas, when a platinum electrode is used, the life of the bulb is very short, owing to the conductor being deposited on the walls, which deposit, as I have explained on another occasion, renders difficult the passage of the discharge. Namely, as soon as some of the projected particles strike the conducting layer, they impart a similar electrification to the latter, and a repulsion is exerted upon the particles following. The result is an apparent increase in the resistance of the tube. The above defect of the platinum electrode, despite of its effectiveness, must, in my opinion, lead to its abandonment.

It has been suggested that the Roentgen rays may be due simply to a propagation of electro-static stress; but, on this assumption, it is difficult to conceive how rays could be produced in instances when the glass wall is at a high temperature and consequently conducting, or when the impact plate or inclosure is of metal and connected to the ground. Stokes has recently considered the possibility that the impact of the cathodic stream on one side of a partition might give rise to a molecular motion on the other side without necessarily there being a transit through the partition. According to this view, which I have likewise considered some time ago, it would appear that the material streams might start on the outer side of the wall of the tube, in which case only the air would be responsible for the effects, and the futility of a spectral analysis test would be in a certain measure accounted for. But is it not more probable to assume an actual passage and shattering of matter as all evidences point in this direction? Assuming that, as Professor Stokes now thinks it probable, the disturbance is non-periodic and still capable of producing effects characteristic of transverse vibrations of extremely high frequency, it seems to me a serious question whether, the old Newtonian views on light should not be reconsidered rather than the conclusion drawn that the novel manifestations observed by Roentgen are due to transverse vibrations, when there is no experimental evidence to this effect, nor even a satisfactory explanation found how the cathodic impact might give rise to waves of a higher frequency than those of light.

Being, as I am, firmly convinced of the existence of material streams, I look upon the unsuccess of the attempts of demonstrating an actual transit of matter as being due to either the minuteness of the amount or else to the state of the matter, but rather, to the former cause, as all peculiarities of the streams point in this direction. In my opinion, no experimenter need be deterred from carrying on an investigation of the Roentgen rays for fear of poisonous or generally deleterious action, for it seems reasonable to conclude that it would take centuries to accumulate enough of such matter as to interfere seriously with the process of life of a person. But I look confidently to the demonstration of actions of a purely qualitative nature. For instance, despite of the danger of such an assertion by encouragement which might be given to quacks I would say that I expect with the utmost confidence the demonstration of a germicidal action. In addition to the physiological effects, to which I have early drawn attention, I have more recently observed with powerful tubes that a sensation of pain is produced in the forehead above the eyes just as soon as the current is turned on. This sensation is very similar to that one frequently experiences when stepping from a dark room into the glare of bright sunlight, or when walking for some time over fields of fresh-fallen snow.

As to the hurtful actions on the skin, which have been variously reported, I note that they are misinterpreted. These effects have been known to me for some time, but I have been unable, on account of pressing matters, to dwell on the subject. They are not due to the Roentgen rays, but merely to the ozone generated in contact with the skin. Nitrous acid may also be responsible, to a small extent. The ozone, when abundantly produced, attacks the skin and many organic substances most energetically, the action being no doubt heightened by the heat and moisture of the skin. After exposing the hand, for instance, for some time, the skin loses its elasticity, which causes a tension and pain, and subsequently an inflammation and blistering. This occurs mostly only at short range, but may be produced by a single terminal bulb, or generally by a very highly exhausted bulb, in which the terminals act independently, at greater distance. Owing to this, I have always taken the precaution, when getting impressions with the rays, to guard the person by a screen made of aluminum wires which is connected to the ground, preferably through a condenser. The radical means, however, of preventing such actions is to make impossible the access of the air to the skin

while exposing, as, for instance, by immersing in oil. As this would be inconvenient in most cases, a metallic screen should be resorted to. The action of the ozone on some substances, when placed near the bulb in such a way that the gas is generated on their surfaces, is so powerful that the substances are practically destroyed in a few minutes. When a wire heavily insulated with rubber is connected to the terminal of a high-frequency coil, sometimes an exposure of barely a minute is sufficient to completely wreck the rubber insulation. There are certain commercial insulating compounds which are even more quickly destroyed, but which I will not enumerate. because of a possible disadvantage to the manufacturers. Gutta-percha, beeswax and paraffine stand the attack very well, and such wires should be used with high-frequency coils. This powerful action of the ozone was observed by me first about two years ago, when performing an experiment which was shown to many persons in my laboratory. The experiment consisted of charging a person, standing on an insulated stand, with a potential approximating one and one-half million volts, which was alternated severai hundred thousand times a second. Under such conditions luminous streams break out on all parts of the body, especially abundantly on the feet, hands, hair, nose and ears. I subjected myself a number of times to this experiment, which seemed to offer no other danger except the possible rupture of a blood vessel, if the skin was very dry and non-conducting. I then noted on myself and others after effects resembling much those attributed to the Roentgen rays. With currents produced by perfected electrical oscillators, such as were described in the Electrical Review, September 30, 1896, the production of the ozone is so abundant that it is sufficient to merely turn on the current for a few seconds and ozonize strongly the atmosphere of a large hall. These currents are also capable of bringing about chemical combinations, of which the chief is that of the nitrogen with the oxygen of the atmosphere, and an immense possibility, which I have been following up for a long time, is opened up; namely, the combination of the nitrogen of the atmosphere on an industrial scale by practically no other means than mechanical power. If merely fertilizers of the soil would be manufactured in this manner, the benefits to humanity derived therefrom would be incalculable. From the above named action of the ozone, it follows that the experimenter should use the indicated precaution, for while ozone in small quantities is a most beneficial disinfectant, when generated in large quantities it is not free of danger.

It is an unpleasant duty to say on this occasion a few words on the subject of "making the blind see" by means of the Roentgen rays. This sensational topic has been given a wide circulation in the journals. Is it not cruel to raise such hopes when there is so little ground for it? For, first of all, the rays are not demonstrated to be transverse vibrations. If they were, we would have to find means for refracting them to make possible the projection of a sufficiently small image upon the retina. As it is, only a shadow of a very small object can be projected. What possible good can result from the application of these rays to such purposes? The shape of the small object might eventually be recognized by impressing the retina, but the sense of touch is more than sufficient to convey such impressions. Luminous sensations are well known to be excited in two ways; namely, by mechanical shock and electrical transmission. Both of these, I think, are present in the Roentgen streams, and hence such an effect on the optic nerve might be expected. I may say, however, that I can not confirm some of the experiments reported. For instance, when a hand is put before the closed eyes it is easy to distinguish the shadow, much the same as before the light of a candle; but when the tube is closed, and all light from the same excluded, I fail to get such an impression. The latter is, therefore, chiefly due to ordinary light, or else my tubes act differently from those experimented with by others. It may be proper to recall here that in ordinary bright sunlight, especially in the southern climates, it is easy to distinguish the shadow of objects, and even their rough outlines, with the eyes shut.

Proceeding on the assumption that we have in reality to deal with material streams, it is important to inquire which are the best conditions to be maintained when taking impressions with the sensitive screen or plate. First, the experimenter will easily observe that there are two causes which, with a given bulb and coil, tend to increase the intensity of the impressions. One of these may be said to lie in the bulb, the other in the coil. The latter, being most generally made of many turns of fine wire, is very sensitive to changes in the capacity of bodies attached to its terminals. The capacity of these bodies, therefore, in such a coil largely determines the difference of potential. At a certain degree of exhaustion this capacity assumes such a value that the pressure rises to a maximum, this tending to give the highest velocity to the cathodic stream, and, consequently, to give rise to the most intense rays. But at that degree of exhaustion it may happen, and usually does happen, that the cathodic streams are not most abundant. To produce the best result it is necessary that both of these causes should be made to cooperate by a careful proportioning of the dimensions of the bulb, which, in practice, is very difficult, inasmuch as the experimenter has to avail himself of commercial bulbs which may or may not be best suitable for his coil. This simple consideration shows the great advantage of the use of a coil which contains no fine wire and is capable of giving a heavy current through the secondary far in excess of what even the largest bulb requires.

Assuming the physician has learned how to manipulate his apparatus to best advantage, he will next notice that, to secure the clearest definition, he will have to maintain a certain pressure on the terminals of the tube, dependent chiefly on the distance and degree of opacity of the object investigated. It goes without saying that the definition is the better the smaller the spot from which the rays are emanating, but this is true only when impressions are taken at very small distances. When the distances are large, it is a disadvantage to use a too small radiating surface, as then the density is diminished to such a degree that the action is too weak. Discarding this consideration, it is clear that, if the rays are intense, the more opaque portions of the body are likewise penetrated and much detail is lost, whereas, when the rays are less intense, the impression might be altogether too weak to bring out sufficient detail.

To illustrate in a popular manner the best way to proceed, I shall avail myself of a simple illustration. Suppose that there would be imbedded between two panels of cloth a foreign object, such as a coin, and it is desired to locate it. We may accomplish this by placing behind the cloth a cardboard, for instance, and then firing from a certain distance a load of fine shot through the cloth in the region where the coin is supposed to be located. The shot will penetrate the cloth on all points except on the place where the coin is located, and on the cardboard behind, this place will be plainly indicated by the absence of the marks. Exactly in this way we proceed in applying the Roentgen rays to the location of such a body. Roentgen gave us a gun to fire — a wonderful gun, indeed, projecting missiles of a thousandfold greater penetrative power than that of a cannon ball, and carrying them probably to distances of many miles, with velocities not producible in any other way we know of. These missiles are so small that we may fire them through our tissues for days, weeks, months and years, apparently, without any hurtful consequence. Instead of the cardboard to indicate the path of the missiles, he gave us what is properly called a Roentgen screen, which becomes luminous on all places where it is hit by the missiles. Where the latter are prevented from hitting the screen by the intervention of the opaque body, the screen does not glow and we observe the shadow of the object. It is simple enough to project the shadow of an object in this way but when it is required to show the finer detail of the structure of the object, the difficulty begins. It will at once appear that, to produce such a result to best advantage, two conditions will have to be more or less realized. Firstly, the screen should be composed of such material that it is capable of becoming luminous by the faintest impact; and, secondly, the missiles should all be of uniform size, and should

move with uniform velocity. Neither of these two conditions has so far been realized in practice, for all the bodies we know require a violent impact to become luminous, and no way has been found as yet to produce a uniformity in velocity and magnitude of the supposed projectiles. But a little thought leads immediately to the conclusion that there will be a certain velocity of the missiles which will give, under all conditions, the best definition. This velocity is easily ascertained by trial. Evidently the definition will be best when the bullets which pass through the densest parts of the body strike the screen so feebly as to not make it light up, whereas, those passing through portions of slightly smaller density hit it sufficiently strong as to make it light up feebly. The more sensitive the screen to impact, that is, the weaker an impact is required to make the screen light up, the more detail will be revealed. It therefore follows that, in the application of the Roentgen rays, not the body which fluoresces strongest, but the one which is most sensitive, is best suited for finer work.

The above considerations have led me to adopt the following procedure, which, in practice, has proved very successful. The Roentgen screen is first applied to the body to be investigated, the pressure at the terminals of the tube being very much reduced. The pressure is then slowly and gradually raised. It will be presently observed that, at a certain pressure, the shadow of the object examined is clearest. But as the vacuum is increasing, the pressure generally rises, and the image gets blurred in spite of the screen getting much brighter. Just as soon as the clearness is slightly diminished, the experimenter should for a few moments reverse the current, lowering a little the vacuum in this manner. The current being again given the direction it had at first, namely, that which causes a slow and steady increase of the vacuum, the shadow gets again clear, and by such easy manipulation the best result may be secured. An additional advantage, however, is gained, because the frequent reversals produce a brighter phosphorescence of the screen. When taking a photograph, the bulb should be watched through the screen and the switches manipulated in the above manner.

To give a practical example of the effectiveness of this procedure, I need only mention one of the instances which have come to my notice. A few months ago I investigated the case of Mr Cornelius Mack, of Watertown, Mass. Mr. Mack, while performing his duties many years ago, was struck by a bullet which lodged somewhere in the chest and could not be located. I apply the screen vainly a number of times for although the streams penetrated the body with such ease as to make the screen behind appear bluish white, and reveal all the bones of the body, I could not observe the missile. I then resorted to the above indicated means, and immediately and easily the exact location of the projectile, between the shoulder blade and one of the ribs, was ascertained and the bullet successfully extracted.

ON THE HURTFUL ACTIONS OF LENARD AND ROENTGEN TUBES*

The rapidly extending use of the Lenard and Roentgen tubes or Crookes bulbs as implements of the physician, or as instruments of research in laboratories, makes it desirable, particularly in view of the possibility of certain hurtful actions on the human tissues, to investigate the nature of these influences, to ascertain the conditions under which they are liable to occur and — what is most important for the practitioner — to render all injury impossible by the observance of certain rules and the employment of unfailing remedies.

As I have stated in a previous communication (see Electrical Review of December 2, 1896) no experimenter need be deterred from using freely the Roentgen rays for fear of a poisonous or deleterious action, and it is entirely wrong to give room to expressions of a kind such as may tend to impede the progress and create a prejudice against an already highly beneficial and still more promising discovery; but it can not be denied that it is equally uncommendable to ignore dangers now when we know that, under certain circumstances, they actually exist. I consider it the more necessary to be aware of these dangers, as I foresee the coming into general use of novel apparatus, capable of developing rays of incomparably greater power. In scientific laboratories the instruments are usually in the hands of persons skilled in their manipulation and capable of approximately estimating the magnitude of the effects, and the omission of necessary precautions is, in the present state of our knowledge, not so much to be apprehended; but the physicians, who are keenly appreciating the immense benefits derived from the proper application of the new principle, and the numerous amateurs who are fascinated by the beauty of the novel manifestations, who are all passionately bent upon experimentation in the newly opened up fields, but many of whom are naturally not armed with the special knowledge of the electrician — all of these are much in need of reliable information from experts, and for these chiefly the following lines are written. However, in view of the still incomplete knowledge of these rays, I wish the statements which follow to be considered as devoid of authoritativeness, other than that which is based on the conscientiousness of my study and the faith in the precision of my senses and observations.

Ever since Professor Roentgen's discovery was made known I have carried on investigations in the directions indicated by him, and with perfected apparatus, producing rays of much greater intensity than it was possible to obtain with the usual appliances. Commonly, my bulbs were capable of showing the shadow of a hand on a phosphorescent screen at distances of 40 or 50 feet, or even more, and to the actions of these bulbs myself and several of my assistants were exposed for hours at a time, and although the exposures took place every day, not the faintest hurtful action was noted — as long as certain precautions were taken. On the contrary, be it a coincidence, or an effect of the rays, or the result of some secondary cause present in the operation of the bulbs —

---

* Electrical Review, May 5, 1897.

as, for example, the generation of ozone — my own health, and that of two persons who were daily under the influence of the rays, more or less, has materially improved, and, whatever be the reason, it is a fact that a troublesome cough with which I was constantly afflicted has entirely disappeared, a similar improvement being observed on another person.

In getting the photographic impressions or studying the rays with a phosphorescent screen, I employed a plate of thin aluminum sheet or a gauze of aluminum wires, which was interposed between the bulb and the person, and connected to the ground directly or through a condenser. I adopted this precaution because it was known to me, a long time before, that a certain irritation of the skin is caused by very strong streamers, which, mostly at small distance, are formed on the body of a person through the electrostatic influence of a terminal of alternating high potential. I found that the occurrence of these streamers and their hurtful consequence was completely prevented by the employment of a conducting object, as a sheet of wire gauze placed and connected as described. It was observed, however, that the injurious effects mentioned did not seem to diminish gradually with the distance from the terminal, but ceased abruptly, and I could give no other explanation for the irritation of the skin which would be as plausible as that which I have expressed; namely, that the effect was due to ozone, which was abundantly produced. The latter peculiarity mentioned was also in agreement with this view, since the generation of ozone ceases abruptly at a definite distance from the terminal, making it evident that a certain intensity of action is absolutely required, as in a process of electrolytic decomposition.

In carrying further my investigations, I gradually modified the apparatus in several ways, and immediately I had opportunities to observe hurtful influences following the exposures. Inquiring now what changes I had introduced, I found that I had made three departures from the plan originally followed; First, the aluminum screen was not used; second, a bulb was employed which, instead of aluminum, contained platinum, either as electrode or impact plate; and third, the distances at which the exposures took place were smaller than usual.

It did not require a long time to ascertain that the interposed aluminum sheet was a very effective remedy against injury, for a hand could be exposed for a long time behind it without the skin being reddened, which otherwise invariably and very quickly occurred. This fact impressed me with the conviction that, whatever the nature of the hurtful influences, it was in a large measure dependent either on an electrostatic action, or electrification, or secondary effects resulting therefrom, such as are attendant to the formation of streamers. This view afforded an explanation why an observer could watch a bulb for any length of time, as long as he was holding the hand in front of the body, as in examining with a fluorescent screen, with perfect immunity to all parts of his body, with the exception of the hand. It likewise explained why burns were produced in some instances on the opposite side of the body, adjacent to the photographic plate, whereas portions on the directly exposed part of the body, which were much nearer to the bulb, and consequently subjected to by far stronger rays, remained unaffected. It also made it easy to understand why the patient experienced a prickling sensation on the exposed part of the body whenever an injurious action took place. Finally, this view agreed with the numerous observations that the hurtful actions occurred when air was present, clothing, however thick, affording no protection, while they practically ceased when a layer of a fluid, quite easily penetrated by the rays, but excluding all contact of the air with the skin, was used as a preventive.

Following, now, the second line of investigation, I compared bulbs containing aluminum only with those in which platinum was used besides, ordinarily as impact body, and soon there were enough evidences on hand to dispel all doubt as to the latter metal being by far the more injurious. In support of this statement, one of the

experiences may be cited which, at the same time, may illustrate the necessity — of taking proper precautions when operating bulbs of very high power. In order to carry out comparative tests, two tubes were constructed of an improved Lenard pattern, in size and most other respects alike. Both contained a concave cathode or reflector of nearly two inches in diameter, and both were provided with an aluminum cap or window. In one of the tubes the cathodic focus was made to coincide with the center of the cap, in the other the cathodic stream was concentrated upon a platinum wire supported on a glass stem axially with the tube a little in front of the window, and in each case the metal of the latter was thinned down in the central portion to such an extent as to be barely able to withstand the inward air pressure. In studying the action of the tubes, I exposed one hand to that containing aluminum only, and the other to the tube with the platinum wire. On turning on the former tube, I was surprised to observe that the aluminum window emitted a clear note, corresponding to the rhythmical impact of the cathodic stream. Placing the hand quite near the window, I felt distinctly that something warm was striking it. The sensation was unmistakable, and, quite apart from the warmth felt, differed very much from that prickling feeling produced by streamers or minute sparks. Next I examined the tube with the platinum wire. No sound was emitted by the aluminum window, all the energy of the impact being seemingly spent on the platinum wire, which became incandescent, or else the matter composing the cathodic stream was so far disintegrated that the thin metal sheet offered no material obstruction to its passage. If big lumps are hurled against a wire netting with large meshes, there is considerable pressure exerted against the netting; if, on the contrary — for illustration — the lumps are very small as compared with the meshes, the pressure might not be manifest. But, although the window did not vibrate, I felt, nevertheless, again, and distinctly, that something was impinging against the hand, and the sensation of warmth was stronger than in the previous case. In the action on the screen there was apparently no difference between the two tubes, both rendering it very bright, and the definition of the shadows was the same, as far as it was possible to judge. I had looked through the screen at the second tube a few times only when something detracted my attention, and it was not until about 20 minutes later, when I observed that the hand exposed to it was much reddened and swollen. Thinking that it was due to some accidental injury, I turned again to the examination of the platinum tube, thrusting the same hand close to the window, and now I felt instantly a sensation of pain, which became more pronounced when the hand was placed repeatedly near the aluminum window. A peculiar feature was that the pain appeared to be seated, not at the surface, but deep in the tissues of the hand, or rather in the bones. Although the aggregate exposure was certainly not more than half a minute, I had to suffer severe pain for a few days afterward, and some time later I observed that all the hair was destroyed and that the nails on the injured hand had grown anew.

The bulb containing no platinum was now experimented with, more care being taken, but soon its comparative harmlessness was manifest, for, while it reddened the skin, the injury was not nearly as severe as with the other tube. The valuable experiences thus gained were: The evidence of something hot striking the exposed member; the pain *instantly* felt; the injury produced *immediately* after the exposure, and the increased violence due, in all probability, to the presence of the platinum.

Some time afterward I observed other remarkable actions at very small distances from powerful Lenard tubes. For instance, the hand being held near the window only for a few seconds, the skin seems to become tight, or else the muscles are stiffened, for some resistance is experienced in closing the fist, but upon opening and closing it repeatedly the sensation disappears, apparently no ill effect remaining. I have, furthermore, observed a decided influence on the nasal discharge organs similar to

the effects of a cold just contracted. But the most interesting observation in this respect is the following: When such a powerful bulb is watched for some time, the head of the observer being brought very close, he soon after that experiences a sensation so peculiar that no one will fail to notice it when once his attention is called to it, it being almost as positive as touch. If one imagines himself looking at something like a cartridge, for instance, in close and dangerous proximity, and just about to explode, he will get a good idea of the sensation produced, only, in the case of the cartridge, one can not render himself an account where the feeling exactly resides, for it seems to extend all over the body, this indicating that it comes from a general awareness of danger resulting from previous and manifold experiences, and not from the anticipation of an unpleasant impression directly upon one of the organs, as the eye or the ear; but, in the case of the Lenard bulb, one can at once, and with precision, locate the sensation; it is in the head. Now, this observation might not be of any value except, perhaps, in view of the peculiarity and acuteness of the feeling, were it not that exactly the same sensation is produced when working for some time with a noisy spark gap, or, in general, when exposing the ear to sharp noises or explosions. Since it seems impossible to imagine how the latter could cause such a sensation in any other way except by directly impressing the organs of hearing, I conclude that a Roentgen or Lenard tube, working in perfect silence as it may, nevertheless produces violent explosions or reports and concussions, which, though they are inaudible, take some material effect upon the bony structure of the head. Their inaudibility may be sufficiently explained by the well founded assumption that not the air, but some finer medium, is concerned in their propagation.

But it was in following up the third line of inquiry into the nature of these hurtful actions, namely, in studying the influence of distance, that the most important fact was unearthed. To illustrate it popularly, I will say that the Roentgen tube acts exactly like a source of intense heat. If one places the hand near to a red-hot stove, he may be instantly injured. If he keeps the hand at a certain small distance, he may be able to withstand the rays for a few minutes or more, and may still be injured by prolonged exposure; but if he recedes only a little farther, where the heat is slightly less, he may withstand the heat in comfort and any length of time without receiving any injury, the radiations at that distance being too weak to seriously interfere with the life process of the skin. This is absolutely the way such a bulb acts. Beyond a certain distance no hurtful effect whatever is produced on the skin, no matter *how long* the exposure. The character of the burns is also such as might be expected from a source of high heat. I have maintained, in all deference to the opinions of others, that those who have likened the effects on the skin and tissues to sunburns have misinterpreted them. There is no similarity in this respect, except in so far as the reddening and peeling of the skin is concerned, which may result from innumerable causes. The burns, when slight, rather resemble those people often receive when working close to a strong fire. But when the injury is severe, it is in all appearances like that received from contact with fire or from a red-hot iron. There may be no period of incubation at all, as is evident from the foregoing remarks, the rays taking effect immediately, not to say instantly. In a severe case the skin gets deeply colored and blackened in places, and ugly, ill-foreboding blisters form; thick layers come off, exposing the raw flesh, which, for a time, discharges freely. Burning pain, feverishness and such symptoms are of course but natural accompaniments. One single injury of this kind, in the abdominal region, to a dear and zealous assistant — the only accident that ever happened to any one but myself in all my laboratory experience — I had the misfortune to witness. It occurred before all these and other experiences were gained, following directly an exposure of five minutes at the fairly safe distance of 11 inches to a very highly-charged platinum tube, the protecting aluminum screen having been infortunately omitted, and it was such as to fill me with the gravest apprehensions. Fortunately, frequent warm baths, free

application of vaseline, cleaning and general bodily care soon repaired the ravages of the destructive agent, and I breathed again freely. Had I known more than I did of these injurious actions, such unfortunate exposure would not have been made; had I known less than I did, it might have been made at a smaller distance, and a serious, perhaps irremediable, injury might have resulted.

I am using the first opportunity to comply with the bitter duty of recording the accident. I hope that others will do likewise, so that the most complete knowledge of these dangerous actions may soon be acquired. My apprehensions led me to consider, with keener interest than I would have felt otherwise, what the probabilities were in such a case of the internal tissues being seriously injured. I came to the very comforting conclusion that, no matter what the rays are ultimately recognized to be, practically all their destructive energy must spend itself on the surface of the body, the internal tissues being, in all probability, safe, unless the bulb would be placed in very close proximity to the skin, or else, that rays of far greater intensity than now producible were generated. There are many reasons why this should be so, some of which will appear clear from my foregoing statements referring to the nature of the hurtful agencies, but I may be able to cite new facts in support of this view. A significant feature of the case reported may be mentioned. It was observed that on three places, which were covered by thick bone buttons, the skin was entirely unaffected, while it was entirely destroyed under each of the small holes in the buttons. Now, it was impossible for the rays, as investigation showed, to reach these points of the skin in straight lines drawn from the bulb, and this would seem to indicate that not all the injury was due to the rays or radiations under consideration, which unmistakably propagate in straight lines, but that, at least in part, concomitant causes were responsible. A further experimental demonstration of this fact may be obtained in the following manner: The experimenter may excite a bulb to a suitable and rather small degree, so as to illuminate the fluorescent screen to a certain intensity at a distance of, say, seven inches. He may expose his hand at that distance, and the skin will be reddened after a certain duration of exposure. He may now force the bulb up to a much higher power, until, at a distance of 14 inches, the screen is illuminated even stronger than it was before at half that distance. The rays are now evidently stronger at the greater distance, and yet he may expose the hand a very long time, and it is safe to assert that he will not be injured. Of course, it is possible to bring forth arguments which might deprive the above demonstration of force. So, it might be stated, that the actions on the screen or photographic plate do not give us an idea as to the density and other quantitative features of the rays, these actions being entirely of a qualitative character. Suppose the rays are formed by streams of material particles, as I believe, it is thinkable that it might be of no particular consequence, in so far as the visible impression on the screen or film is concerned, whether a trillion of particles per square millimetre strike the sensitive layer or only a million, for example; but with the actions on the skin it is different; these must surely and very materially depend on the quantity of the streams.

As soon as the before-mentioned fact was recognized, namely, that beyond a certain distance even the most powerful tubes are incapable of producing injurious action, no matter how long the exposure may last, it became important to ascertain the safe distance. Going over all my previous experiences, I found that, very frequently, I have had tubes which at a distance of 12 feet, for illustration, gave a strong impression of the chest of a person with an exposure of a few minutes, and many times persons have been subjected to the rays from these tubes at a distance of from 18 to 24 inches, the time of exposure varying from 10 to 45 minutes, and never the faintest trace of an injurious action was observed. With such tubes I have even made long exposures at distances of 14 inches, always, of course, through a thin sheet or wire gauze of aluminum connected to the ground, and, in each case, observing the precaution that the metal would

not give any spark when the person was touching it with the hand, as it might sometimes be when the electrical vibration is of extremely high frequency, in which case a ground connection, through a condenser of proper capacity, should be resorted to. In all these instances bulbs containing only aluminum were used, and I therefore still lack sufficient data to form an exact idea of what distance would have been safe with a platinum tube. From the case previously cited, we see that a grave injury resulted at a distance of 11 inches, but I believe that, had the protecting screen been used, the injury, if any, would have been very slight. Taking all my experiences together, I am convinced that no serious injury can result if the distance is greater than 16 inches and the impression is taken in the manner I have described.

Having been successful in a number of lines of inquiry pertaining to this new department of science, I am able at present to form a broader view of the actions of the bulbs, which, I hope, will soon assume a quite definite shape. For the present, the following brief statement may be sufficient. According to the evidences I am obtaining, the bulb, when in action, is emitting a stream of small material particles. There are some experiments which seem to indicate that these particles start from the outer wall of the bulb; there are others which seem to prove that there is an actual penetration of the wall, and, in the case of a thin aluminum window, I have now not the least doubt that some of the finely disintegrated cathodic matter is actually forced through. These streams may simply be projected to a great distance, the velocity gradually diminishing without the formation of any waves, or they may give rise to concussions and longitudinal waves. This, for the present consideration, is entirely immaterial, but, assuming the existence of such streams of particles, and disregarding such actions as might be due to the properties, chemical or physical, of the projected matter, we have to consider the following specific actions:

First. There is the thermal effect. The temperature of the electrode or impact body does not in any way give us an idea of the degree of heat of the particles, but, if we consider the probable velocities only, they correspond to temperatures which may be as high as 100,000 degrees centigrade. It may be sufficient that the particles are simply at a high temperature to produce an injurious action, and, in fact, many evidences point in this direction. But against this is the experimental fact that we can not demonstrate such a transference of heat, and no satisfactory explanation is found yet, although, in carrying my investigations in this direction, I have arrived at some results.

Second, there is the purely electrical effect. We have absolute experimental evidence that the particles or rays, to express myself generally, convey an immense amount of electricity, and I have even found a way of how to estimate and measure that amount. Now it is likewise possible that the mere fact of these particles being highly electrified is sufficient to cause the destruction of the tissue. Certainly, on contact with the skin, the electrical charges will be given off, and may give rise to strong and destructive local currents in minute paths of the tissue. Experimental results are in accord with this view, and, in pushing my inquiry in this direction, I have been still more successful than in the first. Yet, while as I have suggested before, this view explains best the action on a sensitive layer, experiment shows that, when the supposed particles traverse a grounded plate, they are not deprived entirely of their electrification, which is not satisfactorily explained.

The *third* effect to be considered is the electro-chemical. The charged particles give rise to an abundant generation of ozone and other gases, and these we know, by experiment, destroy even such a thing as rubber, and are, therefore, the most likely agent in the destruction of the skin, and the evidences are strongest in this direction, since a small layer of a fluid, preventing the contact of gaseous matter with the skin, seems to stop all action.

The *last* effect to be considered is the purely mechanical. It is thinkable that material particles, moving with great speed, may, merely by a mechanical impact and unavoidable heating at such speeds, be sufficient to deteriorate the tissues, and in such a case deeper layers might also be injured, whereas it is very probable that no such thing would occur if any of the former explanations would be found to hold.

Summing up my experimental experiences and the conclusions derived from them, it would seem advisable, first, to abandon the use of bulbs containing platinum; second, to substitute for them a properly constructed Lenard tube, containing pure aluminum only, a tube of this kind having, besides, the advantage that it can be constructed with great mechanical precision, and therefore is capable of producing much sharper impressions; third, to use a protecting screen of aluminum sheet, as suggested, or, instead of this, a wet cloth or a layer of a fluid; fourth, to make the exposures at distances of, at least, 14 inches, and preferably expose longer at a larger distance.

ON THE SOURCE OF ROENTGEN RAYS AND THE PRACTICAL CONSTRUCTION AND SAFE OPERATION OF LENARD TUBES*

I have for some time felt that a few indications in regard to the practical construction of Lenard tubes of improved designs, a great number of which I have recently exhibited before the New York Academy of Sciences (April 6, 1897), would be useful and timely, particularly as by their proper construction and use much of the danger attending the experimentation with the rays may be avoided. The simple precautions which I have suggested in my previous communications are seemingly disregarded, and cases of injury to patients are being almost daily reported, and in view of this only, were it for no other reason, the following lines, referring to this subject, would have been written before had not again pressing and unavoidable duties prevented me from doing so. A short and, I may say, most unwelcome interruption of the work which has been claiming my attention makes this now possible. However, as these opportunities are scarce, I will utilize the present to dwell in a few words on some other matters in connection with this subject, and particularly on a result of importance which I have reached some time ago by thé aid of such a Lenard tube, and which, if I am correctly informed, I can only in part consider as my own, since it seems that practically it has been expressed in other words by Professor Roentgen in a recent communication to the Academy of Sciences of Berlin. The result alluded to has reference to the much disputed question of the source of the Roentgen rays. As will be remembered, in the first announcement of his discovery, Roentgen was of the opinion that the rays which affected the sensitive layer emanated from the fluorescent spot on the glass wall of the bulb; other scientific men next made the cathode responsible; still others the anode, while some thought that the rays were emitted solely from fluorescent powders of surfaces, and speculations, mostly unfounded, increased to such an extent that, despairingly, one would exclaim with the poet:

"O glücklich wer noch hoffen kann,
Aus diesem Meer des Irrtums aufzutauchen!"

My own experiments led me to recognize that, regardless of the location, the chief source of these rays was the place of the *first* impact of the projected stream of particles within the bulb. This was merely a broad statement, of which that of Professor Roentgen was a special case, as in his first experiments the fluorescent spot on the glass wall was, incidentally, the place of the first impact of the cathodic stream. Investigations carried on up to the present day have only confirmed the correctness of the above opinion, and the place of the first collision of the stream of particles — be it an anode or independent

---

* Electrical Review, August 11, 1897.

impact body, the glass wall or an aluminum window — is still found to be the principal source of the rays. But, as will be seen presently, it is not the only source.

Since recording the above fact my efforts were directed to finding answers to the following questions: First, is it necessary that the impact body should be within the tube? Second, is it required that the obstacle in the path of the cathodic stream should

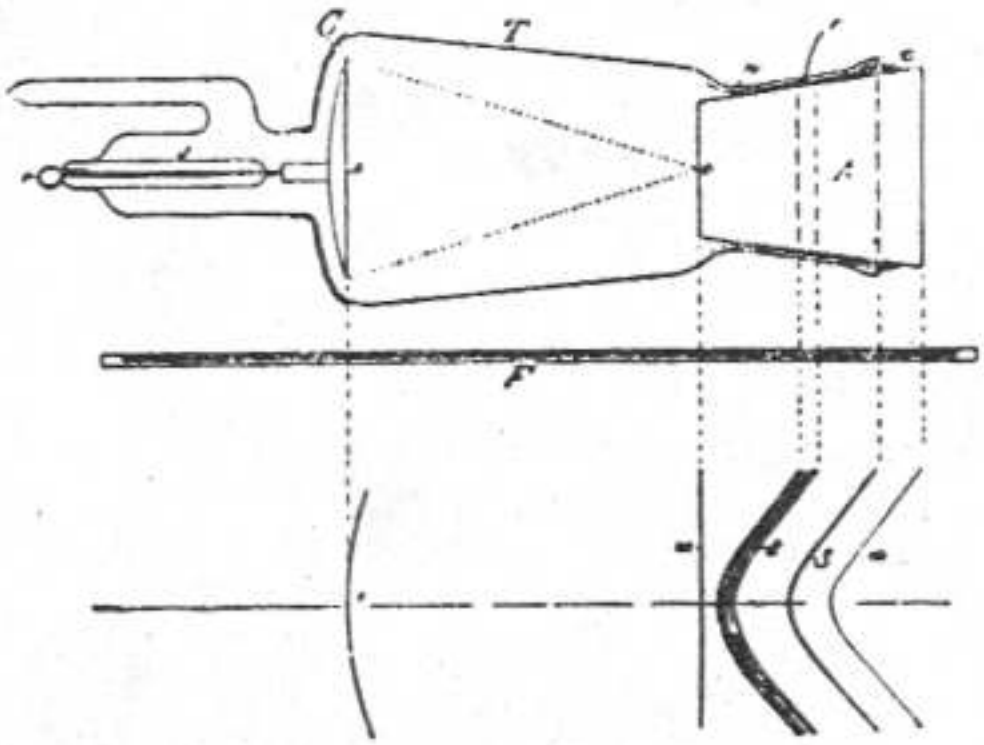

Fig. 1. — Illustrating an Experiment Revealing the Real Source of the Roentgen Rays.

be a solid or liquid? And, third, to what extent is the velocity of the stream necessary for the generation of and influence upon the character of the rays emitted?

In order to ascertain whether a body located outside of the tube and in the path or in the direction of the stream of particles was capable of producing the same peculiar phenomena as an object located inside, it appeared necessary to first show that there is an actual penetration of the particles through the wall, or otherwise that the actions

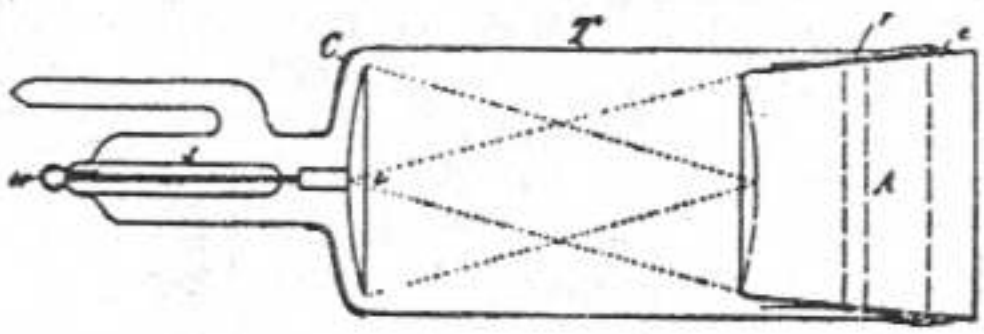

Fig. 2. — Improved Lenard Tube.

of the supposed streams, of whatever nature they might be, were sufficiently pronounced in the outer region close to the wall of the bulb as to produce some of the effects which are peculiar to a cathodic stream. It was not difficult to obtain with a properly prepared Lenard tube, having an exceedingly thin window, many and at first surprising evidences of this character. Some of these have already been pointed out, and it is thought sufficient to cite here one more which I have since observed. In the hollow aluminum cap A of a tube as shown in diagram Fig. 1, which will be described in detail, I placed a half-dollar silver piece, supporting it at a small distance from and parallel to the window or bottom of the cap by strips of mica in such a manner that it was not touching the metal of the tube, an air space being left all around it. Upon exciting the bulb for about 30 to 45 seconds by the secondary discharge of a powerful coil of a novel type now well known, it was found that the silver piece was rendered

so hot as to actually scorch the hand; yet the aluminum window, which offered a very insignificant obstacle to the cathodic stream, was only moderately warmed. Thus it was shown that the silver alloy, owing to its density and thickness, took up most of the energy of the impact, being acted upon by the particles almost identically as if it had been inside of the bulb, and, what is more, indications were obtained, by observing the shadows, that it behaved like a second source of the rays, inasmuch as the outlines of the shadows, instead of being sharp and clear as when the half-dollar piece was removed, were dimmed. It was immaterial for the chief object of the inquiry to decide by more exact methods whether the cathodic particles actually penetrated the window, or whether a new and separate stream was projected from the outer side of the window. In my mind there exists not the least doubt that the former was the case, as in this respect I have been able to obtain numerous additional proofs, upon which I may dwell in the near future.

I next endeavored to ascertain whether it was necessary that the obstacle outside was, as in this case, a solid body, or a liquid, or broadly, a body of measurable dimensions, and it was in investigating in this direction that I came upon the important result to which I referred in the introductory statements of this communication. I namely observed rather accidentally, although I was following up a systematic inquiry, what is illustrated in diagram Fig. 1. The diagram shows a Lenard tube of improved design, consisting of a tube T of thick glass tapering towards the open end, or neck *n*, into which is fitted an aluminum cap A, and a spherical cathode *e*, supported on a glass stem *s*, and platinum wire *w* sealed in the opposite end of the tube as usual. The aluminum cap A, as will be observed, is not in actual contact with the ground-glass wall, being held at a small distance from the latter by a narrow and continuous ring of tinfoil *r*. The outer space between the glass and the cap A is filled with cement *c*, in a manner which I shall later describe. F is a Roentgen screen such as is ordinarily used in making the observations.

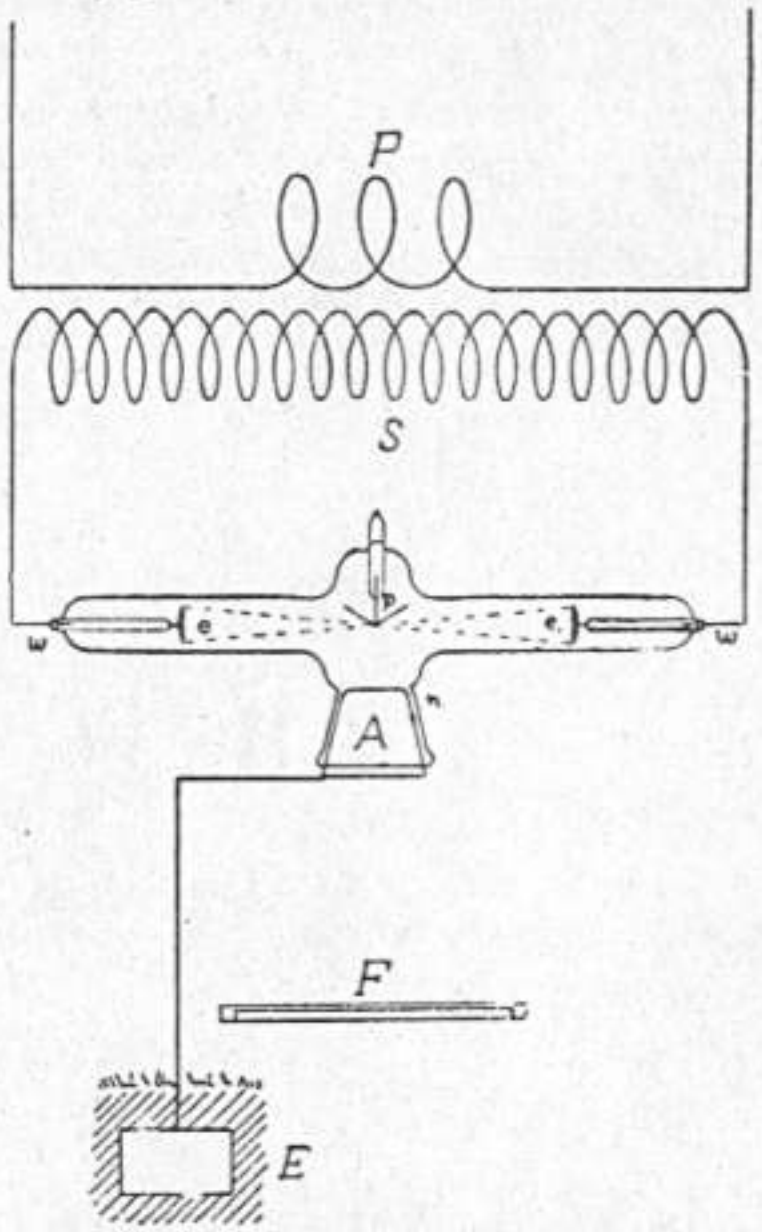

Fig. 3. — Illustrating Arrangement with Improved Double-Focus Tube for Reducing the Injurious Actions.

Now, in looking upon the screen in the direction from F to T, the dark lines indicated on the lower part of the diagram were seen on the illuminated background. The curved line *e* and the straight line W were, of course, at once recognized as the outlines of the cathode *e* and the bottom of the cap A respectively, although, in consequence of a confusing optical illusion, they appeared much closer together than they actually were. For instance, if the distance between *e* and *o* was five inches, these lines would appear on the screen about two inches apart, as nearly as I could judge by the eye. This illusion may be easily explained and is quite unimportant, except that it might be of some moment to physicians to keep this fact in mind when making examinations with the screen as, owing to the above effect, which is sometimes exaggerated to a degree hard to believe, a completely erroneous idea of the distance of

the various parts of the object under examination might be gained, to the detriment of the surgical operation. But while the lines *e* and W were easily accounted for, the curved lines *t, g, a* were at first puzzling. Soon, however, it was ascertained that the faint line *a* was the shadow of the edge of the aluminum cap, the much darker line *g* that of the rim of the glass tube T, and *t* the shadow of the tinfoil ring *r*. These shadows on the screen F clearly showed that the agency which affected the fluorescent material was proceeding from the space outside of the bulb towards the aluminum cap, and chiefly from the region through which the primary disturbances or streams emitted from the tube through the window were passing, which observation could not be explained in a more plausible manner than by assuming that the air and dust particles outside, in the path of the projected streams, afforded an obstacle to their passage and gave rise to impacts and collisions spreading through the air in all directions, thus producing continuously new sources of the rays. It is this fact which, in his recent communication before mentioned, Roentgen has brought out. So, at least, I have interpreted his reported statement that the rays emanate from the irradiated air. It now remains to be shown whether the air, from which carefully all foreign particles are

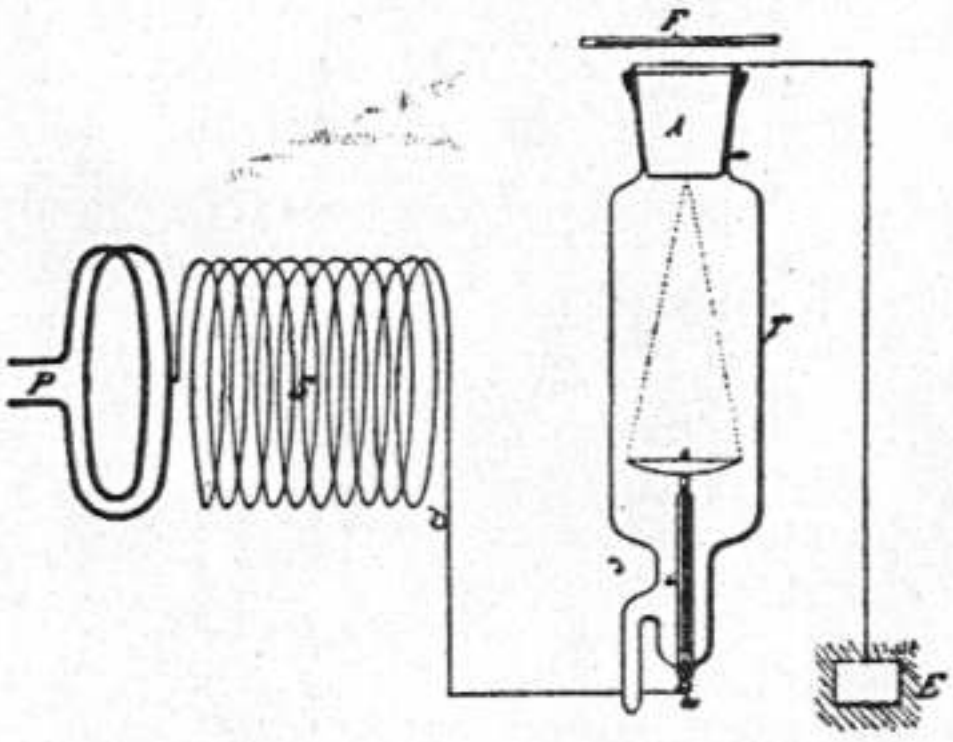

Fig. 4. — Illustrating Arrangement with a Lenard Tube for Safe Working at Close Range.

removed, is capable of behaving as an impact body and source of the rays, in order to decide whether the generation of the latter is dependent on the presence in the air of impact particles of measurable dimensions. I have reasons to think so.

With the knowledge of this fact we are now able to form a more general idea of the process of generation of the radiations which have been discovered by Lenard and Roentgen. It may be comprised in the statement that the streams of minute material particles projected from an electrode with great velocity in encountering obstacles wherever they may be, within the bulb, in the air or other medium or in the sensitive layers themselves, give rise to rays or radiations possessing many of the properties of those known as light. If this physical process of generation of these rays is undoubtedly demonstrated as true, it will have most important consequences, as it will induce physicists to again critically examine many phenomena which are presently attributed to transverse ether waves, which may lead to a radical modification of existing views and theories in regard to these phenomena, if not as to their essence so, at least, as to the mode of their production.

My effort to arrive at an answer to the third of the above questions led me to the establishment, by actual photographs, of the close relationship which exists between

the Lenard and Roentgen rays. The photographs bearing on this point were exhibited at a meeting of the New York Academy of Sciences — before referred to — April 6, 1897, but, unfortunately, owing to the shortness of my address, and concentration of thought on other matters, I omitted what was most important; namely, to describe the manner in which these photographs were obtained, an oversight which I was able to only partially repair the day following. I did, however, on that occasion illustrate and describe experiments in which was shown the deflectibility of the Roentgen rays by a magnet, which establishes a still closer relationship, if not identity, of the rays named after these two discoverers. But the description of these experiments in detail, as well as of other investigations and results in harmony with and restricted to the subject I brought before that scientific body, will appear in a longer communication which I am slowly preparing.

To bring out clearly the significance of the photographs in question, I would recall that, in some of my previous contributions to scientific societies, I have endeavored to dispel a popular opinion before existing that the phenomena known as those of Crookes were dependent on and indicative of high vacua. With this object in view, I showed that phosphorescence and most of the phenomena in Crookes bulbs were producible at greater pressures of the gases in the bulbs by the use of much higher or more sudden electro-motive impulses. Having this well demonstrated fact before me, I prepared a tube in the manner described by Lenard in his first classical communication on this subject. The tube was exhausted to a moderate degree, either by chance or of necessity, and it was found that, when operated by an ordinary high-tension coil of a low rate of change in the current, no rays of any of the two kinds could be detected, even when the tube was so highly strained as to become very hot in a few moments. Now, I expected that, if the suddenness of the impulses through the bulb were sufficiently increased, rays would be emitted. To test this I employed a coil of a type which I have repeatedly described, in which the primary is operated by the discharges of a condenser. With such an instrument any desired suddenness of the impulses may be secured, there being practically no limit in this respect, as the energy accumulated in the condenser is the most violently explosive agent we know, and any potential or electrical pressure is obtainable. Indeed, I found that in increasing the suddenness of the electro-motive impulses through the tube — without, however, increasing, but rather diminishing the total energy conveyed to it — phosphorescence was observed and rays began to appear, first the feebler Lenard rays and later, by pushing the suddenness far enough, Roentgen rays of great intensity, which enabled me to obtain photographs showing the finest texture of the bones. Still, the same tube, when again operated with the ordinary coil of a low rate of change in the primary current, emitted practically no rays, even when, as before stated, much more energy, as judged from the heating, was passed through it. This experience, together with the fact that I have succeeded in producing by the use of immense electrical pressures, obtainable with certain apparatus designed for this express purpose, some impressions in free air, have led me to the conclusion that in lightning discharges Lenard and Roentgen rays must be generated at ordinary atmospheric pressure.

At this juncture I realize, by a perusal of the preceding lines, that my scientific interest has dominated the practical, and that the following remarks must be devoted to the primary object of this communication — that is, to giving some data for the construction to those engaged in the manufacture of the tubes and, perhaps, a few useful hints to practicing physicians who are dependent on such information. The foregoing was, nevertheless, not lost for this object, inasmuch as it has shown how much the result obtained depends on the proper construction of the instruments, for, with ordinary implements, most of the above observations could not have been made.

I have already described the form of tube illustrated in Fig. 1, and in Fig. 2 another still further improved design is shown. In this case the aluminum cap A, instead of

having a straight bottom as before, is shaped spherically, the center of the sphere coinciding with that of the electrode *e*, which itself, as in Fig. 1, has its focus in the center of the window of cap A, as indicated by the dotted lines. The aluminum cap A has a tinfoil ring *r*, as that in Fig. 1, or else the metal of the cap is spun out on that place so as to afford a bearing of small surface between the metal and the glass. This is an important practical detail as, by making the bearing surface small, the pressure per unit of area is increased and a more perfect joint made. The ring *r* should be first spun out and then ground to fit the neck of the bulb. If a tinfoil ring is used instead, it may be cut out of one of the ordinary tinfoil caps obtainable in the market, care being taken that the ring is very smooth.

In Fig. 3 I have shown a modified design of tube which, as the two types before described, was comprised in the collection I exhibited. This, as will be observed, is a double-focus tube, with impact plates of iridium alloy and an aluminum cap A opposite the same. The tube is not shown because of any originality in design, but simply to illustrate a practical feature. It will be noted that the aluminum caps in the tubes described are fitted inside of the necks and not outside, as is frequently done. Long experience has demonstrated that it is practically impossible to maintain a high vacuum in a tube with an outside cap. The only way I have been able to do this in a fair measure is by cooling the cap by a jet of air, for instance, and observing the following precautions: The air jet is first turned on slightly and upon this the tube is excited. The current through the latter, and also the air pressure, are then gradually increased and brought to the normal working condition. Upon completing the experiment the air pressure and current through the tube are both gradually reduced and both so manipulated that no great differences in temperature result between the glass and aluminum cap. If those precautions are not observed the vacuum will be immediately impaired in consequence of the uneven expansion of the glass and metal.

With tubes, as these presently described, it is quite unnecessary to observe this precaution if proper care is taken in their preparation. In inserting the cap the latter is cooled down as low as it is deemed advisable without endangering the glass, and it is then gently pushed in the neck of the tube, taking care that it sets straight.

The two most important operations in the manufacture of such a tube are, however, the thinning down of the aluminum window and the sealing in of the cap. The metal of the latter may be one thirty-second or even one-sixteenth of an inch thick, and in such case the central portion may be thinned down by a countersink tool about one-fourth of an inch in diameter as far as it is possible without tearing the sheet. The further thinning down may then be done by hand with a scraping tool; and, finally, the metal should be gently beaten down so as to surely close the pores which might permit a slow leak. Instead of proceeding in this way I have employed a cap with a hole in the center, which I have closed with a sheet of pure aluminum a few thousandths of an inch thick, riveted to the cap by means of a washer of thick metal, but the results were not quite as satisfactory.

In sealing the cap I have adopted the following procedure: The tube is fastened on the pump in the proper position and exhausted until a permanent condition is reached. The degree of exhaustion is a measure of perfection of the joint. The leak is usually considerable, but this is not so serious a defect as might be thought. Heat is now gradually applied to the tube by means of a gas stove until a temperature up to about the boiling point of sealing wax is reached. The space between the cap and the glass is then filled with sealing wax of good quality; and, when the latter begins to boil, the temperature is reduced to allow its settling in the cavity. The heat is then again increased, and this process of heating and cooling is repeated several times until the entire cavity, upon reduction of the temperature, is found to be filled uniformly with the wax, all bubbles having disappeared. A little more wax is then put on the top and

the exhaustion carried on for an hour or so, according to the capacity of the pump, by application of moderate heat much below the melting point of the wax.

A tube prepared in this manner will maintain the vacuum very well, and will last indefinitely. If not used for a few months, it may gradually lose the high vacuum, but it can be quickly worked up. However, if after long use it becomes necessary to clean the tube, this is easily done by gently warming it and taking off the cap. The cleaning may be done first with acid, then with highly diluted alkali, next with distilled water, and finally with pure rectified alcohol.

These tubes, when properly prepared, give impressions much sharper and reveal much more detail than those of ordinary make. It is important for the clearness of the impressions that the electrode should be properly shaped, and that the focus should be exactly in the center of the cap or slightly inside. In fitting in the cap, the distance from the electrode should be measured as exactly as possible. It should also be remarked that the thinner the window, the sharper are the impressions, but it is not advisable to make it too thin, as it is apt to melt in a point on turning on the current.

The above advantages are not the only ones which these tubes offer. They are also better adapted for purposes of examination by surgeons, particularly if used in the peculiar manner illustrated in diagrams Fig. 3 and Fig. 4, which are self-explanatory. It will be seen that in each of these the cap is connected to the ground. This decidedly diminishes the injurious action and enables also to take impressions with very short exposures of a few seconds only at close range, inasmuch as, during the operation of the bulb, one can easily touch the cap without any inconvenience, owing to the ground connection. The arrangement shown in Fig. 4 is particularly advantageous with a form of single terminal, which coil I have described on other occasions and which is diagrammatically illustrated, P being the primary and S the secondary. In this instance the high-potential terminal is connected to the electrode, while the cap is grounded. The tube may be placed in the position indicated in the drawing, under the operating table and quite close or even in contact with the body of the patient, if the impression requires only a few seconds as, for instance, in examining parts of the members. I have taken many impressions with such tubes and have observed no injurious action, but I would advise not to expose for longer than two or three minutes at very short distances. In this respect the experimenter should bear in mind what I have stated in previous communications. At all events it is certain that, in proceeding in the manner described, additional safety is obtained and the process of taking impressions much quickened. To cool the cap, a jet of air may be used, as before stated, or else a small quantity of water may be poured in the cap each time when an impression is taken. The water only slightly impairs the action of the tube, while it maintains the window at a safe temperature. I may add that the tubes are improved by providing back of the electrode a metallic coating C, shown in Fig. 3 and Fig. 4.

ON CURRENT INTERRUPTERS*

To stimulate the ardor of the zealous experimenters, who believe in the revolutionary character of this discovery, it might be well to suggest one or two such simple devices for interrupting the current. For instance, a very primitive contrivance of this kind comprises a poker — yes, an ordinary poker, connected by means of a flexible cable to one of the mains of the generator, and a bathtub filled with conducting fluid which is connected in any suitable manner, through the primary of an induction coil, to the other pole of the generator. When the experimenter desires to take a Roentgen picture, he brings the end of the poker to white heat, and, thrusting the same into the bathtub, he will at once witness an astonishing phenomenon, the seething and boiling liquid making and breaking the current in rapid succession, and the powerful rays generated will at once convince him of the great practical value of this discovery. I might further suggest that the poker may be conveniently heated by means of a welding machine.

Another device, entirely automatic, and probably suitable for use in suburban districts, comprises two insulated metal plates, supported in any convenient manner, in close proximity to each other. These plates are connected through the primary of an induction coil with the determinals of a generator, and are bridged by two movable contacts joined by a flexible cable. The two contacts are both attached to the legs of a good-sized chicken standing astride on the plates. Heat being applied to the latter, muscular contractions are produced in the legs of the chicken, which thus makes and breaks the current through the induction coil. Any number of such chickens may be provided and the contacts connected in series or multiple arc, as may be desired, thus increasing the frequency of the impulses. In this manner fierce sparks, suitable for most purposes, may be obtained, and vacuum tubes may be operated, and these contrivances will be found a notable improvement on certain circuit-breakers of old, with which two enterprising editors undertook some years ago to revolutionize the systems of electric lighting. The enterprising editors are wiser now. They are to be congratulated, and their readers, scientific societies and the profession, all ought to be congratulated, and — "all is well that ends well." The observant experimenter will not fail to note that the fierce sparks frighten the chickens, which are thus put into more violent spasms and muscular contractions, this again increasing the fierceness of the sparks, which, in return, causes a greater fright of the chickens and increased speed of interruptions; it is, in fact, as Kipling says:

> *"Interdependence absolute, foreseen, ordained, decreed,*
> *To work, ye'll note, at any tilt an' every rate o'speed."*

But to return, in all earnestness, to the "electrolytic interrupter" described, this is a device with which I am perfectly familiar, having carried on extensive experiments with the same two or three years ago. It was one of many devices which I invented in

---

* Electrical Review, March 15, 1899.

my efforts to produce an economical contrivance of this kind. The name is really not appropriate, inasmuch as any fluid, either conducting or made so in any manner, as by being rendered acid or alkaline, or by being heated, may be used. I have even found it possible, under certain conditions, to operate with mercury. The device is extremely simple, but the great waste of energy attendant upon its operation and certain other defects make it entirely unsuitable for any valuable, practical purpose, and as far as those instances are concerned, in which a small amount of energy is needed, much better results are obtained by a properly designed mechanical circuit-breaker. The experimenters are very likely deceived by finding that an induction coil gives longer sparks when this device is inserted in place of the ordinary break, but this is due merely to the fact that the break is not properly designed. Of the total energy supplied from the mains, scarcely one-fourth is obtainable of that amount, which a well constructed mechanical break furnishes in the secondary, and although I have designed many improved forms, I have found it impossible to increase materially the economy. Two improvements, however, which I found at that time necessary to introduce, I may mention for the benefit of those who are using the device. As will be readily noted, the small terminal is surrounded by a gaseous bubble, in which the makes and breaks are formed, generally in an irregular manner, by the liquid being driven towards the terminal at some point. The force which drives the liquid is evidently the pressure of the fluid column, and by increasing the fluid pressure in any manner the liquid is forced with greater speed towards the terminal and thus the frequency is increased. Another necessary improvement was to make a provision for preventing the acid or alkali from being carried off into the atmosphere, which always happens more or less, even if the liquid column be of some height. During my early experiments with the device I became so interested in it that I neglected this precaution, and I noted that the acid had attacked all the apparatus in my laboratory. The experimenter will conveniently carry out both of these improvements by taking a long glass tube of, say, six to eight feet in length, and arranging the interrupting device close to the bottom of the tube, with an outlet for eventually replacing the liquid. The high column will prevent the fumes from vitiating the atmosphere of the room, and the increased pressure will add materially to the effectiveness of the performance. If the liquid column be, say, nine times as high, the force driving the fluid towards the contact is nine times as great, and this force is capable, under the same conditions, of driving the fluid three times as fast, hence the frequency is increased in that ratio and, in fact, in a somewhat greater ratio, as the gaseous bubble, being compressed, is rendered smaller, and therefore the liquid is made to travel through a smaller distance. The electrode, of course, should be very small to insure the regularity of operation, and it is not necessary to use platinum. The pressure may, however, be increased in other ways, and I have obtained some results of interest, in experiments of this kind.

As before stated, the device is very wasteful, and, while it may be used in some instances, I consider it of little or no practical value. It will please me to be convinced of the contrary, but I do not think that I am erring. My chief reasons for this statement are that there are many other ways in which by far better results are obtainable with devices equally simple, if not more so. I may mention one here, based on a different principle, which is incomparably more effective, more efficient and also simpler on the whole. It comprises a fine stream of conducting fluid which is made to issue, with any desired speed, from an orifice connected with one pole of a generator, through the primary of the induction coil, against the other terminal of the generator placed at a small distance. This device gives discharges of a remarkable suddenness, and the frequency may be brought within reasonable limits, almost to anything desired. I have used this device for a long time in connection with ordinary coils and in a form of my own coil with results greatly superior in every respect to those obtainable with the form of device discussed.

ELECTRICAL OSCILLATORS*

Few fields have been opened up the exploration of which has proved as fruitful as that of high frequency currents. Their singular properties and the spectacular character of the phenomena they presented immediately commanded universal attention. Scientific men became interested in their investigation, engineers were attracted by their commercial possibilities, and physicians recognized in them a long-sought means for effective treatment of bodily ills. Since the publication of my first researches in 1891, hundreds of volumes have been written on the subject and many invaluable results obtained through the medium of this new agency. Yet, the art is only in its infancy and the future has incomparably bigger things in store.

From the very beginning I felt the necessity of producing efficient apparatus to meet a rapidly growing demand and during the eight years succeeding my original announcements I developed not less than fifty types of these transformers or electrical oscillators, each complete in every detail and refined to such a degree that I could not materially improve any one of them today. Had I been guided by practical considerations I might have built up an immense and profitable business, incidentally rendering important services to the world. But the force of circumstances and the ever enlarging vista of greater achievements turned my efforts in other directions. And so it comes that instruments will shortly be placed on the market which, oddly enough, were perfected twenty years ago!

These oscillators are expressly intended to operate on direct and alternating lighting circuits and to generate damped and undamped oscillations or currents of any frequency, volume and tension within the widest limits. They are compact, self-contained, require no care for long periods of time and will be found very convenient and useful for various purposes as, wireless telegraphy and telephony; conversion of electrical energy; formation of chemical compounds through fusion and combination; synthesis of gases; manufacture of ozone; lighting; welding; municipal, hospital, and domestic sanitation and sterilization, and numerous other applications in scientific laboratories and industrial institutions. While these transformers have never been described before, the general principles underlying them were fully set forth in my published articles and patents, more particularly those of September 22, 1896, and it is thought, therefore, that the appended photographs of a few types, together with a short explanation, will convey all the information that may be desired.

The essential parts of such an oscillator are: a condenser, a self-induction coil for charging the same to a high potential, a circuit controller, and a transformer which is

---

* Electrical Experimenter, July 1919.

energized by the oscillatory discharges of the condenser. There are at least three, but usually four, five or six, circuits in tune and the regulation is effected in several ways, most frequently merely by means of an adjusting screw. Under favorable conditions an efficiency as high as 85% is attainable, that is to say, that percentage of the energy supplied can be recovered in the secondary of the transformer. While the chief virtue of this kind of apparatus is obviously due to the wonderful powers of the condenser, special qualities result from concatenation of circuits under observance of accurate harmonic relations, and minimization of frictional and other losses which has been one of the principal objects of the design.

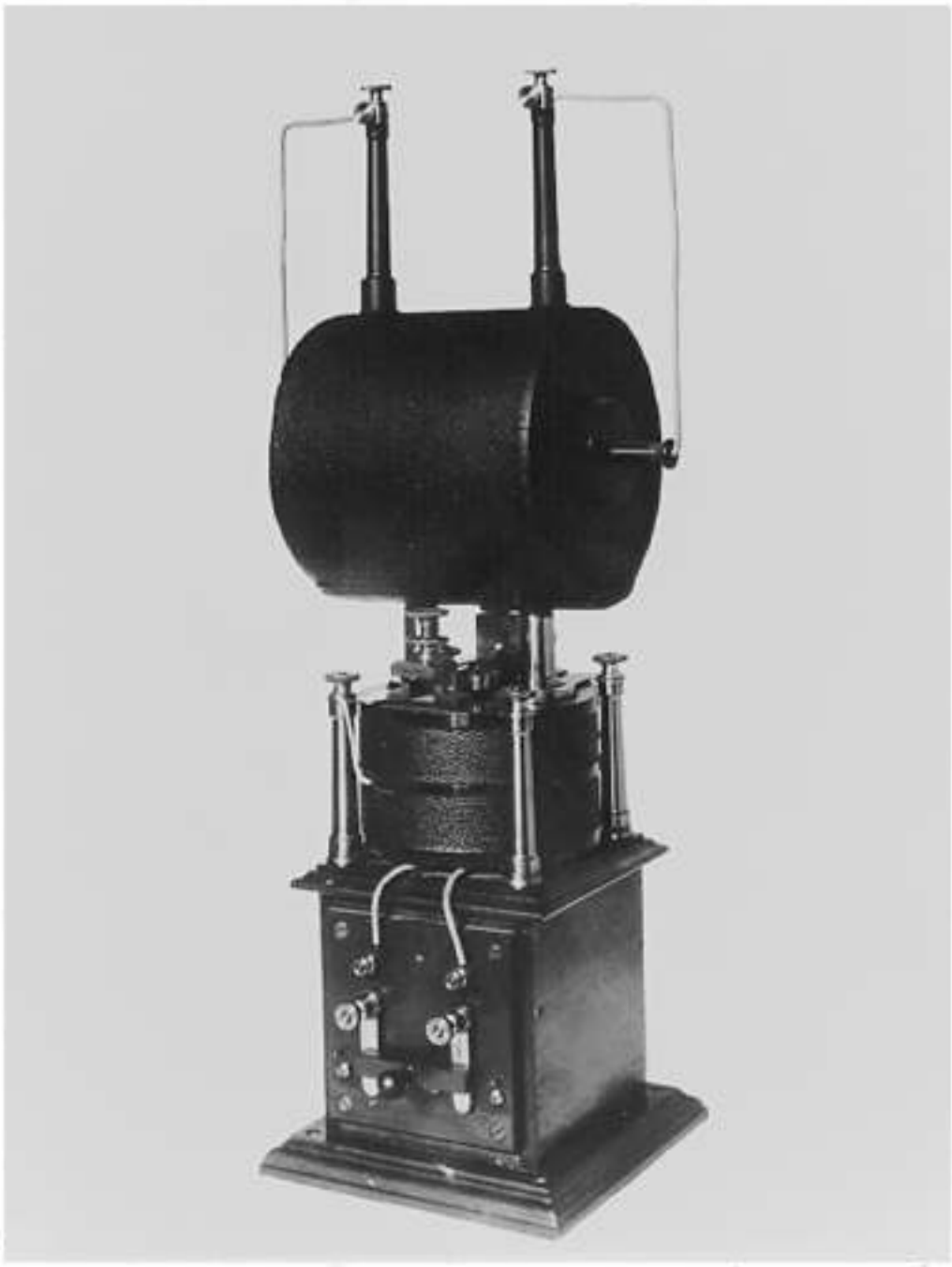

Fig. 1.

Broadly, the instruments can be divided into two classes: one in which the circuit controller comprises solid contacts, and the other in which the make and break is effected by mercury. Figures 1 to 8, inclusive, belong to the first, and the remaining ones to the second class. The former are capable of an appreciably higher efficiency on account of the fact that the losses involved in the make and break are reduced to the minimum and the resistance component of the damping factor is very small. The latter are preferable for purposes requiring larger output and a great number of breaks per second. The operation of the motor and circuit controller of course consumes a certain amount of energy which, however, is the less significant the larger the capacity of the machine.

In Fig. 1 is shown one of the earliest forms of oscillator constructed for experimental purposes. The condenser is contained in a square box of mahogany upon which is mounted the self-induction or charging coil wound, as will be noted, in two sections connected in multiple or series according to whether the tension of the supply circuit is 110 or 220 volts. From the box protrude four brass columns carrying a plate with

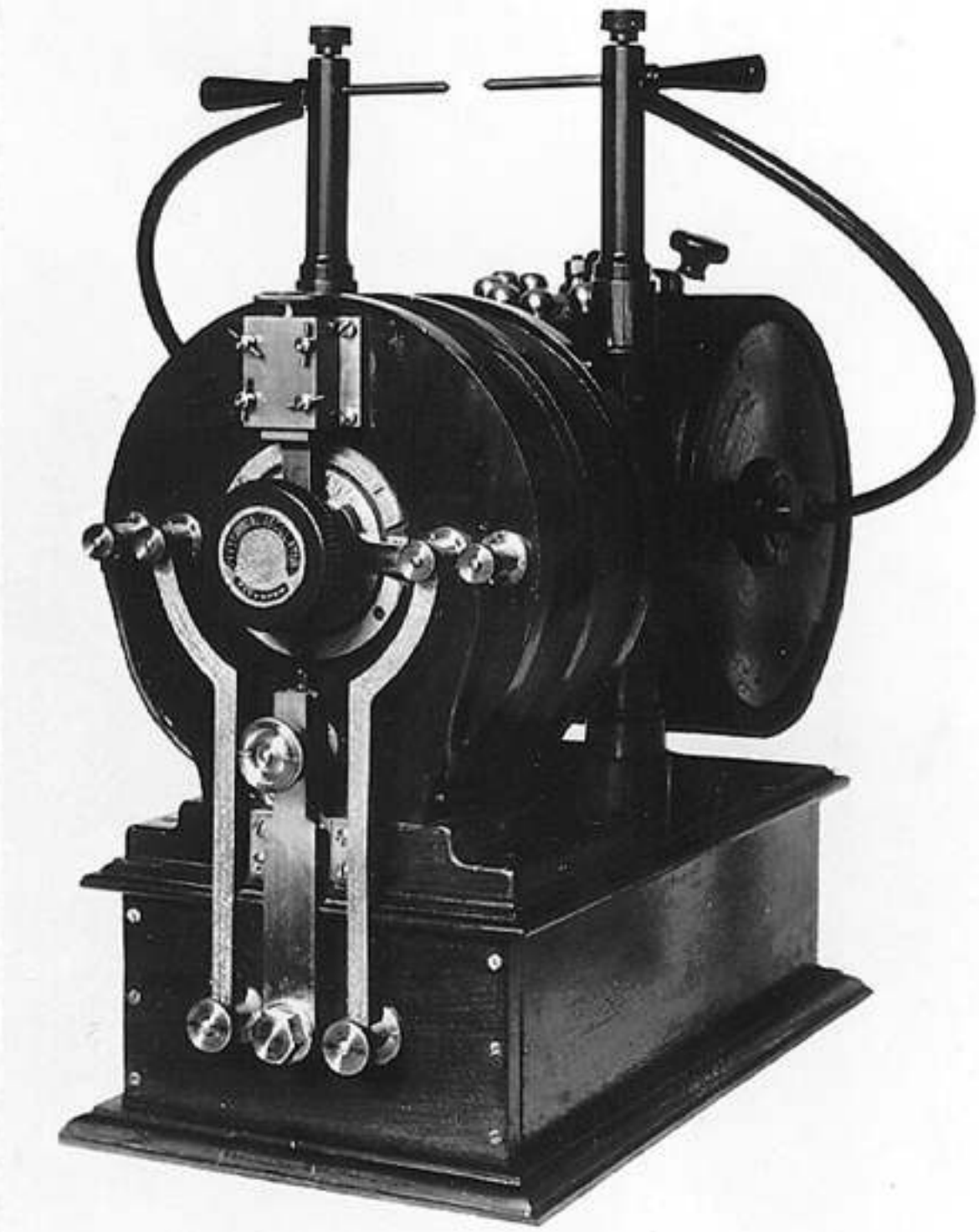

Fig. 2.

the spring contacts and adjusting screws as well as two massive terminals for the reception of the primary of the transformer. Two of the columns serve as condenser connections while the other pair is employed to join the binding posts of the switch in front to the self-inductance and condenser. The primary coil consists of a few turns of copper ribbon to the ends of which are soldered short rods fitting into the terminals referred to. The secondary is made in two parts, wound in a manner to reduce as much as possible the distributed capacity and at the same time enable the coil to withstand a very high pressure between its terminals at the center, which are connected to binding posts on two rubber columns projecting from the primary. The circuit connections may be slightly varied but ordinarily they are as diagrammatically illustrated in the Electrical

Experimenter for May on page 89, relating to my oscillation transformer photograph of which appeared on page 16 of the same number. The operation is as follows: When the switch is thrown on, the current from the supply circuit rushes through the self-induction coil, magnetizing the iron core within and separating the contacts of the controller. The high tension induced current then charges the condenser and upon

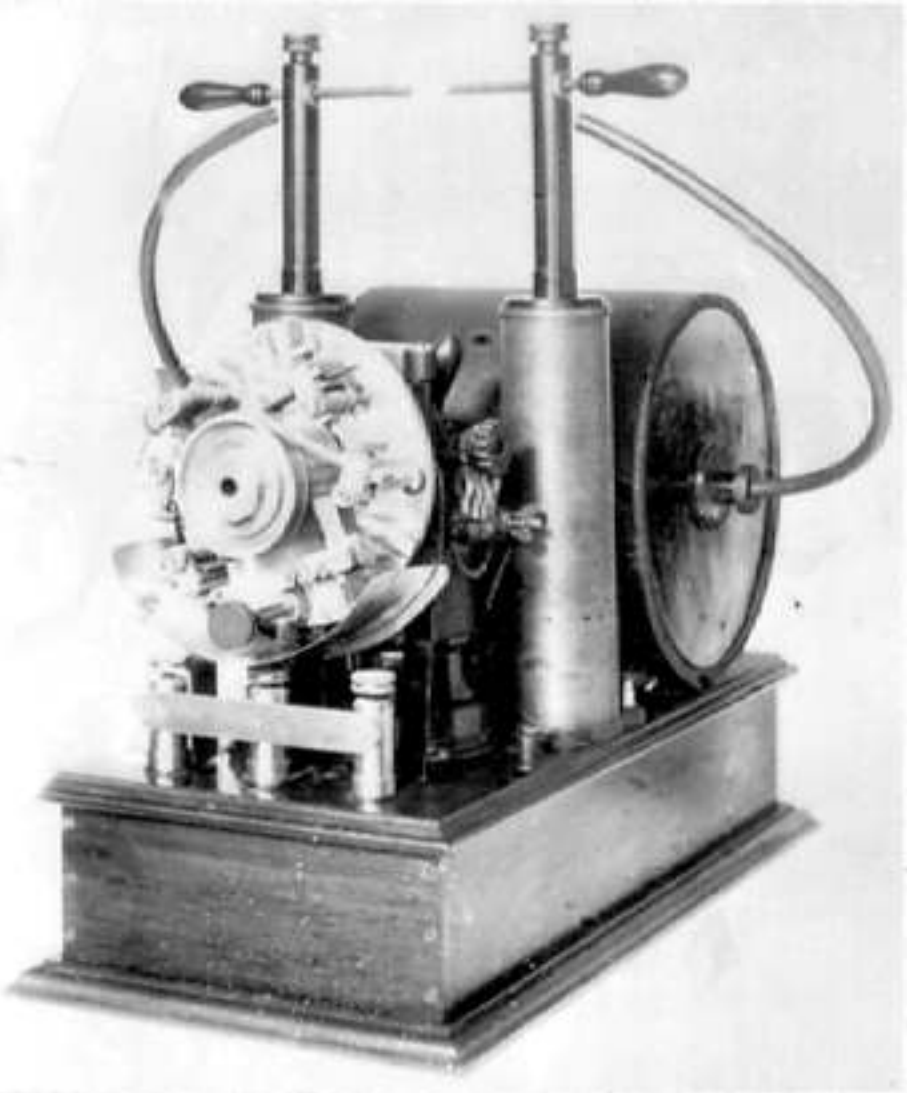

Fig. 3.

closure of the contacts the accumulated energy is released through the primary, giving rise to a long series of oscillations which excite the tuned secondary circuit.

This device has proved highly serviceable in carrying on laboratory experiments of all kinds. For instance, in studying phenomena of impedance, the transformer was removed and a bent copper bar inserted in the terminals. The latter was often replaced by a large circular loop to exhibit inductive effects at a distance or to excite resonant circuits used in various investigations and measurements. A transformer suitable for any desired performance could be readily improvised and attached to the terminals and in this way much time and labor was saved. Contrary to what might be naturally expected, little trouble was experienced with the contacts, although the currents through them were heavy, namely, proper conditions of resonance existing, the great flow occurs only when the circuit is closed and no destructive arcs can develop. Originally I employed platinum and iridium tips but later replaced them by some of meteorite and finally of tungsten. The last have given the best satisfaction, permitting working for hours and days without interruption.

Fig. 2 illustrates a small oscillator designed for certain specific uses. The underlying idea was to attain great activities during minute intervals of time each succeeded by a comparatively long period of inaction. With this object a large self-induction and a

quick-acting break were employed owing to which arrangement the condenser was charged to a very high potential. Sudden secondary currents and sparks of great volume were thus obtained, eminently suitable for welding thin wires, flashing lamp filaments, igniting explosive mixtures and kindred applications. The instrument was also adapted for battery use and in this form was a very effective igniter for gas engines on which a patent bearing number 609,250 was granted to me August 16, 1898.

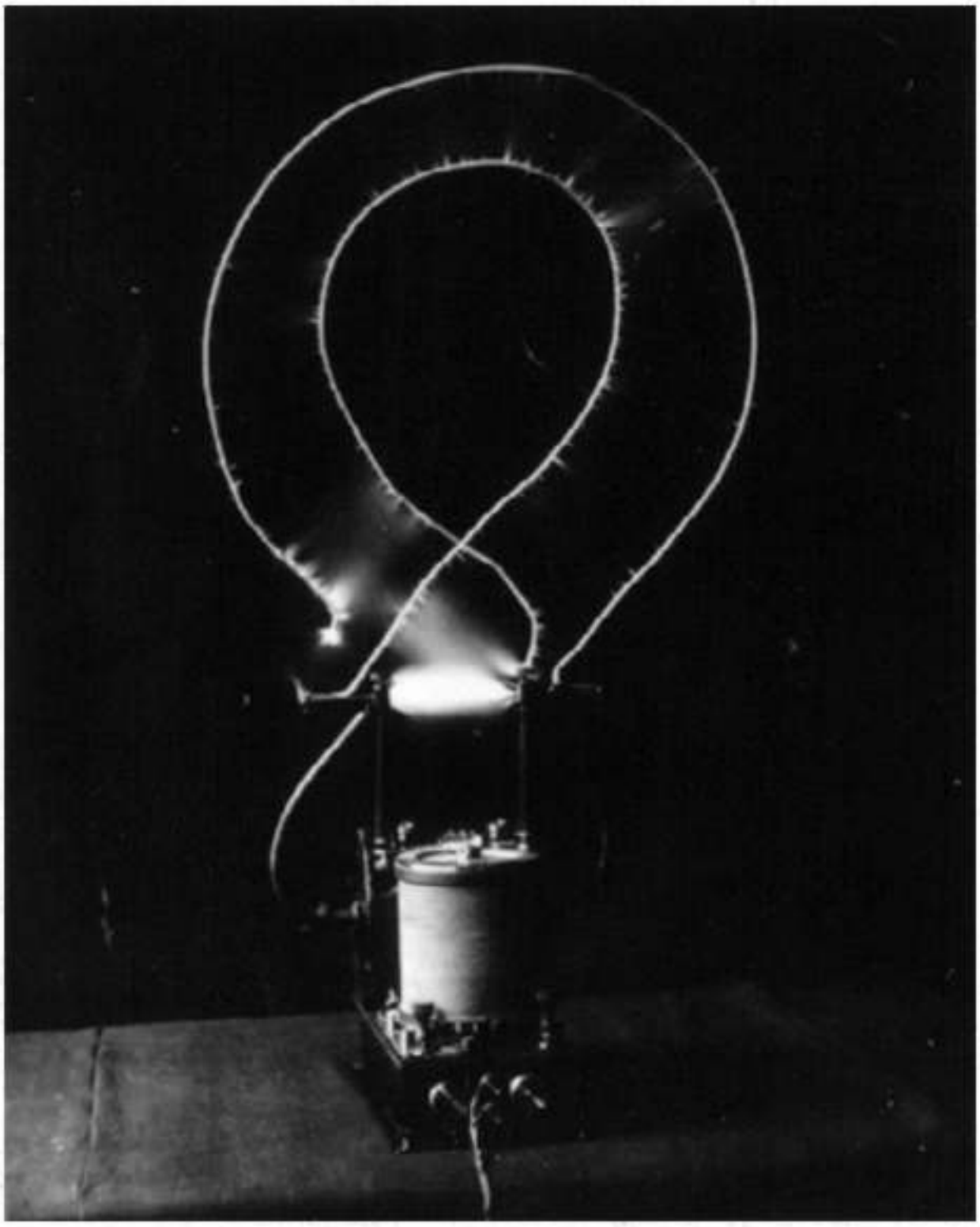

Fig. 4.

Fig. 3 represents a large oscillator of the first class intended for wireless experiments, production of Röntgen rays and scientific research in general. It comprises a box containing two condensers of the same capacity on which are supported the charging coil and transformer. The automatic circuit controller, hand switch and connecting posts are mounted on the front plate of the inductance spool as is also one of the contact springs. The condenser box is equipped with three terminals, the two external ones serving merely for connection while the middle one carries a contact bar with a screw for regulating the interval during which the circuit is closed. The vibrating spring itself, the sole function of which is to cause periodic interruptions, can be adjusted in its

strength as well as distance from the iron core in the center of the charging coil by four screws visible on the top plate so that any desired conditions of mechanical control might be secured. The primary coil of the transformer is of copper sheet and taps are made at suitable points for the purpose of varying, at will, the number of turns. As in Fig. 1 the inductance coil is wound in two sections to

Fig. 5.

adapt the instrument both to 110 and 220 volt circuits and several secondaries were provided to suit the various wave lengths of the primary. The output was approximately 500 watt with damped waves of about 50,000 cycles per second. For short periods of time undamped oscillations were produced in screwing the vibrating spring tight against the iron core and separating the contacts by the adjusting screw *which also performed the function of a key*. With this oscillator I made a number of important observations and it was one of the machines exhibited at a lecture before the New York Academy of Sciences in 1897.

Fig. 4 is a photograph of a type of transformer in every respect similar to the one illustrated in the May, 1919, issue of the Electrical Experimenter to which reference has already been made. It contains the identical essential parts, disposed in like manner, but was specially designed for use on supply circuits of higher tension, from 220 to 500 volts or more. The usual adjustments are made in setting the contact spring and shifting the iron core within the inductance coil up and down by means of two screws. In order to prevent injury through a short-circuit, fuses are inserted in the lines. The instrument was photographed in action, generating undamped oscillations from a 220 volt lighting circuit.

Fig. 5 shows a later form of transformer principally intended to replace Rhumkorf coils. In this instance a primary is employed, having a much greater number of turns

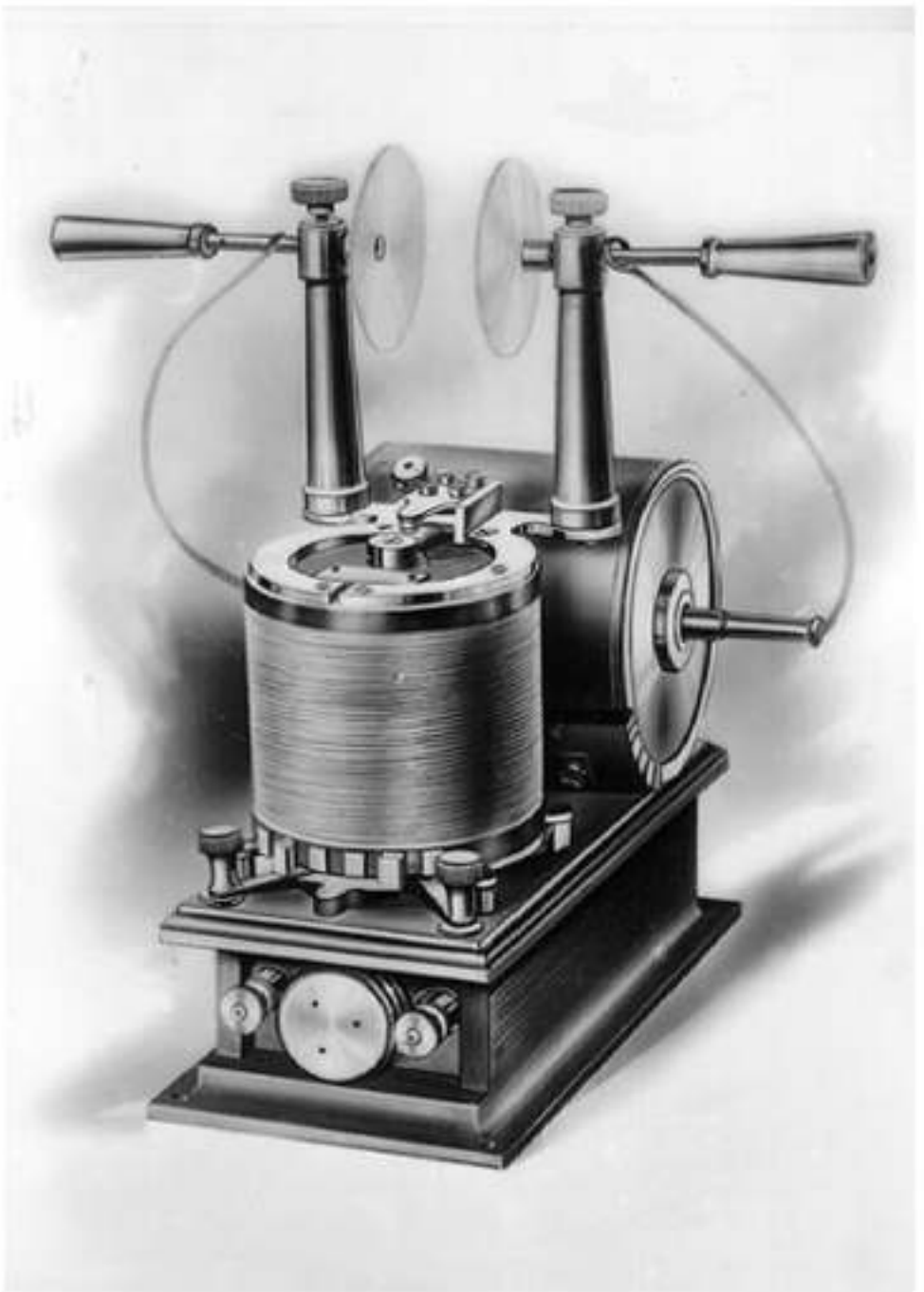

Fig. 6.

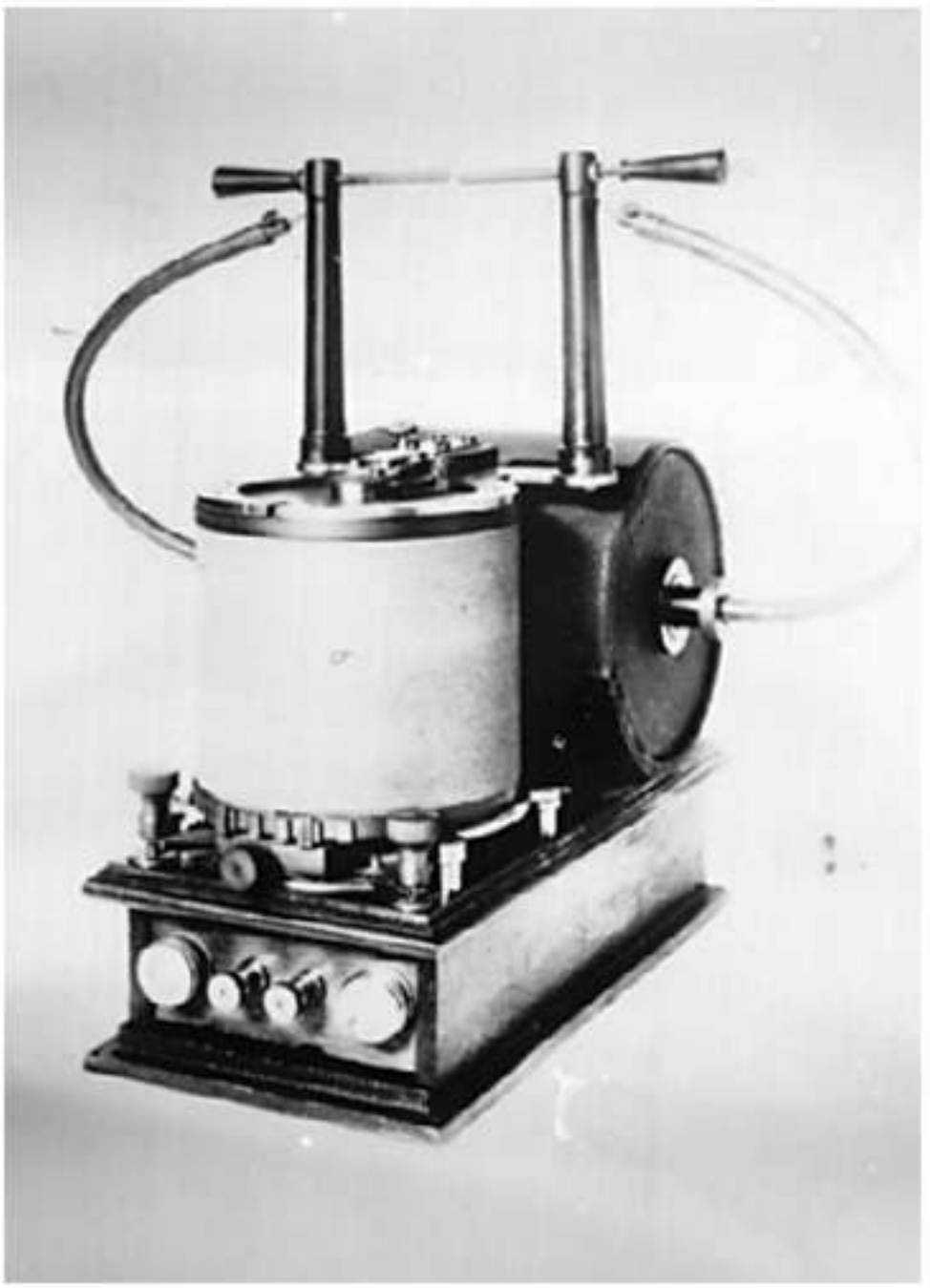

Fig. 7.

and the secondary is closely linked with the same. The currents developed in the latter, having a tension of from 10,000 to 30,000 volts, are used to charge condensers and operate an independent high frequency coil as customary. The controlling mechanism is of somewhat different construction but the core and contact spring are both adjustable as before.

Fig. 6 is a small instrument of this type, particularly intended for ozone production or sterilization. It is remarkably efficient for its size and can be connected either to a 110 or 220 volt circuit, direct or alternating, preferably the former.

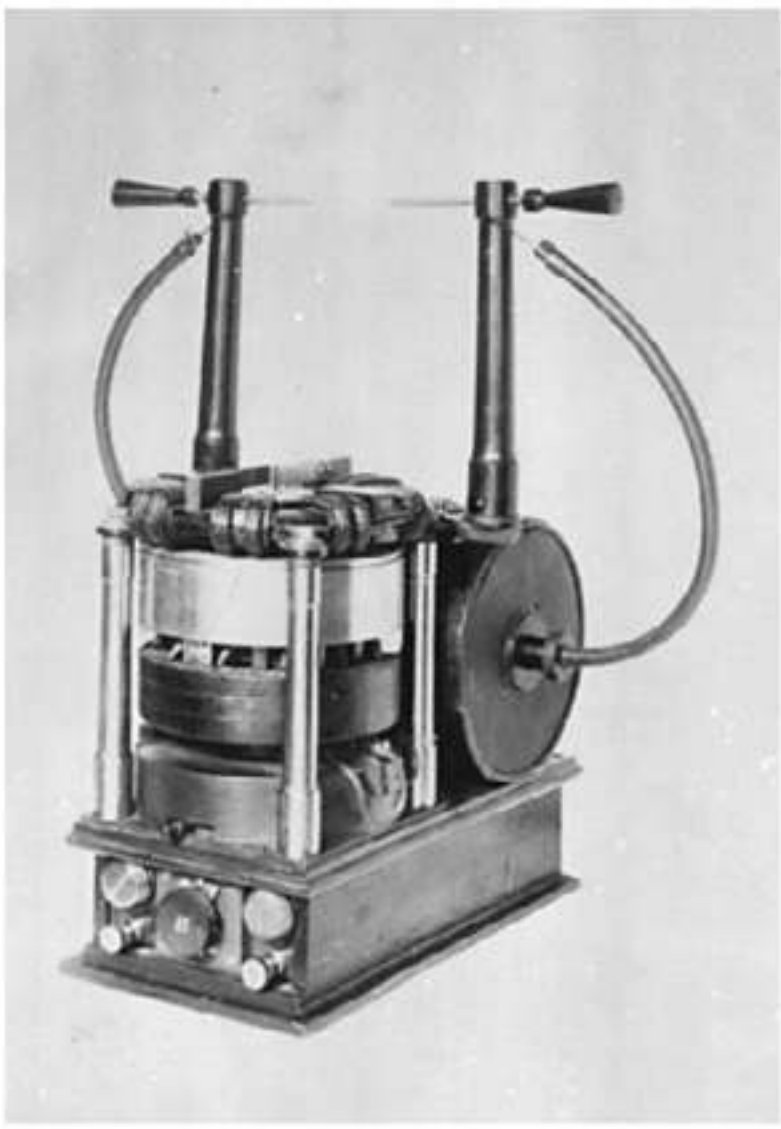

Fig. 8.

In Fig. 7 is shown a photograph of a larger transformer of this kind. The construction and disposition of the parts is as before but there are two condensers in the box, one of which is connected in the circuit as in the previous cases, while the other is in shunt to the primary coil. In this manner currents of great volume are produced in the latter and the secondary effects are accordingly magnified. The introduction of an additional tuned circuit secures also other advantages but the adjustments are rendered more difficult and for this reason it is desirable to use such an instrument in the production of currents of a definite and unchanging frequency.

Fig. 8 illustrates a transformer with rotary break. There are two condensers of the same capacity in the box which can be connected in series or multiple. The charging inductances are in the form of two long spools upon which are supported the secondary terminals. A small direct current motor, the speed of which can be varied within wide limits, is employed to drive a specially constructed make and break. In other features the oscillator is like the one illustrated in Fig. 3 and its operation will be readily understood from the foregoing. This transformer was used in my wireless experiments

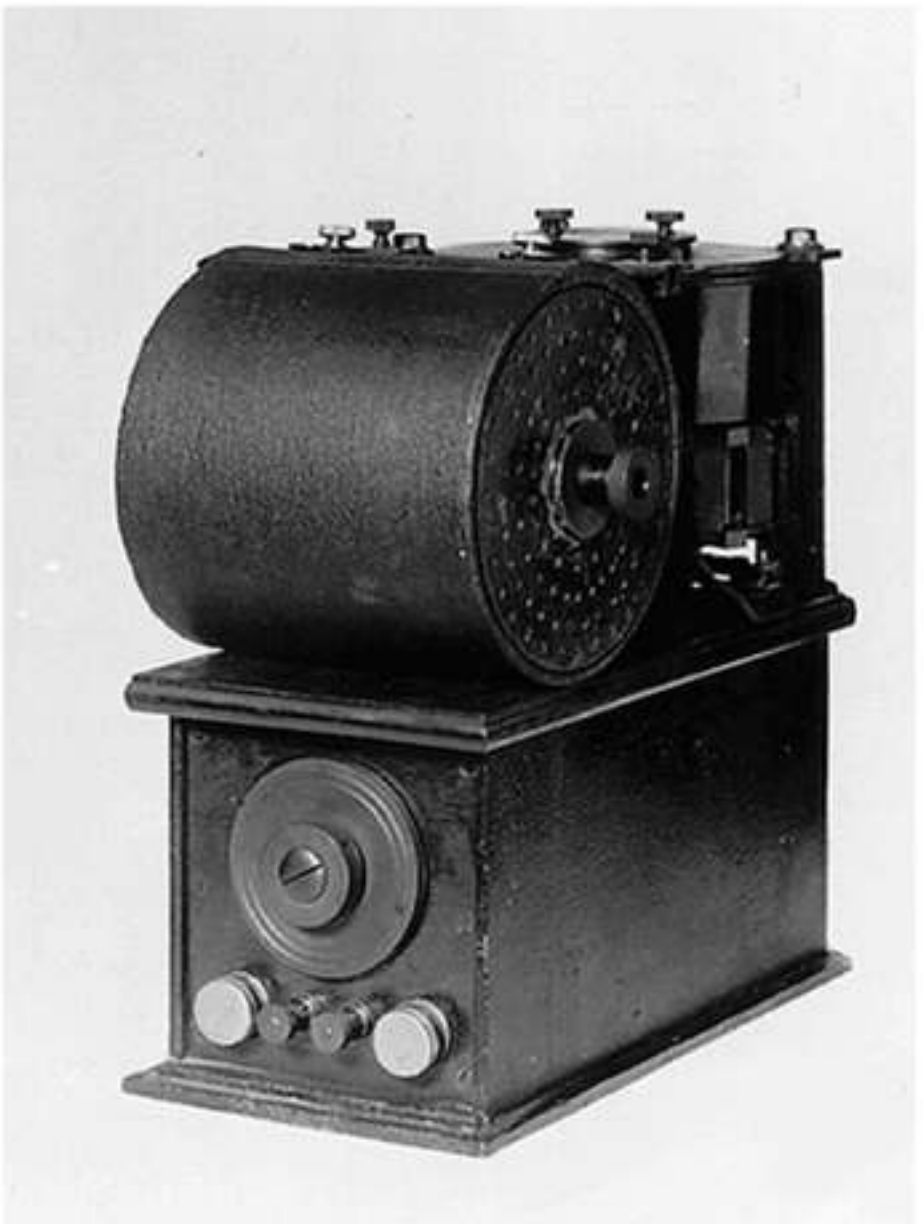

Fig. 9.

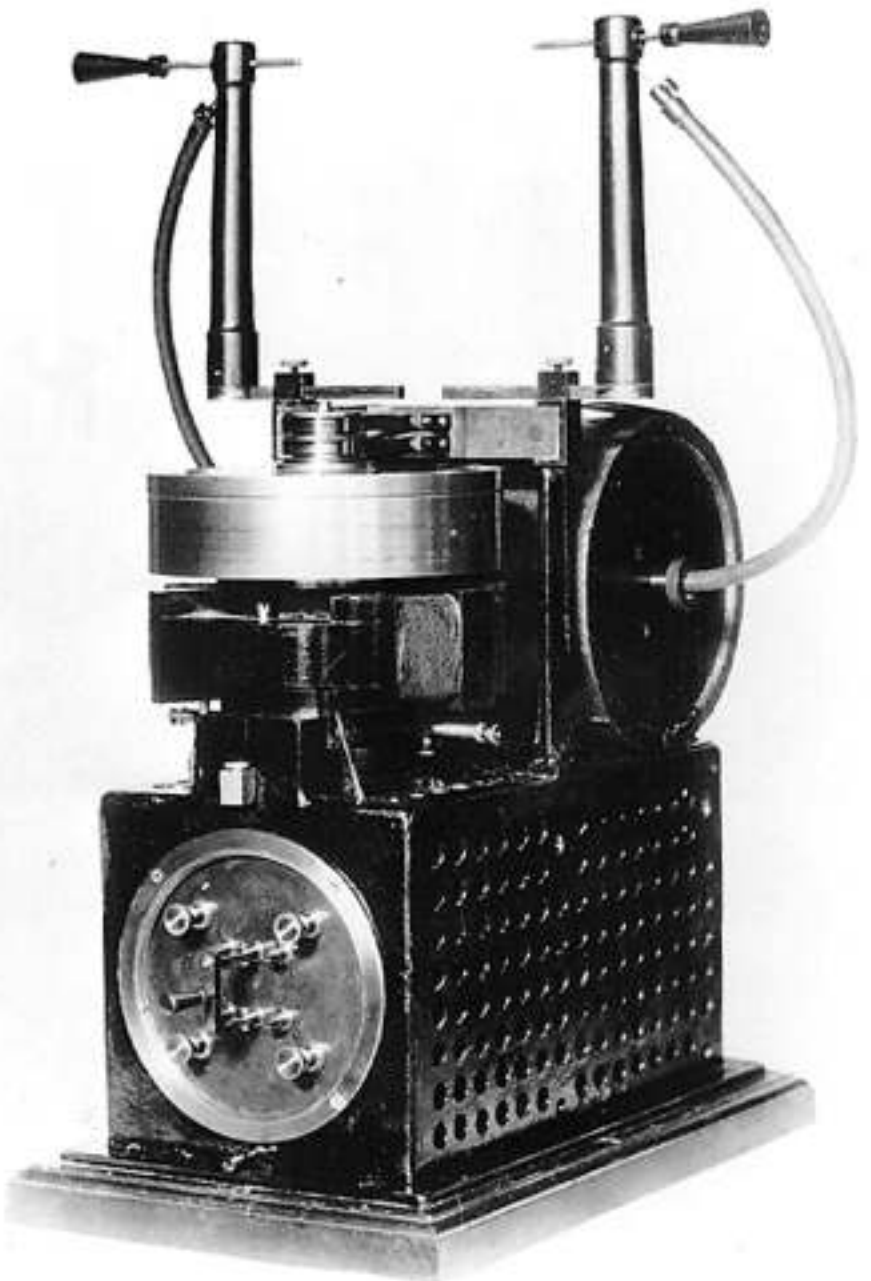

Fig. 10.

and frequently also for lighting the laboratory by my vacuum tubes and was likewise exhibited at my lecture before the New York Academy of Sciences above mentioned.

Coming now to machines of the second class, Fig. 9 shows an oscillatory transformer comprising a condenser and charging inductance enclosed in a box, a transformer and a mercury circuit controller, the latter being of a construction described for the first time in my patent No. 609,251 of August 16, 1898. It consists of a motor driven hollow pulley containing a small quantity of mercury which is thrown outwardly against the walls of the vessel by centrifugal force and entrains a contact wheel which periodically closes and opens the condenser circuit. By means of adjusting screws

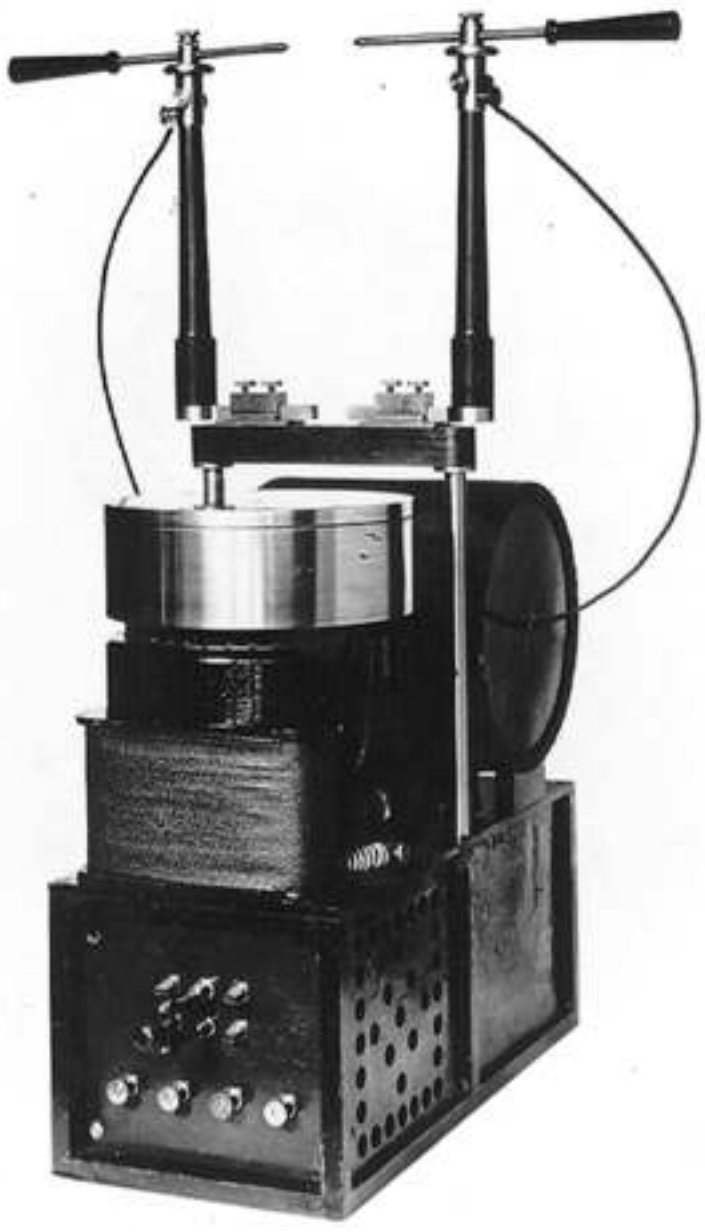

Fig. 11.

above the pulley, the depth of immersion of the vanes and consequently, also, the duration of each contact can be varied at desire and thus the intensity of the effects and their character controlled. This form of break has given thorough satisfaction, working continuously with currents of from 20 to 25 amperes. The number of interruptions is usually from 500 to 1,000 per second but higher frequencies are practicable. The space occupied is about 10" × 8" × 10" and the output approximately ½ kW.

In the transformer just described the break is exposed to the atmosphere and a slow oxidation of the mercury takes place. This disadvantage is overcome in the instrument shown in Fig. 10, which consists of a perforated metal box containing the condenser and charging inductance and carrying on the top a motor driving the break, and a transformer. The mercury break is of a kind to be described and operates on the

Fig. 12.

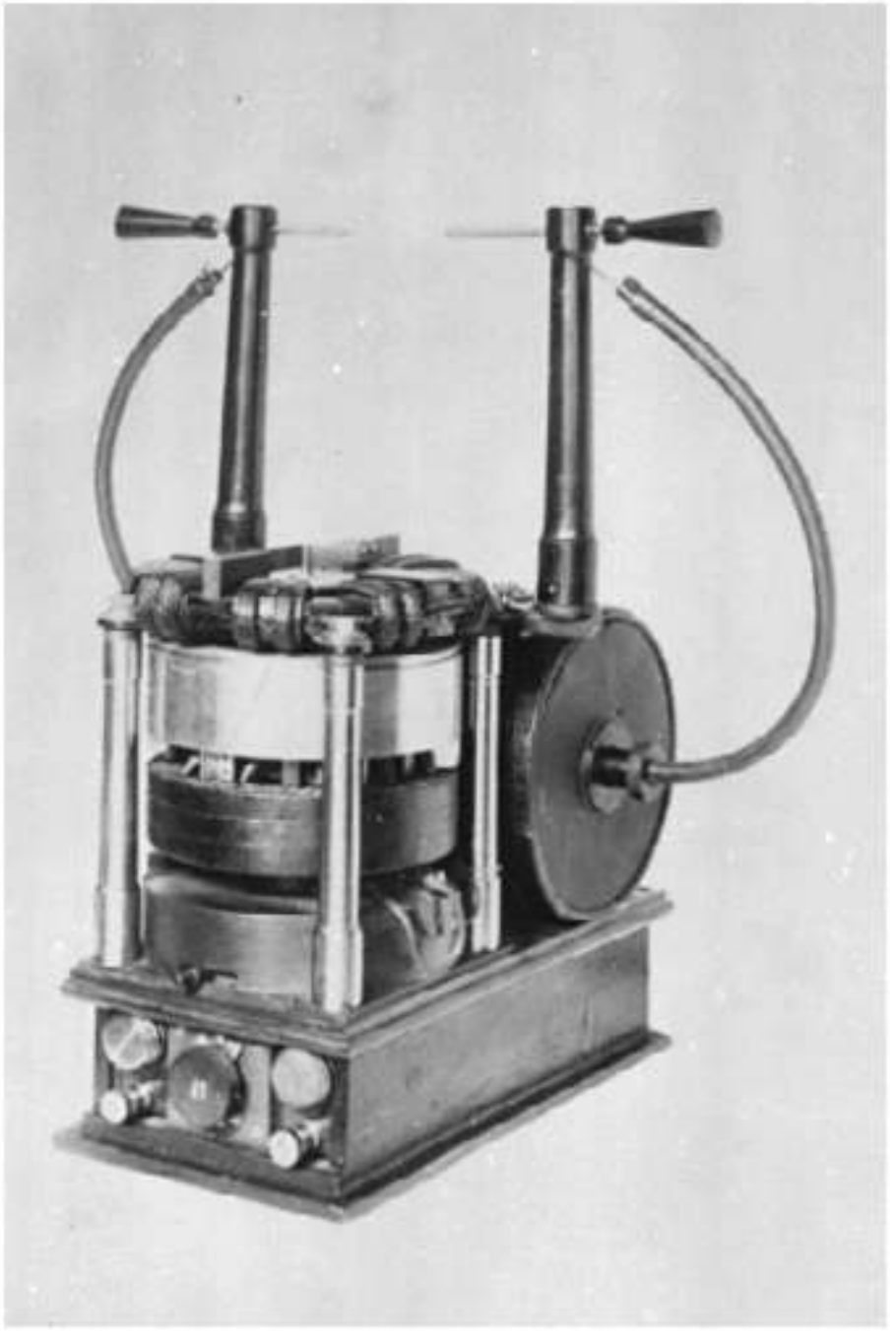

Fig. 13.

principle of a jet which establishes, intermittently, contact with a rotating wheel in the interior of the pulley. The stationary parts are supported in the vessel on a bar passing through the long hollow shaft of the motor and a mercury seal is employed to effect hermetic closure of the chamber enclosing the circuit controller. The current is led into the interior of the pulley through two sliding rings on the top which are in series with the condenser and primary. The exclusion of the oxygen is a decided improvement, the deterioration of the metal and attendant trouble being eliminated and perfect working conditions continuously maintained.

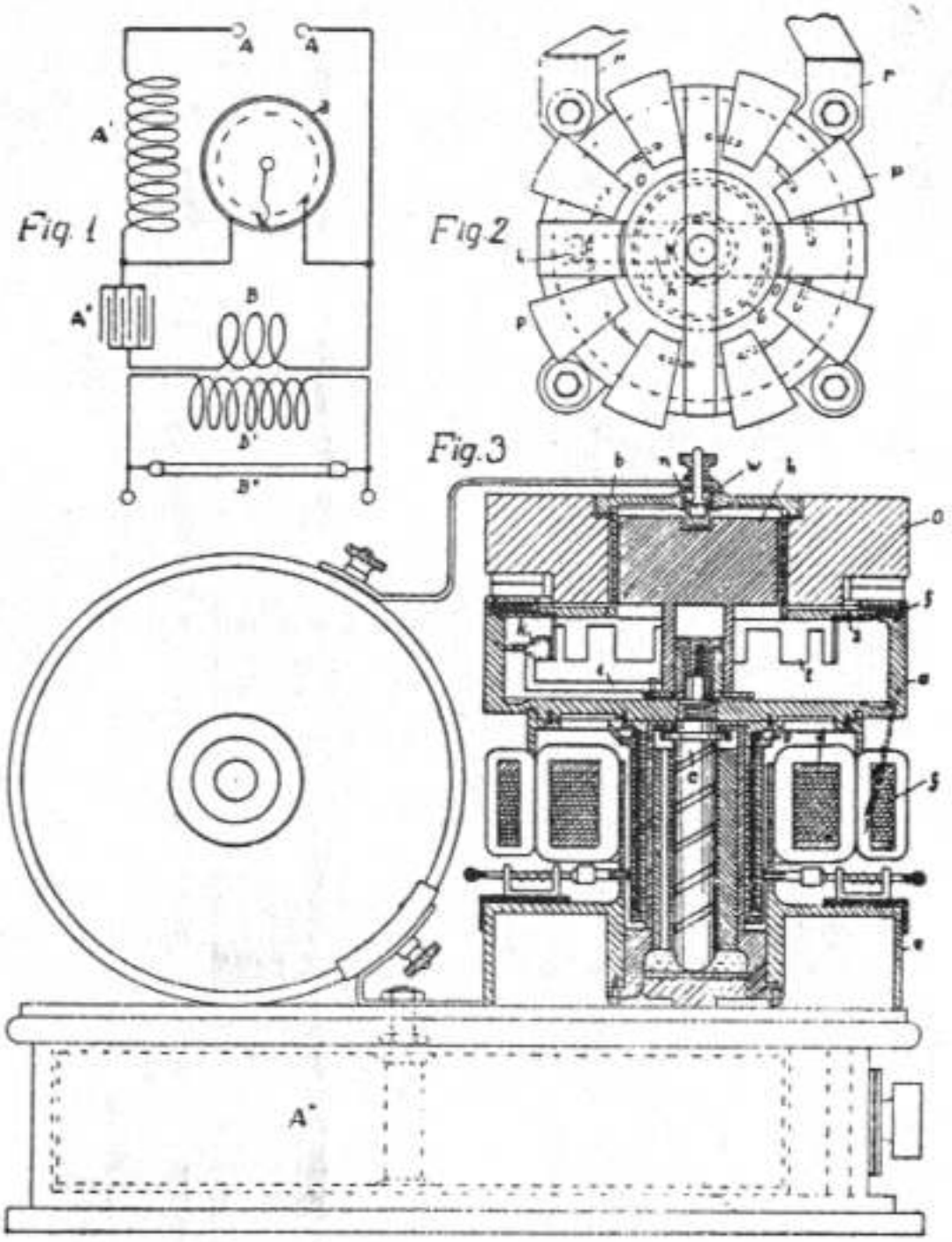

Fig. 14.

Fig. 11 is a photograph of a similar oscillator with hermetically inclosed mercury break. In this machine the stationary parts of the interrupter in the interior of the pulley were supported on a tube through which was led an insulated wire connecting to one terminal of the break while the other was in contact with the vessel. The sliding rings were, in this manner, avoided and the construction simplified. The instrument was designed for oscillations of lower tension and frequency requiring primary currents of comparatively smaller amperage and was used to excite other resonant circuits.

Fig. 12 shows an improved form of oscillator of the kind described in Fig. 10, in which the supporting bar through the hollow motor shaft was done away with, the device pumping the mercury being kept in position by gravity, as will be more fully

explained with reference to another figure. Both the capacity of the condenser and primary turns were made variable with the view of producing oscillations of several frequencies.

Fig. 13 is a photographic view of another form of oscillatory transformer with hermetically sealed mercury interrupter, and Fig. 14 diagrams showing the circuit

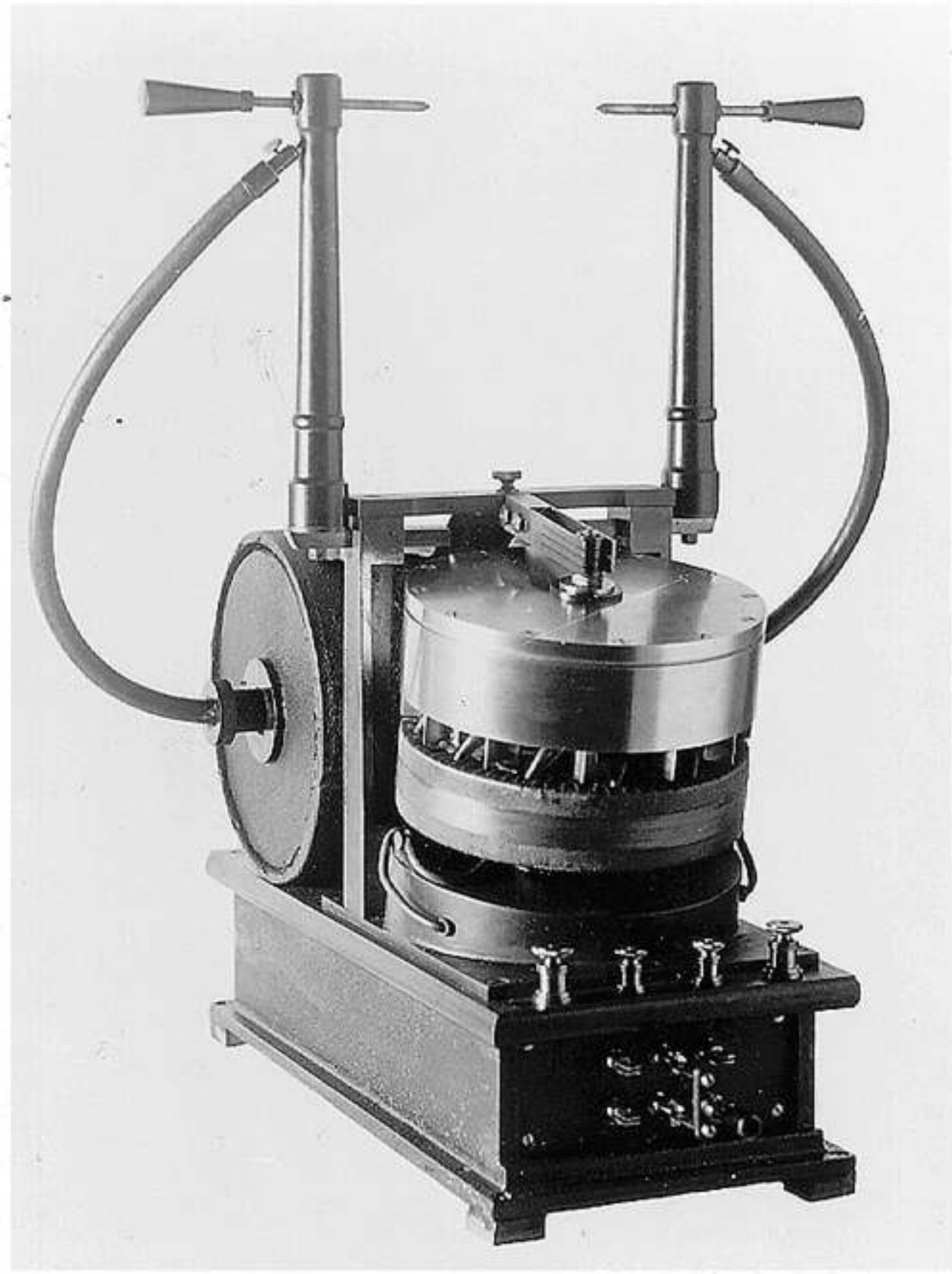

Fig. 15.

connections and arrangement of parts reproduced from my patent, No. 609,245, of August 16, 1898, describing this particular device. The condenser, inductance, transformer and circuit controller are disposed as before, but the latter is of different construction, which will be clear from an inspection of Fig. 14. The hollow pulley *a* is secured to a shaft *c* which is mounted in a vertical bearing passing through the stationary

field magnet *d* of the motor. In the interior of the vessel is supported, on frictionless bearings, a body *h* of magnetic material which is surrounded by a dome *b* in the center of a laminated iron ring, with pole pieces *oo* wound with energizing coils *p*. The ring is supported on four columns and, when magnetized, keeps the body *h* in position while the pulley is rotated. The latter is of steel, but the dome is preferably made of German silver burnt black by acid or nickeled. The body *h* carries a short tube *k* bent, as indicated, to catch the fluid as it is whirled around, and project it against the teeth

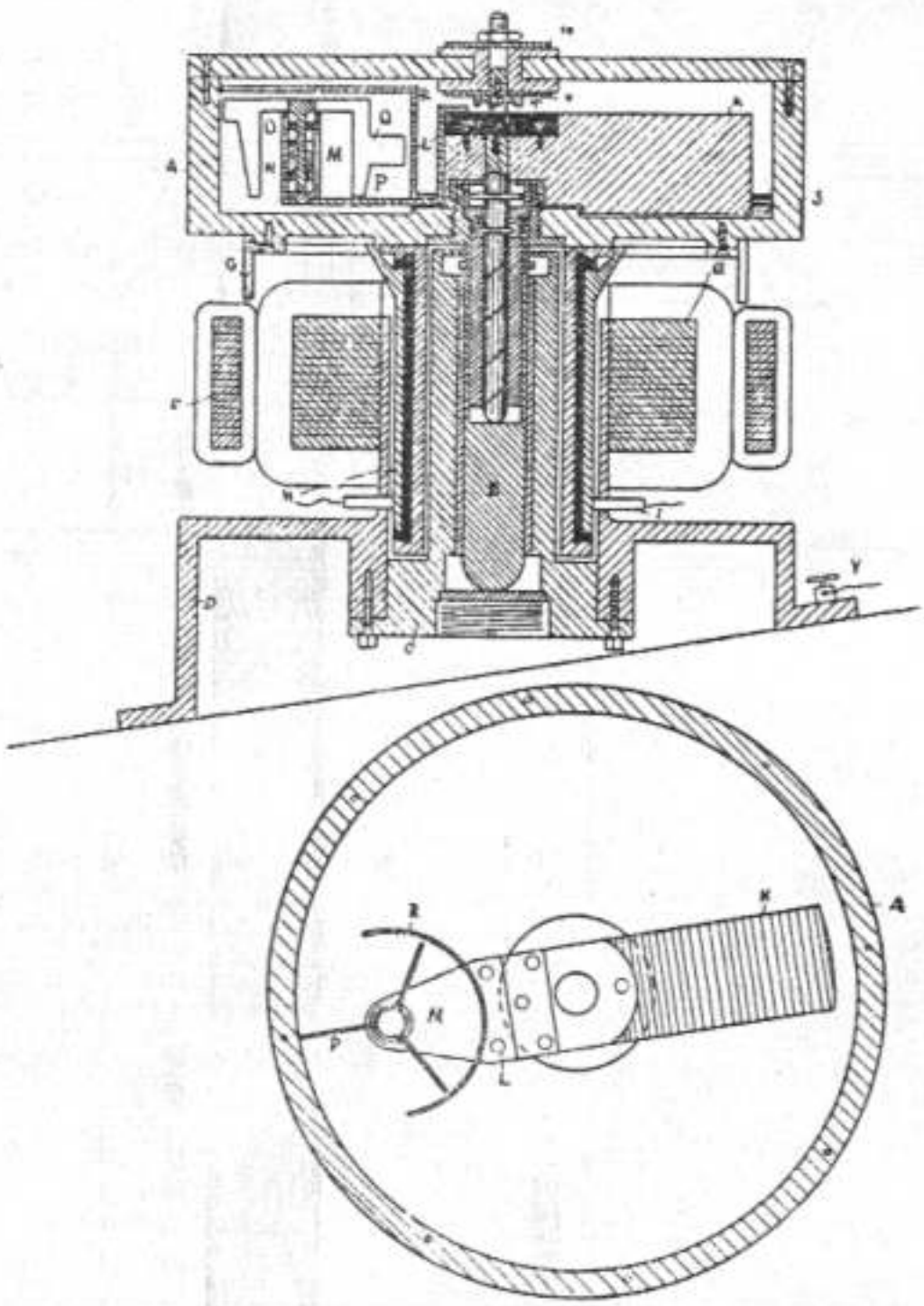

Fig. 16.

of a wheel fastened to the pulley. The wheel is insulated and contact from it to the external circuit is established through a mercury cup. As the pulley is rapidly rotated a jet of the fluid is thrown against the wheel, *thus making and breaking contact about* 1,000 *times per second.* The instrument works silently and, owing to the absence of all deteriorating agents, keeps continually clean and in perfect condition. The number of interruptions per second may be much greater, however, so as to make the currents suitable for wireless telephony and like purposes.

A modified form of oscillator is represented in Figs. 15 and 16, the former being a photographic view and the latter a diagrammatic illustration showing the arrangement

Fig. 17.

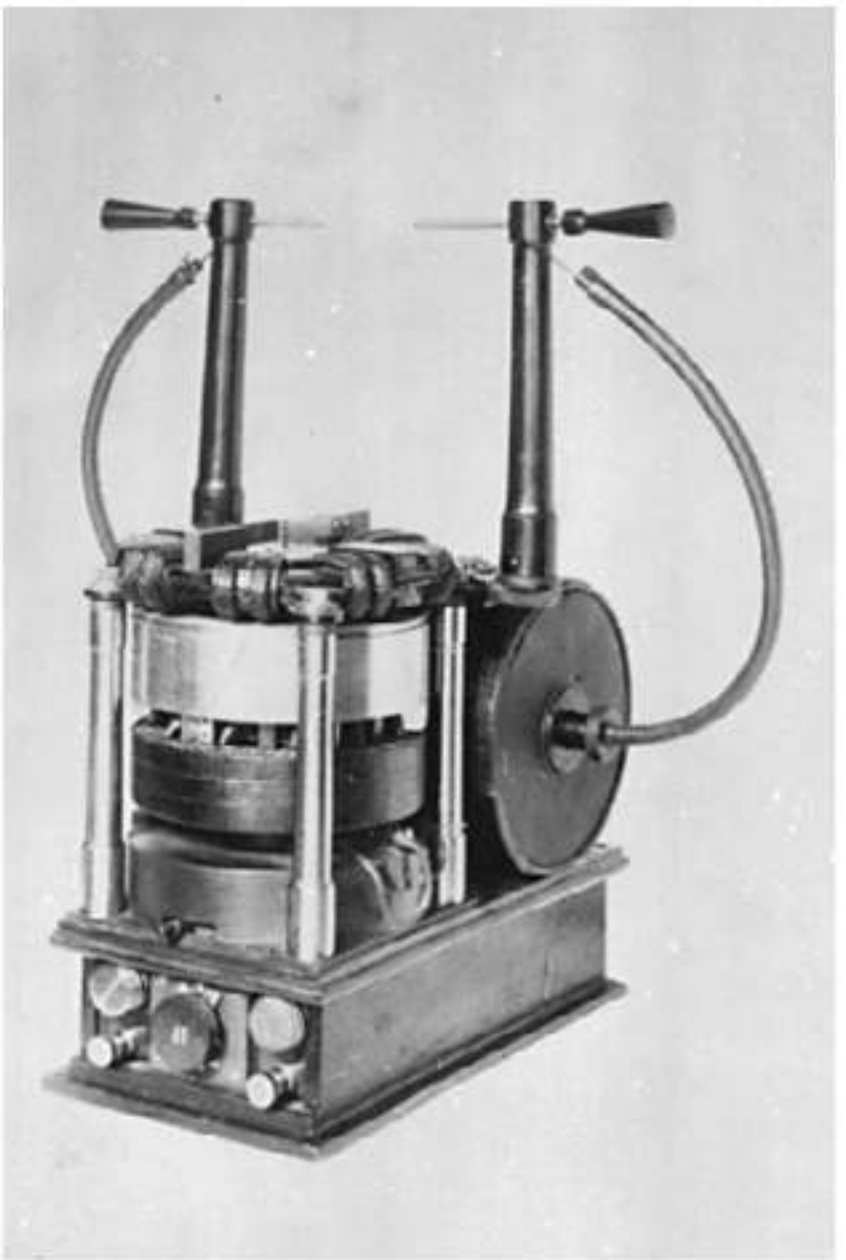

Fig. 18.

of the interior parts of the controller. In this instance the shaft *b* carrying the vessel *a* is hollow and supports, in frictionless bearings, a spindle *j* to which is fastened a weight *k*. Insulated from the latter, but mechanically fixed to it, is a curved arm L upon which is supported, freely rotatable, a break-wheel with projections QQ. The wheel is in electrical connection with the external circuit through a mercury cup and an insulated plug supported from the top of the pulley. Owing to the inclined position of the motor the weight *k* keeps the break-wheel in place by the force of gravity and as the pulley is rotated the circuit, including the condenser and primary coil of the transformer, is rapidly made and broken.

Fig. 17 shows a similar instrument in which, however, the make and break device is a jet of mercury impinging against an insulated toothed wheel carried on an insulated stud in the center of the cover of the pulley as shown. Connection to the condenser circuit is made by brushes bearing on this plug.

Fig. 18 is a photograph of another transformer with a mercury circuit controller of the wheel type, modified in some features on which it is unnecessary to dwell.

These are but a few of the oscillatory transformers I have perfected and constitute only a small part of my high frequency apparatus of which I hope to give a full description, when I shall have freed myself of pressing duties, at some future date.

DEVELOPMENTS IN PRACTICE AND ART OF TELEPHOTOGRAPHY*

The recent successful experiments by Edouard Belin of Paris in the transmission of photographs between New York City and St. Louis, a distance of 1000 miles, have naturally aroused new interest in this rather old art. Mr. Belin's apparatus has been examined with a knowledge of previous efforts in that direction, and it must be admitted that the French inventor has achieved a marked improvement. It is true that his apparatus in many of its features is old and well known, but all the details have been worked out skilfully and his photographic reproductions are not only good likenesses of the originals but are expressive in no small degree. In common with other arts the transmission of pictures to a distance has been brought to its present state of perfection by slow and gradual improvements effected in the course of 77 years. The literature on the subject is quite voluminous and difficult to peruse, as the articles are published in various languages and scattered through numerous periodicals. Only one complete and exhaustive work has been published in German by Dr. Arthur Korn of Munich and Dr. Bruno Glatzel.

FIRST PATENTS TAKEN OUT MANY YEARS AGO

The original idea is due to Alexander Bain, a Scotch mechanician, who secured a British patent disclosing the invention in 1843. His plan contemplated the transmission of printed letters, drawings and pictures in the following way: At the sending station a holder with insulated metal points was arranged to glide in the direction of the lines over a frame resting on the printed page to be reproduced at a distance. Within this frame, and at right angles to its plane, a number of short wires were imbedded in sealing wax, their lower ends being in contact with the letters which in turn were all electrically connected. As the holder moved back and forth the insulated metal points would be brought in and out of contact with the upper ends of the short wires, thus controlling the flow of the current through them. Each metal point was joined by a special line to the receiving station where there was a similar holder made to slide over chemically prepared paper laid on a grounded metal plate. When a battery at the transmitting end was connected with one of its poles to the letters and the other to the ground the current impulses traversing the line wires and the chemical paper would cause changes of color in the latter, thus reproducing the characters. A great number of points and line wires were required to attain satisfactory results and, realizing this objection, Bain proposed to avail himself of only one wire, but did not give full information in this regard. Subsequently Bonnelli and other inventors made improvements in his apparatus, reducing the number of the wires to a few. There is no doubt that, despite the manifest crudity of this system, it was quite capable of being used

---

* Electrical Review, Dec. 11, 1920.

commercially in the transmission of type as well as drawings and pictures and may yet be found valuable.

The first practical success was achieved by an Englishman, Frederick Collier Bakewell, who secured a British patent in 1847 on a process, some features of which have proved to be indispensable in later years. He employed as a transmitter a cylinder on which the characters were written with insulating ink. A metal point bore on the cylinder and advanced slightly with each revolution of the same exactly as in the older form of phonograph. A similar cylinder covered with chemical paper and equipped with a sliding point was provided at the receiving station. The cylinders being grounded and a battery included in the line wire connecting the transmitting and receiving points, the passage of the current resulted in a discoloration of the paper and reproduction of the written characters at the receiving end. Considering the period Bakewell's apparatus was surprisingly perfect, particularly in the feature of maintaining the rotating cylinders in synchronism for which purpose he provided an automatic as well as a hand correction. A controversy was waged between Bakewell and Bain for the honor of priority, but in this respect there can be no mistake. Bain was the originator of the idea while Bakewell was the first to carry it out successfully.

USE OF CHEMICAL PAPER CONSIDERED IMPRACTICAL

The use of chemical paper was considered objectionable, and in 1851 Hipp eliminated it, producing the impressions at the receiver with a magnet actuated by the transmitted impulses. It is curious, though, to observe that the modern art depends entirely on this very device. In 1855 Casselli modified the Bakewell apparatus by employing carefully synchronized pendulums at the transmitting and receiving stations, thus replacing the rotary motion by a to-and-fro movement as in the Bain arrangement. Casselli seems to have had more enterprise than his predecessors, and the apparatus which he perfected in 1860 was actually used with some success for a short time in service between Paris and several other cities in France. Its abandonment was probably due to the slowness of transmission and lack of demand for this kind of facility. It is singular that many treatises on physics and other text books mention Casselli while ignoring Bain and Bakewell.

Shortly after this Meyer perfected a system which was used with success in France, and may be fairly considered as the first thoroughly practical application of ideas in this field. A curious improvement was made by Gérard who, in 1865, proposed the use of flat disks in place of the cylinders of Bakewell. Ever since one wire was adopted for the transmission it became an imperative necessity to maintain perfect synchronism between the transmitter and receiver, and many inventors devoted their energy to this task. D'Arlincourt resorted to tuning forks, and his idea was subsequently carried out in a more perfect manner by Lacour. At about this time the invention reached America, and in 1870 Sawyer brought his ingenuity to bear on the evolution of a process in which he employed zinc clichés. These were very reliable and constituted a signal advance.

In 1880 Edison devised an apparatus on the principle of that used by Sawyer, except that the impressions were produced on paper in bas-relief. This idea was carried further by Dennison in instruments of the reciprocating type. Through the introduction of the Tesla alternating system of power transmission a novel means was afforded for operating transmitters and receivers. The use of synchronous motors was proposed first in 1893 by Sheehy.

DEVELOPMENTS PERMIT USE OF PHOTOGRAPHIC FILMS

In all cases without exception it was necessary to provide an actual print, drawing or sketch to be transmitted until Lenoir introduced photographic films into the art, making possible the transmission of any kind of picture. This was a great step forward, but the honor of the first practical success belongs to an American engineer, N. Amstutz, who used photographic sending clichés in relief for the first time and with complete success. Amstutz was a true pioneer, and his improvement is essential in the carrying out of the modern processes. It is true that as early as 1865, a Frenchman, Hubert, had suggested the use of letters written with thick ink, but this was of little value, and Amstutz was undoubtedly the first to produce and use the clichés on which the up-to-date art vitally depends. Perfectly satisfactory demonstrations were made with his devices in this country more than 20 years ago, when pictures were transmitted over telegraph wires to great distances. Samples of his work have been preserved which clearly show how much be was ahead of his time.

Following Amstutz, Dunlany, Palmer, Mills and other American inventors took up picture transmission with more or less success. By this time the necessity presented itself for increasing the rapidity of the process by greater speed of the devices as well as multiplex transmission. The Belgian inventor, Carbonelle, made an important improvement in this direction when he introduced the telephone diaphragm carrying a stylus for making the impressions.

Of all inventors, however, Dr. Korn was the most successful as well as prolific in the suggestion of improvements, his photographic method of recording carried out in 1903 being the most significant. The general idea of photographic recording had been already advanced by George Little, and a few years later Dillon took out a patent involving the use of sensitized paper and a mirror reflecting a beam of light on the same. But it is obvious that at that time it would have been hardly practicable to use this suggestion, as photography was not sufficiently advanced. In illustration of this it may be mentioned that in 1892 the attention of the scientific world was directed to a wonderfully sensitive receiver, consisting of an electron stream maintained in a delicately balanced condition in a vacuum bulb, by means of which it was proposed to use photography in the transmission of telegraphic and telephonic messages through the Atlantic cables, and later also by wireless. This proposal was met by unsurmountable objections to the photographic method. Indeed, the Belin process has been rendered possible largely through the great improvements in the sensitive films which have been evolved in response to the urgent demands of the motion picture and also under the stimulus of the recent war.

SELENIUM CELL AND VACUUM TUBE USED TO TRANSMIT AND RECEIVE

In the apparatus invented by Dr. Korn a selenium cell is used at the transmitter to vary the intensity of the sending current, and at the receiving station he employs a vacuum tube of high intensity which throws its light through a fine slot on a sensitive plate. The tube is excited by high-frequency currents supplied from a Tesla transformer and may be flashed up many thousand times per second. The motion of the receiver element is effected either by a wire galvanometer, oscillograph or telephone diaphragm. The Korn system has been used for some years past with success in Germany and other countries. In fact, it has been operated for some time even by wireless. Patents on this mode of transmission have been granted in 1898 and 1899 to Küster and G. Williams, but the arrangements involved the employment of Hertz waves and were impracticable. Later Frederick Braun, Pansa and Knudsen secured patents which, however, are equally defective. Success in this direction has been achieved

so far only by Korn, Berjonneau and T. Baker. Invariably the inventors employ a wire galvanometer which is especially suitable for great speed. Telautographic transmission by similar means through wires as well as wireless is now common and is effected by employing a transmitter of two components, the original idea of which is due to an Englishman, Jones, who made that suggestion as early as 1855.

PRESENT DEVELOPMENTS INVOLVE MANY OLD PRINCIPLES

To this short story of picture transmission Belin has contributed the latest chapter. The process he has finally adopted after many years of persistent effort involves the use of two cylinders rotating in synchronism — one for transmitting and the other for reproducing. The former is of copper and is prepared for operation by having its surface coated with a thin shellac solution, wrapping a carbon print of the photograph about it with its face to the cylinder and immersing the whole in hot water, this causing the gelatine to adhere to the cylinder surface in proportion to the degree of blackness so that a likeness of the print in bas-relief is obtained. On this cylinder bears the stylus of a microphone diaphragm which is slowly moved forward by the revolution of the cylinder as in a phonograph. In this manner the pressure of the carbon contacts is varied in conformity with the changes of the surface, and the microphone currents pass over the transmitting wire to the receiving station where they cause corresponding deflections of a mirror forming part of a highly sensitive dead-beat oscillograph. A strong beam of light reflected from the mirror traverses a screen graduated from full transparency to opacity and is led through a microscopic opening to the sensitive film wrapped around the receiving cylinder. Special provisions are made to keep the cylinders exactly in step as this is indispensable to good performance. The film is, of course, protected against the external light, and when the operation is completed it is developed as usual so that either a positive or negative print is obtained according to the position of the screen. There is nothing in his apparatus which is fundamentally novel; in fact, every feature of the same has been disclosed in the prior art. Even the graduated screen, which is one of the most essential parts, has been employed before by Dr. Korn. But Mr. Belin has displayed considerable ingenuity and skill in all the details, and his reproduced photographs are most excellent. There is every reason to believe that his efforts will be rewarded by an extensive practical application of his devices.

TELEVISION TO BE NEXT STEP IN PROGRESS OF TRANSMISSION

The transmission of photographs constitutes only the first step towards the immeasurably greater achievement of television. By this is meant instantaneous transmission of visual impressions to any distance by wire or wireless. It is a subject to which I have devoted more than 25 years of close study. Two of the impediments which years ago seemed unsurmountable have been successfully overcome, but great difficulties are still in the way. These are encountered in the inertia of the sensitive cells and the enormous speed required to make possible the vision of persons, objects or scenes as in life. It is the problem of constructing a transmitter analogous to the lens and retina of the eye, providing a medium of conveyance corresponding to the optic nerve, and a receiver organized similarly to the brain. It is a gigantic task, but I am confident that the world will witness its actual accomplishment in the near future.

II
ARTICLES ON SOME GENERAL PROBLEMS

ON ELECTRICITY*

THE ADDRESS ON THE OCCASION OF THE COMMEMORATION OF THE INTRODUCTION OF NIAGARA FALLS POWER IN BUFFALO AT THE ELLICOTT CLUB, JANUARY 12, 1897.

I have scarcely had courage enough to address an audience on a few unavoidable occasions, and the experience of this evening, even as disconnected from the cause of our meeting, is quite novel to me. Although in those few instances, of which I have retained agreeable memory, my words have met with a generous reception, I never deceived myself, and knew quite well that my success was not due to any excellency in the rhetorical or demonstrative art. Nevertheless, my sense of duty to respond to the request with which I was honored a few days ago was strong enough to overcome my very grave apprehensions in regard to my ability of doing justice to the topic assigned to me. It is true, at times — even now, as I speak — my mind feels full of the subject, but I know that, as soon as I shall attempt expression, the fugitive conceptions will vanish, and I shall experience certain well known sensations of abandonment, chill and silence. I can see already your disappointed countenances and can read in them the painful regret of the mistake in your choice.

These remarks, gentlemen, are not made with the selfish desire of winning your kindness and indulgence on my shortcomings, but with the honest intention of offering you an apology for your disappointment. Nor are they made — as you might be disposed to think — in that playful spirit which, to the enjoyment of the listeners, is often displayed by belated speakers. On the contrary, I am deeply earnest in my wish that I were capable of having the fire of eloquence kindled in me, that I might dwell in adequate terms on this fascinating science of electricity, on the marvelous development which electrical annals have recorded and which, as one of the speakers justly remarked, stamp this age as the Electrical Age, and particularly on the great event we are commemorating this day. Unfortunately, this my desire must remain unfulfilled. but I am hopeful that in my formless and incomplete statements, among the few ideas and facts I shall mention there may be something of interest and usefulness, something befitting this unique occasion.

Gentlemen, there are a number of features clearly discernible in, and characteristic of, human intellectual progress in more recent times — features which afford great comfort to the minds of all those who have really at heart the advancement and welfare of mankind.

First of all, the inquiry, by the aid of the microscope and electrical instruments of precision, into the nature of our organs and senses, and particularly of those through which we commune directly with the outside world and through which knowledge is conveyed to our minds, has revealed their exact construction and mode of action, which

---

* Electrical Review, Jan. 27, 1897.

is in conformity with simple and well established physical principles and laws. Hence the observations we make and the facts we ascertain by their help are *real* facts and observations, and our knowledge is *true* knowledge. To illustrate: Our knowledge of form, for instance, is dependent upon the positive fact that light propagates in straight lines, and, owing to this, the image formed by a lens is exactly similar to the object seen. Indeed, my thoughts in such fields and directions have led me to the conclusion that most all human knowledge is based on this simple truth, since practically every idea or conception — and therefore all knowledge — presupposes visual impressions. But if light would not propagate in accordance with the law mentioned, but in conformity with any other law which we might presently conceive, whereby not only the image might not bear any likeness to the object seen, but even the images of the same object at different times or distances might not resemble each other, then our knowledge of form would be very defective, for then we might see, for example, a three-cornered figure as a six or twelve-cornered one. With the clear understanding of the mechanism and mode of action of our organs, we remove all doubts as to the *reality* and *truth* of the impressions received from the outside, and thus we bar out — forever, we may hope — that unhealthy speculation and skepticism into which formerly even strong minds were apt to fall.

Let me tell you of another comforting feature. The progress in a measured time is nowadays more rapid and greater than it ever was before. This is quite in accordance with the fundamental law of motion, which commands acceleration and increase of momentum or accumulation of energy under the action of a continuously acting force and tendency, and is the more true as every advance weakens the elements tending to produce friction and retardation. For, after all, what *is* progress, or — more correctly — development, or evolution, if not a movement, infinitely complex and often unscrutinizable, it is true, but nevertheless exactly determined in quantity as well as in quality of motion by the physical conditions and laws governing? This feature of more recent development is best shown in the rapid merging together of the various arts and sciences by the obliteration of the hard and fast lines of separation, of borders, some of which only a few years ago seemed unsurpassable, and which, like veritable Chinese walls, surrounded every department of inquiry and barred progress. A sense of connectedness of the various apparently widely different forces and phenomena we observe is taking possession of our minds, a sense of deeper understanding of nature as a whole, which, though not yet quite clear and defined, is keen enough to inspire us with the confidence of vast realizations in the near future.

But these features chiefly interest the scientific man, the thinker and reasoner. There is another feature which affords us still more satisfaction and enjoyment, and which is of still more universal interest, chiefly because of its bearing upon the welfare of mankind. Gentlemen, there is an influence which is getting strong and stronger day by day, which shows itself more and more in all departments of human activity, an influence most fruitful and beneficial — the influence of the artist. It was a happy day for the mass of humanity when the artist felt the desire of becoming a physician, an electrician, an engineer or mechanician or — whatnot — a mathematician or a financier; for it was he who wrought all these wonders and grandeur we are witnessing. It was he who abolished that small, pedantic, narrow-grooved school teaching which made of an aspiring student a galley-slave, and he who allowed freedom in the choice of subject of study according to one's pleasure and inclination, and so facilitated development.

Some, who delight in the exercise of the powers of criticism, call this an assymetrical development, a degeneration or departure from the normal, or even a degradation of the race. But they are mistaken. This is a welcome state of things, a

blessing, a wise subdivision of labors, the establishment of conditions most favorable to progress. Let one concentrate all his energies in one single great effort, let him perceive a single truth, even though he be consumed by the sacred fire, then millions of less gifted men can easily follow. Therefore it is not as much quantity as quality of work which determines the magnitude of the progress.

It was the artist, too, who awakened that broad philanthropic spirit which, even in old ages, shone in the teachings of noble reformers and philosophers, that spirit which makes men in all departments and positions work not as much for any material benefit or compensation — though reason may command this also — but chiefly for the sake of success, for the pleasure there is in achieving it and for the good they might be able to do thereby to their fellow-men. Through his influence types of men are now pressing forward, impelled by a deep love for their study, men who are doing wonders in their respective branches, whose chief aim and enjoyment is the acquisition and spread of knowledge, men who look far above earthly things, whose banner is Excelsior! Gentlemen, let us honor the artist, let us thank him, let us drink his health!

Now, in all these enjoyable and elevating features which characterize modern intellectual development, electricity, the expansion of the science of electricity, has been a most potent factor. Electrical science has revealed to us the true nature of light, has provided us with innumerable appliances and instruments of precision, and has thereby vastly added to the exactness of our knowledge. Electrical science has disclosed to us the more intimate relation existing between widely different forces and phenomena and has thus led us to a more complete comprehension of Nature and its many manifestations to our senses. Electrical science, too, by its fascination, by its promises of immense realizations, of wonderful possibilities chiefly in humanitarian respects, has attracted the attention and enlisted the energies of the artist; for where is there a field in which his God-given powers would be of greater benefit to his fellow-men than this unexplored, almost virgin, region, where, like in a silent forest, a thousand voices respond to every call?

With these comforting features, with these cheering prospects, we need not look with any feeling of incertitude or apprehension into the future. There are pessimistic men, who, with anxious faces, continuously whisper in your ear that the nations are secretly arming — arming to the teeth; that they are going to pounce upon each other at a given signal and destroy themselves; that they are all trying to outdo that victorious, great, wonderful German army, against which there is no resistance, for every German has the discipline in his very blood — every German is a soldier. But these men are in error. Look only at our recent experience with the British in that Venezuela difficulty. Two other nations might have crashed together, but not the Anglo-Saxons; they are too far ahead. The men who tell you this are ignoring forces which are continually at work, silently but resistlessly — forces which say Peace!

There is the genuine artist, who inspires us with higher and nobler sentiments, and makes us abhor strife and carnage. There is the engineer, who bridges gulfs and chasms, and facilitates contact and equalization of the heterogeneous masses of humanity. There is the mechanic, who comes with his beautiful time and energy-saving appliances, who perfects his flying machine, not to drop a bag of dynamite on a city or vessel, but to facilitate transport and travel. There, again, is the chemist, who opens new resources and makes existence more pleasant and secure; and there is the electrician, who sends his messages of peace to all parts of the globe. The time will not be long in coming when those men who are turning their ingenuity to inventing quick-firing guns, torpedoes and other implements of destruction — all the while assuring you that it is for the love and good of humanity — will find no takers for their odious tools, and will realize that, had they used their inventive talent in other directions, they might have reaped a far better reward than the sestertia received. And then, and none too

soon, the cry will be echoed everywhere. Brethren, stop these high-handed methods of the strong, these remnants of barbarism so inimical to progress! Give that valiant warrior opportunities for displaying a more commendable courage than that he shows when, intoxicated with victory, he rushes to the destruction of his fellow-men. Let him toil day and night with a small chance of achieving and yet be unflinching; let him challenge the dangers of exploring the heights of the air and the depths of the sea; let him brave the dread of the plague, the heat of the tropic desert and the ice of the polar region. Turn your energies to warding off the common enemies and dangers, the perils that are all around you, that threaten you in the air you breathe, in the water you drink, in the food you consume. Is it not strange, is it not shame, that we, beings in the highest state of development in this our world, beings with such immense powers of thought and action, we, the masters of the globe, should be absolutely at the mercy of our unseen foes, that we should not know whether a swallow of food or drink brings joy and life or pain and destruction to us! In this most modern and sensible warfare, in which the bacteriologist leads, the services electricity will render will prove invaluable. The economical production of high-frequency currents, which is now an accomplished fact, enables us to generate easily and in large quantities ozone for the disinfection of the water and the air, while certain novel radiations recently discovered give hope of finding effective remedies against ills of microbic origin, which have heretofore withstood all efforts of the physician. But let me turn to a more pleasant theme.

I have referred to the merging together of the various sciences or departments of research, and to a certain perception of intimate connection between the manifold and apparently different forces and phenomena. Already we know, chiefly through the efforts of a bold pioneer, that light, radiant heat, electrical and magnetic actions are closely related, not to say identical. The chemist professes that the effects of combination and separation of bodies he observes are due to electrical forces, and the physician and physiologist will tell you that even life's progress is electrical. Thus electrical science has gained a universal meaning, and with right this age can claim the name "Age of Electricity."

I wish much to tell you on this occasion — I may say I actually burn for desire of telling you — what electricity really *is*, but I have very strong reasons, which my co-workers will best appreciate, to follow a precedent established by a great and venerable philosopher, and I shall not dwell on this purely scientific aspect of electricity.

There is another reason for the claim which I have before stated which is even more potent than the former, and that is the immense development in all electrical branches in more recent years and its influence upon other departments of science and industry. To illustrate this influence I only need to refer to the steam or gas engine. For more than half a century the steam engine has served the innumerable wants of man. The work it was called to perform was of such variety and the conditions in each case were so different that, of necessity, a great many types of engines have resulted. In the vast majority of cases the problem put before the engineer was not, as it should have been, the broad one of converting the greatest possible amount of heat energy into mechanical power, but it was rather the specific problem of obtaining the mechanical power in such form as to be best suitable for general use. As the reciprocating motion of the piston was not convenient for practical purposes, except in very few instances, the piston was connected to a crank, and thus rotating motion was obtained, which was more suitable and preferable, though it involved numerous disadvantages incident to the crude and wasteful means employed. But until quite recently there were at the disposal of the engineer, for the transformation and transmission of the motion of the piston, no better means than rigid mechanical connections. The past few years have brought forcibly to the attention of the builder the electric motor, with its ideal features. Here was a mode of transmitting mechanical motion simpler by far, and

also much more economical. Had this mode been perfected earlier, there can be no doubt that, of the many different types of engine, the majority would not exist, for just as soon as an engine was coupled with an electric generator a type was produced capable of almost universal use. From this moment on there was no necessity to endeavor to perfect engines of special designs capable of doing special kinds of work. The engineer's task became now to concentrate all his efforts upon one type, to perfect one kind of engine — the best, the universal, the engine of the immediate future; namely, the one which is best suitable for the generation of electricity. The first efforts in this direction gave a strong impetus to the development of the reciprocating high-speed engine, and also to the turbine, which latter was a type of engine of very limited practical usefulness, but became, to a certain extent, valuable in connection with the electric generator and motor. Still, even the former engine, though impoved in many particulars, is not radically changed, and even now has the same objectionable features and limitations. To do away with these as much as possible, a new type of engine is being perfected in which more favorable conditions for economy are maintained, which expands the working fluid with utmost rapidity and loses little heat on the walls, an engine stripped of all usual regulating mechanism — packings, oilers and other appendages — and forming part of an electric generator; and in this type, I may say, I have implicit faith.

The gas or explosive engine has been likewise profoundly affected by the commercial introduction of electric light and power, particularly in quite recent years. The engineer is turning his energies more and more in this direction, being attracted by the prospect of obtaining a higher thermodynamic efficiency. Much larger engines are now being built, the construction is constantly improved, and a novel type of engine, best suitable for the generation of electricity, is being rapidly evolved.

There are many other lines of manufacture and industry in which the influence of electrical development has been even more powerfully felt. So, for instance, the manufacture of a great variety of articles of metal, and especially of chemical products. The welding of metals by electricity, though involving a wasteful process, has, nevertheless, been accepted as a legitimate art, while the manufacture of metal sheet, seamless tubes and the like affords promise of much improvement. We are coming gradually, but surely, to the fusion of bodies and reduction of all kinds of ores — even of iron ores — by the use of electricity, and in each of these departments great realizations are probable. Again, the economical conversion of ordinary currents of supply into high-frequency currents opens up new possibilities, such as the combination of the atmospheric nitrogen and the production of its compounds; for instance, ammonia and nitric acid, and their salts, by novel processes.

The high-frequency currents also bring us to the realization of a more economical system of lighting; namely by means of phosphorescent bulbs or tubes, and enable us to produce with these appliances light of practically any candle-power. Following other developments in purely electrical lines, we have all rejoiced in observing the rapid strides made, which, in quite recent years, have been beyond our most sanguine expectations. To enumerate the many advances recorded is a subject for the reviewer, but I can not pass without mentioning the beautiful discoveries of Lenard and Roentgen, particularly the latter, which have found such a powerful response throughout the scientific world that they have made us forget, for a time, the great achievement of Linde in Germany, who has effected the liquefaction of air on an industrial scale by a process of continuous cooling: the discovery of argon by Lord Rayleigh and Professor Ramsay, and the splendid pioneer work of Professor Dewar in the field of low temperature research. The fact that the United States have contributed a very liberal share to this prodigious progress must afford to all of us great satisfaction. While honoring the workers in other countries and all those who, by profession or inclination,

are devoting themselves to strictly scientific pursuits, we have particular reasons to mention with gratitude the names of those who have so much contributed to this marvelous development of electrical industry in this country. Bell, who, by his admirable invention enabling us to transmit speech to great distances, has profoundly affected our commercial and social relations, and even our very mode of life; Edison, who, had he not done anything else beyond his early work in incandescent lighting, would have proved himself one of the greatest benefactors of the age; Westinghouse, the founder of the commercial alternating system; Brush, the great pioneer of arc lighting; Thomson, who gave us the first practical welding machine, and who, with keen sense, contributed very materially to the development of a number of scientific and industrial branches; Weston, who once led the world in dynamo design, and now leads in the construction of electric instruments; Sprague, who, with rare energy, mastered the problem and insured the success of practical electrical railroading; Acheson, Hall, Willson and others, who are creating new and revolutionizing industries here under our very eyes at Niagara. Nor is the work of these gifted men nearly finished at this hour. Much more is still to come, for, fortunately, most of them are still full of enthusiasm and vigor. All of these men and many more are untiringly at work investigating new regions and opening up unsuspected and promising fields. Weekly, if not daily, we learn through the journals of a new advance into some unexplored region, where at every step success beckons friendly, and leads the toiler on to hard and harder tasks.

But among all these many departments of research, these many branches of industry, new and old, which are being rapidly expanded, there is one dominating all others in importance — one which is of the greatest significance for the comfort and welfare, not to say for the existence, of mankind, and that is the electrical transmission of power. And in this most important of all fields, gentlemen, long afterwards, when time will have placed the events in their proper perspective, and assigned men to their deserved places, the great event we are commemorating to-day will stand out as designating a new and glorious epoch in the history of humanity — an epoch grander than that marked by the advent of the steam engine. We have many a monument of past ages; we have the palaces and pyramids, the temples of the Greek and the cathedrals of Christendom. In them is exemplified the power of men, the greatness of nations, the love of art and religious devotion. But that monument at Niagara has something of its own, more in accord with our present thoughts and tendencies. It is a monument worthy of our scientific age, a true monument of enlightenment and of peace. It signifies the subjugation of natural forces to the service of man, the discontinuance of barbarous methods, the relieving of millions from want and suffering. No matter what we attempt to do, no matter to what fields we turn our efforts, we are dependent on power. Our economists may propose more economical systems of administration and utilization of resources, our legislators may make wiser laws and treaties, it matters little; that kind of help can be only temporary. If we want to reduce poverty and misery, if we want to give to every deserving individual what is needed for a safe existence of an intelligent being, we want to provide more machinery, more power. Power is our mainstay, the primary source of our many-sided energies. With sufficient power at our disposal we can satisfy most of our wants and offer a guaranty for safe and comfortable existence to all, except perhaps to those who are the greatest criminals of all — the voluntarily idle.

The development and wealth of a city, the success of a nation, the progress of the whole human race, is regulated by the power available. Think of the victorious march of the British, the like of which history has never recorded. Apart from the qualities of the race, which have been of great moment, they own the conquest of the world to — coal. For with coal they produce their iron; coal furnishes them light and

heat; coal drives the wheels of their immense manufacturing establishments, and coal propels their conquering fleets. But the stores are being more and more exhausted, the labor is getting dearer and dearer, and the demand is continuously increasing. It must be clear to every one that soon some new source of power supply must be opened up, or that at least the present methods must be materially improved. A great deal is expected from a more economical utilization of the stored energy of the carbon in a battery; but while the attainment of such a result would be hailed as a great achievement, it would not be as much of an advance towards the ultimate and permanent method of obtaining power as some engineers seem to believe. By reasons both of economy and convenience we are driven to the general adoption of a system of energy supply from central stations, and for such purposes the beauties of the mechanical generation of electricity can not be exaggerated. The advantages of this universally accepted method are certainly so great that the probability of replacing the engine dynamos by batteries is, in my opinion, a remote one, the more so as the high-pressure steam engine and gas engine give promise of a considerably more economical thermodynamic conversion. Even if we had this day such an economical coal battery, its introduction in central stations would by no means be assured, as its use would entail many inconveniences and drawbacks. Very likely the carbon could not be burned in its natural form as in a boiler, but would have to be specially prepared to secure uniformity in the current generation. There would be a great many cells needed to make up the electro-motive force usually required. The process of cleaning and renewal, the handling of nasty fluids and gases and the great space necessary for so many batteries would make it difficult, if not commercially unprofitable, to operate such a plant in a city or densely populated district. Again, if the station be erected in the outskirts, the conversion by rotating transformers or otherwise would be a serious and unavoidable drawback. Furthermore, the regulating appliances and other accessories which would have to be provided would probably make the plant fully as much, if not more, complicated than the present. We might, of course, place the batteries at or near the coal mine, and from there transmit the energy to distant points in the form of high-tension alternating currents obtained from rotating transformers, but even in this most favorable case the process would be a barbarous one, certainly more so than the present, as it would still involve the consumption of material, while at the same time it would restrict the engineer and mechanic in the exercise of their beautiful art. As to the energy supply in small isolated places as dwellings, I have placed my confidence in the development of a light storage battery, involving the use of chemicals manufactured by cheap water power, such as some carbide or oxygen-hydrogen cell.

But we shall not satisfy ourselves simply with improving steam and explosive engines or inventing new batteries; we have something much better to work for, a greater task to fulfill. We have to evolve means for obtaining energy from stores which are forever inexhaustible, to perfect methods which do not imply consumption and waste of any material whatever. Upon this great possibility, which I have long ago recognized, upon this great problem, the practical solution of which means so much for humanity, I have myself concentrated my efforts since a number of years, and a few happy ideas which came to me have inspired me to attempt the most difficult, and given me strength and courage in adversity. Nearly six years ago my confidence had become strong enough to prompt me to an expression of hope in the ultimate solution of this all dominating problem. I have made progress since, and have passed the stage of mere conviction such as is derived from a deligent study of known facts, conclusions and calculations. I now feel sure that the realization of that idea is not far off. But precisely for this reason I feel impelled to point out here an important fact, which I hope will be remembered. Having examined for a long time the possibilities of the development I refer to, namely, that of the operation of engines on any point of the earth by the energy of the medium, I find that even under the

theoretically best conditions such a method of obtaining power can not equal in economy, simplicity and many other features the present method, involving a conversion of the mechanical energy of running water into electrical energy and the transmission of the latter in the form of currents of very high tension to great distances. Provided, therefore, that we can avail ourselves of currents of sufficiently high tension, a waterfall affords us the most advantageous means of getting power from the sun sufficient for all our wants, and this recognition has impressed me strongly with the future importance of the water power, not so much because of its commercial value, though it may be very great, but chiefly because of its bearing upon our safety and welfare. I am glad to say that also in this latter direction my efforts have not been unsuccessful, for I have devised means which will allow us the use in power transmission of electromotive forces much higher than those practicable with ordinary apparatus. In fact, progress in this field has given me fresh hope that I shall see the fulfillment of one of my fondest dreams; namely, the transmission of power from station to station without the employment of any connecting wire. Still, whatever method of transmission be ultimately adopted, nearness to the source of power will remain an important advantage.

Gentlemen, some of the ideas I have expressed may appear to many of you hardly realizable; nevertheless, they are the result of long-continued thought and work. You would judge them more justly if you would have devoted your life to them, as I have done. With ideas it is like with dizzy heights you climb: At first they cause you discomfort and you are anxious to get down, distrustful of your own powers; but soon the remoteness of the turmoil of life and the inspiring influence of the altitude calm your blood; your step gets firm and sure and you begin to look — for dizzier heights. I have attempted to speak to you on "Electricity," its development and influence, but I fear that I have done it much like a boy who tries to draw a likeness with a few straight lines. But I have endeavored to bring out one feature, to speak to you in one strain which I felt sure would find response in the hearts of all of you, the only one worthy of this occasion — the humanitarian. In the great enterprise at Niagara we see not only a bold engineering and commercial feat, but far more, a giant stride in the right direction as indicated both by exact science and philanthropy. Its success is a signal for the utilization of water powers all over the world, and its influence upon industrial development is incalculable. We must all rejoice in the great achievement and congratulate the intrepid pioneers who have joined their efforts and means to bring it about. It is a pleasure to learn of the friendly attitude of the citizens of Buffalo and of the encouragement given to the enterprise by the Canadian authorities. We shall hope that other cities, like Rochester on this side and Hamilton and Toronto in Canada, will soon follow Buffalo's lead. This fortunate city herself is to be congratulated. With resources now unequaled, with commercial facilities and advantages such as few cities in the world possess, and with the enthusiasm and progressive spirit of its citizens, it is sure to become one of the greatest industrial centers of the globe.

THE PROBLEM OF INCREASING HUMAN ENERGY*

THE ONWARD MOVEMENT OF MAN — THE ENERGY OF THE MOVEMENT — THE THREE WAYS OF INCREASING HUMAN ENERGY

Of all the endless variety of phenomena which nature presents to our senses, there is none that fills our minds with greater wonder than that inconceivably complex movement which, in its entirety, we designate as human life. Its mysterious origin is veiled in the forever impenetrable mist of the past, its character is rendered incomprehensible by its infinite intricacy, and its destination is hidden in the unfathomable depths of the future. Whence does it come? What is it? Whither does it tend? are the great questions which the sages of all times have endeavored to answer.

Modern science says: The sun is the past, the earth is the present, the moon is the future. From an incandescent mass we have originated, and into a frozen mass we shall turn. Merciless is the law of nature, and rapidly and irresistibly we are drawn to our doom. Lord Kelvin, in his profound meditations, allows us only a short span of life, something like six million years, after which time the sun's bright light will have ceased to shine, and its life-giving heat will have ebbed away, and our own earth will be a lump of ice, hurrying on through the eternal night. But do not let us despair. There will still be left on it a glimmering spark of life, and there will be a chance to kindle a new fire on some distant star. This wonderful possibility seems, indeed, to exist, judging from Professor Dewar's beautiful experiments with liquid air, which show that germs of organic life are not destroyed by cold, no matter how intense; consequently they may be transmitted through the interstellar space. Meanwhile the cheering lights of science and art, ever increasing in intensity, illuminate our path, and the marvels they disclose, and the enjoyments they offer, make us measurably forgetful of the gloomy future.

Though we may never be able to comprehend human life, we know certainly that it is a movement, of whatever nature it be. The existence of a movement unavoidably implies a body which is being moved and a force which is moving it. Hence, wherever there is life, there is a mass moved by a force. All mass possesses inertia, all force tends to persist. Owing to this universal property and condition, a body, be it at rest or in motion, tends to remain in the same state, and a force, manifesting itself anywhere and through whatever cause, produces an equivalent opposing force, and as an absolute necessity of this it follows that every movement in nature must be rhythmical. Long ago this simple truth was clearly pointed out by Herbert Spencer, who arrived at it through a somewhat different process of reasoning. It is borne out in everything we perceive — in the movement of a planet, in the surging and ebbing of the tide, in the reverberations of the air, the swinging of a pendulum, the oscillations of an electric current, and in the infinitely varied phenomena of organic life. Does not the

---

* The Century Illustrated Monthly Magazine, June 1900

whole of human life attest it? Birth, growth, old age, and death of an individual, family, race, or nation, what is it all but a rhythm? All life-manifestation, then, even in its most intricate form, as exemplified in man, however involved and inscrutable, is only a movement, to which the same general laws of movement which govern throughout the physical universe must be applicable.

When we speak of man, we have a conception of humanity as a whole, and before applying scientific methods to the investigation of his movement, we must accept this as a physical fact. But can any one doubt to-day that all the millions of individuals and all innumerable types and characters constitute an entirety, a unit? Though free to

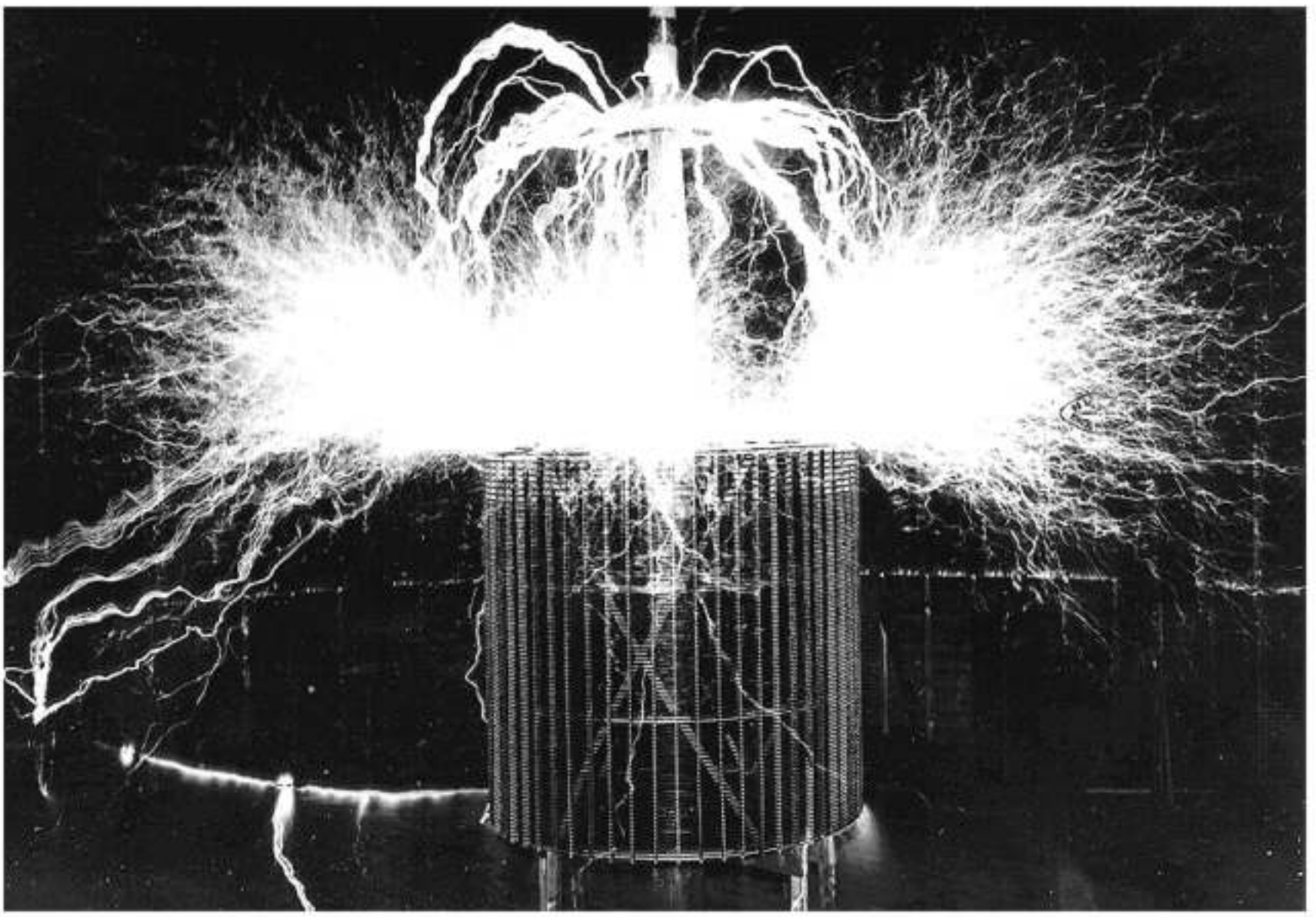

Note to Fig. 1. — This result is produced by the discharge of an electrical oscillator giving twelve million volts. The electrical pressure, alternating one hundred thousand times per second, excites the normally inert nitrogen, causing it to combine with the oxygen. The flame-like discharge shown in the photograph measures sixty-five feet across.

think and act, we are held together, like the stars in the firmament, with ties inseparable. These ties we cannot see, but we can feel them. I cut myself in the finger, and it pains me: this finger is a part of me. I see a friend hurt, and it hurts me, too: my friend and I are one. And now I see stricken down an enemy, a lump of matter which, of all the lumps of matter in the universe, I care least for, and still it grieves me. Does this not prove that each of us is only a part of a whole?

For ages this idea has been proclaimed in the consummately wise teachings of religion, probably not alone as a means of insuring peace and harmony among men, but as a deeply founded truth. The Buddhist expresses it in one way, the Christian in another, but both say the same: We are all one. Metaphysical proofs are, however,

not the only ones which we are able to bring forth in support of this idea. Science, too, recognizes this connectedness of separate individuals, though not quite in the same sense as it admits that the suns, planets, and moons of a constellation are one body, and there can be no doubt that it will be experimentally confirmed in times to come, when our means and methods for investigating physical and other states and phenomena shall have been brought to great perfection. Still more: this one human being lives on and on. The individual is ephemeral, races and nations come and pass away, but man remains. Therein lies the profound difference between the individual and the whole. Therein, too, is to be found the partial explanation of many of those marvelous phenomena of heredity which are the result of countless centuries of feeble but persistent influence.

Conceive, then, man as a mass urged on by a force. Though this movement is not of a translatory character, implying change of place, yet the general laws of mechanical movement are applicable to it, and the energy associated with this mass can be measured, in accordance with well-known principles, by half the product of the mass with the square of a certain velocity. So, for instance, a cannon-ball which is at rest possesses a certain amount of energy in the form of heat, which we measure in a similar way. We imagine the ball to consist of innumerable minute particles, called atoms or molecules, which vibrate, or whirl around one another. We determine their masses and velocities, and from them the energy of each of these minute systems, and adding them all together, we get an idea of the total heat-energy contained in the ball, which is only seemingly at rest. In this purely theoretical estimate this energy may then be calculated by multiplying half of the total mass — that is, half of the sum of all the small masses — with the square of a velocity which is determined from the velocities of the separate particles. In like manner we may conceive of human energy being measured by half the human mass multiplied with the square of a velocity which we are not yet able to compute. But our deficiency in this knowledge will not vitiate the truth of the deductions I shall draw, which rest on the firm basis that the same laws of mass and force govern throughout nature.

Man, however, is not an ordinary mass, consisting of spinning atoms and molecules, and containing merely heat-energy. He is a mass possessed of certain higher qualities by reason of the creative principle of life with which he is endowed. His mass, as the water in an ocean wave, is being continuously exchanged, new taking the place of the old. Not only this, but he grows, propagates, and dies, thus altering his mass independently, both in bulk and density. What is most wonderful of all, he is capable of increasing or diminishing his velocity of movement by the mysterious power he possesses of appropriating more or less energy from other substance, and turning it into motive energy. But in any given moment we may ignore these slow changes and assume that human energy is measured by half the product of man's mass with the square of a certain hypothetical velocity. However we may compute this velocity, and whatever we may take as the standard of its measure, we must, in harmony with this conception, come to the conclusion that the great problem of science is, and always will be, to increase the energy thus defined. Many years ago, stimulated by the perusal of that deeply interesting work, Draper's "History of the Intellectual Development of Europe," depicting so vividly human movement, I recognized that to solve this eternal problem must ever be the chief task of the man of science. Some results of my own efforts to this end I shall endeavor briefly to describe here.

Let, then, in diagram *a*, *M* represent the mass of man. This mass is impelled in one direction by a force *f*, which is resisted by another partly frictional and partly negative force *R*, acting in a direction exactly opposite, and retarding the movement of the mass. Such an antagonistic force is present in every movement, and must be taken into consideration. The difference between these two forces is the effective

force which imparts a velocity V to the mass M in the direction of the arrow on the line representing the force f. In accordance with the preceding, the human energy will then be given by the product $\frac{1}{2}MV^2 = \frac{1}{2}MV \times V$, in which M is the total mass of man in the ordinary interpretation of the term "mass", and V is a certain hypothetical velocity, which, in the present state of science, we are unable exactly to define and determine. To increase the human energy is, therefore, equivalent to increasing this product, and there are, as will readily be seen, only three ways possible to attain this result, which are illustrated in the diagram below. The first way, shown in the top figure, is to increase the mass (as indicated by the dotted circle), leaving the two opposing forces the same. The second way is to reduce the retarding force R to a smaller value r, leaving the mass and the impelling force the same, as diagrammatically

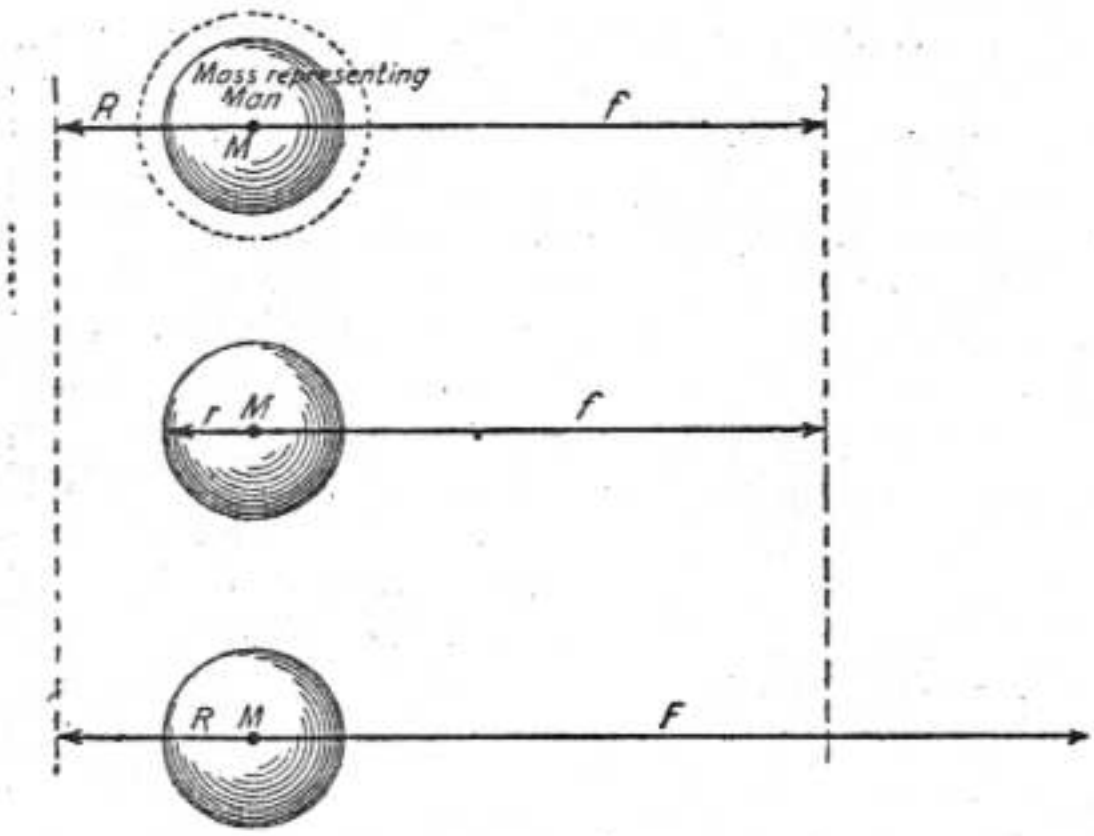

Diagram a. The three ways of increasing human energy.

shown in the middle figure. The third way, which is illustrated in the last figure, is to increase the impelling force f to a higher value F, while the mass and the retarding force R remain unaltered. Evidently fixed limits exist as regards increase of mass and reduction of retarding force, but the impelling force can be increased indefinitely. Each of these three possible solutions presents a different aspect of the main problem of increasing human energy, which is thus divided into three distinct problems, to be successively considered.

THE FIRST PROBLEM: HOW TO INCREASE THE HUMAN MASS — THE BURNING OF ATMOSPHERIC NITROGEN

Viewed generally, there are obviously two ways of increasing the mass of mankind: first, by aiding and maintaining those forces and conditions which tend to increase it; and, second, by opposing and reducing those which tend to diminish it. The mass will be increased by careful attention to health, by substantial food, by moderation, by regularity of habits, by the promotion of marriage, by conscientious attention to the children, and, generally stated, by the observance of all the many precepts and laws of religion and hygiene. But in adding new mass to the old, three cases again present themselves. Either the mass added is of the same velocity as the old, or it is of a smaller or of a higher velocity. To gain an idea of the relative importance of these cases, imagine a train composed of, say, one hundred locomotives running on a track, and

suppose that, to increase the energy of the moving mass, four more locomotives are added to the train. If these four move at the same velocity at-which the train is going, the total energy will be increased four per cent.; if they are moving at only one half of that velocity, the increase will amount to only one per cent.; if they are moving at twice that velocity, the increase of energy will be sixteen per cent. This simple illustration shows that it is of the greatest importance to add mass of a higher velocity. Stated more to the point, if, for example, the children be of the same degree of enlightenment as the parents, — that is, mass of the "same velocity," — the energy will simply increase proportionately to the number added. If they are less intelligent, or advanced, or mass of "smaller velocity," there will be a very slight gain in the energy; but if they are further advanced, or mass of "higher velocity," then the new generation will add very considerably to the sum total of human energy. Any addition of mass of "smaller velocity," beyond that indispensable amount required by the law expressed in the proverb, "Mens sana in corpore sano," should be strenuously opposed. For instance, the mere development of muscle, as aimed at in some of our colleges, I consider equivalent to adding mass of "smaller velocity," and I would not commend it, although my views were different when I was a student myself. Moderate exercise, insuring the right balance between mind and body, and the highest efficiency of performance, is, of course, a prime requirement. The above example shows that the most important result to be attained is the education, or the increase of the "velocity," of the mass newly added.

Conversely, it scarcely need be stated that everything that is against the teachings of religion and the laws of hygiene is tending to decrease the mass. Whisky, wine, tea, coffee, tobacco, and other such stimulants are responsible for the shortening of the lives of many, and ought to be used with moderation. But I do not think that rigorous measures of suppression of habits followed through many generations are commendable. It is wiser to preach moderation than abstinence. We have become accustomed to these stimulants, and if such reforms are to be effected, they must be slow and gradual. Those who are devoting their energies to such ends could make themselves far more useful by turning their efforts in other directions, as, for instance, toward providing pure water.

For every person who perishes from the effects of a stimulant, at least a thousand die from the consequences of drinking impure water. This precious fluid, which daily infuses new life into us, is likewise the chief vehicle through which disease and death enter our bodies. The germs of destruction it conveys are enemies all the more terrible as they perform their fatal work unperceived. They seal our doom while we live and enjoy. The majority of people are so ingnorant or careless in drinking water, and the consequences of this are so disastrous, that a philanthropist can scarcely use his efforts better than by endeavoring to enlighten those who are thus injuring themselves. By systematic purification and sterilization of the drinking-water the human mass would be very considerably increased. It should be made a rigid rule — which might be enforced by law — to boil or to sterilize otherwise the drinking-water in every household and public place. The mere filtering does not afford sufficient security against infection. All ice for internal uses should be artificially prepared from water thoroughly sterilized. The importance of eliminating germs of disease from the city water is generally recognized, but little is being done to improve the existing conditions, as no satisfactory method of sterilizing great quantities of water has as yet been brought forward. By improved electrical appliances we are now enabled to produce ozone cheaply and in large amounts, and this ideal disinfectant seems to offer a happy solution of the important question.

Gambling, business rush, and excitement, particularly on the exchanges, are causes of much mass-reduction, all the more so because the individuals concerned represent units

of higher value. Incapacity of observing the first symptoms of an illness, and careless neglect of the same, are important factors of mortality. In noting carefully every new sign of approaching danger, and making conscientiously every possible effort to avert it, we are not only following wise laws of hygiene in the interest of our well-being and the success of our labors, but we are also complying with a higher moral duty. Every one should consider his body as a priceless gift from one whom he loves above all, as a marvelous work of art, of undescribable beauty and mastery beyond human conception, and so delicate and frail that a word, a breath, a look, nay, a thought, may injure it. Uncleanliness, which breeds disease and death, is not only a self-destructive but a highly immoral habit. In keeping our bodies free from infection, healthful, and pure, we are expressing our reverence for the high principle with which they are endowed. He who follows the precepts of hygiene in this spirit is proving himself, so far, truly religious. Laxity of morals is a terrible evil, which poisons both mind and body, and which is responsible for a great reduction of the human mass in some countries. Many of the present customs and tendencies are productive of similar hurtful results. For example, the society life, modern education and pursuits of women, tending to draw them away from their household duties and make men out of them, must needs detract from the elevating ideal they represent, diminish the artistic creative power, and cause sterility and a general weakening of the race. A thousand other evils might be mentioned, but all put together, in their bearing upon the problem under discussion, they would not equal a single one, the want of food, brought on by poverty, destitution, and famine. Millions of individuals die yearly for want of food, thus keeping down the mass. Even in our enlightened communities, and notwithstanding the many charitable efforts, this is still, in all probability, the chief evil. I do not mean here absolute want of food, but want of healthful nutriment.

How to provide good and plentiful food is, therefore, a most important question of the day. On general principles the raising of cattle as a means of providing food is objectionable, because, in the sense interpreted above, it must undoubtedly tend to the addition of mass of a "smaller velocity." It is certainly preferable to raise vegetables, and I think, therefore, that vegetarianism is a commendable departure from the established barbarous habit. That we can subsist on plant food and perform our work even to advantage is not a theory, but a well-demonstrated fact. Many races living almost exclusively on vegetables are of superior physique and strength. There is no doubt that some plant food, such as oatmeal, is more economical than meat, and superior to it in regard to both mechanical and mental performance. Such food, moreover, taxes our digestive organs decidedly less, and, in making us more contented and sociable, produces an amount of good difficult to estimate. In view of these facts every effort should be made to stop the wanton and cruel slaughter of animals, which must be destructive to our morals. To free ourselves from animal instincts and appetites, which keep us down, we should begin at the very root from which they spring: we should effect a radical reform in the character of the food.

There seems to be no *philosophical* necessity for food. We can conceive of organized beings living without nourishment, and deriving all the energy they need for the performance of their life-functions from the ambient medium. In a crystal we have the clear evidence of the existence of a formative life-principle, and though we cannot understand the life of a crystal, it is none the less a living being. There may be, besides crystals, other such individualized, material systems of beings, perhaps of gaseous constitution, or composed of substance still more tenuous. In view of this possibility, — nay, probability, — we cannot apodictically deny the existence of organized beings on a planet merely because the conditions on the same are unsuitable for the existence of life as we conceive it. We cannot even, with positive assurance, assert that some of them might not be present here, in this our world, in the very midst of us, for their constitution and life-manifestation may be such that we are unable to perceive them.

The production of artificial food as a means for causing an increase of the human mass naturally suggests itself, but a direct attempt of this kind to provide nourishment does not appear to me rational, at least not for the present. Whether we could thrive on such food is very doubtful. We are the result of ages of continuous adaptation, and we cannot radically change without unforeseen and, in all probability, disastrous consequences. So uncertain an experiment should not be tried. By far the best way, it seems to me, to meet the ravages of the evil, would be to find ways of increasing the productivity of the soil. With this object the preservation of forests is of an importance which cannot be overestimated, and in this connection, also, the utilization of water-power for purposes of electrical transmission, dispensing in many ways with the necessity of burning wood, and tending thereby to forest preservation, is to be strongly advocated. But there are limits in the improvement to be effected in this and similar ways.

To increase materially the productivity of the soil, it must be more effectively fertilized by artificial means. The question of food-production resolves itself, then, into the question how best to fertilize the soil. What it is that made the soil is still a mystery. To explain its origin is probably equivalent to explaining the origin of life itself. The rocks, disintegrated by moisture and heat and wind and weather, were in themselves not capable of maintaining life. Some unexplained condition arose, and some new principle came into effect, and the first layer capable of sustaining low organisms, like mosses, was formed. These, by their life and death, added more of the life-sustaining quality to the soil, and higher organisms could then subsist, and so on and on, until at last highly developed plant and animal life could flourish. But though the theories are, even now, not in agreement as to how fertilization is effected, it is a fact, only too well ascertained, that the soil cannot indefinitely sustain life, and some way must be found to supply it with the substances which have been abstracted from it by the plants. The chief and most valuable among these substances are compounds of nitrogen, and the cheap production of these is, therefore, the key for the solution of the all-important food problem. Our atmosphere contains an inexhaustible amount of nitrogen, and could we but oxidize it and produce these compounds, an incalculable benefit for mankind would follow.

Long ago this idea took a powerful hold on the imagination of scientific men, but an efficient means for accomplishing this result could not be devised. The problem was rendered extremely difficult by the extraordinary inertness of the nitrogen, which refuses to combine even with oxygen. But here electricity comes to our aid: the dormant affinities of the element are awakened by an electric current of the proper quality. As a lump of coal which has been in contact with oxygen for centuries without burning will combine with it when once ignited, so nitrogen, excited by electricity, will burn. I did not succeed, however, in producing electrical discharges exciting very effectively the atmospheric nitrogen until a comparatively recent date, although I showed, in May, 1891, in a scientific lecture, a novel form of discharge or electrical flame named "St. Elmo's hotfire," .which, besides being capable of generating ozone in abundance, also possessed, as I pointed out on that occasion, distinctly the quality of exciting chemical affinities. This discharge or flame was then only three or four inches long, its chemical action was likewise very feeble, and consequently the process of oxidation of the nitrogen was wasteful. How to intensify this action was the question. Evidently electric currents of a peculiar kind had to be produced in order to render the process of nitrogen combustion more efficient.

The first advance was made in ascertaining that the chemical activity of the discharge was very considerably increased by using currents of extremely high frequency or rate of vibration. This was an important improvement, but practical considerations soon set a definite limit to the progress in this direction. Next, the effects of the

electrical pressure of the current impulses, of their wave-form and other characteristic features, were investigated. Then the influence of the atmospheric pressure and temperature and of the presence of water and other bodies was studied, and thus the best conditions for causing the most intense chemical action of the discharge and securing the highest efficiency of the process were gradually ascertained. Naturally, the improvements were not quick in coming; still, little by little, I advanced. The flame grew larger and larger, and its oxidizing action more and more intense. From an insignificant brush-discharge a few inches long it developed into a marvelous electrical phenomenon, a roaring blaze, devouring the nitrogen of the atmosphere and measuring sixty or seventy feet across. Thus slowly, almost imperceptibly, possibility became accomplishment. All is not yet done, by any means, but to what a degree my efforts have been rewarded an idea may be gained from an inspection of Fig. 1, which, with its title, is self-explanatory. The flame-like discharge visible is produced by the intense electrical oscillations which pass through the coil shown, and violently agitate the electrified molecules of the air. By this means a strong affinity is created between the two normally indifferent constituents of the atmosphere, and they combine readily, even if no further provision is made for intensifying the chemical action of the discharge. In the manufacture of nitrogen compounds by this method, of course, every possible means bearing upon the intensity of this action and the efficiency of the process will be taken advantage of, and, besides, special arrangements will be provided for the fixation of the compounds formed, as they are generally unstable, the nitrogen becoming again inert after a little lapse of time. Steam is a simple and effective means for fixing permanently the compounds. The result illustrated makes it practicable to oxidize the atmospheric nitrogen in unlimited quantities, merely by the use of cheap mechanical power and simple electrical apparatus. In this manner many compounds of nitrogen may be manufactured all over the world, at a small cost, and in any desired amount, and by means of these compounds the soil can be fertilized and its productiveness indefinitely increased. An abundance of cheap and healthful food, not artificial, but such as we are accustomed to, may thus be obtained. This new and inexhaustible source of food-supply will be of incalculable benefit to mankind, for it will enormously contribute to the increase of the human mass, and thus add immensely to human energy. Soon, I hope, the world will see the beginning of an industry which, in time to come, will, I believe, be in importance next to that of iron.

THE SECOND PROBLEM: HOW TO REDUCE THE FORCE RETARDING THE HUMAN MASS — THE ART OF TELAUTOMATICS

As before stated, the force which retards the onward movement of man is partly frictional and partly negative. To illustrate this distinction I may name, for example, ignorance, stupidity, and imbecility as some of the purely frictional forces, or resistances devoid of any directive tendency. On the other hand, visionariness, insanity, self-destructive tendency, religious fanaticism, and the like, are all forces of a negative character, acting in definite directions. To reduce or entirely to overcome these dissimilar retarding forces, radically different methods must be employed. One knows, for instance, what a fanatic may do, and one can take preventive measures, can enlighten, convince, and possibly direct him, turn his vice into virtue; but one does not know, and never can know, what a brute or an imbecile may do, and one must deal with him as with a mass, inert, without mind, let loose by the mad elements. A negative force always implies some quality, not infrequently a high one, though badly directed, which it is possible to turn to good advantage; but a directionless, frictional force involves

unavoidable loss. Evidently, then, the first and general answer to the above question is: turn all negative force in the right direction and reduce all frictional force.

There can be no doubt that, of all the frictional resistances, the one that most retards human movement is ignorance. Not without reason said that man of wisdom, Buddha: "Ignorance is the greatest evil in the world." The friction which results from ignorance, and which is greatly increased owing to the numerous languages and nationalities, can be reduced only by the spread of knowledge and the unification of the heterogeneous elements of humanity. No effort could be better spent. But however ignorance may have retarded the onward movement of man in times past, it is certain that, nowadays, negative forces have become of greater importance. Among these there is one of far greater moment than any other. It is called organized warfare. When we consider the millions of individuals, often the ablest in mind and body, the flower of humanity, who are compelled to a life of inactivity and unproductiveness, the immense sums of money daily required for the maintenance of armies and war apparatus, representing ever so much of human energy, all the effort uselessly spent in the production of arms and implements of destruction, the loss of life and the fostering of a barbarous spirit, we are appalled at the inestimable loss to mankind which the existence of these deplorable conditions must involve. What can we do to combat best this great evil?

Law and order absolutely require the maintenance of organized force. No community can exist and prosper without rigid discipline. Every country must be able to defend itself, should the necessity arise. The conditions of to-day are not the result of yesterday, and a radical change cannot be effected to-morrow. If the nations would at once disarm, it is more than likely that a state of things worse than war itself would follow. Universal peace is a beautiful dream, but not at once realizable. We have seen recently that even the noble effort of rhe man invested with the greatest worldly power has been virtually without effect. And no wonder, for the establishment of universal peace is, for the time being, a physical impossibility. War is a negative force, and cannot be turned in a positive direction without passing through the intermediate phases. It is the problem of making a wheel, rotating one way, turn in the opposite direction without slowing it down, stopping it, and speeding it up again the other way.

It has been argued that the perfection of guns of great destructive power will stop warfare. So I myself thought for a long time, but now I believe this to be a profound mistake. Such developments will greatly modify, but not arrest it. On the contrary, I think that every new arm that is invented, every new departure that is made in this direction, merely invites new talent and skill, engages new effort, offers a new incentive, and so only gives a fresh impetus to further development. Think of the discovery of gunpowder. Can we conceive of any more radical departure than was effected by this innovation? Let us imagine ourselves living in that period: would we not have thought then that warfare was at an end, when the armor of the knight became an object of ridicule, when bodily stength and skill, meaning so much before, became of comparatively little value? Yet gunpowder did not stop warfare; quite the opposite — it acted as a most powerful incentive. Nor do I believe that warfare can ever be arrested by any scientific or ideal development, so long as similar conditions to those now prevailing exist, because war has itself become a science, and because war involves some of the most sacred sentiments of which man is capable. In fact, it is doubtful whether men who would not be ready to fight for a high principle would be good for anything at all. It is not the mind which makes man, nor is it the body; it is mind and body. Our virtues and our failings are inseparable, like force and matter. When they separate, man is no more.

Another argument, which carries considerable force, is frequently made, namely, that war must soon become impossible because the means of defense are outstripping the means of attack. This is only in accordance with a fundamental law which may

be expressed by the statement that it is easier to destroy than to build. This law defines human capacities and human conditions. Were these such that it would be easier to build than to destroy, man would go on unresisted, creating and accumulating without limit. Such conditions are not of this earth. A being which could do this would not be a man; it might be a god. Defense will always have the advantage over attack, but this alone, it seems to me, can never stop war. By the use of new principles of defense we can render harbors impregnable against attack, but we cannot by such means prevent two war-ships meeting in battle on the high sea. And then, if we follow this idea to its ultimate development, we are led to the conclusion that it would be better for mankind if attack and defense were just oppositely related: for if every country, even the smallest, could surround itself with a wall absolutely impenetrable, and could defy the rest of the world, a state of things would surely be brought on which would be extremely unfavorable to human progress. It is by abolishing all the barriers which separate nations and countries that civilization is best furthered.

Again, it is contended by some that the advent of the flying-machine must bring on universal peace. This, too, I believe to be an entirely erroneous view. The flying-machine is certainly coming, and very soon, but the conditions will remain the same as before. In fact, I see no reason why a ruling power, like Great Britain, might not govern the air as well as the sea. Without wishing to put myself on record as a prophet, I do not hesitate to say that the next years will see the establishment of an "air-power," and its center may not be far from New York. But, for all that, men will fight on merrily.

The ideal development of the war principle would ultimately lead to the transformation of the whole energy of war into purely potential, explosive energy, like that of an electrical condenser. In this form the war-energy could be maintained without effort; it would need to be much smaller in amount, while incomparably more effective.

As regards the security of a country against foreign invasion, it is interesting to note that it depends only on the relative, and not on the absolute, number of the individuals or magnitude of the forces, and that, if every country should reduce the war-force in the same ratio, the security would remain unaltered. An international agreement with the object of reducing to a minimum the war-force which, in view of the present still imperfect education of the masses, is absolutely indispensable, would, therefore, seem to be the first rational step to take toward diminishing the force retarding human movement.

Fortunately, the existing conditions cannot continue indefinitely, for a new element is beginning to assert itself. A change for the better is imminent, and I shall now endeavor to show what, according to my ideas, will be the first advance toward the establishment of peaceful relations between nations, and by what means it will eventually be accomplished.

Let us go back to the early beginning, when the law of the stronger was the only law. The light of reason was not yet kindled, and the weak was entirely at the mercy of the strong. The weak individual then began to learn how to defend himself. He made use of a club, stone, spear. sling, or bow and arrow, and in the course of time, instead of physical strength, intelligence became the chief deciding factor in the battle. The wild character was gradually softened by the awakening of noble sentiments, and so, imperceptibly, after ages of continued progress, we have come from the brutal fight of the unreasoning animal to what we call the "civilized warfare" of to-day, in which the combatants shake hands, talk in a friendly way, and smoke cigars in the entr-actes, ready to engage again in deadly conflict at a signal. Let pessimists say what they like, here is an absolute evidence of great and gratifying advance.

But now, what is the next phase in this evolution? Not peace as yet, by any means. The next change which should naturally follow from modern developments

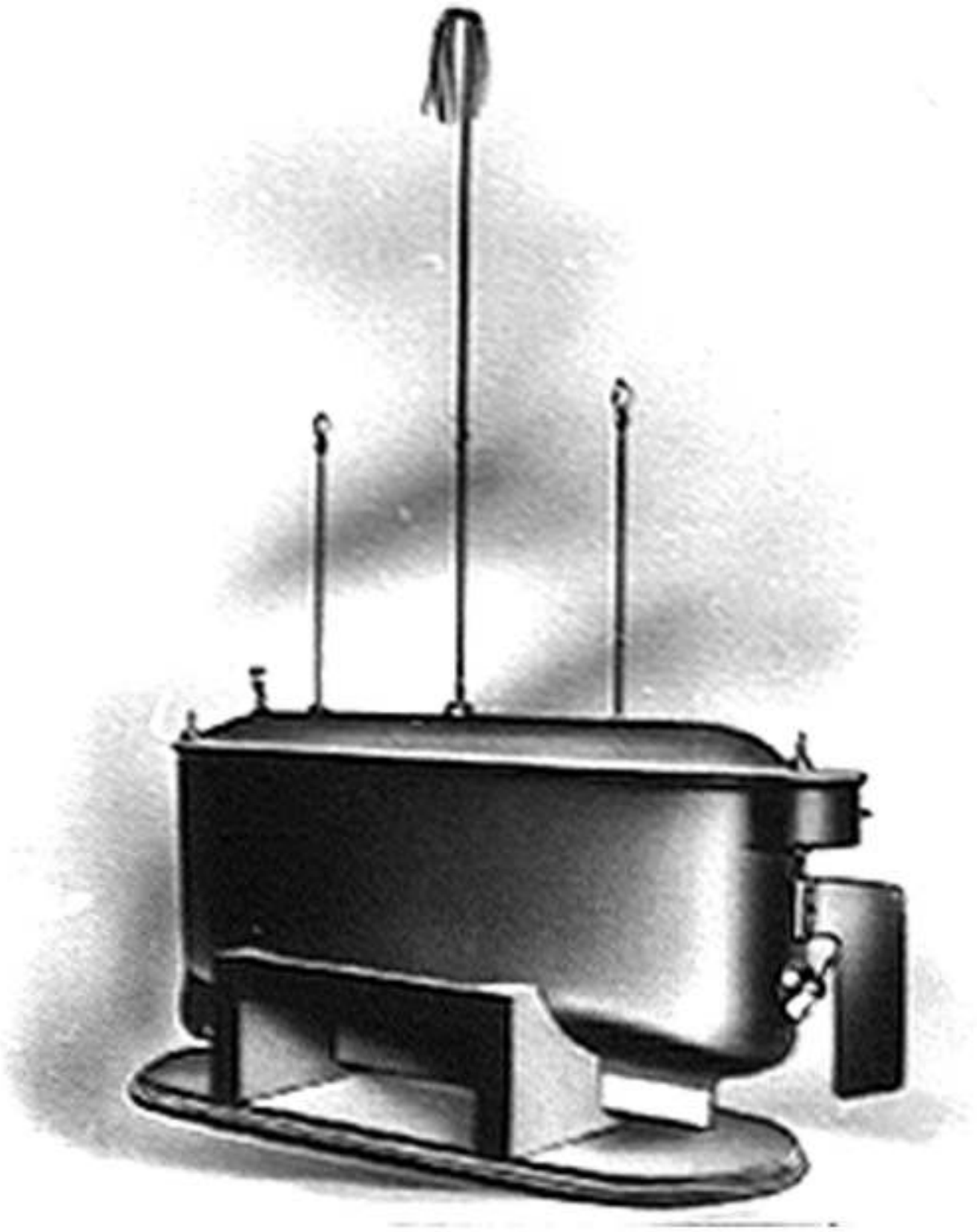

Fig. 2. THE FIRST PRACTICAL TELAUTOMATON.

A machine having all its bodily or translatory movements and the operations of the interior mechanism controlled from a distance without wires. The crewless boat shown in the photograph contains its own motive power, propelling- and steering-machinery, and numerous other accessories, all of which are controlled by transmitting from a distance, without wires, electrical oscillations to a circuit carried by the boat and adjusted to respond only to these oscillations.

should be the continuous diminution of the number of individuals engaged in battle. The apparatus will be one of specifically great power, but only a few individuals will be required to operate it. This evolution will bring more and more into prominence a machine or mechanism with the fewest individuals as an element of warfare, and the absolutely unavoidable consequence of this will be the abandonment of large, clumsy, slowly moving, and unmanageable units. Greatest possible speed and maximum rate of energy-delivery by the war apparatus will be the main object. The loss of life will become smaller and smaller, and finally, the number of the individuals continuously diminishing, merely machines will meet in a contest without bloodshed, the nations being simply interested, ambitious spectators. When this happy condition is realized, peace will be assured. But, no matter to what degree of perfection rapid-fire guns, high-power cannon, explosive projectiles, torpedo-boats, or other implements of war may be brought, no matter how destructive they may be made, that condition can never be reached through any such development. All such implements require men for their operation; men are indispensable parts of the machinery. Their object is to kill and to destroy. Their power resides in their capacity for doing evil. So long as men meet in battle, there will be bloodshed. Bloodshed will ever keep up barbarous passion. To break this fierce spirit, a radical departure must be made, an entirely new principle must be introduced, something that never existed before in warfare — a principle which will forcibly, unavoidably, turn the battle into a mere spectacle, a play, a contest without loss of blood. To bring on this result men must be dispensed with: machine must fight machine. But how accomplish that which seems impossible? The answer is simple enough: produce a machine capable of acting as though it were part of a human being — no mere mechanical contrivance, comprising levers, screws, wheels, clutches, and nothing more, but a machine embodying a higher principle, which will enable it to perform its duties as though it had intelligence, experience, reason, judgment, a mind! This conclusion is the result of my thoughts and observations which have extended through virtually my whole life, and I shall now briefly describe how I came to accomplish that which at first seemed an unrealizable dream.

A long time ago, when I was a boy, I was afflicted with a singular trouble, which seems to have been due to an extraordinary excitability of the retina. It was the appearance of images which, by their persistence, marred the vision of real objects and interfered with thought. When a word was said to me, the image of the object which it designated would appear vividly before my eyes, and many times it was impossible for me to tell whether the object I saw was real or not. This caused me great discomfort and anxiety, and I tried hard to free myself of the spell. But for a long time I tried in vain, and it was not, as I still clearly recollect, until I was about twelve years old that I succeeded for the first time, by an effort of the will, in banishing an image which presented itself. My happiness will never be as complete as it was then, but, unfortunately (as I thought at that time), the old trouble returned, and with it my anxiety. Here it was that the observations to which I refer began. I noted, namely, that whenever the image of an object appeared before my eyes I had seen something which reminded me of it. In the first instances I thought this to be purely accidental, but soon I convinced myself that it was not so. A visual impression, consciously or unconsciously received, invariably preceded the appearance of the image. Gradually the desire arose in me to find out, every time, what caused the images to appear, and the satisfaction of this desire soon became a necessity. The next observation I made was that, just as these images followed as a result of something I had seen, so also the thoughts which I conceived were suggested in like manner. Again, I experienced the same desire to locate the image which caused the thought, and this search for the original visual impression soon grew to be a second nature. My mind became automatic, as it were, and

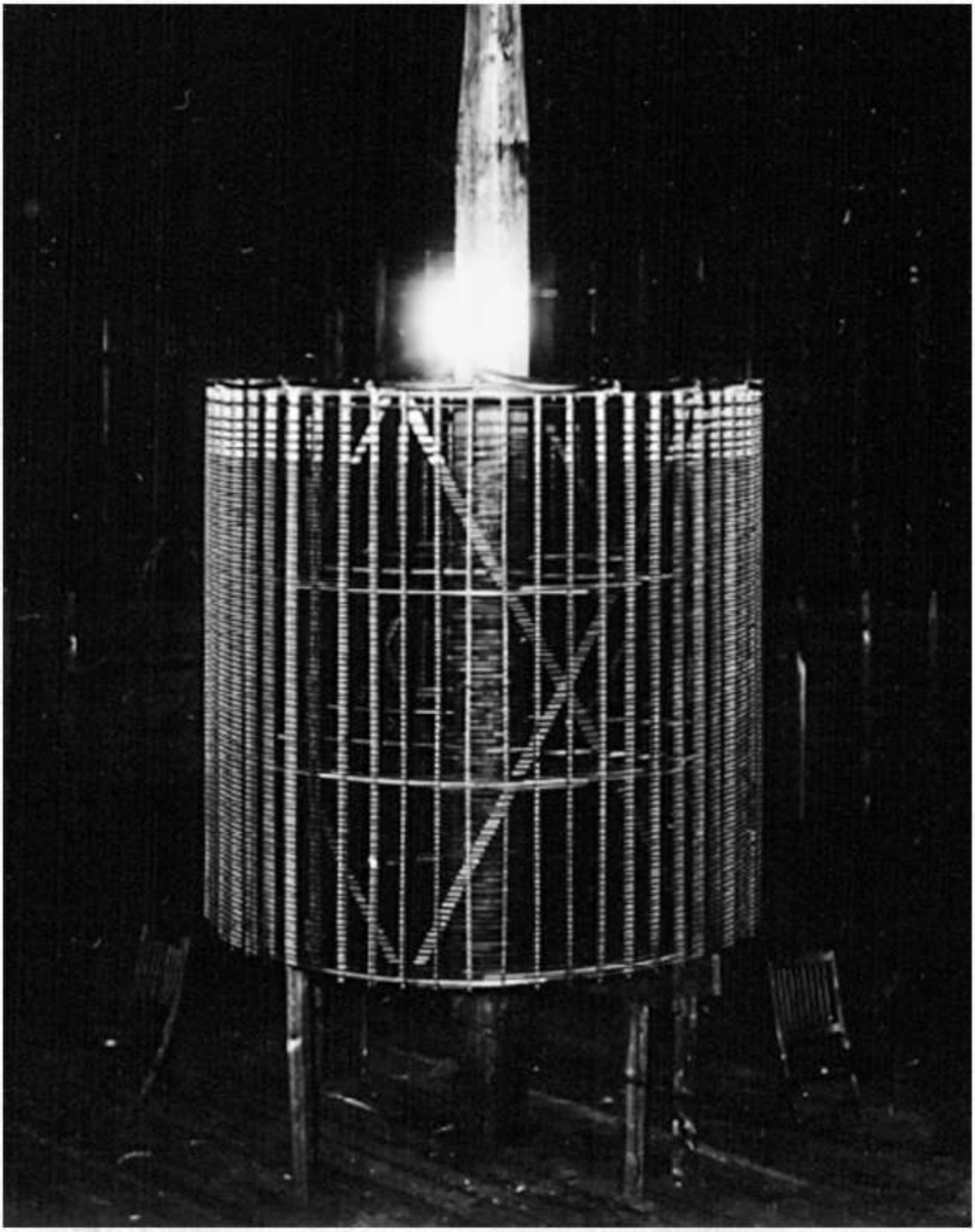

Fig. 3. EXPERIMENT TO ILLUSTRATE THE SUPPLYING OF ELECTRICAL ENERGY THROUGH A SINGLE WIRE WITHOUT RETURN.

An ordinary incandescent lamp connected with one or both of its terminals to the wire forming the upper free end of the coil shown in the photograph, is lighted by electrical vibrations conveyed to it through the coil from an electrical oscillator, which is worked only to one fifth of one per cent of its full capacity.

in the course of years of continued, almost unconscious performance, I acquired the ability of locating every time and, as a rule, instantly the visual impression which started the thought. Nor is this all. It was not long before I was aware that also all my movements were prompted in the same way, and so, searching, observing, and verifying continuously, year after year, I have, by every thought and every act of mine, demonstrated, and do so daily, to my absolute satisfaction, that I am an automaton endowed with power of movement, which merely responds to external stimuli beating upon my sense organs, and thinks and acts and moves accordingly. I remember only one or two cases in all my life in which I was unable to locate the first impression which prompted a movement or a thought, or even a dream.

With these experiences it was only natural that, long ago, I conceived the idea of constructing an automaton which would mechanically represent me, and which would respond, as I do myself, but, of course, in a much more primitive manner, to external influences. Such an automaton evidently had to have motive power, organs for locomotion, directive organs, and one or more sensitive organs so adapted as to be excited by external stimuli. This machine would, I reasoned, perform its movements in the manner of a living being, for it would have all the chief mechanical characteristics or elements of the same. There was still the capacity for growth, propagation, and, above all, the mind which would be wanting to make the model complete. But growth was not necessary in this case, since a machine could be manufactured full-grown, so to speak. As to the capacity for propagation, it could likewise be left out of consideration, for in the mechanical model it merely signified a process of manufacture. Whether the automaton be of flesh and bone, or of wood and steel, it mattered little, provided it could perform all the duties required of it like an intelligent being. To do so, it had to have an element corresponding to the mind, which would effect the control of all its movements and operations, and cause it to act, in any unforeseen case that might present itself, with knowledge, reason, judgment, and experience. But this element I could easily embody in it by conveying to it my own intelligence, my own understanding. So this invention was evolved, and so a new art came into existence, for which the name "telautomatics" has been suggested, which means the art of controlling the movements and operations of distant automatons.

This principle evidently was applicable to any kind of machine that moves on land or in the water or in the air. In applying it practically for the first time, I selected a boat (see Fig. 2). A storage battery placed within it furnished the motive power. The propeller, driven by a motor, represented the locomotive organs. The rudder, controlled by another motor likewise driven by the battery, took the place of the directive organs. As to the sensitive organ, obviously the first thought was to utilize a device responsive to rays of light, like a selenium cell, to represent the human eye. But upon closer inquiry I found that, owing to experimental and other difficulties, no thoroughly satisfactory control of the automaton could be effected by light, radiant heat, Hertzian radiations, or by rays in general, that is, disturbances which pass in straight lines through space. One of the reasons was that any obstacle coming between the operator and the distant automaton would place it beyond his control. Another reason was that the sensitive device representing the eye would have to be in a definite position with respect to the distant controlling apparatus, and this necessity would impose great limitations in the control. Still another and very important reason was that, in using rays, it would be difficult, if not impossible, to give to the automaton individual features or characteristics distinguishing it from other machines of this kind. Evidently the automaton should respond only to an individual call, as a person responds to a name. Such considerations led me to conclude that the sensitive device of the machine should correspond to the ear rather than to the eye of a human being, for in this case its actions could be controlled

irrespective of intervening obstacles, regardless of its position relative to the distant controlling apparatus, and, last, but not least, it would remain deaf and unresponsive, like a faithful servant, to all calls but that of its master. These requirements made it imperative to use, in the control of the automaton, instead of light — or other rays, waves or disturbances which propagate in all directions through space, like sound, or which follow a path of least resistance, however curved. I attained the result aimed at by means of an electric circuit placed within the boat, and adjusted, or "tuned", exactly to electrical vibrations of the proper kind transmitted to it from a distant "electrical oscillator." This circuit, in responding, however feebly, to the transmitted vibrations, affected magnets and other contrivances, through the medium of which were controlled the movements of the propeller and rudder, and also the operations of numerous other appliances.

By the simple means described the knowledge, experience, judgment — the mind, so to speak — of the distant operator were embodied in that machine, which was thus enabled to move and to perform all its operations with reason and intelligence. It behaved just like a blindfolded person obeying directions received through the ear.

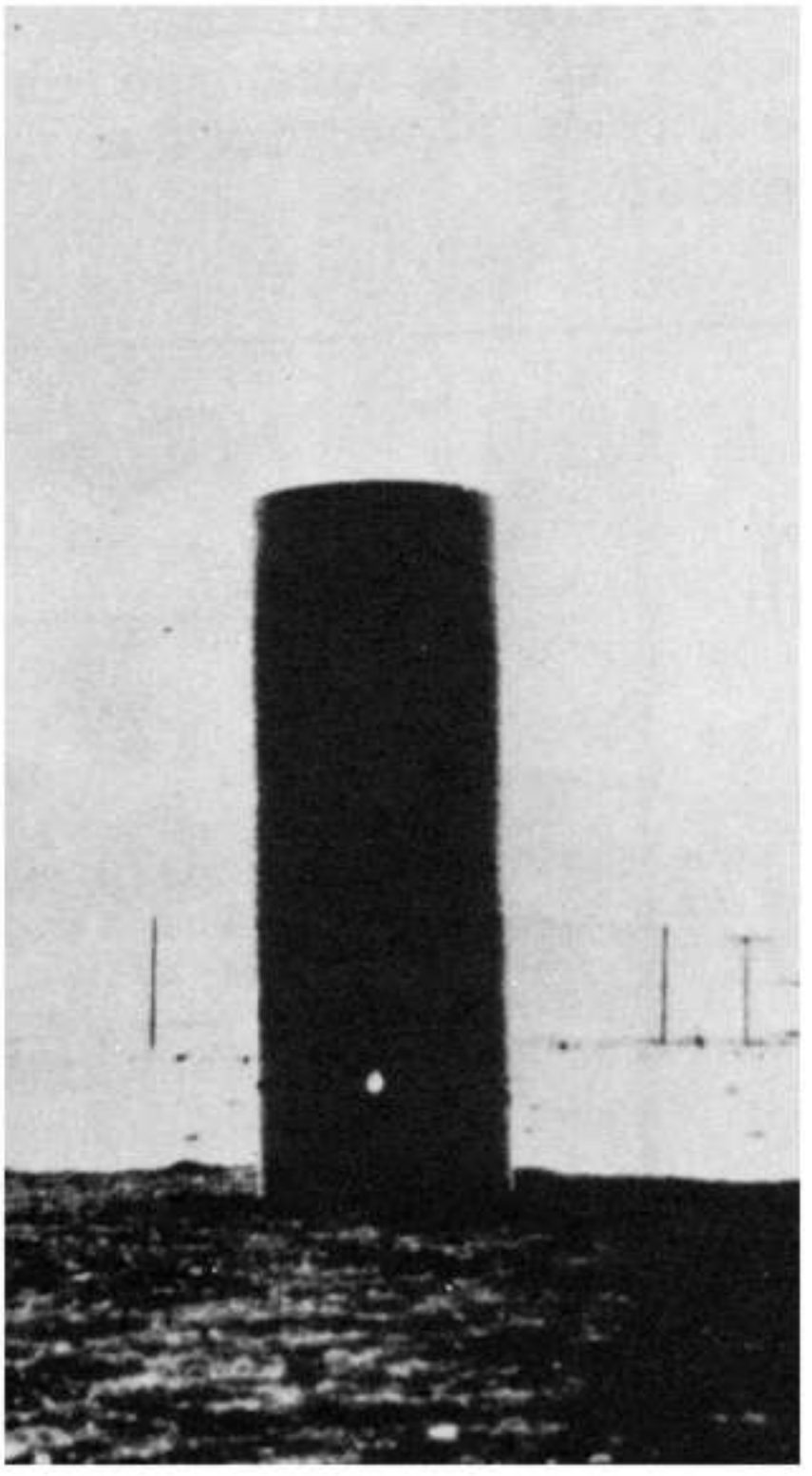

Fig. 4. EXPERIMENT TO ILLUSTRATE THE TRANSMISSION OF ELECTRICAL ENERGY THROUGH THE EARTH WITHOUT WIRE. The coil shown in the photograph has its lower end or terminal connected to the ground, and is exactly attuned to the vibrations of a distant electrical oscillator. The lamp lighted is in an independent wire loop, energized by induction from the coil excited by the electrical vibrations transmitted to it through the ground from the oscillator, which is worked only to five per cent. of its full capacity.

The automatons so far constructed had "borrowed minds," so to speak, as each merely formed part of the distant operator who conveyed to it his intelligent orders; but this art is only in the beginning. I purpose to show that, however impossible it may now seem, an automaton may be contrived which will have its "own mind," and by this I mean that it will be able, independent of any operator, left entirely to itself, to perform, in response to external influences affecting its sensitive organs, a great variety of acts and operations as if it had intelligence. It will be able to follow a course laid out or to obey orders given far in advance; it will be capable of distinguishing between what it ought and what it ought not to do, and of making experiences or, otherwise stated, of recording impressions which will definitely affect its subsequent actions. In fact, I have already conceived such a plan.

Although I evolved this invention many years ago and explained it to my visitors very frequently in my laboratory demonstrations, it was not until much later, long

after I had perfected it, that it became known, when, naturally enough, it gave rise to much discussion and to sensational reports. But the true significance of this new art was not grasped by the majority, nor was the great force of the underlying principle recognized. As nearly as I could judge from the numerous comments which then

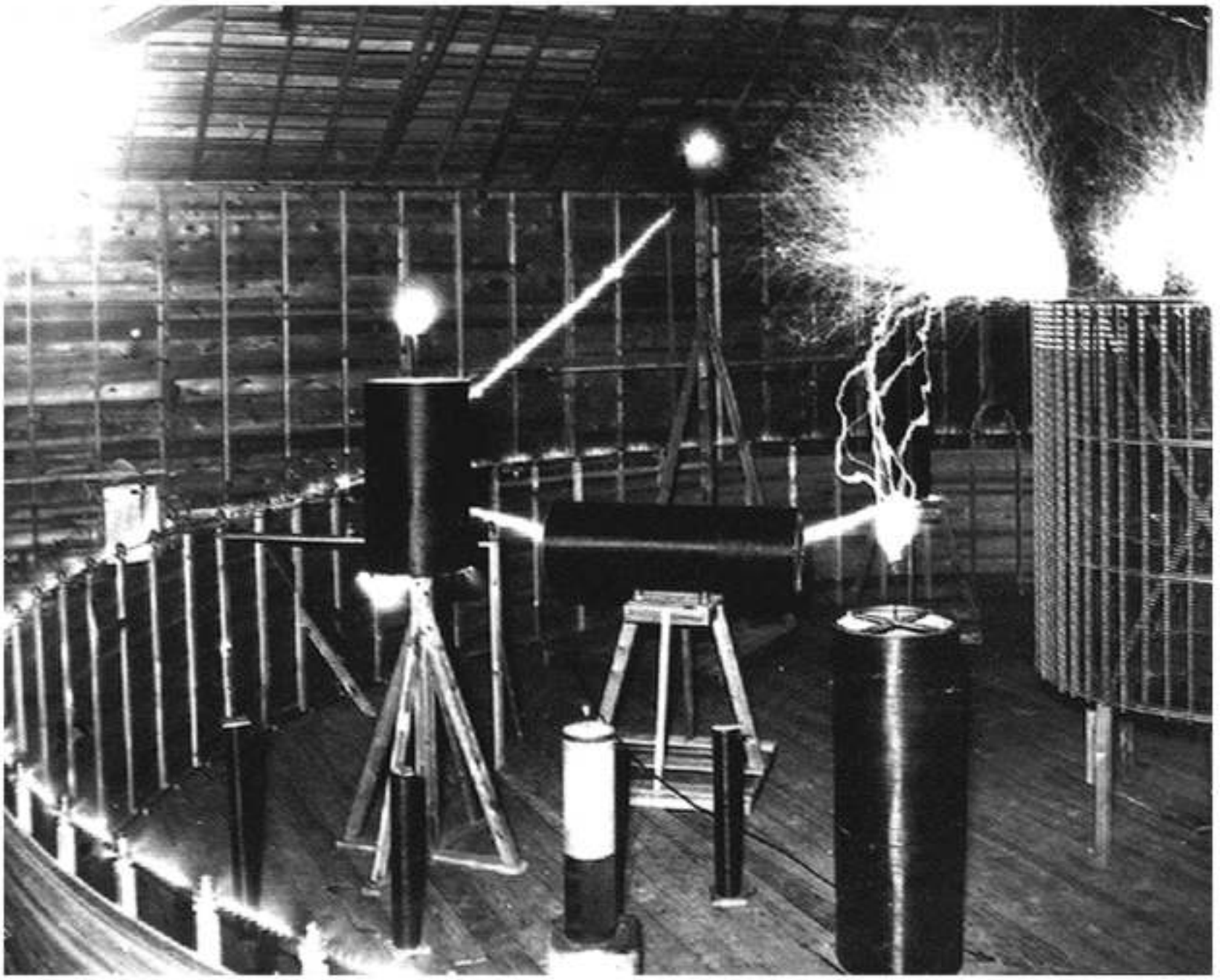

Fig. 5. PHOTOGRAPHIC VIEW OF COILS RESPONDING TO ELECTRICAL OSCILLATIONS.
The picture shows a number of coils, differently attuned and responding to the vibrations transmitted to them through the earth from an electrical oscillator. The large coil on the right, discharging strongly, is tuned to the fundamental vibration, which is fifty thousand per second; the two larger vertical coils to twice that number; the smaller white wire coil to four times that number, and the remaining small coils to higher tones. The vibrations produced by the oscillator were so intense that they affected perceptibly a small coil tuned to the twenty-sixth higher tone.

appeared, the results I had obtained were considered as entirely impossible. Even the few who were disposed to admit the practicability of the invention saw in it merely an automobile torpedo, which was to be used for the purpose of blowing up battleships, with doubtful success. The general impression was that I contemplated simply the steering of such a vessel by means of Hertzian or other rays. There are torpedoes steered electrically by wires, and there are means of communicating without wires, and the above was, of course, an obvious inference. Had I accomplished nothing more than this, I should have made a small advance indeed. But the art I have evolved does not contemplate merely the change of direction of a moving vessel; it affords a means of absolutely controlling, in every respect, all the innumerable translatory movements, as well as the operations of all the internal organs, no matter how many, of an individualized automaton. Criticisms to the effect that the control of the automaton

could be interfered with were made by people who do not even dream of the wonderful results which can be accomplished by the use of electrical vibrations. The world moves slowly, and new truths are difficult to see. Certainly, by the use of this principle, an arm for attack as well as defense may be provided, of a destructiveness all the greater as the principle is applicable to submarine and aerial vessels. There is virtually no

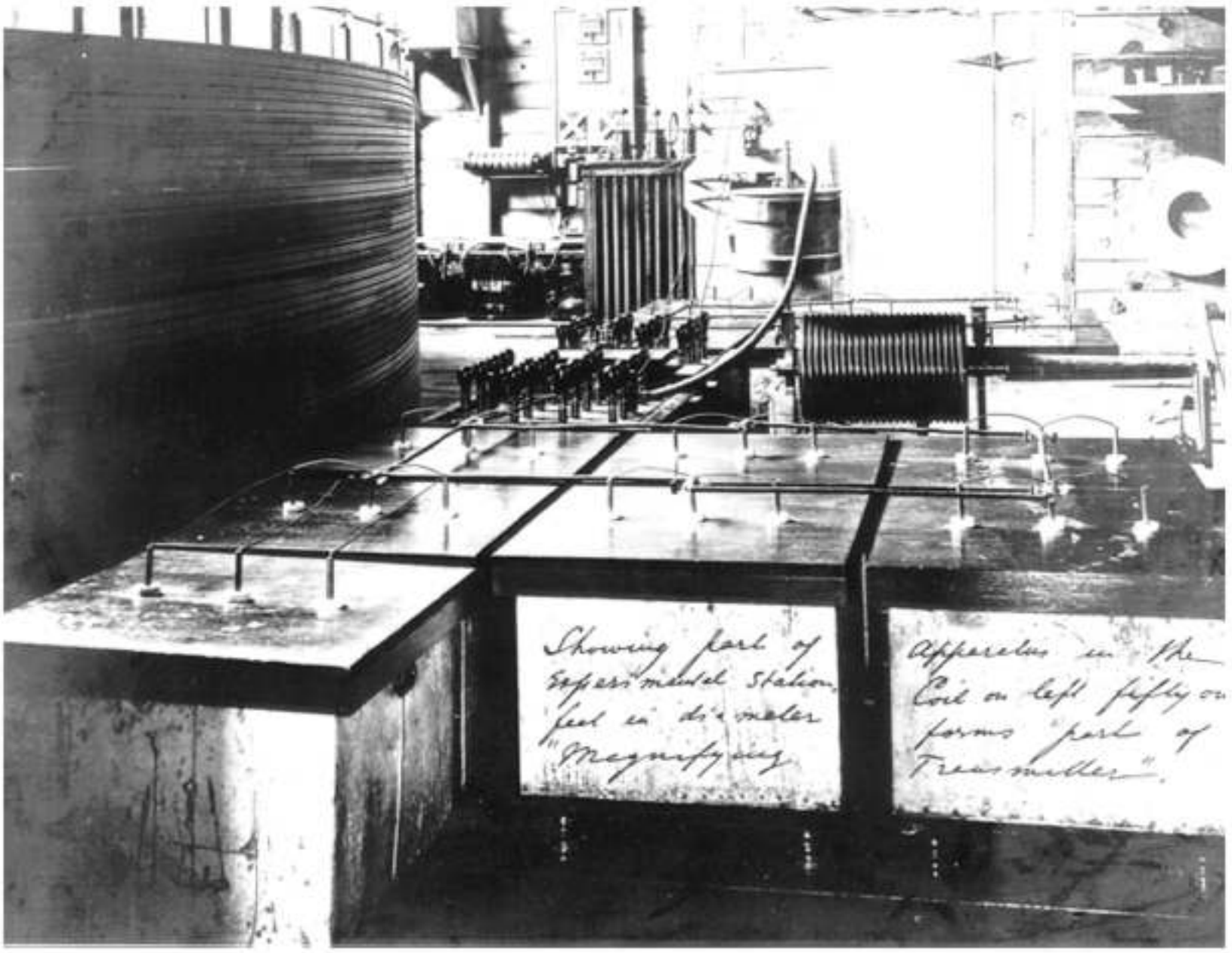

Fig. 6. PHOTOGRAPHIC VIEW OF THE ESSENTIAL PARTS OF THE ELECTRICAL OSCILLATOR USED IN THE EXPERIMENTS DESCRIBED.

restriction as to the amount of explosive it can carry, or as to the distance at which it can strike, and failure is almost impossible. But the force of this new principle does not wholly reside in its destructiveness. Its advent introduces into warfare an element which never existed before — a fighting-machine without men as a means of attack and defense. The continuous development in this direction must ultimately make war a mere contest of machines without men and without loss of life — a condition which would have been impossible without this new departure, and which, in my opinion, must be reached as preliminary to permanent peace. The future will either bear out or disprove these views. My ideas on this subject have been put forth with deep conviction, but in a humble spirit.

The establishment of permanent peaceful relations between nations would most effectively reduce the force retarding the human mass, and would be the best solution of this great human problem. But will the dream of universal peace ever be realized? Let us hope that it will. When all darkness shall be dissipated by the light of science,

when all nations shall be merged into one, and patriotism shall be identical with religion, when there shall be one language, one country, one end, then the dream will have become reality.

THE THIRD PROBLEM: HOW TO INCREASE THE FORCE ACCELERATING THE HUMAN MASS — THE HARNESSING OF THE SUN'S ENERGY

Of the three possible solutions of the main problem of increasing human energy, this is by far the most important to consider, not only because of its intrinsic significance, but also because of its intimate bearing on all the many elements and conditions which determine the movement of humanity. In order to proceed systematically, it would be necessary for me to dwell on all those considerations which have guided me from the outset in my efforts to arrive at a solution, and which have led me, step by step, to the results I shall now describe. As a preliminary study of the problem an analytical

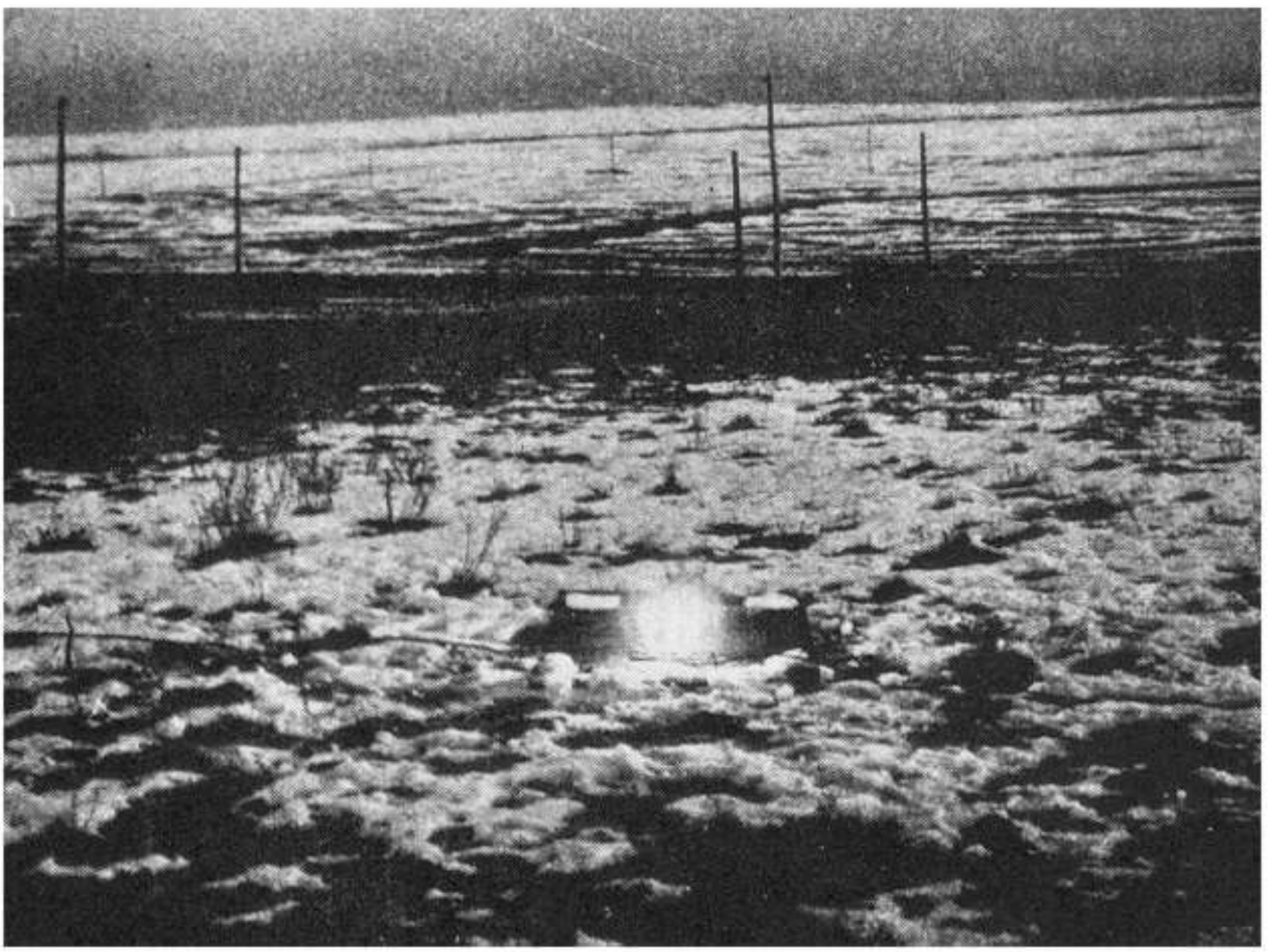

Fig. 7. EXPERIMENT TO ILLUSTRATE AN INDUCTIVE EFFECT OF AN ELECTRICAL OSCILLATOR OF GREAT POWER.

The photograph shows three ordinary incandescent lamps lighted to full candle-power by currents induced in a local loop consisting of a single wire forming a square of fifty feet each side, which includes the lamps, and which is at a distance of one hundred feet from the primary circuit energized by the oscillator. The loop likewise includes an electrical condenser, and is exactly attuned to the vibrations of the oscillator, which is worked at less than five per cent. of its total capacity.

investigation, such as I have made, of the chief forces which determine the onward movement, would be of advantage, particularly in conveying an idea of that hypothetical "velocity" which, as explained in the beginning, is a measure of human energy; but

to deal with this specifically here, as I would desire, would lead me far beyond the scope of the present subject. Suffice it to state that the resultant of all these forces is always in the direction of reason, which, therefore, determines, at any time, the direction of human movement. This is to say that every effort which is scientifically applied, rational, useful, or practical, must be in the direction in which the mass is moving. The practical, rational man, the observer, the man of business, he who reasons, calculates, or determines in advance, carefully applies his effort so that when coming into effect it will be in the direction of the movement, making it thus most efficient, and in this knowledge and ability lies the secret of his success. Every new fact discovered, every new experience or new element added to our knowledge and entering into the

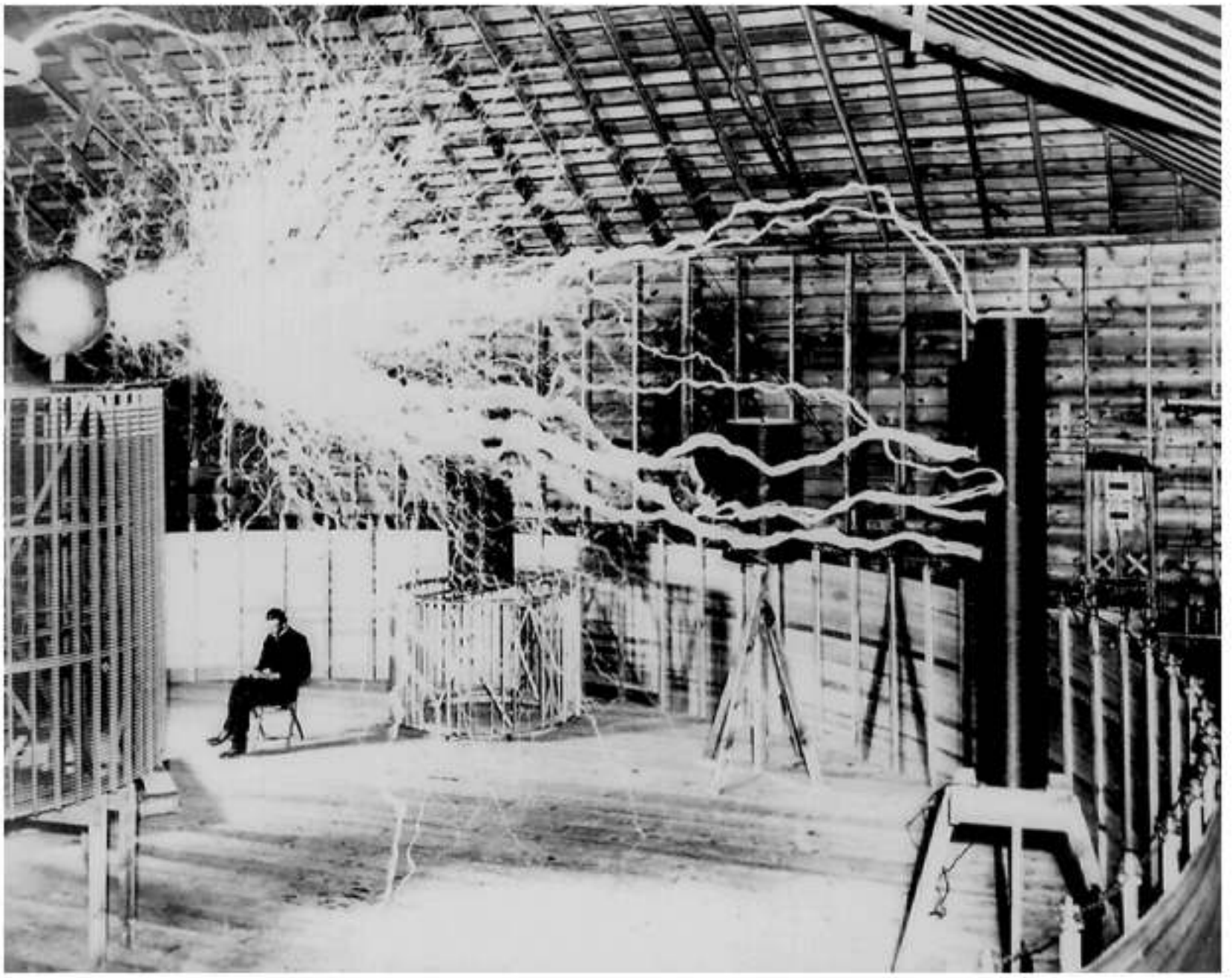

Note to Fig. 8. — The coil, partly shown in the photograph, creates an alternative movement of electricity from the earth into a large reservoir and back at the rate of one hundred thousand alternations per second. The adjustments are such that the reservoir is filled full and bursts at each alternation just at the moment when the electrical pressure reaches the maximum. The discharge escapes with a deafening noise, striking an unconnected coil twenty-two feet away, and creating such a comotion of electricity in the earth that sparks an inch long can be drawn from a water-main at a distance of three hundred feet from the laboratory.

domain of reason, affects the same and, therefore, changes the direction of the movement, which, however, must always take place along the resultant of all those efforts which, at that time, we designate as reasonable, that is, self-preserving, useful, profitable, or practical. These efforts concern our daily life, our necessities and comforts, our work and business, and it is these which drive man onward.

But looking at all this busy world about us, on all this complex mass as it daily throbs and moves, what is it but an immense clockwork driven by a spring? In the morning, when we rise, we cannot fail to note that all the objects about us are manufactured by machinery: the water we use is lifted by steam-power; the trains bring our breakfast from distant localities; the elevators in our dwelling and in our office building, the cars that carry us there, are all driven by power; in all our daily errands, and in our very life-pursuit, we depend upon it; all the objects we see tell us of it; and when we return to our machine-made dwelling at night, lest we should forget it, all the material comforts of our home, our cheering stove and lamp, remind us how much we depend on power. And when there is an accidental stoppage of the machinery, when the city is snow-bound, or the life-sustaining movement otherwise temporarily arrested, we are affrighted to realize how impossible it would be for us to live the life we live without motive power. Motive power means work. To increase the force accelerating human movement means, therefore, to perform more work.

So we find that the three possible solutions of the great problem of increasing human energy are answered by the three words: *food, peace, work*. Many a year I have thought and pondered, lost myself in speculations and theories, considering man as a mass moved by a force, viewing his inexplicable movement in the light of a mechanical one, and applying the simple principles of mechanics to the analysis of the same until I arrived at these solutions, only to realize that they were taught to me in my early childhood. These three words sound the key-notes of the Christian religion. Their scientific meaning and purpose are now clear to me: food to increase the mass, peace to diminish the retarding force, and work to increase the force accelerating human movement. These are the only three solutions which are possible of that great problem, and all of them have one object, one end, namely, to increase human energy. When we recognize this, we cannot help wondering how profoundly wise and scientific and how immensely practical the Christian religion is, and in what a marked contrast it stands in this respect to other religions. It is unmistakably the result of practical experiment and scientific observation which have extended through ages, while other religions seem to be the outcome of merely abstract reasoning. Work, untiring effort, useful and accumulative, with periods of rest and recuperation aiming at higher efficiency, is its chief and ever-recurring command. Thus we are inspired both by Christianity and Science to do our utmost toward increasing the performance of mankind. This most important of human problems I shall now specifically consider.

THE SOURCE OF HUMAN ENERGY — THE THREE WAYS OF DRAWING ENERGY FROM THE SUN

First let us ask: Whence comes all the motive power? What is the spring that drives all? We see the ocean rise and fall, the rivers flow, the wind, rain, hail, and snow beat on our windows, the trains and steamers come and go; we hear the rattling noise of carriages, the voices from the street; we feel, smell, and taste; and we think of all this. And all this movement from the surging of the mighty ocean to that subtle movement concerned in our thought, has but one common cause. All this energy emanates from one single center, one single source — the sun. The sun is the spring that drives all. The sun maintains all human life and supplies all human energy. Another answer we have now found to the above great question: To increase the force accelerating human movement means to turn to the uses of man more of the sun's energy. We honor and revere those great men of bygone times whose names are linked with immortal achievements, who have proved themselves benefactors of humanity — the religious reformer with his wise maxims of life, the philosopher with his deep

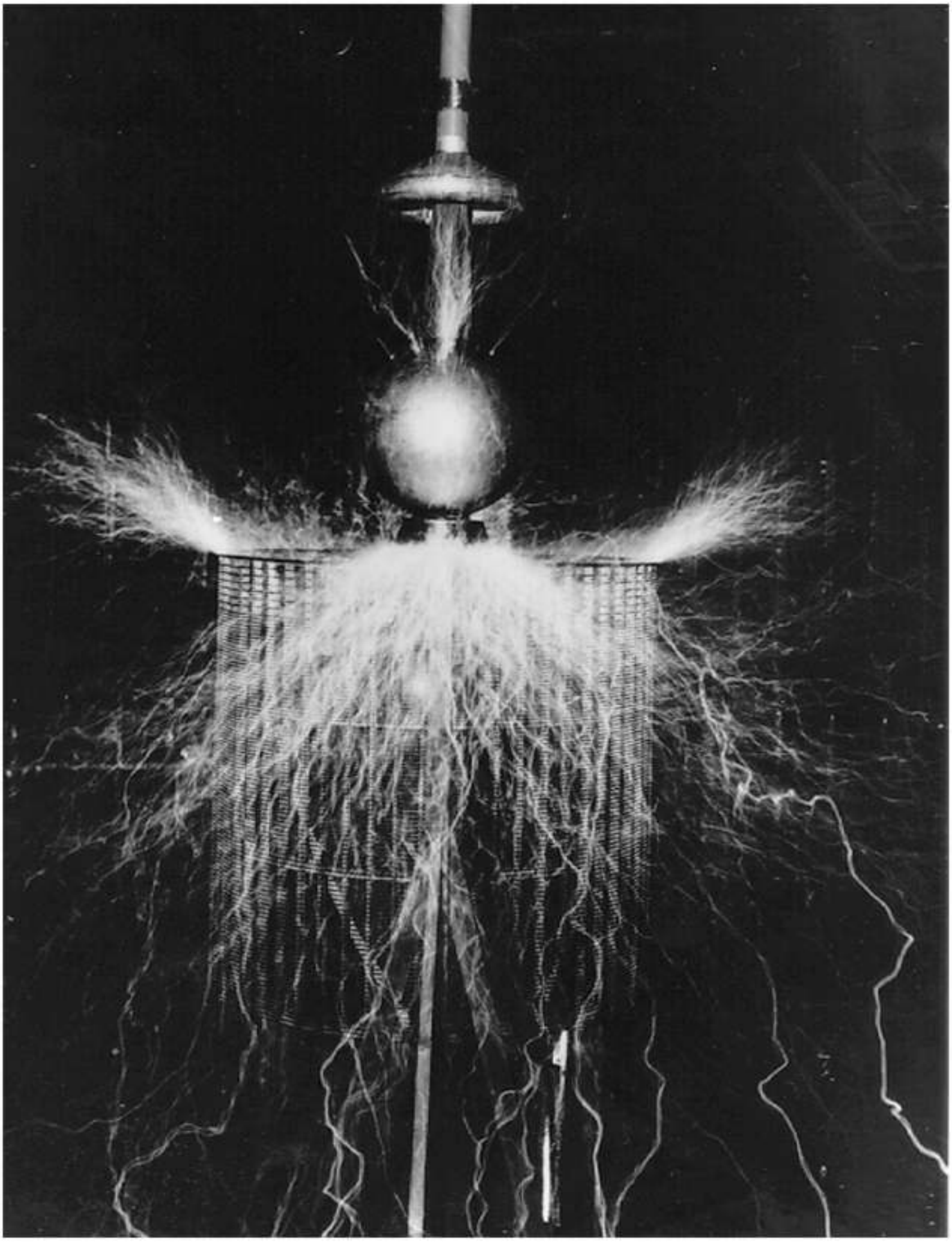

Fig. 9. EXPERIMENT TO ILLUSTRATE THE CAPACITY OF THE OSCILLATOR FOR CREATING A GREAT ELECTRICAL MOVEMENT.

The ball shown in the photograph, covered with a polished metallic coating of twenty square feet of surface, represents a large reservoir of electricity, and the inverted tin pan underneath, with a sharp rim, a big opening through which the electricity can escape before filling the reservoir. The quantity of electricity set in movement is so great that, although most of it escapes through the rim of the pan or opening provided, the ball or reservoir is nevertheless alternately emptied and filled to overflowing (as is evident from the discharge escaping on the top of the ball) one hundred and fifty thousand times per second.

truths, the mathematician with his formulae, the physicist with his laws, the discoverer with his principles and secrets wrested from nature, the artist with his forms of the beautiful; but who honors him, the greatest of all, — who can tell the name of him, — who first turned to use the sun's energy to save the effort of a weak fellow-creature? That was man's first act of scientific philanthropy, and its consequences have been incalculable.

From the very beginning three ways of drawing energy from the sun were open to man. The savage, when he warmed his frozen limbs at a fire kindled in some way, availed himself of the energy of the sun stored in the burning material. When he carried a bundle of branches to his cave and burned them there, he made use of the sun's stored energy transported from one to another locality. When he set sail to his canoe, he utilized the energy of the sun supplied to the atmosphere or ambient medium. There can be no doubt that the first is the oldest way. A fire, found accidentally, taught the savage to appreciate its beneficial heat. He then very likely conceived the idea of the carrying the glowing embers to his abode. Finally he learned to use the force of a swift current of water or air. It is characteristic of modern development that progress has been effected in the same order. The utilization of the energy stored in wood or coal, or, generally speaking, fuel, led to the steam-engine. Next a great stride in advance was made in energy-transportation by the use of electricity, which permitted the transfer of energy from one locality to another without transporting the material. But as to the utilization of the energy of the ambient medium, no radical step forward has as yet been made known.

The ultimate results of development in these three directions are: first, the burning of coal by a cold process in a battery; second, the efficient utilization of the energy of the ambient medium; and, third, the transmission without wires of electrical energy to any distance. In whatever way these results may be arrived at, their practical application will necessarily involve an extensive use of iron, and this invaluable metal will undoubtedly be an essential element in the further development along these three lines. If we succeed in burning coal by a cold process and thus obtaining electrical energy in an efficient and inexpensive manner, we shall require in many practical uses of this energy electric motors — that is, iron. If we are successful in deriving energy from the ambient medium, we shall need, both in the obtainment and utilization of the energy, machinery — again, iron. If we realize the transmission of electrical energy without wires on an industrial scale, we shall be compelled to use extensively electric generators — once more, iron. Whatever we may do, iron will probably be the chief means of accomplishment in the near future, possibly more so than in the past. How long its reign will last is difficult to tell, for even now aluminium is looming up as a threatening competitor. But for the time being, next to providing new resources of energy, it is of the greatest importance to make improvements in the manufacture and utilization of iron. Great advances are possible in these latter directions, which, if brought about, would enormously increase the useful performance of mankind.

GREAT POSSIBILITIES OFFERED BY IRON FOR INCREASING HUMAN PERFORMANCE — ENORMOUS WASTE IN IRON MANUFACTURE

Iron is by far the most important factor in modern progress. It contributes more than any other industrial product to the force accelerating human movement. So general is the use of this metal, and so intimately is it connected with all that concerns our life, that it has become as indispensable to us as the very air we breathe. Its name is synonymous with usefulness. But, however great the influence of iron may be on the present human development, it does not add to the force urging man onward nearly as much as it might. First of all, its manufacture as now carried on is connected with

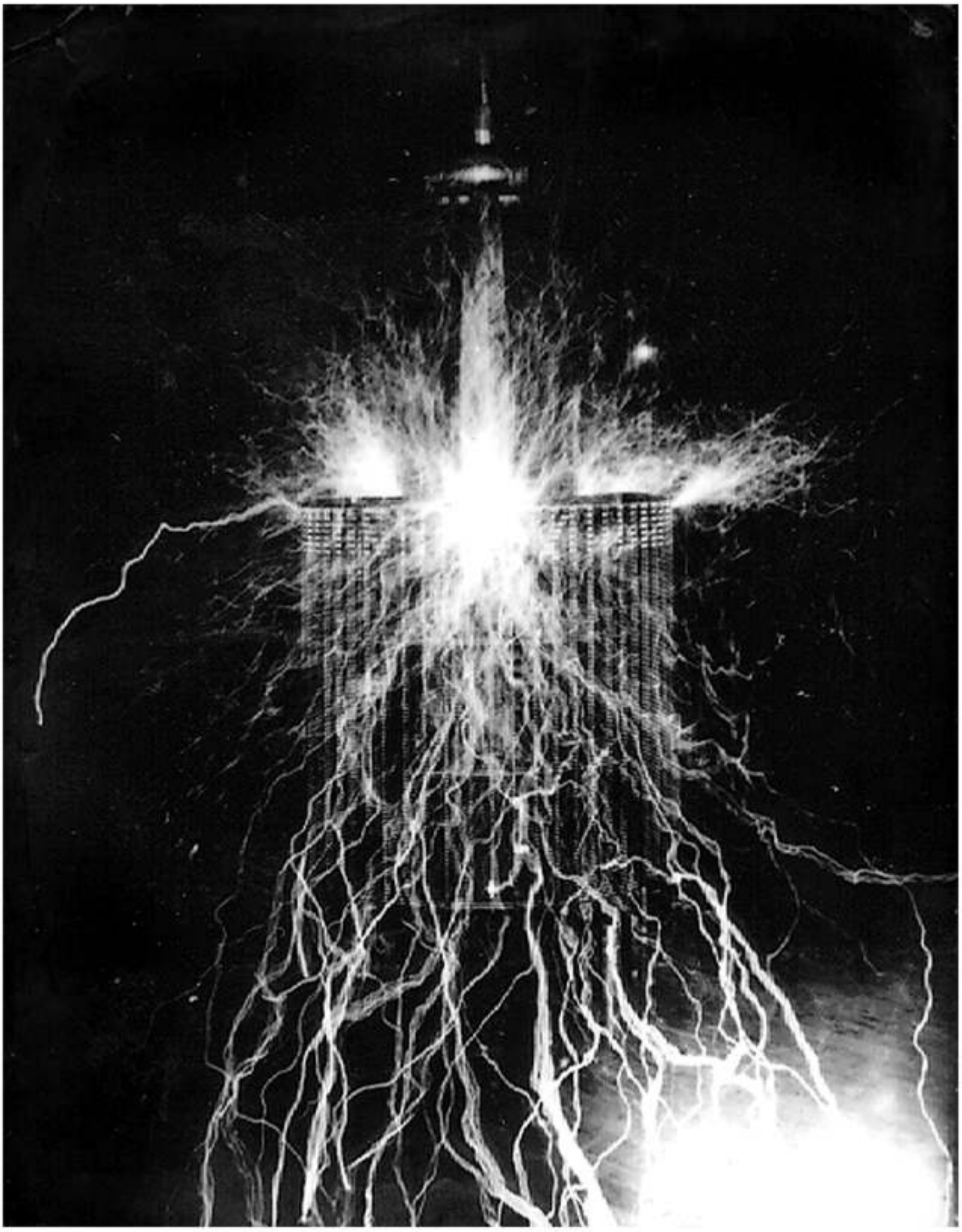

Fig. 10. PHOTOGRAPHIC VIEW OF AN EXPERIMENT TO ILLUSTRATE AN EFFECT OF AN ELECTRICAL OSCILLATOR DELIVERING ENERGY AT A RATE OF SEVENTY-FIVE THOUSAND HORSE-POWER.

The discharge, creating a strong draft owing to the heating of the air, is carried upward through the open roof of the building. The greatest width across is nearly seventy feet. The pressure is over twelve million volts, and the current alternates one hundred and thirty thousand times per second.

an appalling waste of fuel — that is, waste of energy. Then, again, only a part of all the iron produced is applied for useful purposes. A good part of it goes to create frictional resistances, while still another large part is the means of developing negative forces greatly retarding human movement. Thus the negative force of war is almost wholly represented in iron. It is impossible to estimate with any degree of accuracy the magnitude of this greatest of all retarding forces, but it is certainly very considerable. If the present positive impelling force due to all useful applications of iron be represented by ten, for instance, I should not think it exaggeration to estimate the negative force of war, with due consideration of all its retarding influences and results, at, say, six. On the basis of this estimate the effective impelling force of iron in the positive direction would be measured by the difference of these two numbers, which is four. But if, through the establishment of universal peace, the manufacture of war machinery should cease, and all struggle for supremacy between nations should be turned into healthful, ever active and productive commercial competition, then the positive impelling force due to iron would be measured by the sum of those two numbers, which is sixteen — that is, this force would have four times its present value. This example is, of course, merely intended to give an idea of the immense increase in the useful performance of mankind which would result from a radical reform of the iron industries supplying the implements of warfare.

A similar inestimable advantage in the saving of energy available to man would be secured by obviating the great waste of coal which is inseparably connected with the present methods of manufacturing iron. In some countries, as in Great Britain, the hurtful effects of this squandering of fuel are beginning to be felt. The price of coal is constantly rising, and the poor are made to suffer more and more. Though we are still far from the dreaded "exhaustion of the coal-fields", philanthropy commands us to invent novel methods of manufacturing iron, which will not involve such barbarous waste of this valuable material from which we derive at present most of our energy. It is our duty to coming generations to leave this store of energy intact for them, or at least not to touch it until we shall have perfected processes for burning coal more efficiently. Those who are to come after us will need fuel more than we do. We should be able to manufacture the iron we require by using the sun's energy, without wasting any coal at all. As an effort to this end the idea of smelting iron ores by electric currents obtained from the energy of falling water has naturally suggested itself to many. I have myself spent much time in endeavoring to evolve such a practical process, which would enable iron to be manufactured at small cost. After a prolonged investigation of the subject, finding that it was unprofitable to use the currents generated directly for smelting the ore, I devised a method which is far more economical.

ECONOMICAL PRODUCTION OF IRON BY A NEW PROCESS

The industrial project, as I worked it out six years ago, contemplated the employment of the electric currents derived from the energy of a waterfall, not directly for smelting the ore, but for decomposing water, as a preliminary step. To lessen the cost of the plant, I proposed to generate the currents in exceptionally cheap and simple dynamos, which I designed for this sole purpose. The hydrogen liberated in the electrolytic decomposition was to be burned or recombined with oxygen, not with that from which it was separated, but with that of the atmosphere. Thus very nearly the total electrical energy used up in the decomposition of the water would be recovered in the form of heat resulting from the recombination of the hydrogen. This heat was to be applied to the smelting of the ore. The oxygen gained as a by-product in the decomposition of the water I intended to use for certain other industrial purposes, which would probably yield good financial returns, inasmuch as this is the cheapest way of obtaining

this gas in large quantities. In any event, it could be employed to burn all kinds of refuse, cheap hydrocarbon, or coal of the most inferior quality which could not be burned in air or be otherwise utilized to advantage, and thus again a considerable amount of heat would be made available for the smelting of the ore. To increase the economy of the process I contemplated, furthermore, using an arrangement such that the hot metal and the products of combustion, coming out of the furnace, would give up their heat upon the cold ore going into the furnace, so that comparatively little of the heat-energy would be lost in the smelting. I calculated that probably forty thousand pounds of iron could be produced per horse-power per annum by this method. Liberal allowances were made for those losses which are unavoidable, the above quantity being about half of that theoretically obtainable. Relying on this estimate and on practical data with reference to a certain kind of sand ore existing in abundance in the region of the Great Lakes, including cost of transportation and labor, I found that in some localities iron could be manufactured in this manner cheaper than by any of the adopted methods. This result would be attained all the more surely if the oxygen obtained from the water, instead of being used for smelting the ore, as assumed, should be more profitably employed. Any new demand for this gas would secure a higher revenue from the plant, thus cheapening the iron. This project was advanced merely in the interest of industry. Some day, I hope, a beautiful industrial butterfly will come out of the dusty and shriveled chrysalis.

The production of iron from sand ores by a process of magnetic separation is highly commendable in principle, since it involves no waste of coal; but the usefulness of this method is largely reduced by the necessity of melting the iron afterward. As to the crushing of iron ore, I would consider it rational only if done by water-power, or by energy otherwise obtained without consumption of fuel. An electrolytic cold process, which would make it possible to extract iron cheaply, and also to mold it into the required forms without any fuel consumption, would, in my opinion, be a very great advance in iron manufacture. In common with some other metals, iron has so far resisted electrolytic treatment, but there can be no doubt that such a cold process will ultimately replace in metallurgy the present crude method of casting, and thus obviate the enormous waste of fuel necessitated by the repeated heating of metal in the foundries.

Up to a few decades ago the usefulness of iron was based almost wholly on its remarkable mechanical properties, but since the advent of the commercial dynamo and electric motor its value to mankind has been greatly increased by its unique magnetic qualities. As regards the latter, iron has been greatly improved of late. The signal progress began about thirteen years ago, when I discovered that in using soft Bessemer steel instead of wrought iron, as then customary, in an alternating motor, the performance of the machine was doubled. I brought this fact to the attention of Mr. Albert Schmid, to whose untiring efforts and ability is largely due the supremacy of American electrical machinery, and who was then superintendent of an industrial corporation engaged in this field. Following my suggestion, he constructed transformers of steel, and they showed the same marked improvement. The investigation was then systematically continued under Mr. Schmid's guidance, the impurities being gradually eliminated from the "steel" (which was only such in name, for in reality it was pure soft iron), and soon a product resulted which admitted of little further improvement.

THE COMING AGE OF ALUMINIUM — DOOM OF THE COPPER INDUSTRY — THE GREAT CIVILIZING POTENCY OF THE NEW METAL

With the advances made in iron of late years we have arrived virtually at the limits of improvement. We cannot hope to increase very materially its tensile strength, elasticity, hardness, or malleability, nor can we expect to make it much better as regards

its magnetic qualities. More recently a notable gain was secured by the mixture of a small percentage of nickel with the iron, but there is not much room for further advance in this direction. New discoveries may be expected, but they cannot greatly add to the valuable properties of the metal, though they may considerably reduce the cost of manufacture. The immediate future of iron is assured by its cheapness and its unrivaled mechanical and magnetic qualities. These are such that no other product can compete with it now. But there can be no doubt that, at a time not very distant, iron, in many of its now uncontested domains, will have to pass the scepter to another: the coming age will be the age of aluminium. It is cnly seventy years since this wonderful metal was discovered by Woehler, and the aluminium industry, scarcely forty years old, commands already the attention of the entire world. Such rapid growth has not been recorded in the history of civilization before. Not long ago aluminium was sold at the fanciful price of thirty or forty dollars per pound; to-day it can be had in any desired amount for as many cents. What is more, the time is not far off when this price, too, will be considered fanciful, for great improvements are possible in the methods of its manufacture. Most of the metal is now produced in the electric furnace by a process combining fusion and electrolysis, which offers a number of advantageous features, but involves naturally a great waste of the electrical energy of the current. My estimates show that the price of aluminium could be considerably reduced by adopting in its manufacture a method similar to that proposed by me for the production of iron. A pound of aluminium requires for fusion only about seventy per cent. of the heat needed for melting a pound of iron, and inasmuch as its weight is only about one third of that of the latter, a volume of aluminium four times that of iron could be obtained from a given amount of heat-energy. But a cold electrolytic process of manufacture is the ideal solution, and on this I have placed my hope.

The absolutely unavoidable consequence of the advance of the aluminium industry will be the annihilation of the copper industry. They cannot exist and prosper together, and the latter is doomed beyond any hope of recovery. Even now it is cheaper to convey an electric current through aluminium wires than through copper wires; aluminium castings cost less, and in many domestic and other uses copper has no chance of successfully competing. A further material reduction of the price of aluminium cannot but be fatal to copper. But the progress of the former will not go on unchecked, for, as it ever happens in such cases, the larger industry will absorb the smaller one: the giant copper interests will control the pygmy aluminium interests, and the slow-pacing copper will reduce the lively gait of aluminium. This will only delay, not avoid, the impending catastrophe.

Aluminium, however, will not stop at downing copper. Before many years have passed it will be engaged in a fierce struggle with iron, and in the latter it will find an adversary not easy to conquer. The issue of the contest will largely depend on whether iron shall be indispensable in electric machinery. This the future alone can decide. The magnetism as exhibited in iron is an isolated phenomenon in nature. What it is that makes this metal behave so radically different from all other materials in this respect has not yet been ascertained, though many theories have been suggested. As regards magnetism, the molecules of the various bodies behave like hollow beams partly filled with a heavy fluid and balanced in the middle in the manner of a see-saw. Evidently some disturbing influence exists in nature which causes each molecule, like such a beam, to tilt either one or the other way. If the molecules are tilted one way, the body is magnetic; if they are tilted the other way, the body is non-magnetic; but both positions are stable, as they would be in the case of the hollow beam, owing to the rushing of the fluid to the lower end. Now, the wonderful thing is that the molecules of all known bodies went one way, while those of iron went the other way. This metal, it would seem, has an origin entirely different from that of the rest of the globe. It is highly

improbable that we shall discover some other and cheaper material which will equal or surpass iron in magnetic qualities.

Unless we should make a radical departure in the character of the electric currents employed, iron will be indispensable. Yet the advantages it offers are only apparent. So long as we use feeble magnetic forces it is by far superior to any other material; but if we find ways of producing great magnetic forces, then better results will be obtainable without it. In fact, I have already produced electric transformers in which no iron is employed, and which are capable of performing ten times as much work per pound of weight as those with iron. This result is attained by using electric currents of a very high rate of vibration, produced in novel ways, instead of the ordinary currents now employed in the industries. I have also succeeded in operating electric motors without iron by such rapidly vibrating currents, but the results, so far, have been inferior to those obtained with ordinary motors constructed of iron, although theoretically the former should be capable of performing incomparably more work per unit of weight than the latter. But the seemingly insuperable difficulties which are now in the way may be overcome in the end, and then iron will be done away with, and all electric machinery will be manufactured of aluminium, in all probability, at prices ridiculously low. This would be a severe, if not a fatal, blow to iron. In many other branches of industry, as ship-building, or wherever lightness of structure is required, the progress of the new metal will be much quicker. For such uses it is eminently suitable, and is sure to supersede iron sooner or later. It is highly probable that in the course of time we shall be able to give it many of those qualities which make iron so valuable.

While it is impossible to tell when this industrial revolution will be consummated, there can be no doubt that the future belongs to aluminium, and that in times to come it will be the chief means of increasing human performance. It has in this respect capacities greater by far than those of any other metal. I should estimate its civilizing potency at fully one hundred times that of iron. This estimate, though it may astonish, is not at all exaggerated. First of all, we must remember that there is thirty times as much aluminium as iron in bulk, available for the uses of man. This in itself offers great possibilities. Then, again, the new metal is much more easily workable, which adds to its value. In many of its properties it partakes of the character of a precious metal, which gives it additional worth. Its electric conductivity, which, for a given weight, is greater than that of any other metal, would be alone sufficient to make it one of the most important factors in future human progress. Its extreme lightness makes it far more easy to transport the objects manufactured. By virtue of this property it will revolutionize naval construction, and in facilitaing transport and travel it will add enormously to the useful performance of mankind. But its greatest civilizing potency will be, I believe, in aerial travel, which is sure to be brought about by means of it. Telegraphic instruments will slowly enlighten the barbarian. Electric motors and lamps will do it more quickly, but quicker than anything else the flying-machine will do it. By rendering travel ideally easy it will be the best means for unifying the heterogeneous elements of humanity. As the first step toward this realization we should produce a lighter storage-battery or get more energy from coal.

EFFORTS TOWARD OBTAINING MORE ENERGY FROM COAL — THE ELECTRIC TRANSMISSION — THE GAS-ENGINE — THE COLD-COAL BATTERY

I remember that at one time I considered the production of electricity by burning coal in a battery as the greatest achievement toward advancing civilization, and I am surprised to find how much the continuous study of these subjects has modified my

views. It now seems to me that to burn coal, however efficiently, in a battery would be a mere makeshift, a phace in the evolution toward something much more perfect. After all, in generating electricity in this manner, we should be destroying material, and this would be a barbarous process. We ought to be able to obtain the energy we need without consumption of material. But I am far from underrating the value of such an efficient method of burning fuel. At the present time most motive power comes from coal, and, either directly or by its products, it adds vastly to human energy. Unfortunately, in all the processes now adopted, the larger portion of the energy of the coal is uselessly dissipated. The best steam-engines utilize only a small part of the total energy. Even in gas-engines, in which, particularly of late, better results are obtainable, there is still a barbarous waste going on. In our electric-lighting systems we scarcely utilize one third of one per cent., and in lighting by gas a much smaller fraction of the total energy of the coal. Considering the various uses of coal throughout the world, we certainly do not utilize more than two per cent, of its energy theoretically available. The man who should stop this senseless waste would be a great benefactor of humanity, though the solution he would offer could not be a permanent one, since it would ultimately lead to the exhaustion of the store of material. Efforts toward obtaining more energy from coal are now being made chiefly in two directions — by generating electricity and by producing gas for motive-power purposes. In both of these lines notable success has already been achieved.

The advent of the alternating-current system of electric power-transmission marks an epoch in the economy of energy available to man from coal. Evidently all electrical energy obtained from a waterfall, saving so much fuel, is a net gain to mankind, which is all the more effective as it is secured with little expenditure of human effort, and as this most perfect of all known methods of deriving energy from the sun contributes in many ways to the advancement of civilization. But electricity enables us also to get from coal much more energy than was practicable in the old ways. Instead of transporting the coal to distant places of consumption, we burn it near the mine, develop electricity in the dynamos, and transmit the current to remote localities, thus effecting a considerable saving. Instead of driving the machinery in a factory in the old wasteful way by belts and shafting, we generate electricity by steam-power and operate electric motors. In this manner it is not uncommon to obtain two or three times as much effective motive power from the fuel, besides securing many other important advantages. It is in this field as much as in the transmission of energy to great distances that the alternating system, with its ideally simple machinery, is bringing about an industrial revolution. But in many lines this progress has not yet been felt. For example, steamers and trains are still being propelled by the direct application of steam-power to shafts or axles. A much greater percentage of the heat-energy of the fuel could be transformed in motive energy by using, in place of the adopted marine engines and locomotives, dynamos driven by specially designed high-pressure steam- or gas-engines and by utilizing the electricity generated for the propulsion. A gain of fifty to one hundred per cent. in the effective energy derived from the coal could be secured in this manner. It is difficult to understand why a fact so plain and obvious is not receiving more attention from engineers. In ocean steamers such an improvement would be particularly desirable, as it would do away with noise and increase materially the speed and the carrying capacity of the liners.

Still more energy is now being obtained from coal by the latest improved gas-engine, the economy of which is, on the average, probably twice that of the best steam-engine. The introduction of the gas-engine is very much facilitated by the importance of the gas industry. With the increasing use of the electric light more and more of the gas is utilized for heating and motive-power purposes. In many instances gas is manufactured close to the coal-mine and conveyed to distant places of consumption.

a considerable saving both in the cost of transportation and in utilization of the energy of the fuel being thus effected. In the present state of the mechanical and electrical arts the most rational way of deriving energy from coal is evidently to manufacture gas close to the coal store, and to utilize it, either on the spot or elsewhere, to generate electricity for industrial uses in dynamos driven by gas-engines. The commercial success of such a plant is largely dependent upon the production of gas-engines of great nominal horse-power, which, judging from the keen activity in this field, will soon be forthcoming. Instead of consuming coal directly, as usual, gas should be manufactured from it and burned to economize energy.

But all such improvements cannot be more than passing phases in the evolution toward something far more perfect, for ultimately we must succeed in obtaining electricity from coal in a more direct way, involving no great loss of its heat-energy. Whether coal can be oxidized by a cold process is still a question. Its combination with oxygen always evolves heat, and whether the energy of the combination of the carbon with another element can be turned directly into electrical energy has not yet been determined. Under certain conditions nitric acid will burn the carbon, generating an electric current, but the solution does not remain cold. Other means of oxidizing coal have been proposed, but they have offered no promise of leading to an efficient process. My own lack of success has been complete, though perhaps not quite so complete as that of some who have "perfected" the cold-coal battery. This problem is essentially one for the chemist to solve. It is not for the physicist, who determines all his results in advance, so that, when the experiment is tried, it cannot fail. Chemistry, though a positive science, does not yet admit of a solution by such positive methods as those which are available in the treatment of many physical problems. The result, if possible, will be arrived at through patient trying rather than through deduction or calculation. The time will soon come, however, when the chemist will be able to follow a course clearly mapped out beforehand, and when the process of his arriving at a desired result will be purely constructive. The cold-coal battery would give a great impetus to electrical development; it would lead very shortly to a practical flying-machine, and would enormously enhance the introduction of the automobile. But these and many other problems will be better solved, and in a more scientific manner, by a light-storage battery.

ENERGY FROM THE MEDIUM — THE WINDMILL AND THE SOLAR ENGINE — MOTIVE POWER FROM TERRESTRIAL HEAT — ELECTRICITY FROM NATURAL SOURCES

Besides fuel, there is abundant material from which we might eventually derive power. An immense amount of energy is locked up in limestone, for instance, and machines can be driven by liberating the carbonic acid through sulphuric acid or otherwise. I once constructed such an engine, and it operated satisfactorily.

But, whatever our resources of primary energy may be in the future, we must, to be rational, obtain it without consumption of any material. Long ago I came to this conclusion, and to arrive at this result only two ways, as before indicated, appeared possible — either to turn to use the energy of the sun stored in the ambient medium, or to transmit, through the medium, the sun's energy to distant places from some locality where it was obtainable without consumption of material. At that time I at once rejected the latter method as entirely impracticable, and turned to examine the possibilities of the former.

It is difficult to believe, but it is, nevertheless, a fact, that since time immemorial man has had at his disposal a fairly good machine which has enabled him to utilize the energy of the ambient medium. This machine is the windmill. Contrary to popular

belief, the power obtainable from wind is very considerable. Many a deluded inventor has spent years of his life in endeavoring to "harness the tides," and some have even proposed to compress air by tide- or wave-power for supplying energy, never understanding the signs of the old windmill on the hill, as it sorrowfully waved its arms about and bade them stop. The fact is that a wave- or tide-motor would have, as a rule, but a small chance of competing commercially with the windmill, which is by far the better machine, allowing a much greater amount of energy to be obtained in a simpler way. Wind-power has been, in old times, of inestimable value to man, if for nothing else but for enabling him to cross the seas, and it is even now a very important factor in travel and transportation. But there are great limitations in this ideally simple method of utilizing the sun's energy. The machines are large for a given output, and the power is intermittent, thus necessitating the storage of energy and increasing the cost of the plant.

A far better way, however, to obtain power would be to avail ourselves of the sun's rays, which beat the earth incessantly and supply energy at a maximum rate of over four million horse-power per square mile. Although the average energy received per square mile in any locality during the year is only a small fraction of that amount, yet an inexhaustible source of power would be opened up by the discovery of some efficient method of utilizing the energy of the rays. The only rational way known to me at the time when I began the study of this subject was to employ some kind of heat- or thermodynamic engine, driven by a volatile fluid evaporated in a boiler by the heat of the rays. But closer investigation of this method, and calculation, showed that, notwithstanding the apparently vast amount of energy received from the sun's rays, only a small fraction of that energy could be actually utilized in this manner. Furthermore, the energy supplied through the sun's radiations is periodical, and the same limitations as in the use of the windmill I found to exist here also. After a long study of this mode of obtaining motive power from the sun, taking into account the necessarily large bulk of the boiler, the low efficiency of the heat-engine, the additional cost of storing the energy, and other drawbacks, I came to the conclusion that the "solar engine," a few instances excepted, could not be industrially exploited with success.

Another way of getting motive power from the medium without consuming any material would be to utilize the heat contained in the earth, the water, or the air for driving an engine. It is a well-known fact that the interior portions of the globe are very hot, the temperature rising, as observations show, with the approach to the center at the rate of approximately 1^0 C. for every hundred feet of depth. The difficulties of sinking shafts and placing boilers at depths of, say, twelve thousand feet, corresponding to an increase in temperature of about 120^0 C., are not insuperable, and we could certainly avail ourselves in this way of the internal heat of the globe. In fact, it would not be necessary to go to any depth at all in order to derive energy from the stored terrestrial heat. The superficial layers of the earth and the air strata close to the same are at a temperature sufficiently high to evaporate some extremely volatile substances, which we might use in our boilers instead of water. There is no doubt that a vessel might be propelled on the ocean by an engine driven by such a volatile fluid, no other energy being used but the heat abstracted from the water. But the amount of power which could be obtained in this manner would be, without further provision, very small.

Electricity produced by natural causes is another source of energy which might be rendered available. Lightning discharges involve great amounts of electrical energy, which we could utilize by transforming and storing it. Some years ago I made known a method of electrical transformation which renders the first part of this task easy, but the storing of the energy of lightning discharges will be difficult to accomplish.

It is well known, furthermore, that electric currents circulate constantly through the earth, and that there exists between the earth and any air stratum a difference of electrical pressure, which varies in proportion to the height.

In recent experiments I have discovered two novel facts of importance in this connection. One of these facts is that an electric current is generated in a wire extending from the ground to a great height by the axial, and probably also by the translatory, movement of the earth. No appreciable current, however, will flow continuously in the wire unless the electricity is allowed to leak out into the air. Its escape is greatly facilitated by providing at the elevated end of the wire a conducting terminal of great surface, with many sharp edges or points. We are thus enabled to get a continuous supply of electrical energy by merely supporting a wire at a height, but, unfortunately, the amount of electricity which can be so obtained is small.

The second fact which I have ascertained is that the upper air strata are permanently charged with electricity opposite to that of the earth. So, at least, I have interpreted my observations, from which it appears that the earth, with its adjacent insulating and outer conducting envelop, constitutes a highly charged electrical condenser containing, in all probability, a great amount of electrical energy which might be turned to the uses of man, if it were possible to reach with a wire to great altitudes.

It is possible, and even probable, that there will be, in time, other resources of energy opened up, of which we have no knowledge now. We may even find ways of applying forces such as magnetism or gravity for driving machinery without using any other means. Such realizations, though highly improbable, are not impossible. An example will best convey an idea of what we can hope to attain and what we can never attain. Imagine a disk of some homogeneous material turned perfectly true and arranged to turn in frictionless bearings on a horizontal shaft above the ground. This disk, being under the above conditions perfectly balanced, would rest in any position. Now, it is possible that we may learn how to make such a disk rotate continuously and perform work by the force of gravity without any further effort on our part; but it is perfectly impossible for the disk to turn and to do work without any force from the outside. If it could do so, it would be what is designated scientifically as a "perpetuum mobile," a machine creating its own motive power. To make the disk rotate by the force of gravity we have only to invent a screen against this force. By such a screen we could prevent this force from acting on one half of the disk, and the rotation of the latter would follow. At least, we cannot deny such a possibility until we know exactly the nature of the force of gravity. Suppose that this force were due to a movement comparable to that of a stream of air passing from above toward the center of the earth. The effect of such a stream upon both halves of the disk would be equal, and the latter would not rotate ordinarily; but if one half should be guarded by a plate arresting the movement, then it would turn.

A DEPARTURE FROM KNOWN METHODS — POSSIBILITY OF A "SELF-ACTING" ENGINE OR MACHINE, INANIMATE, YET CAPABLE, LIKE A LIVING BEING, OF DERIVING ENERGY FROM THE MEDIUM — THE IDEAL WAY OF OBTAINING MOTIVE POWER

When I began the investigation of the subject under consideration, and when the preceding or similar ideas presented themselves to me for the first time, though I was then unacquainted with a number of the facts mentioned, a survey of the various ways of utilizing the energy of the medium convinced me, nevertheless, that to arrive at a thoroughly satisfactory practical solution a radical departure from the methods then known had to be made. The windmill, the solar engine, the engine driven by terrestrial heat, had their limitations in the amount of power obtainable. Some new way had to

be discovered which would enable us to get more energy. There was enough heat-energy in the medium, but only a small part of it was available for the operation of an engine in the ways then known. Besides, the energy was obtainable only at a very slow rate. Clearly, then, the problem was to discover some new method which would make it possible both to utilize more of the heat-energy of the medium and also to draw it away from the same at a more rapid rate.

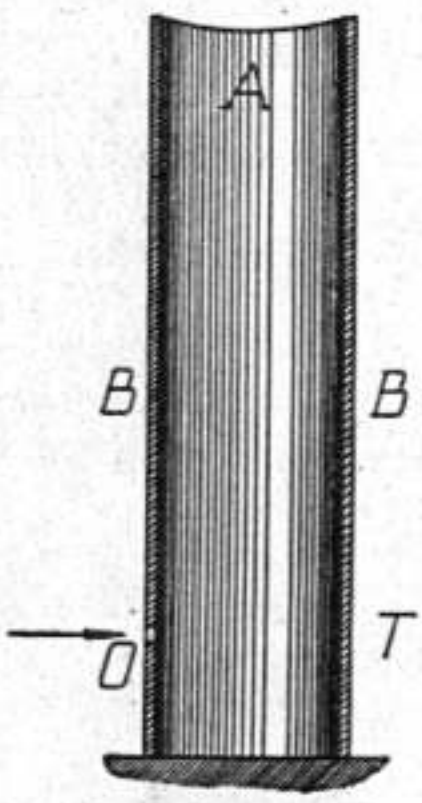

Diagram b. OBTAINING ENERGY FROM THE AMBIENT MEDIUM.

A, medium with little energy; *B, B*, ambient medium with much energy; *O*, path of the energy.

I was vainly endeavoring to form an idea of how this might be accomplished, when I read some statements from Carnot and Lord Kelvin (then Sir William Thomson) which meant virtually that it is impossible for an inanimate mechanism of self-acting machine to cool a portion of the medium below the temperature of the surrounding, and operate by the heat abstracted. These statements interested me intensely. Evidently a living being could do this very thing, and since the experiences of my early life which I have related had convinced me that a living being is only an automaton, or, otherwise stated, a "self-acting engine," I came to the conclusion that it was possible to construct a machine which would do the same. As the first step toward this realization I conceived the following mechanism. Imagine a thermopile consisting of a number of bars of metal extending from the earth to the outer space beyond the atmosphere. The heat from below, conducted upward along these metal bars, would cool the earth or the sea or the air, according to the location of the lower parts of the bars, and the result, as is well known, would be an electric current circulating in these bars. The two terminals of the thermopile could now be joined through an electric motor, and, theoretically, this motor would run on and on, until the media below would be cooled down to the temperature of the outer space. This would be an inanimate engine which, to all evidence, would be cooling a portion of the medium below the temperature of the surrounding, and operating by the heat abstracted.

But was it not possible to realize a similar condition without necessarily going to a height? Conceive, for the sake of illustration, an inclosure *T*, as illustrated in diagram *b*, such that energy could not be transferred across it except through a channel or path *O*, and that, by some means or other, in this inclosure a medium were maintained which would have little energy, and that on the outer side of the same there would be the ordinary ambient medium with much energy. Under these assumptions the energy would flow through the path *O*, as indicated by the arrow, and might then be converted on its passage into some other form of energy. The question was, Could such a condition be attained? Could we produce artificially such a "sink" for the energy of the ambient medium to flow in? Suppose that an extremely low temperature could be maintained by some process in a given space; the surrounding medium would then be compelled to give off heat, which could be converted into mechanical or other form of energy, and utilized. By realizing such a plan, we should be enabled to get at any point of the globe a continuous supply of energy, day and night. More than this, reasoning in the abstract, it would seem possible to cause a quick circulation of the medium, and thus draw the energy at a very rapid rate.

Here, then, was an idea which, if realizable, afforded a happy solution of the problem of getting energy from the medium. But was it realizable? I convinced myself that it was so in a number of ways, of which one is the following. As regards heat, we

are at a high level, which may be represented by the surface of a mountain lake considerably above the sea, the level of which may mark the absolute zero of temperature existing in the interstellar space. Heat, like water, flows from high to low level, and, consequently, just as we can let the water of the lake run down to the sea, so we are able to let heat from the earth's surface travel up into the cold region above. Heat, like water, can perform work in flowing down, and if we had any doubt as to whether we could derive energy from the medium by means of a thermopile, as before described, it would be dispelled by this analogue. But can we produce cold in a given portion of the space and cause the heat to flow in continually? To create such a "sink," or "cold hole," as we might say, in the medium, would be equivalent to producing in the lake a space either empty or filled with something much lighter than water. This we could do by placing in the lake a tank, and pumping all the water out of the latter. We know, then, that the water, if allowed to flow back into the tank, would, theoretically, be able to perform exactly the same amount of work which was used in pumping it out, but not a bit more. Consequently nothing could be gained in this double operation of first raising the water and then letting it fall down. This would mean that it is impossible to create such a sink in the medium. But let us reflect a moment. Heat, though following certain general laws of mechanics, like a fluid, is not such; it is energy which may be converted into other forms of energy as it passes from a high to a low level. To make our mechanical analogy complete and true, we must, therefore, assume that the water, in its passage into the tank, is converted into something else, which may be taken out of it without using any, or by using very little, power. For example, if heat be represented in this analogue by the water of the lake, the oxygen and hydrogen composing the water may illustrate other forms of energy into which the heat is transformed in passing from hot to cold. If the process of heat-transformation were absolutely perfect, no heat at all would arrive at the low level, since all of it would be converted into other forms of energy. Corresponding to this ideal case, all the water flowing into the tank would be decomposed into oxygen and hydrogen before reaching the bottom, and the result would be that water would continually flow in, and yet the tank would remain entirely empty, the gases formed escaping. We would thus produce, by expending initially a certain amount of work to create a sink for the heat or, respectively, the water to flow in, a condition enabling us to get any amount of energy without further effort. This would be an ideal way of obtaining motive power. We do not know of any such absolutely perfect process of heat-conversion, and consequently some heat will generally reach the low level, which means to say, in our mechanical analogue, that some water will arrive at the bottom of the tank, and a gradual and slow filling of the latter will take place, necessitating continuous pumping out. But evidently there will be less to pump out than flows in, or, in other words, less energy will be needed to maintain the initial condition than is developed by the fall, and this is to say that some energy will be gained from the medium. What is not converted in flowing down can just be raised up with its own energy, and what is converted is clear gain. Thus the virtue of the principle I have discovered resides wholly in the conversion of the energy on the downward flow.

FIRST EFFORTS TO PRODUCE THE SELF-ACTING ENGINE — THE MECHANICAL OSCILLATOR — WORK OF DEWAR AND LINDE — LIQUID AIR

Having recognized this truth, I began to devise means for carrying out my idea, and, after long thought, I finally conceived a combination of apparatus which should make possible the obtaining of power from the medium by a process of continuous cooling of atmospheric air. This apparatus, by continually transforming heat into

mechanical work, tended to become colder and colder, and if it only were practicable to reach a very low temperature in this manner, then a sink for the heat could be produced, and energy could be derived from the medium. This seemed to be contrary to the statements of Carnot and Lord Kelvin before referred to, but I concluded from the theory of the process that such a result could be attained. This conclusion I reached, I think, in the latter part of 1883, when I was in Paris, and it was at a time when my mind was being more and more dominated by an invention which I had evolved during the preceding year, and which has since become known under the name of the "rotating magnetic field." During the few years which followed I elaborated further the plan I had imagined, and studied the working conditions, but made little headway. The commercial introduction in this country of the invention before referred to required most of my energies until 1889, when I again took up the idea of the self-acting machine. A closer investigation of the principles involved, and calculation, now showed that the result I aimed at could not be reached in a practical manner by ordinary machinery, as I had in the beginning expected. This led me, as a next step, to the study of a type of engine generally designated as "turbine," which at first seemed to offer better chances for a realization of the idea. Soon I found, however, that the turbine, too, was unsuitable. But my conclusions showed that if an engine of a peculiar kind could be brought to a high degree of perfection, the plan I had conceived was realizable, and I resolved to proceed with the development of such an engine, the primary object of which was to secure the greatest economy of transformation of heat into mechanical energy. A characteristic feature of the engine was that the work-performing piston was not connected with anything else, but was perfectly free to vibrate at an enormous rate. The mechanical difficulties encountered in the construction of this engine were greater than I had anticipated, and I made slow progress. This work was continued until early in 1892, when I went to London, where I saw Professor Dewar's admirable experiments with liquefied gases. Others had liquefied gases before, and notably Ozlewski and Pictet had performed creditable early experiments in this line, but there was such a vigor about the work of Dewar that even the old appeared new. His experiments showed, though in a way different from that I had imagined, that it was possible to reach a very low temperature by transforming heat into mechanical work, and I returned, deeply impressed with what I had seen, and more than ever convinced that my plan was practicable. The work temporarily interrupted was taken up anew, and soon I had in a fair state of perfection the engine which I have named "the mechanical oscillator." In this machine I succeeded in doing away with all packings, valves, and lubrication, and in producing so rapid a vibration of the piston that shafts of tough steel, fastened to the same and vibrated longitudinally, were torn asunder. By combining this engine with a dynamo of special design I produced a highly efficient electrical generator, invaluable in measurements and determinations of physical quantities on account of the unvarying rate of oscillation obtainable by its means. I exhibited several types of this machine, named "mechanical and electrical oscillator," before the Electrical Congress at the World's Fair in Chicago during the summer of 1893, in a lecture which, on account of other pressing work, I was unable to prepare for publication. On that occasion I exposed the principles of the mechanical oscillator, but the original purpose of this machine is explained here for the first time.

In the process, as I had primarily conceived it, for the utilization of the energy of the ambient medium, there were five essential elements in combination, and each of these had to be newly designed and perfected, as no such machines existed. The mechanical oscillator was the first element of this combination, and having perfected this, I turned to the next, which was an air-compressor of a design in certain respects resembling that of the mechanical oscillator. Similar difficulties in the construction were again encountered, but the work was pushed vigorously, and at the close of 1894

I had completed these two elements of the combination, and thus produced an apparatus for compressing air, virtually to any desired pressure, incomparably simpler, smaller, and more efficient than the ordinary. I was just beginning work on the third element, which together with the first two would give a refrigerating machine of exceptional efficiency and simplicity, when a misfortune befell me in the burning of my laboratory, which crippled my labors and delayed me. Shortly afterwards Dr. Carl Linde announced the liquefaction of air by a self-cooling process, demonstrating that it was practicable to proceed with the cooling until liquefaction of the air took place. This was the only experimental proof which I was still wanting that energy was obtainable from the medium in the manner contemplated by me.

The liquefaction of air by a self-cooling process was not, as popularly believed, an accidental discovery, but a scientific result which could not have been delayed much longer, and which, in all probability, could not have escaped Dewar. This fascinating advance, I believe, is largely due to the powerful work of this great Scotchman. Nevertheless, Linde's is an immortal achievement. The manufacture of liquid air has been carried on for four years in Germany, on a scale much larger than in any other country, and this strange product has been applied for a variety of purposes. Much was expected of it in the beginning, but so far it has been an industrial ignis fatuus. By the use of such machinery as I am perfecting, its cost will probably be greatly lessened, but even then its commercial success will be questionable. When used as a refrigerant it is uneconomical, as its temperature is unnecessarily low. It is as expensive to maintain a body at a very low temperature as it is to keep it very hot; it takes coal to keep air cold. In oxygen manufacture it cannot yet compete with the electrolytic method. For use as an explosive it is unsuitable, because its low temperature again condemns it to a small efficiency, and for motive-power purposes its cost is still by far too high. It is of interest to note, however, that in driving an engine by liquid air a certain amount of energy may be gained from the engine, or, stated otherwise, from the ambient medium which keeps the engine warm, each two hundred pounds of ironcasting of the latter contributing energy at the rate of about one effective horse-power during one hour. But this gain of the consumer is offset by an equal loss of the producer.

Much of this task on which I have labored so long remains to be done. A number of mechanical details are still to be perfected and some difficulties of a different nature to be mastered, and I cannot hope to produce a self-acting machine deriving energy from the ambient medium for a long time yet, even if all my expectations should materialize. Many circumstances have occurred which have retarded my work of late, but for several reasons the delay was beneficial.

One of these reasons was that I had ample time to consider what the ultimate possibilities of this development might be. I worked for a long time fully convinced that the practical realization of this method of obtaining energy from the sun would be of incalculable industrial value, but the continued study of the subject revealed the fact that while it will be commercially profitable if my expectations are well founded, it will not be so to an extraordinary degree.

DISCOVERY OF UNEXPECTED PROPERTIES OF THE ATMOSPHERE — STRANGE EXPERIMENTS — TRANSMISSION OF ELECTRICAL ENERGY THROUGH ONE WIRE WITHOUT RETURN — TRANSMISSION THROUGH THE EARTH WITHOUT ANY WIRE

Another of these reasons was that I was led to recognize the transmission of electrical energy to any distance through the media as by far the best solution of the great problem of harnessing the sun's energy for the uses of man. For a long time I was convinced that such a transmission on an industrial scale could never be realized, but

a discovery which I made changed my view. I observed that under certain conditions the atmosphere, which is normally a high insulator, assumes conducting properties, and so becomes capable of conveying any amount of electrical energy. But the difficulties in the way of a practical utilization of this discovery for the purpose of transmitting electrical energy without wires were seemingly insuperable. Electrical pressures of many millions of volts had to be produced and handled; generating apparatus of a novel kind, capable of withstanding the immense electrical stresses, had to be invented and perfected, and a complete safety against the dangers of the high-tension currents had to be attained in the system before its practical introduction could be even thought of. All this could not be done in a few weeks or months, or even years. The work required patience and constant application, but the improvements came, though slowly. Other valuable results were, however, arrived at in the course of this long-continued work, of which I shall endeavor to give a brief account, enumerating the chief advances as they were successively effected.

The discovery of the conducting properties of the air, though unexpected, was only a natural result of experiments in a special field which I had carried on for some years before. It was, I believe, during 1889 that certain possibilities offered by extremely rapid electrical oscillations determined me to design a number of special machines adapted for their investigation. Owing to the peculiar requirements, the construction of these machines was very difficult, and consumed much time and effort; but my work on them was generously rewarded, for I reached by their means several novel and important results. One of the earliest observations I made with these new machines was that electrical oscillations of an extremely high rate act in an extraordinary manner upon the human organism. Thus, for instance, I demonstrated that powerful electrical discharges of several hundred thousand volts, which at that time were considered absolutely deadly, could be passed through the body without inconvenience or hurtful consequences. These oscillations produced other specific physiological effects, which, upon my announcement, were eagerly taken up by skilled physicians and further investigated. This new field has proved itself fruitful beyond expectation, in the few years which have passed since, it has been developed to such an extent that it now forms a legitimate and important department of medical science. Many results, thought impossible at that time, are now readily obtainable with these oscillations, and many experiments undreamed of then can now be readily performed by their means. I still remember with pleasure how, nine years ago, I passed the discharge of a powerful induction-coil through my body to demonstrate before a scientific society the comparative harmlessness of very rapidly vibrating electric currents, and I can still recall the astonishment of my audience. I would now undertake, with much less apprehension than I had in that experiment, to transmit through my body with such currents the entire electrical energy of the dynamos now working at Niagara — forty or fifty thousand horse-power. I have produced electrical oscillations which were of such intensity that when circulating through my arms and chest they have melted wires which joined my hands, and still I felt no inconvenience. I have energized with such oscillations a loop of heavy copper wire so powerfully that masses of metal, and even objects of an electrical resistance specifically greater than that of human tissue, brought close to or placed within the loop, were heated to a high temperature and melted, often with the violence of an explosion, and yet into this very space in which this terribly destructive turmoil was going on I have repeatedly thrust my head without feeling anything or experiencing injurious after-effects.

Another observation was that by means of such oscillations light could be produced in a novel and more economical manner, which promised to lead to an ideal system of electric illumination by vacuum-tubes, dispensing with the necessity of renewal of lamps or incandescent filaments. and possibly also with the use of wires in the interior

of buildings. The efficiency of this light increases in proportion to the rate of the oscillations, and its commercial success is, therefore, dependent on the economical production of electrical vibrations of transcending rates. In this direction I have met with gratifying success of late, and the practical intoduction of this new system of illumination is not far off.

The investigations led to many other valuable observations and results, one of the more important of which was the demonstration of the practicability of supplying electrical energy through one wire without return. At first I was able to transmit in this novel manner only very small amounts of electrical energy, but in this line also my efforts have been rewarded with similar success.

The photograph shown in Fig. 3 illustrates, as its title explains, an actual transmission of this kind effected with apparatus used in other experiments here described. To what a degree the appliances have been perfected since my first demonstrations early in 1891 before a scientific society, when my apparatus was barely capable of lighting one lamp (which result was considered wonderful), will appear when I state that I have now no difficulty in lighting in this manner four or five hundred lamps, and could light many more. In fact, there is no limit to the amount of energy which may in this way be supplied to operate any kind of electrical device.

After demonstrating the practicability of this method of transmission, the thought naturally occurred to me to use the earth as a conductor, thus dispensing with all wires. Whatever electricity may be, it is a fact that it behaves like an incompressible fluid, and the earth may be looked upon as an immense reservoir of electricity, which, I thought, could be disturbed effectively by a properly designed electrical machine. Accordingly, my next efforts were directed toward perfecting a special apparatus which would be highly effective in creating a disturbance of electricity in the earth. The progress in this new direction was necessarily very slow and the work discouraging, until I finally succeeded in perfecting a novel kind of transformer or induction-coil, particularly suited for this special purpose. That it is practicable, in this manner, not only to transmit minute amounts of electrical energy for operating delicate electrical devices, as I contemplated at first, but also electrical energy in appreciable quantities, will appear from an inspection of Fig. 4, which illustrates an actual experiment of this kind performed with the same apparatus. The result obtained was all the more remarkable as the top end of the coil was not connected to a wire or plate for magnifying the effect.

"WIRELESS" TELEGRAPHY — THE SECRET OF TUNING — ERRORS IN THE HERTZIAN INVESTIGATIONS — A RECEIVER OF WONDERFUL SENSITIVENESS

As the first valuable result of my experiments in this latter line a system of telegraphy without wires resulted, which I described in two scientific lectures in February and March, 1893. It is mechanically illustrated in diagram *c*, the upper part of which shows the electrical arrangement as I described it then, while the lower part illustrates its mechanical analogue. The system is extremely simple in principle. Imagine two tuning-forks F, F_1, one at the sending and the other at the receiving-station respectively, each having attached to its lower prong a minute piston p, fitting in a cylinder. Both the cylinders communicate with a large reservoir R, with elastic walls, which is supposed to be closed and filled with a light and incompressible fluid. By striking repeatedly one of the prongs of the tuning-fork F, the small piston p below would be vibrated, and its vibrations, transmitted through the fluid, would reach the distant fork F_1, which is "tuned" to the fork F, or stated otherwise, of exactly the

same note as the latter. The fork F_1 would now be set vibrating, and its vibration would be intensified by the continued action of the distant fork F until its upper prong, swinging far out, would make an electrical connection with a stationary contact c'', starting in this manner some electrical or other appliances which may be used for recording the signals. In this simple way messages could be exchanged between the two stations, a similar contact c' being provided for this purpose, close to the upper prong of the fork F, so that the apparatus at each station could be employed in turn as receiver and transmitter.

The electrical system illustrated in the upper figure of diagram c is exactly the same in principle, the two wires or circuits ESP and $E_1S_1P_1$, which extend vertically to a height, representing the two tuning-forks with the pistons attached to them. These circuits

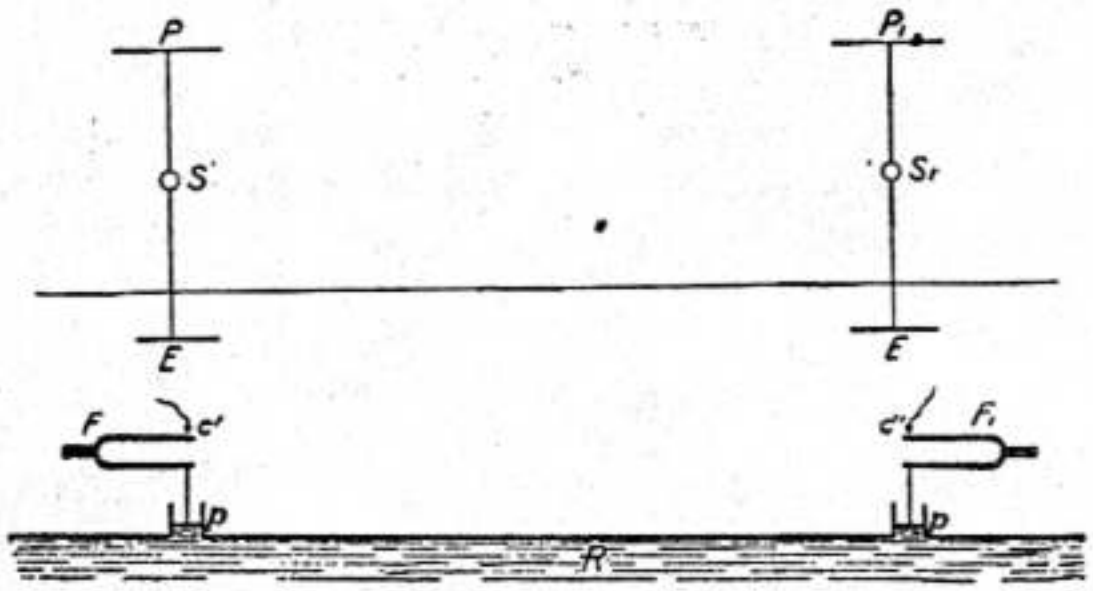

Diagram c. "WIRELESS" TELEGRAPHY MECHANICALLY ILLUSTRATED.

are connected with the ground by plates E, E_1, and to two elevated metal sheets P, P_1, which store electricity and thus magnify considerably the effect. The closed reservoir R, with elastic walls, is in this case replaced by the earth, and the fluid by electricity. Both of these circuits are "tuned" and operate just like the two tuning-forks. Instead of striking the fork F at the sending-station, electrical oscillations are produced in the vertical sending- or transmitting-wire ESP, as by the action of a source S, included in this wire, which spread through the ground and reach the distant vertical receiving-wire $E_1S_1P_1$, exciting corresponding electrical oscillations in the same. In the latter wire or circuit is included a sensitive device or receiver S_1, which is thus set in action and made to operate a relay or other appliance. Each station is, of course, provided both with a source of electrical oscillations S and a sensitive receiver S_1, and a simple provision is made for using each of the two wires alternately to send and to receive the messages.

The exact attunement of the two circuits secures great advantages, and, in fact, it is essential in the practical use of the system. In this respect many popular errors exist, and, as a rule, in the technical reports on this subject circuits and appliances are described as affording these advantages when from their very nature it is evident that this is impossible. In order to attain the best results it is essential that the length of each wire or circuit, from the ground connection to the top, should be equal to one quarter of the wave-length of the electrical vibration in the wire, or else equal to that length multiplied by an odd number. Without the observation of this rule it is virtually impossible to prevent the interference and insure the privacy of messages. Therein lies the secret of tuning. To obtain the most satisfactory results it is, however, necessary to resort to electrical vibrations of low pitch. The Hertzian spark apparatus, used generally by experimenters, which produces oscillations of a very high rate, permits no effective tuning, and slight disturbances are sufficient to render an exchange of messages impracticable. But scientifically designed, efficient appliances allow nearly perfect

adjustment. An experiment performed with the improved apparatus repeatedly referred to, and intended to convey an idea of this feature, is illustrated in Fig. 5, which is sufficiently explained by its note.

Since I described these simple principles of telegraphy without wires I have had frequent occasion to note that the identical features and elements have been used, in the evident belief that the signals are being transmitted to considerable distances by "Hertzian" radiations. This is only one of many misapprehensions to which the investigations of the lamented physicist have given rise. About thirty-three years ago Maxwell, following up a suggestive experiment made by Faraday in 1845, evolved an ideally simple theory which intimately connected light, radiant heat, and electrical phenomena, interpreting them as being all due to vibrations of a hypothetical fluid of inconceivable tenuity, called the ether. No experimental verification was arrived at until Hertz, at the suggestion of Helmholtz, undertook a series of experiments to this effect. Hertz proceeded with extraordinary ingenuity and insight, but devoted little energy to the perfection of his old-fashioned apparatus. The consequence was that he failed to observe the important function which the air played in his experiments, and which I subsequently discovered. Repeating his experiments and reaching different results, I ventured to point out this oversight. The strength of the proofs brought forward by Hertz in support of Maxwell's theory resided in the correct estimate of the rates of vibration of the circuits he used. But I ascertained that he could not have obtained the rates he thought he was getting. The vibrations with identical apparatus he employed are, as a rule, much slower, this being due to the presence of air, which produces a dampening effect upon a rapidly vibrating electric circuit of high pressure, as a fluid does upon a vibrating tuning-fork. I have, however, discovered since that time other causes of error, and I have long ago ceased to look upon his results as being an experimental verification of the poetical conceptions of Maxwell. The work of the great German physicist has acted as an immense stimulus to contemporary electrical research, but it has likewise, in a measure, by its fascination, paralyzed the scientific mind, and thus hampered independent inquiry. Every new phenomenon which was discovered was made to fit the theory, and so very often the truth has been unconsciously distorted.

When I advanced this system of telegraphy, my mind was dominated by the idea of effecting communication to any distance through the earth or environing medium, the practical consummation of which I considered of transcendent importance, chiefly on account of the moral effect which it could not fail to produce universally. As the first effort to this end I proposed, at that time, to employ relay-stations with tuned circuits, in the hope of making thus practicable signaling over vast distances, even with apparatus of very moderate power then at my command. I was confident, however, that with properly designed machinery signals could be transmitted to any point of the globe, no matter what the distance, without the necessity of using such intermediate stations. I gained this conviction through the discovery of a singular electrical phenomenon, which I described early in 1892, in lectures delivered before some scientific societies abroad, and which I have called a "rotating brush." This is a bundle of light which is formed, under certain conditions, in a vacuum-bulb, and which is of a sensitiveness to magnetic and electric influences bordering, so to speak, on the supernatural. This light-bundle is rapidly rotated by the earth's magnetism as many as twenty thousand times per second, the rotation in these parts being opposite to what it would be in the southern hemisphere, while in the region of the magnetic equator it should not rotate at all. In its most sensitive state, which is difficult to attain, it is responsive to electric or magnetic influences to an incredible degree. The mere stiffening of the muscles of the arm and consequent slight electrical change in the body of an observer standing at some distance from it, will perceptibly affect it. When in this highly sensitive state it is capable of indicating the slightest magnetic and electric

changes taking place in the earth. The observation of this wonderful phenomenon impressed me strongly that communication at any distance could be easily effected by its means, provided that apparatus could be perfected capable of producing an electric or magnetic change of state, however small, in the terrestrial globe or environing medium.

DEVELOPMENT OF A NEW PRINCIPLE — THE ELECTRICAL OSCILLATOR — PRODUCTION OF IMMENSE ELECTRICAL MOVEMENTS — THE EARTH RESPONDS TO MAN — INTERPLANETARY COMMUNICATION NOW PROBABLE

I resolved to concentrate my efforts upon this venturesome task, though it involved great sacrifice, for the difficulties to be mastered where such that I could hope to consummate it only after years of labor. It meant delay of other work to which I would have preferred to devote myself, but I gained the conviction that my energies could not be more usefully employed; for I recognized that an efficient apparatus for the production of powerful electrical oscillations, as was needed for that specific purpose, was the key to the solution of other most important electrical and, in fact, human problems. Not only was communication, to any distance, without wires possible by its means, but, likewise, the transmission of energy in great amounts, the burning of the atmospheric nitrogen, the production of an efficient illuminant, and many other results of inestimable scientific and industrial value. Finally, however, I had the satisfaction of accomplishing the task undertaken by the use of a new principle, the virtue of which is based on the marvelous properties of the electrical condenser. One of these is that it can discharge or explode its stored energy in an inconceivably short time. Owing to this it is unequaled in explosive violence. The explosion of dynamite is only the breath of a consumptive compared with its discharge. It is the means of producing the strongest current, the highest electrical pressure, the greatest commotion in the medium. Another of its properties, equally valuable, is that its discharge may vibrate at any rate desired up to many millions per second.

I had arrived at the limit of rates obtainable in other ways when the happy idea presented itself to me to resort to the condenser. I arranged such an instrument so as to be charged and discharged alternately in rapid succession through a coil with a few turns of stout wire, forming the primary of a transformer of induction-coil. Each time the condenser was discharged the current would quiver in the primary wire and induce corresponding oscillations in the secondary. Thus a transformer or induction-coil on new principles was evolved, which I have called "the electrical oscillator", partaking of those unique qualities which characterize the condenser, and enabling results to be attained impossible by other means. Electrical effects of any desired character and of intensities undreamed of before are now easily producible by perfected apparatus of this kind, to which frequent reference has been made, and the essential parts of which are shown in Fig. 6. For certain purposes a strong inductive effect is required; for others the greatest possible suddenness; for others again, an exceptionally high rate of vibration or extreme pressure; while for certain other objects immense electrical movements are necessary. The photographs in Figs. 7, 8, 9, and 10, of experiments performed with such an oscillator, may serve to illustrate some of these features and convey an idea of the magnitude of the effects actually produced. The completeness of the titles of the figures referred to makes a further description of them unnecessary.

However extraordinary the results shown may appear, they are but trifling compared with those which are attainable by apparatus designed on these same principles. I have produced electrical discharges the actual path of which, from end to end, was probably more than one hundred feet long; but it would not be difficult to reach lengths one

hundred times as great. I have produced electrical movements occurring at the rate of approximately one hundred thousand horse-power, but rates of one, five, or ten million horse-power are easily practicable. In these experiments effects were developed incomparably greater than any ever produced by human agencies, and yet these results are but an embryo of what is to be.

That communication without wires to any point of the globe is practicable with such apparatus would need no demonstration, but through a discovery which I made I obtained absolute certitude. Popularly explained, it is exactly this: When we raise the voice and hear an echo in reply, we know that the sound of the voice must have reached a distant wall, or boundary, and must have been reflected from the same. Exactly as the sound, so an electrical wave is reflected, and the same evidence which is afforded by an echo is offered by an electrical phenomenon known as a "stationary" wave — that is, a wave with fixed nodal and ventral regions. Instead of sending sound-vibrations toward a distant wall, I have sent electrical vibrations toward the remote boundaries of the earth, and instead of the wall the earth has replied. In place of an echo I have obtained a stationary electrical wave, a wave reflected from afar.

Stationary waves in the earth mean something more than mere telegraphy without wires to any distance. They will enable us to attain many important specific results impossible otherwise. For instance, by their use we may produce at will, from a sending-station, an electrical effect in any particular region of the globe; we may determine the relative position or course of a moving object, such as a vessel at sea, the distance traversed by the same, or its speed; or we may send over the earth a wave of electricity traveling at any rate we desire, from the pace of a turtle up to ligtning speed.

With these developments we have every reason to anticipate that in a time not very distant most telegraphic messages across the oceans will be transmitted without cables. For short distances we need a "wireless" telephone, which requires no expert operators. The greater the spaces to be bridged, the more rational becomes communication without wires. The cable is not only an easily damaged and costly instrument, but it limits us in the speed of transmission by reason of a certain electrical property inseparable from its construction. A properly designed plant for effecting communication without wires ought to have many times the working capacity of a cable, while it will involve incomparably less expense. Not a long time will pass, I believe, before communication by cable will become obsolete, for not only will signaling by this new method be quicker and cheaper, but also much safer. By using some new means for isolating the messages which I have contrived, an almost perfect privacy can be secured.

I have observed the above effects so far only up to a limited distance of about six hundred miles, but inasmuch as there is virtually no limit to the power of the vibrations producible with such an oscillator, I feel quite confident of the success of such a plant for effecting transoceanic communication. Nor is this all. My measurements and calculations have shown that it is perfectly practicable to produce on our globe, by the use of these principles, an electrical movement of such magnitude that, without the slightest doubt, its effect will be perceptible on some of our nearer planets, as Venus and Mars. Thus from mere possibility interplanetary communication has entered the stage of probability. In fact, that we can produce a distinct effect on one of these planets in this novel manner, namely, by disturbing the electrical condition of the earth, is beyond any doubt. This way of effecting such communication is, however, essentially different from all others which have so far been proposed by scientific men. In all the previous instances only a minute fraction of the total energy reaching the planet — as much as it would be possible to concentrate in a reflector — could be utilized by the supposed observer in his instrument. But by the means I have developed he would be enabled to concentrate the larger portion of the entire energy transmitted to

the planet in his instrument, and the chances of affecting the latter are thereby increased many millionfold.

Besides machinery for producing vibrations of the required power, we must have delicate means capable of revealing the effects of feeble influences exerted upon the earth. For such purposes, too, I have perfected new methods. By their use we shall likewise be able, among other things, to detect at considerable distance the presence of an iceberg or other object at sea. By their use, also, I have discovered some terrestrial phenomena still unexplained. That we can send a message to a planet is certain, that we can get an answer is probable: man is not the only being in the Infinite gifted with a mind.

TRANSMISSION OF ELECTRICAL ENERGY TO ANY DISTANCE WITHOUT WIRES — NOW PRACTICABLE — THE BEST MEANS OF INCREASING THE FORCE ACCELERATING THE HUMAN MASS

The most valuable observation made in the course of these investigations was the extraordinary behavior of the atmosphere toward electric impulses of excessive electromotive force. The experiments showed that the air at the ordinary pressure became distinctly conducting, and this opened up the wonderful prospect of transmitting large amounts of electrical energy for industrial purposes to great distances without wires, a possibility which, up to that time, was thought of only as a scientific dream. Further investigation revealed the important fact that the conductivity imparted to the air by these electrical impulses of many millions of volts increased very rapidly with the degree of rarefaction, so that air strata at very moderate altitudes, which are easily accessible, offer, to all experimental evidence, a perfect conducting path, better than a copper wire, for currents of this character.

Thus the discovery of these new properties of the atmosphere not only opened up the possibility of transmitting, without wires, energy in large amounts, but, what was still more significant, it afforded the certitude that energy could be transmitted in this manner economically. In this new system it matters little — in fact, almost nothing — whether the transmission is effected at a distance of a few miles or of a few thousand miles.

While I have not, as yet, actually effected a transmission of a considerable amount of energy, such as would be of industrial importance, to a great distance by this new method, I have operated several model plants under exactly the same conditions which will exist in a large plant of this kind, and the practicability of the system is thoroughly demonstrated. The experiments have shown conclusively that, with two terminals maintained at an elevation of not more than thirty thousand to thirty-five thousand feet above sea-level, and with an electrical pressure of fifteen to twenty million volts, the energy of thousands of horse-power can be transmitted over distances which may be hundreds and, if necessary, thousands of miles. I am hopeful, however, that I may be able to reduce very considerably the elevation of the terminals now required, and with this object I am following up an idea which promises such a realization. There is, of course, a popular prejudice against using an electrical pressure of millions of volts, which may cause sparks to fly at distances of hundreds of feet, but, paradoxical as it may seem, the system, as I have described it in a technical publication, offers greater personal safety than most of the ordinary distribution circuits now used in the cities. This is, in a measure, borne out by the fact that, although I have carried on such experiments for a number of years, no injury has been sustained either by me or any of my assistants.

But to enable a practical introduction of the system, a number of essential requirements are still to be fulfilled. It is not enough to develop appliances by means

of which such a transmission can be effected. The machinery must be such as to allow the transformation and transmission of electrical energy under highly economical and practical conditions. Furthermore, an inducement must be offered to those who are engaged in the industrial exploitation of natural sources of power, as waterfalls, by guaranteeing greater returns on the capital invested than they can secure by local development of the property.

From that moment when it was observed that, contrary to the established opinion, low and easily accessible strata of the atmosphere are capable of conducting electricity, the transmission of electrical energy without wires has become a rational task of the engineer, and one surpassing all others in importance. Its practical consummation would mean that energy would be available for the uses of man at any point of the globe, not in small amounts such as might be derived from the ambient medium by suitable machinery, but in quantities virtually unlimited, from waterfalls. Export of power would then become the chief source of income for many happily situated countries, as the United States, Canada, Central and South America, Switzerland, and Sweden. Men could settle down everywhere, fertilize and irrigate the soil with little effort, and convert barren deserts into gardens, and thus the entire globe could be transformed and made a fitter abode for mankind. It is highly probable that if there are intelligent beings on Mars they have long ago realized this very idea, which would explain the changes on its surface noted by astronomers. The atmosphere on that planet, being of considerably smaller density than that of the earth, would make the task much more easy.

It is probable that we shall soon have a self-acting heat-engine capable of deriving moderate amounts of energy from the ambient medium. There is also a possibility — though a small one — that we may obtain electrical energy direct from the sun. This might be the case if the Maxwellian theory is true, according to which electrical vibrations of all rates should emanate from the sun. I am still investigating this subject. Sir William Crookes has shown in his beautiful invention known as the "radiometer" that rays may produce by impact a mechanical effect, and this may lead to some important revelation as to the utilization of the sun's rays in novel ways. Other sources of energy may be opened up, and new methods of deriving energy from the sun discovered, but none of these or similar achievements would equal in importance the transmission of power to any distance through the medium. I can conceive of no technical advance which would tend to unite the various elements of humanity more effectively than this one, or of one which would more add to and more economize human energy. It would be the best means of increasing the force accelerating the human mass. The mere moral influence of such a radical departure would be incalculable. On the other hand, if at any point of the globe energy can be obtained in limited quantities from the ambient medium by means of a self-acting heat-engine or otherwise, the conditions will remain the same as before. Human performance will be increased, but men will remain strangers as they were.

I anticipate that many, unprepared for these results, which, through long familiarity, appear to me simple and obvious, will consider them still far from practical application. Such reserve, and even opposition, of some is as useful a quality and as necessary an element in human progress as the quick receptivity and enthusiasm of others. Thus, a mass which resists the force at first, once set in movement, adds to the energy. The scientific man does not aim at an immediate result. He does not expect that his advanced ideas will be readily taken up. His work is like that of the planter — for the future. His duty is to lay foundation for those who are to come, and point the way. He lives and labors and hopes with the poet who says:

Schaff', das Tagwerk meiner Hände,
Hohes Glück, dass ich's vollende!
Lass, o lass mich nicht ermatten!

. *Nein, es sind nicht leere Träume:*
Jetzt nur Stangen, diese Bäume
Geben eins noch Frucht und Schatten.[1]

---

[1] *Daily work — my hands' employment,*
To complete is pure enjoyment!
Let, oh, let me never falter!
No! there is no empty dreaming:
Lo! these trees, but bare poles seeming,
Yet will yield both fruit and shelter!
Goethe's "Hope,"
(Translated by William Gibson)

THE TRANSMISSION OF ELECTRIC ENERGY WITHOUT WIRES*

Towards the close of 1898 a systematic research, carried on for a number of years with the object of perfecting a method of transmission of electrical energy through the natural medium, led me to recognize three important necessities; First, to develop a transmitter of great power; second, to perfect means for individualizing and isolating the energy transmitted; and, third, to ascertain the laws of propagation of currents through the earth and the atmosphere. Various reasons, not the least of which was the help proffered by my friend Leonard E. Curtis and the Colorado Springs Electric Company, determined me to select for my experimental investigations the large plateau, two thousand meters above sea-level, in the vicinity of that delightful resort, which I reached late in May, 1899. I had not been there but a few days when I congratulated myself on the happy choice and I began the task, for which I had long trained myself, with a grateful sense and full of inspiring hope. The perfect purity of the air, the unequaled beauty of the sky, the imposing sight of a high mountain range, the quiet and restfulness of the place — all around contributed to make the conditions for scientific observation ideal. To this was added the exhilarating influence of a glorious climate and a singular sharpening of the senses. In those regions the organs undergo perceptible physical changes. The eyes assume an extraordinary limpidity, improving vision; the ears dry out and become more susceptible to sound. Objects can be clearly distinguished there at distances such that I prefer to have them told by someone else, and I have heard — this I can venture to vouch for — the claps of thunder seven and eight hundred kilometers away. I might have done better still, had it not been tedious to wait for the sounds to arrive, in definite intervals, as heralded precisely by an electrical indicating apparatus — nearly an hour before.

In the middle of June, while preparations for other work were going on, I arranged one of my receiving transformers with the view of determining in a novel manner, experimentally, the electric potential of the globe and studying its periodic and casual fluctuations. This formed part of a plan carefully mapped out in advance. A highly sensitive, selfrestorative device, controlling a recording instrument, was included in the secondary circuit, while the primary was connected to the ground and an elevated terminal of adjustable capacity. The variations of potential gave rise to electric surgings in the primary; these generated secondary currents, which in turn affected the sensitive device and recorder in proportion to their intensity. The earth was found to be, literally, alive with electrical vibrations, and soon I was deeply absorbed in this interesting investigation. No better opportunities for such observations as I intended to make could be found anywhere. Colorado is a country famous for the natural displays of electric force. In that dry and rarefied atmosphere the sun's rays beat the objects with fierce intensity. I raised steam, to a dangerous pressure, in barrels filled with concentrated

---

* The Electrical World and Engineer, March 5, 1904.

salt solution, and the tin-foil coatings of some of my elevated terminals shriveled up in the fiery blaze. An experimental high-tension transformer, carelessly exposed to the rays of the setting sun, had most of its insulating compound melted out and was rendered useless. Aided by the dryness and rarefaction of the air, the water evaporates as in a boiler, and static electricity is developed in abundance. Lightning discharges are, accordingly, very frequent and sometimes of inconceivable violence. On one occasion approximately twelve thousand discharges occurred in two hours, and all in a radius of certainly less than fifty kilometers from the laboratory. Many of them resembled gigantic trees of fire with the trunks up or down. I never saw fire balls, but as a compensation for my disappointment I succeeded later in determining the mode of their formation and producing them artificially.

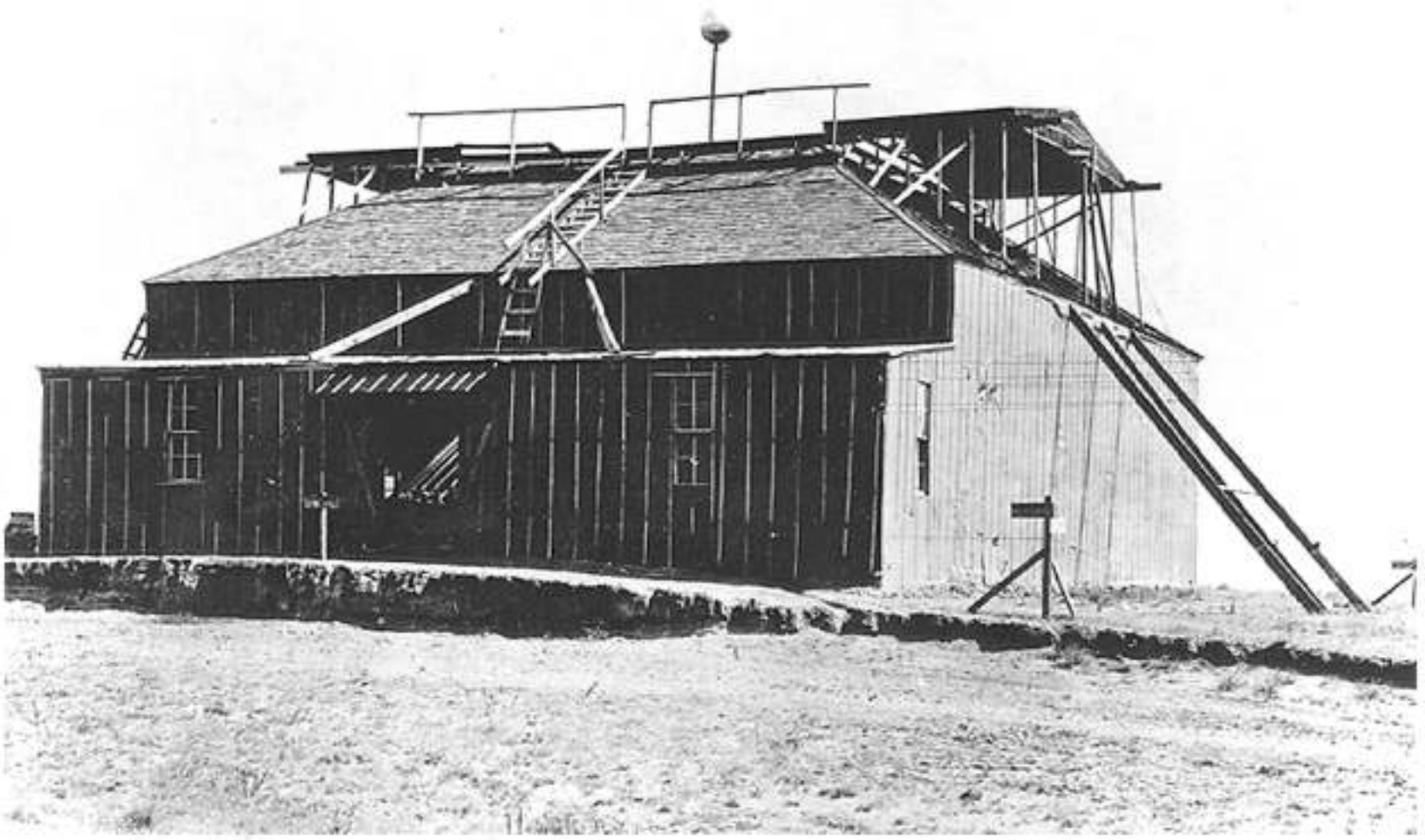

Experimental Laboratory, Colorado Springs.

In the latter part of the same month I noticed several times that my instruments were affected stronger by discharges taking place at great distances than by those near by. This puzzled me very much. What was the cause? A number of observations proved that it could not be due to the differences in the intensity of the individual discharges, and I readily ascertained that the phenomenon was not the result of a varying relation between the periods of my receiving circuits and those of the terrestrial disturbances. One night, as I was walking home with an assistant, meditating over these experiences, I was suddenly staggered by a thought. Years ago, when I wrote a chapter of my lecture before the Franklin Institute and the National Electric Light Association, it had presented itself to me, but I had dismissed it as absurd and impossible. I banished it again. Nevertheless, my instinct was aroused and somehow I felt that I was nearing a great revelation.

It was on the third of July — the date I shall never forget — when I obtained the first decisive experimental evidence of a truth of overwhelming importance for the

Central Power Plant and Transmitting Tower for "World Telegraphy",
Long Island, N. Y.

advancement of humanity. A dense mass of strongly charged clouds gathered in the west and towards the evening a violent storm broke loose which, after spending much of its fury in the mountains, was driven away with great velocity over the plains. Heavy and long persisting arcs formed almost in regular time intervals. My observations were now greatly facilitated and rendered more accurate by the experiences already gained. I was able to handle my instruments quickly and I was prepared. The recording apparatus being properly adjusted, its indications became fainter and fainter with the increasing distance of the storm, until they ceased altogether. I was watching in eager expectation. Surely enough, in a little while the indications again began, grew stronger and stronger and, after passing through a maximum, gradually decreased and ceased once more. Many times, in regularly recurring intervals, the same actions were repeated until the storm which, as evident from simple computations, was moving with nearly constant speed, had retreated to a distance of about three hundred kilometers. Nor did these strange actions stop then, but continued to manifest themselves with undiminished force. Subsequently, similar observations were also made by my assistant, Mr. Fritz Lowenstein, and shortly afterward several admirable opportunities presented themselves which brought out, still more forcibly, and unmistakably, the true nature of the wonderful phenomenon. No doubt whatever remained: I was observing stationary waves.

As the source of disturbances moved away the receiving circuit came successively upon their nodes and loops. Impossible as it seemed, this planet, despite its vast extent, behaved like a conductor of limited dimensions. The tremendous significance of this fact in the transmission of energy by my system had already become quite clear to me. Not only was it practicable to send telegraphic messages to any distance without wires, as I recognized long ago, but also to impress upon the entire globe the faint modulations of the human voice, far more still, to transmit power, in unlimited amounts, to any terrestrial distance and almost without any loss.

With these stupendous possibilities in sight, with the experimental evidence before me that their realization was henceforth merely a question of expert knowledge, patience and skill, I attacked vigorously the development of my magnifying transmitter, now, however, not so much with the original intention of producing one of great power, as with the object of learning how to construct the best one. This is, essentially, a circuit of very high self-induction and small resistance which in its arrangement, mode of excitation and action, may be said to be the diametrical opposite of a transmitting circuit typical of telegraphy by Hertzian or electromagnetic radiations. It is difficult to form an adequate idea of the marvelous power of this unique appliance, by the aid of which the globe will be transformed. The electromagnetic radiations being reduced to an insignificant quantity, and proper conditions of resonance maintained, the circuit acts like an immense pendulum, storing indefinitely the energy of the primary exciting impulses and impressions upon the earth and its conducting atmosphere uniform harmonic oscillations of intensities which, as actual tests have shown, may be pushed so far as to surpass those attained in the natural displays of static electricity.

Simultaneously with these endeavors, the means of individualization and isolation were gradually improved. Great importance was attached to this, for it was found that simple tuning was not sufficient to meet the vigorous practical requirements. The fundamental idea of employing a number of distinctive elements, co-operatively associated, for the purpose of isolating energy transmitted, I trace directly to my perusal of Spencer's clear and suggestive exposition of the human nerve mechanism. The influence of this principle on the transmission of intelligence, and electrical energy in general, cannot as yet be estimated, for the art is still in the embryonic stage; but many thousands of simultaneous telegraphic and telephonic messages, through one single conducting channel, natural or artificial, and without serious mutual interference, are certainly practicable, while millions are possible. On the other hand, any desired degree of individualization may be secured by the use of a great number of co-operative

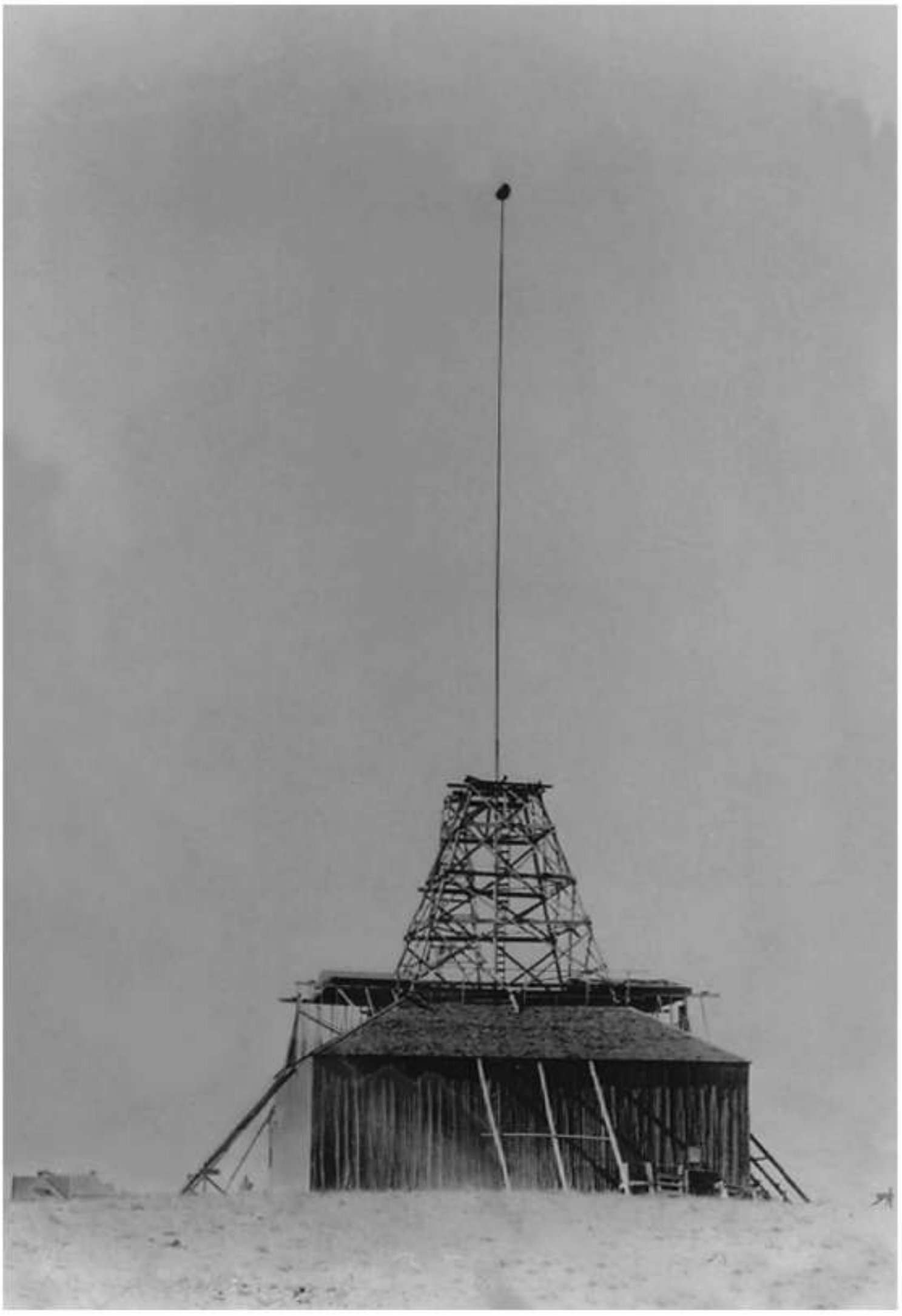

Experimental Laboratory, Colorado Springs.

elements and arbitrary variation of their distinctive features and order of succession. For obvious reasons, the principle will also be valuable in the extension of the distance of transmission.

Progress though of necessity slow was steady and sure, for the objects aimed at were in a direction of my constant study and exercise. It is, therefore, not astonishing that before the end of 1899 I completed the task undertaken and reached the results which I have announced in my article in the *Century Magazine* of June, 1900, every word of which was carefully weighed.

Much has already been done towards making my system commercially available, in the transmission of energy in small amounts for specific purposes, as well as on an industrial scale. The results attained by me have made my scheme of intelligence transmission, for which the name of "World Telegraphy" has been suggested, easily realizable. It constitutes, I believe, in its principle of operation, means employed and capacities of application, a radical and fruitful departure from what has been done heretofore. I have no doubt that it will prove very efficient in enlightening the masses, particularly in still uncivilized countries and less accessible regions, and that it will add materially to general safety, comfort and convenience, and maintenance of peaceful relations. It involves the employment of a number of plants, all of which are capable of transmitting individualized signals to the uttermost confines of the earth. Each of them will be preferably located near some important center of civilization and the news it receives through any channel will be flashed to all points of the globe. A cheap and simple device, which might be carried in one's pocket, may then be set up somewhere on sea or land, and it will record the world's news or such special messages as may be intended for it. Thus the entire earth will be converted into a huge brain, as it were, capable of response in every one of its parts. Since a single plant of but one hundred horse-power can operate hundreds of millions of instruments, the system will have a virtually infinite working capacity, and it must needs immensely facilitate and cheapen the transmission of intelligence.

The first of these central plants would have been already completed had it not been for unforeseen delays which, fortunately, have nothing to do with its purely technical features. But this loss of time, while vexatious, may, after all, prove to be a blessing in disguise. The best design of which I knew has been adopted, and the transmitter will emit a wave complex of a total maximum activity of ten million horse-power, one per cent. of which is amply sufficient to "girdle the globe". This enormous rate of energy delivery, approximately twice that of the combined falls of Niagara, is obtainable only by the use of certain artifices, which I shall make known in due course.

For a large part of the work which I have done so far I am indebted to the noble generosity of Mr. J. Pierpont Morgan, which was all the more welcome and stimulating, as it was extended at a time when those, who have since promised most, were the greatest of doubters. I have also to thank my friend, Stanford White, for much unselfish and valuable assistance. This work is now far advanced, and though the results may be tardy, they are sure to come.

Meanwhile, the transmission of energy on an industrial scale is not being neglected. The Canadian Niagara Power Company have offered me a splendid inducement, and next to achieving success for the sake of the art, it will give me the greatest satisfaction to make their concession financially profitable to them. In this first power plant, which I have been designing for a long time, I propose to distribute ten thousand horse-power under a tension of one hundred million volts, which I am now able to produce and handle with safety.

This energy will be collected all over the globe preferably in small amounts, ranging from a fraction of one to a few horse-power. One of its chief uses will be the illumination of isolated homes. It takes very little power to light a dwelling with

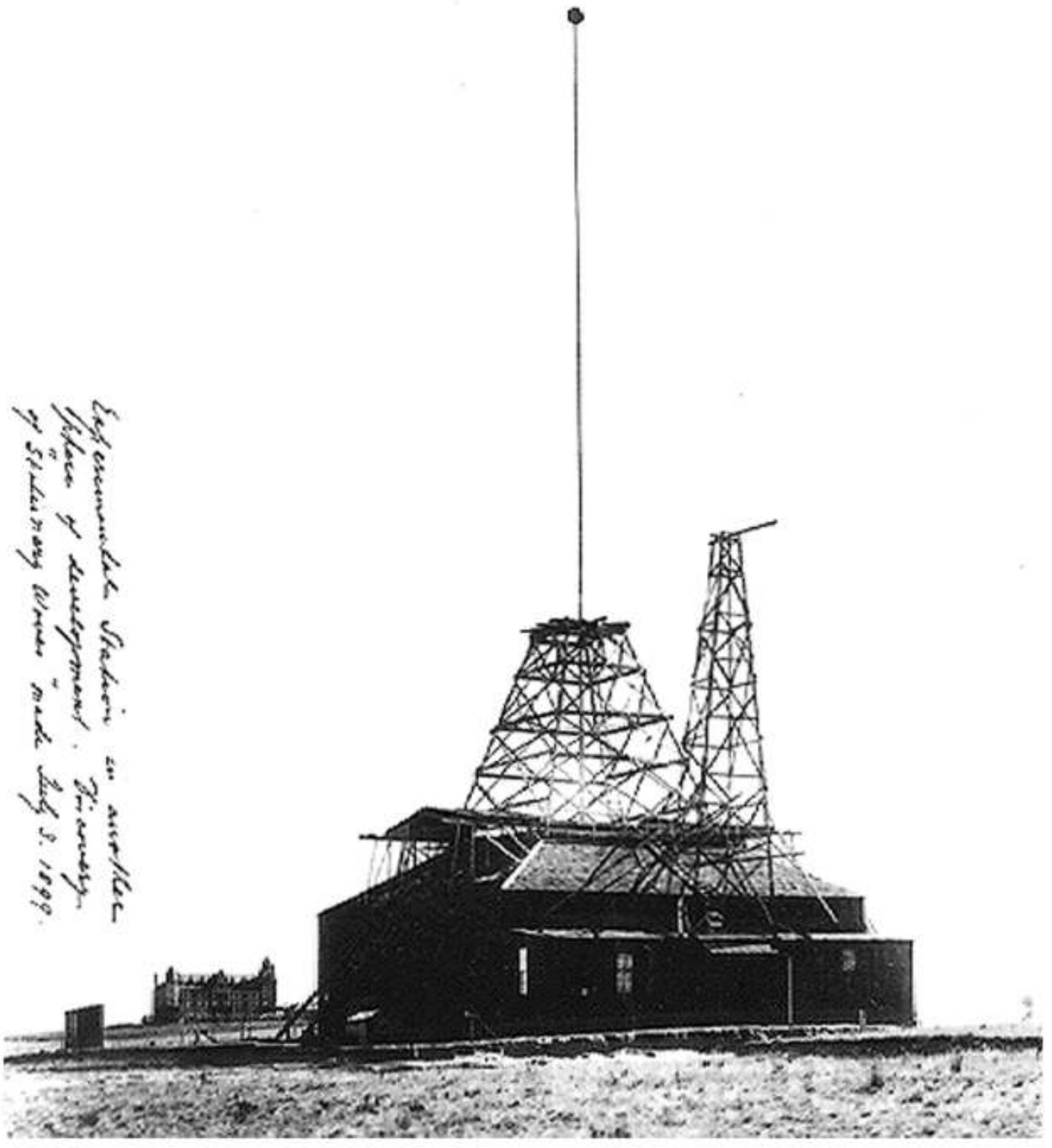

Experimental Laboratory, Colorado, erected Summer of 1899.

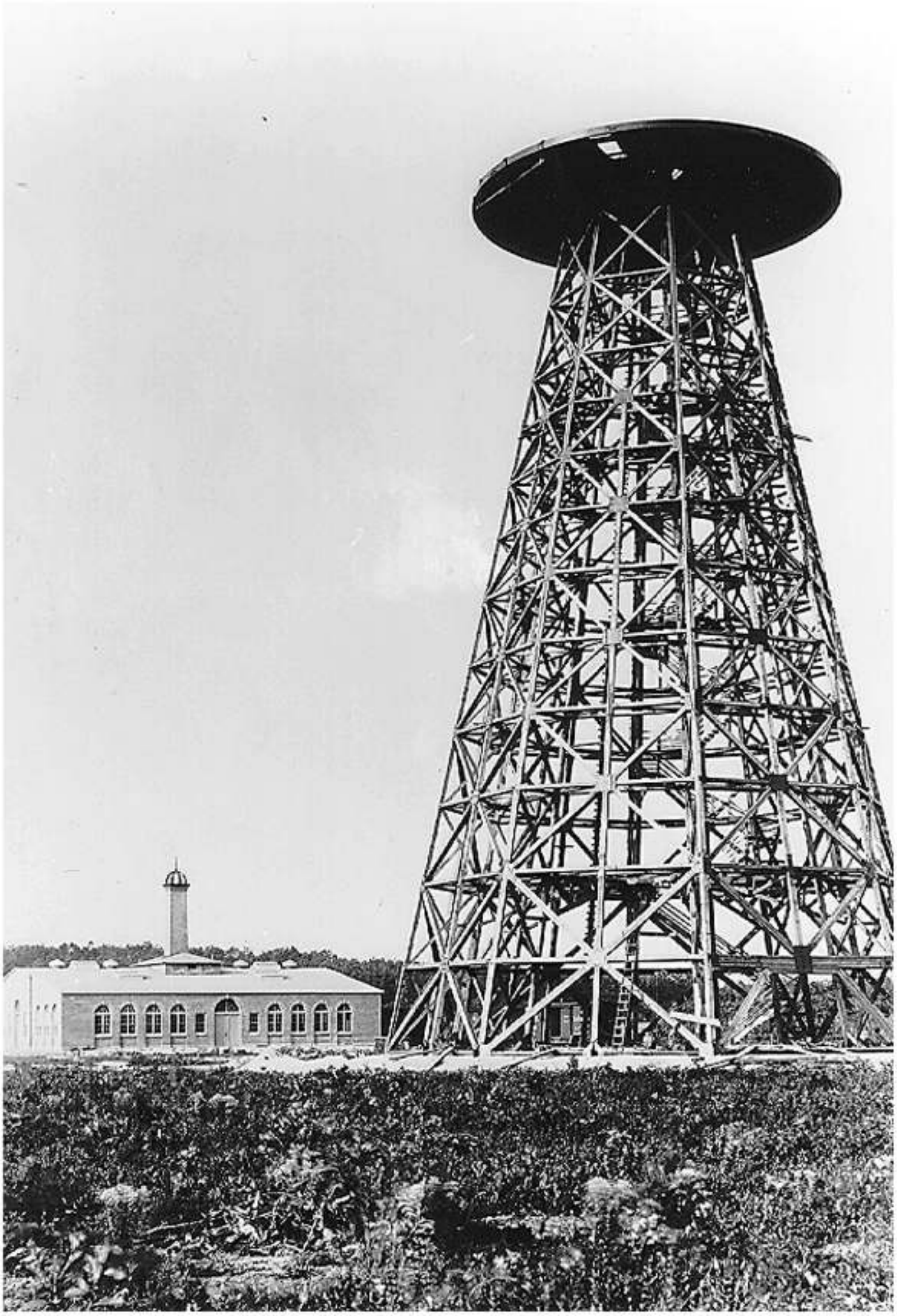

Central Power Plant, Transmitting Tower, and Laboratory for "World Telegraphy," Warderclyffe, Long Island.

vacuum tubes operated by high-frequency currents and in each instance a terminal a little above the roof will be sufficient. Another valuable application will be the driving of clocks and other such apparatus. These clocks will be exceedingly simple, will require absolutely no attention and will indicate rigorously correct time. The idea of impressing upon the earth American time is fascinating and very likely to become popular. There are innumerable devices of all kinds which are either now employed or can be supplied, and by operating them in this manner I may be able to offer a great convenience to the whole world with a plant of no more than ten thousand horse-power. The introduction of this system will give opportunities for invention and manufacture such as have never presented themselves before.

Knowing the far-reaching importance of this first attempt and its effect upon future development, I shall proceed slowly and carefully. Experience has taught me not to assign a term to enterprises the consummation of which is not wholly dependent on my own abilities and exertions. But I am hopeful that these great realizations are not far off, and I know that when this first work is completed they will follow with mathematical certitude.

When the great truth accidentally revealed and experimentally confirmed is fully recognized, that this planet, with all its appalling immensity, is to electric currents virtually no more than a small metal ball and that by this fact many possibilities, each baffling imagination and of incalculable consequence, are rendered absolutely sure of accomplishment; when the first plant is inaugurated and it is shown that a telegraphic message, almost as secret and non-interferable as a thought, can be transmitted to any terrestrial distance, the sound of the human voice, with all its intonations and inflections, faithfully and instantly reproduced at any other point of the globe, the energy of a waterfall made available for supplying light, heat or motive power, anywhere — on sea, or land, or high in the air — humanity will be like an ant heap stirred up with a stick: See the excitement coming!

SCIENCE AND DISCOVERY ARE THE GREAT FORCES WHICH WILL LEAD TO THE CONSUMMATION OF THE WAR*

Whatever future ages may have in store for the human race, the development so far would indicate as its probable fate perpetual strife. Civilization alone is evidently insufficient for insuring permanent peace on earth. It but retards the clash to add to its intensity and magnitude, making it all the more dreadful and ruinous.

The present colossal struggle creates an impression apart, a feeling of awe, a sense of solemnity, springing from the knowledge that a terrible calamity, greater than any recorded in the annals of history, has befallen the world. Suddenly awakened from fancied security to the consciousness of insuspected and universal danger, the nations stand aghast. It is as if some vast terrestrial upheaval were taking place, as if gigantic forces were unchained, threatening the entire globe.

Never before were such immense armies engaged in battle and such frightfully destructive implements employed; never was so much dependent on a victory of arms. Already the losses incurred amount to tens of billions of dollars; more than three million men have been killed and disabled, and for each of these ten, at least, have been turned into nervous wrecks, which will impress their miseries on the succeeding generations and darken their days. All the world over countless sufferers, torn by anxiety, ask themselves how long is this appalling slaughter and sacrilegious waste to continue.

War is essentially a manifestation of energy involving the acceleration and retardation of a mass by a force. In such a case it is a universally established truth that the time necessary to impart a given velocity and momentum is proportionate to the mass. The same law also applies to the annihilation of velocity and momentum by a resisting force. Translated in popular language this means that the period or duration of an armed conflict is theoretically proportionate to the magnitude of the armies or number of combatants.

It is obviously assumed that the resources are ample and all other conditions equal. Furthermore, in making deductions from previous wars a number of factors have to be taken into consideration and all quantities estimated at their proper value on the basis of statistical and other data. Supposing that, as it appears, 12,000,000 men are engaged in the present struggle, a comparison with some of the past wars gives the following results:

Wars	Number of Combatants	Duration Y.	M.	Remarks
Civil war	4,600.000	4	..	Protracted by distance, poor communication and ineffective arms.
Present war	12,000.000	10		
Franco-German war	1,700.000	..	13	Equipment not quite modern.
Present war	12,000.000	7	6	

* The Sun, Dec. 20, 1914. ("Nikola Tesla looks to Science to end the War")

Russo-Japanese war	2,200.000	1	6	Lengthened by distance, poor communication and nature of campaign.
Present war	12,000.000	8		
First Balkan war	1,200.000		6	In all respects up to date.
Present war	12,000.000	5		
Hypothetical average war	2,425.000	1	9	Various causes affecting duration.
Present war	12,000.000	8	6	

Much more concordant and shorter terms would be obtained in these comparative estimates if the records available were corrected as indicated and due allowances made for the facilities of transport and communication, increased power and destructiveness of arms and other factors tending to magnify the rate at which energy is delivered, and so to hasten the termination of the clash. The best inference is certainly that drawn from the Balkan war, as the most modern, according to which the term should be five years. Even though this be but a rough approximation, it is sufficient to show that, barring some extraordinary development, this war will be a long one.

Indeed, it seems on purely scientific grounds that a conflict on such a vast scale can only be ended by exhaustion. The enormous extent of the battle front, owing to numbers and attendant impossibility of striking a decisive blow, is in further support of this theory. It is also highly significant to observe in this connection how the original battle lines, determined in advance by strategy, have been gradually shifted and straightened, contact between the fighting masses being finally established on lines fixed by natural law and brute force of push in defiance of military design. The likelihood of such termination is increased by the fact that the disturbance extends over an immense area, making the supply of necessities to some of the affected regions exceptionally difficult.

Accepting, then, this theory as correct, we are justified in expecting that, conditions remaining normal, the struggle will last more or less according to the form the exhaustion may take. Lack of food, deterioration and shortage of equipment, want of metals, chemicals and ammunition, scarcity of ready capital, failing supply of trained men or sheer giving out of human energy are some of the elements to be reckoned with, any one of which may compel an early cessation of hostilities. That the war cannot be continued much longer with its present intensity can be easily shown.

The daily cost of operation is more than forty millions of dollars, and judging from the casualties recorded to date, twenty-five thousand men, on the average, are killed and disabled in battle every day. At that rate only four more months of active campaign would result in an expenditure of five billions of dollars and a loss of life of three millions of men. This is, manifestly, too great an additional burden to be borne, for even though the fighting material might be available, capital is sure to be lacking. It could be, therefore, concluded with certitude that peace would be restored before next winter, were it not for one possibility, or rather probability, that of a deadlock, which would be the very worst calamity, for, in view of the real cause of the trouble and the temper of nations involved, it could not fail to protract the war for years.

Prophesying is an ungrateful occupation, but scientific forecasting is a useful form of endeavor and would be much more such if human nature were not so prone to leave advice and lesson unheeded. Having made a careful study of the situation, an expert can predict certain happenings with perfect confidence. There are now only three possible issues of this war: first, collapse of Austria; second, conquest of England by the Germans, and, third, Germany's exhaustion and defeat.

The fall of Austria is inevitable and must occur within the next few months. She may defy German influence and sue independently for peace to save herself, but it is

doubtful that she could offer anything acceptable to the Allies. Much more likely it is that the old Emperor, tired of life and recognizing the injustice of Austria's cause, will himself abdicate and recommend partition.

This may not be unwelcome to hard pressed Germany, for it will open up a way of making peace on terms which will not be humiliating and compensate her for the probable loss of Alsace-Lorraine and East Prussia.

The dual monarchy has maintained herself through decades as if by a wonder. It would have been dissolved long ago had it not been for the stubborn adherence of Hungarian magnates to a promise given to Maria Theresa and the extraordinary popularity of the reigning dynasty, largely due to compassion of the subjects of all nationalities aroused by the many strange misfortunes which have befallen the house of Hapsburg. It is well recognized that the unnatural existence of this feudal state has been a constant menace to European peace and is the chief cause of the present upheaval. A division of Austro-Hungarian territory along racial lines will satisfy all warring nations on the European continent. This is sure to come. It is a process natural and unavoidable as the falling of an overripe apple from the tree.

Regarding the second possibility, it is still unsafe to make a prediction and further developments must be awaited before a conclusion can be drawn as to the outcome. There are many indications that Germany is preparing for an attack on England with all energy and speed, and perhaps her operations in the east and west serve the purpose of masking this move. The tension between the two countries is very great, the causes of the quarrel peculiar and a peaceful solution of the difficulty is next to impossible.

The third of the issues mentioned would mean a very long war. Germany cannot break through the steel wall in France and Belgium; her partial victories in Poland can make no impression on the Russian masses. Gradually she must settle on a defensive. She has the greatest load to carry and must give out first, according to financiers and statisticians.

But with a people so intelligent, industrious, resourceful and solidly united such forecasts are hazardous. The Germans are fully capable of "making two blades of grass grow where one grew before" and it is precisely because of this and their perfect military organization that the danger of a long conflict exists. Such a prospect is enough to cause the gravest apprehensions and the uppermost thought in the minds of seers is how to prevent such paralysis of progress and horrible carnage and waste. Can it be done?

There is a grim determination of all directly concerned to fight the issues to the bitter end on the ground that a premature peace, leaving the vital questions unsettled, would only mean the continuance of the existing pernicious regime and repetition of the evil. A new and irresistible argument must be brought forward to stop the conflict. The case is desperate, but there is a hope. This hope lies in science, discovery and invention.

Modern machinery wrought by science is responsible for this calamity; science will also undo the Frankenstein monster it has created. Centuries ago an ingenious contrivance of Archimedes is said to have decided a battle and terminated a great war. Be it a myth or a fact, this story affords an inspiring lesson. What is needed at this psychological moment is some such revelation. A new force, a new agent, a demonstration by any means, old or novel, but of a kind to surprise and suddenly illuminate, to bring the belligerents to their senses and furnish irrefutable proof of the folly and uselessness of carrying on the brutal fight.

This idea, to which I have myself devoted years of work, has now taken hold of scientific men and experts all the world over. Thousands of inventors, fired on by this unique opportunity, are bent upon developing some process or apparatus for accomplishing the purpose, and there is feverish activity in France, Russia, and especially in Germany, among electricians, chemists and engineers. What the genius of nations will

bring forth none can tell, but it is not too much to say that the results will be of such character as materially to affect the outcome and duration of the struggle.

It is on this account that importance attaches to vague reports of mysterious experiments with Zeppelins, explosive rays and magic bombs, for though such news items cannot be accepted as true, they reveal just so many startling possibilities. In the production and application of novel means of warfare Germany should be first, no only by reason of superior facilities and excellent training of her experts, but because this has become a dire necessity, a question of life and death in her present trying position.

The uncertain and often conflicting despatches of the daily happenings received from various sources have made it difficult to form a decided opinion as to the actual state of things, but in spite of rigid censorship the main facts have gradually transpired. One of these is that the Germans were the only people ready for war.

Not even the French, who boasted of preparedness, were able to mobilize on time. The invasion of East Prussia was but a daring stroke of the Russians to draw the enemy and relieve the pressure on France, successful but very costly to them. As to the complacent Britons, they were fast asleep. Whatever may be said against Great Britain, her utter unreadiness and the great danger to which she was exposing herself by her ultimatum to Germany would seem to be proof positive that she did not desire to enter the conflict.

Another fact, equally apparent, is that Germany, not content with a partial, even if certain, victory, had determined to defeat all the Allies in quick succession. Her plan of dictating terms of peace first in Paris, then in Petrograd, and finally in London, was not adopted as a military necessity, but as a deliberate programme based on the absolute confidence in the overwhelming power of her arms. Nor did she mean to stop at that. Her aim was much higher; she wanted nothing less than to rule all nations.

This is now frankly admitted by many of her leading men. To most of us such an undertaking is dumfounding in its boldness and magnitude, all the more as it is intended to be carried through by force. But it would be a mistake to accuse the Germans of conceit and arrogance. They are convinced of their superiority, and it must be admitted that there is some justification for their attempt.

The question has often been raised as to whether our further development will be in the direction of the artistic and beautiful or the scientific and useful. The inevitable conclusion is that art must be sacrificed to science. This being so, the rational Germans represent the nearest approach of the humanity of the future. The Slavs, who are in the ascendency and will lead in their turn, will give a fresh impetus to creative and spiritual effort, but they too will have to concentrate on the necessary and practical. A world of bees will be the ultimate result.

Germany has been foiled in her attempt. Though still undefeated, her campaign is a failure. Many statements have been made in explanation of the sudden halt of her victorious armies, as if by a miracle, at the very gates of Paris, but the views expressed are of speculative character and do not deal with the real physical causes. These may be briefly elucidated.

The German war machine is an attempt to substitute for an assemblage of loosely linked temperamental and problematical units a compact and apathetic mass moving at command with clock precision, machinelike, impassive, indifferent to danger and death, in battle the same as on parade. Its conception rests on a deeply scientific foundation. Every human being is swayed by courage and fear, but the former predominates. This is evident, for life or existence itself is a struggle fraught with perils and pains which must be met with determination and fortitude. Fear comes from the consciousness of inimical environment and is accentuated by isolation.

When many men are placed close together the friendly surrounding and sense of connectedness are productive of a distinct psychological mass effect, calming the nerves and subduing the inborn dread and apprehension. On the other hand, frequent and severe drilling kept up for years, besides being conducive to precision and synchrony of movements, is of decided hypnotic influence, still further eliminating individual initiative and incertitude. Thus results a strong and healthy body which moves and acts as a unit, which is without human failings and shortcomings and capable of maximum performance through well directed and simultaneous application of separate efforts.

Such is the formidable engine Germany has perfected for the protection of her Kultur and conquest of the globe — an unfeeling automaton, a diabolical contrivance for scientific, pitiless, wholesale destruction the like of which was not dreamed of before. It is believed to express the highest efficiency, but is deceptive in this respect, to none more than the Germans themselves. In reality this modern war machine, considered as a transformer of energy, is barbarously wasteful.

Not only does it call for enormous expenditure of money and effort when idle, but involves a fundamental fallacy which military writers ignore, namely, the conditions determining its performance, and therefore its efficiency, are largely, if not wholly, controlled by the enemy. Indeed, it is lack of appreciation of this truth that is responsible for the Paris failure.

The first of the two chief causes of German unsuccess is found in the admirable defensive tactics of the French, who refused to make a stand for a decisive battle, thus preventing the German machine from developing its full power and compelling it to work at low efficiency. The second, even more important, was the result of undue hurry of the Germans, who drove their engine too fast, thereby increasing greatly the losses without adequate gain in useful performance. Had they taken more time, which, as subsequent developments have shown, they could have well afforded, there would have been more energy conserved and the task in all probability successfully accomplished.

The most surprising of the facts which have transpired is that there have been made in diplomatic transaction and conduct of the German campaign a number of grievous mistakes, so patent now that no representations of the press can disguise them. This is a revelation for which the world was least prepared and which shows clearly that German erudition and technical proficiency have been obtained at the expense of intuition, tact and good judgment.

What a blunder was the violation of Belgian neutrality, what an error the expectation that England would tolerate an encroachment so dangerous to her existence, that Italy would sacrifice her fleet and commerce to please the alliance! The Germans had wonderful guns, rendering fortifications useless, and yet in attacking France, instead of the shortest route, they took a circuitous path through Belgium, thus losing time and conjuring new perils and complications besides. Tens of thousands of men were driven into certain death in vain assaults in mass formation when a few shots from these guns would have been sufficient to level the forts.

Troops were withdrawn from France to less important points at the very moment when their presence meant certain victory. The Germans could have marched on Warsaw and Petrograd before the enemy was ready to put up an effective resistance, yet they delayed the invasion until the Russians brought up their millions. They could have taken Dunkirk and Calais without great effort and so avoided the terrible losses which this task, if at all realizable, must now involve. At present they are recklessly venturing far into Russian teritory against overwhelming numbers and in a season when snow-storms may cut the communications and put the whole army at the mercy of the enemy.

What explanation can be offered for these and other singular errors of a nation to which economy is religion, which is admittedly the first in achieving successes in the most scientific manner, along lines of least resistance? Only one reason can be given and it is one which has caused the downfall of many an empire! It is overconfidence and contemptuous disregard of the adversaries.

Germany began the war with a blind faith in an offensive which knows no opposition. She has learned, after a frightful and unnecessary sacrifice of life and property, that France can be strong without Napoleon, that the rights of liberty loving nations, as the Belgian and Servian, cannot be trampled upon with impunity, that Russia is no longer the clumsy and helpless beast of the north. She has finally recognized what she should have known from the first, that England is her most dangerous enemy. She might maintain herself against the armies of the Continent, but with Great Britain shutting her off from the sea and strangling her by degrees the task is rendered impossible.

Victory over the Allies in the west, if at all obtainable, would weaken her to the point of danger; in the East the situation is becoming more hopeless every hour. Germany is losing ten thousand men and spending seventy-five millions of marks a day. Her life blood is ebbing fast; in the end she must lose. The only way to win is to crush England. In doing this she frees herself from the deadly grip at her throat and triumphs over all her enemies.

The Fatherland is now aflame with this thought and has started, with energy never shown before, a new campaign which if undertaken four months ago might have terminated the war before it was fairly under way. Germany enters this mortal combat not with the cold deliberation of a military power but with the passionate resolve of a nation animated by that one desire. She depends for success not only on her generals but on her physicists, engineers, inventors, chemists and artisans and on her volunteers who will offer themselves as martyrs for her cause.

She may make raids and demonstrations to trap the enemy, but she does not have the remotest intention to engage the British fleet in open battle. What she proposes to do is to destroy it by hellish means and artifices without losing a single ship of her own. Unless England wakes up immediately to this grave danger and prepares to meet science with science, skill with skill and sacrifice with sacrifice, the next few months may be critical for her reign as mistress of the seas. That the rules set down at The Hague are ineffective in preventing the use of infernal devices has been already shown. International agreements are of two kinds and may be classified under two captions, which are: "United we stand, divided we fall" and "Circumstances alter cases." The provisions of The Hague are of the latter kind.

Those who would brush aside the above suggestion as highly improbable if not preposterous should bear in mind that a great nation leading in technical achievement is making a fight for its existence and that invention has already provided means by which such destruction can be accomplished, while others are foreshadowed in scientific investigations of recent years. The question that will interest everybody is what methods and contrivances is Germany likely to employ in her cunning undertaking and how can her efforts be met and frustrated?

In her attack upon England four ways are open to Germany: First, forceful invasion in disregard of the British fleet; second, engagement with the fleet in open battle; third, gradual destruction and weakening of the fleet by devices other than guns, and fourth, aerial attacks on land and sea.

History is full of daring conquests. It may be that we are to witness the most remarkable of all. The British Isles have been invaded before, but it was in times of primitive arms. The means of defence have been brought to great perfection, it is true,

but this is largely offset by correspondingly increased powers of offensive. The feat is difficult but not impossible.

Strategy, however, can play no important part in its consummation. It is a case of Hannibal crossing the Alps, a problem of overcoming natural barriers. England has a small coast line on which landing can be effected and many places are likely to be well guarded and fortified. If the Germans contemplate invasion it will come like a lightning stroke. They will attempt it in broad daylight and in their favored manner of hacking through the obstacles regardless of loss. Their frantic efforts to get control of the coast would seem to indicate that such is their intention.

Many experts are of the opinion that so long as there is a superior British fleet in existence an undertaking of this nature is wholly out of the question, but this is a mistake. It is certainly possible for the Germans to establish an operating zone in the Channel, protected on the sides by impenetrable mine fields and submarines. What is more, the possession of Calais, while it would be of great advantage to them, is not absolutely necessary to their purpose.

Whatever the plan, it will be a piece of engineering worked out in all details with German thoroughness. That is the reason why no credence can be placed in the flimsy proposals which have been described in some papers. No feasible scheme has as yet been disclosed, but I think that I am guessing correctly when I say that the Germans contemplate the use of specially designed floating fortresses, which will be in sections and transportable by rail.

They will be made virtually invulnerable to torpedo and gun attack and will be equipped with guns of great range and destructive power constructed with this very object in view. Under the protection of these fortresses, which will sweep the coast clear, landing of troops and artillery is to be effected while bodies of infantry are transported through the air, this latter operation being performed under cover of darkness. With guns of inferior calibre, and more or less unprepared, it will be hard for the Britons to frustrate the attempt.

There is some foundation to the belief that the Germans may venture a naval engagement on a large scale. They have a smaller number of vessels, but they are mostly of quite modern type and without doubt every unit is in perfect order. All reports agree that their guns are superior to those of the British, both in range and durability. The Germans are masters in the manufacture and treatment of heat resisting materials and many technical branches in other countries are entirely dependent on their product. When we add to this advantage the possibilities offered by mines, torpedoes, submarines, Zeppelins and other means of destruction, skilful manoeuvre and surprise the numerical inequality of the fleet assumes secondary importance.

The marvelous exploit of a small German submarine which sank four British cruisers and escaped undamaged is in itself sufficient to justify the conclusion that the impending duel between the two countries will not be decided by guns and armor alone, considered heretofore supreme on the ocean. And yet the full capabilities of this kind of craft remain to be shown.

Germany is apt to go other nations one better. Most inventions originating elsewhere are improved by the Germans. Not only this, but they work for effect, knowing that to surprise is to strike, to strike is to win. It is highly probable that they have developed new things in submarines and may have solved the particular problem confronting them now, which is to destroy battleships in protected harbors.

This might be done by miniature vessels of simplified construction which would be virtually nothing but torpedoes and manned with one or two volunteer operators. The displacement would not need to be more than five tons, so that two or three, if not more, could be lowered from a Zeppelin in convenient localities at night. Such devices controlled by resolute men would be a new terror of the sea hard to guard against.

In general it will be very difficult for the British to combat effectively the submarine peril. An airship or aeroplane can be fought with a similar machine, but under water this method is impracticable and special craft will have to be perfected. Battleships might discourage submarine attacks by small shells filled with explosives of very high velocity so as to produce shocks of great intensity. Minute mines may also be employed, so constructed as to float at a certain depth and to explode on contact. They would do no harm to a large surface vessel but would reveal the presence of and injure a submarine, the delicate apparatus of which is easily deranged.

Next to guns the Zeppelin form of airship is the most valuable war asset of the Germans; at least they think so. Many difficulties had to be overcome in its development. A process of manufacturing cheaply pure hydrogen was perfected, a new alloy of remarkable strength and lightness produced, suitable and highly economical engines constructed and a number of other technical problems successfully solved. While not involving great originality it was a notable advance such as could only be achieved in Germany. Much has been said, both in exaltation and depreciation, of the Zeppelin, making it necessary to separate the wheat from the chaff before expressing an opinion as to its merits.

A claim has been advanced that a new non-inflammable gas was recently discovered, by the use of which the carrying capacity of the vessel is increased two and a half times. The only foundation of this persistent report is that according to the periodic hypothesis of elements evolved by the great Russian Mendelejeff, which has proved an unerring guide in chemical research, there should be a gas of an atomic weight 04. In a way its existence is demonstrated in the solar corona — hence the name coronium — and also in the aurora borealis, in which case it is referred to as terrestrial, or geocoronium.

In order to estimate what Germany might do with her air fleet a correct guess must be made as to its magnitude. Prior to the declaration of war she had thirty-six vessels of various sizes and actual facilities for turning out from eight to ten each month. But under war pressure this rate could be greatly increased.

The machine has passed the experimental stage and it is simply a question of reproduction. In view of the situation it would not be surprising to find that a hundred or more have been manufactured by this time. Produced in such numbers the cost of each would not be more than $ 125,000, which means that one hundred could be had for the price of one single dreadnought.

The carrying capacity has heretofore been given on the basis of passenger weight, but for war purposes it could be considerably increased, and in the latest type it might be as much as twenty tons. Such a vessel could transport 200 men with full equipment and a fleet of 100 could land 20,000 men in one operation.

But the possibilities of damage by explosives are much more impressive, especially as it can be inflicted without risk. A Zeppelin fitted out with proper instruments may sail in perfect safety at great height, find the exact point for attack by reference to two wireless plants in absolute darkness, drop many tons of picric compound and do this again and again.

Several experts have expressed themselves in a slighting manner in regard to the destructive effects, but the fact is that the explosion of three tons of dynamite produces an earthquake perceptible at a distance of thirty miles. If ten tons of clastic explosive were dropped into the heart of a large city thousands would be killed and hundreds of millions of property annihilated. Suppose that a fleet of 100 such vessels were to pass over England at night dropping 100,000 bombs of twenty pounds. Who can judge of the damage and demoralization which would ensue?

At the outbreak of the war it was reported that the Germans had devised a shell the poisonous fumes of which were of great destructiveness. Shortly after a marvelous

new explosive was said to have been produced in France named turpinite. The first intimation came from military quarters and some weight was attached to the news on this account and also because the discovery was attributed to Eugene Turpin, an ingenious and prolific inventor of chemicals.

The idea of employing poisonous or asphyxiating bombs is old. It is authoritatively stated that some were actually thrown during the second siege of Paris against the army of Versailles, but with the only result of killing the expert who was filling them. There is a natural and deeply rooted prejudice against the employment of poisonous agents in warfare, and many of those who tolerate the present methods of destroying life would shrink from such use. Yet death from many of the toxins known is less painful and disfiguring.

In the absence of demonstrated facts I will endeavor to show in a few words how the effectiveness of such means can be enormously increased. Consider first a large shell which, on striking the ground, liberates a poisonous gas of atmospheric density spreading in half a sphere, and let the effective radius be 1,000 feet. Now imagine that an equivalent charge is subdivided in one million parts, giving that many little shells which can be scattered over a large area. Then, since the gas will be of the same volume as before, the radius of action of each shell will be ten feet and their combined destructive effect will be 100 times greater than that of the large shell; in fact, much more so, for the distribution of the gas will not be uniform. It will be seen the secret lies in the employment of extremely small charges in great numbers.

The same reasoning leads to the conclusion that by using minute projectiles of tungsten dipped in curare or similar poison, paralyzing heart or locomotor function, a means for fighting battles would be provided more humane than the present and incomparably more effective. A complete revolution in methods of attack may be brought on through the use of toxins or asphyxiants heavier than air. This may be illustrated by an example.

Let us suppose that ten tons of such liquefied gas are dropped on a battlefield from an aerial vessel. On evaporating a gas blanket will be formed over the earth's surface, the effective height of which may be assumed to be ten feet. If ten cubic feet of the gas weigh one pound, then ten tons will give 200,000 cubic feet of gas, which may be more or less diluted, according to its toxic activity. Assume that it is not more poisonous than carbon monoxide, which is fatal when its percentage in the atmosphere is one-half of one per cent. That means that the gas blanket will contain 40,000,000 cubic feet, and being ten feet high it will cover 4,000,000 square feet, or, roughly, 100 acres. In a populated city, on account of structures and other objects, the deadly zone would be very much extended.

This is danger enough, but if a gas were employed of lethal power equal to that of prussic acid, aconitine or of the strongest poison known, pseudoaconitine, the destructive area would be a hundred times greater. Evidently then there is a prospect that the chemist, who is largely responsible for the war, may also find the means of compelling its speedy termination.

Telautomatics is a name suggested for the wireless control of the organs and translatory movements of self-propelled automata. Fifteen years ago I showed its first applications and the results were received with an interest such as only few inventions have elicited. My demonstrations were repeated in Germany and other countries, but on account of the fact that Hertz waves and imperfectly tuned circuits were employed a general impression was created that such distant control of apparatus was not absolutely reliable.

A further argument was advanced that if it were unfailing, volunteers could always be found ready for sacrifice and more dependable because of intelligence and judgment not possessed by an inanimate machine. This view is held by those who are now

advocating the use of manned aerial torpedoes, but nothing could be more erroneous. A crewless vessel controlled by proper wireless apparatus is in every way superior as a means of attack.

Large guns are now being manufactured in Germany so expensive and shortlived that a single shot from them costs a small fortune. It would be possible to produce for less than the price of a shot a telautomatic aerial torpedo of much longer range and greater destructiveness which would hit its mark every time and dispense with the necessity of the gun altogether.

The new principle can also be applied to a submarine, and, particularly in connection with control from great elevation, it will afford the most perfect means for coast defence so far devised. But its full possibilities will only be appreciated when the use of certain electrical waves to which the earth is resonantly responsive becomes general. It will then be practicable to despatch a crewless boat or balloon to distances of hundreds of miles, guide it along any chart at will and release its potential energy at any point desired.

Great many of the present means and methods will then become obsolete. It is very likely that if this war is protracted this invention will prove of importance. Recent reports would indicate that experiments are being made in Germany with telautomatic torpedoes released from balloons.

One good effect of this disastrous disturbance will be a long period of peace. This is a natural consequence of the law that action and reaction are equal. But in the present phase of human development occasional convulsions are in the order of things. A still greater struggle will probably come, that between the united races of the Orient and Occident.

So long as there are different nationalities there will be patriotism. This feeling must be eradicated from our hearts before permanent peace can be established. Its place must be filled by love of nature and scientific ideal. Science and discovery are the great forces which will lead to that consummation.

I have just made known an invention which will show to electricians how to produce immense electrical pressures and activities. By their means many wonderful results will be achieved. The human voice and likeness will be flashed around the globe without wire, energy projected through space, the wastes of the ocean will be made safe to navigation, transport facilitated, rain precipitated at will and, perhaps, the inexhaustible store of atomic energy released.

Advances of this kind will, in times to come, remove the physical causes of war, the chief of which is the vast extent of this planet. The gradual annihilation of distance will put human beings in closer contact and harmonize their views and aspirations. The harnessing of the forces of nature will banish misery and want and provide ample means for safe and comfortable existence.

But one more accomplishment will still be lacking to make the triumph of the mind of man complete. A way must be found to interpret thought and thereby enable the accurate reduction of all forms of human effort to a common equivalent. The problem is susceptible of solution.

The consequences of such an advance are incalculable. A new epoch in human history would be inaugurated and a colossal revolution in moral, social and other respects accomplished, innumerable causes of trouble would be removed, our lives profoundly modified for the better, and a new and firm foundation laid to all that makes for peace.

HOW COSMIC FORCES SHAPE OUR DESTINIES*

Every living being is an engine geared to the wheelwork of the universe. Though seemingly affected only by its immediate surrounding, the sphere of external influence extends to infinite distance. There is no constellation or nebula, no sun or planet, in all the depths of limitless space, no passing wanderer of the starry heavens, that does not exercise some control over its destiny — not in the vague and delusive sense of astrology, but in the rigid and positive meaning of physical science.

More than this can be said. There is no thing endowed with life — from man, who is enslaving the elements, to the numblest creature — in all this world that does not sway it in turn. Whenever action is born from force, though it be infinitesimal, the cosmic balance is upset and universal motion results.

Herbert Spencer has interpreted life as a continuous adjustment to the environment, a definition of this inconceivably complex manifestation quite in accord with advanced scientific thought, but, perhaps, not broad enough to express our present views. With each step forward in the investigation of its laws and mysteries our conceptions of nature and its phases have been gaining in depth and breadth.

In the early stages of intellectual development man was conscious of but a small part of the macrocosm. He knew nothing of the wonders of the microscopic world, of the molecules composing it, of the atoms making up the molecules and of the dwindlingly small world of electrons within the atoms. To him life was synonymous with voluntary motion and action. A plant did not suggest to him what it does to us — that it lives and feels, fights for its existence, that it suffers and enjoys. Not only have we found this to be true, but we have ascertained that even matter called inorganic, believed to be dead, responds to irritants and gives unmistakable evidence of the presence of a living principle within.

Thus, everything that exists, organic or inorganic, animated or inert, is susceptible to stimulus from the outside. There is no gap between, no break of continuity, no special and distinguishing vital agent. The same law governs all matter, all the universe is alive. The momentous question of Spencer, "What is it that causes inorganic matter to run into organic forms?" has been answered. It is the sun's heat and light. Wherever they are there is life. Only in the boundless wastes of interstellar space, in the eternal darkness and cold, is animation suspended, and, possibly, at the temperature of absolute zero all matter may die.

MAN AS A MACHINE

This realistic aspect of the perceptible universe, as a clockwork wound up and running down, dispensing with the necessity of a hypermechanical vital principle, need not be in discord with our religious and artistic aspirations — those undefinable

---

* New York American, Febr. 7, 1915 ("Did the War cause the Italian Earthquake"),

and beautiful efforts through which the human mind endeavors to free itself from material bonds. On the contrary, the better understanding of nature, the consciousness that our knowledge is true, can only be all the more elevating and inspiring.

It was Descartes, the great French philosopher, who, in the seventeenth century, laid the first foundation to the mechanistic theory of life, not a little assisted by Harvey's epochal discovery of blood circulation. He held that animals were simply automata without consciousness and recognized that man, though possessed of a higher and distinctive quality, is incapable of action other than those characteristic of a machine. He also made the first attempt to explain the physical mechanism of memory. But in this time many functions of the human body were not as yet understood, and in this respect some of his assumptions were erroneous.

Great strides have since been made in the art of anatomy, physiology and all branches of science, and the workings of the man-machine are now perfectly clear. Yet the very fewest among us are able to trace their actions to primary external causes. It is indispensable to the arguments I shall advance to keep in mind the main facts which I have myself established in years of close reasoning and observation and which may be summed up as follows:

1. The human being is a self-propelled automaton entirely under the control of external influences. Willful and predetermined though they appear, his actions are governed not from within, but from without. He is like a float tossed about by the waves of a turbulent sea.

2. There is no memory or retentive faculty based on lasting impression. What we designate as memory is but increased responsiveness to repeated stimuli.

3. It is not true, as Descartes taught, that the brain is an accumulator. There is no permanent record in the brain, there is no stored knowledge. Knowledge is something akin to an echo that needs a disturbance to be called into being.

4. All knowledge or form conception is evoked through the medium of the eye, either in response to disturbances directly received on the retina or to their fainter secondary effects and reverberations. Other sense organs can only call forth feelings which have no reality of existence and of which no conception can be formed.

5. Contrary to the most important tenet of Cartesian philosophy that the perceptions of the mind are illusionary, the eye transmits to it the true and accurate likeness of external things. This is because light propagates in straight lines and the image cast on the retina is an exact reproduction of the external form and one which, owing to the mechanism of the optic nerve, can not be distorted in the transmission to the brain. What is more, the process must be reversible, that is to say, a form brought to consciousness can, by reflex action, reproduce the original image on the retina, just as an echo can reproduce the original disturbance. If this view is borne out by experiment an immense revolution in all human relations and departments of activity will be the consequence.

NATURAL FORCES INFLUENCE US

Accepting all this as true let us consider some of the forces and influences which act on such a wonderfully complex automatic engine with organs inconceivably sensitive and delicate, as it is carried by the spinning terrestrial globe in its lightning flight through space. For the sake of simplicity we may assume that the earth's axis is perpendicular to the ecliptic and that the human automaton is at the equator. Let his weight be one hundred and sixty pounds, then, at the rotational velocity of about 1,520 feet per second with which he is whirled around, the mechanical energy stored in his body will be nearly 5,780,000 foot pounds, which is about the energy of a hundred-pound cannon ball.

This momentum is constant as well as the upward centrifugal push, amounting to about fifty-five hundredth of a pound, and both will probably be without marked influence on his life functions. The sun, having a mass 332,000 times that of the earth, but being 23,000 times farther, will attract the automaton with a force of about one-tenth of one pound, alternately increasing and diminishing his normal weight by that amount.

Though not conscious of these periodic changes, he is surely affected by them.

The earth in its rotation around the sun carries him with the prodigious speed of nineteen miles per second and the mechanical energy imparted to him is over 25,160,000,000 foot pounds. The largest gun ever made in Germany hurls a projectile weighing one ton with a muzzle velocity of 3,700 feet per second, the energy being 429,000,000 foot pounds. Hence the momentum of the automaton's body is nearly sixty times greater. It would be sufficient to develop 762,400 horse-power for one minute, and if the motion were suddenly arrested the body would be instantly exploded with a force sufficient to carry a projectile weighing over sixty tons to a distance of twenty-eight miles.

This enormous energy is, however, not constant, but varies with the position of the automaton in relation to the sun. The circumference of the earth has a speed of 1,520 feet per second, which is either added to or subtracted from the translatory velocity of nineteen miles through space. Owing to this the energy will vary from twelve to twelve hours by an amount approximately equal to 1,533,000,000 foot pounds, which means that energy streams in some unknown way into and out of the body of the automaton at the rate of about sixty-four horse-power.

But this is not all. The whole solar system is urged towards the remote constellation of Hercules with a speed which some estimate at twenty miles per second, and owing to this there should be similar annual changes in the flux of energy, which may reach the apalling figure of over one hundred billion foot pounds. All these varying and purely mechanical effects are rendered more complex through the inclination of the orbital planes and many other permanent or casual mass actions.

This automaton is, however, subjected to other forces and influences. His body is at the electric potential of two billion volts, which fluctuates violently and incessantly. The whole earth is alive with electrical vibrations in which he takes part. The atmosphere crushes him with a pressure of from sixteen to twenty tons, according to barometric conditions. He receives the energy of the sun's rays in varying intervals at a mean rate of about forty foot pounds per second, and is subjected to periodic bombardment of the sun's particles, which pass through his body as if it were tissue paper. The air is rent with sounds which beat on his eardrums, and he is shaken by the unceasing tremors of the earth's crust. He is exposed to great temperature changes, to rain and wind.

What wonder then that in such a terrible turmoil, in which cast iron existence would seem impossible, this delicate human engine should act in an exceptional manner?If all automata were in every respect alike they would react in exactly the same way, but this is not the case. There is concordance in response to those disturbances only which are most frequently repeated, not to all. It is quite easy to provide two electrical systems which, when subjected to the same influence, will behave in just the opposite way.

So also two human beings, and what is true of individuals also holds good for their large aggregations. We all sleep periodically. This is not an indispensable physiological necessity any more than stoppage at intervals is a requirement for an engine. It is merely a condition gradually imposed upon us by the diurnal revolution of the globe, and this is one of the many evidences of the truth of the mechanistic theory. We note a rhythm, or ebb and tide, in ideas and opinions, in financial and political movements, in every department of our intellectual activity.

It only shows that in all this a physical system of mass inertia is involved which affords a further striking proof. If we accept the theory as a fundamental truth and, furthermore, extend the limits of our sense perceptions beyond those within which we become conscious of the external impressions, then all the states in human life, however unusual, can be plausibly explained. A few examples may be given in illustration.

The eye responds only to light vibrations through a certain rather narrow range, but the limits are not sharply defined. It is also affected by vibrations beyond, only in a lesser degree. A person may thus become aware of the presence of another in darkness, or through intervening obstacles, and people laboring under illusions ascribe this to telepathy. Such transmission of thought is absurdly impossible.

The trained observer notes without difficulty that these phenomena are due to suggestion or coincidence. The same may be said of oral impressions, to which musical and imitative people are especially susceptible. A person possessing these qualities will often respond to mechanical shocks or vibrations which are inaudible.

To mention another instance of momentary interest reference may be made to dancing, which comprises certain harmonious muscular contractions and contortions of the body in response to a rhythm. How they come to be in vogue just now can be satisfactorily explained by supposing the existence of some new periodic disturbances in the environment, which are transmitted through the air or the ground and may be of mechanical, electrical or other character.

Exactly so it is with wars, revolutions and similar exceptional states of society.

Though it may seem so, a war can never be caused by arbitrary acts of man.

It is invariably the more or less direct result of cosmic disturbance in which the sun is chiefly concerned.

In many international conflicts of historical record which were precipitated by famine, pestilence or terrestrial catastrophes the direct dependence of the sun is unmistakable. But in most cases the underlying primary causes are numerous and hard to trace.

In the present war it would be particularly difficult to show that the apparently wilful acts of a few individuals were not causative. Be it so. The mechanistic theory, being founded on truth demonstrated in everyday experience, absolutely precludes the possibility of such a state being anything but the inevitable consequence of cosmic disturbance.

The question naturally presents itself as to whether there is some intimate relation between wars and terrestrial upheavals. The latter are of decided influence on temperament and disposition, and might at times be instrumental in accelerating the clash, but aside from this there seems to be no mutual dependence, though both may be due to the same primary cause.

What can be asserted with perfect confidence is that the earth may be thrown into convulsions through mechanical effects such as are produced in modern warfare. This statement may be startling, but it admits of a simple explanation.

Earthquakes are principally due to two causes — subterranean explosions or structural adjustments. The former are called volcanic, involve immense energy and are hard to start. The latter are named tectonic; their energy is comparatively insignificant and they can be caused by the slightest shock or tremor. The frequent slides in the Culebra are displacements of this kind.

WAR AND THE EARTHQUAKE

Theoretically, it may be said that one might think of a tectonic earthquake and cause it to occur as a result of the thought, for just preceding the release the mass may be in the most delicate balance. There is a popular error in regard to the energy of such displacements. In a case recently reported as quite extraordinary, extending as it did over a vast territory, the energy was estimated at 65,000,000,000,000 foot tons. Assuming even that the whole work was performed in one minute it would only be equivalent to that of 7,500,000 horse-power during one year, which seems much, but is little for a terrestrial upheaval. The energy of the sun's rays falling on the same area is a thousand times greater.

The explosions of mines, torpedoes, mortars and guns develop reactive forces on the ground which are measured in hundreds or even thousands of tons and make themselves felt all over the globe. Their effect, however, may be enormously magnified by resonance. The earth is a sphere of a rigidity slightly greater than that of steel and vibrates once in about one hour and forty-nine minutes.

If, as might well be possible, the concussions happen to be properly timed their combined action could start tectonic adjustments in any part of the earth, and the Italian calamity may thus have been the result of explosions in France. That man can produce such terrestrial convulsions is beyond any doubt, and the time may be near when it will be done for purposes good or apt.

6

THE WONDER WORLD TO BE CREATED BY ELECTRICITY*

Whoever wishes to get a true appreciation of the greatness of our age should study the history of electrical development. There he will find a story more wonderful than any tale from the Arabian Nights. It begins long before the Christian era, when Thales, Theophrastus and Pliny tell of the magic properties of electron — the precious substance we call amber — that came from the pure tears of the Heliades, sisters of Phaeton, the unfortunate youth who attempted to run the blazing chariot of Phoebus and nearly burned up the earth. It was but natural for the vivid imagination of the Greeks to ascribe the mysterious manifestations to a hyperphysical cause, to endow the amber with life and with a soul.

Whether this was actual belief or merely poetic interpretation is still a question. Even at this very day many of the most enlightened people think that the pearl is alive; that it grows more lustrous and beautiful in the warm contact of the human body. So, too, it is the opinion of men of science that a crystal is a living being, and this view is being extended to embrace the entire physical universe since Prof. Jagadis Chunder Bose has demonstrated, in a series of remarkable experiments, that inanimate matter responds to stimuli in exactly the same manner as plant fiber and animal tissue.

The superstitious belief of the ancients, if it existed at all, can therefore not be taken as a reliable proof of their ignorance, but just how much they knew about electricity can only be conjectured. A curious fact is that the ray or torpedo fish was used by them in electrotherapy. Some old coins show twin stars, or sparks, such as might be produced by a galvanic battery. The records, though scanty, are of a nature to fill us with conviction that a few initiated, at least, had a deeper knowledge of amber phenomena. To mention one, Moses was undoubtedly a practical and skillful electrician far in advance of his time. The Bible describes precisely and minutely arrangements constituting a machine in which electricity was generated by friction of air against silk curtains and stored in a box constructed like a condenser. It is very plausible to assume that the sons of Aaron were killed by a high-tension discharge, and that the vestal fires of the Romans were electrical. The belt drive must have been known to engineers of that epoch, and it is difficult to see how the abundant evolution of static electricity could have escaped their notice. Under favorable atmospheric conditions a belt may be transformed into a dynamic generator capable of producing many striking actions. I have lighted incandescent lamps, operated motors and performed numerous other equally interesting experiments with electricity drawn from belts and stored in tin cans.

That many facts in regard to the subtle force were known to the philosophers of old can be safely concluded. The wonder is, why 2000 years elapsed before Gilbert in 1600 published his famous work, the first scientific treatise on electricity and magnetism. To an extent this long period of unproductiveness can be explained. Learning

* Manufacturer's Record, Sept. 9, 1915.

was the privilege of a few and all information was jealously guarded. Communication was difficult and slow, and a mutual understanding between widely-separated investigators hard to reach. Then again, men of those times had no thought of the practical; they lived and fought for abstract principles, creeds, traditions and ideals. Humanity did not change much in Gilbert's time, but his clear teachings had a telling effect on the minds of the learned. Friction machines were produced in rapid succession and experiments and observations multiplied. Gradually fear and superstition gave way to scientific insight, and in 1745 the world was thrilled with the news that Kleist and Leyden had succeeded in imprisoning the uncanny agent in a phial, from which it escaped with an angry snap and destructive force. This was the birth of the condenser, perhaps the most marvelous electrical device ever invented.

Two tremendous leaps were made in the succeeding 40 years. One was when Franklin demonstrated the identity between the gentle soul of amber and the awe-inspiring bolt of Jupiter; the other when Galvany and Volta brought out the contact and chemical battery, from which the magic fluid could be drawn in unlimited quantities. The succeeding 40 years bore still greater fruit. Oersted made a significant advance in deflecting a magnetic needle by an electric current, Arago produced the electro-magnet, Seebeck the thermopile and in 1831, as the crowning achievement of all, Faraday announced that he had obtained electricity from a magnet, thus discovering the principle of that wonderful engine, the dynamo, and inaugurating a new era both in scientific research and practical application.

From that time on inventions of inestimable value have followed one another at a bewildering rate. The telegraph, telephone, phonograph and incandescent lamp, the induction motor, oscillatory transformer, Roentgen ray, radium, wireless and numerous other revolutionary advances have been made and all conditions of existence profoundly modified. In the 84 years which have since elapsed the subtle agents dwelling in the living amber and loadstone have been transformed into cyclopean forces, turning the wheels of human progress with ever-increasing speed. This, in brief, is the fairy tale of electricity from Thales to the present day. The impossible has happened, the wildest dreams have been surpassed and the astounded world is asking. What is coming next?

ELECTRICAL POSSIBILITIES IN COAL AND IRON

Many a would-be discoverer, failing in his efforts, has felt the regret to have been born at a time when everything has been already accomplished and nothing is left to be done. This erroneous impression that, as we are advancing, the possibilities of invention are being exhausted, is not uncommon. In reality it is just the opposite. Spenser has conveyed the right idea when he likened civilization to the sphere of light which a lamp throws out in darkness. The brighter the lamp and the larger the sphere the greater is its dark boundary. It is paradoxical, yet true, to say, that the more we know the more ignorant we become in the absolute sense, for it is only through enlightenment that we become conscious of our limitations. Precisely one of the most gratifying results of intellectual evolution is the continuous opening up of new and greater prospects. We are progressing at an amazing pace, but the truth is that, even in the fields most successfully exploited, the ground has only been broken. What has been so far done by electricity is nothing as compared with what the future has in store. Not only this, but there are now innumerable things done in old-fashioned ways which are much inferior in economy, convenience and many other respects to the new method. So great are the advantages of the latter that whenever an opportunity presents itself the engineer advises his client to "do it electrically."

Consider, in illustration, one of the largest industries, that of coal. From this valuable mineral we chiefly draw the sun's stored energy which is required to meet our industrial and commercial needs. According to statistical records, the output in the United States during the past year was 480,000,000 tons. In perfect engines this fuel would have been sufficient to develop 500,000,000 horse-power steadily for one year, but the squandering is so reckless that we do not get more than 5 per cent. of its heating value on the average. There is an appalling waste in mining, handling, transportation, store and use of coal, which could be very much reduced through the adoption of a comprehensive electrical plan in all these operations. The market value of the yearly product could be easily doubled and an immense sum added to the revenues of the country. What is more, inferior grades, billions of tons of which are being thrown away, might be turned to profitable use.

Similar considerations apply to natural gas and mineral oil, the annual loss of which amounts to hundreds of millions of dollars. In the very near future such waste will be looked upon as criminal and the introduction of the new methods will be forced upon the owners of such properties. Here, then, is an immense field for the use of electricity in many ways, vast industries which are bound to be revolutionized through its extensive application.

To give another example, I may refer to the manufacture of iron and steel, which is carried on in this country on a scale truly colossal. During the last year, notwithstanding unfavorable business conditions, 31,000,000 tons of steel have been produced. It would lead too far to dwell on the possibilities of electrical improvements in the manufacturing processes themselves, and I will only indicate what is likely to be accomplished in using the waste gases from the coke ovens and blast furnaces to generate electricity for industrial purposes.

Since in the production of pig-iron for every ton about one ton of coke is employed, the yearly consumption of coke may be put at 31,000,000 tons. The combustion in the blast furnaces yields, per minute, 7,000,000 cubic feet of gas of a heating value of 110 B. T. units per cubic foot. Of this total, without making special provision, 4,000,000 cubic feet may be made available for power purposes. If all the heat energy of this gas could be transformed into mechanical effort, it would develop 10,389,000 horse-power. This result is impossible, but it is perfectly practicable to obtain 2,500,000 horse-power electrical energy at the terminals of the dynamos.

In the manufacture of coke approximately 9400 cubic feet of gas are evolved per ton of coal. This gas is excellent for power purposes, having an average heating value of 600 B. T. units, but very little is now used in engines, largely because of their great cost and other imperfections. A ton of coke requires about 1.32 tons of American coal; hence the total coal consumption per annum on the above basis is nearly 41,000,000 tons, which give, per minute, 733,000 cubic feet of gas. Assuming the yield of surplus or rich gas to be 333,000 cubic feet, the balance of 400,000 cubic feet could be used in gas engines. The heat contents would be, theoretically, sufficient to develop 5,660,000 horse-power, of which 1,500,000 horse-power could be obtained in the form of electric energy.

I have devoted much thought to this industrial proposition, and find that *with new, efficient, extremely cheap and simple thermo-dynamic transformers not less than 4,000,000 horse-power could be developed in electric generators by utilizing the heat of these gases, which, if not entirely wasted, are only in part and inefficiently employed.*

With systematic improvements and refinements much better results could be secured and an annual revenue of $ 50,000,000 or more derived. The electrical energy could be advantageously used in the fixation of atmospheric nitrogen and production of fertilizers, for which there is an unlimited demand and the manufacture of which is

restricted here on account of the high cost of power. I expect confidently the practical realization of this project in the very near future, and look to exceptionally rapid electrical development in this direction.

HYDRO-ELECTRIC DEVELOPMENT

Water-power offers great opportunities for novel electrical applications, particularly in the department of electro-chemistry. The harnessing of waterfalls is the most economical method known for drawing energy from the sun. This is due to the fact that both water and electricity are incompressible. The net efficiency of the hydro-electric process can be as high as 85 per cent. The initial outlay is generally great, but the cost of maintenance is small and the convenience offered ideal. My alternating system is invariably employed, and so far about 7,000,000 horse-power have been developed. As generally used we do not get more than six-hundredths of a horse-power per ton of coal per year. *This water energy is therefore equivalent to that obtainable from an annual supply of 120,000,000 tons of coal, which is about 25 per cent. of the total output in the United States.* The estimate is conservative, and in view of the immense waste of coal 50 per cent. may be a closer guess.

We get better appreciation of the tremendous value of this power in our economic development when we remember that, unlike fuel, which demands a terrible sacrifice of human energy and is consumed, it is supplied without effort and destruction of material and equals the mechanical performance of 150,000,000 men — one and one- half times the entire population of this country. These figures are imposing; nevertheless, we have only begun the exploitation of this vast national resource.

There are two chief limitations at present — one in the availability of the energy, the other in its transmission to distance. The theoretical power of the falling water is enormous. If we assume for the rain clouds an average height of 15,000 feet and annual precipitation of 33 inches, the 24 horse-power per square mile is over 4000, and for the whole area of the United States more than 12,000,000,000 horse-power. As a matter of fact, the larger portion of the potential energy is used up in air friction. This, while disappointing to the economist, is a fortunate circumstance, for otherwise the drops would reach the ground with a speed of 800 feet per second — sufficient to raise blisters on our bodies, while hail would be positively deadly. Most of the water, which is available for power purposes comes from a height of about 2000 feet and represents over one and one-half billion horse-power, but we are only able to use an average fall of, say, 100 feet, which means that if all the water- power in this country were harnessed under the existing conditions only 80,000,000 horse-power could be obtained.

THE NEXT GREAT ACHIEVEMENT—ELECTRICAL CONTROL OF ATMOSPHERIC MOISTURE

But the time is very near when we shall have the precipitation of the moisture of the atmosphere under complete control, and then it will be possible to draw unlimited quantities of water from the oceans, develop any desired amount of energy, and completely transform the globe by irrigation and intensive farming. A greater achievement of man through the medium of electricity can hardly be imagined.

The present limitations in the transmission of power to distance will be overcome in two ways — through the adoption of underground conductors insulated by power, and through the introduction of the wireless art. The first plan I have advanced years ago. The underlying principle is to convey through a tubular conductor hydrogen at a very low temperature, freeze the surrounding material and thus secure a perfect

insulation by indirect use of electric energy. In this manner the power derived from falls can be transmitted to distances of hundreds of miles with the highest economy and at a small cost. This innovation is sure to greatly extend the fields of electrical application. As to the wireless method, we have now the means for economic transmission of energy in any desired amount and to distances only limited by the dimensions of this planet. In view of assertions of some misinformed experts to the effect that in the wireless system I have perfected the power of the transmitter is dissipated in all directions, I wish to be emphatic in my statement that such is not the case. The energy goes only to the place where it is needed and to no other.

When these advanced ideas are practically realized we shall get the full benefit of water-power, and it will become our chief dependence in the supply of electricity for domestic, public and other uses in the arts of peace and war.

ECONOMY IN LIGHT AND POWER — ELECTRIC PROPULSION

In the great departments of electric light and power immense opportunities are offered through the introduction of all kinds of novel devices which can be attached to the circuits at convenient hours for the purpose of equalizing the loads and increasing the revenues from the plants. I have myself knowledge of a number of new appliances of this kind. The most important among them is probably an electrical ice machine which obviates entirely the use of dangerous and otherwise objectionable chemicals. The new machine will also require absolutely no attention and will be extremely economical in operation, so that the refrigeration will be effected very cheaply and conveniently in every household.

An interesing fountain, electrically operated, has been brought out which is likely to be extensively introduced, and will afford an unusual and pleasing sight in squares, parks, hotels and residences.

Cooking devices for all domestic purposes are being provided, and there is great demand for practical designs and suggestions in this field. The same may be stated of electric signs and other attractive means of advertising which can be electrically operated. Some of the effects which it is possible to produce by electric currents are wonderful and lend themselves to exhibitions, and there is no doubt that much can be done in that direction. Theatres, public halls and private dwellings are in need of a great many devices and instruments for convenience and offer ample opportunities to an ingenious and practical inventor.

A vast and absolutely untouched field is the use of electricity for the propulsion of ships. The leading electrical company in this country has just equipped a large vessel with high-speed turbines and electric motors and has achieved a signal success. Applications of this kind will multiply at a rapid rate, for the advantages of the electrical drive are now patent to everybody. In this connection gyroscopic apparatus will probably play an important part, as its general adoption on vessels is sure to come. Very little has yet been done in the introduction of electrical drive in the various branches of industry and manufacture, and the prospects are unlimited.

A FEW OF THE WONDERS TO COME

Books have already been written on the agricultural uses of electricity, but the fact is that hardly anything has been practically done. The beneficial effects of electricity of high tension have been unmistakably established, and a revolution will be brought about through the extensive adoption of agricultural electrical apparatus.

The safeguarding of forests against fires, the destruction of microbes, insects and rodents will, in due course, be accomplished by electrical means.

In the near future we shall see a great many new uses of electricity aiming at safety, particularly of vessels at sea. *We shall have electrical instruments for preventing collisions, and we shall even be able to disperse fogs by electric force and powerful and penetrative rays.* I am hopeful that within the next few years *wireless plants will be installed for the purpose of illuminating the oceans.* The project is perfectly feasible, and if carried out will contribute more than any other provision to the safety of property and human lives at sea. The same plant could also produce stationary electrical waves and enable vessels to get at any time accurate bearings and other valuable practical data without resorting to the present means. It could also be used for time signaling and many other purposes of similar nature.

Electrotherapy is another great field in which there are unlimited possibilities for electrical applications. High-frequency currents especially have a great future. The time will come when this form of electrical energy will be available in every private residence. I consider it quite possible that through their surface actions we may do away with the customary bath, as the cleaning of the body can be instantaneously effected simply by connecting it to a source of currents or electric energy of very high potential, which results in the throwing off of dust or any small particles adhering to the skin. Such a dry bath, besides being convenient and time-saving, would also be of beneficial therapeutic influence. New electric devices for use of the deaf and blind are coming and will be a blessing to the afflicted.

In the prevention of crime electrical instruments will soon become an important factor. In court proceedings electric evidence will often be decisive. *In a time not distant it will be possible to flash any image formed in thought on a screen and render it visible at any place desired.* The perfection of this means of reading thought will create a revolution for the better in all our social relations. Unfortunately, it is true, that cunning lawbreakers will avail themselves of such advantages to further their nefarious business.

TELEGRAPHIC PHOTOGRAPHY AND OTHER ADVANCES

Great improvements are still possible in telegraphy and telephony. The use of a new receiving device which will be shortly described, and the sensitiveness of which can be increased almost without limit, will enable telephoning through aerial lines or cables however long by reducing the necessary working current to an infinitesimal value. This invention will dispense with the necessity of resorting to expensive constructions, which, however, are of circumscribed usefulness. It will also enormously extend the wireless transmission of intelligence in all its departments.

The next art to be inaugurated is that of picture transmission by ordinary telegraphic methods and existing apparatus. This idea of telegraphing or telephoning pictures is old, but practical difficulties have hampered commercial realizations. A number of improvements of great promise have been made, and there is every reason to expect that success will soon be achieved.

Another valuable novelty will be a typewriter electrically operated by the human voice. This advance will fill a long-felt want, as it will do away with the operator and save a great deal of labor and time in offices.

A new and extremely simple electric tachometer is being prepared for the market, and it is expected that it will prove useful in power plants and central stations, on boats, locomotives and automobiles.

Many municipal improvements based on the use of electricity are about to be introduced. *We have soon to have everywhere smoke annihilators, dust absorbers, ozonizers, sterilizers of water, air, food and clothing, and accident preventers on streets, elevated roads and in subways. It will become next to impossible to contract disease germs or get hurt in the city, and country folk will go to town to rest and get well.*

ELECTRIC INVENTIONS IN WAR

The present international conflict is a powerful stimulus to invention of devices and implements of warfare. An electric gun will soon be brought out. The wonder is that it was not produced long ago. Dirigibles and aeroplanes will be equipped with small electric generators of high tension, from which the deadly currents will be conveyed through tin wires to the ground. Battleships and submarines will be provided with electric and magnetic feelers so delicate that the approach of any body under water or in darkness will be detected. Torpedoes and floating mines are almost in sight which will direct themselves automatically and without fail get in fatal contact with the object to be destroyed. The art of telautomatics, or wireless control of automatic machines at a distance, will play a very important part in future wars and, possibly, in the next phases of the present one. Such contrivances which act as if endowed with intelligence will be used in innumerable ways for attack as well as defense. They may take the shape of aeroplanes, balloons, automobiles, surface or under-water boats, or any other form according to the requirement in each special case, and will be of greater range and destructiveness than the implements now employed. *I believe that the telautomatic aerial torpedo will make the large siege gun, on which so much dependence is placed at present, obsolete.*

A volume might be filled with such suggestions without exhausting the possibilities. The advance even under the conditions existing is rapid enough, but when the wireless transmission of energy for general use becomes a practical fact the human progress will assume the character of a hurricane. So all-surpassing is the importance of this marvelous art to the future existence and welfare of the human race that every enlightened person should have a clear idea of the chief factors bearing on its development.

THE POWER OF THE FUTURE

We have at our disposal three main sources of life-sustaining energy — fuel, water-power and the heat of the sun's rays. Engineers often speak of harnessing the tides, but the discouraging truth is that the tidewater over one acre of ground will, on the average, develop only one horse-power. Thousands of mechanics and inventors have spent their best efforts in trying to perfect wave motors, not realizing that the power so obtained could never compete with that derived from other sources. The force of wind offers much better chances and is valuable in special instances, but is by far inadequate. Moreover, the tides, waves and winds furnish only periodic and often uncertain power and necessitate the employment of large and expensive storage plants. Of course, there are other possibilities, but they are remote, and we must depend on the first of three resources. If we use fuel to get our power, we are living on our capital and exhausting it rapidly. This method is barbarous and wantonly wasteful, and will have to be stopped in the interest of coming generations. The heat of the sun's rays represents an immense amount of energy vastly in excess of water-power. The earth receives an equivalent of 83 foot-pounds per second for each square foot on which the rays fall perpendicularly. From simple geometrical rules applying to a spherical body it follows

that the mean rate per square foot of the earth's surface is one-quarter of that, or 20¾ foot-pounds. This is to say over one million horse-power per square mile, or 250 times the water-power for the same area. But that is only true in theory; the practical facts put this in a different aspect. For instance, considering the United States, and taking into account the mean latitude, the daily variation, the diurnal changes, the seasonal variations and casual changes, this power of the sun's rays reduces to about one-tenth, or 100,000 horse-power per square mile, of which we might be able to recover in high-speed low-pressure turbines 10,000 horse-power. To do this would mean the instalment of apparatus and storage plants so large and expensive that such a project is beyond the pale of the practical. *The inevitable conclusion is that water-power is by far our most valuable resource. On this humanity must build its hopes for the future.* With its full development and a perfect system of wireless transmission of the energy to any distance man will be able to solve all the problems of material existence. Distance, which is the chief impediment to human progress, will be completely annihilated in thought, word and action. Humanity will be united, wars will be made impossible and peace will reign supreme.

ELECTRIC DRIVE FOR BATTLE SHIPS*

The ideal simplicity of the induction motor, its perfect reversibility and other unique qualities render it eminently suitable for ship propulsion, and ever since I brought my system of power transmission to the attention of the profession through the American Institute of Electrical Engineers I have vigorously insisted on its application for that purpose. During many years the scheme was declared to be impracticable and I was assailed in a manner as vicious as incompetent. In 1900, when an article from me advocating the electric drive appeared in the Century Magazine, Marine Engineering pronounced the plan to be the "climax of asininity," and such was the fury aroused by my proposals that the editor of another technical periodical resigned and severed his connection rather than to allow the publication of some attacks.

A similar reception was accorded to my wireless boat repeatedly described in the Herald of 1898. The patents on these inventions have since expired and they are now common property. Meanwhile insane antagonism and ignorance have been replaced by helpful interest and appreciation of their value. Recently the Navy Department has let contracts aggregating $ 100,000,000 for the construction of seven war vessels with the induction motor drive, and an equal sum is appropriated to cover the cost of four huge battle cruisers which are to be fitted out in the same way. This latter project is resisted by some shipbuilders, turbine makers, electrical manufacturers and engineers who, in fear of a fatal mistake by the government and under the sway of patriotic motives, urged upon the authorities the employment of the geared turbine.

CONTROVERSIAL CORRESPONDENCE

Numerous letters of protest have been written to C. A. Swanson, of the Senate Naval Committee, but what has so far come out of this correspondence is purely controversial and of no profit whatever to those who seek information. It is regrettable that the question should have been raised at this critical moment, when speedy preparation against threatening national perils is recognized as imperative, and in view of this no doubt should be permitted to remain in the public mind as to the superiority of the equipment recommended by the naval experts. In the following I shall endeavor to make this clear to the general reader.

The most efficient means of propulsion is a jet of water expelled astern from the body of the vessel. Though the theoretical laws governing its action were precisely expressed fifty years ago by Rankine, a singular and inexplicable prejudice against this device still prevails among engineers and writers of text books on hydraulics. But the far sighted are keenly alive to its possibilities. While our present motive resources do not admit of an advantageous use of the jet, it can be confidently predicted that it will soon

---

* New York Herald, Febr. 25, 1917.

be instrumental in a more complete conquest of the deep. I firmly believe that at this writing it is being applied to the submarines devastating the oceans, for their silence alone can explain why they escape so easily detection by microphonic instruments. The sound emitted is the Achilles talon of the undersea boat. Its suppression materially increases the destructiveness of the new weapon.

THE HELICAL PROPELLER

However, under the existing conditions the best results are obtained in all kinds of surface craft with a helical propeller, which is operated in four different ways. First, straight from the shaft of the prime mover; second, by means of a gear wheel; third, through a hydraulic transformer, and, fourth, by an electric transmitter of power. As the screw in order to save energy must be revolved at a moderate rate, the first mentioned, or "direct drive," lends itself best to a reciprocating or rotary engine. The former is clumsy, the latter impossible, and competition has forced the turbine on the market. But, excessive speed being indispensable to its good performance, it had to be adapted to the propeller. This was, in a measure, accomplished by "staging" — that is, passing the steam through a number of turbines in succession — a plan obviously entailing great drawbacks, financial and otherwise. Need of reducing the bulk and cost of the machinery and insuring better working then compelled the adoption of the second arrangement — "geared turbine drive" — in which a peculiar pinioned wheel, first introduced by De Laval, transmits motion to the screw. Next, efforts to do away with certain limitations of this combination resulted in the third, or "hydraulic drive," the turbine actuating the propeller through a centrifugal pump and water motor. Finally, as the furthest step toward perfection, the last named disposition — "electric drive" — was resorted to. In this case the turbine imparts rotation to a dynamo, which in turn runs a motor carrying the screw on its shaft.

ADVANTAGES OF TYPES

Each of these forms has its supporters and champions. In principle the first would be the preferable were it not handicapped in many respects. The second type is cheap, but the gear is a serious objection. Though less economical, the third commends itself by a number of practical and valuable features. As to the last, it is not only very efficient but obtains results impossible with other forms. The law of survival of the fittest is asserting itself, and the struggle for supremacy is now on between the geared turbine and the electric drive.

Through gradual improvement of the cutting tools, scientific design, metallurgical advances and refinement of lubricants, the so-called herringbone gear has been brought to great perfection. De Laval attained an efficiency of ninety-seven per cent and MacAlpine, Melville and Westinghouse ninety-eight and one-half per cent in the transmission from the driving to the driven shaft. On the other hand, ninety-three and three-quarters per cent may be considered as the maximum with electrical apparatus. This means that with the gear the same turbine would impart five per cent more power to the propeller, which should increase the speed of the cruiser from thirty-five to a little more than thirty-five and one-half knots. As it also appears at first sight that the electric drive requires additional space, is heavier and more costly, it is only natural for those who have not made a thorough study of all its phases to decide in favor of the gear.

SOME FATAL MISTAKES

But a careful inquiry into the subject would induce them to reverse their opinion. In estimating the relative merits of these essentially different propelling means they make two fatal mistakes. The first is to take the power transmittted under abnormal conditions as a criterion; the second to draw a parallel between instalments entirely unlike, one primitive, the other elaborate, the former being incapable of fulfilling important functions of the latter. When premises are erroneous deductions therefrom must needs be faulty. Thus the opponents of the electric drive have been led to the conclusion that it is less efficient than the gear, of greater weight, more expensive and uncertain of success. How much truth there is in these contentions will be apparent from an examination of well established facts.

The electric drive is of complex influence on results in ship operation. For the sake of brevity it will be viewed only in the following principal aspects: — (1) turbine performance, (2) power transmitted to the propeller, (3) efficiency of the screw, (4) low power cruising, (5) high power action, (6) fuel consumption by auxiliaries and apparatus for ship use, (7) general economy and (8) promptness and precision of control of all effects, internal and external.

The present turbines are extremely unsuitable for ship propulsion. They offer a striking example of an antiquated invention of small value elevated to a position of extraordinary commercial utility through profound research and astonishing mechanical skill. With hundreds of thousands of thin blades easily destroyed, buckets that through corrosion and erosion soon become wasteful and small clearances between surfaces rotating at terrific rates, they are a cause of constant danger and hazard.

IRREVERSIBLE TURBINES

But their cardinal defect is that they are irreversible, which necessitates the employment of separate turbines for backing. These, besides involving great expense and considerable friction loss, impose narrow limits on the temperature of the working medium. Very high superheat, so desirable in thermo-dynamic conversion, is out of the question in such perishable structures, but from 200 to 300 degrees F. are permissible.

To that extent, then, the turbine is at an advantage when driving a dynamo. Two hundred degrees superheat will usually effect a saving of about twenty-three per cent of steam and ten per cent of fuel. This, however, is not the only gain. The turbine, freed from all the impediments of the gear drive, is capable of being safely run at a higher peripheral speed with a correspondingly increased efficiency and output. Thus, by moderate superheat and other simple and allowable expedients, it becomes practicable to develop twenty-five per cent more power from the same fuel, and this alone would make the electric drive decidedly superior to its competitor.

A MECHANICAL TOUR DE FORCE

As regards the power transmitted from the turbine to the propeller, it will seem in the light of the preceding that the gear is better by five per cent. That may be the case in exceptional tests, but it is quite different in actual service. To this is to be traced the error of those who are taking results obtained at constant load as standard of comparison. The perfection of the modern high speed gear was a veritable tour de force of the scientific machinist. It is a wonderful device, but it also has its inseparable weaknesses and shortcomings. Since the friction loss in it is sensibly constant through

a wide range of performance, a relatively great amount of energy is absorbed at small load. The gear is likewise very sensitive to shocks and vibrations, which break down the capillary oil film, vital to smooth running. In consequence, there is great waste of power when the resisting force is subject to frequent and sudden fluctuations. Measurements I made with turbine gears have shown that while the efficiency with steady and normal effort was ninety-six per cent, not more than ninety per cent was realized with a rapidly varying load. This is what might be expected in practice. Any one who has listened to the tortured engines of a steamship in heavy sea could not have failed to observe how the turning effort varies as the vessel rolls, pitches and ploughs through billows and conflicting undercurrents. A similar state of things is apt to confront a war ship in action, as was evidenced in recent naval engagements, when mountains of water were raised by the exploding shells. Under such circumstances the gear is at a great disadvantage, as the electric drive is susceptible to these drawbacks in a much smaller degree. The idea that the gear transmits more of the primary power to the propeller than the combination of dynamo and motor is, therefore, largely illusionary. There is ample evidence, experimental and inferential, that rather the opposite is true.

SUPERIORITY OF ELECTRIC DRIVE

Considering the efficiency of the screw as distinct from that attained in the transmission of power, it is admittedly better with the electric drive, this conclusion being entirely based on the superior adaptability and flexibility of the system. But there are deeper causes which should be taken into account. The interposition of electromagnetic means between the turbine and propeller materially reduces the loss due to shocks, vibrations, racing and other disturbances owing to inherent elastic resilience and equalizing tendency. The saving of energy thus effected at high speed and in a heavy sea is considerable.

Economy in cruising is one of the most desirable qualities of a war vessel. This is its ordinary use, for the chance of ever being engaged in battle is remote. The bitterest opponents of the electric drive do not deny that it excels in this feature, upon which the manufacturer chiefly relies in guaranteeing a fuel consumption from 10 to 12 per cent smaller than with the gear. The latter is hopelessly condemned by inability of adjustment to varying speed and wasteful in cruising operations, while the former is readily adaptable and economical under all conditions.

Another quality of the electric drive, which may prove especially valuable in action, is its capacity of carrying great overload without danger, owing to the nature of the connection between the turbine and propeller, as explained. The gear is rigid and unyielding and any increase of effort, particularly if sudden, may cause a breakdown.

SAVING OF POWER

Referring to the auxiliaries proper and other apparatus for ship use, to which are chargeable approximately 20 per cent of the fuel consumed, a very substantial saving of power will be achieved through the introduction of the electrical method.

Quite apart from this central station supply will be operative in reducing other waste, many accessories will be dispensed with and general economy materially increased.

But from the military point of view the quickness, ease and precision of control will perhaps be the most significant of the advantages gained. Everything may be made to respond instantly to the pressure of a button. By reversing the motors the vessel may be brought from full speed to a stop within its length. It will be possible to make

it go through all evolutions with extraordinary rapidity and a perfection of manoeuvre, undreamed of before, will be attained.

A curious mistake is made by the advocates of the turbine gear in estimating relative weight. It hardly needs be stated that it is unfair, if not absurd, to compare arrangements of widely different character and scope. Only such as are capable of accomplishing the same results should be considered. Now, a gear drive corresponding to the electric would consist of four main turbines with gears, four reversing turbines of the same capacity, and eight smaller driving and reversing turbines for cruising. This agglomeration of complex and not all too rugged machinery, with its network of water, air and oil pipes, valves, pumps and attachments, would by far exceed in weight the proposed electric drive, and would also require better structural protection, not to speak of other defects and shortcomings.

QUESTION OF WEIGHT

It should be observed, however, that the weights must be taken in their relation to that of the ship. One equipment may be heavier than another, but if it is more efficient and thereby reduces the weight of fuel and other cargo, it is for all purposes the lighter of the two.

The same is true of the cost. Comparative figures mean nothing. The question is whether the investment of capital is justified by what is to be accomplished. But enough has been said to show that for results in all respects equivalent, assuming them to be possible, the gear type, notwithstanding all claims to the contrary, would be more expensive.

That the electric drive is experimental and uncertain of performance is the least tenable of adverse assertions. In the first place, it has been successfully employed on a number of vessels and a great many more are being built. It also was found to be capable of an efficiency higher than that of any other form. But this is quite immaterial. The confidence that in the present instance all expectations will be realized is not based on a few demonstrations, but on years of experience with power plants ever since my system was commercially inaugurated. Tens of millions of horse power of induction motors are now in use the world over and no failure is recorded.

NEW CRUISERS' REQUIREMENTS

The new cruisers will require 180,000 horse power each, which, if necessary can be developed by four units of 45,000 horse power. Turbines of that capacity have been constructed and are in operation today. Dynamos of corresponding output have been installed at several places and are supplying light and power to large cities and districts. Induction motors of 15,000 horse power are being turned out by the manufacturers and can be produced in any size that may be desired, for of all kinds of motors this is the simplest and most dependable. Long since the whole system has been worked out and perfected to the least detail. The project is colossal, but it can be readily carried out by any of the few concerns who are possessed of the proper facilities. Not even a new tool has to be made. There is nothing whatever untried or hazardous about the electric drive.

Much stress is laid on reports, still to be verified, that it was rejected by England and Germany. But this is of no consequence. It has been rejected here more than once. Besides, there was war in the air of Europe and the time for radical innovations unpropitious. Moreover, the Diesel engine was looming up with large possibilities and

Dr. Föttinger's hydraulic drive was being tried. The beginning must be made somewhere and it would be deplorable indeed if the United States, where the invention was first announced and introduced on a gigantic scale, were the last to recognize it. Such mistakes have happened only too often. The foreign navies are not in the habit of keeping the press informed of their doings and it is safe to predict that if progress in this country is much retarded there will be a repetition of previous disappointments.

It is unnecessary to dwell on other objections which are of minor importance and of no bearing on the principle. Without going into tedious technical discussion, it may be stated that the electric drive, if judiciously designed, will save not less than twenty-five per cent of fuel and, with due regard to this and certain specific and invaluable advantages, will be lighter, cheaper and in every respect more dependable than the gear. In fact, I believe that a scheme can be devised permitting the placing of all vital parts below the water line. In view of this, it is to be hoped that the Secretary of the Navy will not pay attention to the protests of rivals, however patriotic, but will cause the good work to be pushed to completion with all the power at his command.

These statements are to be understood as reflecting the present state of the art. The advent of a reversible turbine will profoundly affect the situation in favor of the gear. Such a machine has been perfected and was described in the Herald of October 15, 1911. It is the lightest prime mover ever produced and can be operated without trouble at red heat, thereby obtaining a very high economy in the transformation of heat energy. I anticipate its speedy and extensive application to ship propulsion. But although an ideally simple and very inexpensive drive will be thus provided, there will still be weighty reasons for adopting the electric method on war ships. In order to dissipate all doubt created in the mind by diversified engineering opinion, I will make known but one of them, which in itself is sufficiently consequential and convincing to dispense with further arguments.

DISARMAMENT IMPOSSIBLE

It is idle to dream of disarmament and universal peace in the face of the terrible events which are now unfolding. They prove conclusively that no country will be allowed to control all others by any means. Before all peoples can feel secure of their national existence and worldwide harmony established certain obstacles will have to be removed, the chief of which are German militarism, British domination of the seas, the rising tide of Russian millions, the yellow peril and the money power of America. These adjustments will be slow and pennible in conformity with natural laws. International friction and armed conflict will not be banished from the earth for a long period to come. The drag on human progress would not be so great if war energy could be maintained in purely potential form. This can and will be done through the universal introduction of wireless power. Then all destructive energy will be obtained without effort merely by controlling the life sustaining forces of peace.

The maintenance of war ships and other military implements involves an appalling waste. A vessel costing twenty millions of dollars is rendered virtually worthless in the short span of ten years, deteriorating at the mean rate of two million dollars a year, interest not considered. Hardly more than one out of fifty serves its real purpose. To lessen this ruinous loss and exploit certain inventions I elaborated a scheme some years ago. It was recognized as rational bur financially and in other ways difficult of realization. Now, when national economy and preparedness have become burning questions, it assumes special import and significance.

TO USE WAR SHIPS IN PEACE

The underlying idea is to make war ships available for purposes of peace in a profitable manner, at the same time improving them in a number of features. I am aware of the proposal lately advanced to employ them as carriers of commerce, but this is not feasible and would be an impediment to further perfection. My project primarily contemplated the instalment of the electric drive and the use of the turbo-dynamos for light and power supply and manufacture of various valuable products and articles aboard or on land. This would be a step in the direction of present development meeting the objects of both military and industrial preparedness. I further intended the creation of a type of vessel on radically different principles, which would be a precious asset in peace and ever so much more destructive in war. The new cruisers, if equipped as planned by the Navy Department, will constitute four floating central stations of 180,000 horse power each. The turbines and dynamos are designed for highest efficiency and operate under most favorable conditions. The power they are capable of developing represents a market value of several million dollars a year and could be advantageously utilized at places where fuel can be readily obtained and transport is convenient. The plants would also prove of great value in cases of emergency. They could be quickly sent to any point along the coast of the United States or elsewhere and would enable the government to lend speedy assistance whenever necessary.

But this is not all. There is another and still more potent reason for adopting the electric method. It is founded on the knowledge that at a time not distant the present means and methods of warfare will be revolutionized through novel applications of electric force.

III

AN AUTOBIOGRAPHICAL ARTICLE

SOME PERSONAL RECOLLECTIONS*

I am glad to be accorded this opportunity for two reasons. In the first place I have long since desired to express my great appreciation of the Scientific American and to acknowledge my indebtedness for the timely and useful information which its columns are pouring out in a steady stream. It is a publication remarkable for the high quality of special articles as well as for the accurate review of technical advances. The knowledge it conveys is always reliable and rendered still more valuable through the scrupulous observance of literary courtesy in the quotation of the sources. The services it has rendered in helping invention and spreading enlightenment are inestimable. The Scientific American is a periodical ably and conscientiously conducted, measured and dignified in tone to the point of serving as a model, and in these features, as much as in the wealth and excellence of its contributions, it reflects great credit, not only on its staff and publishers, but on the whole country. This is not an idle compliment, but a genuine and well-deserved tribute to which I add my best wishes for continued success on this memorable occasion.

The second reason is one that concerns me personally. Many erroneous statements have appeared in print relative to my discovery of the rotating magnetic field and invention of the induction motor which I was compelled to pass in silence. Great interests have waged a long and bitter contest for my patent rights; commercial animosities and professional jealousies were aroused, and I was made to suffer in more than one way. But despite of all pressure and efforts of ingenious lawyers and experts, the rulings of the courts were in support of my claims for priority in every instance without exception. The battles have been fought and forgotten, the thirty or forty patents granted to me on the alternating system have expired, I have been released of burdensome obligations and am free to speak.

Every experience which I have lived through bearing on that early discovery is vividly present in my memory. I see the faces of the persons, the scenes and objects of my attention, with a sharpness and distinction and in a fullness of light which is astonishing, and is a measure of the intensity and depth of the original impressions. I have always been fortunate in ideas, but no other invention, however great, could be as dear to me as that first one. This will be understood if I dwell briefly on the circumstances surrounding it and some of the phases and incidents of my young life.

From my childhood I had been intended for the clergy. This prospect hung like a dark cloud on my mind. After passing eleven years at a public school and a higher institution, I obtained my certificate of maturity and found myself at the critical point of my career. Should I disobey my father, ignore the fondest wishes of my mother, or should I resign myself to fate? The thought oppressed me, and I looked to the future with dread.

Just at that time a terrible epidemic of cholera broke out in my native land. People knew nothing of the character of the disease and the means of sanitation were of the poorest kind. They burned huge piles of odorous shrubbery to purify the air, but drank

---

* Scientific American, June 5, 1915.

freely of the infected water and died in crowds like sheep. Contrary to peremptory orders from my father I rushed home and was stricken down. Nine months in bed with scarcely the ability to move seemed to exhaust all my vitality, and I was given up by the physicians. It was an agonizing experience, not so much because of physical suffering as on account of my intense desire to live. On the occasion of one of the fainting spells my father cheered me by a promise to let me study engineering; but it would have remained unfulfilled had it not been for a marvelous cure brought about by an old lady. There was no force of suggestion or mysterious influence about it. Such means would have had no effect whatever on me, for I was a firm believer in natural laws. The remedy was purely medicinal, heroic if not desperate; but it worked and in one year of mountain climbing and forest life I was fit for the most arduous bodily exertion. My father kept his word, and in 1877 I entered the Joanneum in Gratz, Styria, one of the oldest technical institutions of Europe. I proposed to show results which would repay my parents for their bitter disappointment due to my change of vocation. It was not a passing determination of a light-hearted youth; it was iron resolve. As some young reader of the Scientific American might draw profit from my example I will explain.

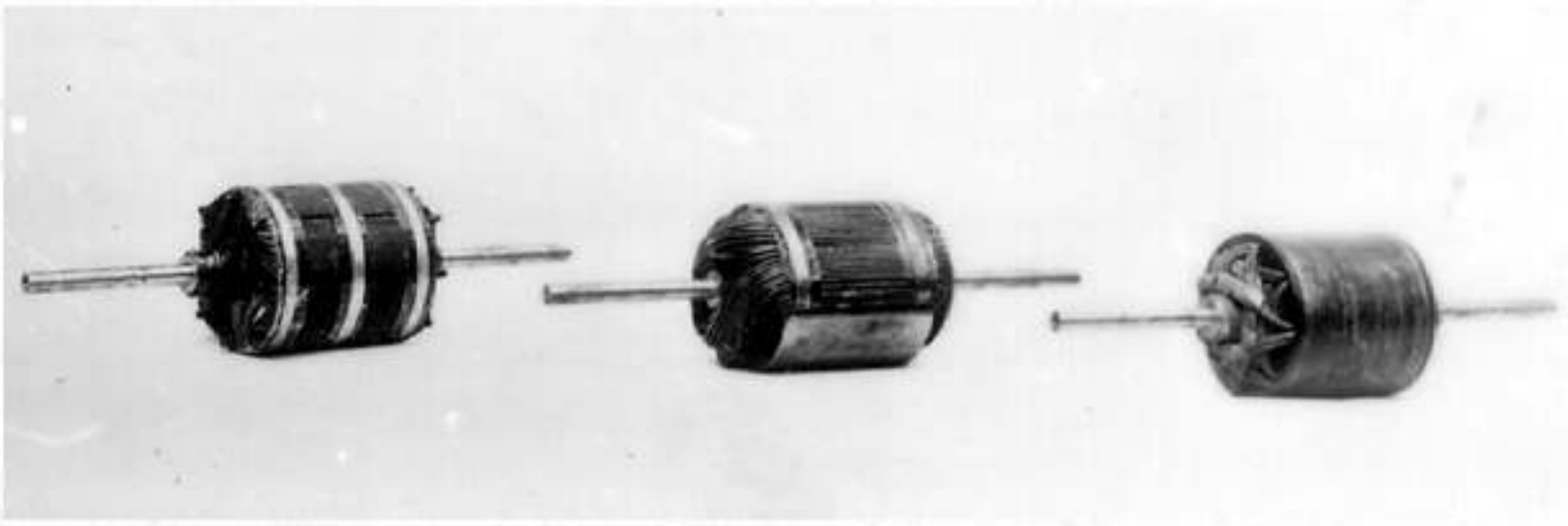

Three rotors used with the early induction motor shown below

When I was a boy of seven or eight I read a novel entitled "Abafi" — The Son of Aba — a Servian translation from the Hungarian of Josika, a writer of renown. The lessons it teaches are much like those of "Ben-Hur," and in this respect it might be viewed as anticipatory of the work of Wallace. The possibilities of will-power and self-control appealed tremendously to my vivid imagination, and I began to discipline myself. Had I a sweet cake or a juicy apple which I was dying to eat I would give it to another boy and go through the tortures of Tantalus, pained but satisfied. Had I some difficult task before me which was exhausting I would attack it again and again until it was done. So I practised day by day from morning till night. At first it called for a vigorous mental effort directed against disposition and desire, but as years went by the conflict lessened and finally my will and wish became identical. They are so to-day, and in this lies the secret of whatever success I have achieved. These experiences are as intimately linked with my discovery of the rotating magnetic field as if they formed an essential part of it; but for them I would never have invented the induction motor.

In the first year of my studies at the Joanneum I rose regularly at three o'clock in the morning and worked till eleven at night; no Sundays or holidays excepted. My success was unusual and excited the interest of the professors. Among these was Dr. Allé, who lectured on differential equations and other branches of higher mathematics and whose addresses were unforgetable intellectual treats, and Prof. Poeschl, who held the chair of Physics, theoretical and experimental. These men I always remember with a sense of gratitude. Prof. Poeschl was peculiar; it was said of him that he wore the same coat for twenty years. But what he lacked in personal

magnetism he made up in the perfection of his exposition. I never saw him miss a word or gesture, and his demonstrations and experiments always went off with clocklike precision. Some time in the winter of 1878 a new apparatus was installed in the lecture room. It was a dynamo with a laminated permanent magnet and a Gramme armature. Prof. Poeschl had wound some wire around the field to show the principle of self-excitation, and provided a battery for running the machine as a motor. As he was illustrating this latter feature there was lively sparking at the commutator and

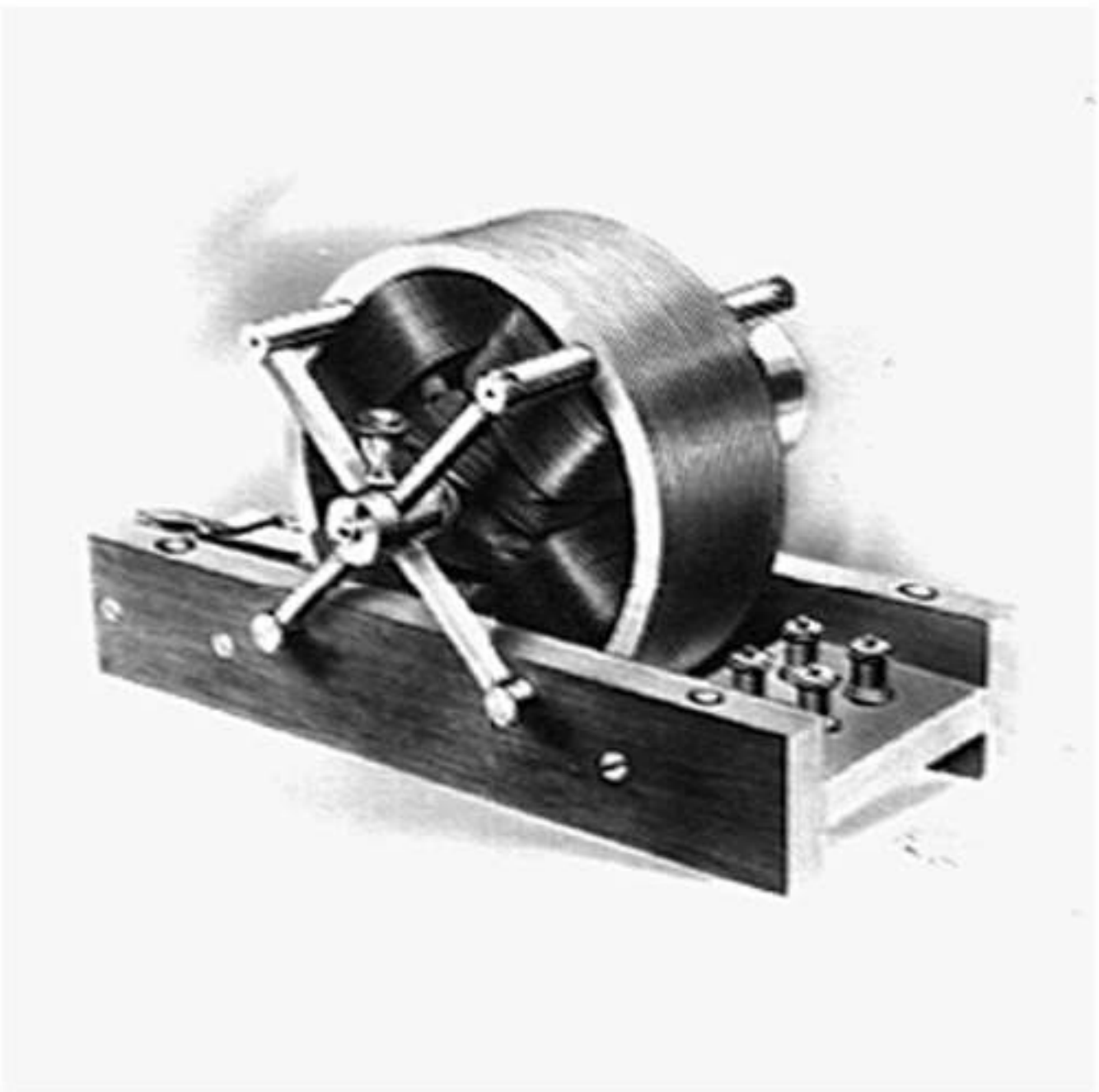

One of the earliest of induction motors. Although it weighed only a little over 20 pounds, it developed ¼ horse-power at a speed of 1,800 revolutions, a performance considered remarkable at the time.

brushes, and I ventured to remark that these devices might be eliminated. He said that it was quite impossible and likened my proposal to a perpetual motion scheme, which amused my fellow students and embarrassed me greatly. For a time I hesitated, impressed by his authority, but my conviction grew stronger and I decided to work out the solution. At that time my resolve meant more to me than the most solemn vow.

I undertook the task with all the fire and boundless confidence of youth. To my mind it was simply a test of will-power. I knew nothing of the technical difficulties. All my remaining term in Gratz was passed in intense but fruitless effort, and I almost convinced myself that the problem was unsolvable. Indeed, I thought, was it possible to transform the steady pull of gravitation into a whirling force? The answer was an emphatic no. And was this not also true of magnetic attraction? The two propositions appeared very much the same.

In 1880 I went to Prague, Bohemia, carrying out my father's wish to complete my school education at a university. The atmosphere of that old and interesting city was favorable to invention. Hungry artists were plentiful and intelligent company could be found everywhere. Here I made the first distinct step in advance, by detaching the commutators from the machines and placing them on distant arbors. Every day I imagined arrangements on this plan without result, but feeling that I was nearing the solution. In the following year there was a sudden change in my views of life. I realized that my parents were making too great sacrifices for me and resolved to relieve them of the burden. The American telephone wave had reached the European continent, and the system was to be installed in Budapest. It appeared an ideal opportunity, and I took the train for that city. By an irony of fate my first employment was as a draughtsman. I hated drawing; it was for me the very worst of annoyances. Fortunately it was not long before I secured the position I sought, that of chief electrician to the telephone company. My duties brought me in contact with a number of young men in whom I became interested. One of these was Mr. Szigety, who was a remarkable specimen of humanity. A big head with an awful lump on one side and a sallow complexion made him distinctly ugly, but from the neck down his body might have served for a statue of Apollo. His strength was phenomenal. At that time I had exhausted myself through hard work and incessant thinking. He impressed me with the necessity of systematic physical development, and I accepted his offer to train me in athletics. We exercised every day and I gained rapidly in strength. My mind also seemed to grow more vigorous and as my thoughts turned to the subject which absorbed me I was surprised at my confidence of success. On one occasion, ever present in my recollection, we were enjoying ourselves in the Varos-liget or City Park. I was reciting poetry, of which I was passionately fond. At that age I knew entire books by heart and could read them from memory word by word. One of these was Faust. It was late in the afternoon, the sun was setting, and I was reminded of the passage:

"Sie rückt und weicht, der Tag ist überlebt,
Dort eilt sie hin und fördert neues Leben,
Oh, dass kein Flügel mich vom Boden hebt
Ihr nach und immer nach zu streben!

Ach, zu des Geistes Flügeln wird so leicht
Kein körperlicher Flügel sich gesellen!"

As I spoke the last words, plunged in thought and marveling at the power of the poet, the idea came like a lightning flash. In an instant I saw it all, and I drew with a stick on the sand the diagrams which were illustrated in my fundamental patents of May, 1888, and which Szigety understood perfectly.

It is extremely difficult for me to put this experience before the reader in its true light and significance for it is so altogether extraordinary. When an idea presents itself it is, as a rule, crude and imperfect. Birth, growth and development are phases normal and natural. It was different with my invention. In the very moment I became conscious of it. I saw it fully developed and perfected. Then again, a theory, however plausible, must usually be confirmed by experiment. Not so the one I had formulated. It was being daily demonstrated every dynamo and motor was absolute proof of its soundness. The effect on me was indescribable. My imaginings were equivalent to realities. I had carried out what I had undertaken and pictured myself achieving wealth and fame. But more than all this was to me the revelation that I was an inventor. This was the one thing I wanted to be. Archimedes was my ideal. I admired the works of artists, but to my mind, they were only shadows and semblances. The inventor, I thought, gives to the world creations which are palpable, which live and work.

The telephone installation was now completed and in the spring of 1882 an offer was made me to go to Paris, which I accepted eagerly. Here I met a number of

Americans whom I befriended and to whom I talked of my invention, and one of them, Mr. D. Cunningham, proposed to form a company for exploitation. This might have been done had not my duties called me to Strasburg, Alsace. It was in this city that I constructed my first motor. I had brought some material from Paris, and a disk of iron with bearings was made for me in a mechanical shop close to the railroad station in which I was installing the light and power plant. It was a crude apparatus, but afforded me the supreme satisfaction of seeing for the first time, rotation affected by alternating currents without commutator. I repeated the experiment with my assistant twice in the summer of 1883. My intercourse with Americans had directed my attention to the practical introduction and I endeavored to secure capital, but was unsuccessful in this attempt and returned to Paris early in 1884. Here, too, I made several ineffectual efforts, and finally resolved to go to America, where I arrived in the summer of 1884. By a previous understanding I entered the Edison Machine Works, where I undertook the design of dynamos and motors. For nine months my regular hours were from 10:30 A. M. till 5 A. M. the next day. All this time I was getting more and more anxious about the invention and was making up my mind to place it before Edison. I still remember an odd incident in this connection. One day in the latter part of 1884 Mr. Bachelor, the manager of the works, took me to Coney Island, where we met Edison in company with his former wife. The moment that I was waiting for was propitious, and I was just about to speak, when a horrible looking tramp took hold of Edison and drew him away, preventing me from carrying out my intention. Early in 1885 people approached me with a proposition to develop an arc light system and to form a company under my name. I signed the contract, and a year and a half later I was free and in a position to devote myself to the practical development of my discovery. I found financial support, and in April, 1887, a company was organized for the purpose, and what has followed since is well known.

A few words should be said in regard to the various claims for anticipation which were made upon the issuance of my patents in 1888, and in numerous suits conducted subsequently. There were three contestants for the honor, Ferraris, Schallenberger and Cabanellas. All three succumbed to grief. The opponents of my patents advanced the Ferraris claim very strongly, but any one who will peruse his little Italian pamphlet, which appeared in the spring of 1888, and compare it with the patent record filed by me seven months before, and with my paper before the American Institute of Electrical Engineers, will have no difficulty in reaching a conclusion. Irrespective of being behind me in time, Prof. Ferraris's publication concerned only my split-phase motor, and in an application for a patent by him priority was awarded to me. He never suggested any of the essential practical features which constitute my system, and in regard to the split-phase motor he was very decided in his opinion that it was of no value. Both Ferraris and Schallenberger discovered the rotation accidentally while working with a Gaullard and Gibbs transformer, and had difficulty in explaining the actions. Neither of them produced a rotating field motor like mine, nor were their theories the same as my own. As to Cabanellas, the only reason for his claim is an abandoned and defective technical document. Some over-zealous friends have interpreted a United States patent granted to Bradley as a contemporary record, but there is no foundation whatever for such a claim. The original application only described a generator with two circuits which were provided for the sole purpose of increasing the output. There was not much novelty in the idea, since a number of such machines existed at that time. To say that these machines were anticipations of my rotary transformer is wholly unjustified. They might have served as one of the elements in my system of transformation, but were nothing more than dynamos with two circuits constructed with other ends in view and in utter ignorance of the new and wonderful phenomena revealed through my discovery.

PHOTOGRAPHS

Nikola Tesla at the age of 23

55. Nikola Tesla

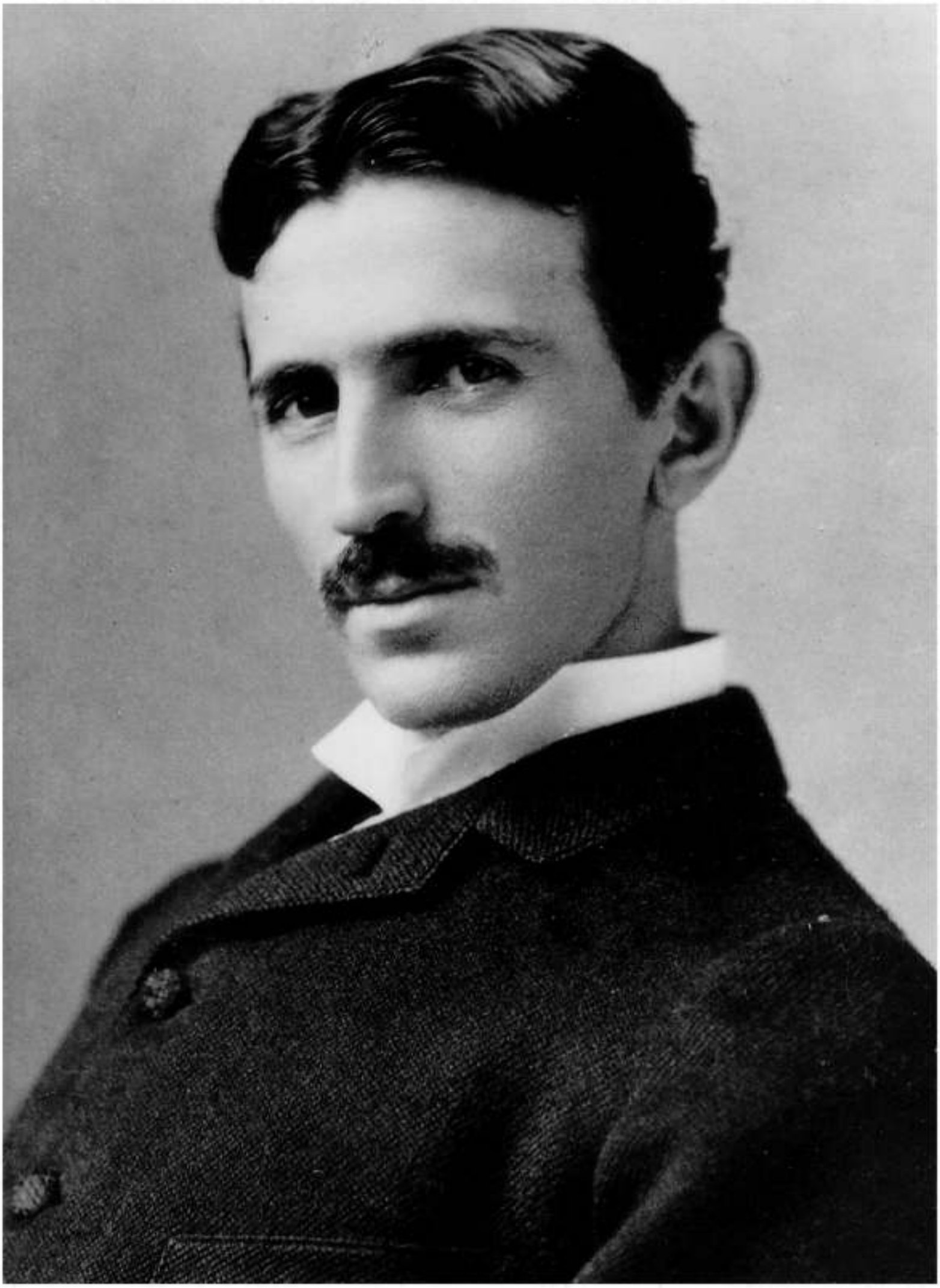

Nikola Tesla at the age of 39

Nikola Tesla in his working room

Nikola Tesla in his laboratory

Nikola Tesla with his "artificial daylight"

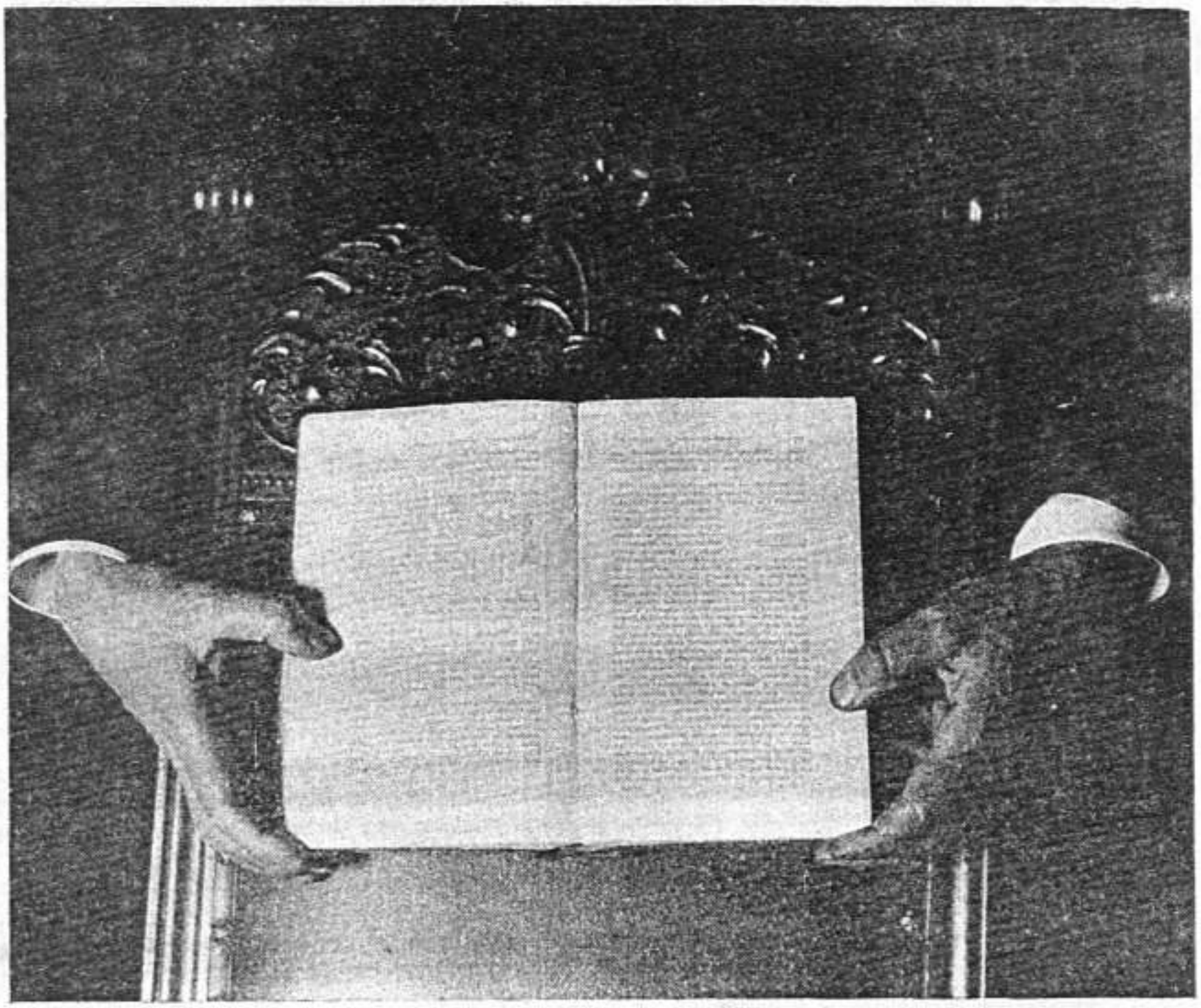

Tesla's "artificial daylight" was used in taking this photograph of Tesla's hands

relation between C_1 and self-induction in the circuit is such that they annul each other at that frequency. Fig. 4 - a further modification shows the system with inductance L_1 in circuit

Fig 4

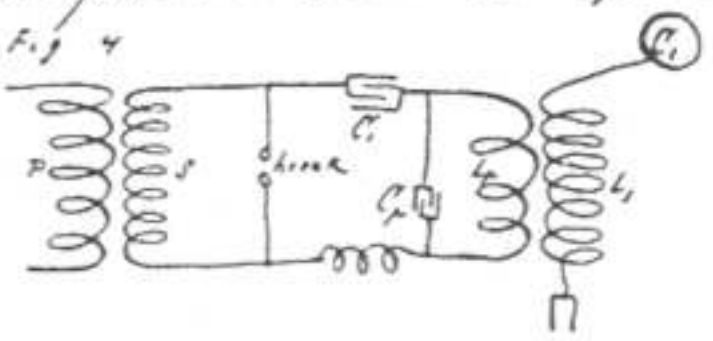

To satisfy above conditions we must have

$$C_1 = \frac{L_1}{R_1^2 + p^2 L_1^2}$$ R_1 being the resistance including the arc

Since in most cases, even with the arc included R_1 will be negligible against pL_1 we have again $C_1 = \frac{1}{p^2 L_1}$

From all the above considerations we get a general relation between the constants of all the three circuits which is expressed by

$$\left.\frac{1}{C_1 L_1} = \frac{1}{C_p L_p} = \frac{1}{C_1 L_1}\right\} \quad \ldots\ldots \quad \text{II}$$

or $$C_1 L_1 = C_p L_p = C_1 L_1$$

3.

One page of Tesla's notebook from Colorado Springs

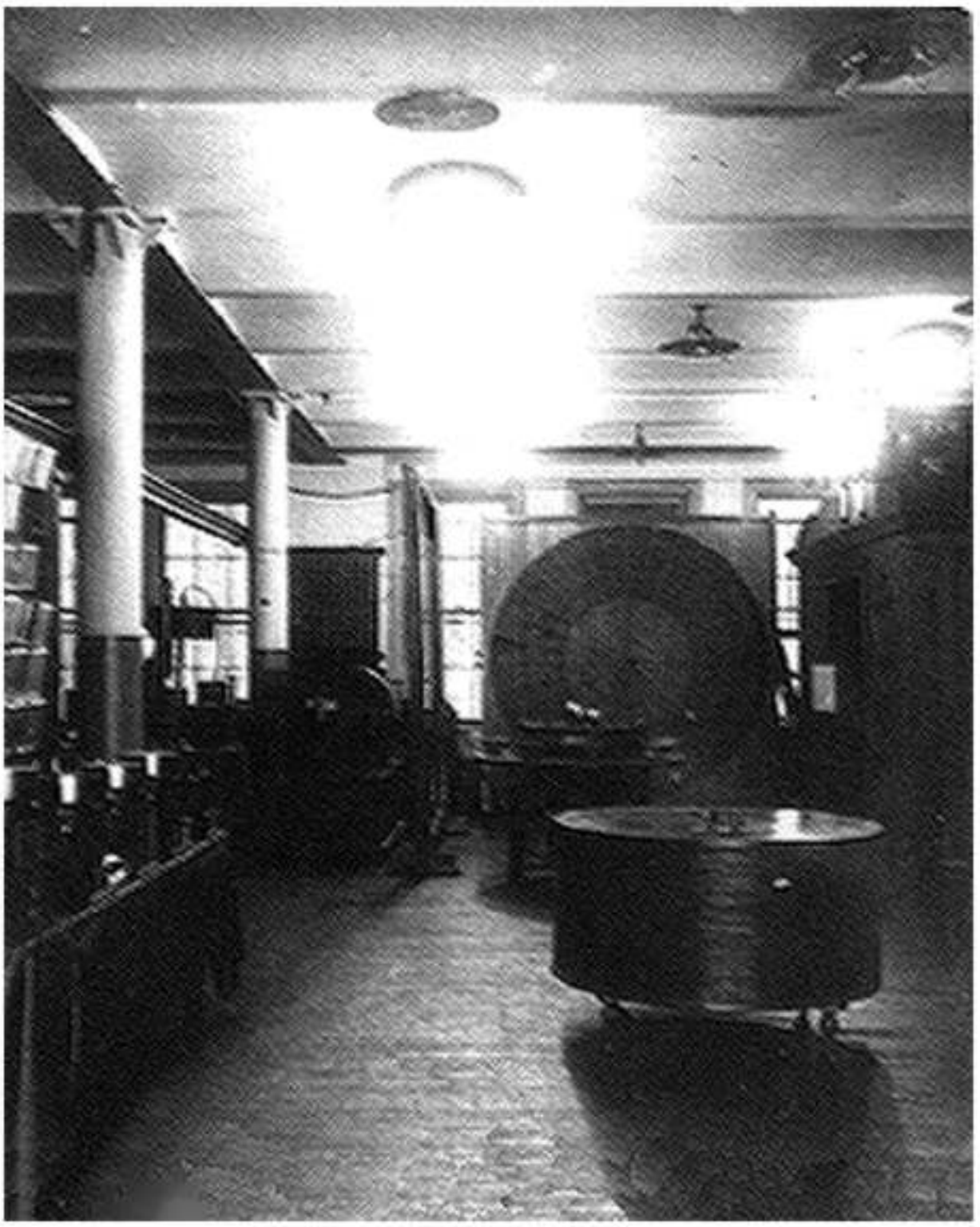

Tesla's laboratory lighted by Tesla's "artificial daylight"

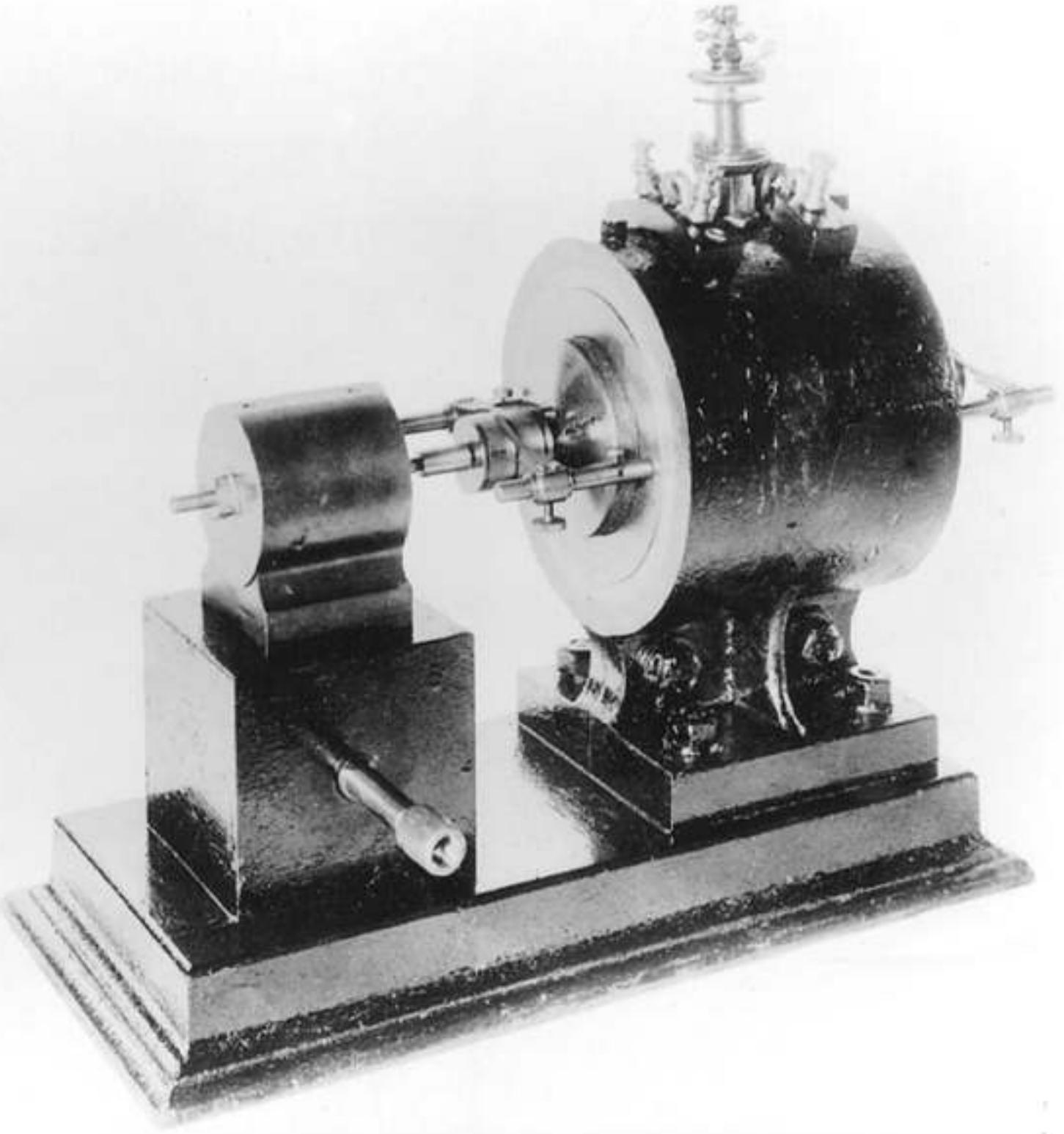

Small dynamo-electric oscillator for scientific uses

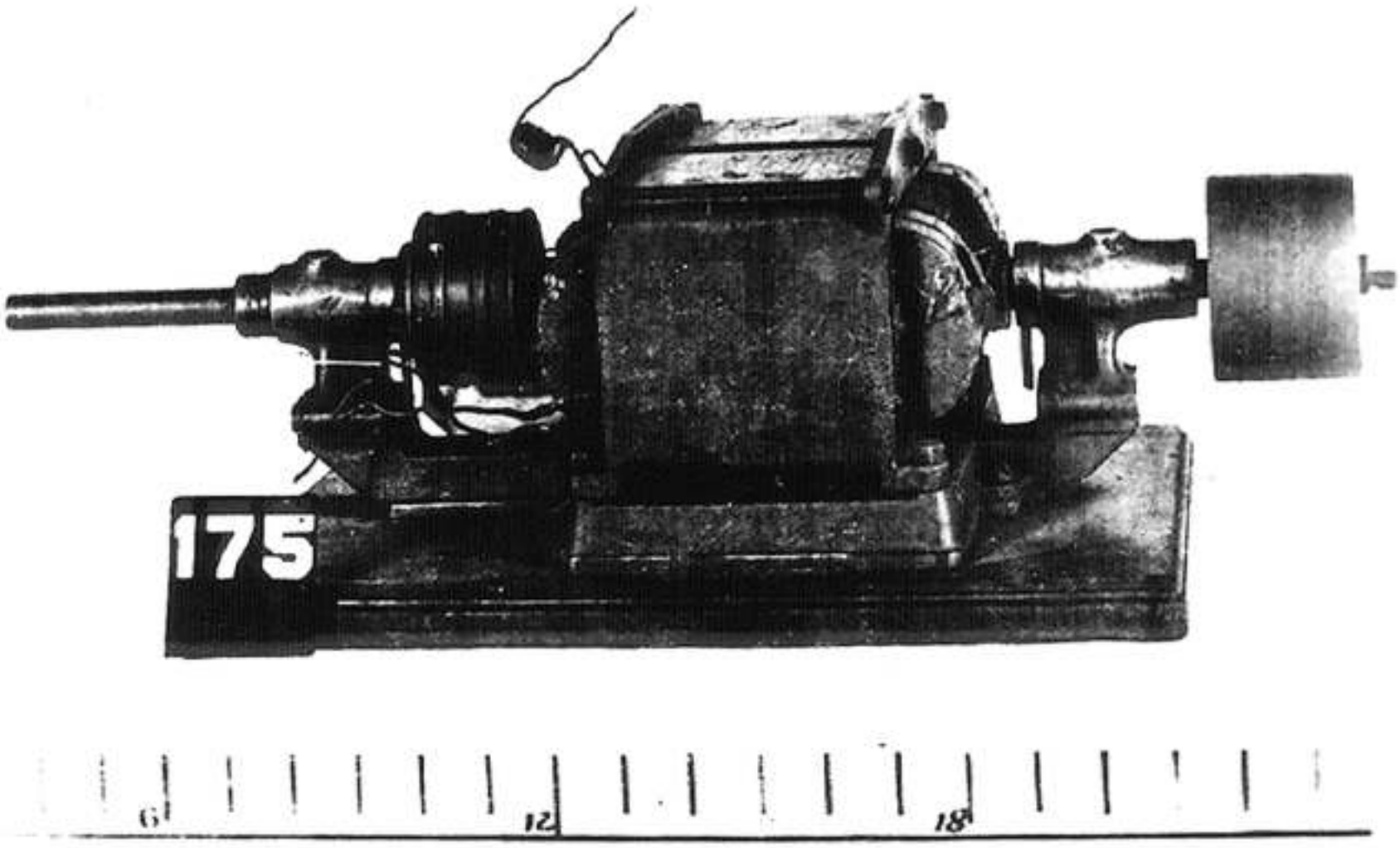

Early laboratory model of Tesla motor with round rotor and slip rings

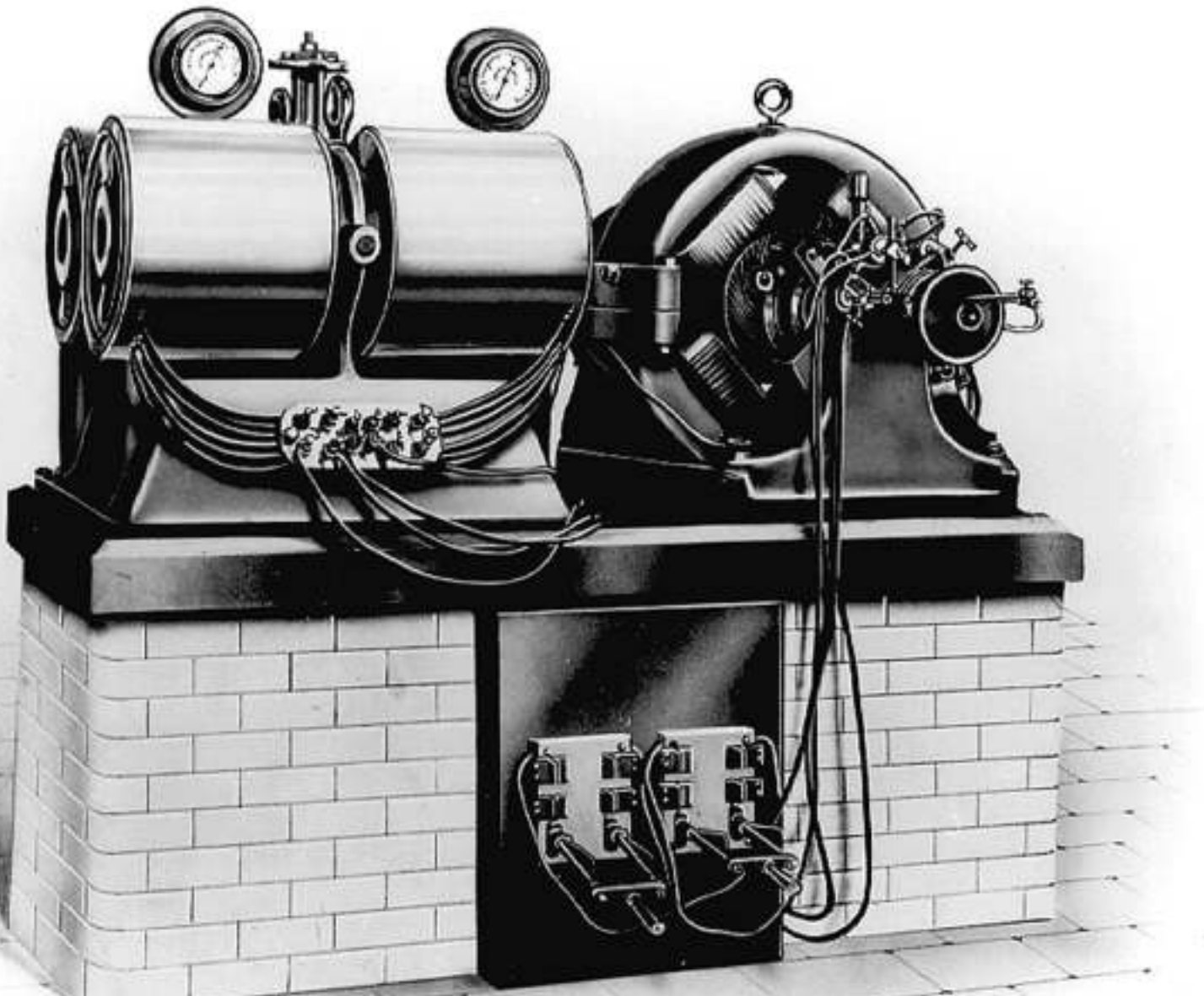

Large dynamo-electric oscillator

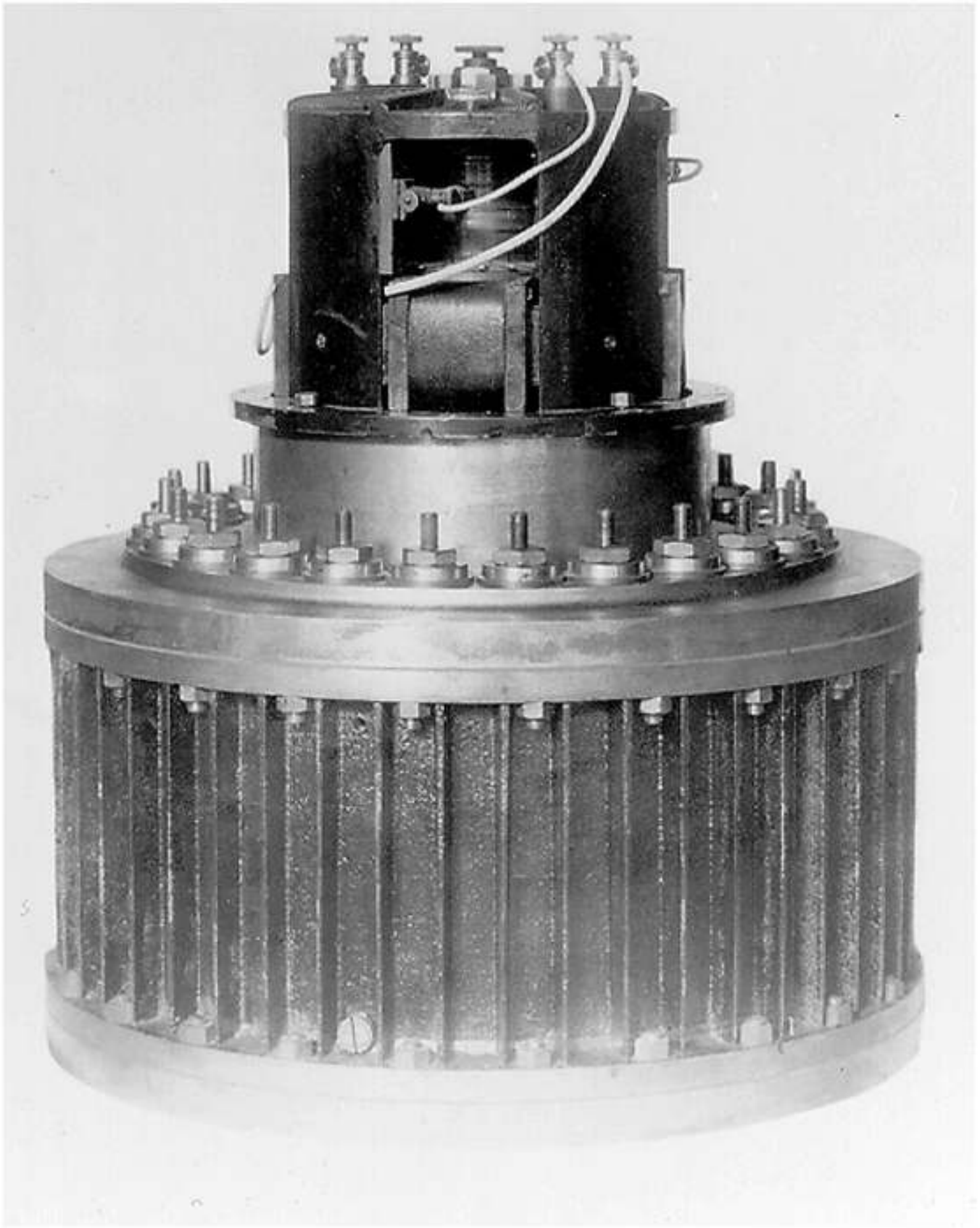

Very fast mercury interrupter for industrial uses

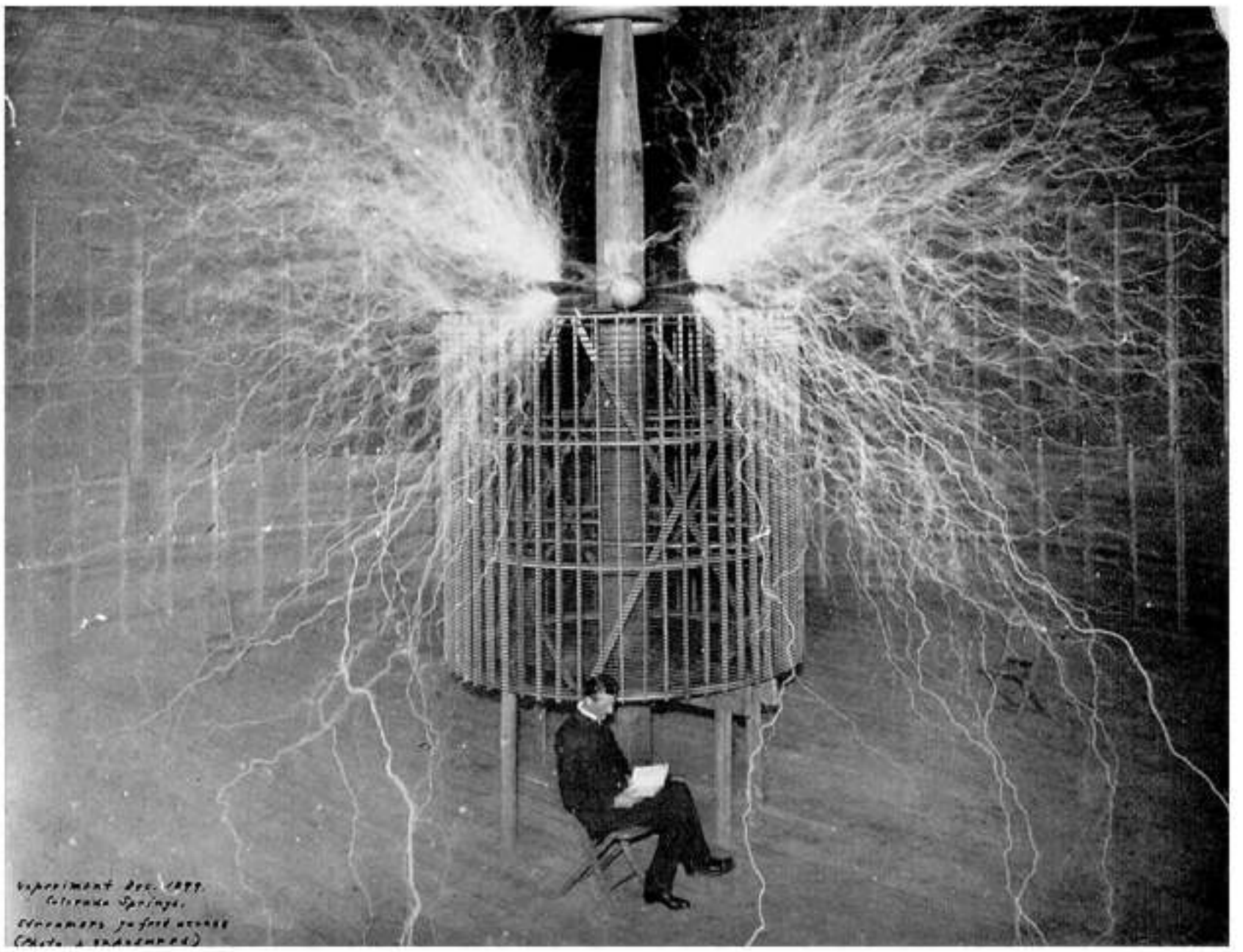

In his laboratory at Colorado Springs Tesla produced extremely high voltages up to. 12000000 volts (at a frequency of several hundred thousand cycles per second)

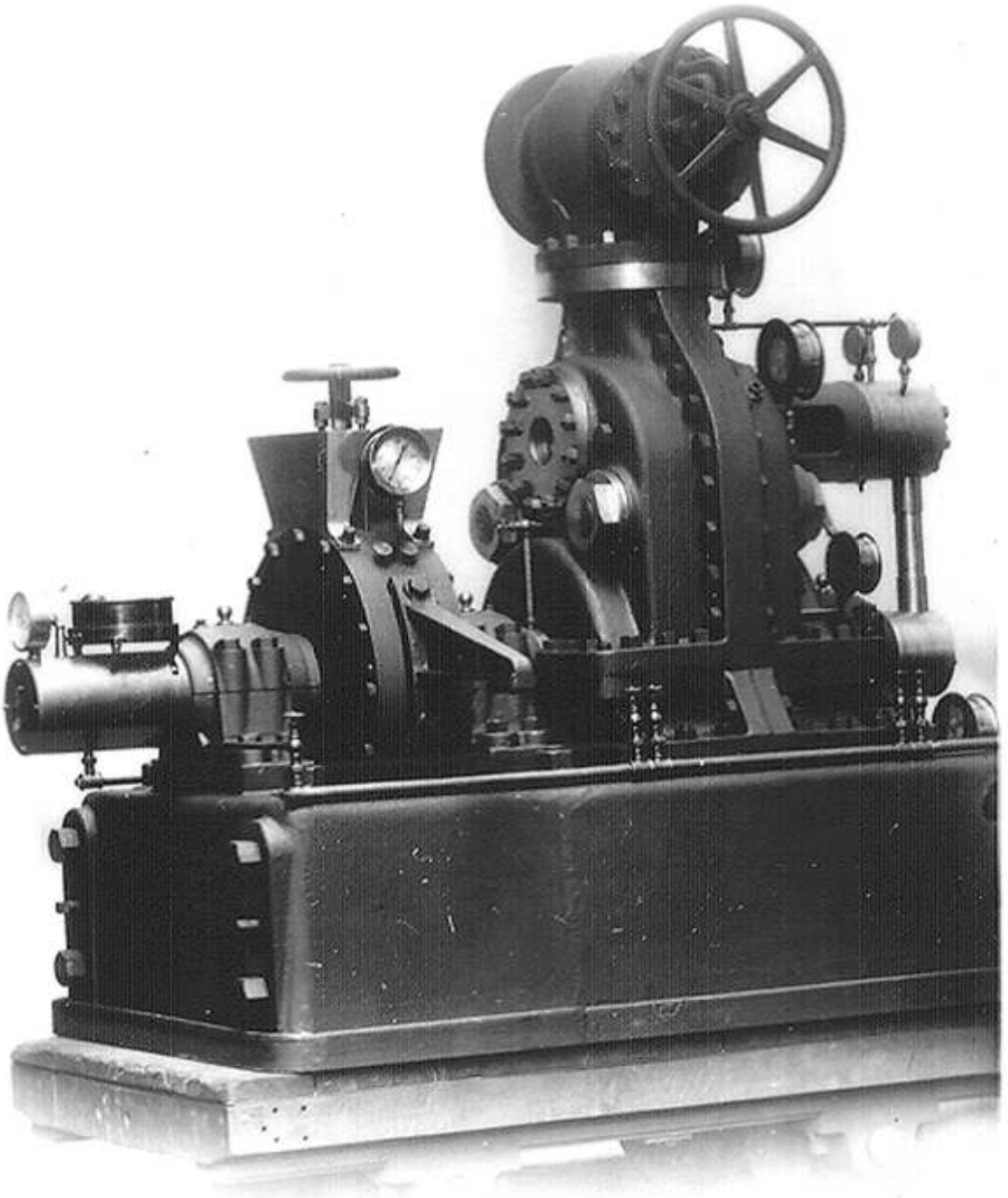

Tesla's 10000 HP steam turbine

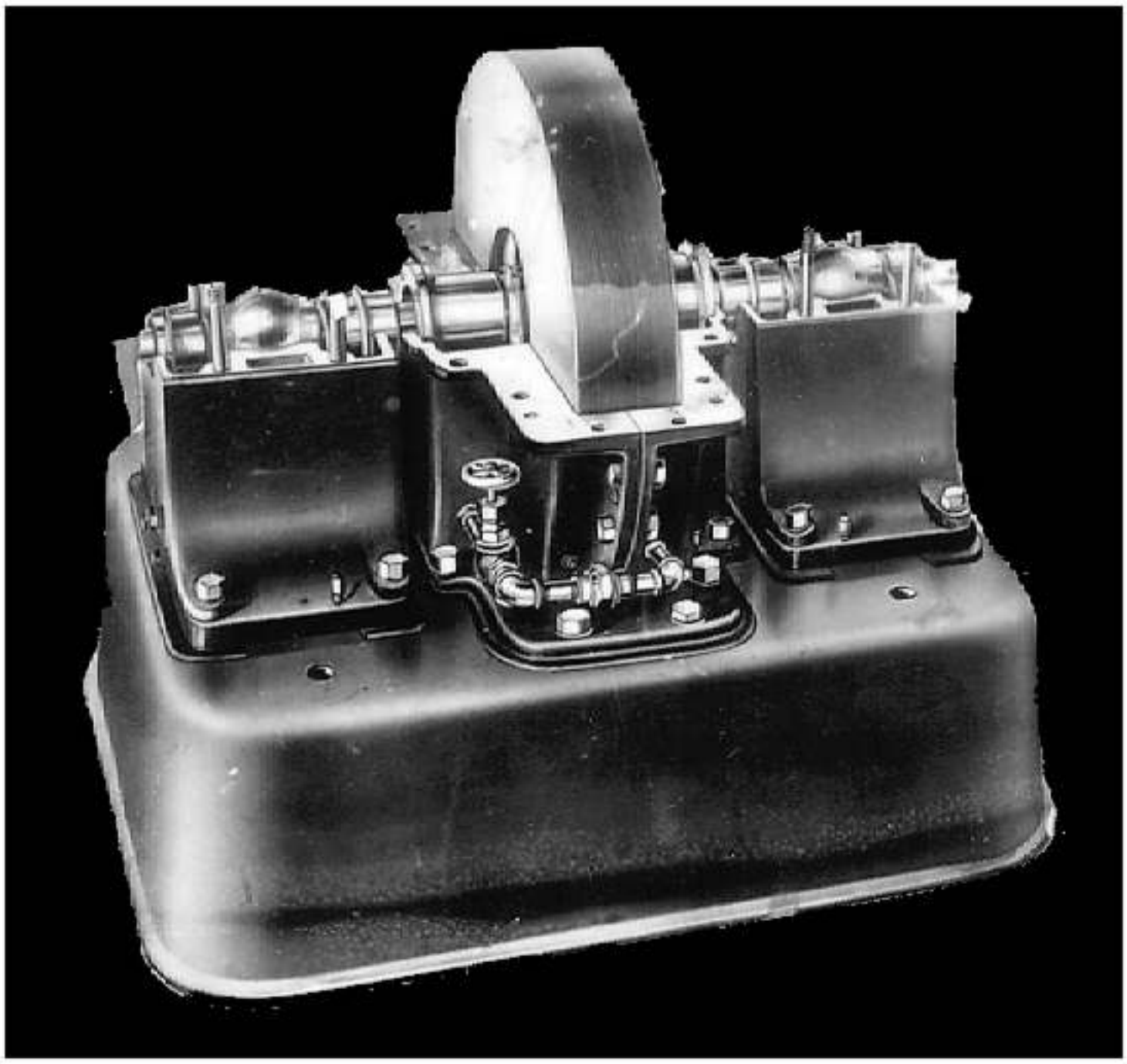

Lower part with rotor of Tesla's steam turbine

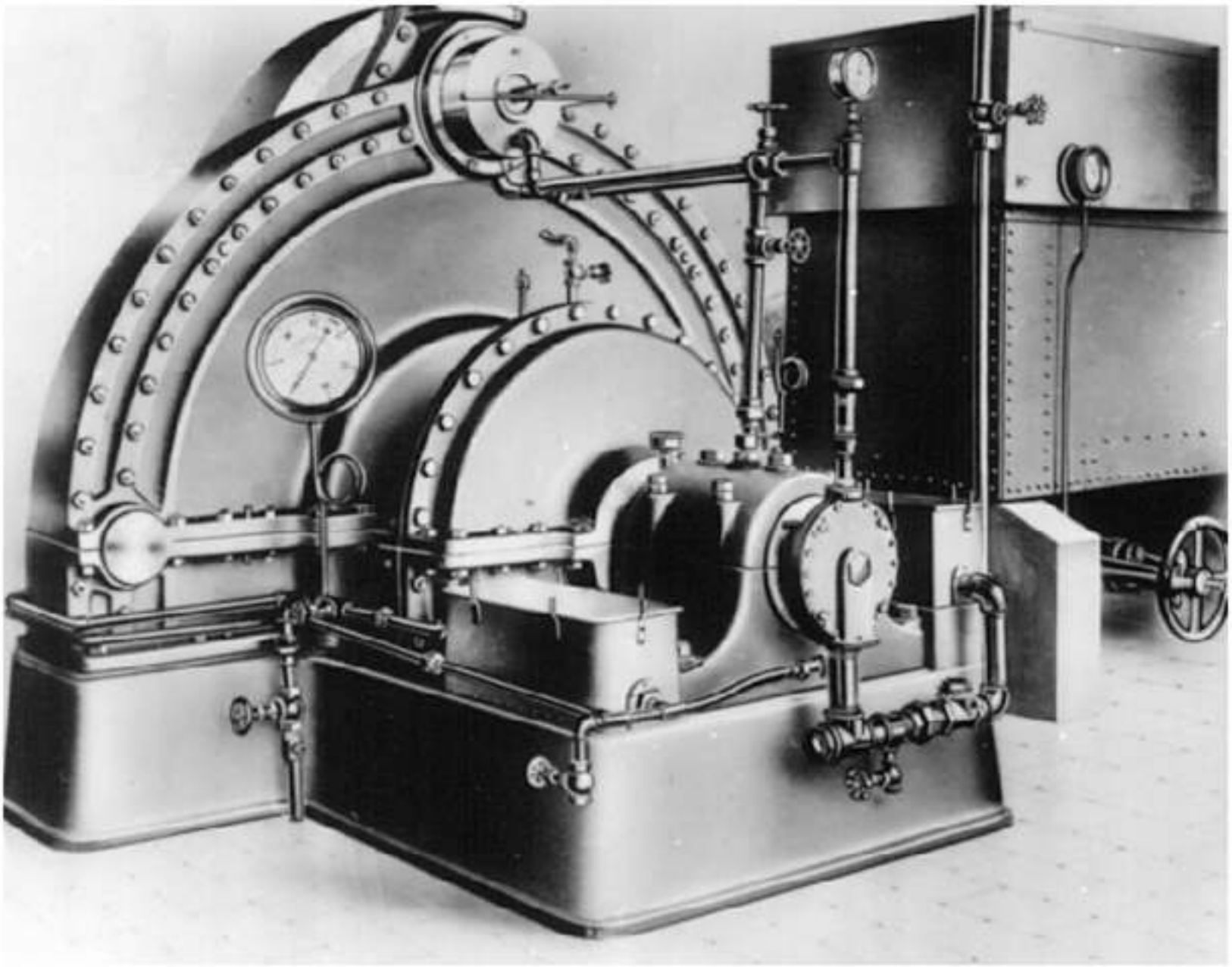

Tesla's turbo-pump

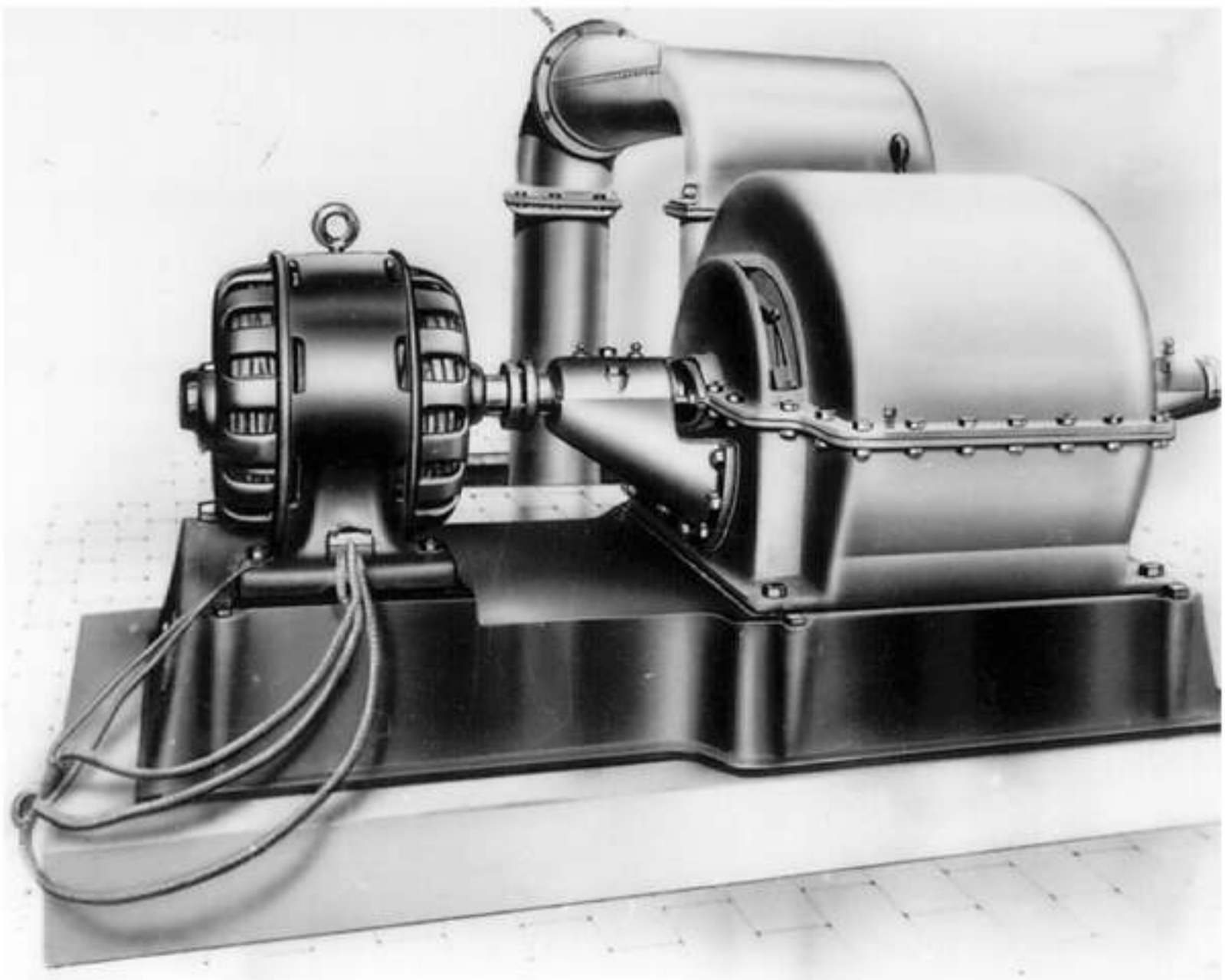

Tesla's blower and three-phase motor

NIKOLA TESLA

PUBLISHER: NOLIT, PUBLISHING HOUSE, BEOGRAD □ TECHNICAL ASSISTANT OF NIKOLA TESLA MUSEUM: ŽIVOTA PAVLOVIĆ □ TECHNICAL DIRECTOR OF NOLIT: ANTE SANTIĆ □ PRINTED BY KULTURA PRESS, BEOGRAD, YUGOSLAVIA, JUNE 1956.

DESCRIPTION OF FOLLOWING FILE MATERIAL

NIKOLA TESLA

100-2277	156	pages
REFERENCES	96	pages
	252	TOTAL PAGES

XXXXXXX
XXXXXXX
XXXXXXX

XXXXXXXXXXXXXXXXXXXX
X NO DUPLICATION FEE X
X FOR THIS PAGE X
XXXXXXXXXXXXXXXXXXXX

MAIN INVESTIGATIVE FILE

156 pages

[redacted] 9/24/40

Department of Justice,

Attn. Mr. G. Edgar Hoover,

Washington, D. C.

ALL INFORMATION CONTAINED
HEREIN IS UNCLASSIFIED
DATE 7-2-80 BY SP4 [illegible]

Dear Mr. Hoover:

The appended article was printed in the New York Times issue of Su September 22, 1940 and if based on proven facts, should be of vital importance to t War Department as well as to that of other nations now controlled by insane dictato

If, as the auther states, the teleforce has been perfected by Nikola Tesla, i would be a measure of foresightedness to insure his constant guarding against his b molested, possibly kidnapped and tortured, by alien enemies for the purpose of seizi the secret of such an invaluable instrument of war and/or defense

The foregoing is offered just in case the article and its inferences have no been called to your attention.

Very truly yours

[redacted]

1 ENCL

RECORDED & INDEXED

Mark 10/1/40 [redacted]
100-2237-1
FEDERAL BUREAU OF INVESTIGATION
2 SEP 26 1940
U.S. DEPARTMENT OF JUSTICE

3

NY Times 9/22/40

"Death Ray" for Planes

Nikola Tesla, one of the truly great inventors who celebrated his eighty-fourth birthday on July 10, tells the writer that he stands ready to divulge to the United States Government the secret of his "teleforce," with which, he said, airplane motors would be melted at a distance of 250 miles, so that an invisible Chinese Wall of Defense would be built around the country against any attempted attack by an enemy air force, no matter how large.

This "teleforce," he said, is based on an entirely new principle of physics that "no one has ever dreamed about," different from the principle embodied in his inventions relating to the transmission of electrical power from a distance, for which he has received a number of basic patents. This new type of force, Mr. Tesla said, would operate through a beam one one-hundred-millionth of a square centimeter in diameter, and could be generated from a special plant that would cost no more than $2,000,000 and would take only about three months to construct.

A dozen such plants, located at strategic points along the coast, according to Mr. Tesla, would be enough to defend the country against all possible aerial attack. The beam would melt any engine, whether Diesel or gasoline-driven, and would also ignite the explosives aboard any bomber. No possible defense against it could be devised, he asserts, as the beam would be all-penetrating.

High Vacuum Eliminated

The beam, he states, involves four new inventions, two of which already have been tested. One of these is a method and apparatus [illegible] producing rays [illegible] manifestations of [illegible] air, eliminating the [illegible] high vacuum; a second is a method and process for producing "very great electrical force"; the third is a method for amplifying this force, and the fourth is a new method for producing "a tremendous electrical repelling force." This would be the projector, or gun, of the system. The voltage for propelling the beam to its objective, according to the inventor, will attain a potential of 50,000,000 volts.

With this enormous voltage, he said, microscopic electrical particles of matter will be catapulted on their mission of defensive destruction. He has been working on this invention, he added, for many years and has recently made a number of improvements in it.

Mr. Tesla makes one important stipulation. Should the government decide to take up his offer he would go to work at once, but they would have to trust him. He would suffer "no interference from experts."

In ordinary times such a condition would very likely interpose an insuperable obstacle. But times being what they are, and with the nation getting ready to spend billions for national defense, at the same time taking in consideration the reputation of Mr. Tesla as an inventor who always was many years ahead of his time, the question arises whether it may not be advisable to take Mr. Tesla at his word and commission him to go ahead with the construction of his teleforce plant.

Such a Device "Invaluable"

After all, $2,000,000 would be relatively a very small sum compared with what is at stake. If Mr. Tesla really fulfills his promise the result achieved would be truly staggering. Not only would it save billions now planned for air defense, by making the country absolutely impregnable against any air attack, but it would also save many more billions in property that would otherwise be surely destroyed no matter how strong the defenses are as witness current events in England.

Take, for example, the Panama Canal. No matter how strong the defenses, a suicide squadron of dive bombers, according to some experts, might succeed in getting through and cause such damage that would make the Canal unusable, in which case our Navy might find itself bottled up.

Considering the probabilities in the case even if the chances were 100,000 to 1 against Mr. Tesla the odds would still be largely in favor of taking a chance on spending $2,000,000. In the opinion of the writer, who has known Mr. Tesla for many years and can testify that he still retains full intellectual vigor, the authorities in charge of building the national defense should at once look into the matter. The sum is insignificant compared with the magnitude of the stake.

ALL INFORMATION CONTAINED
HEREIN IS UNCLASSIFIED
DATE 7-19-92 BY [illegible]

100-2237-1

RECORDED & INDEXED

[redacted] 100-2237-1

October 1, 1940

[redacted]

(b)(7)(C)

Dear [redacted]

I wish to acknowledge receipt of your letter dated September 24, 1940, together with its enclosure.

Your courtesy and interest in bringing this information to my attention are indeed appreciated, and you may be assured your letter will receive appropriate consideration.

Sincerely yours,

John Edgar Hoover
Director

ALL INFORMATION CONTAINED
HEREIN IS UNCLASSIFIED
DATE 7-2-80 BY SP4 Jan/rtc

Mr. Tolson
Mr. Clegg
Mr. E. A. Tamm
Mr. Foxworth
Mr. Nathan
Mr. Ladd
Mr. Egan
Mr. Glavin
Mr. Nichols
Mr. Gandon
Mr. Rosen
Mr. Tracy
Miss Gandy

COMMUNICATIONS SECTION
MAILED
★ OCT 1 1940 ★
P.M.
FEDERAL BUREAU OF INVESTIGATION
U.S. DEPARTMENT OF JUSTICE

[redacted] (b)(7)(C)

5

[redacted]

NOT FOIA REDACTIONS

U. S. DEPARTMENT OF JUSTICE

JAN 12 1943

TELETYPE

[redacted]

Mr. Toleo
Mr. E. A.
Mr. Cl...
Mr. ...
Mr. ...
Mr. Nichol
Mr. ...
Mr. Tracy
Mr. Carson
Mr. ...
Mr. ...
Mr. McGuire
Mr. ...
Mr. Quinn
Mr. Nease
Mr. Gandy

FBI NYC 1-12-43 11-06 PM WHS
DIRECTOR
VEST

UNSUBS --- EQUIPMENT, EXPERIMENTS AND RESEARCH OF NIKOLA TESLA, DECEASED, [redacted] ESPIONAGE - M. RETEL UNDER ABOVE HEADING TO THE BUREAU FROM THIS OFFICE DATED JAN NINE LAST. INQUIRY DEVELOPS THAT TESLA DIE JAN EIGHT, RATHER THAN THURSDAY, JAN SEVEN, AS [redacted] STATED IN REFERENCE TELETYPE. ON THE NIGHT OF JAN EIGHT, SAVA KOSANOVICH, GEORG CLARK, AND KENNETH SWEEZEY VISITED TESLA-S HOTEL WITH A REPRESENTATIVE OF SHAW WALKER CO. IN ORDER TO OPEN THE SAFE IN THE ROOM OF TESLA. KOSANOVICH LATER REPORTED TO WALTER GORSUCH, OFFICE OF ALIEN PROPERTY CUSTODIAN, NYC, THAT HE WENT INTO THE ROOM IN ORDER TO SEARCH FOR A WILL OF TESLA. KOSANOVICH AND THE OTHERS MADE THE SEARCH OF THE SAFE IN THE PRESENCE OF THREE ASST MANAGERS OF HOTEL NEW YORKER AS WELL AS REPRESENTATIVES OF THE YUGOSLAVIAN CONSULATE, IDENTITIES OF LATTER NOT YET KNOWN. AFTER THE SAFE WAS OPENED, SWEEZEY, TOOK FROM THE SAFE A BOOK CONTAINING TESTIMONIALS SENT TO TESLA ON THE OCCASION OF HIS SEVE TY FIFTH BIRTHDAY. THIS BOOK WAS ARRANGED FOR TESLA BY SWEEZEY. KOSANOVICH TOOK FROM THE ROOM THREE PICTURES OF TESLA, TWO BEING EN-LARGED NEWSPAPER PICTUREX. ACCORDING TO MANAGERS OF HOTEL AND KOSANO-VICH HIMSELF, NOTHING ELSE WAS REMOVED FROM THE ROOM OR SAFE. THE SAFE WAS THEN CLOSED UNDER A NEW COMBINATION, WHICH COMBINATION IS NOW IN POSSESSION O[redacted] KOSANOVICH. ON SATURDAY AFTERNOON, JAN NINE, GORSUCH AND [redacted] FTIZGERALD OF ALIEN PROPERTY CONTROL WENT TO HOTEL AND SEIZED ALL THE PROPERTY OF TESLA, CONSISTING OF ABOUT TWO TRUCKLOANDS OF MATERIAL, SEALED ALL ARTICLES AND TRANSFERRED THEM TO THE MANHATTAN STORAGE AND WAREHOUSE CO. NY, WHERE THEY ARE NOW LOCATED AT THAT [redacted] TIME THERE WERE ALSO IN THIS WAREHOUSE APPROXIMATELY THIRTY BARRELS AND BUNDLES BELONGING TO TESLA WHICH HAD BEEN THERE SIN ABOUT NINETEEN THIRTY FOUR. THESE HAVE ALSO [redacted] BEEN SEALED AND ARE NOW UNDER ORDERS OF ALIEN PROPERTY CUSTODIAN. IN VIEW OF FACT TESL IS A US NATURALIZED CITIZEN, ALIEN PROPERTY CUSTODIAN FEELS THAT ITS JURISDICTION OVER PROPERTY IS DOUBTFUL BUT [redacted] FEELS THAT NO OTHER AGENCY WILL BE ABLE TO GET [redacted] TO THIS PROPERTY FOR AT LEAST TWO DAYS

COPIES DESTROYED 3/10/58 #4

ALL INFORMATION CONTAINED HEREIN IS UNCLASSIFIED DATE 7.13.82 INDEX

Rec'd 12 15 am 1-13-43

100-2237-2

NOT FOIA REDACTION

16 JAN 13 1943

COPY IN FILE

77 FEB 5 1943

[redacted]

REDACTIONS ON THIS PAGE ARE NOT FOIA DELETIONS

6

PAGE TWO
AFTER THAT TIME IT IS POSSIBLE THAT A PUBLIC ADMINISTRATOR WILL BE APPOINTED FOR THE PROPERTY WHO MAY TAKE THE PROPERTY INTO HIS CUSTODY. TESLA ALSO HAD SOME PROPERTY, [redacted] ALLEGED BY INFORMANT FITZGERALD IN THIS CASE, TO BE A WORKING MODEL OF AN INVENTION IN A SAFE DEPOSIT BOX IN GOVERNOR CLINTON HOTEL IN NY. INQUIRY SHOWS THAT THIS WAS PLACED HERE BY TESLA IN NINETEEN THIRTY TWO AS SECURITY FOR FOUR HUNDRED DOLLARS OWED HOTEL. THIS BILL IS STILL OWED AND HOTEL APPEARS UNWILLING TO RELEASE THIS PROPERTY TO ANYONE AT LEAST UNTIL [redacted] DEBT IS PAID, BUT THIS OFFICE WILL BE ADVISED IF ANYONE ATTEMPTS TO PAY BILL AND OBTAIN PROPERTY. CONCERNING TESLA HOTEL MANAGERS REPORT HE WAS [redacted] VERY ECCENTRIC IF NOT [redacted] MENTALLY DERANGED DURING PAST TEN YEARS AND IT IS DOUBTFUL IF HE HAS CREATED ANYTHING OF VALUE DURING THAT TIME, ALTHOPRIOR TO THAT HE PROBABLY WAS A VERY BRILLIANT INVENTOR. THEREFORE, ANY NOTES OF VALUE WERE PROBABLY THOSE MADE PRIOR TO THAT TIME. KOSANOVICH IS A NEPHEW OF TESLA WHO DESCRIBED HIMSELF AS FORMERLY QUOTE YUGOSLAV MINISTER OF STATE UNQUOTE AND NOW QUOTE [redacted] PRESIDENT OF EASTERN AND CENTRAL PLANNING BOARD REPRESENTING YUGOSLOVIA, CZECHOSLOVAKIA, POLAND AND GREECE, UNQUOTE. SWEEZEY IS A WRITER FOR POPULAR MECHANICS AND OTHER PUBLICATIONS WHO IS [redacted] DESIROUS OF PUBLISHING A BIOGRAPHY OF TESLA AND THERFORE WOULD LIKE TO OBTAIN CONTROL OF HIS NOTES FOR THIS WORK. CLARK IS EMPLOYED BY RCA AND WOULD ALSO PROVIDE STORAGE ROOM FOR TESLAS EFFECTS IN ORDER TO USE THEM IN WRITING A BIOGRAPHY. TESLA AT ONE TIME REPORTED TO BE WORKING ON EXPERIMENTS FOR YUGOSLAVIAN GOVERNMENT IN EXILE. IT IS DESIRED THAT BUREAU ADVISE IMMEDIATELY WHETHER IT IS INTERESTED FURTHER IN THIS PROPERTY FOR PURPOSES OF TAKING CONTROL OF IT. SUGGEST THAT, IN VIEW OF FACT THAT THE NOTES AND OTHER MATERIAL WOULD BE HIGHLY TECHNICAL IN CHARACTER AND FOR THAT REASON [redacted] COULD NOT BE REVIEWED [redacted] EXCEPT BY A TRAINED PERSON THE OFFICE OF SCIENTIFIC RESEARCH DEVEL-

OPMENT MIGHT BE INTERESTED.
FOXWORTH
END NYC S2 WHS
HOLD WA R 2 RSG

[redacted]

REDACTIONS ON THIS PAGE ARE NOT FOIA DELETIONS

[illegible] IS UNCLASSIFIED
DATE 7-13-82 [illegible]

Mr. [illegible]
Mr. [illegible]
Mr. [illegible]
Mr. Glavin
Mr. Ladd
Mr. Nichols
Mr. Bason
Mr. Tracy
Mr. Carson
Mr. Coffey
Mr. Hendon
Mr. McGuire
Mr. Mumf[illegible]
Mr. Quinn Tamm
Mr. N[illegible]
Miss Gandy

Little

FBI NYC 1-9-43 11-30 PM D[illegible]
DIRECTOR
COAT
UNKNOWN SUBJECTS. E[redacted] EXPERIMENTS AN[illegible] OF NIKOLA TESLA, DECEASED. ESPIONAGE - M. NIKOLA TESLA, ON[illegible] STANDING SCIENTISTS IN THE ELECTRICAL FIELD, DIED [illegible] TEEN FORTY THREE AT THE HOTEL NEW YORKER, NEW YORK [illegible] LIFETIME, HE CONDUCTED MANY EXPERIMENTS IN CONNECT[illegible] TRANSMISSION OF ELECTRICAL POWER AND [redacted] WHAT [illegible] THE DEATH RAY. ACCORDING TO INFORMATION FURNISHED [illegible] THREE SIX FIFTH AVENUE, NEW YORK CITY, THE NOTES A[illegible] EXPERIMENTS AND FORMULAE TOGETHER WITH DESIGNS OF [illegible] VITALIZE THEM ARE AMONG TESLAS PERSONAL EFFECTS, A[illegible] TAKEN TO PRESERVE THEM OR TO KEEP THEM FROM FALLIN[illegible] [redacted] UNFRIENDLY TO THE WAR EFFORT OF THE UN[illegible] ING TO SPANEL, A DISTANT RELATIVE OF TESLA, NAMED S[illegible] WAS INTENSELY DISLIKED BY TESLA, IS TAKING STEPS T[illegible] THESE IMPORTANT DOCUMNTS AND PLANS. SPANEL BELIEV[illegible] STRONG LIKELIHOOD THAT KOSANOVICH WILL MAKE THIS MATERIAL AVAILABLE TO TO THE ENEMY. SPANEL ADVISED G TWO HEADQUARTERS IN WASHINGTON, AS WELL AS MR MORKIN OF THE DEPARTMENT OF JUSTICE IN WASHINGTON, CONCERING THE ABOVE. SPANEL WAS ALSO INTELEPHONIC COMMUNICATION WITH [redacted] DR D LOZADO, ONE OF THE ADVISORS TO VICE PRESIDENT WALLACE CONCERNING THIS MATTER, AND LOZADO TOLD SPANEL [redacted] THAT THE GOVERNMENT WAS VITALLY INTERESTED IN THE EFFECTS OF TESLA AND REQUESTED SPANEL TO LOSE NO TIME IN DOING ALL HE COULD TO PRESERVE [redacted] THEM. BLOYCE FITZGERALD, AN ELECTRICAL ENGINEER WHO HAD BEEN QUITE CLOSE TO TESLA DURING HIS LIFE TIME, ADVISED THE NEW YORK OFFICE THAT ON JANUARY SEVENTH, NINETEEN FORTY THREE, SAVA KOSANOVICH, GEORGE CLARK, WHO IS IN CHARGE OF THE MUSEUM AND LABORATORY FOR RCA, AND KENNETH SWEZEY OF ONE SIX THREE MILTON STREET, BROOLKYN, NY, WENT TO TESLAS ROOMS IN THE NEW YORKER, AND WITH THE ASSISTANCE OF A [redacted] LOCKSMITH BROKE INTO A SAFE WHICH TESLA HAD INHIS ROOMS IN WHICH HE KEPT SOME OF HIS VALUABLE PAPERS, INCLUDING IMPORTANT [redacted] ELECTRICAL FORMULAE, DESIGNS, ET CETERA. WITHIN THE PAST MONTH, TESLA TOLD FITZGERALS THAT HIS EXPERIMENTS IN CONNECTION WITH THE WIRELESS TRANSMISSION OF ELECTRICAL POWER HAD BEEN COMPLETED AND PERFECTED.

Memo Mr. Ladd 1/11/43 JBL
Memo to Director 1/11/43 JBL.

RECORDED

100-2237-3

ENCLOSURE

F B

17 JAN 18 1943

FIVE

NOT FOIA REDACTIONS

Best Copy Available

8

PAGE TWO

FITZGERALD ALSO KNOWS THATTESLA HAS CONCEIVED AND [redacted] A REVOLUTIONARY TYPE OF TORPEDO WHICH IS NOT PRESENTLY IN USE [redacted] THE NATIONS. IT IS FITZGERALDS BELIEF THAT THIS DESIGN HAS NOT [redacted] AVAILABLE TO ANY NATION UP TO THE PRESENT TIME. FROM STATEME[redacted] TO FITZGEARLD BY TESLA , HE KNOWS THAT THE COMPLETE PLANS [redacted]CATIONS AND EXPLANATION OF THE BASIC THEORIES OF THESE THIN[redacted]OME PLACE IN THE PERSONAL EFFECTS OF TESLA. HE ALSO KNOWS THAT [redacted] A WORKING MODEL OF TESLAS WHICH COST MORE THAN TEN THOUSAND D[redacted]O BUILD IN A SAFETY [redacted] DEPOSIT BOX BELONGING TO TESLA[redacted]GOVERNOR CLINTON H[redacted]X HOTEL, AND [redacted]X FITZGEARLD [redacted] THIS MODEL HAS TO DO WITH THE SO CALLEDE DEATH RAY OR THE WIRE[redacted]NSMISSION OF ELECTRICAL CURRENT. TESLA HAS ALSO TOLD FITZGEARLE[redacted] CONVERSATIONS THAT HE HAS SOME [redacted]X EIGHTY [redacted] TRUNKS INDIFFERE[redacted]ES CONTAINING TRANSCRIPTS AND PLANS HAVING TO DO WITH EXPERIMENTS [redacted]ED BY HIM. BUREAU IS REQUESTED TO ADVISE IMMEDIATELY WHAT, IF [redacted]ION SHOULD BE TAKEN CONCERNING THIS MATTER BY THE NEW YORK FIEL[redacted]ION.

FOXWORTH

CORRECTION- THROUGHOUT THE ENTIRE TELETYPE THE NAME THAT SHOULD APPEAR IS FITZGEARLD [redacted] NOT FITZGERALD [redacted] AS IT SOMETIMES IS SPELLED

HOLD

NOT FOIA REDACTIONS

Best Copy Available

JOHN EDGAR HOOVER
DIRECTOR

C-287

Mr. Tolson
Mr. E.A. Tamm
Mr. Clegg
Mr. Glavin
Mr. Ladd
Mr. Nichols
Mr. Rosen
Mr. Tracy
Mr. Carson
Mr. Coffey
Mr. Hendon
Mr. Kramer
Mr. McGuire
Mr. Harbo
Mr. Quinn Tamm
Tele. Room
Mr. Nease
Miss Beahm
Miss Gandy

Federal Bureau of Investiga[redacted]
United States Department of [redacted]
Washington, D. C.

JBL:ed

January 11, 1943

ALL INFORMATION CONTAINED HEREIN IS UNCLASSIFIED DATE 2-2-80 BY SP4 Jmpte

MEMORANDUM FOR [redacted]

RE: UNKNOWN SUBJEC[redacted]
EXPERIMENTS A[redacted]
OF NIKOLA TESL[redacted]
ESPIONAGE - [redacted]

Nikola Tesla, one of the world's outsta[redacted] in the electrical field, died at his residence in the [redacted] New York City, on January 7, 1943. In the course of [redacted]ucted many experiments with respect to the transmission [redacted] by means of radio and what is commonly called the "Death Ray" [redacted] with respect to the wireless transmission of electrical [redacted] were [redacted] to have been completed and perfected, and Tesla had also co[redacted]ed and [redacted] a revolutionary type of torpedo which is not in use b[redacted]tio[redacted] present time. The specifications, explanations of the basi[redacted]ies, [redacted]rking models of Tesla's scientific endeavors are reported to be [redacted] his effects. Tesla is reported to have some 80 trunks in different places containing transcripts and plans having to do with his experiments as well as a working model of one of his developments in the safety deposit box at the Governor Clinton Hotel.

Information concerning Tesla's experiment[redacted]n reported to the New York Office by A. N. Spanel and Bloyce Fitzgerald, the latter an electrical engineer who had been quite close to Tesla. Both of these individuals have indicated that no steps have been taken to preserve Tesla's records and models or to keep them from falling into the hands of individuals sympathetic to the Axis powers.

1 ENCLO

Tesla has a distant relative by the name of Sava Kosanovich, whom he intensely disliked. Kosanovich is reported to be taking steps to get possession of these important documents and plans, and Spanel believes there is a strong likelihood that Kosanovich will make such information available to the enemy. On January 7, 1943, Kosanovich, accompanied by George Clark, in charge of the Museum and Laboratory for RCA, and Kenneth Swezey of Brooklyn, New York, entered Tesla's rooms at the Hotel New Yorker where, with the aid of a locksmith, they broke into a safe in which Tesla kept some of his valuable papers, including important electrical formulae, designs, et cetera.

RECORDED & INDEXED

D63

100-2237-3

Mr. Spanel, in addition to reporting these developments to the Bureau, has also advised the headquarters of the Military Intelligence Division, a Mr. Workin of the Department of Justice in Washington, and Dr. Lozado, one of the advisors to Vice President Wallace. Lozado advised Spanel that the Government was vitally interested in the effects of Tesla and requested that Spanel loose no time in doing all he could to preserve them.

1 JAN 18 1943

COPIES DESTROYED

FOR VICTORY BUY UNITED STATES SAVINGS BONDS AND STAMPS

55 JAN 26 1943

1-12-43

10

Best Copy Available

The New York Office was instructed to disc[illegible]ke the matter up with the State's Attorney in New York City with the [illegible] possibly taking Kosanovich into custody on a burglary charge and obt[illegible] the various papers which Kosanovich is reported to have taken from Tes[illegible]. It was pointed out that any activities pursued by the State's Attor[illegible]d be handled in a most secret fashion in order to avoid any publici[illegible]ect to Tesla's inventions. The New York Office was also instructe[illegible] the Surrogate Court in order that stops could be placed against t[illegible] of Tesla both in his hotel and any other points, in particular, the [illegible] boxes that he ma have in order that no one may enter them without a [illegible]tative being present and every precaution taken to preserve the secrecy [illegible]la's inventions. The New York Office is to keep the Bureau advised of all de[illegible]ents.

Respectfully,

D. M. Ladd

D. M. Ladd

L.M.C Smith is handlin this with alien Property Custodian so there appear to be no need for us to mess around in it.

EW

11

Best Copy Available

JOHN EDGAR HOOVER
DIRECTOR

7

Mr. Tolson
Mr. E. A. Tam
Mr. Clegg
Mr. Glavin
Mr. Ladd
Mr. Nichols
Mr. Rosen
Mr. Tracy
Mr. Carson
Mr. Coffey
Mr. Hendon
Mr. Kramer
Mr. McGuire
Mr. Harbo
Mr. Quinn Tam
Tele. Room
Mr. Nease
Miss Beahm
Miss Gandy

Federal Bureau of Investigation
United States Department of Justice
Washington, D. C.

EAT:DS

January 12, 1943

MEMORANDUM FOR MR. LADD

On Friday, January 8th, Mr. L. M. C. Smith called me in connection with the death of Nikola Tesla. He advised me that he was concerned about the possibility of enemy agents confiscating some of the trunks of Tesla, who had died on January 7th. He understood that the War Department was interested in this matter and that apparently the Alien Property Custodian's office was taking some action. He desired to know whether the Bureau would take some steps to refrain relatives of Tesla from taking the contents of his trunks and whether the Bureau would seize possession of the trunks. Mr. Smith indicated that he was talking to the Alien Property Custodian along the same lines. I told him that in view of the fact he was going to handle the matter with the Alien Property Custodian's office, there did not appear to be any action which the Bureau could or should take.

INFORMATION CONTAINED
IS UNCLASSIFIED
7-2-80 BY

I ENCLO. 1

Very truly yours,

Edw. A. Tamm

12 30 from 1/13/43
Called Donegan
& instructed no
further action

advise field

RECORDED

100-2237-3

B
1 JAN 13 1943

FOR VICTORY
BUY
UNITED STATES DEFENSE BONDS AND STAMPS

53 JAN 22 1943

12

[redacted]

(b)
(7)
(c)

April 16, 1948

ALL INFORMATION CONTAINED
HEREIN IS UNCLASSIFIED
DATE 2-3-88 BY SP4 JRM/RTC

Mr. J. E. Hoover
Federal Bureau of Investigation
Washington D.C.

Dear Mr. Hoover,

I am a student at the Milwaukee School of Engineering, studying Electrical Engineering. I am also interested in the life and work of Nickola Tesla. I understand that at the time of his death, your department took his manuscripts and experiment data for national security. I am preparing a paper to be presented before the student branch of the American Institute of Electrical Engineers on Tesla.

RECORDED & INDEXED 14 SEP 10
100-2237-3X

If it is possible I would appreciate material bearing on Tesla's [redacted] and methods of experiment.

FBI
APR 28 1948

13

This information would help me in a better presentation of this paper and consequently a far greater appreciation of his work in the field of science.

I know that a part of the experiments and theory have a secret classification, and I do not expect any of it.

I am intrested in "Ground Current Transmission" as the basis of my thesis for graduation. If it is possible to obtain this information, I would be very grateful.

Yours very truly,

[redacted] (6)(7)(c)

100-2237-3X April [illegible], 1948

RECORDED 65-47953-18

[redacted]

(b)
(7)
(C)

INFORMATION CONTAINED HEREIN IS UNCLASSIFIED DATE 7-3-[illegible] BY SP4

Dear [redacted]

Your letter of April [illegible], 1948, has been received and I want to express my appreciation to you for having written me as you did. The effects of Nickola Tesla were handled by the Office of Alien Property, and not by this Bureau. It is suggested you may desire to communicate with the Office of Alien Property, United States Department of Justice, 101 Indiana Avenue, Washington, D. C.

Sincerely yours,

John Edgar Hoover
Director

NOTE: This individual requests information relative to the work of Nickola Tesla relative to electrical experiments he was conducting, which Swain understands were taken by this Bureau and held for security reasons. Bureau file [illegible] reflects that the effects of Tesla were handled by the Office of Alien Property.

VWPrjec

Mr. Tolson
Mr. E. A. Tamm
Mr. Clegg
Mr. Glavin
Mr. Ladd
Mr. Nichols
Mr. Rosen
Mr. Tracy
Mr. Egan
Mr. Gurnea
Mr. Harbo
Mr. Pohr
Mr. Pennington
Mr. Quinn Tamm
Tele. Room
Mr. Nease
Miss Gandy

COMMUNICATIONS SECTION
MAILED 8
☆ APR 2[illegible] 1948 P.M.
FEDERAL BUREAU OF INVESTIGATION
U. S. DEPARTMENT OF JUSTICE

6 0 MAY 10 1948

RECEIVED READING ROOM
APR 7 00 PM '48

15

April 3, 1950

ALL INFORMATION CONTAINED
HEREIN IS UNCLASSIFIED
DATE 7-2-80 BY SP4 [illegible]

[redacted]

(b)
(7)
(C)

[redacted]:

Reference is made to your inquiry by telephone on March 29, 1950, concerning certain technical papers which belonged to the late Nikola Tesla.

From an examination of our files, we have been able to determine that this Bureau has never been in possession, as had been indicated to you, of a copy of Dr. Tesla's papers.

Very sincerely yours,

J. Edgar Hoover

100-2237-3X1

~~65-47953-26~~

RECORDED - 53

APR 7 1950

80

67C

[redacted]

EX-115

U.S. DEPT. OF JUSTICE
RECEIVED READING ROOM
FBI
APR 3 5 19 PM '50

(b)
(7)
(C)

APR 4 11 20 AM '50
RECEIVED
U S DEPT
[redacted]

[redacted]

Tolson
Ladd
Clegg
Glavin
Nichols
Rosen
Tracy
Carbo
Ohr
Tele. Room
Case
Andy

MAILED 4
APR 4 1950
COMM - FBI

16

Director, FBI

SAC, New York

April 17, 1950

(b)
(7)
(C)

[redacted]

Rebulet dated April 3 last.

On April 7, 1950 agents of this office interviewed Mr. J.V. POTTS, Vice President of the Manhattan Warehouse and Storage Company, 52nd Street & 7th Avenue, New York City, and at that time Mr. POTTS advised that the rules of his firm required that all persons gaining access to goods stored by Manhattan first had to fill out an appropriate form setting forth their names, date of visit, and reason for requesting access to the goods.

In a review of the file pertaining to the storage of the effects of NIKOLA TESLA, MR. POTTS revealed that only one such visit had been made by persons outside of the management of Manhattan Storage itself. This one occassion took place on January 26 and 27, 1943, at which time representatives of the Alien Property Custodian made a thorough review of the entire effects of the TESLA estate.

NIKOLA TESLA

The TESLA effects are stored in rooms 5J and 5L of Manhattan Storage's warehouse at 52nd Street & 7th Avenue, New York City. MR. MICHAEL KING, who stated he had been Floor Supervisor for approximately 10 years on the floor in question, stated that he could recall only the one occassion in early 1943 when an examination was made of the TESLA effects. He stated that at that time numerous photographs were taken by the examiners. His description of the equipment used would tend to show that a microfilm reproduction was made of some of the papers of the deceased scientist. MR. KING added that several of the group making the examination wore U.S. Navy uniforms, and during the two days required to complete the examination the civilian assistants in the group were identified to him only as "FEDERAL AUTHORITIES". According to MR. KING, no other instance of microfilming of the records of the TESLA estate has taken place since that time.

It should be noted that the Bureau was informed of the examination mentioned above by New York letter (with attachments) dated October 17, 1945, entitled UNKNOWN SUBJECT; SAVA NOSANOVICH; Experiments & Research of NIKOLA TESLA (Deceased), Espionage-M.

cc: 65-12290

ALL INFORMATION CONTAINED HEREIN IS UNCLASSIFIED DATE 7-3-80 BY SP4 Jrm/rtc

100-2237-
NOT RECORDED
148 APR 28

EHH:JJC
105-1391

17

MR. POTTS stated that no inquiry had been received by Manhattan from SAVA N. KOSANOVICH, nor had Manhattan informed him, in any way, that an examination of the TESLA effects had been made by anyone. In fact, added MR. POTTS, the only correspondence relating to the TESLA estate has been in the form of bills for storage.

MR. POTTS stated that any personal inquires regarding the estate would of necessity be directed to him, and to date no such inquiries have been made.

Interviewing agents explained to MR. POTTS that the examination made, as mentioned above, was not instigated by the Bureau, nor had the Bureau taken part in that examination.

Unless advised to the contrary, this investigation is being placed in a closed status, and no further investigative action is contemplated by this office. CLOSED.

[redacted]

(b)
(7)
(C)

[redacted]

August 18, 1952

Federal Bureau of Investigation
Department of Records
Washington, D. C.

ALL INFORMATION CONTAINED
HEREIN IS UNCLASSIFIED
DATE 2-2-80 BY SP4 Jam/jr

Gentlemen:

In a manner of introduction, I wish to state that I am working toward a degree in Electrical Engineering at the Institute of Technology of the University of Minnesota.

For several years, I have been engaged in a study of extensive compass and detail concerning the researches and writings of the late, world renowned scientist, Dr. Nikola Tesla. At considerable expense, I have acquired an extensive collection of materials relating to Dr. Tesla and his works which include:

1) Personal letters written by Tesla to his close friend.

2) Numerous periodicals, some of which are to be found in only a few libraries throughout the United States.

3) A few rare books which have now become "collector's items".

4) A collection of issued patents.

Although the items listed are considerable in number, the specific information desired is lacking.

As I understand it, because of the nature of Dr. Tesla's role in scientific developments, all research papers, patent applications, etc., were secured by the Federal Bureau of Investigation at the time of Dr. Tesla's death in January of 1943.

The purpose of this seizure, as described in numerous articles, was to determine whether these papers contained suggestions leading toward advancements in the field of science.

100 2237-4

RECORDED - 68

Reply
8-26-52

[redacted]

W - 28

(b)
(7)
(C)

[redacted]

19

Now it seems that sufficient time has elapsed for an investigation of this kind. If Dr. Tesla's Estate has been released by the department in charge, any records that can be made available for examination will be welcomed.

A letter from Harold I. Baynton, Assistant Attorney General, Director, Office of Alien Property, informed me that the Library of Congress listed certain works, writings and research studies prepared by the late Dr. Tesla. However, a letter addressed to the Library failed to bring results as the Library "has no files on the researches of Tesla".

A similar result was obtained from the Bureau of Naval Research and the Department of Commerce.

I am especially interested in the research work in which Tesla was engaged in his later years. There are various unpublished works, such as a 10-page typewritten statement presented in 1937 at a meeting of several well-known editors outlining his discoveries and giving a resume' of his work in the fields of gravity and cosmic ray research, etc. Also, Tesla prepared various papers, one of which was in effort to secure the Pierre Gutzman Prize from the Institute of France. My inquiry is in effort to determine whether any of these documents, as well as others, are at this time available.

I will greatly appreciate any information in regard to any records which you may have.

Very truly yours,

(6)
(7)
(C)

[redacted]

August 26, 1952

EX. - 28

[redacted]

INDEXED 68
RECORDED - 68

100-2237-4

(b)(7)(c)

ALL INFORMATION CONTAINED HEREIN IS UNCLASSIFIED DATE 7-2-80 BY SP4 Jmfrte

Dear [redacted]

With reference to your letter of August 18, 1952, our files disclose that the effects of Nikola Tesla were taken into custody at the time of his death by the Office of Alien Property, and not by this Bureau. Consequently, you may wish to communicate further with that agency, which may be addressed as follows: (65-47953)

Assistant Attorney General
Rowland F. Kirks
Director, Office of Alien Property
United States Department of Justice
101 Indiana Avenue, N. W.
Washington 25, D. C.

Sincerely yours,

John Edgar Hoover
Director

cc - 1 - Assistant Attorney General (with copy of incoming)
Rowland F. Kirks
Director, Office of Alien Property
United States Department of Justice
101 Indiana Avenue, N. W.
Washington 25, D. C.

MAILED 10
AUG 27 1952
COMM-FBI

[redacted]

(b)
(7)
(c)

100-2237

NOTE: No reference Bureau files on correspondent in Minnesota.. 8-22-52...per [redacted]

60 SEP 10 1952

21

STANDARD FORM NO. 64

Office Memorandum • UNITED STATES GOVERNMENT

TO : MR. A. H. BELMONT

DATE: May 5, 1953

FROM : MR. L. L. LAUGHLIN

SUBJECT: NIKOLA TESLA (Deceased)
INFORMATION CONCERNING

[redacted] INFORMATION CONTAINED HEREIN IS UNCLASSIFIED DATE 2-22-80 BY SP4 Smith

[redacted] called on the afternoon of May 4, 1953.

[redacted] stated that he had been reading a book entitled, "The Prodigal Genius - The Life of Nikola Tesla" by John J. O'Neill, whom [redacted] described as a science writer for a New York newspaper (publisher - Ives Washburn). [redacted] noted in this book that Bureau Agents went to Tesla's room following his death on January 7, 1943, opened his safe, examined his papers, and took over his personal files. [redacted] said this appeared on page 277. [redacted] stated that Tesla is the father of modern power engineering, being responsible for the invention of the A. C. generator, motor transmission, and other electrical engineering feats. He inquired (1) if the papers and works of Tesla were in the possession of the Bureau, and (2) if so, were they available for review in view of their scientific importance.

I told [redacted] that the statement concerning the Bureau's taking Tesla's files did not seem very logical but that I would check on the matter. (b) (7) (C)

The Bureau's files reflect that shortly after the death of Tesla in his hotel room in New York City on January 7, 1943, Sava Kosanovich, a distant relative, and other individuals entered his room and opened the safe, examining certain materials which he possessed. On January 8, 1943, Mr. L. M. C. Smith of the Department advised Mr. Tamm that he was concerned about the possibility of enemy agents confiscating some of the trunks of Tesla and apparently the Office of Alien Property Custodian was taking some action regarding these effects. Since the matter was being handled by the Office of Alien Property Custodian, the Bureau did not make any inquiries into this situation. (65-47953-6)

It is noted also that the Bureau received a letter dated April 16, 1948, from [redacted] explaining that he was studying electrical engineering at the Milwaukee School of Engineering and

100-2237-4X

[redacted]

RECORDED-66
INDEXED-66 MAY 6 1953

65-47953

1 - Mr. Nichols

[redacted] (b) (7) (C)

22

was interested in the life and works of Tesla. [redacted] stated that he understood at the time of Tesla's death the Bureau took his manuscripts and experiment data for national security. The Bureau on April 22, 1948, advised [redacted] that the effects of Tesla were handled by the Office of Alien Property and not by the FBI.(65-47953-18)

I called [redacted] this morning and told him that it was the office of Alien Property and not the FBI which took over the effects of Tesla following his death. Accordingly, I suggested that [redacted] might wish to communicate with the office of Alien Property for further information concerning this matter.

The book "Prodigal Genius - The Life of Nikola Tesla" is not in the Bureau Library. A copy is being obtained from the Library of Congress. It will be examined to determine specifically the reference made to the Bureau's taking these papers. At that time a determination can be made as to what further action should be taken.

(b)
(7)
(C

ADDENDUM: LLL:mer 5-14-53

Page 277 of the "Prodigal Genius - The Life of Nikola Tesla," describing Tesla's death, contains the following statement: "Operatives from the Federal Bureau of Investigation came and opened the safe in his room and took the papers it contained, to examine them for a reported important secret invention of possible use in the war."

Since this work was published in 1944, it is not felt that any particular purpose would be served by raising an objection with the publishers at this time. [redacted] the individual who raised the question, has been set straight and, therefore, no further action is being taken.

STANDARD FORM NO. 64

Office Memorandum • UNITED STATES GOVERNMENT

TO : Director, FBI

DATE: 2/19/54

FROM : SAC, New York (6[illegible])

INDEXED

SUBJECT: LELAND I. [illegible]
[illegible]

INFORMATION CONTAINED
IN IS UNCLASSIFIED
[illegible] 7-2-80 [illegible]

Mr. GEORGE H. SCHERFF, JR., 149 [illegible]ord Road, [illegible] Rochelle, New York, advised that he received two letters from LELAND [illegible], 127 Seymour Avenue Southeast, Minneapolis, Minnesota, photostat[illegible] of which are being furnished the Bureau and Minneapolis.

Mr. SCHERFF stated that he was an associate [illegible] NIKOLA TESLA in 1914 and that for many years his father had been Dr. [illegible] private secretary. Mr. SCHERFF said that he never heard of LELAND I. A[illegible] did he ever hear of any of the names mentioned in ANDERSON'S letter.

Mr. SCHERFF stated that he has quite a bit of [illegible]'S writings in his possession and he didn't know whether or not they would be of value to a foreign government.

[redacted] (6)(7)(C)

No further action is being taken by the N.Y. Office, UACB.

Encs. (29)
1 - Minneapolis (3 Encs.)

EXP. PROC.

memo: New York
[redacted]: aaa
3-10-54

100-2237-4X1
~~100-0-4973~~

RECORDED - 15
MAR 1 1954
3-11

INDEXED - 15
EX-129

67C

[redacted]

no action

[redacted]

(6)
(7)
(C)

24

Leland I. Anderson
127 Seymour Avenue Southeast
Minneapolis 14, Minnesota

February 3, 1954

Mr. George H. Scherff, Jr.
149 Seacord Road
Westchester, NEW YORK

Dear Mr. Scherff:

re.: The Life and Work of Dr. Nikola Tesla.

Recently, I have founded an organization in name and honor of Dr. Tesla in cooperation with several people who were intimately associated with Tesla during his lifetime, and with others who are interested in Dr. Tesla and his achievements from a scientific and historical standpoint. (See enclosed brochure.) I have had some difficulty locating a few of Tesla's associates, and, the name of George Scherff is among them. Therefore, it is my sincere hope that you, Mr. Scherff, are the person I seek as having been associated with Tesla.

I have personally studied the works of Tesla for a number of years, being particularly interested in elaborating upon his researches regarding high-tension radiant beams. Through some travel and other efforts, I have been fortunate to locate many original collections of Tesla's correspondence and manuscripts, and in a few cases obtained a number of interesting items.

I was in New York a short time ago on business, and while there I visited Mr. Kenneth M. Swezey. He intends to undertake some significant work on behalf of Tesla in the near future, and since he knew Tesla for so many years during his later life, it will be handled with great understanding.

I hope that you may have some interest in the work which I have initiated on behalf of Dr. Tesla. There are many matters that I wish to discuss with you, provided of course, that you are the Mr. Scherff related to the Tesla story. I would be most happy to hear from you at your earliest convenience, and will send you all publications of the organization if you wish to receive them.

Very truly yours,

Leland I. Anderson

25

TESLA-INTERNATIONAL

University Station, Box [illegible]
MINNEAPOLIS · 14 · MINNESOTA

To Those Who Are Interested in the Life and Work of
DR. NIKOLA TESLA

Following the death of Dr. Nikola Tesla on the 7th of [illegible], Mr. John J. O'Neill, former Science Editor of the New York Herald Tribune, presented the biography

PRODIGAL GENIUS
The Life of Nikola Tesla

- a memorable tribute to one of the most outstanding figures in the entire field of electrical science. Many reading this biography learned of Nikola Tesla for the first time despite his monumentous achievements with which he has won world-wide acclaim in scientific circles. Even those closely associated with the fields of science and engineering discovered a remarkable story not generally known of the brilliant genius Tesla whose sensitive personality and seclusion kept his fame in a shadow.

The TESLA-INTERNATIONAL organization is being established in the United States in name and honor of Dr. Nikola Tesla by those sharing a mutual interest in his life and works. The organization has as its objective the promulgation of the truth about Nikola Tesla; that a full recognition be made for his unparalleled research work on the effects of currents of high frequency and high potential, and for his achievements in the realms of polyphase power transmission and telecommunication. It would be the duty of the organization to do all in its power that the name of Tesla win in the eyes of the nation the fame deserving of a truly great American for his contributions to science, industry, and to this country.

A journal of the TESLA-INTERNATIONAL organization was issued beginning the month of November, [illegible]. In addition to items of recent and historical interest related to Tesla, the journal will include:

1) A formal roster of all [illegible] have an interest in the Tesla organization and wish to engage in its activities.

2) An opportunity of [illegible] of the organization through the medium of the journal.

3) A comprehensive bibliography [illegible] listing of all available items concerning Tesla, which would include a cataloging of the various collections of Teslians not generally known. Such a listing will be of particular importance to scholars in the research field.

4) A presentation of hitherto unpublished writings and analyses of Tesla's technical research studies as they become available.

The journal of the TESLA-INTERNATIONAL organization will be forthcoming at intervals of 1½ - 2 months. Subscription rate is $1.00 for 10 issues. Membership in the TESLA-INTERNATIONAL organization is concurrent with subscription to the journal.

Leland I. Anderson
127 Seymour Ave. S. E.
Minneapolis 14, Minnesota

REGISTERED

VIA AIR MAIL

Mr. George H. Scherff, Jr.
149 Seacord Road
Westchester, NEW YORK

MINNEAPOLIS FEB 1954

NEW ROCHELLE FEB 1954

FEB 1954

MINNEAPOLIS MINN. FEB 1954 NO. 35

Leland I. Anderson
127 Seymour Avenue Southeast
Minneapolis 14, Minnesota

February 12, 1953

Dear Mr. Scherff,

It was so very rewarding to receive your reply concerning Dr. Nikola Tesla... I have initiated an undertaking on behalf of Tesla because I feel that in all right and justice something should be done to perpetuate the name of Tesla and see to it that his name becomes a part of the heritage of this nation. A great task perhaps, but as time goes on I believe the name of Tesla will become more significant in scientific developments. I hope that you may have an interest in the organization which I have proposed and established, and I will be honored to have you as a member. The organization is presently set up on the basis of those having a mutual interest in Tesla, with a free exchange of information between members. The first two issues of the journal of the organization are being sent to you under separate cover, and should reach you in a day or two.

Some other members which may be of interest to you are; Muriel Arbus, Dorothy Skerritt, Kenneth Swezey and W. W. Wilhelm. The recent deaths of John O'Neill and Edwin Armstrong were very unexpected, and it is with a great sadness that I received the news and loss of these two members.

Do you know if Mr. Lowenstien had a daughter? The reason I ask is that a woman visited Mr. O'Neill before his death and told him that she inherited a great amount of Teslaiana from her father - whom I presume to be Mr. Lowenstien. This woman was afraid of disclosing the information by reason of her mistaken notion and fear that she would rudely be raided by the army. You see Mr. O'Neill related to me that a few army officials visited his home with insistent requests for information. Of course all this sort of government interest was aroused by Tesla's "Death-Ray" rumors, played up by enterprising journalists. Well, the result of all this is that she refused to give Mr. O'Neill her married name - only that she married a Siamese prince no less, and moved to some mid-western city. If this woman has the amount of material that Mr. O'Neill intimated, it would certainly be important to locate her.

I believe that one of the valuable efforts of the Tesla organization would be to catalog every piece of information concerning Tesla. I have made a beginning effort along this line, and I hope that before too long all collections of Teslaiana may be located, cataloged, and reproduced for fear of eventual loss. Through Mary A. Benjamin (of Walter R. Benjamin Autographs in New York) I have obtained a number of significant items of correspondence between Tesla and Robert U. Johnson. The entire collection of correspondence with Mr. Johnson numbers in excess of 70 pieces. I share this collection with Mrs.

Leland I. Anderson
127 Seymour Avenue Southeast
Minneapolis 14, Minnesota

James W. McChesney of Long Island. The period of this correspondence runs from 1894-1930. Mrs. McChesney has another group of correspondence between Tesla and George Sylvester Viereck which is very interesting in that it is from a period later in Tesla's life. (If you wish to receive any photostatic copies from these collections I will be happy to send them to you.)

I am interested to learn whether you have collected any mementoes, correspondence, writings, etc. of Tesla. For a long while I have been trying to locate a copy of the brochure which Tesla issued the first week of February, 1904. It came in a large square envelope bearing a large red wax seal with the initials "N.T." stamped thereon. Quite a number of them were distributed throughout New York and elsewhere by the Tesla enterprise in an effort to secure financial backing for the tower and power plant erected at Wardenclyffe, Long Island. You no doubt know of the brochure of which I speak. I thought it would be interesting to reproduce this brochure and distribute it among the members of the Tesla organization as a memento. Although I have written and inquired about this brochure extensively, I have not been able to locate a copy. Did you ever have one?

I have hopes that in 1956 (The Tesla Centenary) some significant observance may be organized here in the United States in honor of Tesla. The Tesla Museum in Yugoslavia has obtained the Tesla inheritance, which amounts to 9 tons of apparatus, writings, etc. It is the intention (so stated) of the Museum to publish the entire writings of Tesla, including those in the inheritance, on the Tesla Centenary. I don't know what sort of political propaganda might be injected in this publication, but it occured to me that it may be appropriate to arrange an advance publication in this country [illegible] unpublished works. Unfortunately, there is not much to work on as yet. While the Tesla estate remained in this country, photostats of nearly every important paper in the estate were made under order of Wright Field Development Center in Ohio. If these photostats could be located there would be much material for a publication. However, in working with the Library of Congress in preparation of a file on Tesla, these photostats have escaped the most extensive search thus far.

Hoping that you may be interested in the efforts of the TESLA-INTERNATIONAL on behalf of Tesla and wish to associate yourself with it, I am,

Yours faithfully,

Leland I. Anderson

TESLA INTERNATIONAL

[illegible] Station B [illegible]

[illegible] 14 [illegible] MINNESOTA

IMPORTANT ANNOUNCEMENT

To Members of the TESLA INTERNATIONAL organization
and those interested in the works of
Dr Nikola Tesla

[illegible]

"[illegible] Writings of Nikola Tesla"

by

[illegible] Martin

[illegible] it is with great pleasure that the [illegible] organization announces the reprinting of [illegible] literature

[illegible] and significant work [illegible] a great demand for this [illegible] IS STRICTLY [illegible] will not be repeated when the [illegible] desiring a copy of the book are [illegible]

Cost of this book [illegible] printing rate is only $4.00 [illegible] United States to members and friends [illegible] organization

Leland I. Anderson
127 Seymour Avenue S. E.
Minneapolis 14, Minnesota
3 CENTS 3
3 CENTS 3
SPECIAL DELIVERY
VIA AIR MAI
Mr. George Scherff
149 Seacord Road
New Rochelle, New York
SPECIAL DELIVERY

SAC, New York

March 10, 1954

RECORDED - 15

~~105-0-4973~~

EX-129

Director, FBI

100-2237-4X1

[redacted]

NOT AN FOIA REDACTION

LELAND I. ANDERSON
MISCELLANEOUS; INTERNAL SECURITY - YU

Reurlet 2-19-54 concerning the above-captioned individual. Relet forwarded to the Bureau two Photostats of two letters from Anderson which were received and made available to your office by George H. Scherff, Jr.

There is returned herewith one set of the Photostats received by the Bureau as enclosures with your letter inasmuch as it appears this set was intended for retention in your office file.

Attachment

[redacted]

(b)
(7)
(C)

ALL INFORMATION CONTAINED
HEREIN IS UNCLASSIFIED
DATE 7-2-80 BY SP4 Jrm/rtc

(b)
(7)
(C)

[redacted]

Tolson
Ladd
Nichols
Belmont
Clegg
Glavin
Harbo
Rosen
Tracy
Gearty
Mohr
Winterrowd
Tele. Room
Holloman
Miss Gandy

MAILED 16
MAR 10 1954
COMM - FBI

32

KENNETH M. SWEZEY

ALL INFORMATION CONTAINED HEREIN IS UNCLASSIFIED DATE 7-2-80 BY SP4 [illegible]

163 Milton Street
Brooklyn 22, N.Y.
June 25, 1955

Mr. Tolson
Mr. Boardman
Mr. [illegible]
Mr. Belmont
Mr. Harbo
Mr. Mohr
Mr. Parsons
Mr. Rosen
Mr. Tamm
Mr. Sizoo
Mr. Winterrowd
Tele. Room
Mr. Holloman
Miss Gandy

[redacted]

Mr. J. Edgar Hoover
Federal Bureau of Investigation
Washington, D.C.

Dear Mr. Hoover:

Back in 1943, the local Alien Property Custodian searched through the belongings of the late electrical inventor, Nikola Tesla, stored in the Manhattan Storage Warehouse in New York City. Tesla had been a naturalized American for more than fifty years, so I believe that the search was made on the grounds that the property was to be sent to Yugoslavia, through Tesla's nephew and heir, Mr. Sava Kosanović (Mr. Kosanović had been Minister of State under the King's government, later became Ambassador to the United States from the present government, and is now a Minister serving in Belgrade).

According to the attorney who handled the Tesla estate, Mr. Philip Wittenberg, the Alien Property Custodian assured him that nothing had been held. I have a letter from the Office of Alien Property, dated March 15, 1955, which confirms this statement.

In gathering material to help in a nation-wide commemoration of Tesla's hundredth birthday next year---which will be participated in by leading scientific and engineering societies, museums, and universities---I have just discovered, however, that Tesla's solid gold Edison Medal somehow vanished during that search.

As a friend who had known Tesla well during his last twenty years, I was with Mr. Kosanović in Tesla's room in the Hotel New Yorker on the day he died. A safe expert was called in to unlock Tesla's safe. Among its contents were several honorary degrees, a volume of greetings which I had gathered for him on his seventy-fifth birthday, a bunch of keys, and the Edison Medal. We kept out the book of greetings (I mentioned this at the time to the assistant manager of the hotel and later to a Mr. Gorsuch of the Alien Property Custodian's office), but everything else, including the medal and the keys, was replaced and the safe was locked.

RECORDED - 82 / 60-2237-5
INDEXED - 82

Except when it was inspected by the Alien Property Custodian, the safe was never reopened until it

Memo Belmont - Boardman 6/29/55. Let ack. [redacted] 6/29/55 390

6 JUL 11 1955

EXP. PROC.

JUN 27 1955

33

arrived in Belgrade (where Tesla's property was to be installed in a special Tesla Museum) and was there opened by Mr. Kosanovic. According to his former secretary, both the bunch of keys and the medal were missing. The keys were later found in a tin box outside the safe; the medal was never found.

I learned of the disappearance of the medal only by accident. Mr. Kosanovic had asked his former secretary to get permission from the American Institute of Electrical Engineers (who gave Tesla the Medal) to have it duplicated. This was given, but the cost, it turned out, would be about four hundred dollars. In the meantime, the Tesla Museum, in Yugoslavia, is quietly trying to raise the money to pay for it.

The irony of this situation is more disturbing than the money involved. By giving us a system which made electric power universally available, Tesla---probably more than any other one man---helped put America on top of the world. At the time he died, his gold Edison Medal was the only material evidence left of this country's appreciation. That this last token should have disappeared ---to have to be replaced by his materially poor countrymen overseas for whom he had done nothing---seems a tragic denouement.

John O'Neill, in his biography of Tesla, states that the FBI broke into Tesla's safe on the day he died, and an article in the current (June) Coronet repeats this. I know this isn't true. I did hear, however, that the FBI somehow lent a hand to the Alien Property Custodian during the latter's search in the warehouse.

If that is so, I thought that perhaps some of your men might remember the conditions under which the search was made and therefore might have a suggestion as to what could have happened to the medal. After this long time, I have no hope that the medal can actually be restored, and I am already trying to interest Americans in making a replacement. But future biographers might be spared a lot of wild guessing and wrong blaming if some hint could be obtained as to whether the original got lost, strayed, or stolen---and who might have been responsible.

With best regards and sincere appreciation for any help you can give,

Sincerely,

Kenneth M. Swezey

Kenneth M. Swezey

P.S.: I am enclosing an editorial from last month's POWER magazine which outlines Tesla's contribution to the electric power industry.

K.M.S.

LOUIS N ROWLEY, EDITOR · MAY 1955 · ESTABLISHED 1882 **Power**

Strange Genius

ASK ANY GROUP of power men to name those who laid the foundation for today's electrical generation and distribution. You'll wind up with an impressive list—Edison, Brush, Thomson, Westinghouse, many others. But there is almost sure to be a significant omission.

Yet this forgotten man conceived the polyphase ac motor—still basic—and devised a suitable system of generation and distribution for applying it. To grasp the magnitude of this contribution, we must turn back to the 1880's when the electrical era was being born, and the "battle of the systems" held sway.

Arc lights and motors were being operated on constant-current series systems. Edison's Pearl Street generating station had opened in 1882, supplying incandescent lamps and, later, dc motors on a constant-potential system. Under the leadership of Westinghouse and Stanley, the advantages of ac distribution were demonstrated. But there was no successful ac motor.

In May, 1888, a young Yugo-Slav engineer, but four years in the United States, read a paper before the American Institute of Electrical Engineers. In it he described a new ac system. Its heart was the induction motor with its basic and beautiful concept of the rotating magnetic field. The man was Nikola Tesla, the system he described was destined to sweep the field.

With characteristic vision, George Westinghouse realized the fundamental importance of the polyphase ac system and acquired the basic patents. Its first impact on the general public was at the Chicago World's Fair of 1893. There a 2-phase generator supplied motors and lamps, and, through rotary converters and motor-generators, a variety of dc equipment.

But it remained for the Niagara Falls power project to demonstrate in the most dramatic way possible that polyphase ac was the system of the future. Since 1886 when a charter to develop its power had been granted, the eyes of the world had been on Niagara. An international commission, headed by Lord Kelvin, had reviewed 17 proposals, found none acceptable. Later, just five years after Tesla's AIEE paper, it was officially decided to use the polyphase system.

In August, 1895, Niagara power was delivered to the first industrial customer and in 1896 ac transmission to Buffalo, 22 miles away, was begun. By that time, the steam turbine had been introduced in America and the modern age of electric power had truly opened.

For Nikola Tesla, these far-reaching inventions were but a beginning. Still to come was brilliant work in high frequencies, thinking basic to much of today's radio art. Yet by the time of his death in 1943, both he and his work had begun to slip into obscurity. Why?

A man of flashing insights and enormous brilliance, Tesla was largely indifferent to the development of his ideas. This he left to others while he followed the lure of new challenges. In later years, his projects became more grandiose, his ways more mysterious, his pronouncements more Olympian. And working alone, as he did, he formed none of the institutional ties that help to perpetuate a record of accomplishment.

Next year—July 10, 1956—will be the 100th anniversary of Nikola Tesla's birth. It would be fitting for our engineering societies to commemorate this occasion, to acknowledge our debt to this strange and lonely genius who changed our world for the better.

ALL INFORMATION CONTAINED
HEREIN IS UNCLASSIFIED
DATE 7-14-82 BY [illegible]

100-2237-5

(REPRINTED BY PERMISSION)

35

АМЕРИКАНСКИ
СРБОБРАН
THE AMERICAN SRBOBRAN
Second Class Mail Privileges Authorized at Pittsburgh, Pa.

THE LARGEST AND OLDEST SERBIAN DAILY NEWSPAPER IN AMERICA
Published Daily Except Sat's, Sundays and Holidays by SERB NATIONAL FEDERATION
3414 Fifth Avenue Telephone MAyflower 1-6600 Pittsburgh 13, Pa.

MOMCHILO SOKICH, Editor — JOVAN BRATICH, Ass't. Editor
MILAN M. KARLO, Editor English Section

ПРЕТПЛАТА НА ЛИСТ

За Сједињене Државе: на годину $8.00; шест месеци $4.00. За Канаду: на годину $9.00; шест месеци $4.50. За стране земље: на годину $10.00; шест месеци $5.00. За град Питебург: на годину $9.00; шест месеци $4.50. — Један број 5ц. Претплата за енглеско издање $4.00 годишње.

SUBSCRIPTION RATES

For United States of America: For One Year $8; Six Months $4. For Canada: One Year $9; Six Months $4.50; Foreign Countries: One Year $10; Six Months $5. For Pittsburgh: One Year $9; Six Months $4.50.—Single copy 5c. Subscription for the English Section only is $4.00 per Year.

Рукописи се не враћају никоме. — Огласи се плаћају унапред.

RECOGNITION FOR TESLA

Largely thru a young American engineer's efforts, the world today is re-scanning the record and achievements of our inventive genius, Nikola Tesla. Of late, even the big-time magazines have devoted space to the amazing career and fascinating character of the pioneering electrical wizard.

The man behind this belated recognition for the one-time Serbian immigrant boy who made millions but died almost a pauper is Leland P. Anderson, head of the **Tesla Society**, which has headquarters at the University of Minnesota.

Thru travels, correspondence and detailed research, Mr. Anderson has dug up many friends of the late genius and induced them to join in his noble work. A good many of these are American-Serbians. They serve Mr. Anderson and he serves them, with information issued thru his TESLIAN publication. This is, at present, a mimeographed publication issued monthly which casts new light on the known life and record of the late Dr. Tesla.

The latest issue (March-June) informs of progress plans to honor Dr. Tesla even more. It also presents an account of a fascinating editorial, "Strange Genius", by the POWER magazine of the powerful McGraw-Hill publishing line. This editorial traces the introduction of Dr. Tesla's polyphase system, described by Mr. Anderson, as the **"most tremendous event in all engineering history."**

Editorialist Louis M. Bowler, according to the TESLIAN, answers the perplexing question why, in view of Tesla's important discoveries, he fell short of the comparative popularity won by Edison and Bell. Then in closing, he suggests: "It would be fitting for our engineering societies, in commemoration of the 100th anniversary of Nikola Tesla's birth (July 10, 1956), to acknowledge our debt to this strange and lonely genius who changed our world for the better."

This appears to be just what Mr. Anderson was waiting for. For now, in the same issue of his TESLIAN, he has prepared a form to petition Postmaster General Arthur E. Summerfield to issue a Tesla commemorative stamp next year.

[redacted] this form in duplicate in this issue and [redacted] Send [redacted] petition.

ION CONTAINED
CLASSIFIED
BY SP4 Jones

INDEXED-59
100 2237 A
NOT RECORDED
138 JUL 11 1955

ICAN SRBOBRAN
29, 1955
sburgh, Pennsylvania

Office Memorandum • UNITED STATES GOVERNMENT

TO : L. V. BOARDMAN

DATE: June 29, 1955

FROM : A. H. BELMONT

ALL INFORMATION CONTAINED HEREIN IS UNCLASSIFIED DATE 7-2-80 BY SP4 JM/rtc

SUBJECT: NIKOLA TESLA
MISCELLANEOUS - INFORMATION CONCERNING (ESPIONAGE)

Tolson
Boardman
Nichols
Belmont
Harbo
Mohr
Parsons
Rosen
Tamm
Sizoo
Winterrowd
Tele. Room
Holloman
Gandy

Nikola Tesla, a native of Yugoslavia, was a famous electric inventor who died in New York City in 1943 where he had lived for many years. In attached letter to Bureau dated 6-25-55 Kenneth M. Swezey, Brooklyn, New York, advises he is gathering material to help in a nation-wide commemoration of Tesla's hundredth birth anniversary in 1956. Swezey relates he was present when Tesla's safe was opened by friends after his death and advises the contents were thereafter replaced and then impounded by the United States Alien Property Custodian. Later the safe was removed to Belgrade, Yugoslavia, to be installed in a Tesla Museum. Missing from Tesla's effects is a gold Edison medal he had been awarded. Swezey is seeking to locate the medal and has been advised by the Office of Alien Property (OAP) that OAP held none of Tesla's property. Swezey states he has heard the FBI assisted OAP in handling Tesla's effects while in storage, and accordingly, he asks whether Bureau could assist him in locating the Edison medal. Re FBI's assistance to OAP Swezey mentions that in the Tesla biography ("The Prodigal Genius" - 1944) by John O'Neill it was stated FBI broke into Tesla's safe the day he died (1-8-43 to protect contents from enemy hands). Swezey notes this same comment appears in article ("The Genius Who Walked Alone") by Alfred H. Sinks in the June, 1955, "Coronet." Swezey says he knows FBI did not do this [redacted] Bureau did not enter into Tesla safe matter upon Department's advice it was being handled by OAP. Bureau previously aware of comment in O'Neill's book.

(b)(7)(C)

[redacted]

In 1945 Sinks requested for his use as author data re Bureau's microfilm procedure. Was advised no such data available for publicati

Enclosure Letr 6-30-55
100-2237
cc - 1 - 65-47953
Ticklers - Mr. Bird
Mr. Belmont
Mr. Boardman
ETB:jaa
(5)

RECORDED - 97 100-2237-6

EX-104

6 JUL 7 1955

6 JUL 11 1955

37

Memorandum For Mr. Boardman

RECOMMENDATION:

That the attached letter be sent to Swezey advising Bureau did not participate in the handling of Tesla's effects and that the matter was handled by OAP. Therefore, Bureau unable to be of assistance; that no action be taken relative to Sinks' comment in "Coronet" article.

Tickler - M. Bird
Mr. Belmont
Mr. Boardman

June 30, 1955

RA
RA

ALL INFORMATION CONTAINED
HEREIN IS UNCLASSIFIED
DATE 2-2-80 BY SP4 Jrm/R

Mr. Kenneth M. Swezey
163 Milton Street
Brooklyn 23, New York

(Original)

Dear Mr. Swezey:

With reference to your letter of June 25, 1955, our files disclose the effects of Nikola Tesla were taken into custody after his death by the Office of Alien Property and not by this Bureau.

Since we did not participate in the handling of Mr. Tesla's effects, we are unable to supply the information you requested.

Sincerely yours,

J. Edgar Hoover

John Edgar Hoover
Director

COMM — FBI
JUN 30 1955
MAILED 25

100-2237-6X

RECORDED - 26
INDEXED - 26

EX-113

~~65-47153~~

64 JUL 1 1955

NOTE:

A cover memorandum from Belmont to Boardman was prepared by ETB:jaa on 6-29-55 in connection with this outgoing mail.

Bufiles contain no derogatory data re correspondent; reflect only that he was close friend and admirer of Tesla.

Tolson
Boardman
Nichols
Belmont
Harbo
Mohr
Parsons
Rosen
Tamm
Sizoo
Winterrowd
Tele. Room
Holloman
Gandy

[redacted]

64 JUL 8 1955

39

[redacted] (b)

August 1, 1955.

Mr. J. Edgar Hoover,
Federal Bureau of Investigation,
Washington, D.C.

Dear Mr. Hoover:

In his book, "Prodigal Genius", The Life of Nikola Tesla, Mr. Jo[illegible] J O'Neil says, on page 277, that the F.B.I. went to Tesla's hotel room, opened his steel safe and removed from it, the papers it contained.

Was there ever any publication of what these papers contained? I[illegible] so, could you inform me where I might obtain a copy of such publication?

If there was no publication of the Safe's content, after more tha[illegible] 12 years, would it be improper to publish them?

If there was no publication of the safe's content, but there were no particular secrets found there in, could you inform me where I might learn what the safe contained?

Any information on this matter will be appreciated.

Thank you for your trouble.

Sincerely,

[redacted]

(b)
(7)
(c)

ALL INFORMATION CONTAINED
HEREIN IS UNCLASSIFIED
DATE 7-2-83 BY SP4 Jam/rtc

EX-104

100-2237-6X1

~~65-47~~

RECORDED - 77

INDEXED - 77

2 AUG 12 1955

(b)
(7)
(c)

40

100-2237-6X1

~~65-47953-34~~

August 11, 1955

[redacted]

EX-104

[redacted]

ALL INFORMATION CONTAINED HEREIN IS UNCLASSIFIED DATE 7-2-80 BY [signature]

Dear [redacted]:

Your letter dated August 1, 1955, has been received, and in response to your inquiry, I would like to advise that our files reflect that the effects of Nikola Tesla were taken into custody after his death by the Office of Alien Property and not by this Bureau.

Since we did not participate in the handling of Mr. Tesla's effects, we are unable to supply the information you requested.

Sincerely yours,

John Edgar Hoover
Director

COMM-FBI AUG 11 1955 MAILED 19

NOTE: Bufiles reflect no record on correspondent. This type of reply utilized by Internal Security Division in answering similar inquiries on 6/30/55. (65-47953-33) Cover memo from Mr. Belmont to Mr. Boardman dated 6/29/55 set out background of this matter which concerned the death of Tesla, a famous electrical inventor. Bureau was not involved in this matter, and the opening of the safe mentioned was done by the Office of Alien Property.

Mr. Tolson
Mr. Boardman
Mr. Nichols
Mr. Belmont
Mr. Harbo
Mr. Mohr
Mr. Parsons
Mr. Rosen
Mr. Tamm
Miss Gandy

[redacted]

63 SEP 28 1955

[redacted]

AUG 18 1955

41

[redacted] (5

September 10., 1955.

Mr. John Edgar Hoover,
Federal Bureau Of Investigation,
Washington 25, D.C.

Dear Mr. Hoover:

Refering to my letter to you August first, 4x1 this year - your letter to me, August 11th., reletive to the matter of the papers of Mr. Nikola Tesla.

On August 26, I wrote the office of Alien Property regarding this matter, indicating that I had received the information from you that it was their department which had taken the Tesla Property into custody - not yours..

I have a letter from Mr. Henry G. Hilken - that Department - File Number HGH:N SM:elk 017-3566, in which I am told that office "never had custody, nor has vested, any property of Nikola Tesla".

As I began this matter with you - because it was stated in Mr. O'Neill's book that it was your department who opened Tesla's safe I am wondering if you have any further suggestions along lines I might follow to obtain some information in this regard?

Thank you for your time and trouble.

Sincerely,

[redacted] (b) (7) (c)

ALL INFORMATION CONTAINED
HEREIN IS UNCLASSIFIED
DATE 7-2-80 BY SP4 Jrm/rte

EX-PROC
SEP 19 1955

RECORDED-12 100-2237-6X2

EX-107 (b) (7) (c)

17 SEP 20

[redacted]

42

RECORDED
INDEXED-12

100-2237-6X2

EX-107

September 20, 1955

(b)(7)(C)

ALL INFORMATION CONTAINED
HEREIN IS UNCLASSIFIED
DATE 7-2-80 BY SP4 jem/rtc

Dear [redacted]:

I have received your letter dated September 10, 1955.

As you were advised by my letter of August 11, 1955, this Bureau was not connected in any respect with the acquisition or custody of the effects of Nikola Tesla, and it is therefore not possible to furnish you any additional information.

Sincerely yours,

John Edgar Hoover
Director

(b)(7)(C)

NOTE: By letter 8-11-55, we referred [redacted] to the Office of Alien Property, which Office was reported to have assumed custody of Tesla's effects subsequent to his dea (65-47953-6)

(3)

(b)(7)(C)

COMM - FBI
SEP 20 1955
MAILED 30

SEP 28 1955

43

L INFORMATION CONTAINED
HEREIN IS UNCLASSIFIED
DATE 7-3-80 BY SP4 Jan/etc

RECOGNITION FOR TESLA

(Please fill out this form and mail to the address appearing below.)

THE TESLA SOCIETY
University Station, Box 135
Minneapolis 14, Minnesota

(date)

(city & state)

Hon. Arthur E. Summerfield
Postmaster General, Postoffice Dept.
Washington, D. C.

Dear Sir:

Nikola Tesla's contributions to science, industry, and to his adopted country have greatly inspired engineering progress. His electrical systems helped create an American conomy of world pre-eminence.

We respectfully request issuance of a 1956 commemorative stamp to be issued on the centennial of Tesla's birth (1856-1943).

(signed) _____

AMERICAN SRBOBRAN
June 29, 1955
Pittsburgh, Pennsylvani

Ex. - 10€
INDEXED-59

100 2237-A
NOT RECORDED
138 JUL 11 1955

6C JUL 13 1955

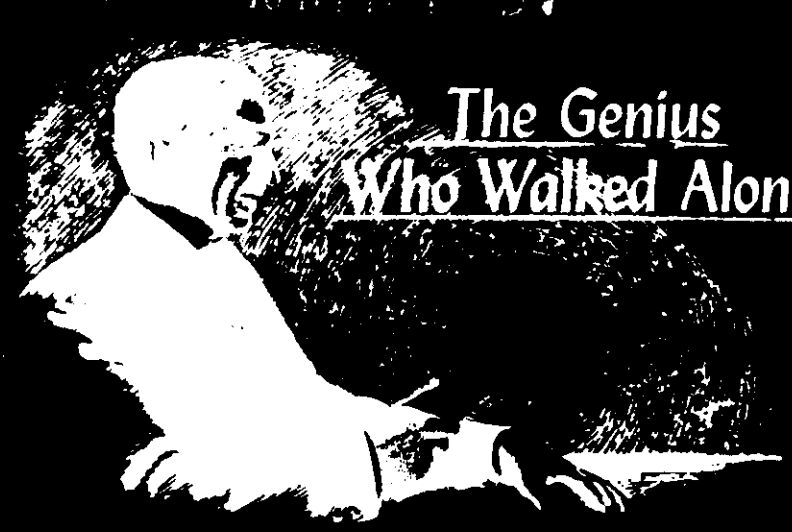

The Genius Who Walked Alone

by ALFRED H. SINKS

Nikola Tesla was a great inventor—and also a prophet without honor

COUNTER-ESPIONAGE WHEELS started turning early on the morning of January 8, 1943. Anxious FBI agents slipped into a room in the Hotel New Yorker where, late the night before, a chambermaid had discovered the body of Nikola Tesla, dead at 86, regarded by many as the greatest scientific genius of his time.

For years, Tesla had been making scientific predictions so fantastic as to be literally out of this world. Of late he had been working—or so he said—on revolutionary new weapons powerful enough to annihilate armies at a single blow.

There was only one Tesla, and the story might—incredible as it sounded—be true. The old man's safe might hold these secrets, and the Government could not risk the chance of enemy spies getting there first.

Half hoping to find something which would bring a sudden and decisive end to World War II, the G-men broke open the dead man's strong box. If anything of importance was discovered, it has never been revealed.

Yet, their quick action was justified, for you could never be sure about Tesla, one of the strangest men who ever lived. Most people took him with a grain of salt, yet no serious scientist dared shrug away his claims as nonsense. Not after Thomas Edison tried it and Tesla proved him wrong.

The world's leading physicists and electrical engineers had to eat crow back in the 1880s when Tesla solved a problem they had thought impossible. That one accomplishment—the invention of a practical alternating-current motor and gen-

45

[redacted]

Mr. Felt
Mr. Baker
Mr. Callahan
Mr. Cleveland
Mr. Conrad
Mr. Gebhardt
Mr. Jenkins
Mr. Marshall
Mr. Miller E.S.
Mr. Sovars
Mr. Thompson
Mr. Walters
Tele. Room
Mr. Boise
Mr. Bowers
Mr. Fenwick
Mr. Herrington
Mr. Conroy
Mr. Mintz
Mr. Eardley
Mrs. Hogan

(b)
(7)
(C)

United States Senate

June 26, 1973

Respectfully referred to:

Congressional Liaison
Federal Bureau of Investigation
Department of Justice
Washington, D. C. 20530

Because of the desire of this office to be responsive to all inquiries and communications, your consideration of the attached is requested. Your findings and views, in duplicate form, along with return of the enclosure, will be appreciated by

Senator [redacted]

ATTN: U.S.S[redacted]

(b)
(7)
(C)

Form #2

ST-105

100-2237-24

7 JUN 29 1973

ENCLOSURE

[redacted]

(b)
(7)
(C)

CORR[redacted]ENCE

46

[redacted]

20 June 1973

(b)(7)(C)

Dear Senator [redacted]

Though in Alaska temporarily working on a military contract, I still consider myself an [redacted] resident, hence it is to you that I write.

During my days at [redacted] College, I became interested in a fascinating Czech physicist, Nicolai Tesla. Proffessor Tesla emmigrated to this country in the twenties, I believe, and did some of his most original work here. Tesla had a peculiar bent of mind, in his younger days he was often called a mad scientist, and did not publish extensively when he came to the US. Most of the extant primary material is in untranslated Czech. Tesla was, however, an extensive note taker. It thought it strange that upon his death, none of his notes from his American period ever appeared. Upon discussing this with a friend, I was informed that all of Mr. Tesla's notes were confiscated by the FBI. I cannot conceive how these notes on physics and electricity can in any way endanger the national safety. It seems that Mr. Hoover in his zeal, had confiscated material whose only sin was a radical approach to science. There is indication that much of Professor Tesla's later work concerned a very novel approach to time theory. Needless to say, it has been radical approaches to physics that have been our greatest scientific advances in modern times, viz. Einstein, Heisenberg, et al.

I was wondering if your office might be able to determine if these papers are still extant, and if so, see to it that the public has access to them. It would be a shame to see all of Nicolai Teslas work to have been in vain.

Please excuse my typing, in all the thousands of words I typed trying to get a liberal education, I never did master the typewriter.

Sincerely yours,

[redacted]

(b)(7)(C)

100-2237-24

ENCLOSURE

47

July 5, 1973

ST-105

REC-15

100-2237-24

ALL INFORMATION CONTAINED HEREIN IS UNCLASSIFIED DATE 7-8-80 BY SP2 jmp/ste

Honorable [redacted]
United States Senate
Washington, D. C. 20510

(b)(7)(C)

Dear Senator [redacted]:

This is to acknowledge receipt of your communication dated June 26th enclosing a letter from your constituent, [redacted] who is temporarily employed in Alaska.

In response to [redacted] inquiry, central files of the Federal Bureau of Investigation indicate that the effects of Dr. Nikola Tesla were impounded after his death by the Office of Alien Property of the Department of Justice and not by the FBI. Since we did not participate in the handling of Dr. Tesla's belongings, I am unable to furnish the information you desire.

I am returning your enclosure as you requested.

Sincerely yours,

William D. Ruckelshaus

William D. Ruckelshaus
Acting Director

MAILED 24
JUL 5 - 1973
FBI

Enclosure

1 - Portland - Enclosures (2)
1 - Congressional Services Office - Enclosures (2)
NOTE: Bufiles reveal prior cordial correspondence with Senator [redacted] is not identifiable in Bufile [redacted] Bufile 100-2237 reflects that Dr. Tesla was a world-famous electrical inventor, and at the time of his death, all of his personal papers and effects were believed dangerous to the count security if they fell into unauthorized hands. The book, "Prodig Genius," by John J. O'Neill, alleged that the FBI took over a ce safe and opened it, appropriating his property. Bufiles clearl indicate that it was the Office of Alien Property of the Depar which did so, and the above reply is forwarded in answer to re inquiries.

(6)(7)

Mr. Felt
Mr. Baker
Mr. Callahan
Mr. Cleveland
Mr. Conrad
Mr. Gebhardt
Mr. Jenkins
Mr. Marshall
Mr. Miller, E.S.
Mr. Soyars
Mr. Thompson
Mr. Walters
Tele. Room
Mr. Baise
Mr. Barnes
Mr. Bowers
Mr. Herington
Mr. Conmy
Mr. Mintz
Mr. Eardley
Mrs. Hogan

54 JUL 13 1973

[redacted] TELETYPE UNIT

(b)(7)(C)

48

(b) (7) (c) [redacted]

FEDERAL BUREAU OF INVESTIGATION
Washington, D.C.

12 July 1973

ALL INFORMATION CONTAINED
HEREIN IS UNCLASSIFIED
DATE 7-3-80 BY SP4 Jam/rtc

Dear Sirs,

It has come to my attention that upon the death of Mr. Nikola Tesla, the founder of modern A.C. power systems, and the original inventor of radio, and innumerable other devices, operatives of the F.B.I. opened his safe and removed his papers on 7 January 1943, within a few hours of his demise. Also, all records of his work have been siezed and held by our government since his death. I would like to know WHY, and also to be informed as to who was, and is responsible for keeping the lid on these records. I would also like to know where they are now.

I do hope you enjoy a good laugh over the aparent naievity of such a request as this, but it is a rather strange situation to exist in a country like this, that a man of such genius and achievement could be systematically cut out of history books, and that the facts about his works could be concealed to the degree they have been. I wish to obtain access to all these old records which have been concealed for thirty years. I would appreciate your kind consideration and attention to this matter and any assistence you may care to give.

EX-105

100-2237-25

9 JUL 20 1973

C-60

[redacted]

[redacted]

(b) (7) (c)

ack 7-19-73

CORRESPO

49

July 19, 1973

REC-60/100-2237-25

[redacted]

(b)(7)(c)

EX-105

ALL INFORMATION CONTAINED HEREIN IS UNCLASSIFIED DATE 7-3-80 BY SP4 Jm/rt

Dear [redacted]

Your letter was received on July 16th. In response to your inquiry, the effects of Dr. Nikola Tesla were impounded, after his death, by the Office of Alien Property of the Department of Justice and not by the FBI. Since we did not participate in the handling of Dr. Tesla's belongings, I am unable to furnish the information you desire. A copy of your communication and of this reply have been referred to the Department of Justice.

MAILED 4
JUL 19 1973
FBI

Sincerely yours,

C. M. Kelley

Clarence M. Kelley
Director

NOTE: Bufiles contain no record of correspondent. (Bufile 100-223 reflects that Dr. Tesla was a world-famous electrical inventor, and at the time of his death, all of his personal papers and effects were believed dangerous to the country's security if they fell into unauthorized hands. The book, "Prodigal Genius," by John J. O'Neil alleged that the FBI took over a certain safe and opened it, appropriating his property. Bufiles clearly indicate that it was the Office of Alien Property of the Department which did so, and the above reply is forwarded in answer to related inquiries. Copy of letter referred to the Assistant Attorney General, Civil Divisio of the Department.)

Assoc. Dir. ____
Asst. Dir.:
Admin. ____
Comp. Syst. ____
Files & Com. ____
Gen. Inv. ____
Ident. ____
Inspection ____
Intell. ____
Laboratory ____
Plan. & Eval. ____
Spec. Inv. ____
Training ____
Legal Coun. ____
Cong. Serv. ____
Corr. & Crm. Research ____
Press Off. ____
Telephone Rm. ____
Director Sec'y ____

[redacted]

MAIL ROOM ☐ TELETYPE UNIT ☐

(6)
(7)
(c)

50

[redacted]

Clarence M. Kelley
Director
Federal Bureau of Investigation
Washington D.C. 20535

ALL INFORMATION CONTAINED
HEREIN IS UNCLASSIFIED
DATE 7-3-80 BY SP4 Jam/rtc

Dear Mr. Kelley,

Thank you for your letter of the 19th of July. I appreciate the information about the Office of Alien Property and its connection with the impounding of the effects of Dr. Nikola Tesla. In my letter of the 16th I did not mean to imply the FBI had impounded his effects, as I was aware of the O.A.P.s general part in the affair. The fact remains that to the best of my knowledge, it WAS agents of the FBI who did in fact break into his safe only hours after his death, and did remove the papers therein. Now, in so far as the Bureau was connected, I wish to understand that extent. I do appreciate your refering my communication to the appropriate persons in the Justice Department, but perhaps you could see that the above mentioned connection of the Bureau could be further looked into. I am curious as to who asked the Bureau to perform such an act, whether is was a person in the O.A.P. or what, and on what grounds they were carried out, and to whom they were responsible. Also, to what person were the perloined papers delivered? Names of the agents involved would be appreciated. As to what happened to any other effects of his, that is probably a question more ably answered by the O.A.P., yet if Bureau agents participated once they may have done so on other occasions. If the persons who did open the safe were NOT FBI agents, then we are faced with the fact that persons aparently posed as Bureau operatives, an even more interesting situation. Perhaps this whets your own curiosity a[redacted]

ST 108
REC 68 100-2237-26
AUG 1973

Da

iml
ack 8-2-73
[redacted]

CORRE[redacted]CE

51

this affair, [redacted] interest. Are you aware that before the year 1900 he was able to transmit thousands of watts of electric power to any point on the globe WITHOUT WIRES. This and other feats would make him a prime target for vested interest groups, notably the J.P.Morgan combine with whom he had connections. I am aware of the well earned tradition of the Bureau of NOT serving any master but the common good, so again we have a curious point if indeed strings were pulled. Quite frankly, it looks as if someone went to a lot of trouble to see that his ideas were not broadly available to ensure the stability of their own electric technological apple cart financially, at the expense of unguessable benefits to to humanity as a whole. How would you like to be able to draw unlimited power out of the air to run say a lightbulb with ONE wire? He did it, and much more. My sincere thanks for your thought and attentions to these matters.

Very best wishes,

(b)
(7)
(C)

REC 68 / 00-2237-26

August 2, 1973

ST-102

[redacted]

(b)(7)(C)

ALL INFORMATION CONTAINED HEREIN IS UNCLASSIFIED DATE 2-3-80 BY SP4 Jpm/rte

Dear [redacted]:

Your letter, which was received on July 30th, has been reviewed and I would like to point out that FBI Agents were not involved in removal of papers from the safe of Dr. Nikola Tesla, nor did we at any time have custody of his property.

I realize there have been some written accounts that our Agents acquired Dr. Tesla's belongings; however, these accounts are simply not true. You can be assured we were absolutely not responsible and there was no impersonation involved.

Sincerely yours,

C. M. Kelley

Clarence M. Kelley
Director

NOTE: Correspondent had written in mid-July and asked about the effects of Dr. Tesla and he was advised that the Office of Alien Property had participated in removing his effects from his hotel room. A copy of his communication was referred to the Department of Justice. Bufiles indicate clearly that after Dr. Tesla's death some relatives opened the safe in his hotel room with the help of a locksmith and, thereafter, the Office of Alien Property confiscated all of his belongings. Bufile 100-2237 mentions that the FBI was advised of the existence of this property; however, inasmuch as the Office of Alien Property was handling Dr. Tesla's effects, the Bureau had absolutely no hand in the entire matter.

AUG 2 - 1973

Assoc. Dir. ____
Asst. Dir.:
Admin. ____
Comp. Syst. ____
Files & Com. ____
Gen. Inv. ____
Ident. ____
Inspection ____
Intell. ____
Laboratory ____
Plan. & Eval. ____
Spec. Inv. ____
Training ____
Legal Coun. ____
Cong. Serv. ____
Corr. & Crm. Research ____
Press Off. ____
Telephone Rm. ____
Director Sec'y ____

[redacted] (3)

(b)(7)(C)

MAIL ROOM ☐ TELETYPE UNIT ☐

AUG 10 1973

53

June 9, 1975

Federal Bureau of Investigation
U.S. Department of Justice
Washington D.C. 20535

Sirs:

We recently contacted the San Francisco FBI office and a review of their files revealed information concerning the scientist Nikola Tesla or his papers which we understand to have been impounded.

If you could make a thorough investigation of all files and materials available to you, we would greatly appreciate the correspondence of any information that might be discovered.

Thank you,

ALL INFORMATION CONTAINED HEREIN IS UNCLASSIFIED DATE 7-3-8 BY SP4 Jam/rtc

[redacted]

100-2237-26X

REC-36

(b)
(7)
(c)

[redacted]

54

July 7, 1975

~~62-115530-4553~~

100-2237-26X

ALL INFORMATION CONTAINED HEREIN IS UNCLASSIFIED DATE 2-3-80 BY [illegible]

[redacted] (C)

[redacted] (b)(7)(C)

Dear [redacted]

This will acknowledge your letter of June 9th.

In response to your inquiry, the papers of Dr. Nikola Tesla were impounded, after his death, by the Office of Alien Property of the Department of Justice.

Sincerely yours,

C. M. Kelley

Clarence M. Kelley
Director

~~1 - The Deputy Attorney General - Enclosure~~
~~Attention: Susan M. Hauser~~

NOTE: Bufile 100-2237 indicates that Dr. Tesla was a world famous electrical inventor, and at the time of his death his personal papers and effects were impounded by Office of Alien Property for national security reasons. Since Tesla's death in 1943 the Bureau has received numerous inquiries about the disposition of his technical papers. The above reply is forwarded in answer to these inquiries. Bufiles contain no information identifiable with requesters.

Assoc. Dir. ____
Dep. AD Adm. ____
Dep. AD Inv. ____
Asst. Dir.:
Admin. ____
Comp. Syst. ____
Ext. Affairs ____
Files & Com. ____
Gen. Inv. ____
Ident. ____
Inspection ____
Intell. ____
Laboratory ____
Plan. & Evol. ____
Spec. Inv. ____
Training ____
Legal Coun. ____
Rm. ____

[redacted] (4)

[redacted] (b)(7)(E)

MAILED 7
JUL 7 1975
FBI

55

GPO 954-5

[redacted] (b)(7)(C)

13 November 1975

Mr. Clarence Kelley
Director
F.B.I.
Washington, D.C. 20535

ALL INFORMATION CONTAINED HEREIN IS UNCLASSIFIED DATE 2-3-80 BY SP4 Jm/rte

Dear Mr. Kelley:

In reply to the letter of 10 November from your office:

I restate that I was not asking about the existence or non-existence of any investigative information on Nikola Tesla, but on his technical papers seized on his death in 1943 and reported in the papers of that time.

The reason given in the reply from your office, the second paragraph, as to why I cannot get any information on Tesla's papers makes no sense in itself or in reply to my inquiry. The third paragraph stating the conditions under which a search will be made is a clear bureaucratic circumvention of the Freedom of Information Act and an excuse on the part of the individual handling my request for doing any work beyond the drafting of a letter. Will it be the decision of your office to let the situation stand like this?

As I stated in my first letter, I am following up the Tesla data for a magazine article. I am tempted to have your reply of the 10th printed and run nationally as an example of how bureaucratic manoeuvring is used to get around the FOIA. Does the bureau need more of this type of publicity?

It is disheartening to see an agency entrusted to uphold the law using its resources to mock the law.

Sincerely,

[redacted] (b)(7)(C)

a.k. 11-26-75

[redacted]

21 NOV 1

[redacted]

56

REC-57 EX 103
100-2237-27

November 26, 1975

[redacted]

(6)
(7)
(C)

ALL INFORMATION CONTAINED
HEREIN IS UNCLASSIFIED
DATE 2-3-00 BY SP4 Jm/rtc

Dear [redacted]:

This will acknowledge receipt of your letter to the Bureau on November 14th.

In response to your inquiry, the papers of Dr. Nikola Tesla were impounded, after his death, by the Office of Alien Property of the Department of Justice.

Sincerely yours,

C. M. Kelley

Clarence M. Kelley
Director

1 - The Deputy Attorney General - Enclosure
Attention: Susan M. Hauser

NOTE: Bufile 100-2237 indicates that Dr. Tesla was a World famous electrical inventor, and at the time of his death his personal papers and effects were impounded by Office of Alien Property for National Security reasons. Since Tesla's death in 1943 the Bureau has received numerous inquiries about the disposition of his technical papers. The above reply is forwarded in answer to these inquiries.

[redacted] (5)

(6)
(7)
(C)

Assoc. Dir. ____
Dep. AD Adm. ____
Dep. AD Inv. ____
Asst. Dir.:
Admin. ____
Comp. Syst. ____
Ext. Affairs ____
Files & Com. ____
Gen. Inv. ____
Ident. ____
Inspection ____
Intell. ____
Laboratory ____
Plan. & Eval. ____
Spec. Inv. ____
Training ____
Legal Coun. ____
Telephone Rm. ____
Director Sec'y ____

MAIL ROOM ☐ TELETYPE UNIT ☐

DEC 24 1975

[redacted]

GPO : 1975 O - 569-920

57

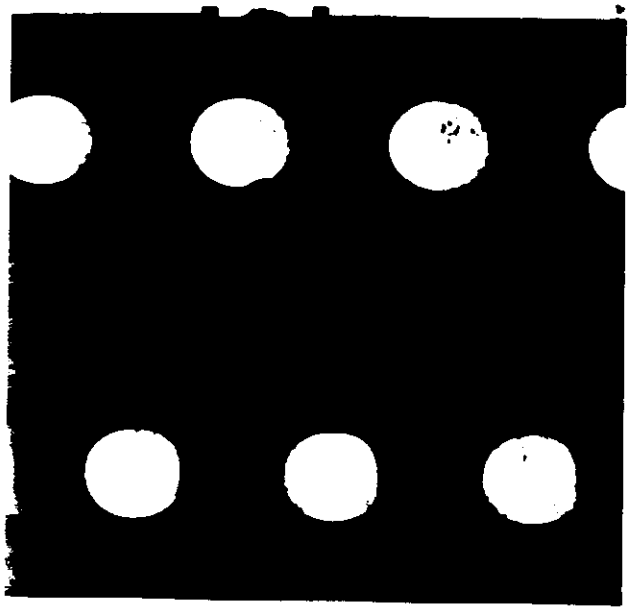

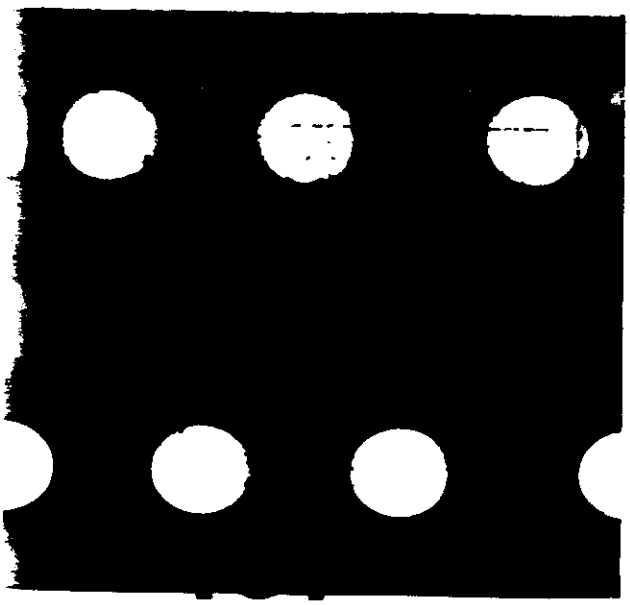

ROUTING AND TRANSMITTAL SLIP

1 TO (Name, office symbol or location) Alan McCreight Rm. 5435 - JEH	INITIALS DATE	ACTION CIRCULATE COORDINATION
2	INITIALS DATE	FILE INFORMATION
3	INITIALS DATE	NOTE AND RETURN PER CONVERSATION
4	INITIALS DATE	SEE ME SIGNATURE

REMARKS

FOIA - [redacted] (b)(7)(c)

Do NOT use this form as a RECORD of approvals, concurrences, disapprovals, clearances, and similar actions

FROM (Name, office symbol or location) Susan M. Hauser	DATE 10/21/75 PHONE 2145

OPTIONAL FORM 41
AUGUST 1967
GSA FPMR (41CFR) 100-11.206

+48—16—81894-1 552-103 GPO 5041-101

58

[redacted]

17 October 1975

Freedom of Information Act Request

Deputy Attorney General
U.S. Department of Justice
Washington, D.C. 20535

[redacted]

Gentlemen:

I am writing an article for a magazine on early twentieth century inventors and want to obtain information on some papers of Nikola Tesla that were seized by the FBI on his death in 1943.

Tesla invented a number of electrical devices and because of the war and because Tesla was born a Yugoslavian national, it was probably considered a measure of preventitive safety to hold in safekeeping papers that might have any bearing on national security.

I would like to find out: 1) if the FBI still has the papers; 2) if they do have the papers, what must be done to see them; 3) if they do not have the papers, who does have them or what happened to them?

100-2237-28

I would be very grateful for your help with this.

REC-2

5 OCT 24 1975

Sincerely,

[redacted]

(6)
(7)
(C)

[redacted]

ALL INFORMATION CONTAINED
HEREIN IS UNCLASSIFIED
DATE 1-3-80 BY SP4 Jmplete

[redacted]

59

erator put Tesla's name among the world's top scientists.

From his invention sprang the industrial age we live in. For without his alternating current, there would be no mass production of automobiles, aircraft, refrigerators; no great water-power dams and generating plants, no Diesel-electric trains; we could not have developed radio, television or atomic power.

The *direct* current that Edison worked with—a feeble force at best—could be sent no more than a couple of miles over wires because its power leaked away rapidly into the surrounding atmosphere. Lights near the power station might burn brightly and steadily, but those near the end of the line would be dim and fluttering.

Tesla sold his basic alternating-current patents in 1888, for a million dollars down. By 1895, the first great power station at Niagara Falls had been built, and by the end of 1896, two more Tesla generators had been installed. Within a few years, the pace of life over half the earth had changed from a crawl to a fast gallop—and it has been gathering speed ever since.

THE MAN who, by his brilliant idea of a "rotating magnetic field," changed the face of the earth and the living habits of the human race was a Croat, born in 1857 in Smiljan, a village in what is now Yugoslavia, but was then part of the old Austro-Hungarian Empire.

When he was about six, Nikola Tesla's father, the village priest, was transferred to a larger parish in the city of Gospic. There, the lad grew up and perfected his earliest "inventions." Of these, his favorite was an "engine" powered by 16 June bugs, harnessed in sets of four to spokes which radiated from the drive shaft.

Nikola was a frail lad, often ill; and he nearly went blind from too much reading. He read everything he could get his hands on, not only science but also religion, philosophy, history, literature. By the time he finished high school, he was fluent in French, German and Italian, as well as his native Serbo-Croat.

He got his schooling—the best his doting family could afford—at Gospic, Carlstadt, Gratz, the University of Prague and, finally, at Budapest. At the University, he saw his first electric motor, a new type direct-current affair whose brushes and commutators sent out showers of crackling blue sparks.

"If we got rid of those brushes and commutators, with all that noise and loss of energy, we'd have a much better motor," Nikola told his professor. "Perhaps it might be done with an alternating current."

"Nonsense!" barked the professor. "An alternating current would never run anything. You're not the brilliant student I thought you were. Forget it!"

But Tesla could not forget. The teacher's ridicule only stamped the idea indelibly on his brain. It became an obsession, a passion—how to make an alternating current drive a motor. In every idle moment, wherever he went, he wrestled with this problem.

Tesla's mind had an unusual twist. Almost from infancy, he had been able to see things in his mind's eye so vividly—and in such minute detail—that often he had trouble telling the real from the imaginary.

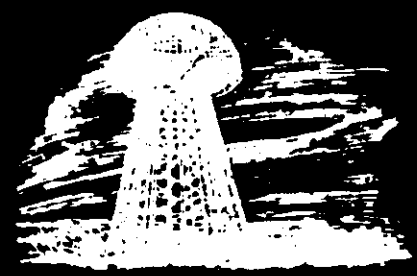

Where the average engineer or inventor would reach instinctively for drawing board, paper and pencil, Tesla would simply switch on that uncanny magic lantern inside his brain. He would fix a mental image there. Then he would alter this detail or that, discard one plan, try another, without ever putting a line on paper.

Years later - from these mental images alone - he could give his workmen exact instructions on how to build each part of a new device, though it was unlike anything ever seen before.

Thus, needing no drafting room and few laboratory conveniences to work on an idea, Tesla could use every spare minute that he had to test and revise his theory of alternating current.

His first real job was manager of a newly organized telephone company in Budapest. But telephone circuits were dull stuff compared with the challenge of that one big idea. He moved to Paris where he became a kind of general trouble-shooter for the Continental Edison Company.

His brain was still chipping away at his big problem, but the trouble was, he couldn't share it with trained men who might have helped him work it out. For whenever he mentioned alternating current to an electrical engineer, the man would look at him as though he were crazy.

But then came the moment when he knew he had solved it. He was walking with a friend in the Bois de Boulogne. Suddenly, he stopped short and began jabbing with his cane at some invisible object in the air.

"See, it works!" he shouted. "It is the rotating magnetic field which causes the armature to turn. It pulls the magnets around with it, causing the shaft to revolve. As I oscillate this switch, causing the current to flow first in one direction, then the other . . ."

Never mind what his friend thought. Tesla had the answer.

At the office, his colleagues scoffed or looked blank. But the manager, listening to the outpourings of scientific jargon, suddenly thought of his boss back in the United States. If there *were* some truth in what the Croat said, surely the famous electrical wizard would be smart enough to see it.

So he gave Tesla a letter of introduction to Thomas Edison and urged him to try his luck in America. Thus, Tesla, now 27, arrived in New York. He was handsome, over six-feet-two, with a distinguished head and deep-set blue eyes. His Slavic face was broad across the cheekbones, his dark hair thick, his chin sharply pointed. Of worldly goods, he had the clothes on his back, four cents in cash, the letter to Edison, and the idea which was to change the world.

Edison thought less than nothing of the idea. It seemed so preposterous that he wouldn't even listen

61

and, of course, Tesla had no drawings with which to try to convince him. But Edison gave him a job, for he had excellent training as an engineer and Edison needed trained men.

Busy with routine electrical work, Tesla waited nearly three years for a chance to turn his mental image into an actual motor he could show to others. In 1887, he was able to borrow enough money to start his own laboratory, and the following year the alternating-current motor and generator were practical realities on a laboratory scale though much practical engineering would still be needed to fit them to commercial use.

George Westinghouse, another inventor, was the first to see their value. He bought the patents and gave Tesla a job as engineer in his Pittsburgh factory.

But Tesla couldn't get along with the other Westinghouse engineers. From his standpoint, the alternating-current job was done. Even "schoolboys" could now iron out the few remaining kinks. Meantime, his brain had started to hatch even bigger dreams. He went back to his laboratory in New York.

"Be alone," he once told a science writer. "That's the secret of invention. Be alone—that's where great ideas are born."

AND HE WAS. In the years that followed, Tesla had many admiring acquaintances, but seldom a friend. After his mother, no woman ever entered his personal life.

His manner toward others was cordial but reserved, distant. His words were as if uttered by some god, sitting on an Olympus high above the rest of humanity. Backed by his fame, those words made a tremendous impression.

He lectured at every scientific center in this country and in all the important capitals abroad. Things which, as yet, existed only inside that amazing brain of his were so real to him, he made them real to his listeners.

He described radar and radio broadcasting and even television. He advocated electro-therapy. He foresaw a day when man would control nature in every respect—even the weather—when machines of all kinds, and the power to run them, would be so cheap that poverty would vanish from the world.

Without wanting to be, Tesla was a superb actor. After listening to him and seeing his wonders, audiences were ready to believe nearly anything.

Tesla reasoned that you could sell electric power cheap if you could do away with the millions of poles and insulators, the millions of tons of copper wire used to transmit it from place to place. He thought he knew how to do it—and J. P. Morgan backed him with $300,000.

On Long Island, Tesla built a huge power plant with a 154-foot steel-ribbed tower topped by an enormous mushroom-shaped copper dome. From this dome he planned to bombard the earth's crust with millions of volts of electric energy. The power so added to the earth's permanent charge could be drained off at some other point—*any* point—on the earth's surface. Thus, it would be possible for electric power to be sent anywhere without conduits, poles or wires. Or so he thought, until he tried it.

62

In November 1928, Tesla announced that he could abolish war.

The inventor had designed a small, inexpensive, radio-controlled boat which, through its supposed ability to destroy the biggest battleships, would make great navies useless. Not many years later, he was talking of another super-weapon: a "death ray" which would annihilate whole armies.

Yet Tesla never suspected that the real super-weapon of the future would come from atomic fission. For Einstein's basic notion which led to smashing the atom, he had only ridicule. Alone in his middle age, he had fallen out of step with the world's great thinker.

Not all Tesla's later inventions were fantastic. Some, like his induction coils and oscillators, and pioneer work on "tuned" electrical circuits, were highly important.

Though he never succeeded in transmitting power without wires on a big scale, he *did* prove that a single wire is enough. And some of his brilliant prophecies inspired the more plodding scientists to work out the practical problems of induction heating, radio-telephone, radar and many other electronic marvels of today.

But as he grew older, he withdrew further and further within himself. His strange prophecies sounded like a voice from another planet. For companionship now, the old man had only his dreams, and they grew stranger with the years. Completely alone at last, a stooped, gaunt figure with thin, silvery hair, he used to slip from his hotel room, buy a bag of birdseed and trudge slowly over to a park where hundreds of pigeons awaited him. These were his friends. They needed him, though the world did not.

When he grew too ill to go out, each day he sent a Western Union messenger to the park. After feeding the birds, the boy was instructed to see if any of them seemed sick. If so, he was to bring them back to Tesla's room where the inventor would nurse them gently back to health.

Perhaps this sad little labor of love showed that the man who changed the world had, at last, discovered a great truth. Perhaps he knew now that the greatest power for good lies not in lonely thought but in a human heart pulsating like his own "tuned circuits"—in tune with the hearts of his fellowmen. Or did he ever know? You could never be sure about Tesla.

Winnie Wit

IN THE EARLY 1920s, when Winston Churchill had offended both his own supporters and the political opposition, the late George Bernard Shaw wrote him: "I enclose two vouchers for the première of my new play, for yourself and a friend—if any."

Back to the playwright promptly came the theater checks with this note from "Winnie": "I regret I am unable to attend the première of your new play. Please send me two vouchers for the second performance—if any."

—[illegible]

RECOGNITION FOR TESLA

At long last Serbians—American and Canadian—have acted to honor the memory and achievements of one of Serbia's greatest sons.

For the world-wide Centennial celebration of Dr. Nikola Tesla's birth next year, Serbs on this Continent plan to erect a bust statue of the electrical genius to stand before the entrance of the Monastery at Libertyville, Ill.

Steps looking towards that end were taken at the recent SNF convention following the reading of a letter by President Mike Radakovich from His Grace, Bishop Nicolai. As the universally-renowned churchman stated, erection of a suitable monument, by Serbians, would forever remind other Serbs of the honor and glory of Dr. Nikola Tesla . . . . And that he was a SERBIAN, son of a SERBIAN ORTHODOX clergyman, born in the SERBIAN SELO of Smiljan in Lika.

Further, His Grace urged that the undertaking be a joint one and representative of ALL the Serbian organizations in the United States and Canada. He naturally looked to the SNF for leadership, and the greatest monetary contribution. But he also besought the help of the Serbian Nat'l Defense and the Jedinstvo beneficial society.

The Convention voted $1000 for the project and a hand collection was taken up among the delegates and guests, kinsmen Milos Konjevich of Joliet, Ill., giving $200. It is probable that the balance of the needed $3000 will be raised thru public good-will offerings and via cash gifts of the other two organizations mentioned.

And after a suitable bust has been erected for Dr. Tesla, Bishop Nicolai suggested a similar-like monument honor the memory of Dr. Mihailo Pupin, also a world-renowned scientist, author and educator.

This is a subject near and dear to all good Serbian hearts

ALL INFORMATION CONTAINED
HEREIN IS UNCLASSIFIED
DATE 7-3-80 BY [illegible]

INDEXED - 36
100 2237 A
NOT RECORDED
12 OCT 7 1955

"AMERICAN SRBOBRAN"
September 28, 1955
Pittsburgh, Pa.

EX-113
7531
60 OCT 7 1955
100-2237
64

INFORMATION CONTAINED
UNCLASSIFIED
DATE 7-3-80 BY SP4 Jm/rtc

100-2237

SNF Opens Drive for Tesla Memorial at Libertyville—

$2000 PUBLIC AID SOUGHT

PITTSBURGH, PA. — The Serb Nat'l Federation Executive Board has acted quickly to implement a Convention decision to honor the memory of the illustrious Dr. Nikola Tesla.

At its first meeting of October 8, the Board drafted a resolution calling on all SNF members and good Serbians to help finance a memorial project for the late scientist-inventor genius.

This would stand before the entrance of the Monastery in Libertyville, Ill.

Cost of the contemplated project, which would clarion to the world that Dr. Tesla was a Serbian, is estimated at $3000. The Convention voted $1000 to the cause and a hand collection among 122 delegates yielded several hundred dollars more.

Kinsman Milos Konjevich of Joliet, Ill., gave $200.

Public Aid Sought

Balance of the needed sum is now being sought thru good-will offerings of the general Serbian populace in the United States and Canada.

A fund, similar to the one being conducted to help defray mortgage expenses on Shadeland, has been established.

It is hoped to raise the necessary monies and complete the project in time for the worldwide Centennial celebration for the genius next year.

Spearheading the movement for recognition, especially among American elements, is the TESLA SOCIETY, founded by scientist-engineer Leland Anderson, a fanatical admirer of the late Dr. Nikola Tesla.

Mr. Anderson right now is conducting a search for a famous portrait of the Serbian electrical wizard done at the turn of the century in New York.

Seek Missing Portrait

In his current TESLAIAN publication, Mr. Anderson revealed the work, by Princess Vilma Lwoff-Parlaghy, is missing.

Reviewing developments, Mr. Anderson wrote:

"On March 1, 1916, the Princess gave a reception in her new studio in New York especially to exhibit her latest protrait of Nikola Tesla. An article in the NEW YORK TIMES for March 2, 1916, stated—

" 'It was one of the beliefs of Mr. Tesla that there was something unlucky about posing for a picture and he never sat to any before he entered the studio of the Princess. The room which she had chosen did not have a skylight in it and the much desired North exposure was missing.

" 'At the suggestion of Mr. Tesla, a cluster of powerful incandescents was put up in the corner of the apartment and the rays, filtered thru blue glass, were just the right quality. The portrait was shown under the same illumination.

At Ease for Sitting

" 'Mr. Tesla, having solved the problem of the artifical sun, fell to thinking about other parts of the universe, and there he sat oblivious to his surroundings.

" 'The painter was able to produce a likeness in which there is no evidence that the subject was conscious that anybody was watching him, much less studying his features from the other side of the easel.

" 'Among those who attended the reception were Mrs. C. B. Alexander, Henry P. Davison, the Countless de Rittenburg and Mrs. E. T. Isham.' "

After the Princess died, in 1923, her studio and all objects of art, was sold at auction.

The Telsa portrait, 53x48 inches, appeared on the cover of TIME magazine (July 20, 1931) and in the ELECTRICAL EXPERIMENTER (January 1919), Mr. Anderson says.

Its location is not now known.

INDEXED - 14

100-2237-A

NOT RECORDED
129 NOV 4 1955

AMERICAN SRBOBRAN
October 26, 1955
Pittsburgh, Pa.

EX-1

65

279
68 NOV 9 1955

100-2237

[redacted]AF $1580

Half of $3000 Costs For Statue Pledged

Cadiz, O., Serb Gives $100 For Bust Image of Inventor To Be Placed at Monastery

Pittsburgh, Pa.—Half of the $3000 fund goal for a statue memorial of the late Dr. Nikola Tesla has been realized, the SNF announced today.

In fact, total contributions counted so far come to $1580.

The Fund is an outgrowth of a plea by Bishop Nicolai for Serbians to do honor for the memory of the noted electrical wizard during the world-wide Centennial celebration planned for the genius next year.

In the wake of the plea, voiced at the recent 7th Convention at Niagara Falls, Canada, the delegates approved a $1000 gift from the SNF and decided to raise, by public grant, the balance of $2000.

A hand collection among the 122 grass-roots leaders of the Society raised another $450. Then, at its first meeting October 5, the newly-elected Executive Board of the SNF appealed to the membership at large to fulfill the balance required.

First Contribution $100

A scant 24 hours after the appeal was published in the Society's "Srbobran" organ last Wednesday, Sime Zelich of Cadiz, O., gave $100.

The proposed memorial, a statue image, would be placed before the entrance of the St. Sava Serbian Monastery in Libertyville, Ill.

historians, writers, educators, scientists, etc., would not be misled, Bishop Nicolai believes.

Be that as it may, the SNF's goal is to amass the needed monies in time to erect and dedicate the memorial before the Tesla Centennial celebration ends.

Donors and the amounts of their donations are as follows:

SNF	$ 1000.00
Delegate M. Konjevich	200.00
" Todor Dragich	50.00
" Petar Borovich	25.00
SNF Counsel N. Stone	25.00
Delegate N. Stepanovich	20.00
" Maxim Jakovac	20.00
" Ilija Janjanin	20.00
" Lou Balta	10.00
" Jovan Vukcevich	10.00
" Milan Kajganovich	10.00
" Stevan Rogulja	10.00
" Bogdan Dragicich	5.00
" Milan Tomich	5.00
" Todor Vuicich	5.00
" Djuro Lukich	5.00
" G. Stoisavljevich	5.00
" R. Vukadinovich	5.00
" Janko Mrmich	5.00
" Petar Maravich	5.00
" Mirko Baranin	5.00

INFORMATION CONTAINED IS UNCLASSIFIED DATE 2-3-80 BY [redacted]

3 NOV 14

ıtion at Niagara Falls, Can-
a, the delegates approved a
000 gift from the SNF and
cided to raise, by public
ant, the balance of $2000.

hand collection among the
grass-roots leaders of the So-
raised another $450. Then,
first meeting October 5, the
ly-elected Executive Board of
SNF appealed to the mem-
ship at large to fulfill the bal-
e required.

First Contribution $100

A scant 24 hours after the ap-
l was published in the Society's
bobran" organ last Wednes-
, Sime Zelich of Cadiz, O.,
e $100.

The proposed memorial, a
tue image, would be placed be-
e the entrance of the St. Sava
bian Monastery in Libertyville,

"There it would proclaim to
ns of thousands of Serbian
sitors annually that Nikola
esla was of Serbian immigrant
ock and son of a Serbian
rthodox clergyman," Bishop
icolai declared.

For half a century and more,
general American public has
en misled anent the nationality
the man who foretold the com-
of atomic energy power.

Only recently, a prominent
American magazine listed him,
ncorrectly, as of Croatian
tock. The mistake was subse-
uently publicly corrected with
pologies by the publication.

But lacking an image reference,
th historical statistics, similar
ors are likely in the future.

Old References Poor

The magazine publication, for
stance, explained it obtained its
ference material from an anti-
ated guide book.

Since the misleading matter
re was never challenged by
rbians and other interested
rties before, the magazine logi-
ly assumed it was factual.

Erection of a bust statue,
lso listing Dr. Tesla's date of
irth, birthplace, parents, etc.,
ould counter the old myths
nd make certain that future

Centennial celebration ends.

Donors and the amounts of their donations are as follows:

SNF	$ 1000.00
Delegate M. Konjevich	200.00
" Todor Dragich	50.00
" Petar Borovich	25.00
SNF Counsel N. Stolac	25.00
Delegate N. Stepanovich	20.00
" Maxim Jakovac	20.00
" Ilija Janjanin	20.00
" Lou Balta	10.00
" Jovan Vukcevich	10.00
" Milan Kajganovich	10.00
" Stevan Rogulja	10.00
" Bogdan Dragisich	5.00
" Milan Tomich	5.00
" Todor Vuicich	5.00
" Djuro Lukich	5.00
" G. Stoisavljevich	5.00
" R. Vukadinovich	5.00
" Janko Mrmich	5.00
" Petar Maravich	5.00
" Mirko Baranin	5.00
" Stanko Jelich	5.00
★ ★ ★	
Prof. Anthony Tomovich (Edmonton, Alberta, Can.)	10.00
Teta Andia Mamula (Pittsburgh)	5.00
Martha Mamula Bjelosh (Pittsburgh)	10.00
Sime Zelich (Cadiz, O.)	100.00
Milinko Alexich, war invalid (Omaha, Nebr.)	
Total	$ 1,[illegible]

—the honoring, forever, of two of Serbia's best-known immigrant sons who contributed so greatly to the welfare and prosperity of their adopted America.

We hope to report developments as soon as they take place, remembering Bishop Nikolai's concluding remarks:

"Nikola Tesla, in the field of science, brought the Serbian name great glory—just as did the greatest Serbian knights on the field of battle."

23 June 56

Federal Bureau of Investigation
Washington 25, D.C.

Gentlemen:

[redacted]

During my senior year at Georgetown University I read J.J.O'Niel's Biography of Nikoli Tesla; the book, entitled "Prodigal Genius", described quite a few of Tesla's experiments, most of which I tried myself in the physics lab. I am interested in reviewing Tesla's experiments in wireless electric power transmission.

Unfortunately, Tesla died in 1945 just at the time he supposedly had developed a system of wireless power transmission. Since World War II was then in progress his papers were seized and sealed by the F.B.I. I suppose that by now Tesla's papers have been released for publication, but a call to the Library of Congress produced no results. Therefore, I have two questions:

1) Does the F.B.I. now have Tesla's scientific papers?

2) If so, are they available for public inspection? If they were released, who has them?

I will certainly appreciate any help you can give me along these lines. Tesla published very little of his findings; this, coupled with the fact that wireless power is connected by most people with "Death Rays" and crack-pots has made it nearly impossible for me to find anything on the subject.

Yours very truly,

[redacted]

[redacted] (b) (7) (C)

RECORDED - 86 100-2237-7

JUL 3 1956

[redacted] (b) (7) (C)

INFORMATION CONTAINED HEREIN IS UNCLASSIFIED 2-3-80 BY SP4 Jmp/etc

[redacted] (b) (7) (C)

68

100-2237-7
RECORDED - 86
INDEXED - 86

EX-122

15

L INFORMATION CONTAINED
EREIN IS UNCLASSIFIED
DATE 7-3-80 BY SP4 Jmfrte

June 29, 1956

[redacted]

(6)(7)(C)

Dear [redacted]

Nikoli Tesla

Your letter dated June 23, 1956, has been received, and in response to your inquiry, I would like to advise that our files reflect that the effects of Nikola Tesla were taken into custody after his death by the Office of Alien Property and not by this Bureau.

Since we did not participate in the handling of Mr. Tesla's effects, we are unable to supply the information you requested.

Sincerely yours,

John Edgar Hoover
Director

COMM — FBI
JUN 29 1956
MAILED 24

NOTE: Bufiles reflect no record on correspondent and reveal the correct spelling of Tesla's name as "Nikola." Bufiles reflect this type of reply h been utilized by the Domestic Intelligence Division in answering similar inquiries. (65-47953; 100-2237) Cover memo from Mr. Belmont to Boardman 6-29-55, set out background of this matter which concerned the death of Tesla, a famous electrical inventor. Bureau was not involved in this matter, and the opening of the safe containing his effects was done by the Office of Alien Property.

Tolson
Boardman
Nichols
Belmont
Harbo
Mohr
Parsons
Rosen
Tamm
Sizoo
Winterrowd
Tele. Room
Holloman
Gandy

FBI
JUL 17 1956

[redacted]

(3)

(6)(7)(C)

[redacted]

69

STANDARD FORM NO. 64

Office Memorandum • UNITED STATES GOVERNMENT

TO : DIRECTOR, FBI

DATE: 7/25/57

FROM : SAC, NEW YORK (65-12290)

SUBJECT: NIKOLA TESLA (Deceased)
IS -YU

INFORMATION CONTAINED HEREIN IS UNCLASSIFIED DATE 7-3-80 BY SP4 Jrmfr

[redacted] Street, New York 24, New York, a United States citizen of Yugoslav extraction, who on occasion, voluntarily furnishes the New York Office with information he considers to be in the interests of the Security of the United States Government, furnished Special Agent NICHOLAS J.MASTROVICH the following information on July 3, 1957: (b)(7)(D)

MR & MRS. JOHN STORM

[redacted] stated that a certain woman named Mrs. MARGARET STORM who lives with her husband, JOHN, at the Colonial Hotel, 51 West 81st Street, New York 24, New York, has been issuing newsletters which contain information pertaining to flying saucers and interplanetary matters. (b)(7)(D)

SECTION NEWSLETTER NEWSLE

[redacted] stated that in his opinion Mr. and Mrs. STORM are exploiting the reputation and genius of NIKOLA TESLA, deceased, inventor of Yugoslav extraction who achieved world wide fame as a result of his inventions in the United States. (b)(7)(D)

TESLA was born in Smiljan, Yugoslavia in July, 1859 and came to the United States in 1894 and became a naturalized United States citizen. In 1886 TESLA designed the arc-lighting system and two years later he invented the Tesla motor and designed a plan for the transmission of alternating current. In subsequent years, TESLA's discoveries and inventions included such fields and appliances as wireless communication, electrical oscillation, radiant power and radio active matter. After 1900, communications and wireless power transmission occupied most of his research.

2 - Bureau (RM) (Encs.2)
1 - Los Angeles (Info) (Encl.1) (RM)
1 - New York (65-12290)

NJM:mcd
(4)

SE 43 100-2237-

RECORDED-56

INDEXED-56

14 JUL 29 1957

0 1957

70

TESLA's only military invention was a method to which he once eluded but never fully described. This invention was a means whereby an inpenetrable "wall of force" can be erected around the United States' borders which would render helpless any military attack. TESLA disclosed the existence of his plan in 1934 and stated he intended to present it to the Geneva Conference but seldom referred to it afterward.

The "New York Times" dated 9/22/40, carried an article setting forth NICOLA TESLA's plan for a "Death Ray". This article included information to the effect that TESLA, on his 84th birthday, July 10, 1940, advised New York Times reporter WILLIAM L. LAWRENCE that he was ready to divulge to the United States Government the secret of his "teleforce", with which he said airplane motors would be melted at a distance of 250 miles so that an invisible Chinese wall of defense would be built around the country against any attempted attack by an enemy airforce no matter how large. According to TESLA, this "teleforce" was based on an entirely new principle of Physics that "no one has ever dreamed about" and was different from the principle embodied in his inventions relating to the transmission of electrical power from a distance, for which he received a number of basic patents.

TESLA stated that this new type of force would operate through a beam one hundredth millionth of a square centimeter in diameter and could be generated from a special plant that would cost no more than two million dollars and would take only about three months to construct. TESLA stated that a dzen such plants located at strategic points along the coast, according to TESLA, would be enough to defend the United States against all possible aerial attacks. TESLA stated that this beam would melt any engine and would also ignite explosives aboard any bomber. TESLA stated that no possible defense against it could be devised and he asserted that the beam would be all penetrating.

TESLA stated to Mr. LAWRENCE that he makes one important stipulation before he would divulge this secret to the United States Government and that was that should the United States Government decide to take up his offer, he would go to work at once but that the United States Government would have to trust him. TESLA stated that he would suffer "no interference from experts."

In this "New York Times" article Mr. LAWRENCE commented that with conditions as they were in 1940, and with the United States getting ready to spend millions of dollars for National Defense, Mr. TESLA's great reputation as an inventor, who always was many years ahead of his time, should be given careful consideration. Mr. LAWRENCE stated, in his opinion, the United States Government should take Mr. TESLA at his word and commission him to go ahead with the construction of his "teleforce" plant.

The New York file of Mr. TESLA bears no indication that any additional developments were carried on in connection with TESLA's invention and whether or not TESLA fully divulged his new plan to the United States Government.

TESLA died at the age of 85 on January 7, 1943.

Mr. [redacted] provided a two page copy of the above mentioned newsletter which Mr. and Mrs. STORM have been distributing in connection with the alleged invention by TESLA, which, according to Mr. and Mrs. STORM, consists of a radio type machine known as the Tesla Set which was invented by Mr. TESLA in 1938 for interplanetary communication. Mr. and Mrs. STORM claim that TESLA's engineers did not complete the Tesla Set until after TESLA's death in 1943. Mr. and Mrs. STORM claim that this Set was placed in operation in 1950 and since that time TESLA engineers have been in close touch with space ships. etc. (X)(D)

The Newsletter furnished by Mr. [redacted] included (6)(7)(D) the following names:

MARGARET STORM
JOHN STORM
GEORGE VAN TASSEL, Yucca Valley, California NY
DAN FRY NY - NMEX
GEORGE KING, London, England

The files of the New York Office contained no pertinent information regarding any of the above mentioned individuals. ARMAHO NY

Two photostatic copies of this newsletter are being sent to the Bureau for purposes of information while one copy is being submitted to the Los Angeles Office for information purposes.

[redacted] (b) (7) (C)

Mr. J. Edgar Hoover

L INFORMATION CONTAINED
EIN IS UNCLASSIFIED
7-3-80 BY SP4 Jam/rtc

Dear Sir:

I an hopeful that you can help me obtain certain information on records and data, which belonged to Dr. Nikola Tesla. He was an Electrical Engineer and prolific inventor.

He was born in Yugoslavia in 1856 and died in the United States, New York City, January 7th, 1943. He was a naturalized citizen of this country.

The only information I could find of his records was a report that the F.B.I. removed his papers for examination, and that the records were sealed by the custodian of alien property.

I have been doing some theoretical research of my own, which I believe may be along the same lines he followed in certain of his experiments. I also believe the development of his ideas would be in the interest of our country regardless of who developes them.

If it is at all possible for me to have access to at least some of his experimental work, I would certainly appreciate it. I am not able, by reason of the vast finances, which would be required, to conduct such experiments myself, so the data he made and collected would be invaluable.

Of course, it is possible that his records do not contain material pertinent to his electronics work, because from what I understand from reading about him, he kept most of his records in his head and wrote down very little of his data.

It is also possible that some of his ideas are impractical, but I feel sure that certain of his ideas will be of immense value to our country within the next several decades or even before, if they are developed at a rapid rate.

I would appreciate hearing from you on the subject, if you have any information pertaining to it, which you could make available to me.

100-2237-9

REC-1

Sincerely,
16 MAR 18 1958

[redacted]

Ack 3/14/58 [redacted]

[redacted]

(b) (7) (C)

[redacted]

74

March 14, 1958

REC-1

100-2237-

[redacted]

(b)(7)(c)

ALL INFORMATION CONTAINED HEREIN IS UNCLASSIFIED DATE 7-3-80 [illegible]

Dear [redacted]:

Your letter postmarked March 7, 1958, has been received.

In response to your inquiry, I would like to advise that our files reflect that the effects of Dr. Nikola Tesla were taken into custody after his death by the Office of Alien Property in the Department of Justice and not by the FBI.

Since we did not participate in the handling of Dr. Tesla's effects, we are unable to supply the information you requested.

Sincerely yours,

John Edgar Hoover
Director

NOTE: Buffiles reflect no record on correspondent. Buffiles reflect above type of reply has been utilized in the past in answering similar inquiries. (100-2237-7) Cover Memorandum from Belmont to Boardman 6/29/55 set forth background of this matter which concerned the death of Tesla, [illegible] electrical inventor. Bureau was not involved in this matter, and [illegible] of the safe containing his effects was done by the Office of Alien Property.

Tolson
Nichols
Boardman
Belmont
Mohr
Parsons
Rosen
Tamm
Trotter
Nease
Tele. Room
Holloman
Gandy

MAIL ROOM

[redacted] also (b)(7)(c)

COMM - FBI
MAR 14 1958
MAILED 19

68 MAR 21 1958

FBI - JUSTICE
REC'D BY [illegible]

[redacted]

(b)(7)(c)

75

June 24, 1957

Federal Bureau of Investigation
Washington 25, D.C.

ALL INFORMATION CONTAINED
HEREIN IS UNCLASSIFIED
DATE 7-3-80 BY SP4 Jan/rtc

Dear Sirs,

I am doing a research study on the life of Dr. Nikola Tesla of New York City (1856 - 1943), and desire information which you may have. It was reported in the book "Prodigal Genius" that Dr. Tesla's papers were seized from his New York hotel room upon his death in 1943 by the F.B.I. I am very interested in getting copies of his papers for my study and would like to know if this report is true and where I might obtain further information about them or if you are holding them.

REC-91 100-2237

EX 101

Sincerely ~~yours~~,

[redacted]

(b)
(7)
(C)

[redacted]

CRIME REC

EX 101

REC- 91

July 2, 1959

Ink 100-2237-10

[redacted]

(b)(7)(c)

L INFORMATION CONTAINED
EIN IS UNCLASSIFIED
DATE 7-3-80 BY SP4 Jamfite

Dear [redacted]

Your letter dated June 24, 1959, has been received.

In response to your inquiry, I wish to advise that our files reflect that the effects of Dr. Nikola Tesla were impounded, after his death, by the Office of Alien Property of the Department of Justice and not by the FBI. Since we did not participate in the handling of Dr. Tesla's effects, we are unable to supply the information you desire.

Sincerely yours,

MAILED 5
JUL 2 1959
COMM-FBI

John Edgar Hoover
Director

NOTE: Bufile 100-2237 reflects that Dr. Tesla was a world-famous electrical inventor, and at the time of his death, all of his personal papers and effects were believed dangerous to the country's security if they fell into unauthorized hands. The book, "Prodigal Genius," by John J. O'Neil, alleges that the FBI took over a certain safe and opened it, appropriating his property. Bufiles clearly indicate that it was the Office of Alien Property of the Department who did so, and the above reply is forwarded in answer to related inquiries.

Tolson
Belmont
DeLoach
McGuire
Mohr
Parsons
Rosen
Tamm
Trotter
W.C. Sullivan
Tele. Room
Holloman
Gandy

[redacted]
(3)

FBI

57 JUL 9 1959

MAIL ROOM ☐ TELETYPE UNIT ☐

[redacted]

(b)(7)(c)

[redacted]

77

OPTIONAL FORM NO. 10

UNITED STATES GOVERNMENT

Memorandum

Tolson
Mohr
Parsons
Belmont
Callahan
Conrad
Malone
McGuire
Rosen
Tamm
Trotter
W.C. Sullivan
Tele. Room
Ingram
Gandy

TO : MR. TROTTER

DATE: 12-6-60

FROM : A. K. Bowles

SUBJECT: NIKOLA TESLA (DECEASED)
INFORMATION CONCERNING

ALL INFORMATION CONTAINED HEREIN IS UNCLASSIFIED DATE 7-3-80 BY

(b)(7)(C)

[redacted] telephoned December 5 and was referred to Ident by switchboard because he wanted to talk with someone in charge of records of deceased. [redacted] said he is making a research study for U. S. Air Force on subject of geophysics. His deadline is ten days from now. [redacted] said he just discovered a sentence in a book by John J. O'Neill entitled "The Prodigal Genius -- The Life of Nikola Tesla," which states the FBI took custody of papers from Tesla's safe after his death in New York City in 1943. Tesla was a world-famous Yugoslav scientist and inventor in the electrical field who died January 7, 1943, in New York City. [redacted] requested immediate access to Tesla's scientific works which may shed light on [redacted] research study. I told [redacted] we would have somebody from our Boston Office contact him immediately.

(b)(7)(C)

Bureau file 100-2237 shows no investigation of Tesla has been conducted by Bureau. Since erroneous statement concerning FBI's taking custody of papers from Tesla's safe after his death appeared in O'Neill's book published in 1944, Bureau has received numerous inquiries from scientists desiring to review Tesla's writings. Each inquiry has been answered by stating FBI did not participate in handling Tesla's effects, but information has come to our attention that Office of Alien Property of Department of Justice may have examined Tesla's effects. (File indicates that representatives of Office of Alien Property did actually review Tesla's possessions, including his writings, but file does not show what final disposition was made of Tesla's possessions.)

A teletype to Boston Division was prepared, but before it was sent [redacted] telephoned again to furnish me the exact page in O'Neill's book in which he refers to the FBI. At that time I told [redacted] the statement in the book was untrue -- that the FBI had not examined or taken custody of Tesla's papers. I suggested to [redacted] that he might contact Office of Alien Property. (Therefore, teletype to Boston was not necessary.) 100-2237-11

ACTION:

For record.

AKB:ks

EX-113 REC-38 5 DEC 8 1960

51 DEC 13 1960

(5)

Bu file 100-2237
1- Mr. Belmont

78

[redacted]
(b)
(7)
(c)

February 14, 1961

Federal Bureau of Investigation
Department of Information
Washington 25, D. C.

[redacted] INFORMATION CONTAINED
HEREIN IS UNCLASSIFIED
DATE 7-3-80 BY SP4 jm/rtc

Dear Sir:

I am a college student who is doing a research paper on Nikola Tesla. As I was collecting the material for my paper, I discovered that at the time of Tesla's death, the department of the F.B.I. confiscated the data and papers that Tesla had collected from his research in the field of electricity. This confiscation of his material was stated in the PRODIGAL GENIUS by J.J. O'Neil, published in 1944 at New York city by Washburn Inc.

I have developed an interest in the discoveries and accomplishments of Tesla that is presently limited by the shortage of factual material. If in your files, you have any information concerning Nikola Tesla that you are permitted to release, I will sincerly appreciate your co-operation in helping me give the proper recognition to this great scientist and American. Below I have listed the facts that may be helpful to you;

REC- 55 100-22137-18
FEB 28 1961
EX.-102

1. Born in 1856 at Smiljan, Crotia, now Yugoslavia
2. Came to America in 1884 and was employed for a short time with the Edison Co. at Orange, N.J.
3. Died on January 7, 1943 at New York city

Thanking you for your time and co-operation that I have taken, I remain,

Sincerly Yours,

[redacted]
(b)
(7)
(c)

[redacted]

79

esd 100-2237-12

REC- 55

EX-76

February 23, 1961

[redacted]

(6)(c)

ALL INFORMATION CONTAINED HEREIN IS UNCLASSIFIED DATE 7-3-80 BY [illegible]

Dear [redacted]:

Your letter of February 14, 1961, has been received, and the interest which prompted you to write is appreciated.

In response to your inquiry, I wish to advise that our files reflect that the effects of Dr. Nikola Tesla were impounded, after his death, by the Office of Alien Property of the Department of Justice and not by the FBI. Since we did not participate in the handling of Dr. Tesla's effects, we are unable to supply the information you desire.

MAILED 10
FEB 23 1961
COMM-FBI

Sincerely yours, (b)(7)(c)

John Edgar Hoover
Director

NOTE: No record could be located in Bufiles identifiable with correspondent. Bufile 100-2237 reflects that Dr. Tesla was a world-famous electrical inventor, and at the time of his death, all of his personal papers and effects were believed dangerous to the country's security if they fell into unauthorized hands. The book, "Prodigal Genius," by John J. O'Neill, alleges that the FBI took over a certain safe and opened it, appropriating his property. Bufiles clearly indicate that it was the Office of Alien Property of the Department who did so, and the above reply is forwarded in answer to related inquiries.

Tolson
Parsons
Mohr
Belmont
Callahan
Conrad
DeLoach
Evans
Malone
Rosen
Tavel
Trotter
W.C. Sullivan
Tele. Room
Ingram
Gandy

(3)
50 MAR 6 1961
MAIL ROOM TELETYPE UNIT

[redacted] (b)(7)(c)

80

November 21, 1962

Federal Bureau of Investigation

Washington 25, D.C.

Gentlemen:

I am making a study, motivated out of personal curiosity, into the life and works of Nikola Tesla. Mr. Tesla died on January 7, 1943 in the Hotel New Yorker. Since F.B.I. Operatives opened his safe and took his papers for examination, I wonder if these papers are available for perusal? If they are available, where would they be located, and are copies available to the public?

I am a citizen of the United States, and have been cleared for security--- the latest one being for work on [redacted]

Thank you very much for any information or help you may be able to give me in this matter!!

Respectfully yours,

[redacted]

(6)
(7)
(C)

ALL INFORMATION CONTAINED HEREIN IS UNCLASSIFIED DATE 7-3-80 BY SP4 [illegible]

EX-114

REC-39 100-2237 1B

5 NOV 28 1962

[redacted] 11-27-62

81

RA-114

REC-39 100-2237-13

November 27, 1962

[redacted]

(b) (7) (c) ALL INFORMATION CONTAINED HEREIN IS UNCLASSIFIED DATE 7-3-80 BY SP4 Jam/rtc

REC'D-READING ROOM FBI NOV 27 4 53 PM '62

Dear [redacted]

Your letter of November 21st has been received.

In response to your inquiry, I would like to point out that the effects of Dr. Nikola Tesla were impounded, after his death, by the Office of Alien Property of the Department of Justice and not by the FBI. Since this Bureau did not participate in the handling of Dr. Tesla's effects, I am unable to supply the information you desire.

Sincerely yours,

J. Edgar Hoover

John Edgar Hoover
Director

[redacted] (b) (7) (c)

MAILED 8 NOV 2 1962 COMM-FBI

NOTE: Bufiles contain no record identifiable with correspondent. Bufile 100-2237 shows that Dr. Tesla was one of the world's outstanding scientists in the electrical field, and at the time of his death, all of his personal papers and effects were believed dangerous to the country's security if they fell into unauthorized hands. The book, "Prodigal Genius," by John J. O'Neil, alleges that the FBI took over a certain safe and opened it, appropriating Dr. Tesla's property. Bufiles clearly indicate that it was the Office of Alien Property of the Department which did so, and the above reply has been forwarded in answer to related inquiries. Dr. Tesla was born in Yugoslavia and died in New York City 1-7-43.

Tolson
Belmont
Mohr
Casper
Callahan
Conrad
DeLoach
Evans
Gale
Rosen
Sullivan
Tavel
Trotter
Tele. Room
Holmes
Gandy

[redacted] (3) 3 blc

RECEIVED-DIRECTOR

140

53 DEC 3 1962

[redacted]

MAIL ROOM ☐ TELETYPE UNIT ☐

[redacted] [redacted]

82

[redacted] (b)(7)(c)

10 March 1964.

Federal Bureau of Investigation,
Washington 25, D.C.

ALL INFORMATION CONTAINED
HEREIN IS UNCLASSIFIED
DATE 7-14-82 BY SP/JSK/MKE

Dear Sirs,

For some time, have been wondering about the matter of what was reported on the late Nikola Tesla, the inventor. He died during early January 1943, while in residence at the Hotel New Yorker, New York City. Accounts have it that his belongings (papers, etc.) were studied. Would appreciate learning if anything can be learned about this.

Am hoping to be on leave, and in Washington, along the third week of April. This is mentioned, in case it is possible to view anything relating to the question.

Sincerely,

[redacted]

ITC 3-17-64
ack 3-18-64
[redacted]

(b)(7)(c)

[redacted]

83

TRUE COPY

(b)(7)(c) [redacted] 10 March 1964.

Federal Bureau of Investigation
Washington 25, D. C.

Dear Sirs,

For some time, have been wondering about the matter of what was reported on the late Nikola Tesla, the inventor. He died during early January 1943, while in residence at the Hotel New Yorker, New York City. Accounts have it that his belongings (papers, etc.) were studied. Would appreciate learning if anything can be learned about this.

Am hoping to be on leave, and in Washington, along the third week of April. This is mentioned, in case it is possible to view anything relating to the question.

Sincerely,

[redacted] (b)(7)(c)

ALL INFORMATION CONTAINED HEREIN IS UNCLASSIFIED DATE 7-3-80 BY SP4 Jm/rtc

100-2237-14

10 MAR 13 1964

(b)(7)(c)

84

REC-130

100-2237-14

March 18, 1964

INFORMATION CONTAINED
HEREIN IS UNCLASSIFIED
DATE 7-3-80 BY SP4 Jan/rtc

[redacted] (b) (7) (c)

Dear [redacted]

Your letter of March 10th has been received.

In response to your inquiry, I would like to point out that the effects of Dr. Nikola Tesla were impounded, after his death, by the Office of Alien Property of the Department of Justice and not the FBI. Since we did not participate in the handling of Dr. Tesla's effects, I am unable to supply the information you desire.

Sincerely yours,

J. Edgar Hoover

John Edgar Hoover
Director

MAR 18 4 11 PM '64
REC'D-READING ROOM
FBI

MAILED 19
MAR 18 1964
COMM-FBI

NOTE: No record could be located in Bufiles identifiable with correspondent. Bufile 100-2237 reflects that Dr. Tesla was a world-famous electrical inventor and at the time of his death, all of his personal papers and effects were believe dangerous to the country's security if they fell into unauthorized hands. The book, "Prodigal Genius," by John J. O'Neil, alleges that the FBI took over a certain safe and opened it, appropriating his property. Bufiles clearly indicate that it was the Office of Alien Property of the Department which did so, and the above reply is forwarded in answer to related inquiries.

[redacted] (3) [redacted] (b) (7) (c) [redacted]

Tolson
Belmont
Mohr
Casper
Callahan
Conrad
DeLoach
Evans
Gale
Rosen
Sullivan
Tavel
Trotter
Tele. Room
Holmes
Gandy

57 MAR 2 ...

MAIL ROOM ☐ TELETYPE UNIT ☐

85

TRUE COPY

Sir,

According to "Prodical Genius, Nikola Tesla" Tesla
by J. J. O'Neil (a book) some papers were taken from the safe of Mr. Festa about 1945 yr. Is this true. If so are the papers declasified yet? If so may I obtain a copy?

[redacted] (b)(7)(C)

Sir,

According to "Prodical Genius, Nikola Tesla" by J. J. O'Neil (a book) some papers were taken from the safe of Mr. Tesla about 1945 yr. Is this true. If so are the papers declasified yet? If so may I obtain a copy?

REC-15
EX-10
100-2237-15
JUN 23 1964

[redacted] b(7)(c)

[redacted]

ALL INFORMATION CONTAINED
HEREIN IS UNCLASSIFIED
DATE 7-3-80 BY SP4 Jones/rtc

96

June 22, 1964

REC- 15

100 2237 15

[redacted] (b)(7)(c)

ALL INFORMATION CONTAINED HEREIN IS UNCLASSIFIED DATE 7-3-80 BY SP4 Jmfrte

REC'D-READING ROOM FBI JUN 22 3 30 PM '64

Dear [redacted]

Your card of June 16th has been received.

In response to your inquiry, I would like to point out that the effects of Dr. Nikola Tesla were impounded, after his death, by the Office of Alien Property of the Department of Justice and not by the FBI. Since we did not participate in the handling of Dr. Tesla's effects, I am unable to furnish the information you desire.

MAILED 20 JUN 22 1964 COMM...

Sincerely yours,

J. Edgar Hoover

NOTE: No record could be located in Bufiles identifiable with correspondent. Bufile 100-2237 reflects that Dr. Tesla was a world-famous electrical invent and at the time of his death, all of his personal papers and effects were believed dangerous to the country's security if they fell into unauthorized han The book, "Prodigal Genius," by John J. O'Neil, alleges that the FBI took ov a certain safe and opened it, appropriating his property. Bufiles clearly indicate that it was the Office of Alien Property of the Department which did s and the above reply is forwarded in answer to related inquiries.

[redacted] (3)

[redacted]

(b)(7)(c)

Tol[redacted]
Belm[redacted]
Mohr
Casper
Callahan
Conrad
DeLoach
Evans
Gale
Rosen
Sullivan
Tavel
Trot[redacted]
Tel[redacted]
[redacted]dy

RECEIVED DIRECTOR

64 JUN 26 1964

MAIL ROOM ☐ TELETYPE UNIT ☐

87

OREGON STATE UNIVERSITY
CORVALLIS, OREGON 97331
SCHOOL OF SCIENCE
Reply to: DEPARTMENT OF GENERAL SCIENCE

March 28, 1967

FEDERAL BUREAU OF INVESTIGATION
Department of Information
9th Street & Pennsylvania Aven, N.W.
Washington 25, D. C. 20535

ALL INFORMATION CONTAINED
HEREIN IS UNCLASSIFIED
DATE 2-3-80 BY SP4 jrm/pte

Dear Sirs:

I am a student of the history of science at Oregon State University, and I am attempting to write a research paper on a very eccentric scientist who died in 1943. His name was Nikola Tesla, a naturalized American of Serbian extraction, and he died in his hotel room in New York City on January 8, 1943.

During the years leading up to World War II, Nikola Tesla supposedly invented a "Death Ray" which could destroy several hundred aircraft. Mr. Tesla was a very prolific and creative genius during his early years but gradually became something of a crackpot in his old age. As a student of the history of science, it is important to determine whether or not Tesla had any valid ideas in the plans for his death ray. Tesla invented the fluorescent light and also was one of the first scientists to discover X-Rays--hence there may be some possibility that his death ray might actually have been some crude type of laser.

In Tesla's biography, "Prodigal Genius", by John J. O'Neill, the author states on page 277:

> "Operatives from the F.B.I. came to Tesla's hotel room shortly after his death and opened the safe in his room. They took the papers that it contained in order to examine them for a reported secret invention of possible use in the war..."

I am trying to locate Tesla's secret and unpublished writings concerning his death ray. I have searched the literature quite thoroughly and have found nothing. Does the F.B.I. still have these papers or can you tell where I might be able to obtain these writings for examination? Any assistance or information that you may lend me will be very much appreciated.

100-2237-16

Sincerely yours,

[redacted]

REC 49
12 APR 4 1967

(6)
(7)
(C)

4/3/67

CORRESPONDENCE 88

April 3, 1967

REC 49 100-2237-16

[redacted]

ALL INFORMATION CONTAINED HEREIN IS UNCLASSIFIED DATE 7-3-80 BY SP4 Jam/rtc

(b)
(7)
(c)

Dear [redacted]

Your letter of March 28th has been received.

In response to your inquiry, the effects of Dr. Nikola Tesla were impounded, after his death, by the Office of Alien Property of the Department of Justice and not by the FBI. Since we did not participate in the handling of Dr. Tesla's effects, I am unable to furnish the information you desire.

Sincerely yours,

J. Edgar Hoover

John Edgar Hoover
Director

MAILED 30
APR 3 1967
COMM-FBI

NOTE: No record could be located in Bufiles identifiable with correspondent. Bufile 100-2237 reflects that Dr. Tesla was a world-famous electrical inventor, and at the time of his death, all of his personal papers and effects were believed dangerous to the country's security if they fell into unauthorized hands. The book, "Prodigal Genius," by John J. O'Neil, alleges that the FBI took over a certain safe and opened it, appropriating his property. Bufiles clearly indicate that it was the Office of Alien Property of the Department which did so, and the above reply is forwarded in answer to related inquiries.

[redacted] (3)

Tolson
DeLoach
Mohr
Wick
Casper
Callahan
Conrad
Felt
Gale
Rosen
Sullivan
Tavel
Trotter
Tele Room
Holmes
Gandy

54 APR 11 1967

MAIL ROOM ☐ TELETYPE UNIT ☐

(b)
(7)
(c)

89

J. Edgar Hoover
Federal Bureau of Investigation
Washington D. C.

TRUE COPY

[redacted]

Feb. 25, 1969

Dear Mr. Hoover,

HEREIN IS UNCLASSIFIED
DATE 2-3-80 BY SP4 Jam/etc

In the year 1943 the F.B.I. confiscated all of the papers and maybe some of the machines of physicist, Nikola Tesla. These papers were his experiments and ideas at the time of his death. According to the books I've read, these papers were confiscated on the grounds of the enemy getting ahold of his ideas and apply them to war machines.

I have studied all of the material on this man and have found him to be more intelligent than the great "Brain" of his time, Thomas Edison.

Why without Nikola Tesla there would be Westinghouse Company as we know today. This is the man who harnessed Niagara Falls, and was the one and only man who could see the possibilities of Alternating Current when men like Edison said "it would never work."

What I am wondering is, maybe these papers could be reclassified from whatever "Top Secret" classification they now have and be made available for study by the people who understand and can gain knowledge from them.

I would be willing to pay for reproductions of his experiments if nothing else. He still has a great many ideas that have never been tried.

It disturbs me to think that everyone has forgotten about the ideas of this man when he was so advanced for his time.

I can say with assurance that no man alive can say that he knows all of Tesla's ideas. And studying other men's ideas is the way to advance in science faster.

100-2237-12

I hope something can be done to get these papers released.

Thank You,

[redacted] (b)(7)(c)

/s/ [redacted]

100-2237-

90

Feb. 25, 1969

Dear Mr. Hoover,

In the year 1943 the F.B.I. confiscated all of the papers and maybe some of the machines of physicist, Nikola Tesla. These papers were his experiments and ideas at the time of his death. According to the books I've read, these papers were confiscated on the grounds of the enemy getting ahold of his ideas and apply them to war machines.

I have studied all of the material on this man and have found him to be more intelligent than the great "Brain" of his time, Thomas Edison.

Why without Nikola Tesla there would be Westinghouse Company as we know today. This is the man who harnessed Niagara Falls, and was the one and only man who could see the possibilities of Alternating Current when men like Edison said "it would never work".

What I am wondering is, maybe these papers could be reclassified from whatever "Top Secret" classification they now have and be made available for study by the people who understand and can gain knowledge from them. (b)(7)(c)

ALL INFORMATION CONTAINED HEREIN IS UNCLASSIFIED DATE 1-14-82 BY [illegible]

CO[redacted]NDENCE

91

I would be willing to pay for reproductions of his experiments if nothing else. He still has a great many ideas that have never been tried.

It disturbs me to think that everyone has forgotten about the ideas of this man when he was so advanced for his time.

I can say with assurance that no man alive can say that he knows all of Tesla's ideas. And studying other men's ideas is the way to advance in science faster.

I hope something can be done to get these papers released.

Thank You,

[redacted] (b)(7)(c)

March 4, 1969

100-2237-17

[redacted]

(b)(7)(c)

Dear [redacted]

Your letter of February 25th has been received.

In response to your inquiry, the effects of Dr. Nikola Tesla were impounded, after his death, by the Office of Alien Property of the Department of Justice and not by the FBI. Since we did not participate in the handling of Dr. Tesla's belongings, I am unable to furnish the information you desire. A copy of your communication has been referred to the Department of Justice.

Sincerely yours,

J. Edgar Hoover

MAILED 10
MAR 4 - 1969
COMM-FBI

NOTE: Bufiles contain no record of correspondent. Bufile 100-2237 reflects that Dr. Tesla was a world-famous electrical inventor, and at the time of his death, all of his personal papers and effects were believed dangerous to the country's security if they fell into unauthorized hands. The book, "Prodigal Genius," by John J. O'Neil, alleges that the FBI took over a certain safe and opened it, appropriating his property. Bufiles clearly indicate that it was the Office of Alien Property of the Department which did so, and the above reply is forwarded in answer to related inquiries. Copy of letter referred to Assistant Attorney General, Civil Division of the Department.

[redacted] (3)

[redacted]

54 MAR 13 1969

Tolson
DeLoach
Mohr
Bishop
Casper
Callahan
Conrad
Felt
Gale
Rosen
Sullivan
Tavel
Trotter
Tele. Room
Holmes
Gandy

MAIL ROOM ☐ TELETYPE UNIT ☐

[redacted]

(b)(7)(c)

93

(b)(7)(c)

[redacted]

April 8, 1970

Federal Bureau of Investigation
Director of Central Records
Washington, D.C.

Dear Sir:

I am doing a research paper on Nickola Tesla and would appreciate it if you could please provide me with the following information.

That information being why did your Bureau impound his personal effects immediately after his death on January 7, 1943. Secondly, could you provide a list of those effects, and lastly, when were they released and to whom were they given.

Thanking you for the information

[redacted] (b)(7)(c)

P

ALL INFORMATION CONTAINED
HEREIN IS UNCLASSIFIED
DATE 7-3-80 BY SP4 Jmp/stc

REC 44 100-2237-18

APR 15 1970

[redacted]

4/14/70

[redacted]

(b)(7)(c)

CORRES[redacted]

94

REC 44 100 2237-18

April 14, 1970

46

ALL INFORMATION CONTAINED HEREIN IS UNCLASSIFIED DATE 7-3-80 BY SP4 Jrmprte

[redacted]

(b) (7) (c)

Dear [redacted]:

In reply to your inquiry of April 8th, the effects of Dr. Nikola Tesla were impounded, after his death, by the Office of Alien Property of the Department of Justice and not by the FBI. Since we did not participate in the handling of Dr. Tesla's belongings, I am unable to furnish the information you desire. A copy of your communication has been referred to the Department of Justice for any help it may be able to offer.

Sincerely yours,

Edgar Hoover

John Edgar Hoover
Director

[redacted]

(b) (7) (c)

MAILED 9
APR 14 1970
COMM-FBI

NOTE: Bufiles contain no information identifiable with correspondent. Bufile 100-2237 reflects that Dr. Tesla was a world-famous electrical inventor, and at the time of his death, all of his personal papers and effects were believed dangerous to the country's security if they fell into unauthorized hands. The book, "Prodigal Genius," by John J. O'Neil, alleges that the FBI took over a certain safe and opened it, appropriating his property. Bufiles clearly indicate that it was the Office of Alien Property of the Department which did so, and the above reply is forwarded in answer to related inquiries. Copy of letter referred to Assistant Attorney General, Civil Division of the Department.

Tolson
DeLoach
Walters
Mohr
Bishop
Casper
Callahan
Conrad
Felt
Gale
Rosen
Sullivan
Tavel
Soyars
Tele. R
Holmes
Gandy

59 APR 20 1970

MAIL ROOM TELETYPE UNIT

[redacted] (3) [redacted] [redacted] [redacted]

(b) (7) (c) 95

July 15, 1970

REC-3 100-2237-19

[redacted] (6)(7)(C)

ALL INFORMATION CONTAINED HEREIN IS UNCLASSIFIED DATE 7-3-80 BY [signature]

Dear [redacted]:

Your letter was received on July 13th and the interest which prompted you to write to me is appreciated. With respect to your inquiry, the effects of Dr. Nikola Tesla were impounded, after his death, by the Office of Alien Property of the Department of Justice and the FBI did not participate in the handling of Dr. Tesla's belongings. In addition, this Bureau is strictly an investigative agency of the Federal Government and matters such as you mentioned do not come within the scope of this Bureau's authority.

Sincerely yours,

J. Edgar Hoover

[redacted] (6)(7)(C)

John Edgar Hoover
Director

MAILED 8
JUL 15 1970
COMM-FBI

NOTE: Bufiles contain no record of correspondent. Bufile 100-2237 reflects that Dr. Tesla was a world-famous electrical inventor, and, at the time of his death, all of his personal papers and effects were believed dangerous to the country's security if they fell into unauthorized hands. Bufiles indicate that the Office of Alien Property of the Department appropriated his property and replies similar to the above have been used to answer related inquiries.

Tolson
DeLoach
Walters
Mohr
Bishop
Casper
Callahan
Conrad
Felt
Gale
Rosen
Sullivan
Tavel
Soyars
Tele. Room
Holmes
Gandy

54 JUL 23 1970

[redacted] (2)

MAIL ROOM [ ] TELETYPE UNIT [ ]

[redacted] (6)(7)(C)

96

(b)(7)(c)

[redacted]

INFORMATION CONTAINED
HEREIN IS UNCLASSIFIED
DATE 7-3-80 BY SP4 Jmfete

July 8, 1970.

Mr. J. Edgar Hoover,
Director,
Federal Bureau of Investigation,
Washington D. C.

N.I.K. - Tesla

Dear Sir,

I am writing this to you as I believe that most of the government is infiltrated with foreign agents, and there is a very good chance this could be of extreme importance for the defense of our nation.

I met a man a number of years ago that was raised on Long Island in the neighborhood where Mr. Tesla, inventor of the Tesla Coil, had his lab. He told me of Mr. Tesla's notes blowing down the street when the junk men were dismantling his equipment. It would be a wonderful thing is some of these notes were salvaged and could be found.

Mr. Tesla was at least a century ahead of his time. He sent radio signals around the world seventeen years prior to Mr. Marconi, who received the credit, and pioneered many fields. He was so far advanced that he had to invent a special math to keep up with his work.

He, on several accasions talked before the scientists of the world and became very angry at their inability to understand him, and due to this was violently disliked and didnot receive acknowledgement for his discoveries. One of the notes read by this man told of the radio transmission of electricity being brought to a high degree of effiency.

Now here is the thing that should be investigated throughly. During my High School education, in the winter of either 19-25-26 or 1926-27, I made a currant events report on an article appearing in a small publication of that name that was received weekly at the Troy Highschool, Troy Montana. It stated in this article that Mr. Tesla had made an offer to the Congress of the United States that if they would install radio transmission towers at every 150 miles around the border of this country, that he would install equipment that would broadcast a vertical plane of energy beyond the atmosphere through which no material object could pass as it would shatter or lose it's monecular coohesion. It was refused.

There is a good chance that this data is in the files of congress. What a defence, and boy do we need it. EX-117 REC-3 100-2237-19

I have had some results along this line with structured vortices of magnetic fields, but do not have the technical equipment or knowledge to carry out further experiments. The theory is quite simple and deals with particle acceleration, and it works to the best of my knowledge.

9 JUL 16 1970

Sincerely

[redacted]

(b)(6)(c)

[redacted]

97

[redacted] (b)(7)(c)

6 DECEMBER 1971

FEDERAL BUREAU OF INVESTIGATION

WASHINGTON, D.C.

Dear Sir:

I have recently begun a collection and reading file of all matters pertaining to Nikola Tesla. In so doing I was amazed to find that upon his death; January 7, 1943, in NYC, your bureau confined his papers. May I ask if you still "have them in jail". I am extremely interested in his work(s) and am trying to establish my own "Tesla" library. Your assistance would be greatly appreciated.

Very truly yours,

[redacted]

[redacted] (b)(7)(C)

[redacted]

REC- 39 100-2237-20

16 DEC 15 1971

[redacted]

[redacted]

INFORMATION CONTAINED HEREIN IS UNCLASSIFIED DATE 7-3-80 BY [redacted] (b)(7)(C)

[redacted]

98

December 14, 1971

REC- 28 100-2237-20

[redacted] (b)(7)(C)

ALL INFORMATION CONTAINED HEREIN IS UNCLASSIFIED DATE 7-3-80 BY [redacted]

(b)(7)(C)

Dear [redacted]:

Your letter of December 6th has been received.

In response to your inquiry, the effects of Dr. Nikola Tesla were impounded, after his death, by the Office of Alien Property of the Department of Justice and not by the FBI. We did not participate in the handling of Dr. Tesla's belongings in any way. Copies of your communication and my reply have been referred to the Department of Justice.

Sincerely yours,

J. Edgar Hoover

John Edgar Hoover
Director

[redacted] (b)(7)(C)

NOTE: Bufiles contain no record correspondent. Dr. Tesla was world-famous electrical inventor, and at death, his effects believed dangerous to country's security. "Prodigal Genius," by John J. O'Neil, alleges FBI took safe and appropriated his property. Above reply previously given to same inquiries. (100-2237) Material sent to the Assistant Attorney, Civil Division, of the Department.

[redacted] (4)

Tolson
Felt
Rosen
Mohr
Bishop
Miller, E.S.
Callahan
Casper
Conrad
Dalbey
Cleveland
Ponder
Bates
Tavel
Walters
Soyars
Tele. Room
Holmes
Gandy

MAILED 8
FBI

[redacted] (b)(7)(C)

58 DEC 21 1971

MAIL ROOM ☐ TELETYPE UNIT ☐

99

Federal Bureau Of Investigation
Ninth Street and Pennsylvania
Northeast Washington D. C. 20535

Dear Sirs,

Upon rea ding a biography on Nikola Tesla, I found the urge to read more on him and his works. At the end of the book it was stated that the F.B.I. went to his hotel room gathered up his papers and locked them in a vault. The thing I would like to know is the real reason they were locked up and if it would be possible to see some of these records and any other works of his.

I can think of only one possible reason as to cause of his records being locked up and that is because he was too far advanced for his time. This seems to be the only logical solution, but, with technology much more advanced now than in his time it would seem likely that scientists take over where he left off.

Please let me know If I can look at the records and if you can please answer my question of the real reason his records were locked up.

Thank You,

[redacted]

ALL INFORMATION CONTAINED
HEREIN IS UNCLASSIFIED
DATE 7-3-80 BY SP4 Jam/rtc

ST-113

(b)
(7)
(C)

REC-48

100-2237-21

[redacted]

Ack
10-31-72
[redacted]

100

ST-113

REC-48

October 31, 1972

100-2237-21

[redacted]

ALL INFORMATION CONTAINED HEREIN IS UNCLASSIFIED DATE 7-3-80 BY [signature]

(b)(7)(c)

Dear [redacted]:

Your letter was received on October 26th.

In response to your inquiry, the effects of Dr. Nikola Tesla were impounded, after his death, by the Office of Alien Property of the Department of Justice and not by the FBI. Since we did not participate in the handling of Dr. Tesla's belongings, I am unable to furnish the information you desire. I am forwarding a copy of your communication and of this reply to the Department of Justice.

Sincerely yours,

L. Patrick Gray III

L. Patrick Gray, III
Acting Director

MAILED 8
OCT 31 1972
FBI

NOTE: Correspondent is not identifiable in Bufiles. Bufile 100-2237 reflects that Dr. Tesla was a world-famous electrical inventor, and at the time of his death, all of his personal papers and effects were believed dangerous to the country's security if they fell into unauthorized hands. The book, "Prodigal Genius," by John J. O'Neil, alleges that the FBI took over a certain safe and opened it, appropriating his property. Bufiles clearly indicate that it was the Office of Alien Property of the Department which did so, and the above reply is forwarded in answer to related inquiries. Copy of letter referred to Assistant Attorney General, Civil Division of the Department.

Felt
Baker
Bates
Bishop
Callahan
Cleveland
Conrad
Dalbey
Jenkins
Marshall
Miller, E.S.
Ponder
Soyars
Walters
Tele. Room
Mr. Kinley
Mr. Armstrong
Ms. He[illegible]
Mrs. N[illegible]

[redacted]

57 NOV 6 1972

MAIL ROOM ☐ TELETYPE UNIT ☐

(b)(7)(c)

[redacted]

101

[redacted]

April 3, 973

(b)
(2)
[redacted]

Federal Bureau of Investigation
Washington
District of Columbia

1 ex
Zip Co
dir
gen

ALL INFORMATION CONTAINED
HEREIN IS UNCLASSIFIED
DATE 7-2-80 BY SP4 Jm/rtc

Dear sirs:

During my research on Nikola Tesla, I found that the F.B.I. had confiscated his records pertaining to his experiments. I would like to know if such information is available and if so how copies might be obtained.

t

I am an engineering student and hope possibly to resume where Tesla left off.

I have the honor to remain,

(b)
(7)
(c)

EX-111 REC-36 [redacted] 100-2237-22

10 APR 11 1973

[redacted]

CORRES

102

O
Nikola Tesla

EX-111

REC-36

100-2237-22

April 11, 1973

[redacted]

(b) ALL INFORMATION CONTAINED
(7) HEREIN IS UNCLASSIFIED
(c) DATE 7-3-80 BY SP4 Jim/rte

Dear [redacted]:

Your letter was received on April 9th.

In response to your inquiry, the effects of Dr. Nikola Tesla were impounded, after his death, by the Office of Alien Property of the Department of Justice and not by the FBI. Since we did not participate in the handling of Dr. Tesla's belongings, I am unable to furnish the information you desire. A copy of your communication and of this reply have been referred to the Department of Justice.

Sincerely yours,

L. Patrick Gray, III
Acting Director

NOTE: Bufiles contain no record of correspondent. (Bufile 100-2237 reflects that Dr. Tesla was a world-famous electrical inventor, and at the time of his death, all of his personal papers and effects were believed dangerous to the country's security if they fell into unauthorized hands. The book, "Prodigal Genius," by John J. O'Neill, alleged that the FBI took over a certain safe and opened it, appropriating his property. Bufiles clearly indicate that it was the Office of Alien Property of the Department which did so, and the above reply is forwarded in answer to related inquiries. Copy of letter referred to the Assistant Attorney General, Civil Division of the Department.)

[redacted] (4)

Mr. Felt
Mr. Baker
Mr. Callahan
Mr. Cleveland
Mr. Conrad
Mr. Gebhardt
Mr. Jenkins
Mr. Marshall
Mr. Miller, E.S.
Mr. Soyars
Mr. Thompson
Mr. Walters
Tele. Room
Mr. Kinley
Mr. Armstrong
Mr. Bowers
Mr. Herington
Ms. Herwig
Mr. Mintz
Mrs. Neenan

54 APR 2 [redacted]

MAIL ROOM ☐ TELETYPE UNIT ☐

(b)
(7)
(c) [redacted]

103

[redacted] (b)(7)(c)

June 20, 1973

Federal Bureau of Investigation
Department of Justice
Washington, D. C.

INFORMATION CONTAINED
HEREIN IS UNCLASSIFIED
DATE 7-3-80 BY SP4 Jm/rte

Gentlemen:

I would like to know if any microfilm or other reproductions of Nikola Tesla's notes and papers exist at your office. Tesla was a famous scientist who died in New York City. The Federal Bureau of Investigation entered his safe shortly after this to remove his papers for examination for the war effort. After the war the papers were offered to any group that would start a museum to house them. No one accepted and the papers were finally sent to the Tesla Museum in Belgrade, Yugoslavia, sometime in the early 1950's, possibly just before 1954. Tesla was the inventor of all ac motors and the polyphase system, as well as all flourescent and neon lamps. He was a major pioneer in the early days of radio and discovered many of the early principles of radar. He declined nomination of a Nobel Prize. He was a naturalized citizen of America and said he valued his citizenship papers above all his awards and possessions. Despite this, all his papers were sent to another nation.

I would like to examine some of his papers from 1899 and later without having to fly to Yugoslavia. I have only seen a condesnsed copy of his research from Colorado Springs, but am unable to obtain copies. The principles and equipment are rather out-of-date and well-known, but still useful in my research. [redacted]

I would greatly appreciate help in this matter.

Sincerely, REC-26 100-2237-23

[redacted] (b)(7)(c)

JUN 29 1973

P.S. Tesla died in January of 1943 and shortly after ~~this~~ the papers were removed from his safe. The original copies of these papers were sent abroad prior to 1954, as I believe it was in that year the Yugoslavs founded the Tesla Museum (not to be confused with the Tesla Institute). [redacted]

(b)(7)(c)

104

EX-109

June 27, 1973

REC-26 100-2237-23

[redacted] (b)(7)(C)

ALL INFORMATION CONTAINED HEREIN IS UNCLASSIFIED DATE 2-3-80 BY [illegible]

Dear [redacted]:

Your letter was received on June 25th.

In response to your inquiry, the effects of Dr. Nikola Tesla were impounded, after his death, by the Office of Alien Property of the Department of Justice and not by the FBI. Since we did not participate in the handling of Dr. Tesla's belongings, I am unable to furnish the information you desire. A copy of your communication and of this reply have been referred to the Department of Justice.

Sincerely yours,

William D. Ruckelshaus

William D. Ruckelshaus
Acting Director

[redacted] (b)(7)(C)

MAILED 24 FBI

NOTE: Bufiles indicate one letter to correspondent dated 4-15-66 in reply to his inquiry regarding the Air Force's Project Blue Book and UFO sightings. Bufile 100-2237 reflects that Dr. Tesla was a world-famous electrical inventor, and at the time of his death, all of his personal papers and effects were believed dangerous to the country's security if they fell into unauthorized hands. The book, "Prodigal Genius," by John J. O'Neill, alleged that the FBI took over a certain safe and opened it, appropriating his property. Bufiles clearly indicate that it was the Office of Alien Property of the Department that did so, and the above reply is forwarded in answer to related inquiries. Copy of letter referred to the Assistant Attorney General, Civil Division of the Department.)

[redacted] (4)

[redacted] (b)(7)(C)

Felt
Baker
Callahan
Cleveland
Conrad
Gebhardt
Jenkins
Marshall
Miller, E.S.
Soyars
Thompson
Walters
Room
Kaise
James
Powers
Herrington
Conmy
Mintz
Wardley
Logan

54 JUL 8 1973

MAIL ROOM ☑ TELETYPE UNIT ☐

105

100-2237-28

November 10, 1975

[redacted]

(b) (7) (c) ALL INFORMATION CONTAINED HEREIN IS UNCLASSIFIED DATE 7-3-80 BY SP4 Jpm/rtc

Dear [redacted]:

This is to acknowledge receipt of your Freedom of Information-Privacy Acts (FOIPA) request forwarded to the FBI by the Department of Justice on October 22nd.

In response to your request for files pertaining to Nikola Tesla, please be advised that in order to preserve the privacy of an individual who may be the subject of a similar inquiry, it has been necessary for the FBI to maintain the practice of not indicating whether we do or do not have such information in our files.

If you can provide notarized authorization from Mr. Tesla's next of kin directing us to release to you any information our files may contain concerning him, we shall thereafter search our files and advise you accordingly.

Since we have not conducted a search of our files, please do not infer that we do or do not have the information you requested.

Sincerely yours,

C. M. Kelley

Clarence M. Kelley
Director

MAILED 6
NOV 10 1975
-FBI

1 - The Deputy Attorney General - Enclosure
Attention: Susan M. Hauser

[redacted] (5)

(b) (7) (c)

Assoc. Dir. ___
Dep. AD Adm. ___
Dep. AD Inv. ___
Asst. Dir.:
Admin. ___
Comp. Syst. ___
Ext. Affairs ___
Files & Com. ___
Gen. Inv. ___
Ident. ___
Inspection ___
Intell. ___
Laboratory ___
Plan. & Eval. ___
Spec. Inv. ___
Training ___
Legal Coun. ___
Telephone Rm. ___
Director Sec'y ___

MAIL ROOM ☑ TELETYPE UNIT ☐

62 DEC 30 1975 F 303

[redacted]

GPO : 1975 O - 569-920

106

[redacted] (6)(7)(c)

April 20, 1976

Mr. Clarence Kelly
Director
F.B.I.
Washington, DC

ALL INFORMATION CONTAINED HEREIN IS UNCLASSIFIED DATE 7-3-80 BY [illegible]

Dear Mr. Kelly:

Mr. Allen and Mr. Ruchlehaus, former acting Director of the FBI, contacted me in 1973 regarding the unavailability of American microfilm records of Nikola Tesla's unpublished diary (now in the Belgrade museum, arranged by month per folder).

At the time I discounted the possibility that these unpublished discoveries had military significance. But because of experiments now under way at Hill AFB, I now suspect such military applications exist and feel it imperative that you be notified, particularly in view of the fact that the Soviets have primary access to the entire collection.

Two photos of each page exist.

After Tesla's death, scientists from the Navy and OSS performed a cursory examination of the diary and notes, which if my memory serves me correctly, was one month long, hardly enough time to decipher Tesla's torturous handwriting. Though Tesla wrote in English, his penmanship was small, blurred, and as difficult to translate as a foreign language.

According to the museum director (1971), the Soviets had made copies of some portions, but not the Colorado Springs diary, which numbers 500 pages, 20 that directly pertain to ball lightning, and 20 or so relevant to the equipment construction. (We copied the most significant portions, but feel more exists)

FX-115 REC-52 100-2237-29

[redacted] an article [redacted] magazine, EDN (an electrical engineering magazine), but only with the very recent receipt of an unpublished manuscript from John J. O'Neill's book (PRODIGAL GENIUS) did I place credence on Tesla's later claim to military applications. Incidentally, some of O'Neill's descriptions were inaccurate and exagerated, as we have exceeded Tesla's results and are familiar with the experiments. At any rate, there are three possible military applications.

(b)(7)(c)

4 MAY 3 1976

[redacted]

107

First, Tesla claimed that the lightning balls (which destroyed his equipment) could be used to destroy aircraft. I have talked to AF personnel --such as [redacted] who saw one inside his plane in flight--and found AF personnel fear these "rf balls," as they call them.

Second, it is a suspicion of mine that ball lightning, if injected with lithium, could produce a cheap fusion bomb.

Third--and this may be no more than a suspicion--the propulsion mode of ball lightning involves electro-gravitic interaction, by which means air vehicles of revolutionary configuration may be constructed. There are no presently-known laws of physics that can account for the propulsion (400 mph or so when following an airliner). Other hitherto unsuspected applications may exist.

(b)(7)(C)

None of these applications were the goal of Project Tesla, which centered on producing ball lightning as Tesla did and studying it as a plasma confinement technique for fusion reactors. Incidentally, Tesla's claim to setting up standing waves on the earth's surface (wireless power) was erroneous and involved techniques similar to Project Sanguine, that is, using the earth's atmosphere as a waveguide ([redacted] is aware of our research).

Cordially,

[redacted]

P.S. By a copy of this letter, along with the enclosures, I am notifying the C.I.A.

Enclosures: 2

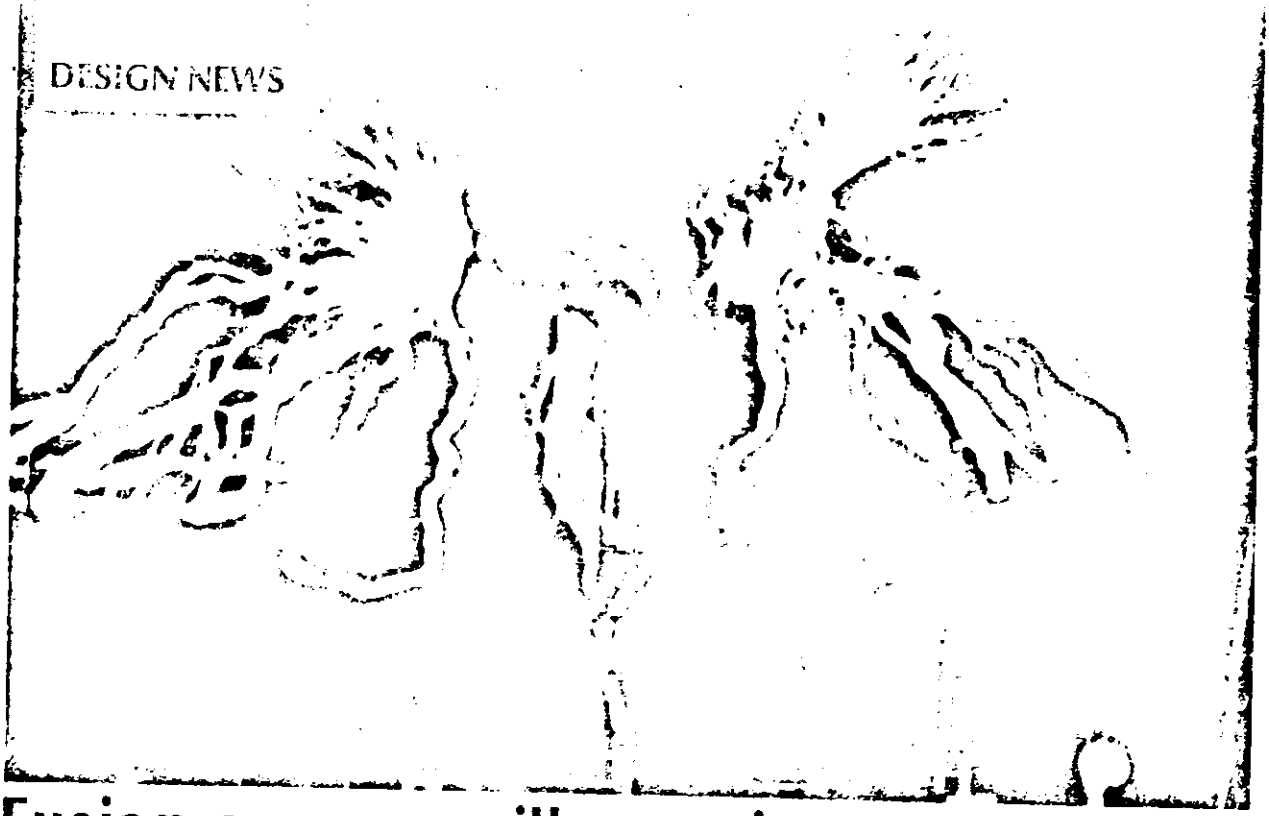

Fusion energy: will experiments in ball lightning provide the key?

Paul Snigier, Associate Editor

In the vast and empty hangar where the first atomic bomb was assembled, a man-made lightning storm is now being unleashed. The voltages of these lightning bolts—20 million volts—are the highest discharge voltages ever produced by man.

Project Tesla, headed by Robert K. Golka and Dr. Robert W. Bass, is an attempt to artificially duplicate one of nature's rarest and most terrifying phenomena—ball lightning. The experiments are based upon the unpublished notes of Nikola Tesla, who, in 1899 at his Colorado Springs laboratory, used a secret *magnifying transmitter* to produce 1.5-in. lightning balls that floated for 30 sec.

The energy surplus

Many physicists, including the eminent Dr. James Tuck, founder of the U.S. fusion program, believe that the lightning ball holds the key to a fantastic, cheap and endless energy source—fusion power, or the energy source used by the stars and sun. The fuel is deuterium, or heavy water, that can be inexpensively extracted from ocean water to provide mankind

Highest voltage continuously oscillating damped-wave lightning generator (ever produced by mankind) creates a current of 1100A at 12.5 MV! Subsequent improvements raised this to a peak current of 2200A at 20 MV. Further improvements could conceivably produce bolts that exceed natural lightning (100 MV)!

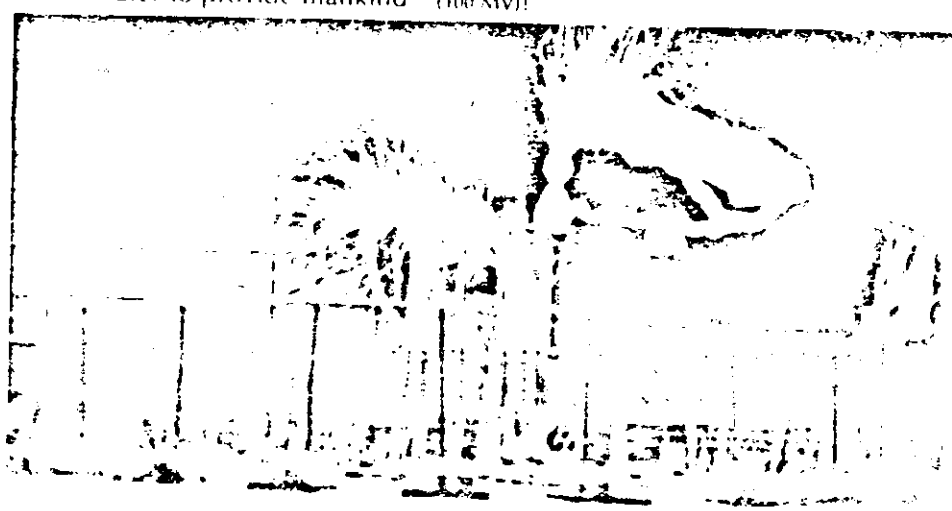

100-2237-29

DISCLOSURE

with millions of years of [illegible]. Unfortunately, progress in fusion research, which has centered on magnetic confinement and laser implosions, has been frustratingly slow and full of unpleasant surprises; and scientists warn that success could be as far off as four decades! But if these promising experiments under way at Wendover, UT, are successful, a new unexpected confinement technique could unleash this energy source.

In search of nature's secrets...

Ball lightning, a glowing sphere of red, orange or yellow plasma, often materializes during lightning storms and floats about, often against a strong wind. The ball may bounce along the floor and, on occasion, the sphere will "slip" through glass without breaking it. (The author recently investigated one such case in a hospital, in which the lights were damaged.) At times it materializes inside or even outside aircraft in flight, seemingly impervious to deformation from the wind force.

Witnesses of ball lightning have included such notables as Niels Bohr and Victor Weisskopf, the Director of the MIT Physics Department. Another witness was Secretary of State Dean Acheson, who reported seeing it cross the breakfast table aboard the presidential plane.

The accidental formation of ball lightning has been observed about once per year for the past decade inside building 985 at Hill AF Missile Radiographic Facility, UT. The volleyball-size fireballs drop out of the space adjacent to the high voltage supply of the 25 Mev linear accelerator.

The ball of blue fire floats down to the floor, rolls around randomly and then rises again to the power-supply area where it dissipates without detectable damage. Despite troubleshooting, no explanation can be found for this occurrence.

On one occasion, lightning struck the building—a large concrete structure with a 60-ft. ceiling inside—and, simultaneously, an intense sphere of fire the size of a tennis ball formed above the conduit on the wall at [illegible]ly shoulder level. It moved along the wall for a distance of some 30 ft., floated out and around the neck and shoulders of a person standing near the wall, moved back to the wall and continued along for several feet until it intercepted a duplex outlet on the conduit. At this the ball exploded, causing electrical damage throughout.

A new state of matter?

No presently known laws of physics can account for the stability and bouncing of fireballs unless it includes surface tension. This hitherto unobserved state of matter is a new concept, since plasmas have never previously exhibited such strong surface tension. Also, presently known laws cannot account for the propulsion.

Project Tesla has developed a rigorous mathematical model of the lightning ball's absolute, asymptotic, fluid-dynamical stability. Initial computer studies indicated a density range of 10^{15}-10^{17} cm^{-3}, with a temperature of 10^{5}-10^{6} °K—or seven times hotter than the sun! □

Chapter 34

TESLA TRIES TO PREVENT WORLD WAR II

When Tesla was talking as a scientist he was opposed to wars on moral, economic and all practical and theoretical grounds. But, like most scientists, when he stopped thinking as a scientist, and let his emotions rule his thoughts, he found exceptions in which he felt some wars and situations were justifiable. As a scientist he was unwilling to have the discoveries of scientists applied to the pruposes of war makers, but when the emotional phase of his nature took the ruling position he was then willing to apply his genius to devising measures that would prevent wars by supplying protective devices.

This attitude is exemplified in the following statement which he prepared in the twenties but did not publish:

"At present many of the ablest minds are trying to devise expedients for preventing a repetition of the awful conflict which is only theoretically ended and the duration and main issues of which I correctly predicted in an article printed in the Sun of December 20, 1914. The League is not a remedy but, on the contrary, in the opinion of a number of competent men, may bring about results just the opposite. It is particularly regrettable that a punitive policy was adopted in framing the terms of peace because a few years hence it will be possible for nations to fight without armies, ships or guns, by weapons far more terrible, to the destructive action and range of which there is virtually no limit. Any city at any distance whatsoever from the enemy can be destroyed by him and no power on earth can stop him from doing so. If we want to avert an impending calamity and a state of things which may transorm this globe into an inferno, we should push the development of flying machines and wireless transmission of energy without an instant's delay and with all the power and resources of the nation."

Tesla saw preventative possibilities in his new invention which embodied "death ray" characteristics and which was made several years after the foregoing statement was written. He saw it providing a curtain of protection which any country, no matter how small, could use as a protection against invasion. While he might offer it as a defensive weapon, however, there would be nothing to stop military men from using it as a weapon of offense.

While I did not know the nature of Tesla's plan I was convinced that it did embody many discoveries that would be of commercial value, and these were the angles he should seek to develop. I felt that if he could be induced to develop some minor phase of his work that would have immediate commercial use he could derive an income from it which would enable him to proceed with his more elaborate plans. To this end I sought to gain some insight into his thoughts, that would enable me to get a practical plan in operation. This was no secret to Tesla and he successfully parried every thrust I made.

The clearest conception I got, and that was largely from scattered remarks, and by making deductions from them, concerned a possible manner in which one phase of his curtain of protection might operate. This was a "war" angle and as such it did not interest

100-2237-01

me, but since it involved "lightning balls," or "fire balls," I was very curious. Fi[illegible]lls had always fascina[illegible]o, and I had read everything I could lay my hands on about them.

A fire ball is a strange phenomenon associated with lightning. Some of the energy of the lightning stroke appears to become locked into a ball shaped structure which may be of any size from a couple of inches to a foot in diameter. It looks like a perfect sphere, brightly incandescent and floats like a bubble, being easily carried by air currents. They may last for a short time, from a fraction of a second to many seconds. In this interval, during which they stay fairly close to the ground, they may come close to many objects without damaging them or being damaged by them. Suddenly, for no known reason, the ball explodes doing as much damage as a bomb, if close to structures, and no damage if in the open.

The fire ball looked to me like a gigantically enlarged model of the tiny electron, one of the building blocks of matter, which acts as if it were just a spherical area of space in which an amount of energy was crystallized to give it structure. I felt that if it were possible to discover how a large amount of energy was stored in this fairy bubble structure of a fire ball a new insight might be gained into the structure of the electron and other fundamental particles of matter. Also this method of storing energy could be applied to a thousand useful purposes.

When I approached Tesla with pleas along this line to develop this possible phase of his discovery he would evade direct reply by indulging in a, not always, tolerant lecture on my gullability in believing theories about the complex structure of the atom. While he had in earlier years discussed some of his experiences with fire balls in his laboratory at Colorado Springs and explained his theory of their formation, he would not in the later years permit himself to be drawn into a discussion of them as a possible part of his system. This, of course, made me suspicious that the clue was "hot" but I could be completely wrong in my conclusions. Tesla was very quick in detecting my technique when I sought to narrow down a field by trying to get him to deny statements when he was adamant to direct questions.

Tesla became familiar with the destructive characteristics of fire balls in his experiments at Colorado Springs in 1899. He produced them quite by accident and saw them, more than once, explode and shatter his tall mast and also destroy apparatus within his laboratory. The destructive action accompanying the disintegration of a fire ball, he declared, takes place with inconceivabel violence.

He studied the process by which they were produced, not because he wanted to produce them but in order to eliminate the conditions in which they were created. It is not pleasant, he related, to have a fire ball explode in your vicinity for they will destroy anything they come in contact with.

It will be necessary to reconstruct his statements from very fragmentary notes and a long distance memory.

"Parasite oscillations, or circuits, within the main circuit were a source of danger from this cause. Points of resistance in the main circuit could result in minor oscillating circuits between terminals or between two points of resistance and these minor circuits would have a very much higher period of oscillation than the main circuit and could be set into oscillation by the main current of lower frequency.

"Even when the principal oscillating circuit was adjusted for the greatest efficiency of operation by the dimination of all sources of losses the fire balls continued to occur but these were due to stray high frequency charges from random earth currents.

"From these experiences it became apparent that the fire balls resulted from the interaction of two frequencies, a stray higher frequency wave imposed on the lower frequency free oscillation of the main circuit.

"As the free oscillation of the circuit builds up from the zero point to the quarter wave length node it passes through various rates of change. In a current of shorter wavelength the rates of change will be steeper. When the two currents react on each other the resultant complex will contain a wave in which there is an extremely steep rate of change, and for the briefest instant currents may move at a tremendous rate, at the rate of millions of horsepower.

"This condition acts as a trigger which may cause the total energy of the powerful longer wave to be discharged in an infinitesmally small interval of time and at a proportionately tremendously great rate of energy movement which cannot confine itself to the metal circuit and is released into surrounding space with inconceivable violence."

It is but a step, from learning how a high frequency current can explosively discharge a lower frequency current, to using the principle to design a system in which these explosions can be produced by intent. The following process appears a possible one but no evidence is available that it is the one Tesla evolved: An oscillator, such as he used to send power wirelessly around the earth at Colorado Springs, is set in operation at a frequency to which a given warship is resonant. The complex structure of a ship would provide a great number of spots in which electrical oscillations will be set up of a much higher frequency than those coursing through the ship as a whole. These parasite currents will react on the main current causing the production of fireballs which by their explosions will destroy the ship, even more effectively than the explosion of the magazine which would also take place. A second oscillator may be used to transmit the shorter wavelength current.

Somewhat later I learned the reason for Tesla's reticence to discuss details. This came shortly after Stanley Baldwin replaced Neville Chamberlin as Prime Minister of Great Britain.

Tesla revealed that he had carried on negotiations with Prime Minister Chamberlin for the sale of his ray system to Great Britain for $30,000,000 on the basis of his presentation that the device would provide complete protection for the British Isles against any enemy approaching by sea or air, and would provide an

offensive weapon to which there was no defense. He was convinced, he declared, of the sincerity of Mr. Chamberlain and his intent to adopt the device as it would have prevented the outbreak of the then threatening war, and would have made possible the continuation- under the duress which this weapon would make possible - of the working agreement involving France, Germany and Britain to maintain the status quo in Europe. When Chamberlin failed, at the Munich conference, to retain this state of European equilibrium it was necessary to get rid of Chamberlin and install a new Prime Minister who could make the effort to shift one corner of the triangle from Germany to Russia. Baldwin found no virtue in Tesla's plan and preemptorially ended the negotiations.

Tesla was greatly disappointed by the collapse of his negotiations with the British Government. With it there collapsed his hopes of providing a demonstration of his most recent, and, what he considered, his most important discoveries. He did not, however, dwell on the jubject; beyond the single conversation he did not mention the matter again. He did not get another chance to finance the demonstration of these discoveries.

During the period in which the negotiations were being carried on, Tesla declared, efforts had been made to steal the invention. His room had been entered and his papers examined but the thieves, or spies, left empty handed. There was no danger, he said, that his invention could be stolen for he had at no time committed any part of it to paper. He could trust his memory to preserve every fine detail of his investigations. This was true, he said, of all of his later major discoveries.

The nature of his system makes little difference now; he has gone and has taken it with him. Perhaps, if there is any communication from beyond the veil that separates this life from whatever exists hereafter, Tesla may look down upon earth's struggling mortals and find some way of dropping a hint concerning what he accomplished; but, if the situation is such that this cannot take place, then we must await until the human race produces another Tesla.

ooo

ALL INFORMATION CONTAINED
HEREIN IS UNCLASSIFIED
DATE 7-3-80 BY SP4 Jam/rtc

April 30, 1976 [redacted]

EX-115

REC-47

100-2237-29

[redacted]

(b)(7)(c)

Dear [redacted]:

Thank you for your letter of April 20th, with enclosures. It was certainly most thoughtful of you to furnish us this information, and your interest and courtesy are indeed appreciated.

MAILED 6
APR 30 1976
FBI

Sincerely yours,

C. M. Kelley

Clarence M. Kelley
Director

NOTE: Bufiles indicate limited correspondence with [redacted], last outgoing 6-27-73, in reply to his request concerning papers of Dr. Nikola Tesla. Dr. Tesla was a world-famous electrical inventor, and at the time of his death in 1943, all of his personal papers and effects were believed dangerous to the country's security if they fell into unauthorized hands. The book, "Prodigal Genius," by John J. O'Neill, alleged that the FBI took over a certain safe and opened it, appropriating his property. Bufiles indicated the Office of Alien Property of the Department of Justice did so. Bufile 100-2237-23.

[redacted] (3)

Assoc. Dir. ___
Dep. AD Adm. ___
Dep. AD Inv. ___
Asst. Dir.:
Admin. ___
Comp. Syst. ___
Ext. Affairs ___
Files & Com. ___
Gen. Inv. ___
Ident. ___
Inspe[redacted]
Intel[redacted]
[redacted]
Legal C[redacted]
Plan. & Eval. ___
Spec. Inv. ___
Training ___
Telephone Rm. ___
Director [redacted]

(b)(7)(c)

[redacted]

MAIL ROOM ☐ TELETYPE UNIT ☐

~~58 MAY 21 1976~~
31 JUN 21 1976

GPO : 1975 O - 594-120

115

Assoc. Dir. ___
Dep. AD Adm. ___
Dep. AD Inv. ___
Asst. Dir.:
Adm. Serv. ___
Ext. Affairs ___
Fin. & Pers. ___
Gen. Inv. ___
Ident. ___
Inspection ___
Intell. ___
Laboratory ___
Legal Coun. ___
Plan. & Eval. ___
Rec. Mgnt. ___
Spec. Inv. ___
Training ___
Telephone Rm. ___
Director Sec'y ___
FBI/DOJ

JUN 16

United States Senate

To ensure proper handling please return all correspondence TO THE ATTENTION OF:

[redacted]

Respectfully referred to:

FBI

Please respond to the attached inquiry in duplicate and return the enclosure. Thank you for your cooperation.

(b)(7)(C)

[redacted] U.S.S.

EXP PROC

REC-34 100-2237

JUN 17 1976

[redacted]

ENCLOSURE

116

Case

[redacted]

(b)(7)(c)

New Senate Office Bldg
Room 5241, Washington DC 2510

Dear Sir.

I am a substitute in the Milwaukee Public School System. I do scientific experiments in high voltage electricity. I have studied all the available writings of the dead genius Nikola Tesla (1861 - January 7, 1943)

When Nicola Tesla died the Federal Bureau of Investigation came and opened the ~~[illegible]~~ safe in his room and took the papers it contained, to examine ~~[illegible]~~ them

117

ENCLOSURE

for a reported secret invention of
possible use in II W.W..

As a citizen & a
Scientist I would like to
study these unpublished papers
with hope of findings new
ideas for producing an alternate
source of energy. Something
that Nikola Tesla knew about
and because of his unfortunate
financial status, was not able
to develop into a working model
Please help. -

With love in The Lo

[redacted]

(b)(7)(c)

[redacted]

REC-34

100-2237-30

June 23, 1976

Honorable [redacted]
United States Senate
Washington, D. C. 20510

ALL INFORMATION CONTAINED HEREIN IS UNCLASSIFIED DATE 2-3-80 BY SP4 Jrm/rtc (b) (7) (c)

Dear Senator [redacted]:

This will respond to your communication of June 16th enclosing the letter of [redacted]

The effects of Dr. Nikola Tesla were impounded, after his death, by the Office of Alien Property of the Department of Justice and not by the FBI. Since we did not participate in the handling of Dr. Tesla's belongings, I am unable to furnish the information you desire.

A copy of your communication and of this reply are being referred to the Department of Justice and the enclosure to your communication is being returned as requested.

Sincerely yours,

C. M. Kelley

Clarence M. Kelley
Director

Enclosure
1 - Assistant Attorney General - Enclosures (2)
Civil Division
1 - Milwaukee - Enclosures (2)
1 - Office of Congressional Affairs - Enclosures (2)
NOTE: This response is consistent with past responses to inquiries of a similar nature. Bufile 100-2237 reflects that the Office of Alien Property took possession of Dr. Tesla's papers following his death.

[redacted] (7)

Assoc. Dir. ___
Dep. AD Adm. ___
Dep. AD Inv. ___
Asst. Dir.:
Adm. Serv. ___
Ext. Affairs ___
Fin. & Pers. ___
Gen. Inv. ___
Ident. ___
Inspection ___
Intell. ___
Laboratory ___
Legal Coun. ___
Plan. & Eval. ___
Rec. Mgnt. ___
Spec. Inv. ___
Training ___
Telephone Rm. ___
Director Sec'y ___

MAILED 10
JUN 23 1976
FBI

(b) (7) (c)

[redacted]

56 JUL 14 1976

MAIL ROOM ☐ TELETYPE UNIT ☐

[redacted]

119

FBI/DOJ

July 26, 1979

Dear Mr. Webster:

ALL INFORMATION CONTAINED HEREIN IS UNCLASSIFIED DATE 7-14-81 BY [illegible]

OUTSIDE SOURCE

I am writing this letter in regard to some papers you have in your possession by Nikola Tesla.

I have for some time now been studying the works of Mr. Tesla and I am involved in the research and further developement of his efforts. I have in my possession a copy of almost everything that was ever written by him.

However I have read that on the day following his death (he died the night of January 7th, 1943, so probably January 8th, 1943) the Federal Bureau of Investigation went to where Mr. Tesla had been staying - the Hotel New Yorker, New York City, New York and collected all notes and papers that he had with him there.

REC 79 100-22237-[illegible]

2 AUG 7 1979

To further my studies and hopefully complete them it would be deeply appreciated if you would send me a copy of all the notes, papers, books, drawings etc. that were found there.

ack 8-4-79

[redacted]

(b) Thank you,

(7)

(c)

[redacted]

120

UNITED STATES GOVERNMENT — UNITED STATES DEPARTMENT OF JUSTICE
FEDERAL BUREAU OF INVESTIGATION

Memorandum

Assoc. Dir. ___
Dep. AD Adm. ___
Dep. AD Inv. ___
Asst. Dir.:
Adm. Servs. ___
Crim. Inv. ___
Ident. ___
Intell. ___
Laboratory ___
Legal Coun. ___
Plan. & Insp. ___
Rec. Mgmt. ___
Tech. Servs. ___
Training ___
Public Affs. Off. ___
Telephone Rm. ___
Director's Sec'y ___

TO : Mr. Bresson

DATE: 2/25/80

FROM : [redacted] (b)(7)(c)

SUBJECT: FREEDOM OF INFORMATION ACT DISCLOSURE REGARDING DR. NIKOLA TESLA

ALL INFORMATION CONTAINED HEREIN IS UNCLASSIFIED DATE 7-3-80 BY SP4 Jrm/r

PURPOSE:

To reduce time spent on handling of requests for information on captioned subject and to promote uniformity of disclosure.

DETAILS:

A search of FBIHQ central records indices reflects that Dr. Nikola Tesla is carried as the subject of Bufile 100-2237. Virtually all information in this file is inquiry-type correspondence. For purposes of FOIA releases, copies of this material have not been made and requesters have been so advised. Copies of the remaining material in the file totalling 29 pages, however, has been processed for disclosure. Numerous requesters have sought information relating to Dr. Tesla under the FOIA. Therefore, it is recommended that the disclosure documents maintained in Bufile 190-16504-4 be considered the preprocessed release appropriate for responses by the Initial Processing Unit for any further requests for information on this subject.

RECOMMENDATION:

That the Initial Processing Unit, FOIPA Branch, Records Management Division, add captioned case to their list of preprocessed cases and handle any future requests for such information. 100-2237-

1 - [redacted]
1 - [redacted]

100-2237 190
190-16504 1980

XEROX
MAR 27 1980

(b)(7)(c)

[redacted]

[redacted] (7)

121

Buy U.S. Savings Bonds Regularly on the Payroll Savings Plan

August 6, 1979

OUTSIDE SOURCE

[redacted] (b)(1)(c)

ALL INFORMATION CONTAINED HEREIN IS UNCLASSIFIED DATE 2-3-80 BY SP4 Jenkins

Dear [redacted]:

Your recent letter requesting information concerning Dr. Nikola Tesla has been received.

The effects of Dr. Tesla were impounded, after his death, by the Office of Alien Property of the Department of Justice and not by the FBI. We have no preprinted material available for public distribution regarding Dr. Tesla. However, under the provisions of the Freedom of Information Act (Title 5, United States Code, Section 552), requests have been made in the past regarding your topic and there may be documents available to you under Title 28--Code of Federal Regulations.

If you are interested in seeking such documents under the Freedom of Information Act, you should make a separate inquiry, clearly marking the envelope and letter as a Freedom of Information Act request, and direct it to the Director, Federal Bureau of Investigation, 9th Street and Pennsylvania Avenue, N.W., Washington, D. C. 20535. In the letter you must request documents regarding the specific topic of interest to you.

REC-79
EX-137
100-2237-32

Sincerely yours,

DE-79

William L. Bailey
Assistant Director

MAILED 11
AUG 6 1979
FBI

2 AUG 7 1979

Assoc. Dir. 1
Dep. AD Adm.
Dep. AD Inv.
Asst. Dir.:
Adm. Servs.
Crim. Inv.
Ident.
Intell.
Laboratory
Legal Coun.
Plan. & Insp.
Rec. Mgnt.
Tech. Servs.
Training
Public Affs. Off.
Telephone Rm.

[redacted] - Enclosure
Room 6958
(This correspondence response may engender a future FOIA inquiry.)

NOTE: Based upon available information, correspondent is not identifiable in Bufiles.

[redacted]lch (4)

(b)(7)(c)

122

[redacted]

FBI/DC

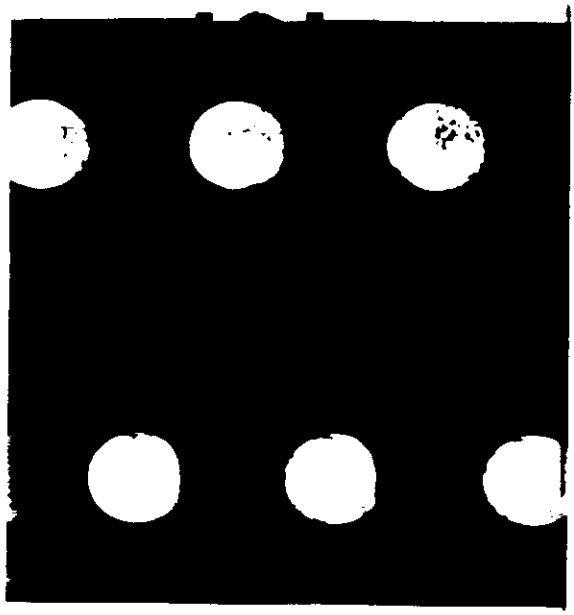

(Rev. 10/10/79)

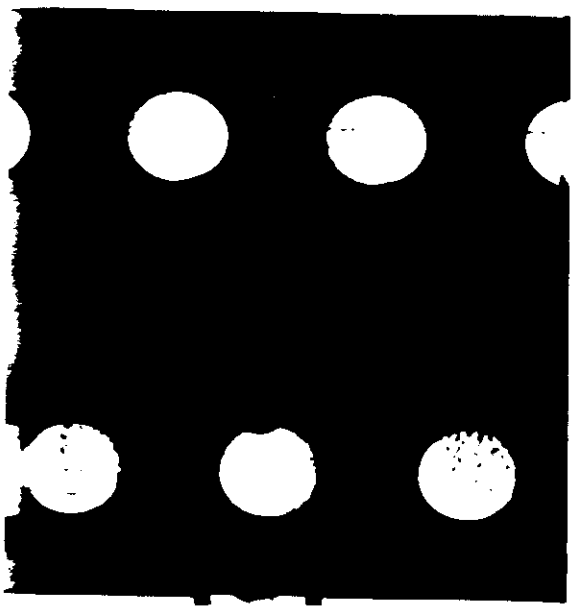

DEPARTMENT OF JUSTICE
FEDERAL BUREAU OF INVESTIGATION
INTERNAL ROUTING/ACTION SLIP

TO	BLDG.	ROOM	NAME/TITLE/ORGANIZATION	
	JEH	7142	Mr. Colwell	235
	JEH	7110	Mr. Boynton	235
	JEH	7110	Mr. Moore	235
	JEH	5829	Mr. Bailey/Rogers	211
	JEH	5829	Mr. O'Brien/Lass	211
	JEH	6296	Mr. Flanders/Woleslagle	314
			OPERATIONS SECTION	
	JEH	6992	Mr. Ervin/Poston	314
	JEH	6993	Mr. Tierney/Poston	314
	JEH	6280	CHIEF, TAR/Secretary	314
			SA:	
			Attn:	
	JEH	6587	CHIEF, FIELD COOR.	314
			SA:	
			Attn:	
	JEH	6958	CHIEF, IPU/Secretary	314
			SA:	
			Attn:	
	JEH	6363	File Duplication	314
	JEH	6268	Tickler/Index Group	314
	JEH	6992	Leave Clerk	314
	JEH	6348	Word Processing Center	314
	JEH	6380	DCRU	314
			Attn:	

BLDG	ROOM	NAME/TITLE/ORGANIZATION	
		DISCLOSURE SECTION	
JEH	6995	Mr. Bresson/Nemmensen	314
JEH	6994	Mr. Lewis/Nemmensen	314
JEH	6927	CHIEF, UNIT A/Secretary	314
		SA: Team	
		RA: Team	
JEH	6959	CHIEF, [redacted]	314
		SA: Team	
		RA: Team	
JEH	6975	CHIEF, UNIT C/Secretary	314
		SA: Team	
		RA: Team	
JEH	6986	CHIEF, UNIT D	314
		SA: Team	
		RA: Team	
JEH	6786	CHIEF, UNIT E	314
		SA: Team	
		RA: Team	
JEH	6387	CHIEF, UNIT F/Secretary	314
		SA: Team	
		RA: Team	

(2)

ALL INFORMATION CONTAINED HEREIN IS UNCLASSIFIED DATE 2-14-82 BY [illegible]

I would prefer IPU being alerted that any request for Tesla file be referred directly to [redacted] whereupon she would see that appropriate release is made

☐ RECOMMENDATION/COMMENT
☐ SEE REMARKS ON REVERSE
☐ MAKE COPIES (NO.)
☐ RETURN (BY)
☐ LOG
☐ FILE
☐ SEE ME
☐ CALL ME
☐ NECESSARY ACTION
☐ COORDINATE
☐ PER INQUIRY
☐ INFORMATION

FROM Freedom of Information-Privacy Acts Branch

THOMAS H. BRESSON SECTION CHIEF

BLDG. | ROOM

PHONE | DATE

[redacted]

FORM DOJ-359A
8-1-74

(b)
(7)
(C)

123

CONFIDENTIAL

OFFICE OF THE UNDER SECRETARY OF DEFENSE

WASHINGTON, D.C. 20301

RESEARCH AND ENGINEERING

FEDERAL GOVERNMENT

9 FEB 1981

B11

MEMORANDUM FOR THE DIRECTOR, FEDERAL BUREAU OF INVESTIGATION

SUBJECT: Papers Recovered on the Death of Nicola Tesla (U)

(U) We understand that the FBI may have possession of a number of papers found after the death of Nicola Tesla in 1943. Nicola Tesla was a brilliant electrical engineer (i.e. the Tesla Coil) who was a pioneer in various aspects of electrical transmission phenomena.

(C) We believe that certain of Tesla's papers may contain basic principles which would be of considerable value to certain ongoing research within the DoD. It would be very helpful to have access to his papers.

(U) Since we have really no idea of the possible volume of these papers, we would be happy to provide a researcher who could assist you in reducing the magnitude of the search. If there are further questions, I am the point of contact within the DoD and can be reached at 695-6364 or 695-7417.

Allan J. MacLaren

Allan J. MacLaren
LtColonel, USAF
Military Assistant
Strategic and Space Systems

REGISTERED
1059638

FBI
ALL INFORMATION CONTAINED
HEREIN IS UNCLASSIFIED
DATE 4-8-93 BY 9803 [redacted] b7C
FOIPA No. 356,608
362,001

100-2237-33

Per DOD letter dated 3-29-93
with Enclosures 1 and 2
All DOD info is unclassified
DOD referenced FOI/PA #'s 356,608 and
362,001
4/8/93 9803 [redacted] b7C

ALL INFORMATION CONTAINED
HEREIN IS UNCLASSIFIED
DATE 7-14-93 BY SP1DSK/MK

2 MAR 12 1981

b7C

Classifed by: DUSDRE/S&SS
Declassify on: February 1987

DECLASSIFIED BY 1048 [redacted]
ON 1-27-93
Per Army letter 5-25-89
291860

CORRESPONDENCE

50 MAR 30 1981

CONFIDENTIAL

124

March 10, 1981

Lt. Col. Allan J. MacLaren, USAF
Military Assistant
Strategic and Space Systems
Office of the Under Secretary
of Defense
Washington, D. C. 20301

FEDERAL GOVERNMENT

ALL INFORMATION CONTAINED
HEREIN IS UNCLASSIFIED
DATE 7-14-92 BY SP1 ASK/MKE

Dear Colonel MacLaren:

Your memorandum of February 9 requesting access to the scientific papers of Dr. Nikola Tesla which might be in our files has been referred to my office for reply.

A preliminary review of our files indicates that the FBI did not participate in the handling of Dr. Tesla's belongings following his death in New York City in January, 1943. His papers were examined by representatives of the Office of Alien Property, the Navy Department and the Office of Scientific Research and Development. In February, 1943, the papers apparently were released to Mr. Sava N. Kosanovic, Dr. Tesla's nephew and the administrator of his estate. Mr. Kosanovic's address at that time was 11 Central Park South, New York, New York.

A complete search of our indices is being made to determine if we have any information that might be useful to you. You will be notified of the results of this search at the earliest possible date.

DE-110/100-2237-34

MAILED 3
MAR 10 1981
FBI

Sincerely,

MAR 12 1981

Roger S. Young
Assistant Director in Charge
Office of Congressional
and Public Affairs

1 - [redacted] (FOIPA) - Enc.
1 - Mr. Young - Enc.
1 - [redacted] - Enc.

(b)(7)(c)

NOTE: Reply discussed with [redacted] FOIPA, RMD, who has handled similar requests for information in our files concerning Dr. Tesla. In numerous previous responses we have said that the Office of Alien Property the Department of Justice impounded Dr. Tesla's papers after his death. However, the Office of Foreign Litigation, Civil Division, indicated that Dr. Tesla's papers are not in their possession.

Exec AD Inv. ___
Exec AD Adm. ___
Exec AD LES ___
Asst. Dir.:
Adm. Servs. ___
Crim. Inv. ___
Ident. ___
Intell. ___
Laboratory ___
Legal Coun. ___
Plan. & Insp. ___
Rec. Mgnt. ___
Tech. Servs. ___
Training ___
Public Affs. Off. ___
Telephone Rm. ___
Director's Sec'y ___

[redacted] (c)

60 MAR 30 1981

139

(b)
(7)
(c)

MAIL ROOM ☑

125

March 20, 1961

Lt. Col. A. J. MacLaren
Military Assistant
Strategic and Space Systems
Office of the Under Secretary
of Defense
Washington, D. C. 20301

FEDERAL GOVERNMENT

ALL INFORMATION CONTAINED
HEREIN IS UNCLASSIFIED
DATE 7-14-92 BY [illegible]

Dear Colonel MacLaren:

A complete search of our retrievable files concerning Dr. Nikola Tesla shows that all notes and material in his immediate possession at the time of his death on January 7, 1943, were placed in the custody of the Alien Property Custodian under seal by the United States Government. These materials have never been in the care or custody of the FBI.

On January 26 and 27, 1943, Federal authorities made a thorough review of the effects of Dr. Tesla to determine if any ideas of significant value to the United States war effort could be found. His effects were examined at the Manhattan Warehouse and Storage Company at 52nd and 7th Avenue, New York, New York, where they apparently were taken after his death. Participating in this examination were representatives from the New York and Washington Offices of the Alien Property Custodian, the Office of Scientific Research and Development at the Massachusetts Institute of Technology, the Office of Naval Intelligence, and United States Naval Research. The FBI did not participate in this examination. (65-47953 section 1)

It was the considered opinion of a spokesman of those examiners "that there exist among Dr. Tesla's papers and possessions no scientific notes, descriptions of hitherto unrevealed methods or devices, or actual apparatus which could be of significant value to this country or which would constitute a hazard in unfriendly hands." There was thought to be no technical or military reason why further custody of the property should be retained. However, our files indicate that certain papers, which were regarded as typical of Nikola Tesla's writings and thoughts in the period of 1925 to 1942, were removed for the purpose of record to the Office of the Alien Property Custodian. (65-47953 section 1)

MAILED 6
MAR 23 1961
FBI

Exec AD Inv. ___
Exec AD Adm. ___
Exec AD LES ___
Asst. Dir.:
Adm. Servs. ___
Crim. Inv. ___
Ident. ___
Intell. ___
Laboratory ___
Legal Coun. ___
Plan. & Insp. ___
Rec. Mgnt. ___
Tech. Servs. ___
Training ___
Public Affs. Off. ___
Telephone Rm. ___
Director's Sec'y ___

1 - Mr. Young
1 - [redacted]
1 - [redacted]

MAIL ROOM [redacted]

V-38 DE-113 100-2237-25 MAR 25 1961

BE

(SEE NOTE PAGE THREE)

[redacted]

126

. Col. A. J. MacLaran

A memo dated October 17, 1945, from our New York Office said that at that time Dr. Tesla's effects remained at the Manhattan Storage Warehouse in some 75 packing boxes and trunks under seal by the New York Department of Taxation. The rental for this storage, approximately $15 per month, was being paid by Charlotte Muzar, 134 East 63rd Street, New York, New York, who was listed as an agent for Sava Kosanovich, Dr. Tesla's nephew and administrator of his estate. (65-47953-14)

On October 26, 1945, [redacted] a young scientist who had been Tesla's protege, called in person at our New York Field Office. With him were [redacted] and [redacted] from a research development unit at Wright Field, Dayton, Ohio. These men carried a letter signed by [redacted] requesting that the FBI allow the bearers of the letter access to the effects of Nikola Tesla. (65-47953-15)

It was explained to [redacted] that the FBI had no jurisdiction over Tesla's effects, and they were referred to the Office of the Alien Property Custodian. Bureau files do not indicate whether the men ever examined Tesla's belongings. (65-47953-15)

The Tesla effects remained in rooms 5J and 5L of the Manhattan Storage Company. In the 1950s, FBI Agents were told by company management that the only recorded visit had been made by "Federal authorities" in January, 1943. [redacted] recalled that the men had taken numerous photographs. His description of the equipment used would tend to show that a microfilm reproduction was made of the papers of the deceased. (65-47953-27)

Our files do not reflect any pertinent information on the Tesla materials since that date. Their current whereabouts or condition are not reflected in our files.

For further information regarding this matter, you may wish to contact the Office of the Alien Property Custodian and the other Federal agencies mentioned above.

I hope that we have been of assistance to you.

Sincerely,

Roger S. Young
Assistant Director in Charge
Office of Congressional
and Public Affairs

(CONTINUED - OVER)

127

Lt. Col. A. J. MacLaran

NOTE: On February 9, 1981, Col. MacLaran wrote to us inquiring about the scientific papers of Dr. Nikola Tesla. In a return letter of March 9, we informed him that a thorough review of our files would be made in search of the information he requested. This was done and he is being informed of the results. Tesla's papers have been the subject of numerous inquiries by various individuals and organizations since his death. FBI received over 20 FOIA requests on this matter during the period 1973-1980. Matter coordinated with FOIA Section, RMD.

OFFICE OF THE UNDER SECRETARY OF DEFENSE

WASHINGTON, D.C. 20301

RESEARCH AND
ENGINEERING

1 APR 1981

FEDERAL GOVERNMENT

Mr. Roger S. Young
Assistant Director in Charge
Office of Congressional and Public Affairs
Federal Bureau of Investigation
Washington, D.C. 20535

both letters addressed to Lt Col. A.J MacLaren

Dear Mr. Young,

Thank you very much for your letters of March 10 and March 20, 1981, in response to our request re Dr. Tesla. We very much appreciate the effort that must have gone into this. On behalf of the Deputy Under Secretary (Strategic and Space Systems), Dr. S. L. Zeiberg, I would like to thank you and the people who spent their time searching out the relevant data.

Sincerely,

ALL INFORMATION CONTAINED
HEREIN IS UNCLASSIFIED
DATE [illegible] BY [illegible]

Allan J. MacLaren

Allan J. MacLaren
Colonel, USAF
Military Assistant
Strategic and Space Systems

DE-110 100-2237-36

16 APR 10 1981

Per DoD letter dated 3/29/93
With Enclosures 1 and 2
ALL DoD info is unclassified.
DoD referenced FOI/PA #s 356,608 and 362,001
4/8/93 9803 [redacted] b7C

V-11

No acknowledgement necessary

10 French

Vines

FBI
ALL INFORMATION CONTAINED
HEREIN IS UNCLASSIFIED
DATE 4-8-93 BY 9803 [redacted] ICE
FOIPA No. 356,608
362,001

b7C

Off. of Cong. and Pub. Aff.

129

21 July 1981 [redacted] (b)(7)(C)

Director of the FBI
Washington, D.C.

[redacted]

Dear Sir:

While attending college, I came across an article about the electrical genius, Nicolai Tesla. Mr. Tesla was an electrical genius with such peers as EDISON and WESTINGHOUSE. Tesla designed the basic generator and was the first man to introduce alternating current to the people. The article, written in an underground SanFrancisco newspaper, stated that Tesla also worked with electromagnetic waves and supposedly built a plant that could harness the electromagnetic waves out of the earth's atmosphere sufficiently enough to use them as a source of electricity. The article stated that Tesla built such a plant and lit up a city street 150 miles away by sending the electromagnetism via radio waves. This method is presently being used in electronic warfare. After that, the article stated that the FBI confiscated his plans and buried them in your archives. Their reasoning was that such a free form of energy would knock out a big chunk of the oil, coal, and nuclear forms of energy and their contributions to the economy(money for research and employment). All I want to know is if there is any truth to this story and if so what was the FBI's reasons and when are the archives opened again so that Tesla's work could come to light again. Now bear in mind that this man was an electrical genius and even had a unit of electrical measure named after him. If he did figure out a way to utilize the earth's electromagnetic waves then I believe that we are ready to gradually phase out our dependence on oil, ease the volatile tension in the Middle East and put all that money presently going to the Arabs into

[redacted]

100-2237-37

17 AUG 11 1981

(b)(7)(C)

130

space research, joint international research and deep-sea research to help solve our population problem. I am talking about huge sums of money being released that could speed up the experts present projected times of producing significant gains in these still relatively new fields.

You could at least take the time to check out what I am saying and judge for yourself whether or not the archives should be opened now to put the world back on a more secure heading.

Sincerely,

[redacted]

(b)(7)(C)

[redacted]

August 7, 1981

ALL INFORMATION CONTAINED
HEREIN IS UNCLASSIFIED
DATE 7-14-12 BY [illegible]

OUTSIDE SOURCE

[redacted] (b)(7)(c)

Dear [redacted]:

Judge Webster has referred your letter of July 21st to me for a reply. A check of our files indicates Dr. Nikola Tesla's effects were impounded after his death by the Office of Alien Property of the Department of Justice and not by the FBI. While your interest is indeed appreciated, the FBI is unable to answer your questions as we did not participate in the handling or have anything to do with the storage of Dr. Tesla's belongings.

To be as helpful as possible, I am forwarding a copy of this communication to the Department of Justice.

Sincerely,

S

Roger S. Young
Assistant Director in Charge
Office of Congressional
and Public Affairs

MAILED 9
AUG 10 1981
FBI

1 - Acting Assistant Attorney General - Enclosure
Civil Division

NOTE: [redacted] is not identifiable in Bufiles. Dr. Tesla died on 1/7/43 and we have received much correspondence regarding his belongings which were impounded by the Office of Alien Property of the Department of Justice.

[redacted] (4)

100-2237-38

Exec AD Inv. ___
Exec AD Adm. ___
Exec AD LES ___
Asst. Dir.:
Adm. Servs. ___
Crim. Inv. ___
Ident. ___
Intell. ___
Laboratory ___
Legal Coun. ___
Plan. & Insp. ___
Rec. Mgmt. ___
Tech. Servs. ___
Training ___
Public Affs. Off. ___
Telephone Rm. ___
Director's Sec'y ___

MAIL ROOM ☑

(b)(7)(c)

132

FD-36 (Rev. 8-26-82)

FBI

TRANSMIT VIA:
☐ Teletype
☐ Facsimile
☒ AIRTEL

PRECEDENCE:
☐ Immediate
☐ Priority
☐ Routine

CLASSIFICATION:
☐ TOP SECRET
☐ SECRET
☐ CONFIDENTIAL
☐ UNCLAS E F T O
☐ UNCLAS

SECRET

Date 8/18/83

TO: DIRECTOR, FBI
ATTN: INTD, SUPERVISOR [redacted]

SECRET

FROM: SAC, CINCINNATI [redacted] (P)

NIKOLA TESLA
[redacted]
(OO: CI)

This communication is classified "Secret" in its entirety.

Re telephone call of SA [redacted], Cincinnati Division, to Supervisor [redacted] FBIHQ, on 8/11/83.

Enclosed for the Bureau and New York is one copy each of pertinent pages from the 1981 book titled "Tesla: Man Out of Time" by Margaret Cheney, with important passages underlined.

For information of Bureau and New York, [redacted] at Wright-Patterson Air Force Base (WPAFB) and [redacted] also at WPAFB, have both been in contact with SA [redacted] at the Dayton, Ohio RA regarding possible FBI

SECRET

Classified by: 8262
Declassify on: OADR

Classified by [redacted]
Declassify on: OADR

ENCLOSURE

2 - Bureau (Enc. 1)
2 - New York (Enc. 1)
2 - Cincinnati
[redacted]
(6)

ALL INFORMATION CONTAINED HEREIN IS UNCLASSIFIED EXCEPT WHERE SHOWN OTHERWISE

17 AUG 22 1983

Approved: [redacted] Transmitted _____ (Number) _____ (Time) Per [redacted]

53 NOV [illegible] 1983

133

involvement in the seizing of Nikola Tesla's research papers and other documents and scientific instruments after his death on January 7, 1943.

They both explained that Tesla was a scientific genius and experimenter who was born in Yugoslavia of Serbian parents on 7/10/56, went to school later in Gratz, Austria, Prague, Czechoslovakia and Paris, France. He immigrated to the U.S. in the early 1880's, worked for Thomas Edison's laboratory for a couple of years, then started his own lab after being paid $1 million dollars for rights to his patents on his polyphase systems of alternating current dynamos, which lead to the harnessing of Niagra Falls for producing electricity and then the power system of the whole country. He was naturalized in 1889. He predicted wireless communication (radio). His later experiments in Colorado and elsewhere lead to his producing artificial lightning in the millions of volts. He also had patents on the concept of neon and flourescent lights, but he later made little money on his later inventions, although he continued to do experiments leading to devices of great potential worth, which he never patented. He became more reclusive in his later years, living in various hotels in New York City. In the 1930's he claimed he had developed the concept and method of building a "death ray", which could destroy planes at many miles distant, for defending America. Also, there are report of resonance machines or devices whereby he could shake one or many large city buildings from some distance away.

Both [redacted] and [redacted] said that Tesla donated "some" of his papers (or copies thereof) to the Tesla Institute in Belgrade, Yugoslavia; set up in the 1930's in his honor by their government. Biographies on Tesla claim that either the custodian of Alien Property and/or the FBI seized his papers and other personal effects, including a safe or safes, and other property immediately after his death in 1943. This is elaborated on in the enclosed copies of certain pages of Margaret Cheney's book, "Tesla: Man Out of Time". (b)(1) (c)

[redacted] said that after World War II Tesla's papers were shipped to the Tesla Institute in Belgrade, Yugoslavia, by his nephew, Sava Kosanovic, who had become Tito's Ambassador to the U.S. There were reports that some microfilming of Tesla's papers by government agents while they were still in storage in New York under Kosanovic's custody.

Also, the Soviet Union has allegedly had access to some of Tesla's papers, possibly in Belgrade and/or else where, which influenced their early research into directed energy weapons, and Butler feels access to much of Tesla's papers on lightning, beam weapons and/or "death rays" would give him more insight into the Soviet beam weapons program. This is Butler's area of expertise and responsibility. He has been unable to locate any Tesla papers or copies of same in the classified or unclassified libraries at WPAFB. However, there are reports that some portions of them were shipped by the Custodian of Alien Property Office in Washington, D.C. to a technical research lab at WPAFB, possibly the "Equipment Lab", now closed for some years or reorganized into another organization.

[redacted] and [redacted] are both desirous of learning the locations of such papers of Tesla as now exist in the U.S. for both intelligence and research purposes. Therefore, [redacted] would like to examine FBI files relating to Nikola Tesla and possibly any on Sava Kosanovic, his nephew who received the bulk of his papers after Tesla's death, and may possibly have been the subject of FBI investigation.

[redacted] travels to the Washington, D.C. area on FTD business periodically and can review FBI files at FBIHQ relating to Tesla and Kosanovic.

REQUEST OF THE BUREAU

The Bureau is requested to conduct full indices checks on both Nikola Tesla and Sava Kosanovic.

Should there be such files at FBIHQ, as well as at New York, it is requested that Bureau consider granting the above [redacted] of FTD, official access to same, in the interest of national security.

LEADS

NEW YORK

AT NEW YORK, NEW YORK

Will conduct same indices check as requested of Bureau and advise the Bureau and Cincinnati of results and confirm such files and references still exist there.

135

CI [[redacted]] (S) (b)(1)

CINCINNATI

AT DAYTON, OHIO

Will maintain contact with [redacted] and (b)(7)(c)
[redacted]

"A VISIONARY GENIUS AS FERTILE AS ANY IN THE MODERN HISTORY OF SCIENCE...."

Flamboyant, eccentric, almost supernaturally gifted, had he been born today he would still be ahead of his time. Called a madman by some, a genius by others, and an enigma by nearly everyone, Nikola Tesla was perhaps the greatest inventor the world has ever known.

He was a trailblazer who created astonishing, world-transforming devices, often without theoretical precedent. It was Tesla who harnessed the alternating electrical current we use today... Tesla who actually invented radio... Tesla who invented fluorescent lighting and the incredible bladeless turbine. He introduced us to the fundamentals of robotry and computer and missile science, which continue to create and transform the future.

This fascinating new biography, acclaimed by American Scientist as "excellent... a significant contribution to the recent history of science," is a riveting journey into the mind of the nineteenth-century wizard who was Edison's enemy, Mark Twain's friend, J. P. Morgan's client, and mentor to many of the twentieth-century's most famous scientists.

MARGARET CHENEY is a science writer and author of two other nonfiction books. She lives in California.

*The Sunday Times of London

0 39077
71009 00495
ISBN 0-440-39077-X

MARGARET CHENEY

A visionary genius, his discoveries radically changed—and continue to change—the world we live in. "A dramatic and poignant portrait." —Discover

TESLA: MAN OUT OF TIME

Includes eight pages of rare photographs

DELL $3.95

137

The ill-fated Wardenclyffe tower built in 1901–03. It was intended for radio broadcasting and wireless transmission of power across the Atlantic. (Courtesy L. Anderson, after photo by Lillian McChesney)

An artist's rendering of Tesla's concept of the war of the future. The towerlike structures (based on the intended final form of the Wardenclyffe tower) are directing remote-controlled defenses against robot attackers. As Hugo Gernsback wrote in *Science and Invention*, where this illustration appeared, "Machines only will meet in mortal combat. It will be a veritable war of Science." (Gernsback Publications, Inc.)

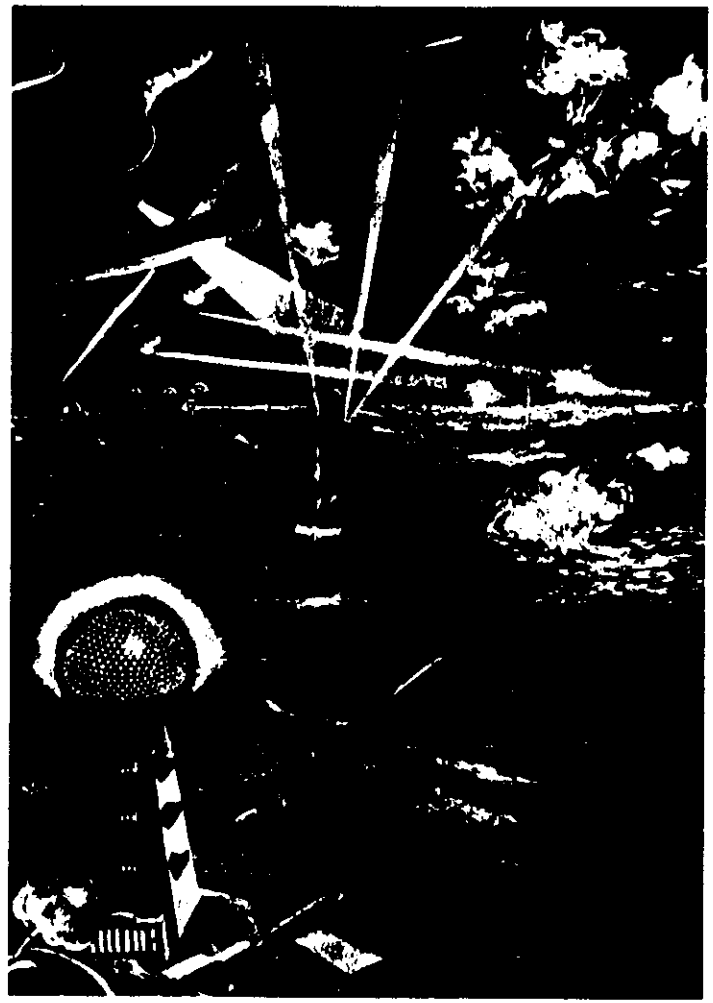

A trio of scientific greats: Albert Einstein, Nikola Tesla, and Charles Steinmetz, as they appeared in 1921 in a visit to the RCA transoceanic station at New Brunswick, N.J. At the time, Tesla was deeply involved in his patent dispute with Marconi. Only after his death would the U.S. Supreme Court uphold Tesla's claim to be the true father of radio. (RCA)

Tesla in his laboratory, 1898. The device shown is an unconnected coil illustrating the action of two resonating circuits of different frequencies—today one of the basic circuits used in computers. The pressure at the end of the coil facing the viewer (illuminated by streamers) is approximately one half million volts. (Courtesy L. Anderson)

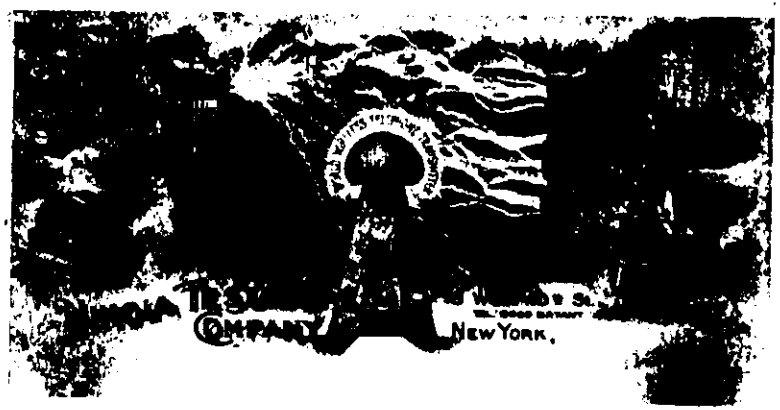

The letterhead of Tesla business stationery recalls some of his more important inventions. In the center is the Wardenclyffe tower as it was intended to look when finished. (Courtesy L. Anderson)

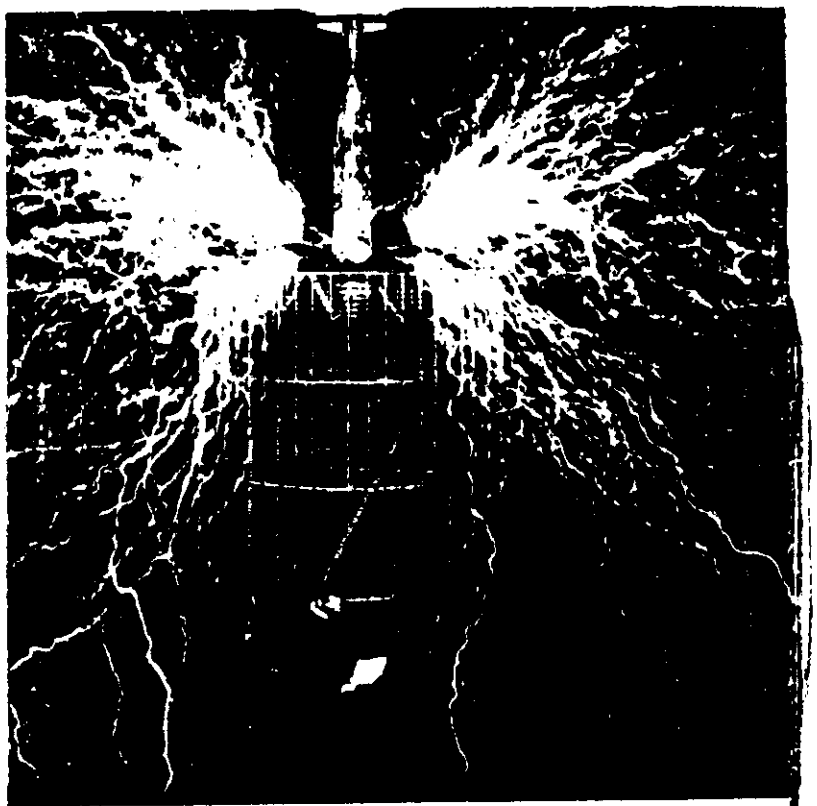

Discharge of several million volts cascading around Tesla in his Colorado Springs laboratory. The roar that accompanied such discharges could be heard ten miles away. (Burndy Library)

of low frequency, and would yield sinusoidal and continuous oscillations like those of an alternator.

"Taken in the narrowest significance of the term, however," Tesla wrote, "it is a resonant transformer which, besides possessing these qualities, is accurately proportioned to fit the globe and its electrical constants and properties, by virtue of which design it becomes highly efficient and effective in the wireless transmission of energy. Distance is then absolutely eliminated, there being *no diminution in the intensity of the transmitted impulses*. It is even possible to make the actions *increase with the distance from the point* according to an exact mathematical law."[5]

Once this powerful equipment was built and the inventor began testing he was able to emulate the electrical fireworks of even the wildest mountain storms. When the transmitter was operating, lightning arresters in a twelve-mile radius from his station were bridged with continuous fiery arcs, stronger and more persistent than those produced by natural lightning.

For the first time he kept a careful daily diary in which he recorded every aspect of his research. And because visual effects were useful as well as thrilling, he devoted many hours to photographic experiments.

The equipment Tesla was perfecting would, he hoped, one day be adaptable for commercial use. But first, thousands of observations and delicate adjustments had to be made. He no longer trusted his legendary memory to store such a volume of information. His daily notes referred constantly to experiments that had failed to turn out as expected, and he would ask himself why. This process was at sharp variance with the one he claimed to have used throughout his earlier life. Now middle-aged, he may have felt his memory waning slightly. Certainly he felt driven by the pressures of his self-imposed deadline.

In his Colorado journal his lifelong fascination with visual phenomena is underscored. The flashing lights that he had always experienced on the screen of his mind were dramatically externalized, and his descriptions, among the mass of mathematical formulas, are detailed, loving, almost erotic in their lingering portrayal of the colors and grandeur of his Colorado electrical storms.[6]

Nights when experiments were being made with the magnifying transmitter the prairie sky exploded with sound and color. Even the earth seemed alive and the crash of thunder from the spark gap could be heard for miles. Butterflies were sucked into the vortex of the

28

Death and Transfiguration

The new government of King Peter, with broad popular support, confronted the Germans and refused to ratify the compromise agreement that had been made with Hitler by Prince Paul. Almost at once reprisals began.

On Palm Sunday, 1941, three hundred Luftwaffe bombers swept over the Yugoslav capital of Belgrade. Methodically they crisscrossed the city street by street, strafing everything that breathed. By noon 25,000 civilians were dead, and the wounded lay everywhere. Most public buildings were left in ruins, including the modern laboratory known as the Tesla Institute.

The combined armed forces of Germany, Italy, Hungary, and Bulgaria invaded the doomed country. Within only days the Yugoslav Army was crushed, and King Peter was sent to England for safety. His government-in-exile would operate from London for the remainder of World War II.

This, however, was only the beginning of the war for Yugoslavs. Accustomed to successive invasions for a thousand years, the people were resilient. The remnants of the Army and Communist factions withdrew into the mountains, from which they launched guerrilla attacks on the invaders. These armed fighters, men and women, were supplied with food grown by the old people and children remaining in undefended villages.

Against them the Nazis and Fascists carried out murderous reprisals. In the fishing villages and along the stony slopes of the Adriatic, half the people in every hamlet were systematically shot.

Soon, however, it became apparent to military strategists in the United States and England that, not only were Axis forces killing Yugoslavs, but rival guerrilla factions of monarchists and Communists had begun to vie for Allied support and were shooting each other as well as the invaders.

Col. Drazha Mihailović, a Serbian army officer, led a faction called Chetniks (the "Yugoslav Army in the Fatherland"), composed mainly of Serbian and Bosnian monarchists. With close ties to King

Peter, they became the first major resistance movement in Europe.[1] The initial British aid to Yugoslavia went to the Chetniks, but it was short-lived. The National Liberation Army or Partisans, led by Josip Broz Tito of the Communist Party, was swiftly rising to prominence.

Allied strategists knew little of Tito. It was said he had been left wounded on a battlefield in 1917 and captured by the Russians. There he was trained as a Communist leader and sent to France during the Spanish Civil War to aid the Loyalists or Republicans.

A Croat, Tito had little reason to love the monarchy, for he was imprisoned after returning to Yugoslavia. On release, he became active in organizing a metal workers' union and helped to build the Yugoslav labor movement. His emergence as head of the Partisans in World War II was that of a natural leader who inspired his fighters and maintained rigorous discipline. He was looking ahead to a time when the Slavs could rebuild a free and united country without oppression either by foreigners or kings.

Tito's goal was to set up committees of popular liberation after the Russian style, while Mihailović and the Chetniks favored local administrative authorities under the monarchy. Both factions kept on killing Germans and Italians but, unfortunately, they also continued murdering each other.[2]

Prof. Bogdan Raditsa*, then director of the information service of the Yugoslav Embassy in Washington, D.C., recalls, "The situation became rather complicated when Yugoslavia collapsed in 1941 and when, at the end of that year, a Royal Yugoslav Mission came to this country." It was composed of members of King Peter's government and the Ban (Governor) of Croatia, Dr. Ivan Šubašić. Srba Kosanović, Tesla's nephew, then a member of the Democratic Party, also arrived as a minister of the exiled government.

"As soon as Kosanović came to the States," says Professor Raditsa, "he tried to reorient Tesla from the exclusive Serbian policy, and he succeeded. Tesla, even before, never felt himself a Great Serbian chauvinist. He used to say, 'I am a Serb but my fatherland is Croatia.'"[3]

The conflict between Serbs and Croats in exile intensified as the war went on, paralyzing normal Slav diplomatic activities in London, Washington, and New York.

"Kosanović, though a Serb," recalls Raditsa, "was leading the struggle for a brotherhood between the Serbs and Croats against Fotić and many other Serb members of various Yugoslav missions.

*Raditsa belonged to a family in southern Croatia that had always favored a union of Croatians and Serbs.

Thus he began using Tesla for the policy directed against the Great Serbians.

"Tesla himself ... was not aware of the deep conflict between the Serbs and Croats, and as basically a scientist and in old age, he was very candid in politics."

Raditsa said he seemed happy that he finally had a man of his own blood near him in New York and noted that Tesla began to rely upon Kosanović's opinion on everything. During this period the inventor was receiving about $500 per month from the royal government as an honorarium.

Various political messages elicited from Tesla for home consumption, says Raditsa, were actually written by Kosanović.[4]

Toward the end of 1942 the Yugoslav Information Center was opened in New York in the Royal Mission headquarters on Fifth Avenue. Raditsa and Kosanović worked together at this office, issuing bulletins and other publications. But a crisis broke out when news reached them of the fighting between Mihailović and Tito.

"Kosanović," he said, "joined Tito and began to popularize the National Liberation Movement for a new Yugoslavia. He had a terrible time to convince Tesla that monarchy was losing in Yugoslavia and that a new Yugoslavia was beginning to come out from the fratricidal civil war. As the largest majority of Serbs in Croatia were joining Tito, Kosanović convinced Tesla that he too should join the movement that was largely shared by the masses of the people, Serbs and Croats. So Tesla's message to the Serbs and Croats was written by Kosanović."[5]

On the walls of the Tesla Museum in Belgrade one may read a vastly enlarged photocopy of the words allegedly sent by Tesla to his embattled countrymen only months before his own death. American Vice-President Henry A. Wallace also had a hand in its drafting. Typewritten, it has many cross-outs and interlinings in Tesla's own handwriting yet the style is that of an ideologue, which the inventor was not:

> Out of this war ... a new world must be born, a world that would justify the sacrifices offered by humanity. This ... must be a world in which there shall be no exploitation of the weak by the strong, of the good by the evil, where there will be no humiliation of the poor by the violence of the rich; where the products of the intellect, science, and art will serve society for the betterment and beautification of life, and not the individuals for achieving wealth. This new world shall not be a world of the downtrodden and humiliated, but of free men and free nations, equal in dignity and respect for man.

The inventor's name also appeared on another message—sent to the Soviet Academy of Sciences on October 12, 1941, urging joint struggle against the Axis powers by Russia, Great Britain, and America, in aid of the revolutionary struggle of the Yugoslav people. This message is not to be seen in the Museum, however, presumably because nostalgia Russian-style has ceased to be politic.

Kosanović became chairman of the Yugoslav Economic Mission advocating a New Yugoslav federation versus the centralistic prewar royalist Yugoslavia. This new organization also began working for a new Central East European Federation. Raditsa too became a member of the Tito movement.

King Peter was desperately seeking for Mihailović the support of President Franklin Delano Roosevelt and Prime Minister Winston Churchill, as well as that of his own Uncle Bertie, who was King George VI of England. The British, at first sympathetic to the Chetnik cause, began to change as they received reports of the aggressive actions of Tito's Partisans.

In 1942 King Peter visited Washington to intercede with FDR. Yugoslav pilots were being trained in Tennessee. FDR told him that America would send airplanes to the Chetniks as soon as they could be spared from the war in the Middle East. The monarch visited New York City, attending a large reception for the American Friends of Yugoslavia at the Colony Club. The Colony, the first female socialites' club in America, had been founded at the inspiration of energetic Anne Morgan. She attended the function, as did the King's mother, Queen Marie, and Mrs. Roosevelt. It was the sort of affair Tesla himself would have delighted in had he not been weak and ill. So King Peter went to him.

In his diaries (*A King's Heritage*), under date July 8, 1942, the young Peter II writes: "I visited Dr. Nicola Tesla, the world-famous Yugoslav-American scientist, in his apartment in the Hotel New Yorker. After I had greeted him the aged scientist said: 'It is my greatest honor. I am glad you are in your youth, and I am content that you will be a great ruler. I believe I will live until you come back to a free Yugoslavia. From your father you have received his last words: 'Guard Yugoslavia.' I am proud to be a Serbian and a Yugoslav. Our people cannot perish. Preserve the unity of all Yugoslavs—the Serbs, the Croats, and Slovenes.'"

The King added that he was deeply touched and that both he and Dr. Tesla had wept. He then visited Columbia University, to be warmly welcomed by President Nicholas Murray Butler and to find another link with his own country in the Pupin Physics Laboratory.

Returning to Washington, he was assured by FDR that food, clothing, arms, and ammunition would be dropped over Yugoslavia. But he was shocked when, in 1943, the British Mission in Yugoslavia made official contact with Tito. Peter asked to be parachuted into his country, but Churchill demurred. Tito openly accused Mihailović of being a traitor.*

At the Teheran Conference in November there occurred, largely at Churchill's instance, what the King described as a "fatal change" of Allied policy. It was decided that "the basic force fighting the Germans in Yugoslavia recognized by the Allies was the National Liberation Army, under the command of Tito, and the Partisan force received full recognition as an Allied Army. Mihailović was thus denied and abandoned."†

Winston Churchill overnight became a hero of modern Yugoslavia. And when the young monarch frantically wrote to FDR for support, the ailing President replied urging him to accept Churchill's advice "as if it was my own." Within months Roosevelt died.

Tesla's nephew, Kosanović, along with certain other diplomatic representatives of King Peter, had been dismissed by the monarch at the height of the 1942 crisis. He often told Bogdan Raditsa in those days that he felt Tesla had been terribly shocked by his nephew's exclusion from the royal government. In fact, Kosanović believed that the inventor's death was actually precipitated by his own "setback."

"He thought," Kosanović repeatedly told Raditsa, "that I was punished, and that eventually I would be arrested or something of the kind, but I succeeded to convince him that it was inevitable in politics."*

During this period Kosanović was frank in saying that he tried to keep Tesla from seeing members of the royal government. Ambassador Fotić had become "the enemy" since he still favored a Great Serbian policy as opposed to the changes ahead. Tesla's relationship with this old friend became "lukewarm."

"There is no doubt," says Professor Raditsa, "that the whole internecine tragedy of Yugoslavia from 1941 to 1943 must have had a rather depressing impact upon Tesla. Very often he would ask me, could I explain to him what was going on among us, and why we cannot agree. . . ."

After the war, Mihailović would be executed by a "People's Court" for alleged collaboration with the enemy, and the Republic of Yugoslavia declared to exist, with Tito as President for life and the Communists firmly in charge.

A count of Yugoslavian casualties at the end of World War II disclosed that 2 million persons had died; tragically, many thousands had been killed by fellow Yugoslavs.

"After the war," recalls Professor Raditsa, "Kosanović became a minister in the Tito-Subašić Government, and I was his assistant in the Ministry of Information from 1944 to 1945, when I left the country, for I couldn't become a Communist. Later on in 1946, Sava Kosanović became Tito's ambassador in Washington but I never saw him again after I left Belgrade in October of 1945. Kosanović had accepted totally the Communist system in Yugoslavia and remained loyal until his death."

There had not been a time in ten centuries when the Yugoslavs had not been ruled and ransacked by invaders—by Venetians, Romans, Turks, Bulgars, Austrians, Hungarians, Germans, Italians, when they were not living under threat of torture, prison, or violent death. Now a marvelous truth began to dawn upon them: that they were free, in a manner of speaking.

Tesla would not live to see this. Whether he could ever have accepted the new government, with its Soviet-type Constitution and a Soviet alliance, whether he could ever have accepted the permanent exile of his beloved monarch, are unanswerable questions.

Unfortunately, however, all this was to have a bearing on how he would be remembered in the West. The fading of his scientific reputation, the forgetfulness of Americans in the postwar period, resulted in large degree from the disappearance of most of his scientific papers behind that new Cold War phenomenon, the Iron Curtain.

In 1948 Yugoslavia ceased to be an Iron Curtain country, declaring its independence from the Soviet doctrine of "limited sovereignty." America and her allies then were generous in sending economic and military aid to the Slavs; but the damage had been done. America had not raced to Tito's wartime support with the alacrity that Churchill had shown. In the future it would not be made easy for American scholars to draw on Yugoslav sources to document the achievements of Nikola Tesla.

The inventor became very feeble in the winter of 1942. His fear of germs was so obsessive that even his closest friends were

required to stand at a distance, like the subjects of a neurotic Tudor. (Pigeon germs did not seem to worry him.) He had heart trouble and suffered occasionally from fainting spells. No longer able to feed his beloved birds, he often relied upon a young man named Charles Hausler, who owned racing pigeons, to take care of them for him.

Hausler had worked for Tesla in this capacity from around 1928 onward, his job being to go to the New York Public Library at noon each day with grain and then to walk around the four sides of the building looking for young or injured birds on window sills or behind large statues. He would take them to Tesla's hotel for rest and recuperation. Then, he has recalled, "I would release them at the library for him." He remembered that the cages in Tesla's rooms had been built by a fine carpenter— "as Mr. Tesla was in all his doings it had to be done right." The pigeons also enjoyed a curtained shower bath.

Hausler and Tesla spent many hours together, talking mostly of pigeons. Once Tesla confided to him that "Thomas Edison could not be trusted." The boy remembered his employer as "a very kind and considerate human person," and there was one incident that stood out in his mind long afterward. "He had a large box or container in his room near the pigeon cages and he told me to be very careful not to disturb the box," said Hausler, "as it contained something that could destroy an airplane in the sky and he had hopes of presenting it to the world." He believed it probably was stored in the cellar of the hotel later.[9]

On a bitter day in early January 1943, Tesla called his other messenger boy, Kerrigan, and gave him a sealed envelope addressed to Mr. Samuel Clemens, 35 South Fifth Avenue, New York City. The boy set forth into the whipping wind and searched fruitlessly for the number. As it turned out, this had been the address of Tesla's first laboratory; but now South Fifth Avenue was West Broadway, and no one by the name of Samuel Clemens lived in the area.

Kerrigan made his way back to the Hotel New Yorker and reported to the sick man. In a weak voice, Tesla explained that Clemens was the famous Mark Twain and that everyone knew of him. He sent Kerrigan forth once more, and this time asked him also to take care of the pigeons. The perturbed messenger fed the birds and then consulted his supervisor, who told him that Mark Twain had been dead for twenty-five years. Once again Kerrigan trudged through the cold afternoon to Tesla's rooms, where he explained and tried to return the envelope.

The inventor was indignant and refused to hear that the humorist was dead. "He was in my room last night," he said. "He sat in that chair and talked to me for an hour. He is having financial difficulties and needs my help. So—don't come back until you have delivered that envelope." Once again the messenger went to his supervisor and together they opened the envelope. It contained a blank sheet of paper wrapped around twenty five-dollar bills—enough to help an old friend through a little fainting spell.

On the fourth of January, the inventor, although very weak, went to his office to make an experiment that George Scherff was interested in. Scherff dropped in to help him prepare for it. The work was interrupted, however, when Tesla felt a recurrence of some sharp pains in his chest.

Refusing medical aid, he returned to his hotel. Next day a maid came in and cleaned. As she left, he asked her to put the *Do Not Disturb* sign on his door to keep visitors away, and not to bother cleaning. The sign remained there the following day and the one after that.

Early on the morning of January 8, Alice Monaghan, a maid, ignored the sign and entered the apartment to find the inventor dead in bed, his sunken, emaciated face composed.[10] Assistant Medical Examiner H. W. Wembly examined the body, placed the time of death as 10:30 P.M. on January 7, 1943, and gave his opinion that the cause of death had been coronary thrombosis. Tesla had died in his sleep, and the examiner noted that he had found "No suspicious circumstances." The inventor was eighty-six years of age.

Kenneth Swezey was notified at once; and at ten o'clock that morning he telephoned to Dr. Rado at New York University. King Peter's headquarters, then at 745 Fifth Avenue, was advised by the professor. Tesla's nephew, Kosanović, then wartime president of the Eastern and Central European Planning Board for the Balkan countries, also was notified.

Then the FBI was called. Swezey and Kosanović summoned a locksmith and Tesla's safe was opened and the contents examined.

The body was removed to the Frank E. Campbell Funeral Home at Madison Avenue and 81st Street and a sculptor was engaged by Hugo Gernsback to prepare a death mask of the inventor.

Just before Tesla's death, Eleanor Roosevelt had tried to intercede in his behalf with President Roosevelt—perhaps with the idea of conferring some honor upon him. In the Tesla Museum at Belgrade three brief notes on White House stationery may be read. On

January 1, at the request of author Louis Adamić, Mrs. Roosevelt had promised to ask the President to write to Tesla and said that she herself would call on him on her next trip to New York. The second note is headed, "Memo for Mrs. Roosevelt" and is signed FDR: "I was having this looked into but the papers yesterday carried the story that Dr. Tesla had died. Therefore I am returning the enclosures herewith." A third note of January 11 from Eleanor Roosevelt to Adamić forwards the President's message and adds her sorrow at learning of the inventor's death.

Adamić wrote a moving eulogy to Tesla that was read by New York Mayor Fiorello H. LaGuardia over station WNYC on January 10.* Meanwhile the extreme tensions between Serb and Croat factions in the United States were making the planning of funeral services difficult. The body lay in state but, according to an unpublished letter of O'Neill's, "only twelve people, some of whom were newspaper reporters," came to view it.

When state services were held at four o'clock on January 12, in the Cathedral of St. John the Divine, however, more than two thousand people crowded in. Serbs and Croats were seated on opposing sides of the cathedral, Bishop William T. Manning having exacted from both factions a promise of no political speeches. The service was begun in English by Bishop Manning and concluded in Serbian by the Very Rev. Dusan Sukletović.

Among Balkan diplomats present were Ambassador Fotić, the Governor of Croatia, a former Prime Minister of Yugoslavia, and the Minister of Food and Reconstruction. In the front row with Kosanović, chief mourner and head of the important new trade mission, sat Swezey. Dr. Rado had been too ill to attend as an honorary pallbearer.

Figures important in American science and industry who did attend as honorary pallbearers included Professor Edwin H. Armstrong, Dr. E. F. W. Alexanderson of General Electric, Dr. Harvey Rentschler of Westinghouse, engineer Gano Dunn, and W. H. Barton, curator of the Hayden Planetarium of the American Museum of Natural History. Newbold Morris, president of the New York City Council, headed this group.

When word of Tesla's death spread abroad to war-stricken Europe, telegrams of tribute and sorrow began pouring in from scientists and governmental leaders alike. In the United States three Nobel prizewinners in physics, Millikan, Compton, and James Franck, joined in a eulogy to the inventor as "one of the outstanding intellects

of the world who paved the way for many of the important technological developments of modern times."

The President and Mrs. Roosevelt expressed their gratitude for Tesla's contributions "to science and industry and to this country." Vice-President Wallace, in the spirit of the new Yugoslavia, declared that, "In Nikola Tesla's death the common man loses one of his best friends."

Although Louis Adamić wrongly eulogized Tesla as one who had cared nothing for money, he could not have been more accurate when he said that Tesla was not really dead: "The real, important part of Tesla lives in his achievement, which is great, almost beyond calculation, and an integral part of our civilization, our daily lives, our current war effort.... His life is a triumph...."*

Among the honors that had come to Tesla in his life were many academic degrees from American and foreign universities; the John Scott Medal, the Edison Medal, and various awards from European governments. In September 1943 the Liberty ship *Nikola Tesla* was launched, an honor that would have pleased the scientist. But not until 1975 was he inducted into the National Inventors Hall of Fame.

Eight months after Tesla's death, the U.S. Supreme Court handed down the decision that he had been confident would come eventually—ruling that he was the inventor of radio.

His body was taken to Ferncliffe Cemetery at Ardsley-on-the-Hudson in the deep cold of the winter afternoon. In the car that followed the hearse rode Swezey and Kosanović. The inventor's remains were cremated and his ashes later returned to the land of his birth.*

In almost every nation in the world, the fighting and dying continued.

*Charlotte Muzar, formerly secretary to Sava N. Kosanović, carried Tesla's ashes to the Tesla Museum in Belgrade in 1957. Throughout the years Kosanović had spoken of leaving the ashes in America and had hoped an appropriate memorial to the inventor would be raised in the United States as their resting place.
—Archives, Tesla Memorial Society

541

29 The Missing Papers

In addition to his acknowledged achievements, Tesla left a legacy of riddles. To pose only three of the most major: Was his unrealized concept for the wireless transmission of energy through the Earth scientifically valid? What actually was he doing in his experimentation with death/disintegrator beam weapons? And what became of his unpatented research papers and other sensitive documents in the days immediately following his death?

In the category of subquestions, what turn of affairs rekindled the intense interest of the U.S. intelligence establishment in Tesla's work (as something surely did) in the late 1940's?

Like Einstein he had been an outsider and, like Edison, a wide-ranging generalist. As he himself had said, he had the "boldness of ignorance." Where others stopped short, aware of what could not be done, he continued. The survival of such mutants and polymaths as Tesla tends to be discouraged by modern scientific guilds. Whether either he or Edison could have flourished in today's milieu is conjectural.

The example set by Tesla has always been particularly inspiring to the lone runner. At the same time, however, his legacy to establishment science is profound for his research, although sometimes esoteric, was almost always sweeping in its potential to transform society. His contribution was major rather than incremental. His turbine failed in part because it would have required fundamental changes by whole industries. Alternating current triumphed only after it had overcome the resistance of an entire industry.

But there was an unfortunate corollary to Tesla's lone battles with the scientific-industrial establishment. Since he was part of no group or institution, he had no colleagues with whom to discuss work in progress, no formal, accessible repository for his research notes and papers. He worked not just in private, but—his love of flamboyant announcements to the press notwithstanding—in secret. Thus any inventions which he did not patent or give freely to the world were more or less shrouded in mystery. And, because of the handling of the

papers he left behind after his death, the range of his achievement continues to remain a partial mystery.

If this has been frustrating to the scientists who have succeeded Tesla, it has at least been stimulating. After a period of obscurity, the one hundredth anniversary of his birth in July 1956 brought an international reawakening to the importance of the inventor's life and genius. Interest in his work, fired by a growing awareness of the riddles surrounding it, has been escalating ever since, almost as if he had been reborn in his true psychological age.

He was honored by centennial celebrations in America and Europe. The American Institute of Electrical Engineers dedicated its fall meeting in Chicago to a review of his life and inventions. Commemorative programs were arranged by the Institute of Radio Engineers, the Chicago Museum of Science and Industry, the Franklin Institute, and various universities, the Tesla Society playing an active role in such recognition. Permanent memorials in the form of scholarships and medals were proposed and exhibits presented by science museums. Special ceremonies were conducted at Niagara Falls, and a statue was later erected in his honor on Goat Island, a gift from the people of Yugoslavia. Chicago, reminded by attorney/author Elmer Gertz that it should be eternally grateful to him for having made the Columbian Exposition of 1893 the "wonder of the globe," dedicated a new public school to Tesla's memory.

The inventor's old colleagues of the AIEE journeyed to Europe to attend more celebrations, statue unveilings, and dedications in his honor. The International Electrotechnical Commission in Munich took formal action, making his name an international scientific unit, the *tesla* joining such historic electrical symbols as farad, volt, ampere, and ohm.[1]

As the exploration of space accelerated, so did interest in Tesla, especially from the standpoint of beam weaponry and microwave work. In America, Russia, Canada, and various other countries, projects in his name or derived from his pioneering, from weather-control to nuclear fusion, began to attract scientific attention. Some were just the shoestring efforts of loners, their laboratories old Quonset huts. Some were top secret and financed by enormous budgets.

Tesla's year of secret experiments at Colorado Springs in 1899 provided the basic impetus for much of this new exploration. His *Colorado Springs Notes*,* when they appeared in English in 1978

*This book may be ordered from Nolit, Terazije, 27, Belgrade, Yugoslavia (about $40).

under the imprint of the Tesla Museum at Belgrade, were eagerly awaited by many scientists. But even this work left important questions unanswered.

The bulk of his papers having vanished from America, reliable information was harder to come by than the recurring rumors of conspiracy, espionage, and patent theft. Scientists thought it strange that some aspects of his Colorado Springs research found in scattered sources did not appear in the Yugoslav-published *Notes*. Only by piecing together fragmentary information could the magnitude of his experiments be comprehended.

Around 1928 O'Neill, by merest chance, had happened to see a legal advertisement in a New York newspaper announcing that six boxes placed in storage by Nikola Tesla would be sold by the storage warehouse for unpaid bills. Feeling that such material should be preserved, he went to the inventor and asked permission to try to obtain funds to reclaim the material.

"Tesla hit the ceiling," he recalled. "He assured me he was well able to take care of his own affairs.... He forbid me to buy them or do anything in any way about them."

Shortly after the inventor died, O'Neill got in touch with Sava Kosanović, told him about the boxes, and urged him to protect them. He was never able to get a positive statement from Kosanović that he had obtained the boxes and examined the contents. "He gave evasive assurances that there was no reason for me to worry..."

Others too were interested in the papers. A young American engineer engaged in war work consulted Tesla on a ballistics engineering problem because he could not get time on an overworked computer, and Tesla's mind was known to offer the nearest thing to it. Soon he became fascinated with Tesla's scientific papers and was allowed to take batches of them home to his hotel room where he and another American engineer pored over them each night. They were returned the next day, a procedure which continued for about two weeks prior to the Inventor's death.

Tesla had received offers to work for Germany and Russia. After the inventor died, both engineers became concerned that critical scientific information might fall into foreign hands and alerted United States security agencies and high government officials.

The relevant records that I have obtained from federal agencies under the Freedom of Information Act reveal strange twistings and inconsistencies in the handling of the Inventor's estate. Tesla left tons of papers, barrels and boxes full of them. But he left no will. He was

survived by five nieces and nephews, of whom two lived in America at the time of his death.

Curiously, the FBI released his estate to the Office of Alien Property, which promptly sealed the contents. Since Tesla was an American citizen, the OAP's concern in the matter was hard to justify. After a court hearing, however, the estate was released to Ambassador Kosanović, one of the heirs.

Sweezy, who also had hoped to write a biography of Tesla (his death intervened), received the following account in 1963 from a former aide of Ambassador Kosanović's:

"Back in 1943... when Tesla died, it was a matter of very short time when Mr. K was issued a certificate from or by the Office of Custodian of Alien Property conveying to Mr. K full rights to the Tesla papers.... he had them all packed up and sent off to the Manhattan Storage Company where they remained until ready for packing and shipping off to Yugoslavia in 1952. Mr. K paid for storage charges.... All this time the certificate from the Alien Property Office was in my possession (in case of need)...

"You will perhaps remember that a number of times Mr. K mentioned the fact that the custodian at the storage warehouse told him that some government guys were in to microfilm some of the papers.... when we opened the safe in the present museum building (in Belgrade, Yugoslavia) the bunch of keys, which was the last thing Mr. K. flung into the safe at the New Yorker Hotel before the combination was re-set to a new combination, were not found in the safe, but in an entirely different box. Also the gold medal (the Edison Medal) was missing from the safe.... Anyway, for years and years Mr. K was bothered by the fact that Tesla papers had been gone thru and just before his departure from Washington in 1949–50(?) he decided to follow my suggestion to call Edgar J. Hoover (sic) and ask him. Mr. Hoover denied categorically that the FBI had gone into the papers...."

The aide said Tesla had told his nephew that "he wished to leave his works, property, etc., to his native country." (Not only is this uncorroborated but the papers were in English.)

Immediately after Tesla's death an exchange of telegrams flew between FBI Agent Foxworth of the field division of the New York Bureau and the director of the New York Bureau of the FBI. The day following discovery of the body, Agent Foxworth reported:

"Experiments and research of Nikola Tesla, deceased. Espionage—M. Nikola Tesla, one of the world's outstanding scientists in the electrical field, died January seventh, nineteen forty three at the

Hotel New Yorker, New York City. During his lifetime, he conducted many experiments in connection with the wireless transmission of electrical power and ... what is commonly called the death ray. According to information furnished by X [name deleted], New York City, the notes and records of Tesla's experiments and formulae together with designs of machinery ... are among Tesla's personal effects, and no steps have been taken to preserve them or to keep them from falling into hands of people ... unfriendly to the war effort of the United Nations...." (The FBI was, however, advised by the office of Vice-President Henry A. Wallace that the government was "vitally interested" in preserving Tesla's papers.)

Bloyce D. Fitzgerald, "an electrical engineer who had been quite close to Tesla during his lifetime," continued Foxworth, "advised the New York office that on January seventh, nineteen forty three, Sava Kosanović, George Clark, who is in charge of the museum and laboratory for RCA, and Kenneth Swezey ... went to Tesla's rooms in the New Yorker [author's note: the correct date would have been January 8], and with the assistance of a locksmith broke into a safe which Tesla had in his rooms in which he kept some of his valuable papers.... Within the last month, Tesla told Fitzgerald that his experiments in connection with the wireless transmission of electrical power had been completed and perfected.

"Fitzgerald also knows that Tesla had conceived and designed a revolutionary type of torpedo which is not presently in use by any of the nations. It is Fitzgerald's belief that this design has not been made available to any nation up to the present time. From statements made to Fitzgerald by Tesla, he knows that the complete plans, specifications and explanation of the basic theories of these things are some place in the personal effects of Tesla. He also knows there is a working model of Tesla's, which cost more than ten thousand dollars to build, in a safety deposit box belonging to Tesla at the Governor Clinton Hotel, and Fitzgerald believes this model has to do with the so-called death ray or the wireless transmission of electrical current.

"Tesla has also told Fitzgerald in past conversations that he has some eighty trunks in different places containing transcripts and plans having to do with experiments conducted by him. Bureau is requested to advise immediately what, if any, action should be taken concerning this matter by the New York Field Division."[2]

Kosanović later reported to Walter Gorsuch of the Office of Alien Property in New York that he first went to Tesla's rooms with the other men to search for a will. After the safe was opened, Swezey took from it a book containing the testimonials sent to Tesla on his seventy-fifth birthday, while Kosanović took from the room three pictures of Tesla. According to the manager of the New Yorker Hotel and Kosanović, nothing else was removed. The safe was closed under a new combination, which combination was in Kosanović's exclusive possession.

On January 9, Gorsuch of OAP and Fitzgerald went to the New Yorker Hotel and seized all of Tesla's property, consisting of about two truckloads of material, sealed it and transferred it to the Manhattan Storage and Warehouse Company. It was added to about thirty barrels and bundles that had been there since about 1934, and these too were sealed under orders of the OAP.

In addition to the question of the legitimacy of Alien Property's involvement in the case is the question of why Kosanović was allowed to have access to the safe's combination, from which he later claimed the Edison Medal had vanished. Tesla's American naturalization papers, which he so prized that he always kept them in his safe, may now be seen at the Tesla Museum in Belgrade; but it is not known what other papers or objects were in the safe.

The Washington Bureau of the FBI went so far as to advise the New York Bureau "to discreetly take the matter up with the State's Attorney in New York City with the view to possibly taking Kosanovich into custody on a burglary charge and obtaining the various papers which Kosanovich is reported to have taken from Tesla's safe." New York was also told to contact the Surrogate Court so stops could be placed against all of Tesla's effects, so that no one could enter them without an FBI agent being present, and New York was to keep Washington advised of all developments.[3]

The idea of arresting the Yugoslav ambassador was quickly dropped. And very soon the Washington headquarters made a curious decision. Edward A. Tamm of the FBI in Washington advised D. M. Ladd of that Bureau that the whole matter was being turned over to the Custodian of Alien Property; and Tamm noted, "There appears to be no need for us to mess around in it."[4]

Soon the well-known electrical engineer Dr. John G. Trump, who was serving as a technical aide to the National Defense Research Committee of the Office of Scientific Research and Development, was asked to participate in an examination of Tesla's scientific papers. Present at the Manhattan Warehouse & Storage Company in addition

to Dr. Trump were Willis George, Office of Naval Intelligence, Third Naval District, Edward Palmer, chief yeoman, USNR, and John J. Corbett, chief yeoman, USNR.

Dr. Trump reported afterward that no examination was made of the vast amount of Tesla's property that had been in the basement of the New Yorker Hotel for ten years prior to his death, or of any of his papers except those in his immediate possession at the time of death. It should be remembered that Tesla's scientific reputation had been in eclipse for a number of years and that there had been many efforts to discredit his claims in radio, robotry, and alternating current. Dr. Trump was a busy man, just as the staff of the FBI was stretched thin by its preoccupation with investigating wartime sabotage.

"As a result of this examination," wrote Dr. Trump, "it is my considered opinion that there exist among Dr. Tesla's papers and possessions no scientific notes, descriptions of hitherto unrevealed methods or devices, or actual apparatus which could be of significant value to this country or which would constitute a hazard in unfriendly hands. I can therefore see no technical or military reason why further custody of the property should be retained."

He added: "For your records, there has been removed to your office a file of various written material by Dr. Tesla which covers typically and fairly completely the ideas with which he was concerned during his later years. These documents are enumerated and briefly abstracted in the attachment to this letter."

In closing Dr. Trump said: "It should be no discredit to this distinguished engineer and scientist, whose solid contributions to the electrical art were made at the beginning of the present century, to report that his thoughts and efforts during at least the past fifteen years were primarily of a speculative, philosophical, and somewhat promotional character—often concerned with the production and wireless transmission of power—but did not include new sound, workable principles or methods for realizing such results."

The file (of which Dr. Trump's notes were only an abstract) consisted apparently of either photostats or microfilm made by the naval officers present, and the original papers apparently remained in storage, later to be transmitted to Yugoslavia. The examination had failed to disclose any alien-owned property subject to the vesting power of the Alien Property Custodian under the Trading with the Enemy Act. Tesla's papers and personal effects were released in

February of 1943 for disposition by Kosanović, the administrator of his estate.

Dr. Trump's abstract included the following:

"*Art of Telegeodynamics, or Art of Producing Terrestrial Motions at Distance*—This document, in the form of a letter dated June 12, 1940, to the Westinghouse Electric & Manufacturing Co., proposes a method for the transmission of large amounts of power over vast distances by means of mechanical vibrations of the earth's crust. The source of power is a mechanical or electromechanical device bolted to some rocky protuberance and imparting power at a resonance frequency of the earth's crust. The proposed scheme appears to be completely visionary and unworkable. Westinghouse's reply indicates their polite rejection. . . .

"*New Art of Projecting Concentrated Non-Dispersive Energy through Natural Media*—This undated document by Tesla describes an electrostatic method of producing very high voltages and capable of very great power. This generator is used to accelerate charged particles, presumably electrons. Such a beam of high-energy electrons passing through air is the 'concentrated nondispersive' means by which energy is transmitted through natural media. As a component of this apparatus there is described an open-ended vacuum tube within which the electrons are first accelerated.

"The proposed scheme bears some relation to present means for producing high-energy cathode rays by the cooperative use of a high-voltage electrostatic generator and an evacuated electron acceleration tube. It is well known, however, that such devices, while of scientific and medical interest, are incapable of the transmission of large amounts of power in nondispersed beams over long distances. Tesla's disclosures in this memorandum would not enable the construction of workable combinations of generator and tube even of limited power, though the general elements of such a combination are succinctly described.

"*A Method of Producing Powerful Radiations*—an undated memorandum in Tesla's handwriting describing 'a new process of generating powerful rays or radiations.' This memorandum reviews the works of Lenard and Crookes, describes Tesla's work on the production of high voltages, and finally in the last paragraph gives the only description of the invention contained in the memorandum. . . . 'Briefly stated, my new simplified process of generating powerful rays consists

in creating through the medium of a high-speed jet of suitable fluid a vacuous space around a terminal of a circuit and supplying the same with currents of the required tension and volume.'"

Long afterward in a letter to a colleague, Dr. Trump told what happened when he visited the Hotel Governor Clinton to examine the "device" stored in its vault, presumably the same box remembered by the messenger boy in Tesla's room.

"Tesla had warned the management that this 'device' was a secret weapon," said Dr. Trump, "and it would detonate if opened by an unauthorized person. Upon opening the vault and indicating the package containing the secret weapon, the hotel manager and employees promptly left the scene." The federal agents who had come along also pulled back, the better to give him the sole distinction of opening the parcel.

It was wrapped in brown paper and tied with a string. He remembered hesitating, thinking how beautiful the weather was outdoors, and pondering on why he was not outside too.

He lifted the parcel onto a table and, mustering his courage, snipped the string with his pocket knife. He removed the wrapping. Inside was a handsome polished wooden chest bound with brass. It required a final effort of courage to raise the hinged lid.

Inside stood a multidecade resistance box of the type used for Wheatstone bridge resistance measurements—a common standard item to be found in every electrical laboratory before the turn of the century!

Why had Tesla seen fit to terrify the staff and management of the hotel with this harmless object for so many years? Perhaps he had become so accustomed to having his hotel bills paid behind his back (believing that the hotels, honored to have him living there, had routinely dismissed the billings), that he was insulted when the Governor Clinton brashly demanded its $400.

Although the FBI closed its Tesla file in 1943, it didn't seem to want to stay closed. It was reopened in 1957 when an informant complained that a New York couple were issuing newsletters containing "information pertaining to flying saucers and interplanetary matters" and exploiting the inventor's name and fame. They allegedly claimed that Tesla's engineers, after his death, had completed a "Tesla Set," a radio device for interplanetary communication, that the device had been placed in operation in 1950 and since then Tesla engineers had been in close touch with alien spaceships. Once again the FBI decided no action was warranted and the file was closed.

Sweasy had never put much credence in the "secret weapon" rumors and had written to an inquirer: "Because Tesla was a recluse, and himself liked to talk in mystifying terms during his later years, I think many legends have been built up about the dozens of ideas he had evolved but which were not permitted by others to see the light of day."

He said he had known the inventor well for two decades before his death: "Tesla's greatest genius flamed up during a dozen or so years just before and slightly after the turn of the century. What he did after that may have carried the germs of some of the developments we are witnessing today, but he had not carried any of them—at least on paper or in any other tangible form—to the point of practicality . . ."

Perhaps, but between 1945 and 1947 an interesting exchange of letters and cables occurred among the Air Technical Service Command at Wright Field, Ohio, in whose Equipment Laboratory much top-secret research was being performed, Military Intelligence in Washington, and the Office of Alien Property—subject, files of the late Nikola Tesla.

On August 21, 1945, the Air Technical Service Command requested permission from the commanding general of the U.S. Army Air Force in Washington, D.C., for Private Bloyce D. Fitzgerald to go to Washington for a period of seven days "for the purpose of securing property clearance on enemy impounded property."

On September 5, 1945, Colonel Holliday of the Equipment Laboratory, Propulsion and Accessories Subdivision, wrote to Lloyd L. Shaulis of the OAP in Washington, confirming a conversation with Fitzgerald and asking for photostatic copies of the exhibits annotated by Trump from the estate of Tesla. It was stated that the material would be used "in connection with projects for National Defense by this department," and that all of it would be returned in a reasonable length of time.

That was the last time that the Office of Alien Property or any other federal agency in the United States admitted to having possession of Tesla's papers on beam weaponry. Shaulis wrote to Colonel Holliday on September 11, 1945, saying, "The materials requested have been forwarded to Air Technical Service Command in care of Lt. Robert E. Houle. These data are made available to the Army Air Force by this office for use in experiments; please return them." They were never returned.

These were the full photostatic copies, not merely the abstracts. OAP has no record of *how many* copies were made by those who

150

examined the files with Dr. Trump. The Navy has no record of Tesla's papers; *no* federal archives have a record of them.

Curiously, four months after the photostats had been sent to Wright Field, Col. Ralph Doty, the chief of Military Intelligence in Washington wrote James Markham of Alien Property indicating that they had never been received: "This office is in receipt of a communication from Headquarters, Air Technical Service Command, Wright Field, requesting that we ascertain the whereabouts of the files of the late scientist, Dr. Nichola [sic] Tesla, which may contain data of great value to the above Headquarters. It has been indicated that your office might have these files in custody. If this is true, we would like to request your consent for a representative of the Air Technical Service Command to review them. In view of the extreme importance of these files to the above command, we would like to request that we be advised of *any attempt by any other agency to obtain them.* [Italics supplied.]

"Because of the urgency of this matter, this communication will be delivered to you by a Liaison Officer of this office in the hope of expediting the solicited information."

The "other" agency that had the files, or should have had them, was the Air Technical Service Command itself! Colonel Doty's letter, which was classified under the Espionage Act, was declassified on May 8, 1980.

This embarrassing contretemps goes unexplained in the records. Perhaps it was handled orally with the Liaison Officer.

However, on October 24, 1947, David L. Bazelon, assistant attorney general and director of the Office of Alien Property, wrote to the commanding officer of the Air Technical Service Command, Wright Field, Dayton, Ohio, regarding the Tesla photostats that had been sent by registered mail on or about September 11, 1945, to Colonel Holliday, at the latter's request.

"Our records do not reveal that this material has been returned," said Bazelon. He sent a description and asked that it be returned.

Obviously at least one set of Tesla's papers had reached Wright Field because on November 25, 1947, there was a response to the Office of Alien Property from Colonel Duffy, chief of the Electronic Plans Section, Electronic Subdivision, Engineering Division, Air Materiel Command, Wright Field. He replied: "These reports are now in the possession of the Electronic Subdivision and are being evaluated. . . ." He believed that the evaluation should be completed by January 1, 1948, and "At that time your office will be contacted with respect to final disposition of these papers."

There is no written record that OAP ever sought further to have the documents returned, and they were not returned.

For many years there have been rumors that these unpatented inventions or concepts of Tesla's found their way not only to the U.S. Army Air Force but to Russia and to private American defense industries, and ultimately into certain university research laboratories engaged in beam weaponry.

The Office of Alien Property experienced a very difficult problem over the years in explaining its role in connection with Tesla's papers. Between 1948 and 1978 it issued the following variations on a theme to many inquirers:

"While this Office participated in an examination of certain material owned by the late Dr. Tesla, our records do not disclose that any such material has been vested or is presently under the jurisdiction of this Office. . . ."

"This Office has never had custody . . . of any property of Nikola Tesla. . . ."

"While the Tesla papers were in our custody. . ."

"Photostatic copies of certain documents, made while the papers were under our seal. . . ."

"In 1943 this Office placed a seal on the property. . . ."

"While the Tesla papers were in our custody. . ." etc., etc., etc.

As for what is now Headquarters Aeronautical Systems Division, Wright-Patterson Air Force Base, Ohio, they state: "The organization (Equipment Laboratory) that performed the evaluation of Tesla's papers was deactivated several years ago. After conducting an extensive search of lists of records retired by that organization, *in which we found no mention of Tesla's papers, we concluded the documents were destroyed* at the time the laboratory was deactivated."[6] (Italics supplied. Response, under the Freedom of Information Act, dated July 30, 1980.)

Tesla's original papers, and the remaining models of his inventions—his magnifying transmitter, robot boats, early tube lighting, induction motors, turbine, exhibits shown at the Chicago World's Fair of 1893, such as the "Egg of Columbus," and others—left America in 1952 for Yugoslavia. His ashes were sent later. The artifacts may now be seen at the Tesla Museum in Belgrade, a dignified-looking building with a broad, well-proportioned facade at No. 51 Proleterskih

Brigada, an avenue renamed after the war, but formerly known under the monarchy as Crown Street. The museum bears a plaque on a low wall, printed in the old Cyrillic alphabet.

Here Tesla's English writings have been translated into Serbo-Croatian—except, as the archivist admits, for the "unimportant" material, which remains, just as he wrote it, in the language of his adopted country.

30 The Legacy

The fact that Tesla's research notes and papers have not been easily available for western scientists has not, of course, meant that Teslian research is dead. On the contrary, the very mystery surrounding some of his unproved claims has served to goad numerous scientists into trying to duplicate his experiments. And since his aspirations were virtually limitless, there has always been a chance that the rewards of success would not be inconsiderable. But the single greatest stimulus to try to follow in Tesla's footsteps doubtless remains the example of the man himself—his stunning record of achievement and the enduring fascination of his mind. As one admiring German writer put it, "Tesla went beyond the borders of his exact science to foretell what lies in the future ... a modern Prometheus who dared reach for the stars...."[1]

Although a comprehensive summary of the state of Tesla-inspired research today would be beyond either the scope of this book or the intent of its author, no account of the inventor's life would be complete without at least some indication of what has become of a few of his major preoccupations. The record, as one might expect, is both mixed and incomplete, but it is no less impressive for that.

To begin, then, with Tesla's experiments with ball lightning: He had no idea what ball lightning might be useful for when he first encountered it in his Colorado Springs research; to him it was a nuisance, but it demanded an explanation. And so he set about determining the mode of formation of the strange fireballs and learned to produce them artificially.

The technical explanation runs like this: In the highly resonant transformer secondary comprising his magnifying transmitter, the entire energy accumulated in the excited circuit, instead of requiring a quarter period for transformation from static to kinetic, could spend itself in less time, at hundreds of thousands of horsepower. Thus, for example, Tesla produced artificial fireballs by suddenly causing the impressed oscillations to be more rapid than free ones of the second-

ary. This shifted the point of maximum electrical pressure below the elevated terminal capacity, and a ball of fire would leap great distances.

Yet strangely enough, modern plasma physicists with the best-equipped laboratories, have failed to produce plasmoids with anything near the stability of the true ball-lightning spheres that he created.

Why the fascination with this problem? First, of course, because it is there, an unknown. But second because among other uses, it may hold a vital key in the international race to achieve controlled nuclear fusion—potentially the greatest power source in history. Among those long interested in ball-lightning research are Peter Kapitza, the great Russian physicist, Lambert Dolphin and his colleagues in the radio physics laboratory at SRI International, Dr. Robert W. Bass of Brigham Young University, and Robert Golka, with whom Bass has collaborated on research.

Golka, a Massachusetts physicist, Tesla disciple, and lightning experimenter, has pursued the ephemeral fireball with the fervor of a hunter of snarks. Like Tesla in Colorado, he has done his research alone in a remote western laboratory in the Utah salt flats, and like Tesla, he has struggled to win the kind of federal support that usually goes only to enormous institutions or corporations.

In the largest hangar at the far end of the ghost base at Wendover, Utah, which was built by the U.S. Army Air Force during World War II, big spotlights are often burning as Golka conducts lightning tests. Here, under tightest security in the 1940's, the B-29 *Enola Gay* was housed and outfitted for delivering the first atomic bombs to Hiroshima.

Golka made two trips to the Tesla Museum to pore over the inventor's then unpublished notes and concentrated on replicating as exactly as he could in the old air base hangar the magnifying transmitter that Tesla had built in 1899 when investigating the lightning storms of Pike's Peak.

"He [Tesla] was 'way ahead of anything we have today in the equipment he built," Golka says. "Such as the high-powered switches and spark gap switches. The knowledge has been lost; we don't know how he did it. Some of it was in the diaries, but he kept much of this stuff in his head."

Golka built a magnifying transmitter at his "Project Tesla" that would discharge 22 million volts, creating almost twice as powerful a chain-lightning storm as the maestro himself had produced at Colorado Springs.

The relevance of ball lightning to fusion research has to do with the problem of confining plasma. The heart of the most common type of experimental fusion reaction involves taking isotopic hydrogen gas and both accelerating and superheating it until the hydrogen nuclei fuse to make helium nuclei, releasing, in the process, staggering amounts of energy. Along the way, while the hydrogen is being charged with vast amounts of kinetic and thermal energy, it enters an imperfectly understood material state known as plasma.* In the penultimate stages of the process, before fusion begins, the besetting problem is to maintain the plasma's coherence, to confine it within some kind of invisible electromagnetic "bottle."†

Since the strongest geometric shape is a sphere, Golka believes that ball lightning offers the best potential for containment of the unstable mass. He describes the odd lightning as "a glowing sphere of a variety of colors, a half-inch in diameter or as big as a grapefruit," and resembling an onion in its "layers and layers of alternate charged particles, positive and negative." It may bounce along through buildings, fall into water and set it boiling, and sometimes, as at the Hill Air Force Base in Utah, it may knock out the most sophisticated electronic equipment. In the summer of 1978, with the use of CO-2 laser beams, he finally managed to produce "bead" lightning, which he believes to be a form of ball lightning, and to photograph it in sequential frames.

He then sought support from the U.S. Department of Energy for a major program of research for which he proposed to use a device called a pyrosphere, employing five laser beams to create thermonuclear fusion. In a "Fireball Fusion Reactor" only nonradioactive helium is created and, according to Golka, mathematical models indicate it can reach and hold temperatures above a billion degrees.

He also proposed to the Air Force another Teslian concept, a charged particle beam, but again one designed to employ laser technology. Such beam guns, he believes, would have a range of

*Until recent years plasma had no major industrial importance but was merely a laboratory curiosity. Richard L. Berstn, executive vice president of International Plasma Corp., believes that the first practical application of plasmas came in the 19th century when "the glowing plasma produced by a Tesla coil was used to locate leaks in glass vacuum flasks."

†Teslian ideas are also involved in other aspects of fusion research. Superconducting magnetic coils, cooled to a few degrees above absolute zero, are used in magnetic containment devices; and, in a newly developed rival process, hydrogen fuel pellets are being bombarded by high-energy particle beams.

6,000 miles and could melt and destroy ICBM-type missiles in the air. With a Tesla coil three times the size of his combined coils, Golka believed he could generate 200 million volts of electricity.

But he inherited the usual Teslian problems of a loner, and as he said, "The walls fall in on me when I work for corporations." His work reached a point where it could no longer progress with improvised equipment, but called for enormous investments. His competitors were large corporations and leading universities engaged in the nuclear-fusion race; and even some of the latter were being cut off from their federal grants. They too were deeply into laser technology, although Golka claims his system is different and unique. By no means the only scientist to have attempted to carry forward Tesla's work with ball lightning, he undoubtedly has been one of the most singleminded.*

Russia's Kapitza, who shared the 1978 Nobel Prize in physics with Arno Penzias and Robert W. Wilson of America for his work in magnetism and the behavior of matter at extremely low temperatures, acknowledges his debt to Tesla. "The efficient generation of super-high-frequency oscillations and their conversion back to direct-current electrical energy," he writes, "discloses possible solutions to the problem of transmitting electrical energy ... in free space. The transmission setup will, of course, be similar to that already considered but, instead of a wave guide, a highly directional beam must be used, which, as is well-known, only at short wavelengths will diverge little. Such a setup for the transmission of electrical energy, firstly thought by N. Tesla many years ago, has already been discussed.... Although ... possible in principle, it is tied up with the solution of a series of complicated engineering problems and therefore it can be implemented in practice only in such special situations in which other methods of energy transmission are inapplicable (for example, when energy must be supplied to a satellite)."[3]

In this field of wireless energy transmission, so directly concerned with the space race, there is progress nearer home. Richard Dickinson, who heads the Microwave Power Transmission project for Cal Tech's Jet Propulsion Laboratory in the desert near Barstow, California, traces his inspiration to the early work of Tesla. The concept of bringing electricity to Earth from an orbiting solar-power system via

*Lambert Dolphin says of Golka's replica of the Colorado Springs Tesla coil: "It is spectacular indeed, to either scientist or layman. I hope it ends up in a museum such as the Smithsonian where it can be appreciated." He too is a proponent of further research in ball lightning.

microwaves is daring, costly, romantic, and thoroughly in the style of the maestro.

"We beamed power from our transmitter at Goldstone a distance of one mile," Dickinson said of the NASA project initiated in the mid-seventies. "All of the microwave energy that fell within our target (of which we could only collect a portion with our existing apparatus), we converted 82.5 percent to useful direct current. Thirty-four thousand watts of direct current output carried a distance of one mile. We are well pleased. The next step is to look further into the technology and needs of the satellite power system of the future."[4]

William C. Brown of the Raytheon Company, who developed the rectenna used in this microwave-power research, also attributes the idea of sending electricity by radio waves to Tesla's pioneering in the fundamentals of radio broadcasting and wireless power transmission.

Theoretically, a city the size of New York could be supplied with five billion watts on a winter day by enormous satellite structures in the sky that would orbit synchronously with Earth at a height of 22,300 miles. But admittedly, the cost of such floating power stations would be many billions of dollars, and they would be highly vulnerable to enemy killer satellites, in the event of war.

Brookhaven National Laboratory, located just to the northeast of Tesla's old Wardenclyffe site at Shoreham, also feels a close link with the inventor through the advanced high-energy work being conducted at the laboratory. In 1976 it paid homage to him in a ceremony, and the Yugoslav government sent a plaque to be placed at the still-standing Wardenclyffe laboratory.

Canada, too, has long been a bastion of Tesla Energy System advocates, and because of the country's rich hydroelectric sources, through-the-Earth transmission—if it worked—could be a boon to areas of power shortage.

But—will it work? Several projects have been planned, and some partially implemented, in Canada, central Minnesota, and most recently in Southern California—to "pump" hydroelectric power wirelessly through the Earth to an area of need, employing the Tesla system as it is understood.[5] The U.S. Department of Energy has often been asked to fund projects based on Tesla's system.

Unfortunately, there is no evidence that the system ever worked for Tesla, and none that it could work for anyone else. One of the inventor's problems was that he improperly extended into the electromagnetic domain fluid and fluid-mechanical analogies. Tesla's patent No. 787,412 provides for the Earth to be excited by a carefully

154

valued wavelength to establish a standing wave condition. Tesla believed the propagation path fell along a diameter. But according to much knowledge developed since 1899, the propagation path would not be along a diameter but, rather, along an ellipsoidal arc somewhere between the diameter and the spherical surface.

A fundamental aspect of wave propagation of power is that *no power is transmitted if the wave is standing;* power is transmitted solely with a traveling component. Boundary layer propagation, i.e., the mode of lossless propagation of waves at the boundary of two differing media (such as earth and sky), is a viable concept. However, the boundary plane must be smooth and the waves must be properly launched. At the frequencies Tesla was using, such launching apparatus would be an enormous structure. In examining the photographs of his experimental station at Colorado Springs, it is apparent to experts that he did not employ apparatus essential to the launching of such waves.

Tesla probably was mistaken at Colorado Springs in his interpretation of the lightning storms which he observed traveling away from him (eastwardly) across the plains, producing maxima and minima effects upon his instruments. This he interpreted as standing waves being set up in the Earth by the traveling storm, with the crests of the waves passing through his location as the storms advanced. It is believed he was seeing an interference effect caused by the reradiating surface of the frontal range of mountains to the west of his station. The results would have been the same on his instruments.

Dr. Walt, formerly senior scientist at the Environmental Research Laboratories, National Oceanic and Atmospheric Administration, in Colorado, describes himself as a "firm skeptic" of the Tesla theory. "The concept that electromagnetic energy penetrates 'through the earth,'" he says, "is valid only if the frequency is sufficiently low *and* if the distances are small. It's all tied up with 'skin-effect' phenomena; that means that the field is confined to the surface of a good conductor as in metallic wave guide."[6]

Dr. Walt even goes so far as to suggest that Tesla never really accepted the fact that electromagnetic waves could transport energy through the air. "Instead he thought of the earth itself as a conveyor and also thought of the possibility of a return conductor at heights of '15 miles above sea level.' The parallel of this idea to the earth-ionosphere wave guide at extremely low frequencies is striking (see IEEE *Journals of Oceanic Engineering*, Vol. OE-2, No. 2, April 1977). Also his proposed resonance of the system might be interpreted as the first disclosure of the earth-ionosphere cavity oscillations that have

been associated from the early 1960s with W. O. Schumann, N. Christofilos, and J. Galejs, among others."[7]

With respect to wireless communication, the U.S. Navy's Project Sanguine/Seafarer of recent years has evolved from Tesla's Colorado experiments. In a thermonuclear war, conventional radio communication probably would be disrupted at certain heights and wavelengths. America's atomic submarine fleet might then be without a means of receiving messages. The U.S. Navy, seeing this danger, turned back to Tesla's nineteenth-century suggestion of employing 10 Hz signals (ELF or extra low frequency), to circle the globe and penetrate the deepest waters.

One of the headier speculations concerning Teslian science is a suggestion that Russia has been employing his theories on weather modification to interfere with the jet stream, causing droughts and extremes of hot and cold weather. However unlikely the charge, it is true that Tesla did do a good deal of theorizing (but very little experimentation) on weather control.

He wrote, for example, on the possible use of radio-controlled missiles and explosives to break up tornadoes and the use of "lightning of a certain kind" to trigger rainfall. Of the former he said, "It would not be difficult to provide special automata for this purpose, carrying explosive charges, liquid air or other gas, which could be put into action, automatically or otherwise, and which would create a sudden pressure or suction, breaking up the whirl. The missiles themselves might be made of material capable of spontaneous ignition." His proposal included a lengthy mathematical formula.[8]

As with much modern scientific exploration inspired by the maestro, the returns are still not in on weather changing. Scientist Frederic Jueneman, "Innovative Notebook" columnist for *Industrial Research* magazine, calls attention to the fact that Dr. Robert Helliwell and John Katsufrakis of Stanford University's Radio Science Laboratory, demonstrated that very low frequency radio waves can cause oscillations in the magnetosphere. With a 20-km antenna and a 5 kHz transmitter in the Antarctic, they found that the earth's magnetosphere could be modulated to cause high energy particles to cascade into our atmosphere, and by turning the signal on or off they could start or stop the energy flow.

"The theoretical implication suggested by their work," says Jueneman, "is that global weather control can be attained by the injection of relatively small 'signals' into the Van Allen belts—something like a super-transistor effect."

But Jueneman's speculations go further and are eminently

worthy of Tesla: "If Tesla's resonance effects, as shown by the Stanford team, can control enormous energies by miniscule triggering signals, then by an extension of this principle we should be able to affect the field environment of the very stars in the sky...With godlike arrogance, we someday may yet direct the stars in their courses."[9]

No biography of Tesla would be complete without mention of his bright following of amateur physicists who build Tesla coils for their personal research, endeavoring to replicate his electrical magic; and the young inventors who pore over his basic patents and still find inspiration from them.

Durlin C. Cox, a Wisconsin physicist who has pondered Tesla's published writings, has built two Tesla coils, the second of 10 million volts. The reasons: "My own personal interest in high voltage engineering, especially in the field of high frequency rf transformers; to further my studies on the laboratory production of ball lightning; and because the University of Wisconsin at Madison asked me to submit a Tesla coil in their bi-annual Engineering Exposition in the spring of 1981." He and friends built one Tesla coil for a Hollywood studio for lightning effects, which has been a common use of them.

Electrical engineer Leland Anderson has summarized the major points in design that a coil builder might gain from reading Tesla's *Colorado Springs Notes*:

1. The Q's of the primary and secondary must be as high as practicable.

2. The Q's of the primary and secondary should be equal.

3. The length of the secondary winding should be one-quarter of the effective operating wavelength.

4. The technique of using an "extra coil" tank circuit (or a variation of it) in the secondary to magnify the voltage should be used.

"With these criteria in mind," he says, "the builder will find that hundreds of turns are not necessary for the secondary winding to achieve high voltages."

Last but not least, what about Tesla's death/disintegrator rays? Were his concepts sound? If they were found useful by the U.S. Army Air Force research team, whose top-secret project was rumored to have had the code name "Project Nick," it may be safely assumed that instead of being "destroyed," as reported, his papers are still highly classified.

Dr. Trump's evaluation and Swezey's assessment of Tesla's "secret weapons" have, however, received updated concurrence by

Lambert Dolphin, assistant director of the Radio Physics Laboratory at SRI International, who has studied the inventor's work and his ball-lightning research for two decades. He points out that the fields of knowledge of both physics and electrical engineering have grown exponentially since about 1930.

"Whole libraries are now required just to keep track of all the theory and experience that have unfolded since Tesla's time," he says. "Our mathematical and practical understanding of electricity, magnetism, electromagnetic theory, and radio communications has continued to grow explosively ever since 1950, or should I say 1970!"[10]

Tesla, Dolphin believes, "may have had intuitive insight into lasers and high-energy particle beams as well as ultra-high voltage phenomena, but now that we understand all the physics much more, we can easily evaluate many of his extravagant later-life claims."[10]

In fact, there is no good evidence to suggest that Tesla anticipated lasers. His "teleforce rays" seem to have been concerned exclusively with high-energy particle beams. We still do not know precisely how he intended them to work, although, says Dolphin, the available evidence suggests that Tesla may not have paid sufficient attention to how greatly such beams may be absorbed or dispersed by molecules and atoms in the air. In any case, even if we did understand Tesla's intentions more clearly, we should be hard put to compare them to the current state of the art, much of which is hidden under high security classifications.

Nevertheless, Tesla's work with high voltages to accelerate charged particles does seem to have been decidedly in what is now the mainstream of physical research. "In this field," says Dolphin, "he anticipated modern linear and circular nuclear accelerators. Such machines today have energy levels of tens of billions of electron volts or at least 1,000 times greater energy levels than Tesla ever attained.

"I am sure his magnifying transmitters were spectacular... He probably generated some interesting arcs and sparks that were what we now study as *plasmas*. The containment of plasmas is a huge area of modern physics. For example ... to see if small amounts of matter can be turned into immense amounts of electrical power in carefully contained plasmas." But Tesla's early discoveries and inventions, he concludes, were indeed ingenious and ahead of their time.[11]

As this book goes to press, the Pentagon is studying the creation of a new branch of the armed services, to be known as the U.S. Space Command, whose primary arsenal will consist of laser and particle-beam weapons fired from "space battleships." In prose not

unlike Tesla's own, a Department of Defense fact sheet compares particle beams to "directed lightning bolts" —although without explicitly admitting that such a weapon has in fact been developed.

It is difficult to assess the current state of the beam-weapons program because virtually everything about it is heavily classified. Apparently the technology involved has proved to be complex and difficult, raising questions about the project's feasibility, but many experts nevertheless seem to be hard at work on the problem. At the same time, the activities of the other nations in this area have been monitored carefully by agencies of the federal government. Indeed the possibility of creating a family of particle-beam weapons has been a subject of serious discussion in this country for at least the past twenty-five years, and it is, in my opinion, of no little significance that as long ago as 1947 the Military Intelligence Service identified the writings about a particle-beam among Tesla's scientific papers as being "of extreme importance."

Since he had no laboratory in the later years of his life, Tesla was unable to develop his ideas. But it is undeniable that he described in general terms half a century ago what may prove to be one of the main weapons of the Space Age. And to the end of his days, Tesla the pacifist hoped that such knowledge would be used, not for war among Earthlings, but for interplanetary communication with our neighbors in space, of whose existence he felt certain.

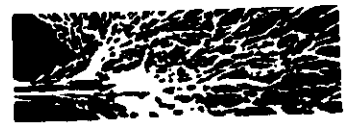

Bibliographical Essay

Some of Tesla's own writing—lectures, articles, patents, papers, and letters—is now available in the United States. His most important lectures and his brief autobiography, in bound volumes, are listed in the prologue to the reference notes.

Citation of biographies of Tesla by O'Neill, Hunt, and Draper, and others may be found in the reference notes. The O'Neill manuscript and the Swezey Collection are to be found at the Smithsonian Institution, Dibner Library.

Serious Tesla scholars will wish to consult the annotated *Dr. Nikola Tesla Bibliography* by J. T. Ratzlaff, and L. I. Anderson (San Carlos, California, Ragusan Press, 1979), for it contains some 3,000 sources of writings by and about Tesla. "Priority in the Invention of Radio, Tesla v. Marconi," by Leland Anderson may be obtained through the Antique Wireless Association, Monograph New Series No. 4.

A new means of analyzing Tesla's inventions is provided in *Dr. Nikola Tesla: Selected Patent Wrappers from The National Archives*, by J. T. Ratzlaff (Millbrae, Ca., Tesla Book Co., 1980). These "file wrappers" provide explanations and correspondence between the patentee and the Patent Office, to overcome objections raised by the examiner.

Tesla's *Colorado Springs Notes, 1899–1900*, published in 1978 by the Tesla Museum, is available through Nolit, Terazije, 27, Belgrade, Yugoslavia.

The Library of Congress Manuscripts Division contains microfilm correspondence between Tesla and George Scherff, Robert Underwood Johnson, Mark Twain, members of the Morgan family, George Westinghouse, and the Westinghouse Electric and Manufacturing Company.

In addition original correspondence and photographs may be found at the Butler Library, Rare Books and Manuscripts, Columbia University, including letters between Tesla and Johnson, Scherff, and

157

REFERENCE PAGES

96 pages

February 12, 1937

Mr. Edgar Hoover, Director,
Federal Bureau of Investigation,
Washington, D.C.

My dear Mr. Hoover:

I do not know whether or not the recent series of air crashes on the west coast has attracted the attention of your department, or whether, if investigation were indicated, the jurisdiction would be your own. An idea as to the cause of these crashes has occurred to me, however, and I thought it might bear a bit of checking up.

If you will check newspaper files as far back as 1934, I believe you will find that the earliest of the unexplained (and apparently unexplainable crashes) occurred about that time.

As I remember the events, it was during that year that three small planes exploded in the air over Texas and southwestern Kansas and Oklahoma. These crashes were not accounted for, either by subsequent investigation where the plane occupants were killed or by the experience of surviving plane occupants in one case.

Following these tragedies there came a lapse of about a year, after which there occurred (likewise without apparent reason) the series of crashes which cost the lives of a senator, of Knute Rockne, and a number of others. All crashes again occurred in the South and Southwest.

Again there was a lapse of time, this one not quite a year, and there started the worst series of air disasters the country has yet seen. One plane lost in the Southwest and not yet accounted for. One plane crashes into a mountainside within sight of its airport. And now the most recent incident, the falling of a United liner into San Francisco Bay while circling its airport, preparatory to landing.

RECORDED & INDEXED 62-47649-1

Now in this most recent incident, the experience of the radio operator at the airport seems to me to be highly illuminating. This operator reported a soft buzz interrupting his communication with the liner ... a loud roar such as produced by the worst imaginable static ... then silence. The plane had dropped into the bay like a plummet.

FEB 24 1937

[redacted] b6 b7C

159

Crack pilots do not suddenly become rank hams and bungle in handling a ship. Nor do the three motors (or even two) on the large airliners, stop simultaneously without extremely sufficient reason. Th ese things might happen once or even twice in a lifetime. They do not happen six and eight times a year. It is not logical that they should.

To digress for a moment, I recall reading an article in a magazine a year or two ago, written by Nikola Tesla, the inventor. The article dealt with a new invention of Mr. Tesla's ... a giant induction coil which would project power (high voltage) through the atmosphere without the use of transmission wires. Mr. Tesla devoted some space to the possible social benefits that would result to the public should his invention be perfected and become practical.

I have not heard of Mr. Tesla now in two or three years. Perhaps he has left the country. Perhaps he is still here. He might still be working on the invention described in the above-mentioned article. It might have been stolen from him.

In any case, his views on the ideas presented by these two unconnected subjects, would be well worth while having. And if I had the money and the time, I should certainly make an effort to smoke him out myself.

The thing is simply this: if one man can make an instrument that will project power through the air for even so short a distance as 500 yards (the then-practical limitations of Mr. Nikola's device) it is entirely possible for another to project power for several hundreds of miles. And the effect of such uncontrolled power on metallic objects in its path is entirely unpredictable.

Please do not think me a "crank" letter writer. I have never before written a letter of this type to anyone. But the idea seems to me so within the bounds of possibility that I most sincerely feel it will bear some practical study.

Yours very respectfully,

[redacted]

(b)(7)(c)

Letter Ack. + Ref
Bu. Air Commerce
cc [redacted]
2-27-37

XXXXXX
XXXXXX
XXXXXX

FEDERAL BUREAU OF INVESTIGATION
FOIPA DELETED PAGE INFORMATION SHEET

6 Page(s) withheld entirely at this location in the file. One or more of the following statements, where indicated, explain this deletion.

☒ Deletions were made pursuant to the exemptions indicated below with no segregable material available for release to you.

Section 552		Section 552a
☒ (b)(1)	☐ (b)(7)(A)	☐ (d)(5)
☐ (b)(2)	☐ (b)(7)(B)	☐ (j)(2)
☐ (b)(3)	☐ (b)(7)(C)	☐ (k)(1)
_____	☐ (b)(7)(D)	☐ (k)(2)
_____	☐ (b)(7)(E)	☐ (k)(3)
_____	☐ (b)(7)(F)	☐ (k)(4)
☐ (b)(4)	☐ (b)(8)	☐ (k)(5)
☐ (b)(5)	☐ (b)(9)	☐ (k)(6)
☐ (b)(6)		☐ (k)(7)

☐ Information pertained only to a third party with no reference to you or the subject of your request.

☐ Information pertained only to a third party. Your name is listed in the title only.

☐ Documents originated with another Government agency(ies). These documents were referred to that agency(ies) for review and direct response to you.

_____ Pages contain information furnished by another Government agency(ies). You will be advised by the FBI as to the releasability of this information following our consultation with the other agency(ies).

_____ Page(s) withheld for the following reason(s): _____

_____

☐ For your information: _____

_____

☒ The following number is to be used for reference regarding these pages:

65-30311-237

XXXXXX
XXXXXX
XXXXXX

XXXXXXXXXXXXXXXXXXXXX
X DELETED PAGE(S) X
X NO DUPLICATION FEE X
X FOR THIS PAGE X
XXXXXXXXXXXXXXXXXXXXX

FBI/DOJ

CC-287

Mr. Tolson
Mr. E.A. Tamm
Mr. Clegg
Mr. Glavin
Mr. Ladd
Mr. Nichols
Mr. Rosen
Mr. Tracy
Mr. Carson
Mr. Coffey
Mr. Hendon
Mr. Kramer
Mr. McGuire
Mr. Harbo
Mr. Quinn Tamm
Tele. Room
Mr. Nease
Miss Beahm

J. EDGAR HOOVER
DIRECTOR

Federal Bureau of Investigation
United States Department of Justice
Washington, D. C.

13818

JBL:ed

January 11, 1943

MEMORANDUM FOR MR. LADD

RE: UNKNOWN SUBJECTS;
EXPERIMENTS AND RESEARCH
OF NIKOLA TESLA (Deceased)
ESPIONAGE - M

(b)(7)(C)

In a teletype from the New York Office dated January 9, 1943, the Bureau's advice is requested as to what action should be taken in connection with this matter. It is to be noted that Tesla died January 7, 1943, and resided at the Hotel New Yorker. He was one of the world's outstanding scientists in the electrical field and has been conducting many experiments in connection with wireless transmission of electrical power and what is commonly referred to as the "Death Ray".

Sava Kosanovich, a distant relative intensely disliked by Tesla, is taking steps to get possession of these important documents and plans. Kosanovich on January 7, 1943, with George Clark, in charge of the Museum and Laboratory for RCA, and Kenneth Swezey of Brooklyn, New York, entered Tesla's rooms in the Hotel New Yorker and, with the aid of a locksmith, broke into a safe containing some of Tesla's valuable papers, including important electrical formulae, designs, et cetera.

Tesla is reported to have completed and perfected his experiments in the radio transmission of electrical power and to have conceived and designed a revolutionary type of torpedo not presently in use by any nation. It is reported that Kosanovich may possibly make this material available to the enemy.

ACTION:

I called Mr. D[redacted] of the New York Office at 12:30 P.M. and pointed out the apparent burglary violation on the part of Kosanovich. I told him this matter should be discreetly discussed with the State's Attorney in New York City with a view to locating Kosanovich and apprehending him on a burglary charge in order to determine the nature of the material he took from Tesla's safe. I pointed out the necessity for the State's Attorney keeping any action most secret in view of the highly confidential nature of the plans involved. I also suggested that the New York Office contact the Surrogate Court in order that Tesla's effects as well as the contents of his safety deposit boxes might not be entered without the presence of a Bureau Agent in order that we may endeavor to preserve the secrecy of any plans or items essential to the conduct of the war and national security.

Respectfully,

[redacted]

(b)(7)(C)

FOR VICTORY BUY UNITED STATES DEFENSE BONDS AND STAMPS

RECORDED & INDEXED

65 47753-1
F B I
1943

162

65-47953-1

[redacted] (b)(7)(c)

January 21, 1943

SAC, New York

Re: UNKNOWN SUBJECTS; SAVA KOSANOVICH; EXPERIMENTS AND RESEARCH OF NIKOLA TESLA (Deceased) ESPIONAGE (M)

Dear Sir:

Reference is made to a teletype dated January 9, 1943, from the New York Field Office and to a phone conversation between Mr. J. B. Little of the Bureau and Assistant Special Agent in Charge Donegan on January 11, 1943.

It was pointed out to Mr. Donegan that Sava Kosanovich, George Clark and Kenneth Sweeny may have committed a burglary violation by entering Tesla's rooms after his death and particularly by using a locksmith to get into a safe containing some of Tesla's valuable papers. Mr. Donegan was advised this matter should be discreetly discussed with the State's Attorney, New York City, with a view to locating Kosanovich and apprehending him on a burglary charge, in order to ascertain the nature of the material taken from the safe of Nikola Tesla. It was also suggested that the New York Office contact the Surrogate Court, in order that Tesla's effects, as well as the contents of his safety deposit boxes, might not be entered without the presence of an Agent, in order that the secrecy of any plans or items essential to the conduct of the war or national security might be preserved. It was stated that Kosanovich might possibly make certain material available to the enemy.

A review of the Bureau files reveals considerable information concerning Nikola Tesla and his inventions and it should be noted that one Nicola Tesla, who might have been identical with Nikola Tesla, made a speech at the Grange Hall, Springfield, Massachusetts, on June 4, 1922, under the auspices of the Friends of Soviet Russia.

Mr. Tolson
Mr. E. A. Tamm
Mr. Cleg
Mr. Gla
Mr. Ladd
Mr. Nich
Mr. Rose
Mr. Trac
Mr. Carson
Mr. Coffey
Mr. Hend
Mr. Kra
McGuire
Carbo
Quinn Tamm
Tease
Handy

[redacted] (b)(7)(c)

COPIES DESTROYED
148 OCT 26 1967

55 FEB 10 1943

Cat [redacted]

163

[redacted]

(6)(7)(C)

No record of Kenneth Sweezy could be located in the Bureau files from the information available.

The foregoing information is being furnished for possible future reference in connection with this case and it is desired that the Bureau be kept promptly and currently informed of all developments in this case.

Very truly yours,

John Edgar Hoover
Director

Federal Bureau of Investigation

United States Department of Justice
New York, New York

EBC:PM
65-12290

March 19, 1943

Director, FBI

Re: UNKNOWN SUBJECTS; SAVA KOSANOVICH;
EXPERIMENTS AND RESEARCH OF NIKOLA TESLA
(Deceased);
ESPIONAGE, MISCELLANEOUS

Dear Sir:

Reference is made to the Bureau letter in the above-captioned matter dated January 21, 1943, in which it is stated that it is desired that the Bureau be kept promptly and currently informed of all developments in this case.

In view of a telephone call from Mr. Little of the Bureau to Mr. T. J. Donegan, Assistant Special Agent in Charge of the New York Office, dated January 14, 1943, in which Mr. Little stated that the above-captioned matter was now being handled as an Alien Enemy Custodial Detention matter and therefore no further action should be taken in the matter by the New York Field Division, this case is being considered closed in this Office, unless advised to the contrary by the Bureau at some future time.

alien En custodian

Very truly yours,

E. E. Conroy

E. E. CONROY
Special Agent in Charge

ALL INFORMATION CONTAINED
HEREIN IS UNCLASSIFIED
DATE 4-18-89 BY SP1 [illegible]
291860

ta

COPIES DESTROYED
148 OCT 26 1960

RECORDED & INDEXED

65-47953-3

(b)
(c)

FOR VICTORY
BUY
UNITED STATES DEFENSE BONDS AND STAMPS

165

FEDERAL BUREAU OF INVESTIGATION

Form No. 1
THIS CASE ORIGINATED AT NEW YORK CITY, N.Y. FILE NO. 100-8189

REPORT MADE AT	DATE WHEN MADE	PERIOD FOR WHICH MADE	REPORT MADE BY
BALTIMORE, MARYLAND	3-29-43	3-6-43	[redacted] (b)(7)(c)

TITLE	CHARACTER OF CASE
SAVA M. KOSANOVICH, with alias Sava M. Cosonovitch	INTERNAL SECURITY G. CUSTODIAL DETENTION

SYNOPSIS OF FACTS:

[redacted] SAVA [redacted]OSANOVICH, [redacted] Reported to have turned [redacted]tents and effects to Alien Property [redacted]odian, NYC, for NICK TESLA. [redacted] (b)(7)(c)

- R U C -

ALL INFORMATION CONTAINED HEREIN IS UNCLASSIFIED DATE 4-30-45 BY [illegible] 291860

REFERENCE: Letter from New York Field Division dated 2-22-43.

DETAILS: AT DOVER, DELAWARE

[redacted]

(b)(7)(c)

Mr. ABE SPANEL, President of the International Latex Corporation, advised that [redacted] He stated that he had been a very good friend of NICK TESLA who has died recently and that he believes that the subject is a third or fourth cousin of TESLA and that when TESLA died, the subject was his only close relative in this country and TESLA's effects came into his possession.

SPANEL related that the subject had recently turned over to the government the majority of the patents of NICK TESLA. SPANEL described TESLA as being one of the greatest inventors that has ever lived. He stated he had more than

APPROVED AND FORWARDED: SPECIAL AGENT IN CHARGE DO NOT WRITE IN THESE SPACES SF

COPIES DESTROYED 148 OCT 26 1960 [illegible] 65-47953 4 RECORDED

CONTESTED THIS REPORT
5 - Bureau
4 - NYC (2 G-2)
2 - Baltimore

APR 22 1943

17 [redacted] (b)(7)(c)

53 APR 22 19[illegible]

U. S. GOVERNMENT PRINTING OFFICE 7—2034

166

900 inventions and patents. SPANEL stated that at one time TESLA had an invention in which he was able to direct electrical current without the means of a conductor. He felt that this type of an invention would be of invaluable assistance to any country at war and for this reason felt that TESLA's inventions and patents should be put into the hands of proper Government officials, where they might be put to the best advantage for the United States. He does not believe the subject is engaged in any un-American activities and stated that he was more than willing to turn these patents and inventions over to the proper Government agency. He asserted that before TESLA died, he had spoken to the subject regarding his becoming a United States citizen and SPANEL believes that he is now taking the proper steps to achieve that end.

SPANEL also stated that the subject had handed all of the effects of the deceased TESLA to the Alien Property Custodian in New York City.

SPANEL advised that the day before TESLA died he had tried to get in touch with War Department officials in Washington in order that he might make available to them patents and inventions that he had developed. However, he was not able to get in touch with the proper authorities and he died the following day.

SPANEL advised that the Yugoslavian Government had been sending TESLA approximately $600.00 per month for sometime prior to his death and this was described as being a sort of pension.

SPANEL stated further that he has previously turned over information regarding the subject to Special Agent [redacted] of the New York Field Division. He also advised that WALDEMER KEMPFERT, Science Editor, New York Times and BILL LAURENZ, Science Feature Writer, New York Times and the Science Editor of the Herald Tribune would be able to elaborate on some of the accomplishments of NICK TESLA and that the June 1900 issue of the Century Magazine also contained an article relating to the inventions of TESLA.

(b)(7)(C)

SPANEL also stated that he believed BLOYCE FITZGERALD, Pierpont Hotel, Brooklyn, New York, Secretary to TESLA, has been contacted by Special Agent [redacted] and that if the New York Office wishes to contact SPANEL he may be reached at his home [redacted]

- REFERRED UPON COMPLETION TO THE OFFICE OF ORIGIN -

JOHN EDGAR HOOVER
DIRECTOR

CC-287

Mr. Tolson
Mr. E. A. Tamm
Mr. Clegg
Mr. Glavin
Mr. Ladd
Mr. Nichols
Mr. Rosen
Mr. Tracy
Mr. Carson
Mr. Coffey
Mr. Hendon
Mr. Kramer
Mr. McGuire
Mr. Harbo
Mr. Quinn Tamm
Tele. Room
Mr. Nease
Miss Beahm
Miss Gandy

Federal Bureau of Investigation
United States Department of Justice
Washington, D. C.

[redacted] (b)(7)(C)
2:45 p.m.

July 17, 1943

MEMORANDUM FOR [redacted]

RE: SAVA KOSANOVICH
INTERNAL SECURITY (G)
CUSTODIAL DETENTION

At this time SA [redacted] of the New York office telephoned, stating on the previous afternoon [redacted] telephoned that office [redacted] stated that she would like to be interviewed concerning certain information she possessed [redacted]

(b)(7)(D)

Agent [redacted] stated [redacted] two teletypes which the New York office forwarded to the Bureau under dates of January 9 and 12, 1943, in the case entitled UNKNOWN SUBJECTS, EQUIPMENT, EXPERIMENTS AND RESEARCH OF NICOLA TESLA DECEASED, ESPIONAGE (Bureau file 100-2237). Briefly, the information contained in these teletypes is that shortly after Nicola Tesla, one of the world's outstanding scientists in the electrical field, died in his hotel room at New York City on January 8, 1943, Sava Kosanovich, a distant relative, and other individuals entered his room and opened a safe, examining certain materials which he possessed. On January 8, Mr. L. M. C. Smith of the Department advised Mr. Tamm that he was concerned about the possibility of enemy agents confiscating some of the trunks of Tesla and that apparently the Alien Property Custodian was taking some action in this matter. Inasmuch as the matter was being handled by the Alien Property Custodian's office, the Bureau did not conduct any inquiries into this situation.

(b)(7)(C)

RECORDED 165-47953

[redacted]

FOR VICTORY BUY UNITED STATES SAVINGS BONDS AND STAMPS

COPIES DESTROYED
148 OCT 26 1960

ALL INFORMATION CONTAINED HEREIN IS UNCLASSIFIED DATE 4-18-89 BY SP1A 66cm
291860

57 AUG 19 1943

168

Mr. Ladd

[redacted]

ACTION:

[redacted]

There is attached for your approval a letter directed to the San Juan Field Office requesting that this interview be conducted and also instructing that she be interrogated concerning the other matter referred to above, inasmuch as the Pittsburg Office has not as yet covered this interview.

Respectfully,

[redacted]

(6) (7) (C)

Federal Bureau of Investigation
United States Department of Justice
New York 7, New York

IN REPLY, PLEASE REFER TO
FILE NO. 65-12290
HER:mhm

CONFIDENTIAL

October 17, 1945

Director, FBI

Re: UNKNOWN SUBJECTS;
SAVA KOSANOVICH;
Experiments and research of NIKOLA TESLA (deceased)
ESPIONAGE - M

Dear Sir:

Reference is made to the Bureau letter dated January 21, 1943, which bore a caption similiar to that mentioned above.

The referenced letter dealt with the death, on January 7, 1943, of the famous inventor, NIKOLA TESLA, who as well as being the inventor of Alternating Current, perfected many electrical devices. He is also credited with having developed the so called "death ray" which would safeguard any country from attack by air.

On June 9, 1945, [redacted] of New York City furnished information of a nonspecific nature indicating that it was his belief that persons sympathetic to Russia were making an effort to secure the effects of NIKOLA TESLA in order to salvage therefrom any models or designs of possible military value. [redacted] claimed that he heard that ABRAHAM N. [redacted], President of the NATIONAL LAND CORPORATION, of Dover, Delaware was the motivating influence behind this attempt to obtain TESLA'S papers which are presently held in storage at the MANHATTAN STORAGE WAREHOUSE in New York City. [redacted] promised to return to the New York Field Division shortly after his initial visit and furnish further and more specific information to support his claims.

RECORDED 47953-14

ENCLOSURE ATTACHED

He was not heard from again, however, until September 27, 1945, at which time he furnished the following additional information:

He said that a boyhood chum of his from Wichita, Kansas, BLOYCE FITZGERALD, had been TESLA'S protege and one of the inventors few confidents. According to [redacted], FITZGERALD who is now an Army Private stationed at Wright Field, Dayton, Ohio, is a brilliant 29 year old scientist who spent endless hours with TESLA prior to the latters death, during which time TESLA explained to him most secret experiments. [redacted] stated that FITZGERALD met TESLA in November 1942, but he had been corresponding with the latter since 1935. According to the informant, FITZGERALD had developed some sort of anti-tank gun, the details of which he presented to TESLA who made certai corrections in design and specifications to further perfect the weapon.

[redacted] related that sometime in December 1942, when FITZGERALD was attending a meeting of the AMERICAN SOCIETY OF MECHANICAL ENGINEERS, he made the acquaintance of ABRAHAM [redacted] who became interested in FITZGERALD'S

RETURN TO INDEXING DEPT.

170

gun. SPANEL offered financial aid to FITZGERALD and the two were in the closest contact with each other for a considerable period of time. [redacted] said that FITZGERALD had lined up a deal for the purchase of the gun by the REMINGTON ARMS COMPANY, but for some reason SPANEL blocked this deal by reaching top men in the REMINGTON COMPANY. SPANEL is then reported as having obtained a job for FITZGERALD with the HIGGENS SHIP BUILDING COMPANY in New Orleans and negotiated a contract with FITZGERALD for the purchase and manufacture of the gun in a manner which would return 80% of the profits derived to SPANEL,

[redacted] stated that in November of 1943, for some unknown reason but which he believes to be attributable to SPANEL, FITZGERALD was fired by the HIGGENS COMPANY. In September of 1944, FITZGERALD was inducted into the Army and for a considerable period of time was located at an ordinance experimental station at Elgin Field, Florida. [redacted] stated that at the present time FITZGERALD is engaged in a highly secret experimental project at Wright Field in Dayton, Ohio. In spite of his rank of Private, FITZGERALD actually is the director of this research and is working with many top young scientists who were inducted into Army from leading industrial posts.

According to [redacted], FITZGERALD is presently working on the perfection of TESLA'S "death ray" which in FITZGERALD'S opinion is the only possible defense against offensive use by another nation of the Atomic Bomb. In this connection, it is noted that the New York Times of September 22, 1940 in an article entitled "SCIENCE IN THE NEWS" by WILLIAM A. LAURENCE, Science Editor states that TESLA devulged to LAURENCE the fact that he had developed a "death ray" or "tele-force" which TESLA claimed would melt airplane motors at a distance of 250 miles, so that actually an invisible Chinese Wall would be built around a country against attack by an enemy air force.

According to the article in the TIMES, this electrical device would operate by the generation of power from a plant, a number of which might be located strategically along our coast lines and the beam from which would melt any engine within a radius of 250 miles.

[redacted] stated that during FITZGERALD'S acquaintance with SPANEL, FITZGERALD had told SPANEL of his associations with TESLA and had apparently described to SPANEL some of TESLA'S most secret work. [redacted] believes that SPANEL, who he claims is definitely pro-Russian in attitude, is now attempting through legal procedure to secure custody of TESLA'S effects which are now held by TESLA'S only heir, one SAVA KOSANOVICH, who is presently in Yugoslavia occupying some governmental post.

It will be recalled that in an article published on March 15, 1945, by the KING FEATURE SYNDICATE INCORPORATED, WESTBROOK PEGLER charged SPANEL with spreading pro-communist and pro- Russian propaganda through his full page advertisement in the newspapers, which SPANEL characterized as being published for the INTERNATIONAL LATEX CORPORATION, as a public service feature. It is also interesting to observe that in the New York Times of October 2, 1945, an article appears which states that SPANEL is suing the KING FEATURE SYNDICATE INCORPORATED for six million dollars alleging the column by PEGLER to have been libelous.

(b)(7)(C)

171

[redacted] stated that through FITZGERALD he too had met SPANEL and from this personal acquaintance he formed the opinion that SPANEL was definitely a communist and is probably one of the financial supporters of the Communist Party in this country. [redacted] stated that SPANEL was born in Russia, but is now an American citizen. He also charged that SPANEL exerted tremendous political influence in Washington, D. C., and said that one of SPANEL'S closest political friends was HENRY WALLACE.

[redacted] advised that two agents from Army Intelligence contacted and stated that in an investigation to determine the qualifications of FITZGERALD for a commission, they had developed information indicating that SPANEL was definitely endeavoring to secure possession of TESLA'S effects. [redacted] indicated that Army Intelligence was pursuing an investigation along these lines in an attempt to ascertain the complete story in this regard.

psychiatrist

[redacted] (b) (7) (C)

[redacted] stated that FITZGERALD had interested a group of young Army scientists now working with him at Wright Field in this foundation, and their ultimate goal is to secure the support of a wealthy backer in order that a foundation might be established and that a sort of "idea factory" might result. He said that they intended to contact HENRY FORD, SR., to solicit his aid in this regard.

[redacted] related that probably the greatest idea of TESLA'S was that involving the wireless transmission of electrical power. He claimed that TESLA had performed a successful experiment many years ago at Pikes Peak, at which time he harnassed local current from the sun's rays which he built up into a huge potential of electrical energy. [redacted] said that according to FITZGERALD, if this idea could be furthered, all electrical energy to operate the world's machinery might be gotten absolutely free rather than by the costly method with which electrical power is presently generated. He said that his idea was to conduct further experiments along this line in China where the need for electrical power is very great.

Inquiry was made at the MANHATTAN STORAGE WAREHOUSE in New York City, and it was determined that the effects of NIKOLA TESLA are contained in some

75 packing cases and trunks and are presently under seal by the New York State Department of Taxation. It was learned that the rental for this storage, which approximates $15 per month, is being paid by one CHARLOTTE MUZAR, 134 East 63rd Street, New York, New York, who is listed as the agent for SAVA KOSANOVICH.

Inquiry was also made at the office of the Alien Property Custodian in New York City, concerning an investigation conducted by this office at the time of TESLA'S death, and at which time the latters property was placed under seal by the United States Government. Mr. WALTER GORSUCH, Chief Investigator for the Alien Property Custodian, provided a cover letter and a summary of materials owned by TESLA at the time of his death which was examined by JOHN G. TRUMP, of the office of SCIENTIFIC RESEARCH & DEVELOPMENT. Mr. GORSUCH also stated that his file in this matter reflected that on the night TESLA died his safe was forced open by a representative of the SHORE & WALKER SAFE COMPANY. It was Mr. GORSUCH'S belief that a Mr. STEZEY who is believed to be one of the editors of the POPULAR SCIENCE MAGAZINE was present in TESLA'S room shortly after the safe was opened. These individuals were MILLIS GEORGE, EDWARD PALMER, and JOHN J. CORBETT.

There are enclosed herewith two typewritten copies of the report by Mr. TRUMP of the ALIEN PROPERTY CUSTODIAN reflecting the findings of Mr. TRUMP, following his examination of TESLA'S effects. There is also enclosed herewith a photostatic copy of a list of persons associated with NIKOLA TESLA. This latter item was furnished by [redacted] (b)(7)(C)

The above information is furnished for the Bureau's information, and no investigation is being conducted by this office.

Very truly yours,

E. P. CONROY, SAC

3 Enclosures

000004

173

13810

Address writer at:

Mass. Inst. of Tech.,
Cambridge, Mass.
January 29, 1943.

Mr. Walter Gorsuch,
Alien Property Custodian,
120 Broadway,
New York, New York.

Dear Sir:

At your request and that of Mr. Joseph T. King of the Washington office of the Alien Property Custodian, I have examined the private papers, writings, and other property of the late Dr. Nikola Tesla with the view to determining both their possible usefulness to this country in its war effort and the possible hazard attendant on their falling into unfriendly hands.

This examination was made at the Manhattan Warehouse, 52nd Street, New York City, on January 26-27, and included all of the notes and material in Dr. Tesla's immediate possession at the time of his death and now in the custody of your office. For reasons indicated below, no investigation was made of material in trunks which had remained untouched in the basement of the New Yorker Hotel for ten years prior to Dr. Tesla's death.

As a result of this examination, it is my considered opinion that there exist among Dr. Tesla's papers and possessions no scientific notes, descriptions of hitherto unrevealed methods or devices, or actual apparatus which could be of significant value to this country or which would constitute a hazard in unfriendly hands. I can therefore see no technical or military reason why further custody of the property should be retained.

For your records, there has been removed to your office a file of various written material by Dr. Tesla which covers typically and fairly completely the ideas with which he was concerned during his later years. These documents are enumerated and briefly abstracted in the attachment to this letter.

COPIES DESTROYED
148 OCT 26 1960

It should be no discredit to this distinguished engineer and scientist whose solid contributions to the electrical art were made at the beginning of the present century to report that his thoughts and efforts during at least the past fifteen years were primarily of a speculative, philosophical, and somewhat promotional character--often concerned with the production and wireless transmission of power--but did not include new sound, workable principles or methods for realising such results.

Very truly yours,

JOHN G. TRUMP,
Technical Aide,
Division 14, NDRC.

Enclosure.

JGT/G

ABSTRACTS OF DR. NIKOLA TESLA'S WRITINGS
RETAINED AS EXHIBITS
FOR THE ALIEN PROPERTY CUSTODIAN

1.

On January 26 and 27, 1943, an examination was made of the technical papers of Dr. Nikola Tesla which, after his decease, had been stored in the Manhattan Warehouse in New York City. This examination was made for the purpose of determining if any ideas of significant value in the present United States war effort could be found among his possessions. Participating in this examination were Mr. John C. Newington, New York Office of the Alien Property Custodian; Mr. Charles J. Hedstniemi, Washington Office of the Alien Property Custodian; Dr. John G. Trump, Office of Scientific Research and Development, Massachusetts Institute of Technology, Cambridge, Massachusetts; Willis George, Office of Naval Intelligence, Third Naval District; Edward Palmer, Chief Yeoman, USNR; John J. Corbett, Chief Yeoman, USNR.

2.

The following papers, which are regarded as typical of Nikola Tesla's writings and thoughts in the period of 1925 to 1942, were removed for the purpose of record and are listed below in the random order in which they were found, together with a brief individual abstract.

Exhibit A

"Possibilities of Electrostatic Generators" - an undated article probably written about 1934 discussing the possibilities, as a source of high-voltage D-C power, of the Van de Graaff type of electrostatic belt generator. The article states correctly the electrostatic principles employed in this device and points out that such generators are not suitable for commercial high-power applications, though of undoubted scientific value. Tesla's wireless tower, erected in 1902 on Long Island, is stated in this memorandum to have been charged to 30 million volts.

Exhibit B

"Reactive Forces of Glycerine and Dynamite" - an undated memorandum involving some calculations of the explosive power of certain compounds and then deviating to a discussion of the possibility of transmitting power by mechanical vibrations along the earth's crust.

Exhibit C

"Process of De-Gassifying, Refining, and Purifying Metals" - a 41-page memorandum probably written about 1930 dealing with the above subject and proposing new theories of capillarity and surface tension. This correspondence indicated that this had been submitted to various industrial companies.

Exhibit D

"Reply to Amtorg re 'the generation of high-voltage and the acceleration of charged particles'" - This document, dated November 8, 1935, answers questions raised by Soviet engineers and scientists regarding Tesla's proposal of May 16, 1935. From this answer, it is deduced that the proposal concerned the generation of high voltages by electrostatic means. These means consisted of a high-voltage terminal presumably supported on an insulating column and charged by a gaseous charge conveying medium passing between ground and terminal. The ideas contained in this memorandum are fairly similar to the belt-conveyor electrostatic generator methods proposed by Van de Graaff and do not appear to offer any unusual features.

Exhibit E

"Art of Telegeodynamics, or Art of Producing Terrestrial Motions at Distance" - This document, in the form of a letter dated June 12, 1940, to the Westinghouse Electric & Manufacturing Company, proposes a method for the transmission of large amounts of power over vast distances by means of mechanical vibrations of the earth's crust. The source of power is a mechanical or electromechanical device bolted to some rocky protuberance and imparting power at a resonance frequency of the earth's crust. The proposed scheme appears to be completely visionary and unworkable. Westinghouse's reply indicates their polite rejection of this idea.

Exhibit F

"New Art of Projecting Concentrated Non-Dispersive Energy through Natural Media" - This undated document by Tesla describes an electrostatic method of producing very high voltages and capable of very great power. This generator is used to accelerate charged particles, presumably electrons. Such a beam of high-energy electrons passing through air is the "concentrated non-dispersive" means by which energy is transmitted through natural media. As a component of this apparatus there is described an open-ended vacuum tube within which the electrons are first accelerated.

Exhibit F (cont.)

The proposed scheme bears some relation to present means for producing high-energy cathode rays by the cooperative use of a high-voltage electrostatic generator and an evacuated electron acceleration tube. It is well known, however, that such devices, while of scientific and medical interest, are incapable of the transmission of large amounts of power in non-dispersed beams over long distances. Tesla's disclosures in this memorandum would not enable the construction of workable combinations of generator and tube even of limited power, though the general elements of such a combination are succinctly described.

Exhibit G

A circular by Carol Bird, dated September 10, 1938, entitled "Tremendous New Power Soon to Be Unleashed". This describes in popular style some biographical information concerning Nikola Tesla and some ideas for the transmission of power on which he is stated to be working. It appears that the method of transmission is by the mechanical resonance method outlined in Exhibit F, above.

Exhibit H

This exhibit consists of a series of letters to representatives of the British Government dated August 28, 1936; October 26, 1937; December 15, 1937; and April 5, 1938. It includes a reply dated January 7, 1938, from the British Government. These letters offer to the British Government, for a fee, the disclosure of a means for accelerating to high energies minute particles. Such beams would constitute a death ray capable of the protection of Great Britain from air attack.

The method proposed is essentially that described in Exhibit F above. Following the initial letter dated August 28, 1936, the subsequent letters attempt to clear up the "misunderstandings" of the British representatives and to expedite their acceptance of the Tesla proposal. The British reply dated January 7 is a polite expression of disinterest in the proposal.

Exhibit I

An undated memorandum written after Tesla's 79th birthday describing several discoveries which he believed he had made. The first related to a dynamic theory of gravity which is described as not yet completed. The second stated as a physical truth the belief that "there is no energy in matter other than that received from the environment". This second statement, which is discussed at length in this and other writings of Tesla, indicates his disbelief in the existence of atomic or nuclear energy.

Exhibit J

"A Method of Producing Powerful Radiations" - an undated memorandum in Tesla's handwriting describing "a new process of generating powerful rays or radiations". The memorandum reviews the works of Lenard and Crookes, describes Tesla's work on the production of high voltages, and finally in the last paragraph gives the only description of the invention contained in the memorandum. This description is as follows: "Briefly stated, my new simplified process of generating powerful rays consists in creating through the medium of a high-speed jet of suitable fluid a vacuous space around a terminal of a circuit and supplying the same with currents of the required tension and volume".

Exhibit K

A letter to prospective licensees on telegeodynamics dated December 27, 1941. This is a single-page letter with the typewritten signature of Dr. Nikola Tesla, in which he addresses himself to the prospective licensees of telegeodynamics, states that over a half million dollars was spent on this development with funds contributed by the Morgans, Crawford, J. J. Astor, and Fish, as well as commercial organizations, and states this to be a new art with which "unvelievable wonders can be achieved".

Exhibit L

Tesla's "New System of Fluid Propulsion". This is an undated memorandum of about 20 typewritten pages describing a system of fluid propulsion in which the conversion from hydraulic to rotary mechanical power is achieved by passing the fluid between flat circular disks, shaft-mounted and enclosed in a casing.

This memorandum written about 1925 describes in general terms a kind of hydraulic turbine which seems practical. There is copious evidence among the other of Tesla's papers that this idea was generally disclosed to appropriate individuals and that it received favorable comment and possibly some use. Some of these comments are contained on the last page of the exhibit.

Exhibit M

"The Power of the Future" - a memorandum apparently written by Tesla and probably in response to a request from some popular science group for an opinion as to the source of future power. This memorandum reviews the gradual evolution of power sources. It discusses in some detail the possibility of atomic power and states as his opinion that atomic power is not feasible. The discussion of atomic energy is apparently confused to some extent

Exhibit M (cont.)

with planetary energy. The article further discusses the subject of wind, tides, lightning, and water power as a source of commercial energy. The last sentence of this memorandum states: "With my wireless system, it is practicable to transmit electrical energy at a distance of twelve thousand miles with a loss not exceeding 5 per cent. I can conceive of no advances which would be more desirable at this time and more beneficial to the further progress of mankind." This memorandum constitutes an interesting generalized discussion of the various sources of power. It is qualitatively correct for the most part except probably in that portion which deals with atomic power.

Exhibit N

"The Transmission of Electric Energy Without Wires" - an article by N. Tesla in the Electric World, March 5, 1904, pages 429-431. A general, somewhat biographical article on Tesla's early work with some speculation on the possibility of long-distance wireless transmission of large amounts of energy.

Exhibit C

"World System of Wireless Transmission of Energy" - an article by N. Tesla in Telegraph and Telephone Age, October 16, 1927, pages 457 and 460. An article which traces the early work on the production and transmission of electromagnetic radiations, describes Tesla's efforts to increase the amount of power which can be transmitted without wires and concludes with a proposed "World System" for the wireless transmission of both power and communications. No workable disclosure of a means for accomplishing this is included, and such generalities as suggest the approach which Tesla had in mind do not seem capable of accomplishing the desired result.

Exhibit P

"Interview with Dr. Nikola Tesla" by Alden P. Armagnac for Popular Science Monthly, May 24, 1928. An 11-page memorandum written in popular conversational style describing an interview with Dr. Tesla and reporting his present work. This report includes statements on a new airplane, on rocket ships, on the wireless transmission of power, on a world system plan for the transmission of speech and television, on the impracticability of harnessing atomic energy, on radio activity, and on the acceleration of charged particles, such as cathode rays, by high voltages.

Exhibit Q

An agreement dated April 20, 1935, between Nikola Tesla and the Amtorg Trading Corporation, in which Tesla agreed to supply plans, specifications, and complete information on a method and apparatus for producing high voltages up to fifty million volts, for producing very small particles in a tube open to air, for increasing the charge of the particles to the full voltage of the high potential terminal, and for projecting the particles to distances of a hundred miles or more. The maximum speed of the particles was specified as not less than 350 miles per second. The receipt of $25,000 fee for this disclosure was acknowledged in this agreement, which was signed by Nikola Tesla and by A. Bartanian of the Amtorg Trading Corporation. The method referred to in this agreement is apparently that described in Exhibit F, above. It is probable that Exhibit D, above, is an effort by Tesla to clear up the questions raised by Soviet engineers after the subject disclosure had been made. There is no evidence that the inventions and information referred to in this agreement are other than those described in a number of Tesla's papers and published articles. It should therefore be expected, and it is substantiated by Exhibit D, that this disclosure subsequently proved unworkable.

3.

An examination of several items of scientific apparatus among the Tesla efforts at the Manhattan Warehouse and in a deposit box at the Governor Clinton Hotel showed those to be standard electrical measuring instruments in common use several decades ago.

JOHN G. TRUMP,
Technical Aide,
Division 14, NDRC.

Mass. Inst. of Tech.,
Cambridge, Mass.,
January 30, 1943.

JGT/G

LIST OF PERSONS ASSOCIATED WITH NIKOLA TESLA

Kerrigan, William - 89 Logan St., Brooklyn, N. Y.
Employed as building supt. Washington Market, Brooklyn. Mr. Kerrigan was the messenger boy for Postal Telegraph some years prior to Jan. 1943. At Mr. Tesla's request, he continued his services as special messenger when convenient. He had called upon Tesla the week prior to his death and has much valuable data and information concerning Tesla's contacts. I first met Mr. Kerrigan at the Frank Campbell funeral church.

Baumgarten, Charles - Room 1203, Municipal Bldg., Budget Bureau, N.Y.C.
Mr. Baumgarten was met at the funeral and Mr. William Lawrence of the New York Times and myself had lunch with him. Mr. Baumgarten knew Tesla and his connections with the Queensboro Bridge and many of his developments of Civic interest.

Skerritt, Miss Dorothy F. - Office, Biddle Purchasing Company, 107 Chambers Street, N.Y.C. - Wo. 2-5500.
Residence: Hasbrook Heights, New Jersey
Miss Skerritt was secretary to Doctor Tesla from 1912 until 1922. She is familiar with the Marconi patent suit, many of Tesla's scientific theories; knows the names of some of his friends; has witnessed demonstrations in his laboratory, then at 8 W. 40th St. N.Y.C. Miss Skerritt also knows that between 1916 and 1918, Doctor Tesla was at the Blackstone Hotel, Chicago and may have material there. She can give account of many of his deals with various firms.

Merrington, Marguerite - 46 W. 97th Street, N.Y.C. - Riverside 9-8186
Miss Merrington has known Doctor Tesla since 1893 and has been a guest of his on several occasions at the old Waldorf Hotel and at his laboratory in 1894 on Houston Street. Miss Merrington recalls the lighting effects without filaments and his radio controlled boat demonstrations. She also recalls statements regarding communication without wires by means of a small instrument. She has witnessed many laboratory experiments including power transmission without wires over short distances in the laboratory and also metallic plate suspension. He had also talked about communication with mars to her.

Holden, Mrs. Agnes J - 327 E. 52 St. N.Y.C. - Plaza 3-2341
Mrs. Holden is the daughter of Robert U. Johnson (deceased) (1936) who was a close friend of Tesla for many years. Mrs. Holden first met Mr. Tesla at her father's home when she was about 12 years old. The Johnsons were connected with the Century Magazine which published many articles regarding Tesla. Mr. Johnson wrote several poems about Tesla, one of which appeared in the April, 1895 issue of the

Century Magazine and the others appeared in "Poems of 50 years, 1880-1930 by Robert Underwood Johnson. Mrs. Holden has been in close contact with Doctor Tesla and has witnessed many of his demonstrations including that of the oscillator of 1899. She recalls the near destruction of the laboratory. Since "World II" , she has talked with Doctor Tesla with regard to instruments of war and he told her in response to her inquiry regarding tanks recently that he could stop them or the war. She recalls his discussions with her and her father regarding transmissions of power and Mars, etc. She says that she knows that Tesla has things for our Government only. Mrs. Holden witnessed many of the experiments and was present at the radio-controlled boat demonstration many years ago.

Lowenstein, Fritz (Deceased) Brother, Emil Lowenstein - 182 Bennett Ave. N.Y.C. - Wa-7-4519. Business (Artist) 420 Lexington Ave. N.Y.C. - Mu-5-8065. Mr. Fritz Lowenstein was the assistant to Dr. Tesla during his historic laboratory experiments in Colorado Springs in 1899. He was also to have appeared as a defense witness for Tesla in his Marconi patent suits during 1915, but for some reason failed to testify. The brother, Emil, address above, knows of the relatives of Mr. Fritz Lowenstein who have documents pertaining to the 1899 experiments. (Mr. G.H. Clark provided information re documents and Lowenstein) (Mr. Czito mentioned Lowenstein). Mr. Emil Lowenstein is not on friendly terms with the entire Lowenstein family and a Mr. Massey, 52 Vanderbilt Ave. can furnish additional information re Lowenstein.

Shirk, A.J. - Inventor's Model Shop, 70 West 100th St. N.Y.C. Ac-2-9466. Mr. Shirk has met Tesla on 3 occasions and appears to know quite a bit about his model work and laboratory developments, particularly within recent years. His exact status can only be determined by another call or ~~exact status~~ interview. He is attempting to determine the address of a Laboratory that existed at about 57th and 3rd Ave. and with whom a certain Dr. Walker was connected.

Arbus, Muriel, Miss - Res: 600 W. 13th St. Tel: Vanderbilt 4-9816, Bus: WPB, Chanin Building, N.Y.C. Miss Arbus has several photographs of Tesla and was a secretary to him before Miss Dorothy Skerritt, i.e. before 1912. She has not been interviewed except by phone.

Berg, Seigurd (or Sigmund) - Copenhagen, Denmark. Business: Paris, France. He has not been interviewed. See Mr. E. Fiensen of the International Latex Corp., Dover, Del. for information. Mrs Berg was a close friend of Tesla in Europe and mentioned other members of his family; Mr. Ernest and Mr. Esko Berg. are found in correspondence from Mrs. B.A. Behrend to Mr. Kenneth Sweezy in 1935 and 1934.

Behrend, Bernard, A. Mrs. - Rond Point, Aiken, S.C. Phone 136. Mr. Behrend and Mrs. Heaviside were very close friends of Dr. Tesla. Mrs. Behrend has many notes and technical data concerning Tesla's work either stored near Boston, Mass or at Aiken, S.C. Mr. Behrend was Chief Engineer for Westinghouse and supervised the construction of a great number of Tesla's motors and generators. He is author of "The Industion Motor" pub. 1921 in which a considerable portion is devoted to Tesla's work.

Boskan, Slavko, Mr. Engineer and author, Belgrade, Yugoslavia. Mr. Boskan published a book in Dresden, Germany entitled "Nikola und Ms Werk" in 1932 (Approx) Mr. Boskan was a close friend of Mr. Tesla and has considerable engineering data in his possession according to Mr. Sweezy.

Denton,Clifford, Mr. - Science Reporter.. New York Daily News, 220 E. 42nd St. N.Y.C. Mu-2-1234 Ext. 557 Mr. Denton has been present at many of Dr. Tesla's press releases and has many notes regarding the conferences. He said that he gave most of his data to Mr. Wm. Lawrence of the New York Times.

Brown Brothers (Mr. Arthur Brown) 220 W. 42 St. Bryant 9-4742. N.Y.C. Brown Brothers are photographers and have a large number of photos of Tesla and his laboratory equipment from which may be deduced mechanical construction details.

Curtis, Thomas Stanley - Address: unknown. Author "Experiments with High Frequencies currents" It is important to locate Mr. Curtis because he discussed many of Tesla's problems and appears to have technical data regarding his work.

Cramps, Shipbuilding Co. Philadelphia, Pa. Mr. Crosby, former Sec. of Commerce, and Mr. Cramps became interested in the radio controlled boat of Dr. Tesla about 35 years ago. Negotiations were carried on between Dr. Tesla and the above executives. This information was furnished by Mr. Kerr.

It may be well to contact Mr. Crosby's relatives or Mr. Cramps.

Czito, Julius - 4629 193rd St. Flushing, Long Island. Tel: Flushing 7-4711. Mr. Czito was mentioned to me first by Mr. Kosenovich and later Mr. Spanel had received his name from Mr. Wm. Lawrence. Mr. Czito is a machinest by trade and worked for Dr. Tesla as such from 1915 to 1929. He was particularly concerned with the construction of a turbin, and a fountain developed for a Mr. Hatmaker. Among other things, he worked on an extractor for sulpher from sea water and mechanical device for measuring the resistance of a ball bearing. He has little data left of Dr. Tesla's work but has a very good memory. He mentioned the Boston gear works, Mr. Bradley, Mr. Miller, the Zumbach Machinery Co. and Mr. Barney Levi. Mr. Czito's father also worked for Dr. Tesla in 1894 and was with him at his Houston St. laboratory. Mr. Czito, Sr. accompanied Dr. Tesla to Colorado Springs in 1899. Mr. Czito has a very good memory and can furnish additional information. He has discovered a photograph showing all of the employees of the old Tesla laboratory. He worked for Dr. Tesla on the development of a speedometer for the Waltham Watch Co. (This information from interview).

Clark, Mr. Geo. H. - Res: 349 E. 49th St. Tel: El-5-1603. Bus: RCA Mfg. Co. (Library) 25 Beaver St. N.Y.C. Room 314 A, Tel: Hanover 2-1829. Ext 123. Mr. G.H. Clark was contacted by virtue of a call placed in December to Mr. Oran Dunlap of the RCA Corp. Mr. Clark has a very large collection of personal data pertaining to radio pioneers, particularly Marconi. His business has been to collect such data in order to assist the prosecution of a suit of infrigment against the Marconi patents. He has never met Dr. Tesla but he knows of his work and is interested in collecting historical data for preservation. Mr. Clark is a friend of Mr. Sweezy.

Crosby, Former Sec. of Commerce, Washington, D. C. (address unknown) See Cramps and Kerr

Wetzel, Tailors - 2 E. 44th St. Murry Hill 2-6757. N.Y.C. This firm was tailor for Dr. Tesla throughout most of his life and may have information with regard to his friends, not otherwise listed.

French, Shriner, and Urner- Shoe Shops. 250 Madison Ave. Murry Hill 2-0319. N.Y.C.
Dr. Tesla purchased most all of his shoes from this firm for the past 50 years and data may be gathered from their records such as mailing addresses, etc.

Cornels, Fredrick C. F.B.I. Office Federal Court House Bldg. 12th Floor ? Regent 2-2315
Mr. Cornels was informed of the possible value of Dr. Tesla's data immediately following his death. So far as known, no action was taken.

Commercial Photostat Company, 11th Floor, Woolworth Bldg. N.Y.C.
Firm which made photostats of Tesla patents for Kerr.

Cramm, Ernest R. to contact call Mr. Clark of RCA.
Mr. Cramm knows a great deal about Dr. Tesla's relations with the RCA Company. Mr. Cramm was a former employee of RCA.

Gilder, Rodman - 108 E. 82nd St. N.Y.C. Butterfield 8-7397.
Son of Richard Watson Gilder, former Pub. of Century Magazine. Mr. Gilder knows of some old Tesla manuscripts and what has happened to his files of the Century Magazine at its dissolution. This name was received from Merrington.

Denmark, Lt. 1270 6th Ave. Room 811, Circle 6-1484 (restricted number) N.Y.C. U.S. Army Int. G2.
Lt. Denmark and his superiors were notified by Mr. Spanel and Washington with regard to Tesla devices. Lt. Denmark was interviewed personally with a group of 4 other officers including Mr. Ritchen.

Kirsch, Leon - a former draftsman for Tesla - name from Miss Dorothy Skerritt.
This party should be located because he had a lot of confidential data of Tesla's and made many drawings according to Miss Skerritt.

Drews, Lillian Married to an Austrian by name of DePree about 1914.
Miss Drews was secretary to Dr. Tesla prior to 1912. Her present address is unknown and she was not in good favor with Dr. Tesla, according to Miss Skerritt, the informant.

DosPassos, John - Attorney, and very good friend of Dr. Tesla. Address unknown.
Wanted Tesla to stop the Spanish American War. Formerly lived in New York. The Gentleman was expensively dressed and wore frocked coat similar to Tesla with bright checkered vest.

Had office in vicinity of 200 Broadway, as late as 1920. Mr. DosPassos is believed to have engineering data of Tesla's according to Thomas Byrne.

DeForrest, Dr. Lee- 6190 Hollywood Blvd. Los An[illegible]s, Calif. - Dr. DeForrest is [illegible] alive and was a friend of Dr. Tesla in the late 90 and early 1900's. There is a possibility that he may be able to assist in interpreting Tesla's works.

Dubilier, William - President of Cornell Dubilier Co., Manufacturers of CCondensers. Mr. G.H. Clark informs that Mr. Dubilier hasin his possession some of the original notes of the 1899 experiments in Colorado Springs.

Fradenburg, A.E. A reporter for the Brooklyn Eagle during 1930 who had numerous contacts with Tesla with regard to Power Transmission. His present address is unknown but he formerly resided in Brooklyn until 1934.

Fitzgerald, Francis, A. - Niagara Power Commission, Buffalo, N. Y. Mr. Fitzgerald, according to a personal interview with Dr. Tesla, was a friend of his on the A.C. power proposition for the development of Niagara. He also told me that Mr. Fitzgerald attempted to influence the Canadian Power Commission in 1927 for a project to transmit power without wires. There is a possibility that he may have some data.

Gernsback, Hugo p Publisher, Res; 230 West End Ave. Sohhler 4-2130 Bus: 25 W. Broadway, Tel: Rector 2-9690. A Friend of Tesla for about 35 years. Published many articles about Tesla during 1919 in the "Electrical Experimenter and later in Science and Invention." Has many of Tesla's original manuscripts and photos. Believes in all of Tesla's theories and has a working knowledge of them. This party was contacted several weeks prior to Dr. Tesla's death. Mr. Gernsback attempted to assist Dr. Tesla personally and appealed to Westinghouse for funds in 1933.

Hammond, John Hayes, Jr. Glochester, Mass. Tel. 2080 Mr. Hammond, Sr., financed some of Dr. Tesla's boat experiments and only 10 years ago John Hayes Hammond, Jr. operated one of Tesla's original models. The family has one of the boats in their

possession now. Much technical data can be gathered from this source.

Hassell, Eugene Floyd - Res: Belport, Long Island
Machinest, Sperry Gyroscope Company, Garden City, L.I. Employee Number 5470, Phone Vigilent 4-5400 (Restricted number) Ext. 211. Use any New York Phone. Name from Czito. This party knows of Tesla's laboratory on Long Island through the laundry driver named Tommy Wallen.

Hobbs, Octavious - Springfield Gardens, Long Island.
(Has not been contacted)

Hatmaker, (no initials) party who financed fountain built by Czito. Has not been contacted, but he lived in the St. Regis Hotel in 1920.

Kosonovich, Sava - Navarro Hotel, apt. 17B. 112 Central park south, N.Y.C. Tel: Circle 7-7900, Office- Regent 7-4662. President of the Central European Powers Association and former Minister of Yugoslavia to the U.S. Mr. K. is one of the two living nephews of Dr. Nikola Tesla (see Nikola Trbjevich) Mr. K. was present in the Hotel New Yorker on the morning following Dr. Tesla's death. Others present were K.M. Sweezy, G.H. Clark. Mr. K. knows of many blue prints that were in the rooms and a black notebook with several hundred pages containing the last notes of Dr. Tesla. Mr. K. says that some of the papers were marked "Government" and that Dr. Tesla had told him he had valuable information. Mr. K. is of the opinion that it may have been for the Yugoslav Gov't. He says that no will was found. His attorney is Mr. Wittenberg. He was appointed heir by the Surrogates Court of New York County. He said that the other nephew waived any interest. Mr. K. is not in accord with Mr. Fotich, present Ambassador of Yugloslavia to U.S., now in Washington. There is a bit of political unrest in the Yugoslav organization.

KOSANOVICH, SAVA

Kerr, John - Attorney, 233 Broadway, N.Y.C. Cooper Kerr Dunham (att. at Law) Courtland 7-9334 - also associated by Byrnes. This firm was the patent attorney for 112 of the Tesla patents. They also instituted the proceedings of the infringement suits for the Westinghouse Company. Mr. Kerr knew Tesla very well and can give considerable data. Mr. Cooper, now deceased, was however, the main instigator of the patents for Tesla. Mr. Cooper left this firm some time ago and Tesla apparently took some of his business

to the new Cooper associates. Many of the old patents of Tesla in his own handwriting are available at this office. Mr. Byrne has additional information. I am of the opinion that this firm still has a connection with Westinghouse.

Byrne, Thomas, J works for Cooper Kerr and Dunham (see John Kerr above). Mr. Byrne knew Tesla very well and also knows of the connections with the Union Sulpher Compnay and the turbine for which see Czito. There is a wealth of information in the office of this company regarding the system of Power Transmission and any patents on file which were never issued. Mr. Kerr and Mr. Byrne were contacted before Mr. Tesla's death.

Kostich (first name unknown) New York, Official photographer for the Yugoslav group. Office believed to be 235 E. 72nd St. and Residence in Long Island City. He may be reached through Regent 7-4662. He is a friend of Mr. Kosonovich.

Kulishich, Prof. Kosta Res: Belgrad, Yugoslovia at the Tesla Institute. He was a school mate of Tesla in Grotz. See the N.Y. Sun of August 27, 1931.

Gage, E. G. 111 Nassau St. N. Y. C. Engineer, works for Leon Ottinger, Courtland 7-5500.
He was a friend of Mr. J.S. Leach (deceased) formerly of Redbank, N. Y. who made electrical parts for Tesla's laboratory. He says that he can get information regarding Leach's relatives and perhaps drawings.

Levi, Bernard - Machinest, Zumbach Machinery Co. 134 W. 54 St. N.Y/C. Circle 7-1444
Received this name from Czito who said that Levi knew of other work by machinests on Tesla's equipment.

Lucan, John - address unknown - presumed to be in Manhattan. A former Western Union Messenger boy during June of 1937 who has other data regarding recent contacts by Tesla during his services as a messenger. He has not been located.

Lynch, Arthur. Lived in England. Believed to be near London, now deceased. Family had considerable correspondence with Tesla regarding transmission of power without wires.

Lawrence, William. Science Writer, New York Times. 229 W. 43 St. N.Y.C. Lackawanna 4-1000. Res: 541 E. 72nd St. Rhinelander 4-5528.

A friend of Tesla's for about 25 years. Has much old data regarding Tesla and has talked to him on many occasions regarding power transmission and the war effort. Has assisted greatly in providing information for gathering material, etc. This party was contacted before Dr. Tesla's death.

Massie, M.C. 52 Vanderbilt Ave. N.Y.C.

Maier, Ruth N. The Yugo Slow Society, 565 5th Ave. Room 807. Pl-8-0256
This is the information center and serves as the publicity agent for the group.
Miss E. Oppa also works there and has many names of Tesla's friends.

Martin, Octavo. Employee of Hotel New Yorker and friend of Tesla.

Mathews, Grenville (deceased) wife was Gana Walker, Met. Star sponsored by McCormick. The family lived in England until his eath and his wife now resides in New York. Mr. Matthews was refered to in Tesla's articles for the Telephone and Telegraph Age for Oct. 1927. Mr. Matthews had correspondence with Tesla on the so-called "Death-Ray". Gana Walker has all of her husband's data.

Mott, C.Jordan, Jr. 520 E. 90th St. N.Y.C. Bus: 6 E. 45th St.
Tel: Vanderbilt 6-0345.
The Mott family financed Tesla in various ventures. They may have some of this data.

Gossett, W. O. Ford Museum, Detroit, Mich.
Mr. Gossett is associated with a Mr. Black while he is on leave of absence to the Army. Mr. Black may be reached regarding some models of Tesla's which are understood to be on display at the Ford Museum.

Nathan, Thoma, A. 25 E. 83rd St. N.Y.C.
We do not know what connection this party had with Tesla but his name was secured.

O'Neill, John, J. Res: 209 N. Long Beach Ave. Freeport, Long Island.
Tel: Freeport 2-493.
Science editor of the New York Herald Tribune, 230 W. 41 St. N.Y.C. Pennsylvania 6-4000.
Mr. O'Neill has known Dr. Tesla for 40 years. He has had many discussions with him regarding his equipment and scientific ventures. He interested Dr. Tesla in 1934 and 1935 to present the matter of national protection devices to the U.S. Govt. Mr. O'Neill made

a few contacts and the matter was dropped. Mr. O'Neill has notes of 1938 and 1939 wherein Dr. Tesla declared he had been approached by the British Govt. through Stanley Baldwin and Neville Chamerlain to negotiate for one of his devices. Mr. O'Neill thought that the sum offered was for 30 millions of dollars. In the interview, Dr. Tesla stated that his device would operate over a range of 200-250 miles. Mr. O'Neill is of the opinion that Tesla had unusual powers. Mr. Lawrence is of the opinion that he does not know what he is talking about. O'Neill can furnish much additional information.

Pickard, Dr. Greenlief Whittier..59 Dalton St. Newton Center, Mass.
Dr. Pickard was a very good friend of Dr. Tesla. Dr. Pickard developed the vertical antenna system and has correspondence with Tesla concerning "wave propagation". This information should be valuable.

Sarony, Inc. Photographers, 362 5th Ave. N.Y.C. Wis 7-1713
They have photos of the old Tesla Laboratory and pictures of Tesla to 1914.

Page, Parker W. Attorney, Present address unknown, however he resided in Manhattan for about 40 years and was formerly associated with Cooper Kerr and Durham. He was last known to be associated with an attorney by the name of Bean in Manhattan. He worked out many of Tesla's details concerning Power Transmission and Tesla gave him many notes according to Mr. Kerr.

Radosavljevich, Paul, R. New York University, Professor, Education Dept. Tel: Spring 7- 2000.
A friend of Tesla for 35 years and knows much of his work with regard to the retina and bile chemistry.

Ritchen, (first name unknown) Anti-Trust Division, Custodian of Alien Property, 18th Floor, 120 Broadway, N.Y.C. Regent 2-3582 (restricted number). Mr. Ritchen supervised the various agents who were responsible for the sealing of the property in the Manhattan warehouse and various hotels. On Saturday eve., January 10, 1943. This office worked with Lt. Denmark.

Astor, Mrs. John Jacob (Lady Ribblesdale) now living in the U.S.
420 Park Ave., Plaza 9-6646
Lady Ribblesdale is the Mother of Vincent Astor who financed many of Tesla's developments about 1910 and their family may have data of importance.

Secor, Harry. Island Road, Ramsey, N. J. Res. Business: Model Craftsman Publication. Ramsey, New Jersey, Tel: Ramsey 519. This party knew Dr. Tesla very well and I talked to him several weeks prior to Tesla's death. He has some plans of Tesla equipment.

Sweezy, Kenneth, M. 163 Milton St. Brooklyn, N. Y. Evergreen 9-5809
Mr. Sweezy has known Dr. Tesla for approximately 15 years. He became a close confident of his on many things and did a very notable work in 1935 when he arranged for a collection of 100 letters from various scientific authorities commemorating Tesla's 75th birthday. Mr. Sweezy wrote many articles about Dr. Tesla and has some old clippings and miscellaneous data including several books detailing Tesla's work. Mr. Sweezy corresponded with Mr. Boskan and Mrs. Behrand. He is a friend of Mr. Clark. Mr. Sweezy would like to write a book of Tesla's life and had spoken to me with Dr. Tesla regarding it. I contacted Mr. Sweezy several weeks before Dr. Tesla's death. (Much information can be obtained here).

Scott, Prof. Charles F. Instructor of Electrical Engineering, Yale University, New Haven, Conn.
Prof. Scott was a friend of Tesla for about 43 years. He worked as an electrician with Tesla in the early days and knows a great deal about his work. Prof. Scott and Tesla did not enjoy close friendship during recent years because Prof. Scott could not understand in full, all of Tesla's work. More information can be obtained here.

Scherff, George, Mrs. 219 Grant Terrace, Maroneck, N. Y.
Mrs. Scherff was the auditor for Tesla for many years and has much information to give. She has information concerning Tesla's personal things and technical data and can provide much of value, including old documents.

Skerrett, John. Author- believed to be from Philadelphia, Pa. who witnessed many of Tesla's demonstrations. Miss Dorothy Skerrett can furnish additional information regarding him.

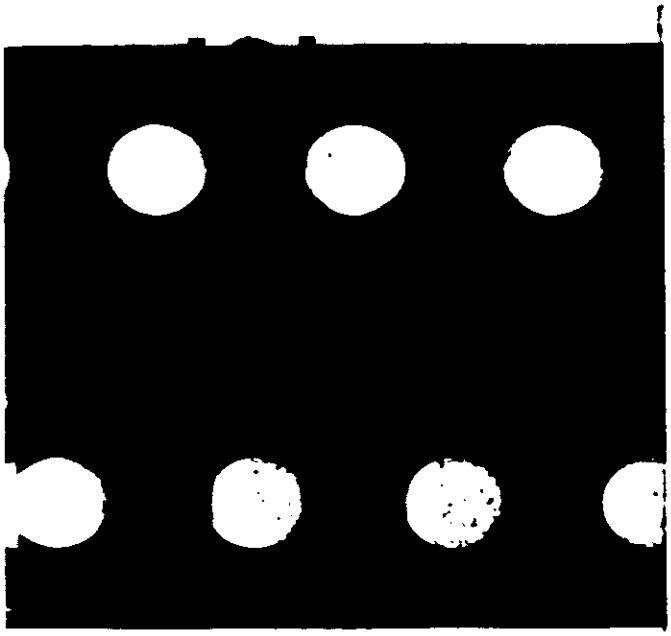

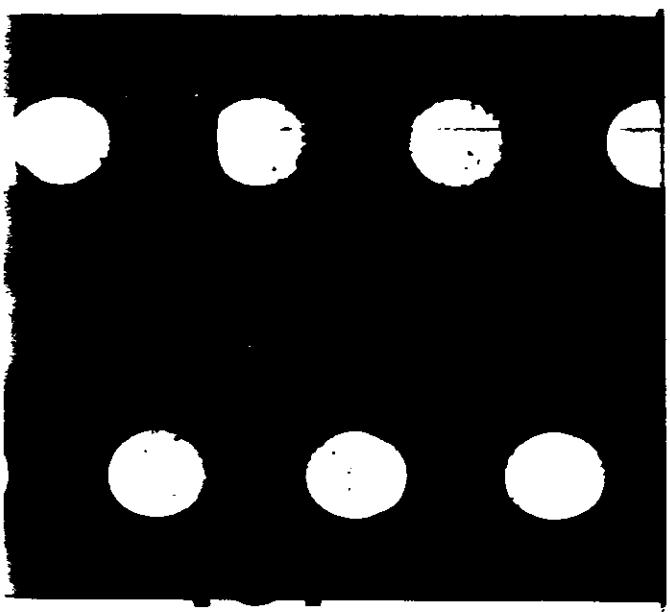

Tom -

It is my understanding that every case which is completed through disclosure is "preprocessed".

ITU's Reading Room maintains only those "preprocessed" cases which have been deemed to have sufficient public interest to warrant inclusion in the Reading Room.

The question, therefore, is: Does the Tesla material fit the criteria for inclusion in the FOIA Reading Room?

I think not. The

(b)(5)
(C)

CC-247

Mr. Tolson
Mr. Clegg
Mr. Glavin
Mr. Ladd
Mr. Nichols
Mr. Rosen
Mr. Tracy
Mr. Egan
Mr. Gurnea
Mr. Harbo
Mr. Mohr
Mr. Pennington
Mr. Quinn Tamm
Mr. Nease
Miss Gandy

June 8, 1949

MEMORANDUM FOR [redacted] (b)(7)(c)

RE: SAVA N. KOSANOVIC
YUGOSLAV AMBASSADOR TO THE US
INTERNAL SECURITY - R
(Bureau file 65-47953)

ALL INFORMATION CONTAINED
HEREIN IS UNCLASSIFIED
DATE 4-18-89 BY SP1 [illegible]
#291860

PURPOSE

This memorandum is submitted to incorporate all the pertinent references in the Bureau files concerning the entitled individual who is the Yugoslav Ambassador to the United States.

A case was opened on this individual when information was received that Kosanovic had taken possession of the scientific papers of his uncle, Nikola Tesla, the internationally known inventor. Subsequent investigation determined that Kosanovic had turned over the possession of these scientific papers to the Alien Enemy Custodian in New York City.
(65-47953-X1 & Serial 3 & 4)

(b)(1)(D) [redacted]

(b)

OK

[redacted]

65-47953-21X

INDEXED 143

(b)(7)(c)

cc - Mr. Ladd
cc - [redacted]
cc - [redacted]
cc - [redacted]

CJM:jpa

THIS MEMORANDUM IS FOR ADMINISTRATIVE PURPOSES
TO BE DESTROYED AFTER ACTION IS TAKEN AND NOT SENT TO FILES

194

STANDARD FORM NO. 64

Office Memorandum • UNITED STATES GOVERNMENT

TO : The Director

DATE: April 3, 1950

FROM : D. M. Ladd

SUBJECT: SAVA N. KOSANOVIC
INTERNAL SECURITY - YU
Bureau File 65-47953

Tolson
Ladd
Clegg
Glavin
Nichols
Rosen
Tracy
Harbo
Mohr
Tele. Room
Nease
Gandy

ALL INFORMATION CONTAINED
HEREIN IS UNCLASSIFIED
DATE 4-18-89 BY SP1AGC

291860

Reference is made to my memorandum dated March 29, 1950, relating to the telephone inquiry by the Yugoslav Ambassador Sava N. Kosanovic as to the possibility of obtaining a copy of a microfilm copy of the technical papers of the late Nikola Tesla, world-famous scientist who died in New York in 1943.

Kosanovic claims to have been a nephew of Tesla and is known to have tried to obtain these papers at the time of Tesla's death. However, they were taken over at that time by the Alien Property Custodian. If any copies were made of these papers, they were made by the Office of the Alien Property Custodian which took possession of Tesla's papers in 1943 or the Department of the Army which was interested in copying Tesla's notes in 1945. The Army's interest apparently was developed by a young scientist named [redacted] who had been a protege of Tesla and one of his few confidants. [redacted], who knew that Tesla had been endeavoring to perfect the wireless transmission of electrical current, one of the basic concepts involved in the production of a "Death Ray" had subsequently entered the Army, and in October, 1945, appeared at our New York Office, together with three other members of the United States Army, to request our assistance in obtaining access to Tesla's papers which were stored in a warehouse of the Manhattan Storage Company. [redacted] and his associates were referred, at that time, to the Alien Property Custodian which was reported to have made an investigation of Tesla's belongings following the latter's death.

(b)(7)(C)

Although the Office of Alien Property or the Department of the Army might be able to furnish a copy of Tesla's papers to Kosanovic, it is not believed that the FBI should facilitate his search for this material, which although possibly of no present value from a National Defense standpoint, could still conceivably be of assistance to the Yugoslav Government.

COPIES DESTROYED
14 OCT 26 1960

[redacted] (b)(7)(C)

Attachments

RECORDED - 95

65 47953-2

(b)(7)(C) [redacted]

195

RECOMMENDATIONS:

1. That the attached letter explaining that we have never had such a copy as he requests, be sent to Mr. Kosmovic.

2. That the attached memo to the New York Office, instructing them to make further inquiry at the Manhattan Storage Company and advising that firm that we have no copy of Tesla's papers as they allegedly claim, be forwarded.

STANDARD FORM NO. 64

Office Memorandum • UNITED STATES GOVERNMENT

TO : Director, FBI

DATE: April 17, 1950

FROM : SAC, New York

SUBJECT: SAVA N. KOSANOVIC
INTERNAL SECURITY-YU
(Bufile 65-47953)

ALL INFORMATION CONTAINED
HEREIN IS UNCLASSIFIED
DATE 7-3-80 BY SP4 Jam/rte

Rebulet dated April 3 last.

On April 7, 1950 agents of this office interviewed Mr. J.V. POTTS, Vice President of the Manhattan Warehouse and Storage Company, 52nd Street & 7th Avenue, New York City, and at that time MR. POTTS advised that the rules of his firm required that all persons gaining access to goods stored by Manhattan first had to fill out an appropriate form setting forth their names, date of visit, and reason for requesting access to the goods.

In a review of the file pertaining to the storage of the effects of NIKOLA TESLA, MR. POTTS revealed that only one such visit had been made by persons outside of the management of Manhattan Storage itself. This one occasion took place on January 26 and 27, 1943, at which time representatives of the Alien Property Custodian made a thorough review of the entire effects of the TESLA estate.

The TESLA effects are stored in rooms 5J and 5L of Manhattan Storage's warehouse at 52nd Street & 7th Avenue, New York City. MR. MICHAEL KING, who stated he had been Floor Supervisor for approximately 10 years on the floor in question, stated that he could recall only one occasion in early 1943 when an examination was made of the TESLA effects. He stated that at that time numerous photographs were taken by the examiners. His description of the equipment used would tend to show that a microfilm reproduction was made of some of the papers of the deceased scientist. MR. KING added that several of the group making the examination wore U.S. Navy uniforms, and during the two days required to complete the examination the civilian assistants in the group were identified to him only as "FEDERAL AUTHORITIES". According to MR. KING, no other instance of microfilming of the records of the TESLA estate has taken place since that time.

It should be noted that the Bureau was informed of the examination mentioned above by New York letter (with attachments) dated October 17, 1945, entitled UNKNOWN SUBJECT; SAVA KOSANOVICH; Experiments & Research of NIKOLA TESLA (Deceased), Espionage-M.

UNRECORDED COPY FILED IN

RECORDED - 38
INDEXED - 38

65 47953 27
APR 18 1950
37

cc: 65-12290

(b)(7)(c)

EHC JJC
105-1391

R-435

APR 2

197

MR. POTTS stated that no inquiry had been received by Manhattan from SAVA N. KOSANOVICH, nor had Manhattan informed him, in any way, that an examination of the TESLA effects had been made by anyone. In fact, added MR. POTTS, the only correspondence relating to the TESLA estate has been in the form of bills for storage.

MR. POTTS stated that any personal inquires regarding the estate would of necessity be directed to him, and to date no such inquiries have been made.

Interviewing agents explained to MR. POTTS that the examination made, as mentioned above, was not instigated by the Bureau, nor had the Bureau taken part in that examination.

Unless advised to the contrary, this investigation is being placed in a closed status, and no further investigative action is contemplated by this office. CLOSED.

XXXXXX
XXXXXX
XXXXXX

FEDERAL BUREAU OF INVESTIGATION
FOIPA DELETED PAGE INFORMATION SHEET

4 Page(s) withheld entirely at this location in the file. One or more of the following statements, where indicated, explain this deletion.

☒ Deletions were made pursuant to the exemptions indicated below with no segregable material available for release to you.

Section 552		Section 552a
☒ (b)(1)	☐ (b)(7)(A)	☐ (d)(5)
☐ (b)(2)	☐ (b)(7)(B)	☐ (j)(2)
☐ (b)(3)	☐ (b)(7)(C)	☐ (k)(1)
_____	☐ (b)(7)(D)	☐ (k)(2)
_____	☐ (b)(7)(E)	☐ (k)(3)
_____	☐ (b)(7)(F)	☐ (k)(4)
☐ (b)(4)	☐ (b)(8)	☐ (k)(5)
☐ (b)(5)	☐ (b)(9)	☐ (k)(6)
☐ (b)(6)		☐ (k)(7)

☐ Information pertained only to a third party with no reference to you or the subject of your request.

☐ Information pertained only to a third party. Your name is listed in the title only.

☐ Documents originated with another Government agency(ies). These documents were referred to that agency(ies) for review and direct response to you.

_____ Pages contain information furnished by another Government agency(ies). You will be advised by the FBI as to the releasability of this information following our consultation with the other agency(ies).

_____ Page(s) withheld for the following reason(s): _____

_____

☐ For your information: _____

_____

☐ The following number is to be used for reference regarding these pages:

_____

XXXXXX
XXXXXX
XXXXXX

XXXXXXXXXXXXXXXXXXXXX
X DELETED PAGE(S) X
X NO DUPLICATION FEE X
X FOR THIS PAGE X
XXXXXXXXXXXXXXXXXXXXX

FBI/DOJ

OPTIONAL FORM NO. 10
JULY 1973 EDITION
GPA FPMR (41 CFR) 101-11.6

UNITED STATES GOVERNMENT

Memorandum

TO : DIRECTOR, FBI [redacted] (S) DATE: 8/20/76

FROM : SAC, BUFFALO [redacted] (S) (RUC) (b)

SUBJECT: [redacted] (S) (1) CONFIDENTIAL

(OO: NEW YORK)

Re Buffalo airtel to Bureau, dated 7/13/76.

Enclosed for the Bureau are six (6) copies of an LHM, captioned "NIKOLA TESLA MONUMENT, NIAGARA FALLS, NEW YORK," which is self-explanatory. One copy is being designated for Legat, Ottawa for information. Two copies are being furnished to New York, one to Newark for information since they had previous interest in this matter, and one copy to WFO for information because of U. S. and Yugoslav dignitaries who attended the unveiling of the monument.

Nothing adverse came to the attention of this office concerning the dedication of the Nikola Tesla Monument which was a bicentennial gift from the Yugoslav Government to the United States. Diplomatic representatives from the United States, Yugoslavia and Canada reportedly attended the affair. No further inquiries being made at Buffalo and it is closing its case administratively.

EX-113

CLASSIFIED BY 6166 REC-33 [redacted]
EXEMPT FROM GDS, CATEGORY 3 [redacted]
DATE OF DECLASSIFICATION INDEFINITE

ENCLOSURE

3 - Bureau (Encs. 6) (RM)
(1 - Legat, Ottawa) (S)
1 - Newark [redacted] (Info) (Enc.1) (RM)
2 - New York [redacted] (S) (Encs. 2) (RM)
1 - WFO [redacted] (Enc. 1) (Info) (RM)
1 - Buffalo (S)

7 AUG 25 1976 (b) (1)

CONFIDENTIAL

[redacted] (8) (b) (7) (C)

Copy to ... 1 Legat, Ottawa, 1 destroy
By routing slip for
[X] info [ ] action
date 8-2-76
by [redacted]

2-22-89
Classified by
Declassify on: OADR
#291860

SEP 10 1976

Buy U.S. Savings Bonds Regularly on the Payroll Savings Plan

5010-110

200

UNITED STATES DEPARTMENT OF JUSTICE

FEDERAL BUREAU OF INVESTIGATION

Buffalo, New York
August 20, 1976

In Reply, Please Refer to File No.

NIKOLA TESLA
MONUMENT
NIAGARA FALLS, NEW YORK

An article appeared in the "Buffalo Evening News," a daily newspaper published in Buffalo, New York, on July 24, 1976, which in part contained the following information:

The article was captioned "Dignitaries Unveil Statue of 'Genius' Tesla."

The article contained information that NIKOLA TESLA was the inventor of the alternating current and the first man to successfully transmit electric power. The background of TESLA set out in the article revealed that he arrived in New York City in 1884 with four cents in his pocket and plans for an airplane and a book of poetry. In 1888, he invented a system to make the transmission of alternating current practical, at 37 was a millionaire but died at the age of 88 in New York City alone and penniless.

The statue, approximately nine feet high, was erected on Goat Island, a site which is located on the property of the New York State Park and Recreation Department.

The article revealed that more than a thousand people listened to FRANK G. ZARB, Federal Energy Administration, representing President FORD, and Dr. IVO MARGAN, President of the Socialist Union of Croatia, representing Yugoslavian President TITO, as both pulled the cord unveiling the nine foot high statue of TESLA.

2-22-89
Classified by SDIAG/GLM
Declassify on: OADR
#241860

(b)
(1)
[redacted] (3)
ENCLOSURE

201

NIKOLA TESLA
MONUMENT
NIAGARA FALLS, NEW YORK

The sculpture was created by Yugoslavian FRANO KRSINIC and was the bicentennial gift of the Yugoslavian people to the United States. Both of the above men read official greetings from their presidents and exchanged pledges to continue good will and friendship between the two countries.

The article stated that following the unveiling, a reception-luncheon was held for several hundred persons at the Parkway-Ramada Inn, Niagara Falls, New York. Mr. ZARB toasted the Yugoslavian delegation which was answered by that country's Ambassador to the United States, DIMCE BELOVSKI.

According to the article, there was a bit of diplomatic byplay between Mr. ZARB and Ambassador BELOVSKI during the ceremonies. In his remarks at the statue unveiling, Mr. ZARB included an appeal to Yugoslavia to stop all harassment of Americans visiting that country.

In responding to Mr. ZARB's toast at the luncheon, the Ambassador gave assurance that his country wants American visitors and will welcome them.

According to the article, some observers thought that the Yugoslav release of an American held for the past seven months was timed to coincide with the unveiling of the statue.

The tribute to TESLA was sponsored by several Yugoslavian groups in cooperation with the Niagara Mohawk Power Corporation, Westinghouse, and the New York State Park and Recreation Commission.

An article appearing in the "Niagara Falls Gazette," a daily newspaper published in Niagara Falls, New York, captioned "Zarb Calls for Energy Independence for U. S." the article dealt with the unveiling of the Nikola Tesla Monument and stated that accompanying the Yugoslavian Ambassador to the ceremonies on July 23, 1976, were Dr. PAVLE SAVIC, President of the Academy of Science of Serbia,

NIKOLA TESLA
MONUMENT
NIAGARA FALLS, NEW YORK

and VASA VESKOVIC, Yugoslavian Consulate General in New York City.

An article appeared in the "Niagara Gazette" on July 24, 1976, captioned "Aide Almost Missed Event." The article in part indicated that friendship and cooperation between the United States and Yugoslavia was the theme of the day as that nation dedicated a statue of NIKOLA TESLA on July 23, 1976.

The friendship was personalized when a Yugoslavian tried to cross the border from Canada to the United States to attend the dedication without a visa.

The individual was GOJKO SEKULOVSKI, who was in Montreal, Quebec, Canada, as the Chairman of the Olympic Commission of Yugoslavia. He also happens to be the Assistant Secretary of State for Foreign Affairs in that country.

He did not have an American visa and almost missed the unveiling of the statue.

Fast thinking on the part of representatives of the Niagara Frontier State Park and Recreation Commission sent an official car to take the dignitary across the border, which saved the day.

In the "Niagara Falls Gazette" on July 24, 1976, there appeared an article concerning the unveiling of the statue which indicated that Dr. BOGDAN MAGLICH was Chairman of the Yugoslavian-American Bicentennial Committee and was a speaker at the affair. Dr. MAGLICH also serves as President of the Fusion Energy Corporation, Princeton, New Jersey. Dr. MAGLICH eulogized the inventor TESLA and stated "only America could have taken a giant of Tesla's stature, embraced him and provided him the means he needed to bring his talent to its best use of humanity."

NIKOLA TESLA
MONUMENT
NIAGARA FALLS, NEW YORK

(b)(2)

[redacted] were in a position to observe the commemoration of the Tesla Monument, stated that no adverse information came to their attention concerning the dedication of the statue on July 23, 1976.

4-750 (Rev. 12-14-88)

XXXXXX
XXXXXX
XXXXXX

FEDERAL BUREAU OF INVESTIGATION
FOIPA DELETED PAGE INFORMATION SHEET

3 Page(s) withheld entirely at this location in the file. One or more of the following statements, where indicated, explain this deletion.

☒ Deletions were made pursuant to the exemptions indicated below with no segregable material available for release to you.

Section 552		Section 552a
☒ (b)(1)	☐ (b)(7)(A)	☐ (d)(5)
☐ (b)(2)	☐ (b)(7)(B)	☐ (j)(2)
☐ (b)(3)	☐ (b)(7)(C)	☐ (k)(1)
_____	☐ (b)(7)(D)	☐ (k)(2)
_____	☐ (b)(7)(E)	☐ (k)(3)
_____	☐ (b)(7)(F)	☐ (k)(4)
☐ (b)(4)	☐ (b)(8)	☐ (k)(5)
☐ (b)(5)	☐ (b)(9)	☐ (k)(6)
☐ (b)(6)		☐ (k)(7)

☐ Information pertained only to a third party with no reference to you or the subject of your request.

☐ Information pertained only to a third party. Your name is listed in the title only.

☐ Documents originated with another Government agency(ies). These documents were referred to that agency(ies) for review and direct response to you.

_____ Pages contain information furnished by another Government agency(ies). You will be advised by the FBI as to the releasability of this information following our consultation with the other agency(ies).

_____ Page(s) withheld for the following reason(s): _____

_____

☐ For your information: _____

_____

☐ The following number is to be used for reference regarding these pages:

_____

XXXXXX
XXXXXX
XXXXXX

XXXXXXXXXXXXXXXXXXXXX
X DELETED PAGE(S) X
X NO DUPLICATE FEE X
X FOR THIS PAGE X
XXXXXXXXXXXXXXXXXXXXX

FBI/DOJ

205

July 7, 1975

[redacted] (b)(7)(c)

Dear [redacted]:

This will acknowledge your letter of June 9th.

In response to your inquiry, the papers of Dr. Nikola Tesla were impounded, after his death, by the Office of Alien Property of the Department of Justice.

Sincerely yours,

C. M. Kelley

Clarence M. Kelley
Director

~~1 - The Deputy Attorney General - Enclosure~~
~~Attention: Susan M. Hauser~~ REC 22 77-32591-20

NOTE: Bufile 100-2237 indicates that Dr. Tesla was a world famous electrical inventor, and at the time of his death his personal papers and effects were impounded by Office of Alien Property for national security reasons. Since Tesla's death in 1943 the Bureau has received numerous inquiries about the disposition of his technical papers. The above reply is forwarded in answer to these inquiries. Bufiles contain no information identifiable with requesters.

JUL 8 1975

Assoc. Dir. ___
Dep. AD Adm. ___
Dep. AD Inv. ___
Asst. Dir.
Adm. ___
Comp. Syst. ___
Ext. Affairs ___
Files & Com. ___
Gen. Inv. ___
Ident. ___
Inspection ___
Intell. ___
Laboratory ___
Plan. & Eval. ___
Spec. Inv. ___
Training ___
Legal Coun. ___
Telephone Rm. ___

[redacted]

MAILED 7
JUL 7 1975
FBI

(b)(7)(c)

[redacted]

56 JUL 29 197[redacted]

[redacted]

GPO 954-546

206

CURRENT BIOGRAPHY

WHO'S NEWS AND WHY

Vol. 4 No. 2 February 1943

The H. W. Wilson Co., New York

94-3-4-116-17

RECEIVED
FEB 19 1944
U.S. SUPERINTENDENT OF DOCUMENTS

IN THIS ISSUE

Architecture
Blomfield, Sir Reginald (Theodore) obit
Isham, Norman M(orrison) obit

Art
Ehnert, James, Baron obit
Glicenstein, Enrico obit
Groth, John (August)
Herlin, Emil obit
O'Day, Caroline Goodwin obit
Sykes, Charles H(enry) obit
Zorach, William

Aviation
Bissell, Clayton L.
Martin, Glenn L(uther)

Diplomacy
Chiang Tso-pin obit
Henderson, Sir Nevile (Meyrick) obit
Mello Franco, Afranio de obit
Murphy, Robert D(aniel)

Education
Boas, Franz obit
Bos, Lars Wilhelm, Rev. obit
Garfield, Harry A(ugustus) obit
Isham, Norman M(orrison) obit
Lodge, Gonzalez obit
Lowell, A(bbott) Lawrence obit
Reynolds, Helen Wilkinson

Engineering
Crawford, Frederick C(leveland)

Government—International
(See also Military and Naval)
Boisson, Pierre (François)
Chiang Tso-pin obit
Darlan, Jean (Louis Xavier François) obit
Ibn Saud, Abdal Aziz
Mello Franco, Afranio de obit
Noguès, Auguste (Paul)
Stresa, Emil Georg von obit

Government—United States
(See also Military and Naval)
Biddle, Francis M(yron)
Bissell, Clayton L.
Carlson, Evans F(ordyce)
Fuqua, Stephen Ogden
Gullion, Allen W(yant)
MacFarland, Francis N(ash)
Martin, Glenn L(uther)

Industry
Crawford, Frederick C(leveland)
Martin, Glenn L(uther)

Journalism
Bayer, Charles
Fawley, Frederick P(inley) obit
Fuqua, Stephen Ogden
Hebert, F(elix) E(dward) obit
Kreeger, William W(yant)

Labor
Andrews, John B(ertram) obit
Gullion, Allen W(yant)
Osborne, William Hamilton obit

Law
Gullion, Allen W(yant)
Osborne, William Hamilton obit

Literature
Fawley, Frederick P(inley) obit
Habe, Hans
Osborne, William Hamilton obit

Medicine
Crile, George (Washington) obit
Van Rensselaer, Mariana Griswold obit
Wiley, Harvey W(ashington) obit

Military and Naval
Anderson, Kenneth A(rthur)
Anderson, Nicholas E. obit
Bissell, Clayton L.
Carlson, Evans F(ordyce)
Fuqua, Stephen Ogden
Gullion, Allen W(yant)
MacFarland, Francis N(ash)
Martin, Glenn L(uther)
Mead, James M(iller)

Motion Pictures
Bayer, Charles
Eddy, Nelson
Howe, James Wong
Westley, Helen obit

Music
Eddy, Nelson

Naval
Borde, Jean (Joseph Jules Noel) de la
Carlson, Evans F(ordyce)
Zaidler, Curt Frederick obit

Radio
Eddy, Nelson
Fuqua, Stephen Ogden
Tinney, Cal(vin L.)

Religion
Bos, Lars Wilhelm, Rev. obit
Cadbury, H. Howard obit

Science
Boas, Franz obit
Carver, George Washington obit
Crile, George (Washington) obit
Howe, Harrison E(stell) obit
Ives, James E(dmund) obit
Rosenoff, Aaron J(oshua) obit
Schmeltz, Franz C(arl) obit
Tesla, Nikola obit

Social Service
Andrews, John B(ertram) obit
Carpenter, J(ulius) Henry, Rev.
O'Day, Caroline Goodwin obit
Smith, Ida B. Wise

Theatre
Behrman, S(amuel) N(athaniel)
Hibbard, Edna obit
Westley, Helen obit

Published monthly by the H. W. Wilson Company, 950 University Avenue, New York, N.Y. Subscription price $8.00 per year. Entered as second-class matter February 28, 1940, at the post office at New York, N.Y., under the act of March 3, 1879.

CURRENT BIOGRAPHY

Published monthly by The H. W. Wilson Company
950 University Avenue New York

Editor: Maxine Block Managing Editor: E. Mary Trow

Copyright, 1942, The H. W. Wilson Company. Reasonable quotation from this publication is permitted provided due credit is given to CURRENT BIOGRAPHY

Vol. 4 February 1943 No. 2

Explanations

Authorities for forms of names are the Library of Congress and the Wilson Company bibliographical indexes. Exception is made to the authorized form when the shortened form of a name is better known: e.g., Monty Woolley instead of Edgar Montillion Woolley. If the full name is not given in the heading it will be found in the sketch itself.

After the name, pronunciation is given if the name is difficult, and then the date of birth as fully as possible. The date of death is given for those who have died. The occupation of the subject follows. Next comes the sketch itself, followed by a list of references for further study. These include magazine and newspaper references (in one alphabet) and books. If the person is not living, references are made to obituaries in newspapers and magazines. Only books of an autobiographical or biographical nature are listed, including such well known reference works as *Who's Who, Who's Who in America*, etc.

The magazine articles listed under *References* are in abbreviated form (see list "Periodical and Newspaper Abbreviations" for complete title). The form of entry is as follows: Sat Eve Post 56:78-9 S '39 por. This means that an article supplementing our sketch will be found in *Saturday Evening Post*, volume 56, pages 78-9, in the September 1939 number. The abbreviation *por* means that the article is accompanied by a portrait. In the case of newspapers, the name of the paper is followed by paging and date.

When a name in a sketch is followed by '40 a biography of that person may be found in the 1940 *Current Biography* Yearbook published in December 1940; for a name followed by '41 see the 1941 *Current Biography* Yearbook; for a '42 name see index in the December 1942 *Current Biography*.

Photographs not credited to various studios and not obtained from the individuals themselves are obtained from Press Association, Inc., Rockefeller Plaza, New York City.

SMITH, IDA B. WISE—*Continued*

References

Christian-Evangelist p423-4 Ap 16 '42 por
Lit Digest 121:33 Je 13 '36 por
N Y Times IV p2 Ag 31 '41 por
Newsweek 16:40 Ag 19 '40 por
Time 29:55 Mr 1 '37 por; 39:51 Mr 2 '42 por; 39:12 Je 15 '42
Who's Who in America 1942-43

STAUSS, EMIL GEORG VON (shtous fŏn) Oct. 6, 1877—Dec.(?), 1942 German state councilor and a Vice-President of the Reichstag; former director of the Deutsche Bank in charge of its oil interests.

Obituary

N Y Times p17 D 12 '42

SYKES, CHARLES H(ENRY) Nov. 12, 1882—Dec. 19, 1942 Nationally known as the newspaper cartoonist, "Bill" Sykes; drew famous war cartoons for the First and Second World Wars; editorial cartoonist of the *Evening Public Ledger* of Philadelphia from its founding in 1914 until its suspension in January 1942.

Obituary

N Y Times p44 D 20 '42

TESLA, NIKOLA (tes'lă) July 9, 1856—Jan. 7, 1943 One of the world's greatest electrical inventors and designers; American citizen of Greek origin; worked with Edison; credited with many "epic making" inventions since he came to the United States in 1884; in his old age claimed to have invented a "death beam" powerful enough to destroy 10,000 airplanes at a distance of 250 miles and to annihilate an army of 1,000,000 soldiers instantaneously.

Obituary

N Y Times p19 Ja 8 '43 por

TINNEY, CAL(VIN L.) Feb. 2, 1908- Radio commentator

Address: b. c/o Mutual Broadcasting System, 1440 Broadway, New York City

Since August 1941 Cal Tinney's slow Texas drawl and homespun humor, with intimate, folksy interpolations, have been heard over the Mutual network in *Sizing up the News* each Monday and Wednesday evening from 8:00 to 8:15 p. m. Tinney's colloquialisms, which the folks "back home" chuckle over—his "just-between-you-and-me, ain't it the truth?" "it shore is" method—has captured many a listener bored with the formal, polished, or cut and dried comments of other newscasters.

But there has been more to Tinney than his mannerisms. Speaking usually as a representative of what the "common man" thinks about affairs at home and abroad, he has taken more than one direct and shrewd pot shot, left of center, at stuffed shirt policy, the doings of Big Business, politicians who coddle Fascism at the expense of democracy under high-sounding terms of Americanism, etc. It is not surprising that the sandy-haired young man from the West has occasionally found himself in hot water. Objections have at times been made to the FCC on the "character of the broadcaster's utterances." But Tinney has apparently survived the allegations against him, since he currently continues his bi-weekly talks.

The outspoken homespun philosopher, who has become a kind of Will Rogers columnist of the air, was born February 2, 1908 on a ranch in Pontotoc County, Oklahoma. His family, however, originally came from Texas, where his grandfather, a rugged individualist, had strange politics for those parts. "My grandfather was a Texas Republican," Tinney says sadly, "and they shot him. Seems he exploited his sentiments one Saturday night in a bar room. Ever since then my Pop has been a Democrat." So has the son and, judging by his broadcasts, a fervent New Deal-supporting one.

After attending the Oklahoma public schools Tinney enrolled at the Murray State School of Agriculture in Tishomingo, Oklahoma. There, however, his education lasted only two weeks. "I never did stay there long enough to find out whether it was a high school or college," he says. Young Tinney apparently decided he could get a better schooling by traveling and seeing the world at first hand. For some years he tramped around, often as an ordinary seaman aboard freighters off for foreign ports. He was a newspaperman of sorts, also, and found jobs in Shanghai and Paris. His work in the pre-War French capital was rewriting material found in English-printed newspapers. "It was easy," Tinney explains. "All you had to do was change words like lift to elevator, and caretaker to janitor."

After getting his education by travel, Cal Tinney settled down in Oklahoma to edit a country paper, and began to advertise it over Station KVOO at Tulsa. That was in 1932. His humorous, drawling voice soon became more popular than his gazette. So he gave up his job as an editor, but since 1934 he has written a weekly feature, "Man of the Week," for the McNaught Syndicate. He is the author, also, of a book called *Is It True What They Say about London? a Non-Partisan Portrait* (1936). When Tinney turned to radio for a living, his voice was heard, successively, on the *March of Time* (1932), the *Voice of America* (1933), and the *Maxwell House Show Boat* program (1934). From 1937 to 1939 he was on the *Vanity Fair* feature, and from 1939 to 1940 on *Youth vs. Age*. That year he originated, but did not appear on, *Stop Me If You Heard This One*.

Tinney is married to Mary Maxine Noble. The couple have two sons, David N. and Scott.

It was in 1940 that Tinney hit on the idea of a folksy newscast and tried it out in Tulsa, Oklahoma. Farm listeners chuckled, appreciated a commentator who spoke their own

Office Memorandum · UNITED STATES GOVERNMENT

TO: Director, FBI

FROM: SAC, New York

SUBJECT: "PLAIN TALK"
INFORMATION CONCERNING
Bureau File #94-36511

22925

Transmitted herewith for the information of the Bureau is the March 1948 issue of "Plain Talk".

Enc. (2)

ENCL ATTACHED

62-8845 ENCL

62 MAR 27 1948

RECORDED 94-36511-98
FBI
MAR 15 1948

INDEXED 138

EX-58

RED AMBASSADORS

Sava Kosanovich of Yugoslavia

By BOGDAN RADITSA

This is the first in a series of profiles of the Red Ambassadors who represent the several Soviet satellite governments in Washington. Others will follow shortly.

FAMILIAR as they are with the blasts of Vishinsky and Molotov, most Americans are not aware that some of the most fervid tirades against "U.S. imperialism" delivered in this country come from an officially accredited ambassador. Sava Kosanovich, a wiry, reddish-haired man in his early fifties, represents Tito in Washington and in the United Nations. He travels all over this country making speeches in praise of the "new progressive democracy" in the Balkans, denouncing "Anglo-American reaction" and helping to form front groups for Tito. Incidentally, the American ambassador in Yugoslavia cannot even move around Belgrade without special permits and a guard of secret police agents.

From Kosanovich's speeches at Lake Success and elsewhere, it would appear that everything in Yugoslavia before Tito came to power was reactionary or Fascist. Yet, when he was touring America during the war, he used to introduce himself as a "member of the democratic government of His Majesty King Peter the Second."

Kosanovich is a restless man—his face and hands seem to be always agitated and moving. He is a cultured man with a long background in liberal, democratic movements. But he is a man of strong ambitions, who was willing to betray his own past and his closest friends for those ambitions.

In an Embassy which is more of a propaganda bureau than a diplomatic office, Kosanovich is only the front man for the Cominform's schemes in America. The real power in the Embassy is held by members of the Communist Party and the secret police, OZNA, just as its real policy is directed from Moscow through Belgrade. Though Kosanovich repeats the Moscow line, he is not yet one of the inner circle.

I first met Kosanovich in the fall of 1941 in the United States, where he had come with some members of the exiled Royal Yugoslav Government, representing Croatia, Serbia and Slovenia. The tragicomic adventures of that royal mission in America centered around the battle between those who wanted Yugoslavia, after its liberation from the Nazis, to become a democratic federal union, and those who demanded a Yugoslavia which would be a Greater Serbia administered on the old prewar pattern. The grim outcome was that Tito succeeded in charming American public opinion with his sweeping promises of democracy and federation, while the exiles were quarreling among themselves—mostly for personal, rather than ideological, reasons.

KOSANOVICH dreamed for a good many years of becoming Yugoslav ambassador to Washington. His uncle, Nikola Tesla, was an important scientist

in America. He himself is descended from a long line of Serbian Orthodox ministers. His friends in politics used to tease him about his shyness toward women, his hatred of smoking and drinking. A strong and dynamic political leader, they said, should be a lady-killer, a hard drinker and a chain smoker.

In prewar Yugoslavia, Kosanovich always attached himself to some popular political leader. (It seemed to give him the feeling that he was running things himself.) In the beginning of his career he followed the tide of Svetozar Pribichevich, the leader of the Democratic Party, who sought a highly centralized Yugoslav state and drove the Communists underground through his secret police. That policy helped to reinforce communism for the present job.

Next, Kosanovich was attracted by the leaders of the Croatian peasants, Stevan Radich and Dr. Vladimir Machek, now in exile in Washington. He considered that he was Machek's "brain." Machek, however, did not always welcome the attentions of his satellite: several times he told me that he was tired of Kosanovich's "old maidish suggestions and tearful interventions." For when he is arguing any involved issue, Kosanovich's voice takes on a querulous tone which makes him sound like an adolescent.

During the war, Kosanovich defended Mihailovich and a united Yugoslavia. He took an active part in Allied meetings and the affairs of American Yugoslavs. His name often appeared in the "Letters to the Editor" column of *The New York Times*. He was a chairman of the Southeastern European Planning Board—a movement not popular with Stalin, as it threatened to block his plans for regional agreements and the artificial building up of buffer states. And he was active, with his friends Louis Adamic and the violinist, Zlatko Balokovic, in the formation and promotion of the United Committee of South-Slavic Americans, subsequently metamorphosed into an important part of the Kremlin's Pan-Slavic front.

In his speeches Kosanovich has been one of the principal promoters of an idea first advanced by Adamic—that America is a nation of nations. As such, she is not only Anglo-Saxon, but German, Italian, Negro or Slav. The Slavs of America should unite in the name of brotherhood to carry on their glorious traditions, to show other Americans the heritage they have brought to this country, and to keep in touch with their motherlands. On the surface this idea seems harmless enough, but it is the banner of Stalin's movement to divide the United States. Russia and her satellites carry the idea farther in their controlled press by openly maintaining that America cannot be progressive until it is transformed into a series of "people's republics" on the Soviet pattern, giving their national sovereignty to all the racial groups that compose the population. Behind that scheme is the desire to Balkanize the United States—to divide it into conflicting clans so that a revolution may be centralized through the only uniting force, the Communist Party.

FIORELLO LA GUARDIA was Kosanovich's greatest acquisition. He led the New York Mayor through the same political zig-zag he himself followed—first to Mihailovich, then to Tito. The speech of greeting to King Peter that La Guardia read in Serbo-Croatian on July 8, 1942, was written by Kosanovich. The Mayor read:

"Drazha Mihailovich and Vladimir Machek are the expression of the Yugo-

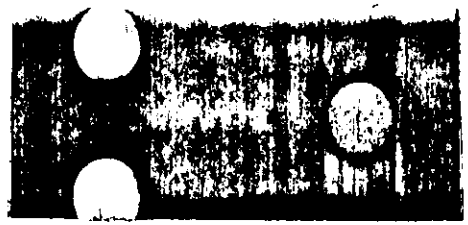

slav spirit of resistance—from Triglav to Vardar. They will go down in history. . . ."

In his own speeches Kosanovich often compared Mihailovich with MacArthur, Chiang Kai-shek and Timoshenko. For example, at a meeting of the anti-Nazi League in New York, June 8, 1942, he spoke of "the epic struggle which my people are making under the man whose name already symbolizes to mankind indomitable spiritual and physical resistance—Drazha Mihailovich."

Mihailovich was killed by a government of which Kosanovich was a member. Machek fled the country to escape the fate of Petkov, Maniu and other peasant leaders. Immediately after he became Tito's ambassador, Kosanovich quoted Count Ciano to prove that Machek had been willing to sell out Croatia for a relatively small amount of money. The former follower of Machek admitted intimately to a friend that he did not believe the accusation, but that Tito had asked him to make it.

On July 6, 1942, at a reception held in the Yugoslav delegation's mansion on New York's Fifth Avenue, Kosanovich introduced Mirko Markovich, editor of the Serbian Communist newspaper, *Slobodna Rec*, and now professor at Belgrade University. Markovich offered King Peter a check of one thousand dollars for "the Chetniks and regular army of General Mihailovich."

A week later orders arrived from Moscow that Mihailovich should be considered a traitor and Tito accepted as leader of the war for liberation. Markovich and his Serbian equivalent of the *Daily Worker* suddenly switched to attacking Mihailovich. Kosanovich did not—but his defense of the Chetniks' leader grew weaker. Shortly before he went to London in March, 1944, Kosanovich in a *New York Post* interview was quoted as follows: "Mihailovich is in the position of a General Lee. Tito is some kind of a Lincoln out to save the Union. Mihailovich was an army officer. I think he is sincere but he is surrounded by a very bad political entourage. The entourage was catastrophic. The Government, diplomats abroad, working in his name, are even more catastrophic."

Curiously, Kosanovich himself was a member of that same "catastrophic" government. When he joined the Yugoslav government-in-exile in London in the spring of 1944, it had already dismissed Mihailovich and sought an agreement with Tito's National Liberation Movement.

KING PETER was in London. Heading his government-in-exile was Dr. Ivan Subasich, the viceroy of Croatia. The group was more or less agreed that Yugoslavia should be restored on the basis of a federal union.

Kosanovich asked for a government representing all political parties, which would be strong enough to fight the Communists. He was a frequent visitor to King Peter and his mother. And when an agreement was drawn up between Subasich and Tito, Kosanovich was terribly dissatisfied with its terms. (I suspect that was because he had not taken an active part in it; he was inclined to think that everything in Yugoslav politics needed his guiding hand.)

Tito was in Belgrade. The Red Army was crossing the Danube in its push toward Vienna. On January 18, 1945, Tito's emissary, General Velebit, visited Kosanovich in Kingston House, London. Kosanovich left the interview pale and nervous. For the first time he realized that dealing with the Communists demanded fortitude.

A few days later, on January 23, King Peter dismissed Subasich's cabinet and reappointed its members only after all of them—including Kosanovich—had agreed in writing that, on their return to Yugoslavia, they would defend certain obligations the king had made concerning the Tito-Subasich agreement. The chief obligation was that the new united Yugoslav Government to be formed under Tito should guarantee all fundamental political and civil rights and freedoms to the Yugoslav people. Kosanovich took a prominent part in drafting this public statement announcing the reappointment of the previous cabinet and the obligations its members assumed. As the king's most intimate adviser, he drafted Peter's act of consent to the Regency. Before Kosanovich left London, the young king kissed him, and received his formal promises that he would defend the interests of the monarchy.

In the spring of 1945, Yugoslavia was "liberated" and the members of its London government-in-exile came back to join Tito's government with the blessing of Churchill, Roosevelt and Stalin. It was at that time that the Communists characterized Kosanovich as a "useful innocent" (*koristna budala*). In a meeting held in a swanky Belgrade apartment house—still the headquarters of the Communist Party of Yugoslavia—the ex-schoolteacher, Edward Kardelj, the Montenegrin, Milovan Gjilas, and other top Communist leaders were talking over the political characteristics of their new partners.

Gjilas said, according to a witness who reported the meeting to me: "The Anglo-Americans dream that they may influence us through someone who is not a Communist. Therefore Ivan Subasich is best fitted for the job of foreign minister. Though he sometimes wavers, he defended the agreement with Tito stubbornly in London and Washington. Milan Grol (the vice-premier and leader of the Serbian democrats) will serve as a Trojan Horse for the West. He is a reactionary politician who backed Mihailovich. If Grol declares that the Serbian people have to abandon Mihailovich, they will accept the idea. As for Kosanovich—he is not an important personality nor a politician. But he is a useful innocent, who may be of help in the United States where he is considered to be a Western-type democrat."

The only member of that London government who still survives politically is the "useful innocent." Subasich, after having been Tito's prime minister and foreign minister, is now a prisoner in Zagreb. Franc Snoj, after participating in the Communist government of Slovenia, was recently sentenced to seven years of slave labor for "espionage in favor of the Western democracies." The liberal Dr. B. Markovich of Serbia died in New York. I arrived there in time to see him before his death. After I had told him the grim story of what Yugoslavia looked like under the Communists, he said very sadly:

"How is it possible that Savitsa (the diminutive of Kosanovich's first name) could stay in such an outrageous government?"

TITO soon began to ignore all the obligations assumed in his agreement with Subasich. Even before the elections he declared that the king was never to come back. Milan Grol and others immediately left Tito's government. Everybody in Yugoslavia expected Kosanovich to do the same. But he began to yield to the Communists.

Subasich had just come back from a trip around Yugoslavia. He had seen that the people did not want commu-

212

nism; they wanted quick action by the democrats. And he had the courage to tell this to Tito. Although he was foreign minister, he was arrested.

I was with Kosanovich in his room in Belgrade's Hotel Majestic when Mrs. Subasich telephoned and asked for immediate help. Her husband was arrested and ill. Kosanovich tried to reassure her. He telephoned Lt. General Rankovich, OZNA's chief trigger-man. The Communist hangman answered coldly that nothing would happen to the foreign minister. Precautions were merely being taken to defend him from any attempt of the "Western reactionaries" upon his life.

We had just been reading Dante there in the hotel room—the part where Count Ugolino hungrily devours the brain of Archbishop Ruggieri, describing the merciless end of all traitors. The blood and turmoil of ancient fratricidal war rose before us: it seemed very near to our own Yugoslav tragedy.

Only a little later Kosanovich entered the new People's Front against the will of the Independent Democratic Party, of which he was Secretary-General. His party issued a clandestine communiqué describing his defection. Soon after that the chairman of the party, Dr. D. Boshkovich, was terribly beaten for three hours by a Communist youth mob. He was lying in a hospital the same night that Kosanovich was flying to the London conference of the Big Four, accompanying the Communist Kardelj as a "liberal and democrat." Before he left, Kosanovich had published an article in the Communist official organ, *Borba*, in which he attacked Subasich and the leadership of the party with whom he had worked closely for twenty years. The Communists wanted a proof of "betrayal." And the price was paid. From London, Kosanovich went to the Paris Peace Conference, and from there to Washington—to attack American democracy, which he had formerly praised.

I CANNOT BELIEVE Kosanovich is a happy man, though he has attained his ambition. Those who once opposed *fascism* and are now serving communism have lost all faith in themselves and in mankind. There are no more miserable people than the intelligentsia who know better—but who have been afraid to resist in the last battle for man's liberty.

Kosanovich once asked for a synthesis between political and economic democracy for the good of the people, and he is now defending the complete subjugation—economic, political and moral—of Yugoslavia to the Communists. Kosanovich once wanted Yugoslavia to be free of the influence of any big power, and he is now ambassador of a puppet state in Stalin's empire.

THE SOLUTION FOR PALESTINE

A comprehensive and authoritative discussion of the Hoover Plan (pages 32-33) and of the Lowdermilk Plan (*Palestine—Land of Promise*), offering an engineering rather than a political solution for the crisis in the Near East, will be presented in the next issue of PLAIN TALK.

213

FEDERAL BUREAU [redacted]

Case Originated At: PITTSBURGH File No. 61-128

Report Made At	Date Made	Period	Report Made By
PITTSBURGH	2/20/46	11/15,19,20, 21,26/45.	[redacted]

Title	Character
SLOBODNA REC (FREE EXPRESSION)	INTERNAL SECURITY - C REGISTRATION ACT

SYNOPSIS: SLOBODNA REC (Free Expression), Serbian communist-line tri-weekly newspaper printed at 1916 East [redacted], Pittsburgh, Pa., steadfastly adheres to the generally recognized communist line and operates, among Serbs in the U. S., as the organ for the dissemination of information on Serbian affairs in Yugoslavia. As the leading Slav communist organ it contained, during the period from 12/6/44 to 8/30/45, favorable publicity for such communist front organizations as the SWC, American Slav Congress, Vidovdan Committee and the United Committee of South Slavic Americans. It supported the TITO and STALIN governments unequivocally and denounced opposition believed to exist against these governments. Due to the leaving of the former Editor-In-Chief, MIRKO MARKOVICH, to confer with TITO and his representatives in Belgrade, Yugoslavia, the editorship has been undertaken by Reverend NIKOLA DRENOVAC. The Managing Editor is CHARLES VUICH and Business Manager is MANE [redacted]

- P -

J. A. Fletcher

1	Bureau (Encls.)	1	Milwaukee (Info.)
	Albany (Info.)	1	Newark (Info.)
	Anchorage (Info.)	1	New Haven (Info.)
	Baltimore (Info.)	1	New Orleans (Info.)
	Boston (Info.)	1	New York (Info.)
1	Buffalo (Info.)	1	Oklahoma City (Info.)
1	Butte (Info.)	1	Omaha (Info.)
1	Chicago (Info.)	1	Philadelphia (Info.)
1	Cincinnati (Info.)	1	Phoenix (Info.)
1	Cleveland (Info.)	1	Portland (Info.)
1	Denver (Info.)	1	Richmond (Info.)
1	Des Moines (Info.)	1	St. Louis (Info.)
1	Detroit (Info.)	1	St. Paul (Info.)
1	Houston (Info.)	1	Salt Lake City (Info.)
1	Indianapolis (Info.)	1	San Diego (Info.)
1	Jackson (Info.)	1	San Francisco (Info.)
1	Kansas City (Info.)	1	Savannah (Info.)
1	Little Rock (Info.)	1	Seattle (Info.)
1	Los Angeles (Info.)	1	Springfield (Info.)
1	Louisville (Info.)	1	Washington Field (Info.)
1	Memphis (Info.)	1	Pittsburgh
1	Miami (Info.)		

NO JUN 1946 5 PITTSBURGH

(Typed Entire)

SLOBODNA

39 FEB

INFORMATION CONTAINED HEREIN IS UNCLASSIFIED DATE 2- BY SP1 [redacted]

#29166

59 JUN 17 1946

b7C

97-

214

[redacted]

Translations of SLOBODNA REC as contained in this report were made at the Pittsburgh Field Office by [redacted] Serbo-Croatian translator, and [redacted] Slavonic translator.

II

ORGANIZATIONAL STRUCTURE

A - OFFICERS

In the "Statement Of The Ownership, Management, Circulation, Etc., Required By The Acts Of Congress Of August 24, 1912, and March 3, 1933," regarding newspapers utilizing the mails as a means of transmission, furnished the Pittsburgh Office by [redacted] Pittsburgh Post Office, the following are given as officers of SLOBODNA REC:

Publisher	J. KRSTOVICH
Editor	CHARLES VUICK
Managing Editor	None
Business Manager	MANE SHUSHNAR
Owner	JOHN KRSTOVICH

This statement was filed at the Pittsburgh Post Office by MANE SHUSHNAR on October 2, 1945.

"2. It is true that this year's calendars were printed too late, but we have inspite of this sold a sufficient number of calendars and some of the sellers have not sent in their money. In addition to the excellent success in advertisements for the calendar and besides the fact that the calendar was excellent, the work of the sale of the calendars is not satisfactory. Our activists should have paid more attention to this then than before selling the calendars.

"3. Soon we shall have received several hundred copies of the new book 'Guns For Tito.' We ought to do our best to sell these books as soon as possible. The book was compiled by an American Major who organized a shipment of weapons to TITO's Army and met TITO personally several times. The price of the book is $2.75.

"4. We must finish the sale of the book of NIKOLA TESLA. We should particularly interest the American engineers and unionists in it.

"5. Soon a book of MIRKO MARKOVICH will be off the press: 'That We May Understand Each Other.' Therefore it will be necessary to organize the sale of the same. The book contains 350 pages and the price of the same is $2.50.

"The working committee decided that by the end of the month of March or in April, MIRKO MARKOVICH should start for the Pacific Coast, to California, to work in the strengthening of our movement and newspaper and in building up of clubs and the apparatus. This will be discussed in detail at the meeting of the Supreme Board in Cleveland."

August 14, 1945 — "Reorganization Of Leadership Of Serbian Progressive Movement In City Of Akron Carried Out." This article, which is quoted below, indicates the then policy of SLOBODNA REC in its leadership in the Serbian Progressive Movement in the United States.

"Akron, August 10 - Last week, on Thursday evening, there was here held a special meeting of the Serbian political progressive club, which was attended by the editor-in-chief of SLOBODNA REC, MIRKO MARKOVICH, and the manager of the paper, MANE SHUSHNAR.

STANDARD FORM NO. 64

Office Memorandum • UNITED GOVERNMENT

TO : Director, FBI

DATE: November 7, 1947

FROM : SAC, Pittsburgh

SUBJECT: SLOBODNA REC
INTERNAL SECURITY - C
REGISTRATION ACT

The following article which appeared in the November 1, 1947, issue of the above captioned Communist line newspaper published at 1916 East Street, Pittsburgh, Pa., is furnished for your information:

Address of Ambassador ROSANOVICH at Banquet of 2nd Serbian Congress, October 26 in Pittsburgh, Pa.

ALL INFORMATION CONTAINED HEREIN IS UNCLASSIFIED DATE 2-22-19 BY SP1 AC/cm # 24860

Brothers and Sisters:

I come among you to extend you the greetings of the peoples and the government of the Federated People's Republic of Yugoslavia, headed by Marshal Tito and to thank you for the considerable aid which you have given your brothers in the old homeland.

By coincidence, I found myself in the period of 1943-44 in this great country where I did my best to defend the truth and contribute to the best of my ability to the thwarting of spreading untruths on the part of the official representatives of the then Yugoslav government in exile and of all those who wanted to convince public opinion of America and its official circles of the impossibility of restoring Yugoslavia. I recall your valuable help of that time. I remember a dear friend in the person of the late Rev. KRAJNOVICH and his constant struggle, as well as of so many others of that period.

You Americans of Serbian descent were hit the hardest. You were exposed to the greatest trials and the heaviest attacks. You had to exercise the greatest self-denial and perspective correctly to see the course of events because every effort was made to confuse you. The idea was that when Serbian Americans follow the wrong path, when chauvinism and national hatred get possession of them, when hatred toward the Croats and Slovenes and toward Yugoslav unity is aroused in them, then it will be easy for the same attitudes to work among Croatians and Slovenes as regards Yugoslav unity, giving chauvinism full sway and thus contributing to the weakening of the war effort in American and rendering impossible the struggle for the salvation and restoration of Yugoslavia and the Balkans.

In a letter of thanks for an honor which was shown me in February, 1944, by a great number of you who are now assembled at this Serbian

NOV 12 1947

RECORDED 77-724-175
INDEXED
EX-93
34 NOV 10 1947

(6)
(7)(C)

217

To: Director, FBI November 7, 1947
Re: SLOBODNA REC
IS - C; REGISTRATION ACT

Congress when I was elected an honorary president of the Vidovdan Congress I said:

"In an extraordinary difficult period of mankind you have with sacrifice and self-denial done your duty also toward your people from whom you sprang and toward America of which you are good citizens, and toward mankind. Since my arrival in America in 1941, in an official capacity, I found among you the best understanding and best cooperation for an ever greater unification of national forces in the struggle against all manifestations of fascism. Together we tried to be as serbs - bearers of Serbo-Croato-Sloveno-Macedonian harmony and unity at a time when the enemy banked his entire hope on disharmony and hatred. Working thus we have contributed to the correct understanding of the national-liberation struggle beset with so many obstacles and bedevilled with so much gossip. Time and events have borne out the truth thereof."

And when taking leave of Serbs in America in a letter of July 24, 1944, among other things I wrote:

"We have here been those who have defended the purity of the Serbian name at a time when it was being most degraded by the ignorant. History will show that we were right and that by our defending the unity of Serbs, Croats, Slovenes, and Macedonians we have best represented the true national Serbian interests and thus represented the interests not only of Yugoslavia but also of America and all United Nations. We have by common sacrifices of a liberation war achieved great successes in the country, but there still are great trials. Enemies will particularly seek to confuse the Serbs and destroy them with false defense of Serbian interests. I ask all my good friends to make every effort to promote harmony and unity. I ask all those who were being deceived in returning to Serbian tradition and enter the great circle of national harmony . . . I ask friends who have had the opportunity and bravery of seeing the right path from the very outset, that they forgive those who haven't seen it because they were deceived by those who thought they must be believed. The true national champion is known by his setting the errant ones on the right path. Responsible culprits who misused their positions and misused the credulity of the ignorant will answer to the people for their misdeeds. The more you will promote harmony, the better it will be for Serbdom, for Yugoslavia, and for America - toward which you have the greatest obligation."

To: Director, FBI
Re: SLOBODNA REC
IS - C; REGISTRATION ACT

November 7, 1947

That was the path to which you were called until his last days by our great countryman NIKOLA TESLA.

And you, by your moderation, have contributed to the interest of the democratic struggle of the world. You have contributed to the unification of all national forces in America in the organization of the war effort. And at the same time, as Americans of Serbian descent together with other Yugoslav Americans, you have shown your American fellow-citizens that your brothers in the old homeland are with united efforts resisting fascism and struggling for freedom and the restoration of their independent state, Yugoslavia.

In this you were able to be the best spokesmen. You and your predecessors have come to this country in search of freedom and better economic conditions.

Most of you and those before you have fled from Hapsburg serfdom because you were being oppressed both nationally and economically. You and your predecessors made valuable contributions to the development of the New World. You with your brother Slovenes and Croatians have sweated, shed blood, worn your bones, expended brains, and whatnot for the progress of this country. Long is the chain of miners, farmers, scientists, and soldiers who gave their best for the general progress and prosperity of the American Union. You have conscientiously been doing your duty and you have become good citizens of this great land. Who of us is not proud of the work, life and nobleness of NIKOLA TESLA without whose work and mind electricity would not be what it now is in the world; whose motor has harnessed the Niagara and the Dnieper, turning the wheels of industry wherever there is electricity? In every spark of electricity, shines his name. America is the greatest beneficiary of TESLA's genius. He asked for no riches.

And so, brothers and sisters, when during the war you have raised your voice for your brethren in the Balkans struggling not only for their life but also for a better and more secure existence of mankind, your voice thus had significance and importance. You were able to be the authorized spokesmen of the struggle which was going on over there.

XXXXXX
XXXXXX
XXXXXX

FEDERAL BUREAU OF INVESTIGATION
FOIPA DELETED PAGE INFORMATION SHEET

3 Page(s) withheld entirely at this location in the file. One or more of the following statements, where indicated, explain this deletion.

☒ Deletions were made pursuant to the exemptions indicated below with no segregable material available for release to you.

Section 552		Section 552a
☐ (b)(1)	☐ (b)(7)(A)	☐ (d)(5)
☐ (b)(2)	☐ (b)(7)(B)	☐ (j)(2)
☐ (b)(3)	☒ (b)(7)(C)	☐ (k)(1)
_____	☒ (b)(7)(D)	☐ (k)(2)
_____	☐ (b)(7)(E)	☐ (k)(3)
_____	☐ (b)(7)(F)	☐ (k)(4)
☐ (b)(4)	☐ (b)(8)	☐ (k)(5)
☐ (b)(5)	☐ (b)(9)	☐ (k)(6)
☐ (b)(6)		☐ (k)(7)

☐ Information pertained only to a third party with no reference to you or the subject of your request.

☐ Information pertained only to a third party. Your name is listed in the title only.

☐ Documents originated with another Government agency(ies). These documents were referred to that agency(ies) for review and direct response to you.

_____ Pages contain information furnished by another Government agency(ies). You will be advised by the FBI as to the releasability of this information following our consultation with the other agency(ies).

_____ Page(s) withheld for the following reason(s): _____

_____

☐ For your information: _____

_____

☒ The following number is to be used for reference regarding these pages:

100-10123-124

XXXXXX
XXXXXX
XXXXXX

XXXXXXXXXXXXXXXXXXXXX
X DELETED PAGE(S) X
X NO DUPLICATION FEE X
X FOR THIS PAGE X
XXXXXXXXXXXXXXXXXXXXX

FBI/DOJ

STANDARD FORM NO. 64

Office Memorandum • UNITED STATES GOVERNMENT

TO : Director, FBI

DATE: 5/8/45

FROM : SAC, Pittsburgh

SUBJECT: [redacted]

(b)7(c)

INTERNAL SECURITY - R

(b)7(D) [redacted] would-be radio repair man, advised this office that on April 29, 1945 he installed at the home of captioned subject, [redacted], a "Hammerlund H.Q. Receiver #120X". [redacted] stated that since this type receiving set is of a kind which is generally used by amateur radio experts or professionals and since the radio set itself was in such condition as to indicate that it had been purchased under a very high priority, he inquired of the subject how he happened to be in possession of such a radio set. [redacted] according to [redacted], was vague as to where he got it, saying that it had belonged at one time to NIKOLA TESLA'S son and was purchased before the war in New York City. [redacted] did not make any notation of the serial number of this radio but advised that under pretext he can review the operation of this set in the apartment of the subject and at that time get the serial number.

(b)7(D)

(b)7(D)

(b)7(D)

(b)7(c)

b7D

[redacted]

[redacted]

[redacted]

[redacted]

COPIES DESTROYED

14

ALL INFORMATION CONTAINED HEREIN IS UNCLASSIFIED DATE 4-16-89 BY SP1ALGCM # 291960

JUN 1 2 [redacted]

(b)7(c)

221

FEDERAL BUREAU OF INVESTIGATION

Form No. 1
THIS CASE ORIGINATED AT WASHINGTON, D. C.

FILE NO. 100-11980

CONFIDENTIAL

REPORT MADE AT	DATE WHEN MADE	PERIOD FOR WHICH MADE	REPORT MADE BY
WASHINGTON, D. C.	30 AUG 1946	7/8;8/2/46	[redacted] (b)(7)

TITLE: (b)(1) [redacted] (c)

CHARACTER OF CASE: (b)(1) [redacted] (c)

Confidential

SYNOPSIS OF FACTS:

The new Yugoslav Ambassador, SAVA N. KOSANOVIC, has stated to the newspaper that they do not contemplate hostilities over the Trieste question. [redacted] (b)(1) (c)

ALL INFORMATION CONTAINED HEREIN IS UNCLASSIFIED EXCEPT WHERE SHOWN OTHERWISE

NO SEP 1946 69 ...STICS

- P -

REFERENCE: Report of Special Agent [redacted] dated July 22, 1946, at Washington, D. C. (b)(7)(c)

2-16-49 Classified by SPIAGGIM
Declassify on: OADR # 291860
DEFERRED RECORDING

DETAILS: AT WASHINGTON, D. C.

GENERAL ACTIVITIES

HANDLED BY STOP DESK

The "Washington Post" for July 23, 1946, carries a headline relative to an interview had with the new Yugoslav Ambassador SAVA N. KOSANOVIC entitled "War Over Trieste Not Anticipated by Yugoslav Envoy". The article stated he had declared on the previous day that his country would not be provoked into any action in Trieste which would compromise the peace. He also stated they would not accept any solution of the problem which did not accord with their essential interests. He said his Government opposed Italian proposals for a plebecite in the disputed area because the Yugoslav population had been diminished by twenty-six years of Italian rule and the additional loss of 56,000 men in the fight against the Nazis.

APPROVED AND FORWARDED: Guy Hottel SPECIAL AGENT IN CHARGE

DO NOT WRITE IN THESE SPACES

100-32820-285

RECORDED & INDEXED 35

COPIES OF THIS REPORT
5 - Bureau
2 - Detroit
2 - Chicago
2 - Cleveland
2 - New York
2 - Pittsburgh
3 - Washington Field

F B I
37 SEP [redacted] (b)(7)(c)

EX - 14

37 SEP 18 1946

U. S. GOVERNMENT PRINTING OFFICE 16—80005-1

COPIES DESTROYED 7-30-58

CONFIDENTIAL

222

CONFIDENTIAL

[redacted] (b)(1) (C)

The article in the "Evening Star" which was referred to above appeared July 23, 1946, and was entitled "New Envoy Disclaims Any Yugoslav Plans for Coup at Trieste." This article was written by NEWBOLD NOYES, JR. The article quotes the Ambassador as saying that Yugoslavia would not be "provoked into compromising the peace." The article stated that the Ambassador had indicated his country would boycott Trieste if they did not get it. The article stated that KOSANOVIC is a nephew of NICOLA TESLA, the Yugoslav-American inventor.

[redacted] (C) (b)(1)

[redacted] (C)

[redacted] (C)

[redacted] (C)

CONFIDENTIAL

223

XXXXXX
XXXXXX
XXXXXX

FEDERAL BUREAU OF INVESTIGATION
FOIPA DELETED PAGE INFORMATION SHEET

2 Page(s) withheld entirely at this location in the file. One or more of the following statements, where indicated, explain this deletion.

☒ Deletions were made pursuant to the exemptions indicated below with no segregable material available for release to you.

Section 552		Section 552a
☒ (b)(1)	☐ (b)(7)(A)	☐ (d)(5)
☐ (b)(2)	☐ (b)(7)(B)	☐ (j)(2)
☐ (b)(3)	☒ (b)(7)(C)	☐ (k)(1)
_____	☐ (b)(7)(D)	☐ (k)(2)
_____	☐ (b)(7)(E)	☐ (k)(3)
_____	☐ (b)(7)(F)	☐ (k)(4)
☐ (b)(4)	☐ (b)(8)	☐ (k)(5)
☐ (b)(5)	☐ (b)(9)	☐ (k)(6)
☐ (b)(6)		☐ (k)(7)

☐ Information pertained only to a third party with no reference to you or the subject of your request.

☐ Information pertained only to a third party. Your name is listed in the title only.

☐ Documents originated with another Government agency(ies). These documents were referred to that agency(ies) for review and direct response to you.

_____ Pages contain information furnished by another Government agency(ies). You will be advised by the FBI as to the releasability of this information following our consultation with the other agency(ies).

_____ Page(s) withheld for the following reason(s): _____

_____

☐ For your information: _____

_____

☒ The following number is to be used for reference regarding these pages:

100-32820-461

XXXXXX
XXXXXX
XXXXXX

XXXXXXXXXXXXXXXXXXXXX
X DELETED PAGE(S) X
X NO DUPLICATION FEE X
X FOR THIS PAGE X
XXXXXXXXXXXXXXXXXXXXX

FBI/DOJ

XXXXXX
XXXXXX
XXXXXX

FEDERAL BUREAU OF INVESTIGATION
FOIPA DELETED PAGE INFORMATION SHEET

4 Page(s) withheld entirely at this location in the file. One or more of the following statements, where indicated, explain this deletion.

☒ Deletions were made pursuant to the exemptions indicated below with no segregable material available for release to you.

Section 552		Section 552a
☒ (b)(1)	☐ (b)(7)(A)	☐ (d)(5)
☐ (b)(2)	☐ (b)(7)(B)	☐ (j)(2)
☐ (b)(3)	☐ (b)(7)(C)	☐ (k)(1)
_____	☐ (b)(7)(D)	☐ (k)(2)
_____	☐ (b)(7)(E)	☐ (k)(3)
_____	☐ (b)(7)(F)	☐ (k)(4)
☐ (b)(4)	☐ (b)(8)	☐ (k)(5)
☐ (b)(5)	☐ (b)(9)	☐ (k)(6)
☐ (b)(6)		☐ (k)(7)

☐ Information pertained only to a third party with no reference to you or the subject of your request.

☐ Information pertained only to a third party. Your name is listed in the title only.

☐ Documents originated with another Government agency(ies). These documents were referred to that agency(ies) for review and direct response to you.

_____ Pages contain information furnished by another Government agency(ies). You will be advised by the FBI as to the releasability of this information following our consultation with the other agency(ies).

_____ Page(s) withheld for the following reason(s): _____

_____

☐ For your information: _____

_____

☒ The following number is to be used for reference regarding these pages:
100-32820-969

XXXXXX
XXXXXX
XXXXXX

XXXXXXXXXXXXXXXXXXXXX
X DELETED PAGE(S) X
X NO DUPLICATION FEE X
X FOR THIS PAGE X
XXXXXXXXXXXXXXXXXXXXX

FBI/DOJ

Federal Bureau of Investigation
United States Department of Justice

Form No. 1
This Case Originated At INDIANAPOLIS, INDIANA — File No. 100-4006

Report Made At	Date	Period	Report Made By
Indianapolis, Indiana	11/18/42	10/29,30/42	[redacted] (b)(7)(C)

Title: AMERICAN SLAV CONGRESS (ALL-SLAV CONGRESS)

Character of Case: INTERNAL SECURITY - C

Synopsis:

Information contained in bulletin entitled "News Flashes from Czechoslovakia under Nazi Domination" issued by Czechoslovak National Council of America, with reference to American Slav Congress, set forth herein. Includes information concerning the permanent committee set-up and a partial list of delegates to the American Slav Congress. [redacted] (b)(7)(D)

cc BR 3/29/47

- P - ALL INFORMATION CONTAINED HEREIN IS UNCLASSIFIED DATE 1-7-83 BY SP5 RTG/PMC

Reference: [redacted] (b)(7)(C) ENCLOSURE ATTACHED

Report of Special Agent [redacted] (b)(7)(C) dated May 12, 1942, at Detroit, Michigan.

Details: At Hammond, Indiana

[redacted] (b)(2) (b)(7)(D) obtained

Approved and Forwarded:	Special Agent in Charge	Do Not Write in These Spaces
		100-56614-42

5 Bureau
1 New York (Inf.)
1 Pittsburgh (Inf.)
1 Newark (Inf.)
1 Milwaukee (Inf.)
1 Washington Field (Inf.)
1 Chicago (Inf.)
1 Philadelphia (Inf.)
1 Cleveland (Inf.)
3 Detroit
3 Indianapolis

RECORDED & INDEXED

15 NOV 21 1942

[redacted] (b)(7)(C)

EX-17

FOR VICTORY BUY UNITED STATES DEFENSE BONDS AND STAMPS

60 JAN 2 7 1943

COPY IN FILE

226

a copy of a bulletin entitled "News Flashes from Czechoslovakia under Nazi Domination", published by the Czechoslovak National Council of America, 4049 West Twenty-sixth Street, Chicago, Illinois, release no. 132, dated May 11, 1942.

This bulletin contains news concerning the American Slav Congress held at Detroit, Michigan, April 25 and 26, 1942. The article contains the permanent committee set-up of the Congress and a list of men of eminence among the delegates to the Congress.

This article is being quoted below:

"AMERICAN SLAV CONGRESS FOR GREATER WAR EFFORT"

The coordination activities of all groups of Slavic extraction in America for an intensified war effort moved a long step closer to reality as a result of the American Slav Congress held in Detroit April 25 and 26 and attended by more than 2300 delegates representing church, fraternal, labor, social and cultural groups from all parts of the country. Every substantial American Slav organization in the country was represented.

Permanent Committee Set Up

A permanent committee was elected with LEO KRZYCKI, Vice-president of the Amalgamated Clothing Workers for President; Prof. J. J. ZMRHAL, of the Czechoslovak National Council, Vice-president; STEPHEN ZEMAN, JR., of the Slovak Evangelical Union, Secretary; VINKO NUK, of the Croatin Fraternal Union, Treasurer; and BLAIR F. GUNTHER, member of the Educational Committee of the Polish National Alliance, Chairman of the Board of Directors.

Participating Slavic nationality groups elected vice-presidents to the Board of Directors. Vice-presidents for the respective nationality groups elected were: EDMUND POINC, Polish; W. J. MUZIK, Czech; V. S. PLATEK, Slovak; VASIL DICOFF, Bulgarian; SAMUEL PERLINICH, Serbian; JOHN BUTKOVICH, Croatian; VINCENT CAINKAR, Slovene; PETER RATICA, Carpatho-Russian; GEORGE PIRINSKY, Macedonian; HARRY LUBESHKOFF, Russian; MICHAEL ATKATCH, Ukrainian.

The various nationality groups also elected members to the nationality committees of the Board of Directors. The National Committee of the congress held its first plenary session in Pittsburgh, May 10, to plan steps to translate the decisions of the congress into action.

Anti-Hitler Measures Adopted

Main decisions embodied in the resolutions of the congress were:

1. To make a direct appeal to American Slavs comprising more than half the workers in the war essential industries of the nation to intensify their production efforts to outproduce Hitler and the Axis.
2. To intensify vigilance against fifth-columnists operating within the various Slavic groups in this country aiming to sow division and disunity in the war effort.
3. To chart a plan to recruit 50,000 American Slav volunteers for a house-to-house campaign among American Slav families for raising the amount of war bond subscriptions to 10 per cent of income.
4. To take all measures to strengthen the bonds of solidarity among American Slav groups and between them and the Slav peoples of Europe for a concerted effort against HITLER.
5. To increase support of all war relief agencies, particularly the Russian, Yugoslavian, Polish, Czechoslovakian, British, Greek and Chinese.
6. To take steps to counteract the appeasers.
7. To set up a permanent organization to coordinate and assist in carrying out the decisions adopted by the Congress.

Response Exceeds Anticipations

The response to the first American Slav Congress ever held in America exceeded all anticipations. It revealed the depth of anti-Axis feeling that has seized hold of the Americans of Slav descent who came expressing desires to do their utmost to the end that the power of Hitlerism, arch-foe of the Slav peoples as of freedom-loving peoples everywhere shall be decisively smashed.

The delegates were mostly brawny men from coal mines, steel mills, machine shops—the men on whom the nation is counting for much of its war essential goods production and wholesome-looking women whose faces showed hardening lines of determination beneath war smiles.

Men of Eminence Among Delegates

Among the delegates most were men and women of distinction in many fields of activity—scholers, writers and clergymen, among them Rev. VINCENT BORKOVICZ, who represented the Very Rev. Bishop STEFAN S. WOZNICKI at the Congress and delivered the opening invocation; Metropolitan Bishop Benjamin, of the Russian Orthodox Church; Most Rev. JOHN BAJNOVICH of Johnstown, Pennsylvania, and Rev. RAWLOWSKI, of Buffalo, New York.

Among others present were JOSEPH WATTRAS, director of the Polish National Alliance of Pittsburgh; CHESTER A. KOZDROJ, President of the Polish Central Citizens' Committee of Detroit; Judge M. GRONKOWSKI of Hamtramck; Captain W. HETMAN, Polish War Veterans, Chicago; Dr. W. T. OSOWSKI; chairman Michigan All Slav Committee, Detroit; Mrs. M. NESTEROWICZ, dean of Polish journalists, Buffalo, New York; ZLATKO BALOKOWICH, famed Croatian violinist; FRANK GRIGORSKI, assistant district attorney of Milwaukee and president of the Pulaski Council there; VINCENT KLEIN, Secretary Chrysler Local No. 17 of UAW-CIO; Michigan State Senator, STANLEY NOWAK; Prof. J. J. ZMRHAL, President of the Czechoslovak National Council; JOSEPH MARTINEK, Executive Secretary of the Czechoslovak National Council, Chicago; KAREL ZRCHAL, President of the American Sokol Union; ADOLF HACER, President of the Czech American National Alliance; VINCENT VRDSKY, Secretary of the Czech American National Alliance; Rev. JAN S. BRADAC, Honorary President of the Slovak National Alliance; Rev. ARNOST BIZKA of the Federation of American Czechoslovaks in Texas; NICOLA TESLA, Serbian American inventor; ETBIN KRISTAN, prominent Slovenian writer; Dr. D. K. KATICH, first vice-president Michigan all-Slav Committee; SAMUEL PERLINICH, President of the Serbian National Foderation, Pittsburgh; Judge ANTHONY LUCAS, Pittsburgh; Ohio State Senator ROYD-BOICH; Judge GEORGE S. TENESY, Cleveland;

RAYMOND TRAVNIK, Slovenska Narodna Podporna Jednota; Rev. M. F[illegible]ENKO, Cleveland; W. MUZIK, President of the Czechoslovak Society of America; and Mrs. MARIE KRAL of the Nat'l Alliance of Czech Catholics.

From the serious and restrained mood of the delegates it was visible they had come for the one purpose of agreeing on a common line of action to be taken to guarantee a speedy end of HITLER and the Axis. There was a notable absence of the usual convention hilarity and abandon.

An International Event

It was a wartime meeting dominated by a wartime grimness. That the deliberations of the congress would have international repercussions was evidenced in the more than thousand telegrams from all parts of the world that reached the congress during the sessions.

One of the wires greeting it was from a Czech group in Teheran, Persia; there were many from Slavic groups in Chile, Argentina, Canada, and throughout America. Soviet writers and scientists and members of the Yugslav government in Kuibyshev wired the congress messages of greetings and good wishes.

The Congress was not only an event significant in the history of America's 15 million Slav-descended citizens but fraught with meaning for the destiny of the more than 200 millions of Slav peoples across the seas engaged in a life-and-death struggle against Nazi enslavers.

For the first time the peoples of the diverse Slavic groups in America were reaching a common understanding on a world-wide issue--a matter that gave delegates a feeling of considerable satisfaction.

Far beyond the brilliantly delivered keynote speeches and the iron note of resolve sounded in the resolutions--all of which raised the assembly to wild cheers of enthusiasm--was the vibrant sense of unity which, given expression by the congress carried to the Slav peoples

throughout the world its message of redoubled efforts to crush HITLER and guarantee a democratic victory for the world.

Keynote--Production for Victory

Production and sacrifice were the keynote motifs of the main address of the congress delivered by LEO KRZYCKI. Reminding listeners that American Slavs occupy a key position in America's war industrial pattern, he called for greater efforts this year to turn the scales of victory in favor of the democracies.

How to safeguard American war production and American morale took up the following sessions which were addressed by Prof. J. J. ZMRHAL, President of the Czechoslovak National Council of America, on fifth-column activities and measures to be taken against them; FRANK N. NISBEY, chairman of the Michigan Defense Savings Program on national morale; ELI OLIVER, of the Labor Division of the War Production Board and GEORGE ADDES, Secretary-Treasurer of the Auto Workers Union on problems facing labor in the war industries. These subjects were treated in further detail in special panel discussions later.

10,000 Hear Hon. Paul V. McNutt

Two thousand plates were served at the banquet tendered the delegates and guests by the Michigan Committee of the American Slav Congress in the Masonic Temple on April 25.

But the climax of the congress was a victory rally in the Michigan State Fair Coliseum where 10,000 persons assembled to hear the Hon. PAUL V. McNUTT, Federal Security Administrator and U. S. Government representative to the Congress who greeted the delegates and drew thunderclaps of applause by his appeal for "more tanks for TIMOSHENKO". "In this first Slav Congress you have shown the world the miracle of American unity," he declared.

A message from President ROOSEVELT was received wishing the Congress success in its work."

XXXXXX
XXXXXX
XXXXXX

FEDERAL BUREAU OF INVESTIGATION
FOIPA DELETED PAGE INFORMATION SHEET

__1__ Page(s) withheld entirely at this location in the file. One or more of the following statements, where indicated, explain this deletion.

☑ Deletions were made pursuant to the exemptions indicated below with no segregable material available for release to you.

Section 552		Section 552a
☐ (b)(1)	☐ (b)(7)(A)	☐ (d)(5)
☒ (b)(2)	☐ (b)(7)(B)	☐ (j)(2)
☐ (b)(3)	☒ (b)(7)(C)	☐ (k)(1)
_____	☒ (b)(7)(D)	☐ (k)(2)
_____	☐ (b)(7)(E)	☐ (k)(3)
_____	☐ (b)(7)(F)	☐ (k)(4)
☐ (b)(4)	☐ (b)(8)	☐ (k)(5)
☐ (b)(5)	☐ (b)(9)	☐ (k)(6)
☐ (b)(6)		☐ (k)(7)

☐ Information pertained only to a third party with no reference to you or the subject of your request.

☐ Information pertained only to a third party. Your name is listed in the title only.

☐ Documents originated with another Government agency(ies). These documents were referred to that agency(ies) for review and direct response to you.

_____ Pages contain information furnished by another Government agency(ies). You will be advised by the FBI as to the releasability of this information following our consultation with the other agency(ies).

_____ Page(s) withheld for the following reason(s): _____

_____

☐ For your information: _____

_____

☒ The following number is to be used for reference regarding these pages:

100-56674-42

XXXXXX
XXXXXX
XXXXXX

XXXXXXXXXXXXXXXXXXXXX
X DELETED PAGE(S) X
X NO DUPLICATION FEE X
X FOR THIS PAGE X
XXXXXXXXXXXXXXXXXXXXX

FBI/DOJ

4-750 (Rev. 12-14-88)

XXXXXX
XXXXXX
XXXXXX

FEDERAL BUREAU OF INVESTIGATION
FOIPA DELETED PAGE INFORMATION SHEET

4 Page(s) withheld entirely at this location in the file. One or more of the following statements, where indicated, explain this deletion.

☒ Deletions were made pursuant to the exemptions indicated below with no segregable material available for release to you.

Section 552		Section 552a
☒ (b)(1)	☐ (b)(7)(A)	☐ (d)(5)
☒ (b)(2)	☐ (b)(7)(B)	☐ (j)(2)
☐ (b)(3)	☒ (b)(7)(C)	☐ (k)(1)
_____	☒ (b)(7)(D)	☐ (k)(2)
_____	☐ (b)(7)(E)	☐ (k)(3)
_____	☐ (b)(7)(F)	☐ (k)(4)
☐ (b)(4)	☐ (b)(8)	☐ (k)(5)
☐ (b)(5)	☐ (b)(9)	☐ (k)(6)
☐ (b)(6)		☐ (k)(7)

☐ Information pertained only to a third party with no reference to you or the subject of your request.

☐ Information pertained only to a third party. Your name is listed in the title only.

☐ Documents originated with another Government agency(ies). These documents were referred to that agency(ies) for review and direct response to you.

_____ Pages contain information furnished by another Government agency(ies). You will be advised by the FBI as to the releasability of this information following our consultation with the other agency(ies).

_____ Page(s) withheld for the following reason(s): _____

_____

☐ For your information: _____

_____

☒ The following number is to be used for reference regarding these pages:

100-56674-95

XXXXXX
XXXXXX
XXXXXX

XXXXXXXXXXXXXXXXXXXXX
X DELETED PAGE(S) X
X NO DUPLICATION FEE X
X FOR THIS PAGE X
XXXXXXXXXXXXXXXXXXXXX

FBI/DOJ

233

FEDERAL BUREAU OF INVESTIGATION

Form No. 1
THIS CASE ORIGINATED AT NEW YORK FILE NO. 100-26200

REPORT MADE AT	DATE WHEN MADE	PERIOD FOR WHICH MADE	REPORT MADE BY
NEW YORK	6-23-48	7/24/47	[redacted] (b)(7)(C)

CONFIDENTIAL

TITLE	CHARACTER OF CASE
AMERICAN SLAV CONGRESS 41797	INTERNAL SECURITY - G; REGISTRATION ACT

SYNOPSIS OF FACTS:

In radio broadcast 7/27/47 ASC official asserted that first ASC Congress held 4/25,26/42, Detroit, Michigan, grew out of Tri-State All Slav Congress meeting in Pittsburgh, Pa., 12/3/38; stressed role of ASC in uniting Slavic groups for "peace, economic security and progress". [redacted]

News disseminated through quarterly magazine "The Slavic American" [redacted]

ALL INFORMATION CONTAINED HEREIN IS UNCLASSIFIED EXCEPT WHERE [redacted]

Class 10/18/80

DATE 5p/GSK/PB 7-15-80

CHARGE & EXP. BY 7-15-80
REASON FOR II. 1-2,4,5
DATE OF REVIEW 7-15-90

ENCL Behind file 9-15-48

APPROVED AND FORWARDED: Edward Scheidt SPECIAL AGENT IN CHARGE

DO NOT WRITE IN THESE SPACES

100-56674-1096 RECORDED - 111

COPIES OF THIS REPORT

5-Bureau (Encs.)
2-Chicago
2-Cleveland
2-Detroit
2-Los Angeles
2-Milwaukee
2-Pittsburgh
2-St. Louis
2-San Francisco
1-Washington Field (Inf.)
1-Newark (Inf.)
1-Boston (Inf.)
4-New York

F B I
34 JUN 25 1948

CONFIDENTIAL

COPIES DESTROYED 11-7-58

U. S. GOVERNMENT PRINTING OFFICE

CC-7-14-

61 SEP 15 1948 ENCLOSURE BEHIND FILE

1095 234

41824

NY 100-26200

[redacted]

(b)(1)
(b)(7)(C)

The first two issues of "The Slavic American", furnished by [redacted] contain the following articles: (b)(1)

Vol. 1, Fall 1947, No. 1

Articles

Henry Wallace, Champion of Peace....	3	..... by Leo Krzycki
Poland's Western Boundaries.....	5	.....by Congressman G. Sadowski
Statement on the Truman Doctrine At Senate Foreign Relations Committee Hearings.....	6	.....By George Pirinsky
As a Veteran Sees It, First in a Series of Articles.....	9	.....by Captain George Wuchinich
Spotlight on the Balkans, Statements on Balkan-Greek Question at U.N. Security Council Hearings.....	20	by Warren R. Austin, U. S. Representative and Andrei A. Gromyko, U.S.S.R. Representative
The Real Bulgaria An Answer to Life Magazine.....	50	.....by Dr. Nissim Mevorah

235

CONFIDENTIAL

Features

Story of the American Slav Congress 10 ...The Record of an Organization
Leo Krzycki,
Fifty Years a Servant of the People 18 .....by Tabitha Petran
One World Flight,
Stop-Over in Moscow..... 34 .....by Norman Corwin
Czechoslovak Sokol in America..... 40 .....The Symbol of a People
We Felt the Heartbeat of New Yugoslavia; The Rebuilding of a Country 43 .....by Zlatko Balokovic
Bright Passage,
A Review of the new book on Czechoslovakia, by Maurice Hindus 47 .....by Misko
Savo Radulovich..... 48 .....Yugoslav Artist
Highlights of Slavic American News.. 52 Notes on Rallies and Conferences
Slavic American Youth Get Together.. 54 .....Youth councils in action

Stories

My American Pilgrimage,
Excerpts from the new novel..... 38 .....by Stoyan Christowe
The Importance of Being Kobotchnick
A story of a Man and His Dog..... 42 .....by Louis Adamic

Vol. 1, Winter 1947, No. 2

Articles

Conspiracy Against Peace..... 5 .....by Louis Adamic
Deportation Laws Hit Slavic Americans..... 13 .....by Abner Green
Analysis of the Marshall Plan.... 22 .....by George Pirinsky
Program and Activities of the American Slav Congress..... 29 .....by George Pirinsky

CONFIDENTIAL

236

Features

Nikola Tesla	3	by Pauline Klopacka
Tribute to a Fighting Senator	9	ASC Testimonial Dinner
The World Youth Festival	10	by Ilona Vlahov
U.S.S.R. Thirty Years After Feudalism	14	by S. Serbuzov
Summary of a Journey	24	by Ella Winter
The Story of Geo Milev	31	by Maria Vladimirova
Prague	32	Europe's New Film Capital
Slav Saga in Pennsylvania	33	by Lyla Y. Slocum Eugene Konecky
American Clergymen See the New Yugoslavia	38	Digest of their Report
Pages from an Artist's Notebook	42	by Alvena Becker
Five Women	44	by Mario Seton

Fiction

Wedding Day	7	by Thomas Bell

[redacted]

CONTINUED

41860

NY 100-26200

CONFIDENTIAL

ENCLOSURES (5) TO BUREAU

[redacted]

b7c
b7D
0/5

Two copies of quarterly magazine "The Slavic American", Winter 1947 issue.

- P E N D I N G -

CONFIDENTIAL

238

XXXXXX
XXXXXX
XXXXXX

FEDERAL BUREAU OF INVESTIGATION
FOIPA DELETED PAGE INFORMATION SHEET

1 Page(s) withheld entirely at this location in the file. One or more of the following statements, where indicated, explain this deletion.

☒ Deletions were made pursuant to the exemptions indicated below with no segregable material available for release to you.

Section 552		Section 552a
☒ (b)(1)	☐ (b)(7)(A)	☐ (d)(5)
☒ (b)(2)	☐ (b)(7)(B)	☐ (j)(2)
☐ (b)(3)	☒ (b)(7)(C)	☐ (k)(1)
_____	☐ (b)(7)(D)	☐ (k)(2)
_____	☐ (b)(7)(E)	☐ (k)(3)
_____	☐ (b)(7)(F)	☐ (k)(4)
☐ (b)(4)	☐ (b)(8)	☐ (k)(5)
☐ (b)(5)	☐ (b)(9)	☐ (k)(6)
☐ (b)(6)		☐ (k)(7)

☐ Information pertained only to a third party with no reference to you or the subject of your request.

☐ Information pertained only to a third party. Your name is listed in the title only.

☐ Documents originated with another Government agency(ies). These documents were referred to that agency(ies) for review and direct response to you.

_____ Pages contain information furnished by another Government agency(ies). You will be advised by the FBI as to the releasability of this information following our consultation with the other agency(ies).

_____ Page(s) withheld for the following reason(s): _____

_____

☐ For your information: _____

_____

☒ The following number is to be used for reference regarding these pages:

100-56674-95

XXXXXX
XXXXXX
XXXXXX

XXXXXXXXXXXXXXXXXXXXXX
X DELETED PAGE(S) X
X NO DUPLICATION FEE X
X FOR THIS PAGE X
XXXXXXXXXXXXXXXXXXXXXX

FBI/DOJ

THE SLAVIC AMERICAN

50¢

Louis Adamic

Thomas Bell

S. Garbuzov

Abner Green

E. Konecky

Alvena Seckar

Marie Seton

Lyla Y. Slocum

M. Vladimirova

Ilene Vlahov

Ella Winter

NIKOLA TESLA - *Poet in Electricity*

ALL INFORMATION CONTAINED
HEREIN IS UNCLASSIFIED
DATE 2-14-95 BY [illegible]

WINTER 1947

240

Nikola TESLA

Whose daring imagination and concrete accomplishments are among the wonders of our age.

By PAULINE KLOPACKA

WHEN Nikola Tesla died in January of 1943 in comparative seclusion in a New York hotel, he owned no more than the few personal possessions that had become dear to him during the 86 years of his life. Yet his estate was so fabulous that its value can never be truly assessed. And his heirs were the men and women of all the world.

What price can be put on the work of a man who brought into being the electric power era? The industrial giant that the U. S. is today rests on the series of brilliant discoveries and inventions in the harnessing and transmission of electricity conceived by Nikola Tesla, who came to this country from the land of the South Slavs when he was 28 years of age.

It was at midnight between July 9 and 10 in 1856 that a son, Nikola, was born to the Rev. Milutin Tesla and Djouka, his wife, in the little Serbian village of Smiljan, in the province of Lika. Now a part of Yugoslavia, it was at that time under Austro-Hungarian rule.

Tesla's father, a Serb, was a priest of the Greek Church, and his mother of a distinguished Serbian family, came from a long line of inventors. Both father and mother gave to the child a valuable heritage and culture developed and passed on by ancestral families that had been community leaders for many generations.

It was at first planned that the son prepare for the priesthood but Nikola would have none of this. Physics and mathematics fascinated him. He would be a teacher of these favorite subjects. But then he switched to electrical engineering and at the age of 25 a graduate of Prague University—earlier training had been obtained at the Graz Polytechnic in Austria—he was set for his first job.

At that time the American Telephone System was brought to Europe and an installation set up in Budapest, where Tesla was a successful applicant for a position.

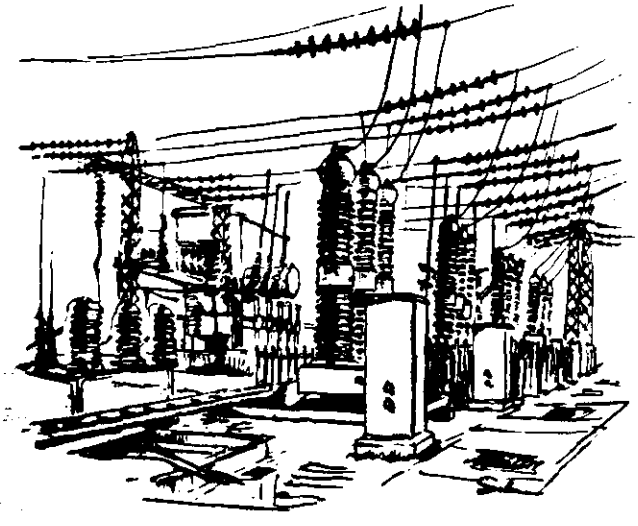

Drawings by Alvena Seckar

THREE years later, in 1884, he was U. S. bound. There were 4 cents in the young immigrant's pocket when he arrived in New York, but that did not disturb him. He had the names of friends. He would soon get to work.

His confidence was well founded, since within a few years he was counted among the ranking scientists of the country, his discoveries bringing in handsome royalties.

It is interesting to note the description of Tesla at this time by his biographer, J. J. O'Neill in the book, "Prodigal Genius": "Tesla was a

spectacular figure in New York in 1891. A tall, dark, handsome well-built individual with a flare for wearing clothes that gave him an air of magnificence, who spoke perfect English but carried an atmosphere of European culture. He was an outstanding personality to all who beheld him." One of his colleagues described him as "immaculately groomed, and of delightful courtesy and charm."

A review of Tesla's work is nothing short of amazing. To quote from J. J. O'Neill's book:

"It was Tesla's invention of the polyphase alternating current system that was directly responsible for harnessing Niagara Falls and opening the modern electric superpower era in which electricity is transported for hundreds of miles to operate the tens of thousands of mass production factories of our industrial system.

"Every one of the tall, Martian transmission lines that stalks across the earth and whose wires carry electricity to distant cities is a monument to Tesla, every dynamo and every motor that drives every machine in the country is a monument to him.

"He discovered the secret of transmitting electric power to the utmost ends of the earth without wires and demonstrated his system by which power could be drawn from the earth anywhere by making a connection to the ground; he set the entire earth in electrical vibration with a generator which sprouted lightning that rivaled the fiery artillery of the heavens. It was a minor portion of this discovery that he created the modern radio system. He planned our broadcasting methods of today 40 years ago when others saw in the wireless only the dot and dash message that might save ships in distress.

"Tesla was an inventor but he was much more than a producer of devices. He was a discoverer of new principles opening many new empires of knowledge which even today have been only partly explored. In a single burst of invention he created the world of power of today.

"He brought into being our electric power era, the rock bottom foundation on which the industrial system of the entire world is builded. He gave us our mass production system for without his motors and currents it could not exist.

"He gave us every essential of current radio. He invented radar 40 years before its use in World War II. He gave us our modern neon and other forms of gaseous tube lighting. He gave us fluorescent lighting. He gave us the high frequency currents which are performing their electronic wonders throughout the industrial and medical world. He gave us remote control by wireless."

Always proud of his national origin, Tesla spoke as follows during his visit to Belgrade in 1892 in answer to a speech of welcome by the city's mayor: "There is something in my which is only perhaps illusory . . . But if I were to be sufficiently fortunate to bring about at least some of my ideas it would be for the benefit of all humanity. If these hopes become one day a reality, my greatest joy would spring from the fact that this work would be the work of a Serb."

Tesla dedicated his life to peace, to lightening the burden of toil from the shoulders of his fellow man. As every scientist who so interprets his function in society, he was stricken when he saw the coming of World War II and his inventions being prepared for destructive purposes. He sought desperately to prevent the war and made available a device which he offered to the world, maintaining that it would make any country, no matter how small, safe within its boundaries. His offer was rejected.

But once the war was an accomplished fact, and when the people's armies rose in defense of their nations in what appeared to be an unequal fight, he did all he could to rally his countrymen to work to the limit in the war effort.

Shortly before his death he wrote as follows to his nephew, M. Sava Kosanovic, now Yugoslav Ambassador to the U. S.:

"President Roosevelt and Donald Nelson, Director of our War Production have repeatedly urged the American people, workers and employers, to meet as fully as possible the goals established for the production of war materials. . . . For that reason, my dear brothers and sisters, as the oldest Serb, Yugoslav and American in the U. S., I am addressing this letter to you, asking you to answer the call of President Roosevelt.

"The achievements of our brothers in the old country are worthy of the spirit which permeates our folklore . . . the fate of the Serbs, Croats and Slovenes is inseparable."

Tesla was not satisfied with his achievements in releasing the earth's energies so that men could work with less backbreaking effort and live more comfortably. The man who could draw up a design for a perfect motor was also concerned with drawing up a plan for a better world. When Tesla read the address of the then Vice-President, Henry A. Wallace, on The Future of the Common Man, he was fired with enthusiasm. The Yugoslav edition of the speech included a preface by Nikola Tesla written in October, 1942:

"Out of this war, the greatest since the beginning of history, a new world must be born, a world that would justify the sacrifices offered by humanity. This new world must be a world in which there shall be no exploitation of the weak by the strong, of the good by the evil; where there will be no humiliation of the poor by the violence of the rich; where the products of intellect, science and art will serve society for the betterment and beautification of life, and not individuals for the amassing of wealth. This new world shall not be a world of the downtrodden and humiliated, but of free men and free nations, equal in dignity and respect for man . . ."

This man, whose work was so advanced of his time that much of it still remains unexplored could have amassed millions, but he was so little interested in personal gain that to save his friend, Mr. Westinghouse, from bankruptcy he tore up a contract which would have brought him $12 millions in royalties. Pressed for funds during the latter part of his life, many of his inventions are lost to the world.

But though he was often short of money he would walk over to Herald Square and feed the pigeons. It was almost a sacred trust, feeding the pigeons twice a day. They had been his personal responsibility through the years, and if he could not be there to do the feeding, a Western Union messenger boy would be hired to do the job in his stead. Often he would forget an important engagement so that he might keep his "date" on Herald Square. The pigeons were a way to relaxation, a note of warmth in an otherwise rigidly disciplined life. He had few friends and never married, since he felt a scientist must keep himself free of personal relationships that would be unduly demanding.

Restless and eager to unravel every possible unknown to the very end of

(Continued on page 49)

GEO MILEV

describes only from the standpo. of his art. . . . In his attitude toward various events in the life around him, which impress him strongly, he does not take sides. He does not praise one and hurt the other; he merely describes everything he sees, describes it with the delicate, sweet colors of poetry. . . ."

Geo was fined 20,000 leva and sentenced to one year in prison. He could not believe that the court could make such a decision. With joking reference to the dullness of "their Honors," he left the courtroom believing that the decision would never be carried out.

He was right. Unable to enforce their decision legally, the government resorted to illegal means.

Next day, May 15, 1925, Geo was kidnapped from his home and killed by underlings of Prime Minister Alexander Tzankoff.

The cultural world of Europe protested Geo's death. Henri Barbusse, of France, visited Bulgaria to investigate the case. In his book "The Murderers" he made reference to the circumstances of Geo's death. Max Reinhardt protested and "regretted the loss of a very gifted theater director." Oskar Kokoshka, in Vienna, recognized the loss of "a precious critic and learned connoisseur of modern art."

Many Bulgarian writers were silent. Fearing for their lives, they did not dare to speak a word for Geo Milev or express regret for his death. The more courageous of them stated that "talent such as Geo's is born only once in a hundred years," that "He was the most cultured Bulgarian," "The most honest and courageous."

THE youth and the common people deeply mourned for Geo. They knew they had lost a sincere friend and teacher. Unable to use the Bulgarian printing presses, they copied his poems by hand and learned it by heart. Bulgarian students abroad printed it in Paris, and in Belgrade. In Prague it was translated into Czech and in Russia into Russian.

A few courageous young people in Bulgaria printed pamphlets about Geo. They were promptly tortured and imprisoned.

We, his family, searched for him for months, but we never learned exactly where and how he was killed.

There were rumors that he had been shot in the mountains, that he had been burned in the furnace of "Public Safety." These measures were used by Bulgarian Fascists long before the world knew of Hitler. Both stories, however, avowed that his spirit was not crushed.

Geo's voice was silenced forever. The murderers triumphed, but they forgot that he who speaks for the freedom of a tormented and deprived people does not die. In today's New Bulgaria, Geo Milev is honored as one of her most cherished sons. Geo's poems are celebrated especially by the youth of today, the heirs of the September Revolution of 1944, which fulfilled his prediction of a decade before that "September will be May."

TESLA

(Continued from page 4)

his life, he read a paper on the occasion of his 80th birthday on the perfection of a tube for atom smashing. As if that were not enough, he also presented a system of interplanetary communication.

Thus the fragmentary story of the life and work of a Yugoslav immigrant who, like so many tens of thousands of his fellow countrymen, left their homeland rather than live as subjects within the Austro-Hungarian empire.

He made a unique contribution to his adopted land, so ideally suited to the full scope of his genius, "the like of which in all *history* could probably be counted on the fingers of one hand."

It is to be hoped that just as he brought electrification to the U. S. in the short span of ten years, his adopted country might assist in the full electrification of the Balkans, reversing its present policy toward New Yugoslavia.

HE AMERICAN SLAV COMMITTEE
of Canton, Ohio
welcomes the new magazine
THE SLAVIC AMERICAN
and projects best wishes for its success. This organ, we know, will be a great contribution to the enlightenment of the homes of American Slavs.

Greetings to the Second Issue
of
THE SLAVIC AMERICAN
and
Best Wishes for Continued Success in the Coming Year
ALL SLAVIC COUNCIL OF NORTHERN CALIFORNIA
739 Page Street, San Francisco, Calif.

GREETINGS FROM
JIM BALANOFF

Greetings from Lodge 3052
American-Russian Fraternal Society, IWO
1010 East Foss Avenue Flint, Mich.

Greetings from
CLUB "YUGO-FORWARD"
Detroit, Mich.

THE STANLEY THEATRE
Presents
The Best Films from the U.S.S.R.
NOW! "THE GREAT GLINKA"
7th Ave. & 42nd St. New York City

Best Wishes for Success to
THE SLAVIC AMERICAN
American Russian Fraternal Society
Lodge 3069
120 Glenmore Ave. Brooklyn, N. Y.

Efficient Service Since 1919
LEON BENOFF
General Insurance Broker
391 East 149th St., New York
MElrose 5-0984
Insurance is cheaper to have than to need

243

FORM NO. 64

Office Men[illegible]dum • UNITED S[illegible] GOVERNMENT

TO : Director, FBI

DATE: April 11, 1949

FROM: SAC, New York

SUBJECT: AMERICAN SLAV CONGRESS;
INTERNAL SECURITY - C
(Bufile 100-56674)

Enclosed are two copies of the Fall, 1948 issue of "The Slavic American", a quarterly, published by the American Slav Congress.

These are being submitted for information only, not for evidence. One copy is being retained in the files of this office.

Encls. 2

[redacted]
100-26200

(b)
(7)
(C)

ALL INFORMATION CONTAINED
HEREIN IS UNCLASSIFIED
2-22-49 SP/RC

~~ENCLOSURE BEHIND FILE~~

-116

EX. 116

RECORDED - 105

INDEXED - 105

100-56674-1168

5 APR 12 1949

FILE

(b)
(7)
(C)

244

CONFID

SLAVIC AMERICAN

a Quarterly

Club Metro Dancers, Chicago

Published by The American Slav Congress

FALL 1948

245

The American Way of Life

"Why Go to War to Keep Others From Having Their Way of Life," asks Adamic

by LOUIS ADAMIC

THE opening lines of the Progressive Party's platform read: "Three years after the end of the Second World War the drums are beating for a third. Civil liberties are being destroyed. Millions cry out for relief from unbearably high prices. The American Way of Life is in danger."

The American Way of Life has been the issue in any American election ever since 1776. Every voter who goes to the polls, votes—intelligently or mistakenly; independently or under the spell of inveterate partisanship—for one or another concept of the American Way of Life.

Of course, various people, living in various circumstances, have various ideas of what constitutes the American Way of Life. I propose to state my ideas of it; also I shall presume to fit those ideas within the frame of the new Progressive Party which must continue to grow from its beginnings in 1948.

As I see the American Way of Life, its principles were born of the American Revolution. They were won in struggle; *nothing* as fundamental and deep-reaching comes easy. They are stated in the Declaration of Independence and the Constitution of the United States. Our job now is to perceive what policies and measures will safeguard the Way against decay and corruption, and will further its growth and evolution to meet successfully the problem of changing times and new conditions. The principles of 1776 are as valid as ever, but life is different today from what it was then. Fortunately growth and change are of the very essence of the American Way.

The first principle of the American Way of Life is the *right to life* itself; and this must be safeguarded against war on the one hand, and on the other against poverty, which in recent decades has taken a far heavier toll than any war in which this nation has ever so far been involved—though the "next war," if we permit it to be drummed up, will reverse the story.

The second principle of the American Way is *liberty* . . . it has always been our slogan and our pride. But we have long been cautioned that its price is eternal vigilance, and we know how to recognize those who have designs on it.

The third principle of our Way is *abundance*. When migrants from Europe first began to settle here, this was a land rich in the gifts of nature; and for all that those gifts have been abused by ignorance and irresponsibility, and particularly by exploiters and monopolists. Our resources are still great enough—if deforestation and erosion are checked in time, and if our mineral resources are properly conserved—to afford abundance, the *good* life, to all the inhabitants of These States.

And a fourth principle of the American Way is *opportunity*.

THE Progressive Party promises to safeguard the *right to life* by avoiding war—always the saddest failure of morality and now the potenial destroyer of human society and the globe itself.

Whether or not we can avoid World War III, I don't know; but I do know this—that if we don't try to avoid it, nothing else is worth trying to do nowadays. It is futile to wonder about the kind of curtains you'll hang up in your living-room . . . futile to write or read books, to go to lectures or to school . . . silly to worry about being called a Red or a Communist, or whatever, or about being hauled up before the fantastic Un-American Activities Committee . . . futile to work at your job, whatever it may be . . . silly to worry about keeping on the good side of whoever can take that job away from you.

War or peace? I don't know; but if we want any sort of future for this country, for the rest of the world, for ourselves and the Russians, for you and me personally, then we'd better work for peace . . . stand up for peace . . . stand up with our new political vehicle, the Progressive Party.

The Progressive Party further proposes to safeguard the *right to life* by abolishing poverty. Cynics, prestitutes, and generally people without hope and vision say this can't be done. They say Henry Wallace is a starry-eyed visionary. We say *it can* be done if we will jealously maintain freedom, bear in mind the limitless capabilities of Americans, and keep the grip of monopoly from arrogating the resources that should serve all, and if we will insist upon the application of the ever more marvelous discoveries and techniques of science for the common good.

The Progressive Party proposes to safeguard *liberty* — not with more lip service, but by adhering fully to the Constitution, including the Bill of Rights and all subsequent amendments, in all their vitality and integrity, and by reviving and enhancing the programs and formulations of Roosevelt's New Deal. The Progressive Party proposes to guard liberty

(Continued on page 26)

LOUIS ADAMIC

Slovenian American author and lecturer, a foremost authority on national groups, he is a prolific writer. Among his works are My Native Land, Dinner at the White House, Two-Way Passage, Nation of Nations, My America. He also edits and publishes a current affairs bulletin, Trends and Tides, issued from his home in Milford, New Jersey.

246

A HALF HOUR OF MUSIC

with

TWO DISTINGUISHED AMERICAN ARTISTS
OF SLAVIC DESCENT

in a unique

Album of Recordings

Now on Sale

ZLATKO
BALOKOVIC
Violinist

IVAN
PETROFF
Baritone

By BALOKOVIC

HYMN TO THE SUN	Rimsky-Korsakoff
CROATIAN RHAPSODY	Lhotka
FOR ONE MOMENT OF JOY	Croatian Folk Song

By PETROFF

LEGEND	Bulgarian Folk Song
PEASANT'S LAMENT	Bulgarian Folk Song
ARIA PRINCE IGOR	Borodin

By BOTH

SONGS MY MOTHER TAUGHT ME	Dvorak
ELEGIE	Massenet

Prize selections for your library long to be cherished and enjoyed

FOUR RECORDS TO EACH ALBUM

$4 the Album

postage prepaid

USE CONVENIENT ORDER BLANK ➔

AMERICAN SLAV CONGRESS
205 East 42nd Street
New York 17, N. Y.

$4 for album of 4 records

I enclose ..... for ☐ album(s)

Name .....

Address .....

City & Zone .....

State .....

(Make checks and money orders payable to
AMERICAN SLAV CONGRESS

The American Way

(*Continued from page 5*)

against that danger which most disturbed the Founding Fathers—the power of the military. And note how all these things are inter-related. Liberty is imperiled by poverty, by monopoly, by war. Every measure which the new party proposes is a measure to safeguard liberty.

By *abundance*, the new party means that our rich land—and our skills, brought here by immigrants from the Old World in the last 300 years—shall produce all that is needed to make the good life available to every law-abiding and industrious man and woman here, and their children, regardless of color, race or religion; and that these fruits of enterprise and labor shall not be so ill-divided that a few are glutted with a surfeit of luxuries while many who toil and sweat must for reasons beyond their control still go "ill-fed, ill-clothed and ill-housed."

The pioneers who first possessed the Atlantic seaboard and later pressed westward through the forests and the prairies, could win abundance by strength and industry, by the wide swing of the axe, the true aim of the flintlock, and the firm hand on the plow. There was *opportunity* galore. Almost any man could get land for the asking or for a few dollars an acre, and become

(*Continued on page 29*)

The American Way

(Continued from page 26)

an independent farmer. Any man could set up a little store in a new community and become a prosperous merchant as the town grew. Almost any man could start a paper, establish a factory or mill, or open a mine, and become an industrialist.

This is no longer true. Millions of square miles have been rendered useless for human use and habitation by irresponsible deforestation and by erosion. The number of family farms dwindles yearly; every day hundreds of independent merchants and small mining, milling and manufacturing companies are forced out of business by the power of monopoly, centered in Wall Street.

The relentless limitation of opportunity, the shrinking of abundance for millions, the violences done to liberty in defiance of the Constitution and in contempt of the tradition that began in 1776, the further threat against freedom in the ominous form of military rule, the denial of life itself to unnumbered victims of poverty, and the grave threat to all our lives in the probability of a war waged with atom bombs and bacteria —these developments, conditions and prospects now imperil the American Way of Life.

The Progressive Party proposes to restore and safeguard and extend that Way—the emphasis is on the word "extend." Nothing in nature stands still, and no more can human economic and social and political institutions. Change is the key principle of the American Way—growth, adaptation, progress. Had it not been for that principle, the USA would not exist—we would not now be debating the decisions made in an election; we would still be colonial subjects, or we wouldn't be here at all.

If we remembered more vividly what daring it took in 1776 to reject monarchy and form a republic, we would have less hesitation in rejecting the National Association of Manufacturers' notions of "free enterprise," and adopting measures more in keeping with today's facts of life. We would not hesitate to defy the greatest power on earth—that of monopoly corporations and cartels, whose agents have lately seized control of the U.S. Government.

Under Henry Wallace's leadership, the Progressive Party offers itself as a medium through which those who love their country and are also in favor of their own rightful individual interests can express themselves politically . . . in 1949 . . . 1950 . . . in 1952, assuming that the "next war," now being drummed up, won't destroy us all before then.

We know now that we have established a firm foundation for the new party under the leadership of Henry Wallace and Glen Taylor. Personally, I was not in this campaign only in reference to this year's election or because I think, as I do think, that Henry Wallace is a great American who should be in the White House in this crucial period. In the main, I was in this campaign because, like Wallace and Taylor, like many other Americans, I became convinced that neither of the old parties is fit to deal with the profound crisis which is coming to a climax in these middle years of the 20th century. I am in this movement because I want to help build a new people's party that will be capable of coping with the crisis now converging upon us and the rest of the world.

LIKE many Americans, I am foreign-born; and every once in a while I hear or read some remark to the effect that I have no right to be doing what I am doing—helping the growth of a new party which hopes to save the peace. Such remarks amuse me. It so happens that I have read rather extensively in American history, not as taught in most schools, but as it really happened; and I am impressed by this fact—that in all crucial or climactic periods in the career of this country, the so-called foreigners played important roles.

The Irish and German elements, for instance, were the big "foreign" groups around 1776, and it was they who became the backbone of General Washington's revolutionary army. The Irish and German elements also furnished the mass support to Thomas Jefferson when he started a new party 150 years ago. Jefferson did not triumph immediately (as Wallace didn't); his supporters stood it with him until he did (as I hope we will

(Continued on page 30)

Greetings From

MARY ANTONIC
BOZO BARANIC
MILO BARANIC
JOHN BEZELJ
PAUL BIAZEVICH
KAY BEGOVICH
FLORENCE FERKICH
GEORGE GELSOVICH
STEVE HROSTI
FRANK KURSOC
LJUBICA LOVRICH
ANTON PESUSICH
ERICA PETRAS
NICK PETRICH
A. PUJATCKY
LUCY LJUBENKO

Lodge 3172, A.R.F.S., Sioux City, Iowa

PETER ZAKUTONSKY
LOUIS KLYM
MARY KLYM
HELEN WONSOWIC
PAUL ROMANOV
MARY ROMANOV
BRANCH No. 14 LEMKO ASS'N, GARY, IND.
BRANCH No. 3295, IWO, CARPATHO-RUSSIANS, GARY, IND.
MILLIE KLYM
MICHAEL KLYM
ANNA SAMOZKA
WALTER IVANZOWICZ

A.S.C. of Newark, N. J.

JOHN J. KASKEVICH, M.D.
530 Summer Ave., Newark

JOHN BENKO
JOHN DOLINAJEC
MICHAEL DROBAN
STEVEN DZUROSKA
STEPHEN HRUSKA
TILLY JANOVITZ
MICHAEL KOLARIK
STEFAN LACKO
JOSEPH MATEJKA
MICHAEL MATEJKA
JOSEPH MEDVECKY
IMRO RIBAR
SHEPERO SHOE STORE
MATEJ STROMKO
STEFA TAL
JOSEPH TURZA
FRANK ZAVARTKAJ
JOSEPH ZILINEK

248

Delegates join in singing the National Anthem.

The American Way

(Continued from page 29)

with Wallace). The same was true again in the period of Andrew Jackson, when American democracy took another long step forward. When Lincoln came along and started a new party, his most steadfast backing came from the numerous new-immigrant groups—Germans, Finns, Poles, Scandinavians and others.

This was quite natural. As newcomers who came here seeking liberty, abundance and opportunity, they had a more acute sense of what America professed, and they took American principles more seriously than many of the old-line Americans who had begun to be matter-of-fact, if not smug, about the country. As newcomers, they were somewhat outside the mainstream of American life. By going behind the cause of Washington, Jefferson, Jackson and Lincoln, they became part of the mainstream. They promoted themselves from second-class citizens to first-class. It was Americanization at its very best. It made history, it enriched the traditions, it integrated the new Americans into the country as a whole.

And it is quite natural, and very fortunate, that many of us in the new-immigrant groups have joined with many old-line Negro Americans, with many white Americans of the earlier immigration waves, with Henry Wallace, in this movement to form a new party and make it competent to deal with the complex problems looming before us. Many of us Slavic Americans already in 1946 and early in 1947, sensed that Henry Wallace was right, and we became part of the growing impulse to form a new party. Regardless of what some of our opponents have said, this fact is strictly and wonderfully in the American tradition. It is part of the Americanization process. It is according to the American Way. We are promoting ourselves from second-class to first-class citizenship. This is resented by some of the Americans of the older strains, the self-styled standard Americans; but don't let that worry you too much. They, too, are being Americanized or re-Americanized as you assume your full rights and duties of citizenship. Americanism has its standards, to be sure; very high standards; but it is not anything rigid or dead; it is alive, vital, open to change and enrichment.

Slavic Americans are part of the whole immense American dynamic which is as yet little understood, and is full of promises and dangers. By coming here, we of the new immigration greatly complicated the American civilization as it was, say, 90 or 100 years ago. Most Slavic immigrants became workers in the great industries, and now their energy is integral with the American scene as a whole. Most immigrants in the last 100 years or so worked hard, many of them too hard at too little pay, and helped to create a complex industrial machine which, lest it overwhelm us, now needs intelligent handling and control. It is our duty to take an active interest in finding an approach to the immense industrial, economic and social problems facing us: for, let me repeat, our coming here and our labors in the last several decades have helped to create these problems.

Most of us who came over were ordinary people. But in the new immigration waves were also some extraordinary human beings. There was, for instance, a man of genius, Nikola Tesla. His numerous inventions now are one of the most important factors in the immense American industrial scheme which throbs with the high promises that pulsated through Tesla's brain, but which are also full of dangers. Personally, as one who happens to be proud of being of the same background as was Tesla, I feel it is my special duty to help do what is necessary to insure that Tesla's work, as well as the work of ordinary men and women, will go into the fulfillment of promises in our American Way of Life, rather than contribute to the catastrophe now threatening.

IN 1942, Henry Wallace made his famous speech on "The Century of the Common Man." Nikola Tesla, who was a very uncommon man, publicly endorsed that speech in glowing terms. And I think that I speak not only for myself, but also for Tesla, when I assert that the American Way of Life is not the way of incredibly greedy monopoly profits and prohibitive prices for the necessities of life. Look at this picture: Millions of men in their best years who fought and suffered, many of whom will carry greater or lesser disabilities to their graves—veterans to whom we said "Nothing is too good for you"—are unable to secure homes of minimum decency and convenience. Their families cannot be adequately fed with meat at 70¢ to $1.20 a pound. Whatever wage increases they may secure

(Continued on page 32)

249

comments from our readers

Dear Editor:

Our small club of eight members, from a small mining community in Pennsylvania, until recently was known as the Rural Ridge Busy Knitters Club. We are now a chapter of the Congress of American Women.

We have only fifteen dollars in our treasury and out of this we are sending you $10, because of our desire to contribute to the work you are doing.

May it help in some way towards *The Slavic American's* fight for freedom and democracy.

Anna Tominac, Pres.
Anne Kondrick, Sec'y.
Julia Pukavina, Treas.
Rural Ridge, Pa.

Dear Editor:

I send you post haste my renewal subscription for *The Slavic American.*

In all sincerity—keep up the good work for you are doing an excellent job in the struggle against fascism.

I never miss an issue.

Rev. Eliot White
New York, N. Y.

Dear Editor:

How about more profiles on Slavic American writers and scientists like Nikola Tesla? The field for this type of material is virtually endless.

Anton Markulic
Los Angeles, Calif.

(See page 13—Ed.)

The American Way

(Continued from page 30)

through their unions, increased living costs still stay one jump ahead of them.

We of the Progressive Party say this is not the American Way of Life. And "we" includes great numbers of ex-GIs and young workers, old-stock Americans and immigrants: Americans of all breeds and backgrounds.

If all Americans are employed at better than mere-existence wages or are engaged in business or professional activities at a reasonable compensation; if all Americans are well clothed and fed; if all Americans are secure instead of uncertain and worried, as the majority are today, there will be no war. The Hearsts, Peglers, Forrestals and Bullitts won't get to first base in trying to propagandize us into fear and hate of other countries which are emerging out of backwardness and, because of their different historic experiences, are attempting a different system for providing benefits and opportunities for their citizens.

Why go to war to keep others from having their way of life? We in the Wallace movement, in the Progressive Party, insist on peace in order to keep the American Way of Life. If our approach prevails in time, there will be no war and Russia will be no danger to America, to the American Way of Life. The chief danger to this country and to our institutions under the Constitution lies in our present high-level politicians and wire-pullers who have raised the cry of Communism and of the Russian menace as a smokescreen to neutralize any possible militancy on the part of labor, to scare us in the new-immigrant groups, to frighten the Negroes, and to confuse the people generally so they won't be able to figure out who or what is responsible for high living costs. Henry Wallace clearly means what he says; so he and his active supporters were smeared, lest too many voters vote for him and in their own interest.

The old-line politicians and wire-pullers and their propagandists are not afraid of Communism, but of American democracy and of the American people; of the people getting wise to themselves and demanding a return to the American Way of Life—the Way defined in the Declaration of Independence and the Constitution of the United States.

That's what *they* are afraid of . . . that's what *we* Progressives stand for . . . and that's what will prevail if you and I, all of us and all of our neighbors wherever we come from, do everything in our power to build the new party that has come into being around the personality and political philosophy of Henry Wallace. We, all of us, will have to do all we can in this post-election period to make of the Progressive Party a party capable of saving the country and helping to bring about a world in which the American Way of Life will include not warlike antagonism, but constructive interest in the ways of life in other countries.

250

SECRET

FEDERAL BUREAU OF INVESTIGATION

Form No. 1
THIS CASE ORIGINATED AT CINCINNATI, OHIO

NY FILE NO. 100-27583 MBJ

REPORT MADE AT	DATE WHEN MADE	PERIOD FOR WHICH MADE	REPORT MADE BY
NEW YORK CITY	11/13/43	10/6,7, 25-28/43	[redacted] (b)(7)(C)

TITLE [redacted] (b)(7)(C) 0/S

CHARACTER OF CASE: SECURITY MATTER - C.

SYNOPSIS OF FACTS: (S) [redacted] (S)

(b)(7)(C)
(b)(7)(D)
0/S

APPROPRIATE AGENCIES AND FIELD OFFICES ADVISED BY ROUTING SLIP(S) OF CRS DATE 9/16/82

CONTAINED ... UNCLASSIFIED ... WHERE SHOWN OTHERWISE

Lee INS - Detroit FNC 2-17-49 L-6-59 R-367

IES DESTROYED

- R U C -

REFERENCE: Bureau File #100-118061
Report of Special Agent [redacted] dated (b)(7)(C)
July 17, 1943 at Cincinnati, Ohio.

DETAILS: At New York, N. Y.

This investigation is predicated upon a request in

DECLASSIFIED ON 9-17-87
BY 3042 pwt/EAn
appeal # 87-0499

Class. & Ext. By JP-1 GSR/RDD
Reason - FCIM II, 1-2.4.2 2+3
Date of Review 7/30/92 7/30/82

APPROVED AND FORWARDED: E. E. Conroy SPECIAL AGENT IN CHARGE

DO NOT WRITE IN THESE SPACES

100- 118061 - 47

RECORDED & INDEXED

75

30 NOV 16 1943 (b)(7)(C) [redacted]

COPIES OF THIS REPORT
5 - Bureau
4 - Cincinnati (2-USA, Dayton) (#100-4083)
2 - New York

SECRET

7—2021

251

SECRET

NY 100-27583

reference report that indices of the New York office be checked against the names of the persons [redacted] (b)(7)(C)

SAVA KOSANOVICH first came to the attention of the Bureau in January, 1943, after the death of NIKOLA TESLA, one of the world's outstanding scientists in the electrical field. During his lifetime, TESLA conducted many experiments in connection with the wireless transmission of electrical power and just prior to his death, was interested in what is commonly called the "death-ray". (S) U

The notes and records of TESLA's experiments and formulae, together with designs of machinery necessary for their operation, were reported to be among TESLA's personal effects, after his death. (S) U

It was reported that KOSANOVICH claimed to be a nephew of TESLA, and he attempted to secure possession of TESLA's personal effects, and hired a private locksmith to gain access to TESLA's possessions. The Bureau was interested because of the supposedly vital importance of TESLA's inventions and the desire to keep them out of enemy hands, as one informant maintains that KOSANOVICH was pro-Axis in his sympathies. The matter was later handled as an alien enemy, custodial detention matter and no further investigation conducted by this office. (S) U

The Bureau advised by letter of January 21, 1943, that its files revealed confidential information concerning NIKOLA TESLA and his inventions and advised that one NICOLA TESLA, who might be identical with NIKOLA TESLA, made a speech in Springfield, Massachusetts on July 4, 1922 under the auspices of the Friends of Soviet Russia. (S) U

(S) [redacted] (S) U (b)(7)(C)

(S) U

SECRET

252

STANDARD FORM NO. 64

Office Memorandum • UNITED STATES GOVERNMENT

TO : MR. TOLSON

DATE: Jan. 30, 1951

FROM : L. B. NICHOLS

SUBJECT: [redacted]

(b)(7)(c)

ALL INFORMATION CONTAINED HEREIN IS UNCLASSIFIED DATE 2-22-89 BY SP1AGCom #241860

Tolson
Ladd
Clegg
Glavin
Nichols
Rosen
Tracy
Harbo
Belmont
Mohr
Tele. Room
Nease
Gandy

[redacted] called yesterday and said he would be in town for the next two or three days and wanted to see me. I told him I would be glad to see him late yesterday or today at his convenience. He is coming in today at 2:30 p.m.

I asked him if there was anything special which would require my doing any checking. He stated there were two things he wanted to discuss.

1. The case of Nicola Tesla and Abraham A. Spanel, President of International Latex Corporation, [redacted]

Our files reflect that Nicola Tesla was one of the world's outstanding scientists and in fact designed the generators installed at Niagara Falls. He died in New York on January 7, 1943, and is supposed to have left details and plans for a so-called death ray. [redacted]

(b)(7)(c)

Our files also reflect that Colonel Erskine of Military Intelligence called us on January 9, 1943, advising that Tesla had died, that A. Spanel had communicated with the War Department regarding this death, that Tesla had a nephew named Sava Kosanovich who had taken possession of Tesla's papers and Spanel thought the papers might be used against our Government.

We made an immediate inquiry in New York and the first report was that Kosanovich and others entered Tesla's room with the aid of a locksmith, broke into a safe containing some of Tesla's valuable papers including formula.

Coincident with this, on January 8, 1943 L. M. C. Smith called Mr. Tamm regarding the death of Tesla and Smith stated he was talking to the Alien Property Custodian about seizing these items.

We interviewed Spanel who expressed concern over Tesla's effects and Spanel stated that Kosanovich had turned over the effects of Tesla to the Alien Property Custodian. Spanel further stated the day before Tesla died, he tried to get in touch with the War Department to make available certain patents.

SE 2 1/00 - 346930-1

5 [redacted] 4 1951

RECORDED - 18

MAR 2 1951

COPIES DESTROYED

R94 JUL 27 1962

EX. - 8

INDEXED - 18

[redacted]

(b)(7)(c)

253

[redacted] (b)(7)(C)

In 1945, we talked to a Private Bloyce Fitzgerald, who stated he had been associated with Tesla, and that the Army believed that Tesla's "death ray" is the only defense against atom bombs.

It was very clear we had no responsibility for Tesla's effects, that the Alien Property Custodian seized them and we learned later that Naval authorities made microfilms of all his papers.

Kosanovich communicated with the Bureau on March 29, 1950, and under date of April 3, 1950, in response to his request for the microfilms of the papers of Tesla, who was a relative of Kosanovich, we advised Kosanovich that this Bureau had never been in possession of Tesla's papers.

[redacted] (b)(7)(C) (b)(7)(D)

Senator [redacted] furnished the Bureau five communications received from a [redacted] which pertained primarily to Abraham Spanel. This individual mentioned the FBI at length in these communications, pointing out that Mr. Foxworth had been called in on the Tesla case but was killed shortly thereafter. He further stated that he was associated with Fitzgerald and as such came in touch with Tesla. He stated the FBI investigated this matter but their hands were tied, that there was nothing the FBI could do as they had been stopped from a higher level, that [redacted] the FBI Agent he dealt with, resigned and requested never to discuss the matter with him again, that he had a wife and family to consider and that the last hope was Congress. These communications were furnished to the Department on September 19, 1950. (b) (7) (C)

[redacted] (b)(7)(C)

[redacted] (b)(7)(C)

We did have an Agent, [redacted] who entered on duty [redacted] resigned [redacted] The file does not indicate that we have ever interviewed [redacted] on the basis of [redacted] allegations.

I think we should see what specifics [redacted] wants. I think we can tell him on the Tesla papers that when they were reported to us, the Department stated that the Alien Property Custodian was going to seize the papers and that we learned Spanel had called the War Department about the papers falling into the wrong hands. [redacted] (b)(7)(C)

Right. H.

I agree. H.

Why wasn't he interviewed?

H. 3 -

255

STANDARD FORM NO. 64

Office Memorandum • UNITED STATES GOVERNMENT

TO : D. M. Ladd

FROM : E. G. Fitch

SUBJECT: [redacted] (b)(7)(C)

INTERNAL SECURITY - R

DATE: August 30, 1946

Mr. Tolson
Mr. E. A. Tamm
Mr. Clegg
Mr. Coffey
Mr. Glavin
Mr. Ladd
Mr. Nichols
Mr. Rosen
Mr. Tracy
Mr. Carson
Mr. Egan
Mr. Gurnea
Mr. Hendon
Mr. Pennington
Mr. Quinn Tamm
Mrs. Room
Mr. Nease
Miss Beach
Miss [illegible]

Mr. Lyon of the State Department informed Mr. Roach that he obtained a note from Colonel Grombach, Special Intelligence, War Department concerning the above mentioned individual. Mr. Lyon was of the opinion that the information supplied by Colonel Grombach may be of interest to the Bureau.

The information as obtained from Colonel Grombach by Mr. Lyon is quoted as follows:

NR [redacted] (pronounce: [redacted] and according to common saying his mistress, arrived apparently together with or shortly after [redacted] It is supposed [redacted] Nicolas Tesla the well known scientist, residing in Cleveland, Oh., (probably American citizen) [redacted]

see [redacted] (b)(7)(C)

(b)(7)(C)

RECOMMENDATION

It is suggested this memorandum be referred to the Internal Security Section for its information.

(b)(7)(C)

[redacted]

(b)(7)(C)

RECORDED & INDEXED 206

SE 26

100-348245-1

F R I

JAN 14 1947

53 JAN 23 1947

EX-16

(b)(7)(C)

5-[redacted]

256

FD-72
(1-10-49)

FEDERAL BUREAU OF INVESTIGATION

FORM NO. 1
THIS CASE ORIGINATED AT WASHINGTON FIELD

SECURITY INFORMATION - CONFIDENTIAL

REPORT MADE AT	DATE WHEN MADE	PERIOD FOR WHICH MADE	REPORT MADE BY
WASHINGTON, D. C.	JUN 1 1952	5/9,10,13,16,26/52	[redacted] SA

TITLE		CHARACTER OF CASE
[redacted] (b)(7)(C)	FOI/PA # 291860 APPEAL # CIVIL ACTION # REQUEST # 12,356	ESPIONAGE - R (b)(1)(c)

SYNOPSIS OF FACTS: DATE 2-16-89 [illegible] 6cm SI is [redacted] (b)(1)

2-16-89
Classified by SP1AAC4pn
Declassify on: OADR
291860

ALL INFORMATION CONTAIN
HEREIN IS UNCLASSIFIED
EXCEPT WHERE SHOWN
OTHERWISE

ICC by R/S as collected by Special to SIS

State OJH 7-11-52.

[redacted] (b)(1)(c)

Subject in interview and signed statement says [redacted]

(b)(1)(c)
(b)(7)(D)

Accompanied [illegible] by copy by [illegible] to AMEMB Nicosia 7-17-52 memo

photocopy

AGENCY OSI DIST OFF 4
REG. REC'D. 11-13-52
REPT. FORW. 12-1-52
BY [redacted]

DETAILS: AT WASHINGTON, D. C.: Re: [redacted] (b)(3)(A) (b)(1)(c) (b)(1)(s)

APPROVED AND FORWARDED:	SPECIAL AGENT IN CHARGE	DO NOT WRITE IN THESE SPACES
		100-356557-99 RECORDED - 19
		INDEXED 19
		JUN 26 1952 10 (b)(7)(c) SECRET

COPIES OF THIS REPORT
(6) - Bureau (100-356557)
1 - San Francisco (100-29336)(Info)
1 - Los Angeles (65-5203)(Info)
1 - New York (65-14842)(Info)
3 - Washington Field (100-19816)
E 49

E 9 AUG 1 1952

PROPERTY OF FBI - This confidential report and its con[illegible] you by the FBI and are not to be distributed outside of agency to w[illegible]

257

SECRET

[redacted]

(b)(7)(C)
(b)(7)(D)

INTERVIEW OF THE SUBJECT

(b)(7)(D) [redacted] was interviewed at the Washington Field Office by SA [redacted] and the reporting Agent, on May 9, 10, and 13, 1952, and by [redacted] and the reporting Agent, on May 26, 1952. (b)(7)(C)

History Prior to Entering United States

(b)(7)(D)

[redacted]

(b)(7)(C)

SECRET

258

[redacted]

Acquaintanceship with Officials in the Yugoslav Government

[redacted] admitted at this time he was interested in Yugoslav matters, Yugoslav progress in engineering, and their advances in equipment. He said he was also desirous of making the acquaintance of NIKOLA TESLA, who was an outstanding Yugoslav scientist and one of the founders of Westinghouse.

[redacted] (b)(2)(C)(b)(7)(D)

[redacted] He said KOSANOVIC was not a great

[redacted]

SECRET

administrator, but he has considerable respect for him in many ways. He believes that KOSANOVIC emphasized to the Yugoslav government that he (KOSANOVIC), would be especially effective as Ambassador because he was a nephew of TESLA (mentioned above) and a friend of Mayor LA GUARDIA, and other influential persons in this country.

[redacted]

(b)(7)(D)

[redacted]

SECRET

260

XXXXXX
XXXXXX
XXXXXX

FEDERAL BUREAU OF INVESTIGATION
FOIPA DELETED PAGE INFORMATION SHEET

2 Page(s) withheld entirely at this location in the file. One or more of the following statements, where indicated, explain this deletion.

☒ Deletions were made pursuant to the exemptions indicated below with no segregable material available for release to you.

Section 552		Section 552a
☒ (b)(1)	☐ (b)(7)(A)	☐ (d)(5)
☐ (b)(2)	☐ (b)(7)(B)	☐ (j)(2)
☐ (b)(3)	☐ (b)(7)(C)	☐ (k)(1)
_____	☐ (b)(7)(D)	☐ (k)(2)
_____	☐ (b)(7)(E)	☐ (k)(3)
_____	☐ (b)(7)(F)	☐ (k)(4)
☐ (b)(4)	☐ (b)(8)	☐ (k)(5)
☐ (b)(5)	☐ (b)(9)	☐ (k)(6)
☐ (b)(6)		☐ (k)(7)

☐ Information pertained only to a third party with no reference to you or the subject of your request.

☐ Information pertained only to a third party. Your name is listed in the title only.

☐ Documents originated with another Government agency(ies). These documents were referred to that agency(ies) for review and direct response to you.

_____ Pages contain information furnished by another Government agency(ies). You will be advised by the FBI as to the releasability of this information following our consultation with the other agency(ies).

_____ Page(s) withheld for the following reason(s): _____

_____

☐ For your information: _____

_____

☐ The following number is to be used for reference regarding these pages:

_____

XXXXXX
XXXXXX
XXXXXX

XXXXXXXXXXXXXXXXXXXXXX
X DELETED PAGE(S) X
X NO DUPLICATION FEE X
X FOR THIS PAGE X
XXXXXXXXXXXXXXXXXXXXXX

FBI/DOJ

Report Form
FD-263 (5-22-55)

FEDERAL BUREAU OF INVESTIGATION

Reporting Office	Office of Origin	Date	Investigative Period
WASHINGTON FIELD	BUREAU	3/28/60	2/18-3/15/60

TITLE OF CASE

[redacted] (b)(7)(C)

Applicant, Pan American Union,
Washington, D. C.

Report made by: [redacted] (b)(7)(C)

Typed by: mjr

CHARACTER OF CASE

LOYALTY OF EMPLOYEES OF THE UNITED NATIONS AND OTHER PUBLIC INTERNATIO ORGANIZATIONS

Synopsis

REFERENCE

Bulet dated 2/15/60;
Bu airtels dated 2/25 and 3/10/60;
Seattle airtel dated 2/26/60;
Baltimore airtels dated 2/27 and 3/4/60;
Norfolk airtel dated 3/1/60;
San Francisco airtel dated 3/3/60;
New York airtels dated 2/26, 3/3,4,10/60;
Chicago airtel dated 3/5/60;
Springfield airtel dated 3/8/60;
New Haven airtel dated 3/9/60.

DO TO: 5-3-1
REQ. REC'D 3/1
MAR 14 1960
ANS. [redacted]
BY:

(b)(7)(C)

- P -

2-21-89 SP/AGGUM

291860

Approved

Special Agent In Charge

Copies made:

6 - Bureau (138-4457) (Enc 6)

1 - Washington Field (138-4085)

Do not write in spaces below

138-4457-83

MAY 24 1960

[redacted]

(b)(7)(C)

cc CSC

[redacted]

Property of FBI - This report is loaned to you by the FBI, and neither it nor its contents are to be distributed outside the agency to which loaned

☆ U. S. GOVERNMENT PRINTING OFFICE: 1955 O—344750

262

204 (Rev. 3-3-59)

CONFIDENTIAL

UNITED STATES DEPARTMENT OF JUSTICE
FEDERAL BUREAU OF INVESTIGATION

SECRET

Copy to:

Report of: [redacted] Office: Washington, D. C.
Date:

Field Office File No.: 138-4085 Bureau File No.: 138-4457

(b)
(7)
(c)

Title: [redacted]
Applicant, Pan American Union,
Washington, D. C.

2-21-89
Classified by SPIA [illegible]
Declassify [illegible]
291860

Character: LOYALTY OF EMPLOYEES OF THE UNITED NATIONS AND OTHER PUBLIC INTERNATIONAL ORGANIZATIONS

Synopsis:

[redacted]

(b)
(1)
(b)
(7)
(c)

[redacted] has been interviewed on various occasions [redacted]

(b)
(7)
(D)

- P -

CONFIDENTIAL

SECRET

This document contains neither recommendations nor conclusions of the FBI. It is the property of the FBI and is loaned to your agency; it and its contents are not to be distributed outside your agency.

263

[redacted] (c)

[redacted] (b) (1)

(c)

INTERVIEWS WITH [redacted]

On June 7, 1947, [redacted] was interviewed by SAs [redacted] and [redacted] of the Chicago Office.

[redacted] (b) (7) (D)

[redacted] (b) (7) (C)

(b)(7)(C) [redacted]

[redacted] admitted at this time he was interested in Yugoslav matters, Yugoslav progress in engineering, and their advances in equipment. He said he was also desirous of making the acquaintance of NIKOLA TESLA, who was an outstanding Yugoslav scientist and one of the founders of Westinghouse.

[redacted] He said KOSANOVIC was not a great administrator, but he has considerable respect for him in many ways. He believes that KOSANOVIC emphasized to the Yugoslav government that he (KOSANOVIC), would be especially effective as Ambassador because he was a newphew of TESLA (mentioned above) and a friend of Mayor LA GUARDIA, and other influential persons in this country.

[redacted]

(b)(7)(C)

(b)(7)(D)

Nikola Tesla

Colorado Springs Notes 1899-1900

NOLIT

Beograd, Yugoslavia, 1978

THE MANUSCRIPT OF NIKOLA TESLA PREPARED FOR PUBLICATION BY THE NIKOLA TESLA MUSEUM, BEOGRAD

SCIENTIFIC COMMENTARIES BY

ALEKSANDAR MARINČIĆ, D.Sc.

ASSOCIATE PROFESSOR OF ELECTRICAL ENGINEERING BEOGRAD UNIVERSITY
SCIENTIFIC ADVISER TO THE NIKOLA TESLA MUSEUM

THIS BOOK HAS BEEN PUBLISHED WITH
THE HELP OF THE YUGOSLAV FEDERAL ADMINISTRATION FOR INTERNATIONAL
SCIENTIFIC, EDUCATIONAL, CULTURAL AND TECHNICAL COOPERATION

Copyright © 1978 by
Nikola Tesla Museum, Beograd

Published by Nolit,
Beograd, Terazije 27, Yugoslavia

All Rights Reserved
No part of this book may be reproduced in any form by photostat, microfilm, or any other means, without written permission from the publisher

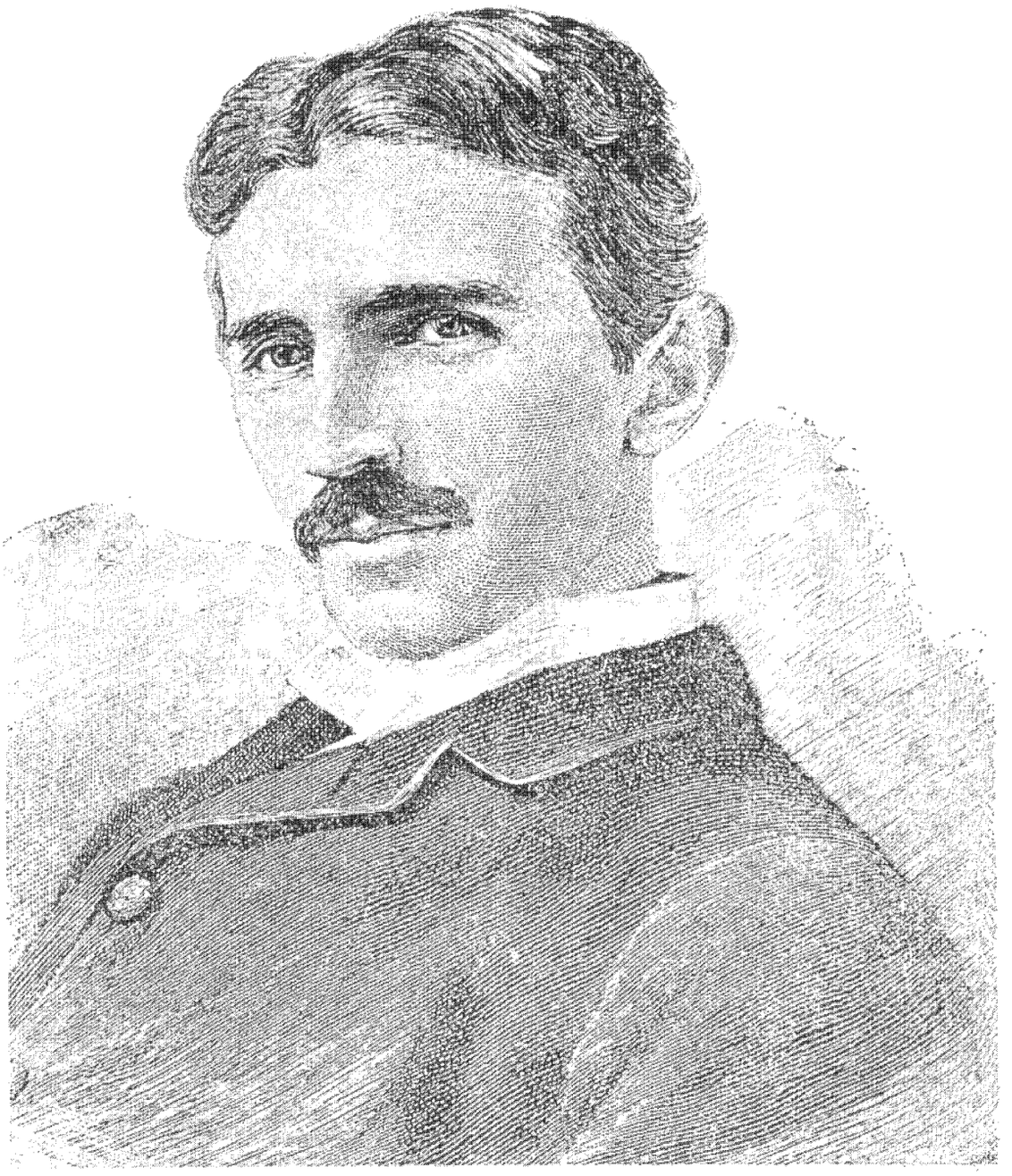

CONTENTS

Introduction 11

June 1—30 23
July 1—31 53
August 1—31 125
September 1—30 169
October 1—31 199
November 1—30 251
December 1—31 305
January 1—7 341

Commentaries 395

PREFACE

The Nikola Tesla Museum is publishing the third book from the legacy of Nikola Tesla — his research diary written in Colorado Springs.

The previous two books contain works that had already been published and had thus been accessible to the public.

The most significant of Tesla's works had been selected and published in their integrity in the first book (Nikola Tesla: Lectures, Patents, Articles, Beograd, 1956 /in English/) while the most important reviews of Tesla's works and the appreciation of their significance for world science are contained in the second book (Tribute to Tesla, Beograd, 1961).

Tesla's manuscript (written in English), that has up to now remained unpublished and unknown to the public, is appearing in this book for the first time.

Nikola Tesla did not write his diary for the public, but exclusively for his personal use. Obviously, he was writing it to have an insight into the course of his research and due to the exceptional extent of the experiments of his research in the isolated laboratory he had erected in 1899 on the slopes of the mountain Pikes Peak, he was probably writing it with the wish to leave behind some evidence in case of fire or destruction of his laboratory. Tesla evidently did not intend to publish this diary and left it among his other notes and writings. It was not until the whole legacy of Nikola Tesla had been systematically examined and put in order in the Nikola Tesla Museum that the manuscript of this diary was discovered.

Like all testimonies of this kind, the diary of Nikola Tesla has the value and fascination of a most genuine testimony because it reveals Tesla's ideas in an important period of his research. It reveals the extraordinary enthusiasm and fervour of his inexhaustible and strikingly exploring imagination. In fact, this diary brings to light all that made Tesla different from all other researchers: his creative spirit which often bewildered, amazed and infuriated many of his contemporaries and even some well-informed scientists, to whom it seemed that Tesla's ideas belonged to the sphere of illusion rather than to the acknowledged course of science. Tesla thus shared the fate of all exceptionally great and far-sighted explorers.

In fact, when one carefully studies the entire work of Tesla one can see that his principal aim was very clear: to search for the inexhaustible possibilities of dominating the forces

of nature and subordinating them to human purposes thus increasing immensely the power of man and mankind in order to live more humanly. All that Tesla had done was subordinated to this principal aim. All his experiments in Colorado Springs, dealt with in this diary, had also been dedicated to this basic aim. Because of the extraordinary dimensions of his experiments, which would be unusual even for present-day experimental work in this field, this diary is not only a valuable historical testimony but also an inexhaustible inspiration for further research even when some mistakes are spotted. Tesla was so ingenious and devoted to his indefatigable search for new knowledge that he could permit his little errors to feed all kinds of small-minded people who learned how to calculate well but could never learn to seek for new ways of knowledge because they didn't have a creative gift.

Preliminary arrangements to prepare this diary for publication required a lot of time, effort and collaborators. The Nikola Tesla Museum thanks them all and especially the author of the commentaries, Prof. Aleksandar Marinčić.

By publishing this diary the Nikola Tesla Museum wishes to mark the 120th anniversary of Tesla's birth, which has been celebrated all over the world, as well as to underline the deep devotion which Tesla felt towards this country where he was born.

Beograd, December 1977

INTRODUCTION

In 1898 Tesla's creativity in the field of high frequencies was at its peak. From his initial ideas in 1890 and his first, pioneering steps, he had worked with such intensity that many of the inventions and discoveries which he had given the world by this time have remained unsurpassed to this day. Even the loss of his laboratory on Fifth Avenue in 1895, a severe blow for him, did not hold him back for long. He soon resumed his experiments in a new laboratory, on Houston Street, continuing to make new discoveries and inventions applying them with unflagging energy.

Tesla's polyphase system essentially solved the problem of generating, transmitting and utilization of electrical power. When he started working on high frequencies, he almost immediately began to perceive their vast possibilities for wireless transmission of "intelligible signals and perhaps power". He worked on the practical development of his first ideas of 1891—1893 at such a rate that by 1897 he had already patented a system for wireless transmission of power and an apparatus utilizing this system. Shortly before this, during the ceremonial opening of the hydroelectric power plant on Niagara, at a time when the world was only just coming around to Tesla's polyphase system which for the first time in history enabled the transfer of electrical power over distance, he said: "In fact, progress in this field has given me fresh hope that I shall see the fulfillment of one of my fondest dreams; namely, the transmission of power from station to station without the employment of any connecting wires."[16]

Always true to the principle that ideas must be experimentally verified, Tesla set about building powerful high-frequency generators and making experiments in wireless power transmission. The Nikola Tesla Museum in Belgrade posesses a Tesla's own slide which confirms that the experiment described in the patent "System of transmission of electrical energy"[13] was in fact carried out before the Examiner-in-Chief of the U.S. Patent Office. For experimental verification of his method of wireless power transmission "by conduction through the intervening natural medium", on the global scale Tesla needed still higher voltages and more room (in the Houston Street laboratory he generated voltages of 2 to 4 MV using a high-frequency transformer with a coil diameter of 244 cm), so towards the end of 1898 he began looking for a site for a new laboratory. Mid-1899

he finally decided on Colorado Springs, a plateau about 2000 m above sea level, where he erected a shed large enough to house a high-frequency transformer with a coil diameter of 15 meters!

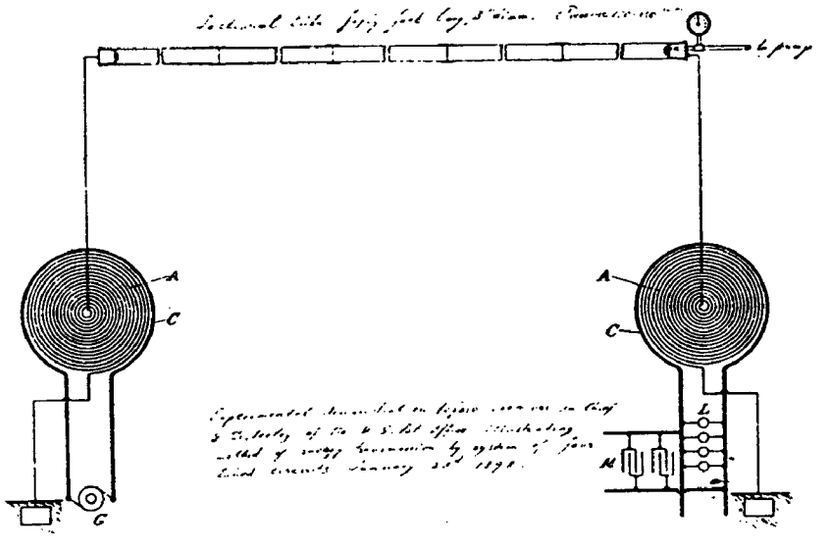

Fig. 1c. Diagram of an apparatus demonstrating transmission of electric power through rarified gas (Tesla's own slide now at the Nikola Tesla Museum, Belgrade)

Tesla's arrival in Colorado Springs was reported in the press. According to the Philadelphia "Engineering Mechanics" Tesla arrived on the 18th of May 1899 (according to[68] he left New York on 11th May 1899), with the intention of carrying out intensive research in wireless telegraphy and properties of the upper atmosphere. In his article "The transmission of electric energy without wires" (1904[1]) Tesla writes that he came to Colorado Springs with the following goals:

1. To develop a transmitter of great power.
2. To perfect means for individualizing and isolating the energy transmitted.
3. To ascertain the laws of propagation of currents through the earth and the atmosphere.

Tesla had some ten years of experience with high frequency AC behind him by the time he moved to Colorado Springs. In 1889, on his return from Pittsburg where he had been working as a consultant to Westinghouse on the development of his polyphase system, he began work on the construction of an alternator for generating currents at much higher frequencies than those used in ordinary power distribution. In 1890 he filed applications for two patents[2] for alternators working at over 10 kHz. One of these patents was in conjunction with a method for achieving quiet operation of arc lamps, but this was in fact a first step towards a new application of alternating currents, which soon became known as "Tesla currents". Tesla's alternators were an important milestone in electrical engineering and were the prototypes for alternators which were used some quarter-century later for driving high-power radio transmitters, and later on also for inductive heating.[24]

Soon after he had started his research in high frequencies Tesla discovered there specific physiological action and suggested the possibility of medical applications. He did

a lot of work on the utilization of high frequency AC for electric lighting by means of rarefied gas tubes of various shapes and types. During 1891 he publicized his results in journals[3], patent applications[15] and in his famous lecture to the AIEE at Columbia College[4]. This lecture, before a gathering of eminent electrical engineers, brought Tesla widespread recognition and soon made him world-famous. This success was due in good measure to his convincing experiments too, which included a demonstration of rarefied gas luminescing in a tube not connected by wires to the source of power. This was the first experiment demonstrating wireless power transmission, and marked the birth of an idea to which Tesla was subsequently to devote a great part of his life. The necessary powerful electric field was created between the plates of a condenser connected across the secondary of a high-frequency transformer, whose was connected via a series condenser to a high-frequency alternator. The system worked best when the primary and secondary circuits were in resonance. Tesla also made use of the resonant transformer with his spark oscillator, enabling easy and efficient generation of high-frequency AC from a DC or low frequency source. This oscillator was to play a key role in the development of HF engineering. Only a few years later it was to be found among the apparatus of practically every physics laboratory, under the name of the Tesla coil[20].

The first record of Tesla's high-frequency coupled oscillatory circuit with an air-cored transformer is to be found in Patent No. 454622 of 23 June 1891 (application filed 25 April 1891) under the title "System of electric lighting". The oscillator converts low-frequency currents into "current of very high frequency and very high potential", which then supplies single-terminal lamps (see Fig. 2c). Induction coil *PS* produces a high secon-

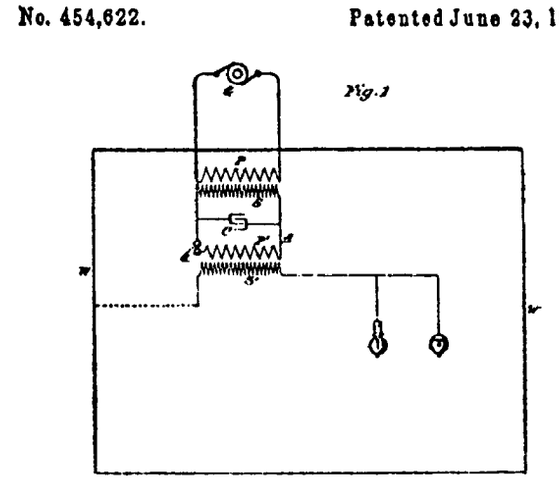

Fig. 2c. System of electric lighting

dary voltage which charges condenser *C* until a spark occurs across air gap *a*. The discharge current flows through the air gap and the primary of the high-frequency induction coil *P'*. The discharge of the condenser in this case differs from the discharge through coil with ohmic resistance studied by Henry[22], already known by that time. In Tesla's oscillator the energy of the high-frequency oscillations in the primary circuit is gradually transferred to the secondary circuit. The secondary circuit contains the distributed capacity of the secondary winding and the wiring and the capacity of the load, and is thus also a resonant

circuit. After energizing of the secondary circuit, the remaining energy is returned to the primary, then back to the secondary, and so on until losses reduce it sufficiently to interrupt spark across *a* in the primary circuit. Then condenser *C* begins to recharge from source *G* via induction coil (transformer) *PS*. Oberbeck[29] published a theoretical analysis of Tesla's oscillator in 1895.

Tesla presented much new information about his discharge oscillators and his further research on high frequency currents in the lecture he gave to the IEE in London, February 1892 which he subsequently repeated in London and then in Paris[5]. He described at length the construction of a type of air-cored HF transformer and drew attention to the fact that the secondary voltage cannot even approximately be estimated from the primary/ /secondary turns ratio. Tesla also did a lot of work on improvements of the spark gap and described several designs, some of which were subsequently attributed to other authors[24]. In describing the apparatus with which he illustrated this lecture he explained several ways for interrupting arcs with the aid of a powerful magnetic field; using compressed air; multiple air gaps in series; single or multiple air gaps with rotating surfaces.

He describes how the capacity in the primary and secondary circuits of the HF transformer should be adjusted to get the maximum performance, stating that so far insufficient attention had been paid to this factor. He experimentally established that the secondary voltage could be increased by adding capacity to "compensate" the inductance of the secondary (resonant transformer).

He demonstrated several single-pole lamps which were connected to the secondary, describing the famous brush-discharge tube and expressing the opinion that it might find application in telegraphy. He noted that HF current readily passes through slightly rarefied gas and suggested that this might be used for driving motors and lamps at considerable distance from the source, the high-frequency resonant transformer being an important component of such a system.

The drawing shown in Fig. 3c dates from early on during Tesla's work with high frequencies, 1891—1892. It is taken from Tesla's original slide found in the archives of

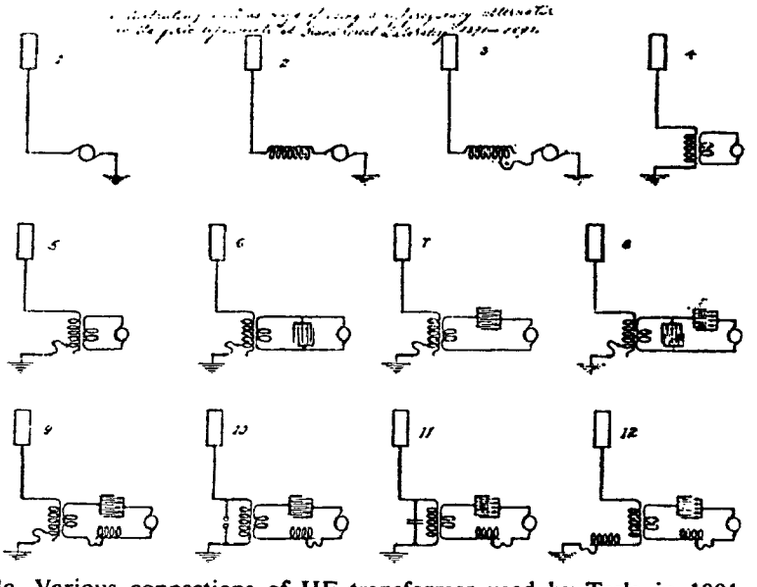

Fig. 3c. Various connections of HF transformer used by Tesla in 1891—1892 (Tesla's own slide now at the Nikola Tesla Museum, Belgrade)

the Nikola Tesla Museum in Belgrade. According to Tesla's caption these diagrams are "Illustrating various ways of using highfrequency alternator in the first experiment at Grand Street Laboratory 1891—1892". It seems that Tesla made these to prove his priority in a patent suit[35]. Only some of these diagrams have been published in [4, 6, 13], so that this is an important document throwing new light on an exceptionally fertile but relatively little known period of Tesla's work. It is, for example, clear from these diagrams that he introduced an HF transformer in the open antenna circuit. Circuits like that in Fig. 3c—4 are to be found later in two patents filed in 1897[13,14] on his apparatus and system for wireless transmission of power (these patents refer to Tesla's disruptive discharge oscillator as an alternative to the high-frequency alternator).

In February 1893 Tesla held a third lecture on high-frequency currents before the Franklin Institute in Philadelphia[6], and repeated it in March before the National Electric Light Association in St. Louis. The most significant part of this lecture is that which refers to a system for "transmitting intelligence or perhaps power, to any distance through the earth or environing medium". What Tesla described here is often taken to be the foundation of radio engineering, since it embodies principles ideas of fundamental importance, viz.: the principle of adjusting for resonance to get maximum sensitivity and selective reception, inductive link between the driver and the tank circuit, an antenna circuit in which the antenna appears as a capacitive load[71]. He also correctly noted the importance of the choice of the HF frequency and the advantages of a continuous carrier for transmitting signals over great distances[12].

Between 1893 and 1898 Tesla applied for and was granted seven American patents on his HF oscillator as a whole[25], one on his HF transformer[26], and eight on various types of electric circuit controller[27]. In a later article[28] Tesla reviews his work on HF oscillators and reports that over a period of eight years from 1891 on he made no less than fifty types of oscillator powered either by DC or low-frequency AC.

Along with his work on the improvement of his HF oscillators Tesla was continuously exploring applications of the currents they produced. His work on the improvement of X-ray generating apparatus is well known — he reported it in a series of articles in 1896 and 1897[7] and in a lecture to the New York Academy of Sciences[17]. In a lecture before the American Electro-Therapeutic Association in Buffalo September 1898[18] he described applications of the HF oscillator for therapeutic and other purposes. The same year he took out his famous patent "Method of and apparatus for controlling mechanism of moving vessels or vehicles"[59], which embodies the basic principles of telemechanics a field which only began to develop several decades after Tesla's invention.

On 2nd September 1897 Tesla filed patent application No. 650343, subsequently granted* as patent No. 645576 of 20th March 1900[13] and patent No. 649621 of 15th May 1900[14]. Unlike other radio experimenters of the time who worked either with damped oscillations at very high frequencies[43], Tesla investigated undamped oscillations in the low HF range. While others principally developed Hertz's apparatus with a spark-gap in the tank circuit (Lodge, Righi, Marconi, and others) and improved the receiver by

* The second of the two patents by which Tesla protected his apparatus for wireless power transmission, known as the "system of four tuned circuits", is particularly important in the history of radio. It was a subject of a long law suit between the Marconi Wireless Telegraph Company of America and the United States of America alleged to had used wireless devices that infringed on Marconi's patent No. 763772 of 28th June 1904. After 27 years the U.S. Supreme Court in 1943 invalidated the fundamental radio patent of Marconi as containing nothing which was not already contained in patents granted to Lodge, Tesla and Stone[65].

introducing a sensitive coherer (Branly, Lodge, Popov, Marconi, and others), he set about implementing his ideas of 1892—1893. How far he had got in verifying his ideas for wireless power transmission before coming to Colorado Springs may be seen from patent No. 645576 and the diagram in Fig. 1c.

Tesla based his hopes for wireless power transmission on the global scale on the principle that a gas at low pressure is an excellent conductor for high frequency currents. Since the limiting pressure at which the gas becomes a good conductor is higher the higher the voltage, he maintained that it would not be necessary to elevate a metal conductor to an altitude of some 15 miles above sea level, but that layers of the atmosphere which could be good conductors could be reached by a conductor (in fact an aerial) at much lower altitudes. "Expressed briefly, (cit. patent 645576) my present invention, based upon these discoveries, consists then in producing at one point an electrical pressure of such character and magnitude as to cause thereby a current to traverse elevated strata of the air between the point of generation and a distant point at which the energy is to be received and utilized". Figure 1c proves that Tesla did actually carry out an experimental demonstration of power transmission through rarefied gas before an official of the Patent Office. From the patent it may be seen that the pressure in the tube was between 120 and 150 mm Hg. At this pressure, and with the circuits tuned to resonance, efficient power transfer was acheived with a voltage of 2—4 million volts on the transmitter aerial. In the application Tesla also claims patent rights to another, similar method of transmission, also using the Earth as one conductor, and rendered conductive high layers of the atmosphere as the other*.

Tesla spent about eight months in Colorado Springs. Something of his work and results from this period can be gleaned from articles in "American Inventor" and "Western Electrican". For instance, it is stated that Tesla intended to carry out wireless transmission of signals to Paris in 1900. An article of November 1899 reports that he was making rapid progress with his system for wireless transmission of signals and that there was no way of interfering with messages sent by it. Tesla returned to New York on the 11th of January 1900[68].

The diary which Tesla kept at that time gives a detailed day-by-day description of his research in the period from 1st June 1899 to 7th January 1900. Unlike many other records in the archives of the Nikola Tesla Museum in Belgrade, the Colorado Springs diary is continuous and orderly. Since it was not intended for publication, Tesla probably kept it as a way of recording his research results. It could perhaps also have been a safety measure in case the laboratory should get destroyed, an eventuality by no means unlikely considering the dangerous experiments he was performing with powerful discharges. Some days he made no entries, but usually explained why at the beginning of the month.

---

* In the late eighties of the last century very little was known about the radiation and propagation of electromagnetic waves. Following the publication of Hertz's research[23] in 1888, which provided confirmation of Maxwell's dynamic theory of the electromagnetic field published in 1865[60], scientists became more and more convinced that electromagnetic waves behaved like light waves, propagating in straight lines. This led to pessimistic conclusions about the possible range of radio stations, which were soon refuted by experiments using the aerial-earth system designed by Tesla in 1893[6]. Tesla did not go along with the general opinion that without wires "electrical vibrations" could only propagate in straight lines, being convinced that the globe was a good conductor through which electric power could be transmitted. He also suggested that the "upper strata of the air are conducting" (1893), and "that air strata at very moderate altitudes, which are easily accessible, offer, to all experimental evidence, a perfect conducting path" (1900)[41]. It is interesting to note that this mode of propagation of radio waves was initially considered as something different from other modes[61] then to be forgotten until recent years. In the 1950's Schumann, Bremmer, Budden, Wait, Galejs and other authors[34], working on the propagation of very low (3 to 30 kHz) and extremely low (1 to 3000 Hz) electromagnetic waves, founded their treatment on essentialy the same principles as Tesla.

According to his notes, Tesla devoted the greatest proportion of his time (about 56%) to the transmitter, i.e. the high-power HF generator, about 21% to developing receivers for small signals, about 16% to measuring the capacity of the vertical antenna, and about 6% to miscellaneous other research. He developed a large HF oscillator with three oscillatory circuits with which he generated voltages of the order of 10 million volts. He tried out various modifications of the reciever with one or two coherers and special preexcitation circuits. He made measurements of the electromagnetic radiations generated by natural electrical discharges, developed radio measurement methods, and worked on the design of modulators, shunt-fed antennas, etc.

The last few days covered by the diary Tesla devoted to photographing the laboratory inside and out. He describes 63 photographs in all, most of them showing the large oscillator in action with masses of streamers emerging from the outer windings of the secondary and the "extra coil". He probably derived special satisfaction from observing his artificial lightning, now a hundred times longer than the small sparks produced by his first oscillator in the Grand Street Laboratory in New York. By then many leading scientists had been experimenting with "Tesla" currents but Tesla himself was still in the vanguard with new and unexpected results. When he finally finished his work in Colorado Springs he published some photographs of the oscillator in a blaze of streamers causing as much astonishment as had those from his famous lectures in the USA, England and France in 1891—1893. The famous German scientist Slaby wrote that the apparatuses of other radio experimenters were mere toys in comparison with Tesla's in Colorado Springs.

The descriptions of the photographs in the diary also include detailed explanations of the circuitry and the operating conditions of the oscillator. The photographs themselves give an impressive picture of the scale of these experiments. Tesla maintains that bright patches on some of the photographs were a consequence of artificially generated fireballs. He also put forward a theory to explain this, still today somewhat enigmatic phenomenon. Research on fireballs was not envisaged in his Colorado Springs work plan, but belonged to the special experiments which, in his own words, "were of an interest, purely scientific, at that time"[68], which he carried out when he could spare the time.

Tesla used some parts of the diary in drawing up the patent applications which he filed between 1899 and 1902. Keeping such notes of his work was more a less a constant practice; they provided him with an aide-mémoire when preparing to publish his discoveries.

The diary includes some descriptions of nature, mostly the surroundings of the laboratory and some meteorological phenomena, but only with the intention of bringing out certain facts of relevance to his current or planned research.

Immediately after he finished work at Colorado Springs Tesla wrote a long article entitled "The problem of increasing human energy" in which he often mentions his results from Colorado Springs[41]. In 1902 he described how he worked on this article[68]: "The Century" began to press me very hard for completing the article which I have promised to them, and the text of this article required all my energies. I knew that the article would pass into history as I brought, for the first time, results before the world which were far beyond anything that was attempted before, either by myself or others".

The article really did create a sensation, and was reprinted and cited many times. The style he uses in describing Colorado Springs research differs greatly from that of the diary.

Tesla wrote about his Colorado Springs work again in 1904[1]. Some interesting data is tc be found in his replies before the United States Patent Office in 1902, in connection with a patent rights dispute between Tesla and Fessenden[68]. This document includes statements by Tesla's assistant Fritz Lowenstein and secretary George Scherff. Tesla took Lowenstein on in New York in April 1899. At the end of May that year he summoned him to Colorado Springs, where Lowenstein remained until the end of September, when family matters obliged him to return to Germany. Tesla was satisfied with him as an assistant and asked him to return later, which he did, again becoming Tesla's assistant in February 1902.

Tesla did not break off his research in the field of radio after visiting Colorado Springs. Upon returning to New York on the 11th of January 1900[68] he took energetic steps to get backing for the implementation of a system of "World Telegraphy". He erected a building and an antenna on Long Island, and started fitting out a new laboratory. From his subsequent notes we learn that he intended to verify his ideas about resonance of the Earth's globe, referred to in a patent of 1900[42]. The experiments he wanted to perform were not in fact carried out until the sixties of this century, when it was found that the Earth resonates at 8, 14 and 20 Hz.[34] Tesla predicted that the resonances would be at 6, 18 and 30 Hz. His preoccupation with this great idea slowed down the construction of his overseas radio station, and when radio transmission across the Atlantic was finally acheived with a simpler apparatus, he had to admit that his plans included not only the transmission of signals over large distances but also an attempt to transmit power without wires. Commenting on Tesla's undertaking, one of the world's leading experts in this field, Wait[21], has written: ... "From an historical standpoint, it is significant that the genius Nikola Tesla envisaged a world wide communication system using a huge spark gap transmitter located in Colorado Springs in 1899. A few years later he built a large facility in Long Island that he hoped would transmit signals to the Cornish coast of England. In addition, he proposed to use a modified version of the system to distribute power to all points of the globe. Unfortunately, his sponsor, J. Pierpont Morgan, terminated his support at about this time. A factor here was Marconi's successful demonstration in 1901 of transatlantic signal transmission using much simpler and far cheaper instrumentation. Nevertheless, many of Tesla's early experiments have an intriguing similarity with later developments in ELF communications.

Tesla proposed that the earth itself could be set into a resonant mode at frequencies of the order of 10 Hz. He suggested that energy was reflected at the antipode of his Colorado Springs transmitter in such a manner that standing wave were set up."

In a letter to Morgan[69] early in 1902 Tesla explained his research, in which he envisaged three "distinct steps to be made: 1) the transmission of minute amounts of energy and the production of feeble effects, barely perceptible by sensitive devices; 2) the transmission of notable amounts of energy dispensing with the necessity of sensitive devices and enabling the positive operation of any kind of apparatus requiring a small amount of power; and 3) the transmission of power in amounts of industrial significance. With the completion of my present undertaking the first step will be made". For the experiments with transmission of large power he envisaged the construction of a plant at Niagara to generate about 100 million volts.[1]

However, Tesla did not succeed in getting the necessary financial backing, and after three years of abortive effort to finish his Long Island station he gave up his plans and

turned to other fields of research. He wrote several times about his great idea for wireless transmission of power, and remained convinced to his death that it would one day become reality. Today, when we have proof of the Earth's resonant modes (Schumann's resonances[34]), and it is known that certain waves can propagate with very little attenuation, so little that standing waves can be set up in the Earth-ionosphere system, we can judge how right Tesla was when he said that the mechanism of electromagnetic wave propagation in "his system" was not the same as in Hertz's system with collimated radiation. Naturally, Tesla could not have known that the phenomena he was talking about would only become pronounced at very low frequencies, because it seems he was never able to carry out the experiments which he had so brilliantly planned, as early as 1893.[6] It is gratifying that after so many years Tesla's name is rightfully reappearing in papers dealing with the propagation of radio waves and the resonance of the Earth[21,54,62,72]. In a recent book of a well known scientist (Jackson[54]) it is stated that "this remarkable genius clearly outlines the idea of the earth as a resonating circuit (he did not know of the ionosphere), estimates the lowest resonant frequency as 6 Hz (close to 6.6 Hz for a perfectly conducting sphere), and describes generation and detection of these waves. I thank V.L. Fitch for this fascinating piece of history". We believe that further studies of Tesla's writings will reveal some interesting details of his ideas in this field.

The publication of the Colorado Springs diary, a unique record of the work of a genius, means an enrichment of the scientific literature, not only in that throws light on a particularly interesting period of Tesla's creativity, but also as a source for the study of his work as a whole, and particularly of his part in the development of radio. It also facilitates the identification of many documents now at the Nikola Tesla Museum in Belgrade which lack date or description.

The preparation of this manuscript for publication required considerable time and labor in order to present its content in a form not deviating essentially from the original but more accessible to study. No alterations have been made even where the original contains certain minor errors, sometimes also in the use of power and energy units; some more important calculation errors which influence the conclusions drawn are also reproduced but are noted. A section at the end of the book contains commentaries on the Diary with explanatory notes, and a survey of his earlier work and that of other researchers. For these commentaries reference was made to the large body of literature and documents in the archives of the Nikola Tesla Museum in Belgrade.

Aleksandar Marinčić

Nikola Tesla
Colorado Springs Notes
1899-1900

Colorado Springs Notes

June 1—30, 1899

To this to be added two applications filed with Curtis and some other patent matters chiefly foreign.

Colorado Springs June 4. 1899.

Telephony without wires.

General observations.

Senders { one impulse / Several impulses } for one telephone impulse.

Receiver { several impulses / one impulse } for one telephone impulse.

Form of Energy Sender { Static action / Current " / Rays { light / heat / Rotation e.t.c / Magnetic act. / Sound " }

Form of Energy affecting receiver { Static / two current attraction, repulsion / Magnetic / Kathode rays / heat " / light " / Kathode mechanical action / Deflection by mech. displacement. }

Instruments to be used { Static machine / Induction coil / Oscillator { single terminal / two terminals } / Batteries, / Dynamos [high frequency] { alt. / direct } / Condenser { Rheostatic mach. / Oscillator } }

Receiving Instruments suited for the various transmitting instruments { to be worked out. }

Arrangements of circuit e.t.c. to be worked out.

HUZES MIDDLE TESLE

Colorado Springs

June 1, 1899

The following seems to be the best plan for constructing small batteries of very high e.m.f. required for exciting vacuum tube to be used as receiver in telegraphy: As

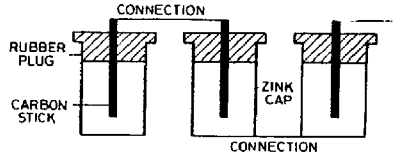

the current for exciting the tube need be only very small the battery can furnish a minute current. From previous experiments about $\frac{1}{20{,}000}$ amp. is amply sufficient. Approximate dimensions of box 1/4 cu. foot. The price will not be prohibitory. Tin caps, plugs and carbons will be readily obtainable.

The connection of the receiver is to be as in experiments in New York: If necessary the resistance R_1 will be used to strain the tube exactly just to point of breaking down. It is very important as in all sensitive devices so far used that the dielectric is strained

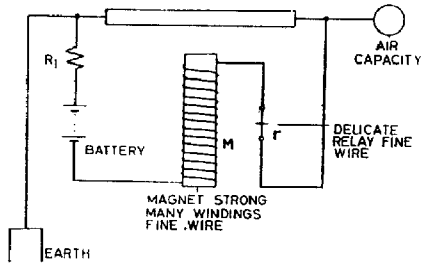

exactly to the breaking point. The magnet M is to have a resistance nearly equal to the internal resistance of the battery, so as to get best output. The relay will suit as it is with 1000 ohms resistance. The magnet must be strong to blow out tube when lighted. This device should by *very sensitive* and should break down by very minute currents propagated through the earth from a similarly connected oscillator.

Colorado Springs

June 2, 1899

- **Signalling Valuable Uses of Condenser Methods**
  - Telegraphy
    - Ships
    - Land
    - Cables (this very much so, but powerful apparatus required).
  - Protection
    - Ships
    - Icebergs
    - → Collisions
- **Research**
  - Animal
    - Plant
    - → Electricity
  - Terrestrial
    - Magnetism
    - Static
    - Atmosph.
    - → Electricity
  - Disturbances
    - Earth currents
    - Solar influence etc.
  - Locating on deposits
    - Magnetic
    - Non-magnetic by reflection
  - In connection with Roentgen rays, other rays and *dark rays of the sun.* **Most important.**
- **Measurements etc.**
  - Resist., current., e.m.f. etc.
  - Intensities, light, heat etc.
  - Meters
    - power
    - current
    - integrators of all kinds

Colorado Springs

June 3, 1899

Various modifications of a principle consisting in accumulating energy of feeble impulses received from a distance and utilizing magnified effect for operating a receiving device. Several modes of carrying out the same, generally considered:

Resonance

- Condenser
  - Commutating currents and charging
  - Directing currents { by batteries / gas valves } and charging
  - Using direct currents of high tension
- Magnet
  - Commutating currents for relay
  - Directing currents through relay { batteries / valves }
- Dynamo principle
  - Commutating currents } field
  - Directing { batteries / valves } } direct
  - Using direct currents } current
  - Low frequency currents in field

High frequency currents in armature	Direct currents in armature
heating device electromagnet condenser, etc.	relay, field magnet dynamo, condenser, etc.

Colorado Springs

June 4, 1899

Telephony without wires.
General observations:

Senders { one impulse / several impulses } for one telephone impulse.

Receiver { several impulses / one impulse } for one telephone impulse

Form of energy sender { Static action; Current action; Rays { light, heat, Roentgen, etc. }; Magnetic action; Sound action } — Form of energy affecting receiver { Static; Two currents attraction, repulsion; Magnetic; Cathode rays; Heat rays; Light rays; Cathode mechanical action; Deflection by mech. displacement }

Instruments to be used { Static machine; Induction coil; Oscillator { single terminal, two terminals }; Batteries; Dynamos (high frequency) { alt., direct }; Condenser { Rheostatic Mach., Oscillator } } — Receiving instruments suited for the various transmitting instruments { to be worked out }

Arrangements of circuit etc. to be worked out.

Colorado Springs

June 5, 1899

Induction method; results with apparatus to be used calculated from

$$M = \frac{p^2 s^4 W_p V_t^2}{32^2 D^6 S^2}$$ (This formula is very problematical)

M = Power in secondary or receiving circuit

p = $2\pi n$, estimated $40{,}000 = 4 \times 10^4$

s = length of side of square circuit $= 1200 = 12 \times 10^2$ cm.

W_p = power spent in primary $= 4 \times 10^{10}$ ergs assumed.

V_t = total volume of wire in both circuits $= 25 \times 10^3$ cu.cm.

D = distance from center to center of circuits (horizontal)

S = specific resistance of wires $= 1.7 \times 10^3$

Taking M to be the minimum 0.3 ergs to affect relay, it is found that with above circuits and under such conditions about 1 mile communications should be possible. With circuits 1000 meters square, about 30 miles. From this, the inferiority of the induction method would appear immense as compared with disturbed charge of ground and air method.

Colorado Springs

June 6, 1899

Arrangements with single terminal tube for production of powerful rays.

There being practically no limit to the power of an oscillator, it is now the problem to work out a tube so that it can stand any desired pressure. The tubes worked with in New York were made either with aluminium caps or without same, but in both cases a limit was found so that but a small fraction of the obtainable e.m.f. was available. If of glass, the bottom would break through owing to streamers, and if an aluminium cap were employed there would be sparking to the cap. Immersion in oil is inconvenient, likewise other expedients of this kind. The best results will probably be obtained in the end by static screening of the vulnerable parts of the tube. This idea was experimented npon in a number of ways. It is now proposed to test the arrangements indicated below:

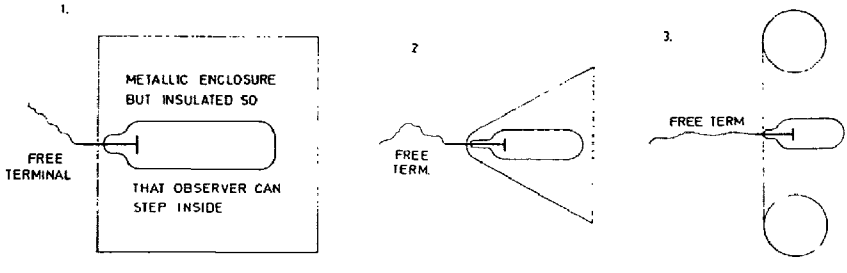

In each case there would be an insulated body of capacity so arranged that the streamers can not manifest themselves. The capacity would be such as to bring about maximum rise of e.m.f. on the free terminal.

Colorado Springs

June 7, 1899

Approximate estimate of a primary turn to be used in experimental station.

$$L_s = \pi\left[4A\left(\log_e\frac{8A}{a} - 2\right) + 2a\left(\log_e\frac{8A}{a} - \frac{5}{4}\right) - \frac{a^2}{16A}\left(2\log_e\frac{8A}{a} + 19\right)\right]$$

Here A radius of circle $=25$ feet $= 300$ inch $= 300\times 2.54 = 762$ cm.

a ,, ,, cable $= \frac{13''}{32} = \frac{13}{32}\times 2.54 = 1.03$ cm.

$$\frac{8A}{a} = 5919 \qquad \log_e\frac{8A}{a} = 3.772248 \times 2.3 = 8.6762$$

$$4A = 3048 \qquad 2a = 2.06 \qquad a^2 = 1.061; \qquad 16A = 12{,}192$$

$$L_s = \pi\left[3048\times(8.6762 - 2) + 2.06\times(8.6762 - 1.25) - \frac{1.061}{12{,}192}\times(17.3524 + 19)\right]$$

last term being negligible, we have

$L_s = 3.1416\times(3048\times 6.6762 + 2.06\times 7.4262) =$

$= 3.1416\times(20{,}349.06 + 15.3) = 3.1416\times 20{,}364.36 =$

$L_s = 63{,}976.67$ cm.

or approx: **63,900 cm.**

Two turns in series should be approx. 255,600 cm.

Approximate estimate of inductance of primary loop used in experimental oscillator on vertical frame in New York.

Diameter of loop $=8$ feet $=244$ cm.

This gives $A = 122$ cm diam. of cable $= \frac{13''}{16}$

$a = \frac{13''}{32}\times 2.54 = 1$ cm. nearly

$$\frac{8A}{a} = 976 \qquad \log_e\frac{8A}{a} = 2.98945\times 2.3 = 6.875735$$

$a^2 = 1$ $4A = 488$ $16A = 1952$

$$L=\pi\left[4A\left(\log_e\frac{8A}{a}-2\right)+2a\left(\log_e\frac{8A}{a}-\frac{5}{4}\right)-\frac{a^2}{16A}\left(2\log_e\frac{8A}{a}+19\right)\right]$$

$$=\pi\left(488\times 4.875735+2\times 5.625735-\frac{1}{1952}\times 32.75\right)=$$

$$=\pi(2379.3600+11.2515-\text{small fraction})$$

$$=\pi\times 2390.6115=3.1416\times 2390.6115 \qquad \mathbf{L=7210.345\ cm.}$$

this is a trifle more with ends close enough **8,000 cm.**

Colorado Springs

June 8, 1899

Method and apparatus for determining self-inductances, also capacities, particularly suitable for determining small inductances.

Since resistance can be neglected when the frequency of the currents is high the inductances can be easily compared in the following way:

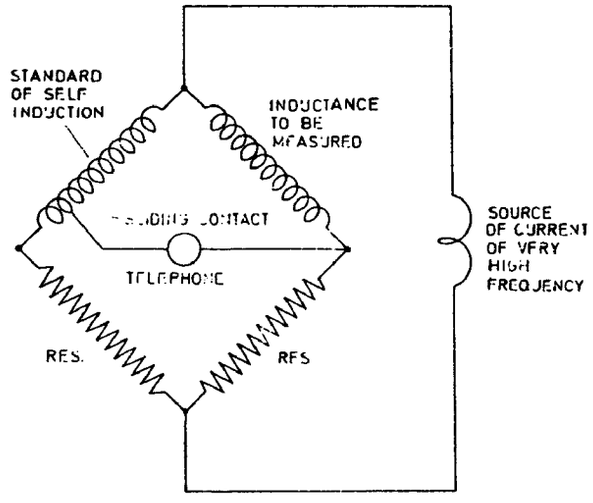

A standard of self-induction is provided with a sliding contact so that any number of turns can be inserted. Two resistances, suitable for the source of high frequency current and the inductance to be measured, are connected in the manner of a bridge. The two opposite points, one movable, are connected through a telephone. When no sound is heard then we have the two inductances — that is, the one to be measured, and that part of the standard which corresponds to equilibrium or silence in the telephone-practically equal if the quantities are suitably chosen. By determining inductances capacities may from these be easily measured. It is possible that the high frequency source might be dispensed with and a *very sudden* discharge of a condenser passed through instead. The auxiliary resistance should be so determined that the resistances in the two parts through which the current divides are equal or nearly so.

Colorado Springs

June 9, 1899

Consider the practicability of using a column of air or other gas as detector of disturbances from a distance. This would be on the principle of the Ries thermometer as experimented with in New York. The arrangement of apparatus is illustrated in the diagram below. There is a reservoir *V*, preferably of polished surface, made in the manner of mirrors to reflect rays to center. In this reservoir is placed a resistance *r* of *minute mass.*

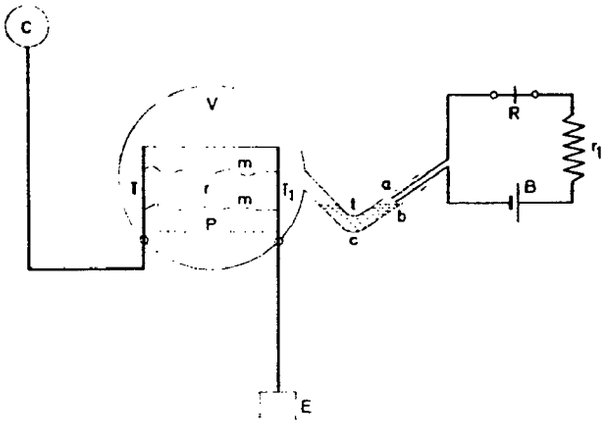

This resistance may be conveniently obtained by connecting with pencil marks *m m* two terminals *T* and T_1, holding a glass plate *P*. The *mass must* be minute so that the smallest amount of current would raise the temperature of the marks or conductors and thus heat the air in the reservoir which, expanding, would drive a minute column of liquid *c* contained in tube *t* towards contacts *a b*. The liquid should be very light and need not be highly conducting, barely enough to allow the relay *R* to be worked by battery *B* when contact between *a* and *b* is established. The resistance r_1 may be used to regulate battery strength. The terminals $T T_1$ I would preferably connect in the manner I generally resort to, that is, one to the ground and the other to a body of some surface and elevated. Suppose air is used, we would want 0.1696 Ca per °C per gramme. It will be now easy to calculate how much the air can be expanded per erg of energy supplied.

(to work out)

Colorado Springs

June 10, 1899

Suppose a *very fine* mercury column were prepared of resistance *R*, length *L* and connected to a ground and an elevated insulated conductor of capacity in the manner illustrated in diagram.

Then if a current *I* be passed through it the energy lost in the column and converted into heat will be RI^2 watts. The current is, of course, minute and we could scarcely calculate on more than 1 erg in telegraphy being transmitted to a great distance from the transmitting station; the question is what can be done with that little amount of energy.

If the mercury be raised to a temperature *t* degrees above normal it will expand for each degree 0.00018 of its length hence its length will be $L+Lt\times 0.00018 = L(1+0.00018\,t)$. This value is a little greater than would actually be found in a glass tube. Suppose the tube were $\frac{1}{10}$ mm. diam. and 10 meters long; its resistance would be approx.

1000 ohm. Then $RI^2=1000\ I^2=\frac{1}{10^7}$, taking one erg as energy supplied, gives $I^2=\frac{1}{10^{10}}$ $I=\frac{1}{10^5}$ amp. The column in the tube would expand for one degree $0.00018\times 10=0.0018$ meters or 0.18 cm or 1.8 mm.

The volume of the column would be $0.01\times 10{,}000=100$ cu.mm. or 0.1 cu.cm. Now this would weigh $0.1\times 13.6=1.36$ gramme. The mass of this would be $\frac{0.00136}{9.81}$. Now to raise water 1° C we want 41,600,000 ergs per gramme. Specific heat of mercury being 0.0319 we would want $41{,}600{,}000\times \times \frac{320}{10{,}000}=41{,}600\times 32=$ about 1,330,000 ergs.

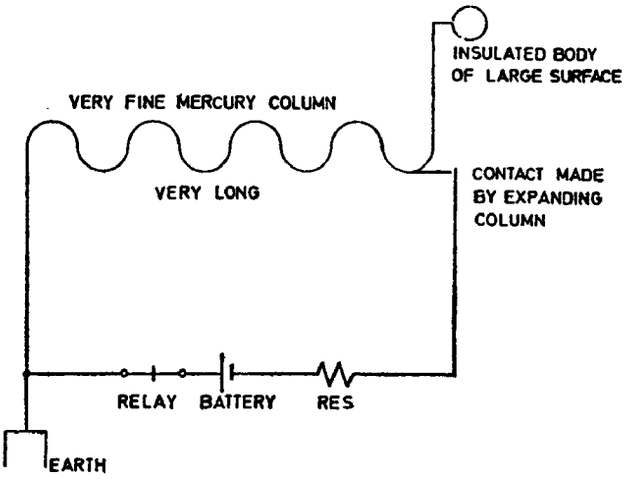

This shows that on the above assumptions, indication of disturbances by mercury column would be hardly practicable unless the column could be made *much thinner.*

Colorado Springs

June 11, 1899

The following method and apparatus for detecting feeble disturbances transmitted through a medium seem to be particularly adapted for telegraphy. The idea was followed up in New York but results were not satisfactory. Now the experiments are to be resumed with apparatus as illustrated below.

The general idea is to provide a path for the passage of a current such that it will diminish in resistance when the current passes and also such that it will be of as minute a mass as possible. The specific heat of the material forming the path for the current should also be as small as possible. The best way I have so far found is to make a mark of the required thickness with a carbonstick so as to connect two terminals through a conductor of high resistance so deposited. This conductor I preferably connect with one end to the earth and with the other to an elevated object of a large surface. The conductor is further connected in circuit with relays and batteries in any way suitable, as for instance in the arrangement here shown. Now when a feeble impulse passes it reduces the resi-

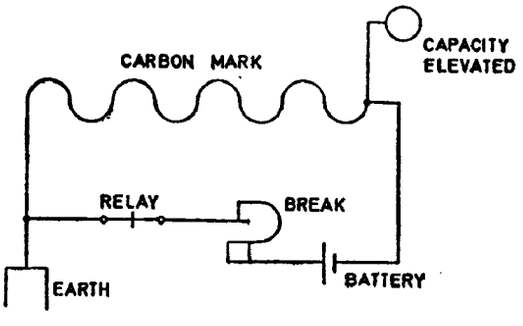

stance of the carbon and more of the battery current can pass through and so on until the relay is brought into action. The relay then, in any way suitable, breaks the current of the battery and a normal regime is established. The relay itself may be utilized to break the current or an auxiliary magnet may be employed as illustrated. The carbon mark may be connected in the manner *of a bridge* to increase sensitiveness.

This to be followed up.

Colorado Springs

June 12, 1899

A convenient way of obtaining a conductor (rather a poor one) of small mass, such as will be instantly evaporated or disintegrated by a battery current, and one which is also automatically renewed in a simple manner, is the following:

Two terminals are fastened to an insulating plate, preferably of glass, and provision is made once for a film of poorly conducting substance to be deposited on the plate thus bridging the terminals and establishing sufficient contact between them to allow a current to pass.

The best manner to carry this idea out seems to be the following:

In a small bottle, having a stopper with two terminals, is placed a quantity of iodine and the bottle is by any suitable means kept at a temperature such that the haloid is deposited in an exceedingly fine film causing a leak of the battery current through a relay. A stronger current may then be passed by establishing a suitable connection with the relay and the film of iodine may thus be destroyed and the terminals again insulated, this process being repeated in as rapid succession as may be desired. This film may be used in the detection of feeble impulses as in telegraphy through media, in which case it is connected to ground and capacity.

Colorado Springs

June 13, 1899

Arrangements of transmitting apparatus for telephony at a distance without wires.

The most difficult part in the practical solution of a problem of this kind of telephony is to control a powerful apparatus by feeble impulses such as are produceable by the human voice.

One of the best ways is to use carbon contacts as in the microphone, but when powerful currents either of great volume or high e.m.f. are used, as they must be in such cases, the problem offers great difficulties.

A solution which I have before described is offered in the following scheme, illustrated diagramatically below.

S is a source of preferably direct current as a powerful battery or dynamo, *C* a condenser which is connected with a primary *p* and break *d* as usual in an oscillator. The break *d* is such that at the number of breaks resonance is obtained.

A secondary *s* is provided which is connected to the ground and an insulated body of capacity and elevated as shown, and normally the adjustment is such that the secondary with its capacity and self-induction is in resonance with the primary *p*. From the latter a shunt is made by two contacts *c c* preferably of carbon. Normally these carbons touch loosely but by speaking upon funnel *f* they are harmonically pressed together and the primary current is diverted thus destroying the resonance and greatly diminishing effect in the secondary rhythmically with the undulations of the voice. In this manner very minute variations in the contact resistance are made to produce great variations in the intensity of the waves sent out. The breaks at *d* must be much above undulations of the voice.

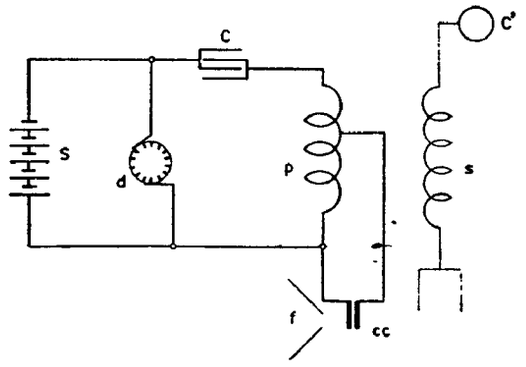

Colorado Springs

June 14, 1899

The following arrangement, considered before in a general way, seems to be particularly suitable for telephony at a distance without wires and for such purposes where it is necessary to effect control of a powerful apparatus by feeble impulses such as those produced by a human voice.

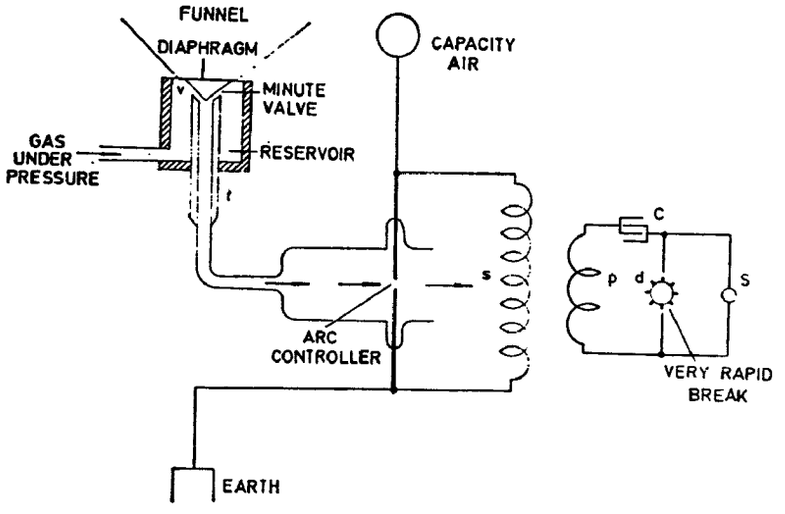

The idea is to use an ordinary oscillator, preferably one operated from a source of direct currents with a break (mercury or simply an air gap) which is much higher in

frequency than the vibrations of the voice. At any rate, there will be an arc, whether in the primary of the secondary which will be blown out, or the resistance of which will be enormously increased, rhythmically with the vibrations impressed by voice or otherwise, as the case may be. The control of the arc is effected by a jet of air or other gas issuing under pressure from an orifice the opening of which is controlled in some convenient way by the vibrations. An arrangement of such apparatus is illustrated in the diagram below, the arc controlled thus being in the secondary. The source of direct currents S charges a condenser C and the discharges of the same (a very great number) through a break d and primary p energize a secondary s with the usual connection in telegraphy as I have introduced. The air or gas under pressure is controlled by a diaphragm and valve v. The outlet pipe t can be screwed up as close to the diaphragm as is necessary for the best result. In this or a modified way a powerful apparatus may be controlled by very feeble undulations, as those of the human voice.

Colorado Springs

June 15, 1899

First experiments in the station were made today. The e.m.f. of the supply transformer was 200 volts only. The break on the disk, which was driven by a Crocker Wheeler motor, varied from 800—1200 per second. ω was found to be 800 approximately.

Under these conditions the secondary from the New York high tension transformer could only charge from 3—4 jars and it was impossible to obtain more than a harmonic of the vibration of the secondary system of the oscillator, which required many more jars.

The secondary was wound on a conical framework, there being 14 turns of an average length of 130 feet each, that is approximately.

The primary was formed by one turn of cable, used in New York laboratory for the same purpose, consisting of 37 wires No. 9 covered with rubber and breading. The details of construction are to be described later.

Note: Sparks went over the lightning arresters instead of going to the ground This made it necessary to change the connection to the ground, separating that of the secondary of the oscillator from the ground of the arresters. By connecting the secondary to a water pipe, and leaving the ground of the arrester as before, the sparks ceased. This indicates a bad ground on the arresters. The *latter work exceedingly well.* The ground connection was made by driving in a gas pipe about 12 feet deep and gammoning coke around it. This is the usual way as here practised.

The power taken in these first experiments was small, 1/2—3/4 H. P. only. The spark on the secondary was 5″ long but *very thick and noisy;* indicates considerable capacity in the secondary. The variation of the length of the spark in the break did not produce much change. The weather was very stormy, hail, lightning.

Colorado Springs

June 16, 1899

Experiments were continued today. A new ground connection was made by digging a hole 12 feet deep and placing a plate of copper 20″×20″ on the bottom and spreading coke over it again, as customary. Water was kept constantly flowing upon the ground to moisten it and improve the connection but in spite of this the connection was still bad and to a remarkable degree. It is plain that the rocky formation and dryness is responsible and I think that the many cases of damage done by lightning here are partially to be attributed to poor earth connections. By keeping the water constantly running the resistance was finally reduced to 14 ohms between the earth plate and the water main. By connecting the earth plate and water main again, the lower end of the secondary being connected to the latter, sparks would again fly over the arresters. When the water main was disconnected they again ceased.

The action of the waves spreading through the ground was tested by a form of sensitive device later to be described and it was found that there was a strong vibration passing through the ground in and around the laboratory. The device was purposely unsensitive, to get an idea by comparison with former experiences in this direction. It did not respond when placed close to the oscillator, but unconnected to ground or capacity, but responded 200 feet from the shop when connected to the ground with one terminal. It responded also all along a water main, as far as it reached, although it was connected to the ground fairly well. The action on the device was still strong when there were *no sparks* from the secondary terminal. This is a good indication for the investigation of waves, stationary in the ground. It was concluded the earth resistance was still too great. Possibly the ground affects the primary and the secondary, more than assumed, by the formation of induced currents.

To be investigated.

Colorado Springs

June 17, 1899

Measurements of resistance between ground wire and water main showed the surprising fact that it was 2960 ohms, and even after half an hour watering it still was 2400 ohms, but then by continued watering it began to fall rapidly. Evidently the soil lets the water run through easily and being extremely dry as a rule it is very difficult to make a good ground connection. This may prove troublesome. The water will have to be kept flowing continuously. The high resistance explains the difficulty, from a few days before, of getting the proper vibration of the secondary. The first good ground was evidently at the point where the water main feeding the laboratory connected to the big main underground and this was several hundreds of feet away. This introduced additional length in the secondary wire which became thus too long for the quarter of the wave as calculated. The nearest connection to earth was as measured about 260 feet away and even this one was doubtful.

Measurement of inductances primary, secondary and *mutual induction.*

Readings for two primary turns in series showed:

$$I=34, \qquad E=7, \qquad R=0.015, \qquad \omega=716, \qquad I=\frac{E}{\sqrt{R^2+\omega^2 L^2}}$$

Neglecting R^2 we have $\omega L_p = 0.206$ and $L_p = \mathbf{287{,}000\ cm}$ approx.

For secondary 14 turns on conical frame average length of turn 130 feet.

$E = 57.7$ $\quad \frac{E}{I} = 4.57$ $\quad \omega^2 L^2 = 16.49$ $\quad L_s = \frac{4}{716} = 0.0056$ henry approx.

$I = 12.65$

$\omega = 716$ $\quad \left(\frac{E}{I}\right)^2 = 20.98$ $\quad \omega L = 4$ approx. or $L_s = \mathbf{5{,}600{,}000\ cm.}$ approx.

$R = 2.12$ $\quad R^2 = 4.49$

Coefficient of mutual induction, 2 primary turns in series:

$$M = \frac{E_p}{\omega I_s} = \frac{6 \times 10^9}{716 \times 10.7} = \mathbf{783{,}300}\ \text{cm.}$$

$E_p = 6$
$I_s = 10.7$
$\omega = 716$

This will reduce L. Reduction estimated from

$$L - \frac{M^2}{N} = L\left(1 - \frac{M^2}{NL}\right) = L \times 0.64$$

Colorado Springs

June 18, 1899

Experiments were continued with the oscillator showing that proper vibration does not take place, evidently owing to some cause which is still to be explained. To see whether the trouble is due to poor induction from the primary, a coil-wound on a drum of about 30″ diam, 10″ long, 500 turns approx. of No.26 wire, used in some experiments in New York — was connected to the free end of the secondary and with this coil a great rise was obtained, streamers about 12″ long being obtained on the last free turn even with a small excitation of secondary. The trouble seems to be due to internal capacity. The total length of a quarter wave with coil was about 2400 feet, which agrees fairly with the calculation from the vibration of the primary circuit. The experiments with the coil show strikingly the advantage of an *extra coil,* as I call it, already noticed in experiments in New York; that is, a coil practically not inductively connected but merely used to raise the impressed electromotive force.

Measurements of inductance of the secondary as used: 12 turns on tapering frame 1 1/4″ apart from center to center showed:

Current through secondary	E.m.f. on terminals	ω
10.9	74 V	710

from this L'_s was found $= \mathbf{9{,}500{,}000\ cm.}$

Readings for mutual induction:

	E.m.f. on primary (one turn)	ω
10.9	4.75	710

gave $M' = \frac{E}{I\omega} = 0.00062$ H or **620,000 cm.**

Compared with the first winding (14 turns far apart) the second winding was better because of both higher self-induction and greater mutual induction coefficient.

Measurement of capacity of condenser in sections:

The condenser was compared today with 1/2 mfd. standard by wirebridge and telephone receiver, according to the Maxwell method. There are 80 sections in the condenser, 40 on each side, which can be connected by plugs as desired.
They are: $1+2_1+2_2+5+10+10+20+30=80$
The measurements made by Mr. L. today gave 0.153 mfd per unit.

This to be verified.

Colorado Springs

June 19, 1899

Sensitive automatic device for receiving circuits in telegraphy through the natural media, purposes of tuning, etc. The device in simple form is illustrated in the diagram below.

In a small glass tube *t* are fixed two thin wires *w w* of soft iron or steel carrying contact points of platinum *c c* on the top. A spool *S* wound with wire surrounds tube *t*. The contact points are shaped so that the wires can deviate considerably without the separation becoming too great. When the current passes through coil *S* the wires *w w* are separated and the distance between the contact points, *c c* increased. The tube is moderately exhausted. The dielectric between the points is strained, as in sensitive powders, very nearly to the point of breaking down by means of a battery and when the disturbance reaches the circuit the dielectric gives way under the increased strain and the battery current passes through coil *S* separating the terminals and now breaking the battery current. It is supposed in this instance that the contact points *c c* and coil *S* are connected in series with the battery, but the connection may be made in many other ways for the purpose of securing the same result — that is of automatically interrupting the current after the signal has been received. The contact points must be very close together and pointed. Stops *p p p* are provided to limit the movement of the wires *w w* and prevent vibration upon each action. An additional coil may be placed upon *S* for the purpose of adjusting the wires so the points will be at the required minute distance from each other, which is easily effected by graduating the strength of the current passing through the additional coil and an independent relay may be connected in the circuits in any convenient way for registering the signals. The degree of vacuum may also be made adjustable. In the first device coil *S* had 24 layers, 94 turns per layer=2256 turns, No. 21 wire, res. 14.7 ohms.

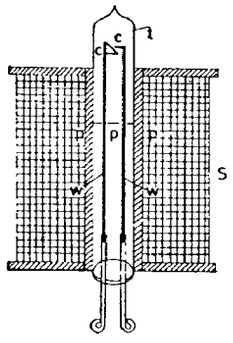

Colorado Springs. June 19. 1899.

MUZEJ NIKOLE TESLE

Sensitive automatic device for receiving circuits in telegraphy through the natural media, purposes of tuning etc. The device in a simple form is illustrated in diagram below. In a small glass tube t are fixed two thin wires ww of soft iron or steel carrying contact points [illegible] CC on the top. A spool S wound with wire surrounds tube t. The contact points are shaped so that the wires can deviate considerably without the separation becoming too great. When the current passes through coil S the wires ww are separated and the distance between the contact points CC increases. The tube is moderately exhausted. The dielectric between the points is strained as in sensitive powders very nearly to the point of breaking down by means of a battery and when the disturbance reaches the circuit the dielectric gives way under the increased strain and the battery current passes through coil S separating the terminals and now breaking the battery current. It is supposed in this instance that the contact points CC and coil S are connected in series with the battery; but the connection may be made in many other ways for the purpose of securing the same result that is of automatically interrupting this current after the signal has been received. The contact points must be very close together and pointed. Stops p p p are provided to limit the movement of the wires ww and prevent vibration upon each action. An additional coil may be placed upon S for the purpose of adjusting the wires in the point will be at the required minute distance from each other that is easily effected by graduating the strength of the current passing through the additional coil and an independent relay may be connected in the circuits in any convenient way for registering the signals. The degree of vacuum may also be made adjustable. In the first device coil S had 24 layers, 94 turns per layer = 2256 turns, [illegible] Res. 14.7 ohms.

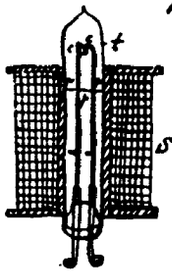

Colorado Springs

June 20, 1899

Approximate estimate of some particulars of apparatus. With new jars the capacity will be about 0.174 mfd. that is with two sets of condensers in series as usual. Assume 20,000 volts on the supply transformer, the energy per impulse will be

$$\frac{4 \times 10^8 \times 0.174}{2 \times 10^6} = 34.8 \text{ watts estimated roughly.}$$

Suppose 1600 discharges through the primary per second, the condensers will deliver $34.8 \times 1600 = 55{,}680$ watts or a little over 74 H.P. With ten thousand volts they would still deliver $\frac{74}{4} = 18.5$ H.P. Now the vibration of the primary will be approximately:

$$T = \frac{2\pi}{10^3}\sqrt{\frac{7 \times 10^4}{10^9} \times 0.174} = \frac{2\pi}{10^5}\sqrt{0.7 \times 0.174} = \frac{2.2}{10^5} \text{ or } \frac{22}{10^6}$$

This gives $n = 45{,}500$ per sec. about. This vibration supposes only one primary turn.

The wave length calculated from this is about 4 miles or 21,120 feet and $\frac{\lambda}{4} = 5{,}280$ feet. As each turn has, on the average, 130 feet we shall want to make up the length of a quarter wave $\frac{5280}{130} = 40$ turns about. Or, if two primaries are used in series, the capacity remaining as before, the wave length will be doubled and 80 turns will be needed. Let it then be assumed that 80 turns are used, the self-induction of the secondary will be not far from 165×10^6 cm. The period of the secondary will then be:

$$T_1 = \frac{2\pi}{10^3}\sqrt{\frac{165 \times 10^6}{10^9} \times \frac{38}{9 \times 10^5}}$$

assuming no internal capacity or that it is overcome by suitable construction and only a ball of 30″ diam. or approximately 38 cm. radius on the free terminal of the secondary. We have then

$$T_1 = \frac{164}{10^7} \quad \text{and} \quad N = 61{,}000 \text{ approx.}$$

But this vibration will not be in harmony with the primary vibration. To effect this the self-induction of the secondary can be estimated. We have namely:

$$T = \frac{1}{45{,}500} = \frac{2\pi}{1000}\sqrt{\frac{38}{9 \times 10^5} L_s},$$

where L_s is the self-induction of the secondary required.

From this $L_s = \frac{10}{32}$ henry or $L_s = 312{,}500{,}000$ cm. Suppose the wire wound on the same spool or frame and the length to remain as before, the turns necessary can be estimated from $\frac{165 \times 10^6}{312 \times 10^6} = \frac{6400}{N^2}$, from which follows $N^2 = 12{,}102$ and $N = 110$ turns.

In addition to the wire already on hand this would cost about $ 250 but with 80 turns only $ 100 will be necessary. To keep the vibration of the secondary the same, the capacity on the free terminal will have to be increased. The capacity necessary will be C and we have:

$$\frac{1}{45{,}000} = \frac{2\pi}{1000}\sqrt{\frac{165\times 10^6}{10^9}C} \quad \text{from which follows } C = 67.3 \text{ cm.}$$

A ball of this size is not to be had. If we employ a disc we have $\frac{2r}{\pi} = 67.3$, $r = 56$ cm. A disc could scarcely be employed except with small pressures, there would be too much leakage.

All these estimates assume, of course, that the distributed capacity of the secondary is overcome in some way or other as by condensers in series, for instance. It is quite certain that the vibration of the secondary will be much slower.

Colorado Springs

June 21, 1899

Considerations of the various particulars of apparatus to be used, continued:

The present supply transformers can furnish 26 H.P.

Assume this energy consumption, that is, $26\times 750 = 19{,}500$ watts and 1600 breaks or charges of the condensers per second. This gives per each break $\frac{19{,}500}{1600} = 12$ watts roughly. Let us further suppose that an excess of power is supplied so that the secondary receives clear 12 watts per each discharge of the primary. This means to say that the capacity on the end of the secondary will be charged 1600 times per second to a potential p. If C be the capacity on the free end we have $12 = \frac{p^2}{2}C$ from which $p^2 = \frac{24}{C}$. Assume C to be a sphere 38 cm. radius we have

$$\frac{24}{\frac{38}{9\times 10^{11}}} = p^2 = \frac{9\times 10^{11}\times 24}{38}, \quad \text{from this}$$

$$p = 3\times 10^5\sqrt{\frac{240}{38}} = 3\times 10^5\sqrt{6.32} = 3\times 10^5\times 2.51 = \mathbf{753{,}000 \text{ volts}}$$

Approximate estimate of primary voltage necessary for above output.

To get e.m.f. lowest value it would be necessary to connect condensers in multiple, both sets. This would give a capacity of $0.174\times 4 = 0.696$ mfd. Calling p_1 the primary e.m.f. necessary for this output, we have

$$\frac{0.696\times p_1^2}{2\times 10^6} = 12.$$

From this $p_1^2=\frac{10^9}{29}$ and $p_1=6000$ volts approx. (26 H.P. expenditure, 1600 breaks per sec.)

With this e.m.f. assume 4 ohms res. of arc, the initial current would be 1500 amp. through the primary. From these assumptions the loss in the primary may be computed.

Colorado Springs

June 22, 1899

Wire for the new secondary ordered from Habirshaw No. 10 B.& S. rubber covered; all in all about 11,000 feet needed (more nearly 10,500 feet). This will do for 80 turns of an average length of 131 feet each.

No. 10 am. gauge 5.26 mm. square or $\frac{5.26}{645}$ sq.inch

100 feet will have: $\frac{5.26}{645}\times 1200=9.8$ cu.inches.

The weight of this, taking 5.13 ounces per cu.inch will be

$$\frac{5.13}{16}\times 9.8=3.14 \text{ lbs.}$$

Accordingly, 11,000 feet will weigh 345.4 lbs. This will give still less copper in the secondary than there is in the two primary turns. With secondary wire double we shall have 40 turns and with four wires (for quick vibration) 20 turns. The weight of copper should be equal and some of the No. 10 cord may be used on the first low turns.

Some arrangements were tried aiming chiefly at prolonging the vibration in the primary after each break. One of these was as illustrated in the diagram below:

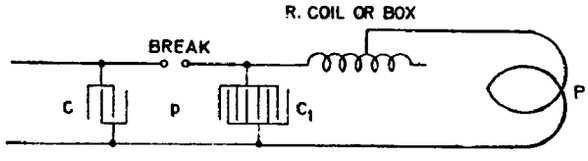

The condenser C_1 was placed in shunt to the primary P. Since there was no spark gap in this circuit and the magnifying factor was very large, the resistance being minute, the vibration continued much longer after each break as would be the case with the ordinary connection. A very curious feature was the *sharpness* of tuning. This seems to be due to the fact that there are two circuits or two separate vibrations which must accord exactly. The sparks were strong on terminals of the secondary always when $C=a\,C_1$, a being a whole number (no fraction), and particularly when $a=2$ or 4.

This arrangement was carried out in New York on one of the later type oscillators and similar results were observed.

In this form there was a loss in circuit *p* since this part did not act upon the secondary in inductive relation to *P*. A modification consisted in including in circuit *p* one or more turns of the primary *P* or independent turns which acted inductively upon the secondary.

An arrangement intended for the same purpose was also tried. It consisted of providing two primaries, one independent of the break and merely shunted by a condenser,

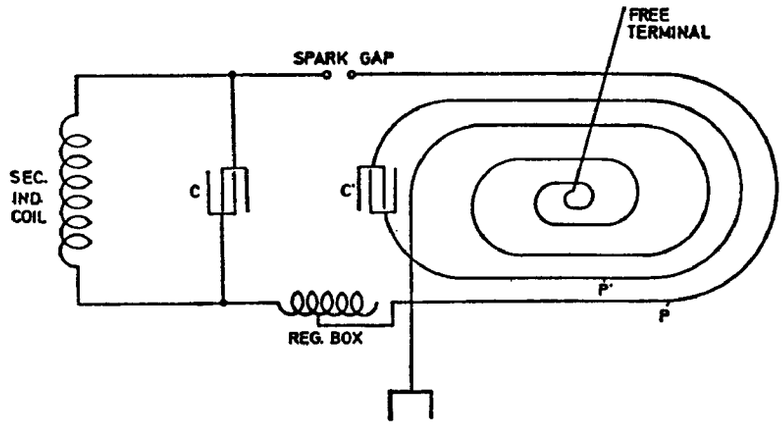

as illustrated. This plan was also experimented with in New York and it was found that it is good when the break number is *very small*. When the break is very rapid there is not much difference. In making the adjustments *C'P'* was first tuned to the vibration of *C P*, then the secondary was adjusted.

This to be followed up.

Colorado Springs

June 23, 1899

Approximate self-induction of Regulating box brought from New York to be used in primary.

Dimensions: diam. of drum 12″=30.48 cm.
Length „ „ 18″=45.72 „
Number of turns =24

Area inclosed by one loop $\frac{\pi}{4}d^2=730$ cm. sq.

From this

$$L=\frac{4\pi N^2 S}{l}=\frac{12.57\times 576\times 730}{45.72}\text{ cm}=$$

$$=0.275\times 576\times 730=115{,}600\text{ cm.}$$

From this for approximate estimates we may take $\frac{115{,}600}{24}=4800$ cm per turn. This will be too much, as turns are far apart and thick. After Langevin's formula $L_s=\frac{\Omega^2}{l}$. Here Ω total length of wire is $30.5\times 3.1416\times 24=2300$ cm approx.

This would give value $L' = \frac{2\,300^2}{45.72} = \frac{5{,}290{,}000}{45.72}$

$L' = 115{,}700$ cm., remarkably close.

Experiments with oscillator secondary 36 1/2 turns were continued. Many modified arrangements with auxiliary condensers — one of which is illustrated in the sketch below — were tried. All these chiefly aimed at prolonging the vibrations in the primary after each break and also at effecting sharper tuning of the circuits. In using auxiliary condensers in this way circuits are obtained containing no spark gap in which the damping factor was extremely small and the magnifying factor very great.

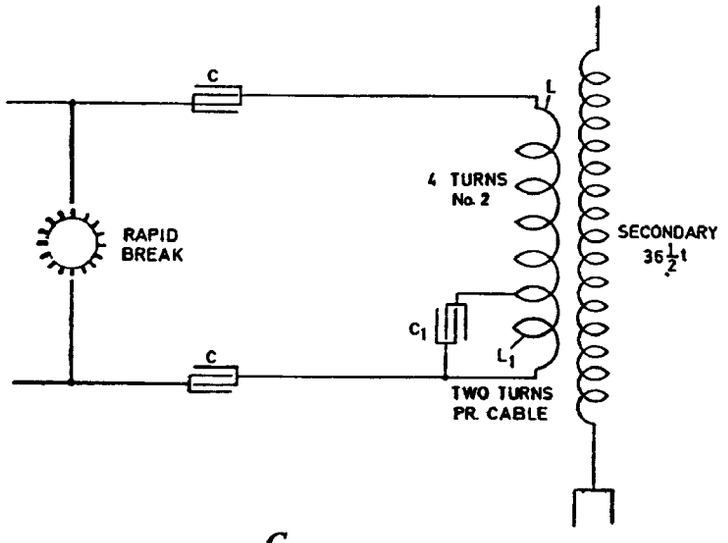

In this arrangement the relation $\frac{C}{2} L = C_1 L_1$

had to be attained for the best result. Or $L_1 = \frac{L}{4}$ $C_1 = 4 \times \frac{C}{2}$

Resonance was obtained with 15 jars on each side, 6 turns primary. With 4 turns primary there would have been necessary $15 \times \frac{36}{16} = 34$ jars or thereabouts. On thick cable about 68 jars. (for reference)

Note: Several rates of vibration were tried with such arrangements. Remarkable was the sharp tuning in some of them, one turn of the regulating coil being sufficient to entirely de troy the effect or to produce a great maximum rise of pressure. The jars broke down frequently, owing to sudden rise, as the handle of the regulating coil was turned.

Colorado Springs

June 24, 1899

The following plan of producing a conducting path of extremely low resistance suitable for resonating circuits and other uses offers the possibility of attaining results which can not be reached otherwise. It is based on my observation that by passing through

a rarefied gas a discharge of sufficient intensity, preferably one of high frequency, the resistance of the gas may be so diminished that it falls far below that of the best conductors. So through just a bulb of highly rarefied gas an immense amount of energy may be passed and currents of a maximum strength such that they can not traverse a copper wire, owing to its resistance and impedance, may be made to traverse the rarefied gas. The plan now is to constitute a circuit composed of a rarefied gas column, heated by auxiliary means to a very high incandescence so as to offer an inconceivably small resistance to the passage of the current and use this column for the purpose to which it is suited. To illustrate the use of this idea in telegraphy, for instance the diagram below is shown in which *S* is a source of oscillating currents of preferably high frequency, *C* a condenser in shunt to same, *L* a coiled glass tube containing the rarefied gas which is kept at a high degree of excitation. The conductor *L* is connected, as in my system, to earth and a capacity preferably elevated. Through this path the currents of a distant transmitter are made to pass which are of the same frequency and cause a great rise of the e.m.f. on the terminals of conductor *L*, which may then be utilised to affect a receiving instrument in many ways.

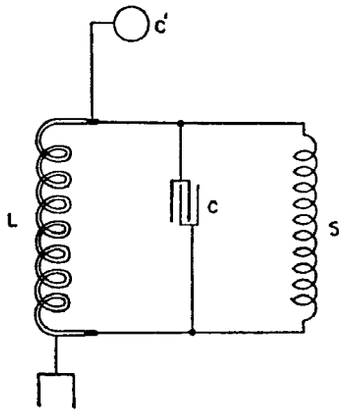

(To follow up).

Colorado Springs

June 25, 1899

The following plan seems to be well adapted for magnifying minute variations such as are produced by the action of a microphone, for example. Suppose that on a rotating or, generally speaking, moving surface of iron (polished or smooth) there is arranged a brush of soft iron, steel or at least having a surface of such magnetic materials whatever they be then there will be a certain amount of friction developed on the contact surfaces between the brush and moving surface and the brush will be dragged in the direction of movement of the surface. A spring may be used to pull the brush back against the friction and to maintain it in a position of delicate equilibrium. Let now the brush or surface be but slightly magnetized, then the friction between the magnetic surfaces will be enormously increased and the brush will be pulled forward with great force. A small variation in the magnetization of the surface will thus make great changes in the force exerted upon the brush, and the movements of the latter may be utilised for any purpose, as for instance in loud speaking telephones, or in perfecting a "wireless telephone" or such purposes. A simple form of apparatus is illustrated below: *A* is a rapidly rotating

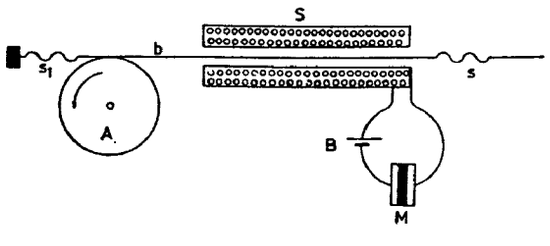

cylinder with a polished iron surface, if not all of iron; *b* is a small bar or brush bearing upon the cylinder and also of soft iron. This light plate or bar is held in a balanced position by differential spring $s\, s_1$ so as to bear lightly on the cylinder *A*. *S* is a solenoid energized through battery *B* in series with a microphone *M*. By speaking upon the latter the bar *b* will be vibrated back and forth and the movements of the bar may control any other apparatus, for instance a valve or other microphone.

Colorado Springs

June 26, 1899

In following up an old idea of separating gaseous mixtures by the aplication to them of an excessively high electromotive force, the following apparatus is to be adopted with a new oscillator.

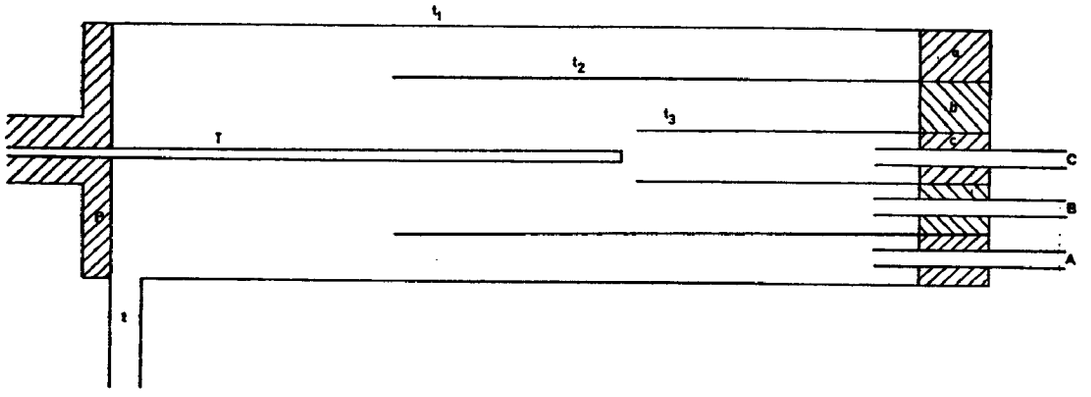

Note: in this apparatus it will be preferable to use a form of oscillator with mercury break supplied from a source of direct current, so that the force on *T* will be mostly uni--directional. Any other generator developing the necessary e.m.f. should, however, accomplish the same result.

Three tubes t_1 t_2 t_3 (assuming only three will be needed) are slipped one into the other, being held apart by insulating plugs *a b c*. In these plugs are fastened outlet tubes *A B C* to lead the several separated gases away to reservoirs into which they may be compressed. It is therefore to be understood that there is the desired degree of suction on the outlet pipes, or else the mixture is forced under desired pressure through a tube *t* serving to let in the mixture. The high tension terminal *T* is led in through an insulating plug *P* fastened into the largest tube t_1. The particles of the gas coming in contact with the active terminal are thrown away with great force and are projected at different distances according to their size and weight, hydrogen farther then most others. The latter element, if it be present, will therefore pass through tube *A*, that is mostly, the heavier and larger molecules through the other tubes. By repassing the gases drawn off through the apparatus again, any degree of purification or separation is obtained.

Colorado Springs

June 27, 1899

Arrangements of apparatus in telegraphy through the natural media aiming at exclusion of manager, in accordance with method experimented with in New York. This is not quite so good as the method used with condenser of commutating individual impulses, but great safety can be secured nevertheless. The idea was to provide more than one synchronized circuit and to make the receiver dependent in its operation on more then one such circuit. Experiments have shown that a great degree of safety is reached with two circuits. I think with three it is almost impossible to disturb the receiver when the vibrations have no common harmonics very near to the fundamental tones. Several arrangements experimented with are illustrated below. These are to be followed up.

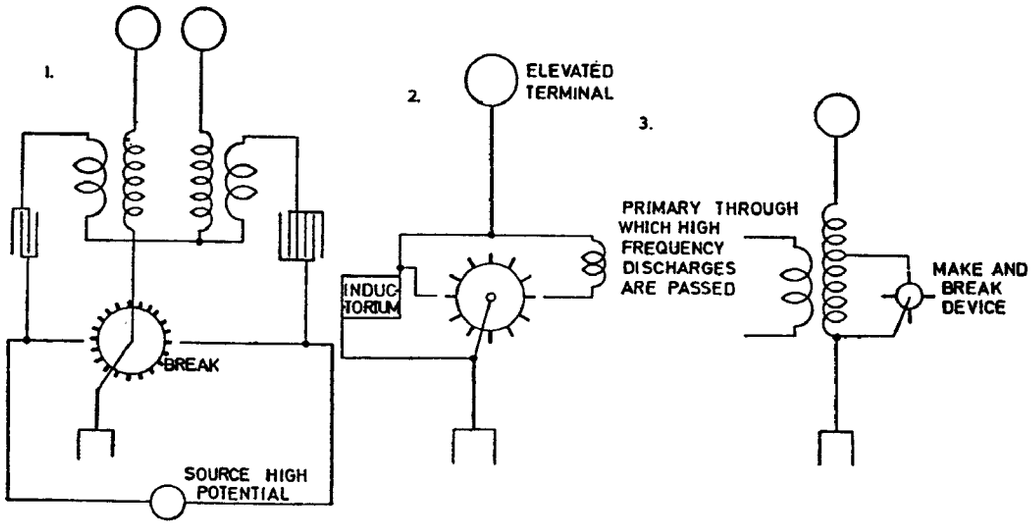

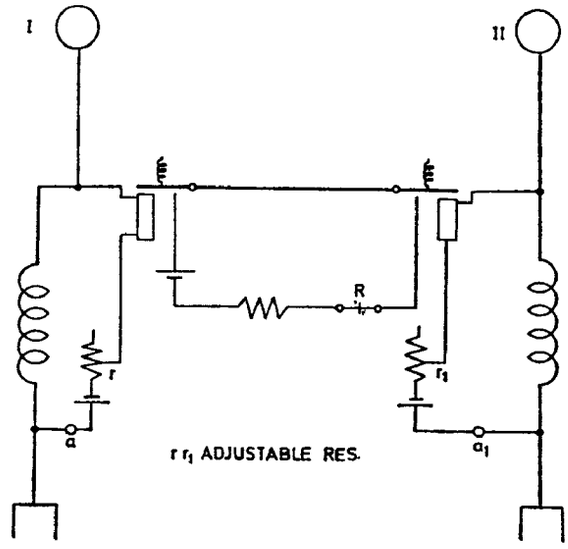

Figs. 1., 2. and 3. illustrate some arrangements of apparatus on the sending station by means of which two vibrations of different pitch are obtained. A greater number is omitted for the sake of simplicity. In case 1. are provided two sending circuits which should

be some distance apart and which are energized alternately by discharging condensers of suitable capacity through the corresponding primaries. In Figures 2. and 3. one sending circuit is arranged so that its period is altered by inserting some inductance as in 2., or by short-circuiting a part of the circuit periodically, by means of an automatic device. It is not necessary to use such a device; however, arrangements of this kind will be later illustrated. On the receiving station two synchronized circuits responding to the vibrations — each to one — of the sender. The receiver R responds only when both circuits I and II affect sensitive devices $a\,a_1$. The diagrams are self-explanatory.

Colorado Springs

June 28, 1899

Approximate estimate of the secondary with 20 turns on tapering frame, before referred to, from data of the secondary with 36 turns on the same frame. In the latter the wires 3 notches apart, in the former 7 notches.

Roughly, the capacity of the secondary with 20 turns will be, if C be that of the secondary with 36 turns:

$$C_1=\frac{20}{36}\times\frac{3}{7}\,C=\frac{60}{252}\,C=\frac{20}{84}\,C=\frac{10}{42}\,C=\frac{5}{21}\,C$$

and the self-induction L_1 of the secondary with 20 turns compared with L — that of the secondary with 36 turns, will be

$$L_1=\left(\frac{20}{36}\right)^2\times\frac{36\times3}{20\times7}\,L=\left(\frac{5}{9}\right)^2\times\frac{27}{35}\,L=\frac{675}{2835}\,L \qquad \text{Now } L=383\times10^5$$

$$C=1200\text{ cm.}$$

Therefore $C_1=\frac{5}{21}\times1200=\mathbf{290\text{ cm.}}$ and $L_1=\frac{383\times675}{2835}\times10^5=\mathbf{9\times10^6\text{ cm.}}$ From this $T=\frac{2\pi}{10^3}\sqrt{\frac{290}{9\times10^5}\times\frac{9\times10^6}{10^9}}=\frac{107}{10^7}$ approx. as period of sec. system (roughly) and $n=\frac{10^7}{107}=93{,}458$ per sec. Now the length of wire for 20 turns, about 139 feet per turn, will be 139×20 feet. This gives $\lambda=11{,}120$ feet or $\frac{\lambda}{4}=2780$ feet and this would correspond to $n=90{,}000$ approx.

Adding a ball of 38 cm. capacity would give a total capacity

$$290+38=328 \qquad \sqrt{328}=18.11 \qquad \sqrt{290}=17 \text{ approx.}$$

hence by adding a ball the secondary vibration will be reduced by a ratio of: $\frac{17}{18.11}$ or it will be $\frac{17}{18.11}\times93{,}460=88{,}000$ approx. This would be too quick a vibration to best suit the apparatus as then we would have only 4 jars on each side of the primary.

With the additional coil of 1500 cm. capacity added in series with secondary on free terminal, the capacity would be 1500+290=1790, that is about 6 times as much as before. The vibration will then be slower $\sqrt{6}=2.5$ approx. times slower, about 37,400 per sec. **This better suited.**

Colorado Springs

June 29, 1899

The first good trial of a new wound secondary with 36 turns was made today. The wire was No. 10 cord, the turns being wound in every third groove. The distance of wires is approx. 1 7/8".

Vibration under the conditions of the first experiments: Approximate self-induction of secondary about 5×10^7 cm. Additional coil connected to free end of secondary, the coil having 240 turns, spool 6 feet long, 2 feet diam. Estimated self-induction of coil roughly 10^7 cm.

A=2900 sq.cm. $\quad l=\dfrac{2900\times240^2\times4\pi}{183}=\dfrac{576\times29\times10^4\times12.57}{183}=$

N=240 turns

l =183 cm. $\quad =1140\times10^4=114\times10^5$ for rough approximation $=10^7$

The wave length should be (ignoring capacity):
$4\times[5280\text{ (sec)}+1440\text{ (spool)}]=4\times6720=26{,}880$ feet or about 5 miles.

To give this wave length the primary vibration should actually be 187,000 : 5= =37,400 per sec. (same number before found).

The capacity C_p in primary to be found:

$$\frac{1}{37{,}400}=\frac{2\pi}{1000}\sqrt{LC_p}=\sqrt{\frac{7\times10^4\times C_p}{10^9}}=\frac{2\pi}{10^3}\sqrt{\frac{7\times C_p}{10}}$$

$$\frac{1}{374}=\frac{2\pi}{10^3}\times0.84\sqrt{C_p},\quad \sqrt{C_p}=\frac{10^3}{2\pi\times0.84\times374}=\frac{1000}{1975}\text{ or }0.5\text{ approx.}$$

$C_p=0.7$ mfd

This would require $\dfrac{0.7}{0.003}$ jars=233 jars with two primary turns in multiple and $\dfrac{233}{4}$ or about 58 jars total with two primaries in series. As so many jars were not available evidently only a higher vibration was obtainable. This explains why first results unsatisfactory.

Arrangements of apparatus experimented with in carrying out condenser method. (This for Curtis application)

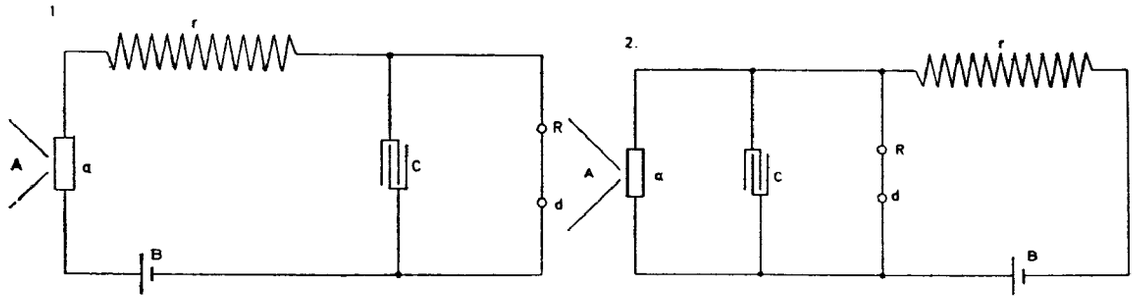

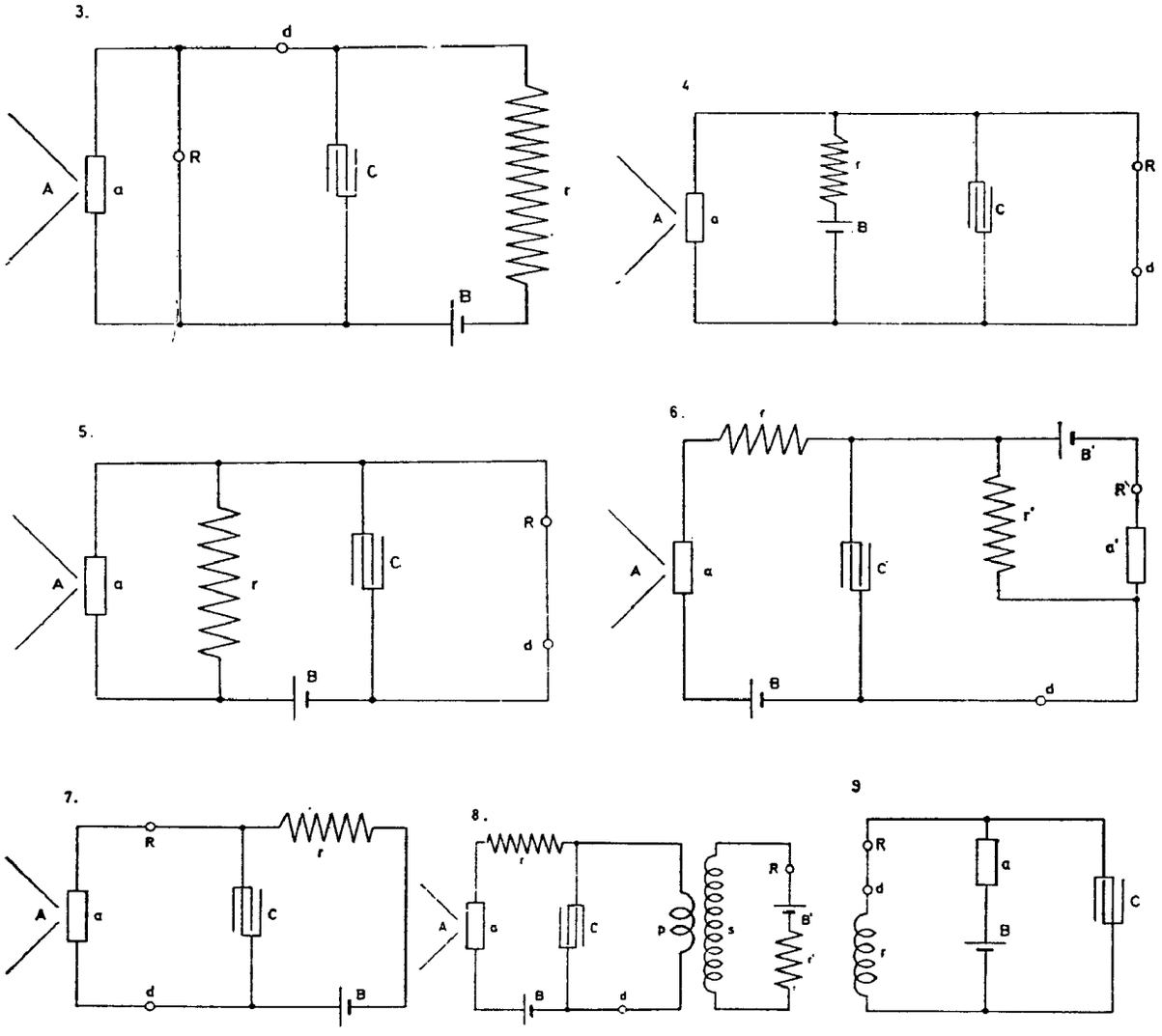

Colorado Springs

June 30, 1899

Simple formulas to be used in rough estimates of the quantities frequently wanted.

In formula $T=\frac{2\pi}{10^3}\sqrt{LC}$, L is in henry but usually is wanted in cm. We may therefore use

$$T_1=\frac{2\pi}{10^3\times 10^4\times\sqrt{10}}\sqrt{LC} \text{ or approx. when } L \text{ is in cm.}$$

$$T_1=\frac{2}{10^7}\sqrt{LC} \quad C \text{ in mfd.} \tag{1}$$

From $L=\frac{T_1^2\times 10^{14}}{4C}$ we have

$$C=\frac{T_1^2\times 10^{14}}{4L} \quad \ldots\ldots\ldots\ldots \tag{2}$$

Introducing jars for C we have $C=n\times 0.003$

$$\text{therefore } n=\frac{T_1^2\times 10^{17}}{12L} \quad \ldots\ldots\ldots\ldots \tag{3}$$

Introducing again λ in miles in place of T_1

$$T_1 \text{ being} = \frac{\lambda}{187{,}000} \text{ we have:}$$

$$\lambda=\frac{374}{10^4}\sqrt{LC} \text{ or, since usually } \frac{\lambda}{4} \text{ is needed}$$

$$\frac{\lambda}{4}=\frac{93.5}{10^4}\sqrt{LC} \quad \ldots\ldots\ldots\ldots \tag{4}$$

Observations made in experiments with oscillators, 36 1/2 turns and additional coil:

The additional coil is, as observed in the New York apparatus, an excellent means of obtaining excessive electromotive force. But it is peculiar that to properly develop the independent vibration of such a coil its momentum should be very great with respect to the impressed vibration. When such a relation exists the free vibration asserts itself easily and prominently. But when the impressed vibration is very large and the coil's own momentum small, the free vibration can not assert itself readily. It is exactly as in mechanics. A pendulum with great momentum relative to the impressed momentum swings rigorously through its own period but when impressed momentum is very large relatively it is hampered, for then the impressed dominates more or less. This I look upon as distinct from the magnifying factor which depends on $\frac{pL}{R}$.

It was evident that in such excitation of the additional coil there should be, for the best result, three vibrations falling together: that of the coil, that of the secondary and that of the combined system. In view of the above it is of advantage to place inductance between the secondary and additional coil to free the latter, when impressed vibration is too powerful to allow the intended vibration of the coil to take place readily.

From experiments it further appeared as though it would be of advantage to have some self-induction in the primary spark gap. This is to be ascertained. The use of condensers in series with the supply secondary is sometimes of advantage but little so when the vibration of the secondary is in resonance with the primary. Then there is less short circuiting of the secondary of the supply transformer and sparks are loud and sharp.

Colorado Springs Notes

July 1—31, 1899

To this to be added two applications filed with Curtis and other patent matters, mostly foreign.

Colorado Springs July 1 : 1899.

MUZEJ
NIKOLE TESLE

Various ways of connecting apparatus when applying condenser method of recording effects. The charging or discharge of condenser is controlled by the effects transmitted through the medium and the condenser discharges are passed through the primary of the oscillating transformer. The diagrams below show various arrangements with the instruments in the secondary of the transformer.

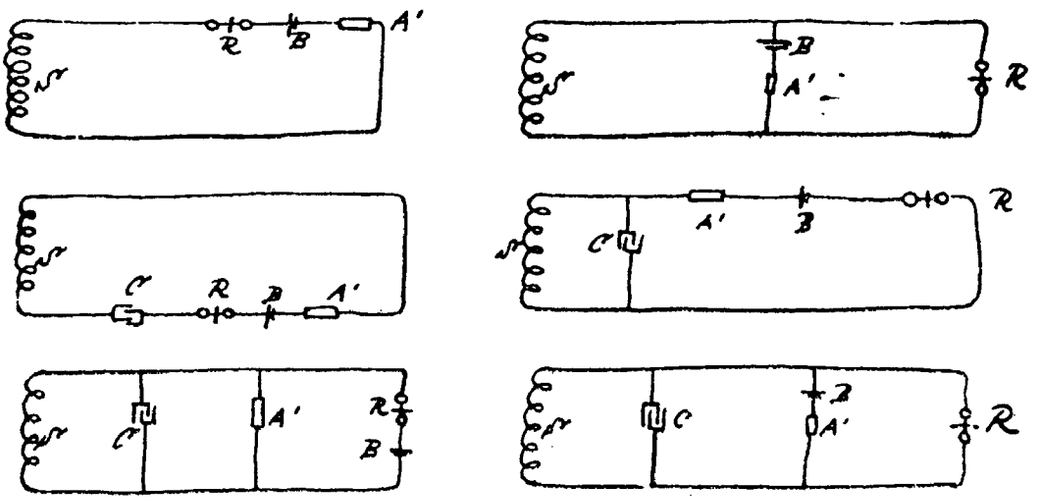

In these arrangements the primary is not shown. The coil is assumed to be connected in the circuit in any way but so that the charging or discharging of the condenser is controlled by a sensitive device operated by the feeble effects which are to be recorded. In the above diagrams S is the secondary of oscillating transformer, B battery to sensitive device in secondary, A' sensitive device, R for relay (magnetic), C condenser in secondary. The primary circuit which is not shown includes a sensitive device, battery, condenser and suitable break device. This method with the sensitive device very good.

Colorado Springs

July 1, 1899

Various ways of connecting apparatus when applying condenser Method of Magnifying effects. The charging or discharging of the condenser is controlled by the effects transmitted through the media and the condenser discharges are passed through the primary of the oscillatory transformer. The diagrams below show various arrangements with the instruments in the secondary of the transformer.

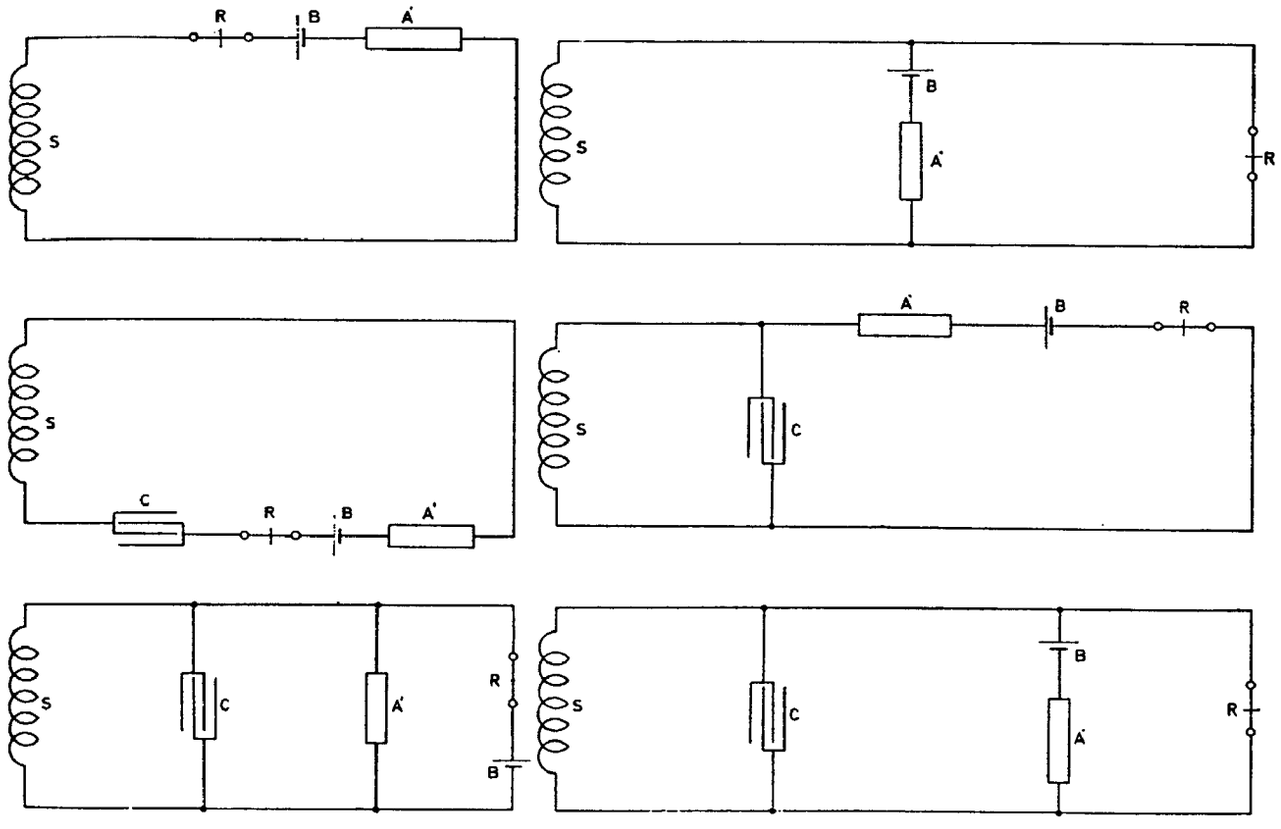

In these arrangements the primary is not shown. The same is assumed to be connected in the circuit in any way but so that the charging or discharging of the condenser is controlled by a sensitive device affected by the feeble effects which are to be magnified. In the above diagrams *S* is the secondary of oscillatory transformer, *B* battery to strain sensitive device in secondary; *A'* sensitive device, *R* fine relay (magnetic); *C* condenser in secondary. The primary circuit which is not shown includes: a sensitive device, battery, condenser and make-and-break device. This method with two sensitive devices is very good.

Colorado Springs

July 2, 1899

Considerations regarding best conditions of working apparatus in experimental station particularly with reference to stationary waves in the ground which will be investigated.

First assumption on which to base calculations of other elements is made by deciding on the wave length of the disturbances. This in well designed apparatus determines $\frac{\lambda}{4}$ or length of secondary wound up. The self-induction of the wire is also given by deciding on the dimensions and form of coil hence L_s and λ are given. For the best working of the secondary we should have the capacity on end or free terminal just counteracting the self-induction of the secondary. This will be the case when $C_s = \frac{L_s}{R_s^2 + p^2 L_s^2}$. Since the resistance should be negligible we have $C_s = \frac{1}{p^2 L_s}$. Now p is given by assuming λ. Hence from above equation C_s is given. Furthermore, to get best results the same relation between p, L_p and C_p must also be preserved so that $C_p = \frac{1}{p^2 L_p}$, C_p and L_p being the capacity and inductance of primary. From these considerations follows a relation between C_s, C_p, L_s, L_p. Namely, $C_s = \frac{1}{p^2 L_s}$ and as $p^2 = \frac{1}{C_p L_p}$ we have $C_s = \frac{1}{L_s \frac{1}{L_p C_p}} = \frac{L_p C_p}{L_s}$ or otherwise expressed, $L_s C_s = L_p C_p$ ..... *I.*

This applies to a simple case, as the one here illustrated which was one of the earliest arrangements.

The scheme of connections illustrated in Fig. 1. has the disadvantage that the primary discharge current passes through the break hence, the resistance of the latter being large, the oscillations are quickly damped and there is besides a large current through the break which makes good operation of the latter difficult. To prolong oscillation in pri-

1.

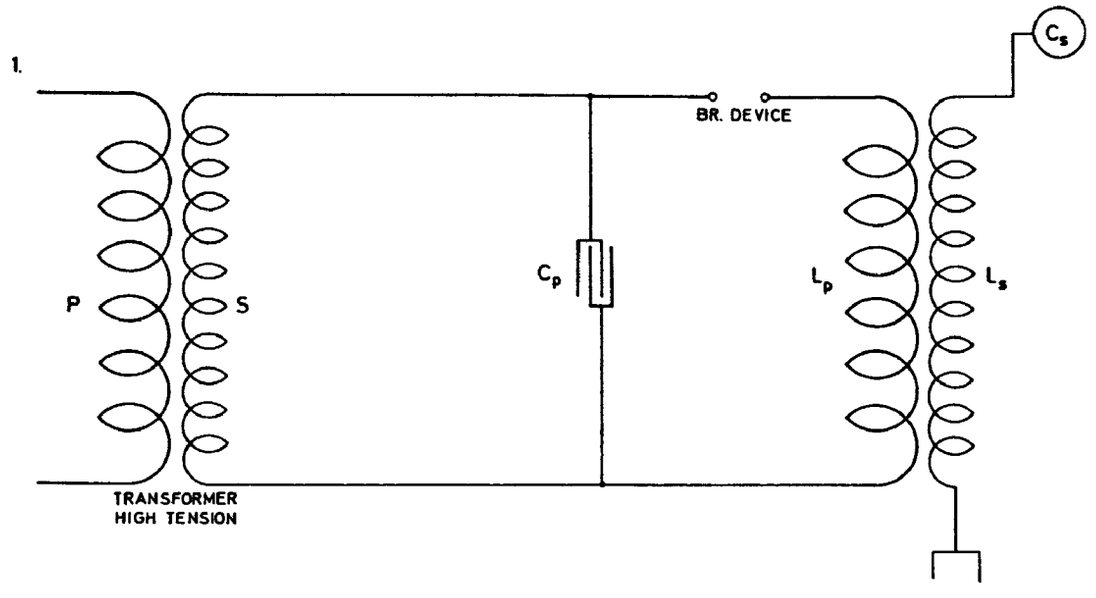

mary and increase economy one of the schemes before considered may be resorted to. One of these is illustrated in Fig. 2. which follows: in this arrangement the currents through the break device are much smaller and the oscillations started by the operation of break

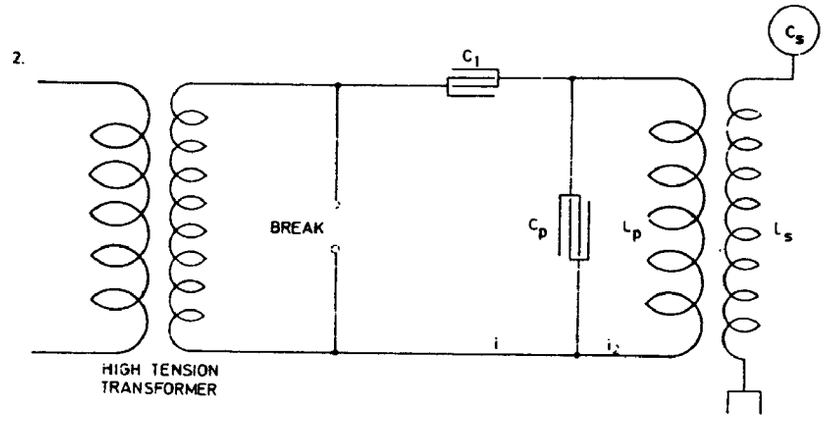

in circuit L_pC_p continue much longer. We can now determine the magnitude of currents i, i_2. Capacity $C_p=\frac{L_p}{R_p^2+p^2L_p^2}$ from foregoing or approximately $C_p=\frac{1}{p^2L_p}$ as before, neglecting resistance. We have then $\frac{i_2}{i}=\sqrt{\frac{R_p^2+p^2L_p^2}{R_p^2}}$ or, since the first term is negligible in numerator, we have $\frac{i_2}{i}=\frac{pL_p}{R_p}$ or $i_2=i\frac{pL_p}{R_p}$. From this relation it is evident that, other difficulties or disadvantages not considering the arrangement as illustrated in Fig. 2. should be superior to that in Fig. 1. It secures two chief advantages: 1) less current through the break and more through the primary and 2) longer and better oscillation in circuit including primary because it is easy to constitute such a system without break with an extremely small resistance or frictional waste.

Fig. 3. illustrates an arrangement similar to that shown in Fig. 2. but with a condenser in each branch. The same considerations made in regard to Fig. 2. hold good for this and in both cases, if there is to be resonance and best conditions attained, the circuit including the break should have the same period and be in phase with primary circuit L_pC_p and secondary L_sC_s. Referring to Fig. 2. as the simpler, this is the case when the

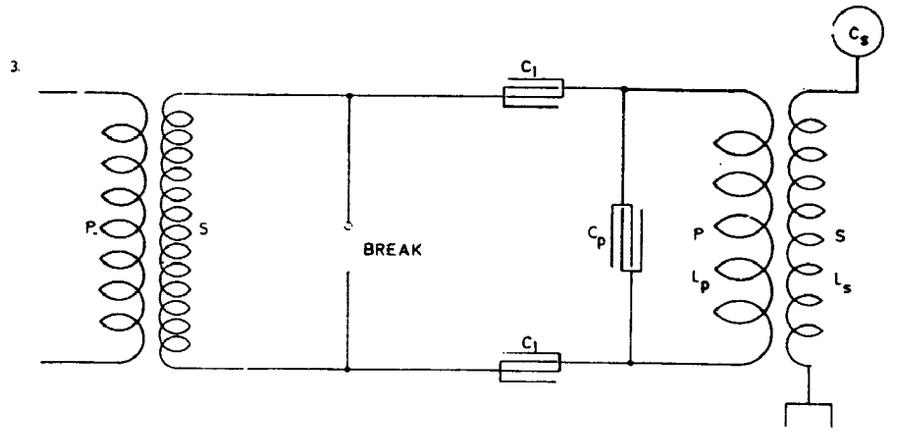

relation between C_1 and self-induction in this circuit is such that they annul each other at that frequency.

Fig. 4 — a further modification shows the system with inductance L_1 in circuit. To satisfy above conditions we must have

$$C_1=\frac{L_1}{R_1^2+p^2L_1^2},$$

R_1 being the resistance including the arc. Since in most cases, even with the arc included, R_1 will be negligible against pL_1, we have again

$$C_1=\frac{1}{p^2L_1}.$$

From all the above considerations we get a general relation between the constants of all the three circuits which is expressed by:

$$\left.\begin{aligned}&\frac{1}{C_sL_s}=\frac{1}{C_pL_p}=\frac{1}{C_1L_1}\\ \text{or }\ &C_sL_s=C_pL_p=C_1L_1\end{aligned}\right\}\ldots\ldots\ldots\ldots\ldots\ \text{II.}$$

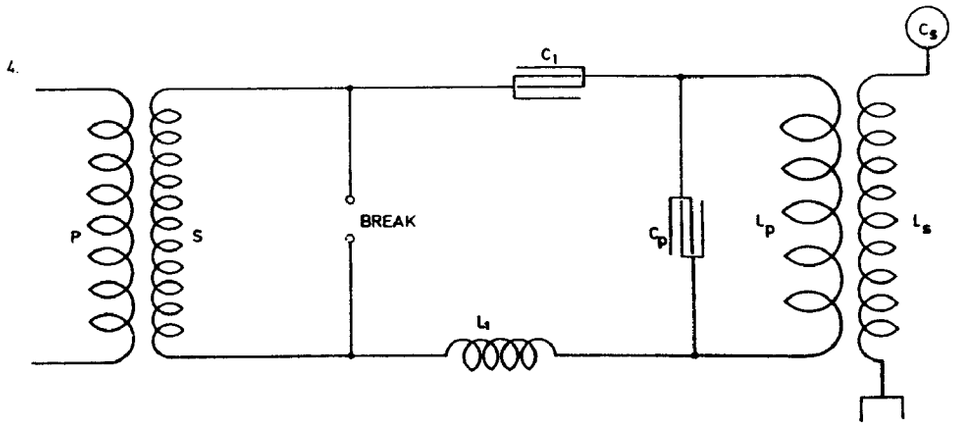

We have seen from the preceding that of the quantities considered p was given by arbitrary selection of the wave length, L_s necessarily by the wire and design of secondary and, lastly, C_s as following from the two preceding quantities. One more quantity is, however, given by practical considerations and that is C_1. Namely, this capacity C_1 must be sufficient to take up the entire energy of the transformer, if all things are rightly proportioned. Now let P' be the e.m.f. on the secondary of the supply transformer, then there will be stored each time in condenser C_1 a quantity of energy $\frac{P'^2C_1}{2}$ and if this value be taken for the average energy stored each time and if, furthermore, the frequency of the make and break be p_1, that is $p_1=4\pi n$, n being number of charges per second, or

$$n=\frac{p_1}{4\pi},\ \text{then}\ \frac{P'^2C_1}{2}\cdot\frac{p_1}{4\pi}=M\ \text{or}\ C_1=\frac{8\pi M}{P'^2p_1}$$

M is here the total power of the transformer expended and expressed in watts, P' the pressure of secondary (average as defined) and p_1 as before stated the frequency of the break. The quantity C_1 thus being given in each case, these remain still to be determined: L_p, L_1 and C_p.

Now it is evident that when the relation between p_1, L_p and C_p exists, which is here implied, the current passes through the system as if there would be no inductance, hence insofar as the circuit including the break, C_1 and L_1 is concerned the system L_p C_p will comport itself as if it consisted of a short wire of inappreciable resistance, the primary being generally made of stout short conductor — therefore, in estimating the quantities of the circuit C_1 L_1 b the compound system L_p C_p may be neglected since it will have little influence upon the period under the conditions assumed, and we may then put $C_1 = \frac{1}{p^2 L_1}$ when resistances are, as always before, negligible.

Since C_1 is known we can determine L_1 because

$$L_1 = \frac{1}{p^2 C_1} = \frac{1}{p^2 \frac{8\pi M}{P'^2 p_1}} = \frac{P'^2 p_1}{8\pi M p^2}$$

Presently then all the quantities are known for determining the constants of circuit L_p C_p from the two equations:

$$\left.\begin{aligned} L_p C_p &= L_s C_s \\ L_p C_p &= L_1 C_1 \end{aligned}\right\} \ldots\ldots\ldots \text{III.}$$

Colorado Springs

July 3, 1899

In experiments with the secondary as last described, fairly good resonance was obtained with 15 jars on each side of the primary. A length of wire No.10—170 feet — was covered with intense streamers. The capacity — total — was $7.5 \times 0.003 = 0.0225$ mfd. L_p was approximately estimated $36 \times 7 \times 10^4$ cm. (six primary turns in series). From this $T = \frac{4.836}{10^5}$ as calculated. This gives $n = \frac{1}{T} = 20{,}700$ per sec. approx. With this vibration λ was nearly 9 miles or $\frac{\lambda}{4} = 2.25$ miles. Actually, there was only one mile of secondary wire but owing to the large capacity (distributed) in the secondary the vibration was much slower than should be inferred from the length of wire. We may estimate the ideal capacity, which associated with the inductance of the secondary would give a vibration of the above frequency. Since there was resonance we have:

$$T = \frac{4.836}{10^5} = \frac{2\pi}{10^3}\sqrt{\frac{5 \times 10^7}{10^9} C_s}$$

Taking the inductance of the secondary as being 5×10^7 cm. and from this

$$C_s = \frac{23.34}{20{,}000} = \text{roughly } \frac{1}{1000} \text{ mfd. more exactly 0.0012 mfd. or } \mathbf{1080} \text{ cm.}$$

But we may approximately estimate capacity in another way taking the wires in pairs as a condenser. This would give $C_s = \frac{A}{4\pi d} \times 40$, there being 40 pairs since there

are 40 turns wire. Now A=surface of half wire: 131 feet, about 4000 cm. long; half circumference about 0.4 cm. gives A=1600 cm. sq. The distance of wires d was=5 cm. From this: $C_s=40\times\frac{1600}{4\pi\times 5}=$**1040 cm. approx.** (probably accidentally close.)

Last night the 50,000 volts transformer brought from New York broke down. This happened upon connecting to the lower end of the secondary a condenser composed of two adjustable brass plates of 20″ diam., one being connected to the ground, the other to the secondary. The plates were about 5″ apart. The experiment was repeated with the transformer after repairing it and all was found in good order.

Experiments were now continued with the secondary of 40 turns wire No. 10 just one mile long. In connection with this secondary a coil was used wound on a drum 2 feet in diam. and 6 feet long, with wire No. 10 (cord), there being 260 turns. Approx. estimate of capacity after a previous similar estimate: 6 feet=$6\times 12=72''=72\times 2.54=183$ cm. Half circumference of wire 0.4 cm. Area=$183\times 0.4=74$ sq.cm. (about)=a, distance of wires about 1 cm.=d. This would give roughly the capacity $C_1=\frac{a}{4\pi d}=\frac{74}{4\pi}$ for one pair of wires; there being 260 pairs, total capacity would be according to this $\frac{260\times 74}{4\pi}=1532$cm. $=C_t$ (for coil). Now, the capacity in the secondary was previously found 1080 cm. Hence the total capacity of the system would be 1080+1532=2612 cm.=C'. This, of course, gives only an idea and the determination in this manner is far from being exact. Consider what the period would be with the capacity and secondary and coil together as a whole. Since the coil will have only about 12,000,000 cm. the inductance of the secondary will be the chief governing factor. Taking this at 5×10^7 cm. we would have a total inductance $5\times 10^7\times 12\times 10^6$ or $(50+12)\times 10^6=62\times 10^6$ cm. This would give

$$T=\frac{2\pi}{10^3}\sqrt{\frac{62\times 10^6}{10^9}\times\frac{2612}{9\times 10^5}}=\frac{2\pi}{3\times 10^7}\sqrt{164{,}944}=$$

$$=\frac{2\pi\times 406}{3\times 10^7}=\frac{2549.68}{3\times 10^7}=\frac{849.9}{10^7}\text{ or }\frac{850}{10^7}=\frac{85}{10^6}$$

and n=11,800 roughly. *To this the primary to be adjusted* for first approximate trials. Now the primary has six turns. Since one turn is approx. 7×10^4 cm. we may put:

$$\frac{85}{10^6}=T=\frac{2\pi}{10^3}\sqrt{\frac{36\times 7\times 10^4}{10^9}C_p}$$

From this a rough idea of the capacity in primary may be gained. We get C_p=0.0717 mfd. roughly. Taking capacity of one jar=0.003 mfd. we would want total $\frac{0.0717}{0.003}=24$ jars approx. or 48 jars on each side of primary. This vibration would be impracticable under the present conditions as the transformer could not charge this number of jars. Although for *stationary waves* in ground it would be desirable to use such a low frequency the vibration will have to be quickened. An octave would require only 12 jars on each side. This was tried and results *were good* although the octave vibration had only 1/4 of the energy as the fundamental would have had. To get the true vibration we shall want

at least 8 *turns* in the primary with present transformer to keep the capacity in the primary within the limits given by the output of transformer. This would then give $48 \times \frac{36}{64} = 27$ jars on each side. While this might do, still for best conditions not more than 16 jars should be used on each side of primary. This just taxes the transformer to full capacity within safe limits.

Conclusion: *Used about 10 turns in the primary.*

Colorado Springs

July 4, 1899

Observations made last night. They were such as not to be easily forgotten, for more than one reason. First of all a magnificent sight was afforded by the extraordinary display of lightning, no less than 10—12 thousand discharges being witnessed inside of two hours. The flushing was almost continuous and even later in the night when the storm had abated 15—20 discharges per minute were witnessed. Some of the discharges were of a wonderful brilliancy and showed often 10 or twice as many branches. They also appeared frequently *thicker on the bottom* than on top. Can this be so? Perhaps it was only due to the fact that the portion close to the ground was nearer to the observer. The storm began to be perceptible at a distance as it grew dark and continuously increased. An instrument (rotating "coherer") was connected to ground and a plate above ground, as in my plan of telegraphy, and a condenser was used to magnify the effects transmitted through the ground. This method of magnifying secures much better results and will be described in detail in many modifications. I used it in investigating properties of Lenard and Roentgen rays with excellent results. The relay was not adjusted very sensitively but it began to play, nevertheless, when the storm was still at a distance of about 80—100 miles, that is judging the distance from the velocity of sound. As the storm got nearer the adjustment had to be rendered less and less sensitive until the limit of the strength of the spring was reached, but even then it played at every discharge. An ordinary bell was connected to earth and elevated terminal and often it also responded. A small spark gap was bridged by a bright spark when the lightning occurred in the neighbourhood. By holding the hands across the gap a shock was felt indicating the strength of the current passing between the ground and the insulated plate. As the storm receded the most interesting and valuable observation was made. It happened this way: the instrument was again adjusted so as to be more sensitive and to respond readily to every discharge which was seen or heard. It did so for a while, when it stopped. It was thought that the lightning was now too far and it may have been about 50 miles away. All of a sudden the instrument began again to play, continuously increasing in strength, although the storm was moving away rapidly. After some time, the indications again ceased but half an hour later the instrument began to record again. When it once more ceased the adjustment was rendered more delicate, in fact very considerably so, still the instrument failed to respond, but half an hour or so it again began to play and now the spring was tightened on the relay very much and stil it indicated the discharges. By this time the storm had moved away far out of sight. Byl readjusting the instrument and setting it again so as to be very sensitive, after some time

it again began to play periodically. The storm was now at a distance greater than 200 miles at least. Later in the evening repeatedly the instrument played and ceased to play in intervals nearly of half an hour although most of the horizon was clear by that time.

This was a wonderful and most interesting experience from the scientific point of view. It showed clearly the existence of *stationary waves*, for how could the observations be otherwise explained? How can these waves be stationary unless reflected and where can they be reflected from unless from the point where they started? It would be difficult to believe that they were reflected from the opposite point of the Earth's surface, though it may be possible. But I rather think they are reflected from the point of the cloud where the conducting path began; in this case the point where the lightning struck the ground would be a nodal point. It is now certain that they *can be produced* with an oscillator

(*This is of immense importance*)

Measurement of inductance of oscillator secondary 36 1/2 turns on tapering frame repeatedly referred to. The approximate dimensions and form of same are indicated in

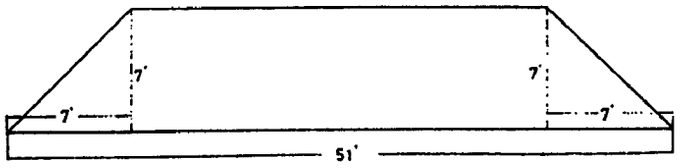

the sketch. On the base it was about 51 feet and the sides were inclined at an angle of 45°. The sides were formed of light lattice work notched for the reception of the wires. The first turn of the secondary began some distance from the ground so that the average turn was smaller than it ought to have been, judging from dimensions, that is nearly 145 feet. Nevertheless more wire was actually coiled up owing to the fact that there was some loss in the corners, and the wire not being perfectly straight added still further to the length so that 6 coils of wire were rolled up, their lengths being: 1000+1000+1005+1002+ +762+546=5315 feet total, No. 10 B. & S. wire. Deducting ends left gave very nearly 5280 feet or a mile = 1610 meters approx. The wire was wound on by the help of a stand rolled on the floor and supporting the reel. The resistance of the wire was 5.55 ohms. The readings were as follows:

motor (ω)	E	I		
2115	212	6.2	from this average values were	$I=6.17$, $E=211.33$, $\omega=883.42$
2100	211	6.16		
2120	211	6.16		

$$\frac{E}{I}=34.25 \qquad \left(\frac{E}{I}\right)^2=1173 \qquad R^2=30.8 \qquad L=\frac{\sqrt{\left(\frac{E}{I}\right)^2-R^2}}{\omega}$$

gives $L=3826\times10^4$ cm. or **0.03826 henry.**

With 40 turns placed at same distance we may take approximate inductance to be about 42×10^6 cm. Note: It was before assumed 5×10^7 but the turns were a trifle closer.

Readings were taken today with the synchronous 8 pole motor to ascertain ω as closely as possible for future measurements with following results:

Time	Speed generator (10 pole)	Speed motor	Speed reduced gen.
5.35	1700	2155	1724
5.40	1700	2165	1732
5.50	*1730*	2160	*1728*
6.10	*1710*	2150	*1720*
6.20	1705	2170	1736
6.25	*1717*	2150	*1720*

Speed of generator on station was taken by Mr. L. and on motor in exp. station by myself. The readings on generator were more liable to be underestimated. General results show that high values obtained on generator agree well with values obtained on motor. The latter *can* go a little faster without load. This I have observed with such motors before. The reason for this may be found in the fact that the generator fluctuates about a certain average value, a greater momentum is impacted to the motor when the speed of the generator is *above* than when *below* that value. This will result in the motor making a few more revolutions than would strictly follow from the average value. Or, the counter-electromotive force is out of phase giving higher e.m.f. on motor then on generator, thus changing amount of positive or negative slip. Taking average from three evidently best readings we get on generator 1719, on motor 1722 which agrees fairly. Accordingly, *with this generator* ω will be generally $2\pi \times 29 \times 5 = 911$ or, for ordinary estimates $\omega = 900$.

Colorado Springs

July 5, 1899

From older notes:

Consider generation of hydrogen for balloons in the ordinary way:

$H_2SO_4+Zn=ZnSO_4+H_2$ $\left.\begin{matrix}H=1\\S=32\\O=16\\Zn=65\end{matrix}\right\}$ $H_2SO_4=98$

From this:

98 (H_2SO_4)+65 (Zn)=2H in lbs. Now weight of hydrogen 0.00561 lbs. per cubic foot, for filling 10 ft balloon we would want $523\times\frac{2}{3}=350$ cu. feet hydrogen, namely capacity of 10 foot balloon would be 523 feet but it ought to be filled only to about 2/3. This quantity of hydrogen will weigh about $350\times0.00561=1.96$ lbs.

Result: We want $\left.\begin{matrix}100 \text{ lbs } H_2SO_4\\65 \text{ ,, Zn}\end{matrix}\right\}$ to fill balloon of only 10 feet diam.

Now consider and compare process which some years ago occurred to me and which consists in decomposing a hydrocarbon as by an electric current heating a wire to incandescence. To get a rough idea take, for instance, a hydrocarbon of the general composition C_2H_4 (not to speak of combinations richer still in hydrogen). In such a combination we have for the quantity of hydrogen contained in it an extremely small weight. For instance, from $\left\{\begin{matrix}C=12\\H=1\end{matrix}\right\}$ 28 units of weight total we get 4 unity of weight hydrogen, much more than possible in former method. In case therefore a very small weight is essentially required this method is *most excellent*. Now as to electrolytic generation: 1 amp.-hour gives 37.3 milligram of hydrogen, 1000 amp.-hours $\frac{37{,}300\times2.2}{10^6}$ lbs., 0.00561 lbs per cu. foot gives 1.2 cu. feet per 1000 amp.-hours! Ridiculously small!

Colorado Springs

July 6, 1899

On a previous occasion the capacity of a coil was estimated by considering it as a series of parallel conductors and in this manner a tolerably close estimate was obtained. Applying this to the secondary of 40 turns we would have:

$$C=\frac{0.01206}{\log\frac{d}{r}}$$ from a practical formula $\left\{\begin{matrix}d=\text{distance between}\\r=\text{diameter of}\end{matrix}\right\}$ wires

This gives C in microfarad per 1 km., according to the authority. Here the length of wire total is 5280 feet roughly or $5280\times12\times2.54=160{,}934$ cm. Taken as a pair of conductors this would give length $\frac{160{,}934}{2}=80{,}467$ cm.

$$\text{Now } \frac{d}{r}=\frac{4.23}{0.127}=\frac{4230}{124}=33.3 \qquad d=\frac{10''}{6}=4.23 \text{ cm.}$$

$$\log\frac{d}{r}=1.522444 \qquad r=\frac{0.1''}{2}=0.127 \text{ cm.}$$

from these data we would have per 1 km. in microfarad·

$$C_1=\frac{0.01206}{1.522444}=0.00792 \text{ mfd. per km.}$$

Now the length of the pair of parallel wires as supposed would be 80,467 cm. or 0.80467 km. or for the secondary the capacity would be $C=0.80467\times C_1\times2$, double since both sides must be counted, or $C=0.00792\times2\times0.80467=0.01584\times0.80467=$ $=0.012746$ mfd. or $9\times10^5\times0.012746=1274.6\times9=11{,}471.4$ cm. Evidently this is not applicable, the capacity could be at the utmost 3000—4000 cm. judging from the vibration of the secondary.

Colorado Springs

July 7, 1899

General conclusions arrived at after all these and previous experiences with electrical oscillators of this kind. It is important as a rule and sometimes imperative to overcome distributed capacity. In large machines it also becomes necessary to overcome the too great self-induction since it prevents obtaining a very high frequency which is generally of great advantage. The high e.m.f. being for the chief purposes aimed at — that is power transmission and transmission of intelligible messages to any point of the globe — essentially necessary, it is important to ascertain the best manner to obtain it. As has been already stated this result may be reached in two ways radically different — either by a high ratio of transformation or by resonant rise. For power transmission it seems that ultimately the former method must prevail, but where a small amount of energy is needed the latter method is unquestionably the better and simpler of the two. By placing the secondary in a very close inductive relation to the primary, the self-induction is diminished so that the self-induction in a highly economical machine of this kind would not seem to be an impediment in the way of obtaining a very high frequency, at least not one which could not be more or less overcome by scientific design of the machine. But the distributed capacity is a troublesome element in such a machine and all the more so as the e.m.f. increases. When the pressure reaches a few million volts almost all the energy is taken in

charging the condenser or capacity distributed along the wire. The difficulty becomes greater still when it is realized that in an economical machine the turns must be close together, which increases the drawbacks resulting from the distributed capacity. Now one way of reducing the internal capacity is to place between the turns, and *in series* with them, condensers of proper capacity, but this is not always practicable. This will be *later considered* more in detail. By such means the full rise of pressure on the terminal or terminals of the secondary may be obtained, which is impossible with distributed capacity of any magnitude. Very often only a small rise at the terminals can be obtained as all the charge remains "inside". Now as to obtaining the required pressure by a resonant rise there are again two ways: either to place a secondary in *loose* connection to a primary thereby enabling the free vibration of the secondary to assert itself, or using a secondary in *intimate* connection with the primary and then raising the pressure by an additional coil — extra coil — or inductance *not in inductive relation* to the primary. The latter method I have found preferable when a very high e.m.f. is desired. More particularly for purposes of telegraphy to any point of the globe which is one of the objects, I conclude that: 1) ratio of transformation should be as large as practicable with reference to the preceding; 2) magnifying factor of coil as large as possible; 3) minimum internal capacity; 4) high self-induction in coil for *sharp tuning*. Experiences up to present indicate flat spiral form of coil in sections as best suitable.

Rough estimate of period of vibration to be adopted with Westinghouse transformer 40,000 — 60,000 volts.

Required: that only one turn of primary be used because of 1) high ratio of transformation to be attained and 2) facility of regulation with the Regulating coil brought from New York. Now the total output of W.E. Transformer will be, say, 50 H.P. (though the machine may be strained to many times that output). From this follows the number of jars which it will be possible to use. We have $50\times750=\frac{1}{2}\times60{,}000^2\times300\times C$, assuming now 150 cycles per second, a little more than is likely to be the case. From this follows $C=\frac{75\times10^3}{36\times10^8\times3\times10^2}=\frac{75}{36\times3\times10^7}$ farad or in centimeters we would have the capacity of condenser which the transformer will be able to charge without considering resonant conditions or other causes which may enable the transformer to charge many more jars — $C=\frac{9\times75\times10^{11}}{108\times10^7}=\frac{9\times75\times10^4}{108}=C=62{,}500$ cm. total. Now taking the capacity of one jar as 0.003 mfd. or 2700 cm. this would give only $\frac{62{,}500}{2700}=\frac{625}{27}=23$ jars total, or in two series 46 jars on each side of primary. The capacity of new jars will be probably 0.0025 and a correspondingly greater number may be taken. With 40,000 volts we would be able to take $\frac{36}{16}\times23=$nearly 52 jars *total* or 104 on each side. Assuming 60,000 volts and say 48 of new jars on each side this would give capacity in the primary most suitable to the transformer $24\times0.0025=$**0.06 mfd.** and the inductance of the primary being say 7×10^4 cm. The period T would be $=\frac{2\pi}{10^3}\sqrt{\frac{7\times10^4}{10^9}\times0.06}=\frac{12.874}{10^6}$ and $n=77{,}660$ per second.

Colorado Springs

July 8, 1899

Further conclusions relative to the best working conditions and constructional features of such oscillators derived from observations made in these and previous experiments. Beginning with the primary, the capacity should, as stated before, be best adapted to the generator which supplies the energy. This consideration is, however, of great importance only when the oscillator is a large machine and the object is to utilize the energy supplied from the source in the most economical manner. This is the case particularly when the oscillator is designed to take up the *entire output* of the generator, as may be in the present instance. But generally, when the oscillator is on a supply circuit distributing light and power the choice of capacity is unrestricted by such considerations. In most cases the advantages secured by using a very high frequency are so pronounced that the primary circuit will have to be designed with this feature in view. The resistance of the primary circuit should be in any event as small as it is practicable to make it. I also think that generally, the inductance should be as small as practicable for that frequency which is supposed to be arbitrarily selected beforehand. When, however, the break number is comparatively small, that is, much smaller than the number of free vibrations, it is of great advantage to have the inductance great in order to give a greater momentum to the circuit and to thus enable it to vibrate longer after each break. But if the break number is of a frequency comparable with that of the free vibrations, the inductance should be as small as possible for however small it be, the circuit will generally vibrate long enough. One more reason why the inductance should not be large in such a case is that, in the primary, it is unnecessary to raise the pressure by making $\frac{pL}{R}$ very large. Necessarily this factor *will* be large in a well designed circuit, but should be so chiefly owing to an extremely small resistance and not owing to a high self-induction. By making the inductance smaller a greater capacity may be used and this will give a greater output, a feature which is sometimes of importance. Of course, as the capacity becomes large the difficulties in the make and break device increase, but with a properly designed mercury break these difficulties are in large measure overcome. I conclude from the above facts that the best way to construct a primary in such a machine is to use thin sheet of copper or at any rate a stranded cable. I have settled upon using copper sheet in the smaller machines since long ago, this giving the best result. By using sheet a very small inductance is obtained and *more length* of conductor can be wound on for same frequency, at the same time the opportunity for radiation is excellent and the construction is simple and cheap. For the same section sheets heat *much less* than cable and the difference in this respect is so marked that I have been tempted to believe that there is a special reason for it, not yet satisfactorily explained. The *actual length* of the primary conductor, relative to that length which is obtained by dividing the velocity of light by $2n$, n being the number of vibrations of the primary per second — is of little importance since the primary is generally but a very small fraction of that length, but I believe to have observed that it is preferable, in a slight degree, to make the conductor of such a length that, if l be this length and n the frequency, $2\,Knl$ should $= v$, the velocity of light, and K should be a *whole* number and not a *fraction*. At least this seems to hold good in circuits made very long, expressly for the purpose of ascertaining whether there is truth in this idea which was arrived at by considering the ideal conditions of such a vibrating circuit. In this abstract case l should be rigorously

equal to that *half wave* length which is obtained by computation from the velocity of light. In practice it is invariably observed that l is smaller and K is not as it should be $= 1$ but is often a large number, this simply following from the fact that the velocity of propagation in a circuit with considerable inductance and capacity is generally much smaller than that of light and often considerably smaller. It is to be stated that for a number of reasons it is of advantage, whatever be the actual length of the primary conductor, to arrange it so that it is *symmetrical* with respect to the condenser and the make-and-break device, one of the chief objects being to secure the maximum difference of potential on the terminals of the condenser. This consideration leads to the adoption of at least *two condensers in series*, the primary generally joining the outer coatings while the inner ones are bridged by the break device.

Coming now to the secondary quite different considerations apply. First, we must decide whether the secondary high electromotive force is to be obtained exclusively or entirely by transformation as in the commercial transformers with iron core, or not. In the first case obviously similar rules of economic design as followed in ordinary transformers will have to be respected. The secondary will have to be placed in the closest possible inductive relation to the primary and this will give an economical machine and one of relatively high frequency, since the inductances of the circuits by mutual reaction will be considerably reduced. But it is at once seen, that in a machine as here chiefly considered for the purposes followed from the outset, the connection between the primary and secondary can never be as close as in ordinary transformers, and the connection must be all the less intimate as the pressure on the secondary is increased since the wires must necessarily be placed at a greater distance from each other. From this it follows that in such a machine the free vibration of the secondary can never be quite ignored even if the electromotive force is not extraordinarily high. Now directly as the free vibration of the secondary becomes an important element to consider in the design, the careful adjustment becomes obviously imperative. It goes without saying that $\frac{pL}{R}$ should be as large as possible in all cases where resonant rise is one of the objects. But here is where we find in practice, and particularly in a large machine, difficulties not easily overcome. Both the inductance and capacity grow rapidly as turns are added, so much so that very soon it is found the secondary period becomes longer than that of the primary. The chief drawback is, as has been already pointed out, the distributed capacity but also the inductance though in a lesser degree. While the inductance in a certain sence has a great redeeming feature and is *necessary*, yet it stands in the way of obtaining a very high frequency in a large machine. To get a high electromotive force we must have many turns or turns of great length and this means great inductance and this again entails the drawbacks of *slow vibration*. Thus, in a large machine we encounter those difficulties which meet us in the design of too large a bridge, for instance, difficulties which are based on the very properties of matter and seemingly insuperable. Make a wire rope of twice the section and it will not be able to carry a longer piece of its own, since the weight is increased in the same proportion as the section and the strain per unit of the latter remains the same. Fortunately for us in electrical machinery, of this kind at least, this limit is immensely remote owing to the wonderful properties of this agent. Still the difficulties encountered on account of the capacity and inductance, and equally on account of the insulation are such as will require great deal of persistent effort to be effectively done away with in these

oscillators, if the results aimed at are to be achieved in a thoroughly practical manner. Much attention will be devoted to this part of the problem in perfecting the machines which are necessary for the successful carrying out of the projects of transmitting power as well as effecting communication with any point irrespective of distance. But the machines for these two purposes will necessarily differ in design, since in one case — the first — a great amount of energy is imperative, while in the other only a high electromotive force and immense rate of *momentary energy delivery is required.* The two most promising lines of development are evidently these two: either to obtain the necessary electromotive force in a secondary alone, or in an extra inductance, not affected inductively by the primary or even by the secondary but merely excited by the latter, the rise of pressure being due to a great magnifying factor. The latter method has been found to be by far the best when a high e.m.f. but not a great amount of energy is required and there is scarcely any limit to the maximum pressure so producible. But it does not seem to me as though this method should be applied in power transmission contemplated, but this will be decided in the future.

Recognizing in the distributed capacity the chief drawback, I have since long thought on ways of overcoming it and the best seems to be so far, to make the secondary in sections of the determined length and to join them all in series through condensers of the proper capacity. By this means the greatest possible length of conductor may be utilized by a given frequency and placed in good inductive connection with the primary. Theoretically it is possible to entirely do away with the effect of distributed capacity in this manner and to use an excessively large inductance and consequently a large magnifying factor as well as magnifying transformation ratio. The wave length in sueh a theoretical case will be then exactly that which follows from the velocity of propagation of light.

Various arrangements experimented with for the purpose of studying effect of diminished inductance of secondary.

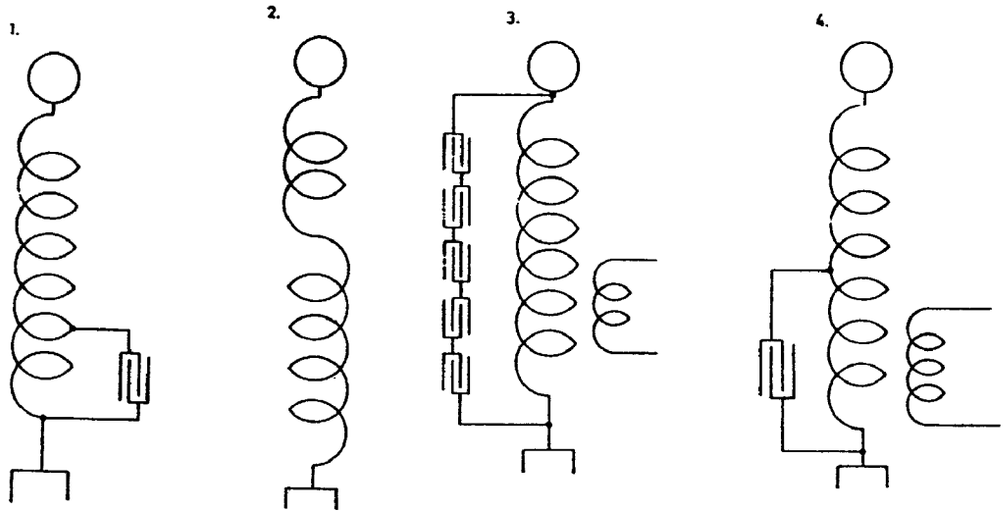

In Diagram 1. one part of the secondary was used as primary, this part being shunted by the primary condenser; in 2. a few turns of the secondary, those remote from the primary, were wound opposite; in 3. a series of condensers capable of standing the entire

pressure of the secondary were used to shunt the same; in 4. a larger part of secondary inductance was counteracted by a condenser; in 5. the entire secondary inductance was counteracted by a condenser; in 6. the inductance of the secondary was reduced by placing

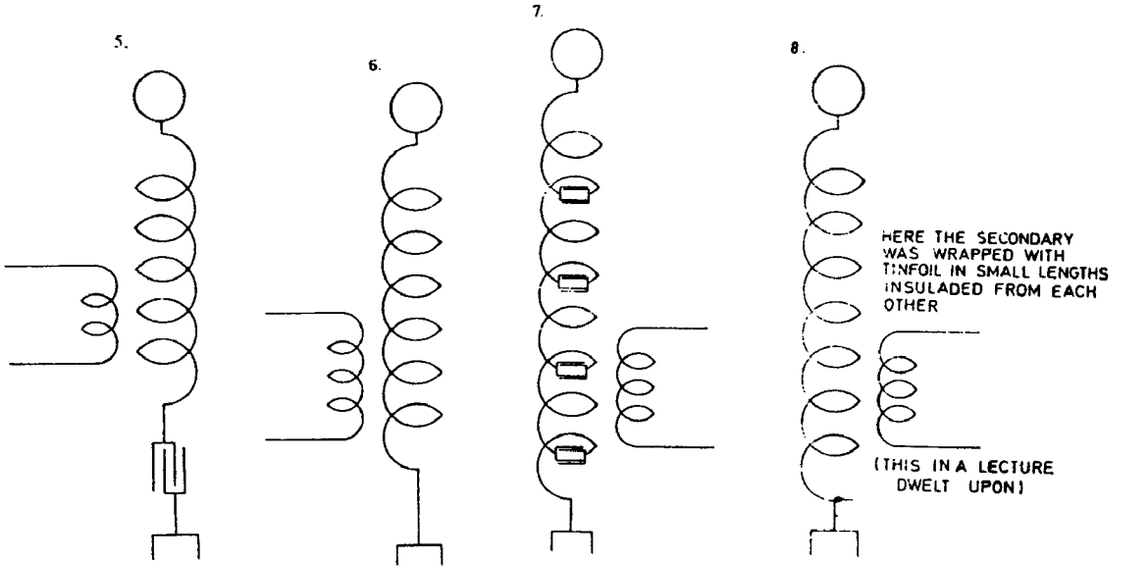

the turns far apart; in 7. inductance was counteracted by a series of condensers inserted between the turns and also distributed capacity was reduced and in 8. (not shown) static screeening was resorted to.

Colorado Springs

July 9, 1899

To ascertain to what extent the distributed capacity of secondary wire No. 10 was responsible for the small spark length obtained on the free terminal and to further study this capacity effect, wire No. 31 is to be wound on the secondary frame. For these experiments the present transformer brought from New York is to be used — which can charge just about 16 jars, as now operated, on each side of the primary, this giving primary capacity = 8 jars or $8\times0.003=0.024$ mfd. Since L with connections (1 primary turn) is $L=\frac{7\times10^4}{10^9}=\frac{7}{10^5}$ henry, the period of the system to be adopted for new experimental coil of this wire will be:

$$T=\frac{2\pi}{10^3}\sqrt{\frac{7}{10^5}\times\frac{24}{1000}}=\frac{2\pi}{10^7}\sqrt{168}$$

$\sqrt{168}=12.9$

68 : 2

2400 : 24

159

or T approx. $= \frac{6.28 \times 13}{10^7} = \frac{82}{10^7}$

This would give $n = 10{,}000{,}000 : 82 = 122{,}000$ per second.

180

160

From this again we get $\lambda = 186 : 122 = 1.524$ miles, or length of secondary roughly $=$ $= \frac{\lambda}{4} = 0.38$ miles or wire length $=$ 2000 feet approx. When two primary turns in series are to be used we shall have $\frac{\lambda}{4}$ or length of wire $=$4000 feet.

This to follow up.

The effects of distributed capacity in some experiments with the secondaries constituted of wire No. 10 (or cord) were so striking that it seemed worth while to carry on some investigations with very thin wire and consequently very small capacity in the secondary. It was decided to use wire No. 31 in these experiments. The diameter of this wire was only $\frac{1}{11.4}$ of that of wire or cord No. 10 hence the capacity of the new secondary, assuming all other things to remain the same, would be only $\frac{1}{11.4}$ of the capacity of the old secondary. The capacity of the new coil would be, however, reduced or increased in proportion to the length of the new wire relatively to the old and would be furthermore regulated by the distance of the turns. It was resolved to adopt 122,000 per second (see note before) in the primary as compared with 21,000 per second with the old secondary which was obtained with 15 jars on each side of the primary. For this vibration (122,000) the length of the new secondary should be about 2000 feet, this being the length of a quarter wave. Calling now the distance between the turns of the new coil d, its capacity as compared with that of old secondary of a length of 5280 feet would be:

$C_1 = \frac{1}{11.4} \times \frac{20}{53} \times \frac{d}{d_1} C$, C being capacity of old secondary and d_1 the distance of turns in same. We may call $\frac{d}{d_1} = D$ a number which will modify the capacity according to the distance of the turns, and we then have the capacity of the new coil $C_1 = \frac{1}{11.4} \times$ $\times \frac{20}{53} \times DC$. Now L being the inductance of old coil and L_1 that of the new, we have, disregarding effect of the smaller diameter of wire for the present, $L_1 = \left(\frac{14}{36}\right)^2 DL$ for the inductance will evidently be changed in accordance with the same number D. This relation follows from the fact that 2000 feet of new secondary with 143 feet average length of turn give $\frac{2000}{143} = 14$ turns or nearly so, and there were 36 turns in old secondary, the length being preserved the same in both coils. From this it follows that the new system

will vibrate with a period T=? which will be $\sqrt{\left(\frac{14}{36}\right)^2 \frac{20}{53 \times 11.4} D^2}$ times the period of the old system, or $\frac{14}{36} D \sqrt{\frac{1}{30}}$ or $0.07D$ times. From this we may calculate D.

The old primary system was 21,000 per second, the new 122,000 per second, hence we have $0.07\,D \times 21{,}000 = 122{,}000$ or $D = 83$. This means to say that without any additional capacity on the free terminal the turns would have to be put at a distance only $\frac{1}{83}$ that of the former secondary. This would not be realizable because the sparks would pass between the turns. Capacity must be, therefore, added on the free terminal. Calling this capacity c and the old C, the total capacity on the new coil would be $C' = \frac{20\,DC}{11.4 \times 53} + c$ and the inductance would be $L'_1 = L_1 = \left(\frac{14}{36}\right)^2 DL$. Hence, for estimating D and c we have the equation:

$$\frac{1}{122 \times 10^3} = \frac{2\pi}{10^3} \sqrt{\left(\frac{14}{36}\right)^2 D \frac{38 \times 10^6}{10^9} \left(\frac{20 \times 1200\,D}{11.4 \times 53} + c\right) \frac{1}{9 \times 10^5}} \qquad \begin{matrix} L = 38 \times 10^6 \\ C = 1200 \end{matrix} \Big\} \text{old coil}$$

$$\frac{1}{122 \times 2\pi} = \frac{14}{36 \times 3 \times 10^4} \sqrt{D(40\,D + c)} \quad \text{or} \quad \frac{108 \times 10^4}{3416\,\pi} = \sqrt{D(40\,D + c)}$$

Taking here now D=1 we get approx: $\frac{11{,}664 \times 10^7}{1166 \times 10^4} = 10{,}000 = (40 + c)$ or c=roughly 10,000 cm. for same distance of wires in new coil as in old.

It was of interest to determine the period of the combined primary and secondary system of the experimental oscillator and the following method was adopted. A coil wound with thin wire, turns separated by a string to reduce distributed capacity, was placed at a distance of a few feet from the vibrating system and so that it was about equally affected by the primary and secondary. One end of the coil was connected to earth and the other end was left free. An idea was already obtained beforehand as to the frequency which was likely to be found but more wire was wound on the coil to enable the adjustment to be effected by taking off turns. Turns were then taken from the lower end of the coil until a maximum of spark length from free terminal was obtained. The coil then gave a spark 5″ long. This took place when there were 1140 feet of wire on the coil, this length being found by measurement of resistance $\begin{cases} \text{res. of coil } 38.4 \text{ ohms} \\ \text{res. of } 12 \text{ feet } 0.405 \text{ ohms} \end{cases}$

Neglecting the capacity of the coil this length should be $= \frac{\lambda}{4}$ or the quarter of a wave length. Of course, it was less but it was surmised that it would not be very much less. The total length of wave was then λ=4560 feet. From this would follow

$$n = \frac{186{,}000 \times 5280}{4560} = 215{,}370 \text{ per second.}$$

Now the capacity in the primary circuit was ten new jars on each side, this making a five jars total or $5\times0.0025=0.0125$ mfd. or $\frac{125}{10^4}$ mfd. From this the period of the system ought to have been

$$T=\frac{2\pi}{10^3}\sqrt{\frac{125}{10^4}L\left(1-\frac{M^2}{NL}\right)}$$

N = inductance of secondary
L = inductance of primary
M = mutual inductance

But on a previous occasion $1-\frac{M^2}{NL}$ was found to be nearly 0.6 so that $T=\frac{2\pi}{10^3}\sqrt{\frac{125}{10^4}\times0.6\times L}$ Taking now $L=7\times10^4$ cm. or $\frac{7}{10^5}$ henry we have

$$T=\frac{2\pi}{10^3}\sqrt{\frac{125}{10^4}\times\frac{6}{10}\times\frac{7}{10^5}}=\frac{2\pi}{10^8}\sqrt{42\times125}=$$

$$=\frac{2\pi}{10^8}\sqrt{5250}=\frac{72.46\times2\pi}{10^8}=\frac{455}{10^8}\text{ approx.}$$

and from this would follow $n_1=\frac{10^8}{455}=219{,}800$ per second. This is fairly close within the limits of ordinary errors of measurement and observation.

On the bases of above estimate of n, we may also determine the inductance of primary cables or cable as modified by the influence of the secondary since we have the equation $\frac{1}{215{,}370}=\frac{2\pi}{10^3}\sqrt{\frac{125}{10^4}L'}$ which gives $L'=\left(\frac{10^4}{21{,}537\times2\pi}\right)^2\times\frac{1}{125}=\frac{10^8}{185{,}537\times10^5}\times\frac{1}{125}$

$$L'=\frac{10^8}{2319\times10^4\times10^5}=\frac{1}{23{,}190}\text{ henry or }\frac{10^9}{23{,}190}=\frac{10^8}{2319}=\mathbf{43{,}120\text{ cm.}}$$

This is not far from the truth since

$$7\times10^4\times0.6=70{,}000\times0.6=\mathbf{42{,}000\text{ cm.}}$$

Estimate of capacity of a large coil (secondary) by Lord Kelvin's formula for concentric cable, to see how far it is applicable to a coil. Kelvin gives $C=\frac{KS}{4\pi r\log\frac{r'}{r}}$. Here S is the surface of inner copper conductor, r' radius of inside hole of conductor outside of cable, r radius of copper conductor inside (Diag. 1.). Assuming now a cable wound up having n turns at a distance d, each turn may be considered as having a conductor on either side at distance d. If we draw a circle of radius d around the conductor and imagine the inner surface conducting, we have the capacity of such a system according to above formula. Now in the case of a coil of this ideal surface we utilize only a small part which is approximately, when d is very large compared to r, $\frac{2r\pi}{2\pi d}=\frac{r}{d}$.

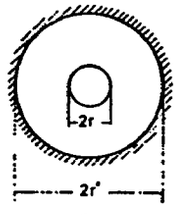

1.

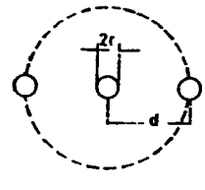

2.

Now if there are n turns there will be $(n-1)$ such systems as illustrated in Diagram 2. Taking air as insulation and neglecting the effect of the small thickness of other dielectric, we would then have the total capacity: $C_1 = \frac{S_1}{4\pi r \log \frac{d}{r}} \times (n-1) \times \frac{r}{d}$. Now $S_1 = 2\pi rl$, l being the length of one turn. The values calculated out in this particular case of a secondary of 37 turns (36 1/2+connecting wires=approx. 37 turns) are as follows:

$n=37$

$S_1=3600$ sq.cm.

$r=0.125$ cm.

$d=4.2$ cm.

$K=1$

$l=143$ feet$=4360$ cm.

$\frac{d}{r}=33.5, \quad \log \frac{d}{r}=1.525045$

Substituting these values we have:

$$C_1 = \frac{3600 \times 36}{4\pi \times 1.525 \times 4.2} = \frac{9 \times 3600}{\pi \times 1.525 \times 4.2}$$

$$= \frac{32{,}400}{3.1416 \times 1.525 \times 4.2} =$$

$$= \frac{32{,}400}{4.791 \times 4.2} = \frac{32{,}400}{20.12}$$

$C_1 =$ approximately $= \frac{32{,}400}{20} =$ **1620 cm.**

This is not far from the value found. It shows that an approximate estimate may be made in this manner.

Colorado Springs

July 10, 1899

The following consideration conveys an idea of the drawbacks of distributed capacity in the secondary. Suppose the total capacity of 12 such large turns would be 1200 cm. as may be frequently the case, or 100 cm. per one turn and now let us ask to what potential this condenser may be charged — assuming further the energy to be carried away for the performance of work — by expending 1 H.P. In this case we would have $\frac{1000 P^2}{9 \times 10^{11} \times 2} 2n = 750$ watts. Here P is the potential, n the number of vibrations per second.

In our case n may be 20,000 and then we may put

$$750 = 40{,}000 \times \frac{1000 P^2}{9 \times 10^{11} \times 2} = \frac{2 P^2}{9 \times 10^4} \text{ or}$$

$$P^2 = \frac{9 \times 10^4 \times 750}{2} = 9 \times 10^4 \times 375 = 3375 \times 10^4 \text{ or}$$

$$P = 100\sqrt{3375} = \text{nearly } \mathbf{5800} \text{ volts.}$$

This shows that by only charging the internal capacity to the insignificant pressure of 5800 volts we would have to expend 1 H.P. Of course, normally the power is small

although the capacity is charged up to a much higher potential, but the consideration shows why with a large distributed capacity a very high pressure can not be obtained on the free terminal. All the electrical movement set up in the coil is taken up to fill the condenser and little appears on the free end. This drawback increases, of course, with the frequency and still more with the e.m.f.

In accordance with the preceding, an experimental coil of No. 31 wire (No. 30 not being on hand) was wound on the secondary frame. In the first experiment 14 1/2 turns were coiled up. The results were disappointing and for some time mystifying. The induced e.m.f. ought to have been 14 1/2 times the primary less 40% of total as before stated, but it did not seem so. Finally it was recognized that, as the capacity of the new secondary was very small, the free vibration of the coil was very high hence no good result could be obtained. The capacity in the primary was now reduced until to all evidence resonance was obtained, but the results were much inferior to what might have been expected, probably because $\frac{pL}{R}$ was small owing to large resistance. One of the reasons was, however, that the capacity in the primary was too small to allow a considerable amount of energy to be transmitted upon the secondary. To better the conditions, one of the balls of 30″ diam. was connected to the free terminal; this allowed a greater number of jars in the primary to be used but the capacity of 38.1 cm. was by far too small to secure the best condition of working. The resonating condition in secondary was secured with approximately 7 jars on each side of the primary and when the ball was connected with about 14 jars.

The capacity of the secondary was estimated to be 40 cm. and the inductance approx 15×10^6 cm. $= \frac{15}{10^3}$ henry.

Note: In these estimates I consider not the actual distributed capacity, but an ideal capacity associated with the coil.

This gave period of secondary roughly:

$$T = \frac{2\pi}{10^3}\sqrt{\frac{10}{10^3} \times \frac{40}{9 \times 10^5}} = \frac{2\pi}{10^7}\sqrt{\frac{600}{9}} = \frac{20\pi}{3 \times 10^7}\sqrt{6} = \frac{2\pi}{3 \times 10^6} \times 2.45 =$$

$$= \frac{4.9 \times \pi}{3 \times 10^6} = \frac{15.4}{3 \times 10^6} \quad \text{or about} \quad \frac{1}{195 \times 10^3} = T.$$

From this $n = 195{,}000$ per second. This vibration was far above that of the primary circuit working under favorable conditions, that is with the full number of jars. As the thin secondary did not yield any satisfactory results a coil was now associated with it. It was one used in some experiments before, having 260 turns of cord No. 10 (okonite) wound on a drum 2 feet in diam. and 6 feet long. The total length of wire was 1560 feet and the capacity of the coil (as above) 1530 cm. This coil was connected to the free terminal of the secondary and the free end of the coil was placed vertically on the top of the same and in the prolongation of its axis. Fairly good resonant rise was obtained on the free

end, the streamers being 2 1/2—3 feet long. The primary circuit had 9 jars on each side, this giving $4.5 \times 0.003 = 0.0135$ mfd. primary capacity and as the inductance of the primary was $\frac{7 \times 10^4}{10^9}$ H the period of the primary was about $\frac{2\pi}{10^6}$ and $n = 160{,}000$ per second. According to this $\frac{\lambda}{4}$ should have been about $\frac{1.16}{4}$ miles or 1531 feet. Assuming the coil and the secondary of 14 1/2 turns vibrated together as one, λ would have been $4(2000+1560) = 4 \times 3560$ feet and $\frac{\lambda}{4} = 3560$ feet. But the experiment disproved this and showed clearly that the coil vibrated *alone*, the secondary merely exciting it, since the $\frac{\lambda}{4}$ on primary bases was 1531 feet, while the spool had 1560 feet, very nearly the same. For best results secondary should have been tuned to the same period as that of the coil. *Conclusion* of *experiments with thin wires* was: results must be inferior as free vibration is important.

In using wire No. 30 in the experiments proposed instead of wire No. 10 in the present secondary, we shall have to consider the following: the largest number of jars would be 154 on each side of the primary and with *one primary turn* which it is advantageous to use on account of facility of adjustment. We would have, as before found,

$n = 43{,}500$ approx. Thus C_p, L_p } primary capacity and inductance are *fixed.*

The wave length will be:

$$\frac{186{,}000}{43{,}500} = 4.2 \text{ miles of } \frac{\lambda}{4} = 1 \text{ mile roughly.}$$

Now No. 30 wire has diam. 0.01
„ 10 „ „ 0.1 } Suppose the same number of turns as

before, wound on the secondary frame and placed at twice the distance, the distributed capacity will be not far from $\frac{1}{2} \times \frac{1}{10}$ or $\frac{1}{20}$ of that of the old secondary. The inductance of the new coil — neglecting effect of small diameter of No. 30 wire — will be one half of the old, hence the new system will vibrate $\sqrt{20 \times 2} = \sqrt{40} = 6.3$ times quicker than the old secondary system. Since the old system vibrated 21,000 per sec. the new will vibrate 6.3 times that or 132,000 times per second, this number being $= n$. We should now, for the best suitable conditions, make the new system vibrate only about 1/3 that number since this would be approximately the vibration of the primary system, as above stated. Now taking the capacity of the old secondary 1200 cm., that of the new would be only $\frac{1200}{20} = 60$ cm.; we would have, therefore, to bring the pitch down to make the capacity 9 *times* as large or $9 \times 60 = 540$ cm. or we would have to put about 480 cm. on the free terminal of the new coil.

Further consideration in using a new secondary of No. 30 wire. The length of 1 mile of this wire will have a resistance on the basis of 9.7 feet per ohm from tables $\frac{5280}{9.7} = 544$

ohms approx. To get a rough idea of how the coil might work suppose that on the primary there would be 40,000 volts and that there were 36 turns of secondary, then there would be theoretically an e.m.f. on the terminals of secondary $40{,}000 \times 36 = 1{,}440{,}000$ volts and, deducting with reference to mutual inductance 40%, we would have $1{,}444{,}000 \times 0.6 = 864{,}000$ volts impressed or induced e.m.f. Suppose now we had a capacity of 480 cm. on the free terminal as before estimated, the charge stored in this condenser would be:

$$\left.\begin{matrix}\text{Coulombs} \\ \text{or} \\ \text{amp.} - \text{sec.}\end{matrix}\right\}: \frac{864{,}000 \times 480}{9 \times 10^{11}} \text{ per one charge and there being}$$

$43{,}500 \times 2 = 87{,}000$ charges per second and taking a theoretical case we would have $\frac{864{,}000 \times 480 \times 87{,}000}{9 \times 10^{11}} = \frac{86 \times 87 \times 48}{9 \times 10^{4}} = 4$ amp. nearly. The current in the secondary would be quite large for the small section of the wire. Suppose 50 H.P., expended we may say roughly: $E_s i_s = 50 \times 750 = 37{,}500$ watts. With the above pressure we would have: $864{,}000 \times i_s = 37{,}500$ or $i_s = 0.043$ amp. only. In this case the energy lost per second would be $544 \times \frac{43^2}{10^6} = \frac{1849 \times 544}{10^6} = 1$ watt approx. The loss in this case, in spite of the great amount of energy transformed, would be ridiculously small owing to the great e.m.f. despite comparatively high resistance of the secondary. But this only seems so, for 544 ohms would be extremely small resistance for such e.m.f. The theoretical case above considered is hardly realizable, it would require an immense amount of energy.

Additional coil used before in some experiments, also in trials with a secondary of No. 31 wire.

Approximate inductance of coil

Data: diam. 2 feet=24″=61 cm.=d

$$\text{Area} = \frac{\pi}{4} d^2 = \frac{\pi}{4} \times 3721 = 2922 \text{ sq.cm.}$$

length 71″=71×2.54=approx. 180 cm.

From this $L = \frac{4 \pi N^2 A}{l} = 12.57 \times \frac{260^2 \times 2922}{180}$ $N = 260$ turns, this gives

$$L = 13{,}925{,}000 \text{ cm. approx.} = 0.0139 \text{ H}$$

Period of primary was before found $\frac{1}{16 \times 10^4}$, hence

$$\frac{1}{16 \times 10^4} = \frac{2\pi}{10^3} \sqrt{\frac{13{,}900{,}000}{10^9} C}$$

From this a rough idea of the capacity of the coil may be had, resonance being observed when the primary had $T=\frac{1}{16\times 10^4}$ as above. From above equation we find

$$C=\frac{10}{142{,}336}\ \text{mfd. or in cm.}$$

$$C=\frac{9\times 10^5\times 10}{142{,}336}=\frac{9\times 10^6}{142{,}336}=63.2\ \text{cm.}$$

This is a much smaller value than would be expected from previous approximate estimates. The correctness of the value found depends, among other things, chiefly on the correct determination of the period, for resonance might have been also obtained with a lower or upper harmonic, but this is not very likely to be the case as the vibration was very intense. There were approximately 5000 volts on primary turn. Resistance of coil was 1.56 ohm. From this $\omega=2\pi\times 16\times 10^4=1{,}004{,}800$ or 10^6 approx; $\omega L=0.014\times 10^6=$ $=14{,}000$, $\frac{\omega L}{R}=\frac{14{,}000}{1.56}=8910$ as factor for magnifying e.m.f. impressed; very large.

Colorado Springs

July 11, 1899

Some considerations on the use of "extra coils". As has been already pointed out an excellent way of obtaining excessive electromotive forces and great spark lengths is to pass the current from a terminal of an oscillating source into such a coil, properly constructed and proportioned, and having preferably a conducting body — best a sphere — connected to the free terminal. In free air the *highest economy* is obtained with a well polished sphere, but for the greatest spark length — if this be the chief object — no capacity on the free terminal should be used, but all the wire should be carefully insulated so that streamers can not form except on the very end of the wire which as a rule should be pointed. This, however, is not always true. When the apparatus delivers a notable amount of energy the curvature of the end of wire or terminal attached to it should be such that the streamer breaks out only when the pressure at the terminal is *near the maximum*. Otherwise, very often, when a finely pointed terminal is employed the streamer begins to break out already at a time when the e.m.f. has a small value and this reduces, of course, the spark length and power of the discharge. By careful experimentation and selection of terminal the most powerful spark display is easily secured which the particular apparatus used is capable of giving. When the conditions are such that for the most powerful discharge a terminal of some, relatively small, curvature is needed, the curvature of the terminal can be beforehand calculated so that the discharge will break out at any point of the wave desired, when the e.m.f. at the terminal has reached any predetermined value. The greater the curvature of the terminal the smaller an electromotive force is required to enable the discharge to break out into the air. In fact, the curvature of the terminal may serve as an indication of the value of the e.m.f. the apparatus is developing and it is often conve-

nient to determine the e.m.f. approximately by observing how large a sphere will just prevent the streamers from breaking out, and for such purposes I have found it useful to provide the laboratory with such metallic spheres of different sizes up to 30" diam. It is of course necessary to guard in such experiments against errors which might be caused by any modification of the constants of the vibrating circuit through the addition to the system of a body of some capacity. The latter should be such as to insure the maximum rise of the pressure. With apparatus of inadequate power the pressure may be very much diminished by the addition of capacity merely because there is not enough energy available to charge the same to the full pressure. It is a notable observation that these "extra coils" with one of the terminals free, enable the obtainment of practically *any* e.m.f. the limits being so far remote, that I would not hesitate in undertaking to produce sparks of thousands of feet in length in this manner. Owing to this feature I expect that this method of raising the e.m.f. with an open coil will be recognized later as a material and beautiful advance in the art. No such pressures — even in the remotest degree, can be obtained with resonating circuits otherwise constituted with two terminals forming a closed path. It is also a fact that the highest pressure, at a free terminal, is obtained in that form of such apparatus in which one of the terminals is connected to the ground. But such "extra coils" with one terminal free may also be used with ordinary transformers and by using one such coil on each of the terminals of the transformer, practically any spark length may be reached. Of course, it is desirable that the frequency of the currents should be high, as with the common frequencies of supply circuits the lengths of the wires in the coils become too great. In the diagrams below the two typical arrangements with such an "extra coil" or coils are illustrated in which Diagram 1. illustrates their use with an ordinary transformer, which may have an iron core or not, and Diagram 2. shows typically the connection as

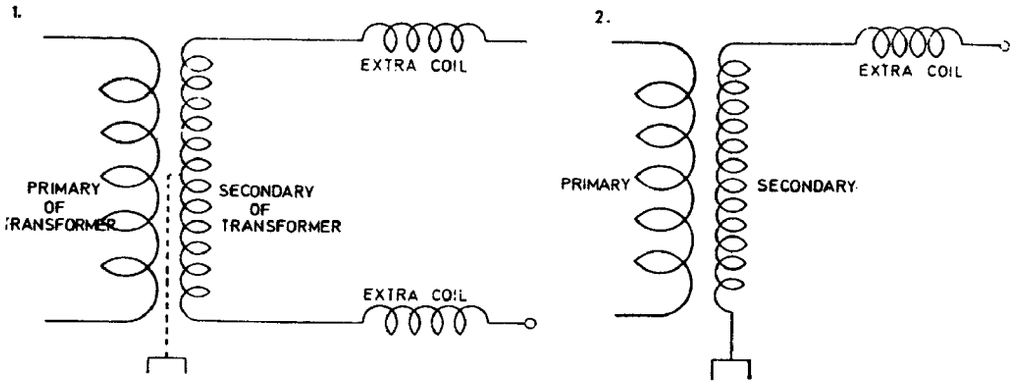

I use it in my "single terminal" induction coil. As has been stated on a previous occasion in connection with this subject, to enable a considerable rise of pressure to take place in a circuit, the same must be tolerably free from inductive influences of other circuits. It follows from this that, although with a secondary in *loose* connection with a primary a very high pressure is obtainable, yet the pressure will never be as high as when an "extra coil" *not* in inductive connection with the primary is employed to raise the pressure, because the secondary always reacts upon the primary thus dampening the vibration, while the "extra coil" does not react in *such* a *manner*, the rise of pressure being simply due to the factor $\frac{pL}{R}$.

The object of the considerations which follow is to establish simple relations between the quantities which are known or adopted beforehand, so as to enable the experimenter to construct such coils without previous trials.

Calling E_0 the impressed e.m.f. and E the pressure measured with reference to the free terminal — that is the maximum pressure, p the product $2\pi n$ as usual, L the inductance of the "extra coil" and R its resistance, we have the known relation $E=\frac{pL}{R}E_0$. Obviously the maximum rise will take place when the period of the excited system or "extra coil" is the same as that of the oscillating system impressing the movement, for although the results obtained with a lower or upper harmonic, and particularly the former, may be sometimes so remarkable, as to be mistaken for effects of the true vibration, they are nevertheless always inferior, and I as a rule try the first upper and undertones to be sure of the result, when there exists any doubt in this respect. In ordinary practice the first element which is given will be the frequency, hence the wave length must be assumed as the first fixed quantity. But as has been already stated on another occasion, in an apparatus *designed* to give the *best result* the actual length of the wire should be that which is obtained on the basis of a velocity of propagation v equal to that of light. I have already remarked before that this is generally not true, the actual length of wire being always smaller than the theoretical length, and I propose to put together data derived from many experiments with coils wound with different wires and varying in size, from which it will be possible to always obtain, beforehand, with any particular wire, insulation and size of coil etc. the length required — by multiplying the theoretical length with a coefficient dependent on these and other particulars of this kind, different in special cases. Such coefficients will be certainly useful to the practitioners. The chief element determining the length of the wire is the distributed capacity and I shall presently suppose, that by proper design it is so reduced, that the length of wire is very nearly equal to the theoretical length, or the length of one quarter of the wave as computed from the velocity of light. In this case then, if l be the length of wire in the "extra coil", and λ this wave length, the length of the wire will be such that $l=\frac{\lambda}{4}$. Now since $\lambda=\frac{v}{n}$, where n is the frequency and furthermore $n=\frac{p}{2\pi}$, we have $\lambda=\frac{v}{\frac{p}{2\pi}}$ or $=\frac{2\pi v}{p}=\lambda$. This is the simplest case. The period of the exciting as well as the excited system will be $T=2\pi\sqrt{LC}$

where C is the capacity in farad and L the inductance in henry } of each of the „extra coils"

$$\text{or } n=\frac{1}{T}=\frac{1}{2\pi\sqrt{LC}}=\frac{p}{2\pi};\quad \text{or } p=\frac{1}{\sqrt{LC}} \text{ or } LC=\frac{1}{p^2}$$

This condition, as is well known, must be fulfilled, whatever be the length of the wire, to enable the maximum rise of pressure to take place, and also, p must be the same number for both systems, obviously. Now evidently in designing the apparatus, in any case, the experimenter will know approximately what e.m.f. he would wish to secure, and consequently he will have an idea how much difference of pressure he will have between the turns, and this will give him again an idea how he must place the windings most ad-

vantageously. He will furthermore recognize at once that the simplest form of such a coil, and also the cheapest, will be one with *one* single layer and, settling upon this form, he will get an approximate estimate as to the diameter of the coil to be adopted. This will, of course, depend much on the kind of wire he uses and particularly on the insulation, since the better the insulation the closer will be two points of the coil between which there will exist a certain maximum pressure. Granted now the diameter of the coil to be constructed is settled upon, it will be at once seen that, assuming turns are wound on until resonance is obtained, the inductance of the coil and the capacity of the same will vary in the like manner. If more turns are wound on the drum their number will be proportionate to the length of the coil, therefore to the length of the wire, and the inductance will be proportionate — on the one hand, to the square of the turns or respectively to the square of the length of the wire, and on the other hand, it will be inversely proportionate to the length of the coil. Inasmuch as this length is likewise proportionate to the length of the wire, the inductance, on the whole, will be proportionate to the ratio $\frac{l^2}{l}$ or to l, that is to say, the inductance of the coil, as more turns are wound on, will grow as the length of the wire. And so will also, and obviously, the distributed capacity. And furthermore, and for the same reasons, under the conditions considered, both the capacity and the inductance of the coil will vary inversely as the distance of the turns which I shall designate τ. This is clear since, as far as the inductance of the coil is concerned, the number of turns will be inversely as τ, and the length of the coil *directly* as τ, hence the inductance will be inversely as τ; and, as regards the distributed capacity, it will be, of course, inversely proportionate to τ. Hence we can express both the unknown quantities L and C_1 (distributed capacity) in terms of l and τ. But it should be remembered that in the equation $LC=\frac{1}{p^2}$, C is capacity associated with the coil on the free terminal and not the distributed capacity. In case, therefore, we should make the capacity on the free terminal very large in comparison with the distributed capacity of the coil, or if capacity be associated with the coil in other ways, as by *shunting* the coil with a condenser as in sketch 3. — or in any other way, but so that the distributed capacity *may* be *neglected*, then the design of the coil is much simplified, for then one of the constants, preferably C, can be adopted beforehand and the other constant calculated. It will be in such case better to adopt first a capacity, because it is easy to get an idea of what kind of condenser to use when the

3.

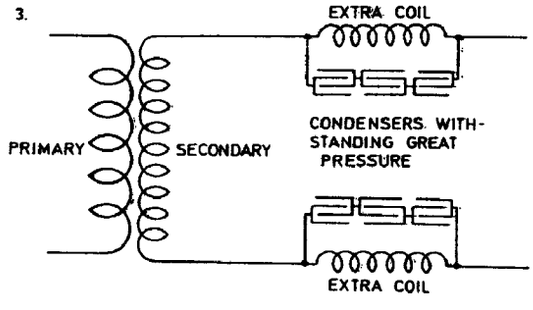

pressure of the terminals of the coil is approximately known. A practical way is, sometimes, to adopt a construction before suggested, securing a negligible internal capacity, consisting of the placing of condensers in series with the turns of the coil, and then merely calculating one of the constants, assuming first a value for the other constant, whichever is the more

convenient of the two. I have also found it practicable in some cases to avail myself of some methods of tuning allowing exact observations as to the rise of pressure in the excited circuit, and to tune a small number of turns first to a much higher harmonic and, after completing this adjustment, to calculate the dimensions of the coil for the fundamental vibrations from the experimental data secured. But in most cases such resources are not readily available and an approximate idea must be gained in other ways. There are a number of different considerations which, when followed out in connection with the preceding, will lead to the establishment of simple relations between the quantities primarily adopted and will enable an experimenter to construct such a coil to suit source, without previous experiment and some of these I propose to consider on other occasions. Presently I shall indicate a way which, in some cases to which the calculated data were applied, has given satisfactory results.

The ideal capacity C which should satisfy the equation $LC=\frac{1}{p^2}$ is always a function of the distributed capacity C_1 and furthermore a linear function, so that $C=K_1C_1$, where K_1 is a constant, the value of which is to be deducted from the results of many varied experiments carried on to this end. But this capacity C_1 is, as has been found in many experiments with coils of widely different dimensions, directly proportionate to the length of wire and to the diameter of the same and furthermore to the diameter of the drum. The latter will be understood when it is considered that the greater the diameter of the drum the greater is the potential difference between the turns and, consequently, the greater is the amount of the energy stored in the coil with a given length and diameter of the wire. Finally the quantity C_1 is inversely proportionate to the distance of the turns τ. As to the dielectric constant it is only then important to consider when the turns are quite close together so that the entire space between the turns is filled with the dielectric. When the turns are far apart this constant may be taken=1. From this it follows that the capacity C interpreted as above may be expressed by the following equation: $C=K\frac{Dd\,l}{\tau\times 9\times 10^{11}}$ when the dielectric constant can be neglected. Here D is the diameter of the drum, d diameter of the wire, l length of wire, τ the distance between the turns. C is the "ideal" capacity which will satisfy equation $LC=\frac{1}{p^2}$ expressed in farads. The constant K is determined by practical experiments. When the turns are very close the dielectric constant must be introduced and C will be multiplied with the latter quantity. Now the inductance of the extra coil to be constructed is $L=\frac{4\pi AN^2}{l_1\times 10^9}$ henry. Here A=area of coil in cm. square, N=number of turns, and l_1 length of ccil in cm. Now $A=\frac{\pi}{4}D^2$, $l_1=N(\tau+d)$. Hence the inductance will be $L=\frac{4\pi\cdot\frac{\pi}{4}D^2N^2}{N(\tau+d)\,10^9}=\frac{\pi^2D^2N}{(\tau+d)\,10^9}$ henry. Taking these values for L and C we have, with reference to above, $\frac{1}{p^2}=\frac{\pi^2D^2N}{(\tau+d)\,10^9}\times\frac{dlD}{\tau\times 9\times 10^{11}}K$ or $p^2=\frac{(\tau+d)\,\tau\times 9\times 10^{20}}{\pi^2D^3dlNK}$

Since in the preceding the diameter of the drum is assumed, from practical considerations it will be convenient to find the number of turns N. The quantities D and τ are,

of course, interconnected since by assuming D and deciding on the pressure to be obtained beforehand, τ is practically given. The diameter of the wire will in most cases also be selected beforehand so that then merely N is to be determined to satisfy the condition of resonance for any frequency specified. Now $l=\pi DN$ hence substituting this we have from above:

$$p^2=\frac{(\tau+d)\,\tau\times 9\times 10^{20}}{\pi^2 D^3 d N \pi D N K} \text{ or } p^2=\frac{(\tau+d)\,\tau\times 9\times 10^{20}}{\pi^3 D^4 d N^2 K} \text{ and from this we get}$$

$$N^2=\frac{(\tau+d)\,\tau\times 9\times 10^{20}}{\pi^3 D^4 d p^2 K} \text{ or } N=\frac{3\times 10^{10}\sqrt{(\tau+d)\,\tau}}{D^2 p\sqrt{\pi^3 K}\sqrt{d}} \ldots\ldots\ldots$$

This formula may serve to give an approximate idea of how many turns are to be wound on in cases when the length of the wire, owing to the capacity in the excited circuit, is smaller then $\frac{\lambda}{4}$ (or respectively smaller than $\frac{\lambda}{2}$ if the circuit is not one of the kind illustrated in diagrams above — that is, one in which the potential on one terminal is many times higher than on the other, but an ordinary circuit, in which there is a symmetrical rise and fall of pressure at both the terminals), but the equation assumes that K, the dielectric constant, is=1 or nearly so.

From a number of experiments the value for K with wire No. 10 as used in preceding experiments was found to be nearly $=\frac{52}{10^6}$. Introducing this value in equation for N and reducing the constant quantities we find $N=\frac{747\times 10^9}{D^2 p}\sqrt{\frac{\tau(\tau+d)}{d}}$.

To see how close this formula will give the value of N in a special case take, for instance, the secondary with 40 turns experimented with before. In this particular case we have the following data:
diameter of coil, average, 40 feet=480″=1220 cm. approx.

$$D=1220 \text{ cm.};\quad D^2=1488\times 10^3;\quad \tau=5 \text{ cm.};\quad d=0.254 \text{ cm.}$$

Resonance in secondary from previous tests took place with the primary period being $T=\frac{4.836}{10^5}$, this was also the secondary period and from this $n=20{,}700$ approximately and this gives $p=130{,}000$ very nearly. On the basis of these data we would have:

$$N=\frac{747\times 10^9}{D^2 p}\sqrt{\frac{\tau(\tau+d)}{d}}=\frac{747\times 10^9}{1488\times 10^3\times 13\times 10^4}\sqrt{\frac{5\times 5.254}{0.254}}$$

$$=\frac{747\times 10^2}{1488\times 13}\sqrt{103.4}=\frac{747\times 10^2}{19{,}344}\times 10.16$$

$$=\frac{747\times 1016}{19{,}344}=\frac{758{,}952}{19{,}344}=39.24 \text{ turns}$$

This comes indeed very close, the turns being actually 40 for the condition of resonance as experimentally shown.

This will be followed up.

Colorado Springs

July 12, 1899

Self-induction coil for condenser method in conjunction with oscillating transformer. Adapted to Thomas clockwork and condenser 1/2 mfd. mica on hand (one of the two small condensers). *Capacity* given 1/2 mfd., break also given: wheel of clockwork breaking and making contact has 180 teeth, turns about 20 a minute. This gives breaks $\frac{180 \times 20}{60} = 60$ per second. Here at each make and break we have a wave in the condenser, and tuning

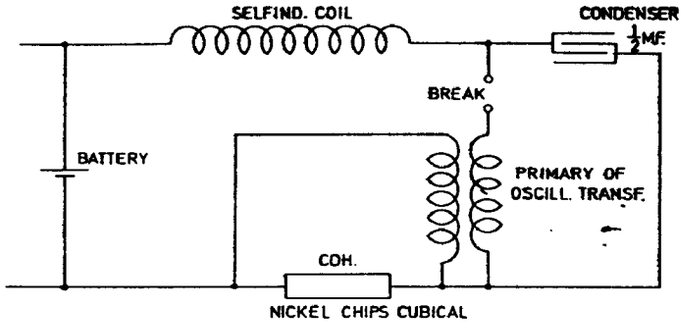

may be effected either by making $n=60$ or $n=30$. Best result seemingly, from former experiments with oscillators, seems to make n=the number of breaks. We have then

$$T = \frac{2\pi}{10^3}\sqrt{L \times \frac{1}{2}}$$

$$T = \frac{1}{n} = \frac{1}{60} = \frac{2\pi}{10^3}\sqrt{L \times \frac{1}{2}}$$

$$\text{From this } L = \frac{2 \times 10^3}{144} = 2000 : 144 = 14 \text{ H}$$
$$= 560$$

This would not be realizable with a condenser of $\frac{1}{2}$ mfd. Therefore a larger condenser or quicker break necessary — will vibration always take place through the high resistance of sensitive device? $\frac{4L}{C} > R^2$ Take $L=1$ henry, we have $\frac{4}{\frac{1}{2 \times 10^6}} > R^2$, $8 \times 10^6 > R^2$ or roughly $3000 > R$. This shows that although resistance may be very large, vibration will still take place.

Follow up.

Colorado Springs

July 13, 1899

Considerations regarding working of oscillator without spark in secondary. This is a considerable advantage because of economy and also facility of exact synchronous adjustment. When spark used the latter difficult as capacity is changed by varying distance of terminals, also because spark establishes short circuit temporarily. In general, the process is very complicated and the tuning only partially successful. But using spark allows obtaining of great suddenness and using short wave lengths. The shortness of waves gives high e.m.f. and, therefore, great effect at distance. Without spark it is difficult to obtain high e.m.f. with *short waves*. Long waves on the other hand are less absorbed and allow exact tuning. Following plan seems to offer particular advantages that seemed to work well in New York oscillator.

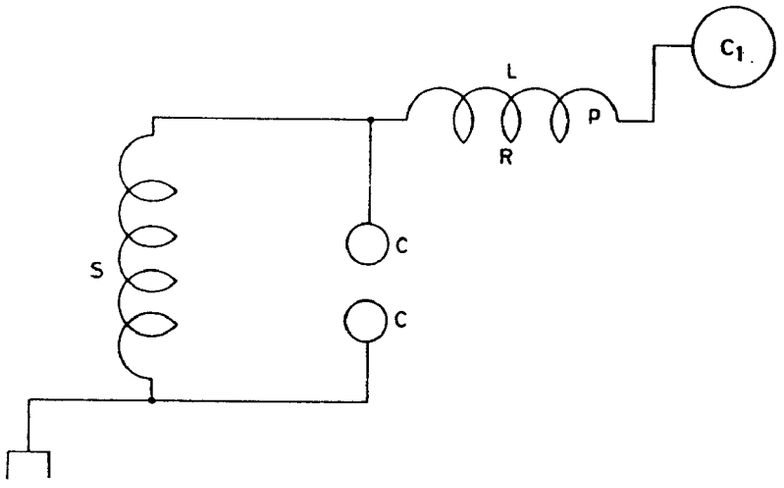

S is the secondary of oscillator. To this is connected a coil L with capacity C_1. The secondary is shunted by a condenser $C\,C$. This condenser can be of large spheres when practicable. No spark should go over the spheres $C\,C$ and streamers should be prevented. Now the adjustment may be such that system $L\,C_1$ is any upper harmonic. In this system $\frac{Lp}{R}$ should be as large as possible. The free vibrations of $L\,C_1$ can be transmitted upon earth through condenser $C\,C$.

Colorado Springs

July 14, 1899

Further considerations in regard to producing most effective movement without spark gap in secondary. 2) A way which was experimented with in New York about a year and a half ago and worked exceedingly well and also later with boat, was to produce a very quick primary vibration and induce currents in secondary of a few turns which has

one of its ends to earth and the other connected to a large capacity. Connections were as illustrated.

Fig. 1) supply direct current 220 volt. Mercury break 1600 per second. The secondary S_1 with small condenser C and spark gap d, primary P 2—3 turns.

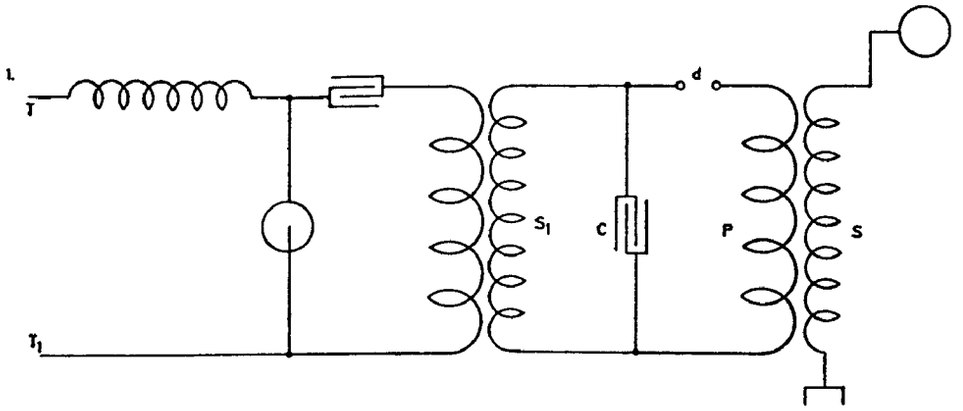

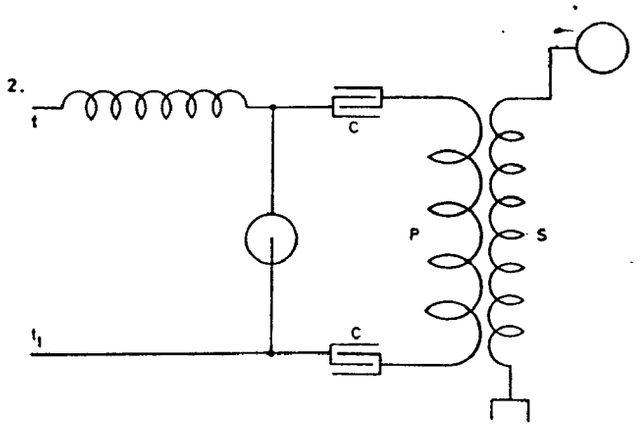

Fig. 2) supply circuit about 600 V; small condensers $C\,C$, $\frac{1}{2}$ mfd. each, 1 turn primary. Both of the arrangements worked well, that illustrated in 2) more economical but waves longer.

3). Another way (and seemingly best) is to provide a secondary which consists of a number of elements comprising condenser and coil each of a high frequency of vibration and all joined in series. The primary vibration should be quick corresponding to that of each of the elements of the secondary. In this manner any e.m.f. may be secured, the secondary may be of any length yet it will vibrate quick.

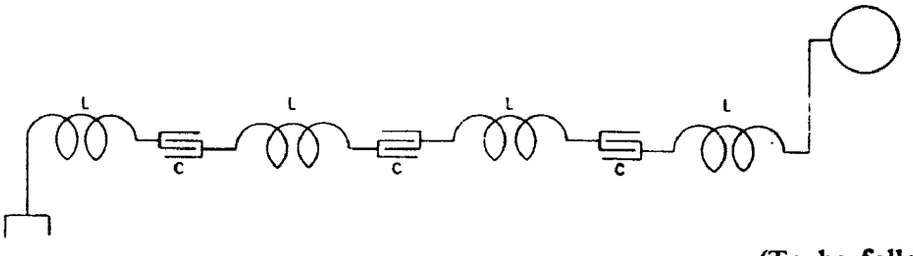

(To be followed up).

Colorado Springs

July 15, 1899

Some arrangements in telegraphy involving the Dynamo principle (first brought to Page some years ago). Present apparatus built two years ago in New York, worked very well. Consider which the best of the following modifications: In case 1. sensitive

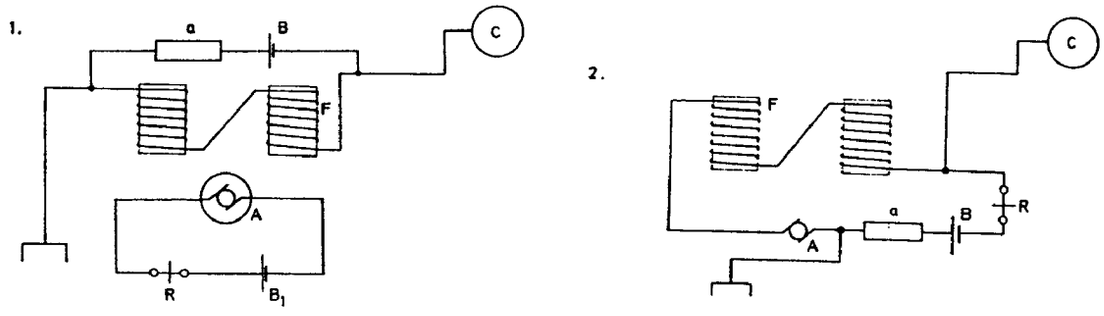

device *a* with battery around field *F*. In armature circuit independently a receiver *R* and battery B_1. The receiver may be a relay, and in addition, to insure greater sensitiveness another sensitive device as *a*, may be joined in convenient manner in the armature circuit. In case 2. the armature and field circuits are joined in series and battery and receiver are in shunt to both, also sensitive device *a*. In both cases the sensitive device may be also in series with the field or field and armature though arrangements 1 and 2 seem preferable. In arrangement 3. a shunt dynamo is shown, the sensitive circuit being also in shunt to the terminals of the dynamo. In addition, to regulate excitation of dynamo a shunt of high self-ind. is placed around the sensitive device *a*. Such a shunt may also be used with good effect in Fig. 2.

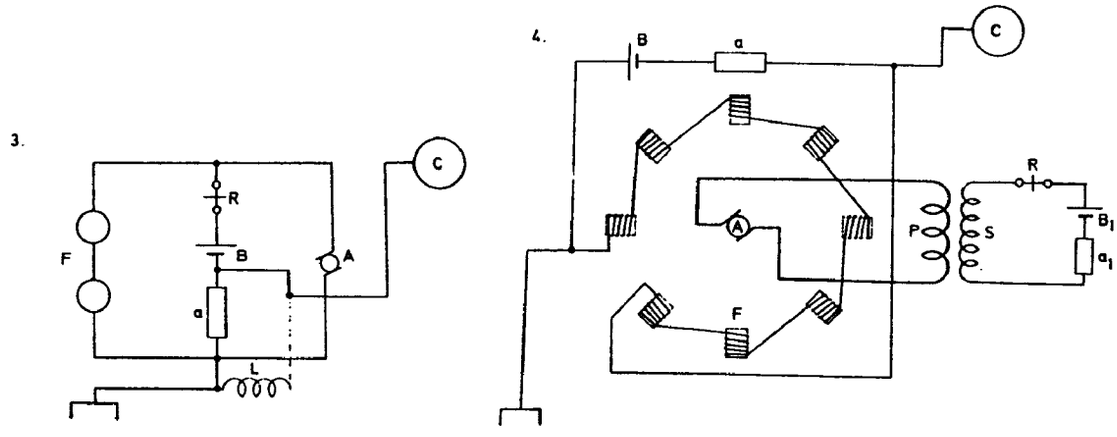

Fig. 4 illustrates one of the dispositions with an alternate and — preferably — high frequency dynamo. The letters are self-explanatory. The sensitive device a_1 may be omitted.

Colorado Springs

July 16, 1899

In order to produce the greatest possible movement of electricity through a region of the earth in accordance with the plan involving use of a single terminal oscillator, as here experimented with, it is desirable to obtain in some way a large capacity on the free terminal. This is connected with difficulty as spheres get to be too large with moderate tensions and when the tensions go into the millions, streamers can not be easily overcome. The streamers involve loss of pressure just as leaks would on a water pipe which is closed at one end. Large capacity is obtainable in a number of ways of which some are:

1) a coil wound for *maximum capacity* (internal). The turns are so disposed that between the adjacent turns of layers there exists a great difference of potential, as much as the insulation can stand. This is best done by following plan illustrated in Fig. 1 in

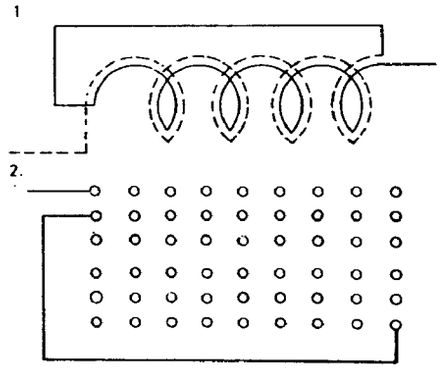

which there exists between each two turns one half of the total difference of pressure which is active on the terminals of the coil. But other arrangements may be followed as, for instance, illustrated in Fig. 2, or similar dispositions may be made so that there shall be the greatest possible difference of pressure between the adjacent layers. Or the capacity may be increased by a conducting coating over the insulation of the wire, which coating may be connected suitably so to secure the maximum storage of energy in the coil;

2) A valuable way of providing capacity is to employ a vessel in which the gas is more or less rarefied. The electrodes leading in should be of wire gauze and present a large surface but throughout of small radius of curvature. Such a way of obtaining large capacity I find very good in telegraphy in connection with receivers and their circuits. Hydrogen seems to be better than other gases to employ in the rarefied vessel.

3) Capacity may be also provided by storage batteries or voltameters or liquid condensers.

4) Another way is by local condensers arranged on end of wire near the free terminal. This is illustrated in annexed diagrams. In Fig. 1. and 2. two of the many arrangements are shown. In Fig. 1. a condenser is placed at the free end of the secondary S of the oscillator, the other end being connected to earth. One coating is directly connected to the end of the secondary, that is to b, the other coating to a point a which has a suitable difference of potential with respect to b. By the operation of the oscillator energy is stored in the

condenser C, which energy must all be supplied through the secondary, thus producing a large movement in and out of the earth. A modified arrangement is shown in Diagram 2.

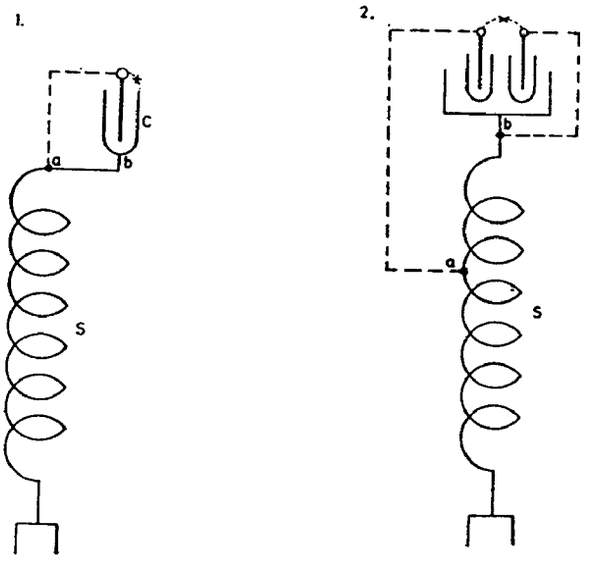

An arc may be maintained on the places marked x. Proper rules of tuning are observed to secure best result.

Colorado Springs

July 17, 1899

Some arrangements of apparatus experimented with. Modifications of former plans.

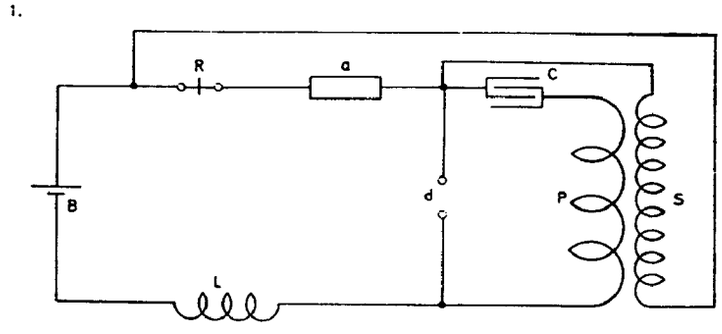

Here relay is placed in series with sensitive device but in secondary. In this way relay is not affected by break. The charge of condenser may be regulated by varying L or by resistances in series with L or with S.

2

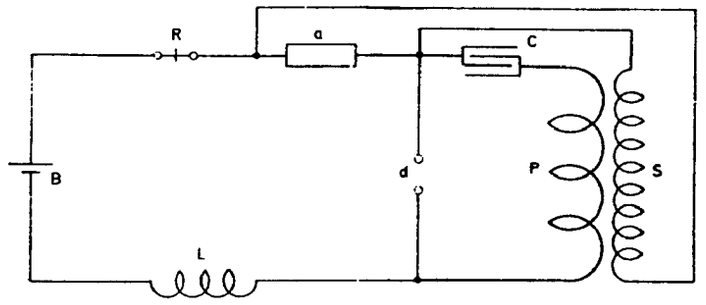

The relay is affected by the break in this disposition but the action was good in some instances; probably secondary *S* was more effective in breaking through the sensitive device *a*.

3.

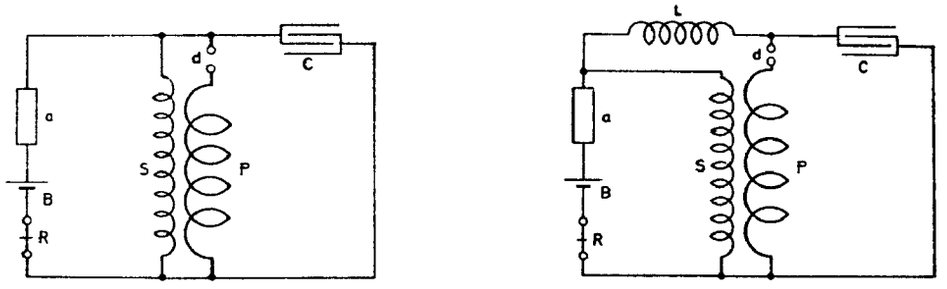

This disposition is simple and secures good results but one disadvantage has been found in the short circuit of the secondary through the condenser, which is necessarily too large for the high tension secondary since it fits the primary *P*. The above defect is reduced largely by the introduction of regulable self-induction *L*, or similarly a resistance is used instead of *L*. In all these dispositions of apparatus the effect upon the sensitive device is rendered accumulative.

Colorado Springs

July 18, 1899

Other arrangements of apparatus experimented with.

1.

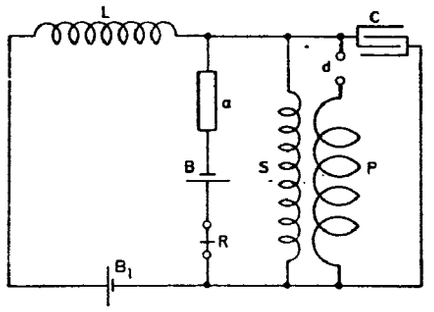

In this scheme the excitation of the condenser and therefore also of the sensitive device *a* was regulated by an adjustable self-induction and additional battery B_1. The battery *B* can be in the same or opposite direction working through the device *a*. The former was apparently preferable.

2

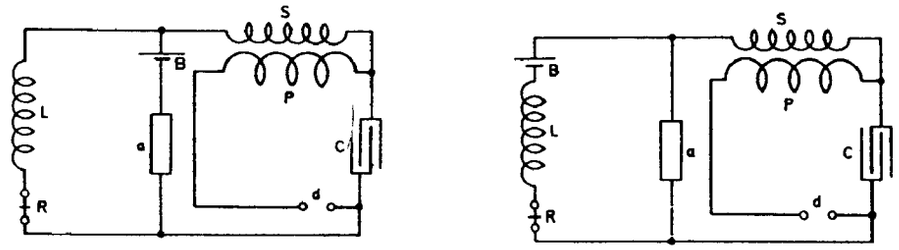

Of these two connections the first was advantageous as the battery was not working except when the sensitive device was excited.

3.

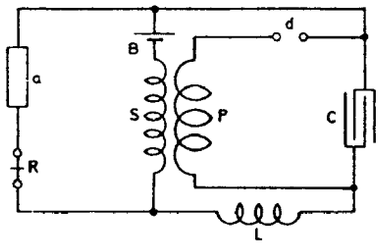

This was a plan (3) similar to one previously experimented with, only the battery *B* was placed so as to be able to charge the condenser.

4.

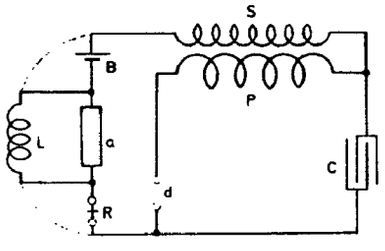

5.

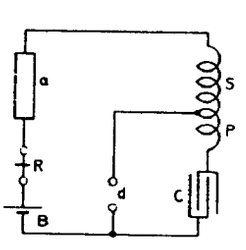

To determine excitation of sensitive device to the point of breaking down a self-induction coil *L* (very high) was placed around it (4). This coil was also tried with connections changed as indicated by dotted lines.

Here again (5) a part of secondary was used as primary. The arrangement worked well probably because as in some instances previously the secondary was open and the rise of pressure considerable upon a small excitation of device *a*. This is suitable for a device of great resistance.

Colorado Springs

July 19, 1899

Some simple dispositions in the practical uses of apparatus as now available.

1.

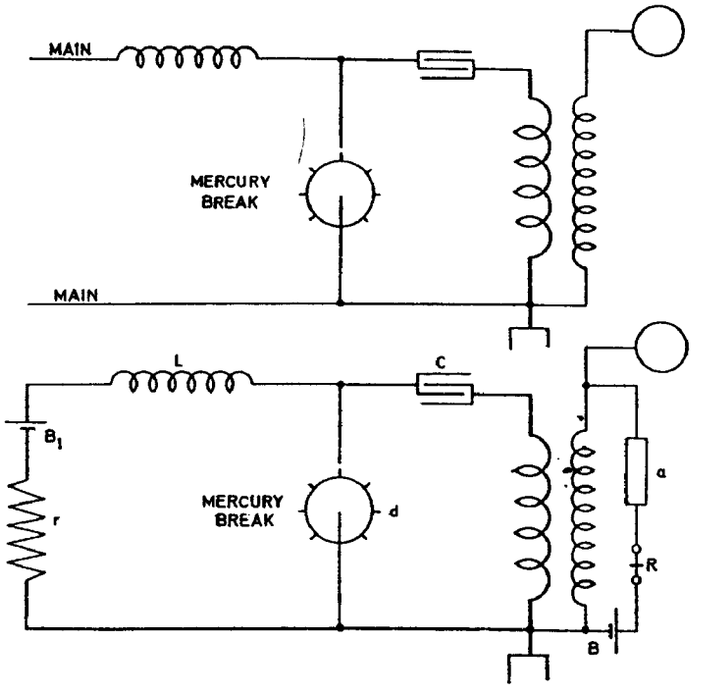

The connections in the oscillator as now manufactured are as shown in first sketch. In this way the apparatus is used as a sender. The connections are now by a throw of a switch changed in such a way that all can be used in receiving the message. One of the simplest connections is shown in the following sketch. The relay *R* should have small self-induction. By battery B_1 the excitation of device *a* is regulated. For facility of adjustment a resistance *r* is also inserted. The switch is to be worked out in detail.

2.

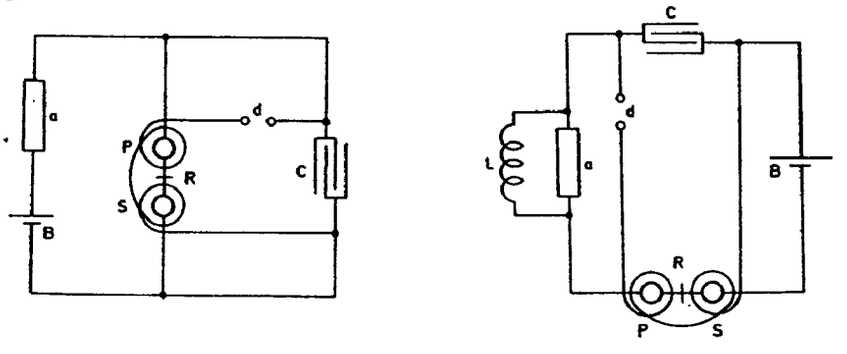

In using the method of exciting the device *a* by means of oscillating transformer the construction of a special apparatus may be obviated by winding the primary directly upon the relay so that the relay itself is the transformer. This is schematically indicated in the sketches in which the letters indicate the same. In the first the battery should be an open circuit, in the latter a closed circuit type.

Colorado Springs

July 20, 1899

Galvanometer from Colorado College set up on lead plate and four rubber supports. Lead plate 50 lbs. Resistance roughly 2530 ohms. The filament is very short, vibration quick, altogether not best quality but possible suitable for approximate determinations of ratios and resistance measurement etc.

1 dry cell 1.43 volt

$$i=\frac{e}{10{,}000+\dfrac{2530\times 100}{2630}}=\frac{1.43\times 2630}{2630\times 10{,}000+2530\times 100}$$

$$i=\frac{1.43\times 263}{2{,}655{,}300}$$ this gave 13.5 deflection.

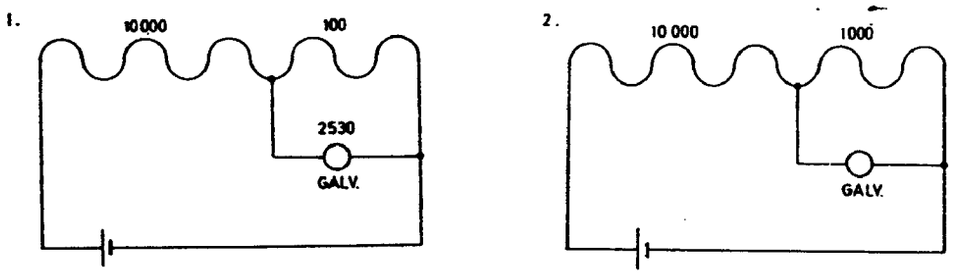

Now the current in galvanometer was

$$I=\frac{100}{2530}i \text{ or } I=\frac{10}{253}\times\frac{1.43\times 263}{2{,}655{,}300}=\frac{376.09}{67{,}179{,}090};$$

this gave 13.5 degrees of scale, hence K for one degree current

$$K=\frac{376.09}{67{,}179{,}090\times 13.5}=\frac{1}{\dfrac{67{,}179{,}090\times 13.5}{376.09}}=\frac{1}{2{,}411{,}438}$$ approx. *Will do for use intended.*

To test proportionality on scale the galvanometer was connected across 1000 ohms. This gave a deflection of *98°* on scale. The currents computed were in both cases as $\frac{10{,}716.7}{100{,}961.9}$. This showed the necessity of increasing range of reading by placing scale further. For small deflections proportionality quite rigorous.

Colorado Springs

July 21, 1899

Various arrangements with two sensitive devices for the purpose of increasing efficiency of receivers in telegraphy. Also for directing currents.

Two sensitive devices, disposed as indicated and so constituted that they break down or respond easier to impulses of one direction than to those of the other, allow the commutation of alternating currents. For this purpose a device may be employed, described before, consisting of a glass tube and two metallic plugs, the glass tube being about half filled with nickel chips or fillings of other metal. In Fig. 1. it is supposed that the devices $a\ a_1$ have this quality which may be given, for instance, by a battery in each circuit as shown in Fig. 2. In both sketches 1) and 2) a relay $R\ R$ is shown having one of its legs in one of the circuits and the other leg or coil in the second circuit. In this manner the impulses coming, for instance, from a distance as in telegraphy can be made to exercise an accumulative effect. The alternating impulses are led in through terminals $t\ t$.

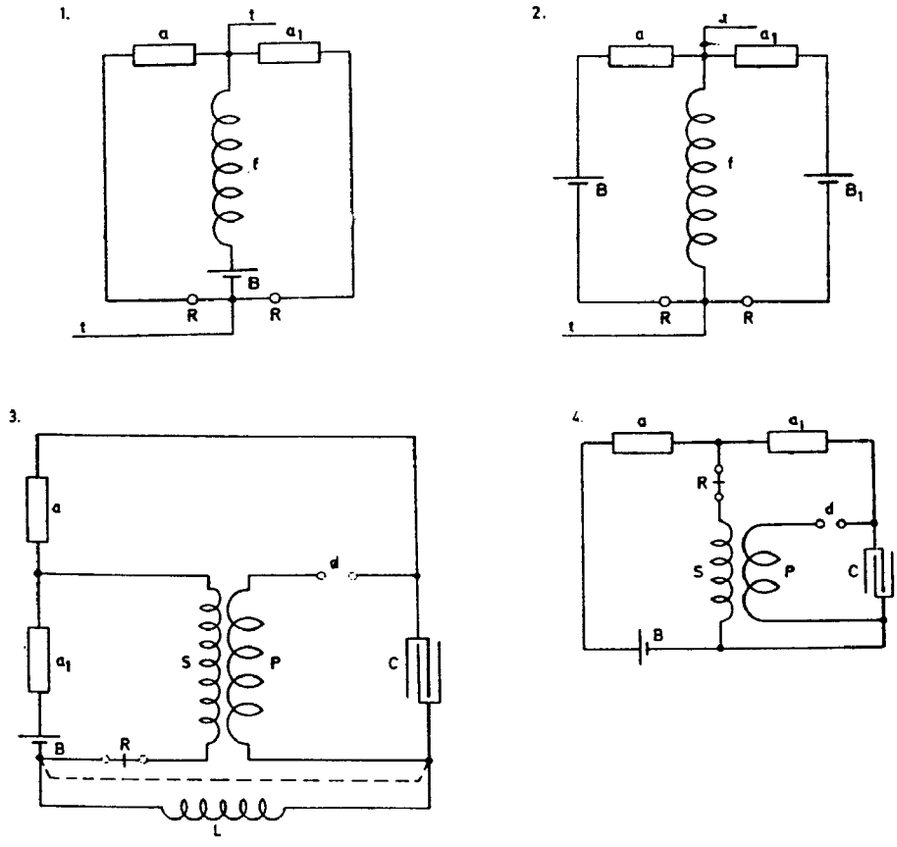

Fig. 3. illustrates one of the connections of apparatus experimented with with good success. The method of excitation and magnification by means of an oscillating transformer is used and the relay and secondary were connected either as shown in the plain lines or in the modification indicated by the Botted lines. The letters have the same meaning as in previous instances. In Diagram 4. similar connections are shown, merely the self-induction coil L has been done away with and secondary S adjusted accordingly.

Figs. 5.—8. show again modified dispositions. Fig. 5.: the condenser is in the bridge and the legs of the receiver are placed one in each of the two circuits. In Fig. 6. the condenser is placed around a battery which is graduated by a resistance (not shown) so that the secondary S strains the devices $a\ a_1$ to the point desired. Fig. 7. shows a similar plan with the secondary in shunt to one of the sensitive devices and in Fig. 8. two sensitive devices one in one and the other in the second circuit of which each contains a condenser and its own primary.

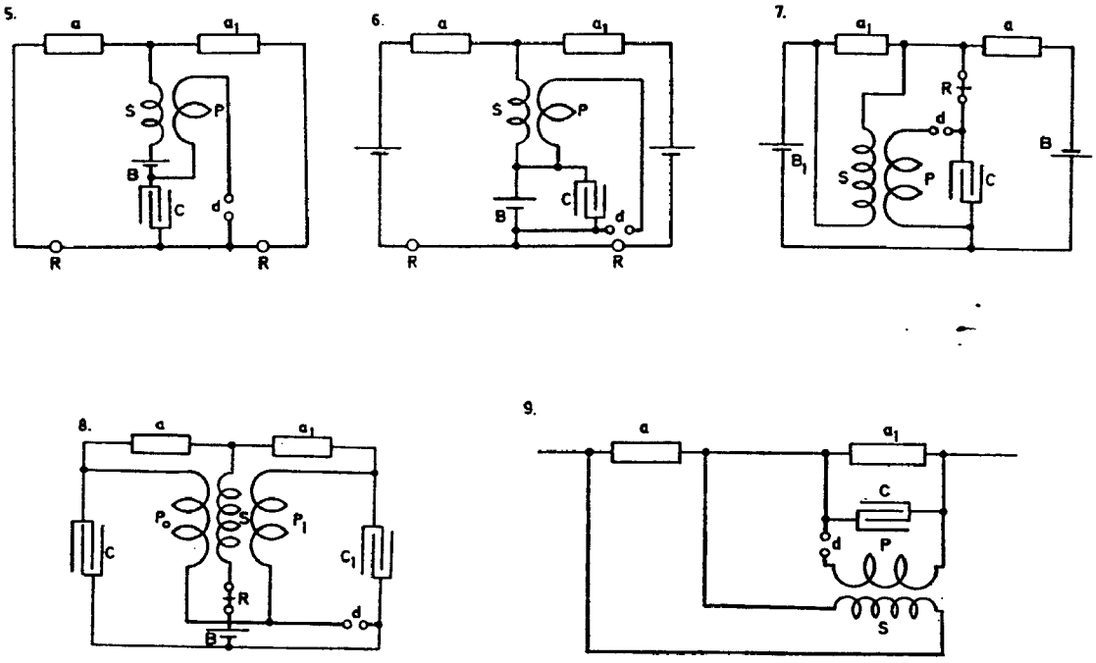

Fig. 9. shows a plan followed in numerous variations and which is capable of excellent results.

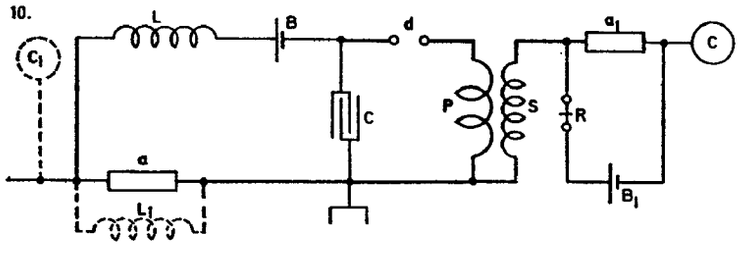

Fig. 10. again shows a form of connections which works extremely well. It is suitable for use in connection with single terminal oscillators. The capacity or elevated terminal may be at C and also at C_1. Both cases result good.

Colorado Springs

July 22, 1899

Further modes of connecting apparatus with two sensitive devices for telegraphy and such purposes. A connection as in sketch showed quite satisfactory results. The sensitiveness was probably due to the fact that the secondary was open as in a previous instance. Several plans of working with two or more devices in multiple were experimented with. The idea was to introduce greater regularity and reduce resistance of the path through

1.

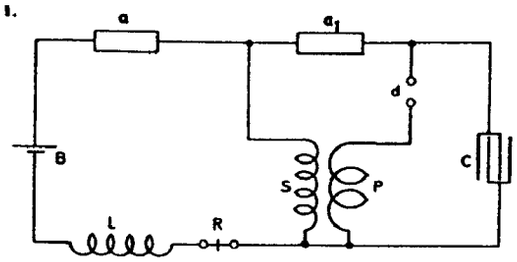

2.

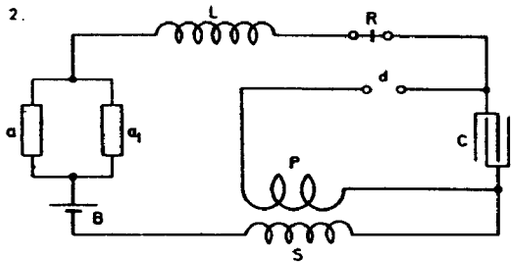

the sensitive apparatus. Some arrangements worked well, for instance the one illustrated in sketch 2. In 3. both devices a and a_1 were shunted by a high self-induction L, the inductive and ohmic resistance of which was regulated so that devices $a\ a_1$ would break down at the slightest disturbance. The results were fair but not better than before obtained with other dispositions. The relay was placed in a number of ways, best results when it was in the secondary S.

3.

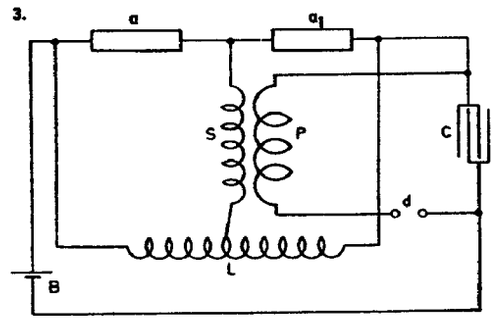

4.

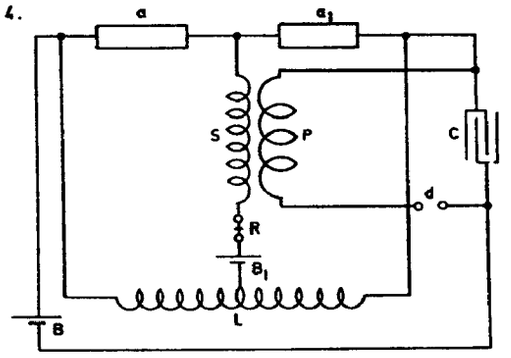

In Diagram 4. the same mode of connection was employed, only a battery and relay were placed in the bridge. The employment of the special battery B_1 allowed some adjustments to be made not practicable in Diagram 3. Generally, battery B_1 was differentially connected with respect to battery B.

5.

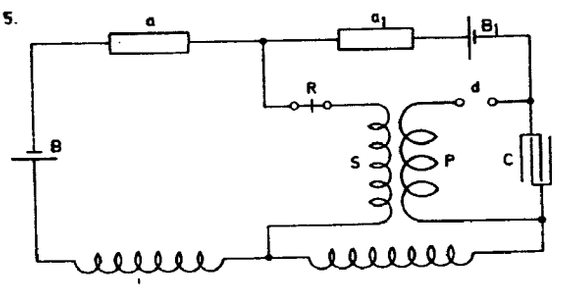

6.

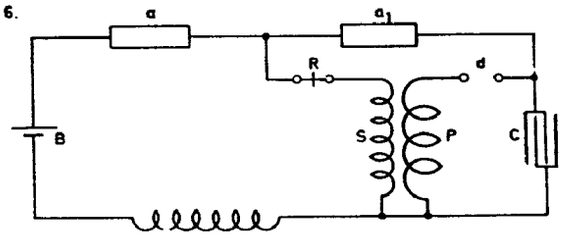

Diagram 5. again shows a form of connections slightly modified, two bateries being used in series to strain the sensitive devices $a\,a_1$. Results about the same.

In Diagram 6. the connections were as previously shown in Diagram 1. only the relay was placed in the secondary *S*. This worked *excellently*.

In Fig. 7. the same connections were retained only a high self-induction was connected around the devices and regulated so that devices were rendered very sensitive.

Fig. 8. shows an arrangement to be used in connection with present oscillator employed as sender. The switching connections are to be simplified. The oscillator with mercury break and its induction coil work *much better* than interrupters driven by clockwork and small special coils. *Important.*

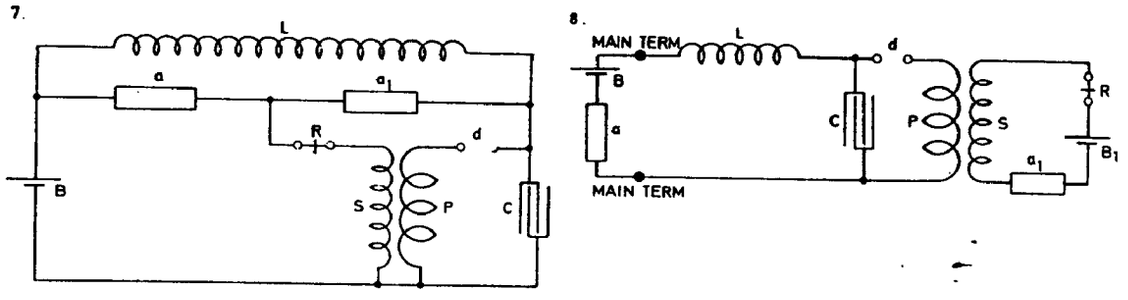

The employment of the mercury break particularly makes the apparatus efficient, probably because of perfect regularity of working which can not be secured by spring contacts or brushes. The efficiency is also in a measure due to the small resistance of primary circuit because of the large copper section and good mercury contact. It is highly important that in preceding dispositions of apparatus the break is of high frequency, the condenser large and best insulated and the conversion in coil *efficient*.

Colorado Springs

July 23, 1899

In investigating the propagation through the media, and more particularly through the ground, of the electrical disturbances produced by the experimental oscillator, as well as those caused by lightning discharge, to which work a few hours were so far devoted every day, a form of sensitive device used in some experiments in New York was adopted,

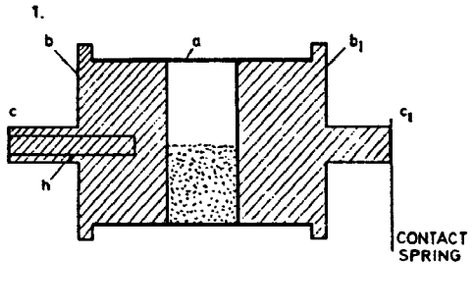

as the best suitable fot these purposes. This device, and the manner of preparing it, it is now necessary to describe. In one form it comprised a glass tube 3/8″ inside diameter

having two brass plugs fitted in its ends. The plugs had their inner surfaces highly polished and the distance between them was from 1/8"—1/2". The tube is illustrated in Diagram 1. in which *a* is the glass tube and *b* b_1 the plugs of metal with narrow projections *C* C_1 for support and contact, respectively. The space between the plugs was filled about 1/3 full with coarse chips of nickel. These chips were made by a milling tool or punch so as to be as much as possible equal in size and shape, this being of considerable importance for the good performance of the instrument. The plug *b* had a small reamed (tapering) hole *h* in the center extending to some distance into the plug so as to enable its being placed on a small arbor fitting into the hole and rotated by clockwork at a uniform rate of speed. In some cases when the working of the device was excellent the speed was 16 revolutions per minute. But often the instrument was rotated very much faster in which case it was merely necessary to increase the e.m.f. of the battery which was used to strain the device to the point of breaking down. A beautiful feature of this kind of device is that by regulating the speed its sensitiveness may be regulated at will and in this respect it is preferable to similar devices which are stationary, the contact after being established being broken by tapping. The device acts exactly like a cell of selenium, its resistance diminishing when the disturbances reach it, being automatically increased in consequence of rotation and separation of the chips when the disturbances cease to affect the latter. The rotation of the device replaces here the property of recovery which the selenium possesses, otherwise the similarity is complete. To insure a quite satisfactory working and permanent state I prepare this form of device in the following manner:

The glass tube, plugs and the chips to be used are first thoroughly cleaned with pure absolute alcohol and dried. Next, one of the plugs, as *b*, is slipped into one end of the glass tube and the required amount of chips is put in the other, plug b_1 being finally inserted closing the tube *nearly* hermetically, but not quite so. Now the device is placed upon a cylinder of metal with a hole in the center, to allow the small part of one of the plugs *b* or b_1 to slip in, with some space between, and permit the plug to rest upon and in good contact with the upper surface of the metal cylinder which is then slowly heated, as by being placed upon an electrical stove or a plate supported above an alcohol lamp. When the lower plug is brought to the required temperature, sealing wax is run around the rim projecting for this purpose, beyond the glass tube. The metal cylinder is now allowed to cool down slowly until the sealing wax is in some degree solidified when the instrument is turned over and placed with the other plug on the cylinder and the operation of sealing the joint between glass and plug repeated. During this preparation the chips are of course at an elevated temperature and all moisture is expelled so that, when the instrument is ready, a thoroughly dry atmosphere exists within the same, this being essential for good performance. The atmosphere is, however, at a pressure slightly below that of the surrounding air. When the device is carefully prepared it works remarkably well, and in comparative tests showed itself superior to this kind of device of the form ordinarily advocated. During a few days I carried on tests of this kind which brought out the good qualities of this kind of instrument. In one instance two of them were compared with a third device of the ordinary form in which the sensitive grains were immersed in an atmosphere considerably rarefied and contact was broken with a tapper. In all three instruments the grains of nickel were of the same size and shape. One of the terminals of each of the devices was connected to a ground wire, while the other terminals were each joined to a piece of wire extending to a small height, these pieces of wire being the same in all particulars. All the three devices were strained as far as was practicable by batteries so as to be at the point

of breaking down and sensitive to a high degree. Although the pieces of wire extending into the air were only of a length of a few feet, all the instruments recorded the discharges of lightning up to about 30 miles as the storm moved away. At this point it was found necessary to set the instrument with the "tapper" so that it was still more sensitive when it responded but in an irregular manner, while the other two devices continued to record regularly up to a distance of about fifty miles when the disturbances ceased, probably owing to the cessation of the storm. I inferred from these experiments, carried on for some time with the view of selecting and adopting the best form of such a device, that when the particles of metal are rotated they are, as it were, suspended in the air and in this condition more susceptible to the influence of the disturbances than when they are kept stationary. It seems, however, that when rotated, the particles are not so liable to stick together and cause irregularity of action such as observable in the ordinary form of such a device. As to the amount of chips, if more are put in the instrument must be rotated at a higher speed or else the battery straining the dielectric must be weaker. Through this kind of instrument much stronger currents can be passed without damaging it and making it further unfit for work. Another form of such instrument particularly suitable for experi*f* mentation is illustrated in Diagram 2. It consisted of a brass plug *b* with a fibre tube -

2.

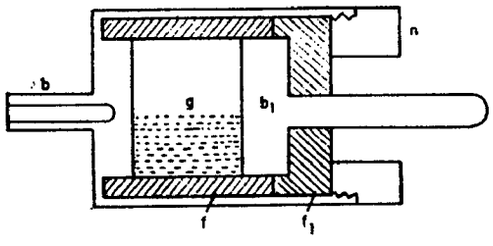

into which was fitted another brass or metal plug b_1 which was held in place by a fibre washer f_1 and metal nut *n*. In other devices of similar construction the space between the plugs was adjustable. This form of instrument was particularly suitable for testing the properties of sensitive grains *g*. Before testing the grains and the instrument as well were thoroughly dried. To get an idea of the resistance of such devices when in either state, excited or not, the resistance of many was measured under varying conditions. A fair idea is conveyed by saying that, unexcited, they measured more than 1,000,000 ohms while the resistance would sink down to 300 or even 50 ohms or still less when excited. When highly sensitive they would respond to sound waves at a considerable distance.

Experiments with oscillator 35 *turns in secondary on tapering frame No. 10 B. & S. wire.*

This is the first test of the Westinghouse transformer installed a few days ago. It was tried yesterday evening but only for a short time to merely get an idea how it will behave. The e.m.f. used was 7500 volts or less. Today a pressure of 15,000 volts on the secondary was used. Best resonating action was obtained with *one* primary turn and a few turns in the regulating coil. The spark gaps were as long as obtainable in the box, that is, about 7 turns of the screw on each side, possibly an inch or so. An approximate estimate places the primary inductances at 75,000 cm. or $L_p = \frac{75}{10^6}$ H. The primary capacity was 88 jars in each of the sets in series. The capacity of one jar being approximately 0.0035 mfd.

The total capacity C_p is=0.154 mfd. From this calculated, and neglecting as in most cases before the reaction of the secondary, we get $T=\frac{214}{10^7}$ or n=46,730 per second.

Observations: A spark gap being established between the free terminal of the secondary and an earthed wire, strong streamers were seen on the *latter*. This shows very rigorous action and demonstrates that the potential of the neighbouring parts of the ground must be considerably affected. *Very strong* sparks on lightning arresters as the secondary discharge is playing over the gap. This is certainly *extraordinary* as the ground is now excellent on the secondary. The arc, horizontally passing about 32" long is very powerful, thick and giving a vivid light, the noise is deafening. The arc passes sometimes on a downward course. Is it attraction or due to surgings of the air in consequence of violent explosions? When large balls 30" diam. are placed in the gap the spark length is nevertheless small. This shows the secondary can not supply the great amount of energy necessary for charging the large balls to full pressure. This may be due simply to the imperfect inductive connection with the primary or to the small amount of power now available from the supply transformers, as there are only two of them, and the Westinghouse transformer works only at 1/4 of the normal pressure. This would mean roughly 1/16 of its total performance. On some points of the balls small streamers are observed; must be due to roughness or points on the places. The balls will have to be gone over and all the surface polished up. It would be impossible for streamers to break out from balls of such size unless the pressure is a few millions of volts, which cannot be the case at present. A curious feature is to see the sparks deviate and follow wooden beams or planks placed nearby. I rather think this is merely due to an effect of the currents of air which are prevented from circulating freely on the side of the plank or beam. The intensity of the vibration in the primary is evidenced by sparks passing between the turns of the regulating self-induction coil in the primary. Between the beginning and end of the coil, although only a few of the turns are inserted, the sparks are sometimes 3" long. This shows a very high e.m.f. on the primary and I almost think there must be a mistake as to the pitch estimated which, judging from these sparks, would seen to be much higher. This is to be investigated closer. Experimentation shows that it is very decidedly better to adopt one turn of primary instead of two and if a lower frequency is desired rather to increase the primary capacity. With one turn the explosions are more violent and the regulation is much more convenient. In these experiments the jars do not seem to be much strained, which indicates well. At times sparks will break through inside of the secondary between the turns and to the ground. The sparks are very strong from small wires attached to the free end of the secondary more so than from thick wires. When a coil was connected to the free secondary end the vibration could not be well established, evidently the coil was "out of tune" and by its capacity and inductance interfered with the free vibration of the secondary. The sparks went from the gap-box to the ground though the box was well insulated; there is danger of inflaming the building by this or by the secondary sparks following the wooden structure. The experiments were continued with 7500 volts as yesterday but the working was unsatisfactory. This showed finally that yesterday one of the jars in one set was bad and there was only one set acting, the other set being short circuited; that is why an e.m.f. of 7500 volts was sufficient yesterday. The Westinghouse transformer gains in e.m.f. as jars are put on, the maximum rise seems still remote, this argues well for the economy of the transformer. The incandescent lamps are all destroyed in consequence of the intense secondary vibration, the filaments being broken by electrostatic attraction towards the glass. Lamps were spoiled at a distance of *40 feet* from the secondary free terminal! This action is likely to give trouble in future experiments. A curious observation is that all horses shy. It is due to sound or possibly to current action through the ground to which horses are highly sensitive either owing to greater susceptibility of the nerves or perhaps only because of the iron shoe establishing good ground connection. I am not quite certain that the secondary vibration is fundamental although for a lower or higher tone it is too powerful. The external gaps used in some trials seem to improve the action somewhat in rendering the discharges of the primary more *sudden*. If time should permit the vibration will be investigated by a rotating mirror to be prepared.

Colorado Springs

July 24, 1899

Experiments with the *secondary* 35 *turns* were continued today. In connection with the secondary an "extra coil" was used. The same was before described having 260 turns on a drum 2 feet in diam. of cord No. 10. The inductance of the coil as before found was approximately 13,900,000 cm. or $\frac{139}{10^4}$ henry. The coil was connected with the lower end to the free terminal of the secondary while the upper end was left free, a few feet of wire extending into the air. Resonance, as evidenced by streamers (maximum) on free end of coil, was obtained exactly as in a previously recorded experiment with 9 jars in each set of the primary condensers, or slightly less, at any rate 8—9 jars caused the largest display of the streamers on the free end. The streamers were only three feet long as the energy from the supply circuit was limited, the intention being to first study the peculiarities and behaviour of the transformers before taking them to their full output. A simple computation showed that the resonant rise on the free end was chiefly, if not wholly, due to the rise in the coil itself, the free vibration of the secondary being comparatively of small moment. To study the harmonics the capacity in the primary circuit was doubled but the effect, as expected, was very small. Now the capacity in primary was again doubled, it being expected that the streamers would be of considerable power under these conditions. This was the first undertone and it should have been fairly strong. But singularly nothing to speak of was noted although the adjustments were carefully gone through again and again. It was thought that owing to a very small arc in the primary the oscillation did not readily establish itself but this was not highly probable though such has taken place in experiments which I made before. The arc was necessarily small as the capacity was very large in the primary. The tuning was very sharp with twice the capacity in primary so that a little variation in the self-induction regulating coil made the streamers change very considerably. I expect that it was sharper still with four times the primary capacity so that, after all, the resonant condition may have been missed. This might have been the case easily as all the variation from *no* streamers to their *maximum* would have taken place by going through only one *quarter* of *one turn*, and *possibly less*, of the regulating coil. This sharpness of tuning noted here and in previous instances in some arrangements again impresses me with the value of such dispositions in telegraphy, when it is of great importance to isolate messages. It seems possible to secure in such or similar ways an almost absolute privacy. The experiments with only two circuits show this sufficiently. Continuing the experiments one of the balls of 30″ diameter was connected to the free end of the coil and now the resonating condition was secured with 23 jars on each side of the primary. Summing up the results the vibration with coil alone, without ball, with 9 jars on each side of primary was, approximately, taking the primary capacity equal to $\frac{9}{2}\times 0.003 = \frac{0\,027}{2} = 0.0135$ mfd.

$$T_1 = \frac{2}{10^3}\sqrt{0.0135 \times \frac{7}{10^5}} = \frac{2\pi}{10^3}\sqrt{\frac{945}{10^9}} =$$

$$= \frac{2\pi}{10^7}\sqrt{94.5} = \frac{2\pi}{10^7}9.72 = \frac{61.0416}{10^7} \text{ or approx. } = \frac{61}{10^7}$$

and $n = 164{,}000$ per second.

Now when the ball was attached the primary capacity was

$$\frac{23}{2} \times 0.003 = \frac{0.069}{2} = 0.0345 \text{ mfd.}$$

and the period

$$T_2 \text{ was} = \frac{2\pi}{10^3}\sqrt{0.0345 \times \frac{7}{10^5}} = \frac{2\pi}{10^3}\sqrt{\frac{2415}{10^9}} =$$

$$T_2 = \frac{2\pi}{10^7}\sqrt{241.5} = \frac{2\pi}{10^7} \times \frac{2\pi \times 15.54}{10^7} = \frac{97.6}{10^7} \text{ and } n = \mathbf{102{,}460 \text{ per sec.}}$$

The ball slows the vibration of the coil very much down. From a series of observation with capacities of varying value useful estimates may be made and the quantities of moment calculated. This mode of proceeding seems to offer features of considerable value in experimentation and it will be followed up. A curious observation in these experiments was that maximum rise was obtained always with the regulating coil practically all out.

How is this to be explained?

Experiments with the *secondary* 35 *turns were resumed.* The probable causes of the curious phenomenon that maximum resonant rise (on the coil attached to the terminal of the secondary, as before described) took place when the self-induction regulating coil was practically all cut out — were considered. Evidently when the coil was cut out there was more energy available for the excitation of the primary turn and therefore the secondary was more strongly energized, this giving a higher electromotive force on its terminals. Owing to this the impressed e.m.f. on the coil attached to the free terminal of secondary was greater and therefore the coil was more strongly excited. Assuming then that the secondary free vibration did not take place, this explanation would be acceptable but for one thing: the maximum rise on the coil with 260 turns did not occur, when *all* the turns of the primary regulating coil were cut out, but at a point when there remained still a few turns in series with the primary. The phenomenon must be therefore interpreted differently. To all appearances the secondary free vibration *did* occur, and there was a certain inductance in the primary which gave the highest e.m.f. on the excited coil on the free terminal of secondary. But now the latter was in fairly close inductive relation with the primary hence its own vibration was more or less modified by that of the primary. In altering the primary vibration, that of the secondary must have been, therefore, correspondingly altered. Now, the secondary excited the coil with 260 turns and, to insure the maximum rise on the free terminal of the coil, the secondary vibration ought to have been of exactly the same pitch as the free vibration of the coil. From this it is plainly seen that if the primary vibration was such as to favour a rise in the secondary of the pressure at the free terminal then the impressed e.m.f. on the coil with 260 turns was greater; but this evidently, judging from the actually observed results, took place when the secondary vibration was "out of tune", more or less with the free vibration of the coil. Thus it happened that by raising the secondary e.m.f. up to a certain point there was an increased resonant rise on the excited coil. But when, by further cutting out turns of the regulating primary coil, the secondary vibration was modified more and more and brought "out of tune" with the free vibration of the coil excited by the secondary, the resonant rise on the terminals of the excited coil was diminished. Now, with a certain small number of turns of the regulating coil still included in the primary, the relation between these opposing elements determining the

resonant rise was such as to insure the maximum. I have no doubt that this is the correct explanation of the phenomenon observed. At first I thought that the *length* of the *primary* might have something to do with it, as I have observed before something to this effect, but now I must reject this view as improbable. From the preceding it is now quite evident that in cases when the free vibration of the secondary can assert itself, the primary capacity and self-induction has to be such that maximum e.m.f. is obtained on the secondary — then the excited coil must be such as to vibrate in accord with the secondary or (inasmuch as the secondary vibration is affected by the primary) the free vibration of the excited coil must be the same as that of the combined primary and secondary system. When the vibration in the secondary is exactly the same as the free vibration of the excited coil the maximum rise will be obtained on the coil, in any event, but for the best result the secondary must also be tuned to the primary so that greatest impressed e.m.f. is secured on the coil.

In cases where the secondary is in such intimate inductive connection with the primary then the latter condition need not be considered and it is only necessary to adjust the coil so that it will have the same period as the oscillation in the secondary. In fact, I believe this will be, in the end, the best condition in practice for, if the transformer be efficient, the connection between the primary and secondary must be a very close one. In such a case the high impressed e.m.f. on the excited coil will be obtained only by transformation and not by resonant rise.

A gratifying observation was made today which was the following: the water pipe to which the secondary lower end was connected, and which conveyed the currents to the ground, was disconnected from the secondary and the latter connected to a separate ground plate at a distance from all other ground connections. Everything was carefully examined to be quite sure that there was no other ground connection in the secondary. Nevertheless, when the secondary discharge was made to play, *strong sparks* went *continuously over the lightning arresters*. There was no other possible way to explain the occurence of these sparks than to assume that the vibration was propagated through the ground and following the ground wire at another place leaped into the line! This is certainly extraordinary for it shows more and more clearly that the earth behaves simply as an ordinary conductor and that it will be possible, with powerful apparatus, to produce the stationary waves which I have already observed in the displays of atmospheric electricity. The mere observation of the sparks speaks well for the power of the apparatus used and clearly shows that it is competent to carry to a great distance even as it is when used as a transmitter in telegraphy. Assume even that the pressure would diminish as the square of the distance from the source, still the performance would be remarkable. Such an assumption seems to be justified when we consider that the density of the current passing over the earth's surface will diminish as the square of the distance from the center of the disturbance and consequently, the effective pressure at least, ought to diminish correspondingly. Now, in the experiments above described the distance between point *a*, where the lower end of the secondary was grounded to point *b*, where the sparks jumped from the ground to the line or vice versa, was 60 feet. Hence on the above assumption we can

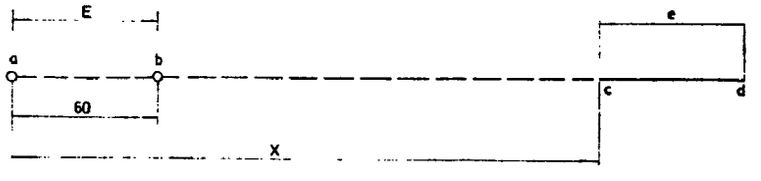

make the ratio $\frac{E}{e}=\frac{x^2}{60^2}$, where x will be in feet. At the lowest estimate E was 10,000 volts and assuming an ordinary instrument be used as a receiver, requiring $\frac{1}{10,000}$ of a volt$=e$ between c and d, we would have $x^2=60^2\times\frac{10,000}{1}=36\times10^{10}$ or 600,000 feet or $x=114$ miles nearly. But by making the distance between c and d much greater the transmission radius may be *greatly* extended.

Capacity of secondary 35 turns used in preceding experiments.

The average length of one turn may be put at approximately 135.1 feet=4120 cm. The wire is No. 10 B. & S. diam=0.102"=0.26 cm. Surface of wire in sq. cm.$=\pi\times0.26\times$ $\times4120\times35=\pi\times37,500$ cm. approx. The capacity was compared with that of 1/2 mfd. standard condenser and was found to be **C=3600 cm.** This measurement was I expect correct within 1/2 %.

Note: The measurement was made by connecting the cable with one end, or with *both* ends to the source, the other terminal of which was connected to the earth. *Result* was the *same.*

Now it is of interest to compare the value found by measurement with that which the cable would have when stretched out. Its capacity would then be $C_1=\frac{l}{2\log_e\frac{l}{r}}$ considered as a cylinder remote from the ground. Taking the values as above

$$C_1=\frac{4120\times25}{2\log_e\frac{4120}{0.13}}=\frac{4120\times35}{2\log_e31,700}=\frac{2060\times35}{\log_e31,700}=\frac{2060\times35}{4.50106\times2.3}=$$

$$=\frac{2060\times35}{10.35244}=\mathbf{6965\ cm.}$$

If we consider the cable in its capacity with reference to the earth or conducting plane its capacity would then be $C_2=\frac{l}{2\log_e\frac{2d}{r}}$. Since we have found the measured value we may find from it the distance d; we have $3600=\frac{4120\times35}{2\log_e\frac{2d}{r}}$ from which

$\log_e\frac{2d}{r}=\frac{4120\times35}{2\times3600}=20.3$ and this gives

$$\log\frac{2d}{r}=\frac{20.3}{2.3}=8.82607,\ \text{hence}\ \frac{2d}{r}=67,000,000\ \text{cm.}$$

$$d=\frac{67,000,000}{2}\times\frac{13}{100}=\frac{670,000\times13}{2}=670,000\times6.5=67,000\times65=\mathbf{44,550\ meters!}$$

The result only shows that the cable measures much more when straight and at some distance from the ground since d comes *out so large.*

It may be of further interest to compare the capacity as found with capacities which would be obtained if the surface of the cable were converted into the surface of a disc or sphere, for instance. Taking first the latter and calling its radius r' we have $4\pi r'^2=\pi 37{,}500$ and $r'^2=\frac{37{,}500}{4}$, $r'=\frac{\sqrt{37{,}500}}{2}=\frac{193.65}{2}=$**96.825 cm.** and this should be the theoretical capacity C_1 of the sphere. Taking now a disk of radius R, its capacity C_2 would be $C_2=\frac{2R}{\pi}$. Now on the above assumption of an equal surface we would have $2\pi R^2=\pi 37{,}500$ $R^2=18{,}750$ and $R=\sqrt{18{,}750}=136.93$ cm. Hence $C_2=\frac{273.86}{\pi}=$**87.2 cm.** This is still smaller than the capacity of a sphere of the same surface. Suppose now the surface of the cable were converted into small spherical surfaces of a diameter equal to that of the cable and inquire what capacity would be obtained in this manner with the given surface. The surface of one of the small spheres being $4\pi r^2$ and calling their number n we have $4\pi nr^2=\pi\times 37{,}500$ and

$$n=\frac{37{,}500}{4r^2}=\frac{37{,}500}{4\times 0.13^2}=\frac{37{,}500}{4\times 0.0169}=\frac{37{,}500}{0{,}0676}=554{,}734=n$$

The total capacity C_3 of all these small spheres, neglecting mutual screening action, will be n times the capacity of one of the spheres and since the latter is=0.13 we would have total capacity $C_3=554{,}734\times 0.13=$**72,115 cm.**! A very large value indeed, which would have been still greater if the diameter of the spheres would have been smaller. These primitive considerations show that to get the largest possible capacity with a given surface we must use the latter in the form of minute surfaces of the smallest possible curvature. This makes it obvious why exhausted bulbs show under certain conditions such comparatively large capacity. And this explains the virtue of bulbs when used in telegraphy for the purpose of supplanting a large elevated plate or wire leading to a great height. Such a bulb or tube, particularly when filled with *hydrogen*, is (as I have found) very effective and I look to a valuable use in the future of such rarefied vessels in connection with telegraphy through the media or the like. The greatest capacity with a given surface will, of course, be obtained with spheres of the smallest possible diameter, as the spheres of hydrogen. The next best form to give to the surface would be a cylinder of great length and minute diameter. The above considerations make it plain why thin wires have such a comparatively large capacity. Taking two such wires of the same length L and diameters δ and δ_1, we would have their capacities as

$$\frac{L}{2\log_e\frac{2L}{\delta}}:\frac{L}{2\log_e\frac{2L}{\delta_1}}\quad\text{or as}\quad\log_e\frac{2L}{\delta_1}:\log_e\frac{2L}{\delta}.$$

Now suppose, for the sake of illustration, that $\frac{2L}{\delta}$ were=10, and $\frac{2L}{\delta_1}=1000$, then the above capacities would be as $\frac{1}{2.3\times 3}:\frac{1}{2.3\times 1}$ or as $\frac{1}{3}:1$. In other words, making the diameter of one wire 100 times as great as that of another, but keeping the length of the wires the same, the capacity of the thick wire or cylinder would be only three times that of the thin one.

Colorado Springs

July 25, 1899

Experiments with the *secondary of* 35 *turns* continued. The secondary was tuned alone and more carefully, the result being that maximum rise of pressure was obtained with *one turn of the primary*, the two cables being connected in multiple, and 78 jars on each side of the primary. When best action was obtained there were a few turns in the regulating coil in series with the primary cables, the total self-induction in the primary being estimated to be $L_p = 85{,}000$ cm. or $\frac{85}{10^6}$ henry.

The capacity in primary was:

$$\begin{cases} 16 \text{ old jars} = 0.00334 \times 16 = 0.05344 \\ 62 \text{ new } \text{,,} \ 10\% \text{ larger} = 0.0036 \times 62 = 0.2232. \end{cases}$$

Total $= \frac{0.2766}{2} = 0.1383$ mfd.

This would give period of the system:

$$T_p = \frac{2\pi}{10^3}\sqrt{0.1383 \times \frac{85}{10^6}} = \frac{21.54}{10^6} \text{ and } n = 46{,}425 \text{ per. sec.}$$

It is of interest to find what value for the inductance of the secondary will be obtained by substituting in the equation for the secondary $T_s = \frac{2\pi}{10^3}\sqrt{L_s C_s}$, the value for C_s found by measurement before recorded. Since T_s must be $= T_p$ we have

$$T_p = \frac{21.54}{10^6} = \frac{2\pi}{10^3}\sqrt{L_s \times \frac{3600}{9 \times 10^5}} \qquad C_s = 3600 \text{ cm.}$$

$$\text{or } \frac{2\pi}{10^3}\sqrt{0.1383 \times \frac{85}{10^6}} = \frac{2\pi}{10^3}\sqrt{L_s \times \frac{3600}{9 \times 10^5}} \text{ and from this:}$$

$$L_s = \frac{9 \times 10^5}{3600} \times 0.1383 \times \frac{85}{10^6} = \frac{0.1383 \times 765}{36{,}000} = \frac{0.1383 \times 85}{4000} \text{ henry or}$$

$$L_s = \frac{10^9 \times 0.1383 \times 85}{4 \times 10^3} = \frac{138{,}300 \times 85}{4} = \mathbf{2{,}939{,}000 \text{ cm.}} \text{ only!}$$

While this estimate is not correct in principle it shows, nevertheless, that the capacity measured in a state of rest is not that which enters as an element of the vibration. It was thought from this result that the secondary might have responded to the first octave and the two primary cables were joined in series, but results proved inferior.

It is possible that when the primary cables were connected in series, owing to the less satisfactory working of the spark gap, the e.m.f. on the secondary was smaller than it ought to have been if both the primary and secondary vibrated at the same rate. Furthermore, it should be borne in mind that when the cables were in series and the vibration in primary reduced to half the number per second, the induced e.m.f. in the secondary

turns could have been only about one half of that in the first experiment. If in the latter experiment with the primaries in series the true note of the secondary was struck then, assuming the capacity to be 3600 cm. or thereabouts, the inductance of the secondary as modified by the primary would have been still only $4 \times 2{,}939{,}000 = 11{,}765{,}000$ cm. It is, therefore, probable that the capacity which enters as an element of the secondary vibration is much smaller than that which is found by measurement, which is as might be expected, since the cable can not be fully charged and discharged at each alternation, as is evident from the constants.

Observations during the experiments today. When the secondary worked very well the spark was very noisy and nearly an inch thick, judging by the eye, and about 3 feet long. The sparks passed all the time over the lightning arresters as the secondary discharge was playing and, at times, for a short interval they were extremely vivid and thick. This seemed to occur chiefly when the secondary arc became louder and roaring, this indicating a better working of the arc and a higher e.m.f. for a given length of the path through the ground. The sparks on the arrester's arc, as is now established beyond any doubt, are due to the propagation to the ground through the earth wire, and it is now plain that although they take place when the oscillation is slow, they are more easily produced with a quicker oscillation. Perhaps the higher harmonics enter prominently into their formation. The secondary arc was adjusted to a length of 31″, then the sparks on the arresters were very violent. It was thought that, if the vibration was propagated through the earth wire and caused the sparks on the arresters in this way, by adding capacity to the earth wire the action on the arresters would be increased. Accordingly, a sphere of 12″ diam. *s* was connected to the wire as shown in diagram and, indeed, the play on the *arresters was intensified.* By now reducing the gap still a few inches the display on the arresters seemed to increase further. When the secondary discharge was permitted to pass continuously for about 5 minutes the fuse on the supply circuit primary gave way showing that energy was taken at a rate of about 20 H.P. This also indicated that the connection between the primary and secondary of the oscillator was fairly close and that the secondary was capable of taking up considerable energy. When two external gaps were used in series, with gaps in box, less energy was taken from the supply circuit, this indicating that the arc in primary short-circuited the secondary of W.T. to some extent.

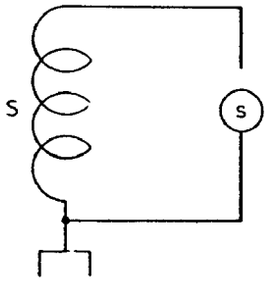

Colorado Springs

July 26, 1899

Investigating vibrations of "additional" or "extra coil": from observations before made it would appear, as I believe it has been stated already, that when the impressed electromotive force was increased, in other words, when the movement in the secondary was made greater, the free vibration of the extra coil did not readily assert itself. At least this has been noted in a number of experiments with the object of ascertaining this. A comp-

lete analogy is afforded in mechanics. In order that free vibration may take place, and readily, there must be a loose connection with the part impressing the movement. This truth is obvious. Considerations of this kind led to experimentation with an arrangement, as illustrated in the sketch below: In this the connection with the secondary *S* impressing

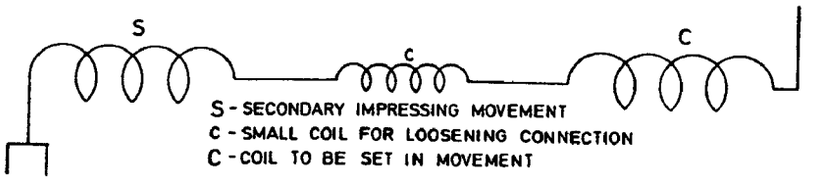

the movement was loosened, so to speak, by the insertion between it and the coil *C* to be excited another coil *c* which was generally adjusted to suit the conditions. This amounted to the same as increasing the momentum of coil *C* and rendering it more preponderating and capable of freely asserting itself. These experiences lead to a rule long recognized, that development of the oscillator must be in two directions: either in the direction of obtaining a high impressed electromotive force by transformation ratio, when the connection between the secondary and primary is *rigid*; or obtaining a high e.m.f. by an excited extra coil in loose connection not reacting inductively.

Colorado Springs

July 27, 1899

Experiments were made today with spark gaps constituted as indicated in the sketch below: The idea in this scheme was to make gaps in the box, which varied from

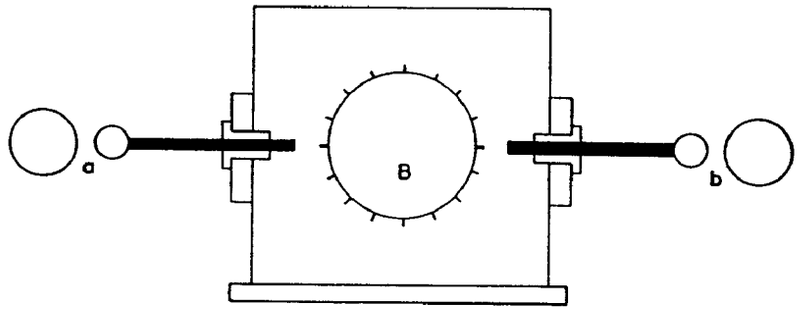

a very small to a great length owing to the movement of the break wheel *B*, very small and the gaps *a* and *b* very large, so large that the discharge could break through only when the gaps in the box were at their minimum length. Thus the loss in the box itself was greatly reduced and owing to the great velocity of separation of the electrodes, a greater suddenness of disruption was obtained. This was, of course, certain since the gaps in the box could not be bridged except for a short interval since gaps *a* and *b* took up the e.m.f. Thus the velocity of separation was the greater the smaller (in length) the arcs in the box were made. The adjustment of their length was effected by merely varying the length of gaps *a* and *b*. In these experiments spheres of various sizes were used to constitute the ad-

ditional gaps *a* and *b* and it was observed that unless the induction coil be capable of giving a large current, spheres of considerable size were not the best to employ in the usual arrangement of apparatus. The reason was that the arc was formed with difficulty, hence it had to be made shorter, but when the current broke through, the resistance of the small arc was very low and the secondary of the induction coil was short circuited too much. This may not be always true. By using additional gaps the primary was closed during a shorter interval of time and also the secondary was less short-circuited. The latter was an advantage but the former was decidedly a disadvantage because the primary circuit could not vibrate very long. The energy taken from the supply transformer or coil was, of course, smaller. All the results obtained in these experiments seem to indicate, contrary to former opinions, that a higher economy is obtainable with one gap that with a greater number. This observation was, however, made before in the New York apparatus. Finally, two gaps in series were adopted as convenient and giving greater velocity of separation. But the best results were obtained with two electrodes in the form of toothed disks rotated in opposite directions. The apparatus in this form was more troublesome to run but worked decidedly better. In this form also an improvement was practicable, which I have since adopted in some form of mercury breaks, and that was to make the number of teeth on each disk such that the total number of the makes and breaks was the product of both the numbers. In this form a small number of teeth was found sufficient for a great number of breaks and the arc could not follow from one to an adjacent tooth.

Colorado Springs

July 28, 1899

The following arrangement was found particularly efficient in applying the method of magnifying the effects of feeble disturbances by means of a condenser. Two instruments were fixed up in the manner indicated in diagram. A similar plan of connections was used before only the sensitive device *A'* was differently placed, as it was found to disadvantage. The sensitive devices *A* and *A'* were prepared as described on a previous occasion and showed, unexcited, a resistance of over 1,000,000 ohms, but when excited the resistance fell in both almost exactly to fifty ohms. Later, instead of the device *A'* another was emplo-

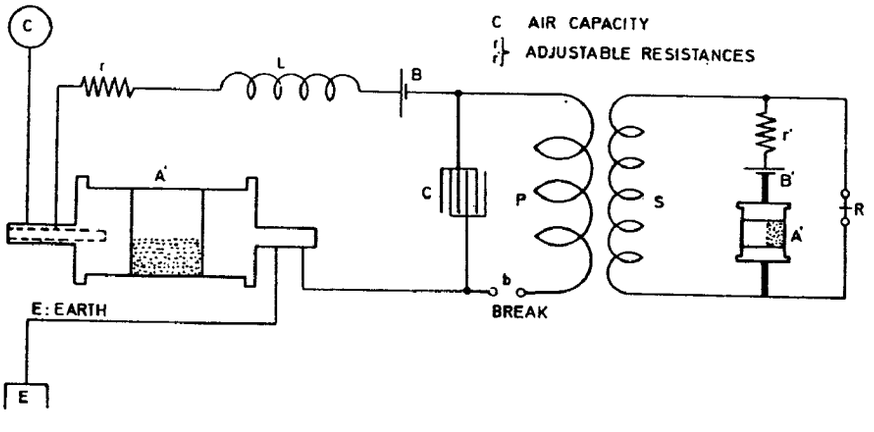

yed of a higher resistance when in the excited state and the coil $P\ S$ was replaced by one with more turns in the secondary. As finally adopted the secondary S had 160 turns in each layer and 32 layers making 5120 turns. The relay R had a resistance of 998 ohms, wire No. 36. The primary P had 50 turns of lamp cord No. 20. The self-induction coil L had 1900 turns of wire No. 20. All coils were wound on spools 4″ diam., 4″ long with wooden core 1 1/4″ in center. The condenser C and 1/2 mfd. Battery B: 8 cells 11.1 volts; Battery B': 4 cells about 5.7 volts. Speed of rotation of the devices A and A' was about 24 per minute. The break b was 72 per second. The break wheel and arbors of devices $A\ A'$ being driven by clockwork. The break whell has 180 teeth, a small very thin platinium brush bearing on it. The devices readily responded when four persons joining hands would shunt the device A'. In one instance the devices recorded effects of lightning discharges fully 500 *miles* away, judging from the periodical action of the discharges as the storm moved away.

Colorado Springs

July 29, 1899

As has been observed before, in order that the free vibration of an excited coil may predominate it is necessary to make the momentum of the coil very large relatively to the impressed vibration. With the object of bettering the conditions favorable for the free vibration, a new coil was wound on same drum 2 feet in diam. and 6 feet long. This coil had, instead of 260 turns as before, about 500 turns of cord No. 20. Its inductance was therefore nearly 4 times that of the old coil or about 40 million centimeters roughly. The coil was connected to the free end of the secondary and resonance was observed with 32 jars on each side, there being on each side two tanks in series, so that the total capacity was only 4 jars in the primary. Taking the capacity of one jar at 0.00334 mfd. the total primary capacity was $4\times0.00334=0.01336$ mfd. The primary turns were in series, so that the primary inductance was $L_p=\frac{4\times7\times10^4}{10^9}=\frac{28}{10^5}$ henry. This would give the period of the system approximately:

$$T_p=\frac{2\pi}{10^3}\sqrt{0.01336\times\frac{28}{10^5}}=\frac{2\pi}{10^5}\sqrt{0.037408}=\frac{2\pi}{10^5}\times0.1934=\frac{1.215}{10^5}$$

or $n=82{,}300$ approx.

First the Westinghouse transformer was connected to give 15,000 volts, but later it was made to give 22,500 volts. The capacity in the primary was evidently too small for the best working of the transformer and the arc schort-circuited the secondary considerably, this causing a great deal of energy to be drawn from the supply circuit. This is always the case when the primary arc does not work well. To insure the best working conditions the transformer should first be able to charge the condensers and the rate of energy delivery of the latter into the primary of the oscillator should be just a little greater than the rate of energy supply by the feeding transformer. Then the arc is loud and sharp and there is no short circuit on the secondary of the latter transformer as the currents

over the gap are of very high frequency and the low frequency current of supply — or if it be a direct current — can not follow. The system then works economically and the economy is much greater than might be supposed judging from the unavoidable losses in the arc. As the capacity was too small a *flaming* arc often formed in the box, a sure sign of bad working, the curious feature being that the arc was of a decidedly red color. This may be due to the alumina which was formed as the break wheel was of aluminium. As was expected, the use of two additional gaps improved the working of the apparatus, reducing the trouble due to the short-circuiting of the Westinghouse transformer. It was observed that when the gaps were made so large that the arc did not break through, a lamp on the supply circuit near the condensers — about 6 feet from the same — would brighten up. I am not quite sure that this was due to resonant rise in the Westinghouse transformer, for it may have been due simply to electrostatic action from the jars, as I have observed a similar effect before. When the electrostatic influence is strong the gas in the bulb is excited, the discharge passing through the same though, of course, it is not visible on account of the intense light of the filament. Particles are thrown off and against the carbon and the same is, on the one hand heated to a higher temperature while on the other hand, owing to the hotter environing medium it can not give the heat away so fast as normally — hence it brightens up. Possibly also a small part of the current of supply passes through the excited gas and slightly more energy is drawn from the mains. It was evident that, as was expected, the free vibration of the coil took place more readily than before when the coil with 260 turns was used, owing to the larger momentum as before explained. The streamers were larger than with the old coil but not quite so large as it was surmised they would be. Partially because of this fact, and partially also because not enough energy could be supplied from the Westinghouse transformer to the primary, owing to the small primary capacity, it was decided to change the connection so as to get the next lower or fundamental tone in the primary, this being in all probability the true note of the coil. The capacity in the primary was made 32 jars on each side in multiple, making the total capacity $16 \times 0.00334 = 0.05284$ mfd.

The primary vibration was now just an octave lower than before but the results proved inferior to those first obtained. There was now only one thing possible and that is, that the tone was right after all, in the first experiment, but the results were not quite satisfactory because the primary capacity was too small, thus unfavorable for the best working of the Westinghouse transformer. Accordingly, the same vibration was again secured in the primary but this time by using a capacity four times larger and reducing the inductance to one fourth, which was done by putting the two primaries in multiple. Now, indeed, the results were satisfactory, for the Westinghouse transformer could supply much more energy, practically four times as much as before. The streamers were now much stronger, extending to a distance of 6 1/2 feet from the top of the coil and they were abundant and thick. I can not understand why they should be of such a *deeply red color.* Those in New York never were such. Perhaps it is due to the smaller atmospheric pressure in this locality. Their movement, and darting about is also much quicker and more explosion like. At times a big cluster of them would form and spatter irregularly in all directions. Sometimes it apeared as if a ball would form above the coil, but this may have been only an optical effect caused by many streamers passing from various points in different directions. Many times sparks passed from the top of the coil to the point where the lower end of the coil was connected to the secondary "free" terminal. These sparks *were* 8'—9' *long.*

New condensers proposed: old ones being inadequate to stand the strain beyond 15,000 volts on two dielectrics, it would be necessary to resort to four sets when using higher pressure and this would make condenser boxes too bulky. It is now proposed to use new bottles of lead glass (Bethesda Mineral Water). These are, as nearly as can be ascertained, twice or rather more than twice thicker than the old bottles. The comparison of capacities was made today for this purpose. The new bottles were filled up to 10″ from the bottom and immersed in a tin tank. The old bottles were filled up to 9″ from the bottom and immersed in a tank. A solution was prepared from rock salt as concentrated as practicable and care was taken that the liquid was at equal height outside and inside. The readings were:

New bottle:				*Old bottle:*			
Volt	Defl.	Average:		Volt	Defl.	Average:	
180	6.5	Defl.	Volt	180	9 trifle less	Defl.	Volt
181	6.5+trifle	6.5	181	182	9 much less	9	182
179	6.5			180	9 trifle less		

Now:

$$\frac{\text{Weight of old bottle}}{\text{Weight of new bottle}} \text{ measured} = \frac{17}{21}$$

From this result the thickness of the walls was first estimated. This not affording a sure test, some bottles were broken and the average showed that new bottles were twice as thick as old ones.

$$\frac{\text{Capacity of new bottle}}{\text{Capacity of old bottle}} \text{ from measurement before made was as } \frac{65}{90}.$$

Taking for comparison specific inductive capacity of old bottle glass 1, we have $65 : 90 = 0.722$. Now, for the same glass, the capacity of a new jar would have been $0.722 \times 2 = 1.444$ times that of old, hence the new glass has 44.4% higher specific inductive capacity. It is still not certain, in view of unequal size, whether *25* or *20* or possibly only 18 will go in tank. Taking 18 to be the lowest figure for new bottles in one tank then $\frac{\text{New tank}}{\text{Old tank}}$ will be as $\frac{65}{90} \times \frac{18}{16}$ or about $\frac{8}{10}$. For *20* bottles in the new tank this ratio will be nearly $\frac{9}{10}$, for 25 jars nearly 1.11. In the *least* favorable case, the first, we shall be able to transform at least 60% more energy than with the old jars; in the best case 2.22 times as much as before. *This is good.*

Colorado Springs

July 30, 1899

Further observations in experiments with *coil* 500 *turns* before described. In these experiments two external gaps were used in addition to the gaps in the box, all being in series so that the total length of the spark gap varied from 2 1/8″ minimum to about 5″ maximum. The two outside gaps were of a fixed length, 1″ each, while the gaps in the spark box varied rythmically with the rotation of the disk. The coil was connected as shown in Diagram 1. to the free end of the secondary, the lowest points of the coil being about 6 feet from the ground. Resonance was obtained with 7 tanks of capacity on each side of the primary. As it was thought that the tanks might perceptibly differ in capacity Diagram 2. is added showing their position. The primary capacity total was from approx. 0.04336 — 0.0498 mfd., according to connections. The effects observed were in many ways interesting. The streamers produced on top of the coil were generally seven feet and sometimes eight feet long, thick and violently darting about. They did not seem so red as those

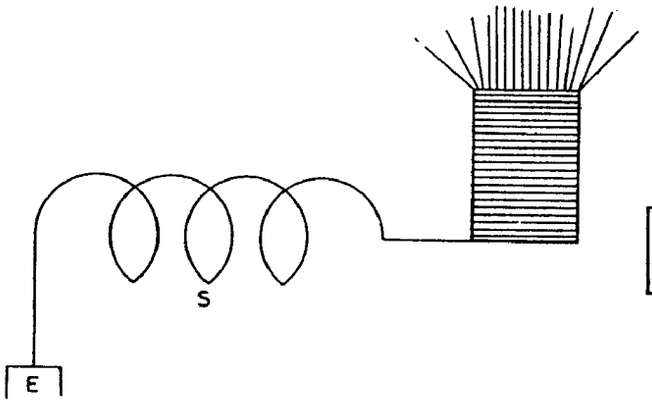

2.

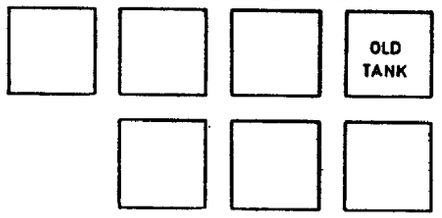

produced before under similar conditions. Very often strong brilliant sparks would pass from top to bottom of the coil. The remarkable feature of the sparks was that they would go in a curve, almost a semicircle, as if they would start out originally in another direction and then be deflected to the lower end of the coil. Certainly they could have reached the lower end by a route shorter by 40 or 50%. During the display it was observed that *no sparks* passed over the *lightning arresters*. This was an indication that only a comparatively small electromotive force per unit length of ground was set up, too small to bridge the gaps on the arresters. In order to see whether the coil would respond to the next fundamental tone the primary cables were joined in series, this making the frequency of the primary oscillations just one half. The coil did respond but the effect was, as anticipated, small, about one quarter. Presently one of the large balls, 30″ diam, with a wire of some 20 feet was connected to the top end of the coil. The self-induction coil being adjusted, very strong streamers were now obtained showing that the ball had reduced the period of the coil considerably. But the vibration of the coil with the ball was still too fast for the primary and another ball, 30″ diam. was connected in multiple with the first. By again adjusting the regulating coil good resonating action was obtained. The sparks and streamers were now stronger, the former passing sometimes to the top of the secondary, a distance of about 8 1/2 feet in a straight line. But owing to their curved path the sparks were actually

much longer. The sparks passed sometimes also to the ground from a kink in the wire connecting the top of the coil with the balls, the distance of these sparks in a straight line was 103". The sparks were much fuller, thicker and louder with the balls then without them, they were particularly strong and bright when passing from top to bottom of the coil. It was plain that much longer sparks could be obtained with *more* turns in the extra coil as then the capacity on the end could be reduced. But the experiments also showed that the amount of electrical movement in the coil was not very great owing to the small section of the wire, for when an arc was established between two large balls it ceased to pass as soon as they were separated a distance of about 1 foot. The streamers were visible and sometimes strong on the wires leading to the balls and particularly on the wire leading from the top of the coil but still the sparks failed to bridge the gap. This showed that there was not enough energy available to charge the balls to a sufficiently high potential while, of course, the passage of the sparks was rendered more difficult owing to the large radius of the curvature. The density ought to be inversely as the radius of the curvature, hence the density on the wire leading to the ball is much greater than on the ball itself, in other words, which really means the same, the ball is charged to a *lower potential* than the wire. This seems to me a somewhat novel view to take. Without much thought I would at once assume that the pressure on the ball and on the wire is the same, but it must be greater on the wire since it can leak out from the same while it does not from the ball.

The thin wire, or any projection or surface of small curvature becomes thus equivalent to a small hole or leak in a pipe or reservoir containing a fluid under pressure and it is plain that such surfaces of small curvature will greatly diminish the maximum pressure obtainable in an oscillating circuit. It is very *important*, as I have often noted, in order to insure the high efficiency of the apparatus, to make provisions for overcoming the formation of the streamers and to this subject a great deal of attention has been already devoted. In signalling to a distance, the formation of a streamer on the transmitter impairs very materially its effectiveness so that the signals sometimes do not go more than a quarter of the distance or even less just on this account. By using a body of considerable surface, which should be spherical or a cylinder with hemispherical ends better results are obtained than with a wire leading to a height alone, not so much because of the increased capacity, but generally only because there is less opportunity for a leak and the system is more economical in producing an electrical vibration in the ground. A large sphere or surface, provided it is not too large as to interfere with the vibration of the transmitting system is better than a small one for the same reasons.

I have, however, observed long ago in this connection that when the transmitting system is formed by conductors of a considerable *mass* of *metal* a greater suddenness, or a greater rate of variation per unit time is obtained and the transmitter is more effective in producing disturbances at a distance. One obvious cause of this is that usually in such a case $\frac{pL}{R}$ is larger than if the conductors are not of great mass, but as far as I have been able to judge, the chief reason is that an electromotive force, acting upon a circuit so constituted, must give rise to a much greater current, in the first moment when in any manner, as by the passage of a spark, a great and very sudden variation in the electromotive force acting in the system is produced. I make a distinction between these two effects. One raises the pressure *gradually*, the other is responsible for the great suddenness. Thus, a mass of metal of minute electrical resistance behaves towards a sudden manifestation of electrical pressure much in the same manner as a mass of metal of *great inertia* behaves

towards a sudden pressure caused by a blow. In both cases there is an increase of the pressure or force. When in the experiments, presently described, a small wire was attached to one of the balls, the other ball being left as before, the sparks passed readily between them at a distance of 6 1/2—7 feet.

Nevertheless although the sparks were very brilliant and to all appearance highly effective, *no sparks* very visible on the arresters when the discharge was playing. Evidently, the electromotive force developed per unit length of ground was small despite the power of the sparks. Upon thinking over the causes of the absence of the sparks on the arresters, it was soon recognized that in the connection as used only a comparatively slow vibration was transmitted upon the ground, the secondary effectively preventing the upper harmonics, which would have been competent to produce the sparks, from passing through the ground. The connection as first used, which is illustrated in Diagram 3. was now changed into the one shown in Diagram 4. Although the coil was now excited by a small impressed e.m.f.

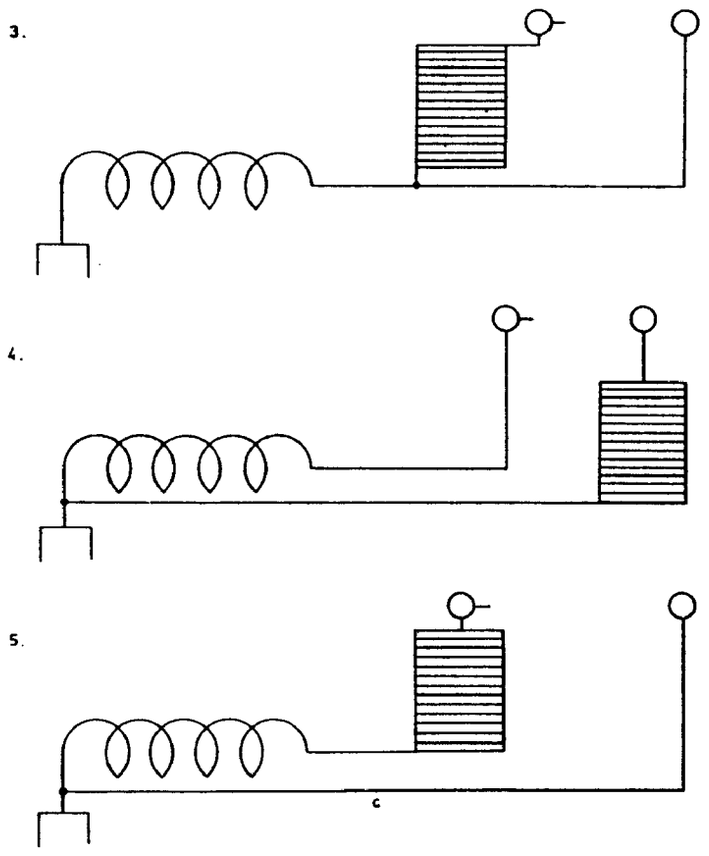

the sparks between the balls were nevertheless quite strong reaching more than 2 1/2 feet. This showed that there was also an induced e.m.f. cooperating with the impressed e.m.f. in the coil to bring about the great rise. Diagram 4. suggested the connecting of the lower end of the excited coil to any other point of the secondary thus regulating the impressed e.m.f. at will. Again, in the connection as shown in Diagram 4., there were *no sparks on* the arresters, for the reason pointed out. But when the connection illustrated in Diagram 5. was made, they appeared and became stronger when conductor *c* was constituted by a very heavy cable. This was to be expected from the above. It demonstrated the obvious fact that short waves are more effective giving higher e.m.f. per unit of length in the ground.

New induction coil for apparatus involving *method* of *magnifying* the effects by means of a *condenser* designed for the purpose of investigating: the *propagation of waves* through the ground and telegraphy.

A quick vibrating system was constituted comprising a ball of 30" diam. and a stout cable. The period of vibration of this system was found to be, by resonance method, 240,000 per second. It was excited by sparks passing through a gap of about 7 feet, or less, from a wire connected to the top end of a coil excited by the secondary as last described. It was hoped that stationary waves might be produced by this apparatus as it seemed powerful enough. It was desirable to have an induction coil the secondary system of which would vibrate with the same period if possible, and a coil was wound on spool the dimensions of which are indicated in diagram. Now the system being 240,000=n, this gives the wave length

$$\lambda = \frac{186{,}000}{240{,}000} = 0.775 \text{ miles or } \frac{\lambda}{2} = \frac{0.775}{2} \text{ miles}$$

or 2000 feet approx. The average length of one secondary turn is a little over 4.5", this will therefore require a little over 5000 turns. Now it is desired to use the 1/2 mfd. condenser on hand for the primary of the coil. The primary must have the same period, hence we have to find the inductance of primary

$$\frac{1}{n} = \frac{1}{24 \times 10^4} = \frac{2\pi}{10^3}\sqrt{L_p \times 0.5}, \quad \left(\frac{1}{480\pi}\right)^2 \times 2 = L_p = \mathbf{9000\ cm.}$$

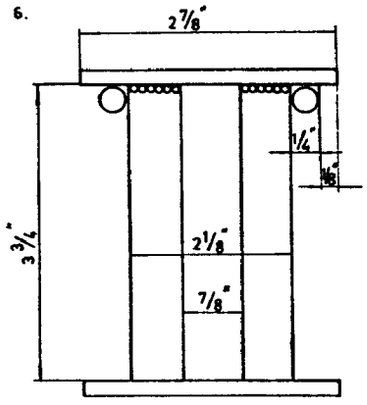

The coil actualy wound for the above object has 32 layers, 160 turns per layer in the secondary. This makes the length of the secondary very nearly=$\frac{\lambda}{2}$. The primary has 50 turns=n. Calculating inductance we have: length of spool: 3.75"=9.525 cm. Area= =28.3 sq.cm., from this $L_p = \frac{28.3 \times 2500}{9.525} \times 1.257 = L_p = \mathbf{9358\ cm.}$ Very nearly the value required.

Note: It will be better, of course, to adopt plan used in New York and design coil with a lot of copper.

Observations of resonant rise on Westinghouse transformer.

In order to observe the rise, the spark gap ordinarily used was made so large that the secondary discharge could not break through and the voltage on the primary, when throwing in the switch, was observed. Several values of primary capacity were experimented with. The diagram below indicates the position of the set of condensers on the right side looked at from the center of the building towards the entrance. On each side of the primary there were then 2 sets in series, the connections in one instance being indicated in diagram. In each old tank there were 16 jars, the capacity of each jar being 0.00334 mfd. In each new tank there were 16 jars, capacity of each jar 10% more, being 0.00367 mfd. With tanks *a* and *b* off we have, calling C_1 total capacity:

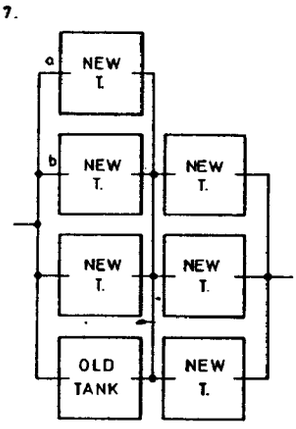

$$\frac{1}{C_1} = \frac{2}{(0.00334 + 0.00367)\,16} + \frac{2}{0.00367 \times 16 \times 3}$$

or

$$C_1 = \frac{0.00493}{0.144} = 0.03424 \text{ mfd.}$$

With this capacity on the secondary of the Westinghouse transformer the rise on the primary, as observed by Weston voltmeter, was from 102 to 122 volts. With tank *b* on each side added, the total capacity being C_2, we have:

$$\frac{1}{C_2} = \frac{2}{(0.00334 + 2 \times 0.00367)\,16} + \frac{2}{0.00367 \times 48} = \frac{1}{0.08544} + \frac{1}{0.088}$$

and from this $C_2 = 0.04336$ mfd. In this case the rise was from 102 to 126 volts. With tank *a* still added on each side to the preceding, the value C_3 of capacity in the secondary was 0.0498 mfd. and the rise in this instance was from 102 to 130 volts.

Note: In all cases when the switch was thrown in, the pressure rose higher at first and then settled down to the values recorded which are once more given in the results summed up:

Results:

Capacity in mfd. in secondary W.T.	on primary Westing. Trans.	
	Voltage initial	Voltage res.
0.03424	102	122
0.04336	102	126
0.0498	102	130

Colorado Springs

July 31, 1899

Proposed condenser from *Mantion Water* quart bottles

Comparative test with sample bottles showed as follows:

Defl. 7 bottles Maniton average three readings 20.66 } degrees on
„ two old bottles „ „ „ 19.7 } scale

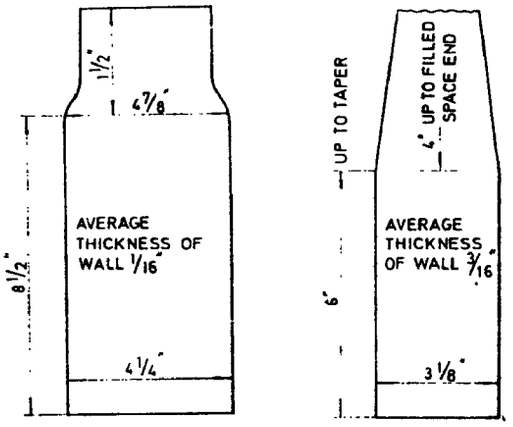

In the first case the e.m.f. was 164 volts } average values
„ „ second „ „ „ „ 167 „ } of three readings

One new bottle defl. $\frac{20.66}{7}$. One old bottle defl. $\frac{19.7}{2}$. Reduced to the same voltage one of the new bottles would have given $\frac{20.66}{7}\times\frac{167}{164}=\frac{21}{7}=3$ approx. This gives a ratio of capacity of one old bottle to new $\frac{\frac{19.7}{2}}{3}=\frac{19.7}{6}=3.30$ or approximately

$$\frac{\text{new bottle}}{\text{old bottle}}\ \text{capacity}=0.3.$$

Now we may have in one tank 39 new bottles whereas only 16 of the old bottles could go in. This will give the capacity of the new tank to that of the old as

$$\frac{39\times 0.3}{16}=\frac{11.7}{16}=0.731.$$

Now mean diam. of cylindrical part of old jar outside =4.5625". Now mean diam. of cylindrical new bottle jar outside=3.125". Allowance for upper part on old jar 1 1/2" taken of same diam. as cylindrical or nearly cylindrical part.

Similar allowance for new bottle 8/3".

These figures would give:

$$\frac{\text{Surface of old bottle}}{\text{Surface of new bottle}} = \frac{\frac{\pi}{4} \times 4.5625^2 + \pi \times 4.5625\,(8.5 + 1.5)}{\frac{\pi}{4} \times 3.125^2 + \pi \times 3.125\,(6 + 8/3)} = \frac{50.829}{29.525}.$$

Now a fair idea of the thicknesses of the walls in the two bottles may be obtained by taking their weight. Measured repeatedly and changing the bottles many times it was found that $\frac{\text{Weight of new bottle}}{\text{Weight of old bottle}}$ was $= \frac{24}{32} = \frac{3}{4}$. Taking into consideration the surfaces as calculated before this would give

$$\frac{\text{Thickness of new bottle}}{\text{Thickness of old bottle}} = \frac{50.829 \times 24}{29.525 \times 32} = \frac{152.487}{118.1} = 1.3 \text{ only!}$$

Since the thickness ratio is much greater as found in this way the determination of the thickness by weight as above is not practicable without making allowances. The glass is evidently uneven, much more so in the old bottles than in the new. In the former particularly the bottom is heavy which vitiates the result inferred from the weight of the bottles. Many bottles were broken and it was ascertained that the average thickness of new bottles was three times that of the old. It was quite certain at any rate, that the *weakest* spot on the new bottle was fully three times the thickness of the weakest spot on the old. This was the most important thing to ascertain for the bottles give way at the weakest place. Now since the capacity of the old bottle in relation to that of the new is found by measurement to be 1 : 0.3 approx. and the surfaces are as $\frac{50.829}{29.525}$ we can get an idea of the specific inductive capacity of the latter with respect to that of the former. The new bottle would have for the same thickness, that is one third of the actual, 0.9 instead of 0.3 and for the same surface it would have $\frac{50.829}{29.525} \times 0.9$ or 1.55 times the capacity of the old, both things considered so that the *specific inductive capacity* of the glass in the new bottle must be something like 55% greater than that of the glass in the old bottle.

Vichy water syphon bottles tested with the object of using them in the proposed new condensers. Dimensions: 3.8″ outside diam.
The glass is from 1/4″ to 1/4″+1/64″ thick, **very uniform.**
Height available 6 1/2″
Compared with Mantion water bottles: $\frac{\text{Mean diam. Vichy}}{\text{Mean diam. Maniton}} = \frac{3.5''}{3''}$

$$\frac{\text{Thickness of Vichy}}{\text{Thickness of Maniton}} = \frac{17}{7}. \quad \text{Now} \quad \frac{\text{Vichy surface}}{\text{Maniton surface}} = \frac{3.5\pi \times 6.5}{3.125\pi \times 8} = \frac{23}{25}$$

approx. Now the deflection — average of three readings was with same e.m.f. $\frac{\text{Deflection Vichy}}{\text{Deflec. Maniton}} = \frac{4.3}{9}$. The capacities are in this ratio and the test shows that, while the Vichy bottles would make excellent condensers, the capacity for two sets in series as

desired would be too small. The reason is that the wall is unnecessarily thick. If it were convenient to use only one set of condensers nothing better could be desired. It having been practically decided to adopt the Maniton bottles, tests were made to see how much pressure these bottles would stand safely. Accordingly 7 of these bottles with wall rather weaker than normal, hardly 1/8″ thick, were placed in a tank with the other bottles. The concentrated salt solution reached to a point about 3″ from the top. Paraffin oil was poured to nearly the top. First 7500 volts were turned on, then the tension was raised up to 15,000 volts and the bottles withstood. The e.m.f. was then raised to 22,500 volts when the bottles began to give way, three being broken after some time. The conclusion was that two sets of bottles in series would withstand quite safely at least 30,000 volts. The glass is *really excellent*. These tests were made with 144 cycles per second. A curious observation was that when one bottle gave way others followed, this being due to the violent oscillations caused or else to the concussion upon explosion.

Approximate determination of secondary modified in construction for the purpose of *overcoming the drawbacks of distributed capacity.*

As before remarked, on a number of occasions, one of the chief difficulties encountered in the operation of a large oscillator is the distributed capacity, owing to which the efficiency of the machine — in transmitting an electrical movement to the environing media — is greatly impaired. The distributed capacity becomes particularly hurtful when the turns are of large diameter or when, generally stated, there is a great difference of potential between portions of the wire not far apart. The adjacent portion of the wire acts like a condenser in which energy is stored at each alternation, and the amount of this stored energy is proportionate to the square of the difference of potential existing between the portions of the wire constituting the condenser. Now most of this movement of electricity, occasioned by this distributed capacity, takes place within the coil and does not, unless in a very small part, appear in the external circuit. Since the movement in the latter circuit is the chief object, the charging and discharging of the condensers formed by the turns of the coil is mostly lost for the purpose for which the machine is designed. In a properly designed oscillator of this kind all the movement produced in the coil should be propagated to the external circuit, but this condition can never be rigorously realized.

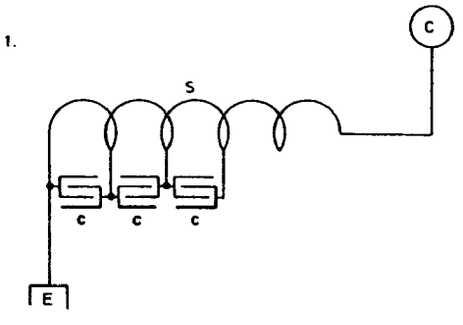

The object of the design which will be presently considered is to approach this degree of perfection as nearly as practicable. Referring to Diagram 1. illustrating a secondary as here used, the object of which is to produce the greatest possible movement of "electri-

city" from E into C and vice versa, it will be seen that the succeeding turns form small condensers c, c, c, in which a local movement takes place which is not transmitted through the entire wire. Such a coil S with considerable distributed capacity will, therefore, not be efficient in producing disturbances such as I contemplate using for a number of purposes. The distributed capacity is particularly hurtful when it is desired to produce a very high potential at C and, as this is generally the case, it is important to adopt a construction and observe working conditions such as will reduce the evil to the minimum. I have in similar instances attained the object more or less by constructing a secondary in parts connected in series through condensers, and a secondary to suit the present apparatus designed on this plan is now to be considered. In order to explain better how such condensers in series act in reducing the effect of distributed capacity, as pointed out before, reference is made to Diagram 2. which shows turns or portions of the secondary connected through condensers C_1, C_2, C_3. Suppose there would be n such parts as t joined in series and let C_1 be the total capacity of the coil or secondary S, then the capacity of the turns or portion t would be $\frac{C_1}{n}$. But now, if there be on the ends of this portion t condensers C_1 and C_2 it is plain that the distribution of electricity along the portion t will be greatly modified by the presence of these condensers and, if their capacity be very much greater than that of the wire t, almost all of the electricity will reside on the coatings of the condensers, hence there will be very little local action in the portion t, and most of the electrical movement created in the wire will be transmitted along the entire length of the same from E to C and vice versa. The machine will then act more efficiently and will be much more suitable for the transmission of energy through the terminals E and C for whatever porpose the energy be intended and in whatever manner it be used. It should be stated that in the particular form of oscillator as here illustrated, the lower turns of portions which are closer to the earth, and therefore at a lower potential, are not nearly as hurtful as the

2.

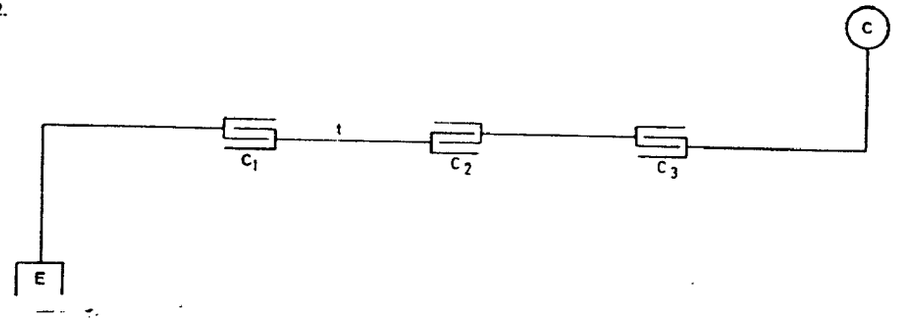

upper ones, or to put it more generally, those which are farther away from the earth connection and closer to the free terminal. The latter are, namely, at a much higher potential and there exists generally a greater difference of potential between portions of wire of the same length when the resonant rise is considerable; as the energy stored in the distributed condensers is proportionate, as before stated, to the square of the difference of the pressure between adjacent portions, it is, as a rule, of advantage to make the upper turns of smaller diameter or to put them farther apart. But in certain instances this very drawback can be turned into an advantage and by placing a few of the turns near terminal C as close together as practicable a greater electrical movement may be produced in the

lower turns or those nearer to the earth connection and the effect exerted at distance may thus be increased, though I prefer not to resort to this means as a better result is obtainable in other ways. Coming now to the consideration of the secondary to be modified in the manner proposed let Diagram 3. illustrate the arrangement as contemplated in the present instance, a condenser *C* being placed between each succeeding turn of secondary *S*. I shall

3.

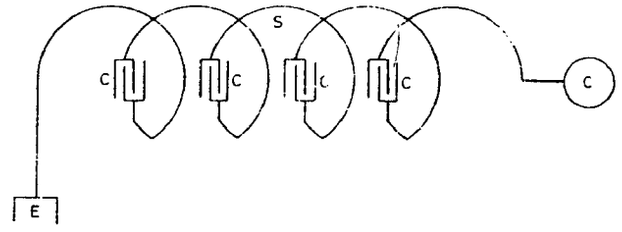

make a rough estimate on the basis of *one* primary turn and the maximum primary capacity available, which is 80 jars on each side giving a total capacity of 40 jars or $40 \times 0.0036 = 0.144$ mfd. approx., there being two sets in series. This would give $n = 50{,}000$ per second roughly. Assume we work with 30,000 volts from the Westinghouse transformer and retain, as at present, 35 turns of the secondary. In this case, considering the distance of the secondary turns and their decreasing diameter, the induced e.m.f. in the secondary will be much smaller than might be inferred from the ratio of transformation which will be 35 :1; with reference to measurements of mutual inductance made before, with a secondary wound on the same frame, it may be estimated at 18 times the primary e.m.f., that is, the induced e.m.f. in the secondary may be assumed to be $18 \times 30{,}000 = 500{,}000$ volts *nearly*. Taking the number of breaks at 1200 per second as used in some of the preceding experiments with the apparatus, and assuming the charge of condensers always effected at an average pressure, say 6/10 of 30,000 or 18,000 volts, the energy stored in the condensers per second and delivered in the primary will be $\frac{18^2 \times 10^6}{2} \times \frac{0.144}{10^6} \times$ $\times 1200$ watts or 28,000 watts, that is nearly 38 H.P. will be taken by the apparatus under these conditions. This is, of course, only an approximate estimate. We may now, on this basis, estimate the current through the Westinghouse transformer's secondary, which will be roughly estimated $\frac{750 \times 38}{30{,}000} = \frac{285}{300}$ of an ampere, or with losses etc., say *one ampere*. The performance will thus be still much below the maximum output of the transformer as it can deliver 1 amp. at 60,000 volts pressure and continuously and, I have no doubt, much more, as so far not the slightest increase of temperature has been noted after prolonged working. Assume then the current through the supply secondary to be *one ampere*, the current through the primary of the oscillator will be increased by the factor $\frac{Lp}{R}$ approx. Here $L = \frac{7}{10^5}$ and $p = 6n$, roughly $= 3 \times 10^5$. R is difficult to estimate since the primary circuit includes the arc over the spark gap. I have adopted a method for determining the resistance of the arc with fair accuracy and this will be the subject of a later consideration. The resistance of the primary cables in multiple is entirely negligible, there being in each 37 wires, No. 9. Taking 1265 feet per ohm, the resistance of about 160 feet

of such two cables would be $\frac{160}{1265 \times 74} = 0.0017$ ohm only. Not considering the resistance of the arc the factor $\frac{Lp}{R}$ would be enormous,

$$\text{being} = \frac{7 \times 10^4}{10^9} \times \frac{3 \times 10^5}{\frac{17}{10^4}} = \frac{21 \times 10^4}{17} = 12{,}353!$$

While, of course, such a condition can not be realized in practice we may approach this value more or less by doing away with the arc in the primary as, for instance, in the form of an oscillator with mercury breaks, which I have devised to work with low tension so that the arc practically does not occur. Or a condenser may be placed in shunt to the primary as has been already considered on a previous occasion. By experience I know that the initial currents in the primary reach certainly several thousand amperes showing by this that the resistance of the arc can not be great. For the present I shall assume that it is 18 ohms so that if the condensers are, as supposed above, charged to 18,000 volts during ordinary performance, the initial current would be about 1000 amperes in the primary decreasing logarithmically. With this maximum in the primary, the loss in this circuit will not be unduly great. Now the secondary condensers should be of a capacity to carry the secondary current at the frequency used. Calling now e the e.m.f. induced in the secondary per turn, c the capacity of one of the secondary condensers as before, we will have the current through the turn $i = e\,c\,\omega$, ω being here 3×10^5 as before assumed. Now the e.m.f., taking it on the average, will be per turn of secondary $e = \frac{500{,}000}{35} = 15{,}000$ volts approximately, and on the preceding assumption of 1000 amp. maximum in the primary turn, the largest value we may assign to i would be $i = \frac{1000}{35} = 30$ amperes, roughly, and this would give

$$c = \frac{30}{15000 \times 3 \times 10^5} = \frac{30}{45 \times 10^7} \text{ farad or } \frac{3 \times 9 \times 10^{11}}{45 \times 10^7} = \frac{30{,}000}{5} = 6000 \text{ cm.}$$

We would thus require a capacity of about 8000 cm. in each of the condensers to carry the secondary current in the oscillator. But this is really too high an estimate and it is quite certain that a smaller capacity would do. Since a jar has a capacity of $0.0036 \times \times 9 \times 10^5 = 3240$ cm., two jars would be amply sufficient and possibly also one jar between each turn of the secondary. Taking it on this basis, the total capacity of the secondary would be $\frac{2 \times 3240}{35} = 185$ cm. approx., while the measured capacity was 3600 cm. The effects of distributed capacity would thus be reduced by the use of secondary condensers to about 5%. These secondary condensers will, of course, have to be so constructed as to withstand not so much the strain on the dielectric — for this they will support easily — but the sparking over the condenser coating. Let the spark length on the secondary be, say, 12 feet and suppose we had 36 secondary condensers, then on the average they ought to be able to prevent sparking when the pressure on each is such as to cause a spark of a length of $\frac{12 \times 12}{36} = 4''$. There will not be much difficulty encountered in this respect,

if the condensers are properly designed. The virtue of condensers used in such a manner is well established and I think it resides in the fact that when they are used the charge does not distribute itself along the wire, but accumulates on the coatings of the condensers thus reducing the effect of mutual electrostatic induction of the adjacent or near positions of the wire, to a large extent, and reducing in this manner the amount of energy stored in the coil itself. It now remains to consider the capacity on the end of the secondary which is "free". This capacity ought to be so large that it can take up all the current of the secondary at the frequency used. Or, to put it otherwise, it should be able to store all the energy the secondary is able to give. There is, however, another consideration which must be made in case the secondary is capable of free vibration, and that is that the capacity on the end should be so determined as to secure resonance with the primary. As regards this capacity there are then three relations to be borne in mind when deciding upon this and they are:

$i = Ec_s\omega \quad c_s = \frac{i}{E\omega}$ . . . . . 1)

Watts in secondary $W = \frac{c_s E^2 \omega}{2}$ or $c_s = \frac{2W}{E^2\omega}$ . . 2)

$L_p C_p = c_s L_s$ or $c_s = \frac{L_p C_p}{L_s}$ . . . . . 3)

E secondary e.m.f.
ω ,, frequency
L_p inductance } in primary
C_p capacity }
L_s inductance secondary

This to follow up.

Colorado Springs Notes

August 1—31, 1899

For want of time following items, partly worked out, have been omitted:

Aug. 4. General observations of electrical phenomena here with particular reference to stationary waves.

Aug. 6. Experiments with stationary waves on water pipe. *Note:* Distance from groundplate to End of main *exactly* 550 *feet*.

Aug. 31. Patent matter worked on:

1) Production of stationary waves and use of same in general
2) Distribution of universal time observatories etc.
3) Indication of direction for ships etc.

MUZEJ NIKOLE TESLE

Colorado Springs Notes:
Aug. 1 — 31 1899.
For want of time following items, partly worked out, have been omitted:

Aug. 4. General observations of electrical phenomena here with particular reference to stationary waves.

Aug. 6. Experiments with stationary waves on waterpipe. Note: Distance from groundplate to end of main exactly 550 feet [redacted] worked on:

1) Production of stationary waves and use of same in general
2) Distribution of universal time observatories etc.
3) Indication of direction — for ships etc.

Colorado Springs

Aug. 1, 1899

Various observations. In the course of these experiments and particularly during the past month a number of highly interesting observations have been made which will be presently dwelt upon.

First of all one is struck by noting the extraordinary purity of the atmosphere which is best evident from the clearness and sharpness of outlines of objects at great distances. In low regions, especialy where moisture is in excess, the outlines of objects become more or less indistinct and confuse at distances of but a very few miles while here at many times such distances the outlines appear perfectly clear and sharp. When a train is moving up Pike's Peak it is very often quite easy to distinguish not only the engine and cars but even the windows and wheels of the same perfectly, although the distance from the experimental station is from 10—12 miles. Quite frequently also the house on top of Pike's Peak can be clearly seen with the naked eye. The ranges of mountains 100—150 miles away or more can be perceived perfectly. A range at a distance of about 50 miles can be seen plainly even at night when the sky is clear. It is wonderful how at times immense objects appear dwarfed, while small objects as horses, carriages or men assume unnatural gigantic dimensions.

Pike's Peak Range appears at times so close and so ridiculously small, that anyone not knowing the reality would be apt to fire a modern rifle at some object on the mountainside believing it to be within shot. Nor is this statement exaggerated much as it seems so. At other times again Pike's Peak appears far remote and its height much beyond what would seem natural. The arc lamps at the foot of the mountains five to seven miles away or more shine with a brilliancy as though they were only as many blocks from the observer and under certain conditions an ordinary incandescent lamp of 16 c.p. seems to give out as much light, judging from a distance, as ordinarily an arc light does. It appears also as big as the latter. This penetration of the light is due to the wonderful purity and extreme dryness of the atmosphere.

The moonlight is of a power baffling description. I have been told that the best photographs of the mountains have been obtained by moonlight and I do not doubt it. Exposures of half an hour ought to give clear photographs revealing all details although the exposures are as I am told from 1 1/2 to 2 hours. I have nowhere seen such a light. Italy is famous for moonlight nights but in my estimation that country can not even compare with Colorado. I think this extraordinary brightness of the moonlight is chiefly due to the absence of moisture, for there are many places, as in Central America, which are located much higher and yet the moonlight, I am told, is not so intense and I can see no other reason for this except the presence of more vapour in those places. It is not a mere saying, but literally true, that during full moon in these parts it is "as light as day". Objects can be clearly perceived at distances of many miles and one can easily recognize a friend or familiar object at a distance of something like a quarter mile if not more. The shadows cast by the moonlight are extraordinarily black and sharp. They suggest the Crookes' shadows noted in vacuum bulbs and on this account the moonlight is particularly interesting and suggesting thought and stimulating the imaginative powers. The shadows of the clouds on the plains and mountains are quite dark and clearly defined and it is interesting to behold the patches as they speed over the ground. When the moon is absent and the nights clear the number of stars visible and their brilliancy is amazing and the sky presents

a truly wonderful sight. The twinkling of the stars is very pronounced, they seem to move in orbits of as much as ten or fifteen of their own diameters across. At times one observes a star burst out into great brilliancy. This is probably due to the removal of an invisible cloud or of a layer of air at a great altitude containing some kind of particles which cut off a large portion of the light. One sees shooting stars quite frequently, also colored rings around the moon, generally in the advanced hours of the night, at times when the air is slightly misty. As this happens generally during very cold nights I believe the colored rings are due to minute crystals of ice.

Owing to the extraordinary purity and dryness of the atmosphere the sounds penetrate to astonishing distances. This is particularly true of *high notes* as nearly as I can judge. Certain conditions, entirely exceptional, concur at times and produce effects of this kind which are startling. A bell will ring in the city several miles away, and it would seem as though the bell would be before the very door of the laboratory. During certain nights when sleepless I have been astonished to hear the talk of people in the streets and sounds of this kind in a large radius around the dwelling not to speak of the grinding of the wheels, the rolling of wagons, the puffing of the engines etc. which are perceptible in such a case, and with painful loundness though coming from distances increadibly great. These phenomena are so striking that they can not be satisfactorily explained by any plausible hypothesis and I am led to believe that possibly the strong electrification of the air, which is often noted, and to an extraordinary degree, may be more or less responsible for their occurence.

The dryness of the atmosphere, which is still further enhanced by the low pressure, is such that wood or other material is made what is called kiln-dry inside of a few hours, and is rendered an insulator far more perfect than wood is ordinarily. The nails on the hands and toes dry out to such an extent that they break off very easily, in fact one has to be careful in trimming them. I found the claws of a cat as brittle as glass. The skin on the hands dries out and cracks up and is apt to form deep sores particularly if, as often in experimentation, one has to wash the hands frequently. The hair gets perceptibly thinner owing to the drying out. Colorado is not a good country for hair. This may be of interest to people with a tendency towards baldness. People even very sick do not cough and expectorate evidently owing to the dryness of the atmosphere. One does not perspire as the sweat is immediately evaporated. It is curious how quick the body gets dry when a bath is taken. Still more this is noted when the body is rubbed with alcohol. These observations are not often made, unfortunately, as the opportunities for comfort are not such as one might desire.

In many respects one is disappointed with the aspect of the country itself although it is far famed. I think it very uninteresting and even the celebrated Pike's Peak is insignificant. Most of the country is barren, practically a desert, with little vegetable and animal life in places. Prairie dogs are about the only animals one can see on the plains. One rarely sees a bird and the country must be a tedious one to live in for any one with tastes for hunting and fishing. But as much as the country is devoid of interest and beauty, so much and far more, is the sky beautiful. The sights one sees here in the heavens are such that no pen can ever describe. The cloud formations are the most marvelous sights that one can see anywhere. The iridescent colors are to my judgement incomparably more vivid and intense than in the Alps. Every possible shade of color may be seen the red and white preponderating. The phenomena accompanying the sunrise and sunset are often such

that one is at the point of not believing his own eyes. At times large portions of the sky assume a deep red almost blood-red color, so intense that superstitious people might will be frightened when first seeing it as by some other altogether unusual manifestation in the heavens. Sometimes, particularly in the forenoon, huge masses of what appears to be snow are seen floating in the air and they are so real and tangible, so sharply defined, that it is difficult to believe them to be composed merely of vapor. The purity and dryness of the atmosphere explains to a degree the sharpness of definition of the boundaries of these formations of mist, but it is quite possible that some other causes as electrification of the particles cooperate in rendering them so compact as they appear to be. Of course, the purer the air, the greater is the difference between the region filled by cloud and that surrounding it as regards the passage of light rays, and the boundaries of the cloud appear sharper and quasi-solid much on this account. The whiteness and purity of these masses of cloud is such that one has the idea that nothing, not even an angel, could come in contact with it without soiling it. Very often when the sun is setting, a considerable portion of the sky above the mountain range presents the sight of an immense furnace with white-hot molten metal. It is absolutely impossible to look at the melting away clouds without being blinded, so vivid is the light. On a few occasions I have seen the mountains covered with a white silvery veil most beautiful to see, an unusual occurence and caused by a fine mistlike rain in the mountain region. The intensity of the light on these occasions was really wonderful. What was remarked before of the shadows of the moon is, and to a much greater degree, true of those thrown by the sun. They are inkblack and sharply outlined. The shadows on the plain and mountains thrown by the clouds appear like big patches of inking blackness hurrying along the ground. Particularly interesting are shadows thrown across the sky resembling often large dark streamers, or those which under certain conditions are formed and are visible like dark columns extended from the ground to the sky. These shadows seem to be best visible in the middle of the afternoon or a little later when the sun in fairly down and on days when it has been extremely hot and sultry in the forenoon and the clouds are formed quickly and are of greater density than usual.

A very curious phenomenon is the rapid formation and disappearance of the clouds. One can watch them continuously forming and disappearing rapidly and one merely needs to turn away for a few moments when he may see that the aspect has changed, new clouds having replaced those he saw before. On many occasions, just after sunset, I have seen seemingly dense, white clouds appear as by enchantment below the mountain peaks. So quickly did these clouds or mist form that their appearance was much like the projection of an image on the screen. The wonderful beauty of the cloud formations as seen here is, however, enhanced not only by the incredible sharpness of the outlines and vividness of color but also by their accidental arrangement and forms they assume. Not unfrequently one can see clouds resembling all kinds of known objects, this adding much to the enjoyment one finds in observing them. In fact I have scarcely ever watched the clouds here without noting among the shapes resembling some or other familiar object. It is probably owing to the peculiar character of the clouds here that phenomena of this kind may be almost daily observed whereas in other parts they are very rare. Very often I have seen low on the horizon what appeared to be immense fields of ice as a sea frozen in the midst of a storm but so wonderfully real that it would be impossible to give an idea of it by a description however vivid. At other times there appeared ranges of mountains which one could not distinguish from the actual, on the horizon or the wide ocean, with its deep green, or dark blue, or black waters stretching out as far as the eye could reach.

Nor was this an ordinary resemblance which one could banish from the mind by a small effort of will, but was rather of nature of those visions or hallucinations which make it necessary for one to pinch himself to fully realize that his senses have been deceiving him. More than once I have seen this ocean dotted with green islands or populated with glittering icebergs or sailing vessels or even steamers not less real to the eye because they were formations of mere mist or cloud.

Almost every evening, after sunset, and when the sky is clear, the horizon towards the plains becomes peculiarly tinged with colors of surprising vividness, all the colors of the rainbow being represented, the strata higher above the horizon beginning with red and passing through all nuances, the lowest strata finishing with blue, violet and black. As it grows darker the black line rises continuously above the horizon. This phenomenon illustrates in an interesting manner how the sun's rays are deviating from the straight course and are being continuously deflected downwards to the more dense strata of the atmosphere. Among the seemingly infinite variety of clouds there are four typical forms regularly observable which are of surpassing beauty. They are:

1) *Red clouds*, which are seen very frequently in the early morning hours at sunrise and, though less frequently, in the evening when owing to a greater percentage of moisture the clouds are denser, more like rain clouds. They reach an intensity of color equal to that of a ruby of the "pigeonblood" species. They are particularly beautiful when appearing in detached masses.

2) *White clouds* which are seen chiefly in the forenoon or in the early part of the afternoon though not so often. The whiteness and purity of these clouds and their sharpness of contours which has been already referred to makes them a unique sight. It would be difficult to offer to the eye a greater treat than it finds in the contemplation of these masses of mist, generally floating in big detached lumps in the blue sky. I note that these clouds are seen generally after a short rain when the wind, springing up suddenly, clears the sky, leaving only a few large and separate masses of vapor.

3) *Clouds* presenting the appearance of immense lumps of gold. These are iridescent clouds witnessed chiefly at sunset. They present a striking sight, particularly when they are small and detached from each other and the sun's rays can penetrate them more freely thus heightening at times to a degree really incredible the intensity of the iridescence. Their color is absolutely like that of gold and the similarity is rendered complete by the forms they assume which are those of gold nuggets found in nature, but generally they pass from pure yellow to a reddish yellow of the kind peculiar to gold found in certain countries or generally gold containing a small percentage of copper. A feature of these most beautiful clouds is that they persist in their iridescence but a very short while. Usually they last only from five to ten minutes and often even not so long, although the yellow color may generally persist on the edges for as much as half an hour, more so in the morning than in the evening hours.

4) Clouds resembling lumps of incandescent metal. These clouds are most wonderful to behold and the intensity of the light emitted by them is such that it baffles description. I have never before seen anything of this kind in the Alps or elsewhere. One can see all nuances of color exhibited by heated metal or coal, from dull red to blinding white incandescence such as is seen in silver furnaces known in German as the "Silberblick". But most generally these clouds present the appearance of lumps of glowing coal surpassing, if anything, the latter in brilliancy and intensity of color and the sense of sight is still more

completely deceived by the gradual burning away of the glowing mass offering to the eye the spectacle of a mass of charcoal which is being quickly consumed in a furnace with a very strong draught. How can the intensity of the light emitted by these clouds be explained? They throw out at times a light which to the eye is as intense and blinding as that of the sun's disk itself, yet they present a surface many hundred times greater than that of the sun's disk. Is it not possible that in this intense iridescence, not to say incandescence, we see not only a phenomenon of reflection and refraction of the rays of light but also, at least partially, of conversion of dark radiations of the sun into such which cause in our eye the sensation of light? Or, if not exactly this, might it not be possible that the dark rays being absorbed in the mist in some way or other reduce the absorption of the light rays and render the process of reflection and refraction of the latter more economical? I can not recollect any experiments carried on with the object of ascertaining the influence of temperature on these processes. A hot glass lens ought to be more efficient in letting the light rays through than a cold one. But, reasoning in the same strain, it would appear that reflection from a surface ought to be impaired by heating the latter. Furthermore I should think that it can not be indifferent for these two processes at what temperature the body reflecting or refracting the rays is maintained, at least one must infer so from the accepted theories according to which the dark and luminous radiations merely differ in their wave lengths but are otherwise identical. The most plausible view on the above phenomenon still seems to me that first expressed, according to which invisible radiations are partially converted into luminous rays or radiations thus supplying the additional light which it is difficult to account for otherwise. It is not impossible that a phenomenon similar to fluorescence might be produced by heat rays falling upon the particles of mist thus heightening the light effect or there may be caused, by the dark rays, a decomposition or falling apart of the vapor particles (as Tyndall demonstrated) — and this process may be accompanied by some evolution of light. Certainly the particles capable of producing such vivid iridescence must be very minute, much smaller than ordinary particles composing the clouds and their form can not be but a passing one as is evidenced by the rapid disappearance and reappearance of clouds already mentioned. These four types of cloud, which can be observed here almost *daily* and which in purity, brilliancy and depth of color and sharpness of outlines surpass by far such clouds noted in other parts, constitute the chief attractions of the incomparable beauty of this sky. These phenomena would be more appreciated if they were more rare, but the fact is that for most people they loose a large portion of their charm by forcing themselves upon the eye too frequently. We are used to speak of "Sunny Italy" but compared with Colorado that country might be almost likened to foggy England. They tell me that there are scarcely 10—20 days in a year, on the average, when the sun does not shine and even this estimate is rather exaggerated. Since my arrival here about the middle of May, with the exception of a few passing thunderstorms, the days were clear with just enough clouds in the sky to break the monotony of the blue.

No wonder that consumptives and generally people in feeble health are getting on here so well. The purity of the air, the altitude, which compels exercise of the lungs to be continuously and unconsciously practised owing to the lesser density of the air and smaller percentage of oxygen (about 20% less than at sea level), the dryness of the air which is altogether exceptional, all these causes may cooperate more or less efficiently in improving the condition of the patients, but I believe that the chief cause of betterment is to be found in the profuse and cheering sunlight. Whether the light produces a specific germicidal effect is a matter of conjecture as yet, as far as I know. I learned here that experiments

had been carried on to ascertain whether there are any Roentgen rays emitted by the sun or prcduced in other ways by the sun's rays but the results were negative. Similar experiments, I am told, were conducted for a long period on Pike's Peak but no action on a photographic film, which was the means of these investigations, was noted, at least not such as might be attributed to Roentgen rays. I think though that rays of this kind must be ultimately demonstrated to exist in the radiations of the Sun as well as of most other sources of intense light and heat. It is possible that such rays are, in a measure, active in arresting the process of decay caused by the bacillus. I conclude that, since the bacillus of tuberculosis is an organism developed under *exclusion* of light, such rays of short wave length, made by any means to penetrate the tissues and reach the affected parts of the same, must needs be inimical to the development of the microbes not used to such rays. Though this conclusion might not prove true, still there is a good foundation for it, and I am hopeful that with the apparatus I am now perfecting for other purposes as well as this, it will be possible to produce Roentgen rays of great intensity which will furnish the long sought for means of successfully combating these dreaded deseases of the internal organs. Whatever be the cause of the marvelous improvement noted in patients it is a fact that most people afflicted with these ailments, and often pronounced beyond medical help, recover and get soon seemingly quite well here. A short while ago I was induced by a friend to go to a dinner he gave in my honor where I met a number of more or less interesting people. The conversation during the entire evening was an animated one and the entertainment highly enjoyable. Everybody seemed to be in high spirits and excellent health. But my pleasure was spoiled in the end when I learned before parting, with painful astonishment, from a friend who is a very skilled and competent physician, that of the two dozen people I met scarcely one individual had more then one whole lung left, the majority of them being in fact "much farther gone" as he said, so that they would infallibly die in a very short time if they would leave here. I soon learned that there were thousands of consumptives in the place, about the only healthful people being coachman, and I concluded that while this climate is certainly in a wonderful degree healthful and invigorating, only two kinds of people should come here: Those *who have* the consumption and those *who want to get it.* That the sun's light and heat exercise a highly beneficial effect on these sick people may be inferred with certainty from its effect upon people who are quite well. It is curious to note how agreeable and indispensable the sunshine becomes here after a while. Even healthful people become sad and unstrung when the sky gets clouded and dark. I have however, observed such an effect before but it is quite natural that it should be so here where the sun shines constantly day after day. I do not suppose that in London or even in New York, where the weather is comparatively fair much attention is paid as to whether the sky is clear or clouded, but here every laborer laments when the sun does not shine. Despite the beautiful spectacle offered by the parting sun one feels sad when its disk sinks behind the mountains and one is thoroughly glad to see it rise again. These feelings are experienced, of course, everywhere, but somehow they are of greater intensity here than elsewhere. Considering the elevation, the small density and exceptional purity and extreme dryness of the air, the scantiness of the vegetation and particularly the scarcity of protecting timber, the vastness of the practically desert prairies over which the wind can sweep unimpeded, the geographical position of the country and other causes and conditions determining the character of the climate it is not difficult to guess the general nature of the weather in Colorado. Nevertheless it is a surprise to learn that the climate is mild in an extraordinary degree, the storms coming but seldom

and lasting one or two days at the most, the snow remaining scarcely over more than thirty--six hours on the ground.

In fact Colorado people seem to be particularly proud of their winter climate. I expressed to a friend my delight at the wonderfully fine and bracing weather we had so far, but he astonished me by saying: "This is not a fair opportunity to judge. To form a correct opinion of the qualities of this climate you must come here in wintertime". I could scarcely conceive how it could be possibly finer and more agreeable then so far experienced. I expect to get data as to the pressure, temperature, moisture etc. The pressure at present is about 24″ average, considerably less than at sea level but, owing to the bracing air, one does not feel much the effect of the rarefaction of the atmosphere except when performing some physical work, when one gets quickly out of breath. The humidity must be extremely small otherwise one would feel both the heat and cold much more. The mean temperature presently at noon is about 80° in the shade but in sunshine it is different. I believe the good people here are more or less inclined to find the days in summer cooler than they are in reality, and they seem also to prefer to be silent about cold snaps which occasionally come in wintertime. But from some indiscreet persons I have learned that the thermometer was at times very near 40° below zero and in the plain sunshine of summer it is apt to be "way up" as my informants told me. I feel sure it can not be far from 150°. The power of the sun's rays on certain days when the atmosphere is particularly calm, dry and pure, is such as to positively surpass belief. The waterpipe passing for some distance across the field to the laboratory being partly uncovered the heat was as a rule so fierce that the water came out boiling and steaming like in a Russian bath. It would be impossible to hold the hand in it, even for a few moments, for it would at once cause a severe pain. One day, about five o'clock in the afternoon, the rays fell through the open door on a high tension transformer which I had brought from New York and, before anybody could notice it, melted out all the insulation, rendering the apparatus completely useless. I observed the danger a few days before and warned the assistants to watch the machine, but unfortunately on that day the usual precautions were omitted. Several barrels filled with concentrated salt solution were placed outside of the laboratory, and the pressure in them rose every day as in a steam boiler, and a few of them were damaged! When the cock was opened the water squirted out to a great distance across the field and it was thought advisable in order to avoid bursting and damage, to leave a small opening in the barrels for the escape of the steam. The most astonishing experience of this kind was, however, the heating of a wooden ball covered with tinfoil, which was supported above the roof, to a point it was deemed unsafe to expose it to the sun's rays. It emitted a dense vapor actually like smoke, and the tinfoil crumbled away! This excessive heating seemed to take place suddenly. I believe that it occurs when, owing to the removal of a layer of impure air, a particularly clear path is opened for the sun's rays, which then pass through the pure medium without much loss. Often I have felt a scorching pain on the cheek or neck to come on *suddenly* when working in sunshine, and I can only explain it with the above assumption. But the most interesting of all are the electrical observations which will be described presently.

Colorado Springs

Aug. 2, 1899

New induction coil for portable apparatus, designed for investigation outside contained in box. *Condenser method.* Particulars: Secondary wound with wire No. 30, 32 layers plus one layer with thick cord. Turns 180 per layer. Total number of turns 5670. Least turn $1.25\times\pi=?$ longest turn $3.5\pi=?$ average $2.125\times\pi=6.675''$ or 17 *cm.* approx. for average length of one turn. Resistance of secondary 375 ohm. The dimensions of spool are as in sketch below.

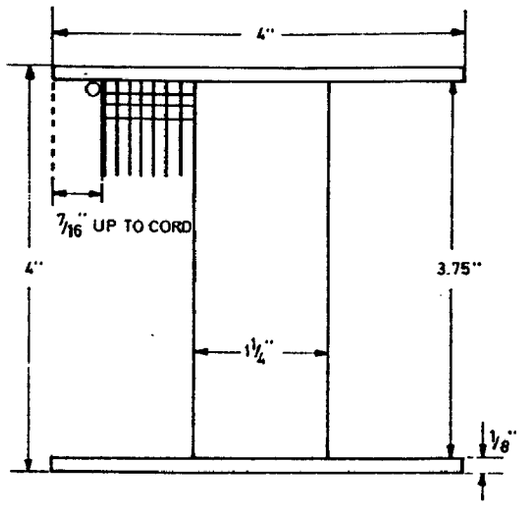

The available length of coil 4" — 1/4 for two fibre flanges $l=3.75''$. The primary 50 turns as a coil before wound cord No. 20, Res=0.51 ohm. The length of average turn 10.6"=26.93 cm. Total length of wire in primary 530"==1346.2 cm.

In connection with this there is to be used: a condenser to be adjusted, a charging coil experimental like wire to be adjusted to the condenser and break, a Thomas clockwork with wheel 180 teeth for break, the arbor carrying also a sensitive device so that same clockwork will serve for break and first sensitive device. A second sensitive device in secondary of oscillating transformer driven by another Thomas clockwork. This latter need not be used when self-exciting process with condenser employed. Relay brought from New York 996 ohms or thereabouts. *This final.*

Mantion bottles to be used compared with *Champagne bottles.* The latter would seem to be better suited. The tests showed as follows: Comparing 2 bottles of each kind filled as far as practicable and placed in tank with rock salt solution as in previous instances charged to *same* potential 356 *volts* approximately, the average of four readings was for: Maniton bottles 13° defl. for Champagne bottles 9.5° defl.

This gives: $\dfrac{\text{Capacity of Maniton}}{\text{Capacity of Champagne}}=\dfrac{130}{95}$

How by taking weight: $\dfrac{\text{Weight of Maniton}}{\text{Weight of Champagne}}=\dfrac{23}{36}$

These figures give a slight advantage to glass in Champagne bottle, but the latter was larger than the Maniton about 1/4" outside and contained a trifle *over* one *quart.* Furthermore, there is the usual hollow bottom (to deceive customers) and this increased the surface in the Champagne bottle. In view of this the conclusion is that the glass is not greatly different in respect to dielectric qualities in both the bottles. The Champagne bottle would unquestionably break down first because of hollow bottom, as it would be difficult to exclude the air. It would also be difficult to get the required number of such bottles in this quiet town. This compels use of *Maniton.*

Consider the following case: A condenser is connected in series with another to a generator of high tension. A circuit making and breaking device is arranged in a bridge between the condensers as illustrated in diagram. When the circuit is closed through this

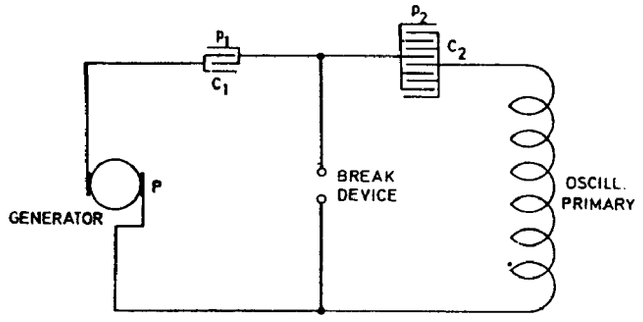

device the condenser included in the circuit of the generator is charged to the full potential, but when the device breaks the current path, the charge is distributed over the two condensers. Such an arrangement with two condensers has certain valuable features in connection with oscillators, particularly when they are worked from a generator of very high and constant e.m.f. The condenser included in the generator circuit prevents short circuiting of the generator in case of defective action of the make and break device and the amount of energy drawn from the source is limited to a quantity which can be exactly determined beforehand. The arrangement is sometimes of value also with alternate current generators. The condenser C_1 then performs the function of a reducing valve on a reservoir such as is used in connection with a distribution system of some gas under great pressure. By means of such an arrangement an oscillator may be worked safely from a generator of any e.m.f. and at any desired pressure. In the case as illustrated the total capacity is

$$C = \frac{C_1 C_2}{C_1 + C_2}$$

and the energy stored by one charge in the system is

$$\frac{1}{2} P^2 \frac{C_1 C_2}{C_1 + C_2}$$

Now $$P = p_1 + p_2 \qquad \ldots\ 1)$$

and $$\frac{1}{2} p_1^2 C_1 + \frac{1}{2} p_2^2 C_2 = \frac{1}{2} P^2 \frac{C_1 C_2}{C_1 + C_2}$$

and from this $$p_1 C_1 = p_2 C_2 \qquad \ldots\ 2)$$

and $$p_1 = \frac{PC_2}{C_1 + C_2}; \qquad p_2 = \frac{PC_1}{C_1 + C_2} \qquad \ldots\ 3)$$

Suppose the process be such that C_1 first be charged to full pressure P and then disconnected and charge distributed over the two condensers, C_2 being the condenser belonging to the oscillator, whereas C_1 is the regulating condenser, then since

$$\frac{1}{2} P^2 C_1 = \frac{1}{2} p_1^2 C_1 + \frac{1}{2} p_2^2 C_2 \quad C_1 (P^2 - p_1^2) = C_2 p_2^2 \quad \text{and} \quad p_2^2 = \frac{C_1}{C_2} (P^2 - p_1^2)$$

is the pressure on condenser C_2 which it was the object to find.

Colorado Springs

Aug. 3, 1899

Modifications of apparatus, involving *condenser method* of magnifying effects, experimented with "*Self-exciting*" process.

In this special modification of condenser method, an effect produced upon the sensitive device is rendered accumulative not only as in some other modifications, but more so by a process comparable to the self-excitation of a dynamo. Thus much feebler initial effects are made sufficient to cause the sensitive device to break down and the receiver to be operated. This process accomplished in this manner will certainly have many valuable uses. A few arrangements which have been experimented with are recorded below. They are self-explanatory. The lettering makes Diagram 1. fully clear with reference to previous

1.

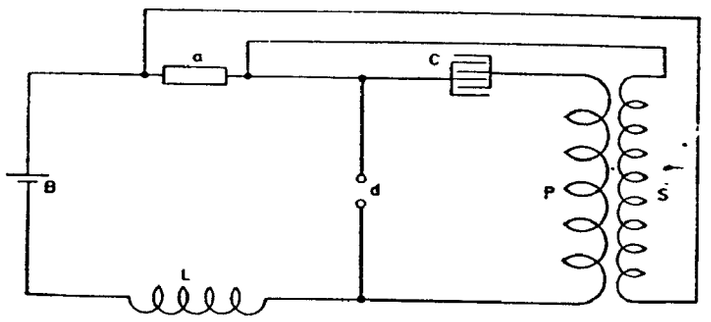

diagrams of this kind. *a* is the sensitive device, *d* a make and break device, *C* a condenser *P* the primary and *S* the secondary of oscillatory transformer, *B* a battery and *L* an inductance suitably adjusted. The sensitive relay usually employed may be in the circuit containing battery *B*, inductance *L*, and the devices *d* and *a*; or, it may be in the circuit of secondary *S* and device *a* in which case this circuit will contain an additional battery. There will also be in the circuits the usual adjustable resistances to adjust the instruments and insure the best action. From the diagram it will be easily seen that when the device *a* is at first very slightly affected, the condenser is charged more and the secondary currents become more strongly excited in their turn, the device and so on, until the device breaks down and diminishes sufficiently in resistance so that the relay is operated. This method has been

2.

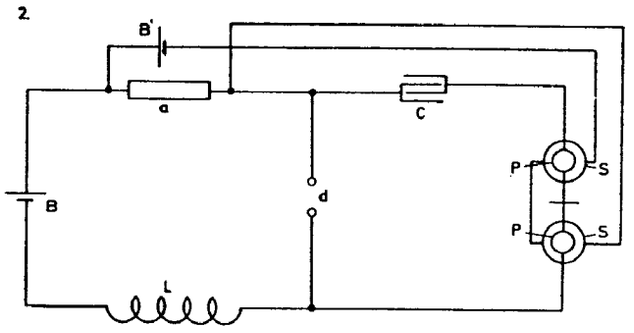

found excellent and will have besides telegraphy many valuable uses since by its means effects, too feeble to be recorded in other ways, may be rendered sufficiently strong to cause the operation of any suitable device. A number of modified arrangements as have been experimented will now be recorded. Referring to diagrams which follow in Fig. 2.

an arrangement identical with that in Fig. 1. is shown, only the relay itself is made to be the transformer by being suitably proportioned to the break and condenser and having on top of primary windings *P P* a secondary *S S* wound with fine wire and containing a battery *B'* as shown. The secondary excites the sensitive device *a* until it breaks down when the relay is operated. This arrangement is not the most preferable to employ as better results will be obtained with an independent transformer and relay, but it has the features of compactness and simplicity. It can be, however, still further simplified by doing away with inductance *L*.

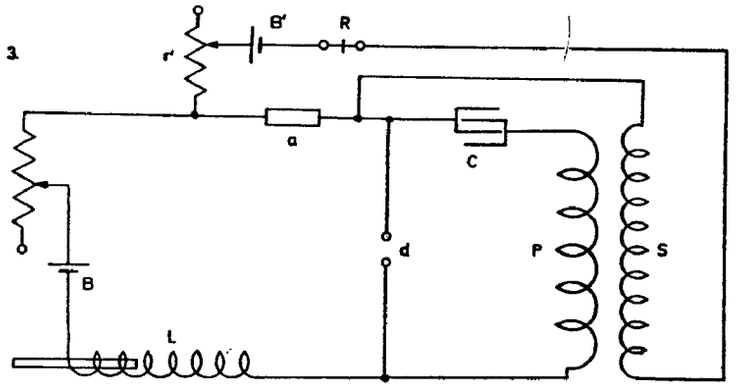

The batteries *B* and *B'* may be connected to cooperate in their acts upon sensitive device *a* or to oppose each other. The former seems preferable. The condenser should be

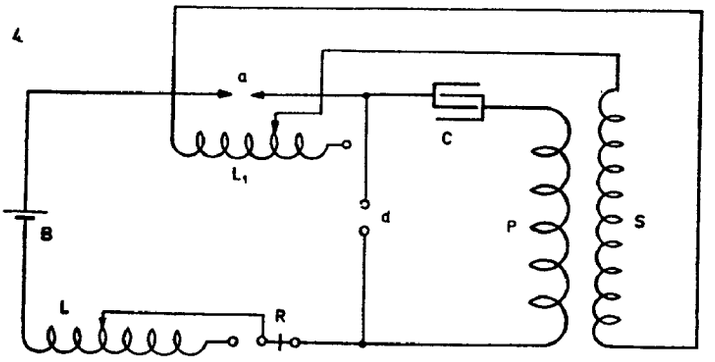

of *large capacity*. In Diagram 3. the form of connections is illustrated which was found most convenient for experimentation. An independent sensitive relay is used and adjustable dead resistances *r* and *r'* in primary and secondary circuits. The inductance *L* is also made adjustable and so is also break device *d* though this is not indicated in the diagram. In

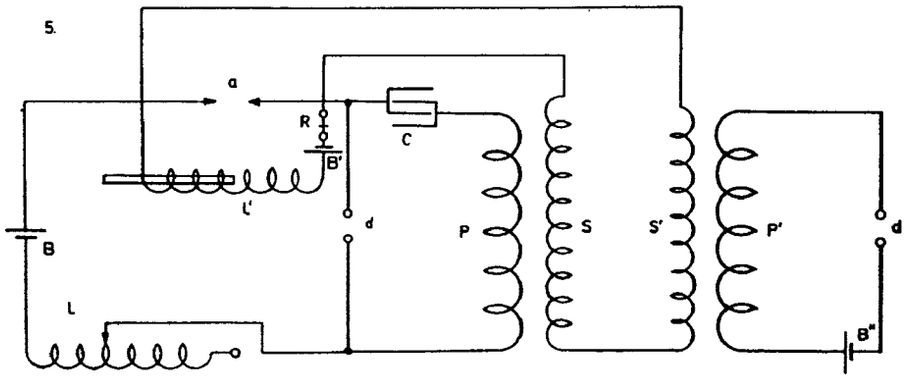

Fig. 4. again plan is shown which is suitable when, instead of a sensitive device as has been described before and which is based on the properties of minute conducting grains, a minute gap *a* is employed. This special device comprises two points almost in contact and in an atmosphere or medium the insulating properties of which are impaired to such an extent that it breaks down readily upon a slight increase of the electrical pressure. The additional adjustable inductance L_1 serves to bridge the gap and allow normally a small current to pass and to charge condenser *C*, to strain sufficiently device *a*. The relay *R* may be otherwise placed. Finally, in Diagr. 5. a modification is shown with an additional induction coil *P'S'*, *B''* and *d'*, the latter device making and breaking the circuit and straining device *a* by currents generated in secondary *S'*. The diagram is otherwise self-explanatory. The relay may be, as stated before, otherwise inserted.

Colorado Springs

Aug. 5, 1899

Experiments with *condenser method* of *magnifying effects continued.* More of the modifications described: In Diagram 1. a resistance, preferably inductive, is placed around

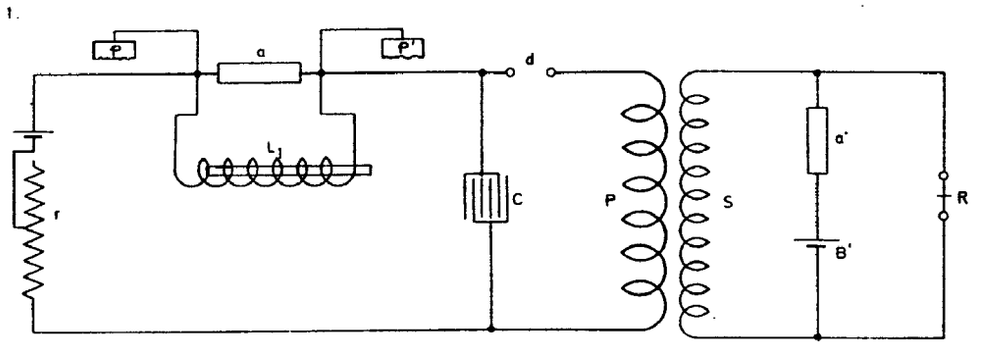

sensitive device *a* for the purpose of regulating the charge of condenser *C* and thereby determining the degree of excitation of device *a'* in secondary circuit of transformer. The adjustable resistance *r* serves to regulate strain exerted upon device *a* by battery *B*. The terminals or plates *p p'* are placed in suitable locations of medium or media, one in the air, the other in the ground generally. Otherwise the diagram explains itself.

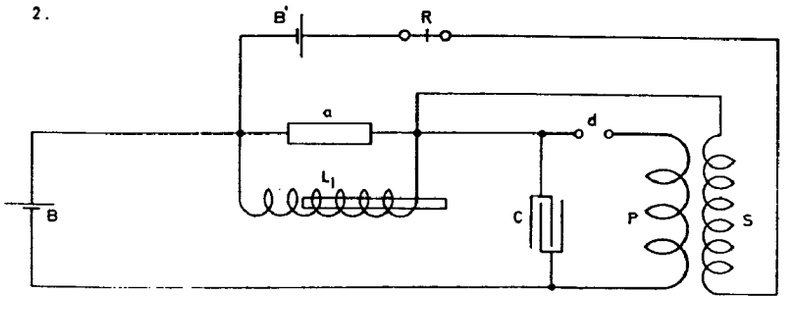

In Diagram 2. the second sensitive device is omitted and the secondary *S* is connected around sensitive device *a*. Other accessories, as adjustable resistances, are likewise omitted for sake of clearness.

In Diagram 3. again the coil *L* is made the secondary of another coil which is supplied from primary oscillating transformer *P S*, the latter being controlled in its performance by sensitive device *a*.

3.

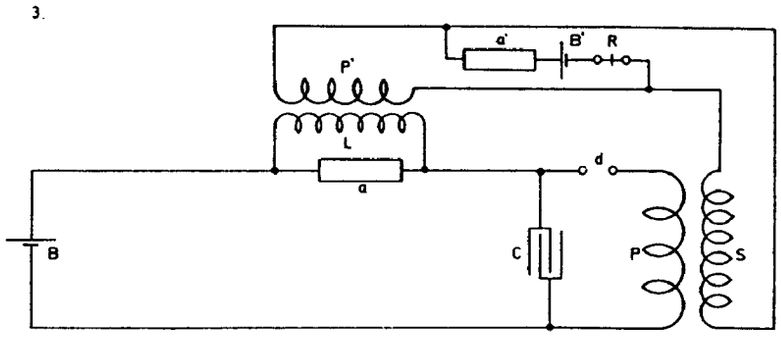

In Diagram 4. a similar arrangement is illustrated as shown on a previous occasion, the secondary *S* being connected around sensitive device *a* and containing another sensitive device, relay and battery, other accessories being omitted for reasons above given.

4.

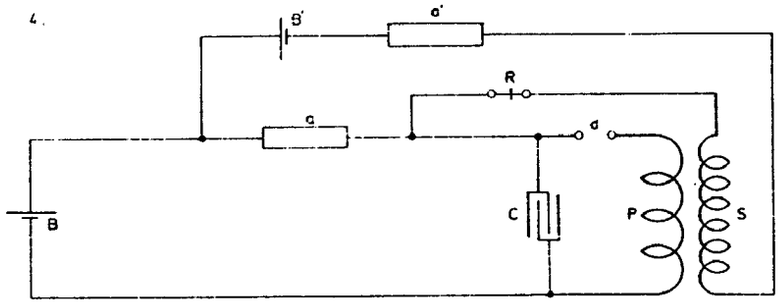

Colorado Springs

Aug. 6, 1899

Experiments with *Condenser method* of magnifying effects. More of the arrangements experimented with described:

1.

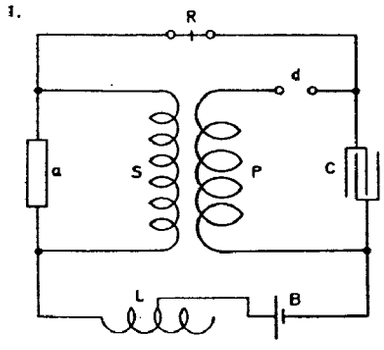

2.

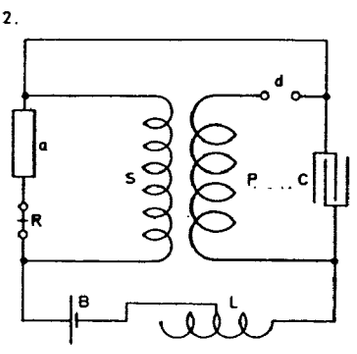

3.

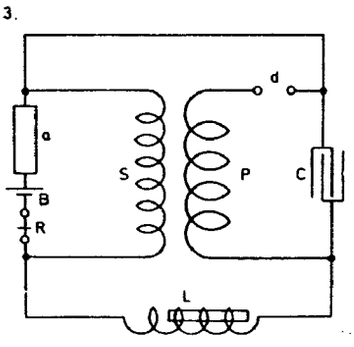

The three diagrams shown illustrate arrangements as variously carried out in a form of portable apparatus referred to before. Referring to Fig. 1. the sensitive device *a* was one consisting of a small glass tube and two metalic plugs, the tube being rotated by a Thomas Clockwork. Coarse nickel chips prepared as before described were used in the tube. An improvement was effected by cleaning the chips first with dilute acid and alkaline solution and destilled water and alcohol at the last. In one apparatus the plugs were 1/8" apart, tube 1/4" diam. *half* filled. Condenser 1/2 mfd. one of the small ones before used. *L*, *S*, *P* and *d* were as described on another occasion. The results *were good.* In Diagram 2. the same devices were used in a slightly different way as will be plain from the diagram. The receiver *R* was put in series with device *a* so as not to be affected much by operation of break device *d.* This seemed better, results are very satisfactory. In Diagram 3. the improvement was carried still further the same devices being again used. The delicately balanced lever of receiver *R* was very little affected by the sudden action of the break, the pull was steady in consequence and a better adjustment was possible. The results were now most satisfactory. One cell of Leclenché dry being quite sufficient.

Evidence of stationary waves water pipe

Colorado Springs

Aug. 7, 1899

Some dispositions of apparatus experimented with in which the secondary of an oscillating transformer was used to excite the sensitive device have shown results vastly better and it seems that the increased sensitiveness is due partially at least, to the fact that one terminal of the secondary connected to a sensitive device (which unexcited has a resistance of about 100,000 ohms or more) is practically *open* and that therefore by the slightest disturbance a high pressure can freely manifest itself and break down the insulation of the device. To investigate further the capacity of such arrangements a great number were tried of which some follow: One of the earlier arrangements was as illustrated

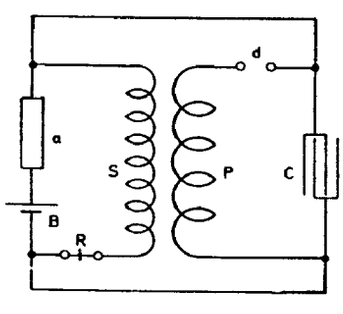

2.

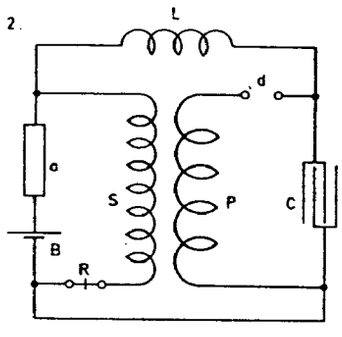

in 1. In this case the secondary *S* was closed by the condenser *C too* large for it, and the self-induction (very large) *L* was inserted to overcome this defect and for other reasons (2).

The next arrangement adopted was as shown in 3. In this case the terminal of secondary, or respectively its continuation up to *t* was open or insulated — at least practically so and the apparatus was more sensitive when the secondary had a great number of turns, it was better to place battery *B* and receiver *R* between the other end of secondary and the corresponding terminal of the condenser, but when the secondary did not have as many turns the apparatus generally worked better with battery and relay placed as shown in 3. as

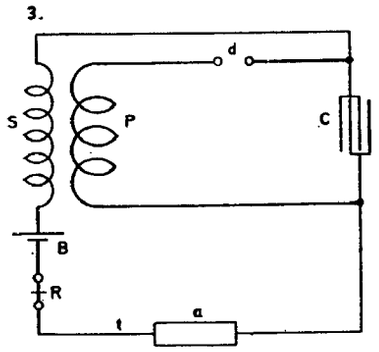

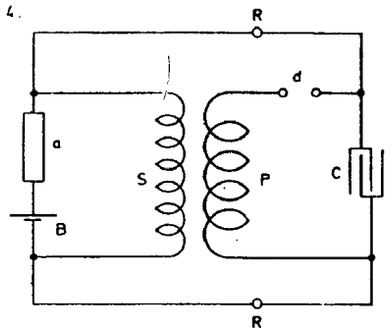

they caused a certain rise — by their capacity and self-induction — of the electrical pressure on terminal *t* of sensitive device.

A modification of Fig. 2. is shown in Fig. 4. In this case the self-induction *L* was replaced by relay *R R* which had one of its legs or coils inserted in each of the two branches of the circuit leading from the condenser as illustrated. As the relay had a very high winding and high resistance nearly 1000 ohms, this left the secondary practically opened and free to work on sensitive device *a*.

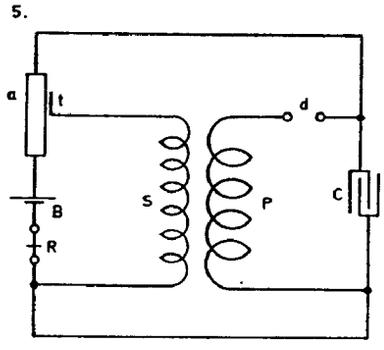

It was observed in some experiments that a sensitive device becomes more responsive to feeble disturbances when, instead of being excited by direct connection to a source, it is strained from a source from some distance. In some instances the apparatus was affected and the relay responded to a small bell from a great distance. It is probable that the increased sensitiveness is due to a certain freedom or looseness of the grains of nickel which were used and which does not exist to such extent by direct connection to a battery. These observations led to investigating the capacities of some such arrangements typically illustrated in Diagram 5 in which the device is excited by induction.

Colorado Springs

Aug. 8, 1899

Other ways of connecting apparatus when using open acting secondary for exciting sensitive device.

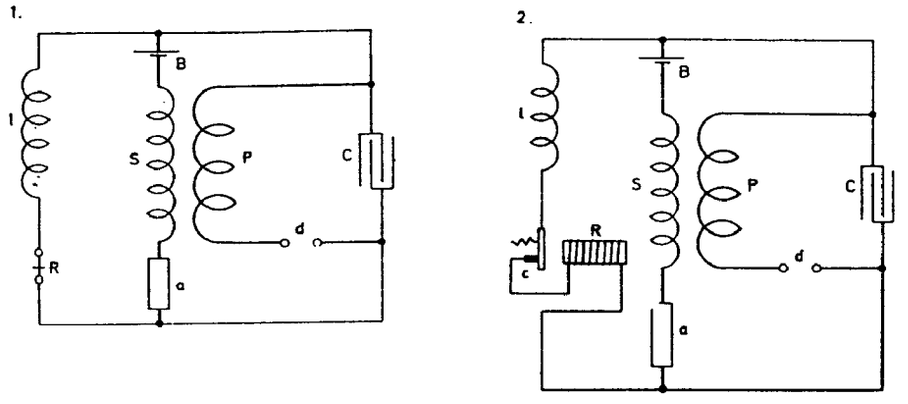

As in some previous experiments the fine relay *R* was affected by the break *d*, the relay with an adjusted high ohmic or inductive resistance *l* was placed in a special branch circuit (1.) It being found, furthermore, that when the sensitive device is very delicately adjusted, it often would not loose the excitation quickly enough by rotation (when a rotating cylinder as often experimented with before was used), but it would always loose the excitation by breaking the battery circuit — the disposition illustrated in 2. was adopted in which the relay *R* was made to break the battery circuit by opening contact *c* which was fixed similarly to that of an ordinary bell or buzzer with a fine spring so that the relay could complete the contact underneath (not shown) working the printing apparatus or other appliance.

The under contact was, however, dispensed with by connecting around contact *c* a circuit of *very high* resistance including another fine relay which was brought into action whenever the lever of relay *R* was pulled toward the core.

Instead of using the clockwork with break before referred to, an ordinary magnetic circuit breaker with contact was employed to operate the primary *P* and to generate thereby the currents in secondary *S* for excitation of device *a*. This simple arrangement is shown in Diagram 3. To provide for excitation of condenser and consequently of sensitive device up to the point desired various plans were investigated of which some follow here:

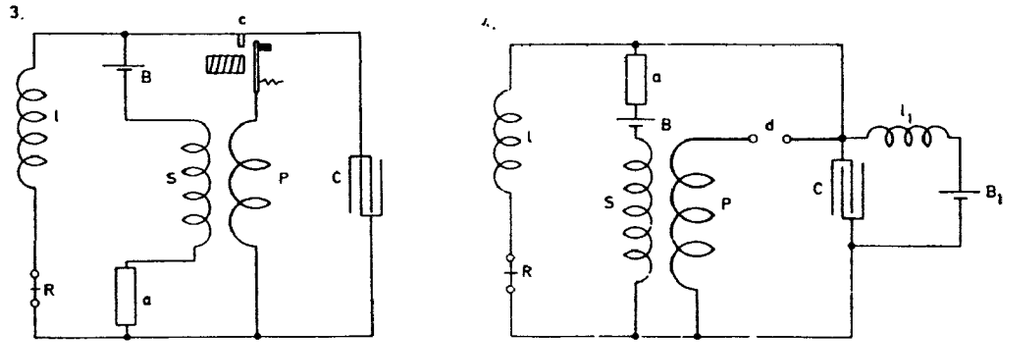

In Fig. 4. for instance, the resistance of device *a* unexcited being practically infinite an other battery B_1 with self-induction coil l_1 was placed around the condenser to excite the same and by the action of secondary *S* also sensitive device *a*.

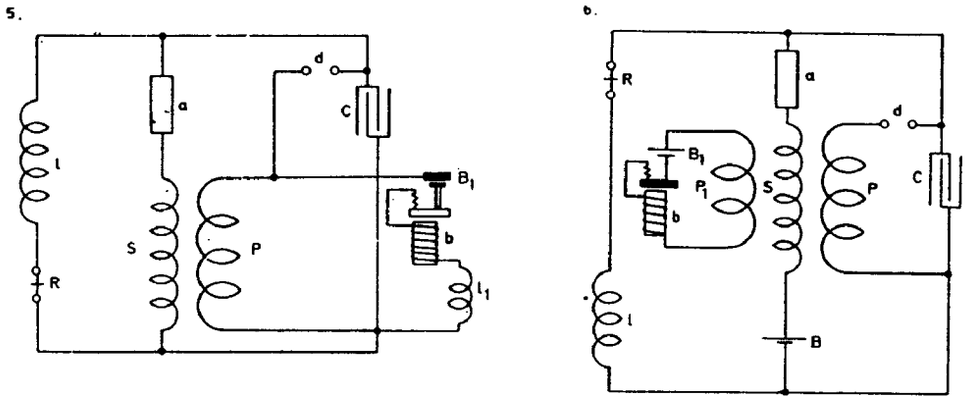

Again in Fig. 5. around the ends of the primary *P* was connected a Battery B_1 in series with buzzer *b* and adjusted self-induction l_1. The latter was so graduated that the induced currents in *S* would strain the device *a* to the point of breaking down. Still another such plan was tried by placing a separate circuit comprising coil P_1 Battery B_1 and buzzer *b* at a suitable distance of secondary *S*, such that the preparatory excitation of device *a* was effected.

Colorado Springs

Aug. 9, 1899

Other dispositions of apparatus experimented with. One of the plans before described was modified in the manner illustrated in 1., the battery B_1 which effected the preparatory excitation being placed as indicated so as to work through the primary *P* and *conjointly* with main battery *B*.

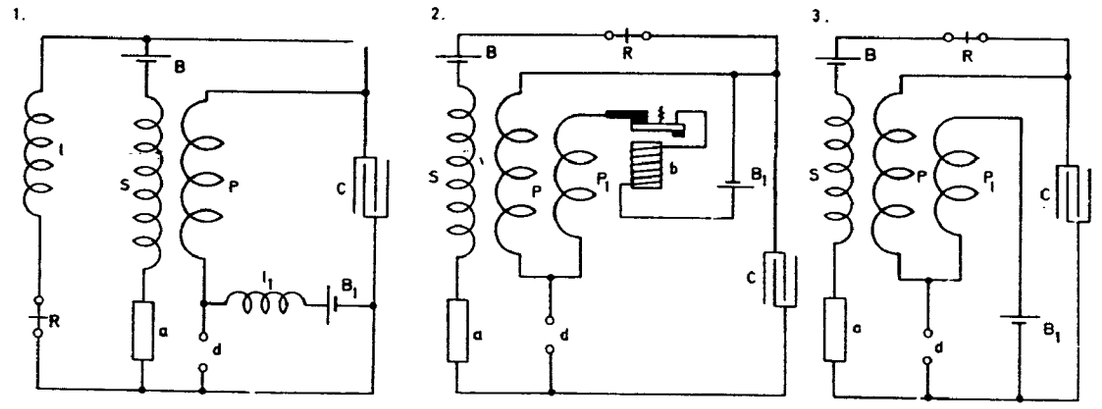

Fig. 2. illustrates a disposition similar to one experimented with before, only in series with buzzer *b* and auxiliary exciting battery B_1, a primary which was adjustable

(P_1) was used. This arrangement was modified to the one illustrated in Diagram 3. The intention being to use the same break for both primaries P and P_1. Neither of the plans (2 and 3) seemed capable of such results as were readily obtained in some previous dispositions. These experiments showed that the proper way was to modify plan 3 into one illustrated in 4.

4.

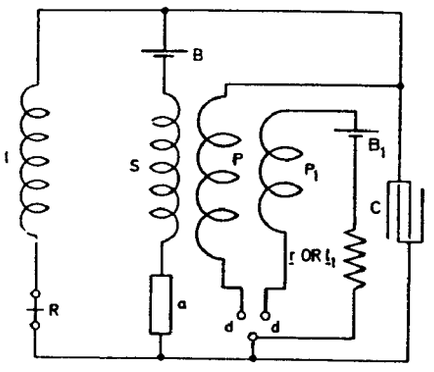

In this case a break device with *two contacts* is provided which make and break *simultaneously* both the main primary P and auxiliary primary coil P_1. In auxiliary circuit P_1, for purpose of adjustment, a resistance r or l dead or inductive is included.

Colorado Springs

Aug. 10, 1899

Further modifications of apparatus experimented with.

1.

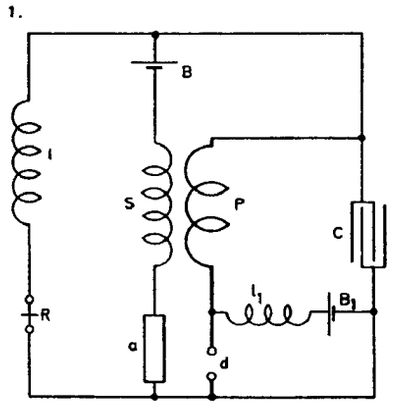

2.

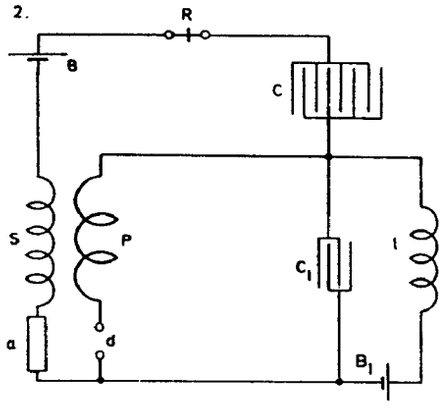

An arrangement as illustrated in 1. was made to see whether excitation (preparatory) could be conveniently effected by shunting around break d a circuit including very high graduated self-induction l_1 with battery B_1. This worked fairly well.

To avoid certain disadvantages in previous similar forms of apparatus — as the permanent closure of condenser — a number of modifications based on the use of two condenser was resorted to and experimented with, some of which are illustrated in diagrams following.

In Diagram 2. two condensers C and C_1 are placed in series, one of them being shunted by graduated self-induction l and battery B_1. The other condenser C, being larger, allows the current from battery B to pass through break and coil l when device a is excited. Not very good. A modified plan is illustrated in 3. In this case the auxiliary battery B_1 charges the two condensers C and C_1 in series, whereupon one of them is discharged through the break d. This is fair.

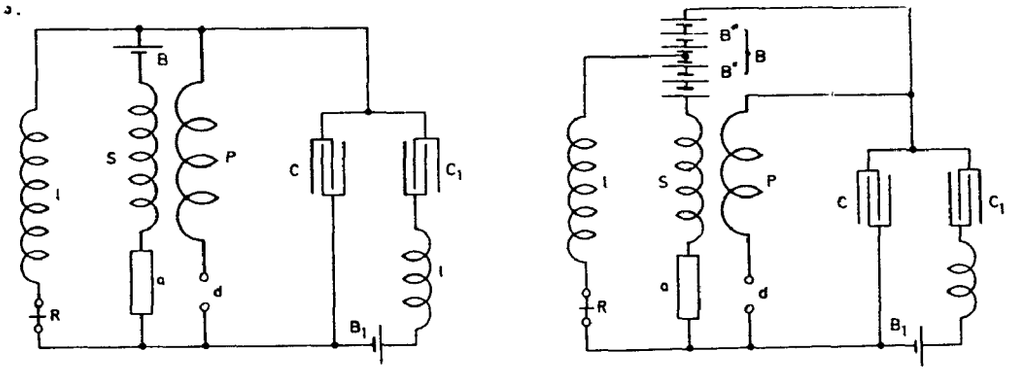

In 4. the battery (main) is so placed that a high e.m.f. is charging the condenser yet current through the sensitive device is small.

Colorado Springs

Aug. 11, 1899

Measurement of capacity of the *new condensers* prepared from *Maniton Water bottles.*

With the exception of three tanks in which bottles with green glass were used all the remaining bottles were of *dark glass.* The test did not show much difference between the two kinds of glass and all the tanks separately measured were found to be, after proper filling in of the solution, of the same capacity or very nearly so. All the bottles were first connected in quantity and the capacity compared with that of 1/2 mfd. standard condenser. The deflections were almost exactly as 36 : 44, 36° for the 1/2 mfd. and 44° for the bottles. The capacity of all the latter was therefore $\frac{11}{18}$=0.611 mfd. This would give for one bottle, since there were 576 bottles, the average value of $\frac{11}{18\times 576}$=0.00106 mfd. or 0.00106× $\times 9\times 10^5$=**955 cm.** As there are 36 bottles in each of the tanks we get for one tank 36×0.00106=0.03816 mfd. or 36×955=**34,380 cm.** As each side has 8 tanks the capacity of each side would be 0.03816×8=0.30528 mfd. or **275,040 cm.** and when, as mostly the case, the two sides are in series the total primary capacity will be $\frac{0.611}{4}$=**0.15275 mfd.** or $0.15275\times 9\times 10^5$=**137,475 cm.** When working with one primary turn, taking the inductance of primary as $\frac{7}{10^5}$ henry we get

$$T=\frac{2\pi}{10^3}\sqrt{0.15275\times\frac{7}{10^5}}=\frac{2.054}{10^5} \quad \text{and} \quad n=48{,}700 \text{ per sec.}$$

Other modifications of signalling apparatus experimented with..

Several ways of providing for initial excitation when using oscillatory transformer principle are illustrated in diagrams which follow:

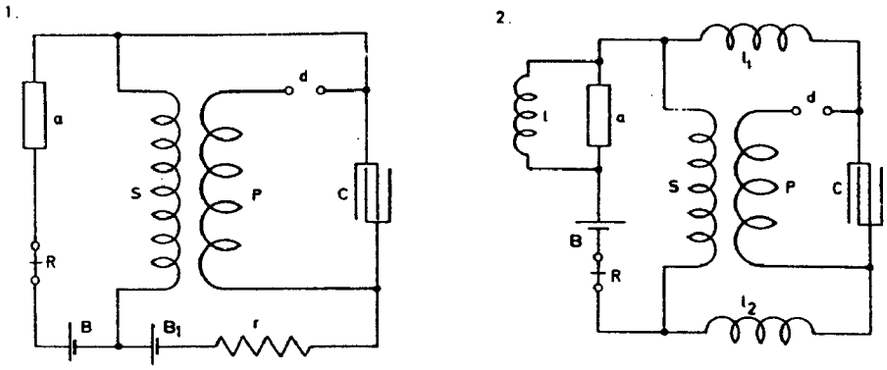

In the first diagram the excitation is provided through auxiliary battery B_1 the strength of which is regulated by adjustable resistance (inductive or ohmic) r. The two batteries B, B_1 are so connected that they join in straining device a.

In Diagram 2. an inductive resistance *very high* is connected around device a and coils l_1 l_2 are also employed to prevent the secondary S being closed and potential diminished through comparatively large condenser C. The inductance l and also l_1 l_2 are adjusted.

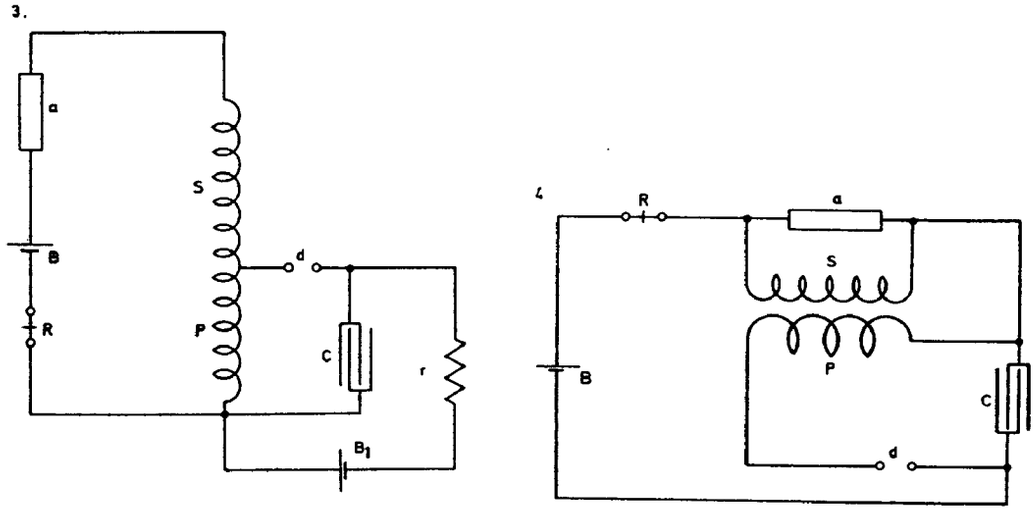

Again in Sketch 3. is shown a plan convenient to use when the secondary is wound in one single layer on a drum. A part of the secondary is made to serve as a primary through which condenser C, loaded to the desired point by battery B_1 (graduated by resistance r) is made to discharge. In this manner it is easy to adjust the action of the secondary on device a.

In Diagram 4. is illustrated a simple way experimented with before which secures good results. This to follow up.

Colorado Springs

Aug. 12, 1899

Further modificatons in signalling apparatus.

Figs. 1. and 2. show ways of securing initial excitation by means of very high inductance $\mathfrak{L}$ connected as shown.

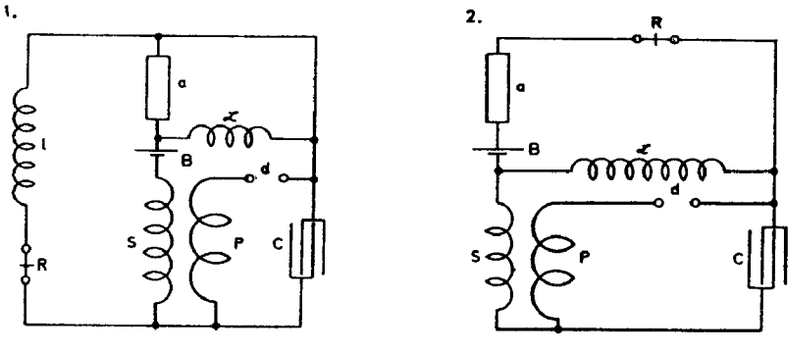

Diagrams 3. and 4. illustrate similar plans of connection. In the former the battery *B* is in the main circuit, in the latter in a shunt to device *a*.

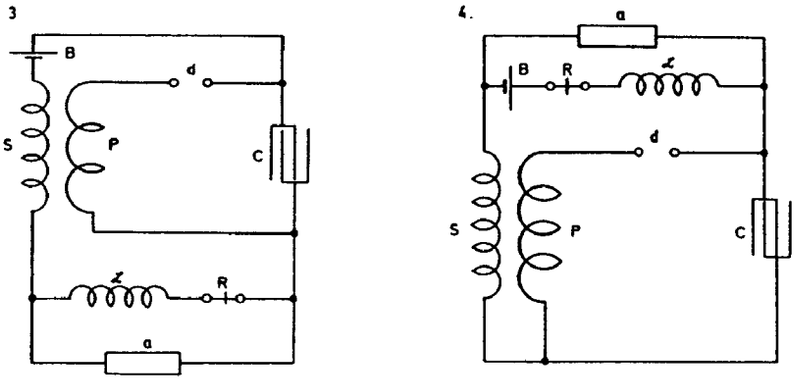

In Figs. 5. and 6. other modified connections are shown. In 5. an auxiliary secondary S_1 with battery and relay is connected around device *a* which is excited by main secondary *S*. In 6. a similar connection is used with a buzzer *b* to excite device *a* through secondary *S*.

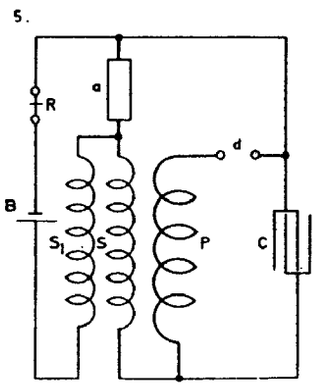

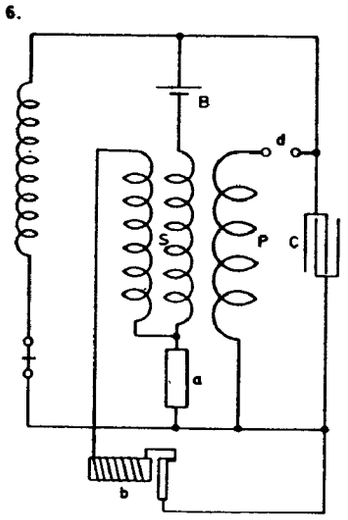

Colorado Springs Aug. 12. 1899.

HUZE'S MIDDLE TESLE

further modifications in signalling apparatus.

1.

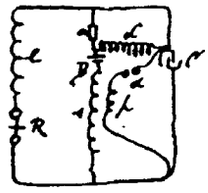

2.

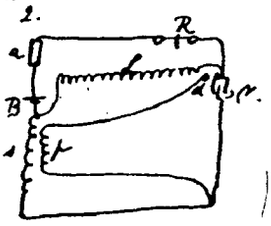

Fig. 1. and 2. show ways of securing initial excitation by means of very high inductance L connected as shown.

3.

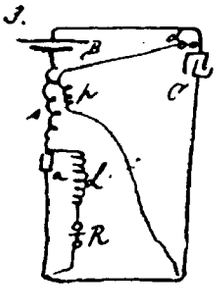

4.

The diagrams 3 and 4. illustrate similar plans of connection. In the former the battery B is in the main circuit, in the latter is a shunt to devices a.

5.

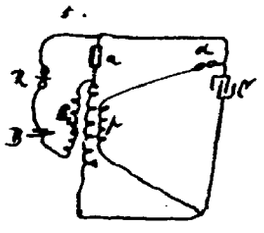

6.

In fig 5. and 6. other modified connections are shown. In 5 an auxiliary secondary s, with battery and relay is connected around device a which is excited by main secondary S. In 6. a similar connection is used with a burner E to excite device a through secondary s.

7

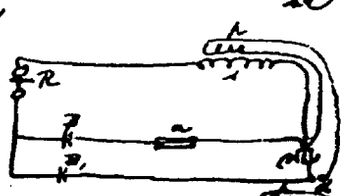

8.

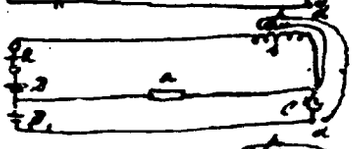

9.

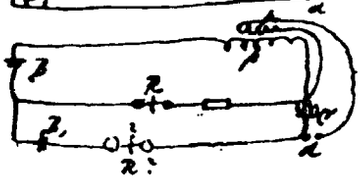

Fig. 7, 8, and 9 again illustrate other arrangements in which two batteries were employed one generally to secure initial excitation

Figs. 7., 8. and 9. again illustrate other arrangements in which two batteries were employed, one generally to secure initial excitation.

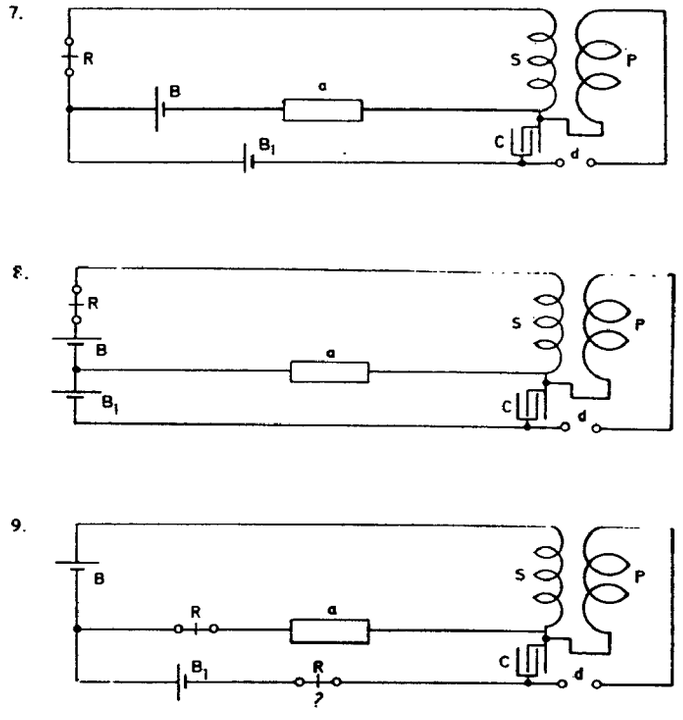

Colorado Springs

Aug. 13, 1899

Experiments with oscillator 35—35 1/2 turns. Tension on Westinghouse Transformer 15,000—22,500 volts. Supply transformers connected 100 volts.

1 primary turn, all jars tension 15,000 volts, effects would indicate capacity too small.

To ascertain this the connection was changed to 2 primary turns in series and 1/4 capacity (2 tanks). The capacity was now varied but resonance effects moderate. All experiments show clearly too much capacity and comparatively little self-induction in secondary. There is a large movement in the wire, but pressure can not appear on end as it would in the absence of capacity.

By adding capacity on one end better results indicate that this view is true.

One of the balls 38 cm. on end results much better, sparks on arresters much stronger.

Two balls connected — effects still stronger, sparks livelier on arresters but the tension still too small. Needs much more capacity on the end to overcome internal capacity distributed along cable.

Now again changed to one turn as oscillation much better. The extra coil was added and adjustment of capacity made. Best results with 3 2/3 tanks capacity on each side. An empty tank placed on top of the coil for capacity. The effects with 22,500 volts on W.T. remarkable. The streamers very rich red, quickly darting up to 9 feet long. Many brilliant sparks would jump up to a 10 foot distance.

Colorado Springs

Aug. 14, 1899

The following arrangements with two sensitive devices were the subject of consideration and experiment today:

This disposition (1.) though it worked fairly had the disadvantage that a diminishing of resistance of device *a* was not very effective in increasing the charge of the condenser, but by making the secondary and relay circuit of very high inductance and resistance this defect was to a degree remedied.

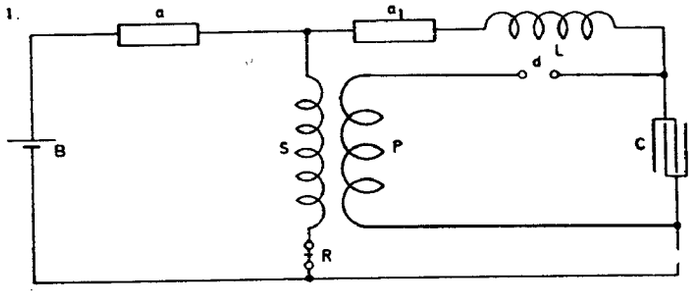

By changing connection to the one indicated in the second diagram the condenser was stronger and more effectively charged upon the falling of the resistance of either of the devices $a\ a_1$.

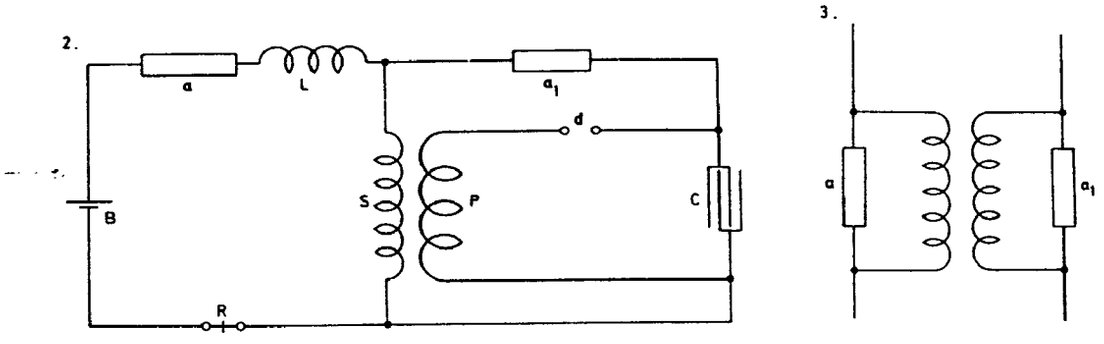

The conclusion arrived at from many experiments with two devices, which seem to indicate that two such sensitive devices are better than a single one as regards sensitiveness, was that the devices should be arranged as in Sketch 3 so that a change in one will produce a change in the other which in return should react upon the first and so on. This general scheme is to be further considered.

Other arrangements of apparatus with open secondary for exciting sensitive device.

In this plan (4.) the secondary S is connected to the terminals of sensitive device a through a small condenser CC_1. A very small condenser is sufficient to cause the excitation.

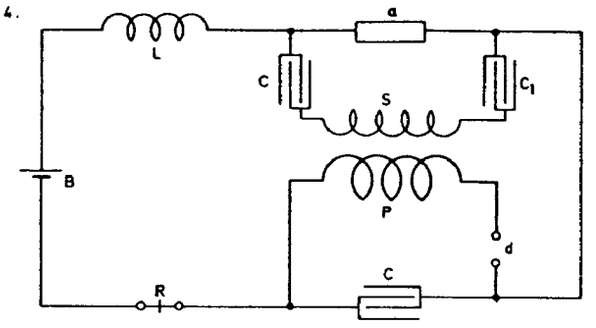

This is a modified arrangement (5.) there being only one condenser and besides a *very high* self-induction around device a to provide for initial excitation when device a is originally of practically infinite resistance. The relay R may be placed around device a instead of self-induction l.

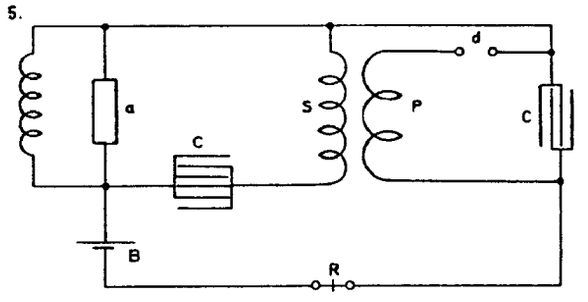

In the diagram below (6.) is shown a manner of connecting apparatus to a circuit L_1 C_1 which is adjusted to be in synchronism with the primary vibrations of the oscillator and excites device a.

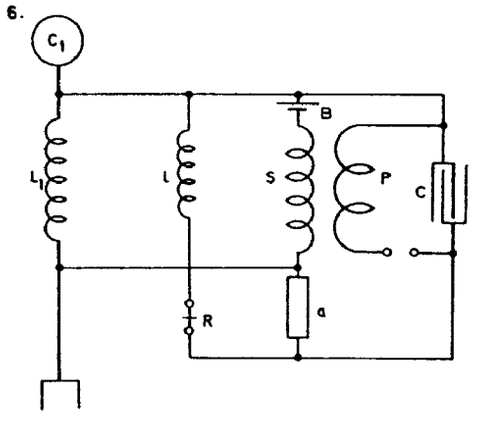

Again in Diagram 7. a special synchronised circuit is done away with, the secondary itself being adjusted to the primary vibrations. The plan adopted in New York apparatus

of winding secondary and primary on a large drum (8.) serving at the same time as table is best. Tuning is easy, apparatus cheap, a large amount of copper may be easily placed in the synchronized circuit.

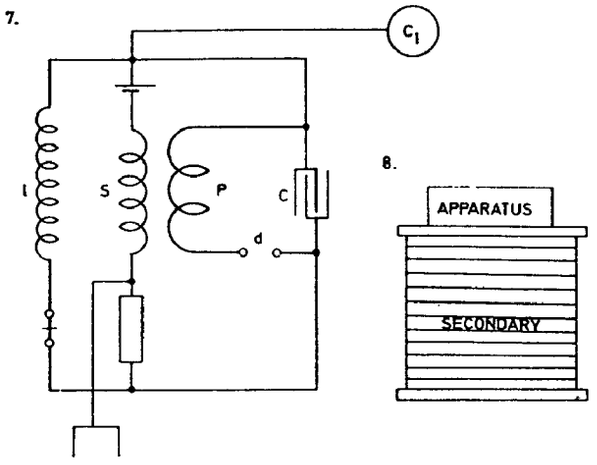

Colorado Springs

Aug. 15, 1899

Change of secondary of oscillator to adapt it to the jars.

Capacity for one tank 36 bottles 0.03816 mfd. Two sets of tanks, 8 in each, give in series a total capacity of 4 tanks that is 0.15264 mfd.

From this $T=\frac{2.054}{10^5}$ approx. and n=48,700 or nearly 49,000.

This gives $\lambda = 3.8$ miles, or for $\frac{\lambda}{4}$=5016 feet.

Now resonance of present secondary 5280 feet was obtained with total capacity of 6 tanks instead of 4. Reducing the figures for length we should have for smaller length a capacity larger in proportion $\left(\frac{5280}{5016}\right)^2$, or 1.11 that is instead of 4 tanks we should have had 4.44 for 5280 feet.

The required length for 6 tanks capacity. This length would be

$$\sqrt{\frac{4.44}{6}} \times 5280 = \frac{2.17}{2.45} \times 5280 = 4677 \text{ feet.}$$

5280 present length
4677 required ,,
} to take off 603 feet.

With this length the oscillator will require same capacity as extra coil and good results may be expected.

Colorado Springs

Aug. 16, 1899

Owing to high self-ind. of secondary of W.T. and large ratio of transformation and also great inductive drop in supply transformers (which are poor) of inadequate capacity desirable to work with two circuits as adopted in small size oscillators with mercury break. Various advantages are thereby secured chief of which: double break number, smaller resistance in gaps and increased capacity of W.T. for charging condensers. Connections may be as illustrated in I and II.

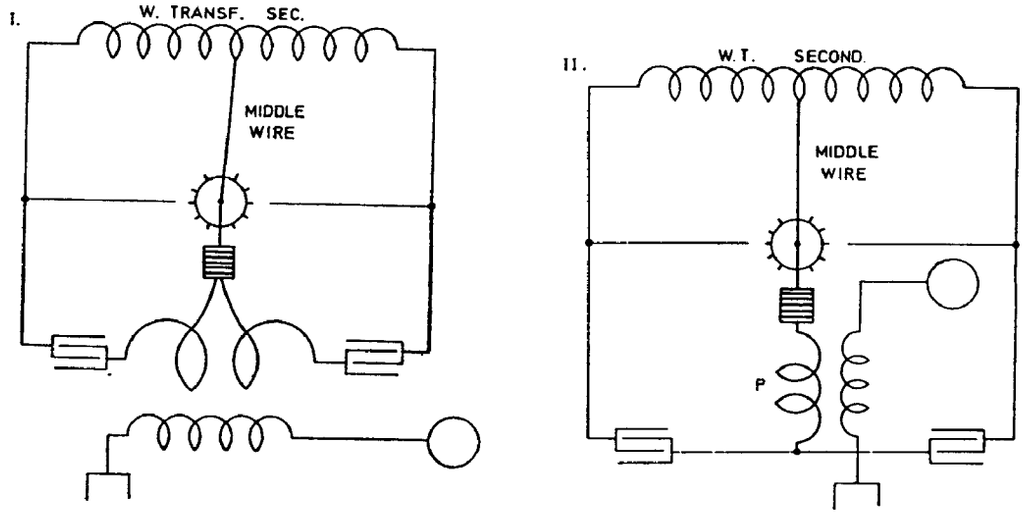

This connection shows well with small oscillators provided the *short circuit* of *secondary* of supply transformer avoided.

Colorado Springs

Aug. 17, 1899

In the working of transformer as before illustrated I. or II. the short circuit of secondary is an inconvenience which is overcome by having a few teeth at a good distance, but this diminishes the number of breaks which it is practicable to secure. Another way is to adopt a process also successful with small oscillators — of charging the condenser, next disconnecting the same and finally discharging. But this has also the disadvantage of reducing the number of breaks.

Plan here illustrated seems free of these objections:

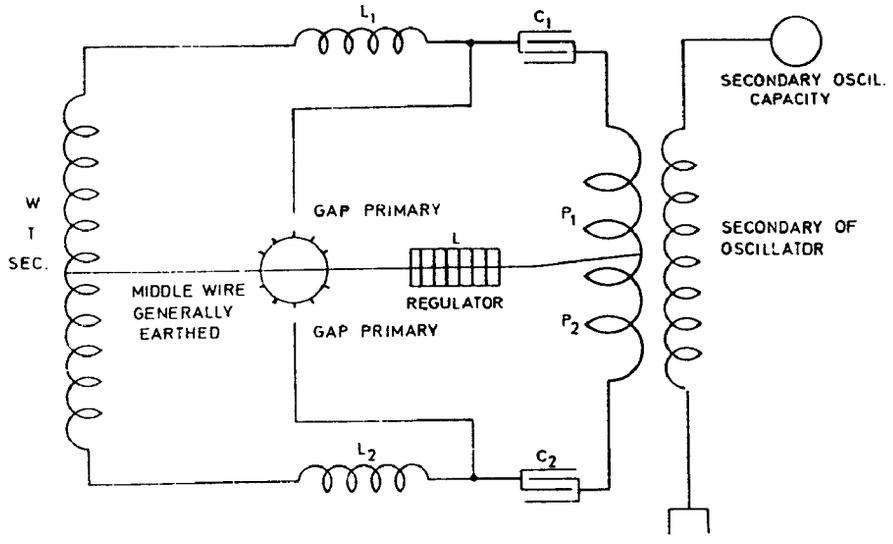

Here the short-circuit is avoided by the use of self-inductions L_1 and L_2 which must be well insulated to stand high tensions. A *single* self-induction inserted in the middle wire may also be used with like effect.

Colorado Springs

Aug. 18, 1899

The best result with apparatus at command, that is, 3 supply transformers, West. Tr. and condensers newly constructed is obtained by employing two dielectrics giving total capacity of condensers equal to that of four tanks. This allows working with 22,500 volts safely.

The results will probably be the same with 45,000 volts connection and 4 dielectrics but then capacity is only one tank and sparks in primary are longer and more difficult to control.

With connection illustrated before (Diagr. I or II) it is also practicable to work with 45,000 volts total by connecting the tanks on each side in a series so that capacity of each of the two alternately working circuits is equal to that of *two* tanks. That is $2\times 0.03816=0.07632$ mfd.

With *one* primary turn this gives

$$T=\frac{2\pi}{10^3}\sqrt{0.07632\times\frac{7}{10^5}}=\frac{2\pi}{10^5}\sqrt{0.053424}=\frac{1.4553}{10^5}$$

and $n=68{,}710$ adding 10% for mutual induction, now smaller because smaller number of turns in secondary (29), we have

$$n=\left\{\begin{matrix}68{,}700\\6900\end{matrix}\right\}=75{,}600 \text{ say } n=\mathbf{76{,}000} \text{ and } \lambda=2.45 \text{ miles } \quad \frac{\lambda}{4}=\mathbf{3234 \text{ feet.}}$$

Colorado Springs

Aug. 19, 1899

Previous experiments showed in a number of cases good results with connection and quantities as indicated:

Capacity in primary circuit 6 tanks on each side; 1 turn primary about 3/4 of self-ind regulator.

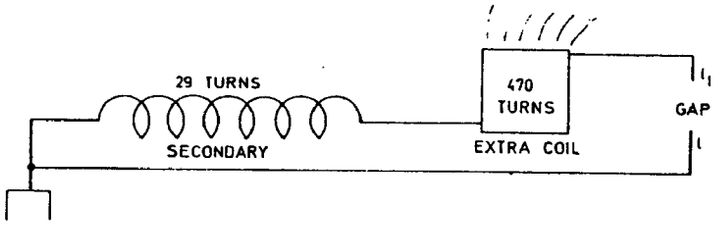

From reaction of capacity on secondary of W. Transformer it was probable that more capacity was required, but the transformer was overloaded when more tanks were joined.

With 22,500 volt connection the overload was very marked and lamps would go down 50%. When the connection was changed to 15,000 volts the lamps instead of falling would go up some 35% — 40%. No other change in capacity or otherwise was made and this showed that effect not merely due to an interaction and self-induction and capacity but that the e.m.f. was also a determining factor.

With the first connection effects were brilliant, sparks in gap 8—11 feet according to charge and adjustment. Above considerations led to changing to *two* turns primary. Capacity first 1 1/2 tanks on each side. e.m.f. on transformer 22,500 V would go up possibly 25%. Capacity was gradually increased to 3 2/3 tanks on each side when with Regulator all out the effects were best. The rise of e.m.f. about 35—40%. The sparks were curiously fierce, no direction seemingly, darting pass terminal *l*.

(Here fire started on coil).

Colorado Springs

Aug. 20, 1899

Exp. with oscillator secondary 29 turns continued to ascertain free vibration more exactly. Connection 2 series on each side, 4 dielectrics, total capacity 1 tank. Tension on Westinghouse Transformer 30,000 volts approx. Spark gaps outside about 3″ each, inside *one turn*. Results on the whole less satisfactory showing clearly that difficulties increase as tension becomes greater. Middle box on one side broke down, sparks following through the mahogony frame to a screw and jumping from this a distance of 4″. This can be only due to rapid vibration and suddenness as tension on that box only $\frac{15{,}000}{2}$ volts. There are some doubts as to the distribution of e.m.f. in condensers in *series* when vibration takes place. Strong (probably inductive) drop on supply circuit (exceptionally so).

Observation: When lamps increase strongest on supply circuit then spark will not jump over the gaps, showing that then e.m.f. on secondary of W.T. smallest.

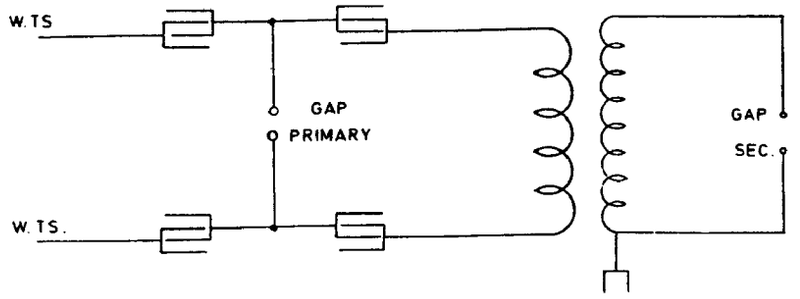

Connection was changed to that indicated in sketch for the purpose of avoiding effect of short circuit of secondary of W. T. through primary arc. Absorbed energy was great. Sparks on switch serious. Lamps would go up very much when arc would break through. But general results not satisfactory. The condensers directly on W.TS. take strong current.

Colorado Springs

Aug. 21, 1899

Other experiments with oscillator secondary 29 turns. Simply spark gap. Connectios used:

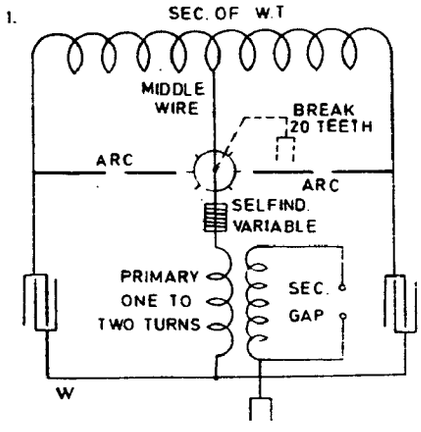

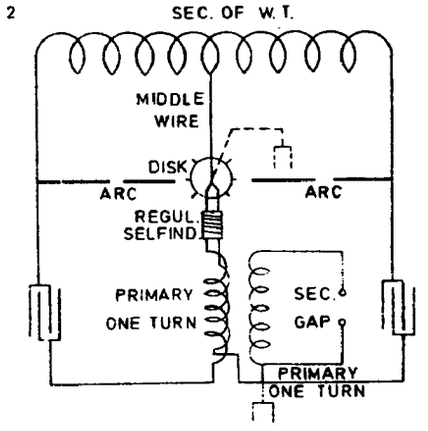

Plan illustrated in first diagram was adopted to obtain double number of breaks with same disk and securing other advantages. Also to better utilize W. Transformer. It was found that when one side on it worked remarkably well, sparks about 4 feet. The tension on each half of transformer being 11,000 volts approx. when both parts on interaction hurtful. The chief drawback being short circuiting of secondary. The arc was *snappy* and *loud* indicating short circuit and rapid vibration through wire *W*. The secondary discharge was thick but spark not long about 3 feet. All tanks were in on

either side and the transformer charged them full when separate. When both parts on evidently the secondary of W. T. was overloaded.

In arrangement illustrated in 2 short circuiting was largely overcome but the short circuit of secondary of W. T. remained the same. The results were similar no matter in what direction both primaries were connected. The necessity of overcoming short circuit in both arrangements became soon more and more important.

To improve — arrangement illustrated in Diag. 3. was used. It proved itself more economical but the amount of energy was limited. The hurtful short circuit was entirely obviated and the lamps were less affected.

3.

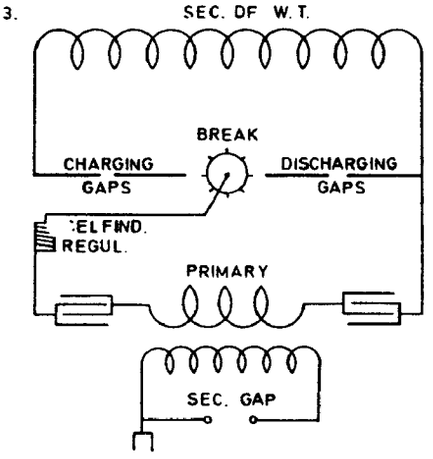

Colorado Springs

Aug. 22, 1899

Arrangements for telegraphy tried. In these the chief point was to keep one end of secondary spool open so to allow full rise of pressure on this end. The sensitive device, one of the before described, excited fully resistance 12 ohms approx. Not excited over 100,000 ohms.

1.

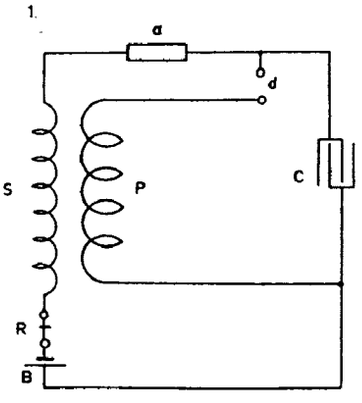

2.

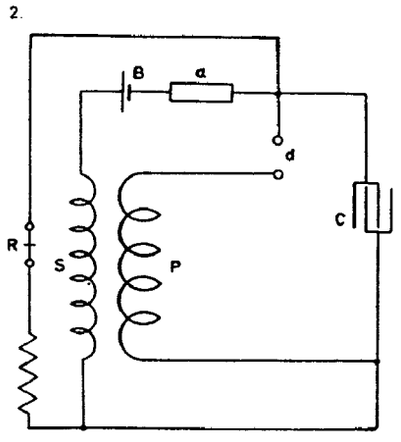

In Diagram 1. first experimented with, a disadvantage was found to exist: namely, the receiver *R* was operated through the break device *d*. This inconvenience was done away with in arrangement illustrated in Fig. 2. which allowed more sensitive adjustment of Relay *R* and the apparatus worked better. Capacity of condenser was varied up to 20 mfd. with changing success. Best results seemingly with small capacities up to 1 mfd. Secondary about 4,000 turns, primary Lamp cord No. 10 turns 28. The apparatus responded freely to small pocket coil at a distance of several feet with *no capacity attached* and *no adjusted circuit.* Consequently will go at great distance.

In these arrangements, as in the previous ones involving the same principle, the effect on the sensitive device is accumulative and a difficulty arises that namely the sensitive device will not readily de-sensitive. By inserting large resistance *r* in circuit with receiver *R* this effect upon the latter is largely reduced as the current through receiver and device is kept to a minimum. By adjusting speed of rotation of sensitive device the inconvenience is also overcome.

Colorado Springs

Aug. 23, 1899

Experiments with new extra coil placed in center of primary. The spool 75" diam., 12 feet high, 160 turns in all. 120 turns wound close together in the adjacent grooves and 40 turns the upper ones at three times that distance, that is, two empty grooves between each two turns. Breaks on two sides alternately approximatelly 2,400 breaks per sec. On top (free end) ball of 38 cm. capacity. Resonance was obtained with 5 2/3 tanks on

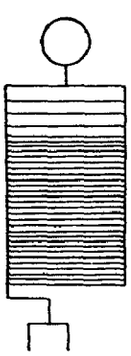

each side, one turn primary, self-induction in box 4 turns. Gaps were 1 1/16 on each side plus gaps in box 2 turns. Tuning remarkably exact, 1/8 turn of self-ind. box reducing the effect very much. When exactly 4 turns in box, sometimes streamer 8 foot long would shoot out from a defective spot on wire. The ball on top reduced streamer capacity and prevented streamers from coming out all along the top turn as usual. The spark gaps work extremely well, loud explosive character indicating good vibration. Such sparks are always noted when secondary well tuned. The system worked economically, the lamps in supply circuit not falling at all. The earth connection now was taken off and oscillator of same

period — (the secondary 29 turns connected). Both had now same period, the secondary and the extra coil. On first throw of switch a spark darted to roof above from the ball and the cord caught fire. Fortunately, it was extinguished before doing damage.

This accident showed that better provisions against such an accident have to be made. The roof to be fixed with a guard of wire gauze which would prevent the wood from catching fire through sparks darting up. As it was dangerous to work further without guard against such an accident another ball 38 cm. supported on high was connected to earth and placed at varying distances from the ball on the end of the extra coil. The sparks jumped from the upper turn of the coil to the Earthed ball and sparks of seven feet were easily obtained. It was evident that the distance could be much increased but this was deemed hazardous. As it was the sparks of seven feet were probably the longest obtained from such large balls or surfaces of such small curvature.

The connection of the primary circuit was now changed, two turns being used in series. This reduced the period to one half and it was thought that this would respond to the fundamental note of both secondary and extra coil. Experiments were disappointing for the display was not remarkable, the sparks were up to four feet long but much *thicker* and whiter. I believe that the true vibration was not struck but skipped. As time pressed, further experiments with the view of ascertaining the fundamental note were postponed and the first connection with one primary turn again made. Both balls were now connected in multiple to top of the coil and to the upper rod of a spark gap, the lower rod being earthed. There was no danger of setting fire in this way. The display was remarkably noisy. The sparks were up to 14 feet long, snapping quick, explosive and very white. Sometimes streamers would shoot out fully 11 feet. Often several sparks at once. No particular direction in striking. The capacity in the primary circuit was varied up to 8 tanks on each side. Always striking effects. The ground wire had no capacity and no sparks were seen on arresters *but before*, with only one ball and *no streamers*, sparks of 5/16″ were *drawn from water pipe in distant room.*

Colorado Springs

Aug. 24, 1899

Experiments with new extra coil and oscill. secondary 29 turns continued.

The ball on top was disconnected and a bare copper wire run around the upper rim of the coil to produce streamers. Capacity in primary circuit on each side was 5 2/3 tanks with 4 turns self-induction box in. It was not advisable to work because by the throw of switch some streamers would dart up to the roof a distance of 12—13 feet. The other ball used in previous experiments was placed at a distance of 11 feet from coil and also it was unconnected — except that it had a wire of about 8 feet hanging from it — the sparks would fly to it from the rim of the coil.

A curious feature is that the streamers are very sudden, explosive. This is due probably to the suddenness of the break. Occasionally an unusually long streamer would

shoot out. This probably owing to resonance of break or temporarily short circuit over break, probably the former cause responsible. Desirable either synchronous break as worked in New York, or a *very rapid one*. The speed of motor is to be increased to double for this purpose.

Coil was disconnected from the oscillator and connected to the ground. The period corresponded to that of the primary with *7 tanks* on each side, no self-induction. 5 2/3 tanks, 4 turns, and 4 tanks and *9* turns. Thus 3 tanks made only a difference of 5 turns on self. box. With four tanks tuning wonderfully close, twice it was missed before finally located.

(The roof of building was fixed today, cords done away with)

Colorado Springs

Aug. 25, 1899

Experiments continued with extra coil on wooden frame 12 feet high, 6 feet diam., 160 turns No. 10 wire. A bare copper wire was supported on top, the wire forming a circle not closed of about 8 feet diam. Another copper wire was supported 4 feet below and at a distance of about 13 feet, all around the diameter of circle being approximately 34 feet. This circle (also not closed) was connected to ground. Very powerful streamers were produced sometimes extending the full distance between the wire circles, but still they showed tendency upward in spite of presence of ground circle. Often sparks would pass in curved paths between the two circles. During the display *no sparks* on arresters, small sparks in adjacent room from water pipe. Capacity on each side from 5 2/3—7 tanks. Longes streamers with former value. The circle of 8 feet diam. was then taken down and another one about 10 feet placed on top of coil. Streamers now showed some tendency to pass to grounded circle. Sparks to the latter more frequent and brilliant. *No play* on arresters and small sparks in adjacent room as before.

One of the balls was now connected to the ground but although sparks of eleven feet jumped to same *no* sparks on arresters. The vibration was evidently slow, that pertaining to extra coil and *harmonics* in earth wire from ball *did not* preponderatingly appear.

Colorado Springs

Aug. 26, 1899

Experiments with oscillator secondary 29 turns and extra coil last described continued.

The alternate motor was put on 200 V with self-ind. coil in series, latter regulated so that motor could drive disk of break with twice the speed, that is 4200, the speed of

motor being approximately 2100. This gave, since disk had 20 teeth and two alternately working breaks, $\frac{4200 \times 20 \times 2}{60} = 2800$ breaks per second.

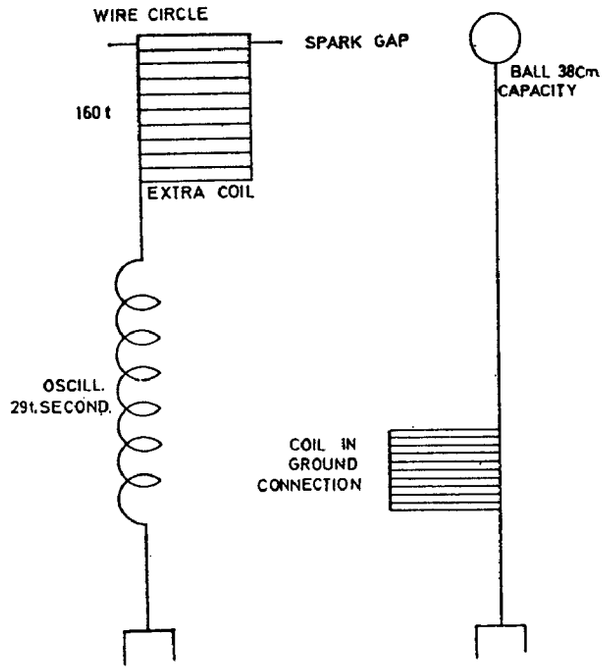

In the first trials connections were made as in sketch. The spark gap between wire circle on top of extra coil and ball supported was 8 feet.

Sparks passed readily and the display on arresters was remarkable. Thick arcs joined the arrester contacts on *both lines* and jumped also through one of the choking coils. This was the strongest effect so far on arresters.

A choking coil was now inserted in ground connection to see whether by lengthening the period of the earth wire the sparks on the arresters would be diminished. This coil was 34″ diam. wound with one layer wire No. 16, thick rubber insulation (layer 10″ high) 50 turns. This coil did not weaken the effect much probably because frequently sparks would jump between the turns. Otherwise it was surmised that the vibration of the secondary itself with the extra coil might be responsible for most of the e.m.f. generated between the ground and line. *Singularly,* despite this strong effect as evident from arresters but very small sparks were drawn from water pipe in adjacent room, this seemingly indicating that in this experiment the earth acted as a nodal region.

The conclusion from these first experiments as to the efficiency of the break was that double number of breaks decidedly better. Nor did it short circuit the transformer more because of the increased number, but on the contrary less as far as could be judged from the lamps on the supply circuit which went *up* as the switch was thrown in.

It was evident, furthermore, that the large circle of wire which was before supported above the secondary and grounded, strongly interfered with the action on arresters because it allowed local vibration which was not effectively transferred to the ground and the air.

To decide surely whether, and to what extent the *long waves* were responsible for the difference of pressure evident on the plates of arresters, the secondary and extra coil were connected as in sketch. In this connection only *long* waves could be effectively transmitted upon the ground. It would have been desirable in this and previous experiment as well to take off the wire circle and substitute a ball on top of the extra coil but this being inconvenient the circle was left. As the extra coil had now only a small initial pressure the e.m.f. obtainable in the spark gap was much smaller and the gap was reduced therefore

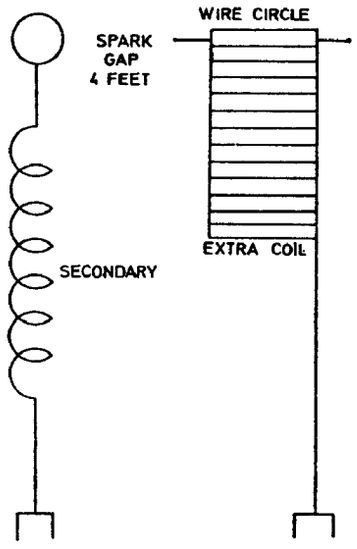

to 4 feet at which distance sparks readily jumped. The play on arresters — though weaker — *took place* nevertheless, this important result showing that waves 3—4 miles long *could* prcduce these e.m.f. sufficient to cause the sparks to pass between the plates of the arresters. Now it is important to consider: is the earth a nodal region or the crest of a wave (that is, the region immediately adjacent to point of attachment of secondary to ground). If a ncdal region then the e.m.f. set up at the small distance of 60 feet separating the point of attachment and the ground of lightning arresters was only a *small part* of the total e.m.f. But if a crest then the e.m.f. set up and causing sparks was nearly the total e.m.f. prcduced by the apparatus. If a ncdal region near the point of attachment of the secondary, then at a distance of about 4000 feet there must be a strong effect, but if a crest, then at that distance there would be no effect. This is to be decided by further observations. The connection was now changed to that indicated. It was thought that both vibrations would cooperate and prcduce a stronger effect, but it was at once evident that so long as streamers (which were about 10 feet) formed on top of the extra coil the effect must be smaller, since *all* energy came from the secondary and the streamers caused loss. A condenser ought to be used instead of a gap to make such an arrangement most economical. Although owing to *nodal* point the length of spark in adjustable gap was small, the display was strong on arresters, but not nearly as strong as when the extra coil was entirely left off. In the latter case the action was very rigorous so that often flames would form on arresters showing short circuit of dynamo. Also the other choking coil would break through. Evidently then the extra coil did not in this instance prove useful in intensifying vibration contemplated.

Experiments continued: extra coil was now lowered 2 feet nearer to ground, distance now being about 4 feet from floor and 5 feet from ground.

Capacity 5 2/3 tanks on each side in primary. The transformer (W. Co.) works very well (22,500 volts). The lamps go up 35—40% when the arc does not break through, the gap being made large for this purpose, and when the arc breaks through they still rise

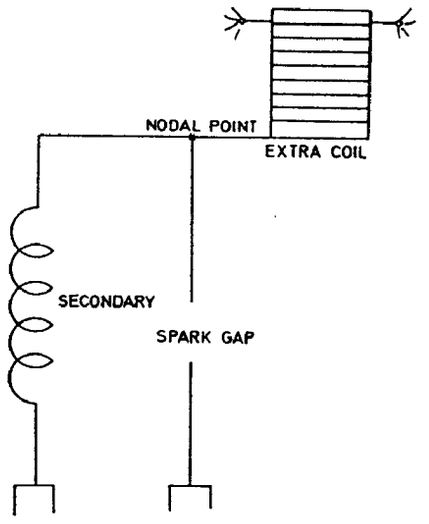

slightly above normal. The gaps outside 1 1/4" each approx. Inside 1 1/2—2 turns. Streamers produced were still more powerful being made so owing to approach of secondary. They would dart out to a distance of 12 feet sometimes.

Important. Strong arcing on arresters, although no spark would pass to the ball used before, which was placed at a distance of about 9 feet. Could the sparks be produced by static induction upon wire through the air and not chiefly by conduction through earth? To test this a coil 50 turns referred to before was inserted in the ground wire of the lightning arresters. It was expected that it would weaken discharge across, but did not probably because the current was small and the choking action likewise for this reason.

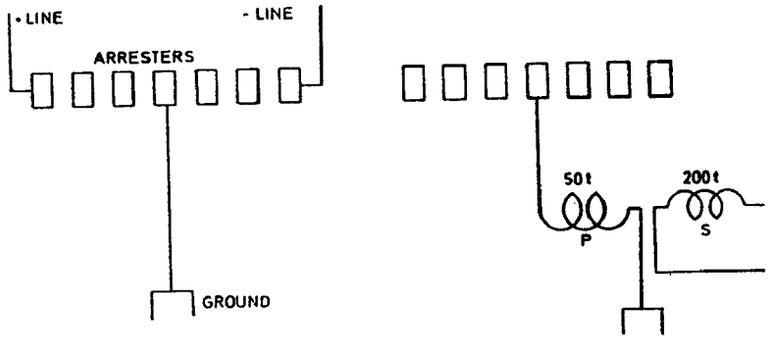

To see whether there is some current passing through the earth wire to the line, another coil was placed in inductive relation to the ground wire coil and strong sparks 3/8" were obtained on former. Sparks, lively 3/8" approx., were also obtained from coil *P*. Note: Sparks to ball sometimes, at other times streamers would dart past the ball. The streamers horizontal when sudden, when switch was held longer they would waver. In last experiments only half of wire circle on top of spool was used.

Colorado Springs

Aug. 27, 1899

Older plans experimented with and modified arrangements of apparatus for wireless telegraphy further considered.

These connections used to relieve the sensitive device from the strain of the battery after excitation. The necessity of doing this leads to the reconsideration of an old plan experimented with in New York which consists of placing the sensitive device between

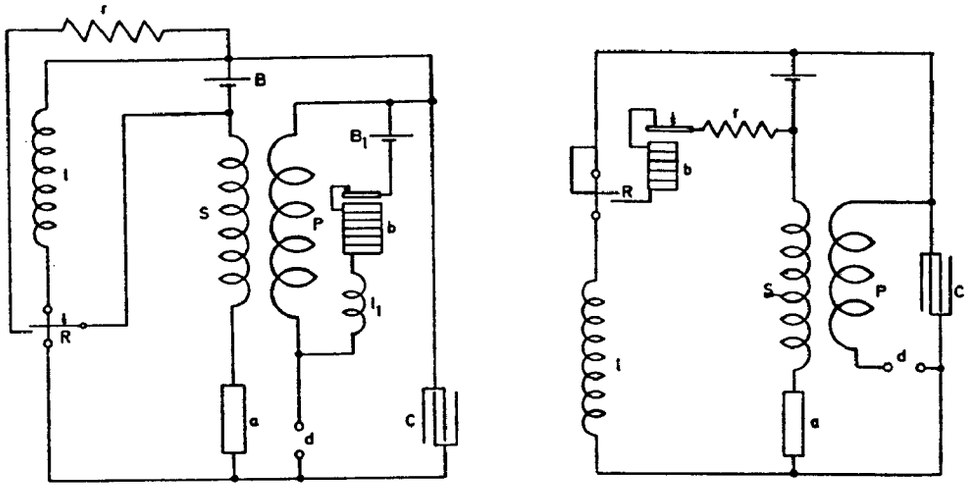

condensers in circuit so that each time only *one* current impulse can pass through the device. This is illustrated in a general way in the little diagram below. The battery strains the device *a* through the condensers $C\,C_1$ but when, upon the device *a* becoming excited, the condensers are suddenly charged the current impulse caused by the charging automatically stops. It is then necessary to reverse the mains, or discharge the condensers to make the apparatus ready for a second operation. This plan allows use of very high pressure on the sensitive device which should be of great resistance.

Plan in last diagram illustrated consists of raising, by means of inductances $l\,l_1$, condenser *C* and break device *d*, the e.m.f. of baterry *B* so far as needed to bring the device *a* to the point of nearly breaking down. The quantities should for a better result be adjusted as usual. Both relay coils *R R* and inductances $l\,l_1$ are placed symmetrically.

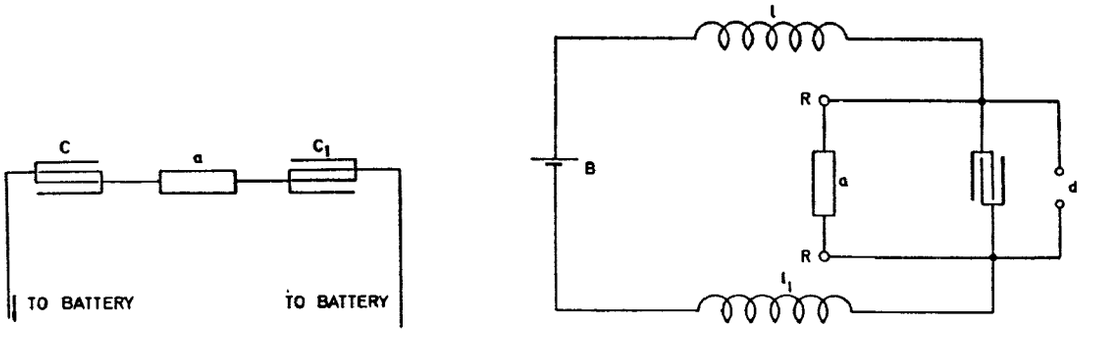

Colorado Springs

Aug. 28, 1899

Experiments with oscillator, secondary 29 t. in series with extra coil before used (160 t) were continued today and showed the following:

Capacity in primary being from 5 2/3—8 tanks on each side, varied to observe shifting of nodal point, play on arresters and behaviour of streamers and spark discharges.

A half circle of bare wire on top of extra coil was left and in addition a larger half circle of bare copper wire (No. 14) was supported on wooden strips 4 feet below the former half circle. Both the bare wires were connected to the free end of an extra spool. The lower half circle was 9 1/2 feet away from a circle of the same bare wire which was supported on oscillator secondary frame and formed the terminal of the secondary. Abundant sparks and streamers were produced. The play on arresters was also observed at each throw of the switch. The rain and lightning were just beginning. Magnificent intense white light witnessed below Pike's Peak, something very unusual. It resembled a white hot silver furnace. The lightning on the mountains was very frequent and the discharges of unusual brilliancy. Twice a curious phenomenon was noted. Lightning striking in one part of the mountains from *cloud* to *earth*, there was seen in another part a few miles away from a high *peak* a lightning discharge which to all appearences came from the *peak* to the *cloud*. The discharge was much thicker at the root and branched out towards the sky spattering itself in many branches and disappearing in fine streams. The astonishing phenomenon was witnessed a second time and subsequently, though there was much uncertainty about the direction in the latter cases; a few times a similar discharge took place from other peaks. Is it possible for a discharge to go from Earth to cloud? As far as the visual impression is concerned there can be no doubt. The discharge in all cases followed a preceding lightning discharge in another region, and apparently from cloud to earth. Perhaps it can be the effect of an intense vibration started by the first discharge which results in another discharge towards an oppositely charged cloud. The clouds were unusual in configuration and grouping. A large portion of the sky was quite clear. The wind at times was very strong. An instrument by its constant play indicated strong electrical disturbances through the earth, even when there was no display of lightning as far as could be seen or heard.

After some time the experiments were continued and presently it was observed that the usual sparking on the arresters was *no longer to be seen* when the switch was thrown in. The only change made was to take the upper half circle off leaving only the lower one. This gave a smaller streamer surface and consequently longer streamers. The display was fine. In order to see whether the upper half circle of bare wire was responsible for sparks on arresters the wire was replaced but still no result. Then it was thought that other causes for the sparks not appearing were responsible and everything that could have the slightest bearing upon this was investigated. Still nothing was arrived at. The sparks did not appear no matter what change was made in the adjustment of the vibratory circuits. What could be the cause? The only explanation at present is that the roof was rendered slightly conducting (although there was little rain in this locality) and that this produced the change. *Important to find out.* Observation: The lightning lighted two houses about two miles away.

Colorado Springs

Aug. 29, 1899

Experiments were made with receiving apparatus comprising an oscillator with mercury break and two devices of the kind before described. The oscillator was of a later pattern, mercury break by 2000 rev. per minute gave $\frac{2000}{60} \times 24 = 800$ breaks per second, there being 24 teeth in the pulley. The condenser in the instrument was 1 mfd. approximately. The instrument was used as a sender and the experiments were intended to test its efficiency as a receiving apparatus. Accordingly, the connections were made as in sketch, the method of magnifying by oscillating transformer being made use of to increase sensitiveness. As far as practicable all connections and parts of instrument were used

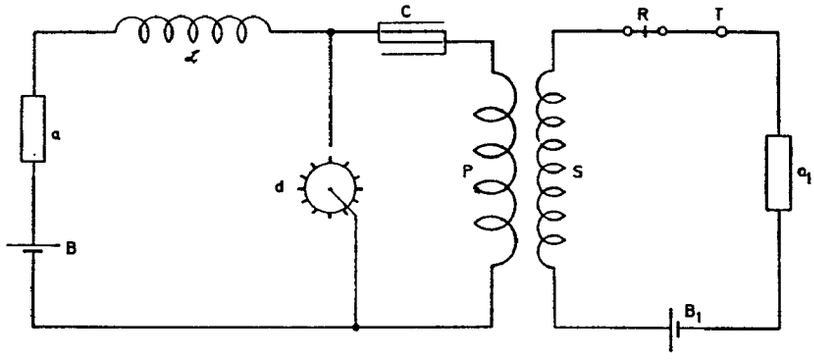

The connections of primary circuit including break remaining the same, only a battery *B*. (1—4 cells dry O.K.) and sensitive device *a* being inserted instead of a generator. In the high tension secondary were connected a receiver *R* (relay), telephone *T*, battery *B*, and another similar sensitive device a_1. The motor was driven from a small direct current generator which in turn was driven by the alternate current motor usually employed to drive the break disk of the large oscillator. This apparatus was extremely effective, merely the addition of small capacity on *a* was sufficient to make the receiver respond. Evidently this effectiveness is due to the efficiency of the oscillating transformer and excellent working and high frequency of the mercury break.

Experiments were continued for a short while with oscillator and extra coil. The frame of the secondary was repaired and a board for connections of the transformers put in place and other work took most of the day, it being late when the investigation was resumed. A netting of wire gauze (iron) had been placed around the opening of the roof to diminish danger of inflaming the building. But on the first throw of the switch the streamers and sparks darted against the netting a distance of about 12 feet and sparks were seen to go from netting on to the wooden structure of the roof. It was advisable to stop work and the roof was removed. Now the ball on top of the extra coil was connected to the latter by a wire No. *10*, 40 feet long, very heavily insulated with tape over the rubber covering. One turn on the outside and nearly another complete one in the inside were made and the end of the wire connected to the ball. The latter could not be lifted up and the experiment was tried with the ball in place. The streamers now appeared on the ball copiously when the current was turned on, their tendency being to go straight up

into the air. The longest were only about 4 feet as it was deemed unsafe to strain the apparatus higher until further provisious for safe working were made. The lightning arresters were observed but *no sparking*. This showed that the absence of sparks was not due to rain or moisture as was concluded yesterday, since the weather was very warm and dry.

Colorado Springs

Aug. 30, 1899

Experiments were resumed with resonating coil to be used in connection with receiving apparatus. The coil was wound a week before on a drum 25 1/4″ diam. of bicycle hoops and a thin board, the idea carried out before in New York being followed to make the drum with coil serve, at the same time, as a table for instruments. The drum was 3 1/2 feet high, only partially wound on upper part. The wire was ordinary magnet wire No. 20, 516 turns. The self-induction was approximately calculated from the following data: diameter of drum 25 1/4″ or 64 cm.; length of wound part 20″ or 50.8 cm.

$$L=\frac{4\pi}{10}\times\frac{\pi}{4}\times\frac{d^2n^2}{l}=\frac{d^2n^2}{l}=\frac{64^2\times 516^2}{50.8}=0.02 \text{ henry approx.}$$

Taking n approximately 50,000 per second it was close enough for the purpose to assume p=300,000.

The resistance of wire being 34 ohms we had

$$\frac{Lp}{R}=\frac{300{,}000\times 2}{3400}=177 \textit{ fairly good.}$$

The coil was now tuned with oscillator in response to a somewhat higher note with small capacity on free terminal, the other being connected to the water pipe. Sparks of 3/4″ were obtained while from the water pipe alone a very minute spark, scarcely perceptible, could be obtained. Induction from primary being carefully eliminated, the sparks were still 3/8″ long and white.

Colorado Springs

Aug. 31, 1899

Experiments were continued with the extra coil and secondary conditions as before. The ball in the center was connected again to the top of coil and elevated a little above the roof, the latter being opened as wide as possible. The experiments were begun in the afternoon while the Sun was very bright. Scarcely any streamers from the ball could be seen but occasionally sparks would go to the roof from the center wire leading to the ball. The distance was 12 feet. There was a pronounced tendency in the sparks to fly to the roof which might have been due to dampness of the latter owing to rain the day before. During

the few trials which were cut short because of the danger threatening from the sparks, the lightning arresters were observed but no spark was noted. In the forenoon the mains were tested and it was found that one of them was fairly grounded which to some extent also made the other defective. This probably was the reason why the sparks no longer appeared on the arresters.

A number of curious observations were made during the trials with the elevated ball. A fly was seen to light on the top of the ball and when the switch was thrown in the insect disappeared evidently thrown off with great force. Another such insect alighted on the under part of the ball, and the current being thrown in just about at the moment when the fly started off, the fly was seen to fall from a distance of about one foot from the ball straight down to the floor, evidently killed in the flight. Still more curious it was to see a moth at a distance of fully eleven feet from ball, near to the wooden frame fall straight down as the switch was thrown in. The strongly electrified ball evidently exercises a strong attraction on a small insect which is drawn towards it every time the ball is electrified. This was repeatedly tried.

An observation less amusing but more useful was that when the ball with its circuit were well tuned and *no streamers* appeared, owing to good insulation of leading cable — — there was a decided tendency to break the jars in the primary. Evidently, when there are no streamers the vibration is effected with lesser loss and hence there is a great rise of e.m.f. reacting upon the primary. This at least appears the most plausible reason for the phenomenon observed.

Light seems to interfere decidedly with the streamers from ball and wire and it is also unmistakably noted that the noise of the discharge is lessened when the sunlight falls upon the apparatus.

Spark gaps were established in a number of ways as by connecting both coil and secondary to ground and each to one of the balls and establishing a spark gap between the latter.

Finally the ball was again connected as before and elevated, a point being first placed on top to facilitate formation of streamers. It was curious to observe that the streamers were carried away horizontally, and eventually blown out by the wind. The resonating action was strong but the length of the streamers could not be estimated. From the leading cable the discharge would sometimes leap to a distance of at least 10 feet. The action of the wind suggests the idea of preventing the formation of wasteful streamers by a current of air.

Colorado Springs Notes

Sept. 1—30, 1899

The following items, partly worked out, omitted for want of time:

Sept. 9. Experiments to be made with st. waves. Exact distance measured to point from ground plate 1938 ft.

Sept. 10. Completed text on ways of producing electric oscillations for wireless telephoning etc. by a) insulation impairment b) change of pressure c) condenser shunt.

Sept. 30. Completed text on a) gass battery b) voltameter as detector

From 1—30, Sept. Method of increasing magnifying factor of res. circuits by cooling.

Colorado Springs Sept. 24. 1899.

MUZEJ NIKOLE TESLE

One of the difficulties in telegraphy and a drawback in practical introduction is the elevated terminal of capacity as proposed by me. It is difficult to elevate a structure to a desired height and keep the same insulated from the ground and with very powerful vibrations as here produced even an insulated wire leading up offers difficulties because of streamers which reduce the force and the effect at distance. I propose to overcome this by the following plan. A structure is to be elevated from the ground up to the desired height and an insulated wire from oscillator is to be brought up to a point of the structure and connected to the same or else brought into proximity as for instance when a spark is used. This point should now be so located that there is at the same moment say, a position maximum on top and a negative on bottom or ground; that is the top and bottom should be one half of wave apart or a multiple thereof.

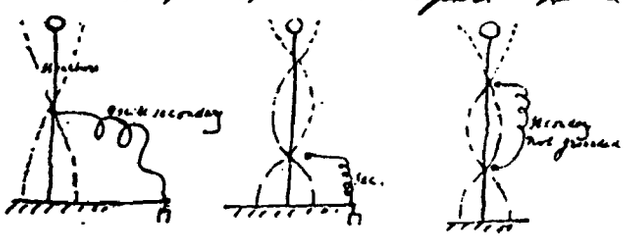

When secondary is grounded as usual it will probably be advantageous to make the wavelength in both systems so that they work in unison on the ground.

Colorado Springs

Sept. 1, 1899

Various ways of connecting instruments on receiving station experimented with and considered as to their merits:

Diagram 1. illustrates one of the earlier dispositions involving the principle, before described, of exciting by means of energy stored in the condenser. This principle has proved itself highly effective as it secures self-excitation and great magnification of an initial feeble effect. In Fig. 1 the defect is that no initial excitation of the condenser is provided for, which makes it difficult to employ a sensitive device of *very high* resistance which, for other reasons, is desirable. This fault is overcome in Fig. 2. by providing an additional battery B_1 for charging initially the condenser and thereby exciting device *a* to the point of breaking down. Still in the latter diagram there is the inconvenience that the relay is traversed by a pulsating current during the time when device *a* is not excited.

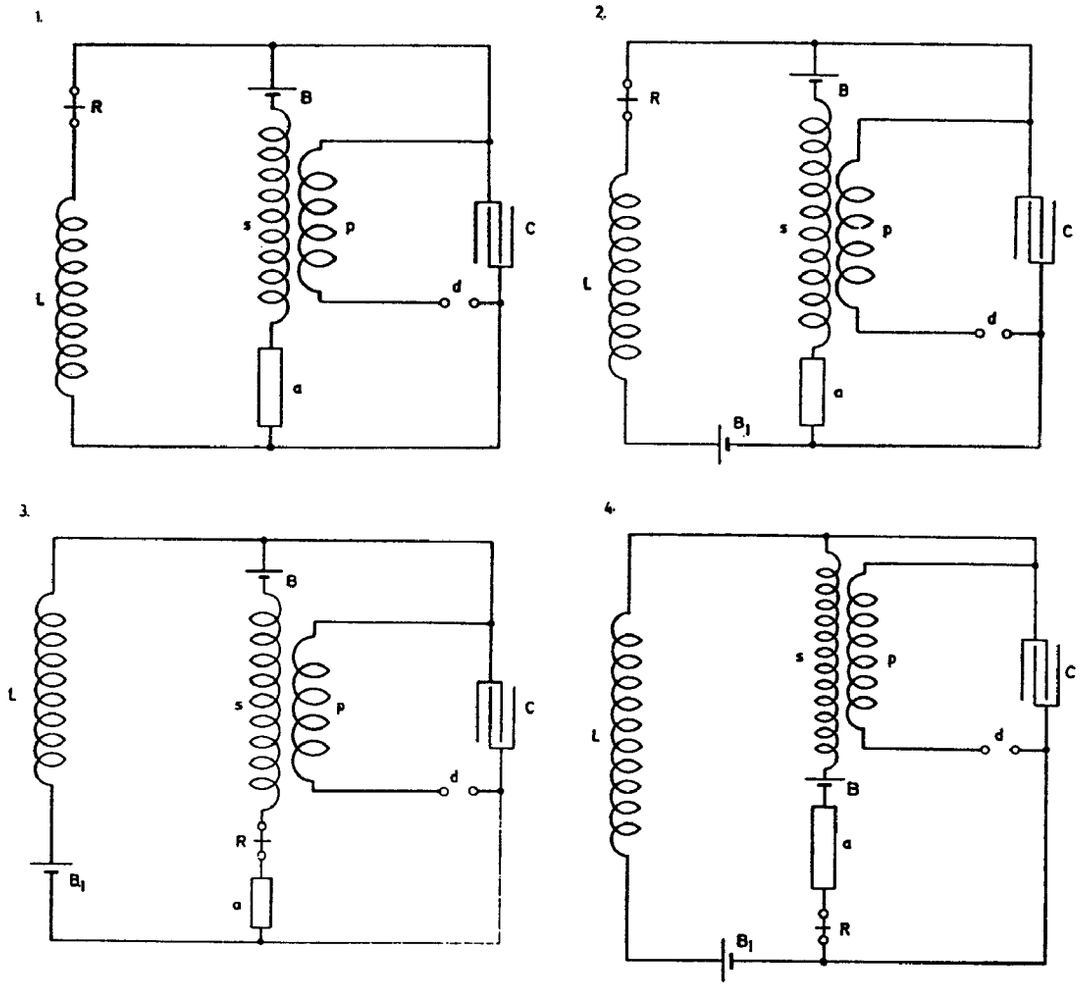

The improvement illustrated in Diagram 3. does away with this drawback and this makes it possible to adjust the relay much better. Still the relay by its self-induction is apt to interfere with the vibration of the tuned secondary *s*. This consideration led to the modification illustrated in Diagram 4.

In this case the battery was placed either near sensitive device *a*, as shown, or in series with the other end of secondary *s* and the rest of the apparatus.

To work best, however, it was recognized, that: there should be no capacity to speak of on the free end of the secondary which is connected to the sensitive device, and on the other end of the sensitive device there should be as much capacity as practicable. Various other considerations finally led to the adoption of the connection shown in Fig. 5 as the best suited so far.

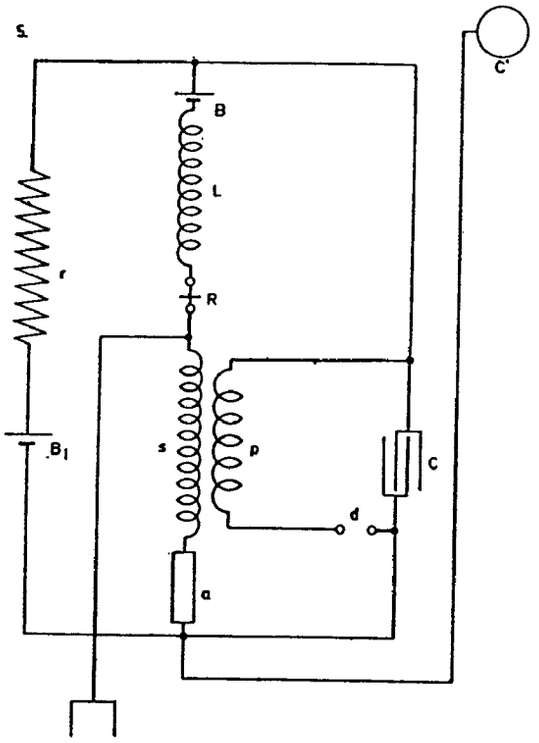

In this plan all the advantages so far aimed at are successfully realized. The secondary is *free* on one end towards device *a* and the potential rise can freely take place; the earth and air connections are both very advantageously situated; the condenser is excited exactly to the degree desired by adjusting resistance *r*. The vibration of the secondary is not sensibly affected by attaching the air line and capacity C', and the current through the relay is made small by opposing batteries B and B_1.

Colorado Springs

Sept. 2, 1899

The plan of connections of the receiving apparatus, which was last described, was modified as shown in the present diagram. The battery B_1 instead of being in branch including resistance *r* was included in the other branch circuit containing the condenser. Furthermore the batteries B and B_1 were disposed in a number of ways

and graduated with reference to each other to study the best conditions of working with the plan. The device *a* was here chiefly strained through the induced currents in *s* the strength of these being graduated by adjusting resistance *r*. Therefore the strain by the batteries themselves was insignificant. Now these batteries were connected either so as

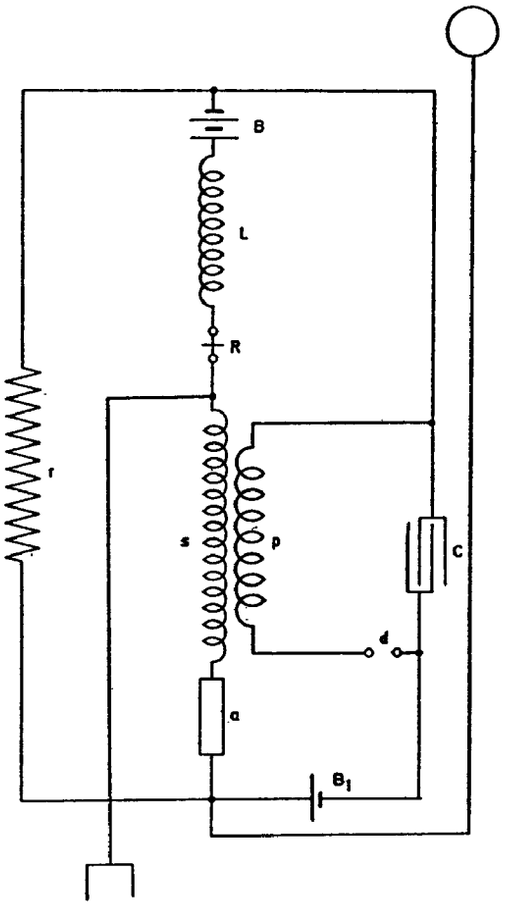

to add together in charging the condenser when device *a* was diminished in resistance, or they were made to oppose each other. In the former case a small diminution of the resistance of *a* tended to produce a change in the same sense and the apparatus possessed the feature of self-excitation, while in the latter instance when device fell in resistance, the condenser charge was diminished and the excitation ceased automatically. This secured small current through the sensitive device. Any condition could however be readily secured graduating the batteries.

Colorado Springs

Sept. 3, 1899

Experiments were resumed with oscillator the connection being as illustrated in diagram.

The extra coil and secondary were both connected to ground and on top of each a ball was placed of 38 cm. capacity. On extra coil, to facilitate the pumping of the spark

and thereby enable the balls to be placed at great distance, a wire was fastened to the ball. The spark gap being about 8 feet. As both oscillator secondary and extra coil vibrated the same pericd but were displaced in phase sparks passed readily and the vibration was that due to each separately, the harmonics being practically prevented to pass to earth.

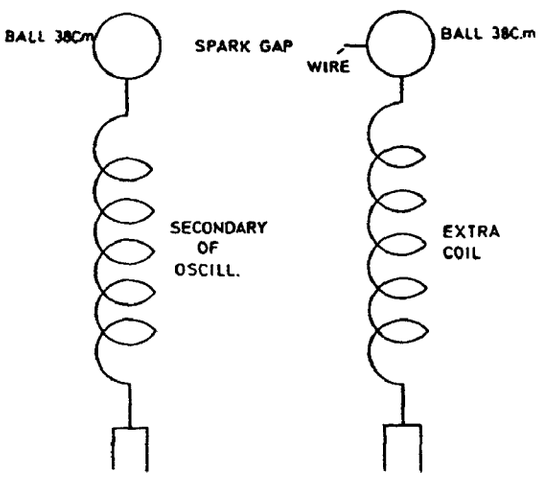

An experimental coil was then fastened to the water pipe with one end and the adjustment for the same period was made. The coil was so placed as to exclude any inductive effect from the vibrating system so that the vibration in the coil was due only to that transmitted through the water pipe. The wire on the coil was previously wound upon a drum approximately 25 1/4 inches in diameter, there being 516 turns of wire No. 21, res. 45 ohms all wound in a single layer. This coil gave on the free end — with induction from vibrating system aiding the vibration — a spark of 3/4"; with the induction eliminated the spark was fully 3/8" long. The spark on the water pipe itself was scarcely visible, say 1/64" long, so that the coil increased the pressure many times.

Now it was of importance to increase the magnifying factor $\frac{Lp}{R}$ and for the purpose of investigating the best conditions the same wire was wound on a form 22 1/2" diam., 1" wide, 1 1/2" deep. 18 layers were made there being 28 turns in each. The self-induction was now nearly 20 times greater, and as the resistance was the same $\frac{Lp}{R}$ was to be much greater. It was feared though that the effect of distributed capacity which was largely increased would be detrimental to the rise of potential on the end. This proved to be the case so that it appears again imperative to overcome also in the receiving circuit the distributed capacity. Various ways are now to be experimented upon with this object in view.

Colorado Springs

Sept. 4, 1899

Experimental coil wound on frame made of bicycle hoop 25 1/4" diam., 16 layers, 28 turns in each, 448 turns total, self-induction about 1/2 henry. This coil was wound very close to study effect of distributed capacity. It was connected for purposes of tuning to water pipe on one end the other being left free. From free end and water pipe short wires were run to a spark gap. The sparking distance was observed from free end to body of experimenter, next from watermain to bcdy, next between the two wires and finally with

body of experimenter connected to free end, the spark between the same points. As it was sure that the vibration of coil was too slow for the impressed vibration of approximately 50,000, wire was gradually taken off.

Number of turns on coil	Longest spark from free end to body of experimenter	Longest spark from water-main end to body of experimenter	Longest spark between the two ends of coil without capacity	Longest spark between the two ends of coil with capacity of experimenter on free end	Observation
I.	II.	III.	IV.	V.	VI.
448	1/8″	5/64″	scarcely visible	scarcely visible	
420	1/8″+*d*	5/64″	,,	,,	
392	1/8″+*d*	5/64″	,,	,,	
364	3/16″	3/16″	,,	,,	
336	3/16″+*d*	3/16″	small spark	small brighter spark	
308	1/8″	3/16″	,,	spark larger	
294	5/32″	5/32″	,,	livelier spark	
280	1/8″	1/8″	,,	,,	
266	3/32″	3/32″	,,	,,	

Indications up to present confirm detrimental effect of capacity. A coil was now added in series. This coil was one used often in New York and was wound on a drum 30″ diam. There were about 150 turns total length of wire 1125 feet. To this added the 266 turns of experimental coil giving length of 6.5 feet per turn made length 2100 feet for exp. coil or total 3225 feet. This was very *near quarter* wave length as it ought to be. Now results were

I.	II.	III.	IV.	V.	Observ.
266+150 *Exp. additional coil*	7/16″	3/32″	3/32″	3/32″ lively	

Experiments were now continued with experimental coil alone and showed

252	1/8″	1/8″ less *d*	small spark	small spark livelier	Observ. The distributed capacity unmistakably prevents rise on end.
224	3/32″ bright	1/16″ ,,	,,	,,	
196	1/16″	1/16″ less *d*	,,	,,	
168	1/16″	1/16″ ,,	practically the same.		

To observe better the end of coil which was before connected to earth (or water pipe) was now connected to a wire run from one turn of secondary, that is from the turn which was nearest to earth connection of secondary. The connection was in the previous experi-

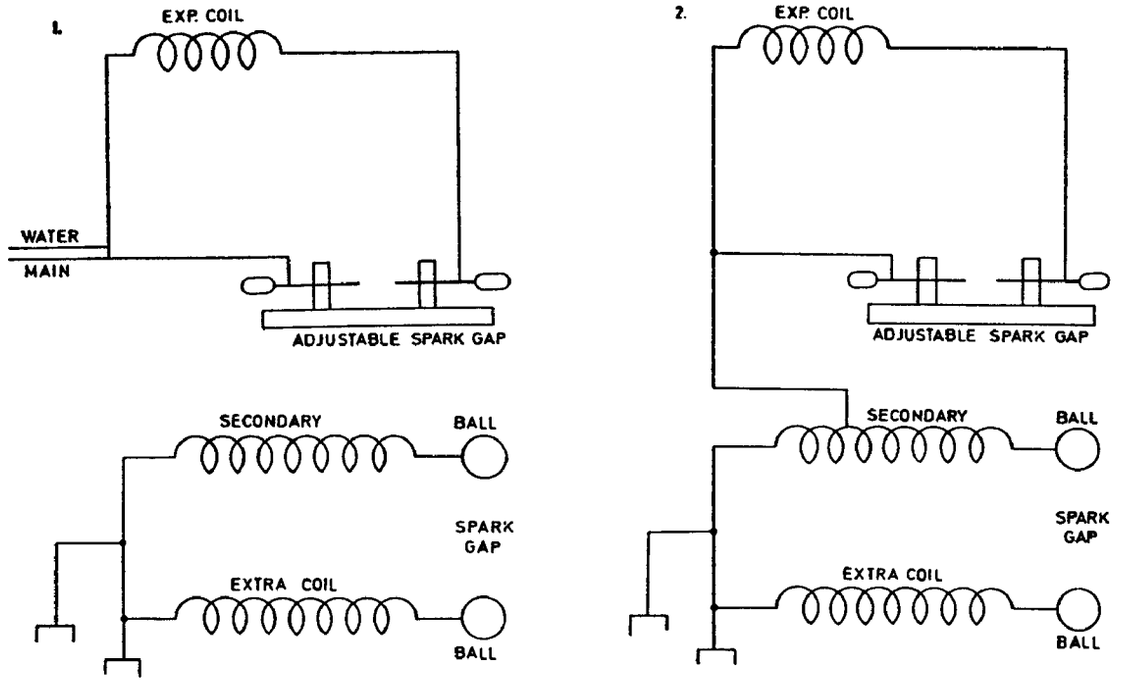

ments as illustrated in one, then it was changed to the connection shown in 2. Nothing was, in principle, changed by this connection, only a higher e.m.f. (initial) was obtained and the tuning was made easier. This I have found to be an excellent way to adopt in tuning coils. The results were as follows:

I.	II.	III.	IV.	V.	Observ.
168	3/4"	3/4"	very small spark	small spark livelier	When the wire was taken off down to
140	3/4"	7/8"	1/16"	,,	19 turns there was no spark between
112	5/8"	1"	stronger	,,	the rods even at a distance of 1/64" but when the hand
98	5/8"	7/8"	,,	,,	was approached to
84	5/8"	1"	,,	,,	free end of coil, sparks would be drawn 3/4" long
70	5/8"	1"	,,	,,	and then spark
56	3/4"	3/4"	,,	,,	would jump between the rods.
42	3/4"	7/8"	much stronger	much stronger	This obvious and easily explained.
28	3/4"	7/8"	5/16 lively	5/16 still livelier	
19	3/4"	3/4"	almost nothing	small spark	

The general conclusions already arrived at before were still further confirmed by these experiments.

They were: 1) distributed capacity must be done away with at any price; 2) the wire should have one quarter of wave length; 3) the last plan of tuning is the best; 4) harmonics appear prominently even under the conditions of these experiments (in the experimental coil the greatest spark between both ends of the coil was obtained when the wire was 200 feet long, this was just $\frac{1}{16}$ of the lenght of secondary); 5) it is most important to tune secondary and extra coil so that they are of the same period exactly, to avoid beats.

Colorado Springs

Sept. 5, 1899

Experimental coil freshly wound on old drum 4 ft. high. Wire No. 18 and a small part of No. 20 covered with wax.

Turns	467 No. 18 49 No. 20	Total 516

Plan of connections:

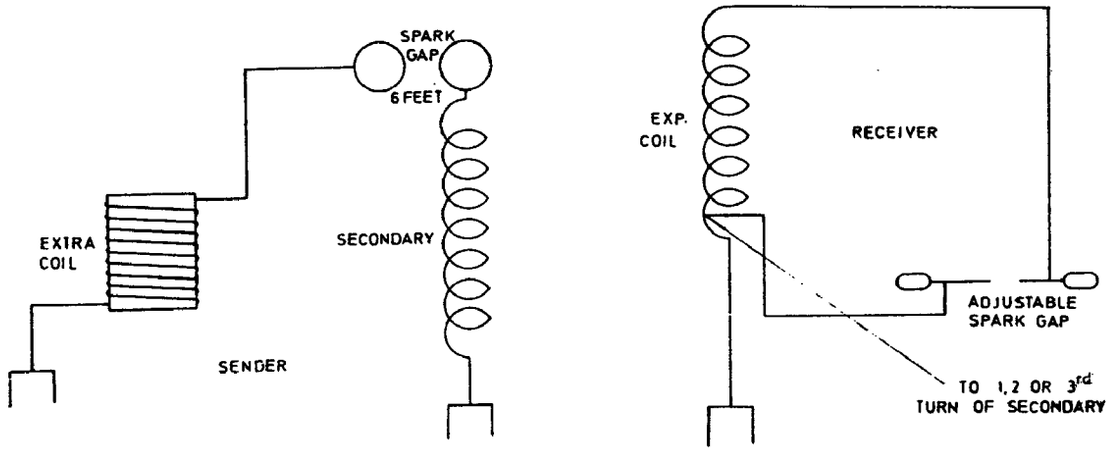

The coil had nearly 1/4 wave length and the response was at once good, a 6" spark being obtained from the free end, also between both ends of coil. The spark would have been probably longer but this was the limit to which the gap could be adjusted.

Measuring carefully the spark length to body of experimenter it was found that from the oscillator end (connection being made to 3^{d} turn) the spark was 1 1/8" long, while from the free end of the coil the spark was 5" long giving more than 4 times the former value.

As it was thought that the body of experimenter was of too large a capacity and affected therefore the vibration of the experimental coil — diminishing the potential, while it did not sensibly affect the powerful oscillator — a ball was fastened to an insulating

stand and spark length tried in this way. With a ball of 4″ diam. the spark from the oscillator end was 1/2″ while from the free end of the exp. coil it was 4″. A still smaller capacity was now used in the belief that perhaps the 4″ ball was too large but the experiments showed a contrary result. It was thought that the wave length being estimated from that of the oscillator and extra coil must be longer than that of the wire on experimental coil. This led to consideration of certain advantages of long waves allowing a great length of wire to be wound up on the experimental coil, this in certain instances overbalancing the advantages of the larger magnifying factor which the short waves offer.

The connection was now made to the second and then again to the first turn of oscillator secondary and, as even in this case the effects were inconveniently strong, connection was made to the water pipe to diminish impressed e.m.f. But even now the streamers would go over the spark gap. Several balls were now experimented with. Results were as follows:

Turns exp. coil	Spark from oscill. end	Spark from free end	Spark between terminals	Ball diam.
516	3/8″	1 1/2″	3 3/8″	no ball
516	1/8″	3/8″	5/8″	18″
516	3/16″	9/16″	1 1/2″	8″
516	5/16″	15/16″	1 7/8″	5″

It was now important to get an idea of the magnifying ratio and the spark was tried on the water pipe and on the free end of coil and the lengths compared. On the water pipe it was 1/64″ and on the free end 1 1/2″. This was fair but the coil was not yet quite well tuned. Completing the adjustment with more care the spark on the pipe was found 1/100″ and on the free end of the coil 2″. This was *quite satisfactory* but not the best by far.

Further efforts to tune still more closely resulted in producing a spark between rods 2 1/4″ and with the capacity of the experimenter on *free rod*, the same being disconnected from everything, 3 3/4″. The capacity in the primary oscillating circuit was now 5 tanks on each side and the self-ind. box 7 turns *in*. This capacity did not secure the best vibration of the sender which was a little slower but was suitable for the coil and no further attempt was made to tune still more advantageously by winding up more turns on the experimental coil. An important fact not to be forgotten is that the experimental coil responded without *any spark* passing between the oscillator balls. Obviously it was seen that, although the experimental coil during the tuning was placed so as to avoid induction of the primary system, the same still existed to some extent. To ascertain how much induced e.m.f. was set up spark was first tried between the terminals of the coil without ground connection and the spark obtained was about 1/64″. Now the coil was reversed so that the induced e.m.f. was against the directly communicated e.m.f. through the water pipe and it was found still that a spark of 1″ between the rods was obtained. The same would have been probably longer had it not been for the fact that the end of the coil was influenced by the metal of the sink which was near. As this could not be helped the effect could only be approximately estimated. All this showed that the induced e.m.f. from the primary system was not to any considerable degree responsible for the rise of pressure on free end of experimental coil.

The coil (experimented with) was now taken outside the building and one end connected to a water pipe running across the field. At a distance of 250 feet from shop or rather from the connection of secondary to ground a spark between the rods 1/4" long was obtained and when the body of the experimenter was connected to the insulated sparkrod the spark was 1". At a distance of 400 feet the spark without capacity was still 1/8" and *with* capacity of experimenter 1/2" although at one place the pipe was buried for 30 feet in the ground. Strong shocks were obtained at that distance before the point of connection.

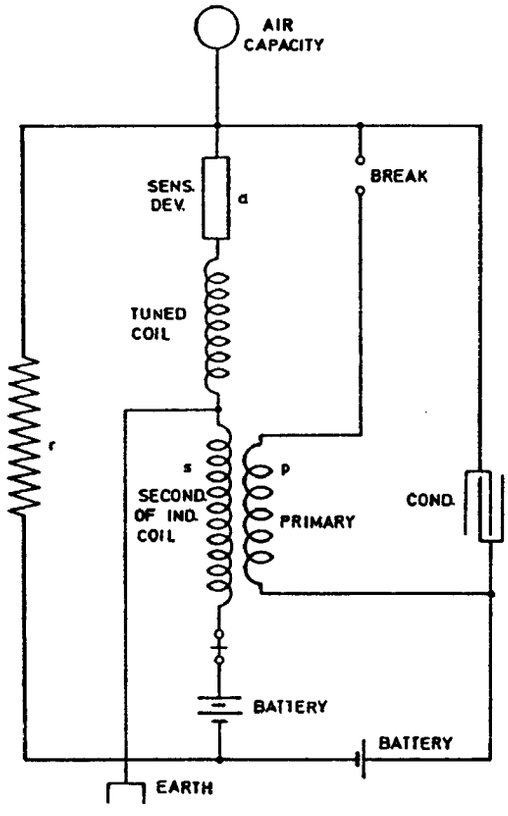

The experiments having shown the effects of distributed capacity to be very hurtful if not fatal to success with tuned coils, for convenience a winding was adopted to give very small capacity and thus the greatest possible length of wire and highest potential on the free end without *any capacity*. Capacity on the end was not needed since the free end is connected to a sensitive device practically without capacity. Since it was desirable to get the greatest possible rise of pressure on this device, it was much better to tune for a condition without capacity on the free end, for any capacity would cause diminution of pressure since the amount of energy was fixed. But wound in this way the tuned coil was not quite suitable to serve at the same time as secondary of the induction coil and, to utilize older apparatus, finally the connection shown in diagram on the left was adopted, which was found to be best.

Colorado Springs

Sept. 6, 1899

Experimental coil for receiving apparatus with short waves. These were produced in the following manner: the extra coil, repeatedly described, was connected in series with the secondary of oscillator, both being first tuned to the same period so that there was a nodal point on the place of connection. The tension on extra coil terminal (a ball of 38 cm. capacity) was over 3 million volts, as was evident from streamers from ball. At a distance from the extra coil (8 feet) another ball 38 cm. capacity was supported, and this ball was joined by a heavy cable 400,000 circular mills section to the ground. The cable was 120 feet long and was not straight but made 3 small turns about 4 feet diam. The rest was practically straight. As the ball connected to the thick cable could not be elevated as high as the other ball of equal size on top of the extra coil a spark-gap was established as indicated in sketch. A small ball was joined to the cable leading up this ball being placed at about the height of the large ball connected to the thick cable. In estimating the vibration of the system comprising the large ball and thick cable leading to ground it was assumed for the present that the large cable was straight and self-induction calculated on this basis would, of course, give a smaller value, but this was thought sufficient to give the first idea as to how much wire should be placed on receiving coil. Assuming the cable straight we have

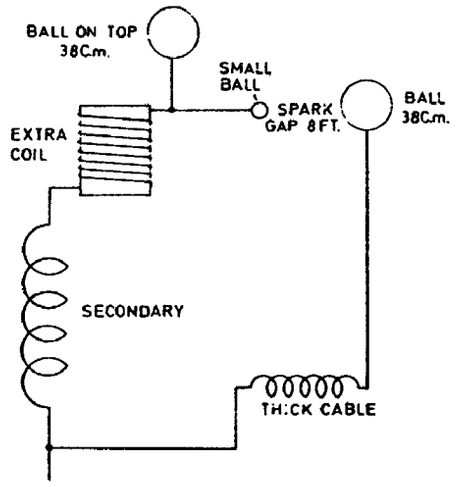

$$L_s = 2\,l\left(\log_e \frac{2\,l}{r} - 0.75\right)$$

$2\,l = 240$ ft $= 7315$ cm. approx.
$r = 0.64$

$\frac{2\,l}{r}$ approx $= 11{,}600$

$\log_e \frac{2\,l}{r} = 9.6$

$n = 3 \times 10^6$

These figures gave approx.
66,000 cm. $= L_s$

From this

$$T = \frac{2\pi}{1000}\sqrt{\frac{38}{9 \times 10^5} \times \frac{66}{10^6}}$$

$$T_{\text{approx}} = \frac{1}{3 \times 10^6}$$

Now λ would be $186{,}000 : 3 \times 10^6 = 0.062$ miles or 3273 feet. Say $\frac{\lambda}{4} = \frac{3280}{4} = 820$ feet. This wire is to be wound on a drum 10″ diam. Therefore, we want 328 turns *at least*.

Colorado Springs

Sept. 7, 1899

A new experimental coil wound with 400 turns on same drum 10″ diam. 66″ long.

The coil when attached to a water pipe gave on free end spark 5/8″. To test whether the wave length is greater 72 turns were added and sparks were decidedly stronger. But adding 50 more turns the effect was weaker. The self-induction was now calculated to get a better idea of the probable wave length and L was 2,000,000 cm. approx. As with this L the capacity would have to be extremely small, far less than the coil evidently had, it was safe to proceed in taking wire off. Gradually shortening the wire increased the spark length until at 405 turns and a capacity of 15 sq. inches tinfoil the longest spark was obtained about 1″. Calculating from wire length $\lambda/4$ was 1010 feet approx. giving n=245,500 per sec. *approx.*

As there was a possibility of confounding the true vibration with a harmonic, wire in definite lengths was taken off. With 270 turns and small capacity on end the effect was still good. From that point on the diminution was steady.

The wire *No. 20* was now taken off and wire No. 18 wound in place to study the effect of diminished resistance. New exp. coil wound on drum 10″ diam. used before. It was estimated that for the vibrating system before described, comprising ball 38 cm. capacity and 120 feet cable 400,000 c. mills, about 400—420 turns would be needed. There was wire enough for 495 turns. The spark was taken to the body of the experimenter,

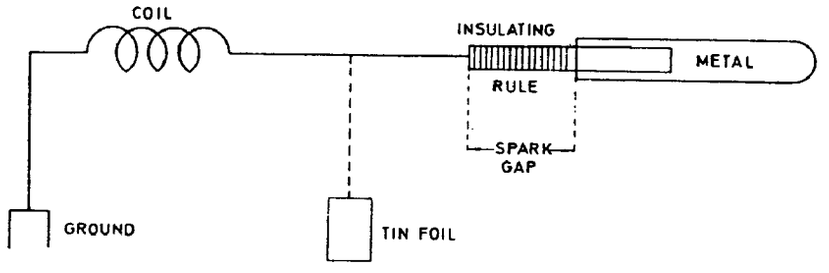

the length being at once read off by a simple arrangement comprising a small rule of insulating material and a metal strip, the position of which was adjustable relative to end of the insulating rule. The metal strip was held in hand and the end of the insulating rule was maintained almost in touch with the wire forming the free terminal of the coil which was carefully placed in the proper position such that there was *no induced* e.m.f. from the primary but only through the ground connection could the coil be excited. The connection of coil and manner of reading off spark-length is indicated in the above diagram.

Results:

Turns	Spark to body of experimenter	Spark to body of exp. with small capacity attached to end of wire
495	3/8″	much less
470	7/16″	,,
460	7/16+1/64	,,
450	7/16+1/32	,,
440	9/16	1/2″
435	9/16	1/2″
430	almost 11/16″	1/2″
425	3/4″	1/2″
420	3/4″ full	1/2″
415	7/8″	1/2″
410	1″	9/16″
405	1 3/16″	5/8″

With 405 turns the limit was nearly approached. With 400 turns the spark without capacity was 1 1/4″ and with tinfoil on wire 5/8″; with 395 turns the former was 1 1/4″ the latter 5/8″ and with 390 the same also, with 385 practically the same. The system still needed a small capacity for when a hand was held at a distance of about a foot a spark of 1 3/8″ could be obtained.

These data give wave length.

Colorado Springs

Sept. 8, 1899

In some previous experiments coils were used wound on a drum 10″ diam. but the inductances were not measured as the changes were made too often. The following data of a new coil built for similar purposes will be useful in connection with the preceding experiments.

The coil was wound on a new drum 10 5/16″ diam. and 41 1/4″ length. There were 550 turns of No. 18 wax-covered wire.

Data for calculating inductance

diameter of coil $d=10\ 5/16''=10.3125''=26.19$ cm.

$S=\frac{\pi}{4}d^2=0.7854\times 685.9=538.7$ cm.sq. $\qquad N=550$

$l=41.25''=104.77$ cm. $\qquad N^2=302{,}500$

$$L=\frac{4\pi}{l}N^2S=\frac{12.5664\times 302{,}500\times 538.7}{104.77}=12.5664\times 302{,}500\times 5.14$$

$L=$**19,538,800 cm.** or **0.019539 henry** approx.

following readings to measure the inductance were taken:

E	I	ω	R	
117	6.2	880	9.586	average of three readings practically the same.

From these data

$$\frac{E}{I}=\frac{117}{6.2}=19 \text{ approx.} \qquad \left(\frac{E}{I}\right)^2=361 \quad R^2=91.89$$

$$\left(\frac{E}{I}\right)^2-R^2=269.11$$

$$L=\frac{\sqrt{269.11}}{880}=\frac{16.41}{880} \text{ or}$$

$L=0.01865$ henry $=18{,}650{,}000$ cm.

Colorado Springs

Sept. 11, 1899

Experiments were continued with apparatus before described and the effects outside at a distance investigated, the chief object being to establish nodal points on earth's surface. The transmitting apparatus was one giving more rapid vibrations and was improvised as indicated in the left sketch.

The apparatus for investigation comprised the ten" drum, before referred to, wound with 395 turns wire No. 18 B. & S. and to increase magnifying factor another layer was wound on top, thus doubling the section. It was found that the scheme of double windings is not a good one because the e.m.f. in both wires are apt to be unequal and it is more difficult to make adjustment. The connections of apparatus were as indicated in the right sketch.

The secondary of the induction coil was connected between the two legs of the receiver, this being convenient for eventually reversing. A high self-induction L was provided to give initial excitation but the apparatus worked also without it. The batteries B and B' were connected both in the same way and opposite, the former giving best results. The tests showed that without *any* capacity or wire l the disturbances were recorded about one mile away; only the ground connection was essential as the waves were still fairly long, about 4000 feet (approx.)

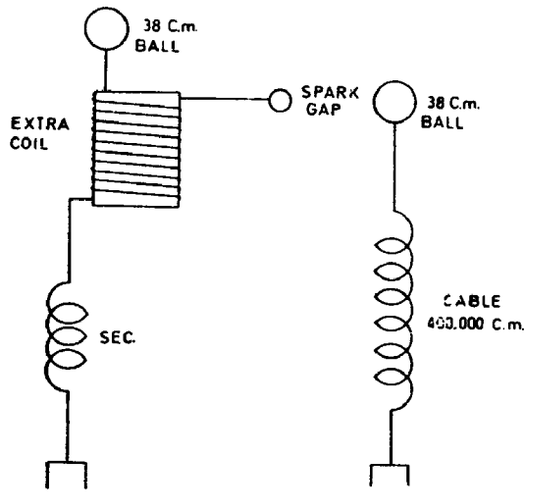

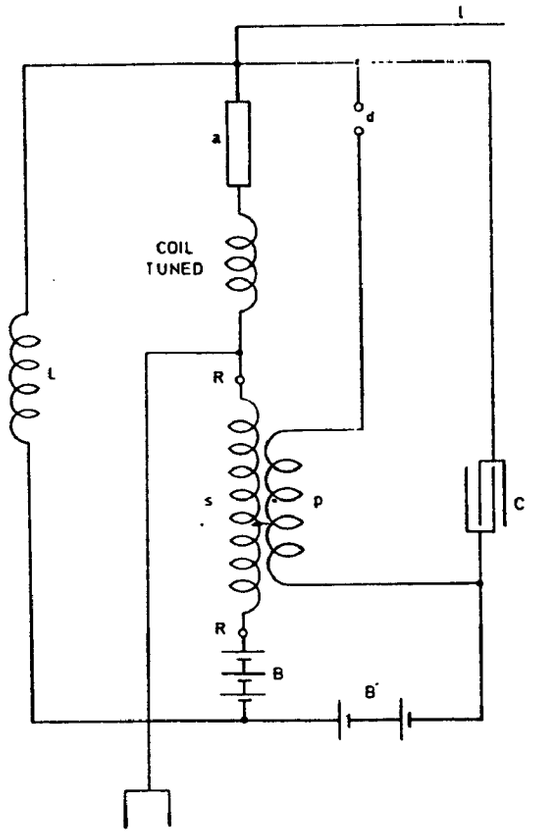

Colorado Springs

Sept. 12, 1899

Experiments were again resumed after some changes for the better had been made. The secondary was reduced to 26 turns and the adjustment was so made that but little self-induction remained in the self-ind. box and all tanks were used. The best condition was obtained with 8 tanks on each side and self-ind. on sixth turn. The extra coil was now adjusted to the same vibration. As with the ball lifted up the vibration was somewhat too slow for the secondary, the ball was lowered to about half the height when resonance was secured with nearly the same capacity and self-induction in primary circuit as corresponded to the vibration of the secondary. Although the agreement was not quite close, the effects were remarkable. The streamers went from ball 38 cm. capacity on top as freely as though it were a small one, this showing that the e.m.f. was far in excess, possibly many times the 3 million volts which theoretically are necessary to produce streamers from a ball of this radius of curvature.

Colorado Springs

Sept. 13, 1899

On Westinghouse Transformer the following change was made. The wire was cut in the middle and the two parts connected as shown in diagram: the end of the first half was connected to the tank which as before remained connected to the ground. The second half was left intact. This mode of connecting afforded the advantage of connecting the two parts in multiple arc for 22,500 volts or 30,000 volts — thus providing double current capacity. This was recognized as necessary as the one half previously used did not load the jars quite fast enough as was evident from the measurement and calculation of constants. When the parts are used in multiple arc the connection is as illustrated by - - - - - - - lines. When the old connection was desirable the dotted connections were taken off and the connection indicated by —· ·—· ·— line.

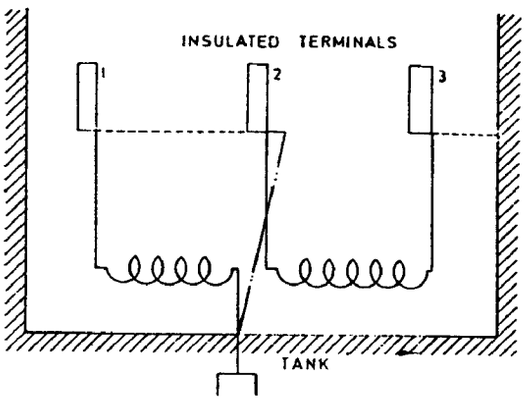

A further change was made today by substituting for the 5″ pulley on the alternating motor another pulley of 6″. This gives now $\frac{6}{2} \times \frac{2100 \times 40}{60} = 4200$ breaks per sec. The tests showed best results with secondary of oscillator, 8 tanks on each side self-ind., *6* turns in. Streamers were all along on the top wire which was raised today, *very strong*, more so than before.

Colorado Springs

Sept. 14, 1899

Experiments continued with the object of completing adjustments of secondary and extra coil with *ball elevated* to the highest position.

It was found that the capacity necessary in primary for resonance with extra coil was increased 25% when ball was lifted about half way. This gave the basis for the calculation showing that about 10 turns from the extra coil had to be taken off to give the same vibration with ball elevated to top position. All in all nearly eleven turns were taken off and it was found that the vibration came out very closely as estimated. The resonance of secondary was obtained with all jars or tanks (8 on each side) and *6 turns* self-induction, while resonance of extra coil with ball elevated took place with all tanks likewise and 4 turns self-induction. The coil was still a little faster than the secondary. When both were connected in series the effects were magnificient, streamers up to 12 feet from the ball. To get best effect a middle value of self-induction had to be inserted, but although with this number of turns (about 4) both the secondary and extra coil were weakened individually, their joint effect was much stronger. This showed importance of very *close tuning*.

Colorado Springs

Sept. 15, 1899

As it was impracticable in the form of apparatus used in some of these experiments to insulate the sensitive device from the break, a number of arrangements were adopted to dispense with this necessity. Some are illustrated below:

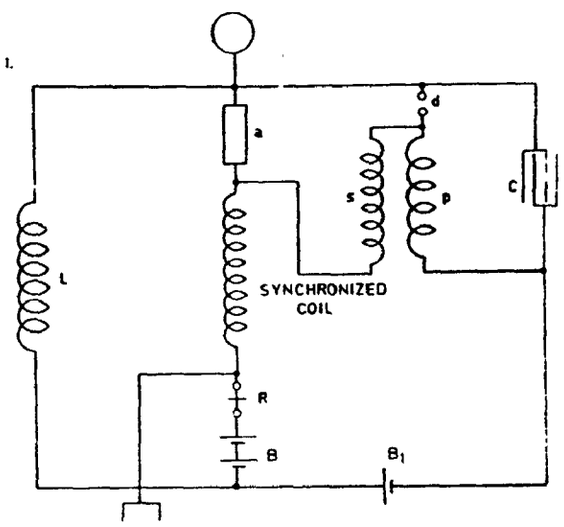

These diagrams are self-explanatory. In all of them both the secondary coil and synchronized coil have their ends free for the purpose of enabling great size of pressure. This has been found a great advantage as has also the construction of a resonating coil in which distributed capacity is reduced to minimum.

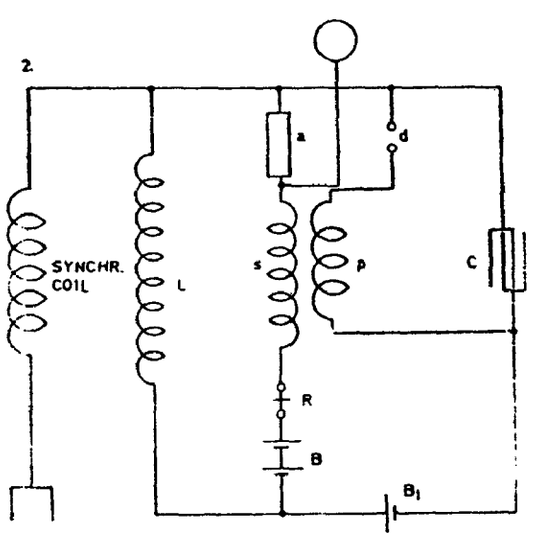

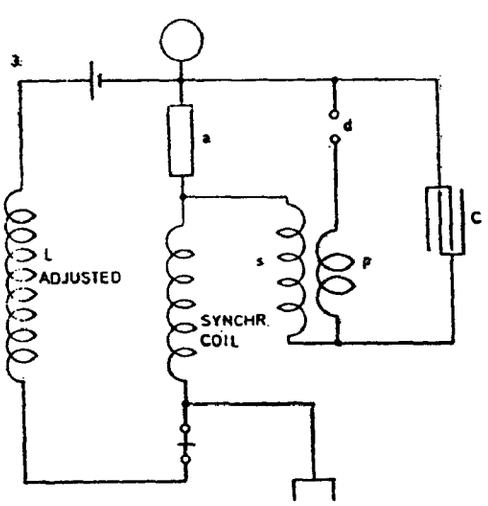

In some of the above arrangements the secondary coil was dispensed with and a part of the synchronized coil utilised to give initial excitation. It was found in these experiments that the primary must be for the best results always on the side near the ground connection as otherwise the influence of the primary is detrimental to a great rise. In one instance results were remarkably good with ratio of transformation 1 : 250, that is two turns of primary and 500 turns in synchr. coil.

Colorado Springs

Sept. 16, 1899

Further experimentation led to adopting one of the two arrangements illustrated according to whether an independent induction coil was used or not. The induction coil secures the advantage that the synchronized coil need not be touched and the apparatus is made suitable for any coil. On the other hand to use the synchronized coil itself has the chief advantage of having the coil entirely open. This latter advantage is secured to a large extent also when an independent induction coil is used, as in following diagram (1): The lettering is as in previous diagrams. A small condenser C_1 is connected to secondary to allow easy passage to the high frequency currents from the ground through the synchronized coil to the sensitive device and wire or capacity in the air.

Diagram two shows manner of connecting when the synchronized coil itself is used as the secondary of the induction coil. In this case the primary consisting from 1—5 turns or so is placed near the ground and the tuning is effected with *all apparatus* mounted together except sensitive device.

This seems best so far judging from tests.

1.

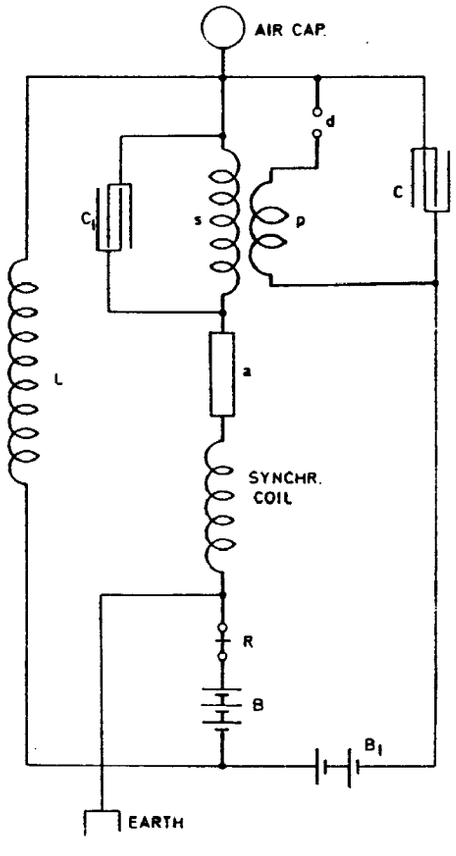

2.

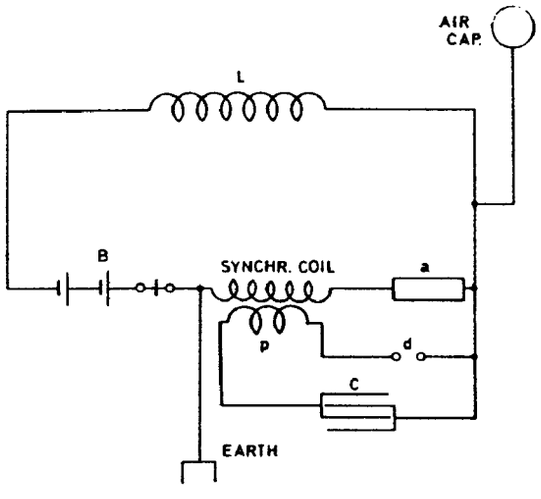

Remark: Another battery is sometimes placed in synchr. coil circuit (this is not shown).

Colorado Springs

Sept. 17, 1899

To suit the two boxes which were made some time ago for the reception of the receiving instruments in easily portable form a number of connections were adopted. These boxes are 9″ wide, 14″ long and 10″ high overall. In the lower part was placed the induction coil, batteries, condenser, resistances and cell. A board was provided to close up this part and on the board was mounted: sensitive relay, clockwork driving break and sensitive device, also a special circuit interrupting device. These boxes were merely made for the

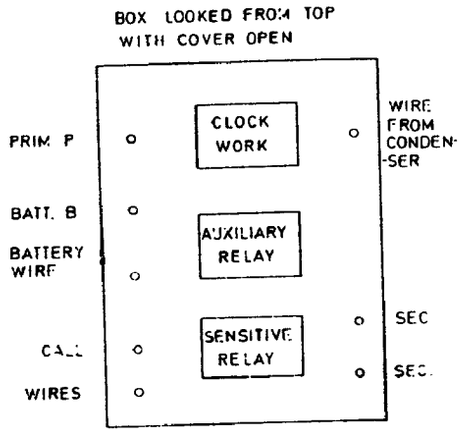

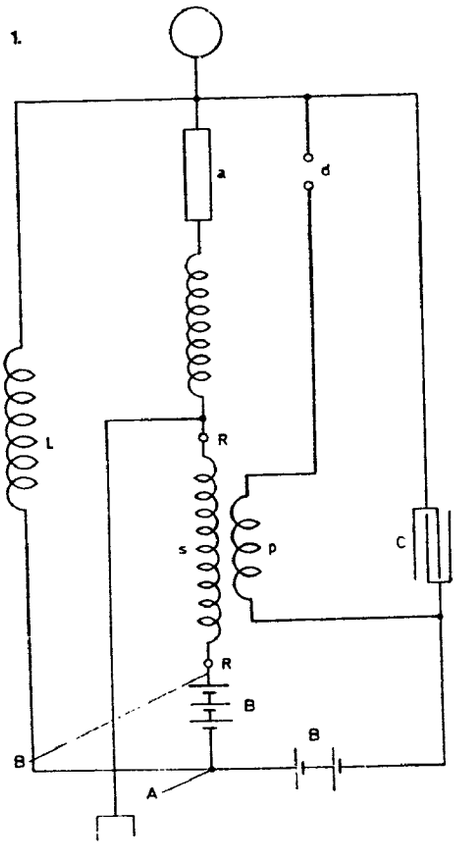

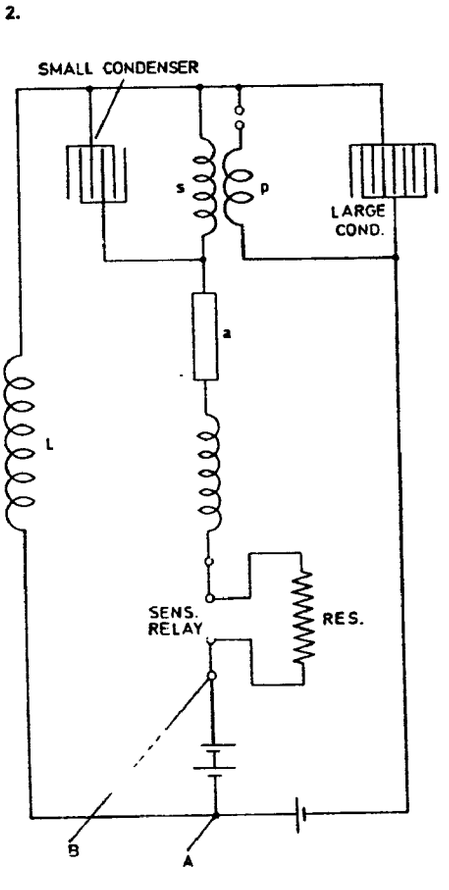

investigation outside and such use. The synchronized coil was wound in one instance around a drum 10″ in diam. and about 4 feet high from the ground and carrying on top a board for placing the box with the instruments and supporting a light rod for air or capacity wire. In another form of apparatus the synchronized coil was wound on drum of 2 foot diam. and 18″ high, which was supported on a tripod of photographic outfit.

These two connections illustrated in Diagrams 1. and 2. were found best suited. The small condenser around secondary *s* comprised only a few sheets of mica and sufficient to let the currents of a frequency of 50,000 per sec. pass through easily.

Colorado Springs

Sept. 18, 1899

Experiments were resumed with all transformers in place, high speed break and connection in multiple arc of West. Transformer. The object was to further test the intensity of the vibrations produced particularly without spark. The connection was as in diagram. It was though that in this arrangement, which was dwelt upon before, the disturbances were produced more economically than when using a spark discharge. The experiments fully confirm this. In the tests the capacity of the two balls of 18″ diam. did not very materially derange the adjustment and period of the circuit. This is to be expected; as for the secondary the capacity was far too small and on the other hand the independent vibration of the extra coil could not be materially interfered with since the condenser formed by the two balls and zinc plate allowed free passage of currents to earth. Now the important thing was to decide whether it is better to make length of extra coil one half or one quarter of wave as before. This to be thoroughly investigated. The working was excellent with 1/4 wave length.

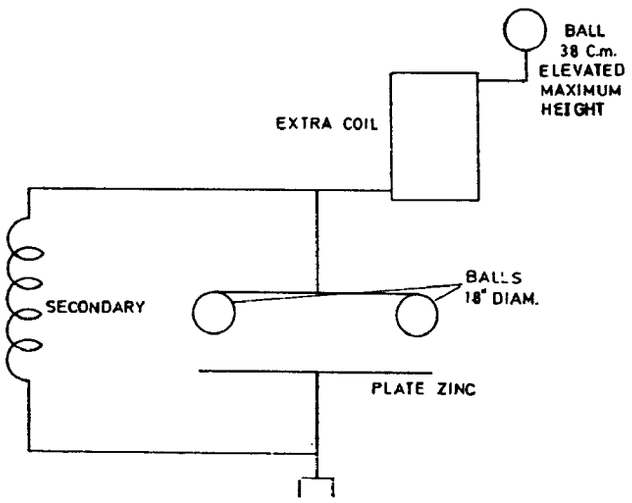

Colorado Springs

Sept. 19, 1899

Various arrangements with oscillator and extra coil for production of most powerful disturbances.

All of these arrangements have been experimented with and described before, and so far the plan illustrated in Diagram 4. seems to be best. In Fig. 1. the extra coil is merely a means of increasing pressure on the end. In Figs. 2. and 3. the vibrations through the

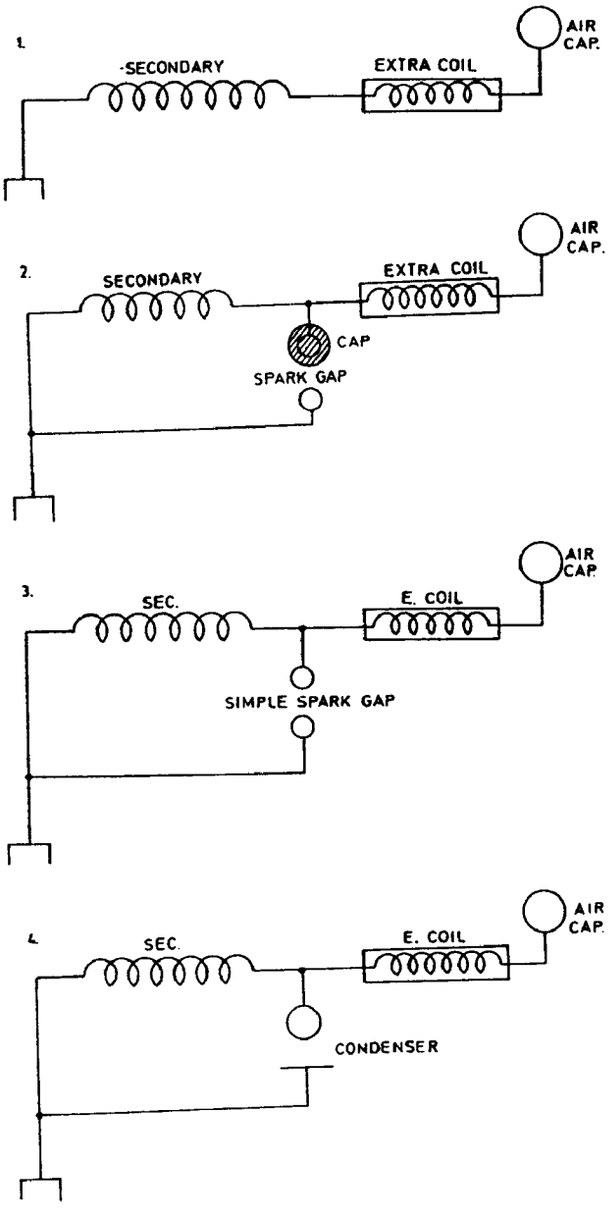

ground are intensified by the extra coil working directly on the ground either through a gap with capacity or without same. In all cases it has been found important to have the two systems vibrate in synchronism. The same considerations apply to Diagrams 4, 5 and 6. The plan in Fig. 4. being found best, the question is what is the best length to give to the wires.

With each secondary and extra coil having one quarter of a wave length the action on the condenser is not most intense. With the extra coil 1/2 wave length and the secondary

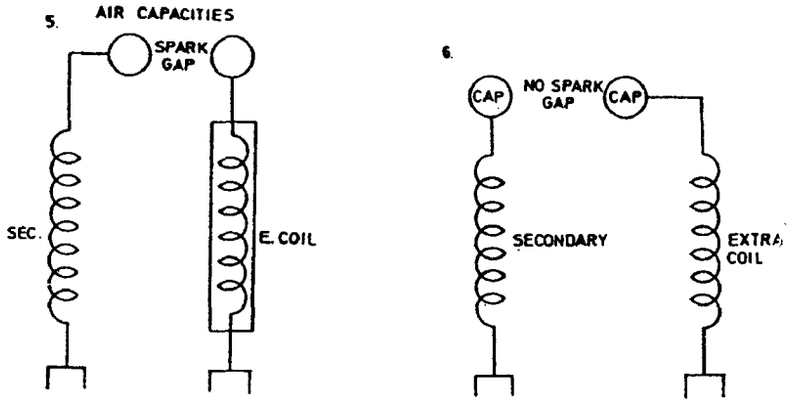

1/4, they both cooperate on the condenser producing on the ball a much greater pressure. This appears the best relation in Fig. 4. In Fig. 5. and 6. it is found best to make extra coil 3/4 wave length and the secondary 1/4 for obvious reasons.

Colorado Springs

Sept. 20, 1899

Consider a form of oscillator of great simplicity particularly adapted for telegraphy similar to type exhibited before Am. Ac. of Science. A coil of high self-induction is connected in series with a condenser and across the condenser is placed a break generally in series with the primary of the coil. Very sudden discharges are produced when using a fine stream of electrolyte or mercury to effect shortcircuit. The stream is broken by condenser current. The plan followed for some time was to produce the stream automatically by a magnet worked by a key. The connections are shcematically indicated in the diagram.

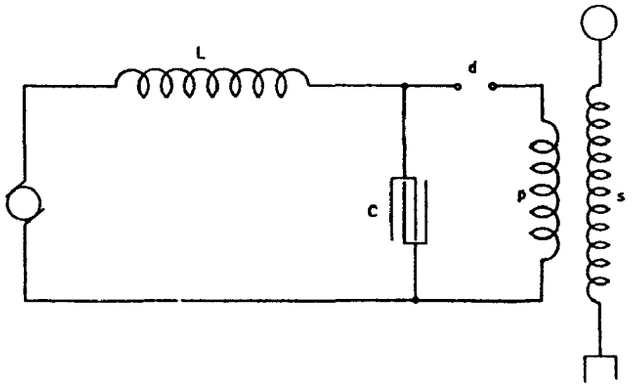

The question is to get the proper capacity of condenser, the amount of self-induction and other particulars. The secondary of the oscillator may be connected as shown to the ground and elevated object of capacity or else a spark gap may be used.

If R be the resistance of charging coil and L the self-induction and E the e.m.f. of the generator the maximum current that could flow through the coil would be $\frac{E}{R}$, but as the stream has a resistance r the maximum current will be $I=\frac{E}{R+r}$. The moment of the coil will be $\frac{1}{2}I^2L$. The condenser will be able to store each time an amount of energy $=\frac{E^2C}{2}$ and we must have $\frac{1}{2}LI^2=\frac{E^2C}{2}$. This gives for C value $C=L\left(\frac{I}{E}\right)^2$ but $\frac{I}{E}=$ $=\frac{1}{R+r}$ hence $C=\frac{L}{(R+r)^2}$. Now to obtain frequency of break we should calculate the time sufficient to evaporate a portion of the liquid column. This we can find easily from dimensions of column and its resistance, specific heat and the amount of energy which is passed through it.

(This to be followed out.)

Colorado Springs

Sept. 21, 1899

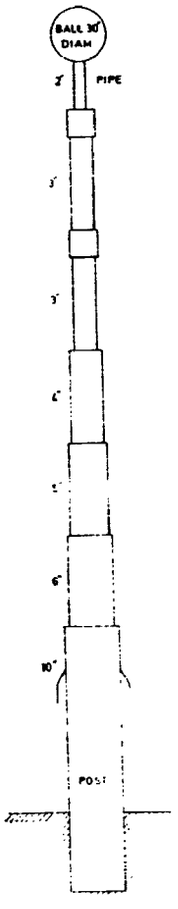

Proposed structure to elevate terminal to a height of 140 feet from ground.

On a telegraph post very strong and reaching nearly to the roof of the building is to be placed a cap consisting of a pipe 10″ diam., about 2 feet long with a coupling for a 6″ pipe. The cap will widen out at the bottom so as to keep the wood safe against the streamers.

The pipes come in lengths of 20 feet. This will give roughly 120 feet of pipe plus cap and timber, at least 20 feet, all in all 140 feet.

The approximate area of pipe above the roof will be: $\pi\times20\times12(6+5+4+3+3+$ $+2)=17{,}332$ sq. inches or 120 sq. feet. The ball having nearly 20 sq. feet. We shall have 140 sq. feet+cap. There may be possibly 150 sq. feet with all joints. The electrostatic capacity will reduce turns on coil to probably less than one half.

The wind pressure will be considerable but except for an unusually strong wind it will be fairly safe.

Colorado Springs

Sept. 22, 1899

The construction of new secondary for oscillator was begun this morning. The plan of tapering coil before used was abandoned as it was decided to obtain effects by the extra coil, this making it desirable to obtain better energy transfer from primary to secondary and if possible increased impressed e.m.f. on extra coil. The mutual induction will be much better and the oscillator more efficient.

The diameter of the new coil is to be exactly 15 meters inside of wire or about 49.25 feet. Two turns of primary are to be used as before, generally connected in multiple. Provision is made for 48 turns of secondary. Twenty two of the new turns will be equivalent to the 25 turns used last on tapering frame. The frame is being built up as in sketch. The primary cables separated by pieces 1 1/8" thick. The secondary wire No. 10 used before to be wound in grooves provided in mouldings as shown. Two groovers were provided in each moulding this making the work simplest. Space was provided for two wires in each groove as it might be found later necessary to double copper. Primary and secondary are to have same amount.

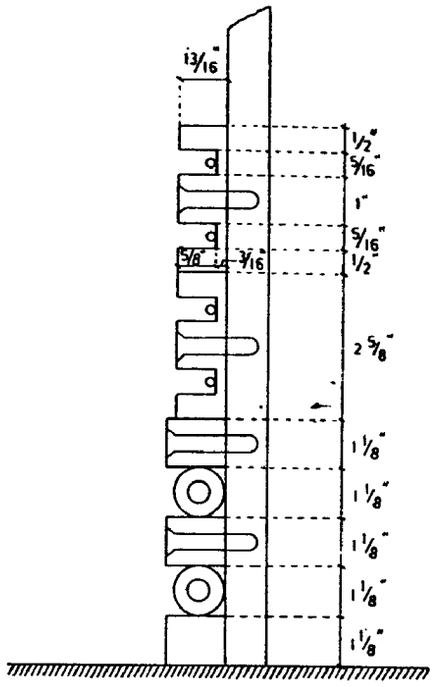

Colorado Springs

Sept. 23, 1899

For best results the copper masses in primary and secondary of reconstructed oscillator should be equal.

There are two primary cables generally connected in multiple arc. These cables each have 37 wires No. 9 B. & S. The area in mills from table of wire No. 9 is 13,090, the total section of one cable being therefore

$$\left.\begin{array}{r} 13{,}090 \times 37 \\ \hline 39270 \\ \quad 91630 \\ \hline 484{,}330 \end{array}\right\} = 484{,}330 \text{ c. mills}$$

or

$$\left.\begin{array}{r} 484{,}330 \times 0.0005067 \\ \hline 2421650 \\ \quad 2905980 \\ \quad\quad 3390310 \\ \hline 2454100110 \end{array}\right\} = 245.41 \text{ mm. square}$$

Taking one wire in each groove (No. 10 B. & S.) we have for 48 turns 10.380 mills being the section of wire No. 10 total section reduced to one turn

$$\left.\begin{array}{r} 10380\times 48 \\ \hline 41520 \\ 83040 \\ \hline 498240 \end{array}\right\} = 498{,}240 \text{ c. mills or}$$

$$\left.\begin{array}{r} 498{,}240\times 0.0005067 \\ \hline 2491200 \\ 2989440 \\ 3487680 \\ \hline 2524582080 \end{array}\right\} = 252.46 \text{ mm. square. That is very nearly the section of primary cables.}$$

Therefore, if two primary cables are used there should be two wires in each groove of the secondary as provided for. The total section of primary will then be 490.82 sq. mm. and of secondary reduced to one turn: 504.92 sq. mm., but as the wire is slightly stretched the sections or masses respectively will be more equal.

Colorado Springs

Sept. 24, 1899

Note relative to Westinghouse Transformer.

The iron core is of dimensions indicated in sketch. The insulation from core 1″ thick blocks of wood. Insulation between fibre paper about 1/2″ thick.

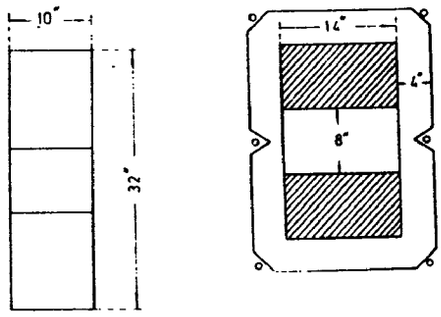

There are three primary coils and 4 secondary coils. For a transformation to 60,000 volts a part of primary is left out. Best way of working is to use smaller transformation ratio to 45,000 approx.

The secondary coils are connected up alternatively, that is, beginning with the first on the left, then to third, then to second and from there to the fourth coil.

The transformer gives every evidence of having a high efficiency. The leakage current is remarkably small for so large a machine. The alternate connection and disposition of coils is evidently to reduce stray field and also for convenience to enable use of similarly wound coils, that is, coils wound on one form.

The tests of mineral seal oil 300° show it to be oil of excellent quality penetrative, of high flashing point and good insulating properties.

Colorado Springs

Sept. 25, 1899

Measurement of self-induction of primary of oscillator and regulating self-in. coil.

Readings:

Conductor measured	Current	Voltage across conductor	p
2 primary turns	33.2	6.4	Computed from revolutions
2 primary turns	58.9	11.7	of synchronous single
1 primary turn	58.9	5.85	phase motor speed 35 per
Self-in. coil	33.2	2.5	sec. 8 pole motor gives
Self-in. coil	58.9	4.45	$n=140$
			$p=880$

Of the above readings the one showing 58.9 amp. was taken repeatedly and is very probably closer than the other reading with smaller current. Taking this as the basis I find, neglecting resistance of both primaries and self-in. coil being very small L_{2p} of two primaries:

$$\frac{E \times 10^9}{Ip} = \frac{11.7 \times 10^9}{58.9 \times 880} = 225{,}730 \text{ cm.}$$

L of one primary will be $L_p = 56{,}432$ *approx.* as the coils are practically one.

$$L_c = \frac{E \times 10^9}{I \times 880} = \frac{445}{1170} \times 225{,}730 = 85{,}855 \text{ cm.} \quad \text{approx.}$$

As there are 24 turns we may take as a rough approximation when quickly computing: 3600 cm. per turn when there are a considerable number in.

Colorado Springs

Sept. 26, 1899

Following method for determining period of vibration, inductances and capacities is simple and convenient. The vibrating system is formed by a continuously variable and exactly determinable inductance and a capacity standard, or by an inductance standard and continuously adjustable condenser or by a system in which both these elements are continuously adjustable and can be exactly determined in one way or another. This system is then excited by a primary vibrating system in a convenient manner and one or both of the elements of the excited system is varied until resonance is obtained. This gives the period of the primary system and if in this only one more element is known all the others can be easily determined. The excitation is conveniently secured and graduated by connecting the wire leading to the system to be excited to the ground through an adjustable spark gap, which is generally very small. This method was applied to determining the period of the primary system used in these experiments in the following manner: a standard

self-induction coil made long ago and used in experiments in N.Y. about 1560 turns wound on a drum 3 1/2" diam. was shunted by the adjustable condenser, also frequently used and consisting of two brass plates 20" diam., and this system was connected to one of the terminals of the Westinghouse transformer as illustrated in diagram below. By varying the length of spark at *b* the degree of excitation was varied to any value desired, the spark at α serving to determine maximum rise of potential on terminals of excited system.

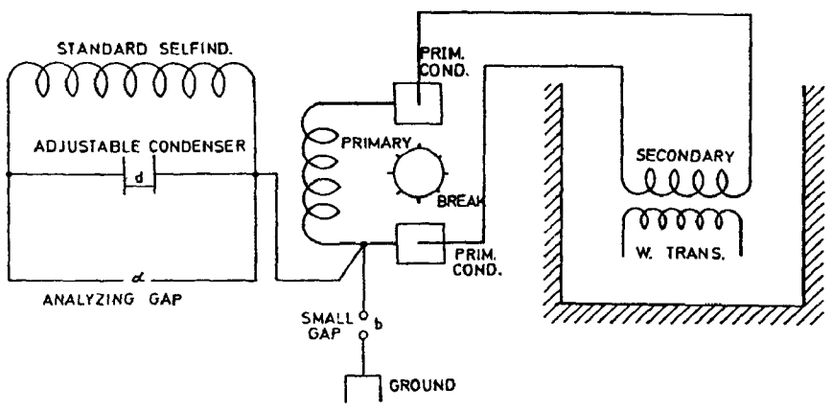

Particulars: $L=0.0176$ H. Res. of coil=59.457 ohms, drum 3 1/2", turns 1560 approx.

Readings in one case:

Capacity in primary total 144 bottles=0,1526 mfd.

Inductance primary 0.000025 H

$$T_{approx}=\frac{2\pi}{10^3}\sqrt{0.000025\times 0.1526}=\frac{1225}{10^8}$$

Resonance was obtained with the plates nearly 0.8 cm. apart, the period of excited system being slightly slower.

$$C_{sec}=\frac{A}{4\pi d}=\frac{2027}{4\pi\times 0.8}=\text{approx. } 200 \text{ cm.}$$

$$T_s \text{ approx. } =\frac{1230}{10^8}$$

Colorado Springs

Sept. 27, 1899

Determination of inductance of coil used in series with extra coil when no ball was used on latter, with old secondary.

160 turns No. 10 B. & S. wire rubber-covered Habirshaw, drum 2 feet diam. 60.96 cm. Length=42.5"=107.95 cm.

First measurement average of readings:

$$I=5.9 \qquad E=38.25 \qquad R=1.054 \qquad \omega=880$$

$$\frac{E}{I}=6.483=\sqrt{(1.054)^2+(880\,L)^2}$$

$$L = \frac{\sqrt{6.483^2 - 1.054^2}}{880} = \frac{6.4}{880} = 0.00728 \text{ H or } 7{,}280{,}000 \text{ cm.}$$

Second measurement average of readings:

$$I=6.77 \qquad E=43.25 \qquad R=1.054 \qquad \omega=880$$

$$E=6.39 \text{ from this } L=0.00716 \text{ H or } 7{,}160{,}000 \text{ cm.}$$

This variation probably due to change in ω and it is probably safest to take average

$$\left\{\begin{matrix}0.00716\\0.00728\end{matrix}\right\} \quad \text{or} \quad \left.\begin{matrix}0.00722 \text{ H}\\7{,}220{,}000 \text{ cm.}\end{matrix}\right\} \quad \text{as best values.}$$

The calculated value from above dimensions is:

$$L = \frac{4\pi N^2 S}{l} = \frac{4\pi \times 25{,}600 \times 2919}{107.95} = 8{,}700{,}000 \text{ cm. or } 0.0087 \text{ henry}$$

$$N^2 = 25{,}600$$

$$S = \frac{\pi}{4} 60.96^2 = 2919 \text{ cm. sq.}$$

The difference must be due to the internal capacity of the coil or possibly inexactness of the dimensions above.

Colorado Springs

Sept. 28, 1899

One of the difficulties in telegraphy and a drawback in practical introduction is the elevated terminal of capacity as proposed by me. It is difficult to elevate a structure to the desired height and keep the same insulated from the ground and with very powerful vibrations, as here produced even an insulated wire leading up offers difficulties because of streamers which reduce the force and the effect at a distance.

I propose to overcome this by the following plan. A structure is to be elevated from the ground up to the desired height and an insulated wire from the oscillator is to be brought

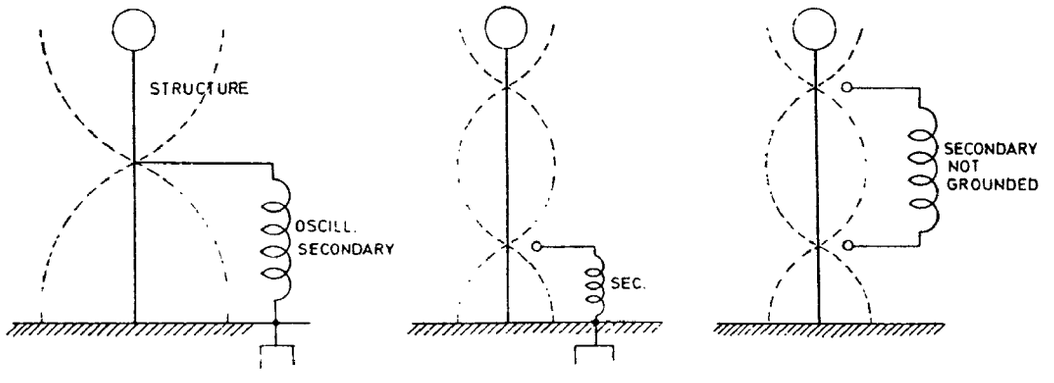

up to a point on the structure and connected to same or else brought into proximity, as for instance when a spark is used. This point should now be so located that there is at the same moment, say, a position maximum on top and a negative on the bottom or ground, that is the top and bottom should be one half of the wave apart or a multiple thereof.

When secondary is grounded as usual it will probably be advantageous to make the wave length in both systems so that they work in unison on the ground.

Colorado Springs

Sept. 29, 1899

Various advantageous arrangements of *oscillating circuits* for *producing disturbances* in the *natural media.*

The object of these arrangements is to produce especially in conjunction with an "extra coil", as before explained, disturbances in the most effective and economical manner. In such a coil the e.m.f. is raised to an extremely high value by the "magnifying ratio". The arrangements furthermore contemplate doing away with the spark which consumes energy, although in many respects it possesses advantages giving, in particular, a very high rate of energy delivery. In the diagrams three such arrangements which have been experimented with are illustrated.

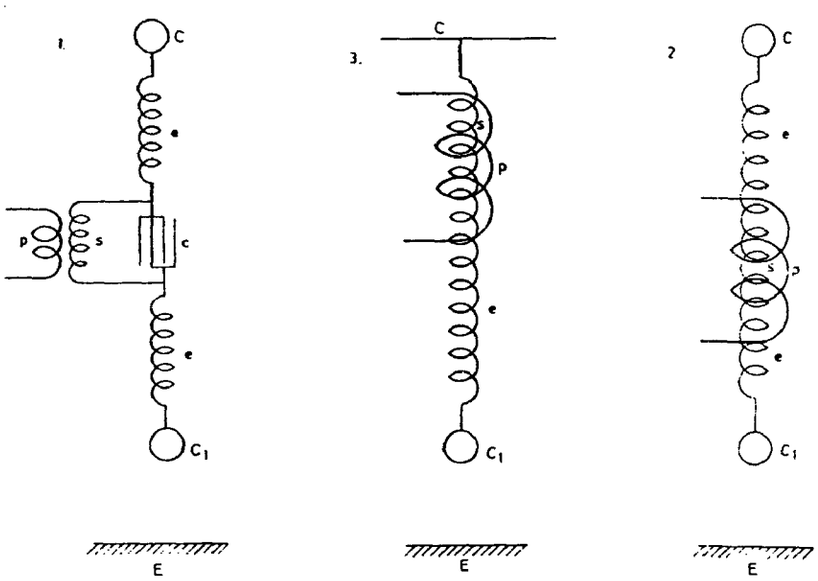

In Fig. 1. the form of connection is shown most frequently experimented with here. The primary p energizes secondary s shunted by condenser c, the secondary exciting extra coils e e with their capacities C C_1 at the free terminals, one of which, C_1, is at some distance from the ground or groundplate E forming a condenser with same. All the three systems, primary, secondary and extra coil have the same period of vibration. Fig. 2. illustrates a simplified way; in this instance the extra coils are partially influenced by induction from the primary p. In Fig. 3. again the extra coil e may be only electrically or also inductively excited. The upper terminal is here a very large capacity as the roof of a building and the terminal of high potential is C_1.

This seems to be very effective.

Colorado Springs Notes

Oct. 1—31, 1899

Following items partly completed omitted for want of time:

Oct. 5. More complete description of photographs taken.

Oct. 14, 22, 23 { page 5 / page 6 }, 25 and 29 corrected results deduced from experimental data recorded.

Patent matters nearly completed:

a) Method securing excessive e.m.f. momenta.

b) Various ways of avoiding use of elevated terminal in power transmission etc.

Colorado Springs Sept 19. 1899.

MUZEJ NIKOLE TESLE

Various arrangements with oscillator and extra coil for production of most powerful disturbances

1.

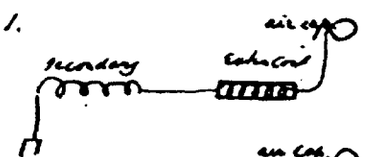

2.

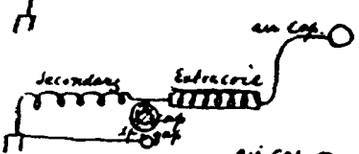

3.

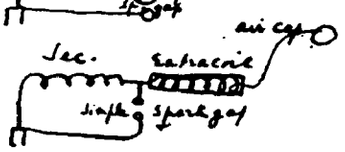

4.

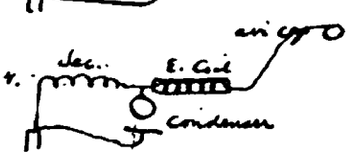

5

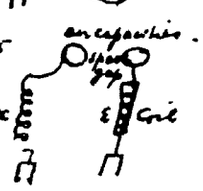

6.

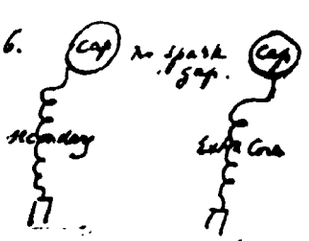

All of these arrangements have been experimented with and described before, and so far the plan illustrated in diagram 4. seems to be best.

In fig 1. extra coil is merely a means of increasing pressure on end.

In fig. 2 and 3. the vibrations through the ground are intensified by the extra coil working directly on the ground either through a gap with capacity or without same. In all cases it has been found important to have the two systems vibrate in synchronism.

The same consideration apply to the diagrams 4 5 and 6.

The plan in fig 4. being found best it is the question what is the best length to give to the wires.

With each secondary and extra coil having one quarter of wavelength the action on condenser is not most intense. With the extra coil 1/2 wavelength and secondary 1/4 they both cooperate on condenser producing on ball much greater pressure. This appears best relation in fig 4. In fig 5 and 6. it is found best to make extra coil 3/4 wavelength and secondary 1/4 for obvious reasons.

The new secondary was wound with 22 turns in all. The last turn was placed on top on porcelain insulators to prevent injury to the wood and breaking through on the last turn where danger greatest. It was evident that the coil could not stand the strain as there was only 1″ between the turns. But the winding was tried for trial. The total length of coil was now — disregarding the last turn which was on top of frame — 27″ approx. Now the length of the old coil was 63″ (last turn excepted). Therefore, if the turns would have been of the same area the self-induction of the new coil would have been increased by a ratio of $\frac{63}{27}$ because of length and diminished by a ratio of $\left(\frac{21}{25}\right)^2$ because of turns. Now the average turn of the old coil was 44 feet dia. and of the new 49 feet approx. This made each of the new turns about 10″ larger than the average of the old. On the whole then the self-induction of the new coil should have been roughly $\frac{63}{27}\times\left(\frac{21}{25}\right)^2\times\left(\frac{11}{10}\right)^2 L$, where L is the self-induction of the old coil, that is L_1=(nearly) 2.06 L.

The storing capacity will also be increased by a ratio of $\frac{3.125}{1.25}$ or nearly 2.5 capacity of the former. Consequently the period of the new coil should be nearly $\sqrt{2.5\times 2.06}$ times longer or nearly 127% longer. With this distribution of turns it will be necessary to use a much smaller number.

As expected the coil wound before was unable to stand the strain and a different distribution of turns of the secondary was made. The ten turns nearest to the ground were left as before and the remaining were placed one turn in each second groove making the distance between the upper turns 2 5/8″ and lower ones 1″. Even with this arrangement, some of the upper and also some of the lower turns would break through.

A change was again made and only 4 of the turns — the lowest — were left 1″ apart and all the others were placed in every second groove. The tests showed that the turns could now withstand the full charge. Perhaps up to six first turns might have been left at a distance of 1″ — but it was thought that the distribution was good enough as it was.

The last change reduced the number of turns to 18 (the uppermost not counted). Compared with the last form of tapering coil of 25 turns the period of the new was now approximately estimated from rough data below:

diameter of one new turn	49 f.
,, average old ,,	44 ,,
turns of new coil	18
,, old ,,	25
average distance of new turns	2 5/8″
,, ,, old ,,	3 1/8″
length of new coil	42″
,, old ,,	63″

Calling L_1 self-ind. of new coil and L_2 that of old tapering coil, we would have approximately:

$$L_1 = \frac{63}{42} \times \left(\frac{18}{25}\right)^2 \times \left(\frac{49}{44}\right)^2 L \text{ or } L_1 = L \text{ nearly}$$

Now the capacity of new coil will be greater by a ratio of $\frac{3.125}{2.625} = \frac{25}{21}$ because of distance of turns and smaller by a ratio of $\frac{l}{l_1}$, l being length of new and l_1 that of old coil. Now

$$\frac{l}{l_1} = \frac{18 \times 49 \times \pi}{25 \times 44 \times \pi} = \frac{88}{110} = \frac{44}{55}.$$

Hence the capacity of new coil to that of old will be as

$$\frac{25 \times 44}{21 \times 55} \text{ or as } \frac{110}{116}$$

or very nearly equal.

Therefore the distribution of the turns will secure nearly the same period of vibration as in the old coil.

Colorado Springs

Oct. 3, 1899

Useful data in estimating possible errors due to the proximity of the ground or conductors or other causes.

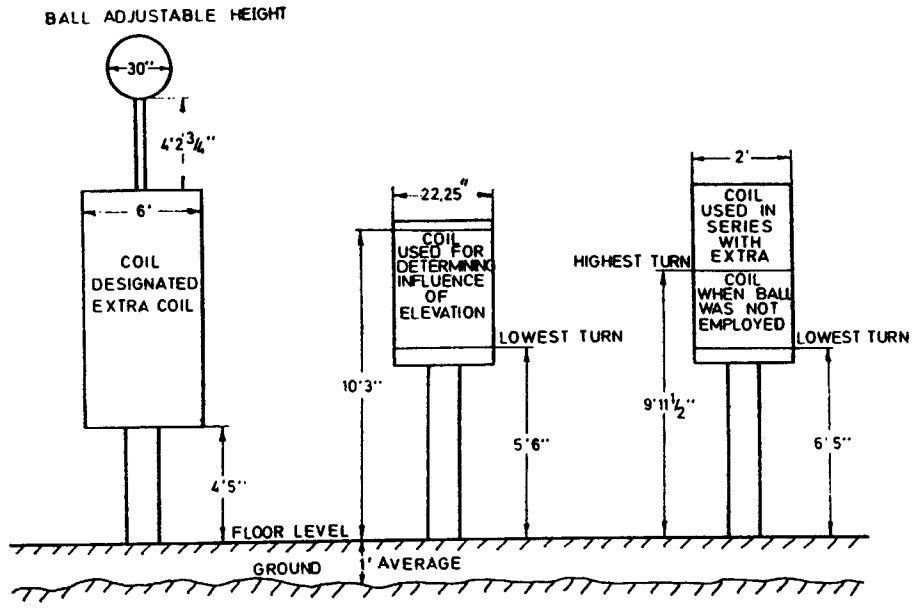

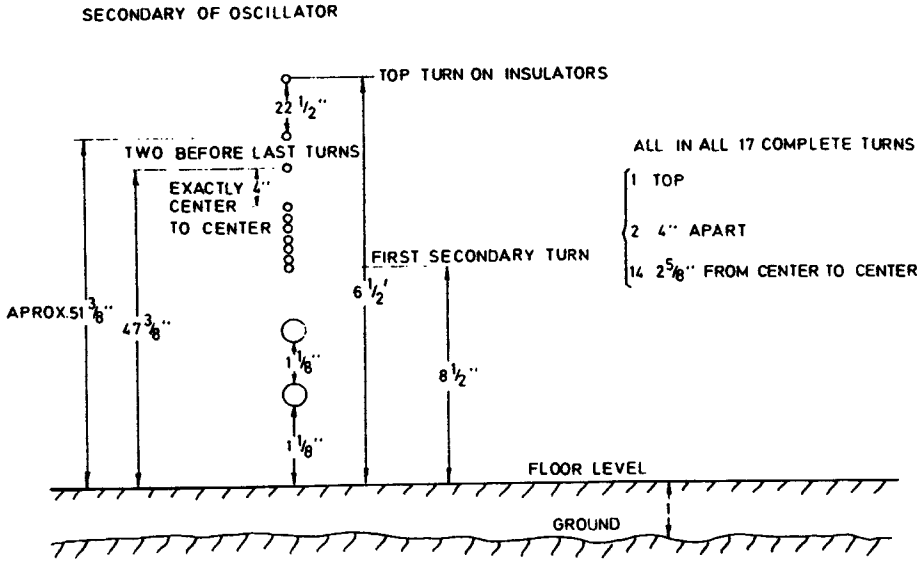

Colorado Springs

Oct. 4, 1899

Test to determine more exactly influence of elevation on capacity of an insulated body.

A coil was wound to suit best the special conditions of this test. On a drum of 2 feet and 1 1/4" diam. were wound 400 turns, wire cord No. 20. The insulation was very thick but of small specific inductive capacity. This wire with widely separated turns was used in order to make the capacity of the coil itself as small as possible compared with capacity of insulated body. The latter was in this case the one sphere of 30" diam. arranged to be elevated at will to a height up to nearly 40 feet from the ground.

The wire had a diam. approx. No. 20 B. & S.=0.032" or 0.8128 mm. The circumference of wire if solid would have been about 2.4 mm. Now one turn of wire was $\pi \times 25.25''$ or about $\pi \times 641$ mm. The total length $\pi \times 641 \times 400 = 256{,}400 \times \pi$ mm. Hence total surface of wire only $\pi \times 256{,}400 \times 2.4 = 615{,}360\ \pi$ sq.mm. or 6154π sq.cm. Now the diam. of the sphere was 30" or 76.2 cm. The surface $\pi d^2 = 18{,}231$ sq. cm. approx. The utmost we could take would be 1/2 surface of wire, that is $3000\ \pi$ sq.cm. and this would be only 1/2 of surface of sphere. But other things considered, it would appear that the error due to electrostatic and distributed capacity of the coil itself would be small. This is however to be further investigated and allowance made for. It would be, of course, desiderable to entirely do away with the capacity of the coil to make the results of the observations rigorously true, but this will be hardly possible.

The number of turns on the coil was selected so as to be suitable to the apparatus used normally. The total length of the coil so far as wound was 57 1/8" or 145.1 cm, diam. of drum 25.25"=64.14 cm. To calculate self-induction we have then the following data:

Turns: 400, length of coil 145,1 cm, area of one loop=3231 sq.cm. From this approximately $L = \frac{4\pi N^2 S}{l} = 44{,}772{,}000$ cm, or 0.044772 henry approx. If we adopt 38.1 cm as the capacity of the sphere in the lowest position, the period of the system would be:

$$T = \frac{2\pi}{1000}\sqrt{0.044772 \times \frac{38.1}{9 \times 10^5}} =$$

$$= \frac{2\pi}{3 \times 10^5}\sqrt{0.1706} = \frac{2\pi}{3 \times 10^5} \times 0.413 = \frac{2.5936}{3 \times 10^5} = \frac{0.86455}{10^5} \text{ or } n = 115{,}668 \text{ nearly.}$$

This is a vibration far too quick, in reality it will be much slower because of capacity in the coil.

Diagram shown illustrates arrangement used in experiments: The coil of 400 t. was excited by secondary of oscilator, and capacity and self-induction in primary were

varied until resonance of free system comprising coil of 400 t. and ball of 38.1 cm cap. was obtained. This was evident from spark length and other indications, as streamers.

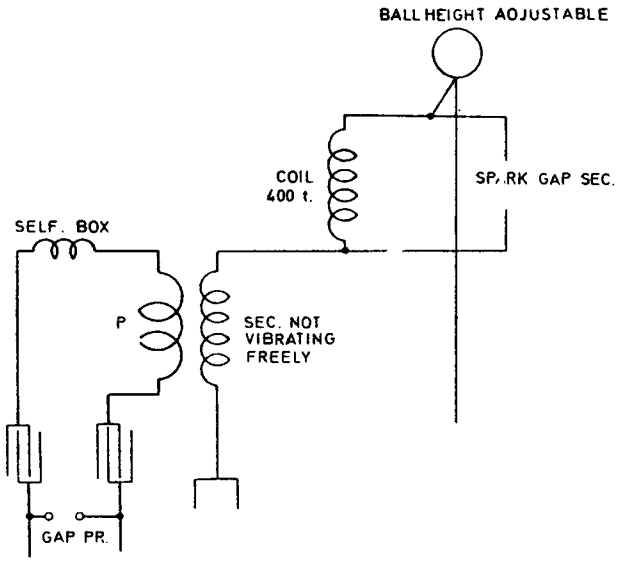

Results:

Ball position	Capacity in primary on each side	Turns in self. box	Spark gap primary	Spark second.	
lowest	1 old+3 2/3 new tanks	22	1/2"+1 turn	53"	The experiments were interrupted here because of darkness
2 feet higher	1 old+4 1/3 „	22	„	„	

From this computed found that by elevating 2 feet, capacity was increased by a ratio of $\frac{5\ 1/3}{4\ 2/3} = \frac{16}{14} = \frac{8}{7}$ or about 15% nearly, really 14.3%. This is a value found nearly the same before in previous tests.

To be followed up.

Colorado Springs

Oct. 5, 1899

Test of secondary last pattern, 17 turns in all.

To ascertain the period a spark gap adjustable was used in the secondary from end to earth, as usual, and the capacity and self-ind. of primary was varied until maximum spark length in secondary and other indications showed maximum resonant rise.

Results:

Capacity in primary	Turns in self. box	
7 tanks on each side	13 „	1 turn primary (2 multiple) approximate
8 „ „	10 „	

Now a ball 38.1 cm. was added on the end and placed near the earth plate at a distance of about 3 1/2 feet but very little affecting the vibration. This shows that distributed capacity in secondary is very large as before.

Capacity of one tank being 0.03816 mfd. Taking approx. L_p=56,400 and 13 turns box 46,800

We have:

$$T=\frac{2\pi}{1000}\sqrt{3.5\times 0.03816\times\frac{103{,}200}{10^9}}=$$

$$=\frac{2\pi}{1000}\sqrt{\frac{13.784}{10^6}}=\frac{2\pi}{10^6}\sqrt{13.784}=\frac{23.36}{10^6}=0.00002336 \text{ and}$$

n=42,800 *approx.*

Some data to be preserved:

Res. of cord used in measuring resistances:	0.596 ohm
Res. of secondary 17 turns	2.804 „
Res. of 2 primary t. in series	0.004 „
Res. of Regulating self-ind. coil	0.054 „

Coil wound for W.T. outfit.: Aug. 24, 1899

Spool about 8 1/2" long: 399 turns per layer, 22 layers

Latest secondary in receiving apparatus, No. 30 wire, 90 turns per layer, 35 layers. Res. 424 ohms.

Tests showed best result with 56—68 primary turns. 62 turns, No. 20 cord, are now used. Res. of cord 0.39 ohm.

Test with special coil for determining more accurately the law of variation of capacity with elevation. The coil with 400 turns No. 20 cord was used as previously and the adjustable ball of 38.1 cm capacity. The ball was normally above the extra coil repeatedly referred to, which on account of its great internal capacity was not used. Although unconnected some error was necessarily caused by the presence of the coil near the ball when the latter was near its lowest position.

A further error was anticipated from the influence of the roof at the points when the ball, which was being gradually lifted during the test, was nearest to it. The smallest distance or nearest point was about 11 feet. Nevertheless some action was bound to occur although the wood is very dry here and it is proposed in later tests to eliminate these erors as much as possible. The roof was covered with some sort of tar paper the influence of which can only be conjectured at present. The most reliable data will be those obtained with ball at the highest points when it is above all structures. The connections used are

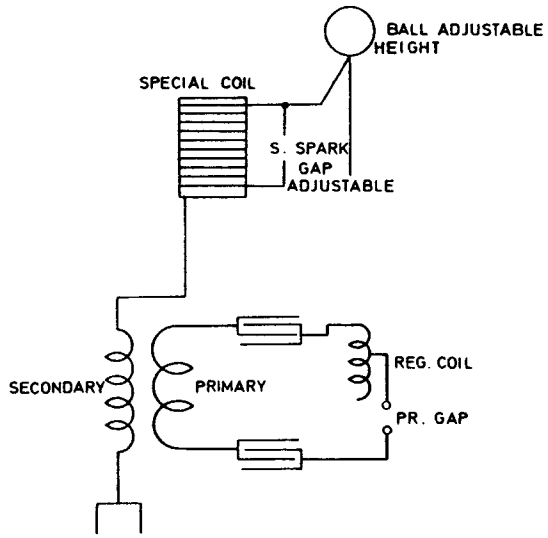

shown in diagram. The ball was lifted by steps of *one* foot each and the primary self-induction and capacity was adjusted until maximum resonant rise was observed on special coil, and adjustable secondary spark gap serving as analizer, besides streamers which served even as a better guide. The results of the test are shown on the following table:

Table showing results. The capacities are all reduced to the same inductance so that as the primary capacity changes, the secondary is changed in the same ratio.

Height from ground feet	Capacity in tanks	Percent of increase	Figures reduced to self-ind. of one primary:
20.66	4.36		
21.66	5.05	16%	
22.66	5.77	14%	
23.66	6.27	9.5%	
24.66	6.00	0	
25.66	6.24	4%	
	two primary turns reduced		
25.66	6.64	10%	To correct later
26.66	8.87	33%	factor $\frac{6.24}{6.64}$ to be used
27.66	11.48	40%	
28.66	14.84	30%	
29.66	18.64	26%	
30.66	21.08	13%	
31.66	22.36	6%	
32.66	23.28	4%	
33.66	24.72	6%	
34.66	25.68	4%	
35.66	27.00	5%	

Table showing results of observations on influence of height in determining capacity of a sphere connected to the coil before described. The sphere of 38.1 cm. electrostatic capacity was gradually elevated and the period of vibration determined for every position of the sphere, by varying the capacity and self-induction of primary circuit. As the self--inductions of both circuits remained the same the secondary capacity varied exactly as the primary.

Height of sphere from ground in feet	Capacity of primary expressed in tanks on each side	Turns in regulating self-ind. coil	Self-ind. in reg. coil		Total self-ind. in primary circuit	Arc		Capacity in primary on one side reduced to same value of self-induction in primary; minimum 106,800 *m* or 137,200 *c*	Increase of capacity of primary or sec. in percents	
			measured data cm.	calculated data cm.		in primary	in secondary		rate	absol.
1	2	3	4	5	6	7	8	9	10	11
20.66	4.66	21.5	77,400	103,200	133,800 *m.* 173,200 *c.*	1/2″+ 1 turn	52 1/4″	5.84 *m.* 5.88 *c.*		
21.66	5.33	22	79,200	105,600	135,600 *m.* 175,600 *c.*	,,	,,	6.77 *m.* 6.82 *c.*	16 *m.* 16	16 16
22.66	6	22.5	81,000	108,000	137,400 *m.* 178,000 *c.*	,,	,,	7.74 *m.* 7.78 *c.*	14.3 14.1	32.5 33
23.66	7	20	72,000	96,000	128,400 *m.* 166,000 *c.*	,,	,,	8.41 *m.* 8.47 *c.*	8.6 8.9	44 44
24.66	8	14	50,400	67,200	106,800 *m.* 137,200 *c.*	,,	,,	8.00 *m.* 8.00 *c.*	—5 —5	37 37
25.66	8 one pr. turn	15.5	53,800	74,400	112,200 *m.* 144,400 *c.*	,,	,,	8.42 *m.* 8.42 *c.*	5.25 5.25	44.5 43
	1.66* two pr. turns	24	86,400	115,200	312,000 *m.* 395,200 *c.*	1/8″+ 1 turn	20″	8.04 *m.* 8.07 *c.*	0.5 0.9	37.7 37.2

1	2	3	4	5	6	7	8	9	10	11
26.66	2.33 2.48 *r*	20	72,000	96,000	297,600 *m.* 376,000 *c.*	,,	27.75	10.71 *m.* 10.71 *c.*	33.2 32.7	83.4 82.2
27.66	3 3.2 *r*	19	68,400	91,200	294,000 *m.* 371,200 *c.*	,,	32 1/4	13.63 *m.* 13.7 *c.*	27.26 28	133.2 133
28.66	4 4.26 *r*	18	64,800	86,400	290,400 *m.* 366,400 *c.*	,,	little less ,,	17.93 *m.* 17.98 *c.*	31.55 31.24	207 205.8
29.66	5 5.32*r*	18.5	66,600	88,800	292,200 *m.* 368,800 *c.*	2″+ 1 turn	still less ,,	22.56 *m.* 22.6 *c.*	25.8 25.7	286.3 284.3
30.66	6 6.35 *r*	14	50,400	67,200	276,000 *m.* 347,200 *c.*	2.5″+ 1 turn	still less ,,	25.4 *m.* 25.4 *c.*	12.6 12.4	335.8 332
31.66	6 6.35 *r*	18	64,800	86,400	290,400 *m.* 366,400 *c.*	2 5″+ 3 *t*	still less ,,	26.72 *m.* 26.8 *c.*	5.2 5.5	357.5 355.8
32.66	6 6.35 *r*	21.5	77,480	103,200	303,000 *m.* 383,200 *c.*	3″+ 3 *t*	still less ,,	27.94 *m.* 28.7 *c.*	4.6 7.1	378.4 388
33.66	6.33 6.86 *r*	22	79,200	105,600	304,800 *m.* 385,600 *c.*	,,	still less	30.29 *m.* 30.46 *c.*	8.41 6.13	418.6 418
34.66	6.66 7.1 *r*	21	75,600	100,800	301,200 *m.* 380,800 *c.*	,,	still less	30.96 *m.* 31.24 *c.*	2.21 2.56	430 431
35.66	7 7.5 *r*	21	75,600	100,800	301,200 *m.* 380,800 *c.*	,,	still less	32.70 *m.* 33.00 *c.*	5.6 5.6	460 460

Observations:

Tuning was very sharp from line 27.66 to end. The arc in the primary was getting stronger and stronger. This probably because of lower frequency. The flaming of primary arc also because of this. For same reasons secondary arc was getting continually weaker as the ball was elevated.

m read measured data

c read calculated data

r read reduced data.

From the sign* two primary turns were used in series as the vibration got too low and not enough primary capacity was available with one turn. This was thought preferable to tuning to harmonic. From the figures on the side of 25.66 line it will be seen that the capacity with two turns was not exactly one quarter of 8, that is 2 tanks, but less. This was probably due to the fact that the tanks are not exactly equal and more so because when two primaries are used in multiple as one single turn the self-induction is less than 1/4 of that of two turns in series. To reduce to same self-induction as with one turn the capacities obtained with two turns should be multiplied by $\frac{6.64}{6.64}$.

Colorado Springs

Oct. 6, 1899

Measurement of coefficient of self-induction and mutual induction.

Secondary last form 17 turns of which total 16 turns disposed on frame described before, one turn in every second groove, one groove near the primary *free.*

Average of readings: $p=880$

Voltage across secondary $E=122.5$ V, $I=13.8$ amp.; Res. $R=2.804$ ohms. From this

$$L_1^2=\frac{\left(\frac{E}{I}\right)^2-R^2}{\omega^2}=\frac{70.94}{880^2}\text{ H}^2 \qquad \frac{E}{I}=8.877;\ \left(\frac{E}{I}\right)^2=78.8$$

$$R^2=7.86$$

$$L_1=\frac{1}{880}\sqrt{70.94}=\frac{8.4226}{880}\text{ H or}$$

$$L_1=\frac{8,422,600,000}{880}=9,571,140\text{ cm.}=\text{approx. }0.00957\text{ H}$$

For determining M the average of a number of readings was:

Current in secondary $I=15$ amp., e.m.f. across two primary turns 11.2 V$=E$, $\omega=880$.

We have from this:

$$M=\frac{E}{I\omega}=\frac{11.2}{15\times 880}=0.000848484\text{ H}$$

M=848,484 cm.

Colorado Springs

Oct. 7, 1899

The secondary was again changed by displacing the 15th and 16th turn, the rest remaining as before: namely, 14 turns, a turn in each second groove and the 15th and 16th turn each in every third groove and the top turn on porcelain insulators as before. This changed very little the constants of the circuit.

The test was now made closed with the following results:

Capacity in primary (one turn)	Turns in regulating coil	Capacity on terminal of secondary
on each side 7 2/3 tanks= total =0.14615 mfd.	6	none
7 2/3 „	7	Ball 38.1 cm capacity at a distance 2 feet from a plate connected to earth terminal of secondary
7 2/3 „	nearly same, just a little more	Ball 1 foot from earth plate.
7 2/3 „	10	Ball 9″ from earth plate.
7 2/3 „	13	Ball 6″ from earth plate.

Tuning of extra coil to suit vibration of the secondary latest design, as specified on another sheet today.

An attempt was made to get the vibration of the coil with ball elevated exactly as that of the secondary. To adjust the vibration the ball was elevated to various positions and soon the adjustment was reached.

With an elevation of 2 feet lower than the highest point (35.66 feet from the ground) — that is 33.66 feet from the ground the maximum resonant rise on coil, as evidenced by the spark, was obtained with 7 2/3 tanks capacity on each side and 13 turns in the self-induction coil. Lowering the ball just a trifle and making capacity on each side 8 tanks the resonant maximum rise in coil took place with 10 turns in regulating coil. This was almost exactly the vibration of the secondary as previously ascertained.

The two were now connected in series and discharges on a spark gap of something like 12 feet were obtained, although the W.T. was not strained to the utmost. When the

spark wire was taken off and ball with a rubber covered wire No. 10 specially prepared left alone, streamers formed on top of ball, but little as the wind was blowing. The ball being disconnected and rubber wire alone left, the streamers were very fierce reacting sometimes 16—18 feet. Best results were with *6 turns* in coil in the last experiments.

A more careful tuning of extra coil without ball, only rubber covered wire or cord No. 10 (which was refered to before), the tip of cable being brought out about 2 feet and inclined to horizontal about 45°. This wire to prevent streamers was specially made and was covered with rubber. Composition Habirshaw, 40% pure Para. The tuning of the coil alone with the self-induction coil specially wound in series, gave:

Capacity of primary	Turns in self-ind. regulating coil
8 tanks on each side	6 1/2

The coil used in series with the extra coil was one especially adjusted so as to give the same vibration to the system as when the extra coil was used alone and with ball on top at highest point. The coil has 160 turns and is wound on a drum 2 feet in diam. with wire No. 10, same as used in the secondary and extra coil.

Now the secondary with a ball on the end and elevated at a height of 2.66 feet from the ground gave also exactly, with 8 tanks in primary on each side and 6 1/2 turns in regulating coil, maximum effect. When the two were connected in series the display was magnificent, sparks flying to the ground a distance of over 16 feet. Their curved paths stretched out would be certainly 24 feet long. This was not the maximum of the power of the apparatus as the spark in the primary could have been still lengthened without difficulty.

Colorado Springs

Oct. 8, 1899

Experimental data in connection with tuning of extra coil and secondary as recorded yesterday.

Capacity on each side in primary circuit 8 tanks	Turns in self-ind. Regulating coil 6.5—7	With ball 38.1 centim. on free end of secondary, the ball being 2.66 feet from a grounded zinc plate, the both had exactly the same period.

Now the length of wire in the secondary was 803 meters, namely 17 turns each of a diameter of 15 meters.

The total length of wire in the extra coil circuit was: the extra coil itself 889 meters, namely 149 turns each of diameter of 1.9 meters plus special coil inserted in series: 307 meters, namely 160 turns each of diam. of 0.61 meter. This special coil was used when the

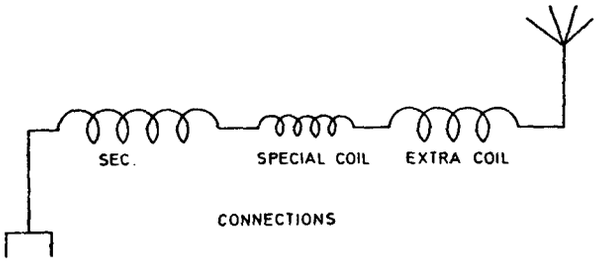

ball on top was not employed as capacity and the coil was so adjusted that the vibration was the same without the ball as with the ball and without the special coil; it being understood that the ball was at its highest position in such case. The total length of wire was therefore:

$$\underbrace{\text{secondary}}_{\text{one system}}+\underbrace{\text{special coil}+\text{extra coil}}_{\text{one system}}=803+307+889=1999 \text{ meters}$$

with all connections the length was increased to 2030 meters (17 meters rubber wire on top; 13 meters lower connecting wire).

Now capacity in primary was 4 tanks$=4\times0.03816=0.15264$ mfd.

Total self-ind. in primary circuit was approximately	56,400 cm	one primary turn
	6600 cm	approx. — all connections in primary circuit
89,000 cm	26,000 cm	self-induct. coil

As the self-ind. of the regulating coil was rather a little larger we may take total self-induction as 90,000 cm, or $\frac{9}{10^5}$ H. This would give

$$T=\frac{2\pi}{10^3}\sqrt{0.15264\times\frac{9}{10^3}}=\frac{2\pi}{10^5}\sqrt{0.137376}=\frac{6.28\times0.37}{10^5}=\frac{2.3236}{10^5} \quad \text{and } n=43{,}000.$$

This would give a wave length approx. $\frac{186}{43}=4.33$ miles or $\frac{\lambda}{4}=1.08$ miles$=5700$ feet while there is a little more wire. Probably self-induction and capacity or either of them in the primary have been slightly underrated or else the wire is not quite as long as calculated before.

Colorado Springs

Oct. 9, 1899

Today an other effort was made to ascertain more closely rate of increase of capacity of a body with the height above the ground. The same adjustable sphere was used and to eliminate some influences which might cause errors the special coil, which was rewound with same wire as before and had now 404 turns, the wire being wound a trifle higher, was connected to the first turn of secondary of oscillator, that is the turn first from the ground. This gave a small initial e.m.f. and reduced the error due to capacity very materially. (Here the distributed capacity is meant). Also, since the pressures developed were much smaller owing to small initial pressure on the special coil the streamers did not appear and did not therefore complicate the observations as in some previous cases. The plan of connections is clear from the diagram below. The object was specially to obtain a number of values which were as closely determined as possible and with the ball in positions entirely above the building. Only three values could be obtained owing to darkness setting in, but these seemed fairly close as the tuning was done over and over with same results. These were as follows:

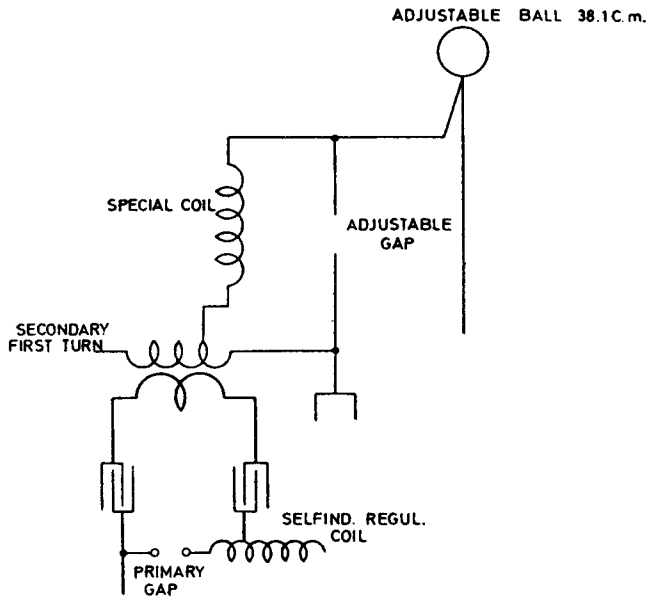

Height of ball above ground	Turns in Reg. coil	Total self-ind. in primary	Total capacity in pr. mfd.
35.66 feet	22	reg. coil 79,200 connections 6600 primary 56,400 } 142,200 cm.	8 tanks each side 0.15264
34.66 „	19	129,400 cm.	0.15264
33.66 „	16 (trifle less)	118,600 cm.	0.15264

Now since the capacity in the primary was the same the capacity in the secondary varied directly as the self-induction of the primary. The above figures show that from 33.66 feet to 34.66 feet, that is an elevation of one foot, the increase was 9.1%, while for the next foot higher it was nearly 9.9% on the average, say, 9.5%. At this rate the increase

of capacity of the elevated sphere with the rise from the ground would be greater than before found. The absolute rate of increase can be approximately estimated from the period of vibration. As before found the special coil with 400 turns had a self-induction of 44,772,000 cm. Now, however, with 404 turns this would be increased about 1% so that the self-induction would now be $\left.\begin{matrix}44,772,000\\447,720\end{matrix}\right\}$ 45,219,720 cm. But to this should still be added the self-induction of one turn of the secondary and wire leading to the ball and also the wire leading from the bottom of the special coil to the first turn of the secondary. The total length of these three wires is 240 feet and this is about 12% of the total length of the wire in the special coil which is 2854 feet. But inasmuch as the one secondary turn was very close to the primary and inasmuch as the other two wires were not coiled up, the self-induction of these wires was comparatively small, estimated a little over 200,000 cm so that the total self-induction was with fair approximation: 44,500,000 cm, or about 0,0445 henry (calculated). Now, with a ball of 38.1 cm capacity the period of secondary would have to be:

$$T_s=\frac{2\pi}{1000}\sqrt{\frac{38.1}{9\times 10^5}0.0445}=\frac{2\pi}{3\times 10^7}\sqrt{1695.45}=\frac{86.19}{10^7}\quad\text{and}$$

$n=116{,}000$. This would be ignoring the internal capacity of the coil itself and its effect in slowing down the vibration. Now this capacity can be approximately estimated as well as the absolute increase of the capacity of the sphere from the primary vibration.

Taking the figures with the ball at a height of 33.66 feet from the ground, the primary vibration was:

$$T_p'=\frac{2\pi}{1000}\sqrt{0.15264\times\frac{118{,}600}{10^9}}=\frac{26.7}{10^6}\quad\text{or}=\frac{267}{10^7}$$

This vibration is evidently slower than one of period T_s and it will be easily seen that

$$\frac{T_s}{T_p'}=\frac{86.19}{267}=\sqrt{\frac{38.1}{C+38.1}}$$

where C is the internal capacity of the coil. Assuming for the present this capacity as not being distributed along the coil but in one place, we get

$$C+38.1=38.1\times\left(\frac{267}{86.19}\right)^2\quad\text{and}\quad C=\left[\left(\frac{267}{86.19}\right)^2-1\right]\times 38.1\text{ cm.}$$

Following this up we get for C value $C=[(3.098)^2—1]\times 38.1=(11.597—1)\times 38.1=$ $=10.597\times 38.1=403.75$ cm.

This is not the actual capacity of the coil but that ideal capacity by which the sphere should be increased to give the vibration of the primary.

We can now write

$$T_p'=\frac{2\pi}{10^3}\sqrt{0.0445\times\frac{(403.75+c)}{9\times 10^5}}\qquad\ldots\ldots\ldots\ 1)$$

This capacity c is now the actual capacity of the sphere at an elevation above considered, that is 33.66 feet. Namely, the total capacity was that of the sphere at that elevation — that is c — plus the ideal capacity of the coil derived from the computation of the primary vibration. This latter capacity has been called C. The inductance of the special coil being as before found, 0.0445 henry, and there being resonance under the conditions of the experiment at the elevation, named T_p', gives the value for the secondary period.

Now at another elevation, say 34.66 feet, we shall have similarly

$$T_p'' = \frac{2\pi}{10^3}\sqrt{0.0445 \times \frac{407.75+c'}{9\times 10^5}} \quad \ldots\ldots\ldots\ldots 2)$$

where c' gives the value of the capacity of the sphere for the elevation of 34.66 feet. Computing I find, from experimental data above given

$$T_p'' = \frac{2\pi}{10^3}\sqrt{0.15264 \times \frac{129{,}400}{10^9}} = \frac{2\pi}{10^6}\sqrt{19.75} = \frac{27.9}{10^6} \text{ or } = \frac{279}{10^7}$$

Now, from equation 1 and 2, we get:

$$\frac{T_p'}{T_p''} = \frac{267}{279} = \frac{\sqrt{0.0445\,\frac{403.75+c}{9\times 10^5}}}{\sqrt{0.0445\,\frac{403.75+c'}{9\times 10^5}}} \quad \text{or} \quad (1.045)^2 = \frac{403.75+c'}{403.75+c}$$

and from this: $1.092\times(403.75+c)-403.75=c'$, but c being 38.1 we find for $c'=78.75$ cm, which result shows that by lifting the ball from an elevation of 33.66 feet to 34. 66 feet or *one foot* higher the capacity has been increased from 38.1 to 78.75 cm, or nearly 106.7%. Similarly we find the increase from 34.66 to 35.66 feet by computing the primary vibrations at these elevations. By analogy to the previous we have

$$T_p''' = \frac{2\pi}{10^3}\sqrt{0.15264\,\frac{142{,}200}{10^9}} \text{ and, since } T_p'' = \frac{2\pi}{10^3}\sqrt{0.15264\,\frac{129{,}400}{10^9}},$$

we get

$$\frac{T_p'''}{T_p''} = \sqrt{\frac{1422}{1294}} = \sqrt{1.099}$$

Now the vibration which corresponded to the primary vibration T_p'' in the special coil was $\frac{2\pi}{10^3}\sqrt{0.0445\times\frac{403.75+78.75}{9\times 10^5}}$ and the one which corresponded to T_p''' was

$$\frac{2\pi}{10^3}\sqrt{0.0445\times\frac{403.75+c''}{9\times 10^5}},$$

where c'' will stand for the capacity of the sphere at the altitude of 35.66 feet.

And now we have:

$$\frac{T_p'''}{T_p''} = \sqrt{1.099} = \sqrt{\frac{403.75 + c''}{403.75 + 78.75}} \quad \text{and from this}$$

$$1.099 \times (403.75 + 78.75) - 403.75 = c'' = 126.51 \text{ cm.}$$

The value at one foot lower was, as before found 78.75 cm, therefore by lifting the sphere from 34.66 to 35.66 feet, the capacity was further increased by 126.51—78.75= =47.76 cm, or about 125%. The value which would correspond to the mean would therefore be about 116% per foot. The method followed contains still some possible errors. One of them lies in the assumption that the capacity of the sphere was 38.1 cm at the starting point. Also there may be an error in the estimation of self-induction of the turns of the regulating coil.

Colorado Springs

Oct. 10, 1899

Resistances measured:

Large extra coil	with cord	3.7 ohms
149 t. wire No. 10	cord	0.596 ohms
drum 75″	Coil alone	3.104 ohms

Coil used in series with extra coil. When ball was not used on top of latter:

160 t. No. 10 wire	with cord	1.65
drum 2 feet	cord	0.596
	Coil alone	1.054 ohms

Resistance of coil used in determining influence of elevation on capacity:

400 turns No. 20 cord	with cord	31.20
drum 25.25″	cord	0.596
	Coil alone	30.604 ohms

Resistance of secondary latest:

with cord	3.36 ohms
cord	0.596 ohms
Secondary alone	2.764 ohms

Colorado Springs

Oct. 11, 1899

Photographs of streamers were taken late last night again and at an early hour this morning under the following conditions.

First two plates exposed to ten flashes, 1/2 second duration each. These flashes issued from the tip of rubber-covered cable or wire No. 10 which was on top of the extra coil. The tip was inclined about 45° degrees to the vertical and pointing downward. The full front view was taken. A curious observation was made. One of the large streamers, about 22 feet long, disappeared at that length for a space of about a foot and continued again after that for a distance of about 2 feet, so that the total length of it was about 25 feet with a dark interval of one foot. Evidently, the current passed for a distance of a foot through air or dust particles which were better conducting and the path was of a greater section in all probability. Perhaps the air on that spot might have been electrified in such a way as to produce the phenomenon.

The next experiment was made with an exposure of two plates to about forty flashes, the view being the same as before.

After this two plates were exposed to but a single short flash about one second, the view being still the same as before. Now a round sheet zinc disk was fastened to the tip of the wire and two plates were again exposed, there being about twenty flashes. Next, the coil was turned and a side view taken with about forty flashes, two plates being again exposed as in all previous cases, two cameras being used for the sake of safety. Upon this the zinc disk was taken off and a ball of 4" diam. fastened to the tip of the No. 10 rubber-covered wire. A long exposure of about 50 flashes was again made. The streamers were as expected a little stronger from the ball then from the point as the breaking out took place at a greater pressure. Two plates were used also in this instance.

The next experiment consisted of taking an impression on two plates of the secondary alone in resonating condition. The phenomenon was beautiful to an extraordinary degree. Not only did the top wire glow but from the under wire (turn next below) a steady sheet of streamers of very fine texture issued of an area which must have been many hundred square feet. The free end of the secondary had the ball of 38.1 cm connected to it at a distance of 32" from the ground but owing to the large radius of curvature sparks did not leap from the ball to the grounded zinc plate below though the distance was small comparatively. During the experiments a short but thick stream issued from the free terminal of the extra coil which had its other end connected to the ground and was thus excited through the vibration of the secondary, having, as stated on a previous occasion, the same period of vibration. The color of the light issuing from the secondary wires, particularly in the neighbourhood of the condensers, was remarkably blue, and should affect the plate strongly, though the intensity was not great. The switch was thrown in fifty times, the duration being about 1/3 of one second, possibly 1/2.

The last experiment consisted of establishing the resonance of the extra coil and secondary in series connected and with the ball of 38.1 centimeter on the free end of the extra coil, the ball being at its lowest position, 20.66 feet from the ground. The other ball of the same size remained as before, connected to the end of the secondary where it was joined to the lower end of the extra coil. As there was great danger of inflaming the roof the power was somewhat reduced, but the display was wonderful in spite of this. This was

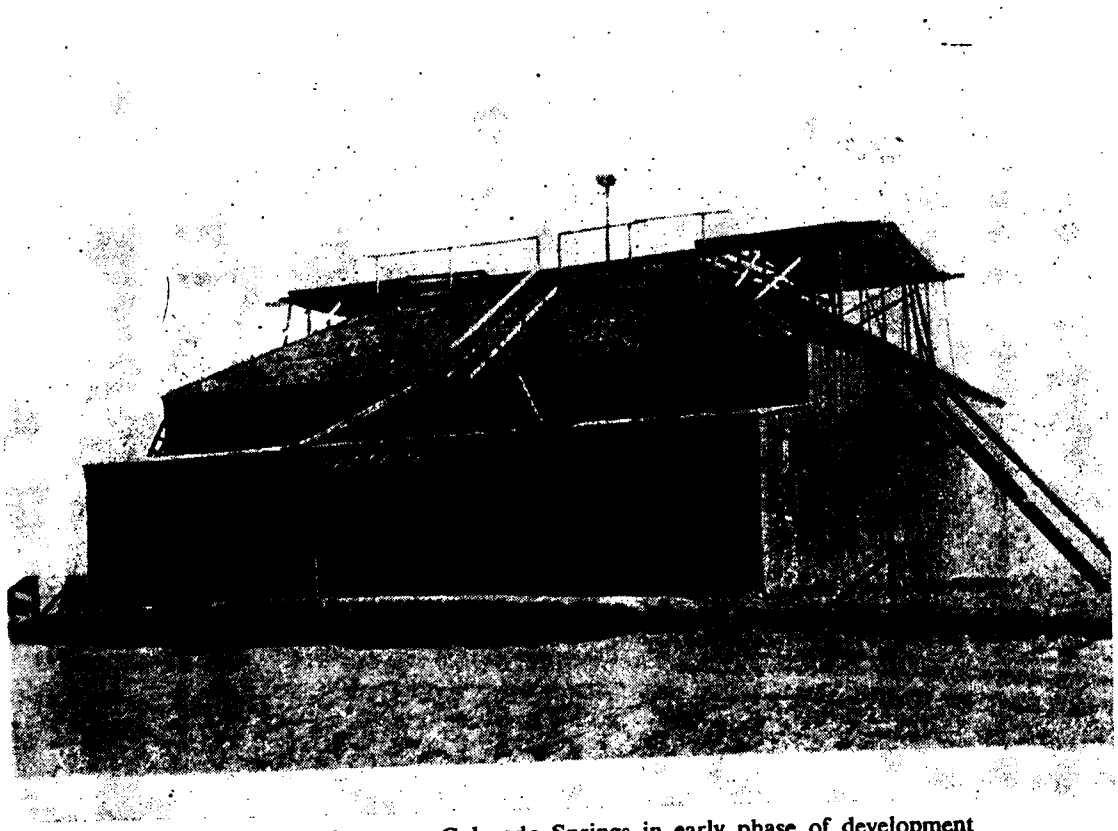

Experimental Laboratory, Colorado Springs in early phase of development

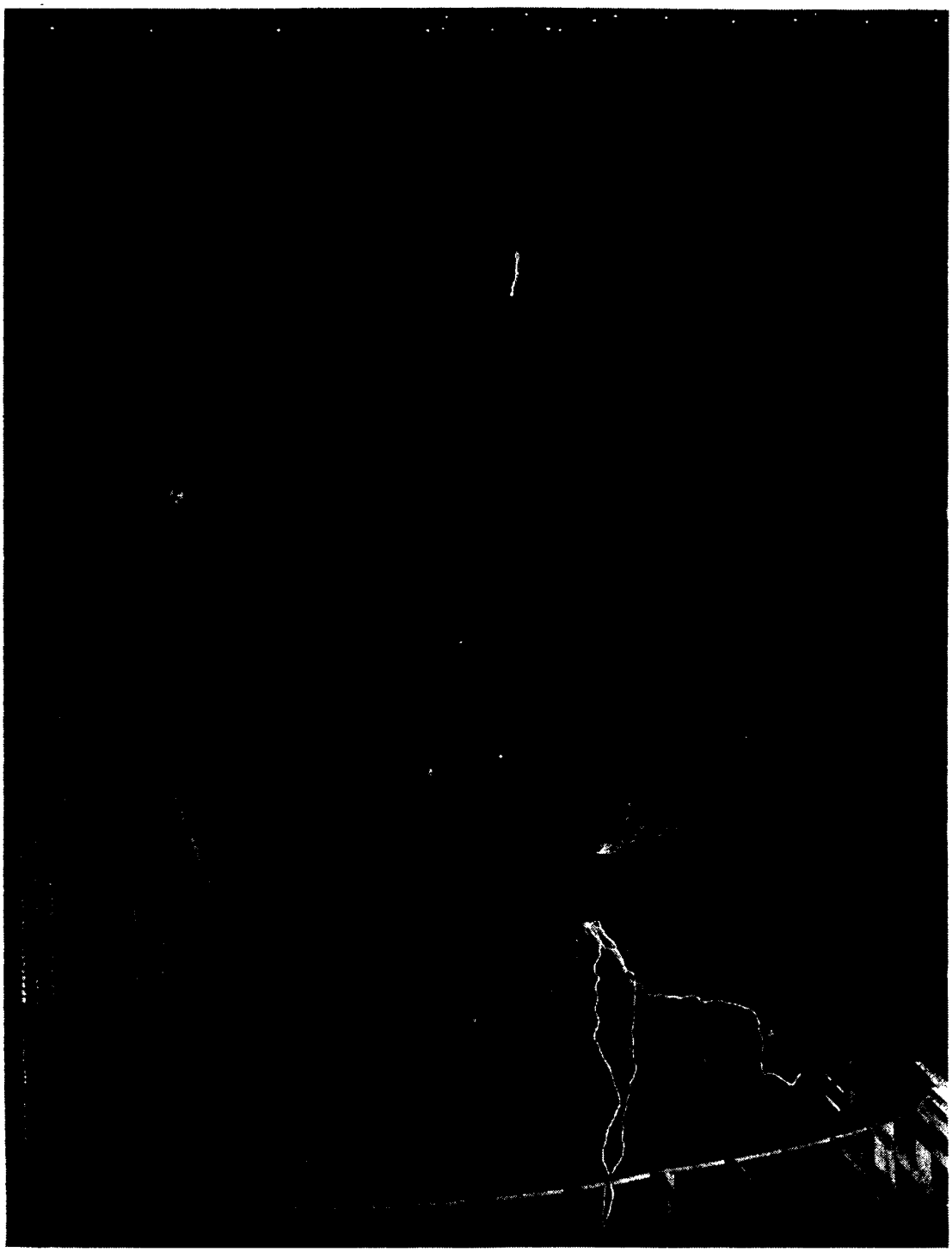

Conical secondary high frequency transformer and "extra coil" in action

the most significant experiment showing streamers from the ball of 38.1 cm capacity from which is evident the enormous tension, as well as the inconceivable rate at which the energy was delivered in the vibrating system. Forty flashes were made and afterward the background was illuminated by the arc of the primary circuit to complete the picture.

Colorado Springs

Oct. 12, 1899

Measurement of inductance of 404 turns coil used in determining influence of elevation.

l=57.125″=145.1 cm diam. of drum 25.25″=64.14 cm.

Area of one loop 3231 square cm.

Calculated before for 400 turns when the wire was wound first a little less tight, the value was:

$$L=\frac{4\pi N^2 S}{l}=44{,}772{,}000\text{ cm.}$$

After making corrections for l which upon more careful second measurement was found to be 46 7/8″ only, and taking N=404 the value was L=45,670,000 cm. The actual measurements gave the following data:

$$I=4.28 \qquad E=194 \qquad R=30.604 \qquad \omega=880 \qquad \frac{E}{I}=45.327$$

and from this

$$L=\frac{\sqrt{45.327^2-30.604^2}}{880}=\frac{33.435}{880}=0.03788\text{ H}$$

or L=37,880,000 cm.

The measured value should be smaller than the calculated but not so much. The internal capacity may be responsible but very likely the current was not quite exactly measured. Corrections to be taken after calibration.

Colorado Springs

Oct. 13, 1899

Measurement of inductances of extra coil and secondary, latest design:
Readings for extra coil:

$$I=5.9 \qquad E=119 \qquad R=3.104 \qquad \omega=880$$

$$\frac{E}{I}=\frac{119}{5.9}=20.17, \text{ from this}$$

$$L=\frac{\sqrt{20.17^2-3.104^2}}{880}=\frac{19.93}{880}=0.022648 \text{ H}$$

or

$$L=22{,}648{,}000 \text{ cm.}$$

Readings for secondary single wire; latest:

$$I=6.77 \qquad E=60 \qquad R=2.764 \qquad \omega=880$$

$$\frac{E}{I}=\frac{60}{6.77}=8.8626 \text{ and}$$

$$L=\frac{\sqrt{8.8626^2-2.764^2}}{880}=\frac{\sqrt{70.9060}}{880}=\frac{8.42}{880}=0.0095682 \text{ H}$$

or $L=9{,}568{,}200$ cm.

Colorado Springs

Oct. 14, 1899

Determination of the natural period of the secondary with and without capacity on free terminal, also of the extra coil and coil of 404 turns used in investigations before described.

The tuning was effected in a manner later to be more fully dwelt upon, which secured closer readings than when exciting, as in some experiments before made, by the primary current or from a turn of the secondary of oscillator.

The excitation was effected in these tests by connecting directly one of the terminals (the lower) of the coil to be tested to one of the terminals of the primary condensers (the one connected to the tank of W. Transformer).

The results of the test are given below:

For secondary of oscillator:

Capacity in primary circuit Total	Self-ind. in primary Turns of Reg. coil + conn.	Observation:
$\frac{(8\times 36)-2}{2}$ bottles=0.126 mfd approx.	15+conn.	No capacity on free terminal

$\frac{(8\times 36)-2}{2}$ bottles = 0.126 mfd approx.		15 1/4+conn.	Ball of 38.1 cm diam.
$\frac{(8\times 36)-2}{2}$	,, = ,,	19 1/4+ ,,	Structure to be described later of iron pipes with ball of 38.1 cm. diam. at an elevation of 141 feet from ground approx.

For extra coil:

$\frac{(8\times 36)-2}{2}$	,, = ,,	19 1/4+ ,,	with above structure connected to free terminal.

For coil 404 turns used in preceding investigations:

$\frac{(6\times 36)-2}{2}$ bottles=0.11342 mfd.		8+conn.	Tuning very sharp, no capacity on end.

Remark: With excitation from secondary (first turn) obtained in a previous test of this coil:

$\frac{(5\times 36)-2}{2}$ bottles=0.094255 mfd.		17 1/2+2 primary turns+connect.	Tuning was not quite sharp.

Colorado Springs

Oct. 15, 1899

Continuing the considerations made Oct. 9 on the influence of elevation upon the capacity and taking, instead of the calculated value of the self-induction of the coil used in the experiments, the value ascertained by experiment which, with corrections for one turn secondary and connecting wires, may be put at 0.04 henry, we have, assuming now the coil to have a capacity entirely negligible:

$$T_s = \frac{2\pi}{1000}\sqrt{0.04\times\frac{38.1}{9\times 10^5}},$$

as secondary period of the coil with ball or

$$T_s = \frac{0.8164}{10^5} = \frac{81.64}{10^7} \quad \text{Now } T_p \text{ was} = \frac{267}{10^7}, \text{ from this}$$

$$\frac{T_s}{T_p} = \frac{81.64}{267} = 0.306 = \sqrt{\frac{38.1}{38.1 + C}} \text{ from previous analogy — and from this}$$

$$0.306^2 = \frac{38.1}{38.1 + C} \text{ or } C = \frac{38.1}{0.09364} - 38.1 = \frac{38.1 \times 0.90636}{0.09364} = 38.1 \times 9.68 = 368.8$$

Now

$$T_p' = \frac{2\pi}{10^3}\sqrt{0.04 \times \frac{368.8 + c}{9 \times 10^5}} \text{ and } T_p'' = \frac{2\pi}{10^3}\sqrt{0.04 \times \frac{368.8 + c'}{9 \times 10^5}}$$

but $T_p'' = \frac{279}{10^7}$ and from this

$$\frac{T_p'}{T_p''} = \frac{267}{279} = \sqrt{\frac{0.04 \times \frac{368.8 + c}{9 \times 10^5}}{0.04 \times \frac{368.8 + c'}{9 \times 10^5}}} \qquad 1.045 = \frac{279}{267} \text{ and from this}$$

$$(1.045)^2 = \frac{368.8 + c'}{368.8 + c} \text{ now } c = 38.1$$

$$1.092 \times (368.8 + 38.1) = 368.8 + c' \text{ and}$$

$$c' = 368.8 \times (1.092 - 1) + 38.1 \times 1.092 = 75.53 \text{ cm.}$$

This value is but little smaller than that before found. From this result it would then appear that by lifting the sphere from 33.66 to 34.66 feet the capacity was increased from 38.1 to 75.53 cm, or approximately 98.3%, a trifle less than before found.

Colorado Springs

Oct. 16, 1899

Inductance of secondary modified by winding another wire No. 10 in multiple with the first. All other particulars remaining:

Readings: $I = 7.1$ $E = 60.5$ $R = 1.382$ $\omega = 880$

$$\frac{E}{I} = 8.521$$

$$L = \sqrt{8.521^2 - 1.382^2} = \frac{\sqrt{70.6975}}{880}$$

$$L = \frac{8.41}{880} = 0.0095568 \text{ H}$$

or $$L = 9{,}556{,}800 \text{ cm.}$$

This is closely agreeing with first measurement of a few days ago, the difference being only 1/10%.

Colorado Springs

Oct. 17, 1899

Structure for capacity of extra coil, for investigation of earth vibrations chiefly.

This structure was erected on a pole 10″×10″ square, tapering on top. Dry fir was used because of toughness and also resinous quality. Pipes of steel of diameters 7″, 6″, 5″, 4″, 3 1/2″, 3″, and 2 1/2″ were used. They were shoved one into the other and riveted, four rivets were used on each joint, the lap being 2′.

The lengths of pipes were as follows:

7″	diam.	23′	4″
6″	,,	18′	2″
5″	,,	18′	4 1/2″
4″	,,	15′	7 1/4″
3 1/2″	,,	19′	3 1/4″
3″	,,	18′	4 3/4″
2 1/2″	,,	8′	1/4″
Nipples on top			7 3/4″
Total length of pipes		121′	9 3/4″
Firwood pole		19′	3″
Total from floor		141′	3/4″
to ground		1′	
Total height from ground to bottom of ball		142′	3/4″

On the top was supported a ball of 30″ diam. hollow wood covered with tin foil very smoothly and the joints indented so as to have no conducting points sticking out. The joints of the pipes, heads of rivets, etc. were all covered first with sheet rubber pure and then with tape, the latter being finally fastened with strong cord. The ball was shellaced several times and finally covered with weatherproof rubber paint. The pole all along was also painted with the same paint. On the lowest end of 7″ pipe a cap was screwed clearing the wood so as to make it more difficult for the streamers to get to the ground along the pole.

* To prevent lateral play 8 champagne bottles set in beams were used.

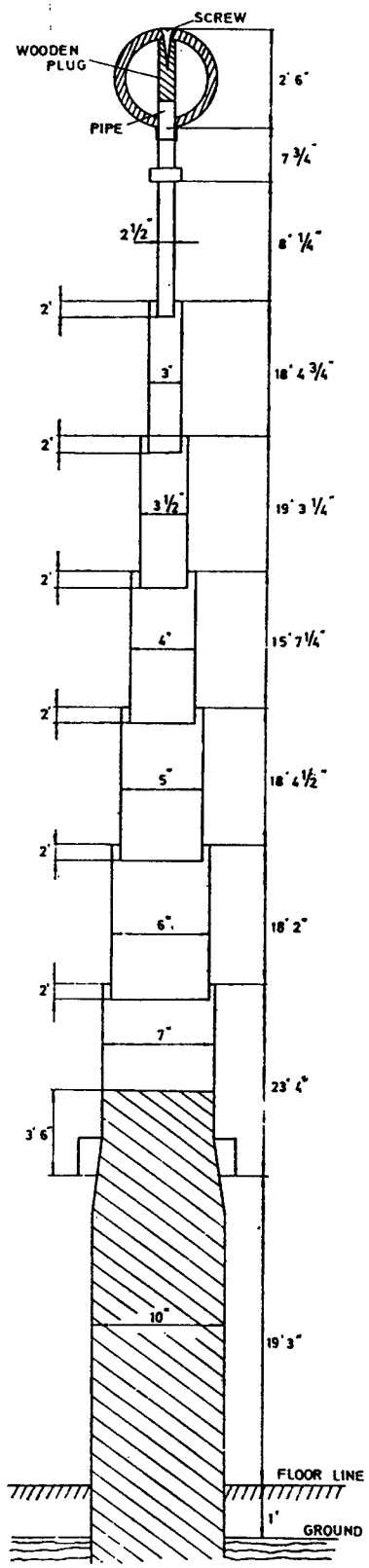
SCREW
WOODEN PLUG
PIPE
2' 6"
7 3/4"
2 1/2"
8" 1/4"
2'
3"
18" 4 3/4"
2'
3 1/2"
19" 3 1/4"
2'
4"
15" 7 1/4"
2'
5"
18" 4 1/2"
2'
6"
18" 2"
2'
7"
23" 4"
3' 6"
10"
19' 3"
FLOOR LINE
1"
GROUND

15*

Colorado Springs

Oct. 18, 1899

For special investigations particularly to prosecute further researches on the increase of capacity with elevation, a new coil is to be constructed as nearly as possible to exact dimensions which follow:

diam. of core 14″=35.5 cm
length of core 8×12″=243.84 cm.

The coil is to be wound with cord No. 20, before used in the coil of 404 turns on 25.25″ diam. drum.

Allowance for thickness of insulation: 0.354 cm.
This makes total diameter d=35.854 cm.

For approximate value of the surface of one loop we have then S=1000 cm. sq. There should go on this length 689 turns and this would make

$$L=\frac{4\pi}{l}N^2 S=24{,}490{,}000 \text{ cm. approx.}$$

or

$$L=0.02449 \text{ henry.}$$

For the purposes contemplated this coil will be well adapted as the self-induction is large and owing to small diameter of the core and great thickness of insulation the capacity should be comparatively small. With this coil balls of 18″ and 30″ diam, are to be used:

Exact diam. of core should be 14.0485″=35.6825 cm. for S=1000 cm. sq.

Colorado Springs

Oct. 19, 1899

Experimental coil before used in investigating propagation of waves through ground. This coil was rewound and presently following particulars are good.

Outside diam. of core=10 3/8″=10.375″=26.3525 cm. Turns 550, No. 18 B. & S. wax covered, thickness of one insul $\frac{14''}{1000}$, length of core l=40 7/8″=40.875″=103.8225 cm.

We may neglect insulation as the core is not perfectly round and any irregularity diminishes the area and we get a larger value as a rule. Now, from above data, surface of one loop $S=\frac{\pi}{4}d^2=0.7854\times 26.3525^2=545.241$ cm. sq. This gives

$$L=\frac{4\pi}{l}N^2 S=\frac{12.5664\times 302{,}500\times 545.42}{103.8225}=19{,}970{,}000 \text{ cm, approx. or } 0.01997 \text{ H}$$

This coil is now to be also used in investigations of the variation of capacity with variation of height. With ball of 18″ diam., the capacity of the ball assuming to be: [18″ = =18×2.54=45.72 cm]—C=22.86 cm, the period of the system, neglecting for the present the distributed capacity of the coil, would be approximately:

$$T=\frac{2\pi}{10^3}\sqrt{0.01997\times\frac{22.86}{9\times10^5}}=\frac{0.447345}{10^5}$$

or n=223,540 per sec. approx.

In a test resonance was obtained with 42 bottles on each side of the break, that is 21 bottles total or 0.0229 mfd capacity in the primary, which consisted of 6 turns of heavily covered wire No. 10.

As it was inconvenient to measure the primary, L_p was estimated to have a self-induction of:

$$\left[\frac{0.447345}{10^5}=\frac{2\pi}{10^3}\sqrt{0.0223\,L_p}\right],\quad L_p=22{,}435\text{ cm.}$$

This is a convenient and good method but the period must be exactly ascertained. The distributed capacity can never be neglected.

Colorado Springs

Oct. 20, 1899

To ascertain the effect of internal capacity of the coil of 404 turns repeatedly referred to, which was used in the experiments on influence of elevation upon capacity of a conductor, the coil was tuned alone with only a short length of wire attached to it. Resonance with primary was obtained with 118 bottles on each side, one primary turn. For future

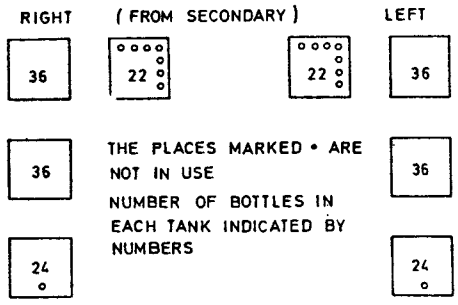

reference the tanks as used are indicated in diagram. The total capacity in primary was therefore $\frac{118}{2}$=59 bottles. Since one tank, that is 36 bottles, equals 0.03816 mfd the capacity was $\frac{59}{36}\times0.03816$=0.06254 mfd.

Now the self-induction in the primary was: primary one turn+connections=56,400+ +6600=63,000 and with allowance for one half turn of self-induction coil, we may say approx. $\frac{64}{10^6}$ henry.

The pericd was

$$T_p=\frac{2\pi}{10^3}\sqrt{\frac{64}{10^6}\times 0.06254}=\frac{8\times 2\pi}{10^6}\sqrt{0.06254}=\frac{4\pi}{10^6}=\frac{12.5664}{10^6}$$

and from this n=79,600 per second. The secondary was vibrating in synchronism hence $T_s=T_p=\frac{2\pi}{10^3}\sqrt{0.04\times C}$, where C denotes capacity which could be associated with the coil, if it had no capacity of its own, and this capacity together with the self-induction of the coil of 0.04 H as before found would give the period $T_s=\frac{4\pi}{10^6}=\frac{2\pi}{10^3}\sqrt{0.04\,C}$. From this follows

$$C=\frac{1}{10^4}\text{ mfd. or }\frac{9\times 10^5}{10^4}=90\text{ cm.}$$

This is the value experimentally found and more to be relied upon than that derived in other ways. Taking this value and adding to the coil a sphere of radius 38.1 cm the total capacity of the system would be 90+38.1=128.1 cm and now we should find the period of the system to be

$$T_s'=\frac{2\pi}{10^3}\sqrt{0.04\times\frac{128.1}{9\times 10^5}}=\frac{4\pi}{3\times 10^6}\sqrt{12.81}=\frac{4\pi}{3\times 10^6}\times 3.58=\frac{14.9958}{10^6}$$

or $\frac{15}{10^6}$ approx. $=T_s'$ or n=66,666 per sec.

We can now find the capacity in primary required for resonance with secondary. The primary period will be $T_p'=\frac{2\pi}{10^3}\sqrt{\frac{64}{10^6}C_p}$, where C_p is the capacity required in primary. Now we have then $T_p'=T_s'=\frac{2\pi}{10^3}\sqrt{\frac{64}{10^6}C_p}=\frac{4\pi}{3\times 10^6}\times 3.58$ (from above) and

$$\sqrt{\frac{64}{10^6}C_p}=\frac{2\times 3.58}{3\times 10^3}\text{ or }\sqrt{C_p}=\frac{3.58}{12}\text{ or }C_p=\left(\frac{3.58}{12}\right)^2=0.096\text{ mfd.}$$

Since one bottle approximates $\frac{0.03816}{36}$ mfd we would want 0.096: $\frac{0.03816}{36}$=90.6 bottles total or, on each side of the break 2×90.6=181.2 bottles. This would suppose that the ball could have a capacity of 38.1 cm but this is physically impossible since it would have to be removed from all objects. In reality its capacity will be always much greater and the system will vibrate much slower as a rule. In fact, the test showed that resonance was attained with the ball 10—18 feet from the ground with all bottles in and in addition 5 1/2 turns in the self-induction box. The tuning was naturally not sharp as the capacity was large and the maximum appeared to be with the ball 10—18 feet from the ground. To get sharper tuning a smaller ball of 18" diameter was used and now resonance was obtained with the ball 10 feet from the ground and all bottles in and no self-induction in the regulating coil.

Colorado Springs

Oct. 21, 1899

To ascertain the value of connections in terms of turns of the regulating coil and for other purposes the coil before described, 404 turns with rubber wire attached, was tuned for three different values of the regulating turns. The method was one frequently used in New York and is illustrated in the plan shown. One end of the coil was connected to that end of condensers, or respectively to that end or terminal of transformer which was grounded and the rise of potential of free terminal of tuned coil was observed by an adjustable spark gap. In this manner very close adjustments are easy. The resonating condition indicated by the longest sparks in the adjustable gap was secured with the following three values:

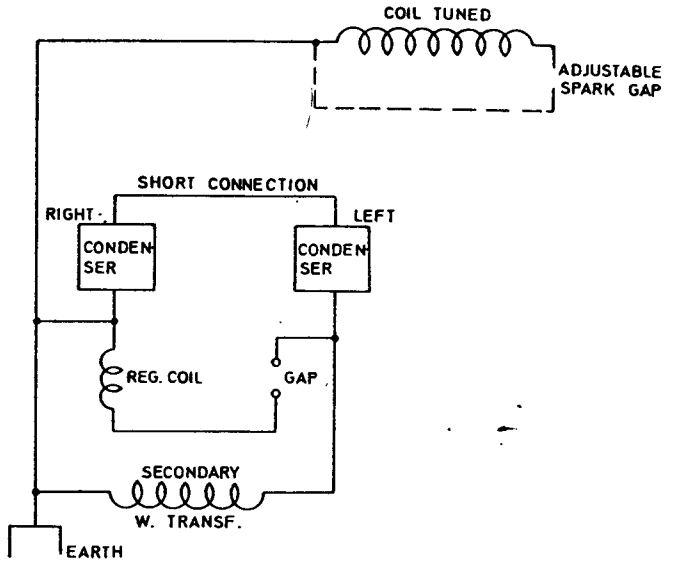

Capacity in the primary in bottles on each side	total	Turns in regulating coil	
8 tanks less 2 bottles	$=286=\overbrace{0.15157}$	16.5	The tuning was not
7 less 2 „	$=250=0.13249$	$18=L_1$	quite as sharp in the
6 „ 2 „	$=214=0.11341$	$21=L_2$	first case,

but it was very sharp in the last two experiments. Taking these and calling x the self-induction of the connections we would have in the case corresponding to L_1 of the regulating coil $T=\frac{2\pi}{10^3}\sqrt{0.13249\,(L_1+x)}$ and in the case corresponding to L_2 of the self-induction coil

$$T=\frac{2\pi}{10^3}\sqrt{0.11341\,(L_2+x)}.$$

From this $0.13249\,(L_1+x)=0.11341\,(L_2+x)$ and

$$x=\frac{0.11341\,L_2-0.13249\,L_1}{0.01908}$$

Now L_1 and L_2 should be exactly measured; resonance method will probably suit the purpose best. This is to be more rigorously carried out.

In the experiments before described, for the purpose of ascertaining the influence of elevation on the capacity of a sphere, the latter was connected to the coil of 404 turns by means of a wire No. 10 heavily covered with rubber (3/8″ wall). Evidently this wire affected the period of the system and to ascertain to what extent, the wire was placed in

the same position as when used in the experiments with the ball at its lowest position — 20.66 feet from the ground. The sphere was omitted but the streamers on the end were prevented by sealing the end with wax, covering with tape and sticking the end of the wire into a glass bottle with very heavy walls. Resonance was attained with (6×36)—2 bottles on each side and 21 turns in the self-induction regulating coil. This was 214 bottles on each side or 107 total. In making the test the primary turn of the oscillator, usually connecting the two coatings of the condensers on the bottom, was left off and the coatings joined by a short wire. The total self-induction in the primary circuit was therefore the 21 turns of the regulating coil plus the connections, or from previous figures 100,800+ +6600=107,400 cm. Now in the test of Oct. 9, with the ball connected to the cable, resonance was obtained with 4.66 tanks on each side or 4.66×36=168 bottles approx. The total self-induction was 21.5 turns of regulating coil+1 turn primary + connections= =103,200+56,400+6600=166,200 cm, both values from calculated data. Had the self--induction been the same we would have had instead of 168 bottles $\frac{166,200}{107,400}=260$ bottles. Thus with the sphere the capacity in the vibrating secondary system was increased by the ratio $\frac{260}{214}$ or $\frac{130}{107}$.

The period of the primary circuit in the first case can now be ascertained. The capacity was 107 bottles$=\frac{107}{36}\times 0.03816=0.11342$ mfd. The self-induction as before stated 107,400 cm. or 0.0001074 H. The period therefore was $\frac{2\pi}{1000}\sqrt{0.0001074\times 0.11342}$. Now the secondary vibrated with the rubber wire attached, the same period which was $\frac{2\pi}{1000}\sqrt{0.04\times C}$, designating by C the ideal capacity associated with the self-induction of the coil. These two were equal and we have $C=\frac{0.0001074\times 0.11342}{0.04}$ mfd, or

$$\frac{10.74\times 0.11342\times 9}{0.04}=30.45\times 9=274 \text{ cm.}$$

This was the capacity with the cable comprised. But before we have found the capacity of the coil alone, with no wire attached, 90 cm or nearly so. The addition of the rubber cable made therefore a considerable difference. It would not have been so high had the streamers been entirely prevented but despite the wax and glass bottle there was a leak which had the same effect as if the capacity had been increased. Since by adding the ball the capacity was increased by the ratio $\frac{216}{214}$ we have — calling now c the capacity of the sphere at the initial elevation of 20.66 feet — $\frac{260}{214}=\frac{274+c}{274}$ and from this

$$c=\frac{274\times 46}{214}=58.88 \text{ cm.}$$

This then would be, according to this estimate, the actual value of the capacity of the sphere at that elevation.

Colorado Springs

Oct. 22, 1899

One of the upper terminals of the condenser (+) usually connected to the ground was joined to the lower end of the coil of 689 turns, the upper end remaining free. The ground was in this case omitted for the purpose of securing a higher initial excitation. The maximum rise was ascertained by an adjustable spark gap as shown. The results of the tests are given in the table below:

Capacity in primary circuit expressed by the number of bottles used	Self-induct. of primary or exciting circuit Turns in regul. coil+connections	Spark length on terminals of the coil	Observation relating to spark
$\frac{(8 \times 36) - 2}{2}$	1.125+connections	4 1/8 inch	
$\frac{(7 \times 36) - 2}{2}$	2.375+ ,,	4 3/4 ,,	The spark was continually increasing and the excitation was reduced as the capacity was getting smaller
$\frac{(6 \times 36) - 2}{2}$	3.625+ ,,	5 5/8 ,,	
$\frac{(5 \times 36) - 2}{2}$	4.75 + ,,	5 3/4 ,,	
$\frac{(4 \times 36) - 2}{2}$	6.25 + ,,	5 7/8 ,,	reduced
$\frac{(3 \times 36) - 2}{2}$	8.25 + ,,	6 1/4 ,,	still more
$\frac{(2 \times 36) - 2}{2}$	11.625+ ,,	7 ,,	still more
$\frac{(1 \times 36) - 2}{2}$	22 + ,,	9 ,,	still more
appr. $\frac{31}{2}$	24 + ,,	about same	

The spark was getting longer because the efficiency of the exciting circuit was increased, as the inductance of this circuit was increased and capacity diminished. There were smaller frictional losses and after each break the system vibrated longer and excited the coil better.

The short stout wire was now substituted by each of the two primary turns separately and joined in multiple with the results indicated below:

$\frac{32}{2}$	13 1/4 turns+1 primary+connections	The primary used was the upper one.
$\frac{32}{2}$	14 „ +1 „ + „	„ „ lower one.
$\frac{32}{2}$	14 1/2 „ +1 „ + „	The tuning was very sharp in the first two cases, not quite so in the last instance.

In order to get useful data as to the self-induction of the connections and also of the various turns of the regulating coil which were most frequently used in the experiments, tests were made as follows. A coil still to be described, built for a special purpose, was used (689 turns, drum 14" diam., 8 feet long) and was excited from one terminal of the condensers, as indicated in the sketch below. The coil had a definite period which was ascertained with all condensers in and the least possible self-induction; the condensers were taken out and more turns of the self-induction coil inserted until resonance was again attained. Since the period was in all instances the same the self-inductance of the circuit was thus varied inversely as the capacity. When all self-inductance or nearly so was taken out and only the connections remained by a simple ratio between the known capacities and a known inductance, the inductance of the connections was given, or else this quantity was ascertained from the known period which was maintained throughout the experiments (that of the coil before referred to). The lower ends of the condensers, usually joined by the primary, were connected by a short stout conductor of inappreciable resistance and inductance.

The method used in the experiments recorded today for determining experimentally the inductance of the connections is very convenient and secures good results. The coil

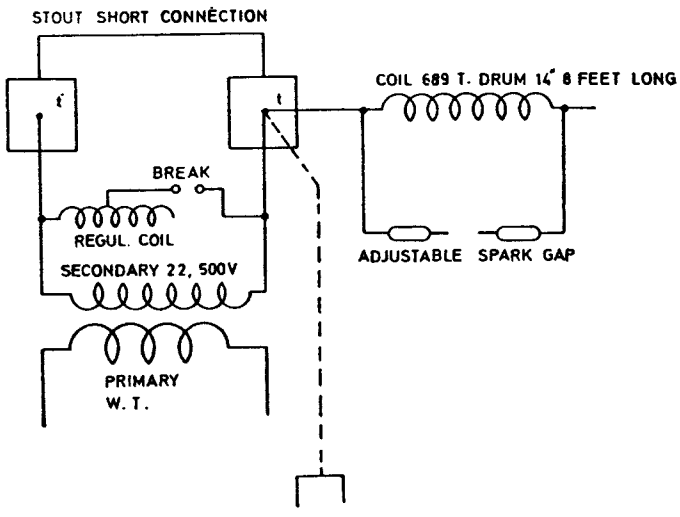

used in the experiments was one of very high self-induction to make the tuning very sharp and it was wound on a drum of relatively small diameter to reduce internal distributed

capacity. This likewise improves the sharpness of the adjustment. It was easy to detect variations of one sixteenth of one turn of the regulating primary coil. From the preceding data, calling l the inductance of one turn and l_1 that of 22 turns, and C the capacity in the primary when 1.125 turns were used and C_1 that when 22 turns were employed, we have, since the period was the same:

$$(l \times 1.125 + \text{connections})\, C = (l_1 + \text{connections})\, C_1.$$

Now it is not necessary to determine C and C_1 since only the ratio is needed and we may simply take the number of bottles in each case. This gives:

$$(l \times 1.125 + \text{conn.}) \times 143 = (l_1 + \text{conn.}) \times 17.$$

Now in a previous instance l and l_1 were approximately: l=4800 cm, l_1=105,000 cm. Substituting these values we have:

$$(5400 + \text{conn.}) \times 143 = 17 \times (105{,}000 + \text{conn.})$$

$$\text{and connect.} = \frac{(17 \times 1050 - 143 \times 54) \times 100}{126}$$

From this the inductance of the connections would be=8040 cm, or 8000 cm. approx. It would be desirable, however, to eliminate the turns of the coil and so estimate the inductance of the connections directly.

Colorado Springs

Oct. 23, 1899

Experiments to further ascertain the influence of elevation upon capacity.

The coil referred to on a previous occasion was finished with exactly 689 turns on a drum of eight feet in length and 14" diam. The wire used was cord No. *20* as before stated so that the approximate estimate of self-induction and other particulars holds good. The coil was set up upright outside of the building at some distance to reduce any errors due to the influence of the woodwork. From the building extended a structure of dry pine to a height of about sixty feet from the ground. This framework supported, on a projecting crossbeam, a pulley (wood) with cord for pulling up a ball or other object to any desired height within the limits permitted and this beam also carried on its extreme end and close to the pulley a strong glass bottle within which was fastened a bare wire No. 10, which extented vertically downward to the top of the coil. The bottle was an ordinary Champagne bottle, from which the wine had been poured out! and the bottom broken in. It was forced neck downward into a hole bored into the beam and fastened besides with a cord. A tapering plug of hard wood was wedged into the neck and into this plug was fastened the wire. The bottle was finally filled with melted wax.

The whole arrangement is illustrated in the sketch shown in which *b* is the bottle with wooden plug *P* supported on beam *B* also carrying pulley *p*, over which passes the cord for pulling up the object, which in this case is shown as the sphere *C*. The spheres used were of wood and hollow and covered very smoothly with tin foil and any points of the foil were *pressed in* so as to be *below* the surface of the sphere. This is a necessary

precaution to avoid possible losses by streamers when the sphere is charged to a high potential. It is desirable to work with strong effects as the greater these are the better the vibration can be determined, but it is necessary to carefully avoid losses and errors owing to the formation of streamers. These have the effect of increasing the apparent capacity so much that a thin wire may often produce results comparable to those obtained with large capacities. The streamers, of course, cause frictional loss and thereby diminish the economy of the system and impair the quality of the results. They also cause a loss of pressure just as leaks in air on water pipes. The ball to be tested or any other object was provided with two metallic bushings, on contacts *c c*, consisting of small split brass tubings which were in good connection with the conducting surface and also insured contact

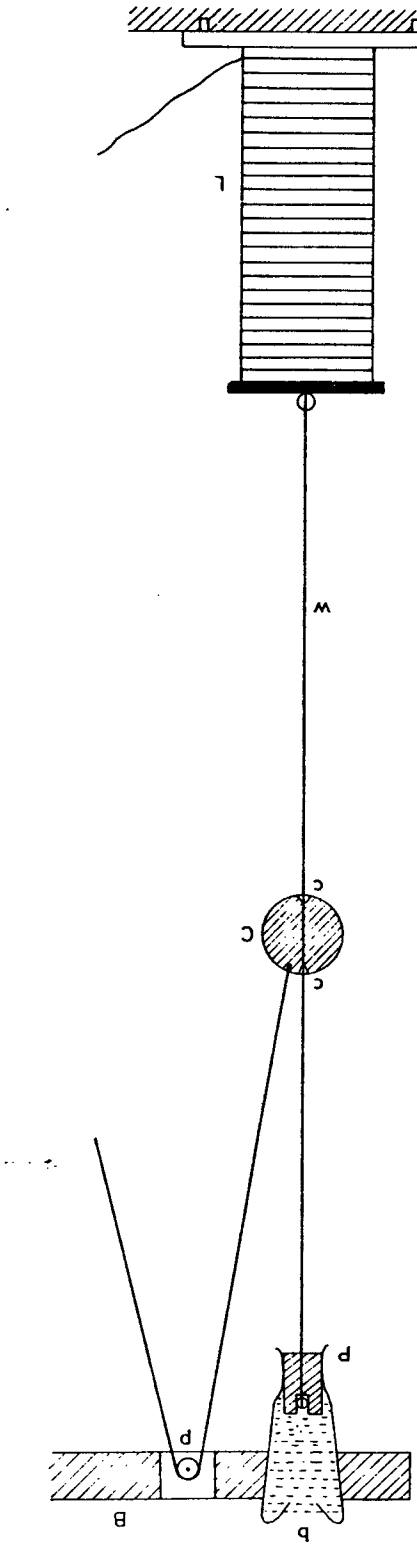

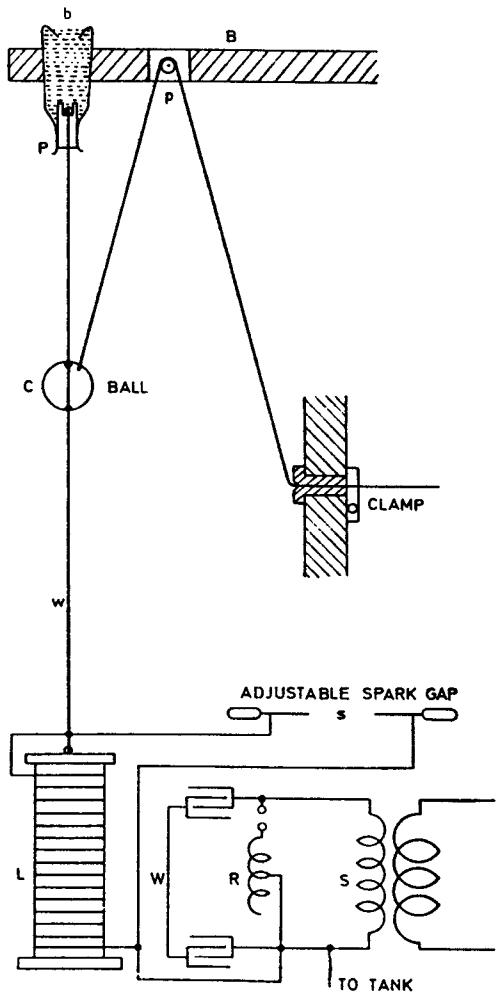

with wire *w* which at the same time served to guide the ball in its up and down movement. To avoid losses the bushings did not project beyond the surface of the ball and for the same reason the cord was not fastened to a hook but a hole was drilled into the ball, the cord with a knot on the end was slipped in and a wooden plug driven into the hole, so that nothing was sticking out capable of giving off streamers or causing leaks into the air. In the first series of experiments a ball of 18″ diameter was used. The ball was not perfectly round but the error due to a slight irregularity of shape was very small. The plan of connections is shown in the sketch in which the same letters are used to designate the same parts of apparatus as before. The excitation of the coil was effected by connecting the lower end to one of the terminals of the condenser — the one which was connected to that end of the secondary of the 60,000 volt transformer which was in connection with the tank. The tank, as described on a previous occasion, was usually connected to the ground but in these first experiments the ground connection was omitted to secure stronger excitation. From the terminals of the coil two thin and heavily insulated wires were led to an adjustable spark gap *s* which was manipulated until the maximum rise of potential on the coil was ascertained. The two sets of condensers were joined by a stout short wire *W* of inappreciable self-induction and resistance and the inductance of the exciting circuit was varied by inserting more or fewer of the turns of the regulating coil *R* into the circuit through which the condensers were periodically discharged. The wires leading from the coil to the adjustable spark gap *s* were, as before remarked, very thin, as short as it was practicable to make them and heavily insulated. By observing these precautions the error due to the capacity of these wires themselves was reduced to a minimum, also the loss owing to a possible formation of streamers. To reduce the capacity the wires were led far apart and then brought in line to the spark gap. The lower wire, which was connected to a point of comparatively low potential was of little consequence but on the top wire these precautions were imperative. The procedure was as follows: first the period of the coil *L* and capacity attached to the free terminal was ascertained by varying the capacity or self-induction, or both, of the primary or exciting circuit until resonance was reached which was evident from the maximum rise of potential. When the period had thus been determined with the capacity, say a sphere, in one position, the position of the body of capacity was varied by shifting it to another place along the wire *w* and the adjustment of the primary circuit was again effected until resonance was reached, generally by simply varying the length of wire of the regulating coil included in the primary circuit. Now as the self-induction of the coil *L* remained the same through all experiments, the apparent capacity could be easily determined from the self-induction and the known period of the primary or exciting circuit. By keeping the capacity in the primary circuit the same or, eventually, the self-induction, the procedure was simplified and the capacity in the system including coil *L* was then at once given by a simple ratio, as in some cases previously described. It was preferable to vary the self-induction as the change of this element could be effected continuously and not step by step, as was the case with the capacity.

The apparatus being arranged as stated, the lowest position of the ball of 18″ diam., which was first used, was 9′ 5″ from center of ball to ground and the highest 58′ 9″.

To ascertain the period of the system *L* the vertical wire was first disconnected and only the spark wires left on, then the vertical wire was connected and the period again determined by adjusting the primary circuit, then the ball was placed in its lowest position and finally readings were taken with the ball at various heights up to the maximum elevation. The results condensed were as follows:

Coil L alone only with spark wires, no vertical wire:

Capacity total in primary circuit	Total primary self--induction turns of regulating coil+conn.	Height of ball from center to ground	Analyzing spark at s
$\frac{142}{2}$=71 bottles	9 7/8 turns+connections	*no ball, no wire*	3 3/4"

Coil *with* vertical wire and spark wires:

$\frac{142}{2}$=71 bottles	18 3/8 turns+connect.	*no ball*	3 1/4"

Coil with *ball, vertical wire* and spark wires:

$\frac{142}{2}$=71 bottles	19 1/2 turns+conn.	9 feet 5"	4"
„ „	20 3/8 „ + „	33' 9"	4 3/8"
„ „	21 1/4 „ + „	58' 9"	4 1/8"

Owing to the construction of the coil L which, as before stated, aimed at sharp tuning it was easy to detect a variation of $\frac{1}{16}$ of *one turn* of the regulating primary coil R.

It was desirable to take some readings with all the bottles in and the results were nearly the same and could still be read off with fair exactness, although the variation on the regulating coil R was reduced to one half, the capacity in the primary being just double that used in the experiments the results of which were just given.

The readings with all the condensers were as follows:

Capacity in primary total	Total self-induction in primary turns of reg. coil+connections	Height of ball from center to ground	Spark on terminals of L
286 bottles	10 1/8 + conn.	9' 5"	4 1/4"
„	10 9/16+ „	33' 9"	4 1/2"
„	11 + „	58' 9"	4 3/4"

Note to above experiments:

The vibration of the coil L with vertical wire and spark wires was found to be in resonance with the primary in another series of observations with

142 bottles	18 3/4 turns+connections

whereas before it was found to be so with 18 3/8 turns. When the different value 18 3/4 turns was observed the *wind* was *blowing hard* and it would seem as if this would have had the effect of increasing the apparent capacity of the aerial vertical conductor. This is to be followed up.

The experiments seemed to demonstrate clearly that the augmentation of the capacity as the ball was elevated was in a simple proportion to the height, for at the middle position the value found was very nearly the arithmetic mean of the values in the extreme positions.

Colorado Springs

Oct. 24, 1899

Tests continued on the effect of elevation upon the capacity of a body connected to earth.

The same coil was used as in the tests just before recorded, but the ball of 18″ diam. was substituted for by one of 30″ diam.

These readings were in all probability closer as an improvement in the procedure was made.

The results were as follows:

First set of readings.

Capacity in primary circuit Bottles total mfd.	Self-inductance of primary: Turns of reg. coil+ connections	Height of ball above ground from center	Analyzing spark on terminals of excited coil
$\frac{(8\times 36)-2}{2}=143=0.1287$	10 3/8+connections	9′ 11″	4 1/2″
$\frac{(8\times 36)-2}{2}=143=0.1287$	10 3/4+ ,,	34′ 3″	4 3/4″
$\frac{(8\times 36)-2}{2}=143=0.1287$	11 1/8+ ,,	58′ 6″	5 1/8″

Second set of readings. Capacity reduced in primary to get greater variation on regul. coil.

$\frac{(4\times 36)-2}{2}=71=0.0639$	19 3/4+ ,,	9′ 11″	4 3/8″

$\frac{(4\times 36)-2}{2}=71=0.0639$	20 3/8+	„	34′ 3″	5 1/4″
$\frac{(4\times 36)-2}{2}=71=0.0639$	21 +	„	58′ 6″	5 3/8″

Note: After these readings had been taken it was found that the ball sliding on the vertical wire did not make a good contact. This might have modified the results slightly.

Colorado Springs

Oct. 25, 1899

Experiments on influence of elevation upon capacity of conductor connected to earth continued:

This time simply a wire No. 10 extending vertically in the continuation of the axis of the coil was used. The coil was the same as before, 689 turns No. 20 cord on drum of 14″ diameter. 36 feet of wire were first taken and after each reading 3 feet were cut off. Each time resonance with the primary was attained and the constants of the primary circuit noted, this giving the necessary data for the determination of the capacity of the vertical wire. The results are indicated below:

Capacity in the primary circuit total Bottles mfd.		Self-inductance of primary Turns of reg. coil+connect.		Length of vertical wire in feet	Analyzing spark on terminals of excited coil
$\frac{(4\times 36)}{2}=71$	0.0639	17	+connect.	36	1/8″
„	„	16 3/8	+ „	33	„
„	„	15 3/4	+ „	30	„
„	„	15 1/4	+ „	27	1/16″
„	„	14 3/4	+ „	24	„
„	„	14 1/4	+ „	21	„
„	„	13 3/4	+ „	18	„
„	„	13 1/4	+ „	15	„
„	„	12 3/4	+ „	12	13/16″
„	„	12 1/4	+ „	9	9/16″

These readings are approximate.

Colorado Springs

Oct. 26, 1899.

Measurement of inductance of 689 turn coil used in investigations on influence of elevation upon the capacity of a conductor.

Readings were as follows:

Volts av.	Current	ω	Res.
118	3.315	880	28.304

$$\frac{E}{I}=\frac{118}{3.315}=35.6 \qquad \left(\frac{E}{I}\right)^2=1267.36$$

$$R^2=800.89$$

$$\left(\frac{E}{I}\right)^2-R^2=466.47$$ *Large dynamometer close*

$$\omega^2=774{,}400$$

$$L^2=\frac{\left(\frac{E}{I}\right)^2-R^2}{\omega^2}=0.00057654$$ From this $L=0.024$ henry

or=**24,000,000** cm.

This is a value slightly smaller than that calculated before. Readings were also taken with small dynamometer. This slightly damaged. The readings are to be revised upon restandardizing.

Volts av.	Current av.	ω
69.25	2.045	880

$$\frac{E}{I}=33.863 \qquad \left(\frac{E}{I}\right)^2=1146.7 \qquad \left(\frac{E}{I}\right)^2-R^2=345.81$$

$$R^2=800.89$$

$$\omega^2=774{,}400$$

$$L^2=\frac{\left(\frac{E}{I}\right)^2-R^2}{\omega^2}=0.0004466$$ From this $L=0.0211$ henry

or **21,100,000** cm.

Note: This value is decidedly too low owing to dynamometer indicating too large a current. Possibly during the test ω had changed.

Colorado Springs

Oct. 27, 1899

Test of condensers some of which were recently refilled. The corrections for capacity to be applied to the work of about two weeks ago.

Readings with 7 cells battery showed for ***one half***

Microfarad Standard	Defl. 101 101 101	average 101°
For set of condensers all in multiple on left side from door	51 51 51	average 51°
For set of condensers all in multiple on right side from door	53 53 53	average 53°
For all condensers in multiple	104 104 104	average 104°

The difference between the two sets is probably due to different heights of solution in the tanks or bottles. In these measurements there were two bottles less on each side in the central tanks.

Taking the above data, the total number of bottles when all were in quantity was $(16\times 36)—4=576—4=572$ bottles.

The capacity was $\frac{104}{101}\times 0.5=$**0.515 mfd** approx. This would give

for one bottle an average:	0.0009 mfd or	810 cm	
„ two „ „	0.0018 „	1620 „	These are
„ three „ „	0.0027 „	2430 „	frequently
„ 12 „ „	0.0108 „	9720 „	needed
for 36 bottles or one tank	0.0324 „	29,160 „	
„ 18 „ half of one tank	0.0162 „	14,580 „	

Note: Small mica condensers with fibre covers made for resonating circuits have a little less than 1/20 mfd each; two were measured.

Referring to the preceding results the period of the excited system without the vertical wire was as follows:

Capacity in primary 71 bottles=0.0639 mfd.
Self-induction of primary connections plus 9 7/8 first turns of the regulating coil measured: 32,700 cm.

$$T_1=\frac{2\pi}{10^3}\sqrt{0.0639\times\frac{32{,}700}{10^9}}$$

With the vertical wire the period corresponding to that of the excited system was T_2, which estimated is:

Capacity in primary as before 0.0639 mfd.
Self-ind. in primary conn.+18 3/8 turns measured: 65,000 cm.

$$T_2=\frac{2\pi}{10^3}\sqrt{0.0639\times\frac{65{,}000}{10^9}}$$

Now calling C the capacity of the excited system with only the spark wires, L the self-induction of the excited coil, before found to be $L=0.024$ H, we have for the period of the excited system:

$$T_{s1}=\frac{2\pi}{10^3}\sqrt{0.024\times C},\quad C \text{ being in mfd. Now } T_{s1}=T_1 \text{ or}$$

$$0.024\times C=0.0639\times\frac{327}{10^7} \text{ and } C=\frac{327\times 0.0639}{10^7\times 0.024}\text{ mfd or}$$

$$C=\frac{9\times 10^5\times 327\times 0.0639}{10^7\times 0.024}=\frac{0.5771\times 327}{2.4}\text{ cm.}=\mathbf{78.36\ cm=C}$$

Calling presently C_1, the capacity of the excited system when the vertical wire was attached, we have by similar reasoning from

$$T_{s2}=\frac{2\pi}{10^3}\sqrt{0.024\times C_1}=T_2=\frac{2\pi}{10^3}\sqrt{0.0639\times\frac{65{,}000}{10^9}}$$

$$C_1=\frac{65}{10^6}\times\frac{0.0639}{0.024}\text{ mfd, or } C_1=\frac{9\times 10^5\times 65}{10^6}\times\frac{0.0639}{0.024}\text{ cm}=\mathbf{155.76\ cm.}$$

The capacity of the wire alone would from these results be

$$C_1-C=155.76-78.36=\mathbf{77.40\ cm.}$$

Calculated approximately we have the following data for the wire: diam. of wire No. 10=0.2588 cm., $r=0.1294$ cm.

$$l=50 \text{ feet approx.}=50\times 12\times 2.54=1524 \text{ cm.}$$

From this: $\frac{l}{r}=11{,}777.4$ and capacity of wire $=\frac{l}{2\log_e \frac{l}{r}}=\frac{1524}{18.7}=\mathbf{81.5\ cm.}$

The calculated value is a little larger but not much, well within the errors of the adjustment and determination of the quantities by experiment.

Continuing we see that when the ball was at its lowest position the period of the primary was as follows:

Capacity in primary as before 0.0639
Inductance: connections+19 1/2 turns measured 68,300 cm or $\frac{683}{10^7}$ H.

$$T_{pl}=\frac{2\pi}{10^3}\sqrt{0.0639\times\frac{683}{10^7}}$$

Similarly, when the ball was at its highest position, we have:

Capacity in primary circuit as before 0.0639
Inductance: connections+21 1/4 turns which, measured, were found: 76,100 cm, or $\frac{761}{10^7}$ H

$$T_{ph}=\frac{2\pi}{10^3}\sqrt{0.0639\times\frac{761}{10^7}}$$

Now calling C' the total capacity of the excited system when the ball was lowest, we have the period of the excited system:

$$T_{sl}=\frac{2\pi}{10^3}\sqrt{0.024\times C'}=\frac{2\pi}{10^3}\sqrt{0.0639\times\frac{683}{10^7}}\ \text{from which}\ C'=\frac{0.0639\times 683}{0.024\times 10^7}\ \text{mfd,}$$

$$\text{or } C' \text{ in cm}=\frac{9\times 10^5\times 0.0639\times 683}{0.024\times 10^7}=\mathbf{163.66\,cm=C'.}$$

The ball at the lowest position effectively contributed only

$$C'-C_1=163.66-155.76=\mathbf{7.90\ cm}$$

but this low value was probably due to the fact that the vertical wire extended above.

Calculating similarly the value of C'', that is the capacity of the excited system when the ball was highest:

$$T_{sh}=\frac{2\pi}{10^3}\sqrt{0.024\times C''}\quad C''=\frac{0.0639\times 761}{10^7\times 0.024}=\text{in cm.}=182.36\text{ cm.}$$

Now $C''-C'=182.36-163.66=\mathbf{18.70\,cm}$ gives the actual value for the ball on top. This is an increase of nearly 137% for 49′ 4″ or about 2.76% per foot.

Colorado Springs

Oct. 29, 1899

Experiments with coil 689 turns on drum 14″ diam. were again continued to further study the influence of elevation upon capacity.

The same arrangement was used which was described on a previous occasion with vertical wire and ball 30″ diam. The excitation of the coil was effected by connecting it to one of the terminals of the condensers, that which was joined to the terminal of the Westinghouse Transformer which was in connection with the tank — but the connection of the latter to the ground was not made directly but through a spark gap 1/8″ long.

The spark wires leading to the spark gap, serving to observe resonant rise, were No. 26 guttapercha coated and each about 25 feet long: It was really only the upper wire leading from the free terminal which was of importance to consider. The vibration of the coil was first ascertained, nothing except the spark wires being attached. Next a sphere of 30″ diam., the tin foil of which was cut through with a sharp knife to prevent formation of eddy currents, was connected to the top of the coil and the vibration again determined. Then the vertical wire was put on and the sphere taken off. After determining the vibration with the vertical wire the sphere was slipped on the same and readings taken with the sphere at different heights. The results were as follows:

Coil with spark wires alone.

Capacity in primary Bottles total mfd	Self-inductance of primary Turns of reg. coil+conn.	Analyzing spark on terminals of excited coil
$\frac{(4\times 36)-2}{2}=71=0.0639$	10 1/2+conn.	3″

Coil with ball of 30″ *diam. and spark wires.*

Capacity in primary circuit Bottles total mfd	Self-inductance of primary. Turns in reg. coil+connections	Analyzing spark on terminals of excited coil
$\frac{(4\times 36)-2}{2}=71=0.0639$	13+conn.	3 1/2″

Coil with vertical wire No. 10, fifty feet and spark wires.

$\frac{(4\times 36)-2}{2}=71=0.0639$	19 3/4+conn.	3 7/8″

Readings with ball of 30" diam., vertical wire and spark wires connected to coil.

Capacity in primary circuit Bottles total mfd	Self-inductance of primary. Turns in reg. coil+conn.	Height of ball from center to ground	Analyzing spark on terminals of excited coil
$\frac{(4\times 36)-2}{2}=71=0.0639$	20 3/4+conn.	9′ 11″	4 3/8″
$\frac{(4\times 36)-2}{2}=71=0.0639$	21 3/8+conn.	32′ 8″	4 3/8″
$\frac{(4\times 36)-2}{2}=71=0.0639$	22 +conn.	55′ 7″	4 3/8″

Readings continued with primary capacity modified.

$\frac{(8\times 36)-2}{2}=143=0.1287$	11 5/8+conn.	10′ 3″	1/4″
$\frac{(8\times 36)-2}{2}=143=0.1287$	12 1/4+conn.	33′ 3″	1″
$\frac{(8\times 36)-2}{2}=143=0.1287$	12 7/8+conn.	55′ 9″	1 1/2″

The capacity in primary was now still further reduced.

The readings were as follows:

Capacity in primary Bottles total mfd	Inductance in primary. Turns in reg. coil+conn.	Height of ball above ground from center	Analyzing spark on terminals of excited coil
$\frac{(5\times 36)-2}{2}=89=0.0809$	16 1/2+conn.	10′ 3″	4″
$\frac{(5\times 36)-2}{2}=89=0.0809$	17 3/8+conn.	33′ 3″	4 1/4″
$\frac{(5\times 36)-2}{2}=89=0.0809$	18 1/4+conn.	55′ 9″	4 3/8″

In these experiments the excitation of the coil was varied by adjusting the small spark gap separating one terminal of the Westinghouse transformer from the ground. The tuning was not very sharp as the ball was large and the magnifying factor of the coil rather small. Taking n approx. 60,000 we have $p=360{,}000$ approx., $R=28.3$, $L=0.024$ we have for $\frac{pL}{R}$ value $\frac{36\times 10^4\times 0.024}{28.3}=300$ approx. Not so small after all.

It was desirable to take some readings with the self-induction in the primary remaining the same, the capacity only being varied.

Following results were obtained:

Primary capacity Bottles total mfd	Primary self-induction. Turns in reg. coil.+conn.	Height of ball from center to ground	Analyzing spark on terminals of excited coil
$\frac{133}{2}=66.5=0.05985$	22+conn.	10′ 3″	4 3/8″
$\frac{137}{2}=68.5=0.06165$	22+conn.	33′ 3″	4 3/8″
$\frac{142}{2}=71\ \ =0.0639$	22+conn.	55′ 9″	4 3/8″

These data are to be worked out.

Colorado Springs

Oct. 30, 1899

Measurement of Inductances

The primary of the oscillator, regulating coil and connections to spark gaps and condensers as generally used were joined in series, the gaps and condensers being bridged by short pieces of wire No. 2 of inappreciable resistance. The object was to determine again: the inductance of the primary turns of the oscillator, of the regulating coil for the various turns as employed and also of the connections. The two primary turns were joined in series and readings taken across both to get better values.

The generator, a 1500 light machine smooth armature Westinghouse type, was specially run, the speed being kept constant. The frequency was determined as before by taking the speed of synchronous motor running without any load and with strong excitation of field. There was no slip under these conditions as frequently ascertained.

The average speed was very closely 2070 per minute on a motor which was a 4-pole, this giving 8280 cycles per minute or 138 per second. From which $\omega=867$.

The connections as used are shown in diagram below:

The connections were all left exactly as used generally with the exception that, as before stated, the gaps and condensers were bridged by short pieces of wire No. 2.

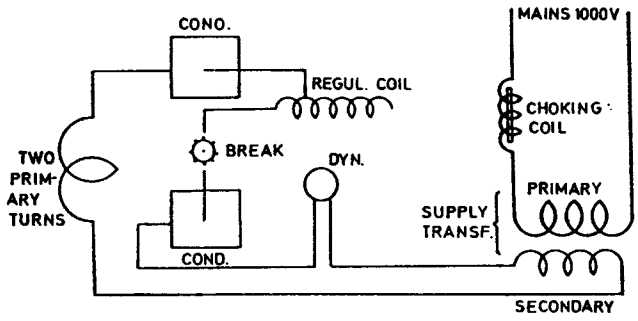

Readings for: *two primary turns, regulating coil* 23.5 *turns* and *all connections in series:*

E	*I*	ω	*R*
14.7	53.00	867	
14.8	53.22	,,	
15.1	54.00	,,	
15.1	54.00	,,	

This gave an average of:

E	*I*	ω	*R*
14.925	**53.555**	**867**	

Readings for *two primary turns in series:*

E	*I*	ω	*R*
10.45	52.1	867	
10.35	52.1	,,	
10.40	52.1	,,	

This gave average values:

E	*I*	ω	*R*
10.4	**52.1**	**867**	

Readings were also taken across each one of the primary turns, the e.m.f. of course being exactly one half but the e.m.f. across the *upper* turn was *slightly greater*, probably because of the greater distance from the ground, possibly because of being nearer to the open secondary.

Readings for *regulating coil* 23.5 turns and *connections* of *break* and *condensers* together in series:

E	*I*	ω	*R*
4.1	52.1	867	
4.1	52.1	,,	
4.1	52.1	,,	

This gives average values:

E	*I*	ω	*R*
4.1	**52.1**	**867**	

Readings for *regulating coil alone* for *various turns:*

E	*I*	ω	Number of turns across which e.m.f. read	Resistance of the turns included
$\frac{7.85}{2}=3.925$	52.1	867	23.5	
$\frac{6.3}{2}=3.15$	52.1	867	19.5	
$\frac{4.8}{2}=2.4$	52.5	867	15.5	
$\frac{3.3}{2}=1.65$	53.00	867	11.5	
$\frac{2}{2}=1$	53.00	867	7.5	
0.5	53.00	867	3.5	

To get better readings for the separate turns of the regulating coil the voltage was taken again as first across the whole: 2 primary turns, connections and regulating coil all in series and the turns of the latter were then varied, readings being taken for each case. The results are indicated below:

E	I	Number of turns of the regul. coil included in the circuit	ω	Resistance total of circuit included
11.55	55.8	0.5	867	
11.675	55.8	2.5	,,	
11.90	55.8	4.5	,,	
12.15	55.3	6.5	,,	
12.45	55.3	8.5	,,	
12.80	55.3	10.5	,,	
13.20	54.9	12.5	,,	
13.50+a little	54.9	14.5	,,	
13.90	54.9	16.5	,,	
14.25	54.4	18.5	,,	
14.60+a little	54.4	20.5	,,	
14.15	51.1	22.5	,,	
14.30	51.1	23.5	,,	

To facilitate estimation of the inductance of the various turns the readings were reduced to the same value of current and are as follows:

11.55	55.8	0.5	867
11.675	55.8	2.5	,,
11.90	55.8	4.5	,,
12.26	55.8	6.5	,,
12.562	55.8	8.5	,,
12.915	55.8	10.5	,,
13.416	55.8	12.5	,,
13.721	55.8	14.5	,,
14.128	55.8	16.5	,,
14.617	55.8	18.5	,,
14.976	55.8	20.5	,,
15.452	55.8	22.5	,,
15.616	55.8	23.5	,,

Colorado Springs

Oct. 31, 1899

Measurement of inductances: New coil for further investigating effect of altitude upon capacity of body connected to earth.

The drum of 14″ diam. and 8 feet long was again used, the cord No. 20 being taken off and wire No. 10 rubber- covered used instead. Most of the data from before remained, only the number of turns was reduced from 689 to 346.

The readings of e.m.f., current and frequency were as follows:

E	I	ω
85	15.635	880
84.75	15.6	,,
82.5	15.3	,,
	Average values:	
84.38	15.512	880

R	
coil with cord	1.752
cord	0.596
coil alone	1.156 ohm.

This gives: $\frac{E}{I}=5.44$ $\left(\frac{E}{I}\right)^2=29.5936$

$R^2=1.3364$

$\omega^2=774{,}400$

$$L^2=\frac{\left(\frac{E}{I}\right)^2-R^2}{\omega^2}=\frac{29.5936-1.3364}{774{,}400}=\frac{28.2572}{774{,}400}\text{ henry}=0.00003649$$

or $L=\sqrt{0.00003649}=\mathbf{0.00604}$ **H** or $L=\mathbf{6{,}040{,}000}$ **cm.**

Now for calculating with reference to note Oct. 18 we have the following data:

diam. of core 14″=35.5 cm

length of core 96″=243.84 cm=l

S=1000 sq. cm.

N=346

N^2=119,716

$$L=\frac{4\pi}{l}N^2S=\frac{12.5664\times 119{,}716{,}000}{243.84}$$

From this L=6,169,600 cm
or 0.00617 henry approx.
This is nearly 2% greater than measured value — fairly close.

Colorado Springs Notes

Nov. 1—30, 1899

Want of time compelled omission of following items partly worked out:

Nov. 27, 28 Corrected and completed results of experiments of

Nov. 3 { with wire of different lengths and ball }, 19 and 21

Nov. 29, 30 a) Extra coils in series exciting one another,
b) Methods of tuning by telephone,
c) Exciting receiving circuit through small sensitive arc
} complete description

Patent matter worked on Nov. 1—30:

Exclusion of messages in telegraphy:

a) Two or more synchronized receiving circuits controlling receiver
b) Key or safety combination
} text to be completed.

Colorado Springs Nov 1. 1899.

MUZEJ NIKOLE TESLE

Measurement of inductance of new extra coil built chiefly for investigating propagation of waves through the ground and similar objects also to investigate further the behaviour of strong streamers.

The frame was made of light notched woodwork fastener to three strong wooden rings. Provision was made for 106 turns. The rings were 8 feet in diam and taking further 1½" on each side for the crosspieces the total diameter of coil inside was 8'3". The length was 8 feet less 1½" on top and ½" on bottom making total length of coil 7 feet 10". The data are as follows:

Length of coil 7'10" = 94" = 238.76 C.M. = l ; diam 8'3" = 99" = 251.46 C.M. = d

Turns wire No. 10 106 = N (really 105 turns wound + one turn loose)

Area $S = \frac{\pi d^2}{4} = 49662.52$ C.M. sq. From these data we have

$$L = \frac{4\pi}{l} N^2 S = \frac{12.5664 \times 11236 \times 49662.52}{238.76} = 208 \times 12.5664 \times 11236$$

$$= 141196 \times 208 =$$

$L = \underline{29,368768}$ C.M. or $\underline{0.029369}$ H. approx Calculator

Now the readings were.

E	J	ω	R
110	6.05	880	coil with cord 3.26
110	6.05	880	cord 0.596
110	6.05	880	coil alone 2.664

$\frac{E}{J} = 18.1818$ $\left(\frac{E}{J}\right)^2 = 330.58$

$R^2 = 7.097$

$\left(\frac{E}{J}\right)^2 - R^2 = 323.483$

$\omega^2 = 774400$

This gives $L^2 = \frac{323.483}{774400} = 0.000417721$

$L = \sqrt{0.000417721} = \underline{0.02042\ H}$ or $\underline{20,420,000}$ C.M.

Measurement shows a value much lower but this was to be expected as the turns are large also far apart ½". However this measurement is to be made again to be sure of the results.

Colorado Springs

Nov. 1, 1899

Measurement of inductance of new extra coil built chiefly for investigating propagation of waves through the ground and similar objects. Also to investigate further the behaviour of strong streamers.

The frame was made of light notched woodwork fastened to three strong wooden rings. Provision was made for 106 turns. The rings were 8 feet in diam. and taking further 1 1/2″ on each side for the crosspieces the total diameter of coil inside was 8′3″. The length was 8 feet less 1 1/2″ on top and 1/2″ on bottom making total length of coil 7 feet 10″. The data are as follows:

Length of coil 7′ 10″=94″=238.76 cm=l; diam 8′ 3″=99″=251.46 cm=d

Turns wire No.10 106=N (really 105 turns wound+one turn loose)

Area $S=\frac{\pi d^2}{4}=49{,}662.52$ cm.sq. from these data we have

$$L=\frac{4\pi}{l}N^2S=\frac{12.5664\times 11{,}236\times 49{,}662.52}{238.76}=208\times 12.5664\times 11{,}236$$

$$=141{,}196\times 208$$

L=**29,368,768 cm,** or **0.029369 H** approx.

Now the readings were:

E	I	ω	R
110	6.05	880	Coil with cord 3.26
110	6.05	880	cord 0.596
110	6.05	880	Coil alone 2.664

Calculated

$\left(\frac{E}{I}\right)=18.1818$ $\left(\frac{E}{I}\right)^2=330.58$

$R^2=7.097$

$\left(\frac{E}{I}\right)^2-R^2=323.483$

$\omega^2=774{,}400$

This gives $L^2=\frac{323.483}{774{,}400}=0.000417721$

$L=\sqrt{0.000417721}$=**0.02042 H** or **20,420,000 cm.**

Measurement shows a value much lower but this was to be expected as the turns are large also 1/2″ apart. However this measurement is to be made again to be sure of the result.

Colorado Springs

Nov. 2, 1899

Readings were again taken today to ascertain the value found yesterday for inductance of new extra coil. The results were as follows:

E	I	ω	R	
194	10.7	887	2.664	average of three readings very closely agreeing.

$$\left(\frac{E}{I}\right) = 18.13 \qquad \left(\frac{E}{I}\right)^2 = 328.6969$$

$$R^2 = \quad 7.0969$$

$$\left(\frac{E}{I}\right)^2 - R^2 = 321.60$$

$$L = \frac{\sqrt{321.6}}{887} = \frac{17.933}{887}$$

$L = 0.0202176$ henry or **20,217,600 cm.**

This is a value a little smaller than the one found yesterday but it is within the limits of variation of ω.

Note: When the turns are far apart the ordinary formulas for calculating do not apply, and the measured value is the more inferior to the calculated value the greater the turns and the farther apart they are. When very far apart it is better to calculate inductance of one turn and multiply or, if they are not all alike, to calculate then separately and add up, making some allowance for mutual induction.

Secondary last form, two wires No. 10 in multiple 17 turns on frame described on another occasion. To test the values before found for inductance and mutual induction coefficient readings were again taken today. For secondary inductance:

E	I	ω	R	
138	16.5	887	1.382	The first two readings were in all probability the best and they are taken.
138	16.5			
136	16.3	875		
134.5	16.2			

From above:

$$\frac{E}{I} = 8.364 \qquad \left(\frac{E}{I}\right)^2 = 69.9565 \qquad R^2 = 1.91 \qquad \left(\frac{E}{I}\right)^2 - R^2 = 68.0465 \qquad \omega = 887$$

$$L = \frac{\sqrt{64.0465}}{887} = \frac{8.003}{887} = \mathbf{0.009023}\ \text{H or } \mathbf{9{,}023{,}000\ cm.}$$

This is smaller than before found because the turn before last was wound a little higher up as at first sparks would break through. It is to be measured once more however.

Readings for *Mutual Induction* Coefficient.

Two primary turns in series:

Current through primary two turns in series	Volts on secondary	
I	E	ω
45.4	34	880
45.4	34	,,
45.4	34	,,

From this $E = M\omega I$, $M = \dfrac{34 \times 10^9}{880 \times 45.4} = \mathbf{851{,}021\ cm.}$

Readings with current through the secondary gave:

Current through secondary	Volts on primary two turns series	ω
17.8	13.4	872 } over
17.8	13.4	,, }

From later readings $M = \dfrac{13.4 \times 10^9}{17.8 \times 872} = \mathbf{863{,}313\ cm.}$

This is a little larger probably due to variation of ω. Readings were now taken for each of the primary turns separate with the following results:

Upper primary turn, nearer to secondary:

Current through secondary	E.m.f. on primary	ω
17.9	6.9	872 average three readings

From this $M_{\text{upper pr.}} = \dfrac{6.9 \times 10^9}{17.9 \times 872} = \mathbf{442{,}059\ cm.}$

Current through primary	E.m.f. on secondary	ω
30.1	11.8	880 average three readings

$$M_{\text{upper. pr.}} = \frac{11.8 \times 10^9}{30.1 \times 880} = \mathbf{445{,}484\ cm.}$$

The difference again in all probability to be ascribed to variation of ω.

Lower primary turn. Readings were as follows:

Current through primary	E.m.f. secondary	ω
30.1	11.1	880 average three readings
Current through secondary	E.m.f. primary	
17.9	6.4	880 average three readings

From first set readings:

$$M_{\text{lower pr.}} = \frac{11.1 \times 10^9}{30.1 \times 880} = \mathbf{419{,}060\ cm.}$$

From second set readings:

$$M_{\text{pr. lower}} = \frac{6.4}{17.9 \times 880} = \mathbf{406{,}300\ cm.}$$

For two primary turns multiple

Current through primaries	E.m.f. secondary	ω
29.2	11.25	880 average three readings
Current through secondary	E.m.f. primaries	
17.9	6.7	880 average three readings

From first set of readings:

$M_{2\ \text{prim. multiple}} = \mathbf{437{,}811\ cm}$

From latter readings:

$M_{2\ \text{pr. multiple}} = \mathbf{425{,}343\ cm}$

Colorado Springs

Nov. 3, 1899

Investigation for the purpose of ascertaining the influence of elevation upon the capacity of a conductor connected to a vibrating system as before used, continued:

The coil of 346 turns, No. 10 wire wound on drum 14″ diam., 8 feet long was again used. The spark wires were as before No. 26 guttapercha covered, 24 feet long each. The readings were as follows:

Capacity in primary circuit *total*	Inductance in primary turns reg. coil+conn.	Length of vertical wire attached to free terminal of excited coil	Analyzing spark on terminals of excited coil
$\frac{(3 \times 36) - 2}{2}$ = 53 bottles = 0.0479 mfd	7 1/8+conn.	45 feet	3 3/8″
0.0479 mfd	6 3/8+ ,,	36 ,,	3 3/8″
,,	5 3/4+ ,,	27 ,,	3 3/8″
,,	5 3/16+ ,,	18 ,,	3 1/4″
,,	4 3/8+ ,,	9 ,,	3 1/8″
,,	3 5/8+ ,,	0 ,,	3 1/8″

Note: As repeatedly observed, the first addition of a small length of wire to a coil generally produces a great effect but a certain small length being bypassed the increase per unit of length becomes more gradual.

Experiments with coil 346 turns on drum 14″ diam. with the view of investigating influence of elevation upon the capacity of a body connected to earth continued. This time in connection with the vertical wire a ball 30″ diam. was used in the manner before described.

Coil with spark wires alone

Capacity in primary circuit *total*	Turns in regulating coil+connections	Inductance	Analyzing spark on terminals of excited coil
$\frac{(3\times 36)-2}{2}$=53 bottles= =0.0479 mfd	3 5/8 +conn.		3 1/8″

Coil with 50 feet wire No. 10 vertical

0.0479 mfd	7 3/4+conn.	4″

Coil with ball 30″ diam. lowest position 10′3″ from center to ground

0.0479 mfd	8 1/2+conn.	4 1/8″

Coil with ball mean position 33′9″ from center to ground

0.0479 mfd	8 7/8+conn.	4 1/4″

Coil with ball highest position 57′3″ from center to ground

0.0479 mfd	9 1/4+conn.	4 3/8″

Note: The excitation in this and previous case was as before described by connecting the lower terminal of coil to that terminal of the condensers (primary) which was connected to small adjustable spark gap, specially made for this purpose, to earth.

It would be desirable in these tests to do away with the spark wires as these are apt to introduce errors in the estimates of capacity. Experiments were made with new extra coil to see how close the maximum rise could be ascertained without any spark wires, merely by observing the streamers. For this purpose the extra coil was excited from the secondary of oscillator as in some previous instances. First the extra coil was tuned with spark wires, then the upper wire which is the only one of importance was taken off and the system again tuned. The results were as follows:

New Extra coil with Spark wires Guttapercha No. 26, 24 feet long

Capacity in primary circuit total		Inductance in primary circuit Turns of regul. coil+connections
bottles	mfd	
$\frac{(8\times 36)-2}{2}$=143 bottles	=0.1287	7 5/8+connections

New Extra coil without upper Spark wire

$\frac{(8 \times 36) - 2}{2} = 143$ bottles $= 0.1287$ 5 5/8 + connections

Colorado Springs

Nov. 4, 1899

Measurement of inductance of primaries.

Another series of readings were taken with the object of closely determining the inductance of the primary turns. This time a different dynamo was supplying the current. The speed was kept very constant. The readings were as follows:

Current	Electromotive force across two primaries in series	ω
345°=58.8	12 a trifle less	880
345°=58.8	12 ,,	,,
345°=58.8	12 ,,	,,

Allowing a little for zero displacement on voltmeter the average is very closely:

I	E	ω	R two primary turns in series
58.8	11.95	880	0.004 ohm.

This gives $\frac{E}{I}=0.2032$ $\left(\frac{E}{I}\right)^2=0.04129$ $R^2=0.000016$

Since R^2 is entirely negligible against $\left(\frac{E}{I}\right)^2$ we have:

$$L=\frac{E}{I\omega}=\frac{11.95}{51{,}744}=0.000230945 \text{ henry}$$

or **230,945 cm.**

This would give for one primary turn approximately

0.000057736 henry or **57,736 cm.**

The value previously found was 56,400 cm.
Reading of today would appear more reliable.

Colorado Springs

Nov. 5, 1899

Capacity of structure of iron pipes, before described, computed:

7″ pipe: Outside diam. 7.625″=19,3673 cm=d

length of pipe with cap=l=23′ 4″=280″=811.2 cm=l

$$C_1=\frac{l}{2\log_e\frac{l}{r}}=\frac{811.2}{2\times 4.42313} \qquad r=9.6837 \quad \frac{l}{r}=83.77$$

C_1=**91.7 cm.** $\log_e\frac{l}{r}=1.9231\times 2.3=4.42313$

6″ pipe: Outside diam.=6.625″=16.8275 cm=d

length of pipe 18′ 2″=218″=553.72 cm=l

$$C_2=\frac{l}{2\log_e\frac{l}{r}}=\frac{553.72}{2\times 4.182} \qquad r=8.4138 \quad \frac{l}{r}=65.81$$

C_2=**66.2 cm.** $\log_e\frac{l}{r}=1.818292\times 2.3=4.182$

5″ pipe: Outside diam. 5.563″=14.13 cm=d

length of pipe 18′ 4 1/2″=220.5″=560.07 cm=l

$$C_3=\frac{l}{2\log_e\frac{l}{r}}=\frac{560.07}{2\times 4.368} \qquad r=7.065 \quad \frac{l}{r}=79.27$$

C_3=**64.11 cm.** $\log_e\frac{l}{r}=1.89911\times 2.3=4.368$

4″ pipe: Outside diam. 4.5″=11.43 cm=d

length of pipe 15′ 7 1/4″=187.25″=475.615 cm.=l

$$C_4=\frac{l}{2\log_e\frac{l}{r}}=\frac{475.615}{8.832} \qquad r=5.715 \quad \frac{l}{r}=83.22$$

C_4=**53.85 cm.** $\log_e\frac{l}{r}=1.92\times 2.3=4.416$

17*

3 1/2" pipe: Outside diam. $4''=10.16$ cm$=d$

length of pipe $19'\ 3\ 1/4''=231.25''=587.375$ cm$=l$

$$C_5=\frac{l}{2\log_e\frac{l}{r}}=\frac{587.375}{9.49} \qquad r=5.08 \qquad \frac{l}{r}=115.6$$

$$C_5=\mathbf{61.9\ cm.} \qquad \log_e\frac{l}{r}=2.062958\times 2.3=4.745$$

3" pipe: Outside diam. $3.5''=8.89$ cm$=d$

length of pipe $18'\ 4\ 3/4''=220.75''=560.7$ cm$=l$

$$C_6=\frac{l}{2\log_e\frac{l}{r}}=\frac{560.7}{2\times 4.83} \qquad r=4.445 \qquad \frac{l}{r}=126.1$$

$$C_6=\mathbf{58.05\ cm.} \qquad \log_e\frac{l}{r}=2.1\times 2.3=4.83$$

2 1/2" pipe: Outside diam. $2.875''=7.3$ cm$=d$

length of pipe $8'\ 1/4''$
„ nipples $7\ 3/4''$
} $8'\ 8''=104''=264.16$ cm$=l$

$$C_7=\frac{l}{2\log_e\frac{l}{r}}=\frac{264.16}{2\times 4.276} \qquad r=3.65 \qquad \frac{l}{r}=72.37$$

$$C_7=\mathbf{30.89\ cm.} \qquad \log_e\frac{l}{r}=1.859\times 2.3=4.276$$

from above we have *total capacity* of structure

C:	7" pipe with cap	91.7 cm.
	6" pipe	66.2 „
	5" pipe	64.11 „
	4" pipe	53.85 „
	3 1/2" pipe	61.9 „
	3" pipe	58.05 „
	2 1/2" pipe	30.89 „
	Ball 30" diam.	38.1 „
	Total Capacity	$C=464.8$ cm.

Note: This supposes of course that all these capacities are connected in multiple. To be true it must be assumed that only long waves are used. With short waves the calculated value would not be experimentally borne out.

Colorado Springs

Nov. 6, 1899

Determination of el. st. *capacity* of the structure of iron pipes *by measurement.*

The method previously employed for such a purpose was again used. The coil described on a former occasion, wound on a drum of 10 5/16" and having 550 turns was excited from a vibrating primary system and the maximum resonant rise obtained with only the spark wires attached to the terminals of the coil. Then the upper terminal of the latter was connected to the structure and the maximum rise again obtained. From the two known periods of the primary system and the self-induction of the coil the capacity of the structure was then computed. In order to avoid errors due to the capacity of the wires connected to the coil the precaution was taken to make no change which would in any considerable way affect the result. Thus, when the vibration of the coil with only the spark wires was determined the wire which was to be later connected to the structure was likewise fastened to the upper terminal of the coil in a position such that in the second experiment or series of experiments it was only necessary to tilt the wire to bring it in contact with the structure. If this precaution would not be observed the error introduced by the connecting wire might be — and in fact it would generally be — considerable. The adjustments were first made with the spark wires and the wire which was to be connected to the structure, this wire being placed vertically and at a distance of about four feet from the latter. The maximum rise was observed on the terminals of the excited coil with:

Capacity in primary circuit total	Turns in regulating coil	Spark analyzing on terminals
$\frac{(8 \times 36) - 2}{2} = 143$ Bottles or 0.1287 mfd	2 1/8	2 5/8"

Now the wire was tilted and brought in contact with the structure and resonant maximum rise was observed with:

$\frac{(8 \times 36) - 2}{2} = 143$ Bottles = 0.1287 mfd	17 1/2	2 5/8"

To determine more satisfactorily the self-induction in both the primary vibrations readings were taken in the following manner. The two primary turns, connections to breaks and condensers and the regulating coil were all connected in series — the breaks and condensers being of course bridged by stout and short wires (No. 2 being used) and readings of e.m.f. across the two primary turns were first taken and then across the two primaries plus connections and turns in the regulating coil as were used in the two instances. Since the resistances were entirely negligible with respect to the inductances it was only necessary to make the ratio of the e.m.f. in two instances to determine the inductance of the connections and turns from the known inductance of the two primary turns which was carefully determined before. As the readings were taken practically at the same moments across the primaries alone and across the primaries connections and turns ω could not vary perceptibly, and to make sure of that the readings were taken repeatedly. The current passed through the inductances also remaining the same during the two consecutive readings, the results ought to be therefore more reliable then those obtained otherwise.

The results in the first case were as follows:

$$\left.\begin{aligned} E_1 &= 10.4 \text{ volts} \\ E &= 10 \quad \text{volts} \end{aligned}\right\} \quad I \text{ and } \omega \text{ the same.}$$

In the second case:

$$\left.\begin{aligned} E_1 &= 13.15 \text{ volts} \\ E &= 10.3 \quad ,, \end{aligned}\right\} \quad I \text{ and } \omega \text{ the same.}$$

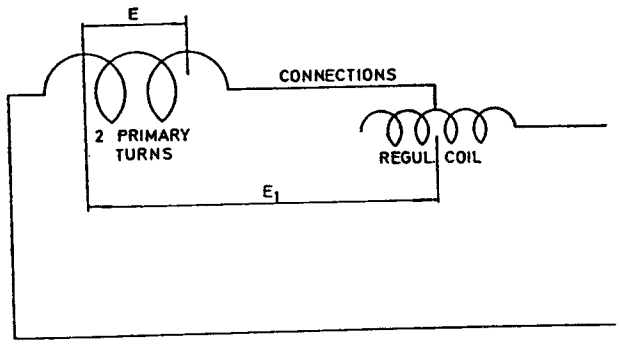

Calling now L the inductance of the two primary turns in series and L_1 that of the two primaries+connections+2 1/8 turns of the regulating coil we have in first case:

$$\frac{E_1}{E} = \frac{L_1}{L} \text{ and } L_1 = \frac{E_1}{E} L$$

Now L was previously determined to be 230,945 cm, hence

$$L_1 = \frac{104}{100} \times 230{,}945 = 240{,}183 \text{ cm.}$$

From this inductance of the connections+2 1/8 turns of the regulating coil is $L_1 - L = 9238$ cm.

In the second case we have similarly

$$L_2 = \frac{13.15}{10.3} \times 230{,}945 = 294{,}847 \text{ cm.}$$

L_2 being inductance of two primaries+connections+17 1/2 turns of regulating coil.

Hence the inductance of the connections and the turns (17 1/2) included is $L_2 - L = 63{,}902$ cm.

From these data the capacity of the structure can now be estimated as follows: In the first case the primary vibration was

$$T = \frac{2\pi}{10^3} \sqrt{\frac{9238}{10^9} \times 0.1287}$$

In the second case the primary vibration was

$$T_2 = \frac{2\pi}{10^3} \sqrt{\frac{63{,}902}{10^9} \times 0.1287}$$

Calling now C_s the capacity of the excited system when the structure was not attached to it, and C_s' that when this was the case we have:

$$T_1 = \frac{2\pi}{10^3}\sqrt{C_s L'} = \frac{2\pi}{10^3}\sqrt{\frac{9238}{10^9} \times 0.1287}$$

and

$$T_2 = \frac{2\pi}{10^3}\sqrt{C_s' L'} = \frac{2\pi}{10^3}\sqrt{\frac{63{,}902}{10^9} \times 0.1287}$$

L' being the inductance of the excited coil. L' was previously measured and found to be $L' = 18{,}650{,}000$ cm. Now from above:

$$C_s = \frac{9238 \times 0.1287}{10^9 \times \frac{18{,}650{,}000}{10^9}} = \frac{9238 \times 0.1287}{18{,}650{,}000};$$

and

$$C_s' = \frac{63{,}902 \times 0.1287}{18{,}650{,}000}; \quad \frac{C_s'}{C_s} = \frac{63{,}902}{9238}; \quad C_s' = C_s \frac{63{,}902}{9238}$$

C_s expressed in centimeters is:

$$C_s = \frac{9238 \times 0.1287 \times 9 \times 10^5}{1865 \times 10^4} = \frac{11.583 \times 9238}{1865} = 57.375$$

from this $C_s' = \frac{63902}{9238} \times 57.375 = 6.92 \times 57.375 = \mathbf{397.03}$ **cm.**

$$C = C_s' - C_s = \mathbf{339.655}\ \textbf{cm.}$$

This is a result inferior to the calculated value but it was to be expected as before stated since it can not be correct to assume that all pipes are connected in multiple unless the vibration is very slow. Another coil is to be used with an inductance much higher so as to examine the truth of this opinion. There is, however, a possibility that the reading, when the structure was attached to the excited coil, was too low. In this case namely, the tuning is *not sharp* owing to the large capacity of the system but when the structure is *not* attached it is quite sharp, hence if there is any error in the adjustment of the circuits it can be only then when the structure was connected. This is to be investigated also. A slight error might have been also caused by the wire which connected the coil to the structure, for although this wire was placed at a distance of 4 feet with its nearest point there might have been enough influence exerted by the structure to make the reading with the spark wires alone larger. This will be ascertained. From previous tests on the increase of capacity with elevation I should expect to find the capacity of the structure much larger than the calculated value.

On the present occasion readings were also taken with the view of determinig the inductance of the connections alone+flexible cable on regulating coil+1/2 turn of regulating coil. This namely is the lowest value which it is possible to give with the regulating coil in circuit. In this case the readings were $E_1 = 10.5$, $E = 10.2$ across the 2 primaries+ +all these connections and across the two primaries alone, respectively. With reference

to foregoing and calling L_3 the inductance of the two primaries+connections+flexible cable+1/2 turn of regulating coil:

$$L_3 = \frac{105}{102} \times L = \frac{105}{103} \times 230{,}945 = 237{,}738 \text{ cm.}$$

Hence the inductance of all these mentioned connections is $L_3 - L = 237{,}738 - 230{,}945 =$

$=6793$ cm, for { connections proper; 1/2 turn regulating coil; flexible cable in reg. coil.

Note: A small error is often caused by the changing position of the flexible cable which makes the readings for a small number of turns *larger* (slightly).

Colorado Springs

Nov. 7. 1899

Further experiments for the purpose of ascertaining the capacity of the structure of the iron pipe by resonance analysis. Two sets of readings were taken: one set with new extra coil the other with coil 346 turns wire No.10 on drum 14″ diam. The readings were as follows:

With new extra coil

Capacity in primary exciting circuit *total:*	Inductance in primary circuit. Turns of regulating coil+conn.	Analyzing spark on *terminals of* excited coil.
$\frac{(8 \times 36) - 2}{2}$ = 143 bottles = 0.1287 mfd	22+conn.	2 5/16″
$\frac{(8 \times 36) - 2}{2}$ = „ = 0.1287 mfd	8+ „	3 3/4″

With experimental coil described

$\frac{(3 \times 36) - 2}{2}$ = 53 bottles = 0.0477 mfd	15.75+conn.	4″
$\frac{(3 \times 36) - 2}{2}$ = „ = 0.0477 mfd	3.5+ „	3 1/8″

*Note: The first readings are of course *with*, the second *without* structure in each case.

*Note: Readings were also taken on this occasion with coil wound on 10 5/16″ drum before described (550 turns) but merely for the purpose of comparing the inductances

of the primary and secondary circuits. With the same capacity as in the last case resonance was obtained with spark wires alone:

$\frac{(3 \times 36) - 2}{2} = 35$ bottles $= 0.0477$ mfd 8 7/8 3 1/4"

This for *future reference.*

Returning to the two sets of observations it is to be noted that *one* turn of the new extra coil had been taken off and allowance should be made for this.

Let the primary vibration in the first case be T_{p_1} and the corresponding secondary vibration T_{s_1} then $T_{p_1} = T_{s_1}$. Similarly for the second reading with the extra coil when the structure was not attached to the coil. Calling the respective vibration T_{p_2} and T_{s_2} we have $T_{p_2} = T_{s_2}$. Now

$$T_{p_1} = \frac{2\pi}{10^3}\sqrt{L_{p_1} \times C} \text{ and } T_{p_2} = \frac{2\pi}{10^3}\sqrt{L_{p_2} \times C}$$

where L_{p_1} and L_{p_2} designate the inductances of the primary circuit in the two cases. From this

$$\frac{T_{p_1}}{T_{p_2}} = \sqrt{\frac{L_{p_1}}{L_{p_2}}}$$

as useful relation to remember.

While the self-induction was varied in the primary circuit, and the capacity remained the same, in the secondary it was just the opposite, the self-induction remaining the same and the capacity being varied. Calling now the capacity of the excited system with the structure C_{s_1} and without the structure C_{s_2} (that of coil with spark wires alone) we have by analogous reasoning:

$$\frac{T_{s_1}}{T_{s_2}} = \sqrt{\frac{C_{s_1}}{C_{s_2}}} = \frac{T_{p_1}}{T_{p_2}} = \sqrt{\frac{L_{p_1}}{L_{p_2}}} \text{ or } \frac{C_{s_1}}{C_{s_2}} = \frac{L_{p_1}}{L_{p_2}}.$$

This is also a convenient equation and useful to bear in mind. In cases when the capacity in the excited system is very often varied it is only necessary to determine the first capacity with which the series of experiments was begun to know all the other values from the known inductances of the primary circuit in two consecutive experiments. But when there are only two values to be determined, as in the present instance, they can be at once calculated from the known primary vibrations.

In the present instance, adopting this procedure we have:

$T_{p_1} = \frac{2\pi}{10^3}\sqrt{0.1287 \times 0.000079}$ and L_{p_1} { Connections +22 turns: = 79,000 cm. = 0.000079 H

$T_{p_2} = \frac{2\pi}{10^3}\sqrt{0.1287 \times 0.00002526}$ L_{p_2} { Connections +8 turns reg. coil = 25,260 cm. = 0.00002526 H

$T_{p_1} = T_{s_1} = \frac{2\pi}{10^3}\sqrt{C_{s_1} \times 0.02}$

$T_{p_2} = T_{s_2} = \frac{2\pi}{10^3}\sqrt{C_{s_2} \times 0.02}$

Inductance of extra coil before measured was 0.02042 henry. This owing to one turn less without *change of length* should be reduced to ratio $\left(\frac{105}{106}\right)^2$ or about 2% making the inductance very approx. 20,000,000 cm. or 0.02 henry.

From the above:

$$\frac{2\pi}{10^3}\sqrt{C_{s1}\times 0.02}=\frac{2\pi}{10^3}\sqrt{0.1287\times 0.000079}$$

and

$$C_{s1}=\frac{0.1287\times 0.000079}{0.02}\text{ mfd,}$$

or in centimeters:

$$C_{s1}=\frac{9\times 10^5\times 0.1287\times 0.000079}{0.02}=\mathbf{457.5}\text{ cm.}$$

Similarly we have

$$C_{s2}=\frac{0.1287\times 0.00002526}{0.02}\text{ mfd, or}$$

$$C_{s2}=\frac{9\times 10^5\times 0.1287\times 0.00002526}{0.02}=\mathbf{146.29}\text{ cm.}$$

This would give for the capacity of the structure according to this method only $C_{s1}—C_{s2}=$ $=457.5—146.29=\mathbf{311.21}$ **cm.**

This inferior result I attribute to the fact that the capacity is partially to be taken as *distributed,* owing to the length of the structure. But determining by the same method with a vibration which would be much slower this error should be very small.

Taking now the values for the set of readings with the experimental coil of 346 turns we have:

$$T'_{p1}=\frac{2\pi}{10^3}\sqrt{0.0377\times 0.00005486}\text{ and }L_{p1}=\text{connections}+15.75\text{ turns}$$
$$=54{,}860\text{ cm.}=0.00005486\text{ H}$$

$$T'_{p2}=\frac{2\pi}{10^3}\sqrt{0.0377\times 0.00001116}\qquad L_{p2}=\text{conn.}+3\ 1/2\text{ turns}=$$
$$=11{,}160\text{ cm.}=0.00001116\text{ H}$$

The inductance of the experimental coil measured being 6,040,000 cm, or 0.00604 henry we have:

$$T'_{s1}=\frac{2\pi}{10^3}\sqrt{0.00604\times C'_{s1}}\text{ and }T'_{s2}=\frac{2\pi}{10^3}\sqrt{0.00604\times C'_{s2}}$$

from these relations follows:

$$C'_{s1}=\frac{0.0477\times 0.00005486}{0.00604}\text{ mfd. and}$$

$$C'_{s2}=\frac{0.0477\times 0.00001116}{0.00604}\text{ mfd.}$$

Hence

$$C'_{s1} - C'_{s2} = \frac{0.0477}{0.00604} \times (0.00005486 - 0.00001116)$$

$$= \frac{0.0477}{0.00604} \times 0.0000437 \text{ mfd, or}$$

$$C'_{s1} - C'_{s2} = \frac{9 \times 0.0477 \times 4.37}{0.00604} \text{ centimeters} = \mathbf{310.6\ cm.}$$

very nearly the same value.

It is to be expected that the value found with a quicker vibrating system should be smaller since then the structure begins to act not as one condenser but as a series of condensers or distributed capacity, all parts not being charged at the same time.

This method of determining the capacity implies therefore to be quite correct a *slow* vibration and, furthermore, negligible capacity in the vibrating system itself and also that the body the capacity of which is determined should not be of too great length since this must cause errors.

From reading with coil of 550 turns it follows, since the capacities both in the primary and secondary circuits remained the same, that the inductances in the primary and inductances in the secondary or excited circuit bore the same ratio, that is:

$$\frac{\text{Ind. 8 7/8 turns + conn.}}{\text{Ind. 3.5 turns + conn.}} = \frac{\text{Ind. coil 550 turns}}{\text{Ind. coil 344 turns}}$$

Ind. of coil 550 turns was: 18,650,000

Ind. of coil 344 turns was: 6,040,000

Hence $\dfrac{\text{Ind. 8 7/8 turns}}{\text{Ind. 3 1/2 turns}} = \dfrac{1865}{604}$ **This for later comparison.**

Colorado Springs

Nov. 8, 1899

Table of *inductances* prepared from preceding readings.

Two primary turns in series	230,945 cm.	0.000230945 H
One of the primary turns	57,736 „	0.000057736 „
All connections to condensers and breaks *as used*	5004 „	0.000005004 „
All connections plus one half turn of reg. coil (first turn)	5774 „	0.000005774 „
All connections plus the whole first turn of reg. coil	6544 „	0.000006544 „
„ „ 1 1/2 „ „	7314 „	0.000007314 „
„ „ 2 „ „	8084 „	0.000008084 „
„ „ 2 1/2 „ „	8854 „	0.000008854 „
„ „ 3 „ „	10,009 „	0.000010009 „
„ „ 3 1/2 „ „	11,164 „	0.000011164 „
„ „ 4 „ „	12,319 „	0.000012319 „
„ „ 4 1/2 „ „	13,474 „	0.000013474 „
„ „ 5 „ „	15,158 „	0.000015158 „
„ „ 5 1/2 „ „	16,842 „	0.000016842 „
„ „ 6 „ „	18,526 „	0.000018526 „
„ „ 6 1/2 „ „	20,210 „	0.000020210 „
„ „ 7 „ „	21,894 „	0.000021894 „
„ „ 7 1/2 „ „	23,578 „	0.000023578 „
„ „ 8 „ „	25,262 „	0.000025262 „
„ „ 8 1/2 „ „	26,946 „	0.000026946 „
„ „ 9 „ „	28,870 „	0.000028870 „
„ „ 9 1/2 „ „	30,794 „	0.000030794 „
„ „ 10 „ „	32,718 „	0.000032718 „
„ „ 10 1/2 „ „	34,642 „	0.000034642 „

* This table is close enough for all general estimates.

After 10 1/2 turns the increase is 3850 cm. per turn so that the inductance of 10 1/2+n turns+conn. will be 34,642+$n\times$3850 cm. With the entire coil in, there are 23 1/2 turns having 84,692 cm. or 0.000084692 H.

In order to test the accuracy of the preceding measurements, readings of the e.m.f. across the two primaries, connections and the regulating coil — all joined in series — were taken repeatedly and in as rapid a succession as was found practicable, the number of the turns of the regulating coil being varied after each set of readings. The diagram below shows the connections of the various inductances while the readings, reduced to the same e.m.f. across: [the two primary turns+connections +1/2 of one turn of the regulating coil+flexible cable] are given in table below:

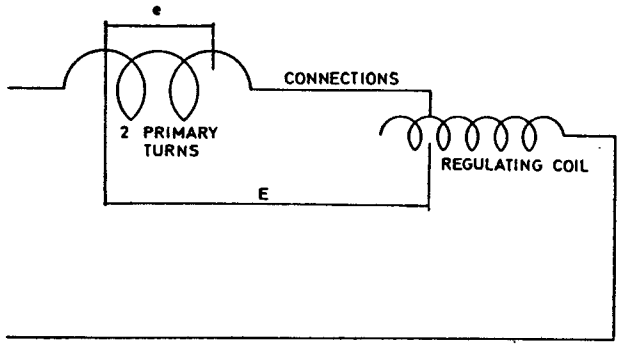

Number of turns of the regulating coil included in circuit.	E.m.f. across two primary turns plus the connections, plus flexible cable+one half of one turn reg. coil					Difference of e.m.f. between successive readings:
	first series of readings	second series	third series	fourth series	average	
23 1/2	15.873	15.928	15.928	15.928	15.914	
22 1/2	15.706	15.706	15.706	15.706	15.706	0.208
20 1/2	15.318	15.263	15.34	15.318	15.310	0.396
18 1/2	14.929	14.8185	14.929	14.929	14.901	0.399
16 1/2	14.4855	14.4855	14.4855	14.4855	14.4855	0.4155
14 1/2	14.119	14.0415	14.1525	14.097	14.102	0.3835
12 1/2	13.764	13.7085	13.764	13.764	13.75	0.352
10 1/2	13.3755	13.3755	13.3755	13.3755	13.3755	0.3745
8 1/2	13.0425	12.9537	13.009	13.0425	13.012	0.3635
6 1/2	12.7095	12.654	12.7095	12.7095	12.6956	0.3164
4 1/2	12.3765	12.3765	12.3765	12.3765	12.3765	0.3191
2 1/2	12.1545	12.1212	12.1875	12.1545	12.1544	0.2221
1/2	12.00	12.00	12.00	12.00	12.00	0.1544

ω was in these readings smaller than 880.

Note: When reduced to the same e.m.f. across the two primaries and connections, 1/2 turn and flexible cable the average values agree fairly well with the readings before recorded. The table prepared on the bases of the values before found will be accurate enough for all ordinary estimates. Both sets of readings show that there is about 0.2 volt variation per turn, the few first turns excepted.

Following readings were taken today for the purpose of putting together a table of the inductances of the various turns of the regulating coil. The machine was specially run and all care was taken to get the readings as close as practicable. The method used in a previous case was again adopted which consisted in reading the e.m.f. across the two primary turns in series and simultaneously the e.m.f. across the two primary turns+ +connections+the turns in the regulating coil. The resistances as before stated being entirely negligible, the inductance in each case was given by the ratio of the e.m. forces and the known inductance of the two primary turns. By this method the error which might have been caused by a variation of ω which could only be determined by taking the speed of the generator, the apparatus for the more exact determination of this quantity being unfortunately left in New York. The results are indicated in the following table:

E.m.f. across two primary turns in series	E.m.f. across two primary turns+ connections+turns of the regulating coil	Number of turns reg. coil	I	ω	Increase of e.m.f. from step to step
12.00	12.3	1/2	58.8	880	
12.00	12.45	2 1/2	58.8	„	0.15
12.00	12.70	4 1/2	58.8	„	0.25
12.00	13.05	6 1/2	58.8	„	0.35
12.00	13.40	8 1/2	58.8	„	0.35
12.00	13.80	10 1/2	58.8	„	0.40
12.00	14.20	12 1/2	58.8	„	0.40
12.00	14.60	14 1/2	58.8	„	0.40
12.00	15.00	16 1/2	58.8	„	0.40
12.00	15.40	18 1/2	58.8	„	0.40
12.00	15.80	20 1/2	58.8	„	0.40
12.00	16.20	22 1/2	58.8	„	0.40
12.00	16.40	23 1/2	58.8	„	0.20

This shows an increase per turn of about 0.20 V, except the few first turns.

Colorado Springs

Nov. 9, 1899

In some experiments it was necessary to use vibrations of lower frequencies and this made it necessary to insert additional inductances in the condenser discharge circuit. In such cases it was convenient to use the two primary turns only; in order to prevent a

strong sparking on the secondary and changing reaction on the primaries it was necessary to join the ends of the secondary. Readings were taken to determine more closely the inductance of the primaries with the secondary closed.

The results were as follows:

Current	E.m.f. across two primary turns in series	ω
58.80	8.75	880
58.40	8.5	,,
58.00	8.33	,,
Average 58.40	Average 8.45 (with allowance for zero displacement)	880

With the secondary open the readings were exactly as before:

58.8	11.95	880

Reduced to same current for both cases the readings with secondary closed become:

58.8	8.5	880

The inductance of two primary turns as before found 230,945 cm.$=L$. We have for their inductance with *secondary closed* $\frac{8.5}{11.95}L=$ **164,270 cm.**

With both primaries in multiple it ought to be **41,068 cm.** approx.

According to previous estimates the mutual induction coefficient with two primaries in series was: approximately 850,000 cm. The inductance of the secondary was found: 9,568,000 cm. last time, say average of two last determinations 9,560,000 cm. From this data we have for inductance with secondary closed:

$$L-\frac{M^2}{N}=230{,}945-\frac{85^2\times 10^8}{956\times 10^4}=230{,}945-\frac{85^2\times 10^4}{956}=230{,}945-75{,}575=\mathbf{155{,}370\ cm.}$$

These readings above do not quite agree with the result calculated, but I think this only indicates some action of secondary on the primary when the former *is open*, or else the mutual induction coeff. measured a little *too high*. This **very likely.**

As it was not always possible to get along with the primaries alone when using them as inductances two self-induction coils were provided, one wound with wire No. 6, the other with wire No. 2 both on a drum of 5″ diam. The particulars relating to both of these coils will be given below. To ascertain approximately their inductances readings were taken by joining them successively in circuit with the two primary cables in series and taking the e.m.f. across, this giving the inductance of each of them approximately from the ratio of the e.m.f. and the known inductance of the primaries, neglecting, of course, the resistance. The readings were as follows:

For coil wound with No. 6 wire:

E.m.f. across two primary turns+coil all in series	E.m.f. across two primaries in series alone	Current	ω
14.5	6.4	30.9	880
14.5	6.4	30.9	880
14.5	6.4	30.9	880

For coil with No. 2 wire:

13.5	8.2	40.1	880
13.5	8.2	40.1	880
13.5	8.2	40.1	880

This would give approximately inductances of coil No. 6 wire:

$$l = \frac{14.5}{6.4} \times 230{,}945 - 230{,}945 = \frac{8.1}{6.4} \times 230{,}945 = \mathbf{292{,}290\ cm,}$$

Coil No. 6 wire

and for coil No. 2 wire

$$l_1 = \frac{13.5}{8.2} \times 230{,}945 - 230{,}945 = \frac{5.3}{8.2} \times 230{,}945 = \mathbf{149{,}340\ cm,}$$

Coil No. 2 wire

These figures were first utilised then separate readings were taken. All the particulars of these coils and the measured and calculated values are as follows:

Coil wound with No. 6 wire:
length of wound part $38.75'' = 98.425$ cm, drum $5'' = 12.7$ cm. 129 turns
Thickness of wire with insulation $\frac{98.425}{129}$ cm. Thickness of bare wire $= 0.162'' = 0.41148$ **cm.**
Thickness of two insulations $\frac{98.425}{129} - 0.41148 = 0.763 - 0.4115 = 0.3515$ cm. This is to be added to the core 12.7 cm diam. making total diam. 13.0515 cm.

To calculate inductance we have therefore the following data:

$d = 13.0515$ cm, $l_1 = 98.425$ cm, $N = 129$, $N^2 = 16641$, $S = \frac{\pi}{4} d^2 = 133.786$ cm.sq.

This gives $l = \frac{12.5664}{98.425} \times 16{,}641 \times 133.786 = \mathbf{284{,}247\ cm.}$

Now the readings to estimate from were:

e.m.f.	Current	ω		
			R calculated approx. 180 feet wire 2535ft.per ohm	$\frac{E}{I} = 0.271$
				$\left(\frac{E}{I}\right)^2 = 0.073441$
13.3	49.1	880		
13.3	49.1	880	0.071 ohm	$R^2 = 0.00504$
13.3	49.1	880		$\left(\frac{E}{I}\right)^2 - R^2 = 0.0684$

from this:

$$l=\frac{\sqrt{0.0684}}{880}=\frac{0.2615}{880}\text{ H}\quad\text{or}\quad\frac{261{,}500{,}000}{880}=\mathbf{297{,}160\text{ cm.}}$$

Small correction should have been made for the e.m.f. making it smaller, this would have made the agreement with the calculated value close.

Coil wound with No. 2 wire

Readings were:

e.m.f.	Current	ω	Resistance will be negligible
6.6	49.1	880	
6.6	49.1	880	
6.6	49.1	880	

$$l_1=\frac{E}{I\omega}=\frac{6.6}{49.1\times 880}=$$

$$=\frac{6.6}{491\times 88}\text{ H}$$

$$\text{or}=\frac{66\times 10^8}{491\times 88}\text{ cm.}$$

$$=\mathbf{152{,}750\text{ cm.}}$$

The dimensions are as follows:

diam. core $5''=12.7$ cm, length of core $38.25''=97.185$ cm. Turns 91. The diam. of wire insulation is $\frac{97.185}{91}=1.068$ cm. Diam. of bare wire $0.2576''=0.6543$ cm. This gives for 2 thicknesses $1.068-0.6543=0.4137$ cm.
From this:

$$d=13.1137\text{ cm.};\quad l'=97.185\text{ cm};\quad N=91;\quad N^2=8281;$$

$$S=\frac{\pi}{4}d^2=145.0644\text{ sq.cm.}\qquad l_1=\frac{4\pi}{l'}N^2S=\mathbf{155{,}330\text{ cm.}}$$

Probably resistance is not quite negligible, but results are close enough for ordinary use of coil.

Colorado Springs

Nov. 10, 1899

Measurements of the effective capacity of a vertical wire as modified by elevation, by resonance analysis and improved method of locating the maximum rise of e.m.f. on the excited system.

In the previous experiments on the same subject the maximum was located by observing a spark, but it was found that this mode of reading has a number of defects. One of these is the necessity of using spark wires, another the impossibility of locating the maximum very closely — except in cases when the tuning is very sharp. But when consi-

derable capacity is in the system, as it must necessarily be when investigating the modification of capacity, the tuning can never be quite sharp. When the pressures on the excited coil are large spark wires also entail considerable loss, which modifies and vitiates the results of the observations. By the spark method it is also impossible to determine the period and capacity of the excited system itself without any attachments.

In the succeeding observations a method practised in New York was resorted to. This consists of employing a small secondary circuit in feeble inductive connection with the excited system and observing in a convenient manner by a suitable instrument the changes of current or e.m.f. in the secondary. A practical and quite convenient means is to insert a minute lamp consuming but a very small fraction of the normal current and observe the degree of incandescence of the minute carbon filament or thin platinum wire. As the small secondary circuit excercises no appreciable reaction on the excited oscillating system owing to the feeble mutual induction and minute amount of energy consumed in the se-

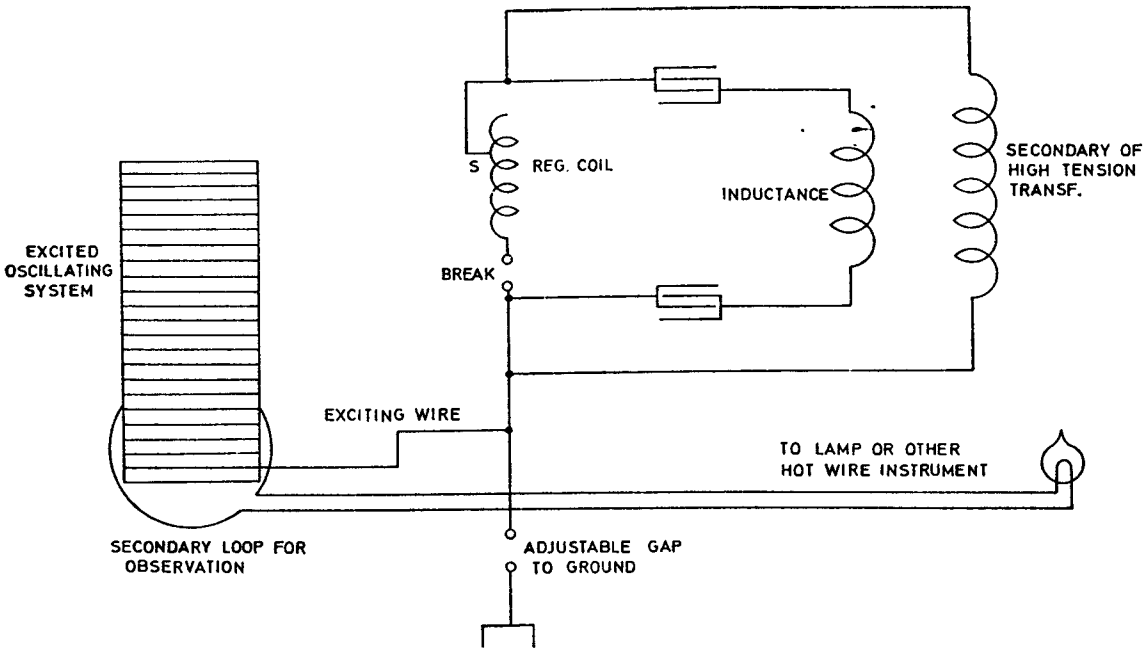

condary, the method is excellent and allows close and reliable readings much more so than the spark wire method. By taking a minute lamp with an exceptionally thin and short filament the energy consumed for the readings is quite insignificant and may be less than one-millionth part of the activity of the oscillating system. In the diagram below the arrangement of apparatus as used is illustrated. The excitation was again conveniently varied by an adjustable ground gap. In the secondary circuit feeding the minute lamp it was also of advantage to provide a *continuously* regulable resistance by means of which the brightness of the filament could be reduced to any degree desired. The current from the supply transformer was also regulable as this was necessary in the course of the experiments. Usually I find it advantageous to proceed as follows: first the maximum is located on the proper place of the regulating coil by altering the capacity of the primary circuit until the maximum rise takes place with the contact slide S at the desired point of the regulating coil. A few turns to either side will generally extinguish the lamp. The maximum being thus roughly located, the brightness of the lamp is reduced by inserting resistance or otherwise — as

by placing the secondary circuit feeding it farther from the excited system — until the filament is barely visible when the slide S is at the point giving the maximum rise on the excited system. By a little experience it becomes easy to thus locate the maximum within 1/4 of one per cent. By resorting however to ordinary experimental resources it is practicable to reach greater precision still. Of course, the greater the momentum of the excited system the better it is. There are hot wire instruments or detectors of all kinds which allow the method to be refined to any degree desired. A very simple improvement, effective and readily on hand is however to provide a source of energy for bringing the filament or wire just to a point when its luminosity can be detected by the observer. I connect the lamp to a battery of constant e.m.f. through two chocking coils graduating the turns of the latter so that the filament is brought preliminarily to the required temperature. A small amount of surplus energy supplied from the secondary loop is then sufficient to make the filament bright. Thus, less energy is taken from the excited system and the location of the maximum is rendered much more easily. The diagram below illustrates this arrangement in its simplest form. The high frequency currents can not of course pass through the chocking coils. This method is also very suitable for tuning circuits for many purposes as in telegraphy.

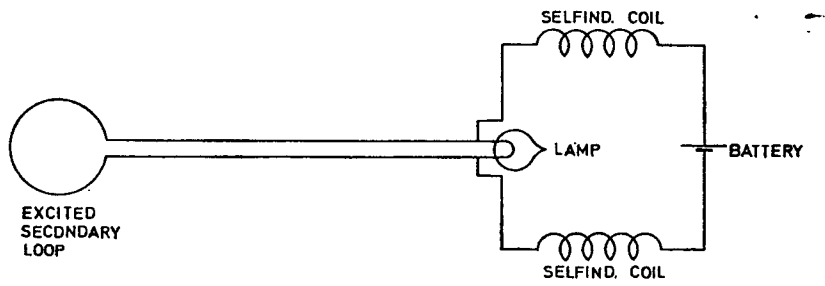

In the present experiments the coil before described: 1314 turns wire No. 18 on drum 14″ diam., 8 feet long was used, the object of the tests being to determine the effective capacity of the vertical wire No. 10, 50 feet long which was used in a number of cases before dwelt upon. The readings were as follows:

Coil 1314 turns with spark wires as before used

Capacity in primary circuit

$\frac{46}{2}$=23 bottles=0.0207 mfd.

Inductance in primary circuit

16 Turns of regul. coil+connections+coil No. 6 wire

Note: This reading was taken to test the spark wire method. The agreement was fairly close *15 1/2* turns being found in the previous measurements by spark analysis instead of *16* turns as now. But this was to be expected as with the *spark wires alone*, the capacity being small the tuning is very sharp. The agreement would probably not be quite so close when a large capacity is connected to the excited system.

Coil 1314 turns alone without spark wires

$\frac{20}{2}$=10 bottles=0.009 mfd.

12 1/2 turns+conn.+coil No. 6 wire

Coil 1314 turns with vertical wire No. 10 approx. 50 feet long

$\frac{70}{2}$=35 bottles=0.0315 mfd. 18 1/2 turns+conn.+coil No. 6 wire

The inductance of primary circuit in the first case was:

Coil No. 6 wire	284,000 cm	total 326,300 cm.
12 1/2 turns+conn.	42,300 ,,	

In the second case it was:

Coil No. 6 wire	284,000 cm	total 349,400 cm.
18 1/2 turns+conn.	65,400 ,,	

Calling as before C_{s1} and C_{s2} respectively the capacities of the excited system with and without the vertical wire we have:

$$C_{s1}=\frac{873{,}000{,}000}{10^9}=\frac{349{,}400}{10^9}\times 0.0315$$

* the inductance of excited coil from data obtained before being 87,300,000 cm.

$$C_{s1}=\frac{3494\times 0.0315}{873{,}000}\ \text{mfd.}$$

Similarly from the preceeding it follows:

$$C_{s2}=\frac{3263\times 0.009}{873{,}000}\ \text{mfd.}$$

This gives the capacity of the vertical wire:

$$C_{s1}-C_{s2}=\frac{3494\times 0.0315-3263\times 0.009}{873{,}000}=$$

$$=\frac{110.061-29.367}{873{,}000}=\frac{80.694}{873{,}000}\ \text{mfd,}$$

or in centimeters:

$$C=C_{s1}-C_{s2}=\frac{9\times 10^5\times 80.694}{873{,}000}=\frac{72{,}624.6}{873}=\mathbf{83.2}\ \text{cm.}$$

The calculated value before found was **81.5 cm.** It is assumed in the calculation that the length of the wire was 50 feet exactly, but this might not be so. It will be measured exactly when taken down. The inductance of the coil with wire No. 6 has been taken as 284,000 cm. but the measured values are higher. Taking the average of two measurements we have about 295,000 cm. This would give a higher value for the effective capacity of the vertical wire. It is also possible that the inductance of the excited coil might be a few percent different from that serving as the basis of this estimation.

It is of interest to determine from above data the capacity of the excited coil alone. The same is:

$$C_{s2}=\frac{3263\times 0.009\times 9\times 10^5}{873{,}000}=\mathbf{30.3\ cm,\ approx.}$$

A cylinder of the dimensions of the coil excited would have a capacity $C=\frac{l}{2\log_e \frac{l}{r}}$.

Here $l=8'=243.84$ cm. $r=7''=17.78$ cm.

$$\frac{l}{r}=13.71 \qquad \log_e \frac{l}{r}=1.137037\times 2.3=2.6152$$

$$C=\frac{243.84}{2\times 2.6152}=46.6 \text{ cm.}$$

Consider now as much of the cylindrical surface as could be covered with the bare wire on the coil:

No. 18 wire diam.$=0.0403''=0.1024$ cm. As there are 1314 turns the wire would cover 1314×0.1024 cm$=134.55$ cm.

Compared with the cylinder of the length of 243.84 cm the capacity C_1 of the shortened would be in the proportion of 134.55 : 243.84 reduced, that is

$$C_1 \text{ would be } \frac{134.55}{243.84} \qquad C=\frac{134.55}{243.84}\times 46.6=\text{approx. } \mathbf{26 \text{ cm.}}$$

From this it would seem that a rough estimate of the capacity of such a coil might be obtained by comparison with a cylindrical surface which the bare wire would cover.

Further experiments to ascertain the dependence of capacity npon elevation.

In these experiments the new coil, wound with a much greater number of turns for the purpose of getting a vibration of lower frequency, was used. This coil was wound on the same drum of 14'' diam. and 8 feet length repeatedly used. It had 1314 turns of No. 18 wax covered wire. As the length of the coil and area of the coils remained exactly the same the self-induction was approximately estimated from the inductance of another coil experimented with before. The latter had 689 turns and its measured inductance was 24,000,000 cm. On this basis the inductance of the new coil was $L\left(\frac{1314}{689}\right)^2=?$, L being the self-nduction of the coil referred to. This would give for $L_1=\left(\frac{1314}{689}\right)^2\times 24{,}000{,}000=3.637\times$ $\times 24{,}000{,}000=87{,}288{,}000$ cm approximately. Comparing it with another coil before described which was wound on the same drum and had 346 turns, and taking the before measured value of the inductance of the latter 6,040,000 cm we get

$$L_1=\left(\frac{1314}{346}\right)^2\times 6{,}040{,}000=14.4225\times 6{,}040{,}000=87{,}111{,}900 \text{ cm.}$$

which is very nearly the same value.

Rough readings gave:

$$E=200 \qquad I=2.5 \qquad \omega=870$$

from this: $\frac{E}{I}=80$ $\left(\frac{E}{I}\right)^2=6{,}400$

$R^2=942.5$

$\left(\frac{E}{I}\right)^2-R^2=5457.5$

R calculated: 4816 feet wire No.18
156.9 feet per ohm: $R=30.7$ ohm
(31.68 meas.)

$$\sqrt{\left(\frac{E}{I}\right)^2-R^2}=73.88 \text{ approx.}$$

Inductance nearly **85,000,000 cm.**

For the present investigation the most probably value 87,300,000 cm will be adopted, which is still to be verified.

With the coil before described experiments were made for the purpose of once more determining the capacity of the structure of iron pipes. The adjustments were as follows:

For coil with structure connected to free terminal:

Capacity in primary circuit

Inductance of primary circuit
21 turns regulating coil+conn.+coil wound with wire No. 6 before described

$$\frac{(6\times 36)-2+12}{2}=113 \text{ bottles}=0.1017 \text{ mfd}$$

For coil with the spark wires alone:

$\frac{46}{2}=23$ bottles$=0.0207$ mfd

15 1/2+conn+coil No. 6 wire.

In the first case inductance of the primary was =359,000 cm.

Coil No. 6 wire	284,000 cm.
21 turns+conn.	75,000 ,,

In the second case

Coil No. 6 wire	284,000 cm
15 1/2 turns+conn.	54,000 ,,

$=338{,}000$ cm.

Calling C_{s1} capacity of the excited system in first and C_{s2} in the second case we have:

$$\frac{2\pi}{10^3}\sqrt{\frac{87{,}300{,}000}{10^9}C_{s1}}=\frac{2\pi}{10^3}\sqrt{\frac{359{,}000}{10^9}\times 0.1017} \text{ and}$$

$$C_{s1}=\frac{\frac{359}{10^6}\times 0.1017}{\frac{873}{10^4}}=\frac{359\times 0.1017}{87{,}300} \text{ mfd}$$

$$\text{or in cm } C_{s1} = \frac{9 \times 10^5 \times 359 \times 0.1017}{87{,}300} = \mathbf{376.4 \text{ cm.}}$$

Similarly we have: $\frac{2\pi}{10^3}\sqrt{\frac{87{,}300{,}000}{10^9}}C_{s2} = \frac{2\pi}{10^3}\sqrt{\frac{338{,}000}{10^9}\times 0.0207}$ and

$$C_{s2} = \frac{338{,}000 \times 0.0207}{87{,}300{,}000} \text{ mfd or } C_{s2} = \frac{338 \times 0.0207 \times 9 \times 10^5}{87{,}300} \text{ cm.}$$

$$= \frac{3042 \times 20.7}{873} = \mathbf{71.67 \text{ cm.}}$$

From this we get *effective capacity* of structure:

$$C_{s1} - C_{s2} = 376.4 - 71.67 = \mathbf{304.73 \text{ cm,}}$$

which is a value very closely before found with *extra coil.*

Note: The readings with spark gap as before practiced are not quite satisfactory and a new method will be tried in the next experiments.

Colorado Springs

Nov. 11, 1899

Experiments for the purpose of ascertaining rate of increase of capacity with elevation continued.

Again the coil with 1314 turns described before was used and the method of locating the maximum rise of potential on the excited system by means of a small circuit inductively connected to the system was resorted to. A few improvements carried out in the mode of using the induced circuit allowed closer readings than it was possible to obtain before with spark observation.

The coil was first tuned alone, without anything being attached to the free terminal. Next the vertical wire No. 10, 50 feet long (approximately) was attached to the free terminal and the tuning again effected, both the primary vibrations being carefully noted. Then a ball 30″ diam. was slipped on to the vertical wire and readings were taken in three different positions of the ball along the wire as before. The results of the observations were as follows:

I. Coil alone

Capacity in primary or exciting circuit	Inductance in primary circuit
$\frac{20}{2}$=10 bottles=0.009 mfd	Turns of reg. 13 coil+conn+coil
	No. 6 wire

II. Coil with vertical wire No. 10, 50 feet approx.

$\frac{72}{2}$=36 bottles=0.0324 mfd 17+conn.+coil No. 6 wire

III. Coil with ball 30″ diam. vertical wire, the ball being at a height of 10′3″ from center to ground.

$\frac{86}{2}$=43 bottles=0.0387 mfd 13 1/2+ ,, + ,,

IV. Coil with ball 30″ diam. and vertical wire, the ball being at a height of 34 feet from center to ground.

$\frac{86}{2}$=43 bottles=0.0387 mfd 14 1/2+ ,, + ,,

Note: (it seemed slightly more than 14 1/2 turns)

V. Coil with ball 30″ diameter and vertical wire, the ball being at a height of 57′9″ from center to ground.

$\frac{86}{2}$=43 bottles=0.0387 mfd 16 1/2+ ,, + ,,

In the first case the inductance of primary circuit was

Coil No. 6 wire	=295,000 cm
13 turns+connections	= 43,300 ,,
total	=338,300 cm.

The primary vibration was therefore:

$$T_{p1}=\frac{2\pi}{10^3}\sqrt{0.009\times\frac{3383}{10^7}}$$

Now calling C_{s1} capacity of excited system in the first case we have:

period of excited system

$$T_{s1}=\frac{2\pi}{10^3}\sqrt{C_{s1}\times\frac{85}{10^3}}$$

Note: In some estimates before the inductance of this coil was calculated to be a little over 284,000 cm. and this value was taken. But two measurements made before show average of about 295,000 cm. and this value will be assumed in present estimates as being more probable until again careful measurements will be made. The results are then to be corrected.

Note: The inductance for excited coil is taken 85,000,000 cm., this being the value obtained by measurement.

Still to be verified.

From this:

$$C_{s1} = \frac{0.009 \times \frac{3383}{10^7}}{\frac{85}{10^3}} = \frac{0.009 \times 3383}{85 \times 10^4} \text{ mfd, or in centimeters:}$$

$$C_{s1} = \frac{9 \times 10^5 \times 0.009 \times 3383}{85 \times 10^4} = \frac{0.81 \times 3383}{85} = \mathbf{31.84 \text{ cm.}}$$

This is slightly larger than before found owing to adoption of smaller inductance for excited coil.

In case II. the inductance of the primary circuit was:

$$\left\{\begin{array}{ll} \text{Coil No. 6 wire as before:} & 295{,}000 \text{ cm} \\ \text{17 turns+connections} & 59{,}700 \text{ ,,} \end{array}\right\} \text{ total=354,700 cm.}$$

The primary period was:

$$T_{p2} = \frac{2\pi}{10^3}\sqrt{0.0324 \times \frac{3547}{10^7}} \text{ and the secondary corresponding } T_{s2} = \frac{2\pi}{10^3}\sqrt{C_{s2} \times \frac{85}{10^3}}$$

Hence $C_{s2} = \frac{0.0324 \times 3547}{85 \times 10^4}$ mfd, or $C_{s2} = \frac{9 \times 10^5 \times 0.0324 \times 3547}{85 \times 10^4}$ cm.

C_{s2}=**121.68 cm.** Hence capacity of the vertical wire will be approximately

$C_{s2}-C_{s1}$=**89.84 cm.** This is again larger than before found but probably closer than the former value.

In case III. the primary inductance was:

$$\left\{\begin{array}{ll} \text{Coil No. 6 wire} & 295{,}000 \\ \text{13 1/2 turns+conn.} & 46{,}200 \end{array}\right\} \text{ total 341,200 cm.}$$

The primary vibration was therefore:

$$T_{p3} = \frac{2\pi}{10^3}\sqrt{0.0387 \times \frac{3412}{10^7}}$$

and the corresponding vibration of the excited system

$$T_{s3} = \frac{2\pi}{10^3}\sqrt{C_{s3} \times \frac{85}{10^3}}$$

from this we have:

$$C_{s3} = \frac{0.0387 \times \frac{3412}{10^7}}{\frac{85}{10^3}} = \frac{0.0387 \times 3412}{85 \times 10^4} \text{ mfd,}$$

or

$$C_{s3} = \frac{9 \times 10^5 \times 0.0387 \times 3412}{85 \times 10^4} = 139.81 \text{ cm.}$$

The effective capacity of the ball at its lowest position (10′ 3″) from ground was therefore only $C_{s3} - C_{s2} = 139.81 - 121.68 = \mathbf{18.13}$ **cm.**

Now taking cases IV. and V. the primary inductance in the

first of these cases was { Coil No. 6 wire 295,000 cm ; 14 1/2 turns 50,100 ,, }

the total would be **345,100 cm.** But there is still a doubt whether there have not been 15 turns instead of 14 1/2. This is to be borne in mind. Taking for the present for the inductance 14 3/4 turns as most probable and nearer to the average value of both extreme readings in IV. and V. we have for inductance of the primary **346,000 cm.**

Now in case V. the inductance was: { Coil No. 6 295,000 cm ; 16 1/2 turns 57,800 ,, }

total **352,800 cm.**

Now since in cases III, IV. and V. the capacity in the primary circuit was not varied we have:

$$C_{s3} : C_{s4} = 341{,}200 : 346{,}000 \text{ and } C_{s4} = C_{s3} \times \frac{346}{341} = \mathbf{141.78} \text{ cm.}$$

and similarly we have:

$$C_{s3} : C_{s5} = 341{,}200 : 352{,}800 \text{ and } C_{s5} = C_{s3} \times \frac{3528}{3412} = \mathbf{144.56} \text{ cm.}$$

The effective capacity of ball at its highest position was:

$$C_{s5} - C_{s2} = 144.56 - 121.68 = 22.88 \text{ cm.}$$

In the mean position the value was: $C_{s4} - C_{s2} = \mathbf{20.1}$ **cm.** whereas the mean value between 22.88 and 18.13 would be **20.5 cm.** The rise is therefore *linear*. The rise in the effective capacity for 47 feet and 6″ was $\frac{18.13}{22.88 - 18.13}$ about 26.2%. Per one *hundred feet* it would be from this: 55.16% or a little over 1/2% per foot.

Colorado Springs

Nov. 12, 1899

Measurements of the effective capacity of the elevated structure of iron pipes were again made today in the manner described before, by means of resonance analysis, the maximum rise of potential on the excited system being determined by a minute lamp included in a secondary circuit without appreciable reaction upon the excited system. The coil with 1314 turns before described was again used, the readings being as follows:

Coil with structure attached:

Capacity in primary circuit

$$\frac{(6\times 36)+12}{2}=\frac{228}{2}=114$$

bottles or 0.1026 mfd.

Inductance in primary circuit
turns reg. coil

15+conn.+coil No. 6 wire

Coil alone, without structure, only connecting wire:

$$\frac{(36-6)+12}{2}=\frac{42}{2}=21$$

7 1/2+ ,, + ,,

bottles=0.0189 mfd

The inductance in primary in first case was:

Coil No. 6 wire	295,000
15 turns+conn.	52,000
total	347,000 cm.

The inductance in primary in second case was:

Coil No. 6 wire	295,000 cm.
7 1/2 turns+conn.	23,600 ,,
total	318,600 cm.

If C_{s1} and C_{s2} be the capacities of the excited system *with* and *without* structure, respectively, then:

$$C_{s1}=\frac{\frac{347,000}{10^9}\times 0.1026}{\frac{87,300,000}{10^9}}=\frac{3470\times 0.1026}{873,000}\text{ mfd.,}$$

and similarly

$$C_{s2}=\frac{3186\times 0.0189}{873,000}$$

and

$$C_{s1}-C_{s2}=\frac{3470\times 0.1026-3186\times 0.0189}{873,000}\text{ mfd}=\frac{356.022-60.2154}{873,000}\text{ mfd,}$$

or

$$\frac{9\times 10^5\times 295.8066}{873,000}=\mathbf{304.95\ cm.}$$

This is again a value close to that found with new extra coil. The agreement would be closer still if some connections would be taken in the present instance. I conclude effective capacity is not far from this.

Colorado Springs

Nov. 13, 1899

An improvement in the method of locating the maximum rises in the excited system has been effected by taking a lamp with an exceptionally thin filament, consuming only a minute fraction of an ampere, for being heated to redness enough to be perceptible, and furthermore by placing the lamp in a dark box. A "fluoroscope" was used, two holes being drilled in the sides of the box for leading the wires in. By these provisions the readings were made more exact. The new extra coil was again used for trial and the capacity of the structure of iron pipes was again determined. The readings were:

With structure attached

Capacity in primary circuit	Inductance in primary circuit
$\frac{(8 \times 36)}{2}$ = 144 bottles = 0.1296 mfd	Turns + connections
	18 1/2 + ,,

Without structure (only connecting wire)

$\frac{(8 \times 36)}{2}$ = 144 ,, = 0.1296 mfd	6 5/16 + conn.

Note: In the second case the tuning was, of course, very sharp and it was easy to locate the maximum within 1/16 of a turn of the regulating coil; in the first case, although it was naturally less sharp, it was still easy to locate within 1/4 of a turn; with great care within 1/8 of a turn. This may be said to be within 1/2% which is satisfactory, all the more as the reading is very positive.

The above results give an inductance in the primary circuit, in the first case 65,442 cm, in the second 19,578 cm, computed from the table before prepared. As the capacity in the primary remained the same in both readings we have, calling C_{s1} and C_{s2} capacities of the excited system *with* and without structure and L inductance of the extra coil: L=0.02 henry

$$C_{s1} - C_{s2} = \frac{0.1296\,(65{,}442 - 19{,}578) \times 9 \times 10^5}{20{,}000{,}000}\ \text{cm} = \mathbf{267.48\ cm.}$$

These readings seem most reliable so far.

Colorado Springs

Nov. 14, 1899

In some experiments with coil having 1314 turns wound on drum 14" diam., 8 feet long the coil was cut in the middle and the two parts, 657 turns each connected in multiple. The self-induction was then practically $\frac{1}{4}$ of the self-induction which it had used ordinarily. Readings were taken to determine the inductance when the two parts were connected as stated.

These readings were:

e.m.f. $\left\{\begin{matrix}214\\212\\210\end{matrix}\right\}$ I $\left\{\begin{matrix}10.7\\10.6\\10.5\end{matrix}\right\}$ $\omega=880$

Average values:

E	I	ω
212	10.6	880

from this $\left(\frac{E}{I}\right)=20$, $\left(\frac{E}{I}\right)^2=400$

$R=7.9$ ohm.
$R^2=62.41$

$$\left(\frac{E}{I}\right)^2-R^2=337.59 \qquad \sqrt{\left(\frac{E}{I}\right)^2-R^2}=18.375$$

$$L=\frac{18.375\times 10^9}{880}\text{ cm}$$

$=20{,}880{,}682$ cm, approx.$=20{,}881{,}000$ cm.

The inductance of the coil as ordinarily used would then be approx.

$=83{,}524{,}000$ cm.

Colorado Springs

Nov. 15, 1899

Experiments with secondary of oscillator to determine capacity of structure, also capacity of secondary.

The readings were as follows:

Secondary alone.

Capacity in primary	Inductance in primary
$\frac{8\times 36}{2}=144$ bottles$=0.1296$ mfd	14 3/4 turns+connections.

Secondary with connecting wire leading to structure.

$\frac{8\times 36}{2}=144$ bottles$=0.1296$ mfd	15 1/4 ,, + conn.

Secondary with structure connected to free terminal.

$\frac{8\times 36}{2}=144$ bottles$=0.1296$ mfd	19 ,, + conn.

* These readings approximate.

In first case inductance of primary was 51,000 cm
„ second „ „ 52,900 „
„ third „ „ 67,400 „

* All these readings and maybe previous ones to be revised.

Taking the inductance of secondary from measurements before made 9,557,000 cm. we have for C_{s1}, that is, capacity of secondary alone:

$$T_{p1}=\frac{2\pi}{10^3}\sqrt{\frac{51,000}{10^9}\times 0.1296} \qquad C_{s1}=\frac{0.1296\times 51,000}{9,557,000}=\frac{0.1296\times 51}{9557}\ \text{mfd.}$$

$$T_{s1}=\frac{2\pi}{10^3}\sqrt{\frac{9,557,000}{10^9}\times C_{s1}} \qquad C_{s1}=\frac{9\times 10^5\times 0.1296\times 51}{9557}=\mathbf{622.23\ cm.}$$

Now calling C_{s2} and C_{s3} respectively, the capacities of the secondary system with the connecting wire and with wire and structure respectively, since the capacity in the primary was in all cases the same, we have:

$$C_{s1}:C_{s2}=51,000:52,900 \text{ and } C_{s1}:C_{s3}=51,000:67,400$$

and

$$C_{s2}=\frac{52,900}{51,000}\times 622.23=\frac{529}{510}\times 622.23=\mathbf{645,41}\ \text{cm.}$$

This gives capacity of connecting wire alone:

$$C_{s2}-C_{s1}=645.41-622.23=\mathbf{23.18\ cm.}$$

Similarly we have:

$$C_{s3}=\frac{67,400}{51,000}\quad C_{s1}=\frac{674}{510}\times 622.23=\mathbf{822.32}\ \text{cm,}$$

and from this the capacity of the structure (the effective capacity) would be:

$$C_{s3}-C_{s2}=822.32-645.41=\mathbf{176.91\ cm.}$$

But since

$$C_{s3}:C_{s2}=67,400:52,900=674:529$$

we have $C_{s3}=$

$$C_{s3}=\frac{674}{529}\quad C_{s2}=\frac{674}{529}\times 645.41=\mathbf{818.54}\ \text{cm.}$$

This value checks those formerly found and shows that the readings were fairly close. The test shows however that this method of determining capacity will only give a correct value when the distributed capacity is quite negligible. This observation has already been made.

Colorado Springs

Nov. 16, 1899

Experiments continued on the influence of elevation upon capacity of system connected to earth.

A new coil wound on drum 14" diam., 8 feet long was used. It had 344 turns No. 10 wire. From the fact that another coil with 346 turns had an inductance of a little over 6,000,000 cm. it is not far away to take the inductance of this coil at that figure.

In the experiments presently described a length of wire No. 12 was used (15 meters long.) The object was to ascertain the capacity of the wire used in connection with the coil. The results of the readings were as follows:

Coil alone without vertical wire.

Capacity in primary circuit	Inductance in primary circuit
$\frac{36}{2}$=18 bottles=0.0162 mfd	$4\frac{13}{16}$ turns+connections.

Coil with vertical wire No. 12, 15 meters long.

$\frac{36}{2}$=18 bottles=0.0162 mfd	14 3/4 turns+conn.

The inductance in primary in the first case was 14,530 cm. In second case 51,000 cm, approx.

If C_{s1} and C_{s2} be again the capacity of the excited system in the first and second case respectively, we have by analogy from previous experiments:

$$C_{s1}=\frac{\frac{14{,}530}{10^9}\times 0.0162}{\frac{6{,}000{,}000}{10^9}}=\frac{14{,}530\times 0.0162}{6\times 10^6}\text{ mfd}$$

or

$$C_{s1}=\frac{9\times 14{,}530\times 0.0162\times 10^5}{6\times 10^6}=\mathbf{35.3\ cm.}$$

Since the capacity in the primary circuit remained the same in both experiments, we have:

$$C_{s1}:C_{s2}=14{,}530:51{,}000 \text{ and } C_{s2}=\frac{5100}{1453}\ C_{s1}=\frac{5100}{1453}\times 35.3=\mathbf{121.15\ cm.}$$

Hence the capacity of wire alone

$$C_{s2}-C_{s1}=121.15-35.3=\mathbf{85.85\ cm.}$$

This is the actual or effective capacity of the wire as used with the coil. But the calculated capacity would be

$$C = \frac{l}{2 \log_e \frac{l}{r}}$$

Here l=15 meters=1500 cm. $\frac{l}{r} = 7308$

r=0.08081″=0.20526 cm.

$$\log_e \frac{l}{r} = 3.863799 \times 2.3 = 8.887$$

$$C = \frac{1500}{2 \times 8.887} = \frac{1500}{17.774} = \mathbf{84.4\ cm.}$$

According to this estimate the effective capacity would be only about 1.7% larger than the calculated capacity.

Colorado Springs

Nov. 17, 1899

Experiments to ascertain capacity of various lengths of vertical wire.

Coil with 344 turns and No. 10 on drum 14″ diam., 8 feet long was used. The wire to be tested was No. 12 of a length of 15 meters. The full length was first connected to the free terminal of the coil excited as usual and then 3 meters were cut off each time and the adjustment of the primary circuit made. The results are indicated below:

Capacity in primary circuit	Length of vertical wire	Inductance in pr. cir.
$\frac{22}{2}$=11 bottles=0.0099 mfd	15 meters	21 1/2 turns+conn.
,, ,,	12 ,,	19 ,, + ,,
,, ,,	9 ,,	16 1/4 ,, + ,,
		17
,, ,,	6 ,,	13 3/4 ,, + ,,
		13 5/8 ,, + ,,
,, ,,	3 ,,	10 1/2 ,, + ,,
,, ,,	0 ,,	7 3/8 ,, + ,,

Approximate estimates from the above readings:

The inductance of coil 344 turns is assumed to be 6×10^6 cm. which is still to be confirmed by close measurement. The inductance of primary when no wire was attached was 7 3/8 turns + conn. = 23,157 cm. With 3 meters wire attached it was 10 1/2 + conn. = = 34,642 cm. Hence calling C_{s1} and C_{s2} the capacities of the excited system, in the two cases respectively we have:

$$T_{p1} = \frac{2\pi}{10^3}\sqrt{0.0099 \times \frac{23157}{10^9}} \qquad C_{s1} = \frac{0.0099 \times 23,157}{6 \times 10^6} \text{ mfd, or in centimeters:}$$

$$T_{s1} = \frac{2\pi}{10^3}\sqrt{\frac{6 \times 10^6}{10^9} C_{s1}} \qquad C_{s1} = \frac{9 \times 0.0099 \times 23,157}{60} = \mathbf{34.386} \text{ cm}$$

$$T_{p2} = \frac{2\pi}{10^3}\sqrt{0.0099 \times \frac{34,642}{10^9}}$$

and since the capacity in the primary circuit was the same in both cases:

$$T_{s2} = \frac{2\pi}{10^3}\sqrt{\frac{6 \times 10^6}{10^9} C_{s2}} \qquad C_{s2} = \frac{34,642}{23,157} C_{s1} = \frac{34,642}{23,157} \times 34.386 = \mathbf{51.44} \text{ cm.}$$

The value of effective capacity of the first 3 meters of wire was therefore $C_{s2} - C_{s1} =$ $= 51,44 - 34,386 = \mathbf{17.054}$ **cm.**

Calling now C_{s3} the capacity of the excited system when 6 meters of wire connected to it we have, since in this case the inductance of the primary was 13 3/4 turns + conn. = $= 47,154$ cm.

$$C_{s3} = \frac{47,154}{23,157} \quad C_{s1} = \frac{47,154}{23,157} \times 34.386 = \mathbf{70.02} \text{ cm.}$$

Hence the value of effective capacity of the second piece of wire 3 meters long was

$$C_{s3} - C_{s2} = 70.02 - 51.44 = \mathbf{18.58} \text{ cm.}$$

Now in the case when 9 meters of wire were attached the inductance of the primary was 16 1/4 turns + conn. = 56,779 cm. Calling C_{s4} the corresponding capacity of the excited system we have:

$$C_{s4} = \frac{56,779}{23,157} \times 34.386 = 84.307 \text{ cm.}$$

Hence effective value of the 3rd piece of 3 meters length was

$$C_{s4} - C_{s3} = 84.307 - 70.02 = 14.287 \text{ cm.}$$

Note* In another series of readings for 9 meters the inductance of primary was found to be 17 turns + conn. = 59,665 cm, and on this basis I find:

$C_{s4} = \frac{59,665}{23,157} \times 34.386 = \mathbf{88.597}$ cm. According to this the effective value of the 3rd piece 3 meters long would then be

$$C_{s4} - C_{s3} = 88.597 - 70.02 = \mathbf{18.577} \text{ cm.}$$

When 12 meters wire were attached the inductance of primary was found to be 19 turns+conn.=67,367 cm. Hence similarly $C_{s5} = \frac{67,367}{23,157} \times 34.386 = 106.034$ cm, and from this the value of 4th piece of wire
$C_{s5} - C_{s4} = 100.034 - 84.307 = \mathbf{15.727}$ cm. But according to second reading it would be:

$$100.034 - 88.397 = \mathbf{11.437} \textit{ cm,} \text{ only.}$$

Finally, when 15 meters were attached the inductance in primary was: 21 1/2 turns+ +conn.=73,142 cm, and therefore: $C_{s6} = \frac{73,142}{23,157} \times 34.386 = 108.609$ cm. and this would give as value of the last piece of three meters

$$C_{s6} - C_{s5} = 108.609 - 100.034 = \mathbf{8.575} \text{ cm only.}$$

Here possibly inductance of wire begins to assert itself. These values as found are still to be considered.

Colorado Springs

Nov. 18, 1899

Experiments were continued to ascertain influence of elevation upon capacity of a system connected to earth as in previous instances. Coil 344 turns referred to before was again used. Also wire vertical No. 10, 50 feet length and ball 30" diam. The procedure was as in a similar case before. The results were as follows:

Coil without vertical wire.

Capacity in primary	Inductance in primary
$\frac{36}{2}$=18 bottles=0.0162 mfd	$4\frac{13}{16}$ turns+conn.

Coil with vertical wire No. 10, 50 feet.

$\frac{36}{2}$=18 bottles=0.0162 mfd	14 3/4 turns+conn.

Coil with ball 30″ diam. slid on vertical wire.

Capacity primary	Height of ball from center to ground	Inductance in primary
$\frac{36}{2}$=18 bottles=0.0162 mfd.	10′ 1″	16 1/4 turns+conn.
,, ,,	33′ 8″	16 7/16 ,, +conn.
,, ,,	57′ 3″	16 5/8 ,, +conn.

On the basis of these readings the following results are obtained: In the first experiment when the wire was attached, the inductance in primary was: $4\frac{13}{16}$ turns+conn.= =14,526 cm. Calling again C_{s1} capacity of excited system we have

$$C_{s1}=\frac{0.0162\times\frac{14,526}{10^9}}{\frac{6\times10^6}{10^9}}\text{ mfd}$$

$$C_{s1}=\frac{0.0162\times14,526\times9\times10^5}{6\times10^6}=\mathbf{35,298\text{ cm.}}$$

In the second case with wire 50 long attached to the excited system the capacity of primary being the same as before and the inductance of primary being 14 3/4 turns+ +conn=51,004 cm, we have:

$$C_{s2}=\frac{51,004}{14,526}C_{s1}=\frac{51,004}{14,526}\times35.298=3.511\times35.298=123.931\text{ cm.}$$

Hence capacity of wire

$$C_{s2}-C_{s1}=123.93-35.298=\mathbf{88.632\text{ cm.}}$$

Now with ball at its lowest position capacity in primary was as before and inductance 16 1/4 turns+conn.=56,779 cm. Hence

$$C_{s3}=\frac{56,779}{14,526}C_{s1}=3.9088\times35.298=\mathbf{137.973\text{ cm.}}$$

From this effective value of ball at the height of 10′1″ was

$$C_{s3}-C_{s2}=137.973-123.931=\mathbf{14.042\text{ cm.}}$$

With ball at a height of 33′8″ the inductance in primary was 57,502 cm. and at the height of 57′3″ it was 58,223 cm. As the capacity in primary was the same the values for C_{s4} and C_{s5}, respectively, are at once found since

$$C_{s4}=\frac{57,502}{56,779}C_{s3}\quad\text{and}\quad C_{s5}=\frac{58,223}{56,779}C_{s3}$$

From this we find

$$C_{s4}=1.0127\times137.973=139.725\text{ cm, and }C_{s5}=1.02543\times137.973=141.482\text{ cm.}$$

The effective value of capacity of ball at the height

of 33′ 8″ was $C_{s4}-C_{s2}=139.725-123.931=$**15.794 cm,** and

at the height of 57′ 3″ $C_{s5}-C_{s2}=141.482-123.931=$**17.551 cm.**

From these results it would appear that from the lowest to the highest position there was an increase of about 25% total or per foot of elevation 0.53%. These readings were made under conditions not the best.

Colorado Springs

Nov. 19, 1899

In order to further investigate effect of elevation upon the capacity of a system as before a cylinder of thin sheet iron 4″ in diam. was prepared in sections 2 meter long each, there being 7 sections in all. The separate tubes were slipped one into the other so that when one was taken off each time the total length was shortened by exactly two meters. The cylinder was supported vertically above the coil used in the experiments by means of a cord extending from the wooden structure in previous instances described and the experiments were usually begun with the full length of tube and after each adjustment one length was taken off. The results were as follows:

Capacity in primary circuit	Inductance in primary	Length of cylinder
$\frac{2\times 36}{2}$=36 bottles=0.0324 mfd	10 3/4 turns+conn.	14 meters
,, ,, ,,	9 7/8 ,, + ,,	12 ,,
,, ,, ,,	8 3/4+1/16 ,, + ,,	10 ,,
,, ,, ,,	7 13/16 ,, + ,,	8 ,,
,, ,, ,,	6 11/16 ,, + ,,	6 ,,
,, ,, ,,	5 5/16 ,, + ,,	4 ,,
,, ,, ,,	3 3/4 less 1/32 + ,,	2 ,,
,, ,, ,,	1 3/8+1/16 ,, + ,,	0 ,,

These results are to be calculated.

Note: coil used 344 turns drum 14″ diam. 8 feet length.

Colorado Springs

Nov. 20, 1899

Experiments with coil 344 turns to determine influence of elevation upon capacity of system as before used were repeated.

The results were as follows:

Coil alone

Capacity in primary	Inductance in primary
$\frac{2\times 36}{2}$=36 bottles=0.0324 mfd	1 3/8 turns+conn.

Coil with vertical wire 50 feet (No. 10)

$\frac{2\times 36}{2}$=36 bottles=0.0324 mfd	8 1/16 turns+conn.

Experiments with ball 30″ diam.

Capacity primary circuit	Height of ball from center to ground	Inductance primary
$\frac{2\times 36}{2}$=36 bottles=0.0324 mfd	10′ 1″	8 7/8+conn.
,, ,, ,,	33′ 8″	9 +conn.
,, ,, ,,	57′ 3″	9 1/8+conn.

from this follows:

When coil was alone the inductance of primary was 1 3/8 turns +conn.=7121 cm. Hence, taking inductance of coil=6×10^6 cm, we have similarly to preceding

$$C_{s1}=\frac{0.0324\times 7121}{6\times 10^6}\text{ mfd}\quad\text{or}\quad C_{s1}=\frac{9\times 10^5\times 0.0324\times 7121}{6\times 10^6}=$$

=34.61 cm, slightly less than found before.

Now in second experiment with wire connected to vibrating system the inductance was 8 1/16 turns+conn.=25,472 cm. Since the capacity was the same we have as before

$$C_{s2}=\frac{25{,}472}{7121}C_{s1}=3.577\times 34.61=\mathbf{123.7999\text{ cm.}}$$

From this follows for capacity of wire alone

$$C_{s2}-C_{s1}=123.7999-34.61=\mathbf{89.19\text{ cm.}}$$

When ball was at a height of 10′1″ the inductance was 8 7/8 turns+conn.=28,389 cm; in the middle position it was 9 turns+conn.=28,870 cm, and in the highest position it was 9+1/8 turns+conn.=29,351 cm. From this following values are obtained:

$$C_{s3}=\frac{28{,}389}{7121}C_{s1}=\frac{28{,}389}{7121}\times 34.61=3.98666\times 34.61=\mathbf{137.9783\text{ cm}}$$

$$C_{s4} = \frac{28{,}870}{7121} C_{s1} = 4.054 \times 34.61 = \mathbf{140.301\ cm.}\ \text{and}$$

$$C_{s5} = \frac{29{,}351}{7121} C_{s1} = 4.1218 \times 34.61 = \mathbf{142.6555\ cm.}$$

The effective capacity of ball at lowest position was

$$C_{s1} - C_{s2} = 137.9783 - 123.7999 = 14.1784\ \text{cm.}$$

At the middle position it was

$$C_{s4} - C_{s2} = 140.301 - 123.7999 = 16.5011\ \text{cm.}$$

and at the highest

$$C_{s5} - C_{s2} = 142.6555 - 123.7999 = 18.8556\ \text{cm.}$$

Hence from lowest to highest there was an increase of about 33% or very nearly an increase of 0.7% per foot or 70% per 100 feet.

Colorado Springs

Nov. 21, 1899

Investigation on influence of elevation upon the capacity continued: The same coil 344 turns on drum of 14″ diam., 8 feet long was used. The object was to ascertain the relative capacities of a wire in vertical and horizontal position. A wire No. 14, 10 meters long was experimented with. Results were as follows:

Coil with wire vertical, lowest point being 8′ 8″ from ground.

Capacity in primary circuit	Inductance in primary
$\frac{22}{2}$=11 bottles=0.0099 mfd	17 1/2 turns+conn.

Coil with same wire horizontal at distance of 8′ 8″ from ground.

$\frac{22}{2}$=11 bottles=0.0099 mfd	18 turns+conn.

The capacity in exciting circuit was now changed and readings again taken, the results being as follows:

Capacity primary	Inductance primary

Coil with above wire vertical as before

$2\times\frac{36}{2}=36$ bottles$=0.0324$ mfd 6 5/8 turns+conn.

Coil with same wire horizontal as before

$2\times\frac{36}{2}=36$ bottles$=0.0324$ mfd 6 3/4 turns+conn.

Determination of the values of the capacities from preceeding readings:

First set of readings: With wire vertical the inductance in primary circuit was 17 1/2 turns+ +conn.=61,592 cm, and with wire horizontal it was 18 turns+conn.=63,517 cm. Since in all cases before the capacity of the coil alone was found to be approximately 35 cm$=C_{s_1}$ the capacity of the wire in the vertical and horizontal positions was as follows:

Wire in horizontal position:

$$C_{s2}=\frac{0.0099\times 63{,}517}{6\times 10^6}\text{ mfd or }C_{s2}=\frac{0.0891\times 63{,}517}{60}\text{ cm}=\mathbf{94.32\text{ cm.}}$$

and this gives for capacity of wire in horizontal position:

$$C_{s2}-C_{s1}=94.32-35.00=\mathbf{59.32\text{ cm.}}$$

Wire in vertical position $C'_{s2}=\frac{0.0099\times 61{,}592}{6\times 10^6}$ mfd or $\frac{0.0891\times 61{,}592}{60}$ cm$=91.464$ cm, and this gives capacity of wire in vertical position:

$$C'_{s2}-C_{s1}=91.464-35.00=\mathbf{56.464\text{ cm or a little less.}}$$

From second set of readings we get:

Wire vertical: Inductance in primary was 6 5/8 turns+conn.=20,631 cm. Hence

$$C''_{s2}=\frac{0.0324\times 20{,}631}{6\times 10^6}\text{ mfd or }\frac{0.2916\times 20{,}631}{60}\text{ cm}=100.26\text{ cm}$$

and hence value of capacity in this case was for wire alone

$$C''_{s2}-C_{s1}=100.26-35=\mathbf{65.26\text{ cm.}}$$

Wire horizontal: Inductance in primary was 6 3/4 turns+conn.=21,052 cm. Hence

$$C''_{s2}=\frac{0.0324\times 21{,}052}{6\times 10^6}\text{ mfd or }\frac{0.2916\times 21{,}052}{60}\text{ cm}=102.31\text{ cm}$$

and the capacity of the wire in horizontal position was then:

$$C''_{s2} - C_{s1} = 102.31 - 35.000 = \mathbf{67.31\ cm.}$$

These readings do not agree as well as they ought to.

To be gone over.

Colorado Springs

Nov. 22, 1899

Measurement of small capacities by resonance method.

This method is suitable to determine capacities too small to be measured in other ways conveniently. Coil with 344 turns before described was again used.
Results:

Coil alone with short piece of stout wire connected to the free terminal.

Capacity in primary circuit	Inductance in primary circuit
$\frac{2 \times 36}{2} = 36$ bottles $= 0.0324$ mfd	1 1/2 turns + connections

Coil with incandescent lamp 16 c.p. 100 V with two filaments attached to short thick wire

$\frac{2 \times 36}{2} = 36$ bottles $= 0.0324$ mfd	$1\frac{19}{32}$ turns + conn.

This test gave an idea of the capacity (effective) of the lamp. The primary inductance in first case was 7314 cm. and in the second 7458 cm. from table prepared. From this follows:

$$C_{s1} = \frac{0.0324 \times 7314}{6 \times 10^6} \text{ mfd or } C_{s1} = \frac{0.2916 \times 7314}{60} \text{ cm} = \mathbf{35.546\ cm.}$$

$$C_{s2} = \frac{0.0324 \times 7458}{6 \times 10^6} \text{ mfd or } C_{s2} = \frac{0.2916 \times 7458}{6 \times 10^6} \text{ cm} = \mathbf{36.246\ cm.}$$

Here C_{s1} and C_{s2} were respectively the capacities of the system without lamp and with lamp attached. Hence the actual or effective capacity of the lamp in this system was

$$C_{s2} - C_{s1} = 36.246 - 35.546 = \mathbf{0.7\ cm.}$$

An approximate idea is also obtained of the capacity of the short piece of stout wire used to attach the small bodies the capacity of which was to be determined. Namely the capacity of the excited system alone being before determined about 35 cm, the capacity of the wire would be

$$35.546 - 35.000 = \mathbf{0.546\ cm.}$$

Colorado Springs

Nov. 23, 1899

Measurement of small capacities by resonance method and mode of determining maximum rise before described by means of diminutive circuit was continued. The coil with 344 turns was again used and in order to get better readings on the self-induction regulating coil in the primary, the primary capacity was reduced. The results were:

1.

Coil with short stout wire alone as before.

Capacity in primary circuit	Inductance in primary circuit
$\frac{36}{2}$=18 bottles=0.0162 mfd	$4\frac{13}{16}$ turns+conn.

2.

Coil with lamp same as before.

$\frac{36}{2}$=18 bottles=0.0162 mfd	$4\frac{15}{16}$ turns+conn.

3.

Coil with same lamp seal broken

$\frac{36}{2}$=18 bottles=0.0162 mfd	$4\frac{31}{32}$ turns+conn.

Note: Curious, the increased capacity probably due to absorption.

4.

Coil with one of my Roentgen tubes as described in articles E.R.

$\frac{36}{2}$=18 bottles=0.0162 mfd — 5 1/8 turns+conn.

5.

Coil with "double focus tube" target connected.

$\frac{36}{2}$=18 bottles=0.0162 mfd — 5 1/16 turns+conn.

6.

Coil with same tube one of the electrodes connected.

$\frac{36}{2}$=18 bottles=0.0162 mfd — 5 3/32 turns+conn.

* **Note:** all of these tubes developed rays fairly strong while tested.

7.

Coil with Lennard tube single terminal as described by me E.R., poorly exhausted, streamers passing through it.

$\frac{36}{2}$=18 bottles=0.0162 mfd — 5 turns+conn.

From these measurements the capacities can now be found.

Calling the inductances in the primary circuit in each succeeding experiment respectively L_1, L_2, L_3, L_4, L_5, L_6 and L_7 we have with reference to prepared table:

L_1=4 13/16 turns+conn.=14,526 cm.
L_2=4 15/16 ,, +conn.=14,947 ,,
L_3=4 31/32 ,, +conn.=15,053 ,,
L_4=5 1/8 ,, +conn.=15,579 ,,
L_5=5 1/16 ,, +conn.=15,368 ,,
L_6=5 3/32 ,, +conn.=15,473 ,,
L_7=5 ,, +conn.=15,158 ,,

Calling furthermore the corresponding capacities of the excited system $C_{s1} \ldots . C_{s7}$ all of them can be at once determined from C_{s1} since

$C_{s2}=\frac{L_2}{L_1} C_{s1}$

$C_{s3}=\frac{L_3}{L_1} C_{s1}$, etc.

Now analogous to previous preceedings of this kind

$$C_{s1}=\frac{0.0162\times L_1}{6\times 10^6}\text{ mfd. or }C_{s1}=\frac{0.0162\times 14{,}526\times 9\times 10^5}{6\times 10^6}=\mathbf{35.298\text{ cm.}}$$

Taking approximately $C_{s1}=\mathbf{35.3\text{ cm}}$ we have:

$$C_{s2}=\frac{L_2}{L_1}C_{s1}=\frac{14{,}947}{14{,}526}C_{s1}=1.029\times 35.3=36.324\text{ cm}$$

$$C_{s3}=\frac{L_3}{L_1}C_{s1}=\frac{15{,}053}{14{,}526}C_{s1}=1.0363\times 35.3=36.58\text{ cm}$$

$$C_{s4}=\frac{L_4}{L_1}C_{s1}=\frac{15{,}579}{14{,}526}C_{s1}=1.0725\times 35.3=37.859\text{ cm}$$

$$C_{s5}=\frac{L_5}{L_1}C_{s1}=\frac{15{,}368}{14{,}526}C_{s1}=1.058\times 35.3=37.347\text{ cm}$$

$$C_{s6}=\frac{L_6}{L_1}C_{s1}=\frac{15{,}473}{14{,}526}C_{s1}=1.0652\times 35.3=37.6\text{ cm}$$

$$C_{s7}=\frac{L_7}{L_1}C_{s1}=\frac{15{,}158}{14{,}526}C_{s1}=1.0435\times 35.3=36.8355\text{ cm}$$

} from these values follow:

Capacity effective of lamp experiment $2=C_{s2}-C_{s1}=36.324-35.3=\mathbf{1.024\text{ cm.}}$

„ „ „ seal broken $3=C_{s3}-C_{s1}=36.58-35.3=\mathbf{1.28\text{ cm.}}$

„ of my Roentgen tube exp. $4=C_{s4}-C_{s1}=37.859-35.3=\mathbf{2.559\text{ cm.}}$

„ double focus tube target connected $5=C_{s5}-C_{s1}=37.347-35.3=\mathbf{2.047\text{ cm.}}$

„ „ „ electrode connected $6=C_{s6}-C_{s1}=37.6-35.3=\mathbf{2.3\text{ cm.}}$

„ „ Lennard tube described $7=C_{s7}-C_{s1}=36.8355-35.3=\mathbf{1.5355\text{ cm.}}$

Colorado Springs

Nov. 24, 1899

A test was made with the object of ascertaining how close the table of inductances prepared from measured data agreed with the values determined by resonance method. The procedure was as follows: the coil with 344 turns on drum 14″ diam., 8 feet long was again used as suitable for the test and it was excited in the manner before described. In order to establish a different relation between capacity and self-induction of the primary circuit these constants were in each case varied and the adjustment completed until the maximum rise on the terminal or terminals of the excited coil took place. As the

period of the system remained in each case the same the products of the capacity and self-inductance in primary remained constant also. Now the capacities in the primary in the succeeding experiments being known or exactly measurable, the various values of inductance in primary were obtained from the relation:

$$L_1 C_1 = L_2 C_2 = L_3 C_3 = \text{etc.}$$

The period of the secondary system was $T_s = \frac{2\pi}{10^3}\sqrt{LC_{s1}}$.

The inductance of coil 344 turns being about 6×10^6 cm. and the average value for C_{s1} from a number of readings with different values of inductance and capacity in primary circuit being 34.9 cm., the period of secondary or excited circuit was thus given.

A reading was now taken at random and resonance was obtained with constants in primary circuit as follows:

Capacity in primary circuit	Inductance in primary
$\frac{36}{2}$=18 bottles=0.0162 mfd	$4\frac{13}{16}$ turns+conn.

from this the period of primary circuit was:

$T_p = \frac{2\pi}{10^3}\sqrt{0.0162 \times L}$ L being the inductance in primary

Now $T_p = T_s$ or $0.0162 \times \frac{L}{10^9} = \frac{6 \times 10^6}{10^9} \times \frac{34.9}{9 \times 10^5}$ and from this we get L in centimeters:

$$L = \frac{6 \times 10^6 \times 34.9}{9 \times 10^5 \times 0.0162} = \frac{34.9 \times 6}{9 \times 0.0162} = \frac{698}{0.0486} = L = \mathbf{14{,}362\ cm.}$$

by resonance method.

Now from table prepared:

$$\text{Inductance } L = 4\frac{13}{16} + \text{conn.} = \begin{cases} \text{Inductance } 4\ 1/2 \text{ turns+conn.} = 13{,}474 \text{ cm.} \\ \text{Inductance } 5 \text{ turns+conn.} = 15{,}158 \text{ cm.} \\ \hline \text{Ind. of } 1/2 \text{ turns} = 1684 \text{ cm.} \\ \text{Ind. of } 1/16 \text{ turns} = 210.5 \text{ cm.} \end{cases}$$

Ind. of 5/16 turn $= 5 \times 210.5 = 1052$ cm approx.

$$\text{Consequently inductance } L = \text{Ind.} \left\{ \begin{matrix} 4\ 1/2 + 5/16 \text{ turn} \\ +\text{conn.} \end{matrix} \right\} = 4\frac{13}{16} \text{ turn+conn.} =$$

$$= 13{,}474 + 1052 = \mathbf{14{,}526\ cm.}$$

Agreement fairly close, within about 1%. This shows readings are reliable.

Colorado Springs

Nov. 25, 1899

Experiment which follows was made to ascertain how the capacity of the same conductor may be altered by different distribution. The experiment was performed in the following manner. Two lengths of wire No. 10 were taken (rubber covered) and one length was bent zigzag fashion so that a piece with three parallel wires was obtained one meter long. The other length was cut in three pieces 1 meter long each and these were connected at the ends. The difference between the two pieces so prepared will appear

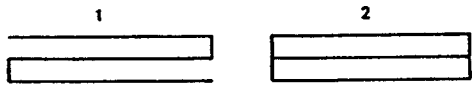

from the sketch in which 1. shows the zigzag wire and 2. the wire cut in three pieces joined in multiple. The distribution in both cases was radically different. These pieces were one after the other placed on the free terminal of a coil with 344 turns and in each case the primary adjusted until resonance was observed. The wires were placed vertically, in the prolongation of the axis of the coil.

An experiment was furthermore made in tuning, not to the real vibration but to a higher harmonic (the next octave) of the primary. The results (with spark gaps slightly changed) were:

Capacity in primary circuit	Inductance primary
$\frac{36}{2}=18=0.0162$ mfd **with wires multiple**	1 1/8 turns+conn.
$\frac{36}{2}=18=0.0162$ mfd **with wire zigzag**	1 1/16 turns+conn.

Now the primary inductance in the first case was 6736 cm and in the second case 6635 cm. Hence, the inductance remaining practically the same, the capacity (effective) of the zigzag wire was smaller to the extent of nearly 1.6%.

Colorado Springs

Nov. 26, 1899

Determination of the capacity of structure of iron pipes by improved method before described.

Note: Originally the structure, to prevent lateral play, was supported sideways by 8 projecting beams at a height of about 80 feet, each beam having fastened into its end a strong champagne bottle. The necks of the bottles abutted against the iron pole and prevented sideways play. They were wrapped with tape to diminish the danger of the necks being broken. This arrangement was good enough and withstood the storm but

it did not allow going beyond a certain pressure as the sparks from the iron pipes would jump to the beams which had the bottles fastened into them. To overcome this defect a plan was adopted, contrived long ago, which consisted in providing a conical roof or hood (made in two parts) rounded on the periphery to reduce loss by leakage and fastening four cords under the roof for the purpose of preventing lateral play and steadying this pole. This arrangement is excellent as the sparks can not jump upon and follow the cords to the ground being fastened under the roof where the electrical pressure was extremely

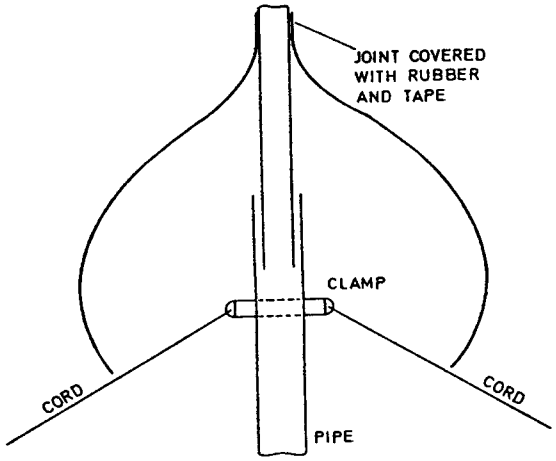

small. The arrangement is indicated in the sketch. The dimensions of the hood were: outside diam. 8 feet., diam. of small circle on periphery 9″. The height of the conical surface about 3 1/2 feet. The cords were led to the four corners of the building and fastened to the same by means of a cable of sheet wires over which was slipped a rubber hose with very thick wall and which was wrapped around three glass insulaters supported on the pole on each corner. It was thought of advantage to insulate the ropes thoroughly and for this purpose they were soaked about a week in linseed oil boiled out and dried in the sun afterward. The cords went down at an angle such that the nearest point of the hood was two feet distant. This arrangement permitted the charging of the pole easily up to a million volts. This is the best arrangement I have found so far for supporting a body to be charged to so high a potential as is necessary for instance in the transmission of messages over great distances. It has been in use since a few weeks ago but the measurements of capacity of the structure before recorded were made without the hood. Presently the readings were taken with the hood with following results:

Coil 344 turns drum 14″ with iron structure connected to free terminal.

Capacity in primary circuit	Inductance in primary circuit
$\frac{2\times 36+12}{2}=\frac{84}{2}=42$ bottles$=0.0378$ mfd	21 1/8 turns+conn.

Coil with connecting wire alone shifted away from structure (4 feet).

$\frac{2\times 36+12}{2}=42$ bottles$=0.0378$ mfd	4 turns+conn.

From this follows: the inductance in primary circuit in the first case was 75,548 cm, in the second case 12,319 cm referring to table of inductances before used. Hence capacity of excited system in first

$$C_{s1}=\frac{0.0378\times 75{,}548}{6\times 10^6}\ \text{mfd, or}\ \frac{0.3402\times 75{,}548}{60}\ \text{cm}=C_{s1}$$

And similarly $C_{s2}=\frac{0.3402\times 12{,}319}{60}$ cm, C_{s2} being capacity of excited system in second experiment. This gives for actual or effective capacity of **structure with hood**

$$C_{s1}-C_{s2}=\frac{0.3402}{60}(75{,}548-12{,}319)\ \text{cm}=\frac{0.3402}{60}\times 63{,}229\ \text{cm}=\mathbf{358.5\ cm.}$$

* Small corrections for inductance may have to be taken later.

Effective capacity of structure of iron pipes with new hood again determined by resonance method. The new "extra coil" was used, its inductance being as before 0.02 H. The readings were as follows:

Capacity in primary	Inductance in primary
Coil with structure and connecting wire	
5×36—12=168 bottles=0.1512 mfd	20 3/8 turns+conn.
Coil with connecting wire alone placed at 4 ft. distance	
4×36=144 bottles=0.1296 mfd	7 turns+conn.
other readings:	
50 bottles=0.045 mfd	17 1/4 turns+conn
40 ,, =0.036 mfd	20 turns+conn.
38 ,, =0.0342 mfd	20 3/4 turns+conn.
39 ,, =0.0351 mfd (approx)	20 3/8 turns+conn.

From these readings follows:

Inductance in first case, with structure, in primary was 20 3/8 turn+conn.=72,661 cm.
Inductance in second case, without structure, in primary was 7 turn+conn.=21,894 cm.

Calling C_{s1} and C_{s2} the effective capacities of the excited system in the two cases respectively, we have:

$$C_{s1}=\frac{0.1512\times 72{,}661}{2\times 10^7}\ \text{mfd, and}\ C_{s2}=\frac{0.1296\times 21{,}894}{2\times 10^7}\ \text{mfd, hence}$$

$$C_{s1}-C_{s2}=\frac{0.1512\times 72{,}661-0.1296\times 21{,}894}{2\times 10^7}=$$

$$=\frac{10{,}986.3432-2837.4624}{2\times 10^7}=\frac{8148.8808}{2\times 10^7}\ \text{mfd,}$$

or

$$\frac{9\times 8148.8808}{2\times 10^2}\ \text{cm}=\mathbf{366.7\ cm.}$$

effective capacity of structure **with hood.**

Capacity of structure without hood before found with extra coil was 311.2 cm, hence for hood alone we get 366.7—311.2=**55.5 cm.** From first and last reading it appears that the secondary capacities in the two cases were as $\frac{168}{39}$. Now the capacity of excited system in last reading was

$$C'_{s2}=\frac{0.0351\times 72{,}661}{2\times 10^7}\text{ mfd, or } C'_{s2}=144.77\text{ cm.}$$

From this would follow value

$$C'_{s1}=\frac{168}{39}\times 114.77=494.39\text{ cm.}$$

Hence $$C'_{s1}—C'_{s2}=494.39—114.77=\mathbf{379.62\ cm.}$$

This value does not agree quite closely with that before found but the tuning was not quite exact in last case.

Note: It now seems that the tuning in all previous cases when structure was determined was made to the first octave instead of to the fundamental tone. **This is to be ascertained.** If this be so then capacity would be much greater.

Colorado Springs Notes

Dec. 1—31, 1899

To be completed:

Dec. 11, 12, 13 Application for Page for separation of gaseous mixtures by high tension discharge of oscillator.

Dec. 17 Description of phenomenon on Pike's Peak in the few days of eclipse of moon.

Patent note

Increase of capacity uses in the arts and scientific measurements.

Colorado Springs Nov. 10. 1899.

MUZEJ NIKOLE TEŠLE

is barely visible when the slide s is on the point giving the maximum rise on the exciter system. By a little experience it becomes easy to thus locate the maximum within 1/4 of one per cent. By resorting however to ordinary experimental resources it is practicable to reach greater precision still. Of course the greater the momentum of the exciter system the better it is. There are hotwire instruments or detectors of all kinds which allow the method to be regarded to any degree desired. A very simple improvement, effective and readily on hand is however to provide a source of energy for bringing the filament or wire just to a point when its luminosity can be detected by the observer. I connect the lamp to a battery of constant e.m.f. through two chocking coils graduating the turns of the latter so that the filament is brought preliminarily to the required temperature. A small amount of surplus energy supplied from the secondary loop is then sufficient to make the filament bright. Thus, less energy is taken from the exciter system and the location of the maximum is rendered much more easy. Diagram below illustrates this arrangement in its simplest form. The high frequency currents can not of course pass through the chocking coils. This method is also very suitable for tuning circuits for many purposes as in telegraphy.

In the present experiments the coil before described: 1314 turns wire No 18 on drum 14" diam. 8 feet long was used the object

Colorado Springs

Dec. 1, 1899

Some particulars about the *apparatus* used in the *experiments here.*

The connections of the bottles in the two tanks frequently referred to as the "old tanks", to which the primary cables and the regulating coil were usually connected and by means of which the finer adjustments of capacity in the primary circuit were made, are as shown in the sketch. The top brass plate has 16 plugs disposed at equal distances in a square and the 36 bottles in the tank being connected by copper springs as indicated, each plug enabled the cutting out or in of two bottles, with the exception of the four central plugs which cut in or out three bottles each. Thus the smallest variation of the capacity on one side was one bottle or 0.0009 mfd, approx. But with the tanks in two sets in series as usually employed it was one half of one bottle. Considering the large number of bottles the variation was small enough for most purposes. The bottles in the new tanks were divided in three sets, twelve bottles in each.

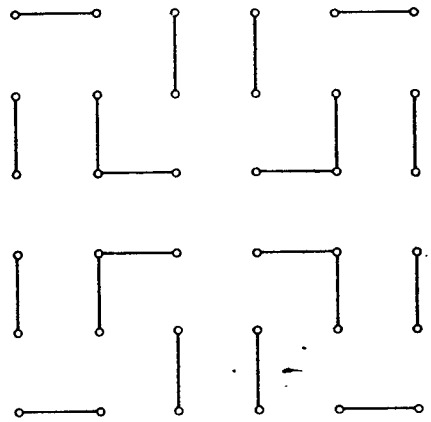

Measured length of all connections on the *condenser sets in primary:*

From top of right condenser to break	$2'\ 5\frac{1''}{2} = 29.5''$
Through break wheel and sp. rod	$2'\ 4\frac{1''}{2} = 28.5''$
From back to regulating coil	$3'\ 10'' = 46''$
Up through second break and rod	$1'\ 10'' = 22''$
Connection to left condenser	$3'\ 7'' = 43''$
To bottom of left condenser	$1'\ 8\frac{1''}{2} = 20.5''$
Connection on bottom between condensers	$3'\ 6'' = 42''$
Up to top of right condenser	$1'\ 8\frac{1''}{2} = 20.5''$

Total length of connections is thus $252'' = 641$ cm, nearly or 21 feet. The section of the connections is partially that equal to the cable used in primary 1 cm radius and partially less. The inductance determined by resonance analysis is about *5000 cm total.* The calculated value a trifle more.

Colorado Springs

Dec. 2, 1899

Various ways of tuning circuits or *determining the maximum of resonant rise.*

In the course of the experiments conducted here a number of such ways have been resorted to most of which have been described or at least referred to, but it may be useful to record here once more those which have been found most satisfactory. They are diagramatically illustrated in Figs. 1—5. below:

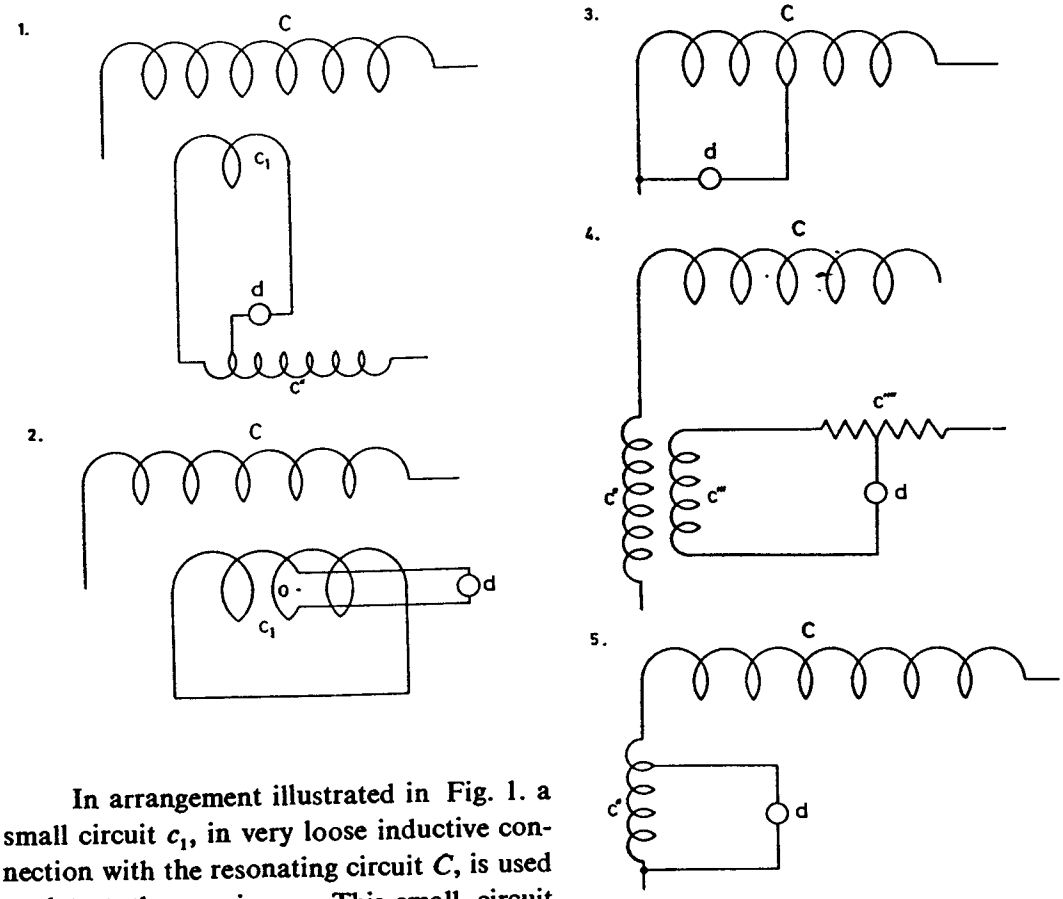

In arrangement illustrated in Fig. 1. a small circuit c_1, in very loose inductive connection with the resonating circuit C, is used to detect the maximum. This small circuit c_1 which exercises no appreciable reaction upon circuit C contains another coil c'' or else a resistance which is noninductive for the purpose of adjusting the effect to suit the indicating device d which is most generally a microscopic spark gap, vacuum tube or any hot wire instrument, as a minute lamp specially made to suit the purpose, a Cardew voltmeter or any other instrument. In Fig. 2. the adjustment of the effect upon d is effected by turning the circuit around a point o or else by approaching small circuit c_1 to or receding with same from circuit C. In Fig. 3. a number of turns of the resonating circuit C are spanned by device d, this number being adjustable. In Fig. 4. again a small coil c'' in series with coil C is placed inductively in connection with a small circuit c''' which again may be adjustable in the manner shown or in any other way. Finally in Fig. 5. a small coil c'' in series with C is spanned by device d. Coil c'' has its turns adjustable. *This method seems best.*

Colorado Springs

Dec. 3, 1899

Determination of free vibration of *new "extra coil". No. 10 wire* wound on frame 8′ 3″ diam. and 8′ length modified by taking off five turns on top and placing the last five turns two grooves apart instead of one groove as the rest of turns. In this modification there are just 100 turns in the coil. The excitation was effected from the secondary the connection being made to a point *o* 3/4 turns from the ground plate as indicated in the

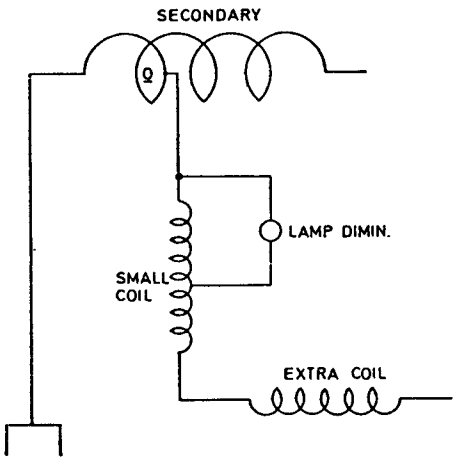

diagram. The maximum rise was determined by means of a diminutive lamp shunting a few turns of an adjustable small coil in series with the extra coil, the small coil being of an inductance entirely negligible as compared with that of the extra coil. The readings for resonating condition were as follows:

Capacity in the primary or exciting circuit	Inductance in the pr. or exc. circuit
$\frac{2\times 36}{2}$=36 bottles=0.0324 mfd	16 1/16 turns regulating coil+1 primary turn, that is two primary cables in multiple *as modified by reaction of secondary.*
$\frac{4\times 36}{2}$=72 bottles=0.0648 mfd	5 5/8 turns of coil+primary as above.

From first reading, taking the inductance of primary turn as modified by the secondary 41,000 cm, the period of the oscillation was $T_1=\frac{2\pi}{10^3}\sqrt{0.0324\,L}$, L the inductance of primary being that of primary turn+16 1/16 of regul. coil=41,000+56,000=97,000 cm. This gives

$$T_1=\frac{2\pi}{10^3}\sqrt{0.0324\times\frac{97}{10^6}}=\frac{2\pi}{10^6}\sqrt{0.0324\times 97}=$$

$$\frac{2\pi}{10^6}\times 1.773=\frac{11.13444}{10^6}\text{ and }\mathbf{n=90{,}000\text{ nearly.}}$$

From second reading, the inductance of 5 5/8 turns of regulating coil being 17,300 cm and total inductance of primary 41,000+17,300=58,300 cm. We have the period

$$T_2 = \frac{2\pi}{10^3}\sqrt{0.0648 \times \frac{583}{10^7}} = \frac{2\pi}{10^6}\sqrt{0.0648 \times 58.3} =$$

$$= \frac{6.28 \times 1.944}{10^6} = \frac{12.2}{10^6} \text{ and } \mathbf{n = 82{,}000 \text{ approx.}}$$

Note: The tuning was very sharp in both cases, but in the second case the secondary reaction *was smaller*, i.e., inductance of the primary greater.

Colorado Springs

Dec. 4, 1899

Experiments to establish equivalence between *the inductance of the primary loop* comprising two primary cables in multiple (*with secondary reacting*) and *that of turns of the regulating coil* in primary circuit.

Resonance analysis was resorted to and the coil of 344 turns on drum 14" diam. 8 ft. long, wire No. 10 was again used. The coil employed had a very small regulating coil in series, and a minute lamp placed across the few turns of this latter coil was employed to ascertain the maximum resonant rise in the coil excited. The results were as follows:

Capacity in the primary circuit	Inductance in the primary circuit
	1.
8 jars on each side, that is 4 jars= =0.0036 mfd	One primary loop as above+6 3/4 turns reg. coil.
	* Small coil in series with coil of 344 turns had 9 turns in circuit *entirely negligible.*
	2.
Capacity same as above	15 1/4 turns regulating p. coil *only*
	* Small coil had 22 turns inserted, still entirely negligible against 344 turns coil

Since resonance was obtained in both cases and the primary capacity in both tests remained the same we have the primary inductances in both cases equal and from this follows that *under the conditions* of these tests the inductance of the primary *as modified* by the *secondary* was equivalent to 15 1/4—6 3/4 turns of the primary regulating coil. Now from the table of inductances the value for the 15 1/4 turns is 52,930 cm and that for the 6 3/4 turns, inserted in the first case, is 21,052 cm. Hence the inductance of primary

cables in this instance was

$$L_p = 52{,}930 - 21{,}052 = \mathbf{31{,}878\ cm.}$$

Thus the secondary, though "open", diminished in this case the primary inductance from 56,400 cm to the above value or about 43.48%.

Colorado Springs

Dec. 5, 1899

Experiments to ascertain *equivalence of inductance of primary loop* (two primary cables in multiple) with *secondary reacting*, and *inductance* of *turns of regulating primary coil* under modified conditions.

Again the coil with 344 turns was used and the maximum resonant rise in same determined in the manner described before. A greater capacity was used this time in the primary so as to come closer to the free vibration of the secondary and thus cause a stronger reaction upon the primary loop. The conditions for resonance were satisfied with the following values:

1.

Capacity in primary circuit	Inductance in primary circuit
$\frac{2 \times 36}{2}$ = 36 bottles = 0.0324 mfd	21 3/4 turns pr. regulating coil *only*

2.

Capacity in primary circuit	Inductance in primary circuit
$\frac{2 \times 36}{2}$ = 36 bottles = 0.0324 mfd	one primary loop as above + 15 1/2 turns reg. coil.

Since in both tests the primary capacity was not changed in the least the inductance of the primary loop in this instance was equivalent to that of 21 3/4 turns, less that of 15 1/2 turns of the regulating coil in the primary. This means the inductance of the primary loop was equivalent to that of 21.75—15.5=6.25 turns of the primary regulating coil or it was $6.25 \times 3850 = \mathbf{24{,}063}$ cm only. Induct. diminished 57.33%. This is a still smaller value than found yesterday but is very probably near the maximum as the secondary showed evidence of a resonating condition. These experiments show the danger of allowing for the amount of secondary reaction. This is to be borne in mind.

Colorado Springs

Dec. 6, 1899

Further experiments to ascertain *equivalence of inductance of the primary loop* (two primary cables in multiple) with *secondary reacting*, and that of *turns of primary regulating coil* under conditions again modified.

In the present tests the "new extra coil" modified so as to have only 100 turns was used (this is to be explained). The coil was used exactly as that of 344 turns before and the maximum rise was determined in the same way and by the same means as in preceding cases. The results of the two comparative tests were as follows:

1.

Capacity in the primary circuit	Inductance in primary circuit
$\frac{5 \times 36 - 24}{2} = \frac{156}{2} = 78$ bottles $= 0.0702$ mfd	11 5/16 turns of primary regul. coil *only*

2.

Capacity in primary circuit	Inductance in primary circuit
same as above $= 0.0702$ mfd	one primary turn $+$ 3 1/2 turns reg. pr. coil.

From these tests it follows that under present conditions the inductance of the primary loop with secondary reacting was equivalent to that of 11 5/16 turns less that of 3 1/2 turns of the primary regulating coil. Now the table of inductance gives inductance of the 11 5/16 turns $=$ 37,775 cm, and that of the 3 1/2 turns $=$ 11,164 cm. Hence the inductance of the primary loop under these conditions was

$$L_p = 37{,}775 - 11{,}164 = \mathbf{26{,}611} \text{ cm.}$$

The secondary was resonating to some extent but not as well as in experiments recorded yesterday. The diminution of inductance due to secondary reaction was here 52.82 %.

Note: These tests make it advisable to break the secondary on *more* points when the primary is used for inductance.

Colorado Springs

Dec. 7, 1899

Experiments to ascertain to what extent *induced currents in the ground* might affect the *primary and secondary oscillating systems* now used in the laboratory.

Resonance analysis was resorted to and the experiments were performed in the following manner: a *square* frame 11′ 1/4″ each side and 3 3/4″ high, wound with 14 turns wire No. 10 was supported horizontally above the ground, its elevation above the latter being made adjustable. This coil was tuned in various positions and the effect of the ground observed on the change of the period of oscillation in the various positions. In order however to get a better range of reading and also to reduce as much as practicable the effects of the distributed capacity in the coil wound on the square frame the same was joined in series with another coil of 344 turns wound on a 14″ diameter drum, which was before used, but so that the coil on the square frame was between the ground connection and the coil of 344 turns, this for the purpose of maintaining between the turns of the square coil a comparatively small difference of potential thus reducing the effect of distributed capacity of the same. By using the additional coil the vibration was rendered slower and a better range of reading was secured. The two coils were excited in the manner repeatedly referred to and described, the maximum resonant rise being determined by means of a minute lamp shunting a few adjustable turns of a very small coil of entirely negligible inductance which was in series with both the coils used.

The results of the tests are indicated in the following table:

Capacity in primary exciting circuit	Distance of square coil from ground	Inductance in primary circuit
1. $\frac{4 \times 36}{2}$=72 bottles=0.0648 mfd	1′ 3″+0	4 1/4 less 1/32 turn reg. pr. coil
2. ,, ,,	1′ 3″+2′	4 1/16 turns reg. pr. coil
3. ,, ,,	1′ 3″+4′	4 less 1/32 ,,
4. ,, ,,	1′ 3″+6′	3 7/8+1/32 ,,

It is to be stated by way of explanation that the *floor* was 1′ 3″ above ground. A simple inspection of the above results shows that induced currents do not prominently assert themselves. This might have been expected considering the extreme dryness of the ground which, as before pointed out, made it too difficult at the outset of these experiments to get a good ground connection. But it is evident from the above table that the electrostatic capacity is an important element. This is quite evident since the vibration of the system comprising the square coil is *quickened by elevation* of the frame. If there were *induced currents* generated in the ground it would *be just the opposite.* Since the capacity in the primary exciting circuit remained the same in all four experiments the capacity of the excited circuit, the inductance of which remained the same, was varied exactly as the

inductance of the primary circuit. Now with reference to the table of inductances the inductances in experiments 1, 2, 3, and 4, respectively, were: 12,824, 12,463, 12,247 and 12,103 cm. The increase of distance from 1 to 2 was 160%; from 2 to 3 61.5%; from 3 to 4 38.2%. Putting results together we have:

Increase of distance		Amount of the diminution of capacity	The numbers indicate a general proportionality but now the capacity of the excited system should be known.
2′	160%	361	
2′	61.5%	216	
2′	38.2%	144	*This will be followed up.*

* Capacity of primary cables with reference to earth should be determined.

Colorado Springs

Dec. 8, 1899

In response to note from I. Hawthorne forwarded to "Northamerican" Philadelphia, dispatch as follows:

"In response to a request from friend I. Hawthorne the following statement:

"Confining myself to my chosen sphere, I believe that the mastery of electrical forces was as great and beneficial an achievement as the Century has witnessed. As to the immediate future my thoughts are dominated by two ideas, one of which is already realized, while the other is on the eve of accomplishment. The art of governing the movements and performances of distant automatons, enabling machines to act as creatures endowed with a mind, will demonstrate to the leading nations the futility of armaments and impracticability of the present life destroying implements of war and will lead to more permanent peaceful relations, in harmony with the humanitarian spirit and enlightenment of the age; while the art of transmitting electrical energy through the natural media, without the use of leading wires, over vast distances, from great centers, as Niagara, will open up inexhaustible resourses of wealth and power and, by rendering immense amounts of the energy of the sun available to the wants of man, will perhaps make it possible for him to produce similar wonderful changes and transformations on the surface of our globe as are, to all evidence, now being wrought by intelligent beings on a neighbouring planet."

N. Tesla

Experiment to determine the inductance of coil wound on the *square frame* before used by means of resonance analysis and *another known coil:*

The square coil was connected in series with coil of 344 turns as before and maximum rise was determined in the same way as described in preceding experiments. The resonant condition was obtained with

Coil 344 turns in series with square coil

Capacity in primary or exciting circuit	Inductance in primary circuit:
$\frac{36}{2}$=18 bottles=0.0162 mfd	5 less 1/32 turns reg. coil=15,000 cm approx.

With coil 344 turns alone

$\frac{36}{2}$=0.0162 mfd	15 less 1/16 turns reg. coil=51,700 cm

Assuming now that the addition of capacity when coil on square frame is connected in series be negligible, as will be the case when the coil which is to be measured is very small in comparison to the other we may assume, since the capacity in the primary circuit was the same in both experiments, that the inductances in the primary or exciting circuit are as the inductances of the excited circuit in both the successive tests. Calling inductance of square coil L and remembering that inductance of the coil with 344 turns was before recorded to be 0.006 henry, we have:

$$\frac{L+0.006}{0.006}=\frac{51{,}700}{15{,}000}=\frac{517}{150} \text{ and } \frac{517}{150}\times 0.006-0.006=L=$$

$$=0.006\times\left(\frac{517}{150}-1\right)=0.006\times\frac{367}{150}=L=\mathbf{0.01468 \text{ henry.}}$$

The correctness of this estimate is of course based on the assumption that the capacity added to the excited system by the square coil is very small compared with the total capacity.

Colorado Springs

Dec. 9, 1899

Results obtained Dec. 7, with square coil in various positions reconsidered.

The results referred to indicate that the induced currents generated in the ground are of little or no moment but that the capacity owing to nearness of ground may be of great importance. To get a better idea of the variation of the capacity and also to settle any doubt as to the influence of the induced currents it is necessary to estimate the capacity of the system which was excited. For the present purpose it is thought the consideration of the "ideal" capacity of the coils will lead to results not far from the truth. Now on a previous occasion the "ideal" capacity of a coil with 344 turns was found to be 34.6 cm. Since this "ideal" capacity increases with the square of the length of the turns, owing

to the fact that it increases with the energy stored in simple proportion, and the energy again in proportion to the square of the difference of pressure between each two adjacent turns, the difference of pressure is simply proportionate to the length. Now the length of one turn on square coil is $4\times 11'\ 1/4''=4\times 132.5''=530''$. The coil of 344 turns being wound on a drum 14" diam., the length of each of its turns is $3.1416\times 14''=44''$ nearly. The "ideal" capacity of the square coil will therefore be, considering also turns,

$$\frac{14}{344}\times\left(\frac{530}{44}\right)^2\times\text{ideal cap. of coil 344 turns}=\left(\frac{265}{22}\right)^2\times\frac{14}{344}\times 34.6=145.1\times 1.4=203.14\text{ cm.}$$

Hence total "ideal" capacity will be the *sum* of these, that is approximately **238 cm.** This value obtained at a given height above ground being known, we can now calculate the increments of capacity, or decrements of same as the coil is approached to or removed from the ground and it ought to be found that these increments or decrements are proportionate to the distances of coil from ground in the successive positions of the coil. I think that it is unnecessary to go through the trouble at present because it is very probably so.

Note: Such proportionality would be destroyed if there would be any appreciable currents generated in the ground.

Colorado Springs

Dec. 10, 1899

Estimate of turns of "Extra coil" to be used *with the structure* of iron pipes as *capacity on free terminal.*

In a previous test resonance was obtained with new extra coil and elevated structure as capacity with

Capacity in primary exciting circuit	Inductance in primary circuit
168 bottles=0.1512 mfd	20 3/8 turns reg. coil

In this test the extra coil had 105 turns. The turns being now reduced to 100, the inductance of the coil will be smaller by a ratio of $\left(\frac{100}{105}\right)^2=0.907$. Hence instead of 20,000,000 cm as before, the inductance of the coil will be 20×0.907 million cm or 18,140,000 cm=0.018 henry approx. Had the above test been performed with the coil so modified, the capacity in the primary exciting circuit — assuming the inductance the same — would have been smaller by a ratio of $\frac{18.14}{20}$ or we would have had instead of 168 bottles about $\frac{18.14}{20}\times 168=153$ bottles approximately $=0.0009\times 153=0.13759$ mfd capacity. We have therefore as basis for computation:

Extra coil with structure: 1.

Capacity-primary: 0.13759 mfd	Inductance-primary: 20 3/8 turns reg. coil.+conn.

Now in another test of extra coil but without structure results were

Extra coil alone: 2.

Capacity-primary: 0.0648 mfd	Inductance-primary: 5 5/8 turns reg. coil.+conn.

These data enable us to determine how many turns are to be left off on bottom of coil in order that it be in resonance with the primary exciting system under the *best working conditions of the latter;* the structure being connected to the coil.

Now the secondary, to be at best, should work with all jars available and the regulating coil should be *all cut out* in the primary. This is namely the condition corresponding to full output and highest economy. Under such working conditions the secondary will modify greatly the inductance of the primary and for the present approximate estimate it will be close enough to assume a diminution of about 50% of the primary inductance so that the latter may be put at 28,000 cm. This would then give in Test 2:

Extra coil alone

Capacity-primary	Inductance-primary
0.0648 mfd	28,000+5 5/8 turns reg. coil+conn=
	=28,000+17,263=45,300 cm. approx.

But capacity in primary with *all jars* as would be required *for best working* would be $\frac{8 \times 36}{2}$ =144 bottles=0.1296 mfd. Reduced to this capacity the inductance in primary would have been in reading 2. instead of 45,300 cm only $\frac{0.0648}{0.1296} \times 45{,}300 = \mathbf{22{,}650\ cm.}$

Taking now reading 1. when structure was connected to the free terminal of coil the inductance in primary was 20 3/8 turns+conn.=72,660 cm from table. But in this case the capacity was 0.13759 mfd. Reducing this to the capacity when secondary works best, that is, to 0.1296 mfd the inductance with this capacity would have been larger by a ratio of $\frac{0.13759}{0.1296}=1.048$ or it would have been $72{,}660 \times 1.048 = 76{,}150$ cm, approx. Thus we have the following data:

Extra coil with structure connected: a)

Capacity in primary 0.1296 mfd	Inductance in primary =76,150 cm and

Extra coil alone without structure: b)

Capacity in primary 0.1296 mfd	Inductance in primary 22,650 cm.

Now to secure resonance with structure attached and under best working conditions of the exciting system with possibly only a very few turns of the regulating coil in primary, we have from above to reduce inductance of extra coil by a ratio of $\frac{22,650}{76,150}$. For same length turns will be

$$\sqrt{\frac{2265}{7615}} \times 100 = 54\text{—}55 \text{ t.}$$

Colorado Springs

Dec. 14, 1899

Test to ascertain free vibration of *new "Extra Coil System"* (latest)

The new "extra coil" latest type is wound on same frame 8′ 3″ diam. and 8 feet in length, the wire being this time No. 6 instead of wire No. 10 as before. There are presently just 100 turns. A coil of No. 6 wire wound on drum 14″ diam. and 8 feet long, which was used repeatedly before, was connected in series with this latest extra coil and resonance determined by means of the adjustable small inductance as usual and a miniature lamp shunting the turns. The results with *no* capacity on the terminal which was "free" were:

Capacity in primary circuit	Inductance in primary circuit
$\frac{5 \times 36}{2} = \frac{180}{2} = 90$ bottles $= 0.081$ mfd	One primary turn (two cables in multiple)+ +3 turns regul. coil

When a ball 30″ diam. with 4 feet of wire was connected to the free terminal the readings were:

Capacity-primary: 0.081 mfd	Inductance-primary: as above, only 7 1/2 turns in regul. coil.

In both cases the excitation was effected through the secondary of the oscillator from a point of the same 3/4 turns from ground plate. In the first case the inductance of primary, taking into consideration the secondary reaction, is estimated at 41,000 cm. Adding to this the inductance of connections and 3 turns of regulating coil=10,000 cm the total inductance was about 51,000 cm. This with a capacity of 0.081 mfd would give the period of the system comprising the two coils in series

$$T_s = \frac{2\pi}{10^3}\sqrt{0.081 \times \frac{51}{10^6}} = \frac{2\pi}{10^6} \times 2.03 = \frac{12.75}{10^6} \text{ approx. and } n = 78{,}500$$

approx. per second. When the capacity of a ball of 30″ diam. is associated with the system we have the inductance of the primary circuit, as before, 41,000 cm for the primary turn with secondary reacting plus 7 1/2 turns regulating coil and connections=23,580 cm, with reference to the table, that is, total=64,580 cm. The period in the second case was therefore

$$T_s = \frac{2\pi}{10^3}\sqrt{0.081 \times \frac{6458}{10^8}} = \frac{2\pi}{10^7}\sqrt{523.098} = \frac{6.28 \times 22.9}{10^7} = \frac{143.8}{10^7}$$

and n=70,000 approx. The coil connected in series with the extra coil was wound on a drum used before. In one case this drum was wound with wire No. 10, 346 turns and in this case it had an inductance of 6,040,000 cm. The new "extra coil" latest having 18,000,000 cm approximately, the total inductance may be placed closely enough at 18,000,000+ $+\left(\frac{283}{346}\right)^2 \times 6{,}000{,}000$ cm, the coil in series with the extra coil here used having 283 turns. This gives inductance total 18,000,000+4,000,000 approx.=22,000,000 cm. Now if the latter coil of 283 turns would have been omitted then the system would have vibrated quicker in proportion

$$\sqrt{\frac{22\times10^6}{18\times10^6}}=\sqrt{\frac{22}{18}}=\frac{\sqrt{11}}{3}=1.106$$

times or since n in the first case was=78,500, the extra coil alone will vibrate $1.106\times78{,}500=86{,}800$ approx. If the inductance in primary be left the same as in the first case then the number of bottles will be reduced by a ratio of $\frac{18}{22}=\frac{9}{11}$ or instead of 90 bottles total we shall want $\frac{90\times9}{11}=\frac{810}{11}=74$ bottles or nearly so; this means 148 bottles on each side or about 4 tanks. This is only an approximate estimate for first guidance. Perhaps the reaction of the secondary is somewhat overestimated in this case as it was not resonating in these tests or near the resonating condition.

* With figures taken from second test the results are very nearly the same.

Colorado Springs

Dec. 15, 1899

List, for future reference, of some coils used in the experiments up to present.

Coil	wound on drum	25.25" diam.	cord No. 20	404 turns	Length of this drum 71 1/2" appr. 70 3/4" long
Coil	,,	,,	cord No. 10	259 ,,	
Coil	,,	,,	wire No. 10	274 ,,	
Coil	,,	24" diam.	wire No. 6	207 ,,	
Coil	,,	10 5/16 ,,	Bell wire No.18	550 ,,	
Coil	,,	14" ,,	cord No. 10	346 ,,	Length of this drum 8 feet appr.
Coil	,,	14" ,,	Bell wire No.18	1314 ,,	
Coil	,,	14" ,,	No. 6 wire	283 ,,	
Coil	,,	5" ,,	No. 2 ,,	91 ,,	38 1/4" long
Coil	,,	5" ,,	No. 6 ,,	129 ,,	38 3/4" ,,
Coil	,,	4" ,,	No. 10 ,,	185 ,,	4 ft. long.
Coil	,,	4" ,,	No. 10 ,,	141 ,,	3 ft. ,,
Coil	,,	30 1/2" ,,	No. 25 ,,	132 1/2 turns	

* Exp. resonance

Coil on drum 26″ diam.
upright stand No. 6 wire 136 turns
Coil on spool 12″ diam. 2 1/8″ long 28 layers Bell wire No. 18

$$\text{turns} \begin{cases} \text{to 20 lay. 28} \\ \text{,, 28 lay. 27} \end{cases} = 20\times 28+8\times 27=560+216=776 \text{ turns}$$

* Exp. to determine periods of vibration.

New extra coil as first wound 8′ 3″ diam., 8 ft. long, 105 turns No. 6 wire, between grooves 1/2″. A number of these coils have been before described and their inductances measured. Since the same drums were repeatedly wound with different wires it is easy to determine the inductances on the bases of data before recorded with some of them. It is proposed to make later a complete table of the coils with the inductances and other particulars worked out.

Colorado Springs

Dec. 16, 1899

In carrying on some experiments to ascertain the effects of induction from the primary circuit of the oscillator in the laboratory, at a distance from the same, a square frame described on a previous occasion was used. This frame was 11′ 1/4″=132.5″= =336.55 cm long and as much wide and 3 3/4″=9.525 cm deep. It was wound with 14 turns of wire No. 10. To ascertain the period of vibration of this coil a formula before arrived at and frequently used was again employed. This formula applies to coils of circular cross section but it was thought that the results would be close enough also for the square coil with due allowances. To apply the rule the square surface was converted into a circular one equal to it and the diameter of the latter was calculated. Finally an allowance was made for the diminished length of the wire on the circular coil for the same number of turns. Calling D the diameter of the circle we have $\frac{D^2\pi}{4}=336.55^2$ from which follows $D=380$ cm. approximately. The formula referred to is

$$p=\frac{3\times 10^{10}\sqrt{(\tau+d)\tau}}{D^2 N\sqrt{\pi^3 K}\sqrt{d}}$$

Here τ=distance of wires=0.46 cm; d=diam. of wire=0.254 cm;

$$(\tau+d)=0.714;\quad \sqrt{\tau(\tau+d)}=0.573;$$

K as found$=\frac{52}{10^6}$; $\sqrt{d}=0.5$; N= number of turns=14; p=natural frequency of coil to be found.

This gives in the present case:

$$p=\frac{3\times 10^{10}\times 0.573}{3.1416\times 380^2\times 14\times\sqrt{\frac{3.1416\times 52}{10^6}\times 0.5}}=$$

$$= \frac{6 \times 10^{10} \times 573}{3.1416 \times 144{,}400 \times 14 \times \sqrt{3.1416 \times 52}} = \frac{6 \times 10^{8} \times 573}{44 \times 1444 \times \sqrt{3.1416 \times 52}} =$$

$$= \frac{3438 \times 10^{8}}{44 \times 1444 \times 12.8} = \frac{3438 \times 10^{8}}{813{,}300} = \frac{3438 \times 10^{6}}{8133} = 423{,}000 \text{ approximately}$$

$$\text{and } n = \frac{423{,}000}{2\pi} = 67{,}360 \text{ nearly.}$$

This would be for a cylindrical coil of 14 turns, but the turns of the square coil are longer and, since the inductance is proportionate to the square of the length of wire, and the frequency again proportionate to the square root of the inductance, n will be smaller in proportion $\frac{4 \times 336.55}{3.1416 \times 380} = \frac{1193}{1346}$ or the system will vibrate about $\frac{1193}{1346} \times 67{,}360$ or roughly 60,000 per sec. The *experiments showed* it vibrated *nearly this number* of times.

Colorado Springs

Dec. 31, 1899

Of the photographs taken here from Dec. 17 to Dec. 31, 1899 by Mr. Alley the following were forwarded through him to my friends of the Century:

I. Front view of laboratory from Pike's Peak side. Isochromatic 11″×14″ plate. Time — afternoon before sunset. This is a very fine photograph showing well the advantage of the pure atmosphere here. Such sharpness of outlines and amount of detail could not be obtained in New York, for instance. I conclude that the high quality of photographs obtainable in these parts is not so much due to the skill of the professionals as to the pure atmosphere and abundance of light.

II. View of interior showing half of circle of oscillator frame with several coils grouped inside; Westinghouse transformer, lightning arresters in background, also part of central "extra coil" latest pattern and a 30″ ball on stand. The photograph was taken late in the afternoon. Light was rather feebly diffused. The plate was as before, 11″×14″ isochromatic.

III. View of interior, chiefly showing condensers, break motor and regulating coil in primary of oscillator. Westinghouse high tension transformer and supply transformers in background, also arresters. Plate same as before, the photograph was taken at the same time, practically as that described under II. The diffused daylight was very feeble. Both of these plates are excellent.

IV. View of laboratory from the rear by moonlight; *1 h 20 min.* exposure. Moon about 2/3 full. Showing Pike's Peak Range and all details of building very sharply. Such photographs by moonlight could be secured only in a few places. Plate same as before, 11″×14″ isochromatic.

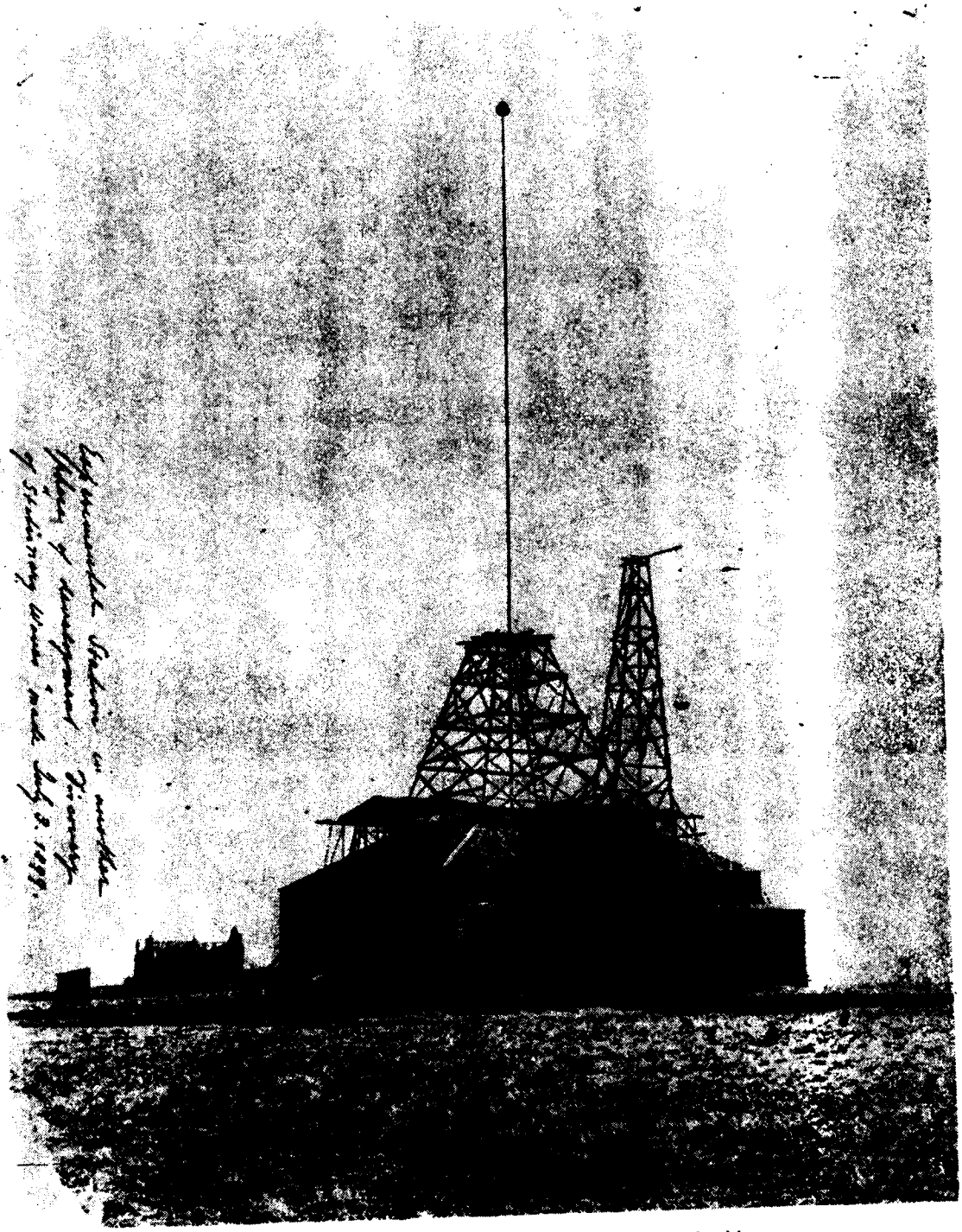

Phot. I. Front view of Laboratory from Pike's Peak side.

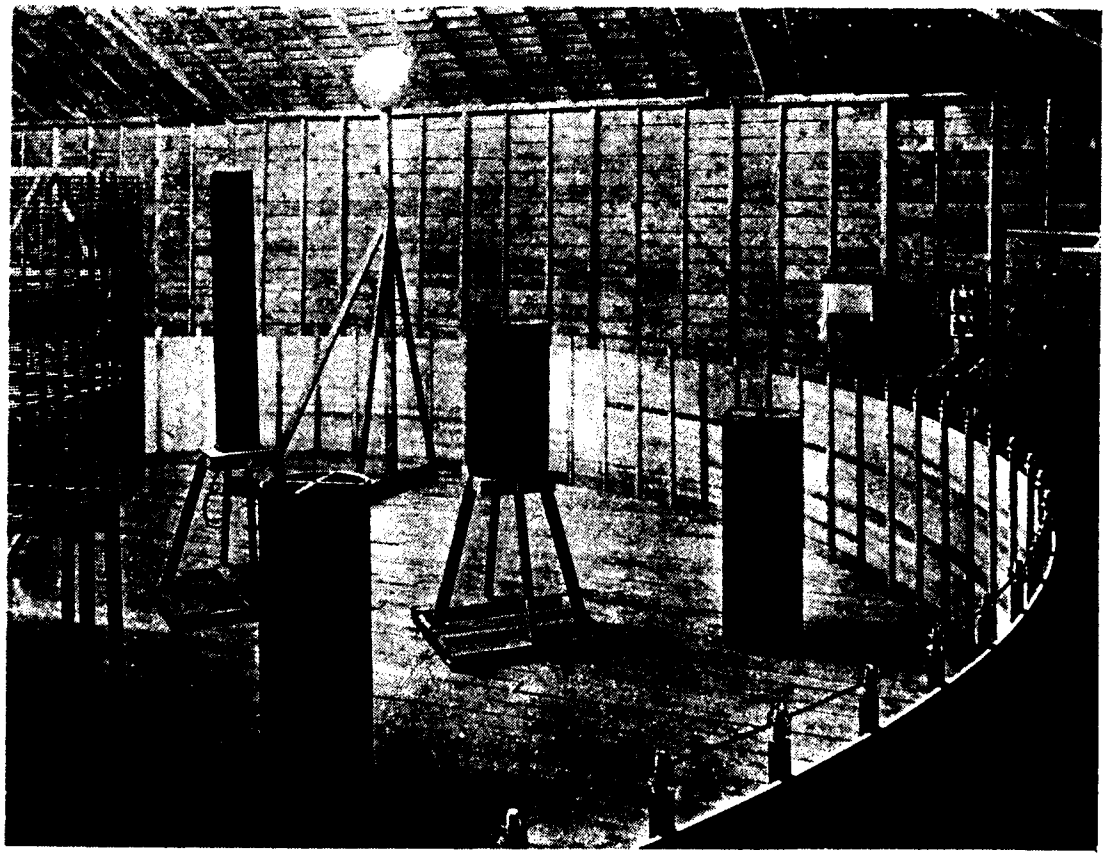

Phot. II. View of interior showing half of circle of oscillator frame with several coils inside.

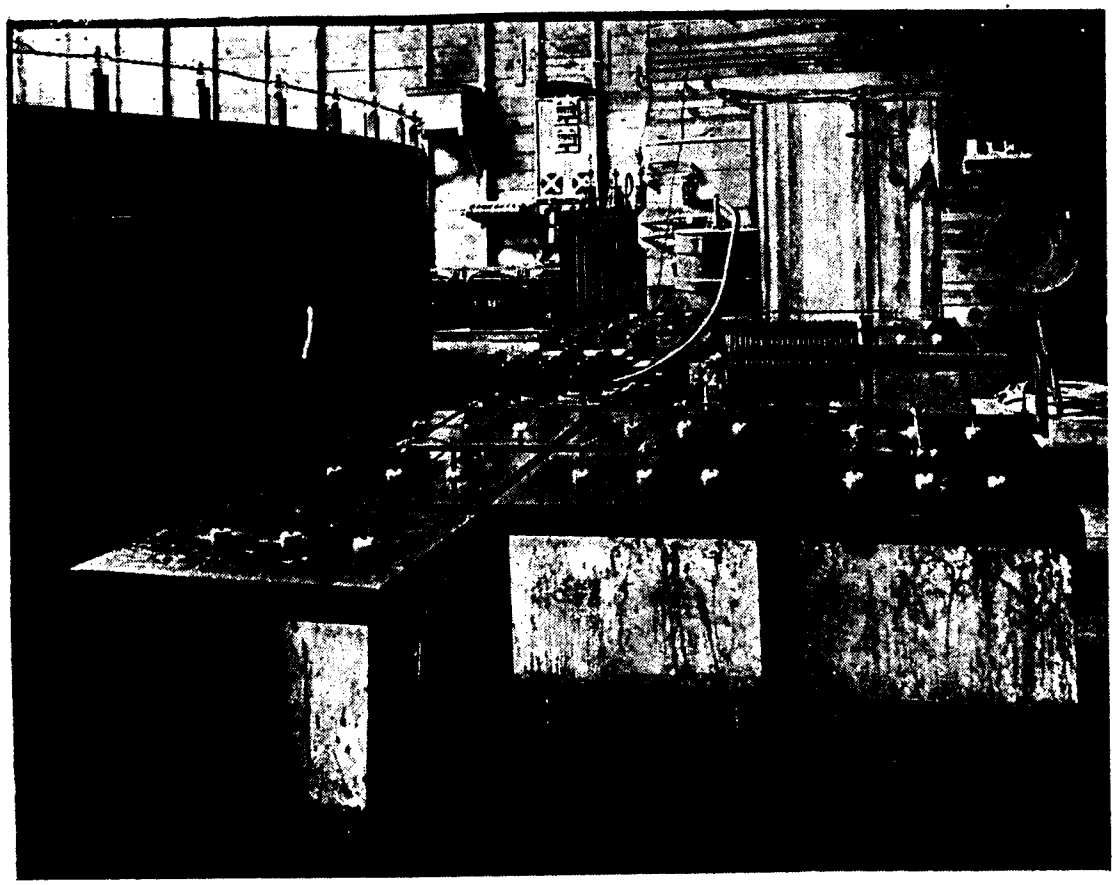

Phot. III. View of interior, chiefly showing condensers, break motor and regulating coil in primary of oscillator. Westinghouse high tension transformer, supply transformers and arresters in background.

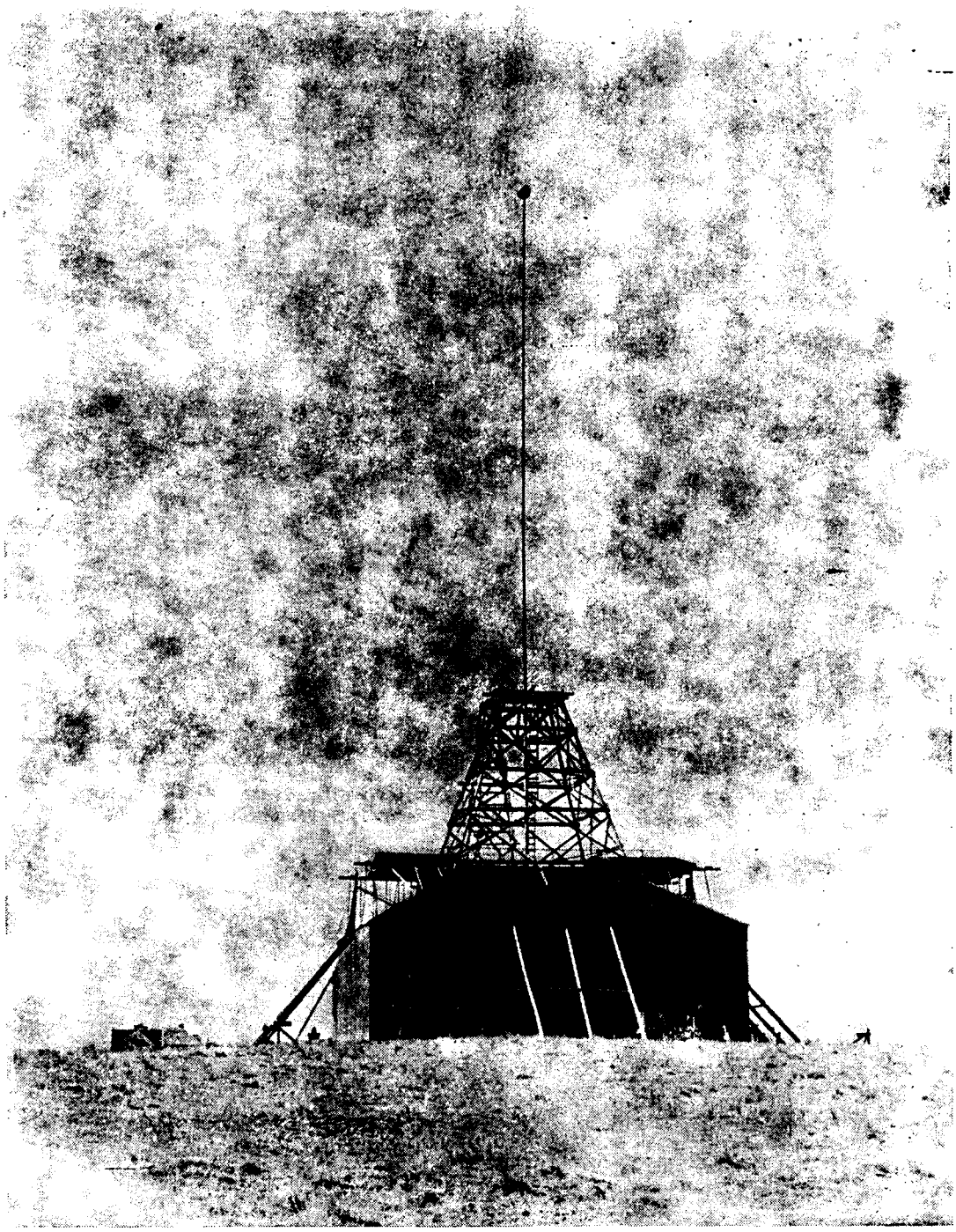

Phot. IV. View of laboratory from the rear by moonlight.

Phot. V. View of interior showing a number of coils differently attuned and responding to vibration transmitted to them from an electrical oscillator[41].

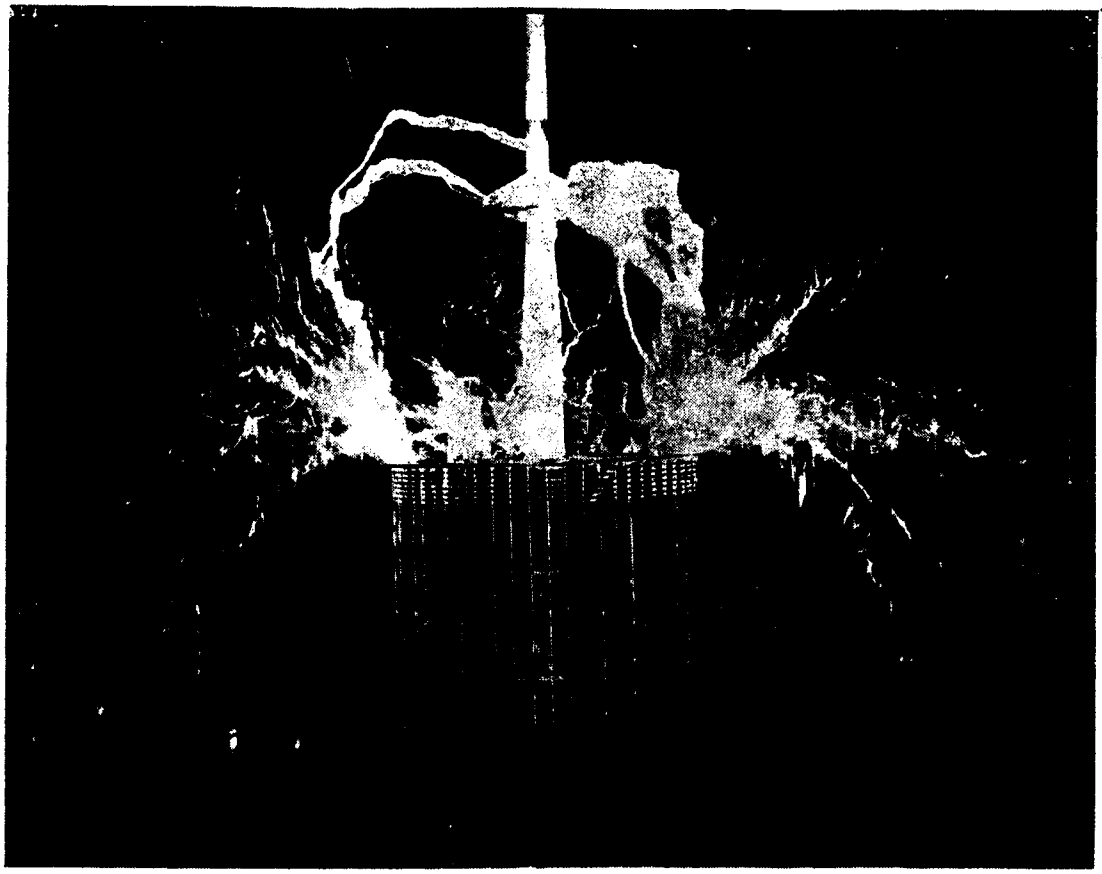

Phot. VI. Normally excited "extra coil".

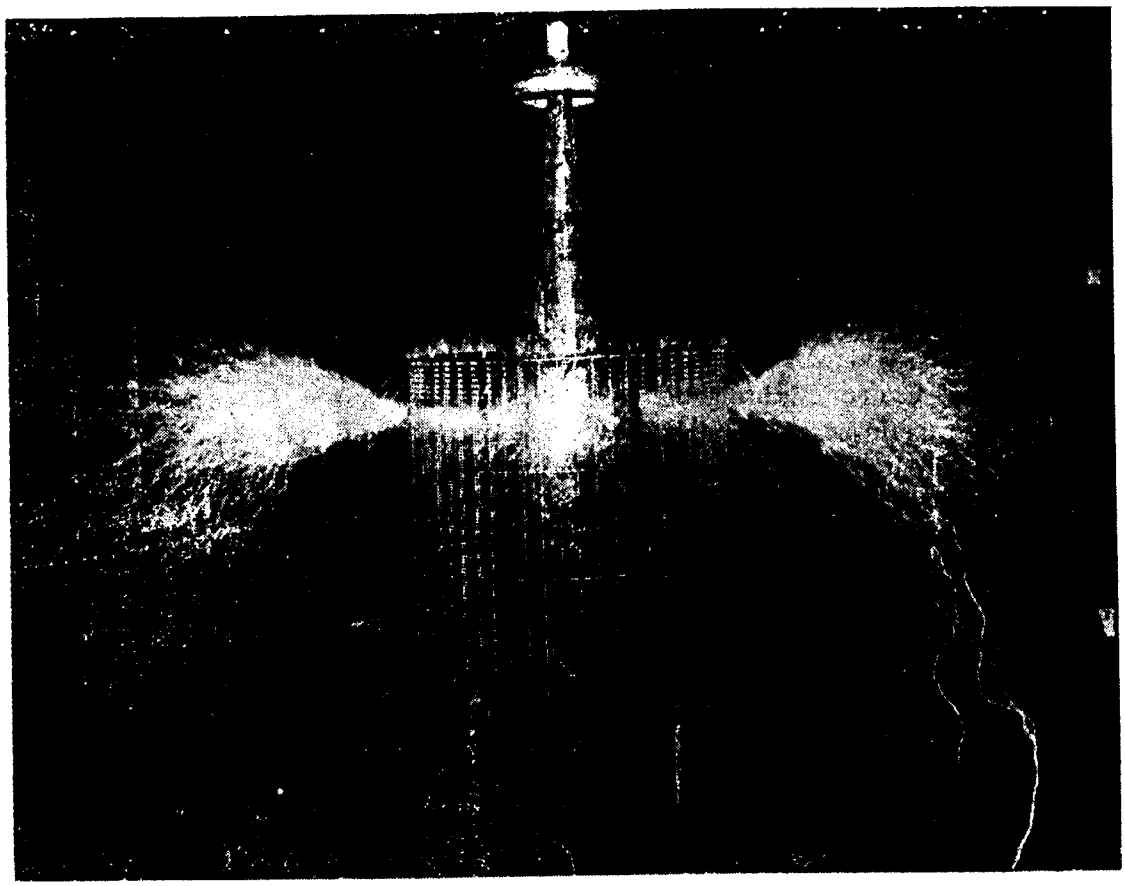

Phot. VII. View of "extra coil" in action.

V. View of interior much the same as in II. The secondary and various coils placed inside, particularly the central "extra coil", are resonating. The latter is connected to a point of the first secondary turn about 3/4 turns from ground connection, nevertheless the streamers are powerful. Other coils are connected to the same point while a ball 30" on a stand and a coil on a stand are connected to the last turn of secondary. Strong sparks were passing from top to bottom of extra coil and the secondary last turn shows strong streamers. About 100 short flashes or throws of switch and afterwards an exposure of 15 minutes to ordinary arc lamp placed in corner of building for the purpose of photography. The arc light is much preferable to flash light as the time can be closely determined in each case. The isochromatic plate is *decidedly better*. In this plate there is a red dye used in coloring the plate, otherwise it is the same as the Cramer "Crown". The plate used was "instantaneous Cramer isochromatic", same size as those before. This observation suggests a line of experiment which might lead to useful results. It would consist in using plates each dyed with a different color to bring out specific effects. The vibrations of the system was the normal or nearly so as recorded in previous notes.

VI. View of "extra coil" excited as normally. A bare brass ring formed of tube 3/4" diam. is placed on top. The switch is thrown in once and held about 3 seconds. The roof has been slightly opened and also the door in front to create a draught. The effect of the latter is noted easily on the separation of the individual discharges. This feature is particularly noticeable on sparks passing to the hood carried by the structure of iron pipes repeatedly described. These sparks pass in curious ways preferring frequently a long path to a short one. This is peculiar to these discharges of high tension emanating from a single free terminal. Some streamers are broken in places to continue stronger afterwards. From end to end of the longest streamers about 50—55 feet in a *straight* line. This photograph is extremely beautiful on account of the character as well as arrangement of the streamers. The extra coil is excited as normally but not quite full power. The vibration is as previously recorded.

The same kind of plate as before was used and the exposure to arc light was 15 minutes, about half light cut off.

VII. View of "extra coil" in action. Wires slightly inclined to the ground, to prevent discharge from going to roof, were fastened at small distances to brass ring on top of coil. Thus a great amount of streamers was produced and they were necessarily weaker individually. The plate illustrates well this feature as is evident from the hairlike appearance of the streamers. Individual sparks passing to ground sometimes are strong. It is peculiar that discharge will break out more strongly on some wire and then keep on the same place until broken by draught created or otherwise. The path is, however, evidently accidental depending probably on the arrangement of particles floating in the air. This photograph is very beautiful and symmetrical. The length of the streamers is about the same as in preceding case. The vibration of "extra coil" system about normal only slightly modified by the wires attached to brass ring. Some streamers, curious to note when striking the ground and thus becoming *sparks* or spark discharges more brilliant in color, appeared thicker on bottom than on the point of origin. I believe I have recorded this phenomenon some time before. It may, on the plate, appear that the streamer or spark is thicker farther away from the origin without necessarily being so. This is simply caused by the end or lower part of the streamer being closer to the camera than the origin. But the eye is not deceived in this respect and the phenomenon may be frequently noted so that its existence is beyond doubt. This may be explained by assuming a volatilization of the

material where the spark strikes, whereby a flame may be produced increasing the brightness of the part of the luminous path nearer to this point. In fact I observe that whenever a powerful spark strikes an object which is of a material easily disintegrated by the heat, such as wood, there is a momentary small flame produced on that point and often one may see the spark bound back as it were or splash over the object like a jet of molten metal. It will be noted on the negative that the points where the sparks hit the floor are always darker, this showing the increased development of light at these spots. The plate used is the same as before.

VIII. This shows a central view of "extra coil" normally excited with streamers issuing from a disk turned towards the camera. In this instance the streamers were longer than before as they were issuing from fewer points, chiefly from the rim of the disk which was a little more than 10" in diam. Some of the streamers darting towards the corners of the building were 30 feet in a straight line, but considering their curved path they were in all probability 50 feet long. Some of them show interesting bifurcations or splitting up in many branches while others, carried by the draught they create themselves, again show clearly the individual discharges. The brilliant sparks to the hood above the coil are also curious and interesting often passing far above the hood and then returning to the same in paths much longer than the straight route from the top of the coil to the hood which they should follow. Some of the streamers striking the floor show the increased brightness, before referred to, very clearly. It is noticeable that the streamers above the coil are of finer texture and split up, the draught being of course stronger near the opening of the roof. On some of the very long streamers one can see occasionally more brilliant points. The plate in this experiment was the same as before and the vibration of the "extra coil" system likewise normal or nearly so.

IX. This photograph illustrates again the extra coil with streamers and sparks from a pointed wire placed towards the camera. The wire or terminal was turned slightly downwards to cause the streamers or sparks to go more downward, as there was a considerable danger in this experiment of inflaming the roof of the building by the discharge taking an upward course. The streamers, when made to issue from a point as in this instance, are namely very long and in fact it was found impossible to work the apparatus to its full capacity in this account. The excitation of the "extra coil" system was pushed as far as could be done without great risk. The longest streamers reached the side of the building and even the corners sometimes. One of them reached the photographer Mr. Alley in the corner of the building, while another one struck me as I was operating the switch in another corner. They were so feeble at that distance, however, that they did not cause any injury or pain. Another one struck the camera but, as subsequently found, did not spoil the plate. These streamers were about the longest produceable in the present building, with the roof closed, measuring from 31—32 feet in a *straight line* from origin to end. Taking into account the curiously curved path the length was probably more than twice this, so that taking the discharge from tip to tip of these longest streamers, the *actual* path of the discharge through the air was from, say, 124—128 feet! If the building would permit I think that with the present apparatus, by putting about two to three times the copper in the oscillator a discharge extending through approximately twice this distance would be obtained, and by overcoming some defects of the present type of oscillator a further gain of about 50% could still be effected, so that I can certainly expect to reach, measured in this way, a length from 372 to 384 feet from end to end. In an industrial plant

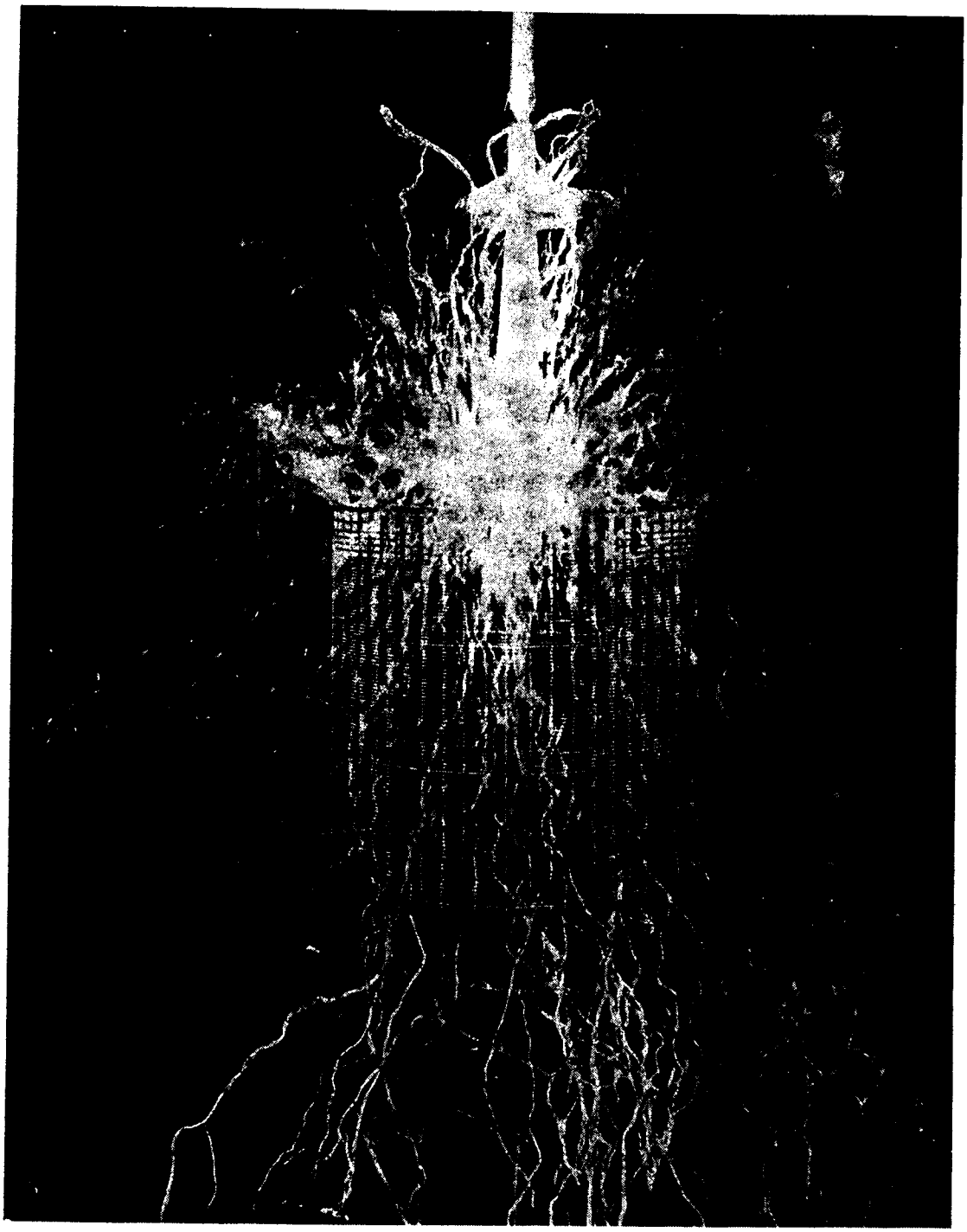

Phot. VIII. Central view of "extra coil" normally excited with streamers issuing from a disk turned towards the camera.

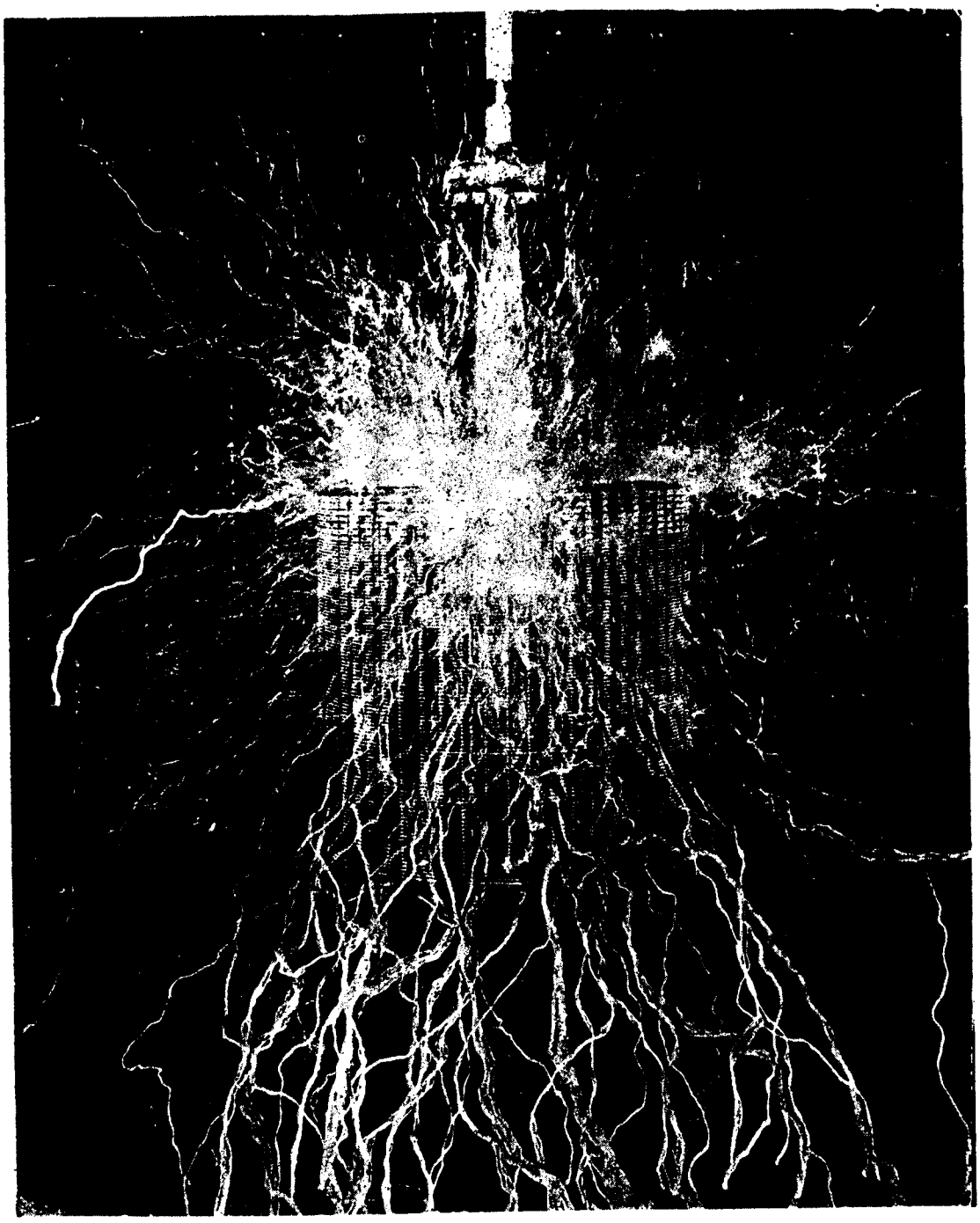

Phot. IX. "Extra coil" with streamers and sparks from a pointed wire placed towards the camera.

it seems to me advisable to push the pressure still further and the difficulties in this respect do not seem to me now to be very great. In the present photograph certain features before commented upon are even better shown than in the preceding plates. For instance, the high luminosity on the bottom where a spark strikes the floor, the "splashing" of the discharge, the branching out and the interruption of a streamer are all well shown. But the most curious feature is the appearance of "fire balls". As already noted in a previous instance a streamer even when not as strong as these here described, will show sometimes one or more points of greater luminosity than the rest. On a plate an effect of this kind may be produced by a streamer suddenly bending or turning, but the actual appearance of these luminous spots or points is unmistakable. In the instance here described the streamers were very powerful and the spots when they appeared were about an inch or possibly more in diameter, actual "fire balls" as they appeared to the eye. Now what is the cause of their formation? I attribute them to the presence of some material in the air at that particular spot which is of such a nature that when heated it increases the luminosity. It is possible that sodium is concerned in the production of the phenomenon. But the luminous "ball" must be extremely short lived as it does not impress itself upon the plate sufficiently despite its high luminosity. One can barely note a small luminous patch on the streamer, the impression of the central portion of the "ball". It is not improbable that the evolution of the "fire ball" may be connected with a process akin to explosion or sudden volatilization. Again, in this instance the same kind of plate was used and the vibration of the extra coil was but slightly quicker than normal.

X. This plate illustrates the discharge issuing from the top of the "extra coil", from the brass ring mentioned before, all over its surface. To produce a more beautiful effect in this instance the switch was thrown in 200 times, but the closure of the circuit was as short as was practicable, only a small fraction of a second, possibly 1/4 or 1/5 of a second. In plates VII, VIII and IX one hundred closures of the switch were made. This photograph is extremely beautiful although the streamers were not so large as in some previous instances. The sparks darting occasionally to the hood rather heighten the effect. The streamers are of fine texture but not quite so as in the plate described under VII. The reason is that the brass ring before mentioned, being of a large diameter, does not permit the streamers to issue from it as readily as the thin wires do and therefore the streamers partake more or less of the nature of sparks, being thicker and more brilliant and bluish white in color at the origin, while the streamers issuing from pointed terminals are of a reddish hue, sometimes quite purple and also less noisy and of feebler luminosity. Owing to their color and small luminosity they do not impress themselves upon the plate as powerfully as the streamers coming from surfaces of a relatively large radius of curvature, which are more or less of a disruptive character, ressembling sparks at the point of issue from the terminal. In this experiment again the vibration of the extra coil was nearly normal, the plate was of the same kind and the exposure to the arc light, as in the previous cases described, about 15 minutes, about half of the light cut off on lens.

XI. Plate illustrates discharge passing laterally to the camera from the central coil across the shop to another coil on a vertical stand. The length of the sparks I estimate about 15 feet in this instance, possibly more. The sparks are very powerful and brilliant. The discharge was produced by 50 successive short closures of the switch, the experiment being, of course, performed in the dark. Then an exposure — with the arc lamp 10 min. lens almost open, with an experimenter (Mr. Alley) sitting in the chair — was made. The picture of a human figure was introduced to give an idea of the magnitude of the discharge.

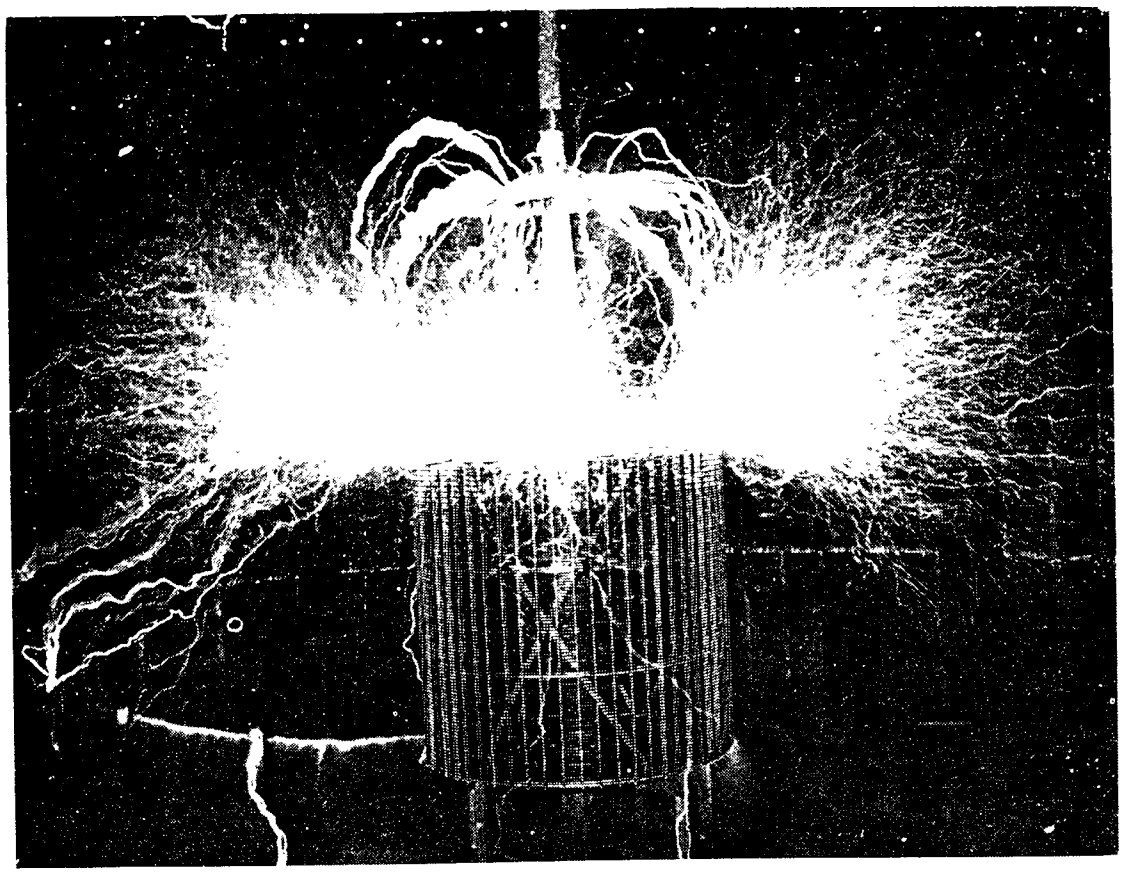

Phot. X. The discharge from the brass ring on the top of "extra coil".

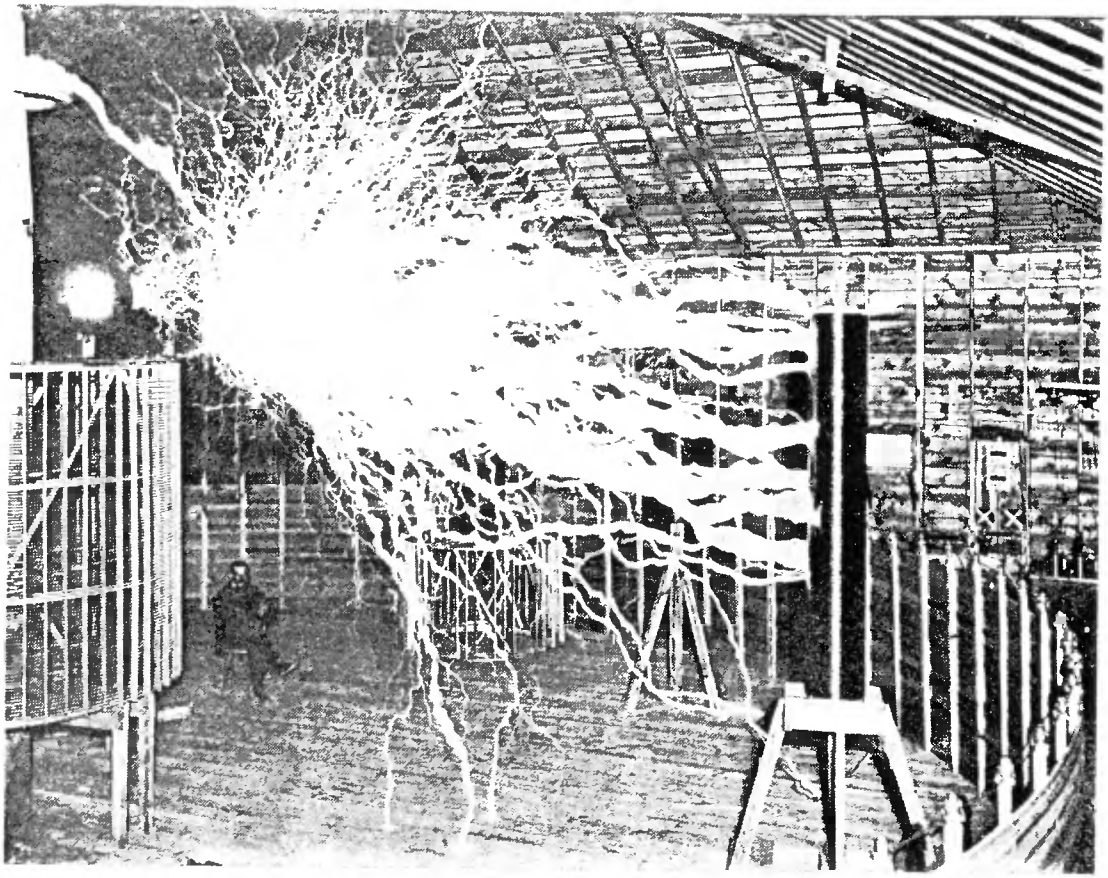

Phot. XI. Discharge passing laterally to the camera from the central coil to another coil on a stand. Mr. Alley is sitting in the chair.

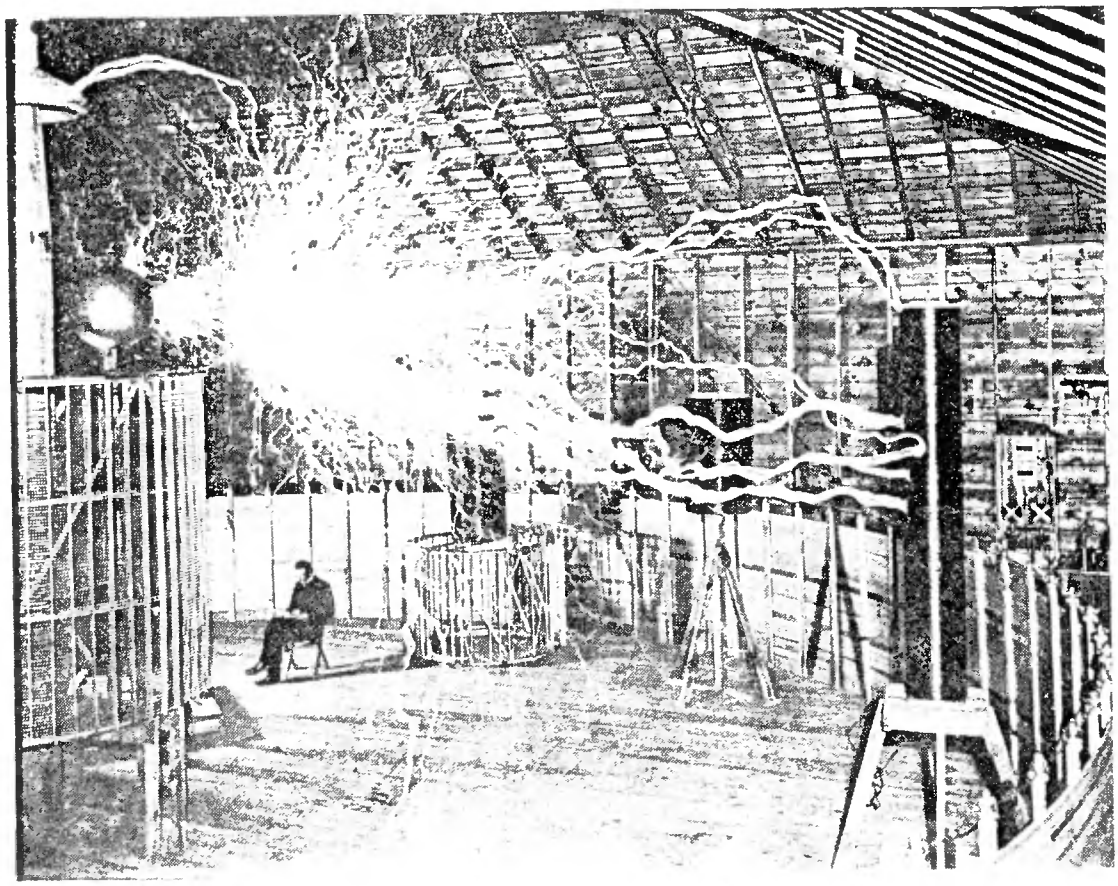

Phot. XII. Repeated experiment shown in phot. XI, but with Tesla sitting in the chair.

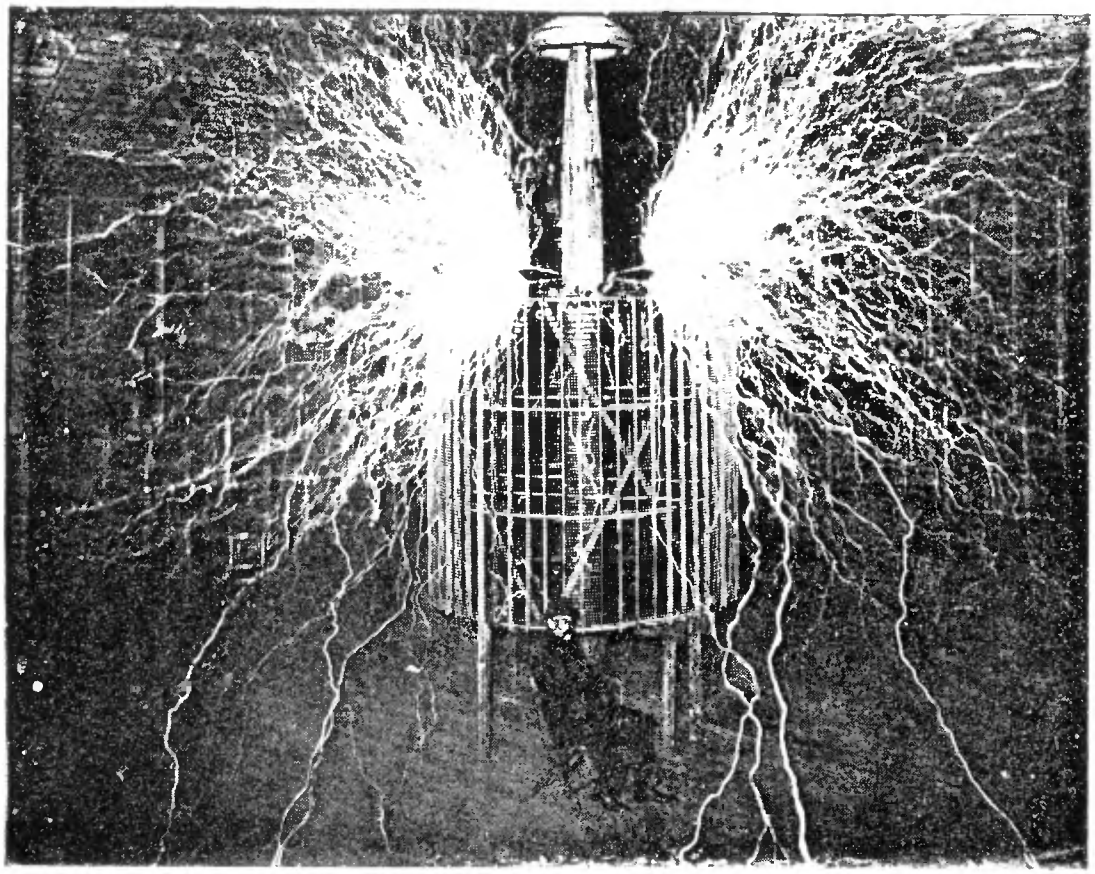

Phot. XIII. Streamers issuing symmetrically from ball with two wires on each side. Mr. Alley is sitting.

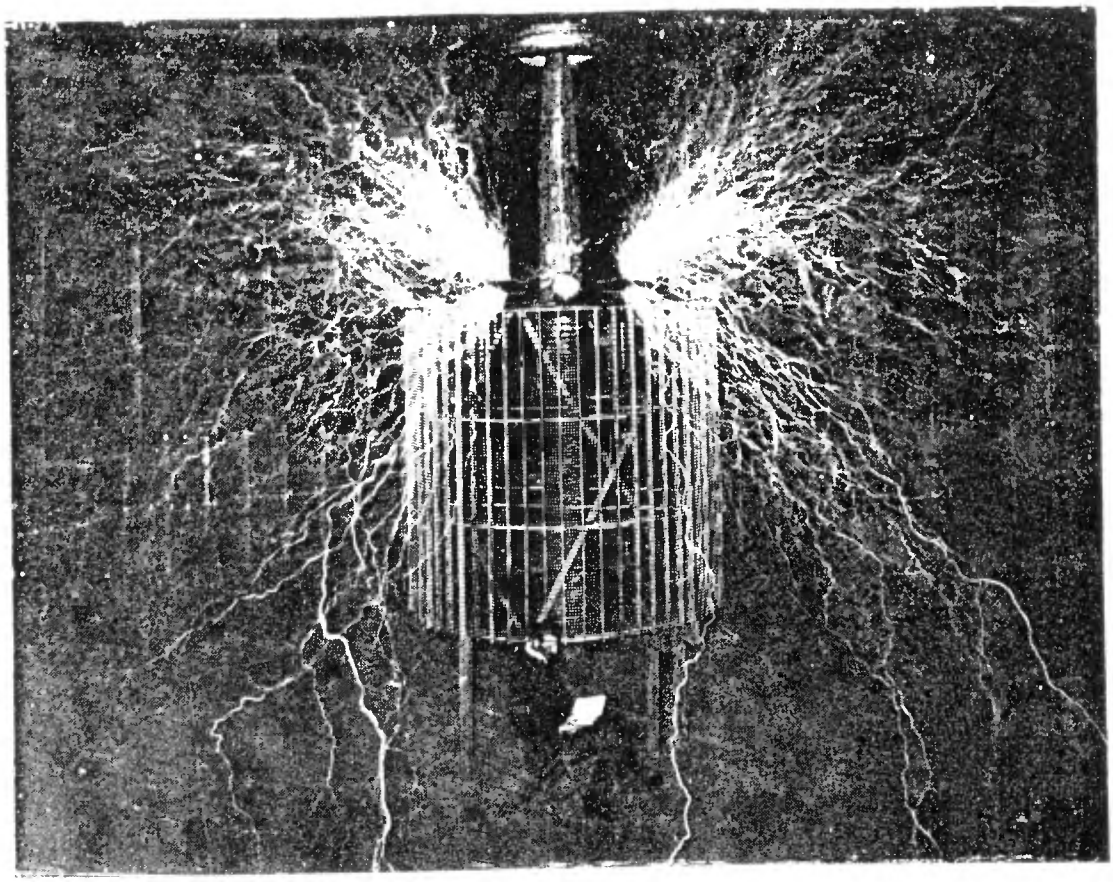

Phot. XIV. Repeated experiment shown in phot. XIII with Tesla sitting.

XII. The same experiment was repeated with the coil on stand being placed farther from the central coil. The sparks were about 20 feet long in a straight line. Fifty throws of the switch were used as before. The procedure was slightly modified by setting off about 1/3 of an Eastman flash powder to bring out my features.

XIII.
XIV. } In these two plates the effect was improved by making the streamers issue symmetrically from ball 8″ diam. with two wires on each side: . Fifty throws of the switch were used and the procedure was as in XII. In all the later instances described the plates and other particulars were the same as before.

Note: *open lens, arc light 5 min.*

Note: to preceding description of photographs taken with Mr. Alley:

As before stated, in most cases when the "new extra coil" was shown in action, the vibration of the system including it was about the normal, only slightly modified by the attachment of terminals of comparatively very small capacity. The "extra coil" system was namely adjusted to the vibration of the primary system which took place with *one primary turn* (the two primary cables being in multiple) *with all the jars being connected in two sets in series* and with the *regulating coil all but 1/2 turn out.* Under these conditions the secondary was very strongly reacting upon the primary modifying the inductance of the latter so that the inductance of the primary turn instead of being as previously determined about 57,000 cm was diminished to 41,000 cm approx. Now the inductance of the connections to the condensers, and 1/2 of one turn of regulating coil, was as will be seen with reference to the table, often referred to — nearly 6000 cm. So that the total inductance of the primary circuit under these conditions, was owing to the resonating secondary, was only 41,000+ +6000=47,000 cm, or $\frac{47}{10^6}$ henry. Now the capacity in the primary was two sets of eight tanks in series or four tanks total, that is, $4\times 36=144$ bottles or $144\times 0.009=0.1296$ mfd, approx. Hence the period was

$$T_p=\frac{2\pi}{10^3}\sqrt{0.1296\times\frac{47}{10^6}}=\frac{2\pi}{10^6}\sqrt{6.0912}=\frac{2\pi}{10^6}\times 2.47=\frac{15.512}{10^6}$$

or $n=64{,}466$ per sec. or nearly so. This is a considerably quicker vibration than when the secondary is not active. As the "extra coil" did not have sufficient inductance in itself, another coil was inserted in series with the same to insure the resonating condition with the above primary vibration. This latter coil was wound with wire No. 6 on an old drum 2 feet diam. and 6 feet long. Particulars about this coil will be recorded on another page.

Colorado Springs Nov. 14. 1899.

MUZEJ NIKOLE TESLE

In some experiments with coil having 1314 turns wound on drum 14" diam. 8 feet long the coil was cut in the middle and the two parts 657 turns each connected in multiple. The selfinduction was then practically $\frac{1}{4}$ of the selfinduction which it had used ordinarily. Readings were taken to determine the inductance when the two parts were connected as stated. These readings were:

E.m.f. $\left\{\begin{matrix}214\\212\\210\end{matrix}\right\}$ C $\left\{\begin{matrix}10.7\\10.6\\10.5\end{matrix}\right\}$ $\omega = 880$

Average values:

E	C	ω
212	10.6	880

$R = .7.9$ ohm.

from this $\left(\frac{E}{C}\right) = 20$, $\left(\frac{E}{C}\right)^2 = 400$ $R^2 = 62.41$

$\left(\frac{E}{C}\right)^2 - R^2 = 337.59$ $\sqrt{\left(\frac{E}{C}\right)^2 - R^2} = 8.375$

$$L = \frac{18.375 \times 10^9}{880} \text{ C. m.}$$

$= 20.880682$ C.m. approx. $20,881000$ C.m.

The inductance of the coil as ordinarily used would then be approx.

$= 83,524,000$ C. m.

Colorado Springs Notes

Jan. 1—7, 1900

Colorado Springs July 11. 1899.

MUZEJ · NIKOLE TESLE

For $A = \frac{\pi}{4} D^2$ $L_1 = N(\overline{r}+d)$ hence the inductance will be $L = \frac{4\pi \cdot \frac{\pi}{4} D^2 N^2}{N(\overline{r}+d)10^9} = \frac{\pi^2 D^2 N}{(\overline{r}+d)10^9}$ Henry. Taking these values for L and C we have with reference to above $\frac{1}{\mu^2} = \frac{\pi^2 D^2 N}{(\overline{r}+d)10^9} \cdot \frac{d}{\ell} \frac{\ell}{D} K$ or $\mu^2 = \frac{(\overline{r}+d)\overline{r} 9 \times 10^{20}}{\pi^2 D^3 d \ell N K}$. Since N is proportional to the diameter of the drum it is assumed from practical considerations it will be convenient to find the number of turns N. The quantities D and $\overline{r}$ are of course independent since by assuming D and designing on the pressure to be obtained beforehand $\overline{r}$ is practically given. The diameter of the wire will in most cases also be selected beforehand i.e. that then merely N is to be determined to satisfy the condition of resonance for any frequency specified. Now $L = \pi D N$ hence substituting this we have from above:

$\mu^2 = \frac{(\overline{r}+d)\overline{r} 9 \times 10^{20}}{\pi^2 D^2 d N \pi D N K}$ or $\mu^2 = \frac{(\overline{r}+d)\overline{r} 9 \times 10^{20}}{\pi^3 D^3 d N^2 K}$ and from this we get $N^2 = \frac{(\overline{r}+d)\overline{r} 9 \times 10^{20}}{\pi^3 D^3 d \mu^2 K}$ or $N = \frac{3 \times 10^{10} \sqrt{(\overline{r}+d)\overline{r}}}{D^2 \mu \sqrt{10^3 K} \cdot \sqrt{2}}$ .... This formula may serve to give an approximate idea how many turns are to be wound on a certain drum the length of the wire, being L the capacity of the excited circuit is smaller than $\frac{\lambda}{4}$, for requencies smaller than $\frac{\lambda}{2}$, if the circuit is not one of the kind illustrated in diagrams above, that is, one, in which the potential at one terminal is many times higher than at the other, but an ordinary circuit, in which there is a symmetrical rise and fall of pressure at both the terminals), but as the equation assumes that K the dielectric constant = 1 or nearly so.

11

Colorado Springs

Jan. 1, 1900

Photographs taken Dec. 22. and 23; with Mr. Alley from Dec. 17 to Dec. 31, 1899 and *particulars* about the same:

XV. Shows an incandescent lamp 16 c.p., 100 V placed out on the field with two wires leading to it. Snow on the ground. The lamp is lighted.

XVI. Illustrates the same with three lamps 16 c.p., 100 V placed on the snow and lighted. The lamps are connected in multiple arc.

XVII. Photograph showing once more the same with three lamps as before, the lamps being placed on black cloth to improve effect. These photographs were taken under the following conditions:

A cord of section equal to that of wire No. 10 was laid on the field in the form of a square of 62′ 5″=749″=*1902.5 cm* side, the center of the square being from the center of the primary loop of the oscillator in the laboratory a little over 60 feet=720″=*1830 cm.* The ends of the square were connected to two small condensers joined in multiple and each having a little less than 1/20 mfd. Neglecting capacity of the cord against that of the condensers the total effective capacity of this system was, with fair approximation 1/10 mfd, or *90,000 cm.* The inductance of the square, taking it as consisting of two pairs of parallel wires, was

$$L_s = 2\times 2\, l \left(\log_e \frac{d^2}{r\,r'} + 1/2\right).$$

In the present instance

$$l = 1902.5 \text{ cm}, \qquad d = 1902.5 \text{ cm}, \qquad r = r' = 0.254 \text{ cm}.$$

$$\frac{d^2}{rr'} = \frac{d^2}{r^2} = \left(\frac{d}{r}\right)^2 = \left(\frac{1902.5}{0.254}\right)^2 = (7500)^2 \text{ and } L_s = 4 \times 1902.5 \times$$

$$\times (\log_e 7500^2 + 1/2) = 7610 \times (17.825 + 0.5) = 7610 \times 18.325 = 761 \times 183.25$$

log 7500=3.875061

2 log 7500=7.750122

2 $\log_e$ 7500=7.75×2.3=17.825 approx.

$L_s = 139{,}450$ cm, or $\frac{13{,}945}{10^8}$ henry

From the foregoing we have for the period of the secondary system:

$$T_s = \frac{2\pi}{10^3}\sqrt{0.1 \times \frac{13{,}945}{10^8}} = \frac{2\pi}{10^7}\sqrt{1394.5} = \frac{2\pi \times 37.34}{10^7} = \frac{234.5}{10^7}$$

and this would give $n = 42{,}640$ approx. per second.

Now resonance in this circuit was obtained with all jars being connected as usual and two primary turns in multiple, there being besides in the primary circuit 18 1/2 turns of the regulating coil. This gives approximately the capacity of primary or exciting circuit $\frac{8 \times 36}{2}$ jars=144 jars or bottles=0.0009×144=0.1296 mfd. Neglecting for the moment

Phot. XVII (?) Experiment to illustrate an inductive effect of an electrical oscillator of great power. The photograph shown is reproduced from Tesla's article[41] in which somewhat different circuit dimensions and position are quoted.

the secondary reaction (that is the action of the secondary of the oscillator upon the primary, the former being thrown out of step by connecting some inductance in series with it), the inductance of the primary circuit with reference to previous data for the primary turns and regulating coil was 122,000 cm. But the inductance calculated from equation

$$\frac{2\pi}{10^3}\sqrt{0.1296 \times L_p} = \frac{2\pi}{10^3}\sqrt{0.1 \times \frac{13{,}945}{10^8}} = \frac{234.5}{10^7}$$

is smaller, being in fact only about *108,000 cm.* The smaller value is evidently the correct one, being the actual value of the inductance of the primary circuit, as modified by the secondary of the oscillator and the secondary circuit lighting the lamps. A small streamer was seen to issue from the free terminal of the secondary, hence it certainly affected the primary, reducing the inductance. The reaction of the secondary circuit lighting the lamps was comparatively small. In order not to burst the lamps the current of the supply transformers was very much cut down. I think about 30 lamps could have been lighted in this manner by pushing to the normal limit the excitation of the primary loop.

Four photographs were made of the discharge of the secondary of latest type, 20 turns of two wires No. 10. The primary consisted of one turn, the two primary cables being connected in multiple arc. The ratio of conversion being thus 1 : 20, the e.m.f. at the terminals of secondary, with the primary excited to full power, was about 400,000 volts. Owing to the low resistance of the secondary — extremely low when considering the high e.m.f. — the discharge was very powerful, of a dazzling brilliancy, literally blinding, and caused a deafening noise. The candle power of the arc is equivalent to that of five or six arc lights of normal strength. At least I conclude so from comparative tests. Photographs were made by exposing the objects to the light of the secondary discharge and it took only a small fraction of the time needed for an arc lamp to impress the plate. The secondary discharge of this apparatus is so powerful that it was always more or less dangerous for the safety of the laboratory and machinery in the same, and elsewhere, to let it play. A number of times the shop caught fire by sparks passing from some nail, wire or any kind of conductor. When the discharge was playing sparks were seen to fly almost everywhere through the laboratory, from one to another object and it was evident that it was more or less risky to let the sparks from the free terminal pass to the ground, because short waves were produced in the conductors and these were only too apt to rupture the insulation of any apparatus in the circuit or circuits connected with the oscillator or in the neighbourhood of the same. The danger resides chiefly in the *short* waves and the risk was considerably diminished when the secondary, instead of discharging directly into the short ground connection, was made to discharge through a coil or inductance, slowing down the vibration and preventing the formation of *very* high harmonics. When the discharge was effected as in the experiments photographed, a continuous and brilliant arcing took place over the lightning arresters and the dynamo at the supply station was short-circuited in rapid succession. When considering that the arc on the arresters is almost continuous one must admit that these arresters work extremely well. The discharge, owing to the terrible noise it creates is highly irritating and I think also dangerous to the timpanum of the ear. Often pain is experienced in the ears afterward and the buzzing in the ears continues for hours. If signalling with *very short* waves were desirable, nothing better could be used than such a secondary discharge. Although I have not tested its effects at extremely great distances, I conclude, from comparison with other induction apparatus experimented with, that it would affect a sensitive device certainly at one thousand miles

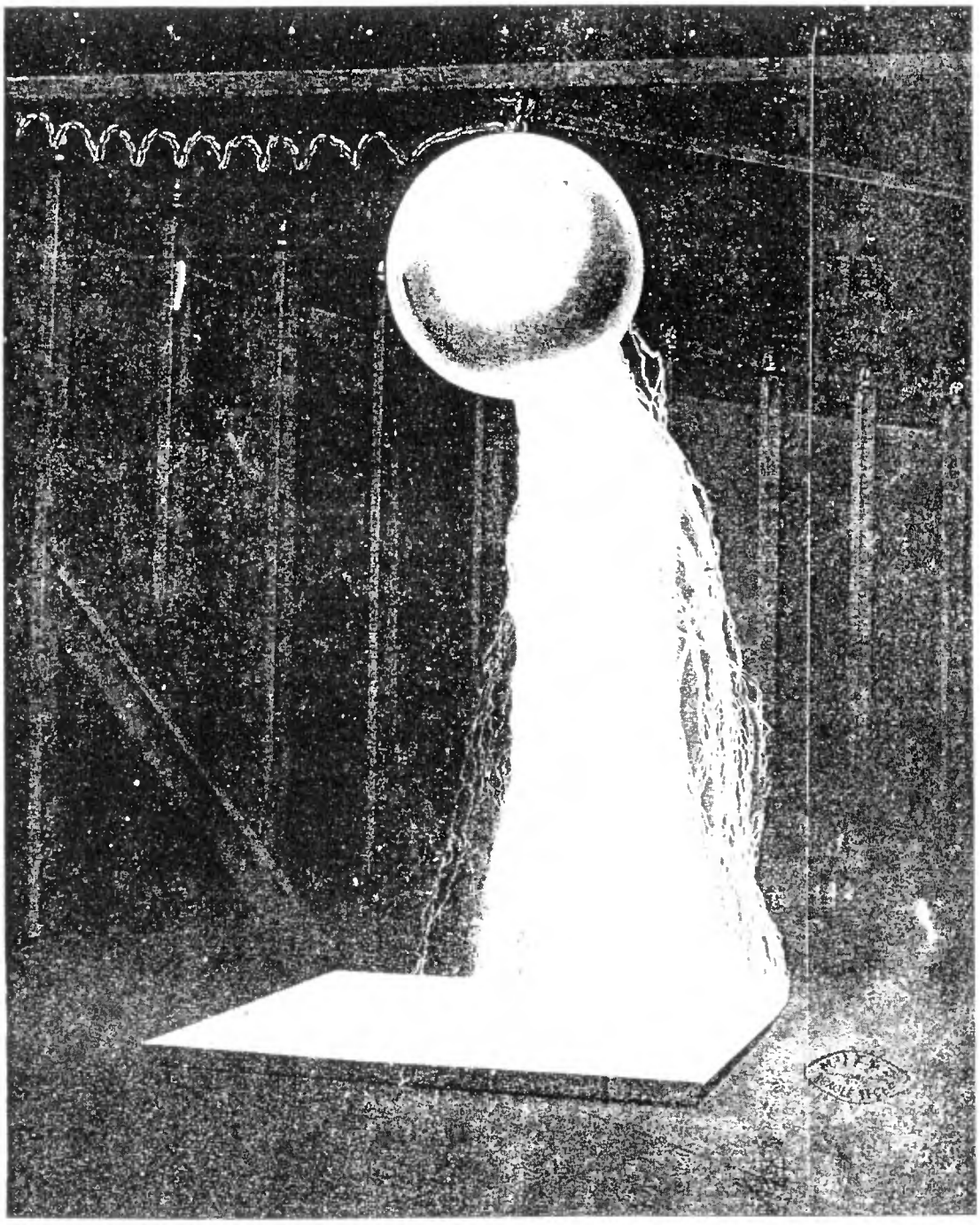

Phot. XIX. Discharge between a ball of 30^{cm} diam. and the ground plate.

and very likely at a greater distance, even on land. The great brilliancy of the discharge is in part due to the comparatively large capacity of the secondary which, as before shown, is without further provision inseparable from such a coil of very large diameter. When looking at the arc for a moment one can clearly perceive the arc proper forming the central and comparatively narrow part of the luminous path, around which there is on each side a brilliant band of 1/2" to 1" width apparently. When the discharge is playing, generally sparks pass on some places between the secondary top turns, this showing that they are by no means too far apart.

Of the four plates: XVIII., shows the secondary discharging from the free end or terminal formed by a wire to the ground plate visible on the bottom.

Plate XIX. illustrates the discharge taking place between a ball 30" diam. and the ground plate. In the former case the discharge is about 3 1/2 feet, in the latter about 3 feet long. These photographs were taken through about half of the full lense opening, nevertheless the discharge is not sharp for although the focusing was carefully effected the wide luminous band on each side of the arc proper, which was referred to, blurs the image. To improve the photographs two more plates were exposed, one the same as plate XVIII., marked XX., showing discharge between a wire and ground plate, and the other, marked XXI., illustrating discharge playing between a ball 18" diam. and the ground plate. In these instances a small opening was used and the images are sharper. To be quite sharp a pin-hole diaphragm should be used. The vibration in these four instances was the normal as before determined, all jars and one turn in primary, 25 throws of switch, very short, flash afterwards.

Colorado Springs

Jan. 2, 1900

Photographs taken with Mr. Alley from Dec. 17 to Dec. 31, 1899 and *particulars* about the same.

XXII. This photograph shows the "new extra coil" as last modified, having 98 turns wire No. 6 and on top two turns or nearly so of wire No. 10 covered with a thickness of 3/8" rubber. This wire was repeatedly referred to in previous notes. It was necessary to use it in many of the experiments recorded for the purpose of preventing or at least reducing leaks. In many cases despite the excellency and great thickness of the insulation the latter was found inadequate to withstand the strain, as is evident from a number of photographs showing the coil in action energized to full power. The picture illustrates five incandescent lamps lighted — and to much more than normal candle power — on a table in front of the coil. The lamps are in series, one end of the series being connected to the ground by a wire seen on the bottom while the other end of the lamp series is joined to the lower end of the coil, the upper end being entirely insulated and remote from objects which might act upon it inductively. The connection will be best understood from the diagram below. In the experiment illustrated there is no appreciable induction exerted

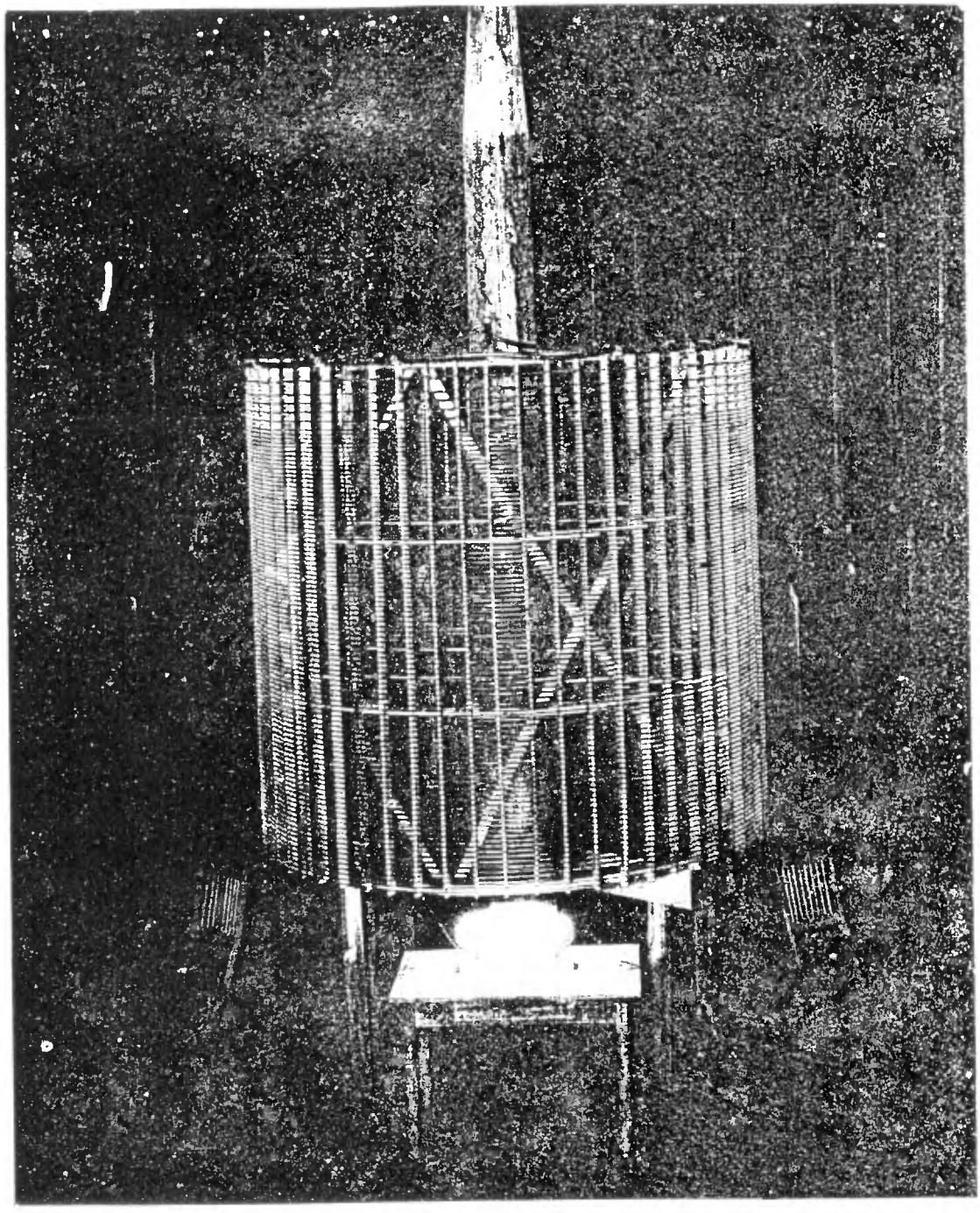

Phot. XXII. Five incandescent lamps lighted by current passing from "extra coil" to the ground plate

upon the extra coil as the wires of the oscillator proper, wound on the wooden structure seen in the back behind the coil, are *short-circuited.* One of the terminals of the condensers is grounded so that when they are discharging through the circuit, chiefly composed of a number of turns of the regulating coil, there is a strong vibration propagated through the ground which through the ground wire *w* reaches the "extra coil". Now, generally, the energy which can thus be transmitted to the coil would be minute, but when the oscillations passing through the ground are exactly of the frequency of the "extra coil" system itself, a considerable current passes into the coil which then acts just as a hole would in a pipe through which a fluid is pumped by means of a pulsating piston. As the magnifying factor of the coil is very large the feeble impulses reaching the ground wire and lamps magnify the impressed e.m.f. and create considerable movement of electricity through the lamps which are thus brilliantly lighted, as shown in the photograph. In the experiment the capacity in the exciting oscillating circuit, impressing the vibrations upon the ground and wire *w*, was 3 tanks on each side or 1 1/2 tanks total, that is 54 bottles or $0.0009 \times 54 = 0.0486$ mfd, approx. The total inductance was 41,000 cm+ind. of 6 1/4 turns of regulating coil=41,000+19,368=60,000 cm, approx. or 0.00006 henry. From this the approximate period of the vibration impressed upon the ground would be

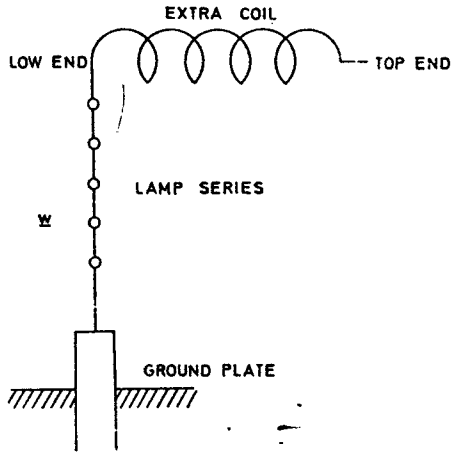

$$T_p = \frac{2\pi}{10^3}\sqrt{0.0486 \times \frac{6}{10^5}} = \frac{2\pi}{10^5}\sqrt{0.02916} = \frac{2\pi}{10^5} \times 0.1708 = \frac{1.074}{10^5}$$

approx. and $n=93{,}110$ and $p=585{,}000$ approx. λ would be very nearly 2 miles and $\frac{\lambda}{4}=1/2$ mile or about 2640 feet. In reality the length of the wire in the excited system — that is extra coil and ground wire, was found by measurement to be *2660 feet* (98 turns, wire No. 6, 25′ 11″ each turn=2540′+3/4 turn of cable inside of secondary frame= =112′+continuation of ground cable outside of circle to ground plate=28′+wire *w*= =20′+rubber covered wire on top of coil=50′ that is, total 2450′+112′+28′+20′+50′= =*2660* feet. From above data and taking resistance of extra coil at *1 ohm* (in reality a little less) we get magnifying factor for coil alone $\frac{pL}{R} = \frac{585{,}000 \times 0.018}{1} = 10{,}530.$

Taking, however, into consideration that the resistance of the lamps was about 1000 ohms roughly, when including the latter in the system the factor would be only about $\frac{1}{1000}$ of this, or approximately only *10.5*. But I believe that the resistance of the lamps when operated by currents of such extreme frequencies is much smaller than the measured resistance according to the usual methods. The currents, namely, when produced in such ways as these here employed, have very high maximum values and the carbon is brought periodically to a much higher temperature than when operated with steady currents or currents of ordinary frequencies. I have observed this repeatedly. Furthermore when such currents as these here are used some part of the discharge also passes through

the rarefied gas in the bulb and there is a corresponding diminution of the effective resistance of the lamp on this account. In fact, I think that it is chiefly owing to this that the resistance becomes very small, it being a fact that such currents pass with the greatest freedom through the rarefied gas particularly when it is maintained at a high temperature, as in the case here considered. The heating of the gas has the effect of increasing the incandescence of the carbon and it is well demonstrated that an incandescent lamp takes, for a given luminosity, less energy when operated with currents of such extreme frequencies. Owing to these reasons the magnifying factor of the excited system even with the lamps included must have been very much larger than the figure last mentioned. It was astonishing to note, in the experiment recorded on the plate, how much energy can be in this manner conveyed to such a carefully synchronized coil through the ground. The supply transformers were cut down by a regulating coil in the primary to less than one half, in fact to about 1/3 of full capacity and inasmuch as only 3 tanks on each side in the primary or exciting circuit were used while 8 tanks were available, it is evident that, if the excited system would have been designed to work with *full output* of the exciting apparatus it would have been quite practicable to light, say $3\times 8/3=8$ times as many lamps, or about 40 lamps. However, inasmuch as the five lamps were far above candle power it would have been, in all probability, possible to light 60 lamps or so to normal candle power by a specially designed coil, with a liberal allowance of copper, vibrating in unison with the system exciting the portion of the ground containing the ground plate. Nothing could convey a better idea of the tremendous activity of this apparatus and a simple comparison with well ascertained data, obtained with other induction apparatus, shows that one of the problems followed up here, that is the establishment of communication with any point of the globe irrespective of distance, is very near its practical solution. The existance of stationary waves proves the feasibility of the project almost beyond any doubt. The great amount of energy which can be conveyed to such a synchronized circuit, by conduction through the ground, makes it appear possible, that the necessity of elevating terminals in my system of energy transmission to a distance may be dispensed with in many instances and that, with a very moderate elevation of, say, a few hundred feet enough energy may be conveyed to a circuit to serve for one or another useful purpose beyond mere signalling, or such uses of the system in which a minute amount of energy is required. Certainly, the amount of energy conveyed in this manner was, in some experiments with this apparatus, surprising at first. An interesting consideration in this connection may be the following: As before stated the period of the exciting or primary circuit, when resonance with the extra coil was attained, was $T_p=\frac{2\pi}{10^3}\sqrt{0.0486\times\frac{6}{10^5}}$. Now the period of the excited system was $T_s=\frac{2\pi}{10^3}\sqrt{0.018\times C_s}$, in which C_s is the "ideal" capacity as designated in previous instances, that is the capacity which would have to be joined to the free end of the "extra coil" of inductance of 0.018 henry but devoid of all distributed capacity. Since $T_p=T_s$ we find $C_s=\frac{0.0486\times\frac{6}{10^5}}{0.018}$ mfd, or

$$C_s=\frac{9\times 10^5\times 0.0486\times\frac{6}{10^5}}{0.018}=\frac{54\times 0.0486}{0.018}=\frac{54\times 486}{180}=\frac{3\times 486}{10}=\mathbf{145.8\ cm.}$$

Suppose an ideal system of this kind excited in the manner described, so that capacity on the free end is charged each time as the current alternates to a potential P. Then, since as before stated, the system in experiment illustrated was vibrating about 93,000 times per second, the total energy set in movement in the system would be

$$2 \times 93{,}000 \times \frac{P^2 \times 145.8}{2 \times 9 \times 10^{11}} \text{ watts.}$$

Let it be further assumed that 1% of the total energy set in movement is frittered down in the lamps and that the number of these were *60*, as might have been the case in the presently described experiment. Suppose each lamp to take 50 watts, the total energy consumed in the lamps would be 3000 watts hence, under the above assumptions, the total energy set in movement in the excited system would have to be 100 times this amount or 300,000 watts. To satisfy this condition we would have

$$2 \times 93{,}000 \times \frac{P^2 \times 145.8}{2 \times 9 \times 10^{11}} = 300{,}000$$

and

$$P^2 = \frac{54 \times 10^{13}}{186 \times 145.8} = 10^{12} \times \frac{540}{186 \times 145.8} \text{ or } P = 10^6 \sqrt{\frac{540}{186 \times 145.8}} =$$

$$= 10^6 \sqrt{\frac{540}{27{,}118.8}} = 10^6 \sqrt{0.02} \text{ approx. or } = 10^6 \sqrt{\frac{2}{100}} = 10^5 \sqrt{2} =$$

$$= 10^5 \times 1.414 \text{ or } \boldsymbol{P = 141{,}400} \text{ volts.}$$

Not very much, as will be seen, for such a pressure is extremely small with apparatus of the kind used here. Taking P roughly as 140,000 volts and assuming that the ground plate be at such a distance that only 1000 volts are impressed upon the same then the magnifying factor would have to be only 140. Of course, this is merely an example to support the above statement that considerable energy may in this way, and by such apparatus, be conveyed to a distant circuit which is connected to the ground at only one point directly or, if desired, through a condenser.

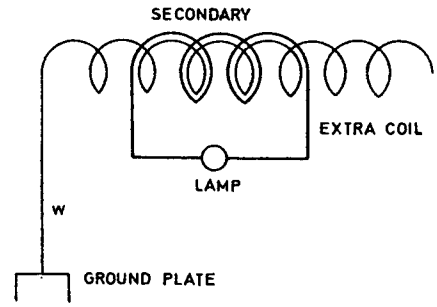

In another photograph, marked Plate XXIII., taken with same apparatus a similar experiment is illustrated. Here the extra coil as indicated in the diagram above is connected directly through the wire *w* to the ground plate and another coil designated in the diagram as "secondary" is placed in inductive relation to the extra coil excited in the same manner as in experiment before described, and a lamp is lighted by the currents generated in this "secondary". Only one lamp was used as it was the object of the photograph merely to illustrate a novel experiment, but with reference to the above it will be understood that as many as *60* lamps, or nearly so, might have been lighted with the apparatus used in this manner. All the particulars were practically the same as before. The "secondary" had four turns, the excitation of the extra coil being reduced so that the lamp was somewhat above normal candle power. In this, as well as in the preceding experiment, the switch on the Westinghouse high tension transformer was thrown in and out

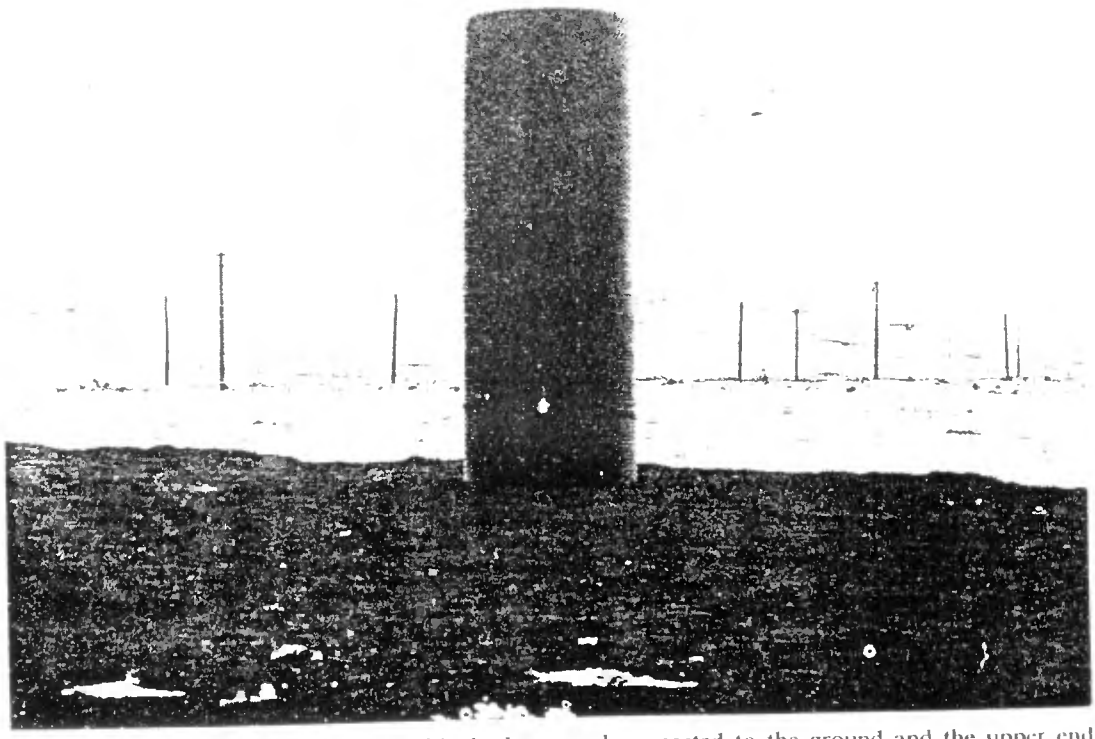

Phot. XXV. A coil outside laboratory with the lower end connected to the ground and the upper end free. The lamps is lighted by the current induced in the three turns of wire wound around the lower end of the coil.

about 50 times and after this, as usual, an exposure to arc light for the detail of the apparatus was made, the time being 10 minutes with a small opening.

In order to make these two experiments still more interesting they were performed outside with a smaller receiving coil and photographs were taken, which are numbered and of which Plate XXIV. shows a coil standing outside on a table to which a groundwire leads, which is connected to one of the terminals of a small lamp, while the other terminal of the same is joined to the lower end of the coil. The upper end of the coil is free, a metal tube being connected to the same, as shown clearly in the picture. This tube is placed axially and serves to increase slightly the capacity of the excited system.

In another experiment, with the same coil illustrated in Plate XXV., the coil is placed on the ground away from the laboratory and the lower end is connected to the nearest ground, while the upper end or terminal is free. Three turns of wire are wound around the lower end of the coil and the ends of this wire are connected to a lamp socket with its lamp which is, as shown, lighted by the currents induced in the three turns of wire through the oscillations transmitted through the ground to the coil.

One more experiment of this kind was photographed, the same coil being again used and placed far out into the field, this being shown in Plate XXVI., giving a clear view of the Pike's Peak Mountain Range in the background. The diagrams and several remarks before made apply to some extent also to these three photographs which were taken after sunset when the dark began to set in, as it was impracticable to take them at another hour of the day. They might have been taken by moonlight but the time was otherwise occupied. During the hours when the light was strong it would have been necessary to exclude first the daylight in some way, flash the lamp in the dark and finally make a short exposure to the full daylight to get the detail of the apparatus. It was found impracticable to get a good photograph by flashing the lamp in full daylight as the latter was too strong and the lamp did not have enough time to impress the plate as strongly as was desirable, even if it was pushed to much higher candle power than the normal. In getting the photographs, generally about 100 throws of the switch were sufficient with the lamp being pushed considerably above the normal. When the daylight was still deemed too strong Mr. Alley helped himself by covering the lens during the short interval when the lamp was not lighted and thus regulated the effect of the daylight, keeping it down to the required value.

The *particulars* were as follows: The coil used in these three experiments was wound on a drum before referred to of 25.25″ diam. and had 274 turns of wire No. 10, rubber covered. Since another coil wound on the same drum had 404 turns and an inductance of approximately 40,000,000 cm. or 0.04 henry the inductance of the present coil was with fair approximation $\left(\frac{274}{404}\right)^2 \times 0.04$ henry or $\left(\frac{137}{202}\right)^2 \times 0.04$ henry. The wire leading from the ground plate to the lower end of the coil placed on the table or ground consisted of two pieces of cord No. 10, one 308 feet and the other 84 feet long. The inductance of these two pieces of wire was estimated at 113,000 cm and compared with the inductance of the coil itself was very small, almost negligible. Calling the total inductance of the excited circuit comprising the two pieces of wire and the coil used L_1 we have for this inductance value $L_1=\left(\frac{137}{202}\right)^2 \times 40{,}000{,}000+113{,}000=18{,}400{,}000+113{,}000=18{,}513{,}000$ cm, or $L_1=$ $=\frac{185}{10^4}$ henry. This inductance, with its distributed capacity, gave a system responding

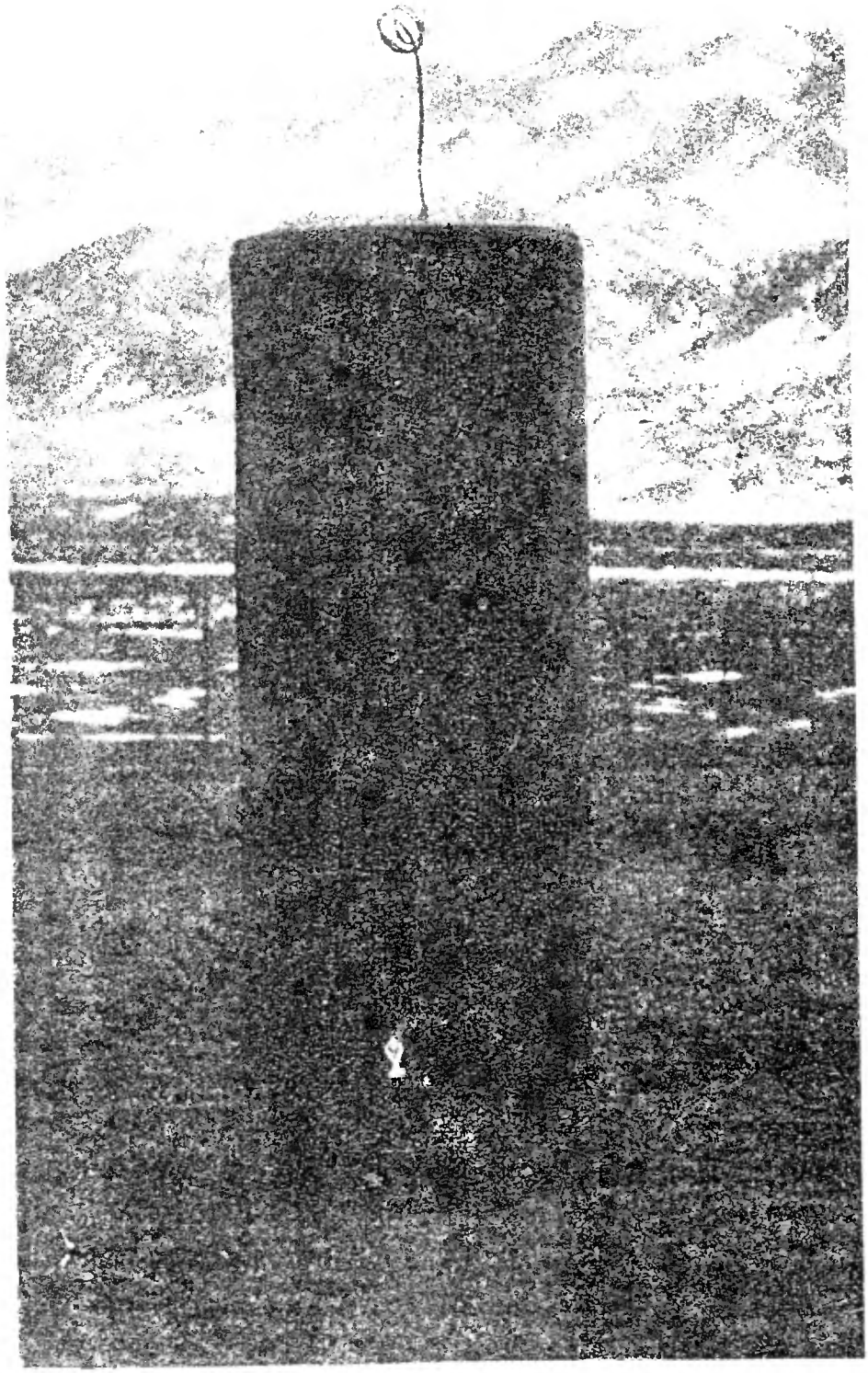

Phot. XXVI. Experiment to illustrate the transmission of electrical energy without wire. The photograph shown is reproduced from Tesla's article[41].

to the primary vibration when the capacity in the primary or exciting circuit was 1 2/3 tanks or 60 bottles on each side, or 30 bottles total, that is, $30\times0.0009=0.027$ mfd, total.

The vibrations were impressed on the ground plate by the oscillator with normal connection, that is, two primary cables in multiple or *one* primary turn, the approximate inductance of which was 56,400 cm or, say, 56,000 cm, which is close enough for the present consideration. This inductance may have been modified by the secondary, but the effect of the latter must have been very slight as, with the capacity used, it was "out of tune" and the current through it was necessarily very small. Taking then the inductance of the primary exciting circuit at 56,000 cm, the period of this circuit was

$$T_p=\frac{2\pi}{10^3}\sqrt{0.027\times\frac{56}{10^6}}.$$

Now calling C_s the "ideal" capacity of the excited circuit, the period of the same was

$T_s=\frac{2\pi}{10^3}\sqrt{\frac{185}{10^4}\times C_s}$ and equating we have $C_s=\frac{10^4}{185}\times0.027\times\frac{56}{10^6}=\frac{56\times0.027}{185\times10^2}$ mfd,

or $C_s=\frac{9\times10^5\times56\times0.027}{185\times10^2}=\frac{243\times56}{185}=$ **75.2 cm,** approx. From above

$$T_p=\frac{2\pi}{10^3}\sqrt{0.027\times\frac{56}{10^6}}=\frac{2\pi}{10^6}\sqrt{1.512}=\frac{6.28}{10^6}\times1.23=\frac{7.7244}{10^6}$$

and $n=129{,}500$ per second nearly.

The theoretical wave length would thus be $\lambda=\frac{186{,}000}{130{,}000}=\frac{186}{130}=1.43$ miles approx. or $\frac{\lambda}{4}=\frac{1.43}{4}=0.3575$ miles or $0.3575\times5280=1888$ feet$=\frac{\lambda}{4}$.

The actual length of wire in the experiment was: 274 turns of the coil, each 79.29″= =1810 feet+one piece of wire 304 feet+one piece of wire 84 feet=1810+304+84= =2198 feet or nearly 15% more than the theoretical value. The fact is, the adjustment for resonance was not quite close as the lamp lighted could not withstand the current by closer adjustment. Two of these lamps were broken. The energy transmitted through the ground to the coil was, of course, small in this instance, since only a small part of the available primary capacity was used, that is, $\frac{1.66}{8}$ of the available capacity and the current of the supply transformers was reduced as far as practicable. If a coil especially adapted for the full output of the oscillator would have been used it would have been practicable to transmit many times the amount of energy needed for lighting the lamp. The lamps used in this experiment were special ones each taking, under the conditions of the experiment, perhaps 10 watts or nearly so. Assuming again a circuit under ideal conditions with the capacity of 75.2 cm on the free end of a coil without distributed capacity, and calling the potential to which this capacity would be charged P, the total energy set

in movement in the excited system would be $2\times 129{,}500\times\frac{P^2\times 75.2}{2\times 9\times 10^{11}}$ watts. If we assume that, as before, 1% of the total energy of the system is frittered down in the lamp we would have, in conformity with what was stated before for determining P, the equation

$$2\times 129{,}500\times\frac{P^2\times 75.2}{2\times 9\times 10^{11}}=1000 \quad \text{or} \quad P^2=\frac{18\times 10^{11}}{259}$$

or

$$P=10^5\sqrt{\frac{180}{259}}=10^5\sqrt{0.695}=10^5\times 0.834$$

or **83,400 V** nearly, which is a small e.m.f. The length of wire in excited circuit was as before stated 2198 feet; the wire being No. 10, with a resistance of 1 ohm per one thousand feet, the resistance of the circuit was about 2.2 ohm. From above $p=2\pi n$ was $=6.28\times 129{,}500=$ $=813{,}260$ or, say, $813{,}000=p$. The inductance being, as shown, $\frac{185}{10^4}$ henry, the magnifying factor in the coil was $\frac{\frac{185}{10^4}\times 813\times 10^3}{2.2}=6840$ nearly. The lamp was one with a very short filament and its resistance may have been possibly 6 ohms. Thus with the lamp comprised the magnifying factor was still very considerable, that is, $\frac{185\times 813}{82}=$ $=1830$ or nearly so. Taking it at 1800 we see that it was necessary, under the conditions assumed, to impress upon the ground plate, or near portions of the ground an electromotive force of only $\frac{83{,}400}{1800}=\frac{834}{18}=52$ volts or nearly so! This seems very little indeed, it can be scarcely believed, but the figures seem to be not far from truth. These remarks refer particularly to the experiment illustrated on the plate marked XXIV. in which the connections were the same as in the diagram shown when discussing Plate XXII., the lamp or lamps being in series with the excited coil or system.

In the experiments illustrated in the Plates marked XXV. and XXVI., the connections were schematically the same as in diagram shown a propos Plate XXIII. and the vibrations and other particulars were practically the same as in experiment shown in Plate XXIV. just described. It is to be stated that when a secondary circuit is used, as in experiments described under XXIII., XXV. and XXVI., in connection with the excited coil, this secondary should for maximum effect be placed near the lower end of the coil; the exact position may be determined by experiment or approximately calculated. Namely, if the coil which is excited were devoid of capacity and the necessary capacity were all on the upper or free end of the coil, then the secondary circuit should, for maximum effect, be just at the center of the coil. But in the experiment as shown, the capacity is distributed and the current is strongest in the first or lowest turn, diminishing towards the top of the coil in each turn. The resultant maximum effect is thus always found near the lower end of the coil, but not quite at the end, since the upper turns also effect the secondary circuit, though proportionately less than the lower ones. The calculation of the maximum position of the secondary is complicated by the fact that generally neither the capacity nor the potential is uniformly distributed, the distribution being greatly varied by very slight irregularities in the dimension of the individual turns or their position, or the position

of the nodal point or points on the wire and many other causes. It is proposed to investigate this subject specially when time permits.

XXVII. This photograph shows an incandescent lamp 16 c.p., 100 V connected with *one* of its terminals to the top or free end of the extra coil, the lower end of the latter being connected to the ground plate. The carbon filament is brought to incandescence by the currents transmitted from the ground plate and the rarefied gas is also glowing as evident from the photograph. It is instructive to note the great actinic power of the glowing gas which, though appearing to the eye of feeble luminosity as compared with the lamp filament, nevertheless impresses the plate at least as strongly, if not more so, than the incandescent filament.

In many experiments made a few years ago I observed this and also that certain gases are particularly adapted to impress the plate. This fact, again observed, impresses me more and more with the value of powerfully excited vacuum tubes for purposes of photography. Ultimately, by perfecting the apparatus and selecting properly the gas in the tube, we must make the photographer independent of sunlight and enable him to repeat his operations under exactly the same conditions, which is almost indispensable in order to attain the best results. Such tubes will, however, enable him to regulate the conditions and adjust the light effects at will. Such a facility would offer a very great advantage to the artist as with the sunlight, particularly in large cities where the air is not very pure, he has to rely much on chance and where it is almost impossible for him to perform two successive operations under the same conditions or to adjust beforehand the light effects. The photograph described shows also the high actinic power of streamers when they are of a bluish or violet color as frequently, which is the case in this instance. The red streamers are comparatively very slow in their action, but it should be stated that apart from the color the action on the plate is determined much by the power or intensity of the streamers. Thus with the powerful apparatus which I have perfected here the actinic rays are much more powerful than with the New York apparatus. In the experiment illustrated the results would have been the same if *both* of the terminals of the lamp would have been connected to the free end of the "extra coil" instead of only one, as illustrated in the diagram, which is added for the purpose of showing more clearly how the connections in this case were made.

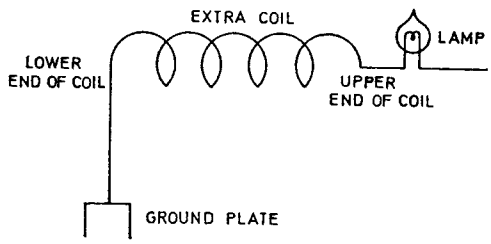

Now, as to the other particulars of the experiment, the capacity in the primary or exciting circuit was 3 tanks on each side or 1 1/2 tanks total, that is 54 bottles or 54× ×0.0009=0.0486 mfd. As to inductance of the exciting circuit there was the primary turn with closed secondary=41,000 cm. and 5 3/4 turns of regulating coil, including connections, making an inductance, according to the table, of 17,684 cm, that is, the

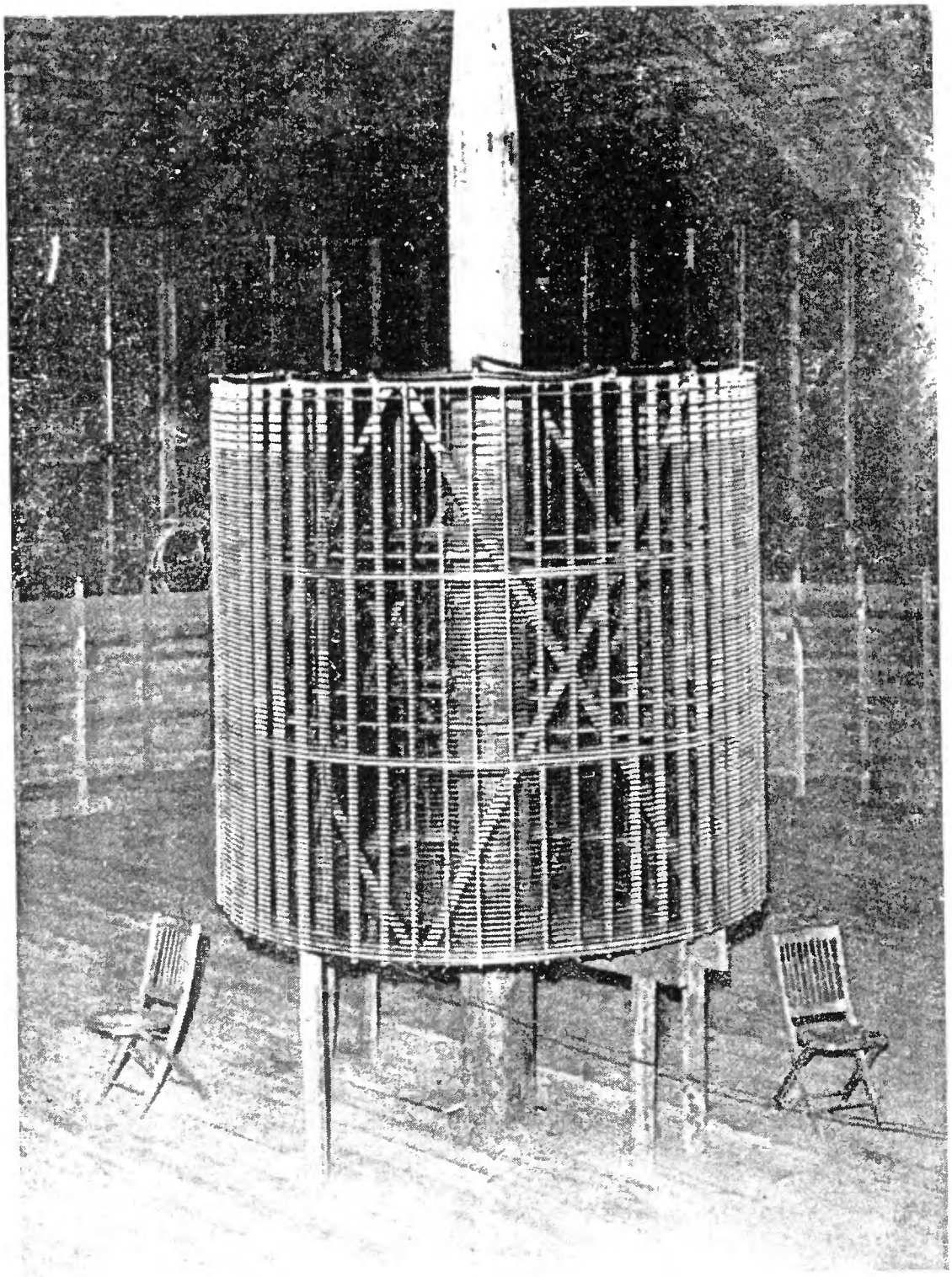

Phot. XXVII. An incandescent lamp connected with one of its terminals to the top or free end of "extra coil", the lower end of the latter being connected to the ground plate.

total inductance of the exciting circuit was 58,684 cm, or, with fair approximation, 59,000 cm$=\frac{59}{10^6}$ henry. These data give

$$T=\frac{2\pi}{10^3}\sqrt{0.0486\times\frac{59}{10^6}}=\frac{2\pi}{10^6}\sqrt{2.8674}=\frac{6.28}{10^6}\times 1.7=\frac{10.676}{10^6}$$

and n=93,700 *approx.* and 588,000=p nearly.

If we assume, as in previous cases, that one percent of the total energy of the vibrating system is used up in the lamp in unrecoverable form, the energy of the system would then be 100 wats per each watt used in the lamp, or taking the lamp at 16 c.p. consuming, say, 50 watts the energy of the system would have to be 5000 watts. From this we get the potential P on the free end of the coil approximately by equating:

$$5000=\frac{c}{9\times 10^{11}}\times\frac{P^2\times 93{,}700\times 2}{2}$$

Here c would be the capacity of the lamp or other object, in centimeters, and taken in the same way as before explained. In previous measurements by resonance analysis the capacity of such a lamp was found to be only *1 cm*, approximately. Taking this value for c we have:

$$P^2=\frac{5\times 10^3\times 9\times 10^{11}}{937\times 10^2}=\frac{45\times 10^{12}}{937}$$

and

$$P=10^6\sqrt{\frac{45}{937}}=10^6\sqrt{0.048}=10^6\times 0.22$$

or = *220,000 volts*=P. This shows that P would be rather large on the assumption of but 1% frictional work in the lamp. In reality, as I know by experience, there will be generally much more energy, of the total energy of the system, used up in the lamp so that the potential P will be found in practice much smaller. But it is to be stated that *owing* to the *small capacity* of the lamp it will be relatively very high. By providing capacity in any way, so as to enable the lamp to take more energy, the potential required may be reduced at will.

This will be apparent from another photograph which is marked XXVIII. In this instance the same connections were used as before, only the free terminal of the lamp was connected by a wire to the structure of iron pipes above. The wire can be scarcely distinguished. In this experiment resonance with the exciting circuit was obtained with 6 tanks on each side, this would mean a capacity of three tanks or 108 bottles= $108\times 0.0009=0.0972$ mfd.

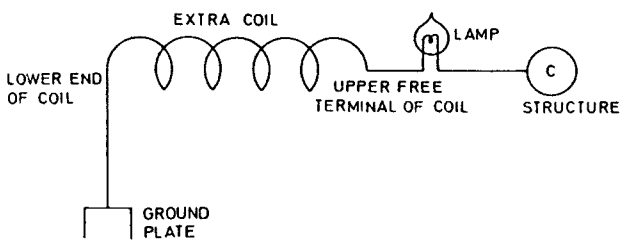

The inductance of the exciting circuit comprised a primary

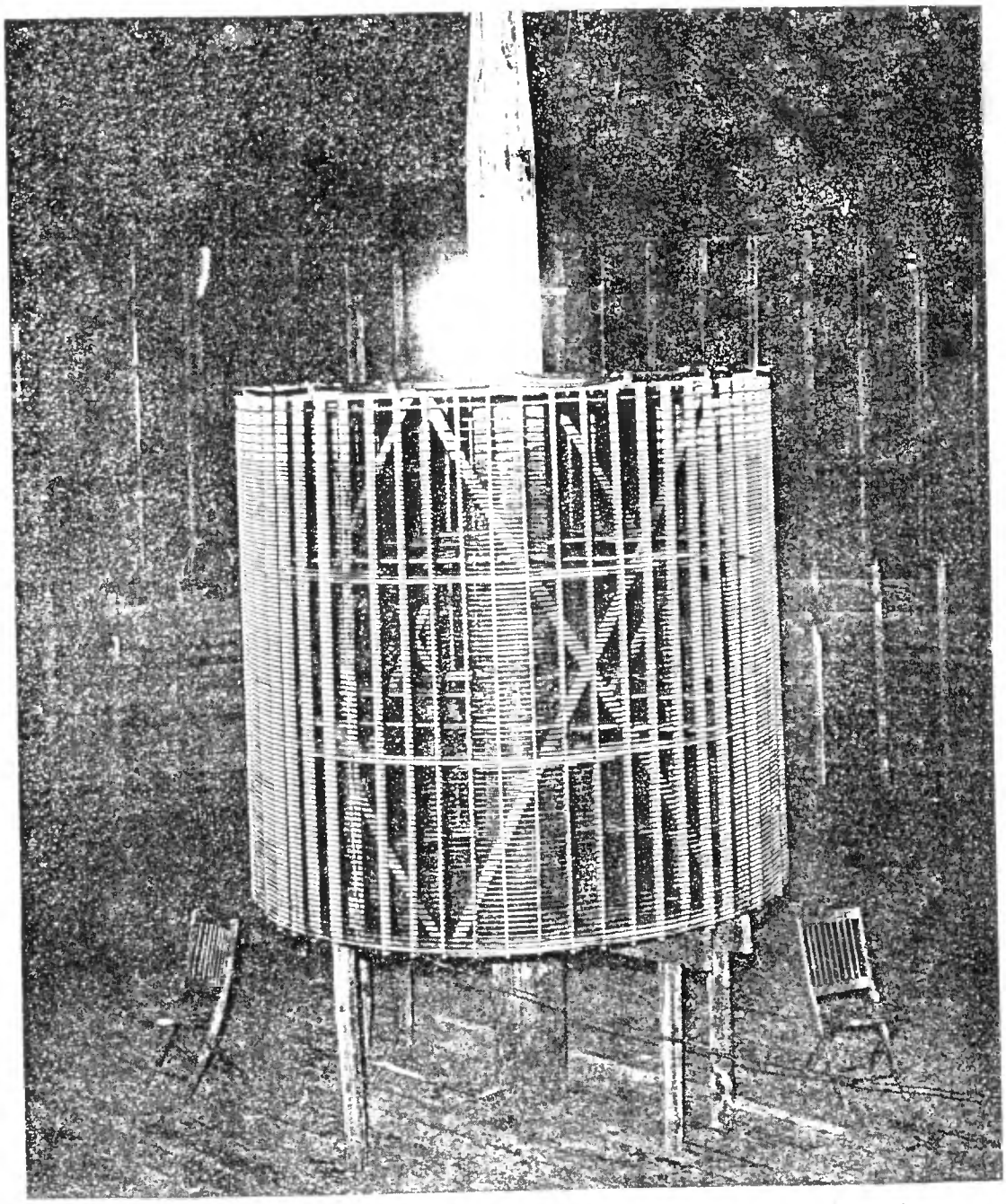

Phot. XXVIII. An incandescent lamp lighted by the current passing from "extra coil" to the structure of iron pipes. The lower end of the coil is connected to the ground plate.

turn with secondary short-circuited=41,000 cm, as before, and *all* the turns of the regulating coil with connections, that is about 85,000 cm, giving total inductance at $41{,}000+85{,}000=126{,}000$ cm or $=\frac{126}{10^6}$ henry. From this follows

$$T=\frac{2\pi}{10^3}\sqrt{0.0972\times\frac{126}{10^6}}=\frac{2\pi}{10^6}\sqrt{12.2472}=\frac{6.28\times 3.5}{10^6}=\frac{21.98}{10^6}$$

and

$$n=45{,}496 \text{ or approx. } \mathbf{45{,}500=n.}$$

As will be seen from the consideration of the diagram above, in this experiment the *entire* energy supplied to the structure or capacity C had to pass through the lamp. Suppose the latter to consume 50 watts, and taking the capacity C with reference to previous estimates roughly at 500 cm. with the protecting hood, and designating with P again the potential to which the structure is charged, we have

$$50=\frac{500}{9\times 10^{11}}\times\frac{P^2\times 45{,}500\times 2}{2} \quad \text{or} \quad P^2=\frac{9\times 10^8}{455}$$

and

$$P=\frac{3\times 10^4}{\sqrt{455}}=\frac{3\times 10^4}{21.3}$$

approx. or=**1409 volts=P**, which is a very small pressure indeed. This pressure could have been, of course, still further reduced by using a resonating circuit of still higher frequency. In the manner just described and illustrated a great many lamps could have been lighted by the vibrations transmitted to the ground and some of the facts pointed out before will enable one to make an approximate estimate in this respect. However, by connecting the "extra coil" as in normal operation, that is, to the free end of the secondary instead of to the ground, a number of lamps might have been lighted corresponding to the full output of the oscillator, say, one thousand lamps or more. Even through the ground, as in the experiment described, the action of the exciting circuit was so intense that the current of the supply transformers had to be cut down to but a very small fraction of the current taken by full output.

It should be remarked that also in the experiment described before (Plate XXVII.) a considerable number of lamps might have been lighted, but not nearly as many as in the case presently described, owing to the very small capacity of the lamps, as before stated.

Coming now to the other experiments, a lamp was lighted in the manner illustrated in Plate XXIX. in which case the lamp was connected in a *shunt* to the extra coil instead of in series with the same, as in the previous case. The diagram illustrates the connections clearly. In this experiment resonance with the exciting circuit was obtained with 22 bottles on each side, that is, 11 bottles total capacity or $0.0009\times 11=$ $=0.0099$ mfd total capacity. There were 4 1/2 turns in the regulating coil of an inductance according to

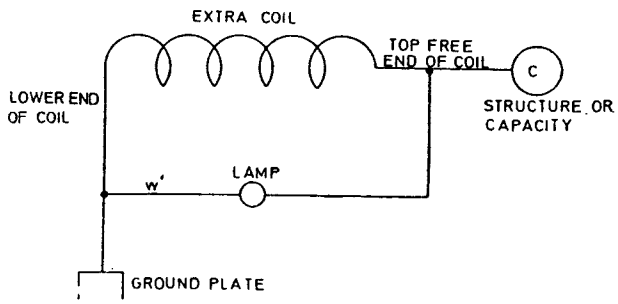

the table of 13,474 cm. This, with the 41,000 cm as before, would give an approximate inductance of 54,500 cm for the exciting circuit and from this

$$T_p = \frac{2\pi}{10^3}\sqrt{0.0099 \times \frac{545}{10^7}} = \frac{2\pi}{10^6}\sqrt{0.00099 \times 545} =$$

$$= \frac{2\pi}{10^6}\sqrt{0.53955} = \frac{2\pi}{10^6} \times 0.735 = \frac{4.6158}{10^6}$$

and $n = \mathbf{217{,}000}$ per sec. approx.

As in this case the capacity may be put approximately at 500 cm, we may roughly estimate the effective inductance in the excited circuit. Namely, calling this inductance L_s we have, for the condition of resonance,

$$T_p = T_s \text{ or } \frac{2\pi}{10^3}\sqrt{0.0099 \times \frac{545}{10^7}} = \frac{2\pi}{10^3}\sqrt{\frac{500}{9 \times 10^5}\,L_s}$$

and from this

$$L_s = \frac{0.0099 \times 545 \times 9}{5 \times 10^4} = \frac{48.56}{5 \times 10^4} \text{ henry}$$

or

$$\frac{48.56 \times 10^5}{5} = \frac{4{,}856{,}000}{5} = \mathbf{971{,}200} \text{ cm.}$$

This was the effective or actual inductance, or nearly so, of the combined system of extra coil and lamp as connected in the diagram on p. 361. Evidently, in the experiment the lamp might have been lighted by doing away entirely with the extra coil and in fact I have done so. Time did not permit taking a photograph of the experiment thus modified.

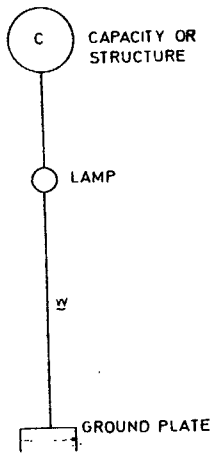

In such a case, the inductance of the wire w (see diagram) need be very small, hence the frequency of the currents impressing the vibration upon the ground plate will be very high and the potential, to which the capacity C will have to be charged in order to pass enough energy through the lamp or other working circuit, will be comparatively very small. By way of example, suppose wire w, forming practically all the inductance of the excited circuit, had 10,000 cm and C were the same structure as in the experiment last described of a capacity of 500 cm; then calling P_2 the potential to which the capacity is to be charged in order to supply 50 watts to the lamp or working circuit, we would have:

$$50 = \frac{P_2^2 \times 2n}{2 \times 9 \times 10^{11}} \times 500 \text{ or } P^2 = \frac{9 \times 10^{10}}{n}.$$

Now, calling T the period, we have

$$T = \frac{2\pi}{10^3}\sqrt{\frac{10{,}000}{10^9} \times \frac{500}{9 \times 10^5}} = \frac{2\pi}{3 \times 10^7}\sqrt{5} = \frac{6.28 \times 2.236}{3 \times 10^7} = \frac{4.68}{10^7}$$

and from this

$$n = \frac{10^7}{4.68} = 2{,}137{,}000 \text{ per sec.}$$

Substituting this for n we get

$$P^2 = \frac{9 \times 10^{10}}{2{,}137{,}000} \text{ or } P^2 = \frac{9 \times 10^{10}}{214 \times 10^4} = \frac{9 \times 10^6}{214}$$

and

$$P = \frac{3000}{\sqrt{214}} = \frac{3000}{14.63} = \textbf{205 volts only!}$$

We see that with such an extreme frequency the voltage of the ordinary incandescent lamp supply circuit would be sufficient to pass enough current through the lamp. Under the above conditions the current would be

$$I = EC\omega = \frac{205 \times 500 \times 2\pi \times 214 \times 10^4}{9 \times 10^{11}} = 1.5313 \text{ amp. approx.}$$

In the experiment illustrated in Plate XXIX. it will be seen that while the inductance of the "extra coil" was greatly reduced by shunting the same with the lamp, yet the coil was still effective, as is evidenced from the streamers visible on the wire leading from the lower end of the coil to the lamp, which is the wire marked w' in the corresponding diagram.

Passing now to the experiment illustrated in plate designated number XXX., the connections in this case are shown in diagram below. Here the lamp was lighted only

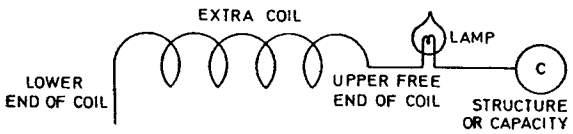

by induction from the primary circuit, the ground connection being omitted. In this case the capacity was 3 tanks on each side or 1 1/2 tanks total=54 bottles=54×0.0009= =0.0486 mfd and the inductance 41,000+3 turns of the regulating coil=41,000+10,000= =51,000 cm, or $\frac{51}{10^6}$ H approx. This gives

$$T_p = \frac{2\pi}{10^3}\sqrt{0.0486 \times \frac{51}{10^6}} = \frac{2\pi \times 1.37}{10^6} = \frac{8.6}{10^6}$$

and $n = 116{,}300$ approx.

Note: Here the excitation of the primary circuit had to be strong, showing that the inductive action was feeble in comparison with action through the ground. The tuning was not quite exact in all these experiments described as time was pressing. In the last experiment n ought to have been just twice the value found in case XXVIII.

XXXI. This is a Roentgen photograph taken in a peculiar manner. It so happened that a workman who thought he had injured one of his figures desired to have a photograph taken and a tube was inserted between the ground plate and a coil, as illustrated in the diagram under XXII. It was doubtful whether the tube could be energized in this manner but the experiment proved that it could and a photograph was taken by flashing the tube a few times, after the adjustment of the vibration in the primary and excited circuit was completed and resonating condition in the latter secured. Nothing peculiarly interesting beyond the manner of taking the photograph was contemplated, nevertheless an inspection revealed that this photograph, probably owing to the high economy of the oscillating systems used in these experiments, or possibly on account of the frequency, was distinctly different from many others taken with different apparatus. The tube was *not strongly excited* and the exposure was scarcely more than a few seconds, yet much of detail was recorded. It is quite curious how plainly the nails are shown, much as in an ordinary photograph.

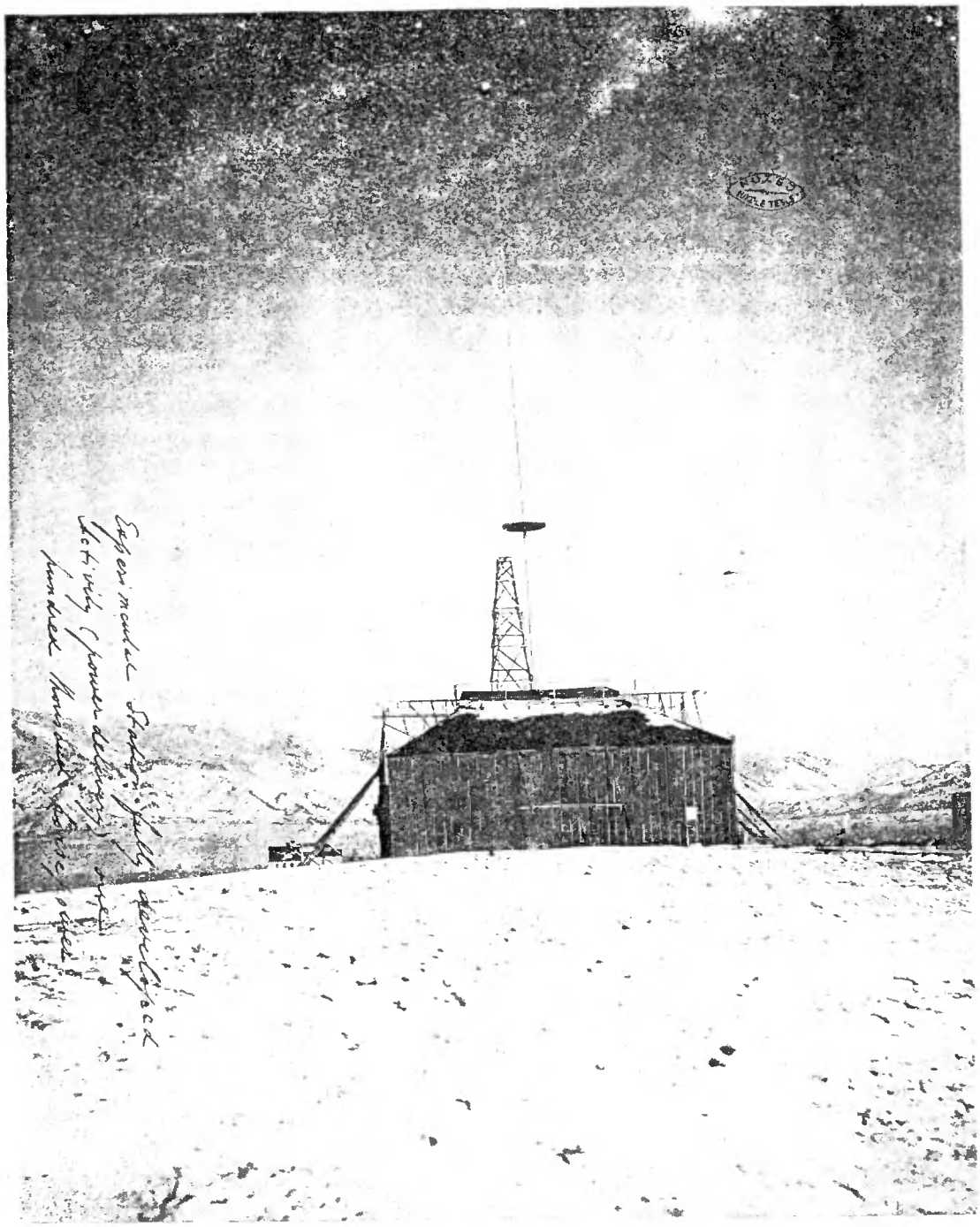

Colorado Springs laboratory fully developed.

On this occasion I must point out a peculiar feature about the action of the currents developed by this apparatus upon Roentgen tubes. As might be expected, some experiments were carried on in this line also and possibly with greater pleasure than those in other directions, for my conviction is growing stronger every day that, with apparatus such as the present, wonderful results must be secured provided only that a tube is constructed capable of taking up any amount of energy. On my return this task will be a serious one. Many times tubes have been worked here from the secondary but curiously enough, for a reason which is to me not yet clear, they can only work for a *few seconds at the most* as, almost instantly, they become very highly rarefied and the sparks begin to dart over the glass, the tube becoming useless. No matter how the current was cut down the action took place, unless it was reduced to such an extent that the tube was scarcely excited at all. Already in New York with an apparatus similar to this, though much smaller, I observed that such an action always occurs, *in some degree*, when the vibrating system possesses a very *small resistance* and the electrical movement in the circuit connected to the tube is very large. This will be further investigated.

XXXII. This is a central view through the open entrance spoiled . . .

Note: Plate XXXIII. is missing. One more photograph is to be made showing a lamp lighted without a coil, merely in series with a plate or object as capacity. If time permits a special coil will be constructed for *full power* of apparatus and all photographs, as far as practicable, taken *outside*. Taken in this manner they would be undoubtedly much more interesting to scientific men.

Colorado Springs

Jan. 3, 1900

Photographs taken with Mr. Alley from Dec. 17 to Dec. 31, 1899 and *particulars* relating to the same.

In the photographs, which will be presently described, 11″×14″ Cramer plates were used, most of which were "instantaneous isochromatic".

XXXIII. View of the Pike's Peak Range taken from room through the window glass by moonlight, the night of an eclipse. A gale was blowing and it being impossible to place the camera outside, the photograph was taken in the above manner. As the building was trembling more or less during the sudden gusts of wind the picture is not as perfect as it might have been. The light was magnificent, the moon almost full and a good photograph might have been taken in 10—15 minutes. There was, of course, considerable loss in the transmission through the window glass though it was thoroughly cleansed, nevertheless the photograph is as good as if it had been taken in daylight. The exposure was much too long, *two hours*, from 9—11. Had the wind not been blowing a perfect picture would have been obtained in a quarter of that time. The wonderful brightness of the moonlight was increased by the snow which was unusually heavy.

XXXIV. This photograph shows the laboratory viewed from behind with the mountain range from Pike's Peak to Cheyenne Mountain in the background. There was

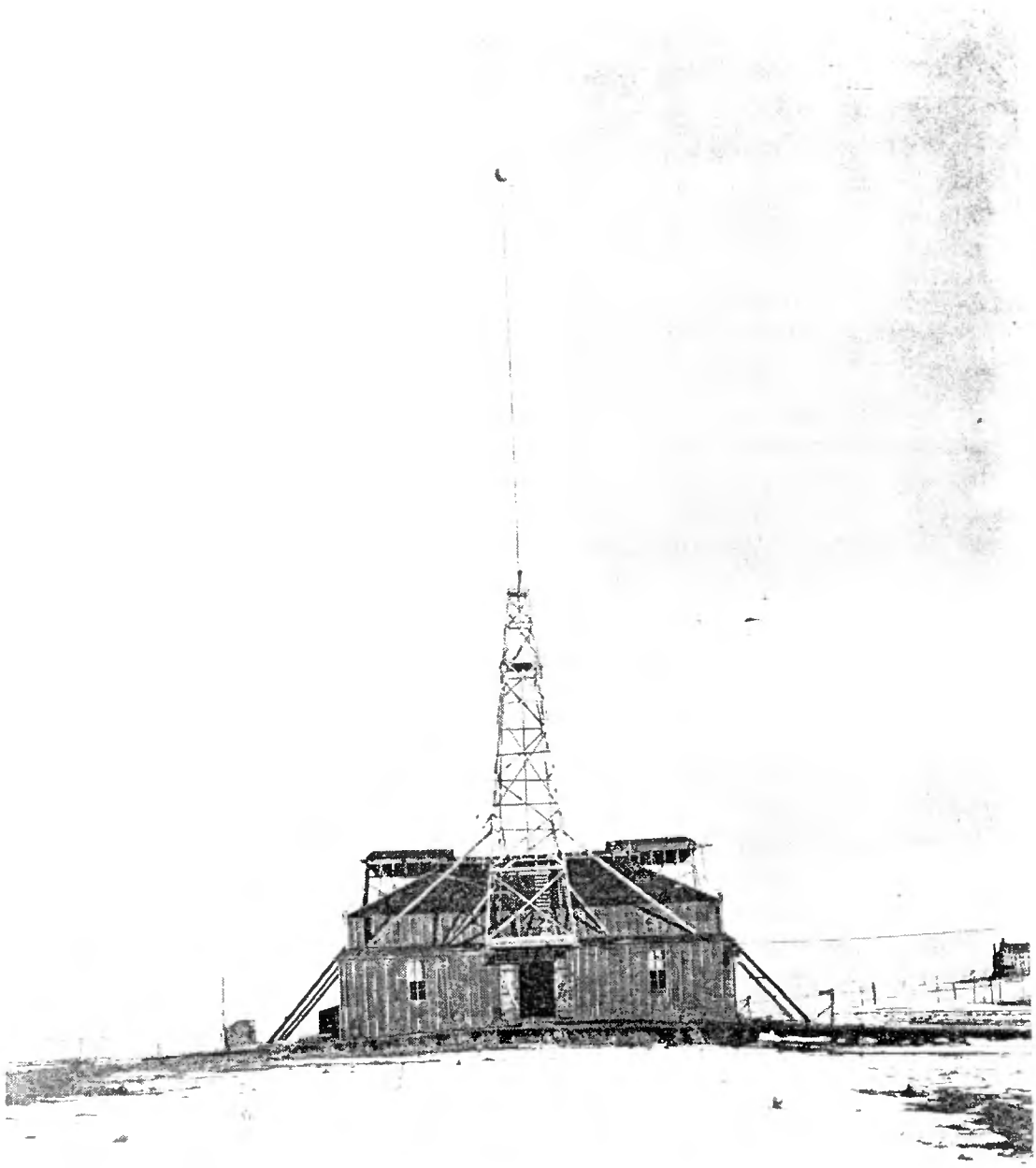

Phot. XXXVIII. View of the laboratory from the Pike's Peak side.

not much snow on the ground and little or none on the roof. The exposure was only 35 minutes, the moon nearly full. As the wind was blowing, the ball on top of the pole does not show well.

XXXV. This is another view of the laboratory from the rear with the Pike's Peak Range as background. Considerable snow on the ground. The exposure was *two hours.* It was again a windy night and the image of the upper part of the pole and ball is marred owing to swaying.

XXXVI. Again a view of the laboratory from the rear with the lower mountain range on the right side of Pike's Peak as background. There was snow on the ground. Extremely cold and very windy. Exposure 40 *minutes.*

XXXVII. Once more a view of the laboratory from the rear with the Pike's Peak Range as background. The moon was waning and a longer exposure — *three hours* — was made. It was found that the plate was somewhat over-exposed. Otherwise the conditions were not unfavourable. The wind was not strong and there was still considerable snow on the ground. The above photographs satisfied fully the novel pleasure of taking pictures by the fascinating moonlight of Colorado and attention was then turned to less agreeable but more useful work.

XXXVIII. This is a view of the laboratory from the Pike's Peak side taken in the morning by sunlight, fresh fallen snow on ground.

XXXIX. A view of the laboratory from the rear taken under the same conditions.

XL. Illustrates discharge of "extra coil" laterally across the field from a pointed wire on the top of the coil to a ball 30" diam., provided with a point and a coil on a stand which supports the ball. Strong streamers and sparks, the latter passing to the floor; the coil mentioned and hood fastened to structure of iron pipes in the center of the building. Some sparks passed also to the roof causing, as usual, considerable concern, the fireproof paint notwithstanding. Some streamers in the same positions as others relative to the camera are very weak, this is probably due to their red color. Many streamers show clearly the phenomenon of splitting up or ramification and the sparks, where they strike the floor, develop increased luminosity. The feature of "splashing" on the floor upon striking the same is also well illustrated, particularly on one of the streamers which is thinner and sharper than most others. To give an idea of the magnitude of the discharge the experimenter is sitting slightly behind the "extra coil". I did not like this idea but some people find such photographs interesting. Of course, the discharge was not playing when the experimenter was photographed, as might be imagined! The streamers were first impressed upon the plate in dark or feeble light, then the experimenter placed himself on the chair and an exposure to arc light was made and, finally, to bring out the features and other detail, a small flash powder was set off. It was found necessary to sit in the chair during the exposure to arc light as, otherwise, the structure of the chair would show through the body of the person, if the same were exposed merely to the light of the flash powder. As the weather during these experiments, which were carried on late at night, was most generally far below zero, I tried to overcome the above necessity but neither I nor Mr. Alley could device a practical remedy.

The simplest remedy would have been to employ a very powerful light enabling an instantaneous exposure, but this was not practicable with the arc light. On the other hand, the ball being very large, a great quantity of flash powder was required which it

was not advisable to use because of danger and impairment of the quality of the photographs. In the instance described, the streamers shown were produced by 50 closures of the circuit energizing the Westinghouse transformer, each closure lasting approximately one half of one second, possibly less. The exposure to arc light lasted 5 minutes, about half of the full lens opening, and in flashing about one third of a large size Eastman powder was set off.

XLI. This is a similar view of the discharge (fifty flashes, very short) of the extra coil from a pointed wire on top, or free terminal. The photograph shows, in an interesting manner, the splitting up of streamers or sparks near the floor. Another curious feature observable is the splitting and again uniting of a streamer or spark. I say "streamer or spark" because the former becomes a "spark" or perhaps stated better, an "arc" when it strikes some object which causes a strong current to pass through the path of the streamer, which then suddenly assumes the brilliancy and color characteristic of "sparks". I have seen at times a very strong discharge dart out from a point or surface in the form of a spark, continue for 6—10 feet or so and then split up in streamers. It is more than likely that this phenomenon will be found recorded in some of the photographs taken on closer inspection, as it is not unfrequent. At times, again, I have observed a small length of a streamer, anywhere along its path, assume a relatively very considerable luminosity and assume in this part the character of a spark. This I have, if I am not mistaken, already pointed out elsewhere. Some such luminous parts or points are to be seen plainly in this and other photographs.

When the action is very energetic, owing to the power of the streamer and other causes, the luminous portion of the same becomes a veritable "fireball". This observation which, to my greatest astonishment, I have frequently observed in experiments with this apparatus, shows now clearly how "fireballs" are produced in lightning discharges and their nature is now quite plain. I have heretofore always been inclined to believe this phenomenon to be merely a visual impression, similar to one which is experienced upon a violent blow on the eye, or some part of the head, or the spine, or which follows upon a sudden and very intense manifestation of light most generally. Although the vision of a moving ball of great luminosity is experienced only in the rarest instances, the person as a rule seeing luminous spots, "stars" or flaming tongues.

With the present experiences I am satisfied that the phenomenon of the "fireball" is produced by the sudden heating, to high incandescence, of a mass of air or other gas as the case may be, by the passage of a powerful discharge. There are many ways or less plausible in which a mass of air might be thus affected by the spark discharge, but I hold the following explanation of the mode of production of the "ball" as being, most likely of all others which I have considered, the true one. When sudden and very powerful discharges pass through the air, the tremendous expansion of some portions of the latter and subsequent rapid cooling and condensation gives rise to the creation of partial vacua in the places of greatest development of heat. These vacuous spaces, owing to the properties of the gas, are most likely to assume the shape of hollow spheres when, upon cooling, the air from all around rushes in to fill the "cavity" created by the explosive dilatation and subsequent contraction. Suppose now that this result would have been produced by one spark or streamer discharge and that now a second discharge, and possible many more, follows in the path of the first. What will happen? Before answering the question we must remember that, contrary to existing popular notions, the currents passing through the air have the strength of many hundreds and even thousands of amperes.

It was a revelation to myself to find that, even with the apparatus used in these experiments, a single powerful streamer, breaking out from a well insulated terminal, may easily convey a current of several hundred amperes! The general impression, if I am not mistaken, is that the current in such a streamer is small but this belief is due to the comparative unfamiliarity of the electrician with such apparatus as I am now using. As a matter of fact it is quite easy to consume in such streamers, as are illustrated in these photographs, most of the energy developed by the apparatus and the currents conveyed through the air may be, by suitable provisions, made as strong as those circulating in the wire or coil itself which produces them. No wonder then, that a small mass of air is "exploded" with an effect similar to that of a bombshell, as noted in many lightning discharges.

But to return now to the explanation of the "fireball", let us now assume that such a powerful streamer or spark discharge, in its passage through the air, happens to come upon a vacuous sphere or space formed in the manner described. This space, containing gas highly rarefied, may be just in the act of contracting, at any rate, the intense current, passing through the rarefied gas suddenly raises the same to an extremely high temperature, all the higher as the mass of the gas is very small. But although the gas may have been brought to vivid incandescence, yet its pressure may not be very great. If, upon the sudden passage of the discharge, the pressure of the heated air exceeds that of the air around, the luminous ball or space will expand, but most generally it may not do so. For assume, for instance, that the air in the "vacuous" space was at one hundredth say, of its normal pressure, which might well be the case, then, since the pressure in the space would be as the absolute temperature of the gas within, it would require a temperature which seems scarcely realizable, to raise the pressure of the rarefied gas to the normal air pressure. It is therefore reasonable to expect that, despite the high incandescence of the rarefied air, the space filled with the same will continue to contract, and here an important consideration presents itself. When, as before explained, the vacuous space was formed, the spark or streamer passed through the air *disruptively*, therefore the path was necessarily very thin, threadlike, and the minute quantity of the air which served as a conductor for the current was expanded with explosive violence to many thousand times its original volume. Owing to the fact, however, that the quantity of matter through which the current was conveyed was small, a great facility was offered for giving off the heat so that the highly expanded gas-owing to its expansion and to radiation and convection of heat-cooled instantly.

But how is it when the second discharge and possibly many subsequent ones pass through the rarefied gas? These discharges find the gas already expanded and in a condition to take up much more energy by reason of the properties it acquires through rarefaction. Evidently, the energy consumption in any given part of the path of the streamer or spark discharge is, under otherwise the same conditions, proportionate to the resistance of that part of the path; and since, after the gas has once broken down, the resistance of other parts of the path of the discharge is much smaller than that including the vacuous space, a comparatively very great energy consumption must necessarily take place in this portion of the current path. Here, then, is a mass of gas heated to high incandescence suddenly but not, as before, in a condition to give up heat rapidly. It can not cool down rapidly by expansion, as when the vacuous space was being formed, nor can it give off much heat by convection. To some extent even radiation is diminished. On the contrary, despite the high temperature, it is compelled to confinement in a limited space which is continuously shrinking instead of expanding. All these causes cooperate in maintaining, for a comparatively long period of time, the gas confined in this space at an elevated

temperature, in a state of high incandescence, in the case under consideration. Thus, it is that the phenomenon of the "ball" is produced and the same made to persist for a perceptible fraction or interval of time. As might be expected, the incandescent mass of gas in a medium violently agitated, could not possibly remain in the same place but will be, as a rule, carried, in some direction or other, by the currents of the air. Upon little reflection, however, we are led to the conclusion that the ball or incandescent mass, of whatever shape it be, will always move from the place where an explosion occured *first*, to some place where such an explosion occured *later*. This will be most generally in the path of the discharge, from its origin to its end, but not necessarily always so. For example, it may so happen that a spark produced in some place strikes an object of a material which is evaporated or volatilized with difficulty, and that *later*, in another place, this same or other spark hits an object of a material more volatile. If so then the explosion on the later place will sooner occur, and the result will be that the current of air, when both the explosions have subsided, will move from the later to the former locality. But I believe that, in most cases, the current of air will take the opposite course, as before stated. In whatever direction the movement may occur, it is plain that the velocity can not be very great. In fact, all observers concur in the opinion that such a "fireball" moves slowly. If we interpret the nature of this wonderful phenomenon in this manner, we shall find it quite natural that when such a ball encounters in its course an object, as a piece of organic matter for instance, it will raise the same to a high temperature, thus liberating suddenly a great quantity of gas by evaporating or volatilizing the substance with the result of being itself dissipated or "exploded". Obviously, also, it may be expected that the conducting mass of the "ball" originated as described, and moving through a highly insulating medium, will be likely to be highly electrified, which accords with many of the observations made. A better knowledge of this phenomenon will be obtained by following up experiments with still more powerful apparatus which is in a large measure already settled upon and will be constructed as soon as time and means will permit. There may be a way, however, of intensifying in this respect, the action of the present machine. A very important matter is to use better means of photographing the streamers exhibiting these phenomena. Much more sensitive plates ought to be prepared and experimented with. The coloring of the films before suggested might also be helpful in leading up to some valuable observation. It being a fact that this phenomenon may now be artificially produced, it will not be difficult to learn more of its nature. Photography will be, of course, the best means to investigate it and the first efforts ought to be in this direction. With the present plates, although the "balls" produced with the apparatus experimented with are probably up to 1 1/2" diam. and possibly more, they leave only a small dark spot on the plate, only the nucleus or central portion impressing itself.

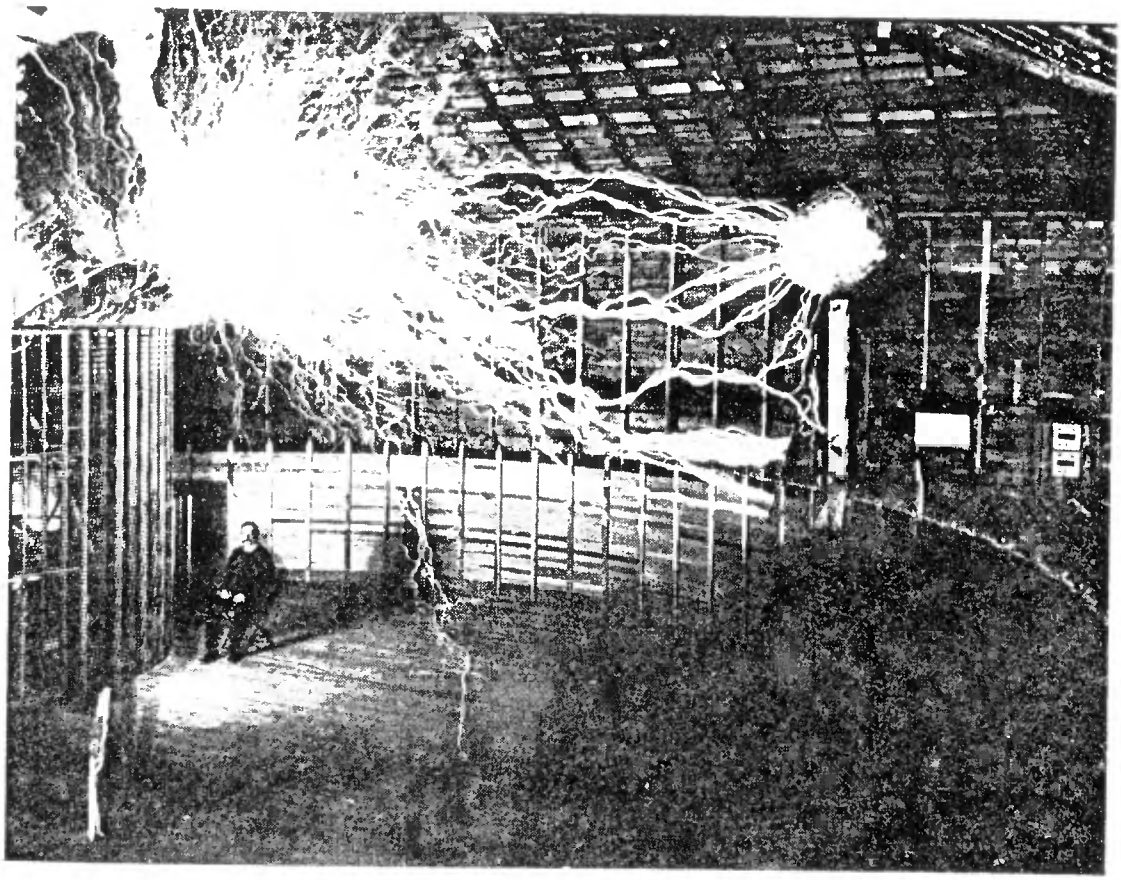

Phot. XLIII. The discharge of "extra coil" laterally across the shop. Mr. Alley is sitting.

Colorado Springs Jan. 4, 1900

Photographs taken with Mr. Alley from Dec. 17 to Dec. 31, 1899 and *particulars* about the same:

XLII. Illustrates a similar view of same apparatus in action. The streamers and sparks are produced by 25 short throws of the switch. The sparks pass to hood, floor and roof. The "splashing" on the floor is plainly visible. Many other features of interest, some of which have been already described, may be observed in the photograph. So, for instance, one or two streamers show clearly the phenomenon, which has been dwelt upon already, namely more luminous spots or "balls". The loss in luminosity of a streamer branching out is also illustrated. To give an idea of the magnitude of the display again a human figure is introduced, this time Mr. Alley sitting. The exposure to arc light was 5 minutes, about half opening of full lens and afterward about one half of the large Eastman powder was set off.

XLIII. This shows again the same discharge laterally across the shop, as before. The sparks are more powerful this time and there are more of them, fifty throws of the switch being made. The sparks and streamers are made to issue this time from a curved wire forming the terminal of the extra coil. The sparks to the hood and to the roof are particularly interesting. The point used before on the ball 30" diam. was taken off. The extra coil unfortunately broke through some places and also to the floor.

Some of the streamers form actual loops turning back upon themselves. A curious feature is presented by a long streamer striking the wooden support of the ball and splashing from there upon the ground wire leading from the ball. Some streamers are seen to pass along the wire without striking the same, lighting finally on the ball. This plainly illustrates that the path of such a discharge is accidental, dependent on the arrangement of particles floating in the air on the currents in the latter. Luminous points are again observed on some of the streamers, as in previous instances. In this experiment the other particulars were the same as before. Mr. Alley was photographed once more, a flash being used after the arc light exposure as in the preceding case.

XLIV. This plate shows the extra coil discharging laterally across the shop and to the floor, the streamers and sparks issuing from several thin wires tied together and spread apart on the end. In this experiment several discharges to the floor were so powerful as to actually inflame the wood on the spot where they struck the wood. Several instances of "splashing" on the wood are observed. The splitting or branching is nicely shown in one of the streamers. One of the sparks strikes the wood and disappears emerging again at some distance from the spot, having evidently followed a better conducting path through the wood. A powerful spark passes to the coil on the stand, jumps out and strikes the top wire of the secondary, instead of taking the shorter and easier route along the wire to the ground. Some very curious curves and twists are observed on a number of the sparks and streamers. In the experiment, 100 throws of the switch were made and the particulars were in other respects the same as before, the vibration of the "extra coil" being the normal or nearly so.

XLV. This shows a slightly different view, the discharge of the extra coil taking a similar course laterally across the shop. Strong sparks pass to hood, floor, high coil on stand and also to roof. The photograph presents features of interest similar to the foregoing. One of the streamers behaves curiously, going for some distance away from the coil and then turning back upon the same. The feature of the thickening of some sparks and streamers on the lower end near the floor is well shown in a few instances, and unmistakably. The discharges are long as they are made to issue from the tip of a wire, mostly the leaks on other points being comparatively small. The glow of the top wire of the secondary is strong. Fifty throws of the switch were made in this instance, other particulars remaining substantially the same.

XLVI. In this case again the extra coil discharges laterally as in a number of instances just described. As there was a bad leak on a spot of the rubber cable forming the last two or top turns of the extra coil, a ball of 30″ diam. was connected to the cable at that point, the object being to take up the pressure and prevent the leak. It was expected that the discharge from the end of the wire, from where it was intended to issue, would thus be strengthened. This proved to be the case decidedly, but the presence of the ball slowed down the vibration of the extra coil to some extent, thus destroying the best condition for resonance obtainable with the apparatus, for some inductance had to be inserted in series with the primary of the oscillator and this meant a slightly decreased economy. Some streamers, issuing from the large ball, despite the drain on the end of the wire, illustrate clearly the immense electromotive force and great quantity of electrical movement in the system. Many strong sparks pass to the high coil and still many more to the ground through the wooden floor, the latter showing some of the interesting phenomena described before. Particularly clear is the action of some sparks in inflaming or volatilizing the wood on the spot where they strike it. The splashing over the surface of the wood is also well shown in a number of instances. A portion of the floor struck by a number of sparks near together is considerably illuminated, chiefly by the increased light of the sparks on the surface of the floor and near the same. This additional light is, as may be seen during the experiment and also by an inspection of the photograph, due to the momentary ignition of the material to which also the thickening of the sparks near the floor might be ascribed, observable in some of the sparks. A curious screw movement is noticeable on some of the streamers. There were again 100 throws of the switch made in this experiment, the other particulars being, as nearly as practicable, the same as before.

XLVII. Once more a similar view was taken, illustrated on this plate, but the ball was not connected to the top of the extra coil and the vibration of the latter was very nearly the normal. There are some leaks on the cable on top, despite the most careful wrapping with mica and rubber, neverthelles some of the sparks and streamers issuing from the tip of the wire attain great length. A number of the sparks fly in curiously curved paths to the top wire of the secondary. These are about 22 feet or more in a straight line. There is a draught created by the discharge, as is evident from the splitting up of some sparks or streamers in individual discharges effected by the operation of the break wheel. Many interesting formations of the streamers and some phenomena before described are again noted in this case. Some sparks are seen to continue along the floor. The sparks to the hood show clearly and beautifully the effect of the draught created in consequence of the rapid heating of the air. A curious feature is afforded by some streamers actually doubling upon themselves. The secondary resonates very strongly but the strong streamers on the

top wire are partially due to the reaction of the excited system. In the present instance also, 100 throws of the switch were made, the other conditions remaining practically the same as before.

XLVIII. This plate shows one of the strongest discharges viewed similarly, as in the previous cases just dwelt upon. The streamers and spark issue again from the tip of the "free terminal" wire of the extra coil. Some of the sparks pass again in winding paths, which are very long, much longer than the straight course which they should take, to the top of the secondary. These paths have easily a length of some fifty feet or so and are of extreme brilliancy. This is partially due to the capacity of the ball of 30" diam. connected to the top turn of the extra coil. Some very brilliant and thick sparks pass from the ball to the hood above and others much longer, though less brilliant, strike the high coil on the stand across the laboratory. One of the streamers is wonderfully interesting on account of the curiously twisted and curved appearance. It is hard to conceive how a discharge can pass through the air in this way when there exists a strong tendency to make it take the shortest route.

The curiously curved path clearly shows how extremely sensitive discharges of great length, and particularly those passing out into the air from a single terminal, are to currents of the air. This sensitiveness is still further increased when the streamer or spark is not compelled to issue always from the same point or points, as when the terminal is constituted by a pointed wire, but can issue with *equal facility* from other points as, for example, when the terminal is constituted by a large ball or disk. The slightest draught is, in such a case, sufficient to alter the position and shape of the streamer. In such an instance the discharge is also highly sensitive to other influences, as magnetic or electric actions, Roentgen rays, light and other forces or disturbances in the medium.

I now understand better why a "rotating brush", which I have described some years ago, is so wonderfully sensitive, many times more than any other sensitive device of which I have knowledge at present. It seems to me that a sensitive device in telegraphy on this principle will have to be ultimately adopted in preferance to others. The trouble is that it is dificult, or at any rate inconvenient, to produce and maintain the phenomenon but this difficulty may be overcome in time. The photograph described shows very beautifully how a streamer falls apart and spatters after striking a wooden structure, owing to the sudden heat evolution and gas generation at that spot. The photograph conveys well the idea of the fierceness of the discharge produced by 100 throws of the switch, other particulars remaining.

Colorado Springs

Jan. 5, 1900

Photographs taken with Mr. Alley from Dec. 17 to Dec. 31, 1899 and *particulars* about the same continued:

XLIX. This plate shows again the extra coil viewed centrally and discharging from the brass ring on top, mentioned before, to which thin wires, pointing upwards, are fastened. As the streamers are made to issue from great many points at once, they are decidedly weaker than when, as in some previous cases, permitted to issue only from a few points. This is evident from the fineness of their texture, as shown in the photograph. But the total

amount of energy spent upon the air is very great in this experiment and the coil in action produces the effect of a hot furnace, creating a strong current of air through the open roof which, rushing upward, takes effect upon the streamers as is plainly recorded on the plate, particularly on the upper streamers. A very interesting long spark passes to the wire leading from the secondary. It is evident that many streamers are split up to such an extent that they do not impress the film sufficiently. In the experiment also 100 throws of the switch were made and the other particulars were nearly the same as before. The e.m.f. at the terminals of the extra coil system is necessarily smaller because of the facility afforded for the escape of the streamers and great frictional loss in the air, which causes the free oscillations of the system to die out more quickly than in some of the foregoing experiments.

L. This photograph represents a similar view of the extra coil discharging from the brass ring and wires fastened to same; in this case the wires being directed downwards The streamers show much the same character as before and many are evidently not strong enough to record their path on the film, on account of the great quantity of them. Most of them produce the effect of a strong glow only. Some strong sparks pass occasionally to the wire leading from the secondary. Again, the photograph was produced by 100 closures of the switch and normal excitation of the extra coil system.

LI. This is once more the extra coil discharging under similar conditions and viewed in the same manner. The wires fastened to the brass ring forming the last turn of extra coil are in this case pointed still more downwards. To strengthen the streamers somewhat the number of the discharging wires is reduced. The streamers on the top part of the picture are very beautiful, their paths being curiously curved. But the fine texture of the discharge again shows the weakening effect of the many wires or points of issue, though the individual discharges are evidently stronger than before. Some sparks passing to the hood and floor are interesting and show that the e.m.f. has been increased by reducing the number of the discharging wires. In fact some sparks and streamers attain great length and there are a number of instances of their splitting up in curious ways illustrated. A strong draught effect is also apparent. The photograph is rendered more beautiful by its symmetry. *All particulars* remained as before.

Colorado Springs

Jan. 6, 1900

Photographs taken with Mr. Alley from Dec. 17 to Dec. 31, 1899 and *particulars* relating to the same continued:

LII. This plate shows a discharge from the top of the extra coil, produced by a single closure of the circuit or throw of the switch, of very short duration. The discharge issues again from the brass ring on the top of the extra coil, which is viewed centrally. Some streamers pass into the air and sparks dart to the hood above the coil. A curious spiral or screw motion in one or two streamers is noticeable. The light of the discharge, though lasting but one fraction of a second, is strong enough to reveal a part of the structure and the top of the coil. The current of air separates the sparks and streamers into the individual discharges produced by the break wheel. This effect is beautifully shown. The vibra-

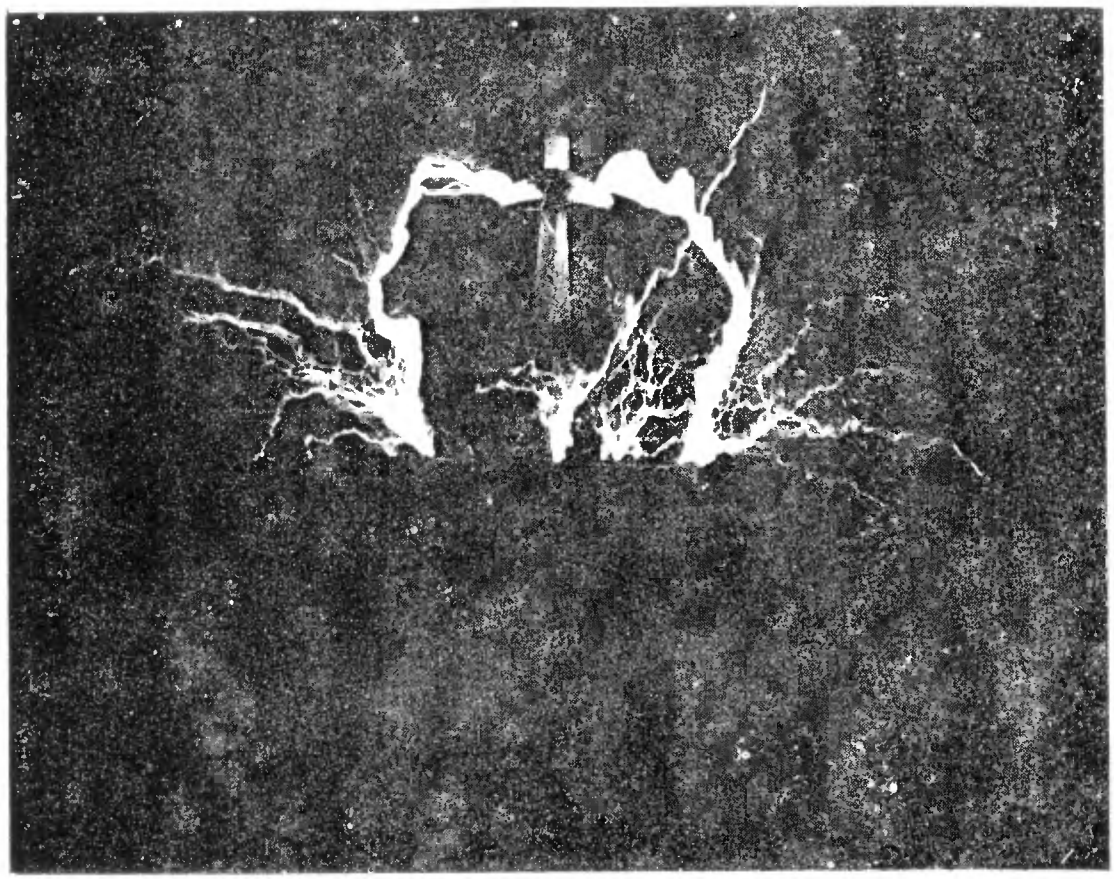

Phot. LII. Discharge from the top of "extra coil", produced by a single closure of the circuit of very short duration

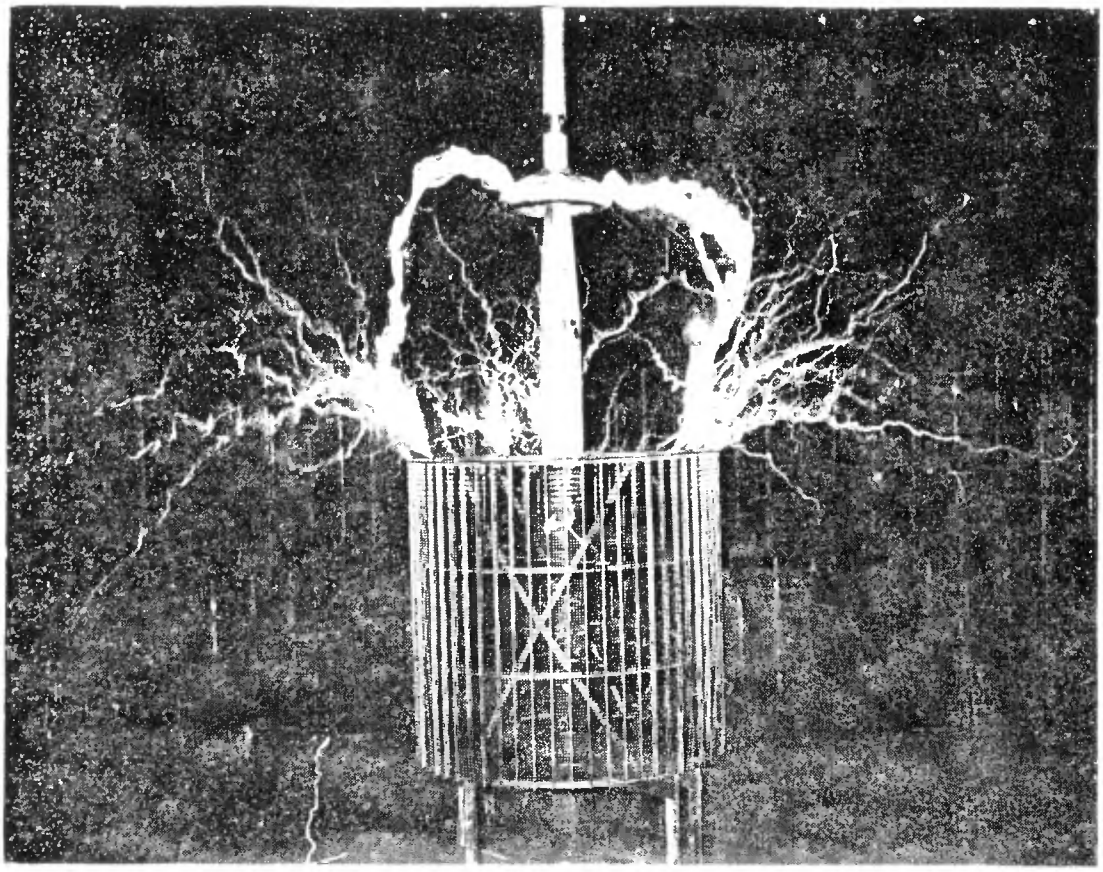

Phot. LIII. Produced under similar conditions as phot. LII by a single closure of the circuit but of longer duration.

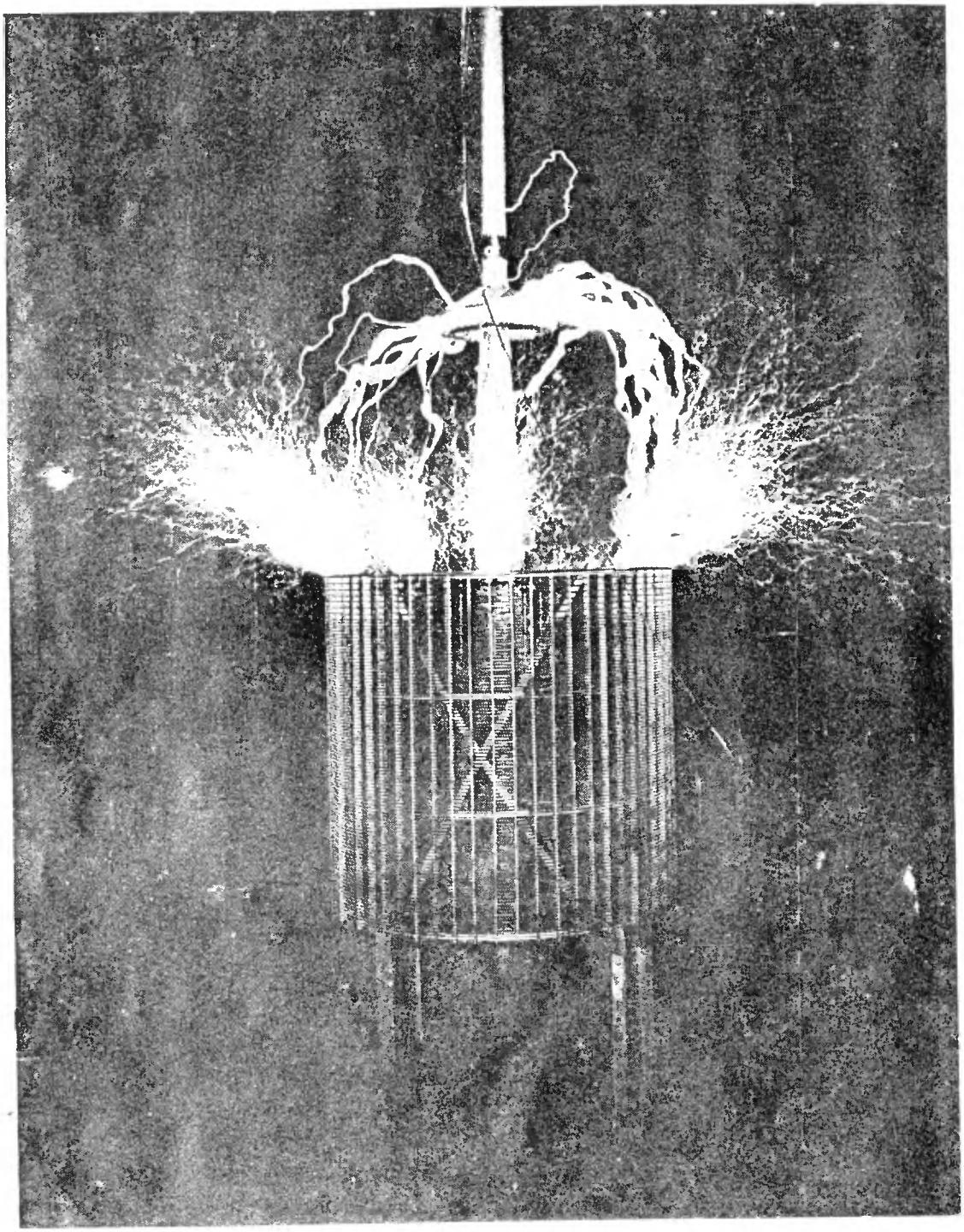

Phot. LIV. "Extra coil" discharging upwards from the brass ring on the top.

tion of the coil and all other particulars are as in most previous instances recently described. *No* after illumination by arc or flash.

LIII. This illustrates again the discharge of the extra coil under similar conditions as produced by a single closure of the circuit through the switch, but of longer duration. This is a side piece to Photograph VI already described, only the door was not open as in that case and the draught was consequently much smaller. Some very interesting bending upon themselves and twisting of the streamers and sparks may be observed in the picture. In places, some streamers are actually interrupted. This singular phenomenon has already been described on a previous occasion. Some streamers again appear exceptionally thin though they ought to appear as thick as the others, judging from their position relative to the camera. This is evidently due to the smaller actinic power of these particular discharges, owing to which only the central and white portion impresses itself upon the film. A spark striking the floor shows the feature of "splashing", dwelt upon before very clearly. A few sparks reach the roof but do not continue along the same, being rather weak at that distance. The photograph is on the whole very beautiful. All the particulars were as normally or nearly so.

LIV. In this photograph the "extra coil" is again shown in central view discharging upwards from the brass ring or turn on the top, under conditions nearly normal. 100 throws of switch were made in the experiment. The plate is very interesting on account of the exceptional fineness of the streamers and perhaps still more so owing to the curious curves of the sparks. One of the latter is seen to pass quite close to the hood without striking it, preferring a point of the iron pole far above the hood. Another feature of interest is afforded by a streamer passing close to the iron pole and escaping through the opening in the roof, seemingly not being affected by the presence of the pole. These two discharges are very long, the latter particularly. The photograph is very successful, the focusing being excellent.

LV. This plate illustrates the discharge passing laterally across the laboratory from the tip of a wire, forming the "free" terminal of the extra coil, chiefly to the floor and top wire of the secondary. The sparks and streamers are very powerful and long, exhibiting many of the phenomena described in some cases before. One spark passing from the terminal of the extra coil across the laboratory is of rare beauty showing the individual discharges effected by the break wheel exceptionally well. A few sparks and streamers show luminous points on some places which may be "fireballs". I have already dwelt at some length on this fascinating phenomenon and have explained what I consider to be its true nature. It may be of interest to state that such luminous points may be produced in other ways without partaking of the nature of the fireballs. One of these ways may be described here. It is well known — at least I assume so — that by causing two or more vibrations of different pitch to pass along a conductor, nodal points and points of maximum effect may be produced and caused to shift slowly along the conductor. Such a result I have frequently obtained with two vibrations of but slightly different period, the period of one of the vibrations being adjustable. If I recollect rightly I have described a result of this kind somewhere before this.

Substituting for a conductor of copper a vacuum tube of great length, I have also produced in the latter more or less luminous strips, striae or portions which would move along the tube with a velocity dependent on the relative wave length of both the vibrations,

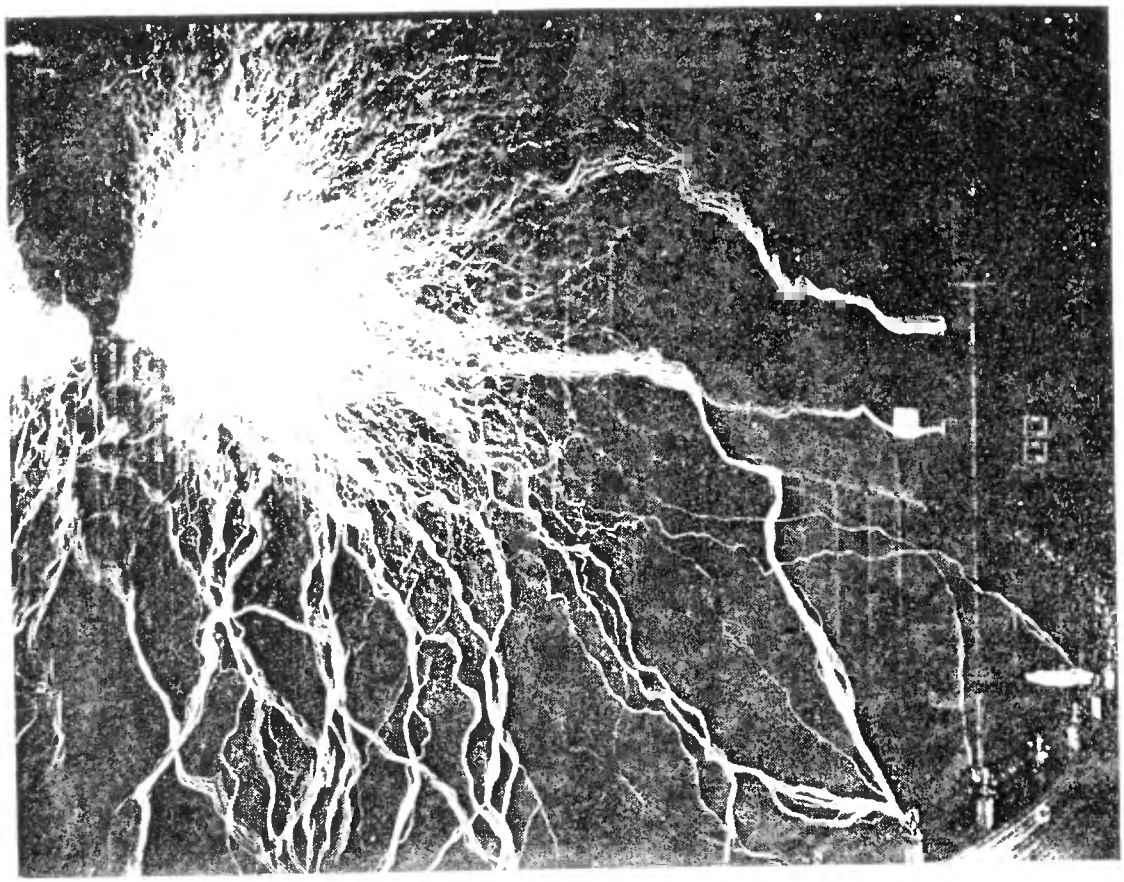

Phot. LV. "Extra coil" discharging laterally across the laboratory from the tip of a wire forming the free terminal of the coil to the floor and top wire of the secondary.

and which was at will adjustable by an adjustment of the wave length of one of the vibrations. The truth is, however, that I observed this phenomenon in vacuum tubes long before without being able to render myself an account of the nature of the same until I obtained the same effect on a wire in the manner stated. Now it is quite clear that, since a streamer is a conducting path comparable to a wire, the same phenomenon may take place on the streamer itself — being the result of two (or possibly more) vibrations of different wave length. This is all the more probable as in such an apparatus two vibrations of this kind may readily occur since the capacity, or the inductance of the circuit or both, may undergo variations as the discharge is playing, thus modifying the period to a slight extent — sufficient to cause the production of this phenomenon. In fact I have frequently observed such variations of the constants of the circuit which is oscillating, these variations being produced in various different ways. Thus it may happen that there is seen on such a long spark or streamer a point or portion of greater or smaller luminousity, or more such points, moving along the path of the discharge with a small velocity, without having anything to do with the occurrence of the fireballs, as before explained.

If the interruption of a discharge in some part of its course, which was noted before, would not have been actually and unmistakably observed, I would think it quite possible that this phenomenon might be due to a dark part or nodal portion formed on the streamer in the manner above set forth, this part being either stationary or slowly shifting along the path of the discharge, as the case may be. I think that I shall be able to settle this point in the following experiment which I propose to carry out. The idea is to provide a streamer which will be preferably straight and will pass continuously through the same path, thus enabling an effect propagated along the streamer to be observed just as on a wire. The streamer should be preferably also of very great length. This I am convinced I can realize as follows:

A glass tube of pieces joined together temporarily, of rather large diameter, and of a length of, say, 30 to 50 feet is to be provided. The end of a well insulated wire, forming the "free" terminal of a coil, as the extra coil here used, is to be led in one end of the glass tube, in the center of the same so that the streamer, when formed on the point of this wire, will have the tendency to pass along the tube on the inside of the same. In order, however, to keep the discharge away from the glass, suction is to be applied on the other end of the tube or else a current of air is to be forced through the tube — from the side of the discharging wire towards the other open end of the former, in any convenient way — so as to compel the streamer to pass along the axis of the glass tube. If the tube is of large diameter I do not think that it will be difficult to carry out the experiment. Now this streamer is to be produced by oscillations of small wave length and under these conditions it will be quite easy to produce stationary or shifting, nodal or maximum points along the path of the streamer.

But, to return to the description of the present photograph, some of the paths described by the discharge are curious in the extreme. Many features dwelt upon before are again and even more clearly shown. So the "splashing", the splitting up and reuniting is plainly visible. Some streamers strike the roof and one particularly was dangerous, the plate showing that after hitting the roof it divided in three parts following the structure. *This will scarcely print.* An ignition of the roof would have been unavoidable had the switch been held on only a fraction of a second longer. But in manipulating the switch I always took care to throw off the handle instantly when, by chance, one of the discharges

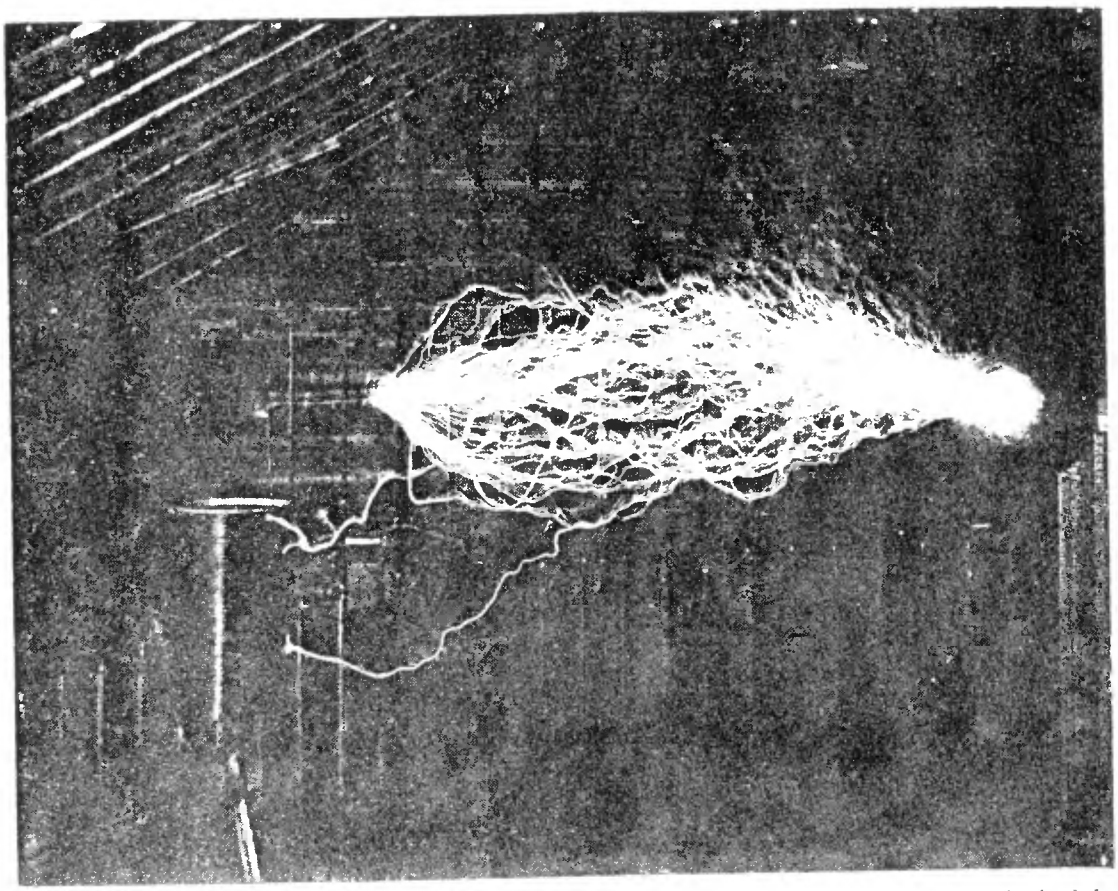

Phot. LVI. Discharge of "extra coil" issuing from a ball of 30" diam. forming the "free" terminal of the coil towards a coil on a stand.

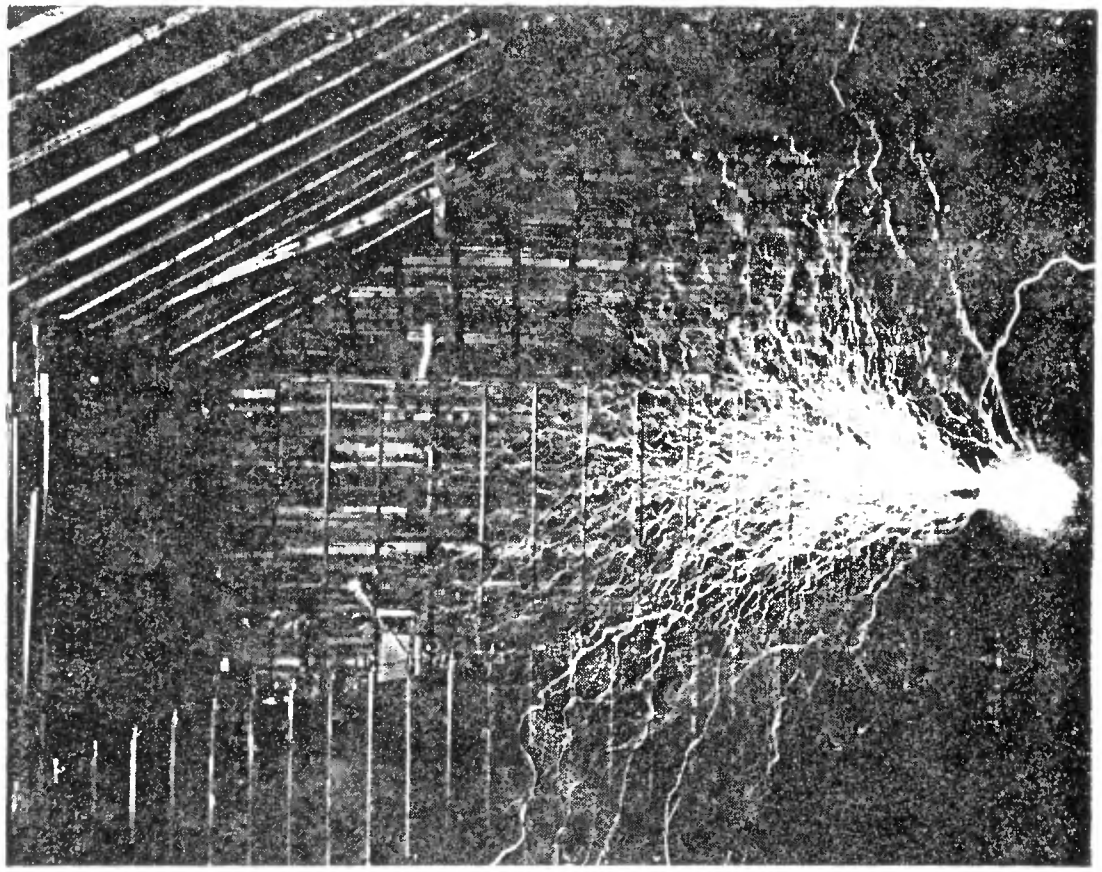

Phot. LVII. Similar as in phot. LVI but discharging across the laboratory into the air.

would dart to the roof. It is to be regretted that the building, although very large for ordinary experiments, did not allow the production of discharges still stronger than those before described, which would have been easily practicable with the present apparatus which — with more copper in the coils and particularly in the "extra coil", and possibly without any change — would have in all probability enabled me to reach twice or three times the length of the actual discharges. In the experiment a great many sparks were seen to pas to the top turn of the secondary. These discharges would, without adequate provision, infallibly injure the condensers and the Westinghouse transformer and also other apparatus connected with the circuits or at a small distance from the same, no matter how well insulated they might be. By grounding the circuits in proper ways this danger is in a large measure reduced. In the experiment just described there were again 100 closures, rather short, effected by the switch and the other particulars not dwelt upon were the same as before.

This statement repeatedly made in the description of these plates should be specified. The truth is, each experiment required a special adjustment as the size and form of the terminals and the character of the discharge affected, to some extent, the constants of the oscillating system or systems. But the departures from the conditions designated as normal were very slight, the inductance of the primary or exciting circuit being varied only by inserting a very few turns of the regulating coil.

LVI. In this photograph the discharge of the extra coil, issuing from a ball of 30″ diameter forming the "free" terminal, passes across the laboratory to a wire turned toward and extending from the top of a coil on a stand. The discharge is made of smaller length for the purpose of heightening its brilliance. The shortest distance in a straight line from the ball to the wire is eleven feet. As the light of the sparks would produce a marring of the images, the photograph is taken through a diaphragm with a very small oponing. The individual discharges corresponding to the closures of the circuit by the break wheel are very clearly shown. It is interesting to observe the curved paths of the sparks which are much longer than the shortest route open to them. Some of the sparks avoid the wire preferring to pass through fully twice the distance through the air. An interesting feature is afforded by one of the longest streamers which in a portion nearer to the wire, extending from the coil on the stand, changes from a *streamer* into a *spark*. It is also curious to observe its path passing far beyond the wire point and returning to the same. In this instance there were 50 throws of the switch made and the vibration was slightly slower than the normal on account of the large ball at the free terminal.

LVII. This plate shows the extra coil, with a ball of 30″ diam. as "free" terminal, discharging laterally across the laboratory into the air. The discharges are much stronger when breaking out from the ball, requiring a much higher e.m.f. Capacity also adds to their volume and fierceness. Many streamers again show luminous points and attain great length, one in particular, which traverses the entire laboratory striking the wall. The end is probably too fine to print clearly. Many discharges again are carried to the roof by the draught they create. Once more 100 throws of the switch were made. The conditions were otherwise the same.

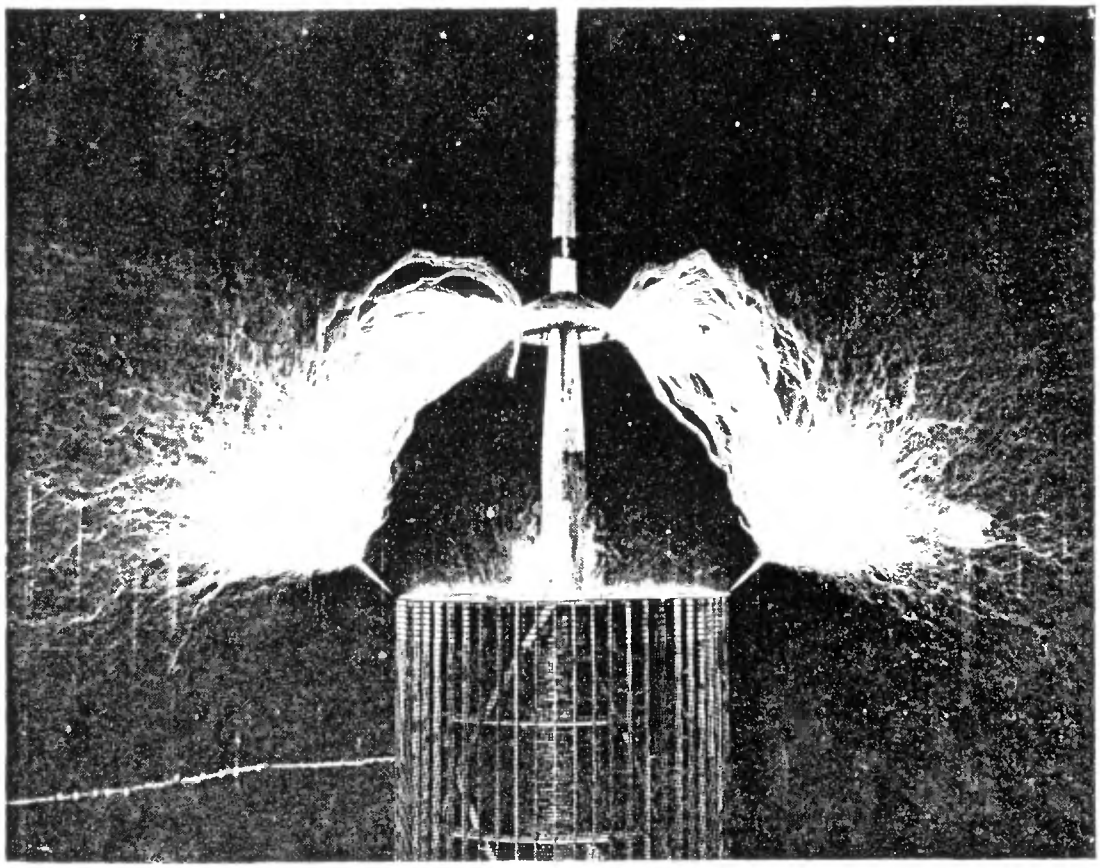

Phot. LVIII. Discharge from "extra coil" issuing from two diametrically opposite wires, pointing upwards and fastened to the brass ring on the top of the coil.

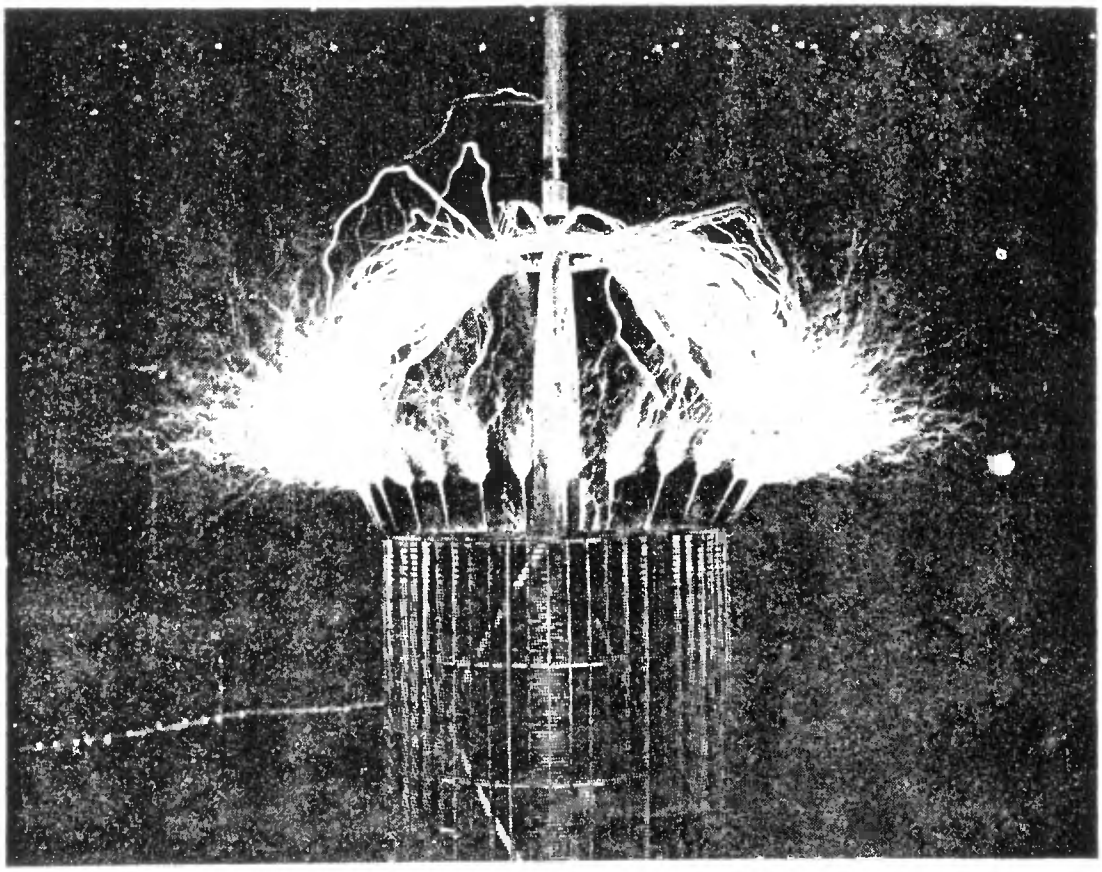

Phot. LIX. Discharge of "extra coil" issuing from many wires fastened to the brass ring as on phot. LVIII.

Photographs taken with Mr. Alley from Dec. 17 to Dec. 31, 1899 and *particulars* about the same continued:

LVIII. This photograph shows the extra coil in central view with the discharge issuing from two diametrically opposite wires, pointing upwards, which are fastened to the brass ring or last turn on the top. The sparks, passing abundantly to the hood above the coil, produce a most beautiful symmetrical figure, which is rendered still more so by the fine texture and sharpness of the discharge paths. On the top of the coil from the brass ring delicate streamers rise producing the effect of a flame. The two wires from the ends of which the sparks and streamers sally forth *glow all along*. This is remarkable and indicates the great quantity of electrical movement. The glow of the top turn of the secondary and also that of the wire leading to the extra coil is strong, that of the latter wire being much stronger. Some exceptionally brilliant sparks occur occasionally. This happens when the discharge breaks out on one wire or point much earlier. In this case the spark continues along this path and practically all the energy supplied goes this way. In the experiment, as in most cases before, 100 throws of the switch were made, other particulars remaining unchanged.

LIX. In this plate the extra coil is again shown in central view, only the discharge is made to issue from many wires instead of only from two as before. The wires are fastened to the brass ring and are pointed upward as in the preceding case. This photograph is also symmetrical and extremely beautiful. Some stronger sparks and streamers occurring occasionally present many features of interest. A number of sparks starting from the back avoid the hood, though passing near the same, circle around and finally strike the hood on the front side. One streamer, extremely long, starts upward following the pole for some distance then turns, passing for a good distance horizontally, and finally darts upward through the opening in the roof, evidently carried by a sudden gust of the draught. Several sparks pass closely to the hood upward and return to the same after traversing a considerable distance. All the wires emitting the streamers glow. Again 100 throws of the switch were made and the vibration, as well as other particulars, remained nearly normal.

LX. This is a very interesting plate, the discharge taking place from a ball of 8″ diam. and two diametrically opposite wires fastened to the same. The extra coil is again viewed centrally. Very strong sparks pass to the floor, some twisting and darting about curiously and exhibiting several phenomena described already. Sparks and streamers also pass to hood, roof and sides of the building. Some of the streamers attain great length being thirty feet, at least, in a straight line, while some sparks measure twenty feet or more. These latter are very brilliant and fierce. The upper streamers indicate the existence of a strong current of air created by the heat developed by the discharge. Again 100 throws of the switch were made, other particulars remaining the same.

LXI. This is another most beautiful photograph showing streamers and sparks issuing from a disk facing the camera. The extra coil is viewed centrally, as before, the disk forming the free terminal being on a point of the vertical axis of the coil. It seems that in some quick moving streamers the individual discharges are recorded, at least the texture appears far too fine for the break wheel period. Assume, for example, 4000 breaks per

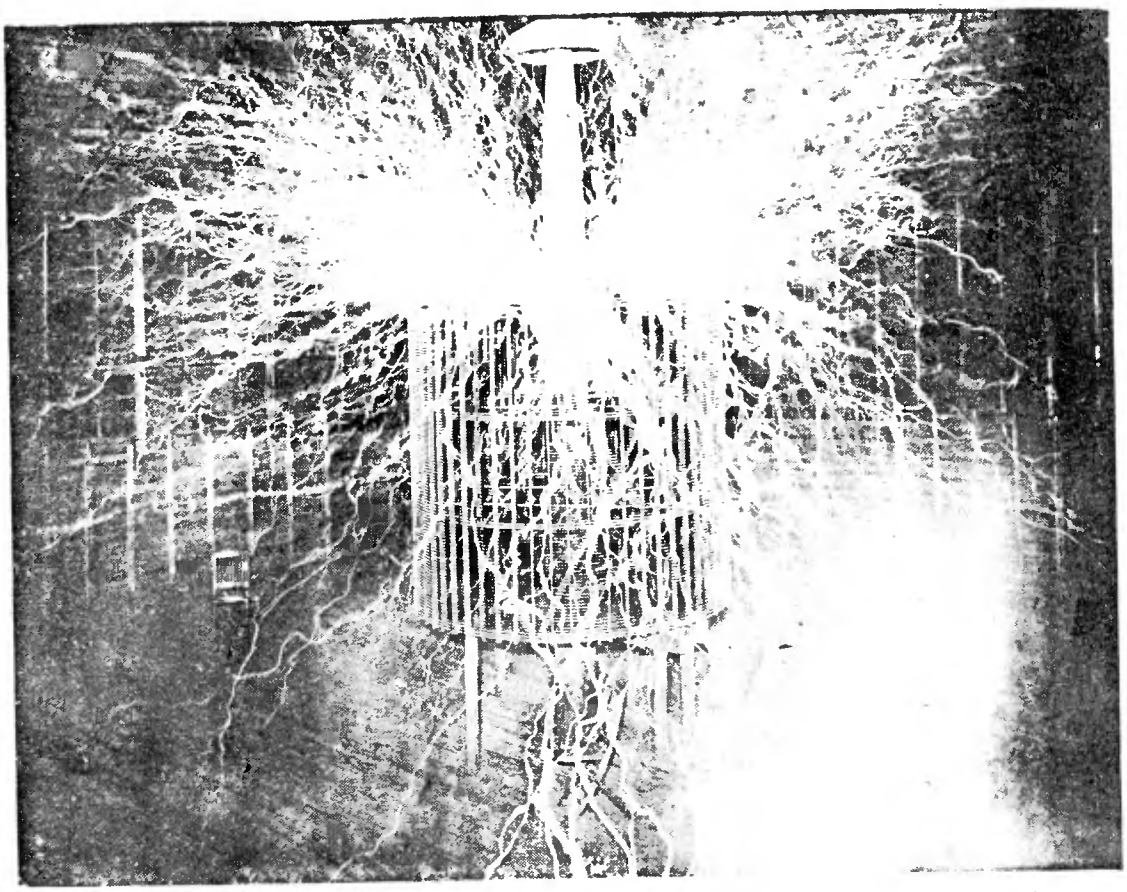

Phot. LX. Discharge from a ball 8″ diam. with two diametrically opposite wires fastened to the same.

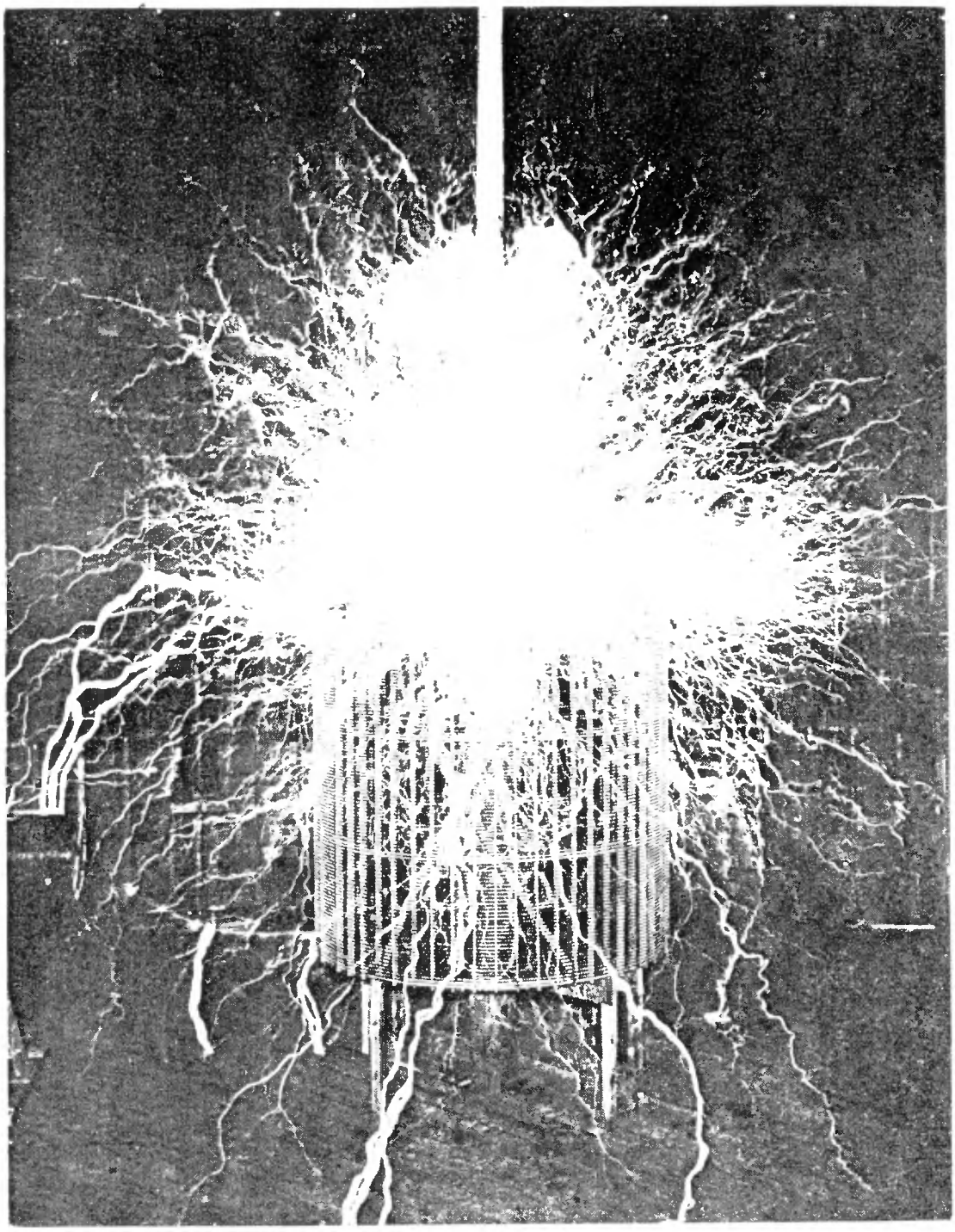

Phot. LXI. Streamers and sparks issuing from a disk facing the camera.

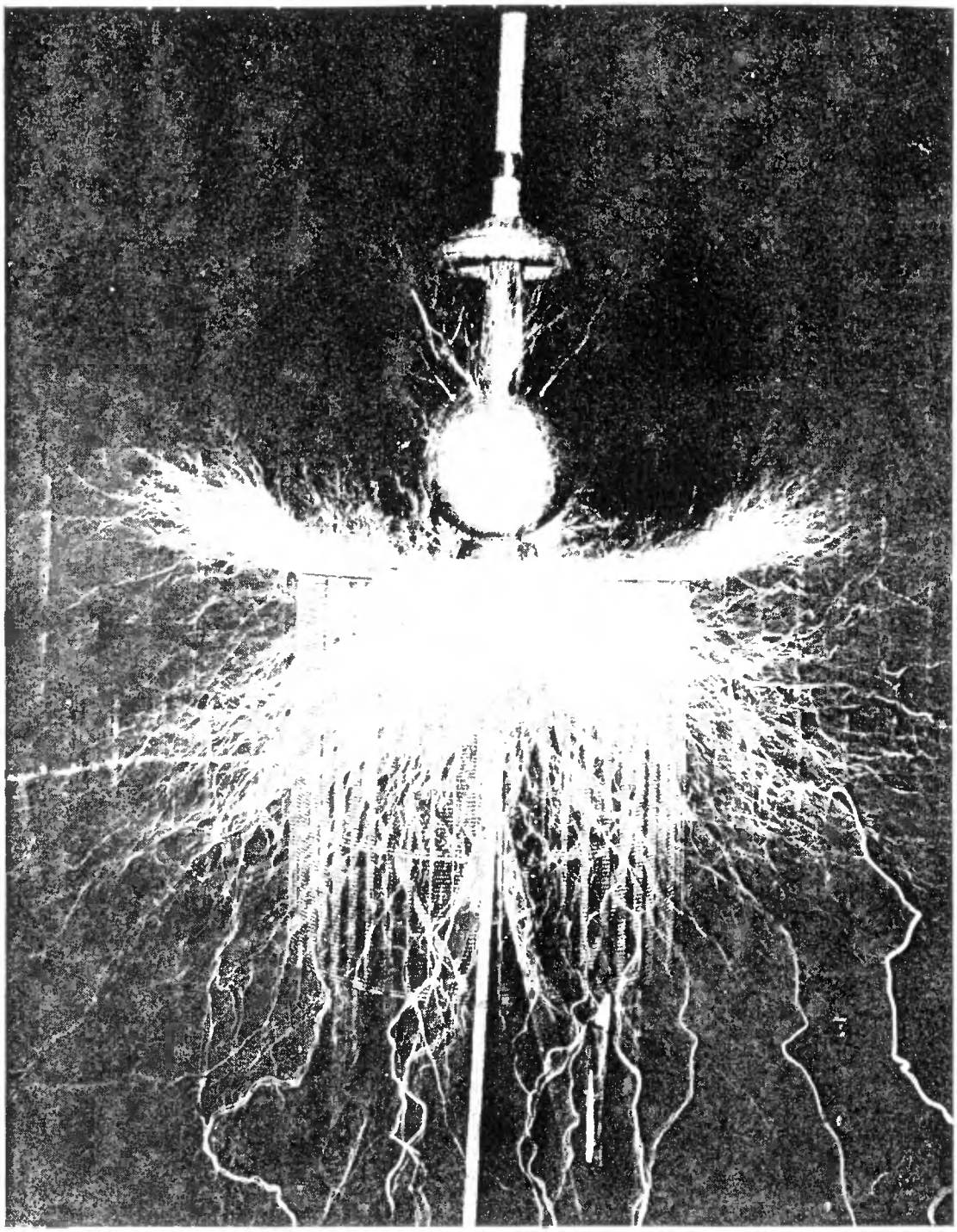

Plate LXII. Discharge issuing from the base of a cone upon which a ball of 30" diam. is resting.

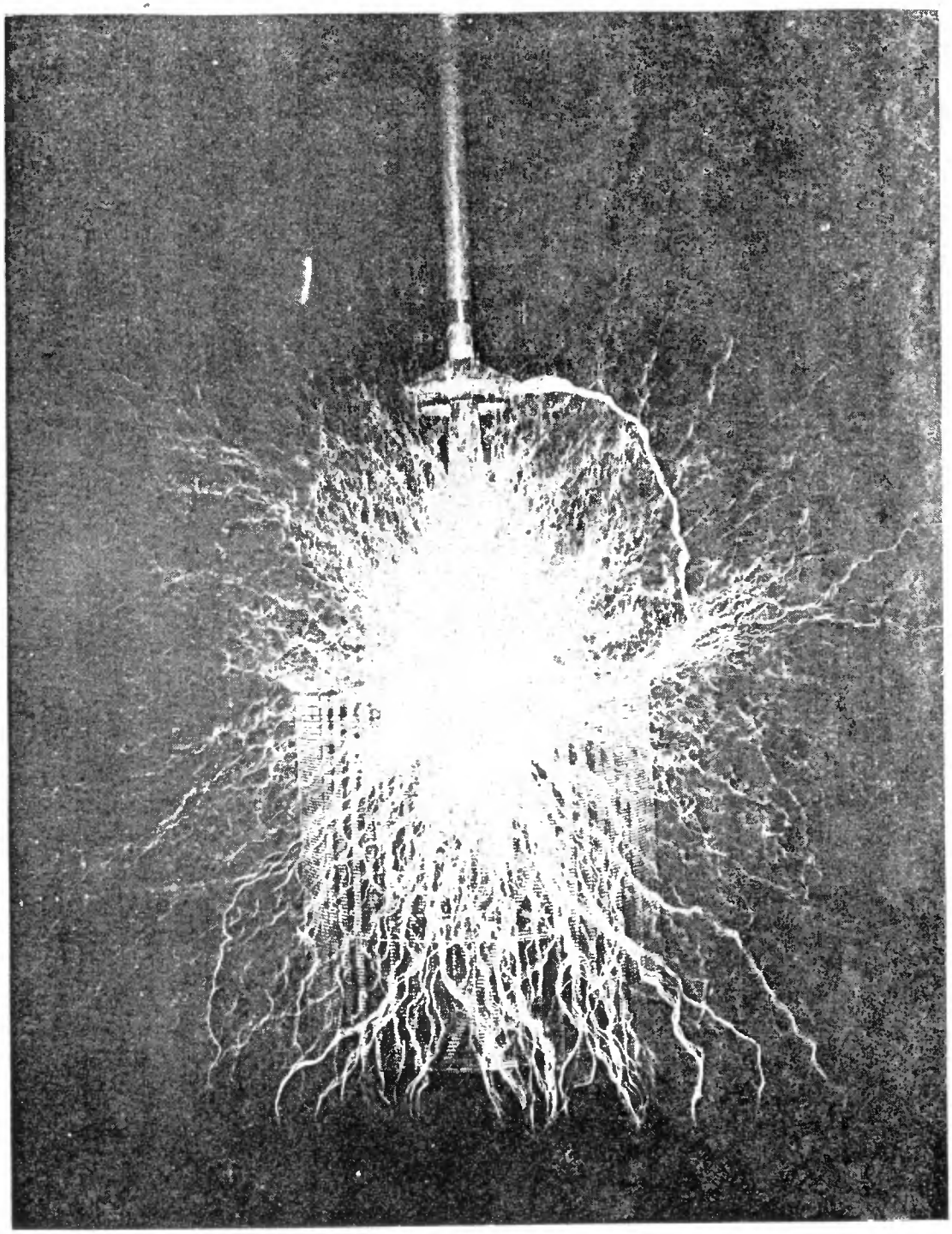

Phot. LXIII. Discharge from a ball 30″ diam. supported on a vertical coil.

second and let the vibration be, say, 60,000 per second — then there would be 30 individual discharges in each break wheel period, understanding by this the time interval from one break to the next, or from one closure to the next. Since the break wheel effect is always seen, even when the streamer moves slowly, it would seem that the finer threads indicate the individual discharges. At any rate, with a stronger draught the latter can be evidently easily recorded and this might be a simple way of exactly determining the vibration of the system, certainly simpler than analysis by a revolving mirror.

This experiment I expect to perform on my return for it is indispensable to determine the vibration quite exactly. Up to the present this necessity was not imperative, the method used being satisfactory so long as the chief purpose was to perfect the apparatus and make general observations. But now quantitative estimates have become important. To return to the description, the strong sparks to the hood are particularly curious. The strong current of air is evident from their behaviour and also from the appearance of the upper streamers. Some very strong sparks pass to the coil in series with the extra coil. One of the streamers striking the floor ignites the wood. Many streamers are carried through the opening in the roof. One, exceptionally long, passes to the photographer in the corner of the building. The shock is but slight as might be expected. A *spark* might be fatal, but there was no possibility of a spark taking that course without being stopped by conducting objects nearer to the origin. Some of the upper streamers are chopped up curiously indicating the presence of small whirls or eddies in the air current passing through the roof opening. The switch was here also closed 100 times; the closures were very short and the other particulars remained as before.

LXII. This is one of the most beautiful plates taken. It shows a discharge issuing from the base of a cone upon which a ball of 30″ diameter is resting. Streamers, though a few only, issue also from the ball giving evidence of the immense electrical pressure and quantity of electric movement. It was indispensable to employ the metallic conical vessel for the purpose of preventing the discharge from following the wooden support, upon which the ball of 30″ was supported, to the ground. This would unavoidable occur even if the support were of the most excellent material as regards insulation, as of glass for example, and no matter how high the support might be.

In fact, I have found from long experience with these discharges of extreme electromotive force, that it is almost impossible to insulate a terminal without some such provision as used in the present instance. The fundamental idea is to provide an arrangement such that the place of support, or that part of the terminal which rests upon the support, is guarded by the conductor projecting beyond. In other words the terminal must be resting on the support on points where there is *no electrical* pressure or, at any rate, a very small pressure. This amounts to screening the support statically. Another way to prevent the current from following the support is to place a coil, through which the current passes, beneath the support passing axially through the coil. The hood, referred to repeatedly in these descriptions, is used for the same purpose as without the same the current would pass along the pole to the ground. But the hood might be dispensed with by using an extra coil of much smaller diameter, axial with the wooden pole supporting the iron structure, but it would be necessary for insuring safety to let the coil finish very close to the bottom of the iron structure where it rests upon the insulating support. This has been one of the great difficulties encountered in the course of this work and it has required much time

and trouble to overcome it successfully. For the same purposes also the large hood, above the cords keeping the iron pole in position, is employed. The rims of both these hoods are curved so as to enable a greater pressure to be reached by preventing the streamers to break out into the air easily and at a much smaller pressure. In a new apparatus, now under consideration, these improvements will be carried much further and I am confident to obtain results far beyond anything arrived at so far.

In the present experiment it is rather astonishing to see some streamers breaking out from the surface of the ball of such a large radius of curvature, when they can pass out so easily from the edge or base of the cone underneath. This shows the existence of violent surgings and a great quantity of electricity set in motion in the system. The photograph shows some luminous spots on a very powerful streamer passing to the floor. Many sparks are very curious on account of the curved paths they follow. The streamers here are also mostly of fine texture, this being due to the facility with which they break forth from the edge of the inverted pass and to their abundance. It may be seen from the plate that one of the supports of the extra coil caught fire. The particulars in this experiment were as in most cases before, 100 throws of the switch being made.

LXIII. This plate again illustrates a most beautiful discharge taking place from a ball of 30″ diameter supported on a vertical coil. Owing to the abundance of the streamers the ball can not be seen. The streamers are of a peculiar character, probably due to the manner in which they were produced, which is different from that practiced in the instances before described. It so happened that when the switch was thrown in the discharge from the ball always darted to the floor. Now, in order to make it pass upward also and so to produce a symmetrical figure, I held the switch on longer expecting that the heated air rising upward would carry the discharge towards the roof. Indeed this happened, the discharge always starting towards the floor and then gradually rising until it was vertical and passing out through the opening in the roof. The last and permanent position was attained in 3—4 seconds of time, this showing the great amount of energy spent in heating the air and rapid heating and rising of the latter. The air current exercises such a predominating influence that some streamers pass vertically upwards very close to the iron pole, without apparently being affected by the presence of the pole.

A peculiar feature of the present photograph is that the upper streamers are not sharp although the focusing was carefully done. This is evidently due to their fluttering motion caused by the sudden and changing gusts of the draught. This again forcibly illustrates the great sensitiveness of such streamers to air currents and I am once more impressed with the possibility of turning this property to some good use. The symmetry of the photograph is somewhat destroyed by a spark, which breaking the insulation of the top turn (3/8″ rubber), passes to the hood above the coil. All the particulars in this case remained nearly normal. There were again 100 throws of switch made.

Aleksandar Marinčić

COMMENTARIES

In Colorado Springs' Memorial Park, near site of Tesla's experimental station, an historic marker notes the operation.

1 *June*

Tesla mentioned a similar application of a magnet for extinction of the arc in rarefied gas in his lecture to the IEE in London 1892[5]. The initial idea for this type of detector may date from the time when he was intensively studying phenomena associated with currents in vacuum.

3 *June*

During the year 1899 Tesla filed applications for four patents[8–11] which made use of the principle of "accumulating energy of feeble impulses". It may be seen from these patents that the function of the capacitor was to store energy from the commutated (in fact rectified) HF current. The condenser is connected to the receiver (a relay) which periodically makes contact[8,10] when the condenser charges up enough. Both these patents were filed 24th June 1899[8,10]. The other two[9,11] were filed 1st August 1899. They also refer to a method of accumulating energy but the way the incoming signal controls the charging of the condenser is different: here it causes variations in the resistance of a "sensitive device" which controls the current charging the condenser from a battery. The condenser discharges periodically through the receiver as in the previous case.

Tesla developed the magnet method while he was in Colorado Springs.

5 *June*

Tesla does not state the origin of the formula he uses to calculate M, the power induced in the secondary, receiving coil, by the primary fed with a power of 4 kW (or 4×10^{10} erg/sec, not ergs). Although he himself expresses doubts about the calculation, the conclusion he draws is correct, i.e. that these mode of transmission is greatly inferior to that which he calls the method of "disturbed charge of ground and air", in fact that of electromagnetic radiation.

6 *June*

Working with a darkened Crooke's tube, on the 8th of November 1895 Röntgen noted the luminescence of barium platino-cyanide crystals and discovered that it was due to some unknown radiation which he termed X-rays. Towards the end of that year he held a lecture on his discovery, and in an amazingly short time the whole world knew about his work[66].

Tesla spent some time in intensive research on X-rays, publishing his results in ten articles in the period 11th March 1896 to 11th August 1897[7]. On the 6th of April 1897 he also gave a lecture on his X-ray studies[17] and presented designs of a number of devices for generating powerful rays. During this lecture he reported interesting data from his earlier experiments with Crooke's tubes in 1894. He had then observed that some tubes which produced only feeble visible light had more effect on photographic plates than tubes which were brighter to the eye. The goal of his research was to obtain true phosphorescence ("cold light"), so that he postponed further investigation of this phenomenon, and of the cause of various spots and hazing on photographic plates which had been kept in the laboratory for a time before use. When he finaly did get around to it a fire broke out in the laboratory, destroying practically everything (13th March 1895). It was several months before he could resume his work, and in the meantime Röntgen made his discovery. When Tesla heard about it, it was immediately plain what had been happening in his laboratory. He repeated Röntgen's experiments, which were rather cryptically described, and realized that he had been mistaken in not following up certain chance observations during his work with Crooke's tubes.

During 1896 and 1897 Tesla carried out many experiments with X-rays, also speculating about their nature. He thought "that the effects on the sensitive plate are due to projected particles, or else to vibration far beyond any frequency which we are able to obtain by means of condenser discharges" (Lit. [1], p. A-30). He immediately realized the importance of high voltages for producing powerful rays and suggested using his single-terminal tubes connected to the secondary of the disruptive discharge coil. It is interesting to note that Röntgen too, in a lecture to the Physical Medical Society of Würzburg the same month as Tesla published his first article, also pointed out the great advantage of using Tesla's high-frequency oscillator in generating X-rays.[66]

Tesla measured the reflection and transmission of X-rays for several metals, lead glass, mica and ebonite. It is not clear, however, whether what he measured was true reflected radiation or secondary radiation. He also tried to detect refraction but did not succeed, for reasons which are today obvious. In papers and in a lecture before the New York Academy of Science he described a number of tubes for producing powerful X-rays, most of them resembling Lenard tubes (which he often mentions) but without the anode terminal.

7 June

Descriptions of the high-frequency transformer are to be found in Tesla's publications and patents from 1891 onwards[15,4], but he did not patent it until 1897[26]. The invention protected by this patent is "A transformer for developing or converting currents of high potential, comprising a primary and secondary coil, one terminal of the secondary being electrically connected with the primary, and with earth when the transformer is in use, as set forth". It in particular protects the spiral form of the secondary, and a conical form is also mentioned. For ordinary uses a cylindrical secondary divided into two parts is proposed. A new feature is the specification that the length of the secondary should be "approximately one quarter of the wavelength of the electrical disturbance in the secondary circuit, based on the velocity of propagation of the electrical disturbance through the coil itself", or, in general, "so that at one terminal the potential would be zero and at the other maximum".

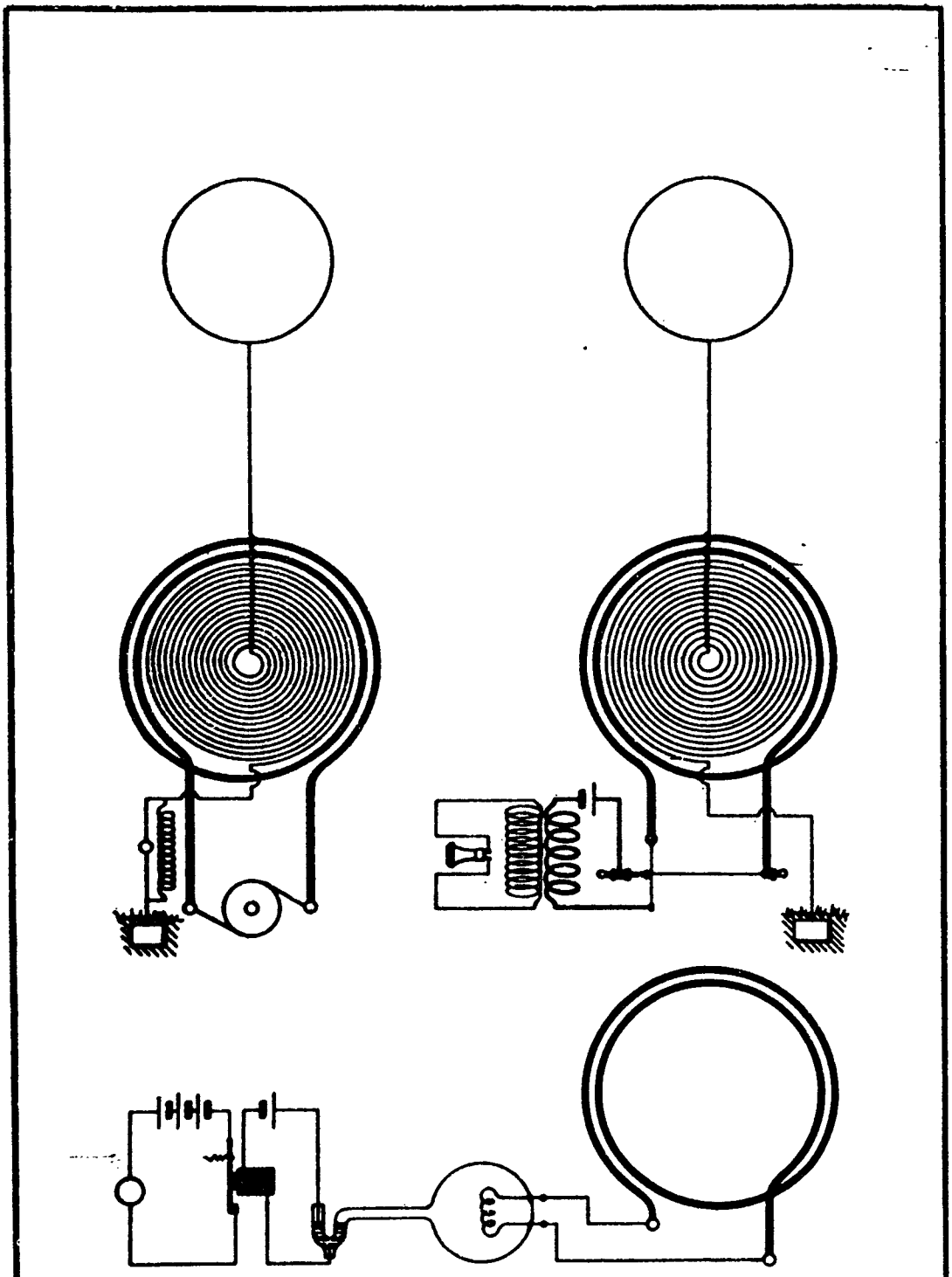

WITNESSES:

INVENTOR.

BY

ATTORNEY.

9—12 *June*

In his efforts to construct a sensitive detector for small signals Tesla worked out several designs making use of the thermal effect of high-frequency current. Since the energies involved are very small (according to Tesla of the order of 1 erg), receivers based on this principle would be extremely delicate.

In the archives of the Nikola Tesla Museum, Belgrade, a slide has been found which evidences that Tesla was probably preparing to file a patent on a receiver similar to that which he described in the diary the 9th of June (see drawing on p. 399). The entry for 11th June is stamped on the back "U.S. Patent Office, Nov. 15, 1902."

The basic principle of these detectors is of an earlier date. According to Fleming[33], Gregory carried out measurements of radiation intensity by the extension of a thin wire in 1889, and Rubens and Ritter in 1890 using a bolometer.

13 *and* 14 *June*

From the very start of his work on wireless transmission of signals in 1892—1893 Tesla advocated the use of continuous HF current, while other experimenters were working with damped impulses. The advantage of continuous currents is particularly great in the transmission of continuous signals, such as speech. The entries for the 13th and 14th of June describe two modifications of the HF oscillator which could be used for amplitude modulation. These two circuits were probably in fact the first modulators in the history of radio. It is not known whether Tesla carried out any experiments with this apparatus, but similar ideas were implemented later[19].

Tesla's notes illustrate how carefully he studied the design, from the power supply to theoretical aspects such as the ratio of the maximum modulation frequency to the carrier frequency.

The transmitter using "controlled arc" modulation of the oscillator power described in the entry of June 14th produces amplitude modulated wave by varying the carrier power about a mean value. The modulating signal can be of low power, so that the device as a whole can also be considered a frequency-shifting amplifier.

15 *June*

This trial run of the new oscillator was Tesla's first step towards the implementation of his high-power generator. The secondary of the HF transformer was made conical in order to reduce the voltage between turns at the top of the coil. This feature is described as one of the alternatives in his "Electrical Transformer" patent[26]. Tesla was the first to suggest using braided insulated wires instead of solid conductors in HF circuits in order to reduce eddy currents (see e.g. ref. 46, p. 60).

16 *June*

In these experiments Tesla investigated the influence of grounding* on the HF oscillator. The main point of interest for him was the propagation of electrical waves

* At this time there was relatively little experience with grounding. He explains in this entry that grounding was made in "the usual way as here practised", probably referring to lightning conductor grounding. Grounding for single-wire telegraphy dates from 1838, when Stinheil demonstrated that the Earth could be used as the return conductor. In 1893 Tesla described his system for energy transmission

through the Earth. He had already put forward the hypothesis that the Earth could be used as one of the conductors in transmission of energy from a transmitting to a receiving aerial in 1893[6]. He further developed this hypothesis in his patent application "Apparatus for transmission of electrical energy" filed in 1897[13].

18 *June*

The secondary circuit was modified by the addition of another coil, altering its response to the primary and the spectrum of the oscillations. Tesla had already found in experiments in New York that this "extra coil" had a good effect. This coil was not inductively coupled to the transformer (some coupling probably existed, though weak).

19 *June*

Continuing his study of the receiver components referred to between 9th and 11th June, Tesla describes a sensitive detector using the attractive force between the plates of a charged condenser. Descriptions of allied devices are to be found in several of Tesla's patents. In patents[8] and [9] this effect is used to periodically make the receiver circuit when main condenser charges up sufficiently (there is no preexcitation nor quenching, since the circuit quenches itself when all the stored energy gets discharged). A fuller description, where it is noted that the performance of the device is improved under reduced air pressure, may be found in patents[70].

20 *June*

Tesla did not make a strict theoretical analysis of the mode of operation of his oscillator, but determined all the main parameters by tests on a simplified representation of the oscillator circuit. For example, he estimated the power supply drain from the energy in the primary circuit capacity multiplied by the rate of discharge. This involves the assumption that the condenser charges up by the same amount before each discharge (which cannot be the case when it is charged from an AC supply) and that all the energy gets dissipated before the next charging.

The "vibration", i.e. the resonant frequency of the primary circuit is calculated from the measured inductivity of the primary with two turns (see June 17th) and its capacity. Since he was now using one turn, the inductance is divided by 4. The capacitance was somewhat greater than that measured on June 18th with the old jars. Using these L and C values he calculates the resonance period of the primary using Thomson's formula for a lossless circuit.

He then finds the wavelength of the primary oscillations, and hence works out the number of turns the secondary must have so that its length is one quarter of a wavelength (see the commentary to 7th June). It is not surprising that he went astray in trying to set up a representation of the secondary circuit as an oscillatory system since the distributed

---

without wires[6] where the alternating current source is connected "with one of its terminals to earth (conveniently to the water mains) and with the other to a body of large surface P". Popov's receiver of 1895 also used grounding via a water pipe[32]. Around 1895 Marconi did some experiments with a Hertz apparatus grounding one terminal of the inductor and leaving the other connected to an elevated conductor with a terminal capacity. Exhaustive studies of the influence of the form of grounding and the nature of the ground were made around 1905 and later[30].

capacitance was not determined. Tesla's own doubts about this way of determining the secondary in terms of length of wire are best revealed when he refers to checking its resonant frequency treating it as an oscillatory circuit.

21 *June*

Returning once more to the problem of the conversion of mains power into HF power Tesla calculates the energy in each charging cycle of the condenser (see comments for June 20th). Taking it that all the energy in the charge condenser will at some instant be found in the condenser of the secondary circuit, he in fact works out the peak voltage on the secondary condenser. The energy equation for lossless coupled circuits has the general form

$$\frac{1}{2} C_p U_p^2 = \frac{1}{2} C_s U_s^2$$

where p refers to the primary, s to the secondary circuit, U is peak voltage. It should be noted that Oberbeck's theory[29] yields the same ratio between the voltage on the primary condenser just before discharge begins and the peak voltage on the secondary condenser.

22 *June*

The circuit with two condensers, one being charged from the power supply and the second via a spark from the first represents a modification of Tesla's classic oscillator*. Theory shows that protraction of the oscillation in the primary circuit lowers the efficiency of the oscillator because energy pulses back and forth between the primary and secondary. However, in this circuit protraction of the spark does not have the same effect because while it lasts the primary capacitance is $C+C_1$, but when it stops the capacitance is only C_1. Why the sparks in the secondary were stronger with $C=aC_1$, a a whole number, is hard to say without a more exhaustive analysis.

The note at the end of the entry indicates his satisfaction with the results and that he felt it necessary to continue research in the same direction.

23 *June*

The two formulae are in fact identical if the thickness of the wire is neglected, because then

$$\mathfrak{L}^2 = (2\pi r N)^2 = 4\pi S N^2$$

24 *June*

Rarefied gases had long interested Tesla, and his work on their conducting properties, especially at high frequencies, is well known, e.g. the patents on an electric lighting system and an incandescent lamp[37]. He presented detailed analyses of the same problems in his famous lectures[4,5,6]. Rarefied gas as a conductor is also referred to in his patent application "System of transmission of electrical energy"[13].

* Drawings reproduced on p. 403 are taken from Tesla's original slide, now in the Nikola Tesla Museum, Belgrade, show four modifications of the transmitter.

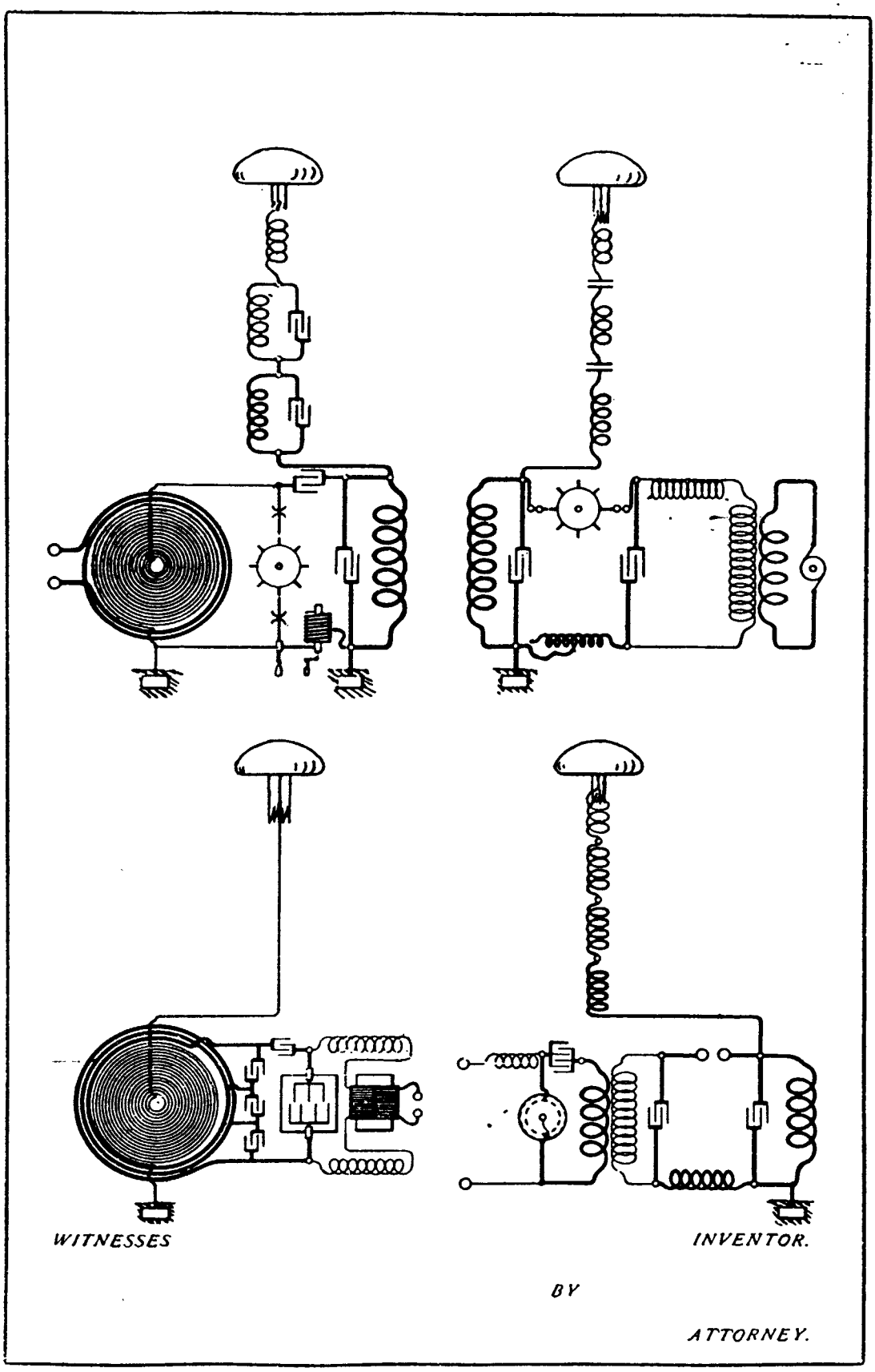
WITNESSES
INVENTOR.
BY
ATTORNEY.

25 *June*

The device shown in the drawing was intended to amplify the vibrations, in the following way: some of the power driving cylinder *A* is converted by friction of brush *b* against *A* into vibrations of *b*. Since the friction is a function of the current in the electromagnet, the vibrations of *b* have a time variation similar to the time variations of the current. If the circuit of the electromagnet includes a microphone and a battery, then the device should amplify the speech signal, brush *b* vibrating in synchronization with the speech pressure but with much more energy. This amplified signal could be used in a modulator (see June 13th and 14th). The drawing shown on p. 405 (from Tesla's slide in Nikola Tesla Museum, Belgrade) illustrates how Tesla thought of implementing some of these ideas*.

26 *June*

The principle of this device using high voltages to separate gases would be that the molecules (in fact ions) of the different gases would behave differently because of their different mass: charge ratios. It is not known whether Tesla tried to verify this idea experimentally. In a later article[28] on electrical oscillators he mentions among the possible applications "formation of chemical compounds through fusion and combination; synthesis of gases; manufacture of ozone . . ." but does not mention separation of gases, so that it may be he never went any further than the initial idea.

27 *June*

The transmitter (Figs. 1 and 2) and receiver (Fig. 3) having several tuned circuits, the transmitter generating several signals at different frequencies and the receiver responding only when all these signals act at the same time, were the subject of two patent applications filed 16 July 1900 (subsequently granted)[38].

This method allows much more selective reception than a single-frequency channel, and is much less sensitive to interference, and the signal can only be decoded by a special receiver. In his patent applications Tesla likens it to a lock which can only be opened when one knows the combination.

The entry of June 27th was subsequently brought in evidence in a dispute before the U.S. Patent Office about priority to the idea of a multi-frequency system[68]. The back of the page bears the stamp "U.S. Patent Office, Nov. 1902".

28 *June*

Tesla considered that the self-capacity of the secondary winding was proportional to the number of turns and inversely proportional to the spacing between turns, so that the ratio of the distributed capacities of the new and the old coil is $N_1 d/N d_1$ (N — number of turns, d — spacing between turns).

The ratio of the inductance of the secondaries with different numbers of turns he finds from the relation

$$\left(\frac{N_1}{N}\right)^2 \frac{l}{l_1} = \left(\frac{N_1}{N}\right)^2 \frac{Nd}{N_1 d_1} = \frac{N_1 d}{N d_1}$$

* It has not so far been established whether Tesla patented or tried to patent this modulator. It appears that the slide is a copy of a drawing intended for a patent application.

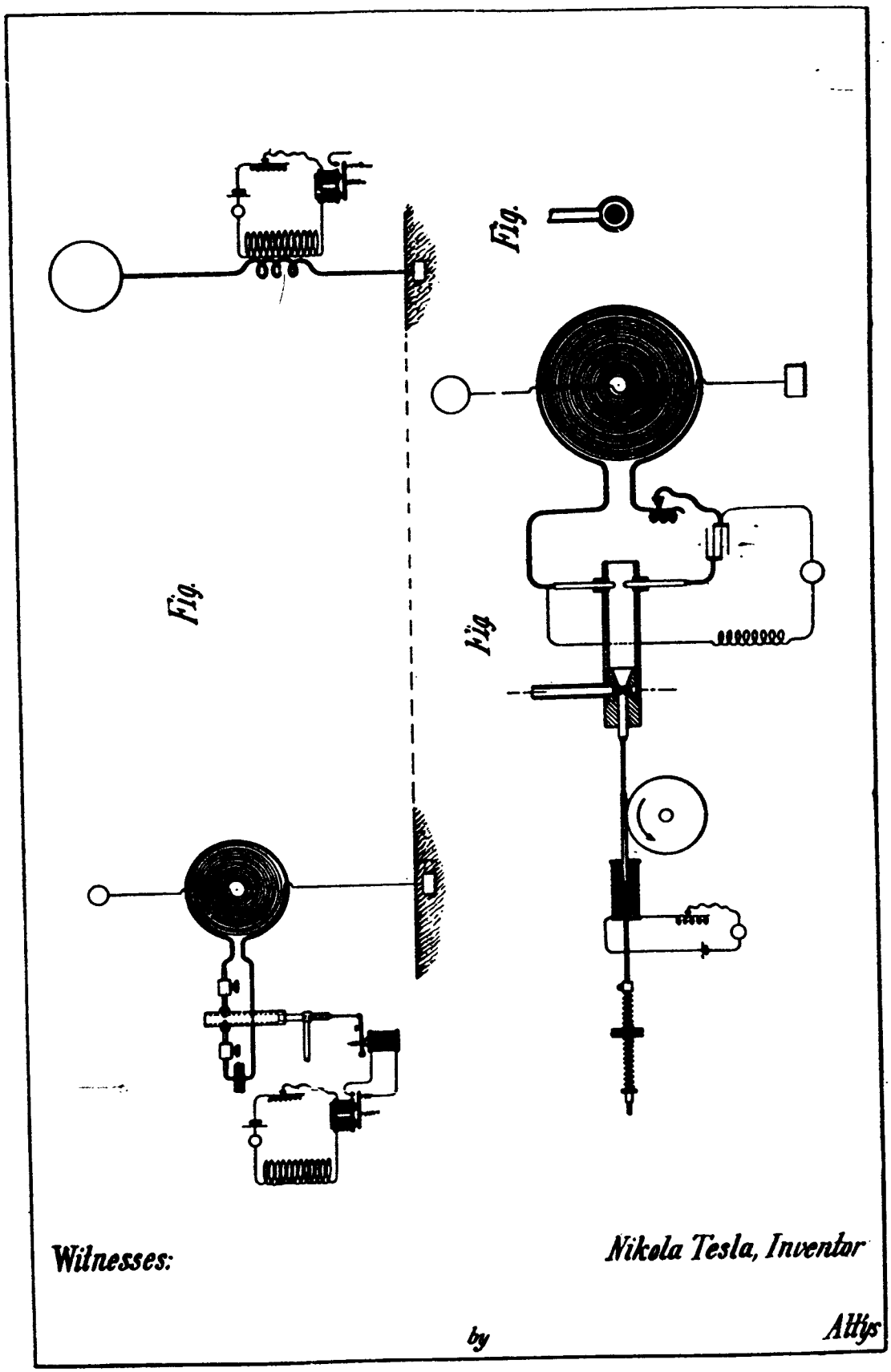
Fig.
Fig.
Fig
Witnesses:
Nikola Tesla, Inventor
by
Attys

derived from the expression for an infinitely long coil, and yielding the same ratio as in the case of capacitance.

The numerical value for the capacitance of the old coil appears here for the first time, without explanation.

The receiver experiments were probably done in preparation for a patent application. Leonard E. Curtis appears a number of times as a witness to Tesla's patents (see for example refs. 8, 10), or as one of the attorneys (on many patents from 1896 on).

30 *June*

Description of electric circuits in terms of mechanical analogies was at one time very popular. The resonance of an electrical circuit was likened to the swinging of a pendulum, and coupled resonant circuits to two pendulums linked together[39]. Maxwell and his followers even tried for a long time to describe the electromagnetic field in terms of a mechanical model[40]. Tesla's comparison of his "additional coil" to a pendulum is not precisely formulated but rather intuitive. He correctly discriminates between the excitation (initial conditions) and the Q-factor. He does not fully explain how he imagined that the vibrations of the three systems, the primary, the secondary and the "combined system", would be the same. By "freeing" the additional coil he means a weakening of the coupling between it and the secondary exciting it. He obviously had a clear understanding that a circuit can oscillate at its own resonant frequency if the coupling with an excitation circuit is loose.

2 *July*

Here Tesla gives the calculation of values for the spark gap oscillator in the fullest detail so far. However, the analysis does not include all the magnitudes relevant to the functioning of the oscillator, e.g. the primary/secondary coupling of the transformer and the distributed capacitance of the secondary. The power equation is also not fully explained and justified. However, by means of this approximate calculation Tesla did get a valuable rough guide relatively quickly and easily.

3 *July*

The distributed capacitance of the secondary windings is difficult to determine. It depends on the coil diameter, the dimensions of the wire and the insulation and the winding pattern. In a single-layer coil it is due mostly to the capacity between neighboring turns, and this is the way Tesla calculated it. He considers a greatly simplified model in which it is taken that the parasitic capacity per turn is equal to $A/4\pi d$, where $A=r\pi l$, half the surface area of the wire in one turn, and d is the distance between turns. The capacitance is calculated as that of a plate condenser of area A and gap d with air between the plates. This model is open to a good many criticisms, but it must not be forgotten that Tesla had to find some solution, whatever its shortcomings. It is also not correct that the total inductance and capacitance of the secondary circuit with the "additional coil" are additive, but Tesla was himself aware that this was guesswork, and often mentions the words "roughly", "estimate", etc.

In an earlier calculation (see June 20th) he had started from the primary circuit and worked out the values for the secondary, whereas here he attacks it from the other end:

from the resonant frequency of the secondary circuit and the known primary inductance (one turn) he finds the required capacity of the primary circuit. He then checks whether this capacity can be used with an LF transformer of the given power. The formula is approximate, but gives a good rough guide for the power in the mains transformer. The peak power rating of the transformer must be even greater than the value found because the condenser is not charging all the time but only in short pulses.

5 July

It is possible that Tesla was planning to construct a balloon to take an antenna to great height[13, 14], and was therefore interested in the generation of hydrogen. He does not give any indication, however, of whether he actually carried out any experiments in this direction, or of the grounds he had for expecting the desired decomposition to take place.

7 July

For the "resonance method" Tesla envisaged two possible types of resonant transformer: one with loose coupling between the primary and secondary, and the other with tight coupling but only with part of the secondary inductance*. This latter type he protected under the patent "Apparatus for transmitting electrical energy", for which he applied on 18 January 1902[44]; a good deal of his time at Colorado Springs was spent in developing it.

His conclusions about various parameters of the oscillator indicate that he had by then gained sufficient experience to be able to design such devices with improved performance in the parameters he wanted. As the experiments proceeded he gradually increased the voltage of the LF power supply. On June 20th he had calculated with an excitation voltage of 20 kV, but he had assumed a much higher rate of charging of the condenser, so that he obtained then a greater power than now with 40 kV. The difference in the number of chargings per second is nowhere explained, nor had he ever previously described how it was calculated. The first time he had probably taken it as being equal to the number of breaks on the rotary disharger, and the second time as double the mains frequency. In this light the accuracy of "the capacity of condenser which the transformer will be able to charge" is dubious. However, Tesla did not take the value he calculated as limiting the capacitance in the primary, noting that it did not take into account resonance and other factors which might enable the transformer to charge a much larger condenser.

8 July

From observing the behavior of his oscillator Tesla came to an interesting conclusion concerning the shape of the conductor of the primary winding, i.e. that a strip conductor was better than a wire of circular cross section because all other conditions being the same it did not get so hot. He believed that there was a special reason for this "not yet satisfactorily explained". Since the dimensions of the strip conductor are not known we cannot work out the reduction in resistance relative to a circular section conductor due to the

* It is easily demonstrated that these two methods are similar. If in the second case a part L'_2 of the secondary capacitance is coupled to the primary with a coupling coefficient of k_2, while in the first case the entire secondary inductance L_2 is coupled with a coefficient of k_1, then the response of the secondary to the primary will be the same if $k_1 = k_2 \sqrt{L'_2/L_2} < k_2$.

skin effect. The surface area of a strip will always be greater than that of a round conductor, the more so the flatter the strip: for a width to thickness ratio of 10 : 1 a strip will have about 1.8 times more surface area; this could effect a considerable reduction in resistance, which would explain, at least in part, the phenomenon which Tesla discovered.

In connection with coils, a problem to which Tesla often returned was that of the velocity of propagation of phenomena through the circuit. In order to achieve the maximum voltage across the secondary terminals without the addition of capacitance Tesla considered that the length of the windings should be equal to a quarter of the wavelength. This would be perfectly correct in the case of a straight conductor with one end grounded. Such a system, when excited, would certainly have the maximum voltage at the free end, but its magnitude would depend greatly on whether the conductor were horizontal (when radiation is small, so that the Q-factor of the resonant system is high) or vertical (when radiation is efficient so that the damping is high). With a helical conductor as in Tesla's oscillator, radiation is low as with a horizontal conductor, so that high resonant voltages are possible unless they are reduced by parasitic capacity. In fact, helical winding increases the distributed inductance and capacitance so that the velocity of propagation of current through the coil is reduced, which means that the wire must be made shorter to achieve maximum voltage across the terminals. If the secondary is terminated with a capacitive load (e.g. a metal sphere) the winding length must be still further reduced in order to maintain the same resonance conditions. Tesla took both these effects into account in designing the secondary.

Figures 1—8 illustrate several ways of reducing the distributed capacitance of the secondary. The solution of placing the turns far apart (Fig. 6) is still used today when it is necessary to reduce parasitic capacitance.

9 *July*

In calculating D (the ratio of the turn spacing of the old and new secondary) Tesla accidentally took the frequency instead of the period, so that he got $D=83$ instead of $D=2.45$. A second numerical error occurred in the formula relating D and C (38 omitted from under the square root) so that C came out to be 10 000 cm instead of 227 cm. Since he never made use of these results, Tesla naturally never discovered his mistakes.

Tesla's method of measuring the oscillator frequency by means of an auxiliary coil is interesting. This coil, with its own distributed capacity, in fact constituted an absorptive resonator. The size of the spark across its terminals provided an indication of the amount of power it absorbed. (In some respects it resembled Hertz's resonator). Tesla adjusted its resonance by varying the number of turns for the biggest spark. He then calculated the wavelength on the assumption that at resonance the length of the coil winding was one quarter of a wavelength. The wire length he determined by measuring the coil resistance, the resistivity per unit length of the wire being known. This method embodies a systematic error due to neglecting the reduction in speed of propagation through the coil[45], and it is applicable for oscillators of high power. However, it was the most reliable method Tesla had used to determine oscillation frequency up to that time.

For theoretical calculation of the oscillation period Tesla used two formulae: one which neglects the influence of the secondary (as for example at the beginning of this entry), the other taking this influence into account. In the latter case it is taken that the primary inductance is reduced by a factor $(1-M^2/NL)$, which would be the case were

the secondary short-circuited. How far this is justified it is difficult to say because an oscillator which discharges heavily does not satisfy the simple theory of the resonant transformer oscillator: the secondary is then heavily damped and free oscillations in it decay rapidly, so one would have to apply a theoretical treatment for heavily damped oscillators.

10—11 *July*

In order to try and increase the secondary voltage of the HF transformer by keeping down the distributed capacity of the secondary Tesla added a third oscillatory circuit, thus obtaining an oscillator with three resonant circuits of which two are tightly coupled*. The third circuit will not necessarily be most strongly excited when its resonant frequency coincides with that of the primary and secondary (assuming these are the same) and the primary and secondary are tightly coupled. If the spark in the primary circuit lasts long, then the tightly coupled primary-secondary system will produce two distinct oscillations, and the third circuit will be most strongly excited if it is tuned to one (strictly speaking to near one) of these two frequencies. On the other hand, if the spark is of short duration the tightly coupled system may oscillate strongest at the resonant frequency of the secondary, and then the third circuit will be excited the strongest when all three have the same resonant frequency. Tesla believed that his system of coupled circuits was producing a single vibration, which under certain conditions is in fact feasible.

12 *July*

Early on in the diary Tesla mentioned a method using a condenser to store energy from weak impulses arriving at a receiver. In the circuit drawn here, the condenser is charged by a battery via a self-inductance coil and a coherer shunted by the secondary of an oscillation transformer. In the absence of an external signal the resistance of the coherer is large so that the charging current is small. The circuit breaker periodically discharges the condenser through the primary of the transformer generating alternating current in the secondary which biases the coherer. When an external signal is received the resistance of the coherer is reduced and the charging current rises rapidly, which in turn increases the AC bias on the coherer which therefore soon gets to full conductivity (in fact there is a feedback loop).

14 *July*

He had tried out the devices shown in these drawings earlier on, some of them for wireless remote control of a boat. Patent No. 613809, "Method of and apparatus for controlling mechanism of moving vessels or vehicles" of 8 November 1898 (application field 1 July 1898) mentions the possibility of using electromagnetic resonance but does not give the circuit diagram of the transmitter referred to here.

15 *July*

Earlier on (see the entry for June 3rd) Tesla presents a general scheme in which the 'dynamo principle" is referred too as one of the ways of accumulating energy from weak

* Similar systems were analyzed in 1906 and 1907 by M. Wien, in 1907 by C. Fischer, and in 1909 by J. Kaiser[46]. From their papers it may be seen that the effective value of the current in the loosely coupled circuit will be a maximum if its resonant frequency is the same as that of the other two coupled circuits but if they were loosely coupled.

signals. The circuits given here illustrate how he implemented this principle. The "sensitive device" has a resistance which varies as a function of the antenna signal, and is connected so as to alter the excitation of a DC (Figs. 1, 2, 3) or AC (Fig. 4) dynamo.

Although he says that apparatus using this principle had already worked well in New York, none of these receivers, nor the principle they embody, appeared in any of his patents.

17 *and* 18 *July*

This is a continuation of the work described in the entry of June 12th, with different combinations of the same components plus relay R for registering the signals received. In all the circuits the sensitive device has an accumulating function. He experimented with different modifications trying to optimize sensitivity and reliability. The circuit in Fig. 1 of July 18th has two batteries, and that Fig. 5 an autotransformer instead of the usual transformer with a primary and secondary.

19 *July*

This is the first mention of a device which functions either as a transmitter or, with certain modifications of the power supply and antenna circuits, as a receiver. The transmitter is powered from the mains, the receiver from two batteries, B_1 biasing the sensitive device a with AC pulses obtained by discharge of condenser C through the primary of an HF transformer when the mercury switch closes.

The modification in Fig. 2, in which the relay is the secondary of the oscillator transformer, is simpler, but cannot be used as a transmitter.

21 *July*

In this setup a small excitation of one sensitive device is rapidly amplified by a feedback loop which acts via a transformer on the other sensitive device. Figure 10 shows how the receiver was excited by aerial (elevated metal ball C or C_1) — earth system.

22 *July*

Figure 8 shows the circuit of a receiver obtained by modification of the transmitter Tesla was then experimenting with. When functioning as a transmitter it is powered from the mains and is in fact a standard Tesla oscillator with a mercury interrupter between the condenser C and the primary P. The relay, sensitive device a_1 and battery B_1 are omitted and the secondary is connected to the antenna and ground. It may be noted that Tesla did not use the best receiver modification (as in Fig. 6), probably to simplify reconnection as a transmitter.

23 *July*

The "sensitive device" Tesla used for detecting electrical waves is usually known as a coherer[47]. It consists of a tube of some insulator with contacts at either end and metal powder (chips) inside. Its resistance is normally high, but drops rapidly when a large EMF is applied. Munk of Rosenschoeld described the permanent increase of conductivity of a mixture of metal chips and carbon after a Layden jar was discharged through it in 1835. In 1856 Varley noted that the resistance of metal powder was reduced during natural

electrical discharges. A major advance was Branly's observation in 1890 that a spark changed the conductivity of a metal powder at a distance. He carried out many experiments with various metal powders, determining their change in resistance by connecting them in series with a galvanometer and battery. In 1894 Lodge* showed that the conductivity of a metal powder could be altered by an electromagnetic wave; this was the final step which preceded the widespread introduction of coherers for the detection of radio waves. From the period 1895—1896 the coherers used by Popov and Marconi are well known.[43, 47]

Once activated, a coherer remains in the conducting state. To reestablish the high-resistance state it has to be shaken. The strength and timing of the shaking have to be properly adjusted. A novel method of decoherence of powders was invented by Popov, and used by him in his receiver and later by others[43]. In 1898 Rupp[48] found that constant slow rotation of the coherer keeps it sensitive. The decohering effect of rotation had been discovered earlier, in 1884, by Calzecchi-Onesti[49].

Tesla mentions that he had worked with a rotating coherer in the New York laboratory, so it is possible that he used decoherence by rotation before Rupp. He finds it superior to other methods of decoherence, because then the sensitive device behaves like a selenium sell, conducting only when radiation acts upon it. Also its sensitivity can be controlled by changing the rate of rotation.

24 July

From the pagination of the manuscript it may be seen that the entry for this day was divided into three parts (the previous day two parts). The first part, three pages, refers to experiments with a 35-turn secondary on the oscillator, the second part, five pages, to a resumption of these experiments, and the third, three pages, to the determination of the capacity of the 35-turn secondary.

Tesla adjusted the regulating coil in the primary to obtain the maximum secondary voltage, judged by the size of streamers. He connected an "extra coil" to the free terminal of the secondary. He investigated the operation of the transformer at harmonic frequencies by doubling the primary capacity** and making fine adjustments of the primary frequency by varying the inductance in order to get maximum response of the secondary to the harmonic of the primary.

On resuming the experiments Tesla sought an explanation for the occurrence of the largest streamers from the secondary when the regulating inductance was practically cut out. He found it confusing that the highest voltage at the free terminal of the extra coil (connected to the secondary like in Fig. 2 of July 11th) was not obtained when the frequency of the excitation was equal to the natural resonant frequency of the coil. After an extensive analysis he came to the correct conclusion (unlike that of June 30th, which was valid only for a special case), that when free oscillation of the secondary becomes influential, the parameters of the primary have to be adjusted to get maximum voltage across

* The term "coherer" is due to Lodge, and denotes a device containing particles of metal such that its resistance is normally high, but is reduced under the influence of electromagnetic radiation.

** For the primary to oscillate at half the frequency the capacity would have to be quadrupled. It is possible that instead of connecting the banks of 8—9 jars in series, equivalent to the capacitance of 4—4 1/2 jars, Tesla connected the previously series connected jars in parallel, achieving an equivalent of 16—18 jars, i.e. four times the capacitance of the series configuration.

the secondary, and resonant frequency of the extra coil has to be equal to the resonant frequency of the coupled primary-secondary system. It seems that it did not occur to Tesla that when the coupling was tight the combined system produced different spectra during and after the spark. It would seem therefore, all the more significant that he was able to reach this correct conclusion, through a combination of empirical results, simple theory and intuition.

Tesla notes that during discharge in the secondary sparks went across the lightning arresters. Since the arresters were connected to the power line, Tesla thought that the HF voltage came from a wave propagating through the earth and getting into the line somewhere else. We have no evidence which would support this statement or establish whether it was not due to coupling between the oscillator and the mains via the power transformer.

The third part of this entry refers to measurement of the capacity to ground of the secondary coil as a whole. Tesla does not explain how he performed the comparison with a standard capacitor nor at what frequency.

26 *July*

This entry is concerned with much the same topics as that of June 30th. He investigated the influence of the HF transformer primary-secondary coupling on the 8th of July.

27 *July*

In his first condenser discharge oscillation transformer for generating high frequencies in 1891[4, 15] Tesla used a simple air gap for regulating the charging and discharging of the condenser. However, a year later he had already described several improvements on simple spark gaps using a magnetic field or an air current for rapid extinction of the arc thereby reducing the period of the charge-discharge cycle. He also described the advantages of a splitted arc across several smaller air gaps: with the same total gap length the breakdown voltage is higher, so that smaller gaps can be used and the losses are less*. A fourth form of improvement which he invented was the use of various rotary interrupters[5].

In the period from 1893 through 1898 Tesla patented several types of interrupter, or "electric circuit controllers". It is interesting that all these patents refer to various types of rotary interrupter, with or without an air gap. Some rotary interrupters were protected within patents for high-frequency generators, including the following:

the combination with discharge points immersed in oil. The turbine whose blades make and break the condenser circuit is driven by oil under pressure[50]

mechanical make-break controllers for DC[51]

synchronous controllers with and without regulation of the interrupt timing, for use with AC sources[52]

commutators for alternate switching between two condensers in the primary circuit of a Tesla oscillator[53].

In 1897 and 1898 Tesla was granted a number of patents for "electric circuit controllers". The principle requirement was that they should make and break a circuit at the highest possible rate, i.e. that they should perform a large number of operations per unit

* The total resistance of series air gaps is less than the resistance of a single air gap with the same breakdown voltage.

time. In eight patents[27] Tesla gives designs for rotary interrupters with conducting or conducting and insulating fluids, usually mercury and oil, respectively. In some designs the interruption takes place in an inert gas under pressure. He gives ingenious designs for using a mercury jet playing on a toothed metal rotor, and for producing two mercury jets (fluid contact).

The rotary interrupter with two auxiliary air gaps shown in the figure was a new idea. One of the reasons Tesla added these air gaps was probably the high voltages with which he was working, since they allowed him to regulate the excitation. That this could be done may be seen from the statement that by adjusting these gaps the period of charging from the secondary of the mains transformer could be shortened. At the end of the entry he records that the best results were obtained with two rotary interrupters (with toothed disks) rotating in opposite directions. He does not explain how he chose the tooth ratio so that the number of interruptions was equal to the product of the number of teeth.

28 *July*

This entry provides one of the most detailed descriptions of the receiver with two rotating coherers and a condenser for accumulating the energy from weak signals. At point *b* the circuit *C*—*P* is periodically made and broken and the resulting AC pulses bias sensitive device *A'* in the secondary. Sensitive device *A* is still poorly conducting so the charging current of *C* via damping coil *L* is small. When an arriving electromagnetic wave reduces the resistance of *A*, *C* charges much faster and the voltage induced in secondary *S* also rises rapidly. The resistance of *A'* drops rapidly and current from battery *B'* activates relay *R*. Judging by Tesla's report, the receiver was very sensitive to distant electrical discharges.

29 *July*

To check out his theoretical conclusions about the free oscillation of the "extra coil" (see 30 June and 26 July) Tesla made a new coil with a higher inductance. As this was his first experiment with the new coil, he had to adjust the circuit parameters by trial and error.

Tesla's ingenuity found full expression in the way in which he developed condensers for high voltages. He filed a patent application on his design for a fluid electrolyte condenser on June 17th 1896[67].

30 *July*

To try and verify his hypothesis about the rejection of harmonics with appropriate coils, Tesla changed the connection of his "extra coil" as shown in Figs. 4 and 5. To understand his way of proceeding one must take into account his ideas from 1893[6] concerning the induction of earth currents via an aerial-earth system. However, the standing waves in terms of which he tried to explain the arcing over the lightning arresters cannot be significant at these frequencies.

31 *July*

Tesla made the condensers for the primary circuit out of mineral water bottles filled with a saturated solution of rock salt, and standing them in a metal tank of the same solution, thus creating a condenser bank with one common plate. The other plates (the

electrolyte in the bottles) could be connected in parallel as desired. The smallest capacity adjustment possible was equal to the capacity of one bottle.

After various tests of what voltage the glass dielectric of the bottles could stand, Tesla returned his attention to the secondary of the oscillator, in which rightly way the limiting factor for obtaining higher voltages. His analysis of the distributed capacity of the secondary is a good illustration of his inventiveness in a little known field and how he sought to reduce problems to a simple but mathematically and physically sufficiently accurate model. It must not be forgotten that these are Tesla's working notes, which is sufficient justification in itself for some of the hypotheses which the reader might otherwise rightly object to.

2 *August*

A receiver of this type is mentioned in the entries of July 12th (the principle), July 28th (circuit diagram with two sensitive devices and relay), July 30th (in connection with earth waves). The transformer here has a frame similar to that of July 28th but with somewhat more turns. The sensitive device was described on July 21st.

Tesla often worked on several problems in parallel. Here for example we have entries concerning the receivers, the development of condensers for the primary of the big oscillator, and the power equation for a new configuration of the oscillator primary circuit. The condenser C_1 in Fig. 2 protects the mains transformer against overload but has the drawback that it reduces the initial voltage on C_2. Tesla's analysis refers to the case of two condensers in series, neglecting all transient phenomena. It may be that he was induced to think about protecting the mains transformer because of his doubts about the ability of the dielectric to stand the voltages which he intended to use.

3—14 *August*

These experiments are a continuation of some earlier research. Here Tesla investigates various modifications of his "condenser method of magnifying effects". All the circuit diagrams of receivers, over 50, include at least one battery, sensitive device, condenser, rotary interrupter and HF transformer. Some of them show a relay for registering the signal received, while in others its presence is understood. Likewise, in all except one case (5 August, Fig. 1) the plates which brings the excitation to the sensitive device are not shown. Tesla says that these plates can be in one or two media, meaning that both can be in the air, both in the ground, or one in the air and the other in the ground, preferably elevated. In the patent[8], referring to these plates, he also says: "... they may be connected to conductors extending to some distance or to the terminals of any kind of apparatus supplying electrical energy which is obtained from the energy of impulses or disturbance through the natural media."*

As regards mode of operation, the various receivers have in common that the sensitive device is biased by a battery. They also include a Tesla oscillator (clockwork rotary interrupter) which creates an added bias on the sensitive device (or devices). This AC pulse bias acts as positive feedback, avalanching the sensitive device into conduction as soon as an arriving signal starts to cause some change. In the receivers with two sensitive devices

* It is interesting to note a similarity of such receiving system and the contemporary ELF grounded wire radiator. In the Nikola Tesla Museum in Belgrade few drawings, showing something that resembles a single grounded wire radiator and a parallel array ELF antenna[72], are found.

the one which receives the external signal is usually in the primary side and the other, which activates the relay, on the secondary side. When there is only sensitive device it usually shunts the transformer secondary (which has a high impedance so as not to reduce the performance of the device), thus creating an efficient feedback loop.

A general feature of all Tesla's receivers is their delicacy. Very careful adjustment was necessary to get the sensitive device at the threshold of avalanching. Most of the sensitive devices were rotated (see June 23rd) so that they were only good conductors during the action of a signal. In some cases, however, this did not achieve satisfactory deactivation of the coherer. Then he used an electromagnetic buzzer to periodically interrupt the excitation of the sensitive device (see Fig. 2 of August 8th). Probably the circuit in Fig. 2 gave him the idea for that in Fig. 3, where the rotary interrupter is replaced by a buzzer as an electromagnetic interrupter. He then used a buzzer in various other configurations (Figs. 5 and 6 of August 8th), with the aim of reliably biasing the condenser, and hence also the sensitive device, to threshold.

Tesla did not measure the sensitivity of his receivers by any definite method, but there is no doubt that he did compare them in some way. From his notes very little can be deduced about their sensitivity, i.e. the power required to activate them. A rough idea is given by data from July 4th, when he used similar receivers to register electrical discharges. He estimated that he registered waves produced by lightning at least 200 miles away, and continued to receive signals (at periodic intervals) later when the weather had already cleared. He records that with the receiver shown in the figure of July 28th he was in one instance able to register lightning discharges at a distance of 500 miles. He estimated the distance from the periodicity of the signals as the storm moved away.

13 *August*

The last experiments with the oscillator were described July 31st, with numerous comments and the remark "this to follow up". Probably he had prepared a new condenser bank in the meantime for work with higher voltages (he measured the capacitance of the new bottles on August 11th, and tried them out with the highest voltage so far from the power supply transformer.

15—21 *August*

With the new condenser bank the secondary had to be modified, and on August 15th he worked out the length of wire required. He calculated the period of the primary from the capacity of the new bottles and the inductance per turn of the primary found earlier (mentioned on June 20th as 7×10^4 cm, probably one quarter of the value measured for two turns on June 17th). It was also his intention to adjust the oscillator to the "extra coil".

The entries for 16, 17, 20 and 21 August give some new circuit diagrams for the oscillator which he thought would be more suitable for working at high excitation voltages. They bear witness to Tesla's constant search for improvements involving only limited changes in the apparatus which he used for lower voltages. The chief problem was overloading of the power supply. It is recorded elsewhere that Tesla's experiments with his spark oscillator (probably on some other occasion) burnt out the generator of a power station five miles away[36].

22 *August*

In this entry he returns once again to the receivers. He tried out two receiver circuits using one battery and one sensitive device. He changed the capacity in the primary circuit over a wide range, but it is not clear why 1 μF proved best. It remains unexplained what was the relationship between the frequency of the incoming signal and that generated by the receiver itself. Could it perhaps be, if the rotating coherer behaved as a nonlinear element, that the signal was amplified as in a heterodyne receiver[55]?

23 *August*

He now put the extra coil in the center of the primary, retaining this configuration from then on. After the usual adjustment of the oscillator he got sparks 2 m, and later 4 m long, indicating a voltage of around 2 million volts.

26 *August*

Tesla experimented with twice the interruption rate. The oscillator worked better and there was heavy sparking across the lightning arresters (Fig. 4). Investigating the cause of this sparking he inserted a coil in the lead of the metal sphere (Fig. 1) to reject high frequencies. In an earlier experiment (see July 30th) inserting such a choke coil in the ground line had stopped sparking across the arresters. This time it did not, so Tesla tried the circuit in Fig. 2. Still there was no marked change, the sparking across the arresters was only slightly reduced. After this experiment he began to wonder whether the grounding point of the secondary was not perhaps a peak rather than a node of the standing wave. It must be understood that Tesla thought that standing waves were set up around the transmitter (like waves on an open transmission line. With shorter waves the rate of change of amplitude with distance would be faster (i.e. maxima and minima would occur at shorter distance intervals), so he thought that a large potential difference could be obtained with a short distance between the grounding of the secondary and that of the lightning arrester.

In order to explain what happened when the sphere was not grounded (which would mean that there were no short waves) but the sparking across the arrester did not stop, Tesla found it necessary to formulate a new hypothesis: "Could the sparks be produced by static induction ~~upon wire~~ through the air and not chiefly by conduction through earth?" The experiment with which he tried to verify this hypothesis did not yield any definite answer.

27 *August*

Although he has noted several times already that good results were obtained with various decoherence techniques (rotation, interruption of the excitation current), this reexamination of his old ideas shows that Tesla is still seeking a more reliable solution. One of the ideas he was gathering together for further investigation is illustrated by the diagram in Fig. 4, in which a rotary interrupter, condenser, choke and battery provide bias for the sensitive device. When interrupter *d* breaks, the voltage on *C* can be higher than the battery voltage. With proper choice of the values the coherer can be biased to threshold, making it very sensitive.

28 *August*

Tesla's idea of the Earth as a perfectly conducting sphere lead him to a mistaken hypothesis about the general behavior of the electromagnetic field around the grounding of the transmitter. What he expected at frequencies of the order of 10 kHz in fact occurs at much lower frequencies[72], at which, as far as can be seen from his notes, he did not work in Colorado Springs. He correctly observed that the decisive factor determining whether predominantly waves of the "Hertzian type" or the waves which he thought to be propagated through the earth (in fact waves in the spherical condenser constituted by the Earth and the ionosphere) would be excited was the excitation of the "Earth". Tesla was also certainly in error when he tried to make generalizations concerning the wave frequency, and in his conviction that he needed extremely high voltages to "create" the second conductor for a system of wireless power transmission. He could not know that this conductor already existed permitting transmission at very low loss of very low frequency waves, and that it would not matter whether the energy transmitted was high or low.

29 *August*

Although the circuit looks simple enough, an analysis of Tesla's receiver with a "magnifying effect" is rather complicated, because transient phenomena have to be taken into account and the resistance law of the sensitive devices as a function of voltage has to be known. It was not easy to adjust a receiver like this to work properly.

Apparently there was an earphone T in the secondary circuit of the transformer, but it is not mentioned in the notes. The sensitivity of an earphone would normally be much greater than that of a relay, so it would be interesting to find out how this apparatus performed. Unfortunately, earphones are practically not mentioned anywhere in the diary.

Tesla here at last makes a few remarks about how the sensitivity of receivers was estimated. To test its response he put a "small capacity" across sensitive device a, but of what value, and whether it was charged or not he does not say.

3 *and* 4 *September*

The aim of these experiments is not explained, but it was probably associated with the "experimental" coil with which he examined currents in the water pipe. This was a resonant coil which in the receiver played a part analogous to that of the "extra" coil in the transmitter. Its purpose was to maximize the received signal. Since Tesla connected one terminal to ground, it appears that he wanted to pick up electrical vibrations from the earth. In this case too he found that it was not sufficient just to increase the Q-factor $\frac{pL}{R}$, but also that it was necessary to keep the coil's distributed capacity as low as possible. This conclusion was consistent with what he had earlier found about the influence of distributed capacity of the coil on the length of wire needed to achieve resonance. Conclusion (5) is interesting in that it shows Tesla was aware that the secondary and the extra coil, although excited by the same primary, would each oscillate at its own resonant frequency, and if these were not the same, they would beat.

5 September

After a number of experiments, including a few outside the laboratory, Tesla once more concludes that parasitic capacity is very harmful, so he decides to try winding a coil to have minimum capacitance. Unfortunately he does not describe how this was done. In his desire to get the maximum possible voltage from the coil he went as far as thinking that it was best to have no capacity at the free terminal. From one aspect he was right (theoretically a coil gives the highest Q-factor with the least capacity in the resonant circuit), but without the "elevated" metal sphere the received signal was much weaker because the free terminal of the coil no longer had a monopole antenna. In the circuit which he in fact used he did not, however, go to such extremes. He added the "experimental" coil but left the metal sphere (aerial capacity) connected to one end of the sensitive device.

6 and 7 September

In calculating the wavelength for the cable and ball Tesla made an arithmetical error. For the calculated T, the wavelength ought to be about ten times less, so that his assumption that on September 7th, he got vibrations of the system consisting of a ball of capacity 38 cm and 120 feet of cable is probably false. It is more likely that the experimental coil was excited by the coupled system of primary, secondary and extra coil.

11 September

Tesla probably thought that he would more easily detect standing waves in the vicinity of the laboratory if the wavelength was shorter. He assumed that the ball-cable system would produce waves which could be registered by the receiver. However, although he measured the electromagnetic field up to a mile away, he probably did not find the expected variation, and could only conclude that electrical disturbances were registered.

13 September

From a document found in the archives of the Nikola Tesla Museum in Belgrade it may be seen that Westinghouse Comp. sent Tesla a 50 kW power transformer for a primary voltage of 200/220 V and secondary tappings of 40, 50 and 60 kV. This is probably the Westinghouse transformer which he often mentions.

15—17 September

The receivers described on September 5th, Fig. 3, and September 11th, Fig. 2, include "tuned" coils whose function is similar to that of the "synchronized" coils shown in the diagrams of September 15th. Tesla did not make a detailed analysis of these receivers, nor do any of his patents on receivers refer to similar circuits. It therefore seems that we do not have sufficient information to draw any reliable conclusions about their sensitivity or their ultimate purpose (for example it is not clear whether they are just for registering signals or for receiving intelligence).

18 and 19 September

As already remarked, oscillators like those he was working with here are not the classical Tesla oscillator with a resonant transformer. The "extra coil" essentially changes

the loading of the secondary circuit, and this alters the mode of oscillation. Also, shunting the secondary with capacitance (as in the diagrams of 18 September and 19 September Figs. 2, 3 and 4) alters the spectrum of the oscillation in comparison with that yielded by an oscillator with two oscillatory circuits. Configurations such as those shown in Figs. 5 and 6 of September 19th can be considered as typical Tesla oscillators with a loosely coupled third circuit consisting of the extra coil and capacitive load. Then the greatest voltage at the free terminal of the extra coil is obtained when the natural resonant frequency of this circuit (together with the ball antenna) is the same as that of the strongest component in the spectrum of the oscillator.

22 *and* 23 *September*

Having investigated the tapering secondary Tesla started making a new, 15 m diameter cylindrical secondary. The criterion that the weight of copper in the primary and secondary should be the same follows from the requirement of equal losses in the two windings (losses in the copper). This way of calculating the gauge of the primary and secondary conductors is applied in designing LF transformers, but for HF transformers it only provides a rough guide, for a number of reasons, e.g.: the current ratio may differ considerably from the turns ratio, skin effect is not taken into account, etc.

25 *September*

As he often did earlier, before finalizing a set up Tesla measured the inductance of the primary and the regulation coil which he usually used as an added, adjustable primary inductance. The value he obtained for L_{2p} differs from that obtained earlier (see July 17th) by the same method.

26 *September*

By this method the frequency of an oscillator is found with a help of a resonant circuit of known parameters. When its resonant frequency is adjusted to coincide with the frequency of the oscillator, the voltage across its terminals, estimated by the strength of the spark across an "analyzing gap", is a maximum. Tesla says that the excitation must be "convenient". Since he introduced regulation of the excitation by means of the small gap b, it is clear that "convenient" excitation was obtained with loose coupling. Loose coupling between the primary and secondary circuits of a spark oscillator ensures that the two frequencies which such an oscillator normally produces are very close. Up to a certain degree of coupling, Tesla's oscillator produces a single frequency. According to Fleming and Dyke[31], with an ordinary spark gap the maximum coupling coefficient for monochromatic oscillation is around 0.05 (certainly less than 0.1), while with a rotary break producing pulse excitation a coefficient of up to 0.2 gives good results. With higher coupling coefficients three components are obtained, even if the primary and secondary circuits by themselves have the same resonant frequency.

27 *September*

True to the principle that measurements should be checked by calculation, Tesla calculates the inductance of the same coil using the formula for a coil of infinite length,

but does not obtain agreement. Since distributed capacitance increases the effective inductance at frequencies below the natural resonance of the coil, the second possible reason which he mentions (inexactness of the coil dimensions) could have some influence, but the main reason is the poor approximation provided by the formula when applied to a coil with this length: diameter ratio.

28 *September*

The circuit diagrams are of great interest because they illustrate a new approach to feeding the antenna (now known as shunt feed[73]) which obviates the problem of insulating the aerial pole. Unfortunately the explanations Tesla gives are too cryptic to be fully comprehensible. The figures do not clearly show whether the lower terminal of the antenna is grounded or insulated. Tesla's conclusions that a standing wave is set up along the antenna and that the distance between points of equal potential is half a wavelength are correct.

The frequencies he was using were not high enough for his antennas to work in the manner shown by the figures (in which case they would be much more efficient radiators than he usually had), so that this contribution to the theory of wire antennas was never properly formulated.

29 *September*

Tesla says that he experimented with the antennas shown in the drawings, but he does not compare them with a grounded antenna.

The shortness of the antennas relative to the wavelength made them inefficient radiators. The configuration shown in Fig. 3 was best probably because it had the greatest terminal capacity, providing the most favorable current distribution on the antenna. Lack of coil and ball dimensions makes it impossible to go into any more detailed analysis of these antennas.

3 *October*

The drawing of several of the coils which Tesla often used offers some interesting information about the laboratory which cannot be seen from the numerous photographs. One sees that there was a wooden floor raised 30 cm above ground level, and the drawing shows the dimensions of the coils and how the HF transformer of the oscillator was wound.

4 *October*

Tesla was primarily interested in the change of capacity of a ball with height, so he measured the primary capacity for two elevations of the ball. In both cases he tuned for resonance of a "special coil". In the first measurement he had $L_p C_{p1} = L_{sc}\, C_{b1} = 1/\omega_1^2$ and in the second $L_p C_{p2} = L_{sc}\, C_{b2} = 1/\omega_2^2$, where p refers to the primary circuit and b to the ball. These equations neglect the effect of interaction between the primary and secondary. They readily yield Tesla's equation

$$\frac{C_{p1}}{C_{p2}} = \frac{C_{b1}}{C_{b2}}$$

The inductance of the primary L_p and of the "special coil" L_{sc} do not figure in the capacity ratio equation. In deriving this equation all distributed capacitance in the secondary and the secondary coil itself are neglected.

6—8 *October*

From the measured inductance of the new secondary and mutual inductance of the primary and secondary, and the primary inductance measured earlier (see September 25th), it follows that the coupling coefficient was 0.58, i.e. tight coupling*. An oscillator with this much coupling will probably produce three pronounced components, even with very rapid interruption of the spark in the primary; this is indicated by the results Tesla obtained with spark oscillators with looser coupling (see the commentary on 26 September).

As before, Tesla determined the wavelength of the oscillator from the period of the primary circuit (see, e.g., June 20th). He compares one quarter wavelength with the total length of wire in the secondary, special coil and extra coil (when no other coils were used, he considered that the length of the secondary windings should be one quarter wavelength).

9 *October*

He made the last measurements of the change of capacity of a sphere with height on October 5th, but did not give the calculation results. He subsequently improved the apparatus as a whole and in the present entry describes a different way of connecting the "special coil", the chief effect of which was to loosen the coupling, which immediately proved its advantages. With weaker excitation it was easier to adjust the "special coil" to resonance because there were no streamers. Parasitic capacities were reduced, mainly to the distributed capacity of the "special coil".

Tesla first determined the distributed capacity of the "special coil". He assumed that the ball circuit resonated at ω_0, determined by the primary circuit, so that one can write

$$L_{p1} C_p = L_{sc}(c + C)$$

where L_{p1} and C_p are the total inductance (including the regulating coil) and capacity of the primary circuit, L_{sc} is the inductance of the "special coil" (including connecting wires), C is the distributed or parasitic capacity of the "special coil", and c the capacity of the ball.

Subsequent changes in the height of the ball changed the capacity in the circuit of the "special coil". To bring the oscillator into resonance with this circuit again, Tesla changed the inductance in the primary circuit. When resonance is achieved, according to Tesla, one can write

$$L_{p2} C_p = L_{sc}(c' + C)$$

Dividing this by the preceding equation yields

$$c' = \frac{L_{p2}}{L_{p1}}(c + C) - C$$

which is in fact the equation Tesla uses to find c'. Because of an arithmetical error in calculating C, Tesla's numerical results for the ball capacity are about 10% higher than they should be, but this does not essentially affect the conclusions. To calculate the distributed capacity of the coil** he uses the relation $L_p C_p = L_{sc}\ (C+c)$ for the ball at

* The regulating coil in series with the primary reduced the coupling. The new coupling coefficient is found to be $k' = k\sqrt{L_p/(L_p + L_{rc})} < k$.

** By distributed capacity Tesla used to mean the total capacity between turns of the coil. Here he uses a different definition of "internal capacity" similar to that normally used today.

a height such that he could consider its capacity close to the theoretical capacity of an isolated sphere.

11 *October*

Tesla obviously did not sleep much the previous night since he was photographing the oscillator in operation both late at night and early in the morning. The Nikola Tesla Museum in Belgrade possesses several photographs which date from this period, but they are too faded to be worth showing. One of the better preserved photos is shown on p. 221.

12 *and* 13 *October*

To calculate the inductance of cylindrical coils Tesla used the formula for a coil of infinite length, which always gave values too large, especially when the diameter: length ratio of the coil was not much less than unity. However, when the proper corrections are made (Russel[57]), the inductances obtained differ from Tesla's values by less than one percent.

15 *October*

Because of the arithmetical error made on October 9th (see commentary), he mistakenly concludes that the capacities of the ball are now somewhat less than before. Had he used the correct values, his conclusion would have been just the opposite.

17 *October*

The 122 ft metal pole bearing the 30" ball is the antenna to be seen in the middle of the laboratory on many photographs. The bottom end of the antenna is insulated by a wooden pole. This is a single-pole antenna of small electrical length. At around the highest frequencies which Tesla used the h/λ ratio was about 0.015. The terminal capacity made the effective height somewhat greater than h, but it still remained an electrically short antenna.

20 *October*

Tesla was measuring the capacity of the coil which he had used for determining the change of capacity of a sphere with height (up till October 9th he had called it a "special coil"). Considering the dimensions of the primary (coil diameter 15 m) and the coil being tested (diameter 64 cm, length 145 cm), the coupling between them was obviously loose, so that the frequency found from the parameters of the primary circuit (provided that the main secondary of the oscillator did not influence the oscillation of the primary) can now be accepted as accurate. It is not stated how resonance was determined, but it was probably from the sparks at the terminals of the test coil. Similar resonance methods are given in recent textbooks on electrical measurements[56]. It must be noted, however, that determination of the distributed capacity of a coil from the resonance of the coil alone is not reliable, it depends on the mode of excitation and always gives lower values. It is therefore recommended to measure it with an added lumped capacity in the circuit.

21 *October*

In a thorough analysis of all details of his measuring apparatus, Tesla did not omit a determination of the parasitic inductance of the connections, by an interesting method which he says he used often in the New York laboratory. Varying the primary inductance and capacitance but keeping a constant frequency of the oscillator (as determined with an auxiliary resonant circuit), one has

$$C_{p1}(L_{p1}+L_{con})=C_{p2}(L_{p2}+L_{con})$$

where C_{p1}, L_{p1} are the first and C_{p2}, L_{p2} the second capacitance-inductance pair in the primary giving the same frequency. From this equation one can find the parasitic inductance of the connections L_{con}, which Tesla denotes by x.

23 *October*

In further experiments to determine change of capacity with height Tesla uses an apparatus similar to that of the previous day. As far as can be judged, the coupling between the oscillator and the measuring circuit (coil with elevated ball) was loose. The lower terminal of the latter was connected with a condenser of the oscillator circuit. Loose coupling is evidenced by the relatively weak sparks obtained across the air gap of coil L (see figure) in comparison with the sparks obtained when a similar coil was excited by the secondary of the oscillator, tightly coupled to the primary (as for example on October 4th and 5th). Under these conditions the spark oscillator would generate a single frequency, determined by the parameters of the oscillatory circuit with the spark gap.

26 *October*

Tesla had already been using the 689-turn coil for several days in experiments to determine change of capacity with height of a ball. On October 18th he calculated its inductance using the formula for an infinitely long coil. Now he determines it by measuring the current and voltage at a frequency of about 140 Hz, knowing the resistance. He gives the results of two sets of measurements. He is convinced that the second set, for which he used a small dynamometer, gave low values, and this was probably so. The first set gave an inductance slightly less than calculated, but a correction of the theoretical value for the finite D/l ratio* gives a value about 6% less than that measured. Thus the calculated value ought to have been 0.023 H, while the experimental result was 0.024 H. The accuracy of the measurement method cannot now be verified but in view of the small difference between reactance and resistance it is doubtful whether it could be of the order of a few percent.

27 *October*

Tesla does not explain how he made the comparison with a standard 0.5 μF condenser. The number of bottles used in the condenser bank is indeed impressive. He did not

* Russell[57] gives the inductance of a coil at very low frequencies as

$$L=(\pi Dn)^2 l\left[1-0.424\frac{D}{l}+0.125\left(\frac{D}{l}\right)^2-0.0156\left(\frac{D}{l}\right)^4\right]$$

Substituting $\pi D^2=4S$ (D is the mean diameter of the coil), and $n=N/l$ (number of turns per cm), the first term in the above equation yields the expression Tesla used. l is coil length. When all quantities are expressed in units of cm, L is also obtained in cm.

carry out measurements on individual bottles to determine what kind of tolerance they had. Since he only measured complete banks, i.e. rather large capacities, and mentions "readings with 7 cells battery", he probably made the comparison in terms of stored charges.

28 *October*

After several days gathering data and making further measurements of inductance and capacitance, he finally proceeds to the calculation of the unkown capacity of the sphere, using the readings of October 23rd and 26th. Consistent with his general principle, he checked the measured values by (usually approximate) calculations.

He calculates the capacitance of the vertical wire by the formula for an isolated ellipsoid of high eccentricity. It is not known whether Tesla first had the idea of using this formula, but it was used later for a similar purpose[58]. All things considered, the agreement between the calculated and measured values is very good.

Tesla then calculated the ratio of the capacities in the lowest and highest positions. In the lowest position the sphere makes little difference to the total capacity. In the highest position it increases the capacity in the coil circuit by 18.7 cm. This is less than the theoretical value for an isolated sphere of 18″ diameter, which does not agree with some of his earlier measurements (see the results of October 21st for a 30″ ball). However, if a comparison is to be made, it must be noted that the new results are probably better because the apparatus had been modified and the parameters checked.

29 *October*

His remark about eddy currents in the sphere is interesting. To prevent their formation he slit the tinfoil with a knife. Did he assume that in the vicinity of the coil the sphere would behave like a short-circuited turn? It is readily shown that if this effect is pronounced (and not taken into account) the measured capacity of the sphere will be too low. This might be an explanation for the reduction of the effective capacity of the sphere in the lowest position (see the calculation of October 28th for an 18″ sphere in the lowest position).

1 *and* 2 *November*

The new extra coil was larger in diameter but shorter than the previous one (see August 23rd). The formula for an infinite coil introduces a rather large error, but with the correction referred to in the commentary to 26 October the agreement with the experimental results is good. The correction terms are significant because the ratio D/l is even greater than unity, and the correction is more than 30%. The corrected value is 0.0198 H, 2—3% less than the measured values.

3 *November*

A repeated measurement of the capacity of the vertical wire and the 30″ sphere by the method of October 29th but with a new coil L (see October 31st). A new feature is Tesla's attempt to eliminate the wires of the spark gap, estimating the excitation solely from the streamers.

5 *November*

Photographs of the Colorado Springs laboratory always show the pole rising from the center of the building. Its dimensions are given in the entry of 17 October. Now Tesla calculates the capacity of the pole as the sum of the capacities of its parts of different thickness, using the formula first cited on October 28th. His final remark indicates that he had thoroughly understood the physical essence of the phenomenon.

6 *November*

Tesla carefully measured the capacitance of the aerial pole by the resonance method, from the known inductance of the 550-turn coil (see September 8th) and known frequency of the oscillator, with two measurements, one with and the other without the capacity to be measured. He did not make use of his earlier results for the inductance of the regulating coil and connections from October 30th, although he could have done. A calculation check shows that the results of October 30th were rather high (by as much as 10% for $2\,^1/_8$ turns of the regulating coil), but Tesla probably thought that the new procedure was better and so did not use the old results. An analysis shows that if the old values had been used the final result would not have been essentially affected, so that Tesla's conclusion that the measured capacity of the pole was less than the theoretical value of November 5th remains valid.

From the relatively lengthy discussion following the measurements it may be seen that Tesla expected just the opposite. As usual when his expectations were not fulfilled, he considers ways for getting more reliable results.

7 *November*

Measurement of the capacity of the structure at two frequencies was intended to demonstrate the reduction of effective capacity with increasing frequency. Tesla did in fact obtain a small difference, but it is dubious proof considering the accuracy of the measurements. The frequency difference was quite large, from 50 kHz to nearly 250 kHz (using "extra" and "experimental" coils).

8 *November*

The primary inductance values cited are from November 5th. The other values given in the table do not agree with those derived from the measurements of October 30th. Also, earlier data do not include values for half a turn of the regulating coil. It must therefore be concluded that the measurements from which the tabulated values were calculated are not described in the diary.

It seems that in measuring inductance from voltage, current, frequency and resistance Tesla had difficulty because of unreliability of the frequency determination. He therefore used the voltage ratio, when it is only necessary for the frequency to be constant. By this method he measured the inductance of the regulating coil plus connections, for various numbers of turns.

9 *November*

The measurements of mutual inductance in terms of the inductance of the primary when the secondary is open and short circuited are noteworthy. They were made at constant current and frequency, simplifying the calculation.

To reduce the oscillator frequency, in some cases Tesla used two special coils which he refers to only by wire gauge number. He compares the calculated and measured values for these coils. The values measured by the voltage ratio method are about 2% less than those found from voltage, current and frequency. The calculated values are lower than either. Correction of the measured values as described in the commentary to 26 October does not make much difference (about —5%) because the D/l ratio is relatively small.

10 *November*

Had Tesla published the measuring methods he developed in New York and Colorado Springs, his name would probably be frequently encountered in earlier textbooks and handbooks on electrical measurements at high frequencies. As it is, we can only remark his exceptional ingenuity in designing measuring devices and the accuracy with which he determined the resonance of oscillatory circuits. An especially interesting feature is his method using a lamp already heated up by a supplementary power source, greatly increasing its sensitivity to small amplitude changes around the resonance peak of the oscillatory circuit.

11 *November*

In measuring the capacity of a sphere at different heights Tesla here uses a loosely coupled circuit containing a lamp to determine resonance. The results for a 50 ft wire differ somewhat from those of October 28th, but are within the limits of error of the method. The values for the capacity of the sphere are somewhat higher than before, but not in proportion to the diameter of the sphere.

12 *November*

Measurements of the pole capacity, like those of November 7th, but now using a coil with 1314 turns. Resonance was determined by means of a small lamp in series with a coil loosely coupled to the measuring circuit. The value obtained was again similar, so Tesla concludes that it is near the true value of the effective capacity.

13 *November*

Tesla uses an improved method for determining the resonance point, with the light bulb in a dark box for more precise detection of luminance, and determines the capacity of the iron piping once more, obtaining a value about 10% less than in earlier measurements (see November 7th and 12th).

15 *November*

Tesla again measures the capacity of the sphere on top of the metal pole as on November 7th and 12th, but with the secondary coil of the oscillator instead of the earlier "supplementary" coils. The results did not agree with those obtained earlier. Tesla puts this down to the large distributed capacity of this coil, but it would seem that other factors influenced the accuracy as well. Because of the tight coupling between the primary and secondary of the oscillator, it was probably producing a compound spectrum.

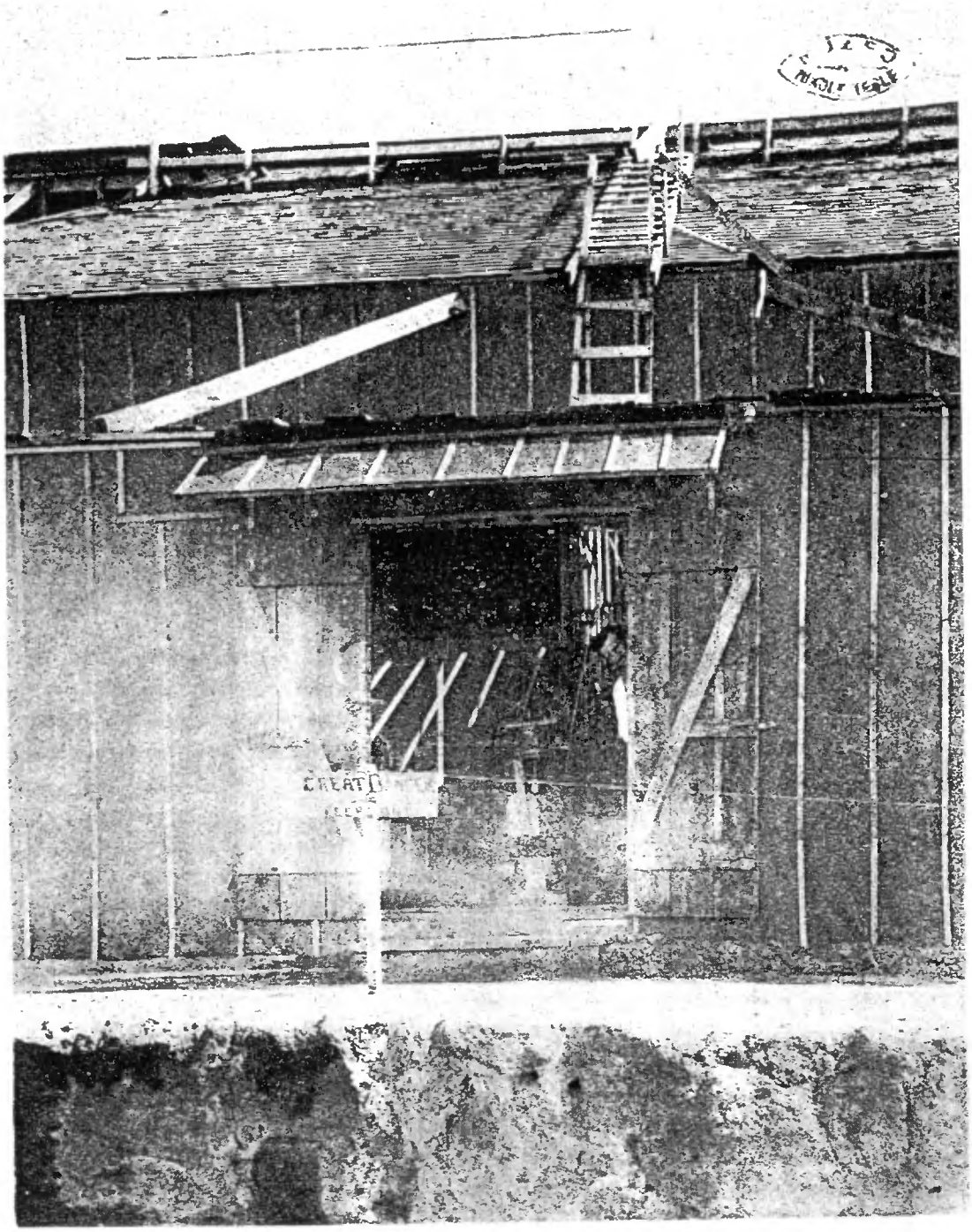

Main entrance to Colorado Springs Laboratory in the early phase of development. Tesla is looking through the door (Tesla's own photograph now at the Nikola Tesla Museum, Belgrade)

16—20 *November*

Capacity measurements made during the period 16—22 November agree on the whole with those made earlier. Tesla does not explain why he repeated similar measurements, e.g. those of November 16th and 18th when he determined the distributed capacity of the supplementary coil and the vertical wire. Nor does he explain why he repeated the measurements of the change of capacity of the sphere with elevation (see November 18th and 20th). He may only have wanted to confirm the earlier results.

On November 17th and 19th he measured the capacity of a vertical wire of various lengths and gauges. From his comments on November 17th it may be seen that at greater lengths he expected some inductive effect. A check of the wavelength, however, reveals that all Tesla's antennas were short in comparison (h/λ of the order of 0.01), so that divergence between the theoretical and measured values cannot be ascribed to an inductive effect.

21 *November*

For some reason which he does not explain, Tesla was interested in the capacity of the same wire when vertical and horizontal, which he measured by the usual resonance method, repeating it with a different capacitance in the primary as a check. Although the results from the two sets of measurements differ appreciably, the value obtained with the wire horizontal was somewhat higher in both cases. The formulae which Tesla used July 24th here yields 54.37 cm for the vertical wire and 58.43 cm for the horizontal. These values agree well with his measurements, especially the first set.

24—26 *November*

To check the values for the inductance in the primary circuit (of the oscillator) which he had earlier measured by the voltage, current and frequency method (see October 30th), Tesla repeats these measurements using the resonance method. He described the procedure on October 21st and made some measurements but did not follow them up with calculations. This time he made both measurements and calculations, but only for one L_pC_p combination. He compares them with values derived from the table given November 8th using linear interpolation. He was probably satisfied with the agreement, and did not make further checks. He had measured the capacity of the same structure, but without the protective cap and using the "extra" and "experimental" coils, on November 7th. On November 12th he had made similar measurements using the 1314-turn coil. In the 26 November entry he refers to the result of 7 November with a new "extra" coil. There is also one more result obtained with an "extra coil", using the best method he had developed for detecting resonance (see 13 November). This result, which differs appreciably from the others, is not mentioned November 26th.

The remark closing this entry suggests the possibility of a systematic error in the determination of resonance, and Tesla emphasizes that it has to be checked.

5 *December*

In this, as in earlier measurements, he found a "reduced inductance of the primary because of the reaction of the secondary". This interpretation of the functioning of the oscillator diverges from Oberbeck's theory[29]. If the spark duration is relatively long

the oscillator starts to produce oscillations of two frequencies, and when the spark is broken it gives a third frequency which is determined by the secondary oscillatory circuit. With a third circuit ("extra coil") the oscillation of the system becomes even more complicated, the oscillations during break being determined by the secondary circuit and the "extra coil". Neglecting for the moment the "extra coil", the three frequencies which a Tesla oscillator with tight inductive coupling[31] and equal natural resonant frequencies of the coupled circuits can be expected to produce are

$$\omega_0 = \frac{1}{\sqrt{LC}} \qquad \omega_1 = \frac{1}{\sqrt{LC(1-k)}} \qquad \omega_2 = \frac{1}{\sqrt{LC(1+k)}}$$

where k is the coupling coefficient. Thus ω_1 can be interpreted as the natural frequency of a circuit with capacity C and inductance $L(1-k)$. For the primary inductance of Tesla's oscillator (see 9 November) one obtains the "reduced" L, i.e. $L(1-k)=23{,}094$ cm; Tesla measured $L=24{,}063$ cm.

6 *December*

The photographs of the inside of the laboratory show the 100-turn "extra coil" raised above the floor in the center. With this coil Tesla again got similar results for the "reduced" inductance of the primary. However, aware of the indeterminacy of this "reduction", and hence also of the oscillation frequency, he notes that the secondary should be broken at more points when the primary is used as a measuring inductance. This would ensure monochromatic oscillation of the oscillator by reducing the coupling of the primary and secondary (i.e. the circuit of the "extra coil"). The measurements with the secondary eliminated are more reliable, and the accuracy with which the values sought are determined depends mainly on the accuracy to which the inductance and capacitance in the exciting circuit of the oscillator are known.

1 *January*

Photograph XVII shows lamps connected into a resonant circuit consisting of one square turn. According to the data Tesla gives, one side of the square was about 1.3 m from the secondary coil of the oscillator. The capacity of the oscillatory circuit consisted of two condensers in parallel. The lamps are paralleled.

Tesla calculates the inductance of the square turn from the formula for the inductance of two parallel conductors, as if there were two such pairs connected in series. The formula for a square coil (Fleming, p. 155),

$$L = 8l\left(\ln\frac{d}{r} - 0.774\right)$$

yields a value 12.6% less than Tesla found. The calculated resonant frequency is therefore somewhat higher than it should be, so that the inductance of the oscillator primary, as Tesla calculates it, is still less. In fact, because of the tight coupling of the secondary the oscillator must have been producing a complex spectrum, probably with its strongest component at the resonant frequency of the oscillatory circuit of the square coil.

In connection with photographs XVIII—XXI showing the secondary producing intense discharges, Tesla makes an interesting remark about signalling over great distances. Comparing this with other induction apparatuses he had constructed, he concludes that

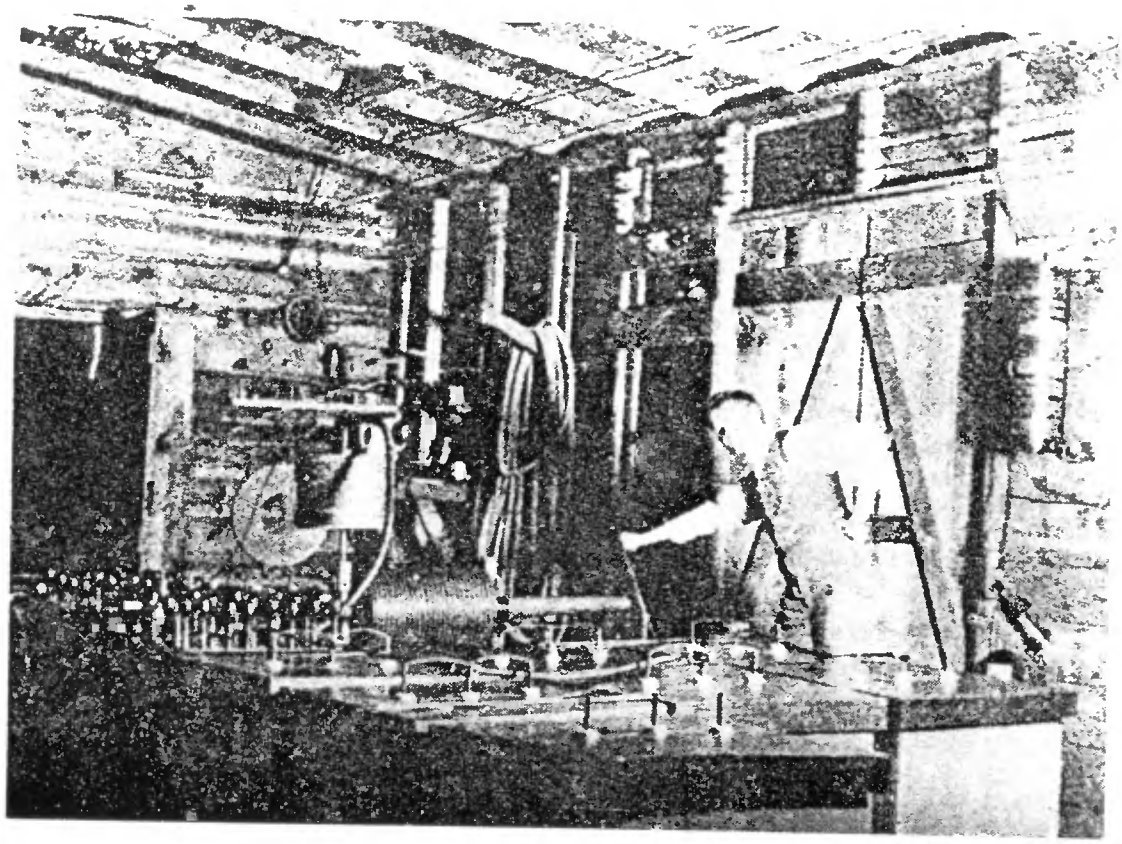

Interior of Colorado Springs Laboratory

one could expect signals to be picked up at distances of a thousand miles or more, even on the Earth's surface. The diary does not mention any measurements at great distances, but in an article[41] he published soon after finishing work at Colorado Springs he states that he observed effects at a distance of about 600 miles.

2 *January*

In this entry of 21 pages (the longest in the Notes) Tesla describes 11 photographs.

The explanation to Photograph XXII concerning the transmission of power from the excited primary circuit to the "extra coil" via the earth is similar to that he gave in 1893[6]. The experiment to which the photograph refers was made with the aim of estimating the power of the oscillator from the thermal effect of the HF current. What Tesla calls the "total energy set in movement" would correspond to the total energy transferred to condenser in the secondary (i.e. the power) if an energy of $\frac{1}{2}CV^2$ is transferred in each half-cycle. It can be shown that the active power dissipated in the circuit is much less than this and is inversely proportional to the Q-factor of the oscillating circuit.

The next few photographs show a movable coil which powers light bulbs by means of the high-frequency power which it picks up. One end of the coil is grounded, the other free or just connected to a short piece of wire. The bulbs are inductively coupled to the resonant coil via the auxiliary secondary. Tesla gives no data about the distance of the resonant coil from the oscillator coil.

Tesla's commentary on photograph XXVIII illustrates that he still retained a lively interest in the problem of electric lighting, even after a period of over ten years. His earlier discovery of the luminescence of the gas and not only the filament with HF currents was here again confirmed[5].

In photograph XXVIII the bulb is connected in series with the terminal capacitive load. In the calculation Tesla does not use the "total energy set in movement" but assumes that $\frac{1}{2}CV^2$ of electrostatic energy is consumed in the bulb in each half-cycle. A similar comment applies to photograph XXIV.

Several times Tesla remarks that the principle energy transfer from the oscillating to the receiving coil takes place via the earth. He finds confirmation for this in the experiment described on p. 363 (photograph XXX). He found that the voltage induced in the receiving coil was greatly reduced if the ground connection was broken. It may be that such experiments led him to the conclusion that "transmission" through the earth was a more efficient method of wireless transmission of power than the "inductive method".

Photograph XXXI is an X-ray picture of a finger. Tesla's comments on this experiment illustrate his interest in this type of radiation, already referred to (see the commentary to 6 June 1899).

3 *January*

After describing some photographs of the laboratory, in the commentary to photograph XLI Tesla explains some transformations of the streamers. He mentions the splitting of streamers near the floor, splitting and reuniting, the phenomenon of luminous parts on the streamers (which he then refers to as sparks), and the breaking up of sparks into streamers and fireballs. His remarks concerning the genesis of fireballs are particu-

larly noteworthy. This phenomenon has been a source of interest since ancient times. Some references to it can be found on Etrurian monuments, in the works of Aristotle, Lucretius and other old sources[63]. Fireballs are considered to be a form of electrical discharge generated during thunderstorms. They are rare in nature, but a fair-sized body of observations has nevertheless been assembled upon which several theories of their origin have been founded. Some hypotheses maintain that fireballs are an optical illusion (an opinion shared by Tesla until he produced them himself), others that they are the traces of meteors. The first genuine scientific approach to the problem was Arago's analysis of some twenty reports of fireballs in 1838. After the publication of his work they became a legitimate subject of scientific interest, but to this day have remained something of an enigma.

A fireball is a luminous sphere occurring during a thunderstorm. Fireballs are usually red, but other colors have also been observed: yellow, green, white and blue. Their dimensions vary, a mean diameter being about 25 cm. Unlike ordinary lightning, fireballs move slowly, almost parallel to the ground. They sometimes stop and change their direction of motion. They can last for up to 5 seconds. Their properties vary greatly from case to case, so that it is believed that there are various types. According to Singer[63] it can be stated that as yet no single theory can explain the occurrence of fireballs in nature.

Despite numerous attempts, only a few types of fireball have been created, and not entirely successfully, in the laboratory. These include the weakly luminescent fireballs generated when ordinary lightning strikes some object. Tesla mentions phenomena of this type several times as the result of sparks or streamers striking wooden objects (see e.g. photograph XL). According to recent theories, fireballs consist of a plasma zone created by electrical discharge. The latest research and calculations by Kapitsa[64] show that the lifetime of a fireball cannot be explained by the energy it receives at the time of genesis, but that it must receive energy from its surroundings. Kapitsa theorizes that this external energy is produced by a naturally created electromagnetic field. The small zone of ionized gas created by the initial lightning or other electrical phenomenon during the storm subsequently expands at the expense of the external electromagnetic field. The diameter of the plasma sphere is determined by the frequency of the external field, so that a resonance occurs. The usual dimensions of fireballs would require that the electromagnetic field have a wavelength of between 35 and 100 cm. According to this theory standing waves created by the reflection of natural electromagnetic waves from the earth would play a certain role. The theory has obtained partial experimental confirmation, but there are still many points on which it is unable to give a satisfactory explanation. It has been found that to maintain a lump of plasma in air requires a power of the electromagnetic field of about 500 W, which is much less than power which can be produced by an electrical discharge. However, too little is known about natural electromagnetic waves to allow any reliable conclusions to be drawn.

Tesla's hypothesis on the origin and maintenance of fireballs includes some points which are also to be found in the most recent theories, but it also bears the stamp of the time. For instance, like Kapitsa, Tesla considers that the initial energy of the nucleus is not sufficient to maintain the fireball, but that there must be an external source of energy. According to Tesla this energy comes from other lightnings passing through the nucleus, and the concentration of energy occurs because of the resistance of the nucleus, i.e. the greater energy-absorbing capacity of the rarefied gas than the surrounding gas through which the discharge passes. In nature the probability of other discharges passing through

the nucleus of a fireball is small, so Kapitsa's hypothesis that act via electromagnetic standing waves is more logical. It is possible that in Tesla's experiments the "passage" of a number of later discharges through the same nucleus was more frequent.

7 January

This is the last entry in the diary. Apart from the usual description of photographs, Tesla writes about experiments he intends to carry out on his return (where?). He qualifies the experiments to date as satisfactory, considering that his aim was "to perfect the apparatus and make general observations". The apparatus which he was then envisaging for future experiments was to be an improved oscillator which would enable better results than any he had so far obtained.

REFERENCES

(1) N. Tesla, LECTURES, PATENTS, ARTICLES, published by Nikola Tesla Museum, Belgrade, 1956 (from now on: Tesla), "The transmission of electric energy without wires", *Electr. World and Eng.* March 5, 1904, A-153.

(2) Tesla: "Alternating electric current generator", U. S. Patent 447 921, March 10, 1891, Appl. Nov. 15, 1890, P-129.
"Method of operating arc lamps", U.S. Patent 447 920, March 10, 1891. Appl. Oct. 1, 1890, P-205.

(3) Tesla: "Phenomena of alternating currents of very high frequency", *The El. World*, Febr. 21, 1891, A-3.
"Electric discharge in vacuum tubes", *The El. Engineer*, July 1, 1891, A-16.

(4) Tesla: "Experiments with alternate currents of very high frequency and their application to methods of artificial illumination", a lecture delivered before the AIEE, May 20, 1891, L-15.

(5) Tesla: "Experiments with alternate currents of high potential and high frequency", a lecture delivered before the IEE, London, Febr. 1892, L-48.

(6) Tesla: "On light and other high frequency phenomena", a lecture delivered before the Franklin Ins. Philadelphia, Febr. 1893, L-107.

(7) Tesla: "On Roentgen rays", *El. Rev.* March 11, 1896, A-27, A-32
"On reflected Roentgen rays, *El. Rev.* April 1, 1896, A-34
"On Roentgen radiations", *El. Rev.* April 8, 1896, A-39
"Roentgen ray investigations", *El. Rev.* April 22, 1896, A-43
"An interesting feature of X-ray radiations", *El. Rev.* July 8, 1896, A-49
"Roentgen rays or streams", *El. Rev.* August 12, 1896, A-51
"On the Roentgen stream", *El. Rev.* Dec. 1, 1896, A-56
"On the hurtful actions of Lenard and Roentgen tubes", *El. Rev.* May 5, 1897, A-62
"On the source of Roentgen rays and the practical construction and safe operation of Lenard tubes", *El. Rev.* Aug. 11, 1897, A-69.

(8) Tesla: "Method of intensifying and utilizing effects transmitted through natural media", U.S. Patent, 685 953, Nov. 5, 1901, Appl. June 24, 1899, P-297.

(9) Tesla: "Method of utilizing effects transmitted through natural media", U.S. Patent 685 954, Nov. 5, 1901, Appl. Aug. 1, 1899, P-303.

(10) Tesla: "Apparatus for utilizing effects transmitted from a distance to a receiving device through natural media", U.S. Patent 685 955, Nov. 5, 1901, Appl. Sep. 8, 1899, P-312.

(11) Tesla: "Aparatus for utilizing effects transmitted through natural media", U.S. Patent 685 956, Nov. 5, 1901, Appl. Nov. 2, 1899, P-319.

(12) Eccles, W. H. WIRELESS, Thornton Butterworth Ltd, London, 1933.

(13) Tesla N. "System of transmission of electrical energy", U.S. Patent 645 576, March 20, 1900, Appl. Sept. 2, 1897.

(14) Tesla: "Apparatus for transmission of electrical energy", U.S. Patent 649 621, May 15, 1900, Appl. Sept. 2, 1897, P-293.

(15) Tesla: "System of electric lighting", U.S. Patent 454 622, June 23, 1891, Appl. Apr. 25, 1891, P-208.
"Electric incandescent lamp", U.S. Patent 455 069, June 30, 1891, Appl. May 14, 1891, P-213.

(16) Tesla: "On electricity", *El. Rev.* Jan. 27, 1897, A-101.

(17) Tesla N. "The stream of Lenard and Roentgen and novel apparatus for their production", Lecture before New York Academy of Science, Apr. 6, 1897 (Nikola Tesla Museum, Belgrade)

(18) Tesla: "High frequency oscillators for electro-therapeutic and other purposes", a lecture delivered before the American Electro-Therapeutic Association, Buffalo, Sept. 13, 1898, L-156.

(19) Fleming, J.A. THE PRINCIPLE OF ELECTRIC WAVE TELEGRAPHY AND TELEPHONY, Third ed. 1916, Longmans Green & Co, London (from now on: Fleming), p. 877.

(20) TRIBUTE TO NIKOLA TESLA, Nikola Tesla Museum, Belgrade, 1961 (from now on: Tribute), Fleming, A. P. M "Nikola Tesla", Jour. of Instit. of Electr. Eng., London, vol. 91, February 1944, A-215.

(21) Wait, J.R. "Historical background and introduction to the special issue on extremely low frequency (ELF) propagation", *IEEE Trans. on Communications*, Vol. COM-22, No. 4, April 1974.

(22) Fleming: p. 22.

(23) Hertz, H.R. UNTERSUCHUNGEN ÜBER DIE AUSBREITUNG DER ELEKTRISCHEN KRAFT, dritte auflage, Leipzig, 1914, Johann Ambrosius Barth.

(24) Цверава Г.К. НИКОЛА ТЕСЛА, изд. Наука, Ленинград, 1974.

(25) Tesla: "Means for generating electric currents", U.S. Patent 514 168, Febr. 6, 1894, Appl. Aug. 2, 1893, P-225.

"Method of regulating apparatus for producing currents of high frequency", U.S. Patent 568 178, Sep. 22, 1896. Appl. June 20, 1896, P-228.

"Apparatus for producing electric currents of high frequency and potential", U.S. Patent 568 176, Sep. 22, 1896, Appl. April 22, 1896, P-233.

"Method and aparatus for producing currents of high frequency", U.S. Patent 568 179, Sep. 22, 1896, Appl. July 6, 1896, P-237.

"Apparatus for producing electrical currents of high frequency", U.S. Patent, 568 180, Sep. 22, 1896, Appl. July 9, 1896, P-241.

"Apparatus for producing electric currents of high frequency", U.S. Patent, 577 670, Feb. 23, 1897, Appl. Sep. 3, 1896, P-245.

"Apparatus for producing currents of high frequency", U.S. Patent, 583 953, June 8, 1897, Appl. Oct. 19, 1896, P-249.

(26) Tesla: "Electrical transformer", U.S. Patent, 593 138, Nov. 2, 1897, Appl. March 20, 1897, P-252.

(27) Tesla: "Electric circuit controller", U.S. Patents:

609 251, Aug. 16, 1898, Appl. June 3, 1897, P-256.
609 246, Aug. 16, 1898, Appl. Febr. 28, 1898, P-272.
609 247, Aug. 16, 1898, Appl. Mar. 12, 1898, P-276.
609 248, Aug. 16, 1898, Appl. Mar. 12, 1898, P-279.
609 249, Aug. 16, 1898, Appl. Mar. 12, 1898, P-282.
613 735, Nov. 8, 1898, Appl. Apr. 19, 1898, P-285.
"Electrical circuit controller", U.S. Patents:
609 245, Aug. 16, 1898, Appl. Dec. 2, 1897, P-262.
611 719, Oct. 4, 1898, Appl. Dec. 10, 1897, P-267.

(28) Tesla: "Electrical oscillators", *El. experimenter*, July, 1919, A-78.

(29) Oberbeck A. "Ueber den Verlauf der Elektrischen Schwingungen bei den Tesla'schen Versuchen", *Wied. Ann. der Physik*, 1895, vol. 55, s. 623.

(30) Fleming: p. 792.

(31) Fleming J.A. and Dyke G.B. "Some resonance curves taken with impact and spark-ball dischargers", *Proc. Phys. Soc. London*, vol. 23, Feb. 1911, p. 136.

(32) Попов А. С. "Прибор для обнаружения и регистрирования электрических колебаний", *Журн. русского физ.—хемич. об-ва*, 1896, т. 22, *4. физич.*, отд. 1, вып. 1.

(33) Fleming: p. 513.

(34) Galeys J. TERRESTRIAL PROPAGATION OF LONG ELECTROMAGNETIC WAVES, New York, Pergamon Press, 1972.

(35) TESTIMONY U.S. District Court, New York, Oct. 3, 1916. Samuel, M. Kintner and Halsey M. Barrett vs. Atlantic Communication Comp.

(36) Hawks E. PIONEERS OF WIRELESS, London, Methuen Co. Ltd, 1927. p. 205.

(37) Tesla: "Incandescent electric light", U.S. Patent 514 170, Febr. 6, 1894, Appl. Jan. 2, 1892, P-216. Also see ref. (15).

(38) Tesla: "System of signaling", U.S. Patent 725 605, Apr. 14, 1903, Appl. July 16, 1900, P-337.
"Method of signaling", U.S. Patent 723 188, Mar. 17, 1903, Appl. June 14, 1901, P-352.

(39) Fleming: p. 287.

(40) Born. M. and Wolf E. PRINCIPLES OF OPTICS, Third ed. Pergamon Press, 1965, Oxford, p. XXVI.

(41) Tesla: "The problem of increasing human energy", *The Cent. Illustr. Mon. Magazine*, June 1900; A-109.

(42) Tesla: "Art of transmitting electrical energy through the natural mediums", U.S. Patent 787 412, Apr. 18, 1905, Appl. May 16, 1900, P-331.

(43) ОЧЕРКИ ИСТОРИИ РАДИОТЕХНИКИ, изд. Академия Наук СССР, Москва, 1960.

(44) Tesla: "Apparatus for transmitting electrical energy", U.S. Patent 1 119 732, Dec. 1, 1914, Appl. Jan. 18, 1902, P-357.

(45) Pocklington H.C. "Electric oscillations in wires", *Proc. Camb. Phyl. Soc.* Oct. 25, 1897, vol. **ix**, p. 324.

(46) Zenneck J. LEHRBUCH DER DRAHTLOSEN TELEGRAPHIE, Verlag, Stuttgard, 1915.

(47) Fleming: p. 467.

(48) Fleming: p. 483.

(49) Calzecchi — Onesti T. "Sulla conduttivita elettrica delle limature metalliche", *Nuovo cimento*, 1884, v. **16**, p. 58, 1885, v. **17**, p. 38 (Pisa).

(50) Tesla: see ref. (25), P-225.

(51) Tesla: see ref. (25), P-228, P-233.

(52) Tesla: see ref. (25), P-237, P-241.

(53) Tesla: see ref. (25), P-245, P-249.

(54) Jackson J.D. CLASSICAL ELECTRODYNAMICS, John Wiley, 1975, New York.

(55) Fleming: p. 706.

(56) Terman F. E. and Pettit J. M. ELECTRONIC MEASUREMENTS, McGraw Hill, New York, 1952.

(57) Russell A. "On the magnetic field and inductance coefficients of circular cylindrical, and helical currents", *Phyl. Mag.* April, 1907.

(58) Fleming: p. 637.

(59) Tesla: "Method of and apparatus for controlling mechanism of moving vessels or vehicles", U.S. Patent 613 809, Nov. 8, 1898, Appl. July 1, 1898, P-363.

(60) Maxwell J.C. "A dynamical theory of the electromagnetic field", *Phyl. Trans. Roy. Soc.*, 1865, vol. **155**, p. 419.

(61) Erskine-Murray J. A HANDBOOK OF WIRELESS TELEGRAPHY, Crosby Lockwood, London, 1913, chap. XVII.

(62) Маринчић А. "Тесла — один из основоположников современой электротехники", *Вопросы истории естествознания и техники*, Акад. Наук, СССР, Москва, 1976, Выпуск 2 (55)

(63) Singer S. THE NATURE OF BALL LIGTNING, Plenum Press, 1971, New York.

(64) Капица, П.Л. "Шаровая молния и радиоизлучение линейных молний". *Жур. тех. физики*, **88**, 1829, (1968)

(65) United States Reports, vol. 320, Oct. 1942, Oct. 1943, Washington, MARCONI v. s. U.S.

(66) Bowers B. X-RAYS, Science Museum, London, 1970.

(67) Tesla N. "Electrical condenser", U.S. Patent 567 818, Sep. 15, 1896, Appl. June 17, 1896.

(68) Testimony in behalf of Tesla, Interference No. 21,701, United States Patent Office, New York, 1902.

(69) Letter of Tesla to Morgan J.P. Jan. 9, 1902. (Nikola Tesla Museum in Belgrade).

(70) Tesla: "Apparatus for the utilization of radiant energy", U.S. Patent 685 957 Nov. 5, 1901, Appl. Mar. 21, 1901, P-343.
"Method of utilizing radiant energy", U.S. Patent 685 958 Nov. 5, 1901, Appl. Mar. 21, 1901. P-348.

685.957

(71) Wheeler L.P. "Tesla's contribution to high frequency", *Electr. Engineering*, New York, August 1943, p. 355, also Tribute: A-211.

(72) Wait J.R. "Propagation of ELF electromagnetic waves and project Sanguine/Seafarer", *IEEE Jour, of Ocean. Eng.*, Vol **OE-2**, No. 2, April 1977.

(73) Morrison J.F. and Smith P.H. "The shunt-excited antenna", *Proc. IRE*, 1937, v. **25**, No. 26.

NIKOLA TESLA: *COLORADO SPRINGS NOTES 1899—1900* ● EDITOR IN CHIEF: *MILOŠ STAMBOLIĆ* ● GRAPHIC DESIGN: *STEVAN VUJKOV* ● TECHNICAL EDITOR: *BOGDAN ĆURČIN* ● PUBLISHED BY *NOLIT*, BEOGRAD, TERAZIJE 27 ● PRINTED IN YUGOSLAVIA BY *BIGZ*, BEOGRAD, VOJVODE MIŠIĆA 17,

1978

TESLA: The Physics Program

Ties Behnke, DESY Hamburg
28−08−2001

- TESLA: The project
- Particle Physics at TESLA
- Physics with the Free Electron Laser
- The Road to TESLA

The TESLA Project

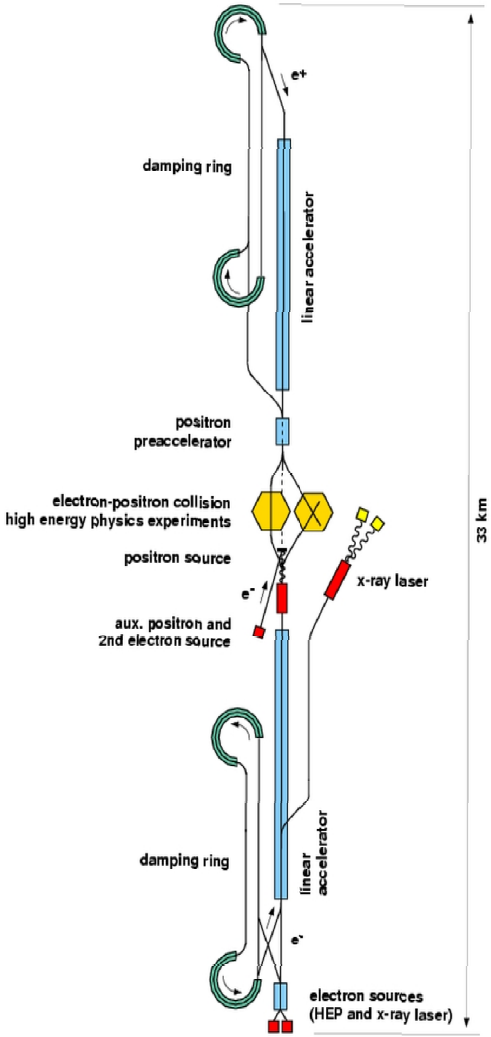

Max energy 500–800 GeV

$\mathscr{L} = 5\ 10^{33}\ cm^{-2} s^{-1}$

Integrated Luminosity:
$500\ fb^{-1}$ /year

Site length: 33km

Integrated facility for electron positron accelerator and Free Electron Laser

TESLA: TDR submitted 3/01

1134 authors from 304 Institutes in 36 countries

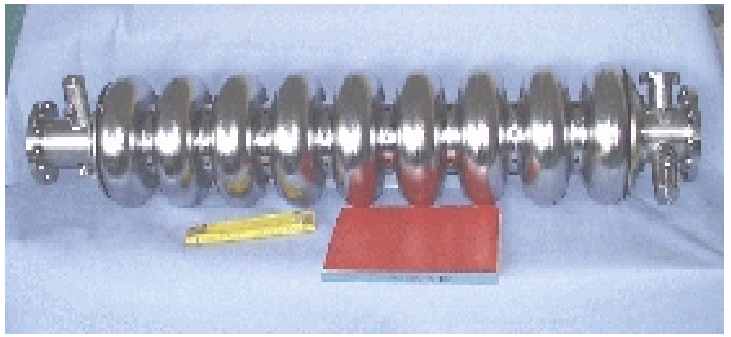

Superconducting cavity:
gradient > 25 MV/m

The TESLA site near Hamburg

TESLA

TESLA

- a machine concept: superconducting acceleration modules
- a collaboration:
  build and operate a test accelerator TTF
- a proposal to build such a machine

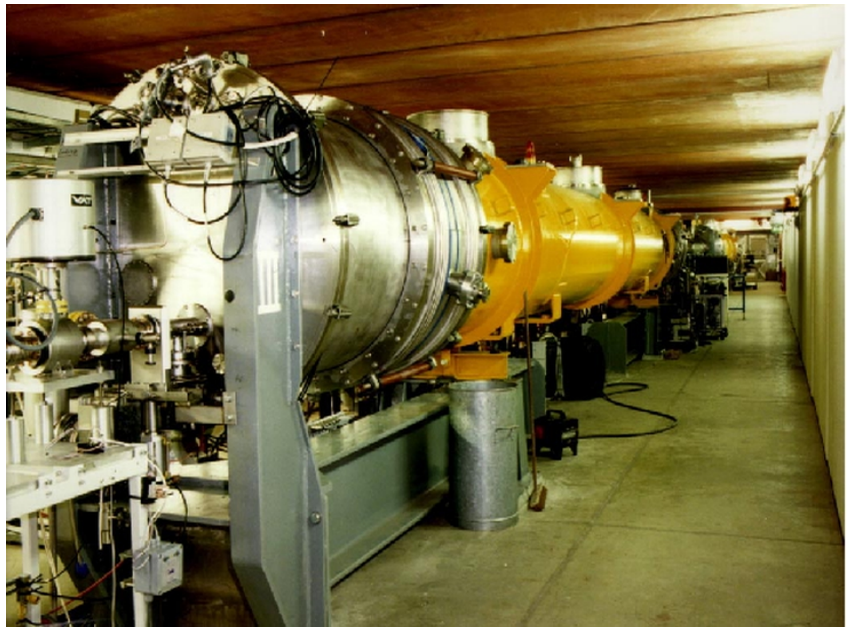

The TESLA Test Facility TTFI

The TESLA Collaboration

IHEP
Academia Sinica, Beijing

Tsinghua-University, Beijing

SEFT
University of Helsinki

CEA/DSM
(DAPNIA, CE-Saclay)

IN2P3
(INP Orsay + LAL Orsay)

Max-Born-Institut,
Berlin-Adlershof

DESY, Hamburg und Zeuthen

GH Wuppertal
Fachbereich Physik

IAP, University of Frankfurt

GKSS, Geesthacht

FZ Karlsruhe

IfH, TU Darmstadt

ITE, TU Berlin

IKK, TU Dresden

RWTH Aachen III

Uni Hamburg
Uni Rostok
BESSY Berlin

INFN Legnaro

INFN Frascati

INFN Milano

INFN Roma II

Polish Academy of Science
Warsaw (IF PAN)

University of Warsaw,
Inst. of Exp. Physics

University of Cracow (INP)

Univ. of Mining & Metallurgy,
Cracow

Polish Atomic Energy
Agency, Cracow

Soltan Institute for Nuclear
Studies, Otwock-Swierk

JINR Dubna

INR Troitsk

IHEP Protvino

MEPhI Moscow

INP Novosibirs

Cornell University
Newman Lab. Ithaca NY

Fermilab
Batavia IL

UCLA
Los Angeles CA

ANL

Yerevan Physics Institut

Overall TESLA Layout

TESLA tunnel: diameter 5.50 m

- Overall collider layout:

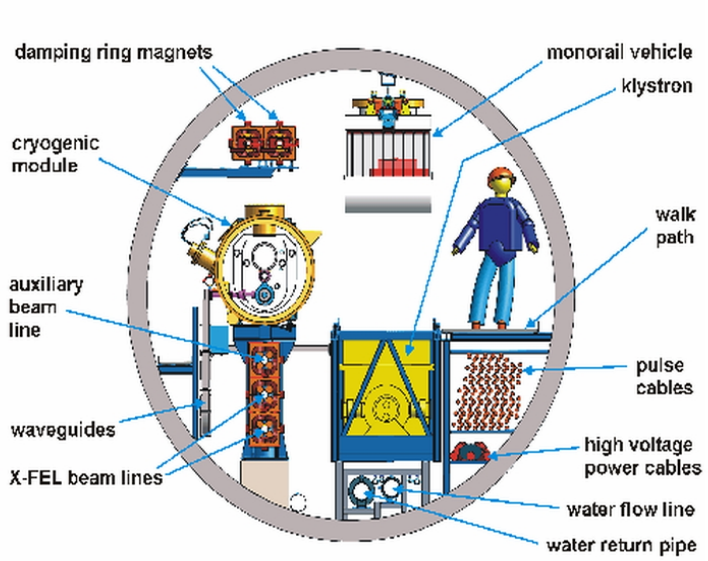

DESY

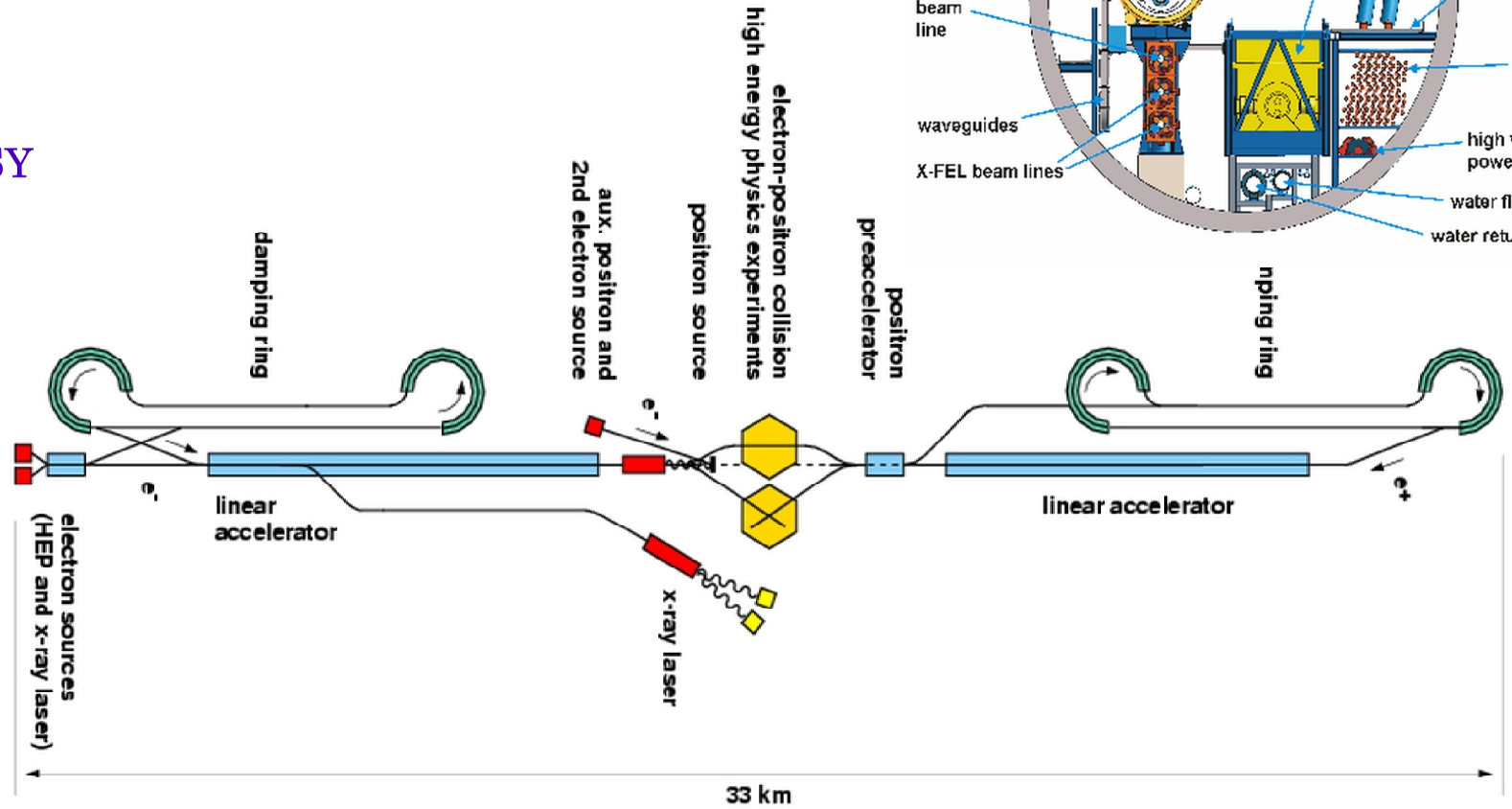

TESLA Parameters

TESLA 500 GeV parameters

		TESLA-500
Accelerating gradient	E_{acc} [MV/m]	23.4
RF-frequency	f_{RF} [GHz]	1.3
Fill factor		0.747
Total site length	L_{tot} [km]	33
Active length	[km]	21.8
No. of accelerator structures		21024
No. of klystrons		584
Klystron peak power	[MW]	9.5
Repetition rate	f_{rep} [Hz]	5
Beam pulse length	T_P [μs]	950
RF-pulse length	T_{RF} [μs]	1370
No. of bunches per pulse	n_b	2820
Bunch spacing	Δt_b [ns]	337
Charge per bunch	N_e [10^{10}]	2
Emittance at IP	$\gamma\varepsilon_{x,y}$ [10^{-6}m]	10, 0.03
Beta at IP	$\beta^*_{x,y}$ [mm]	15, 0.4
Beam size at IP	$\sigma^*_{x,y}$ [nm]	553, 5
Bunch length at IP	σ_z [mm]	0.3
Beamstrahlung	δ_E [%]	3.2
Luminosity	L_{e+e-} [10^{34}cm^{-2}s^{-1}]	3.4
Power per beam	$P_b/2$ [MW]	11.3
Two-linac primary electric power (main linac RF and cryogenic systems)	P_{AC} [MW]	97
e^-e^- collision mode:		
Beamstrahlung	$\delta_{E,e-e-}$ [%]	2.0
Luminosity	L_{e-e-} [10^{34}cm^{-2}s^{-1}]	0.47

TESLA 800 GeV parameters

		TESLA-800
Accelerating gradient	E_{acc} [MV/m]	35
Fill factor		0.79
Repetition rate	f_{rep} [Hz]	4
Beam pulse length	T_P [μs]	860
No. of bunches per pulse	n_b	4886
Bunch spacing	Δt_b [ns]	176
Charge per bunch	N_e [10^{10}]	1.4
Emittance at IP	$\gamma\varepsilon_{x,y}$ [10^{-6}m]	8, 0.015
Beta at IP	$\beta^*_{x,y}$ [mm]	15, 0.4
Beam size at IP	$\sigma^*_{x,y}$ [nm]	391, 2.8
Bunch length at IP	σ_z [mm]	0.3
Beamstrahlung	δ_E [%]	4.3
Luminosity	L [10^{34}cm^{-2}s^{-1}]	5.8
No. of klystrons		1240
Power per beam	$P_b/2$ [MW]	17
Two-linac primary electric power	P_{AC} [MW]	$\approx$150

TESLA Basic Concept

- superconducting solid Nb cavities
  - E(acc) ~ 25 MV/m, T=2K

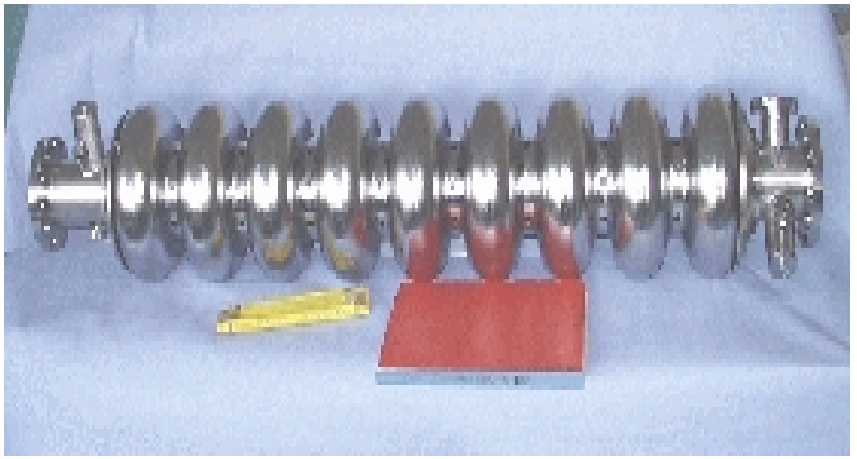

- Long RF pulses (~ 1 ms)
  - low RF peak power (200 kW/m)
  - long bunch train with large interbunch spacing
- Low RF frequency (1.3 GHz)
  - small wakefields
- Overall design compatible with E(cms) = 91 .... 800 GeV
  - baseline design and parameters for 500 GeV

The TESLA acceleration structures:

module geometry	*module length*	*V(acc)*	*Fill factor*	*RF/module*
9−cell structure	1.04	23.40	78.00%	219
4x7 superstructure	3.23	22.00	89.00%	675

TESLA Bunch Structure

- Main characteristics:
  - long bunch trains, even longer times between bunch trains

500 GeV	5 Hz x 2820 x $2.0\,10^{10}$
800 GeV	3 Hz x 4568 x $1.4\,10^{10}$

- possibility of orbit corrections within single bunch train (fast feedback system)
- Head on collisions are possible
- Bunch collisions are well separated in detector

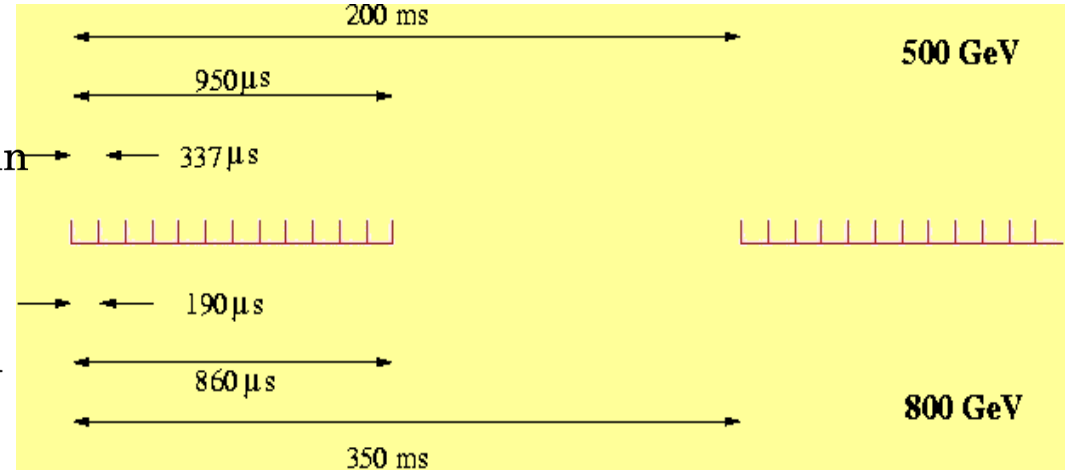

Status of Cavities Development

- TESLA Test Facility (TTF) Goals:
  - Phase I:
    - development of acceleration modules
    - proof of principle of operation of SC linac at high (> 22.5 GeV) gradient
    - proof of principle for SASE FEL in the VUV (60 nm)

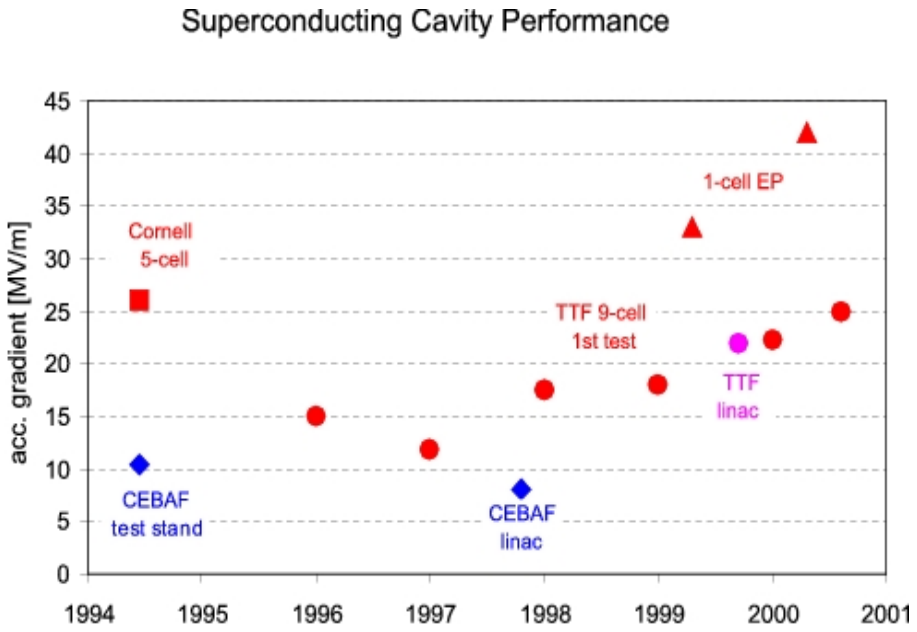

cavity performance per production series

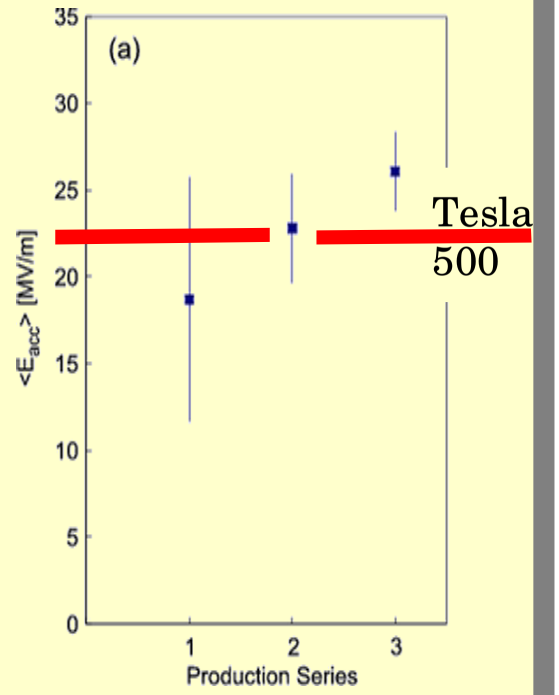

Single Cell Cavities

- Further improvement of gradient: electropolishing

"normal" welded cavities

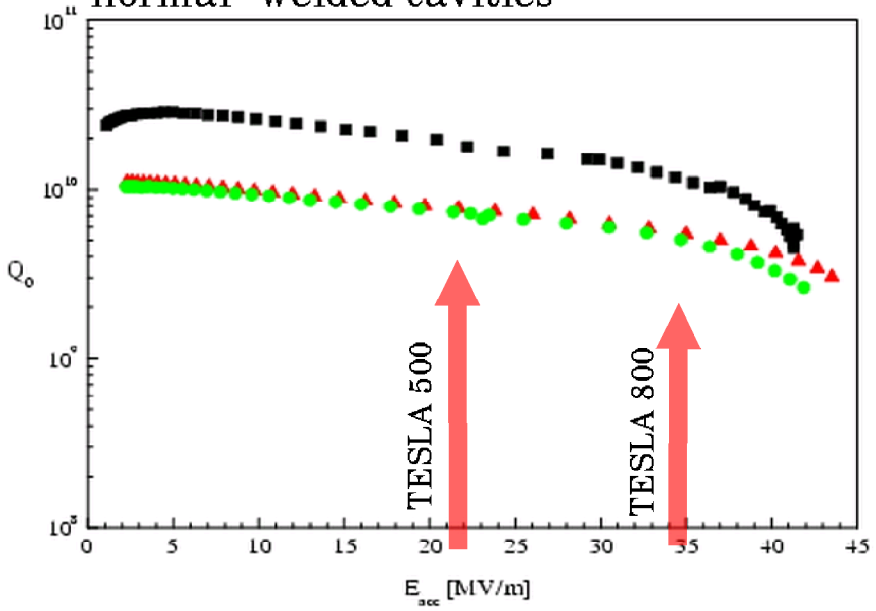

Gradients in excess of 40MV/m
in single cell cavities

Chemically polished Electropolished

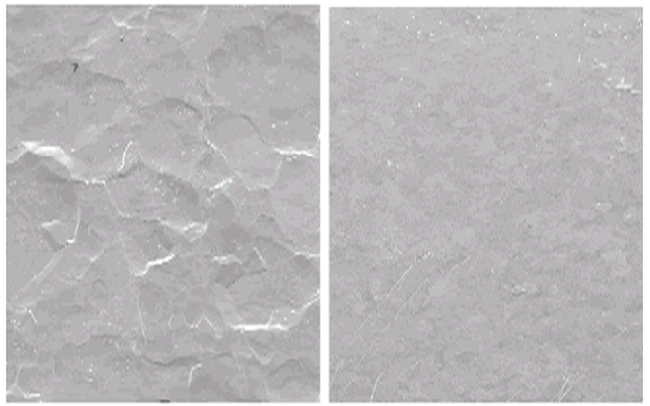

Hydroformed cavities:

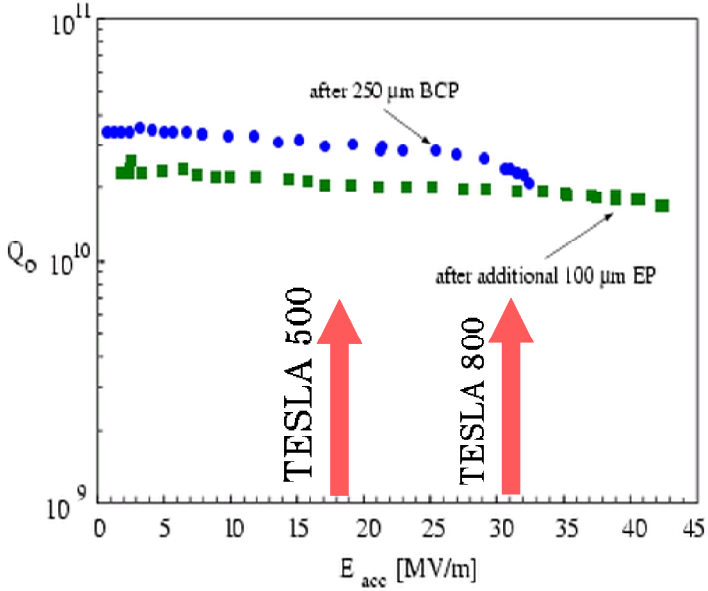

- Overall development looks very encouraging
- Clear path to larger energies (800 GeV at least)

RF Power: Klystrons

TH 1801 multi beam Klystron

- High power (10 MW peak)
- Low voltage (117 kV)
- High efficiency (65 %)
- Long pulse (1.5 ms)

System has been fabricated in industry

Is now being used at the TTF LINAC

Lorentz Force Deformation

- Problem: Cavity deform under the Lorentz force at high gradient
  - Cavity changes its shape
  - cavity is detuned

- solution:
  - active compensation using piezo–crystal

l = 39mm
V(max)= 150 V
f(max) = 500 Hz

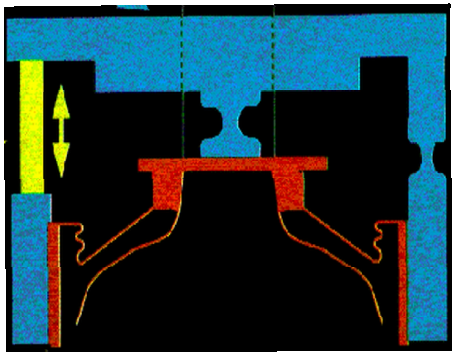

piezo actuator

first successful test on cavity C45 at 20 MV/m

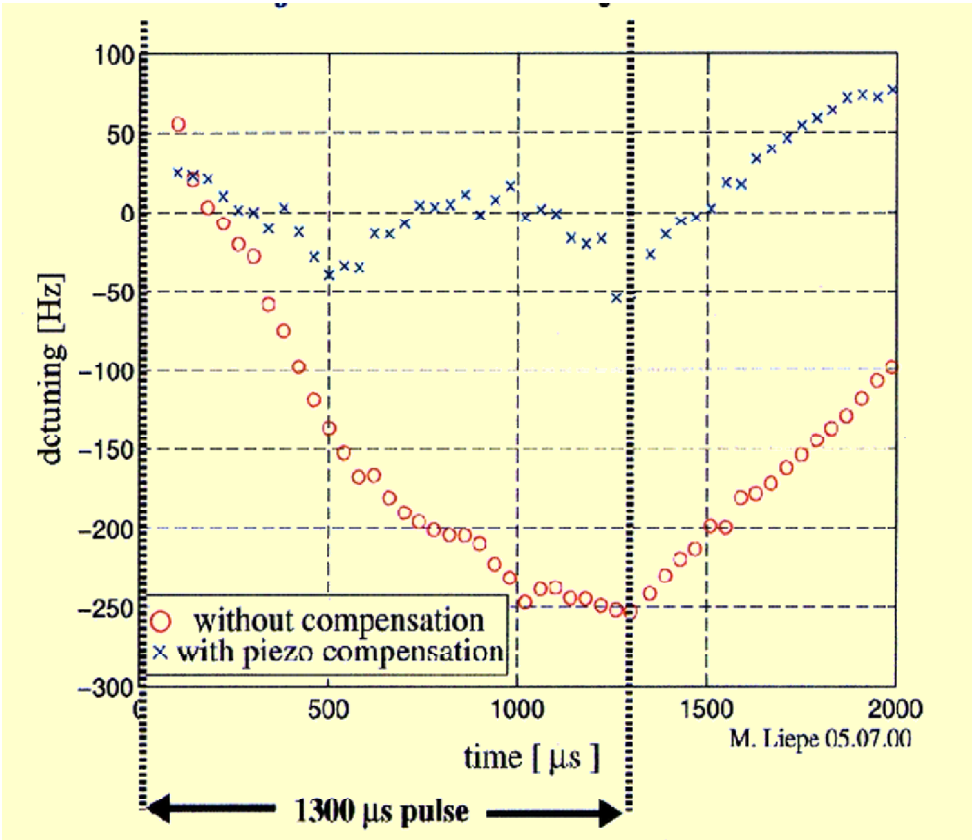

The Free Electron Laser at TTF

- TTF LINAC is used to drive a SASE FEL
  - Goal I: Proof of Principle for VUV FEL
  - Goal II: Operation of user facility after 2003

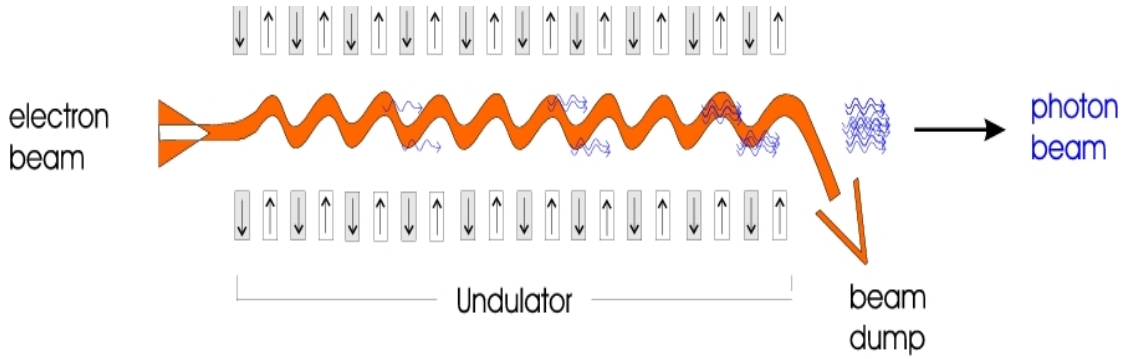

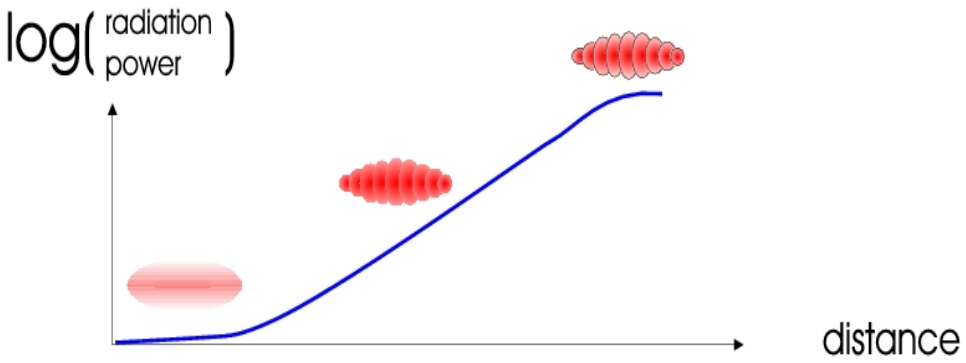

Free Electron Laser in the Self Amplified Spontaneous Emission (SASE) mode

The TTF FEL

- February 2000: observe first lasing at <100 nm
- Since then: systematic studies
  - very reliable and reproducible behaviour
  - continuous reduction of the frequency
  - Main radiation characteristics have been found

CCD image of the FEL beam:

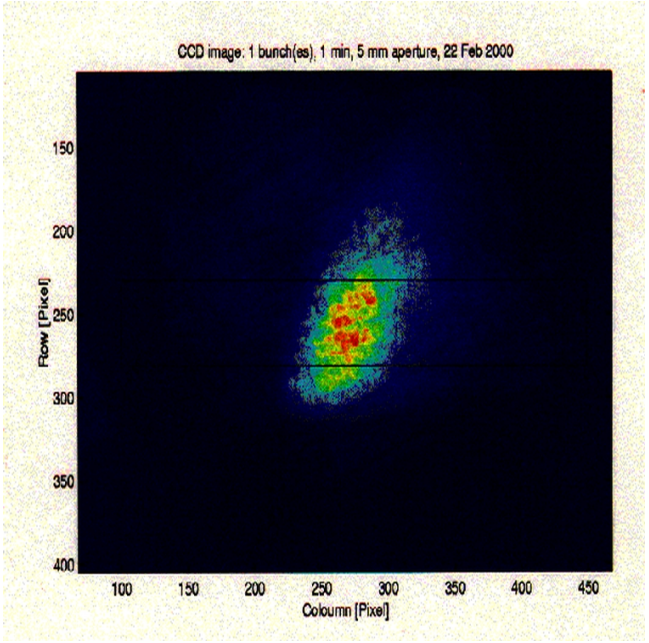

Signal development

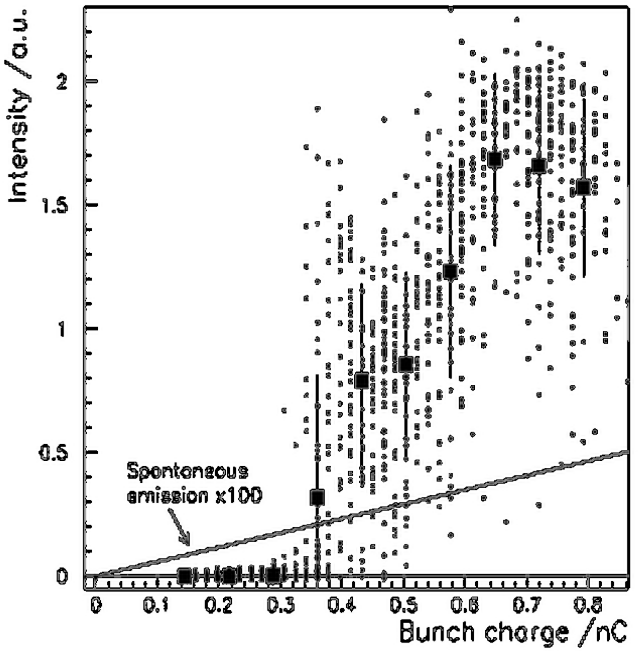

The TTF FEL

Since observation of first lasing:
continuous further development of the system towards:

Smaller wavelength
better reproducibility
higher brilliance

Development of X–ray energy

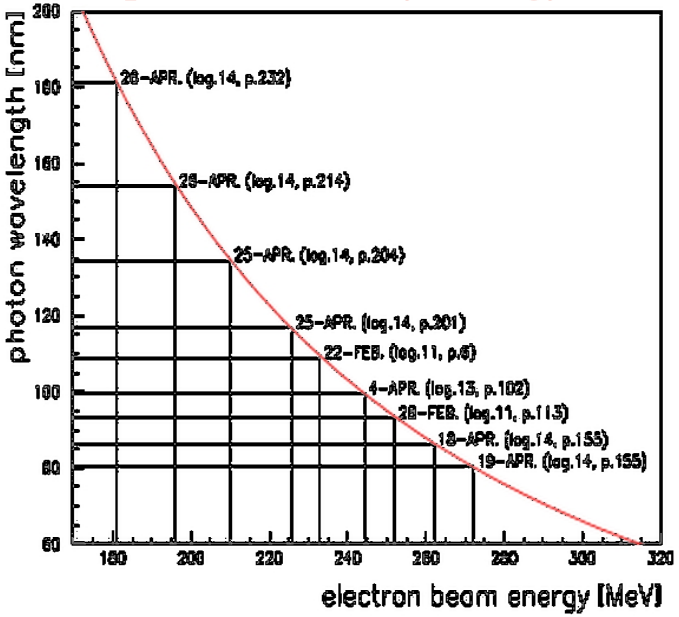

FEL operation: brilliance vs energy

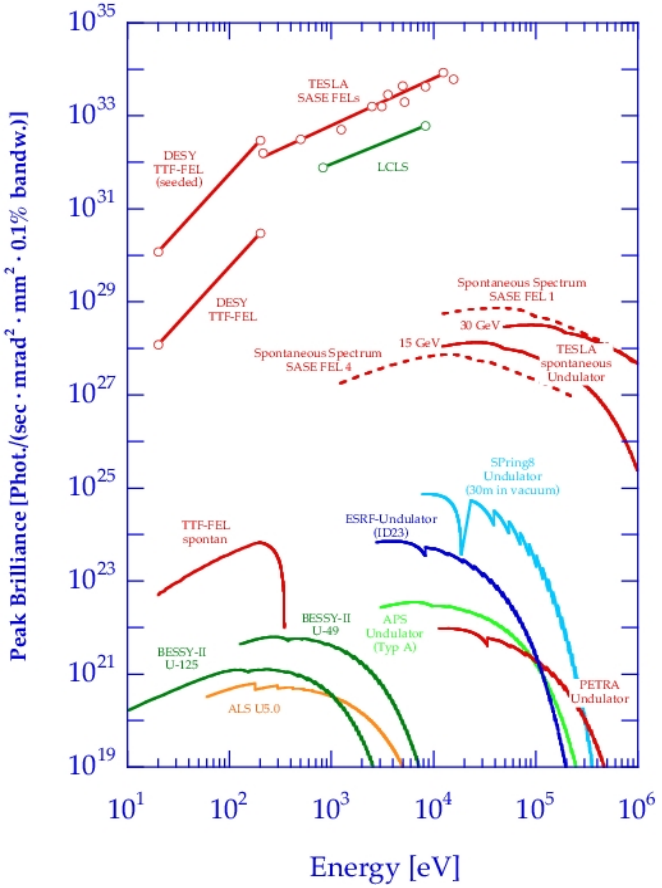

Overall TESLA Layout

- Overall collider layout:

TESLA tunnel: diameter 5.50 m

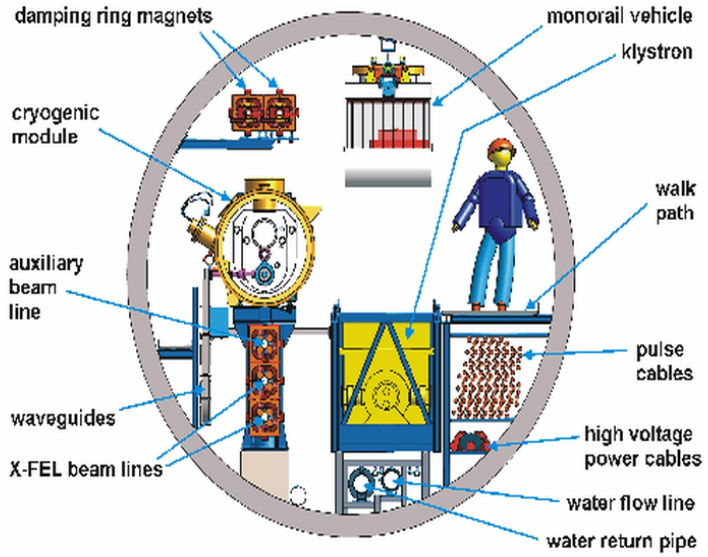

DESY

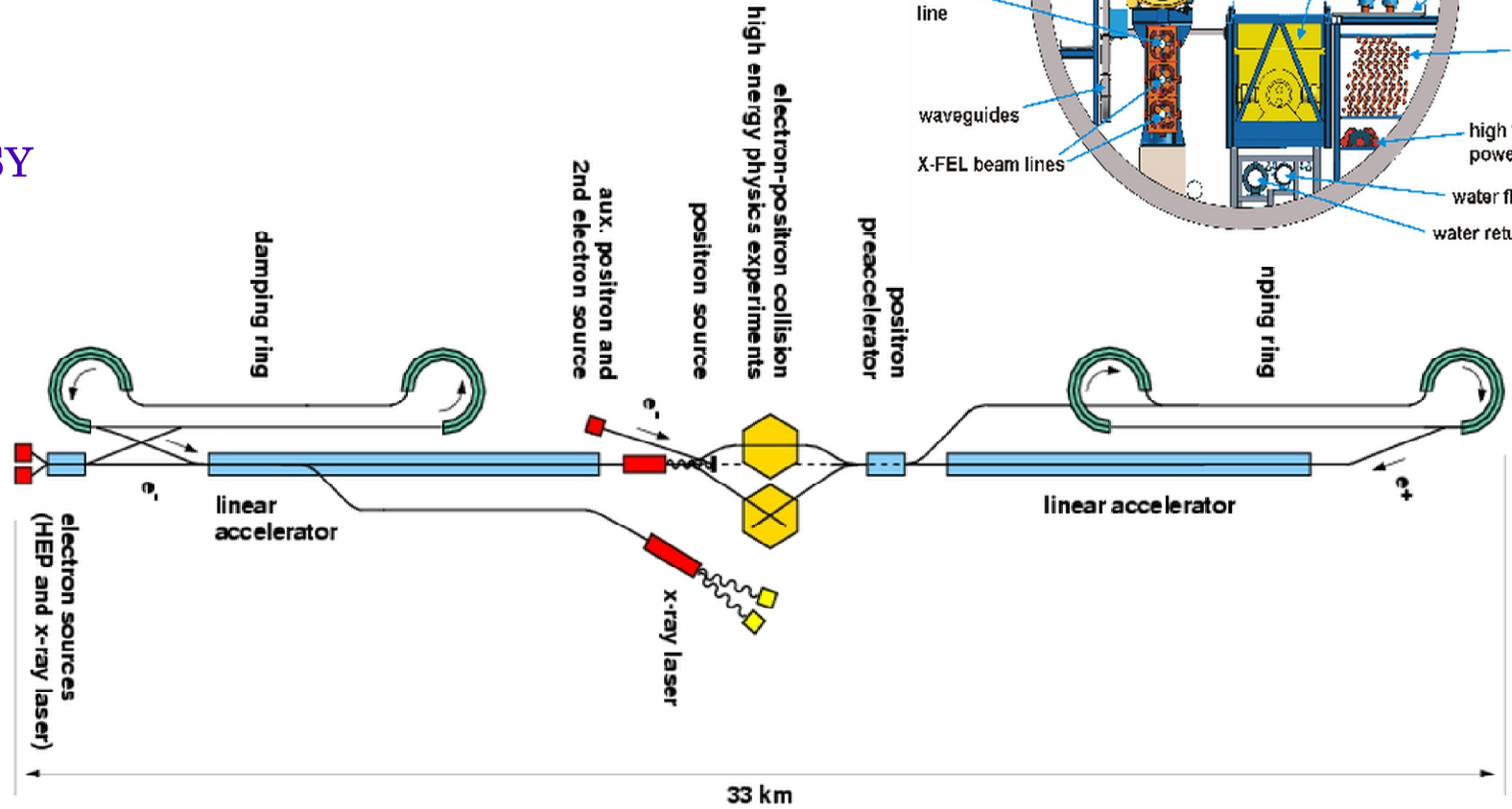

Collider Layout: Injector

TESLA injector complex:

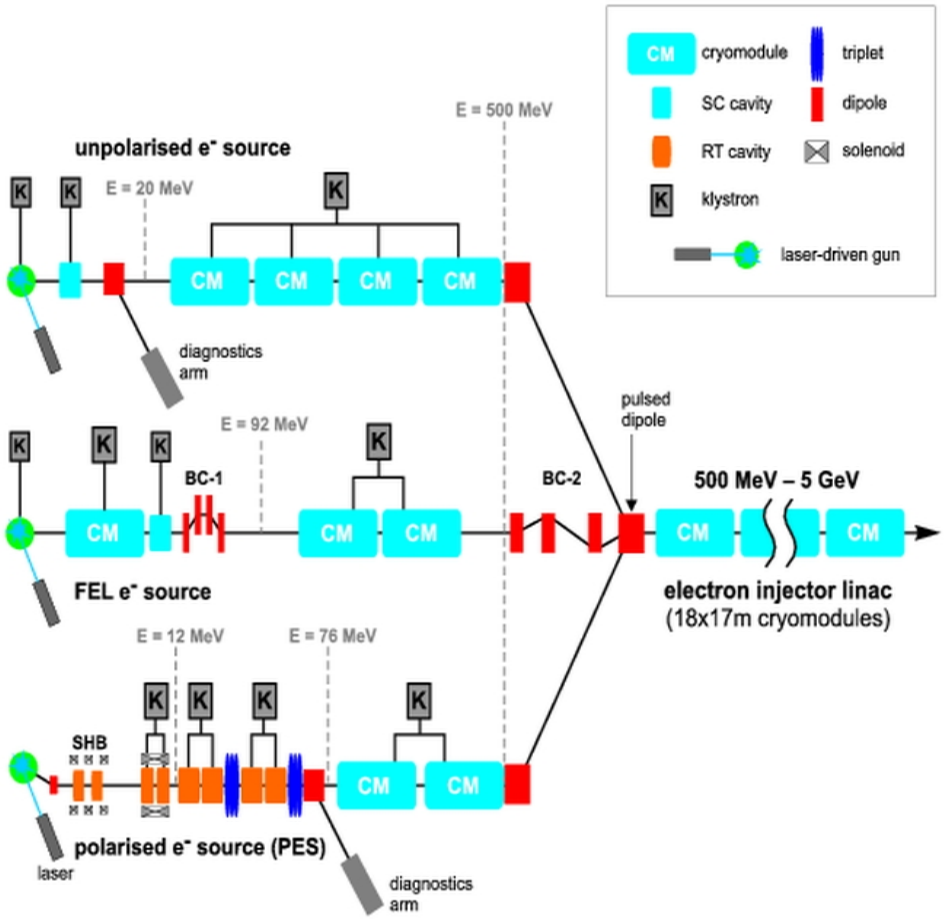

- Laser driven electron guns
- Three separate guns for
  - Unpolarised
  - Polarised
  - FEL beam

- Electron polarisation is part of the baseline program

Collider Layout: Positron Source

- Positron source: use incoming electron beam as a source of photons produce positrons
- Small degradation of quality of beam is acceptable

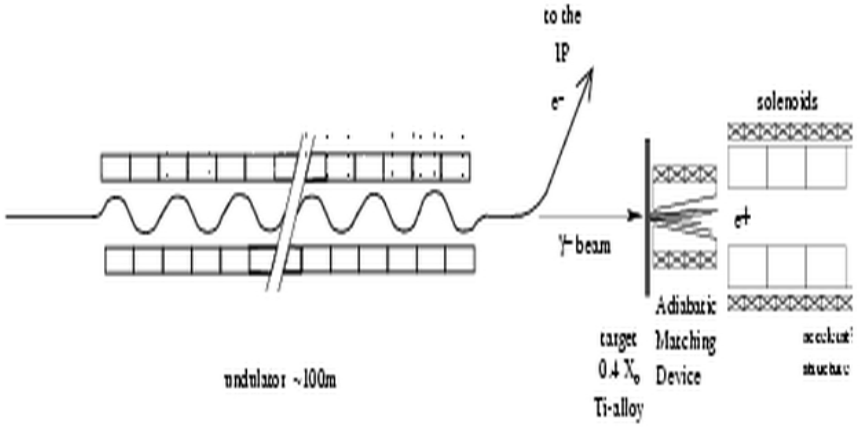

	SLC	TESLA
No of positron per pulse	4.00E+010	5.60E+013
No of bunches per pulse	1	2820
Pulse duration	3 ps	0.95 ms
Bunch spacing	8.3 ms	337 ns
Repetition frequency	120 Hz	5 Hz

- Allows very high positron currents
- Possibility of positron polarisation

- Expected positron polarisation: between 45 and 60% at (nearly) full intensity
- Need to build a helical undulator (technologically challenging)
- Positron Polarisation is not part of the baseline design

The Interaction Region

Conceptual layout of the interaction region(s):

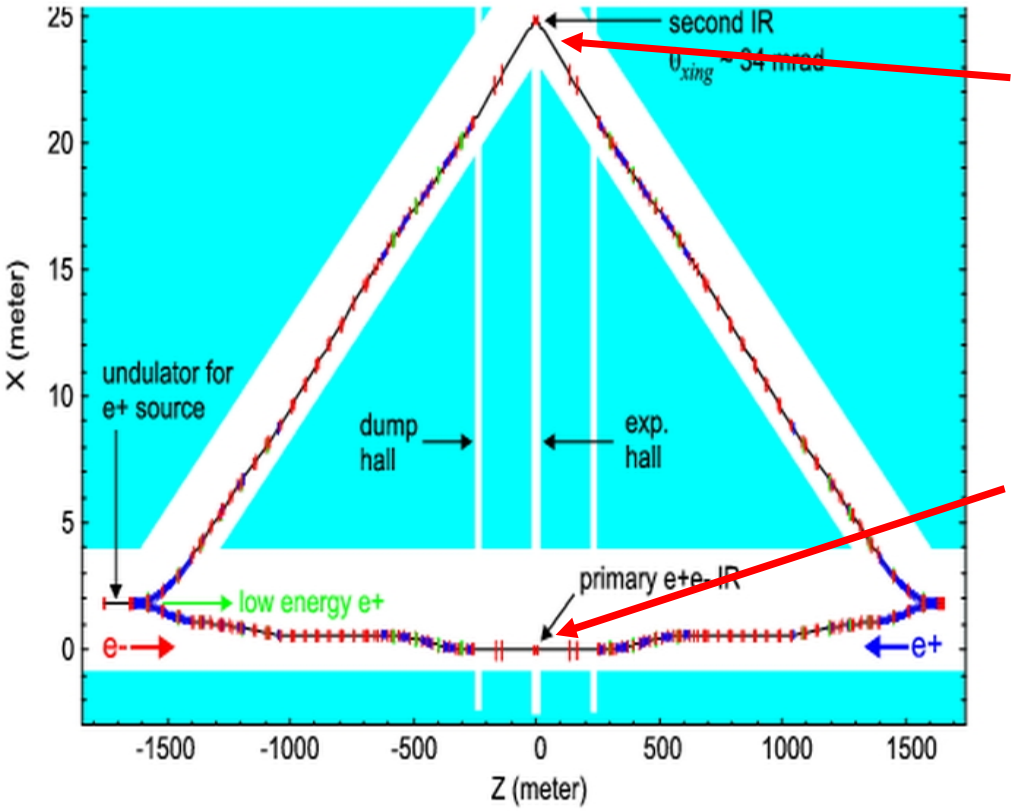

2. IR not part of baseline design

IR for gamma gamma
electron gamma
electron electron
electron positron
34 mrad crossing angle

IR for primary electron positron program (or electron electron)
no crossing angle

Fast Feedback at the IP

- Long bunch trains, long times between bunches:
  - Feedback system within bunch train possible to stabilise the luminosity

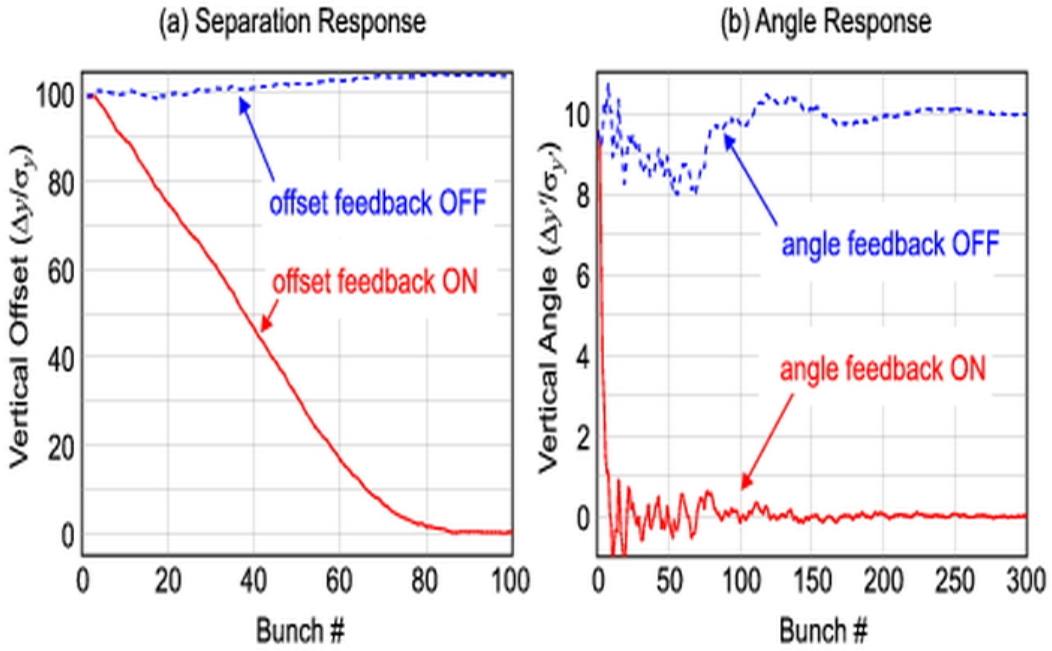

- Act on angle
- Act on offset

- After about 90 bunches: reduction by factor 1000

- Train to train tolerance of final doublet limiting the luminosity loss to 10%: 200nm

A TESLA Site near Hamburg

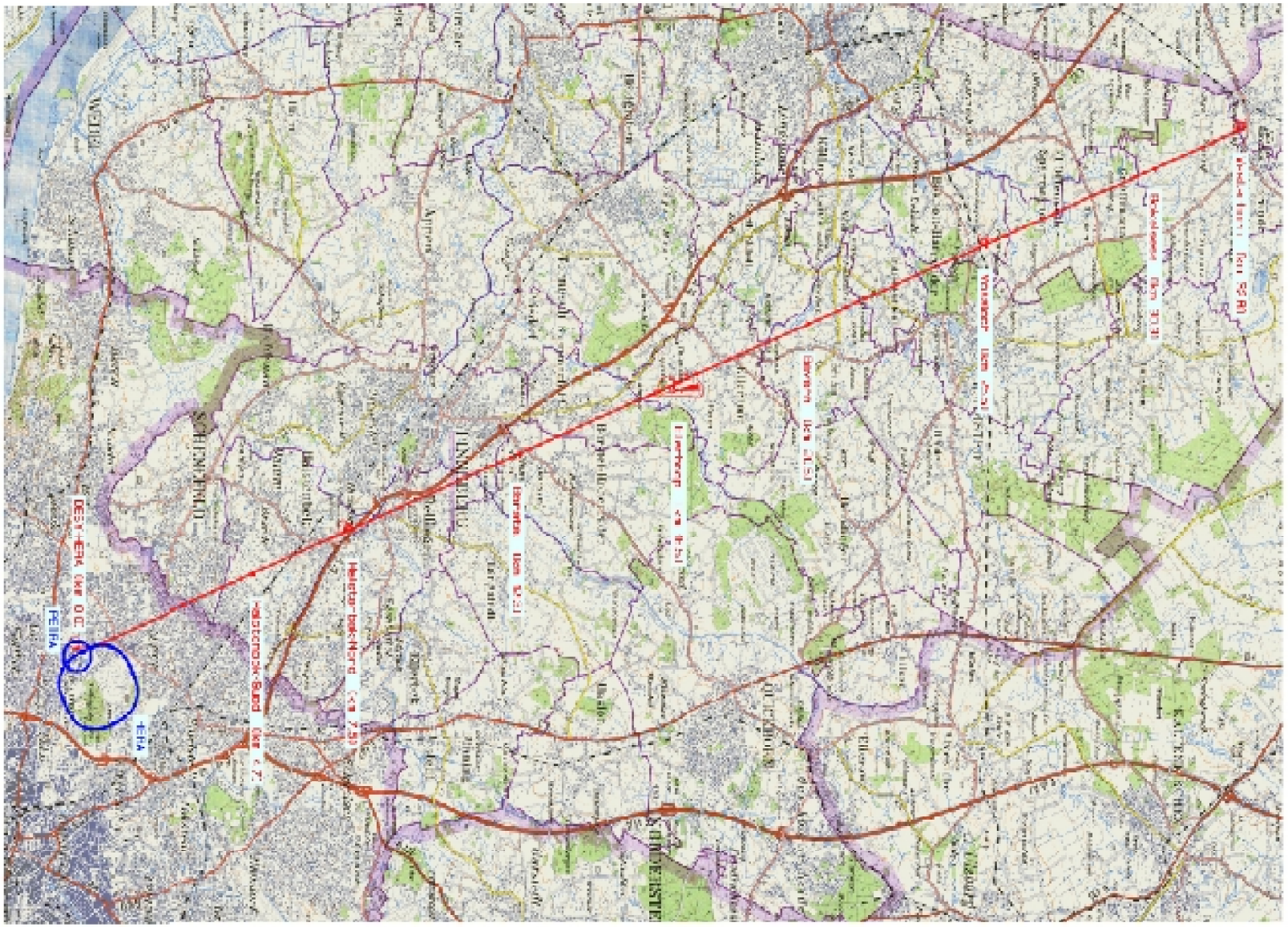

Summary TESLA Collider

- The TESLA collider is in a rather good state:
  - technology is in hands
  - serious industrial studies about production have been finished successfully
  - so far no major show stoppers have been found

  - of course many detailed technical question still need to be solved
  - the energy upgrade potential needs to be firmed up:
    - 800 GeV seems do–able already now, though more cavity development is needed
    - beyond 800 GeV up to 1 TeV seems in reach if better cavities can be made
    - beyond 1 TeV:
      - up to 1.2 TeV by making the machine asymmetric (extend one side only)
      - higher energies by extending both arms of the machine

- competing technologies:
  - American/ Japanese warm machine (X–Band):
    intense development ongoing, but serious problems with cavities. Final proof of operation not yet done
  - Japanese proposal for a "low energy" machine (350 GeV, top and Higgs factory)
    warm technology, similar problems with cavities, though (due to lower gradient) not as serious

- next generation technology: CLIC
  - estimated 10 years of basic research needed before a proposal can be made
  - a machine for the time after LHC/ TESLA to explore the multi–TeV regime

TESLA Parameters

TESLA: expected cross sections for some reactions

Luminosity: $5 \times 10^{34}\ cm^{-2}\ s^{-1}$

bunch trains of 2820 bunches
time between bunches 337 ns
integrated luminosity/year 500 fb^{-1}

100000 Higgs/year
300000 tt / year
1000000 WW/year

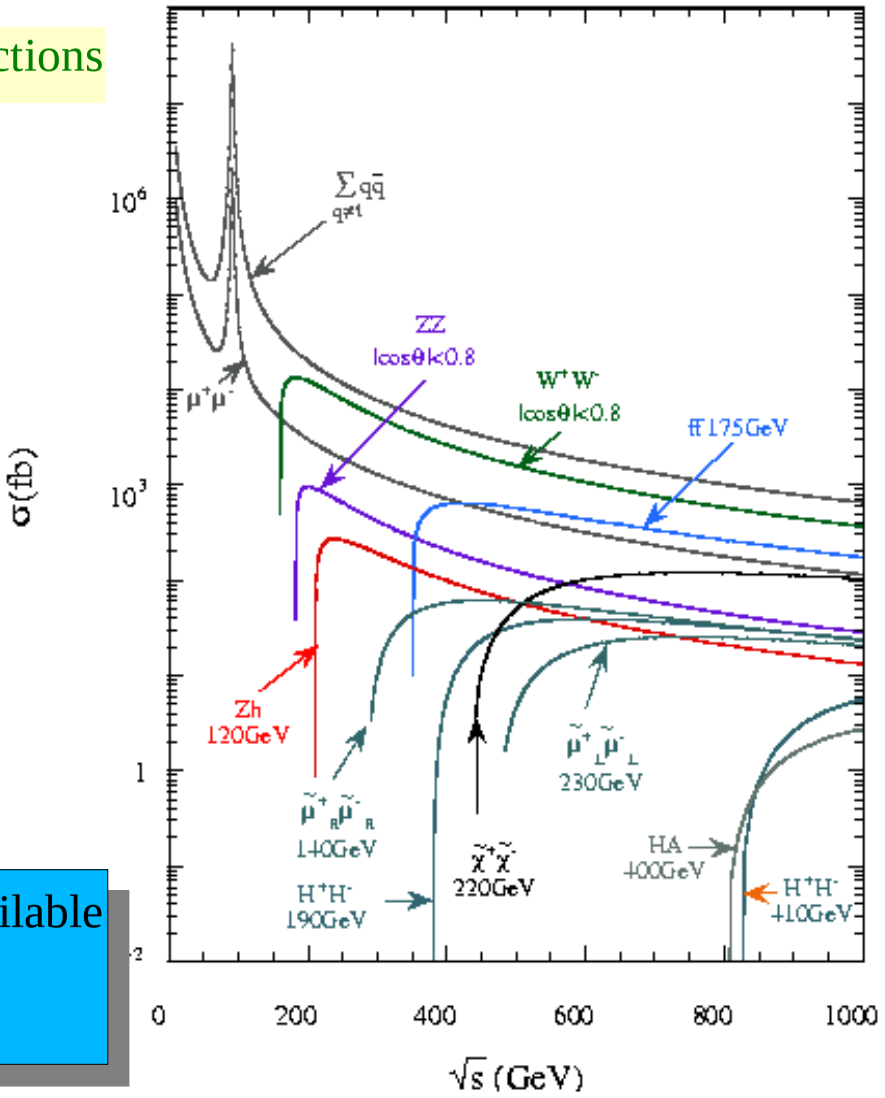

enormous quantities of data will be available at the highest energies!
Precision physics will be possible

Key Questions in Particle Physics

- What is the origin of the symmetry breaking in the electroweak sector
  - Which mechanism gives mass to fundamental particles?
- Can the four fundamental forces of nature, the electromagnetic, the weak, the strong force and gravity, be unified in a comprehensive theory?
- Where do quark and lepton flavour come from?
  - why 3 generations? CP violation? Mixing
- What are the unseen elements of the universe
  - dark matter, dark energy, cosmological constant $\neq 0$

Papers:

Peter P.Higgs: 9

Papers with Higgs in the title: 5286

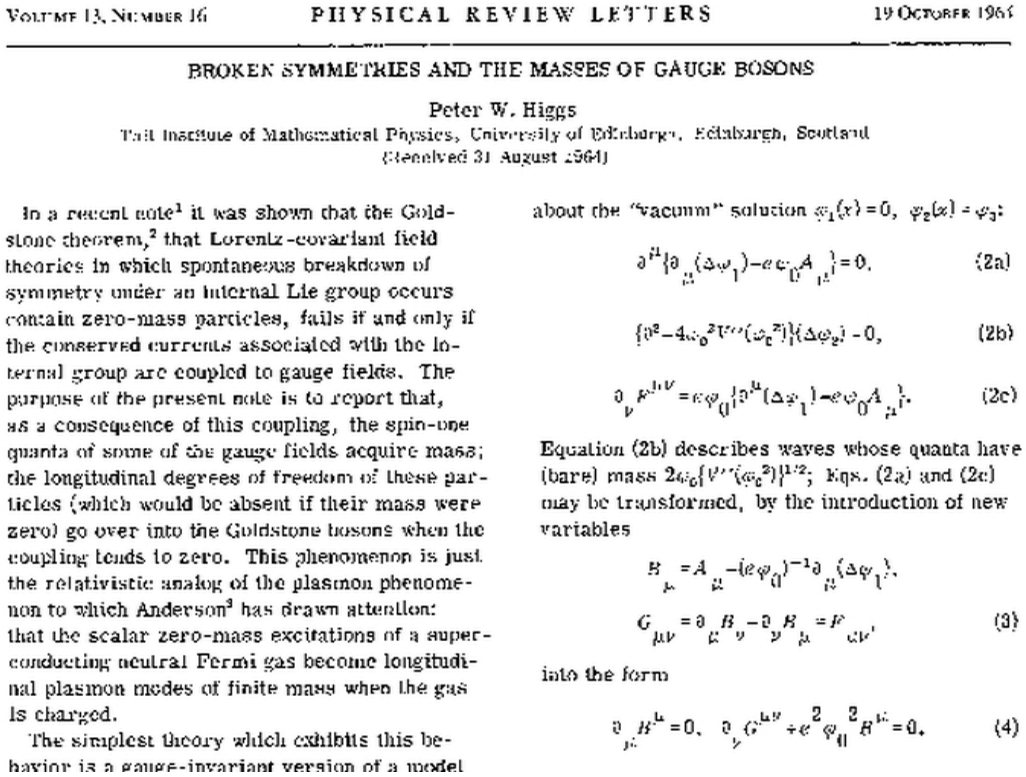

VOLUME 13, NUMBER 16 PHYSICAL REVIEW LETTERS 19 OCTOBER 1964

BROKEN SYMMETRIES AND THE MASSES OF GAUGE BOSONS

Peter W. Higgs

Tait Institute of Mathematical Physics, University of Edinburgh, Edinburgh, Scotland

(Received 31 August 1964)

In a recent note[1] it was shown that the Goldstone theorem,[2] that Lorentz-covariant field theories in which spontaneous breakdown of symmetry under an internal Lie group occurs contain zero-mass particles, fails if and only if the conserved currents associated with the internal group are coupled to gauge fields. The purpose of the present note is to report that, as a consequence of this coupling, the spin-one quanta of some of the gauge fields acquire mass; the longitudinal degrees of freedom of these particles (which would be absent if their mass were zero) go over into the Goldstone bosons when the coupling tends to zero. This phenomenon is just the relativistic analog of the plasmon phenomenon to which Anderson[3] has drawn attention: that the scalar zero-mass excitations of a superconducting neutral Fermi gas become longitudinal plasmon modes of finite mass when the gas is charged.

The simplest theory which exhibits this behavior is a gauge-invariant version of a model

about the "vacuum" solution $\varphi_1(x)=0$, $\varphi_2(x)=\varphi_0$:

$$\partial^\mu\{\partial_\mu(\Delta\varphi_1)-e\varphi_0 A_\mu\}=0, \tag{2a}$$

$$\{\square-4\omega_0^2V''(\varphi_0^2)\}(\Delta\varphi_2)=0, \tag{2b}$$

$$\partial_\nu F^{\mu\nu}=e\varphi_0\{\partial^\mu(\Delta\varphi_1)-e\varphi_0 A_\mu\}. \tag{2c}$$

Equation (2b) describes waves whose quanta have (bare) mass $2\omega_0\{V''(\varphi_0^2)\}^{1/2}$; Eqs. (2a) and (2c) may be transformed, by the introduction of new variables

$$B_\mu=A_\mu-(e\varphi_0)^{-1}\partial_\mu(\Delta\varphi_1),$$

$$G_{\mu\nu}=\partial_\mu B_\nu-\partial_\nu B_\mu=F_{\mu\nu}, \tag{3}$$

into the form

$$\partial_\mu B^\mu=0, \quad \partial_\nu G^{\mu\nu}+e^2\varphi_0^2 B^\mu=0. \tag{4}$$

EW Symmetry Breaking

- central question for the next generation of colliders:
  - understand the nature of the electroweak symmetry breaking mechanism (EWSB)

- currently three main routes to EWSB are discussed:

1. An elementary Higgs boson exists → search for the Higgs boson
2. the Higgs boson is composite → search for the substructure
3. there is no Higgs boson → new strong force must exist at some scale

The Case for an Elementary Higgs

If the Higgs is elementary:

indirect limits from LEP

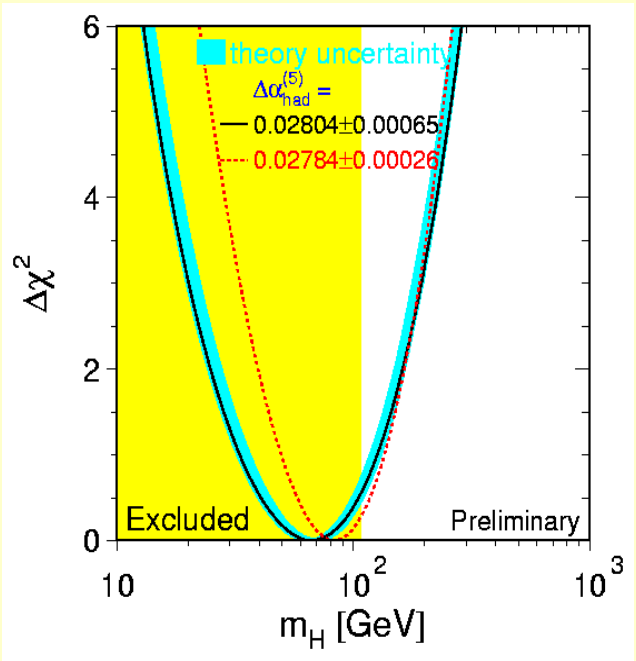

M < 188 GeV@95% CL

development of limits over time:

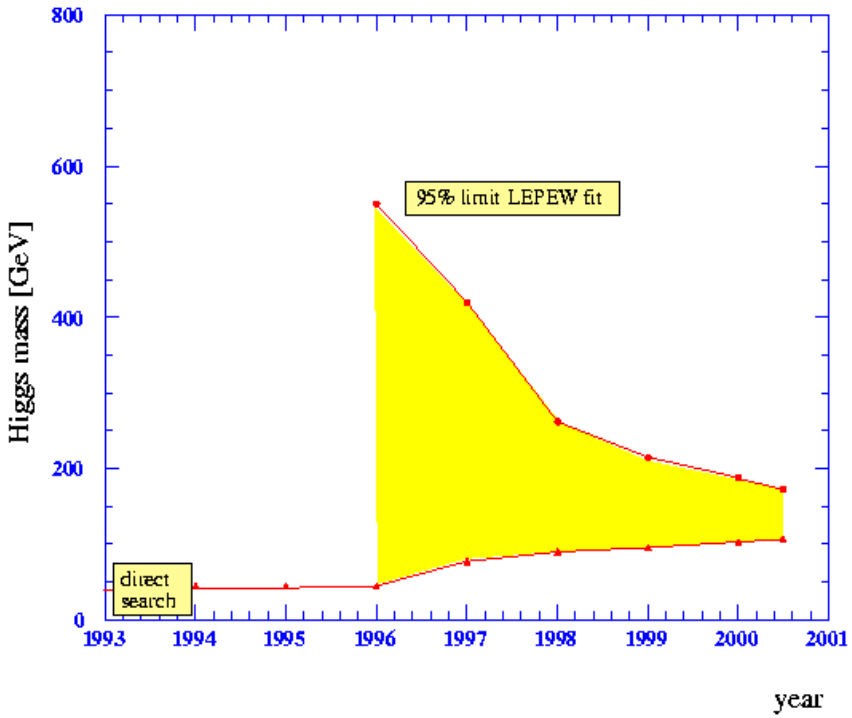

- light elementary Higgs very much favoured
- other (theoretical) constraints
  - validity of perturbation theory: < 500 GeV
  - GUT constraints (naive) < 180 GeV
  - SUSY models < 205 GeV
  - Model independent studies < 300 GeV

The Case for an Elementary Higgs

If the Higgs is elementary:

indirect limits from LEP

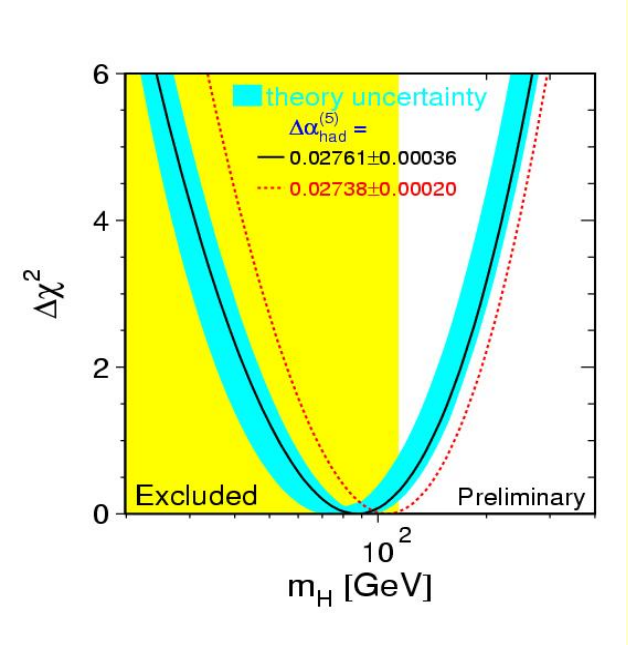

M < 212 GeV@95% CL

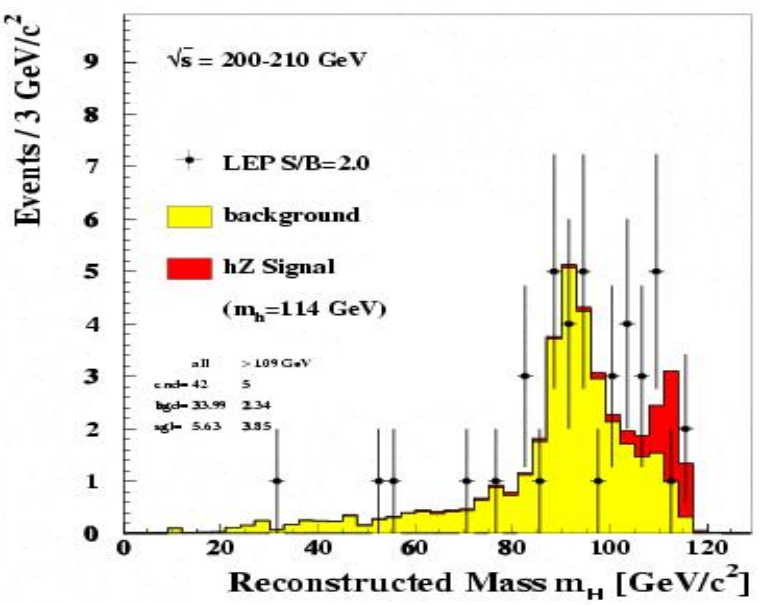

LEP data from September 2000:
some excess observed (~ 2.1 sigma)
at M(higgs) ~ 115 GeV

- light elementary Higgs very much favoured

other (theoretical) constraints

validity of perturbation theory:	< 500 GeV
GUT constraints (naive)	< 180 GeV
SUSY models	< 205 GeV
Model independent studies	< 300 GeV

Possible Discovery of the Higgs

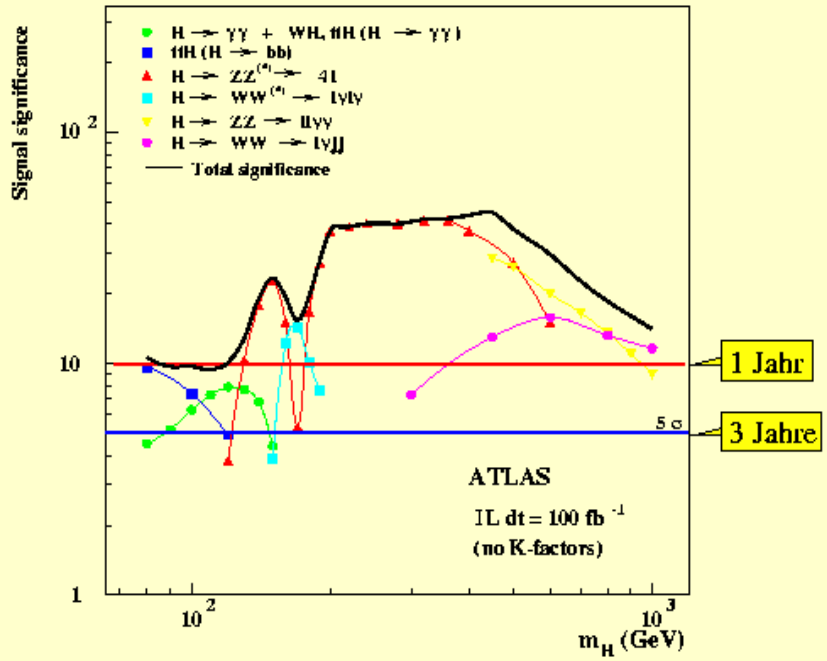

LHC: convincing signals after approx. 3 years
if the Higgs is light
faster, if the Higgs is heavy

Tevatron reach for run II:

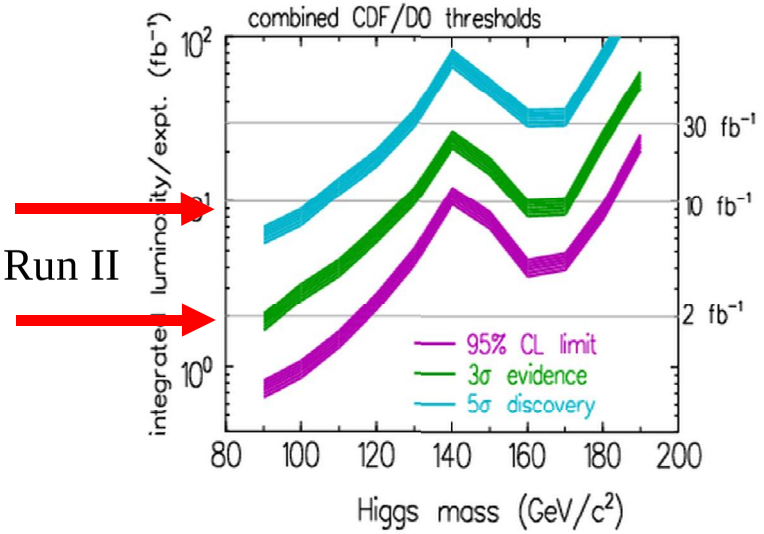

Run II

Either Tevatron or LHC will likely find the Higgs if it is there,
and if LEP has not already found it

Higgs at TESLA

Determination of mass of Higgs:

direct reconstruction of Higgs in a number of decay channels possible,
most favourable ee → Z → HZ

ZH → μμX

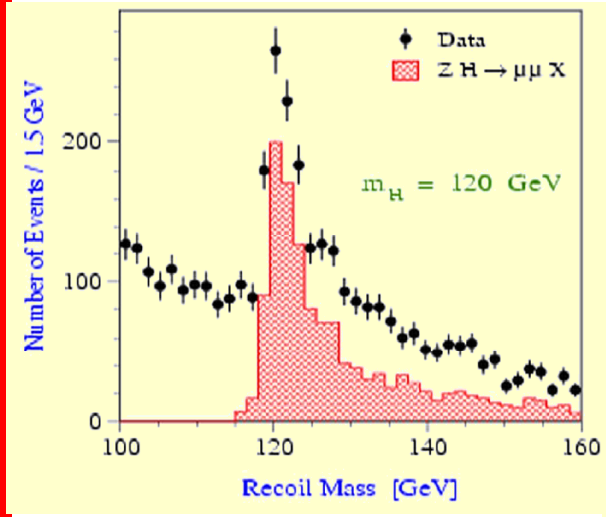

ZH → qqbb

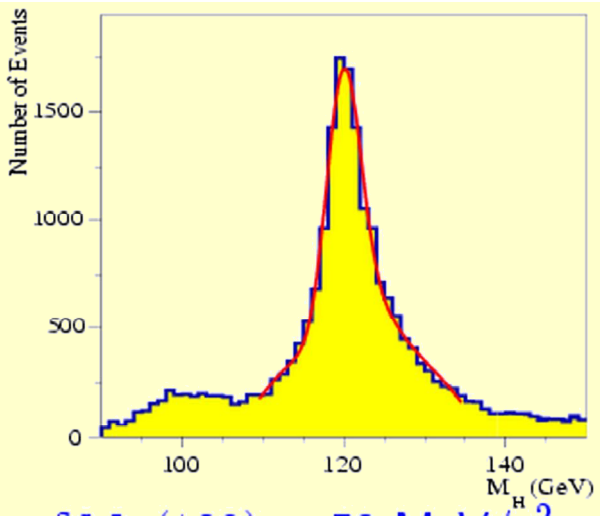

ZH → WW qq

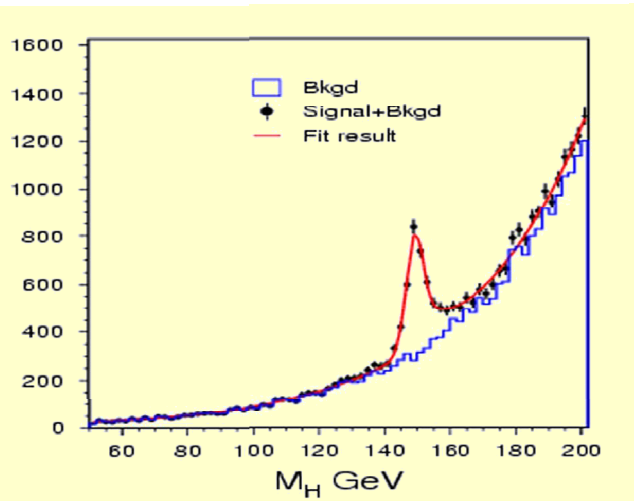

Clear signals in many channels:

mass		width:
M(Higgs)	dM	
120 GeV	40 MeV	to 5–10%
150 GeV	70 MeV	
180 GeV	90 MeV	

Higgs Properties

Once "signals" are found:

- Determine mass and width
- measure quantum numbers J^{PC}
- determine the couplings to fermions (mass)
- measure Higgs self–coupling, determine the potential
- separate SM Higgs from SUSY Higgs or other models

Need whole series of measurement to fully establish nature of Higgs mechanism

Higgs production cross section (SM)

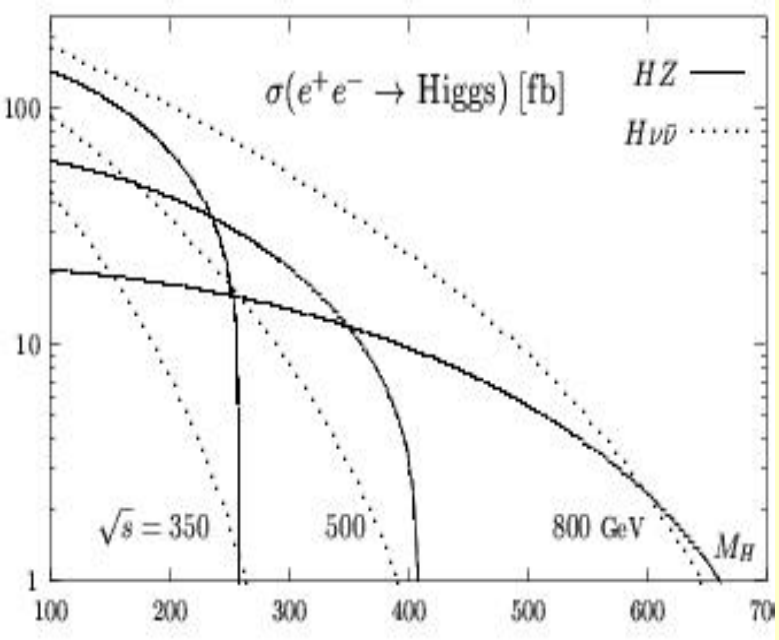

Higgs production II

Alternative channel: WW fusion

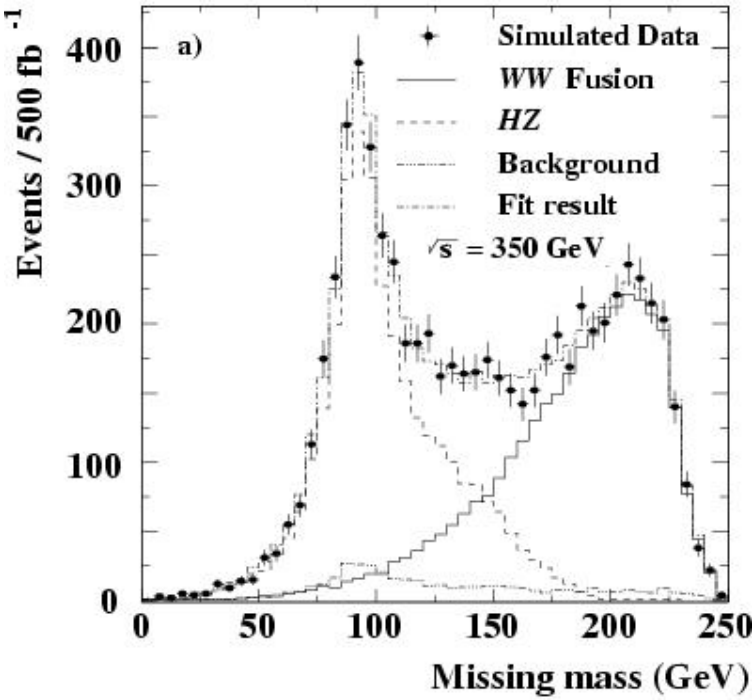

Main interest:
determine the width of the Higgs Boson:

Method	120 GeV	160 GeV
WW	0.061	0.140
$\gamma\gamma$	0.230	

Polarisation of lepton beam is very important to turn on / off the SM backgrounds

Higgs Quantum Numbers

Have to determine the quantum numbers of the Higgs particle

- Spin J
- Study the nature of the candidate (SM, MSSM, ...)

Threshold behaviour

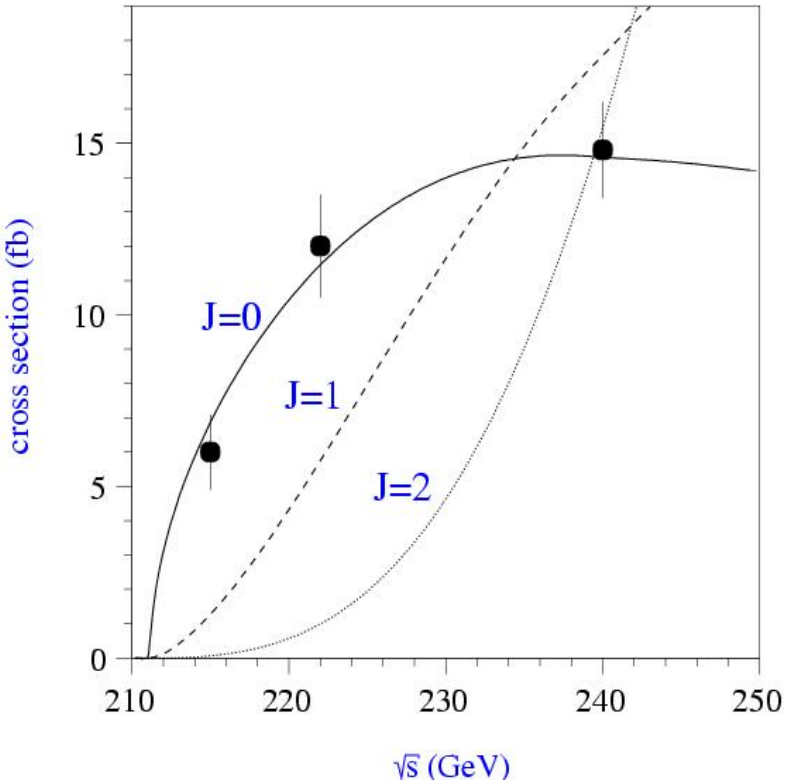

Angular distribution

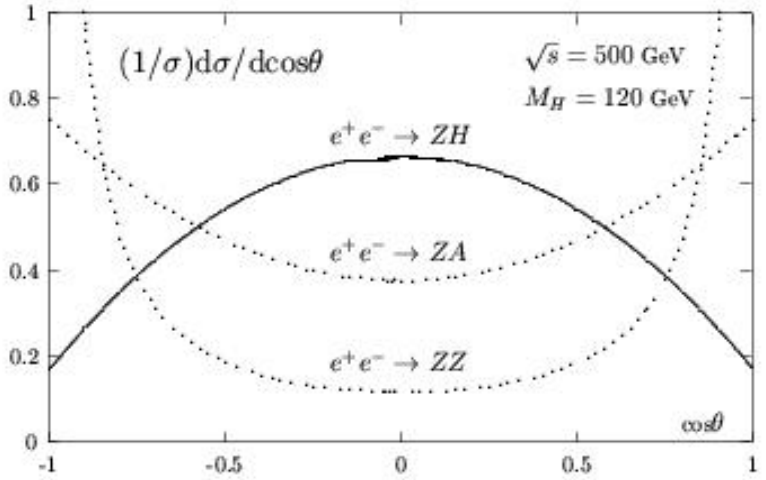

Beyond a Discovery

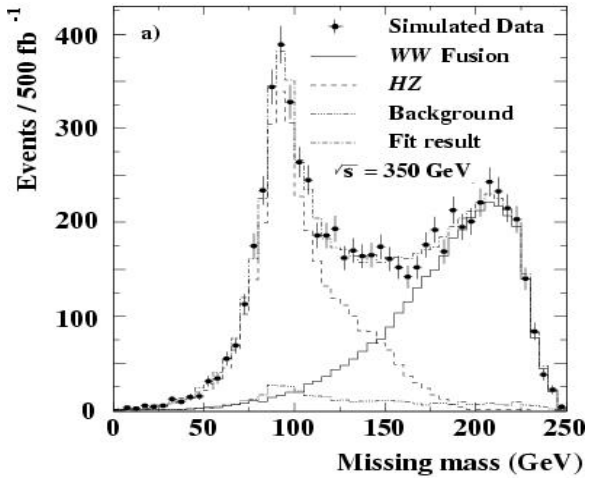

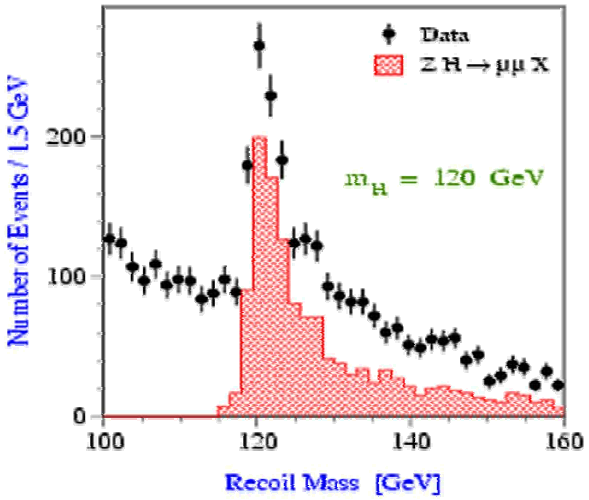

- complete test of our understanding of mass
  - can the Higgs explain the Z/W−mass? is the existence of the Higgs enough?
  - Can the Higgs explain the mass of the fermions

Couplings to fermions:

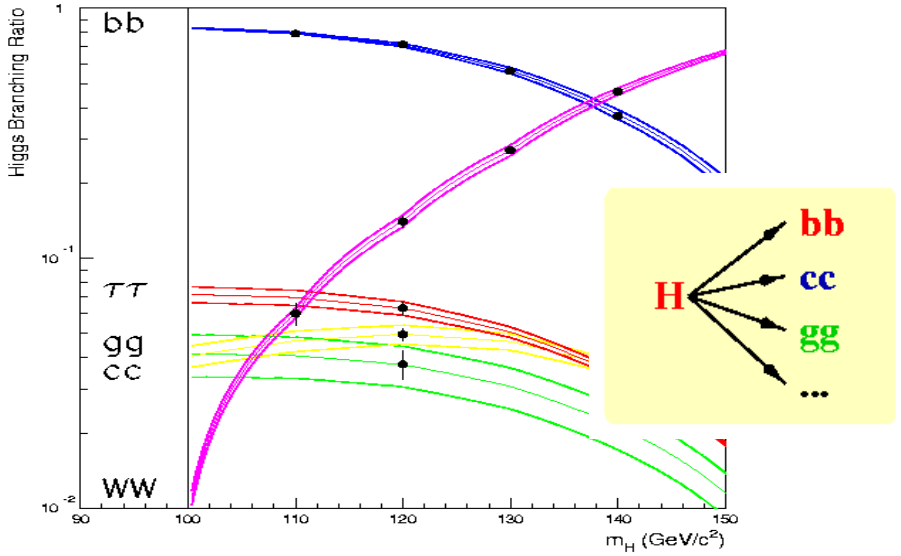

Higgs Self Coupling

The most difficult question:
is the Higgs Potential the one we think it is ("Mexican Hat")?

Higgs self couplings: Higgs Potential

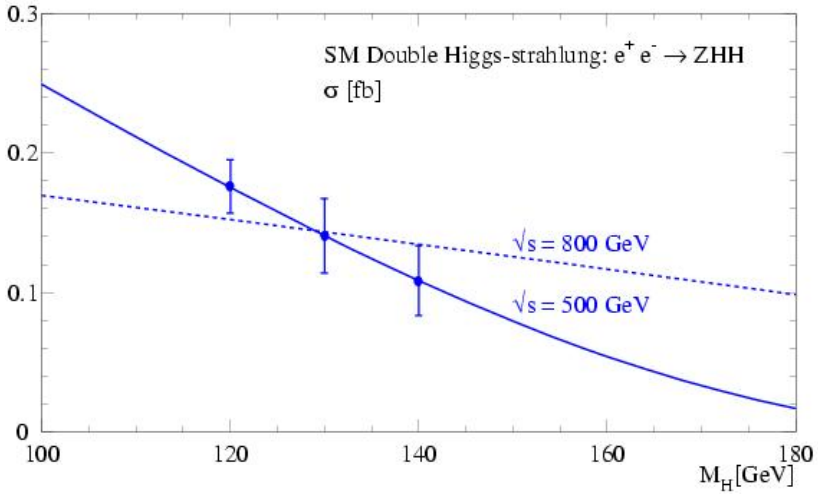

Can measure the Higgs Potential to 10–20%

Role of the detector resolution in this: significance as a function of different energy flow resolution values

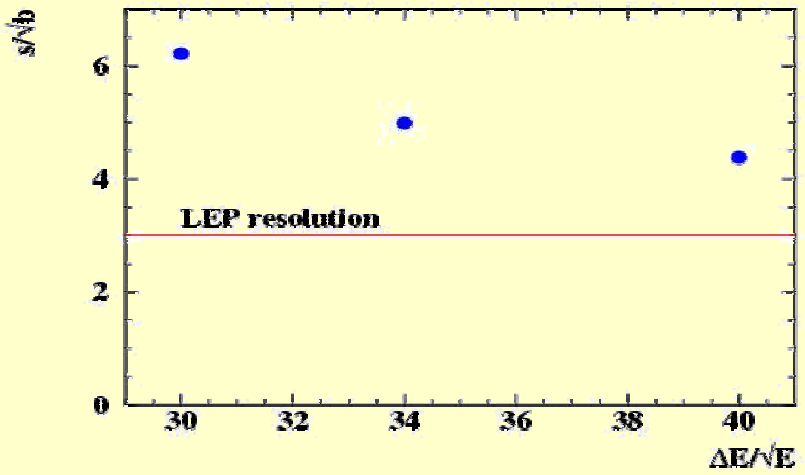

Beyond the Standard Model Higgs

Is the Higgs the SM Higgs?
Is the Higgs a supersymmetric Higgs?
Is the Higgs something completely different?

Answering these questions requires a detailed and precise investigation of the Higgs properties

Example: Distinction SM Higgs from MSSM Higgs

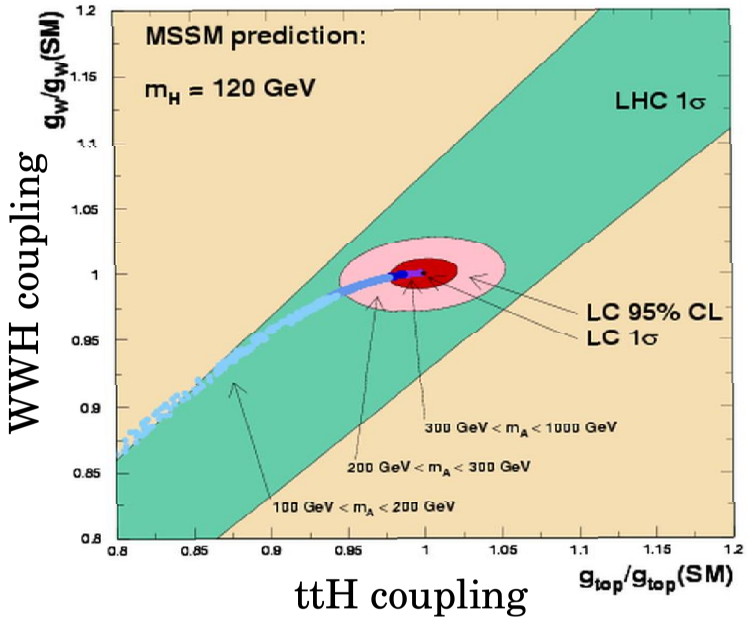

Signal for supersymmetric Higgs
(50 fb^{-1}, 4b final state)

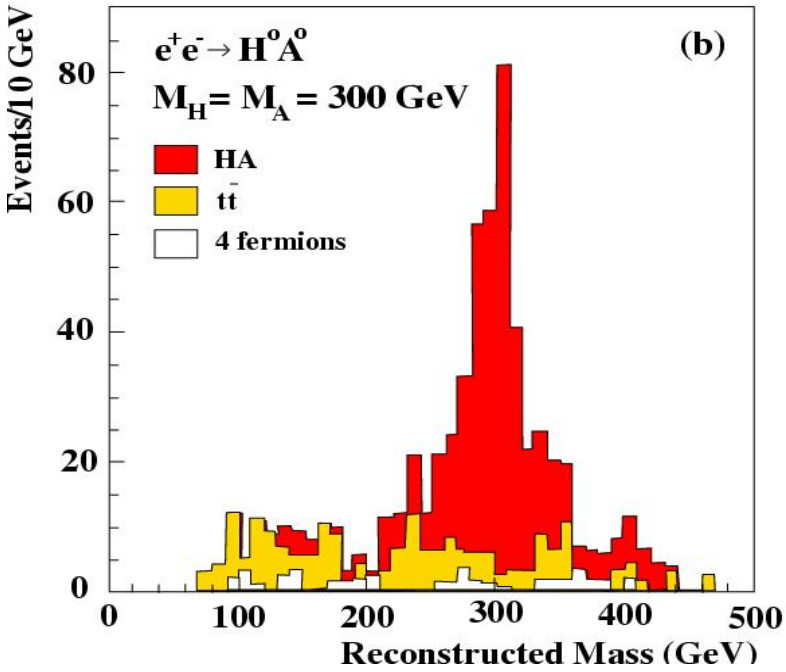

"GIGA Z"

- if light Higgs is not found: return to lower energies as a first step!

GIGA Z:
operate TESLA at 91 GeV
very high luminosity
1 billion Z bosons possible

improve the precision electroweak measurement from LEP

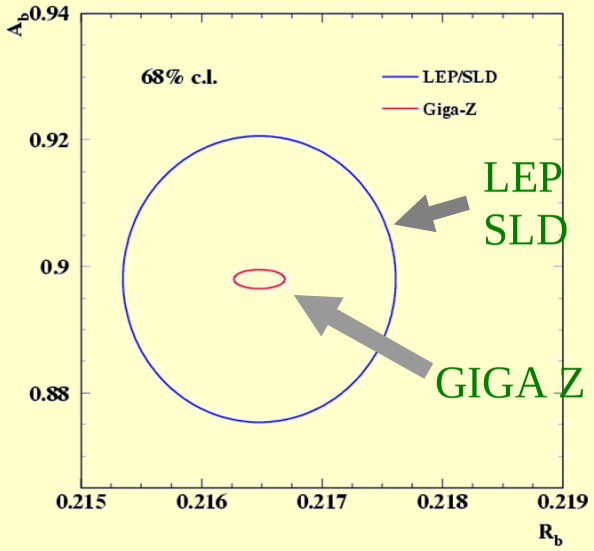

- redo the indirect Higgs "limits" using GIGA Z:
  - get much more stringent information
  - if there is an inconsistency somewhere, it will show up here

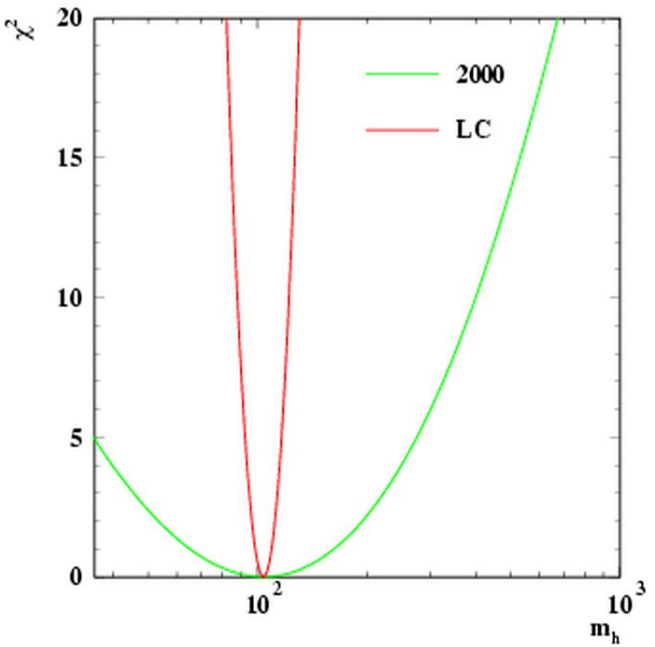

try to see indications of where to go for new physics before going there!

Comparison to LHC

- Finding the Higgs Boson

  LHC / Tevatron should discover the Higgs
  measure its mass
  (exception: Higgs decays dominantely invisibly, then LC finds it)

- Measuring total width, couplings

  LHC will not measure Γ(tot) (or very poorly)
  LHC will measure ratios of some couplings to ~20%
  LC will measure width and couplings on the % level

- Measure the quantum numbers

  LHC will not do, LC will do easily

- explore the Higgs potential

  LHC will not do, LC will do with sufficient luminosity

LHC should discover a Higgs candidate

LC should discover, what this really is

We will need both!

The Higgs does not exist...

- if no Higgs is found at LEP, Tevatron, LHC, LC:
  - very fundamental arguments require: something must happen on the TeV scale (otherwise unitary in WW scattering is violated)
  - one possibility: a new strong interaction (WW rescattering) plays the role of the Higgs
    there are no fundamental scalars in nature, "fermioncentric" world,
    either no Higgs exists, or the Higgs is composite

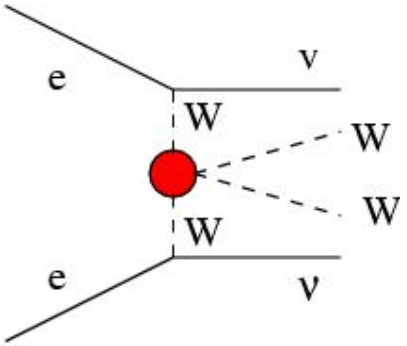

- main access: study of WW scattering
- effects already visible at "low" energies

consistent models for this type are difficult

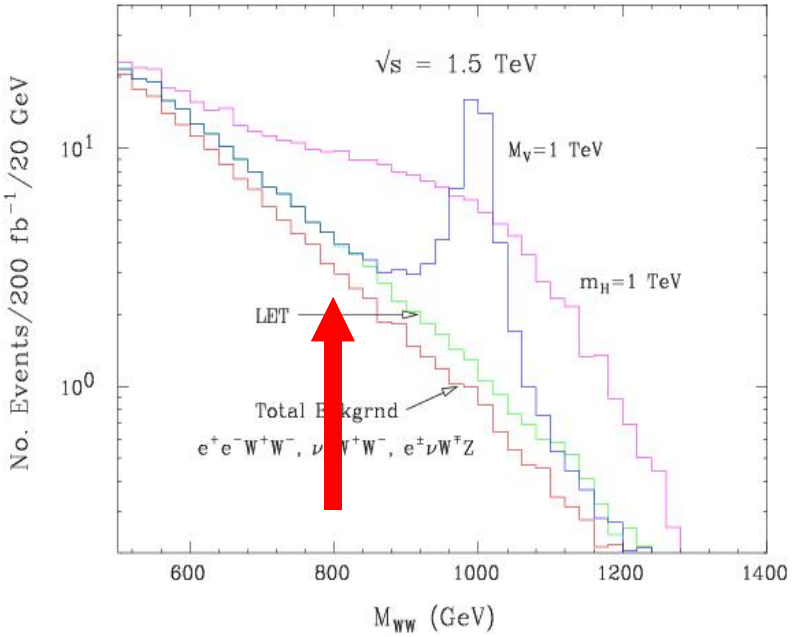

Strong WW scattering

Detailed investigation of the "tripple Gauge couplings" TGC

- a detailed investigation needs high statistics
  (800 GeV, 1000 fb^{-1}) plus
  lepton polarisation (P(e−)=80%, P(e+)=60%)
- need additionally data from Giga Z to determine
  $\alpha(3)$

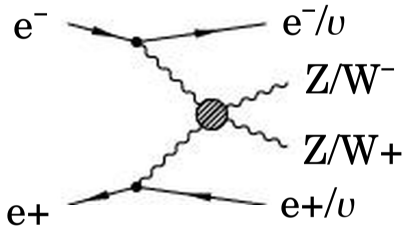

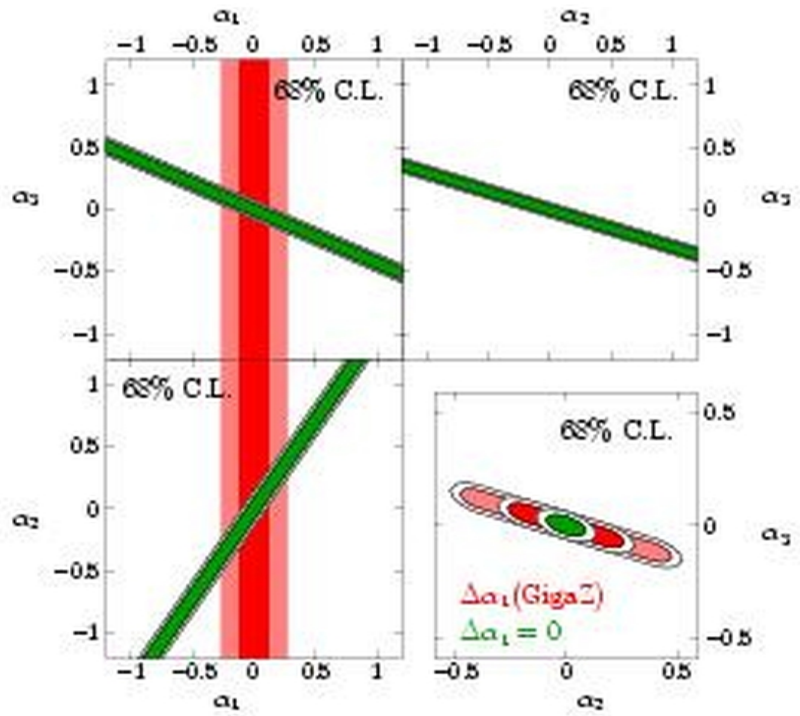

sensitivity to TGC parameters:

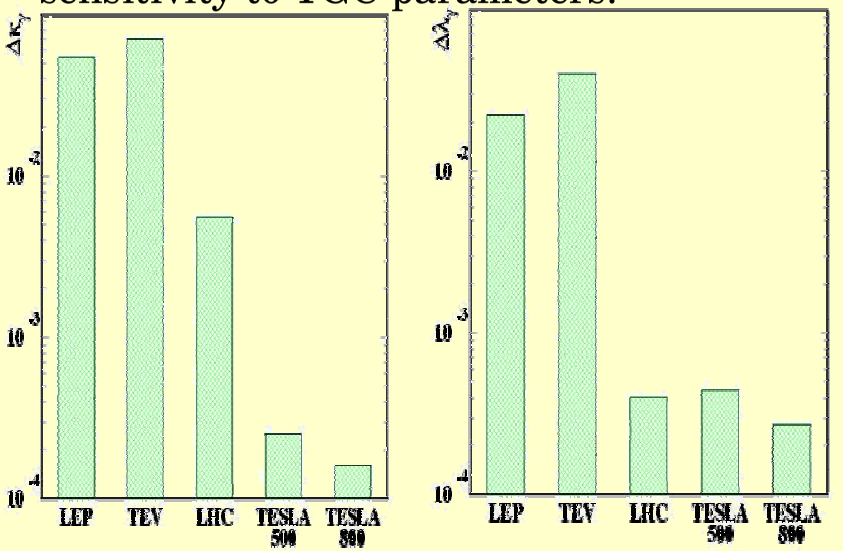

Substructure

- is there a structure below the known one
  - new heavy Z–like bosons
  - Leptoquarks?
  - exotic spin 2 exchange particles?
  - ...

- best studied in the reaction: $e^+e^- \to f\bar{f}$

the scale of substructure can be probed well beyond the energy of the collider

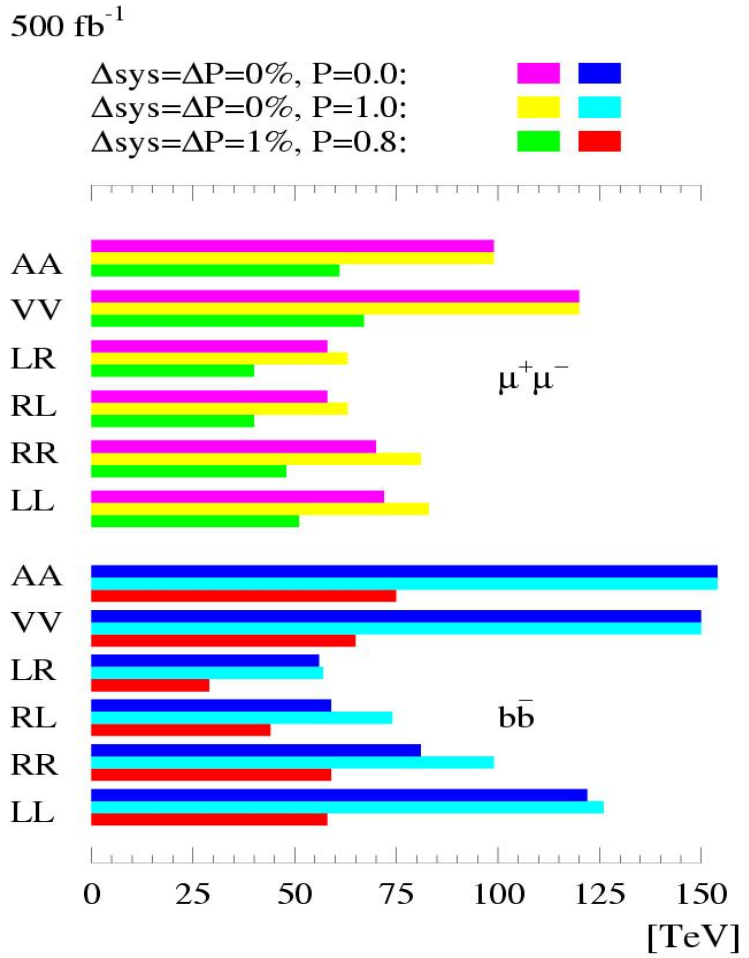

Physics beyond the Standard Model

- "there must be something more than just the Standard Model..."
  SUPERSYMMETRY?

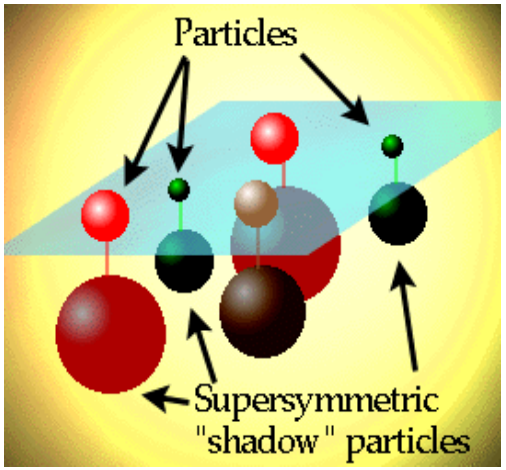

just one possible model of many
but experimental signatures of most
models are similar

SUSY: fundamental symmetry between fermions and bosons
doubles number of particles
particles must be heavy, since no observation so far
SUSY must be "broken"

SUSY helps in unifying forces at large energies

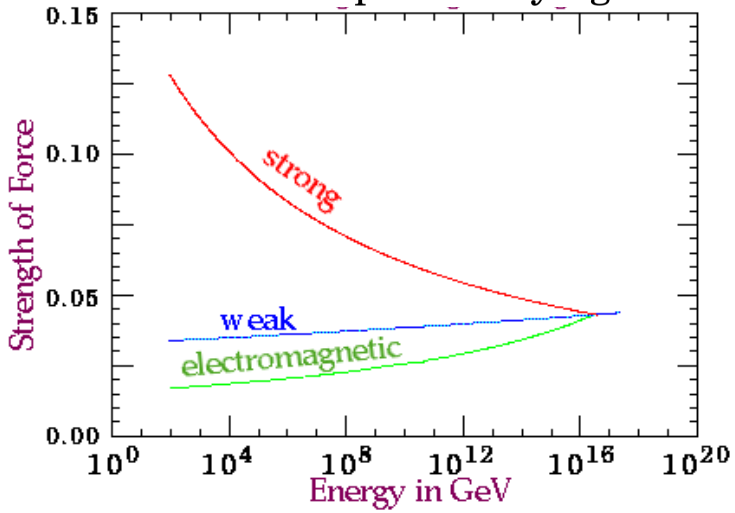

- Supersymmetry extends the SM,
  does not replace it
  (example: quantum mechanics
  extends classical
  mechanics, does not replace it)
- so far no experimental evidence for SUSY

Supersymmetry

- key to Supersymmetry:
  - discovery
  - spectroscopy to select the correct model
- in "all" models: expect at least some of the SUSY partners at few 100 GeV ("no loose theorem", nearly model–independent)

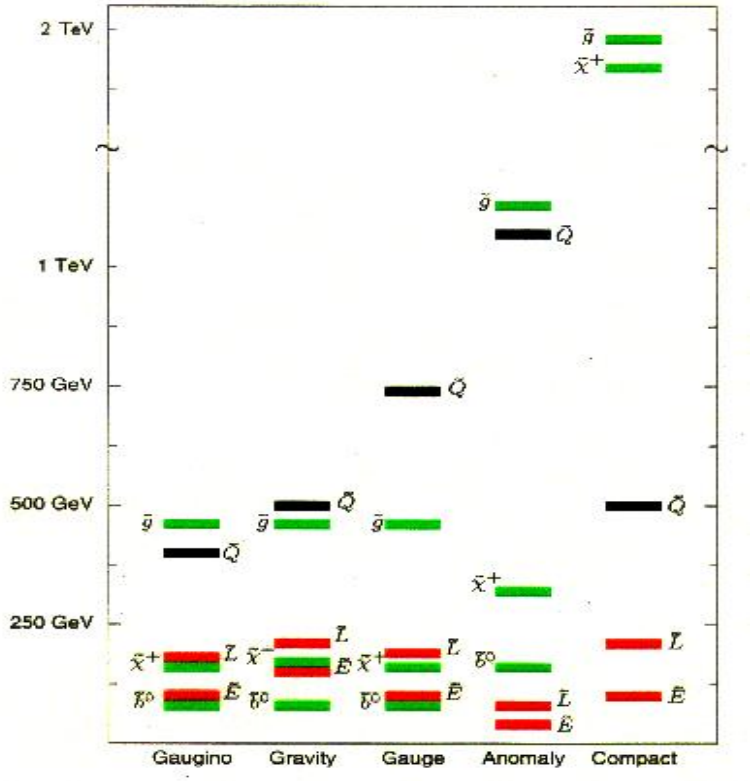

smuon observed mass spectrum

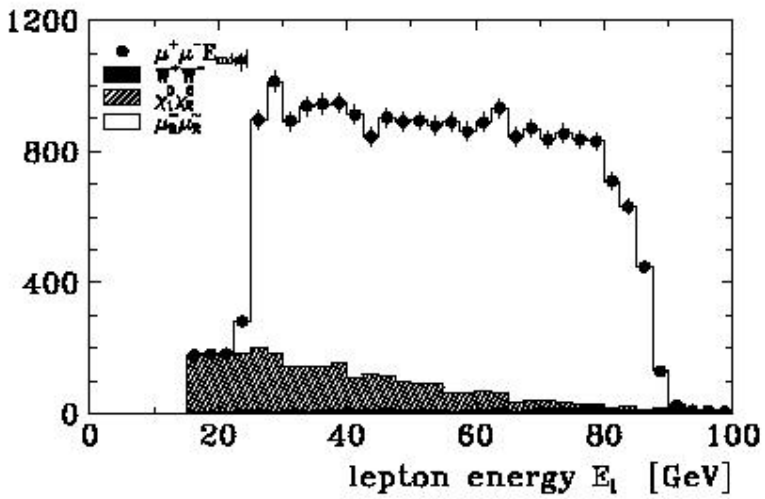

spectacular signals for SUSY partners if in the kinematic reach at LC

TESLA will be able to contribute significantly to the knowledge about SUSY, if SUSY exists

Supersymmetry

- key to Supersymmetry:
  - discovery
  - spectroscopy to select the correct model

- in "all" models: expect at least some of the SUSY partners at few 100 GeV ("no loose theorem", nearly model–independent)

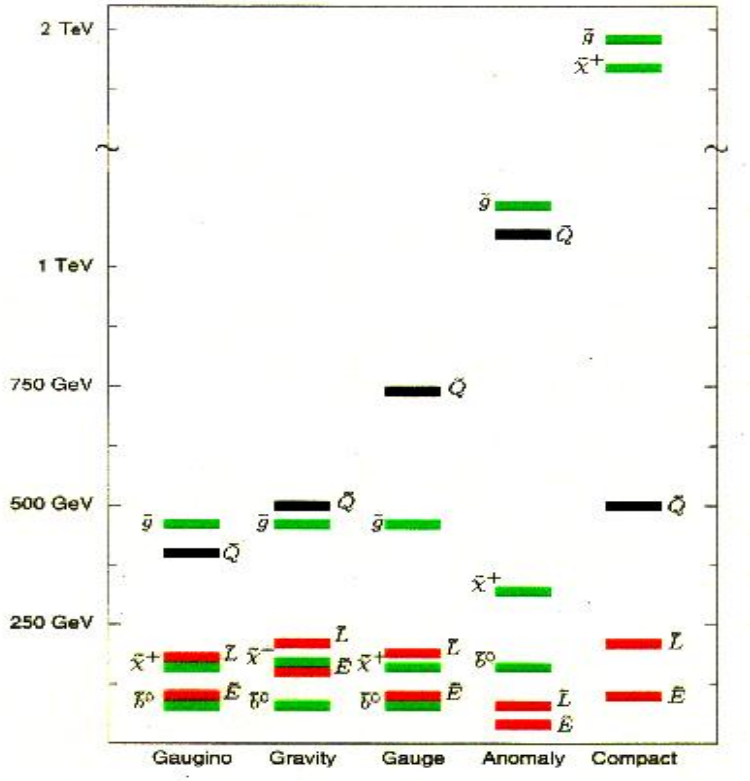

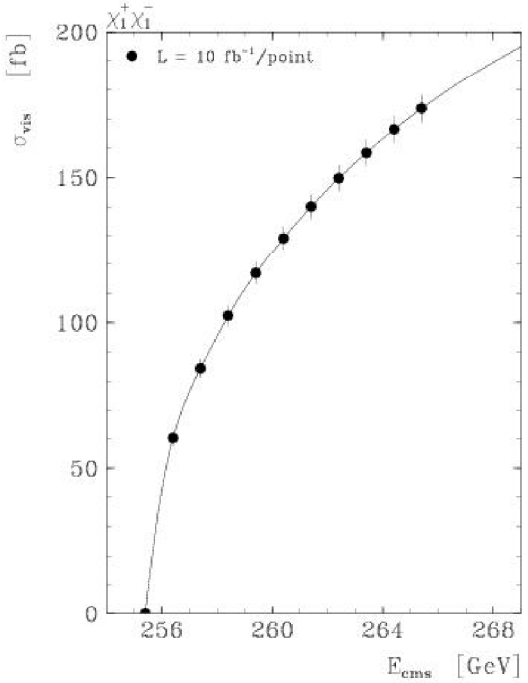

spectacular signals for SUSY partners if in the kinematic reach at LC

TESLA will be able to contribute significantly to the knowledge about SUSY, if SUSY exists

Extra Dimensions

Novel recent approach to solve the gauge hierarchy problem: large extra dimensions

many theoretical models exist with striking predictions

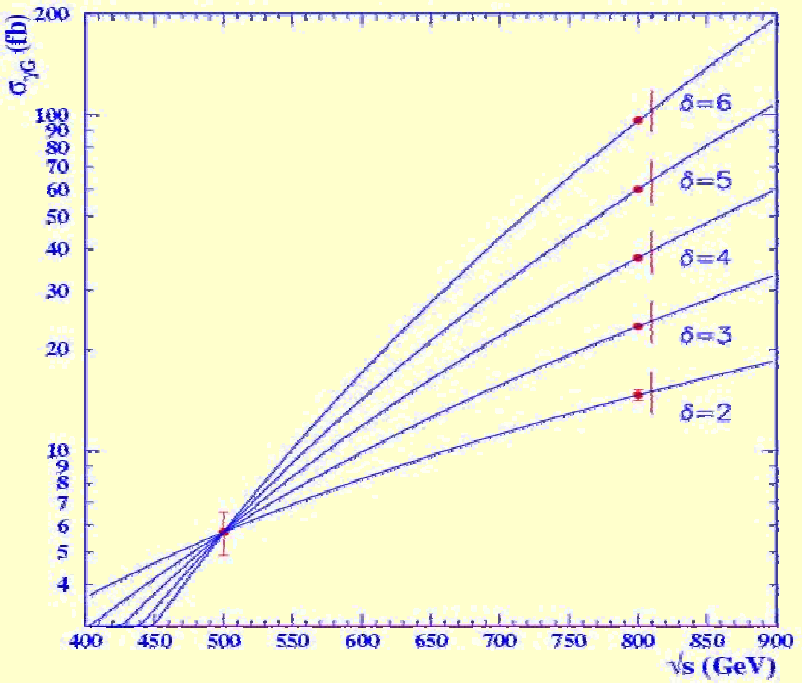

number of extra dimensions determined at TESLA at 500 and 800 GeV in anomalous direct photon events

discovery reach at LHC and TESLA

δ	2	3	4	5	6
LHC	4.0—7.5	4.5—5.9	5.0—5.3	none	none
TESLA	0.5—7.9	0.5—5.6	0.5—4.2	0.5—3.4	0.5—2.9

SUSY at very high energies

precision measurements allow the extrapolation to high energies with good precision:

learn about the high energy behaviour

use this to distinguish models

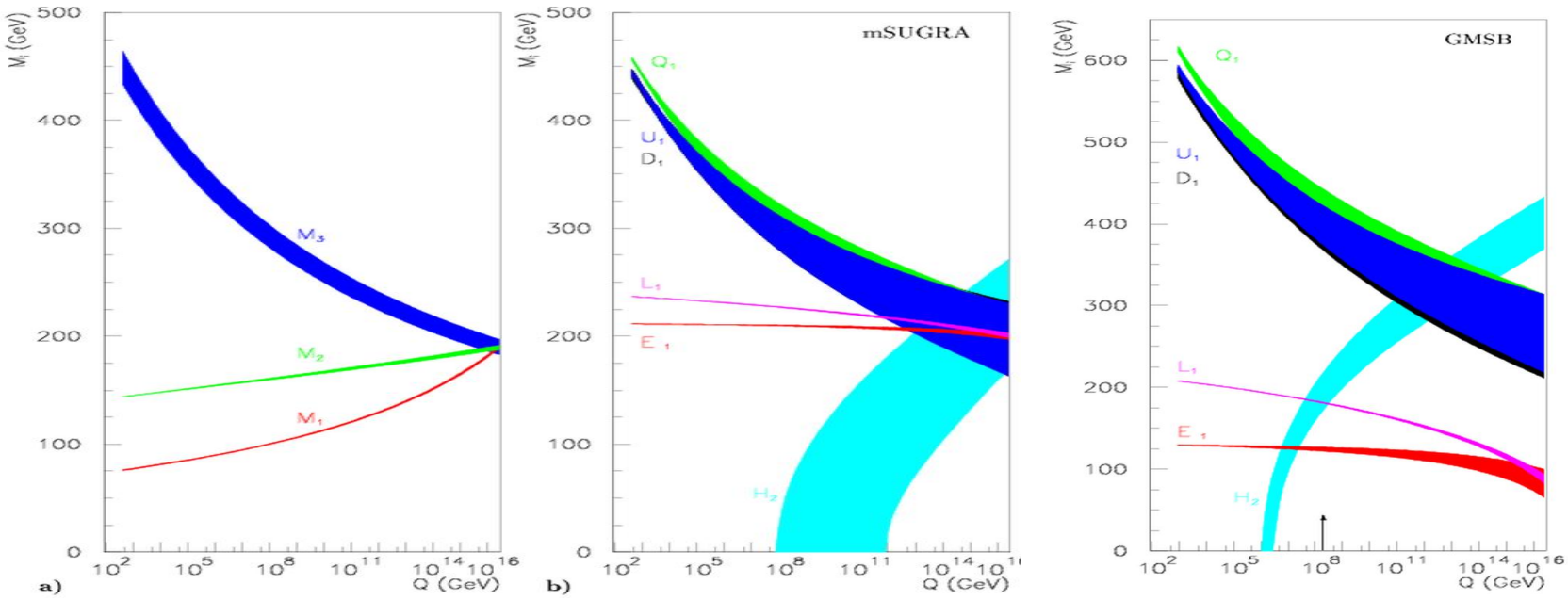

This might be the only way to access these extremely high energies experimentally!

SUSY: LC vs LHC

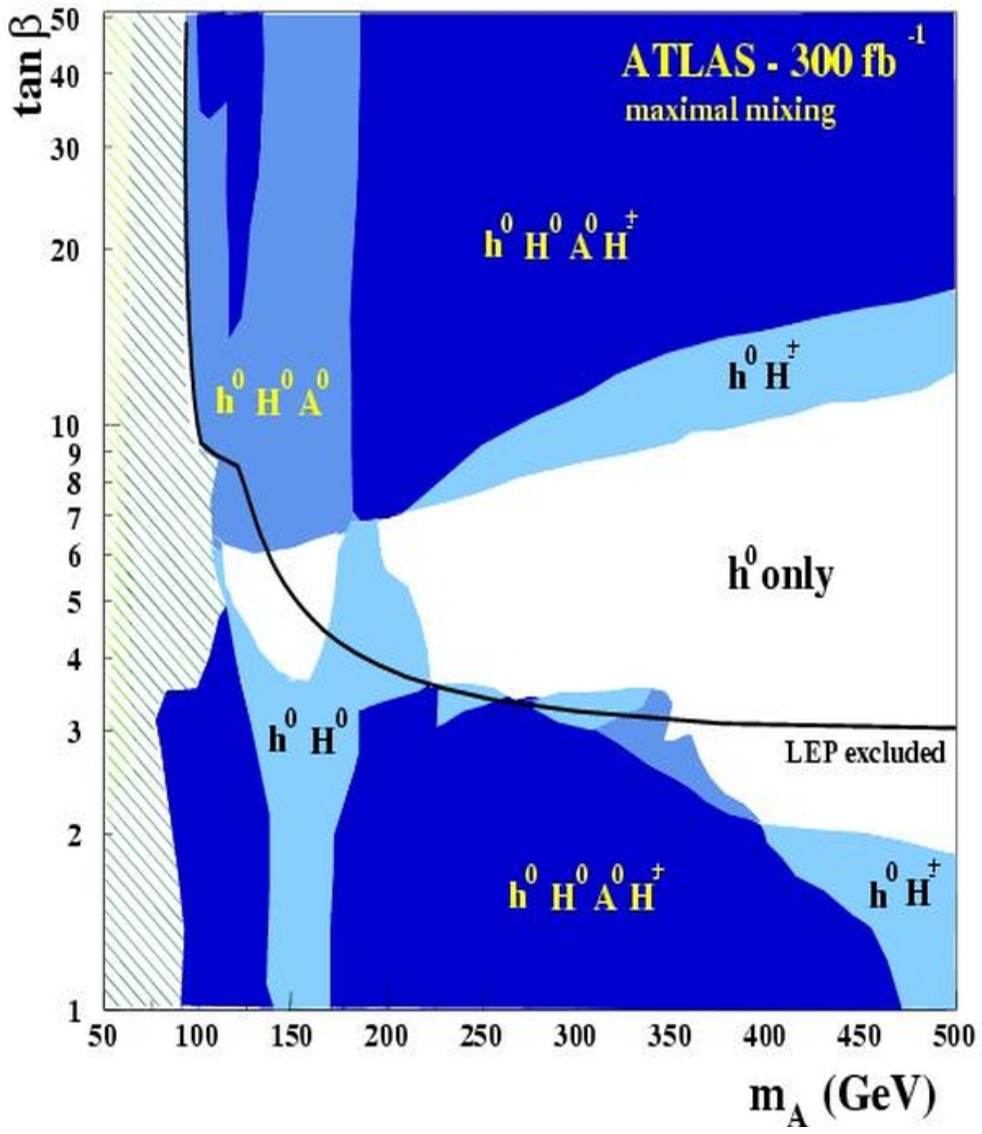

Mass reach of LHC larger

precision reach of LC better (if
within mass reach)
access to anything beyond the mass
essentially only at LC

separation of different SUSY particles
difficult at LHC

Remark: polarisation of lepton beams
is an important ingredient to determine
the sparticle properties

Precision Physics

- High luminosity and clean event structure:
  - TESLA allows precision Standard Model physics
- W–mass determination

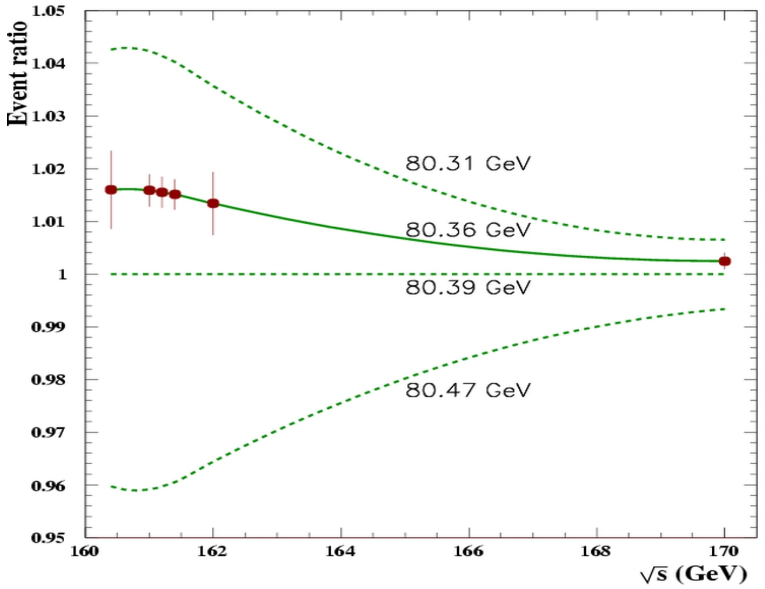

other measurements:
- electroweak gauge bosons
- top mass
- CKM matrix elements

Interpretation of precision data in the SM context:

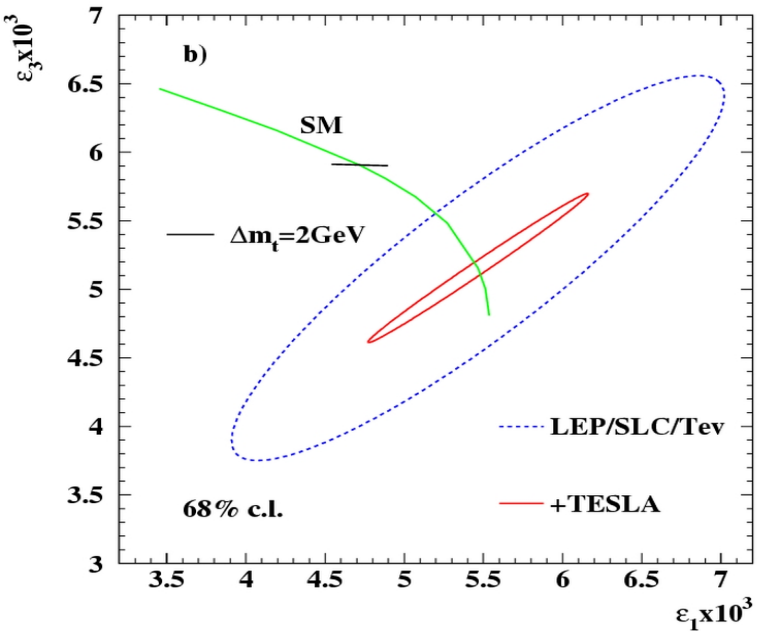

TOP Physics

- A linear collider with E>350 GeV is a top factory
- allows precision studies of the top system
  - top is the heaviest known fermion
  - top−Higgs coupling is very interesting if it exists (Higgs couples to mass)

top threshold scan

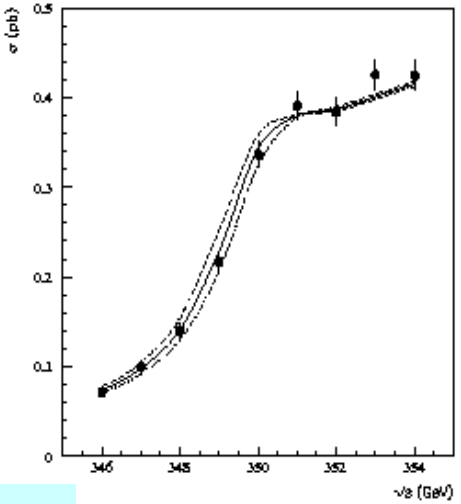

Based on 500 $fb^{1\,-1}$ of integrated luminosity (1 year)
error: m =±100±(100–200) MeV

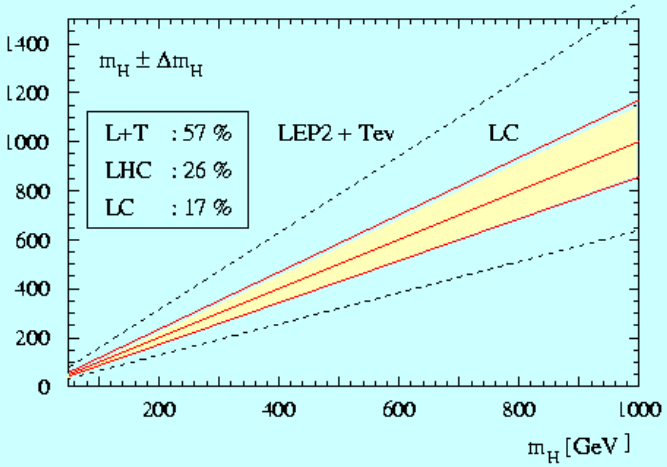

Allows stringent consistency checks of the Standard Model

Precision Tests of the Standard Model

Quantum Chromo Dynamics at LC

Strong coupling constant including LC information:

- add precise α(strong) measurements at three energies (91, 500, 800 GeV)
- do consistent (one experiment!) check of the running of α(strong)
- needs improved theoretical understanding
- could much improve the extrapolation to the GUT scale

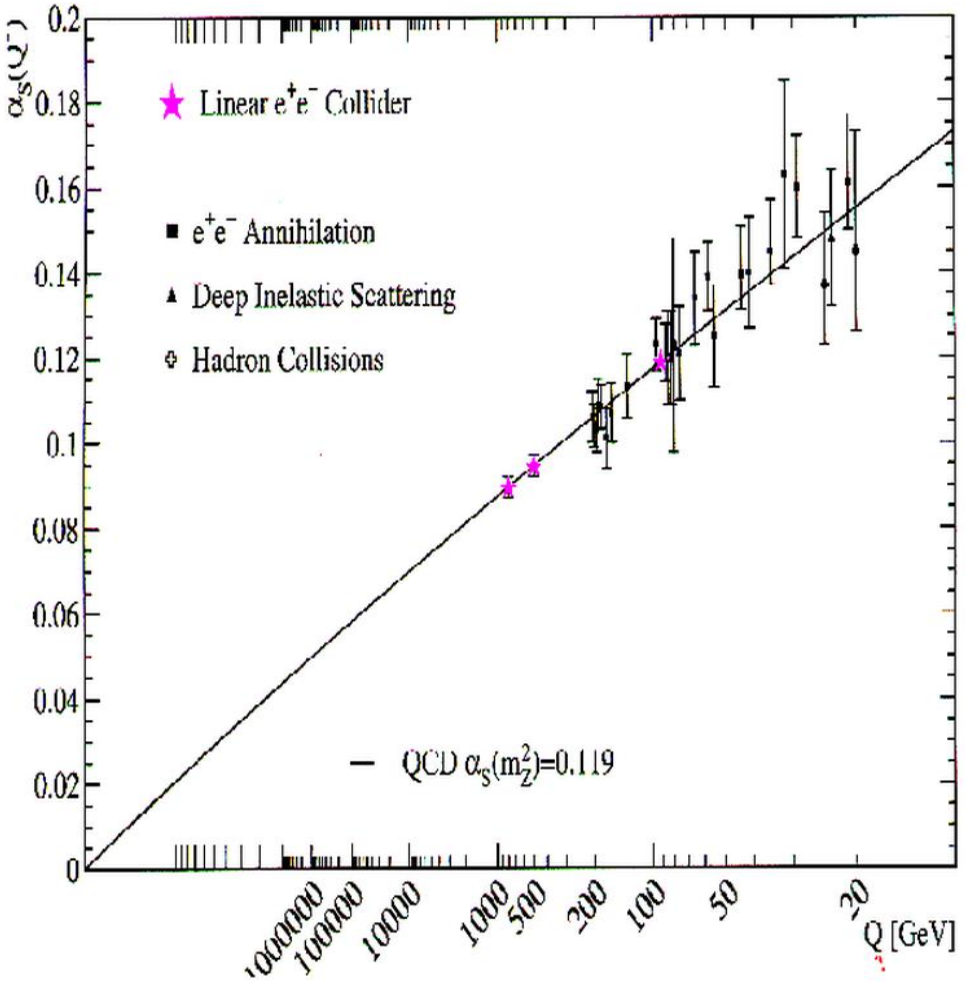

Photon Photon Collider @ TESLA

Alternative: Collide Photons with Photons

- produce scalar Higgs bosons singly (larger discovery reach)
- C=+1 states are produced (C=−1 in e+e− collisions)
- large cross section for pairs of charged hadrons

- initial collision energy less well defined
- need complicated laser installation in interaction point

proposed laser scheme (optical cavity)

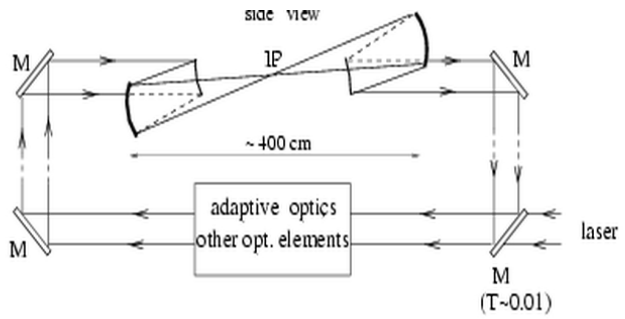

Laser installation technically challenging
Investigations into realisation are starting

Higgs signal in $H \to \gamma\gamma$

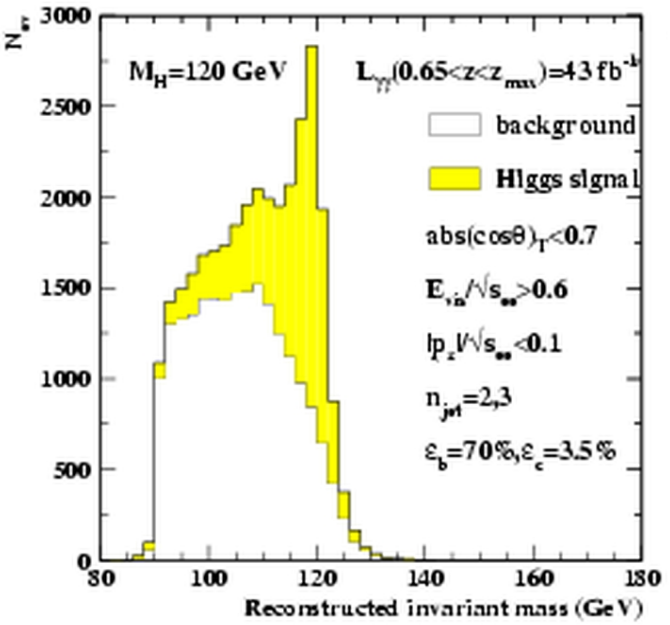

TESLA–N

polarised electron – nucleon scattering
using electrons from TESLA

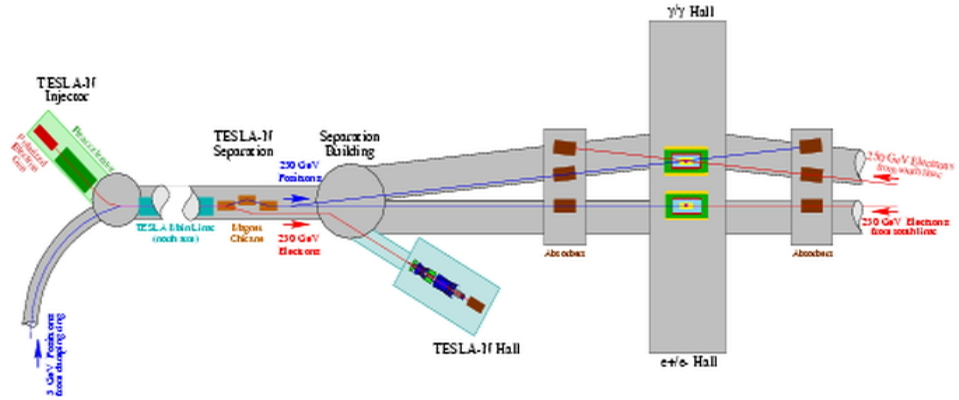

use low intensity electron bunches in between the HEP bunches: no interference to HEP running

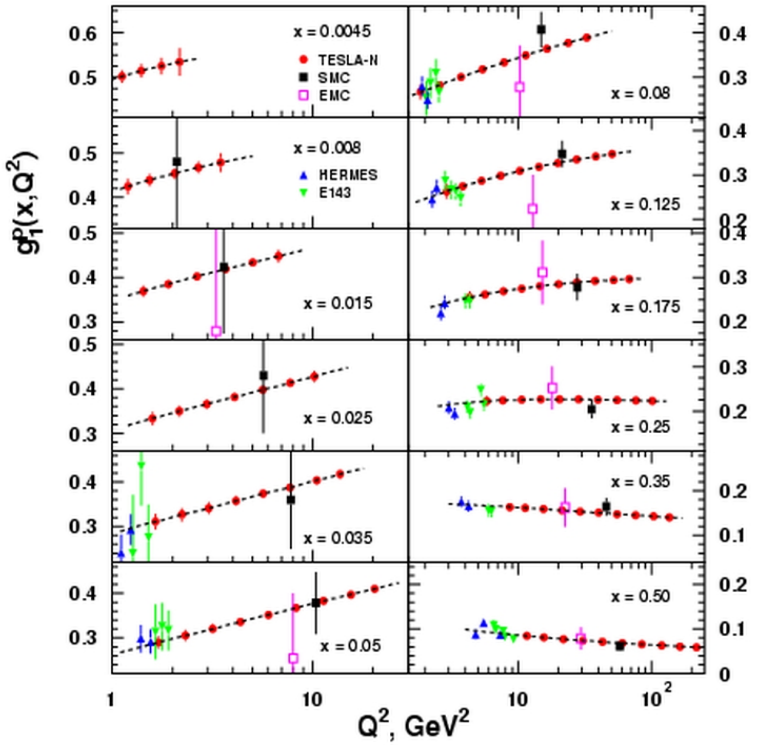

Complete mapping of the Q^2 and x–dependance of both the helicity and the transversity distributions Δq and δq will become available.

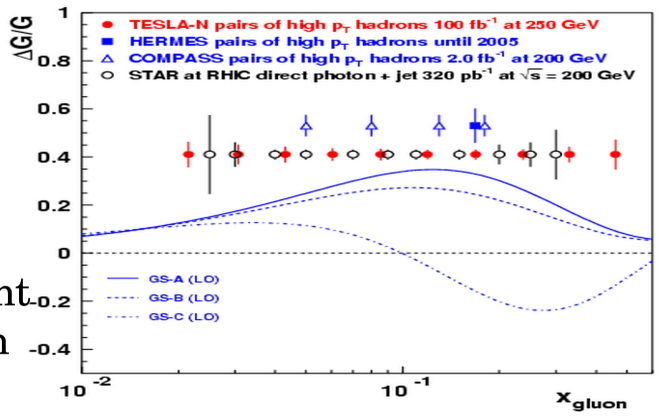

projected precision of measurement of gluon contribution to the proton spin

THERA

THERA: Collide electrons from TESLA with protons in HERA

expected performance:

electron energy	250 GeV
proton energy	1 TeV
luminosity	$4.1 \cdot 10^{30} cm^{-2} s^{-1}$

reach in x–Q^2 plane

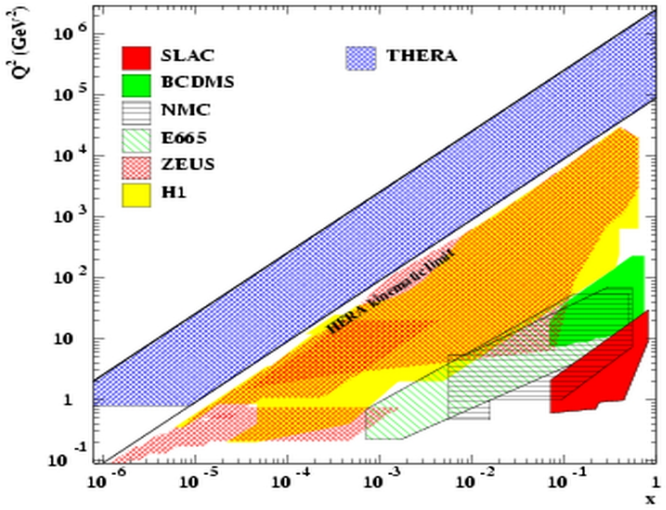

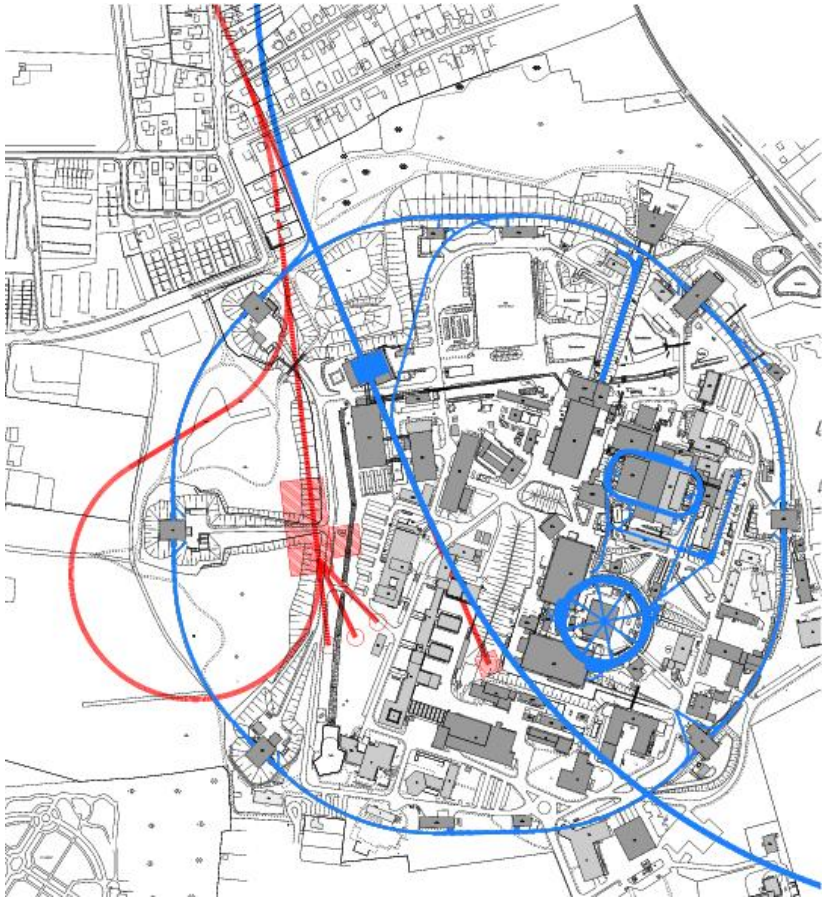

A Detector for TESLA

view of a proposed detector for TESLA

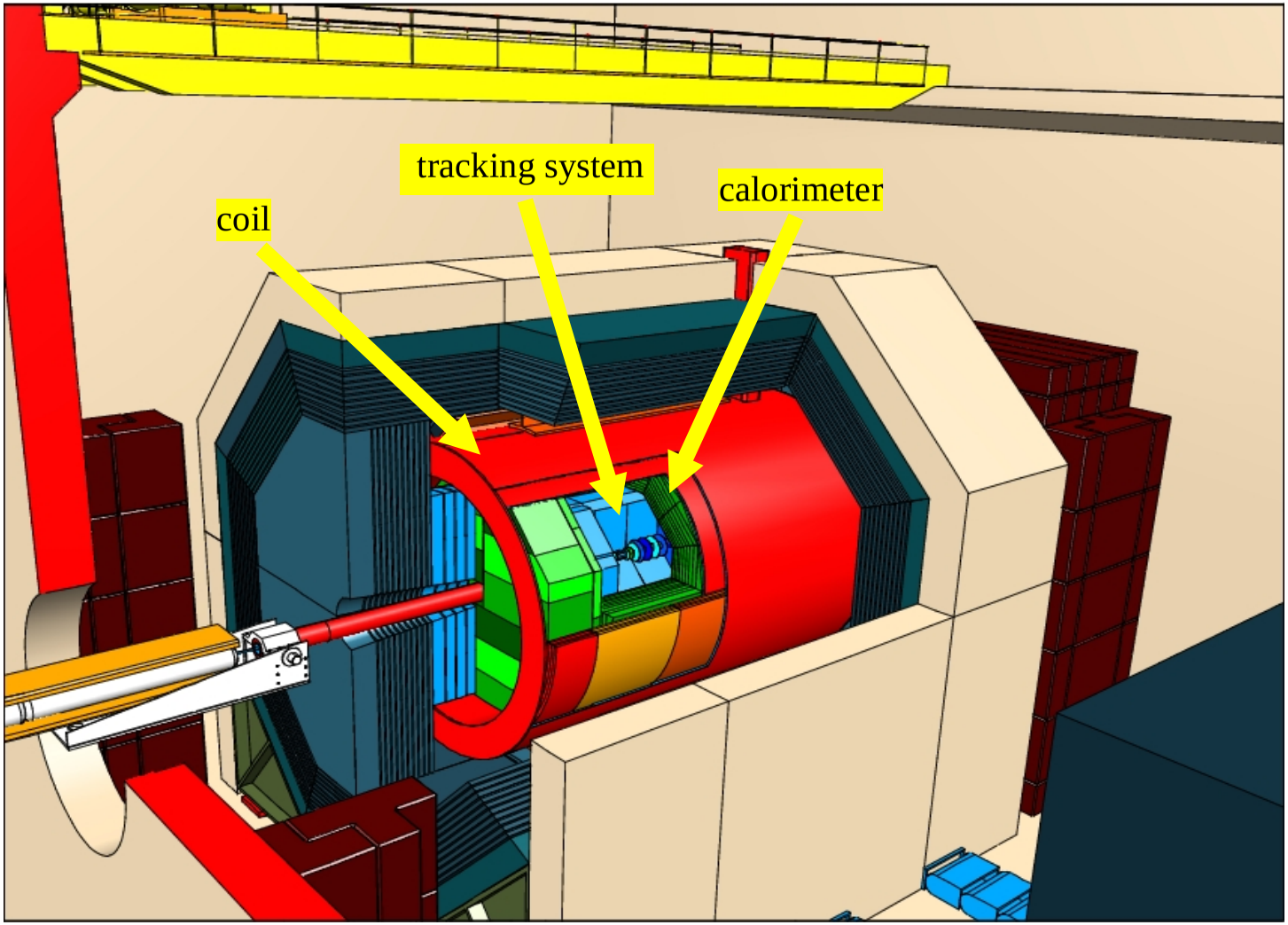

ECFA−DESY linear collider study

Vertex Detector

isometric view of the CCD option

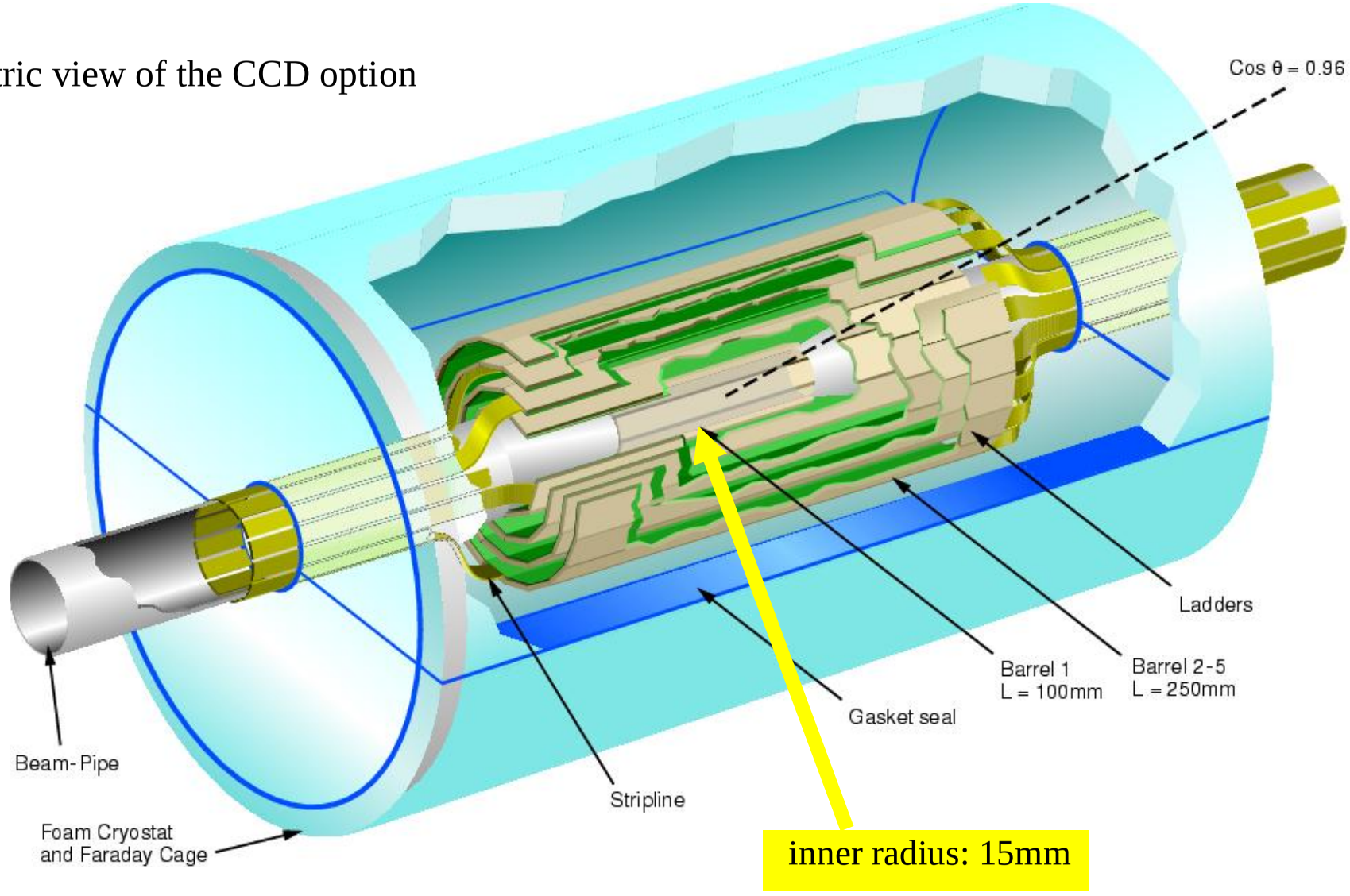

Vertex Detector

Vertex detector:
several options under discussion
requirements:
extremely good precision
radiation hard
fast
high granularity

physics case: B−physics: detached vertices

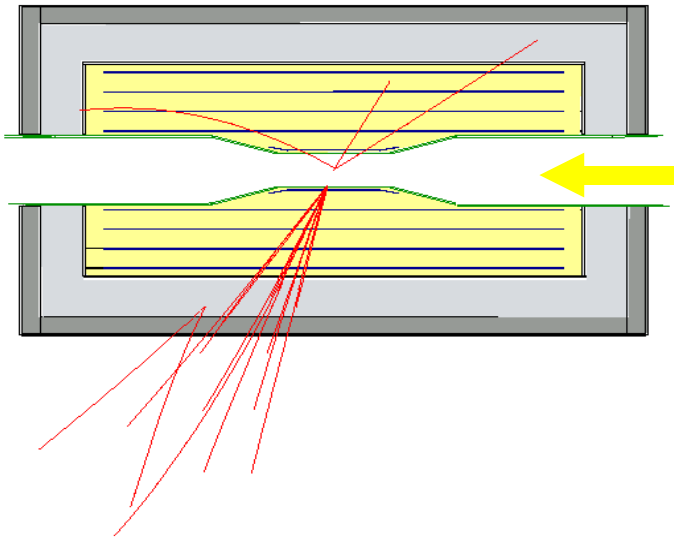

1.5 cm beampipe

construction detail:

extremely thin ladder (50 um)
ladders are "stretched" from two sides

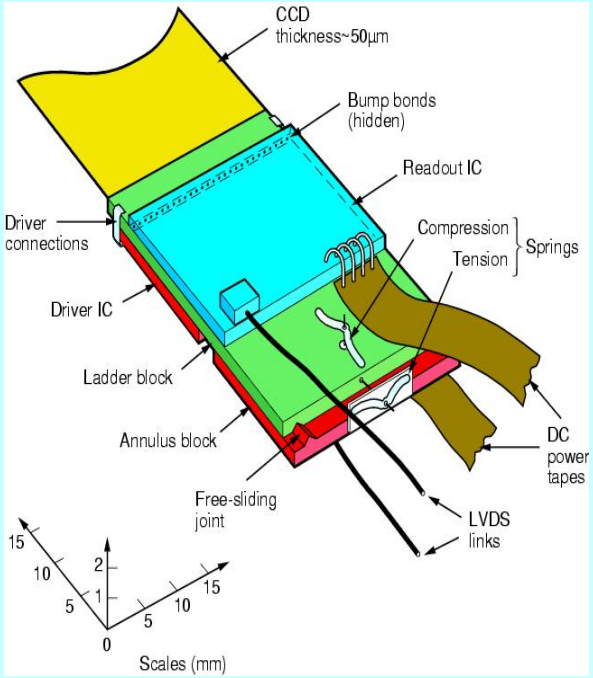

CCD Detector at the FEL

FEL will require improved and new experimental methods:

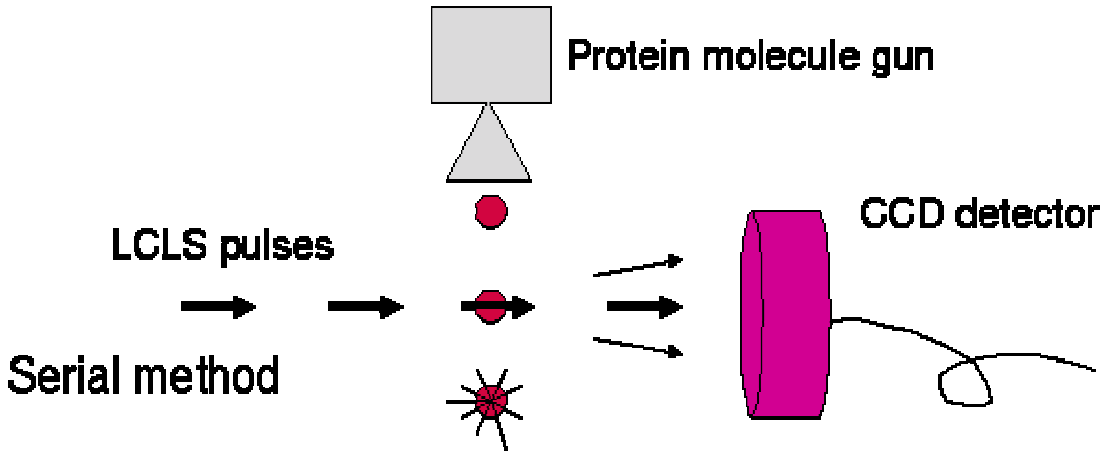

needed: fast, precise detector: CCD

fast recording of diffraction picture from individual molecules

Development of experimental techniques at the FEL is starting
Both HEP and FEL will profit from their respective experiences

TPC tracking System

TPC: Time Projection Chamber

large gasfilled system
little material
true 3−D reconstruction possible
large granularity

material budget:

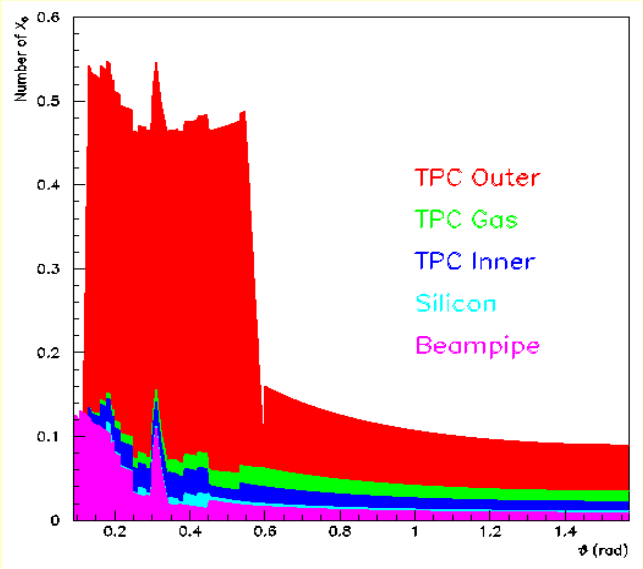

a simulated dd event

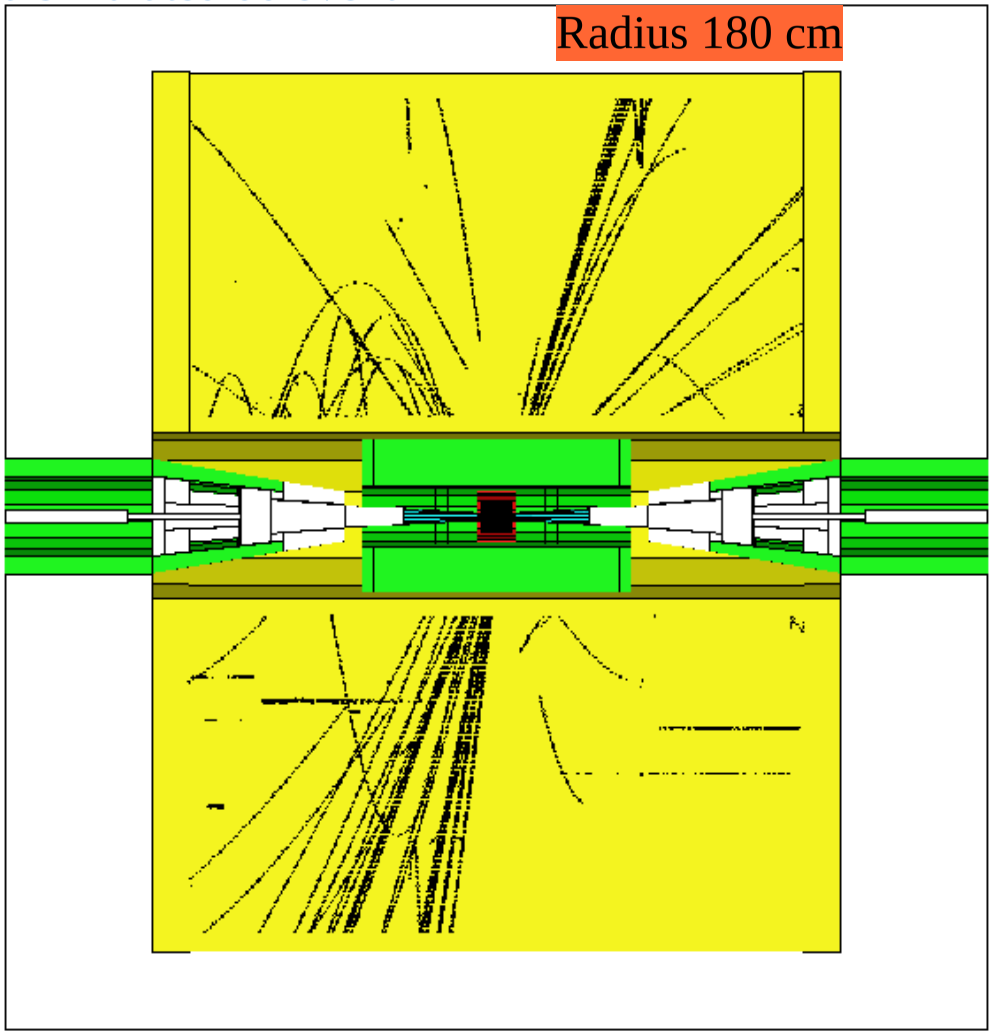

Calorimetry

- calorimeter at E>500 GeV will be very important
- TESLA concept:
  - a high precision, "tracking" calorimeter
  - W absorbers, SI sensors (1x1 cm^2 pad)

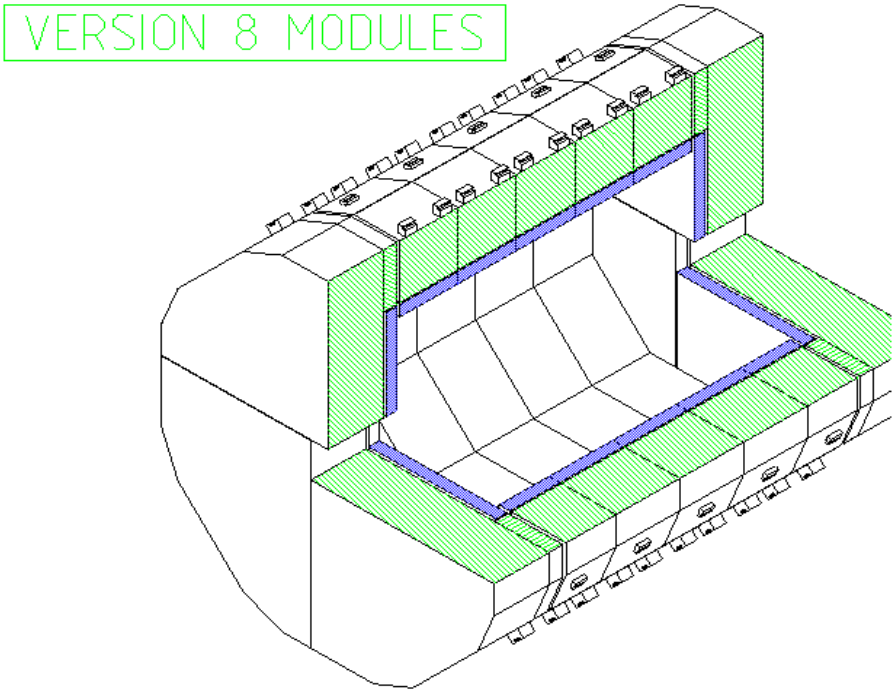

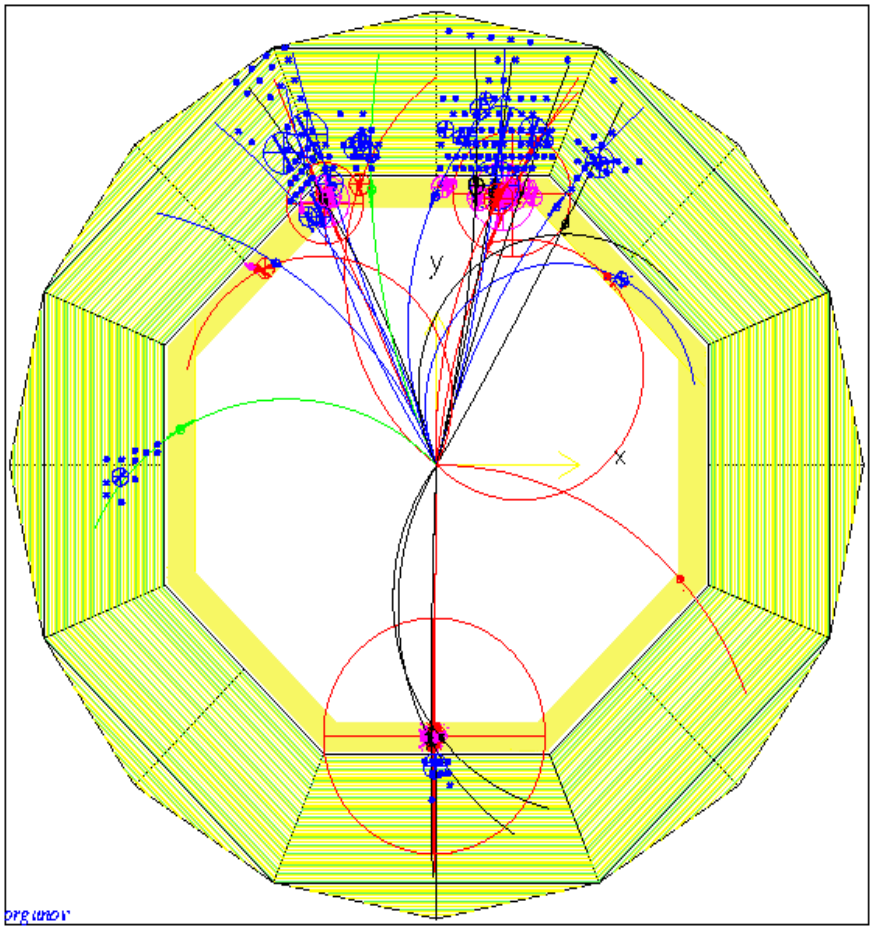

Detector Mechanics

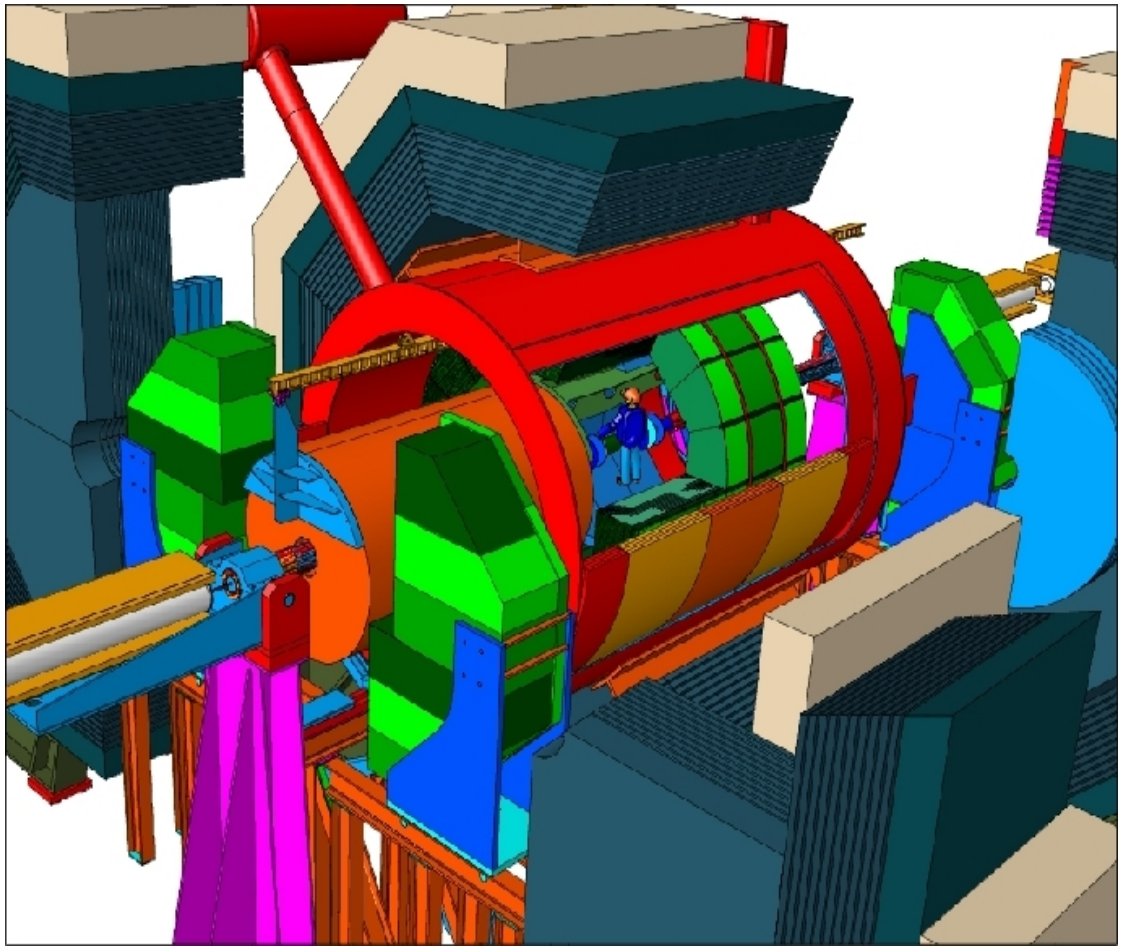

First conceptual version of detector moving and installation:

- Open the endcap Yoke
- Retract the endcap calorimeters
- Move the TPC along z
- Acces the inner detectors

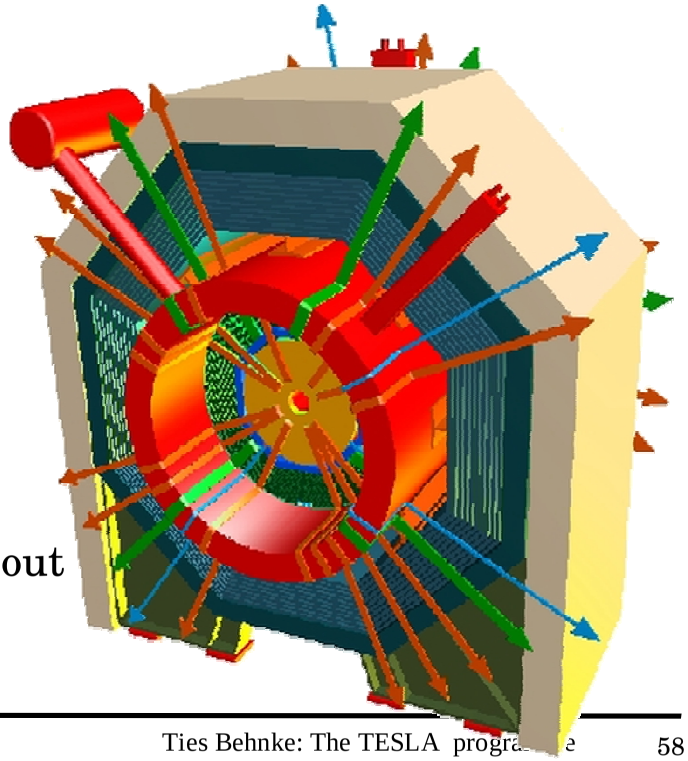

Proposed cable routes out of the detector

Summary Particle Physics

- a linear collider with E= 500 to 800 GeV offers a rich physics program

- EWSB: major insights expected
  - Higgs precision measurements
  - SUSY (or similar) precision study
  - model independent search for alternative scenarios

very strong hints for physics at a few 100 GeV!

- many precision measurements to significantly extend our present knowledge
  - electroweak precision measurements
  - W mass measurement
  - top mass and properties
  - QCD physics
  - ....

results feed back into EWSB understanding

- a linear collider will also search for the totally unexpected
  - substructure?
  - completely new physics: extra dimensions?
  - ...

- the linear collider will complement the physics program of the LHC. Only together can we hope to understand the fundamental problem of electroweak symmetry breaking!

The TESLA FEL: Overall Layout

Aerial view of the Ellerhoop Campus:

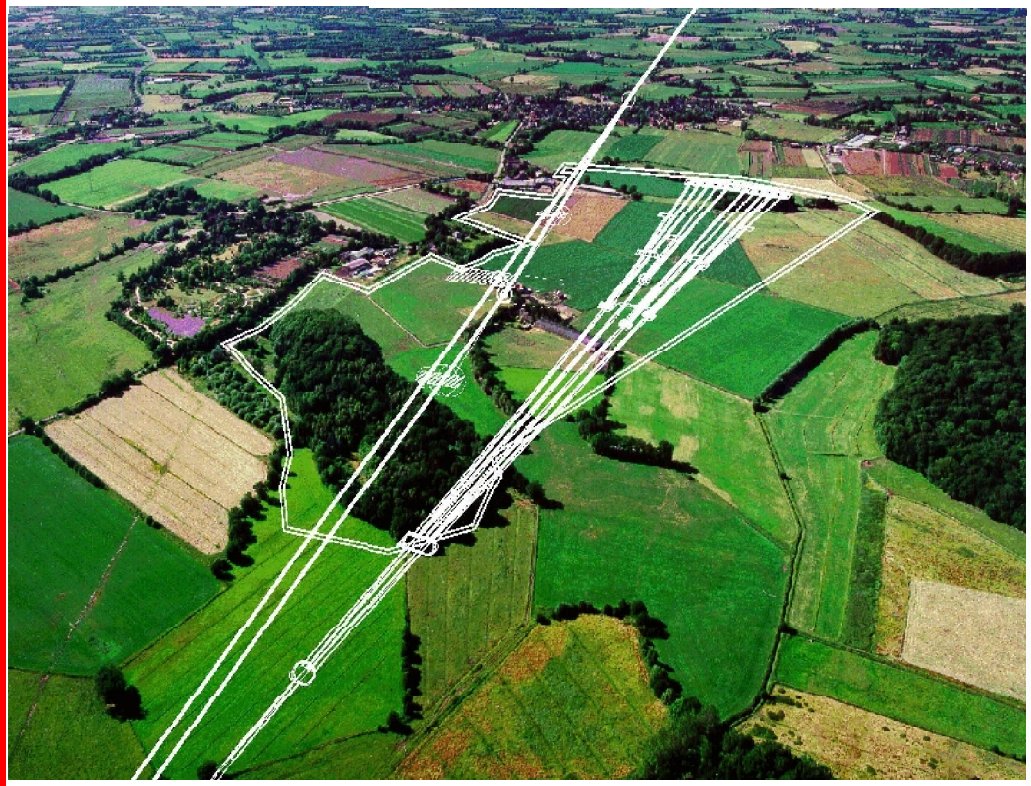

Layout of FEL beamlines

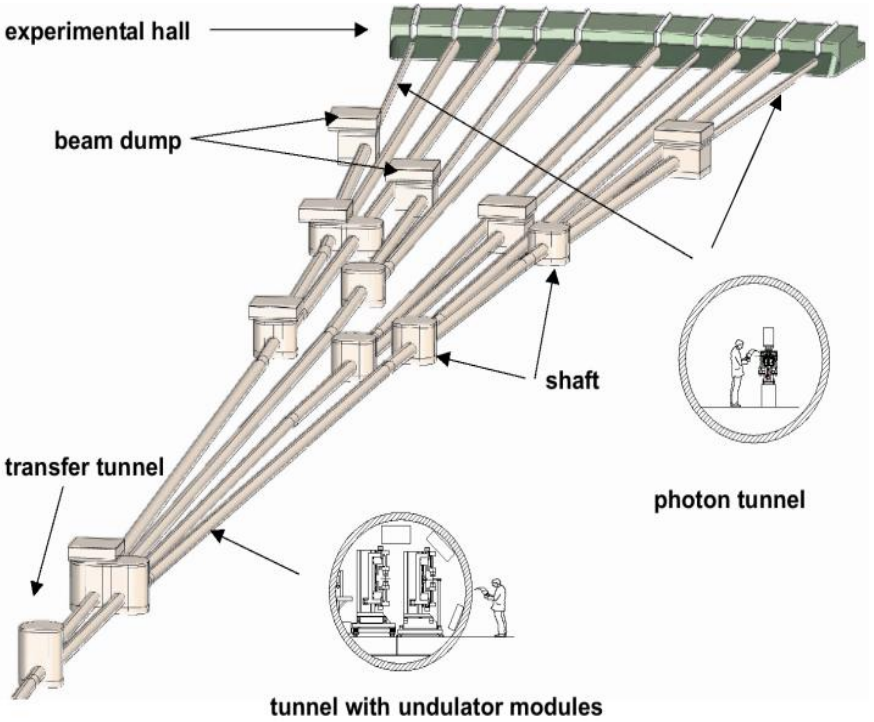

The SASE Principle

- electron beam is sent through undulator
- coherent emission of laser light:

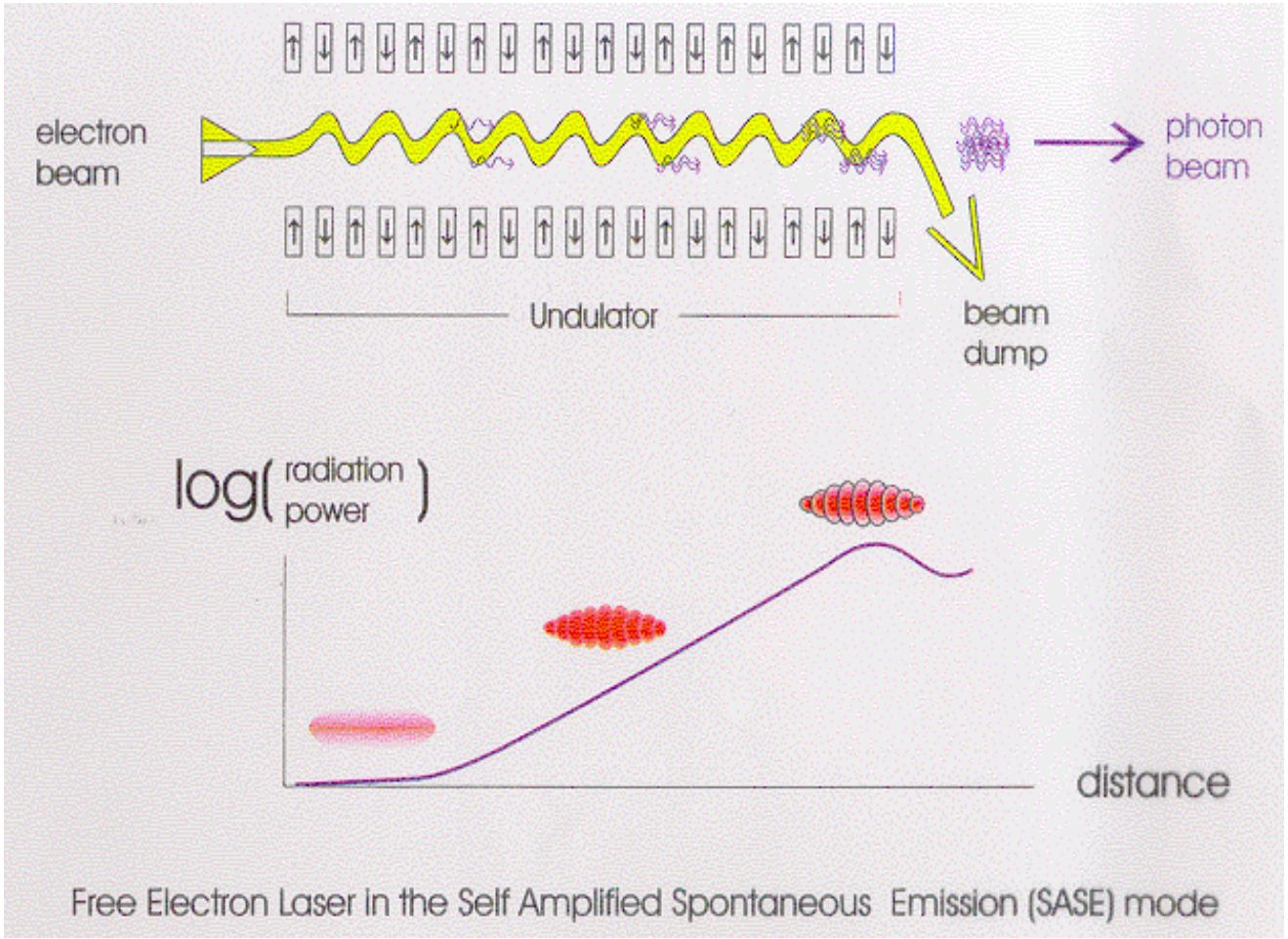

first lasing observed
at DESY February 2000

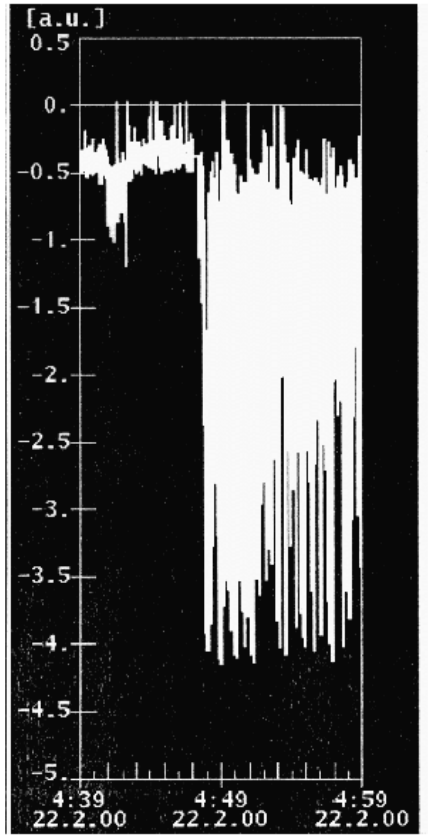

The TESLA FEL

First lasing at <100 nm observed 02–2000

Since then: continuous improvement and optimisation

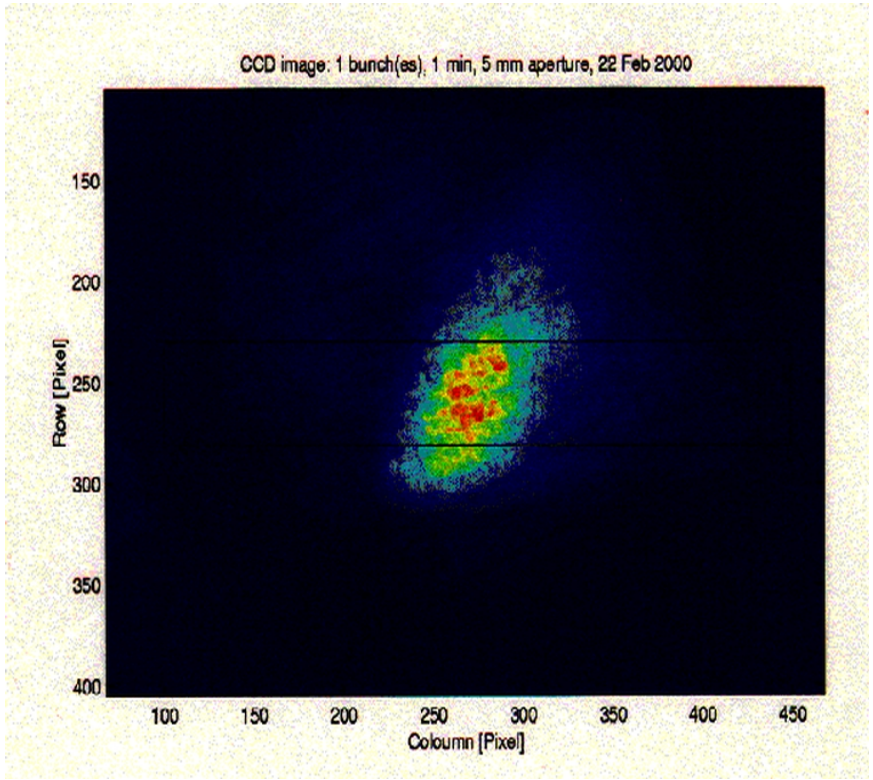

FEL operation: brilliance vs energy

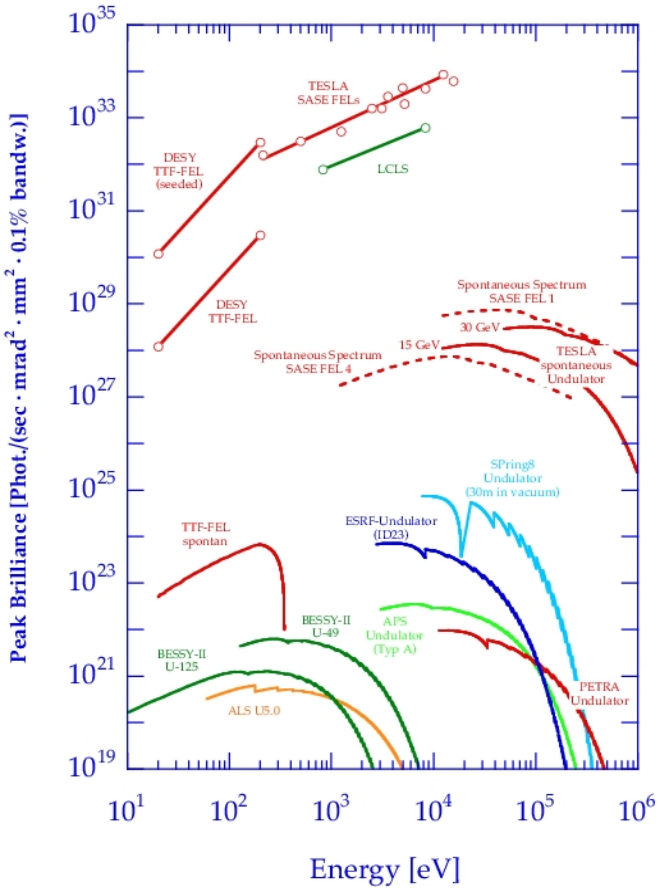

The TESLA FEL

First lasing at <100 nm observed 02–2000

Since then: continuous improvement and optimisation

Smaller wavelength
tunable wavelength
higher brilliance

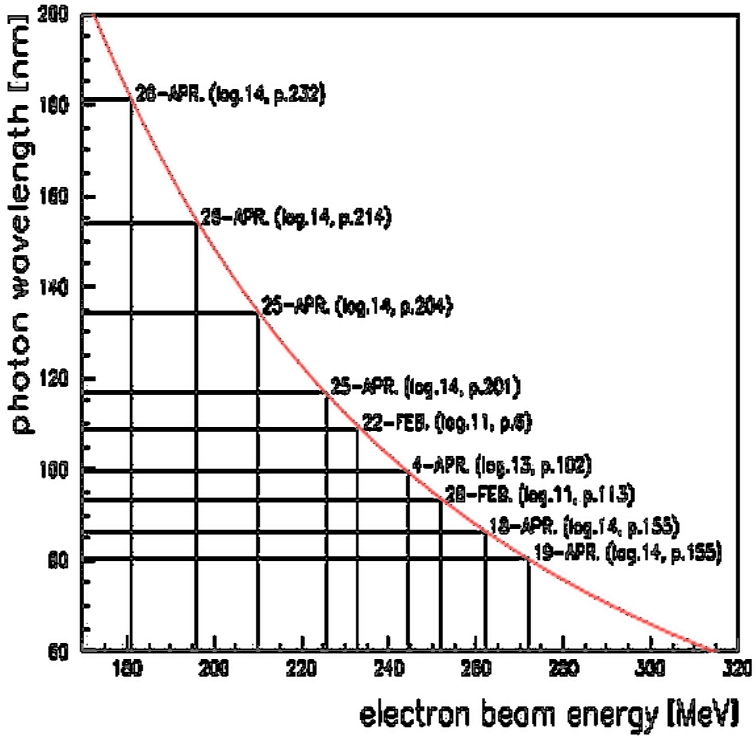

FEL operation: brilliance vs energy

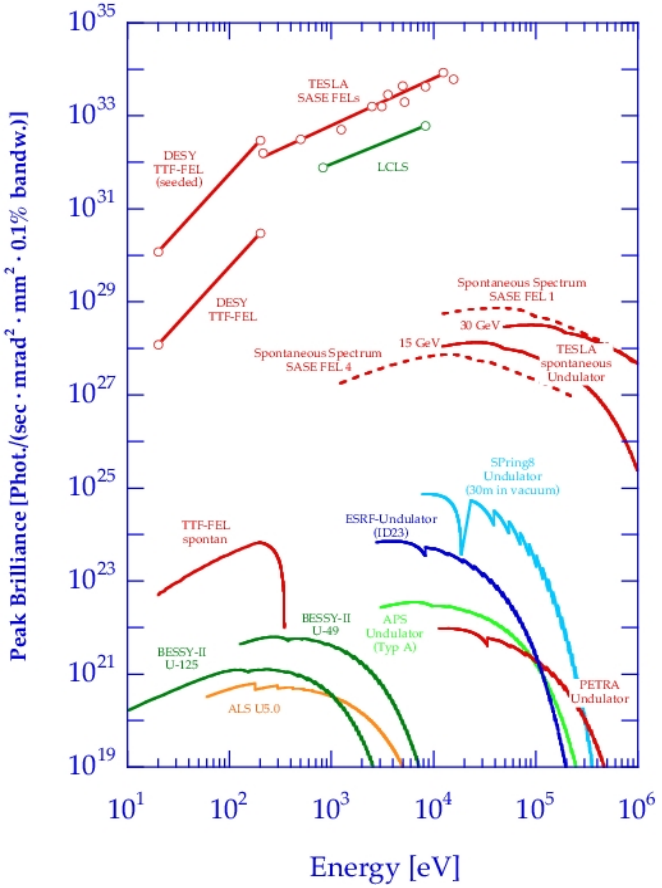

Parameters of the TESLA−FEL

Brilliance of different sources:

TESLA FEL

SLAC FEL

current

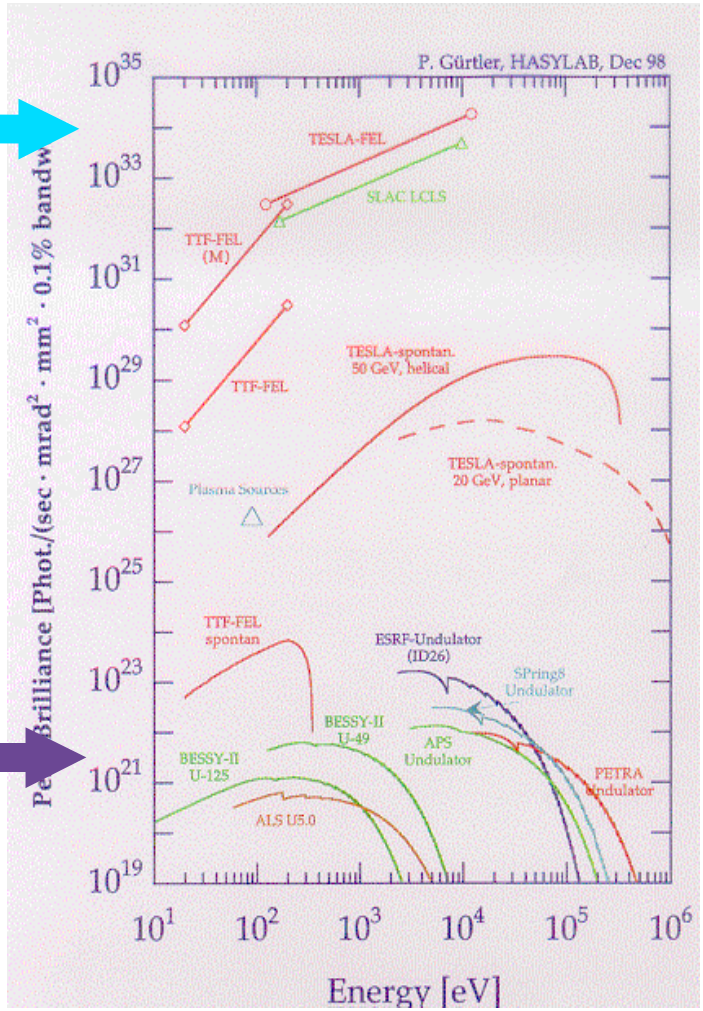

expected Photon Flux for XFEL

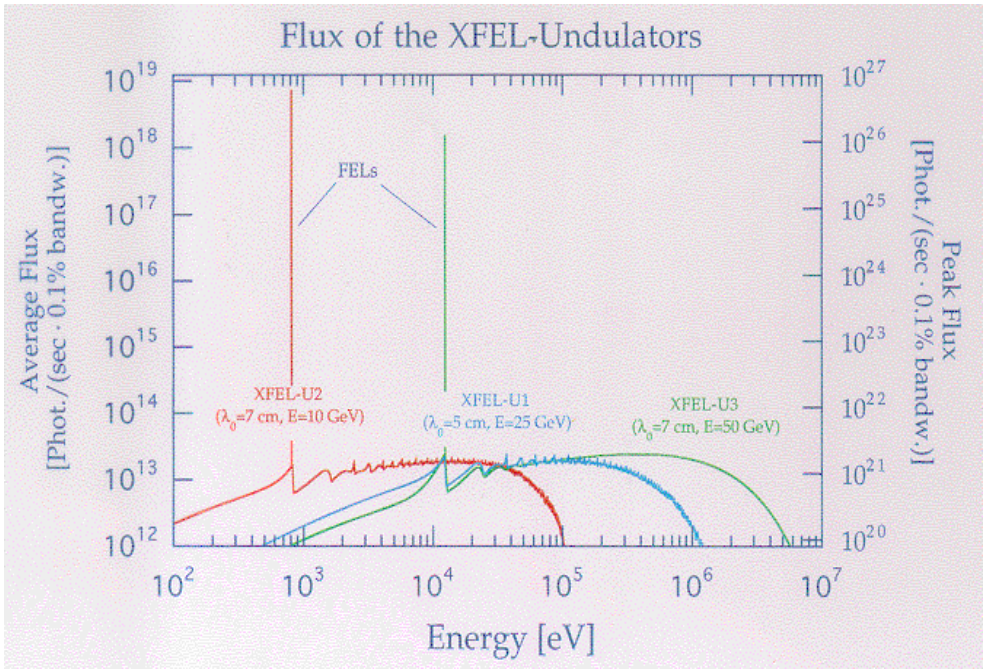

Properties of X−FEL Radiation at TESLA

Electron Beam

- energy: 15−50 GeV
- frequency 5 Hz
- Charge/bunch 1 nC
- Bunchlength 80 fs
- Bunchtrain 11315 bunches

Photon Beam

- wavelength 20−1 A
- ‘peak brilliance’ 2×10^{34}
- photons/ pulse 7×10^{12}
- bandwidth 0.1%
- beam divergence ~ 1 µrad

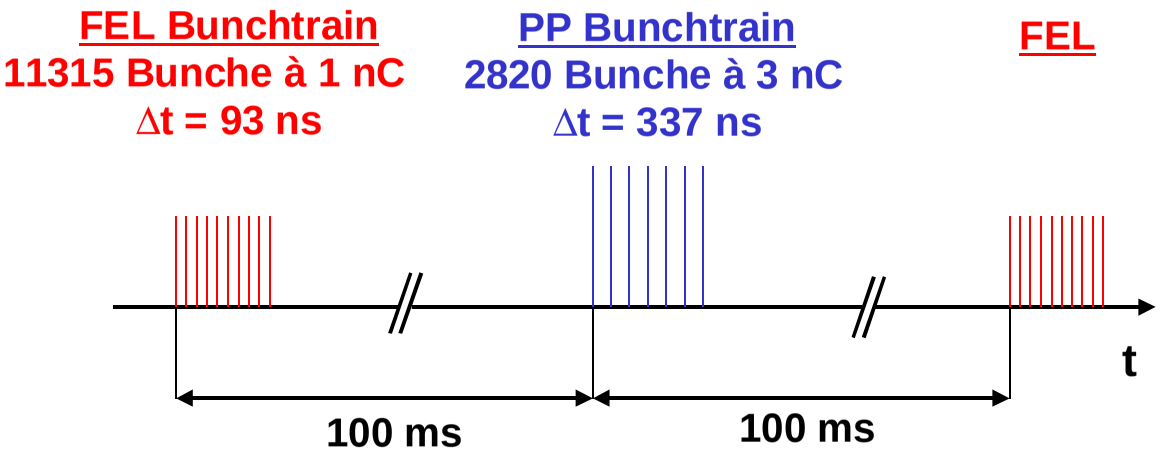

Research at FEL's

- atomic physics, interaction with matter, plasmaphysics

  intensity, short pulses

- femtosecond chemistry, structural biology

  short pulses

- spectroscopy: dynamics of complex systems, holography on a atomic scale

  coherent lightsource

This list is extremely incomplete and can only touch upon the different areas of research possible

Interaction with Matter

The XFEL pulse is extremely energetic:

- per pulse >10^{12} photons
- average power density 1000W/ cm^2
- 'peak power' TW/ cm^2
- focussed to 100nm another increase by 10^7
- most materials will evaporate....
- the exact behaviour of matter in under such conditions is not known

example: X−ray diffraction of single protein molecule:

J. Arthur, Stanford

t=0

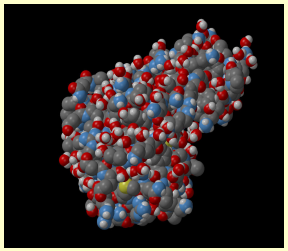

t=100 fs

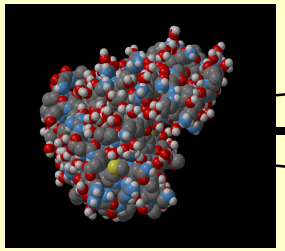

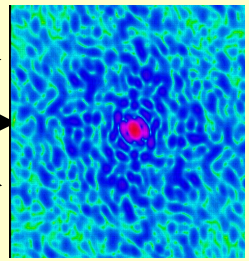

t>7ps

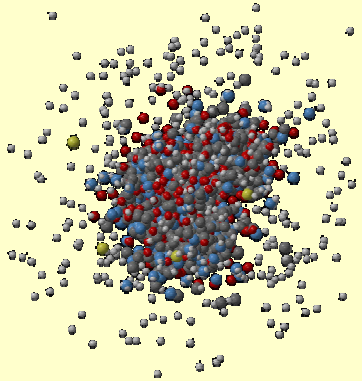

A very short and bright pulse can produce a X−ray picture before the molecule explodes

X−Ray Diffraction

resolving Å structure requires
many molecules:
molecular beam

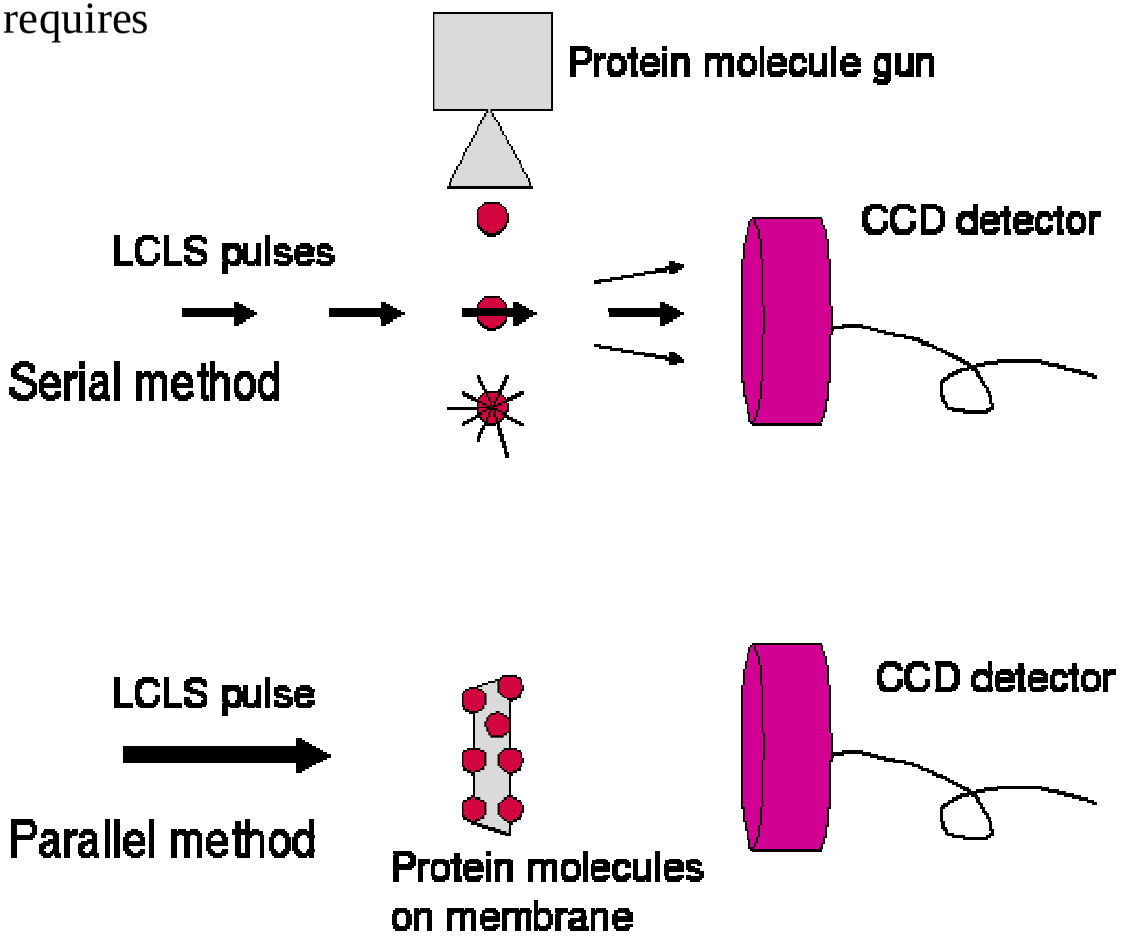

J.Arthur, Stanford

Femtosecond Chemistry

Goal: Study the sequence of dynamical changes on sub−ps time scale following an external disturbance

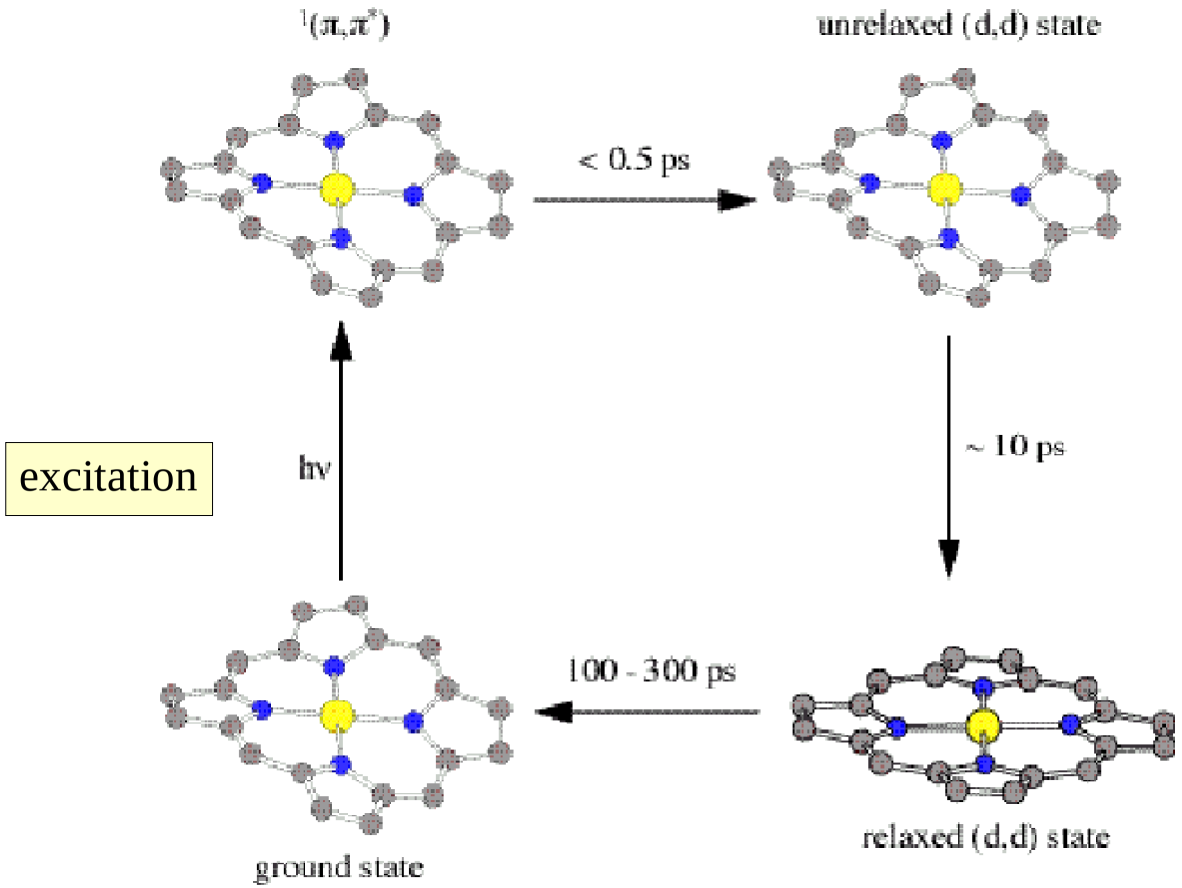

Look at dynamic behaviour of systems

Low−spin Nickel(II) Prophyrins deactivation pathway

J. Arthur, Stanford

Conclusion X–FEL Physics Case

A linear electron positron collider has an exciting physics program:

Physics at the free electron laser

- Look at the dynamics of processes on an atomic scale
- Study single molecules, e.g. biological molecules
- Contributions to many areas of
  - Solid State Physics
  - Atomic Physics
  - Plasma Physics
  - Biology
  - ...

  are expected

A X–FEL has many exciting applications and is carried by a wide and diverse community of physicists. Its an unprecedented example of an interdisciplinary research center

Status of the TESLA Project

- Under construction: Tesla Test Facility Phase TTF II

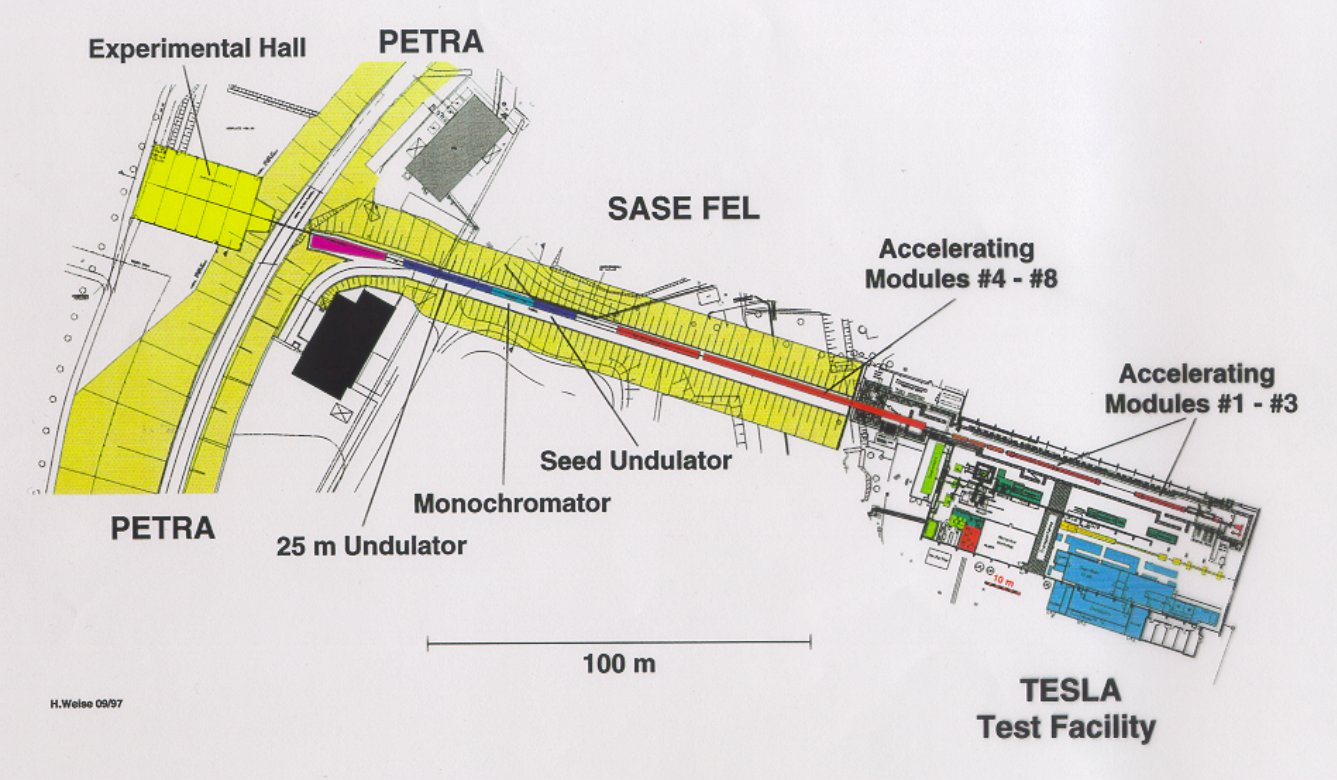

Goal: −demonstrate the superconducting technology (TTF I, done)
− demonstrate the SASE principle in the <100nm range (done)
−gain experience operating a superconducting linac and FEL
−>2003: user facility for Roentgenlaser

The TESLA TDR

The TESLA TDR: published March 2001
see http://tesla.desy.de/tdr

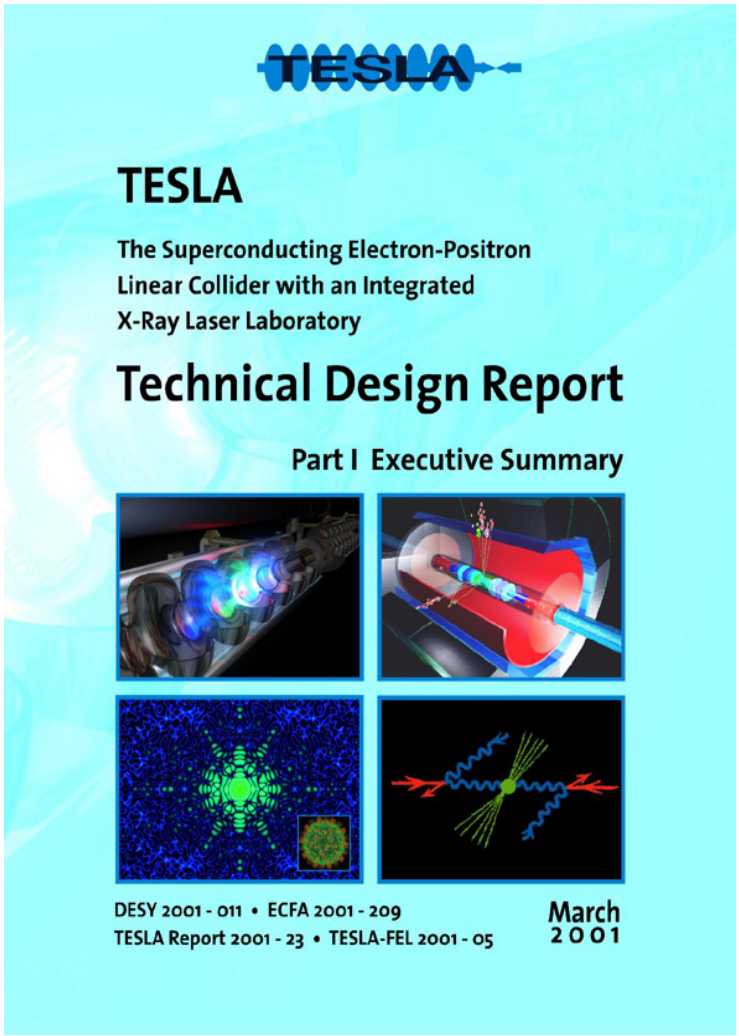

Presented to the public at the
TESLA scientific colloquium, 23/24 March 2001
in DESY Hamburg

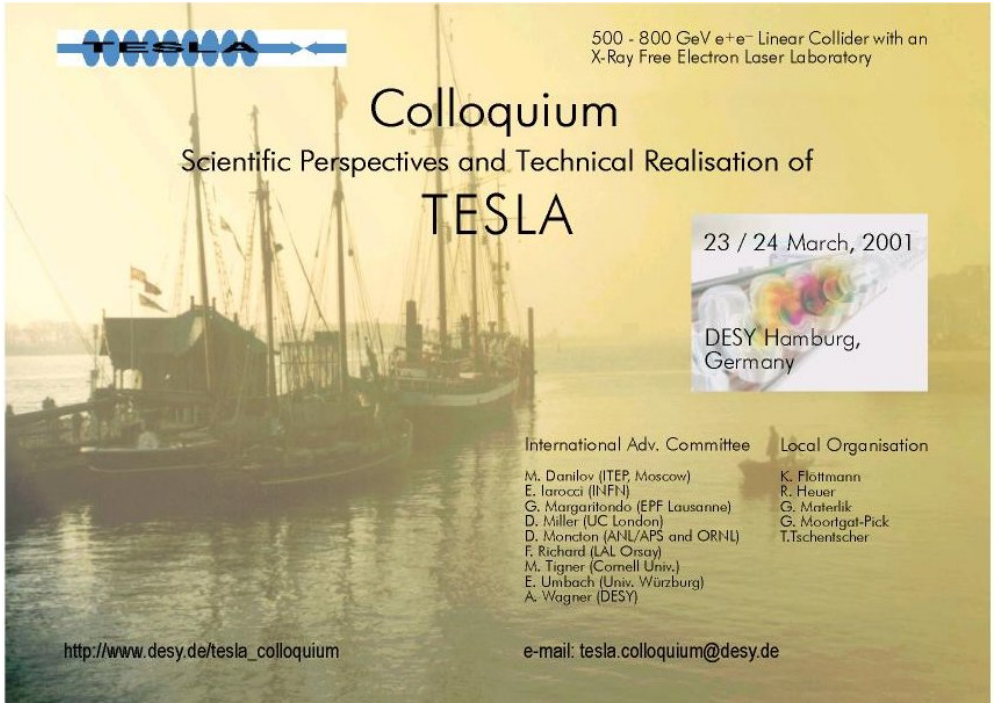

A TESLA Site near Hamburg

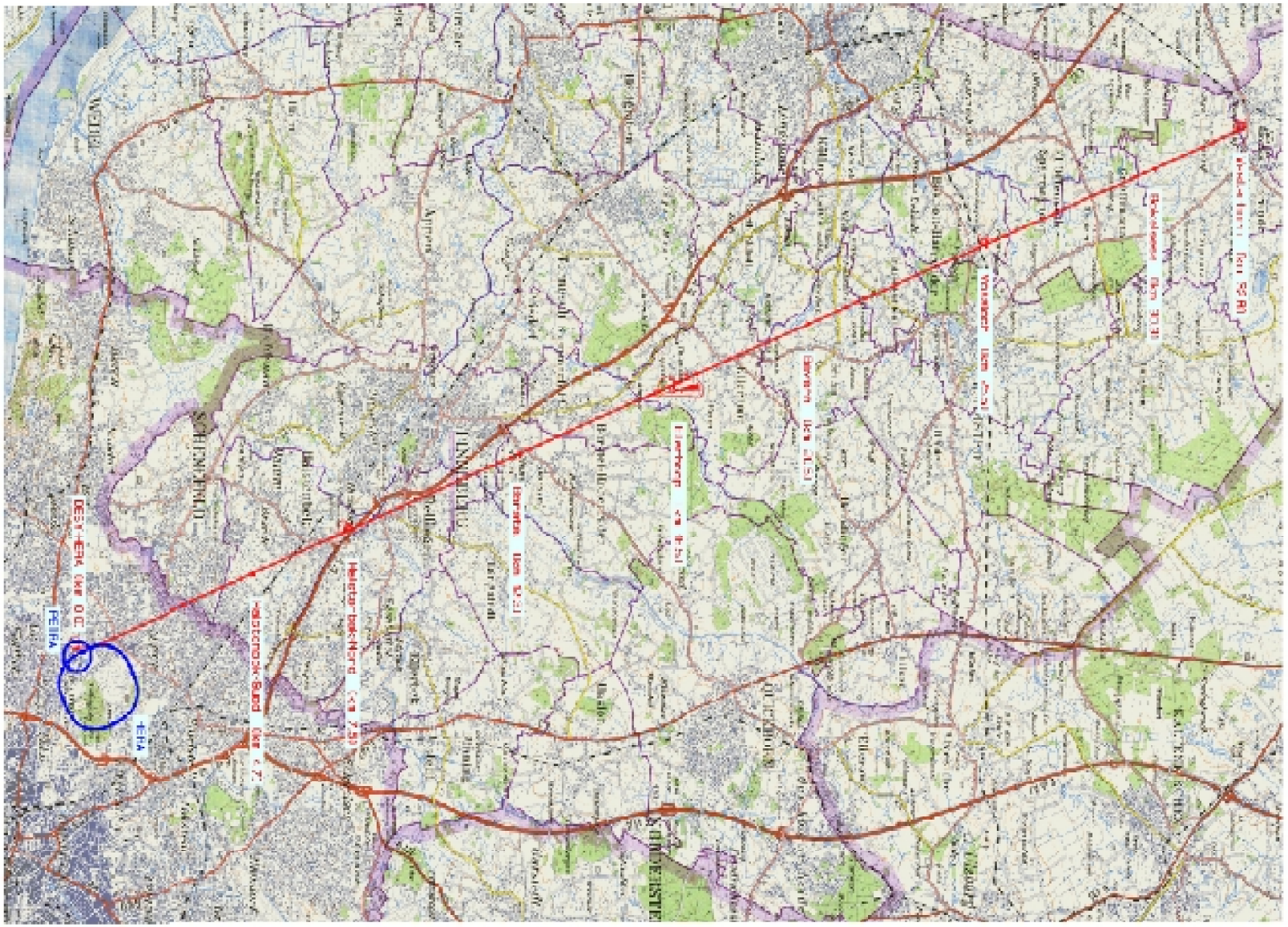

The TESLA Research Campus

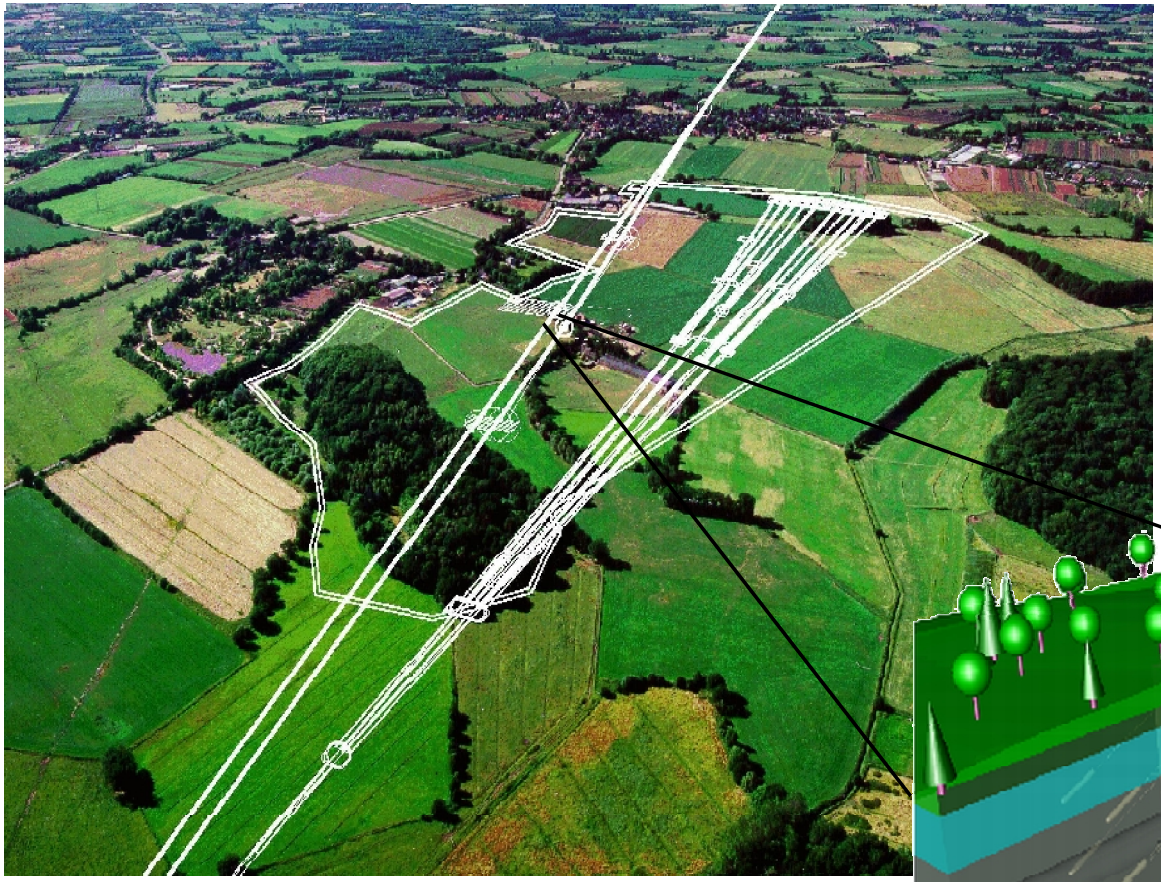

Aerial view of Ellerhoop

Central laboratory site at km15

HEP experiment(s)
XFEL laboratory

Artists drawing of the HEP hall

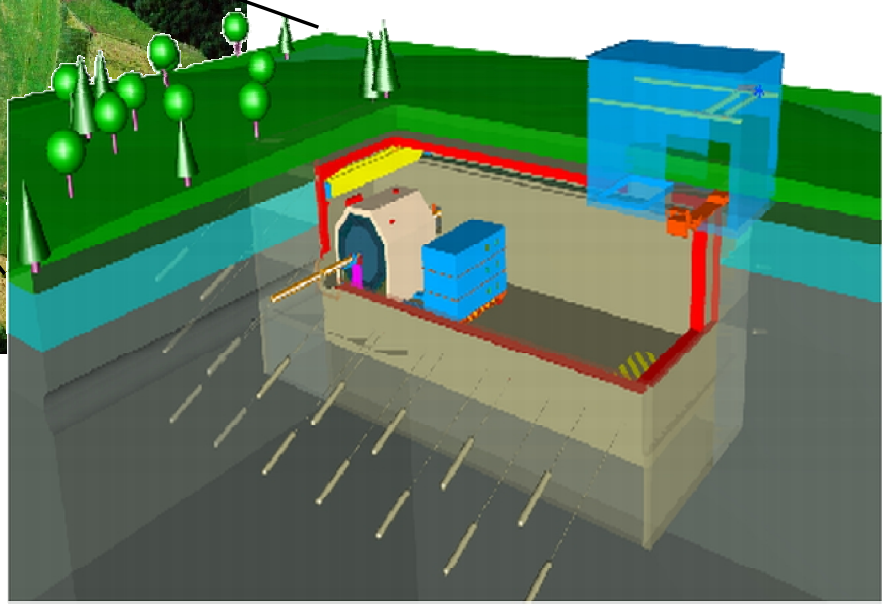

TESLA: Goals and Milestones

- Goals:
  - Develop superconducting technology
  - Use LINAC as driver for X–FEL

- Milestones reached:
  - Routine production of cavities with > 25MV/m
  - Cavities with >40MV/m as single cell cavities
  - Construction and operation of TTF I
    - Stable operation for > 8600 h
    - Demonstrate SASE principle at <100 nm
  - Successful development of klystrons, RF couplers, etc

- Development of the Physics Case

  2 ECFA/DESY workshops with large and international attendance (total >10 workshop meetings)
  - Milestone reached: TESLA TDR Part III (physics), PartIV (detector), Part VI (other research options)
  - Continuation for two more years to
    - Develop the physics studies further
    - React to new developments
    - Continue work on the detector (R&D efforts are starting)
    - Continue the work on machine/ detector interface

Situation worldwide

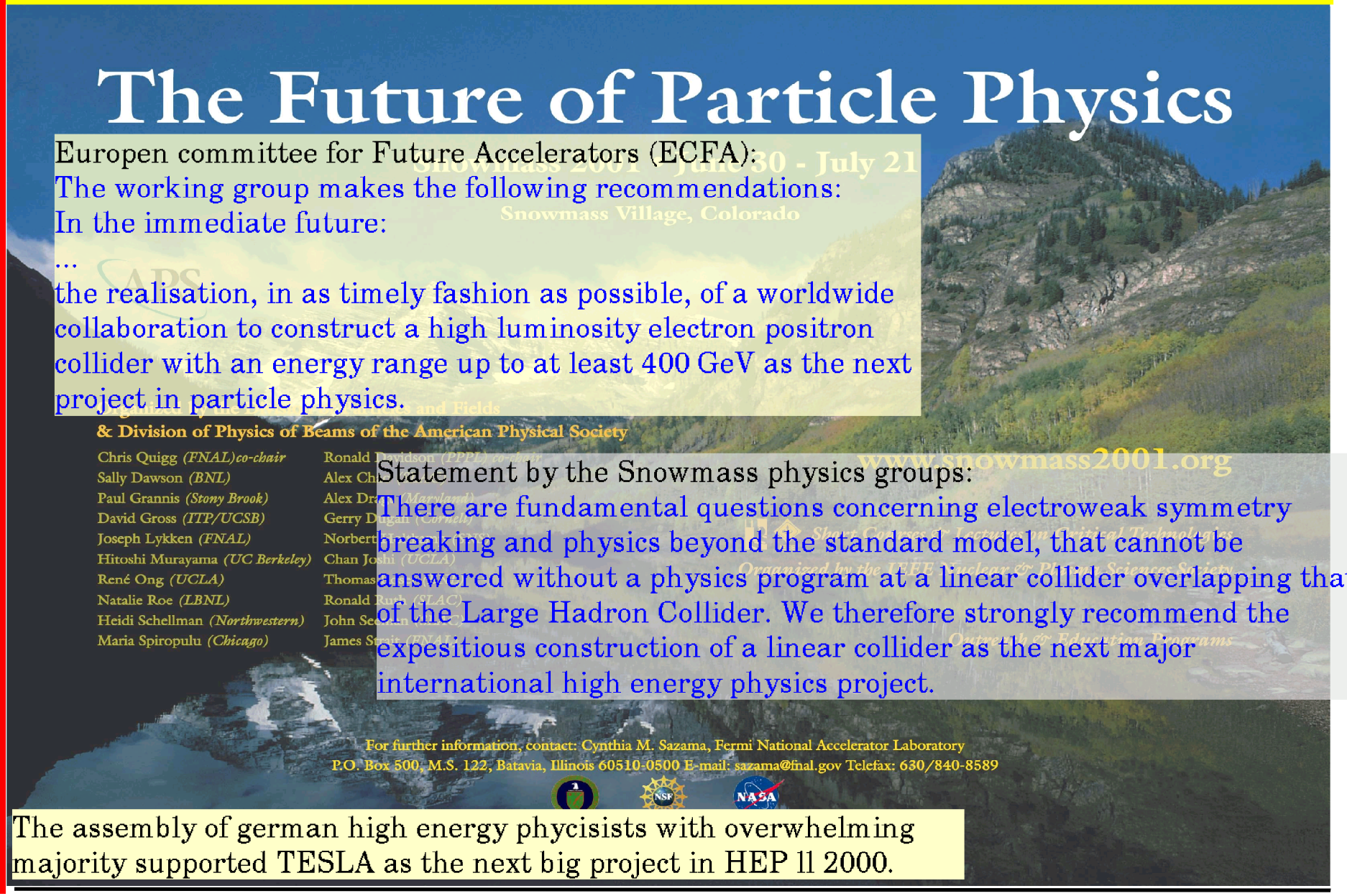

The assembly of german high energy phycisists with overwhelming majority supported TESLA as the next big project in HEP ll 2000.

A Global Accelerator Network

Construct and operate future large accelerators in the framework of a global network

- Make projects part of the national programs of the participating countries
- Maintain the scientific and technical culture and know how in home labes, remain attractive for young people, yet contribute to and participate in large, unique projects
- Maintain and run accelerators to a large extend from participating labs
- Pull together world–wide competence, ideas, resources

- Capital investment is done at home
- Site selections becomes a less critical issue
- Put accelerator close to an existing laboratory:
  - Make optimal use of existing experience, manpower, and infrastructure
  - Specific financial obligations for the host country

ICFA study findings:

Global considerations:
- Need laboratory structure
- Host nation is essential
- Will bear a major fraction of the cost

Technical considerations:
- Project requires central management
- Host lab will have safety responsibility
- Remote operation is in principle feasible
- Local staff of approx. 200 is needed

Costs and schedules

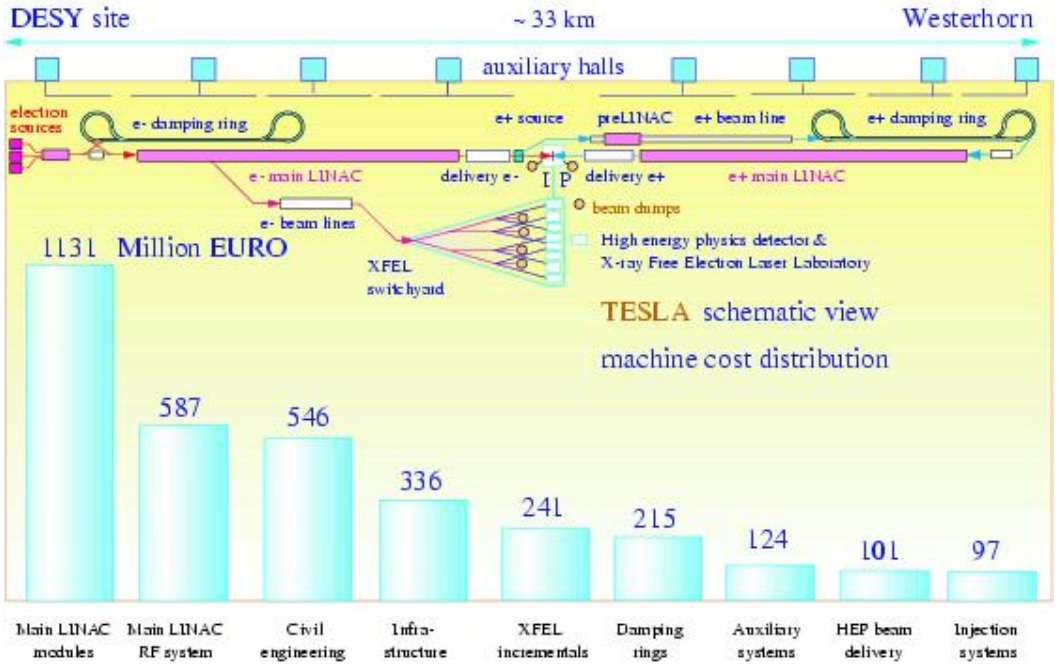

Total estimated TESLA cost:
3136 million Euro

X–FEL additional machine elements:
241 million Euro

Cost of particle physics detector:
about 200 million Euro

Installation schedule:

total construction time after approval:
8 years
4 years to drill the tunnel
4 years to fill the tunnel

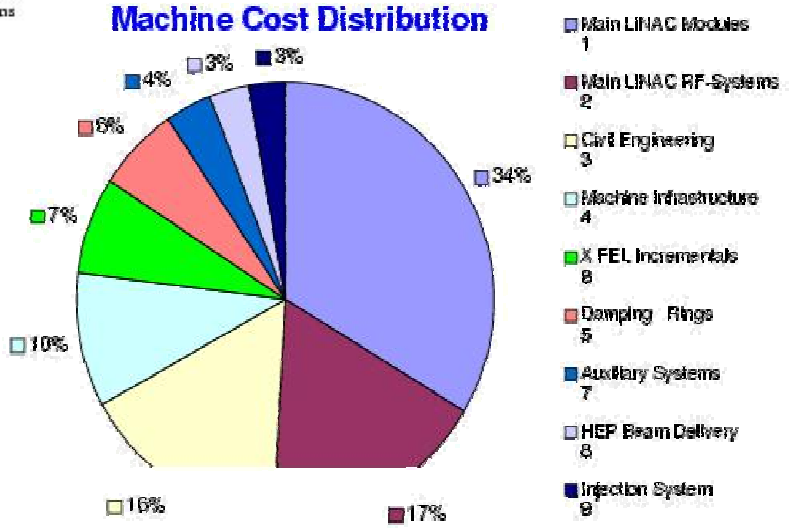

Conclusions

- TESLA: a proposal for a new large interdisciplinary research cent
- Most technical problem are solved
- 500 GeV baseline design is "conservati
- Energy upgrade potential is real

- HEP experimentation at TESLA is challenging
- Needs serious and significant Detector R&D
- Combination of HEP and FEL offers exciting new perspectives

- Plans:
  - TESLA TDR now
  - German Wissenschaftsrat: 2002
  - International technical review?

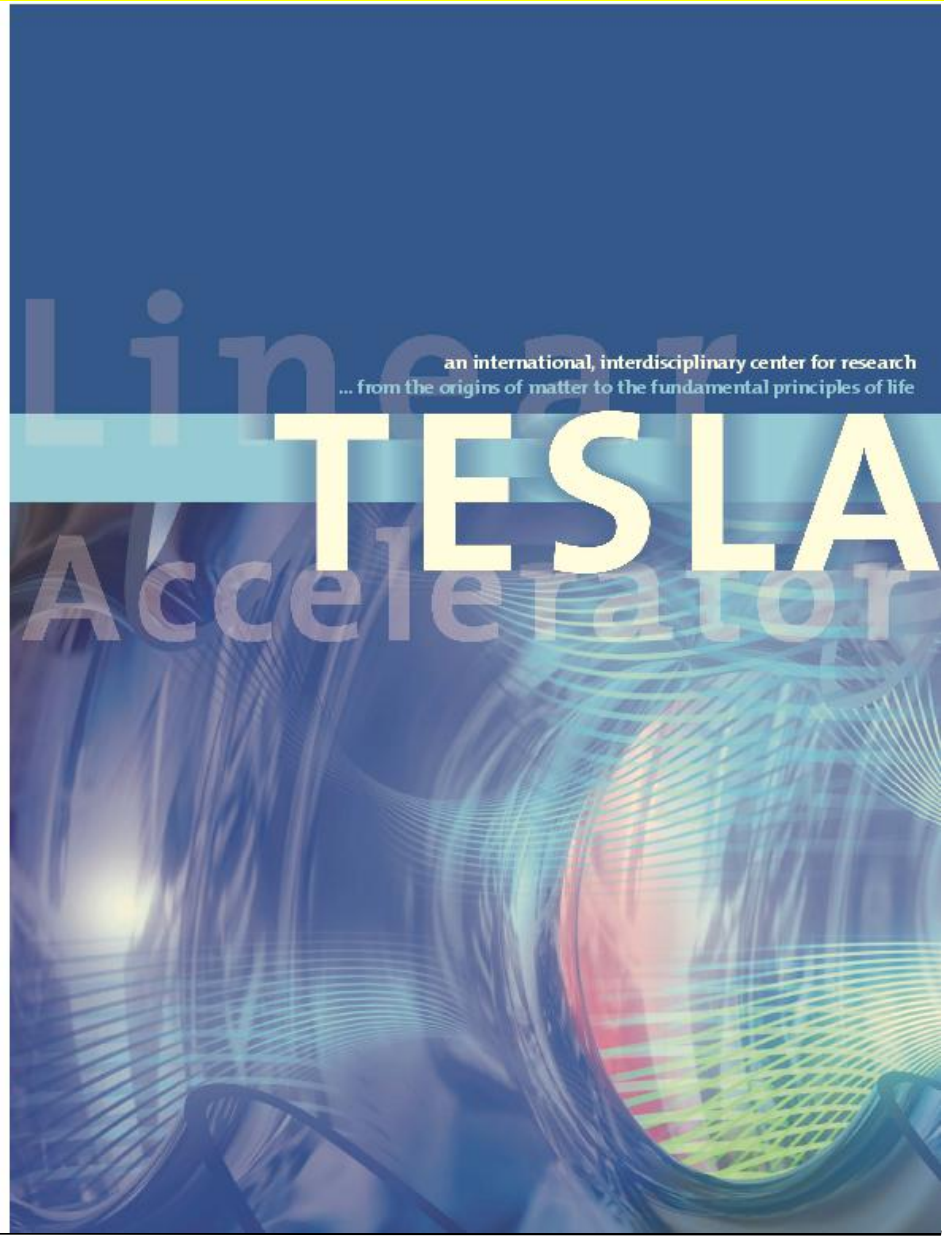

Conclusion

- TESLA is an exciting new project connecting HEP and many other areas of science
- TESLA is in a state where we are confident that it can be build as proposed and within cost
- TESLA is a serious contender in the international competition about the next generation of HEP machines
- TESLA is ideally suited to complement the LHC
- TESLA opens completly new avenues of research in the synchroton radiation community
- The concept of a Global Accelerator Network is a very attractive scheme to realise such a machine

Now is the right time to move ahead and start with TESLA. Lets do it!

Tesla Said

Compiled by
John T. Ratzlaff

MILLBRAE, CALIFORNIA

1984

Published by

TESLA BOOK COMPANY
1580 Magnolia Avenue
Millbrae, California 94030

Library of Congress Catalog Card Number
83-72252

ISBN
0-914119-00-1

Copyright © 1984
by
John T. Ratzlaff

All rights reserved.

CONTENTS

	Page
Acknowledgements	*vii*
Introduction	*ix*
The Tesla Alternate Current Motor	1
Mr. Tesla on Alternate Current Motors	4
The Losses Due to Hysteresis in Transformers	7
Swinburne's "Hedgehog" Transformer	9
Tesla's New Alternating Motors	10
Experiments With Alternating Currents of High Frequency	13
Alternate Current Motors	15
Electro-motors	16
Phenomena of Currents of High Frequency	17
The "Drehstrom" Patent	19
The Ewing High-Frequency Alternator and Parson's Steam Engine	20
On the Dissipation of the Electrical Energy of the Hertz Resonator	22
The Physiological and Other Effects of High Frequency Currents	24
From Ni(c)ola Tesla - He Writes About His Experiments in Electrical Healing	25
Tesla's Latest Results	26
On Apparatus for Cathography	29
Mr. Tesla on Thermo Electricity	31
The Age of Electricity	31
Tesla's Latest Advances in Vacuum Tube Lighting	36
Tesla on Animal Training by Electricity	39
My Submarine Destroyer	40
Letter to Editor	43
Tesla Describes His Efforts in Various Fields of Work	43
Some Experiments in Tesla's Laboratory With Currents of High Potential and High Frequency	46
Tesla's New Discovery	57
Tesla's Wireless Light	59
Talking With Planets	61
Tesla Thinks Wind Power Should be Used More Now (Part of a series of articles by noted scientists)	66
A Striking Tesla Manifesto	72
Letter From Tesla (Refers to subway system)	74
Electric Autos	76

	Page
The Transmission of Electrical Energy Without Wires As a Means for Furthering Peace	78
Tesla on Subway Dangers	87
Tesla's Reply to Edison	88
Tesla On The Peary North Pole Expedition	90
Signalling to Mars - A Problem of Electrical Engineering	92
Tuned Lightning	94
Tesla's Wireless Torpedo	96
Wireless on Railroads	96
Ni(c)ola Tesla Objects	97
Tesla's Tidal Wave to Make War Impossible	98
Mr. Tesla on the Wireless Transmission of Power	102
Can Bridge Gap to Mars	103
Sleep From Electricity	105
Possibilities of "Wireless"	106
Tesla on Wireless	107
My Apparatus, Says Tesla	108
The Future of the Wireless Art	108
Nikola Tesla's Forecast for 1908	111
Mr. Tesla's Vision	112
Little Aeroplane Progress	113
Tesla on Aeroplanes	114
How to Signal Mars	115
What Science May Achieve This Year - New Mechancial Principle for the Conservation of Energy	119
Mr. Tesla on the Future	121
The Disturbing Influence of Solar Radiation on the Wireless Transmission of Energy	121
Nikola Tesla Plans to Keep "Wireless Thumb" on Ships at Sea	126
From Nikola Tesla (Tribute to George Westinghouse)	127
Tesla and Marconi	128
Correction by Mr. Tesla	131
Patent Wrapper, Patent 1,329,559, Valvular Conduit	132
Wonders of the Future	161
Nikola Tesla Tells of Country's War Problems	165
Minutes of the Edison Medal Meeting, May 18, 1917, with Nikola Tesla's Acceptance Speech on Receiving the Edison Medal	167
A Lighting Machine on Novel Principles	190
Famous Scientific Illusions	192

Page		Page
78	Tesla Answers Mr. Manierre and Further Explains the Axial Rotation of the Moon	200
87	The Moon's Rotation	202
88	The Moon's Rotation	204
90	Nikola Tesla Tells How We May Fly Eight Miles High at 1,000 Miles an Hour	209
92	Can Radio Ignite Baloons?	214
94	Signals to Mars Based on Hope of Life on Planet	219
96	Interplanetary Communication	222
96	Nikola Tesla on Electric Transmission	224
97	Nikola Tesla Tells of New Radio Theories	225
98	Mr. Tesla Speaks Out	227
102	Letter to Editor (On Marconi's feat)	229
103	On Future Motive Power	230
105	Dr. Tesla Writes of Various Phases of His Discovery	237
106	Statement of Tesla Relating to Force and Matter	238
107	Chewing Gum More Fatal Than Rum, Says Tesla	239
108	Pioneer Radio Engineer Gives Views on Power	240
108	Mr. Tesla Writes (Refers to J. P. Morgan)	243
111	Breaking up Tornadoes	244
112	Possibilities of Electrostatic Generators	250
113	Nikola Tesla Writes (Additional comments on electrostatic generators)	250
114	Tesla Sees Evidence Radio and Light Are Sound	258
115	Radio Power Will Revolutionize the World	261
119	Tribute to King Alexander	267
121	German Cosmic Ray Theory Questioned	268
121	Nikola Tesla Tells How He Would Defend Ethiopia Against Italian Invasion	269
126	Prepared Statement of Tesla (For interview with press on 81st birthday observance)	272
127	Sending of Messages to Planets Predicted by Dr. Tesla on Birthday	276
128	Dr. Tesla Honors	279
131	Text of Tesla Speech for the Institute of Immigrant Welfare	280
132	Reference to Compass in 13th Century Poem	281
161	The Soviet Sacrifice of Spain	282
165	Story of Youth Told by Age	283
167	Mechanical Therapy	286
190	The New Tesla Electric Heater	288
192	Tesla's New System of Fluid Propulsion	289

ACKNOWLEDGEMENTS

Burlingame Public Library, Burlingame, Calif.

California State Library, Sacramento, Calif.

Columbia University, Rare Book and Manuscript Library, New York City

Mechanics Institute Library, San Francisco, Calif.

San Mateo County Library, Belmont, Calif.

Smithsonian Institution, Div. of Electricity & Nuclear Energy, Washington, D. C.

Stanford University Libraries, Stanford, Calif.

A. L. Lez, San Anselmo, Calif.

Thorn L. Mayes, Saratoga, Calif.

Mildred Ratzlaff, Millbrae, Calif.

Electrical World Magazine

Science News Magazine

Scientific American Magazine

INTRODUCTION

The collection of articles and papers presented in this volume are in Nikola Tesla's own words; it is the most comprehensive single volume of Tesla's writings presently available. A period of over a quarter of a century has elapsed in gathering this material from every known source, in addition to searching archival material from the decades around the turn of the century.

Mr. Tesla speaks for himself and the reader is enabled to make first hand judgments rather than relying on the opinions of others. The subject matter is arranged in chronological order and includes a wide range of interesting and important information not previously published in book form.

It is becoming recognized that Tesla's discoveries and inventions in the areas of alternating current power generation and transmission, high frequency and high voltage, along with basic radio communication, are the fundamentals of the present world-wide technological growth. Power transmission in small and large quantities without wires included plans for transmission of sufficient energy to make a light spot on the moon, and transmission of messages as far as distant planets. Tesla's adversaries seized on these concepts with ridicule and for the purpose of undermining his credibility. In fact, there is now a systematic quest for life and intelligence through the medium of radio astronomy which is a legitimate part of our present space program.

Mr. Tesla continually expressed the contention that his system of electrical transmission was not by electromagnetic means, although the equipment did display these effects. His comments on the ether therefore are significant and differ from those of his contemporaries. It is unfortunate that one of the major hurdles in presenting new and fundamental discoveries is that of communication.

Among the long list of accomplishments are new lighting systems, development and public demonstration of radio control before 1900, and new concepts in the cosmic rays. In the healing arts, Tesla was far ahead in the development of x-ray equipment, studies of physiological and other effects of high frequency on humans, and mechanical therapy.

His thoughts encompassed the widest possible range, extending from treatises on the moon's rotation to finding a reference to the use of a compass in the 13th century. While by nature opposed to war, he developed specific plans for military application aimed at providing defense mechanisms to make war impossible.

A new turbine design, incorporating low cost, simplicity, efficiency and light weight is today a commercial reality. At the time of development, successful demonstrations by the inventor were well received only in technical journals and news accounts.

The name of Nikola Tesla as a leader in the electrical field was well recognized in this country and abroad in the 1890's and for a few years after 1900. The reasons for his fall into obscurity are numerous, but a major point that seems to be commonly overlooked is that a struggling inventor, several times on the verge of financial success, was the victim of economic situations beyond his control. The business difficulties of George Westinghouse resulted in payment of a minute fraction of the true value of the Tesla alternating current motor and generator patents. The crash of 1901 was the most devastating to Tesla and also to his backer, J. P. Morgan, and prevented completion of the Wardenclyffe, Long Island, installation. It should be pointed out that Tesla was only complimentary of his financial backers.

It is intended that the information presented will help in clarifying many missing details and, for the first time, make available some of Tesla's basic thoughts and ideas in areas which are in need of further development for the benefit of mankind.

JTR

The Electrical Engineer - London
June 22, 1888. pp. 583-585

THE TESLA ALTERNATE CURRENT MOTOR

The interest taken in M. Tesla's contributions to electrical apparatus and to electrical literature is so great, and the subject is so important, that we do not hesitate to give further space to the subject. On May 26 a communication on the subject from Dr. Louis Duncan, of Johns Hopkins University, appeared in our American contemporary, the *Electrical Review*, to the effect:

"We may, for our present purposes, divide motors into two classes; Continuous, in which the armature coils are unsymmetrical with respect to the poles, and which, therefore, give a practically constant torque, and alternating motors, in which the armature coils are symmetrical with respect to the poles, and which, therefore, give a torque varying both in magnitude and sign during a period of the counter E.M.F. The Tesla motor belongs to this latter class.

"In every motor the torque is equal to the rate of change of lines of induction through the armature circuit for a small angular displacement, multiplied by the armature current, or $\frac{dm}{dt}I$.

In the Tesla motor the first of these terms is greatest when the coil is opposite a pole and the field currents have their greatest amplitude. It is zero at a point about 45 deg. from this, supposing we neglect armature reactions. It depends on several things. The E.M.F. which determines it is due to changes in the number of lines of force passing through the armature circuit caused by (1) changes in the field currents; (2) the motion of the armature. The current depends on these E.M.F.'s, and on the reduced self-induction and resistance of its circuit. The motor can only do work when the first cause of E.M.F. is the greater, for a current in the direction of the ordinary counter E.M.F. would stop the motion. In some parts of a revolution the two E.M.F.'s work together, retarding the motion; in others, the induced E.M.F. produces a current causing the motor to revolve. It is impossible for me, with only a meagre description of the principles of the machine, to give an idea of the relative magnitude of these effects. Some of the results, however, are the following: Having given a definite number of reversals of the dynamo, there are a number of speeds, multiples of these reversals, at which the motor will govern itself when it is doing a certain amount of work. At one of these speeds, depending on the construction of the motor, the output will be a maximum. Now I see the statement that 'there is no difficulty whatever attendant upon starting the motor under load.' I cannot reconcile this with the above facts. That the torque for a smaller number of revolutions than ordinarily used, might be greater, one can readily see, since the counter E.M.F. is less in proportion to the induced E.M.F., but it must be remembered that for certain speeds even the induced current would tend to stop the motion; how the motor is to pass these critical speeds I do not see. Again, if the maximum load is suddenly thrown on while the motor is running at its proper speed, then, if the inertia be great, the motor will fall behind its point of maximum work, and either stop or take up some slower speed.

"What the possible efficiency and output of the motor may be, only experiment will tell. I have shown* that the output of an ordinary alternating current motor is equal to that of a continuous current motor, supplied with a corresponding ing E.M.F. The efficiency might be great, but is has the disadvantage that about the same current flows for no work and maximum work, so for light loads the efficiency can hardly be very high.

"With our present knowledge of alternating currents it is useless to attempt to calculate from the simple though misleading assumptions ordinarily made, the

**Inst. Elec. Engineers*, Feb., 1888.

output, conditions of maximum work, &c., of this machine. Experiment alone can determine its value, and one properly conducted and interpreted set of experiments should enable us to judge both the merit of the invention and its best possible form. I cannot see, however, how, in the form described in the last issue of this journal the motor can work under conditions of a suddenly varying load as satisfactorily as continuous current motors."

To the above Mr. Tesla replied on June 2 as follows:

"I find in your issue of last week a note of Mr. Duncan referring to my system of alternate current motors.

"As I see that Dr. Duncan has not as yet been made acquainted with the real character of my invention, I cannot consider his article in the light of a serious criticism, and would think it unnecessary to respond; but desiring to express my consideration for him and the importance which I attach to his opinion, I will point out here briefly the characteristic features of my invention, inasmuch as they have a direct bearing on the article above referred to.

"The principle of action of my motor will be well understood from the following: By passing alternate currents in proper manner through independent energising circuits in the motor, a progressive shifting or rotation of the poles of the same is effected. This shifting is more or less continuous according to the construction of the motor and the character and relative phase of the currents which should exist in order to secure the most perfect action.

"If a laminated ring be wound with four coils, and the same be connected in proper order to two independent circuits of an alternate current generator adapted for this purpose, the passage of the currents through the coils produces

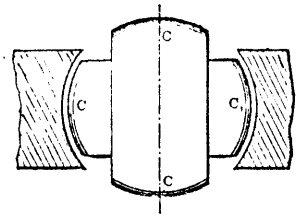

FIG. 1.

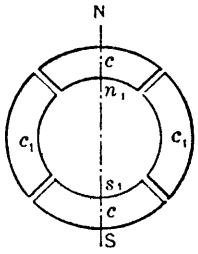

FIG. 1a.

theoretically a rotation of the poles of the ring, and in actual practice, in a series of experiments, I have demonstrated the complete analogy between such a ring and a revolving magnet. From the application of this principle to the operation of motors, two forms of motor of a character widely differing have resulted- one designed for constant and the other for variable load. The misunderstanding of Dr. Duncan is due to the fact that the prominent features of each of these two forms have not been specifically stated. In illustration of a representative of the second class, I refer to Fig. 1, given herewith. In this instance, the armature of the motor is provided with two coils at right angles. As it may be believed that a symmetrical arrangement of the coils with respect to the poles is required, I will assume that the armature is provided with a great number of diametrically wound coils or conductors closed upon themselves, and forming as many independent circuits. Let it now be supposed that the ring is permanently magnetized so as to show two poles (N and S) at two points diametrically opposite, and that it is rotated by mechanical power. The armature being stationary, the rotation of the ring magnet will set up currents in the closed armature coils. These currents will be most intense at or near the points of the greatest density of the force, and they will produce poles upon the armature core at right angles to those of the ring. Of course there will be other elements entering into action

which will tend to modify this, but for the present they may be left unconsidered. As far as the location of the poles upon the armature core is concerned, the currents generated in the armature coils will always act in the same manner, and will maintain continuously the poles of the core in the same position, with respect to those of the ring in any position of the latter, and independently of the speed. From the attraction between the core and the ring, a continuous rotary effort, constant in all positions, will result, the same as in a continuous current motor with a great number of armature coils. If the armature be allowed to turn, it will revolve in the direction of rotation of the ring magnet, the induced current diminishing as the speed increases, until upon the armature reaching very nearly the speed of the magnet, just enough current will flow through the coils to keep up the rotation. If, instead of rotating the ring by mechanical power, the poles of the same are shifted by the action of the alternate currents in the two circuits, the same results are obtained.

"Now compare this system with a continuous current system. In the latter we have alternate currents in the generator and motor coils, and intervening devices for commutating the currents, which on the motor besides effect automatically a progressive shifting or rotation of the poles of the armature; here we have the same elements and identically the same operation, but without the commutating devices. In view of the fact that these devices are entirely unessential to the operation, such alternate current system will - at least in many respects - show a complete similarity with a continuous current system, and the motor will act precisely like a continuous current motor. If the load is augmented, the speed is diminished and the rotary effort correspondingly increased, as more current is made to pass through the energising circuits; load being taken off, the speed increases, and the current, and consequently the effort, is lessened. The effort, of course, is greatest when the armature is in the state of rest.

"But, since the analogy is complete, how about the maximum efficiency and current passing through the circuits when the motor is running without any load? one will naturally inquire. It must be remembered that we have to deal with alternate currents. In this form the motor simply represents a transformer, in which currents are induced by a dynamic action instead of by reversals, and, as it might be expected, the efficiency will be maximum at full load. As regards the current, there will be - at least, under proper conditions - as wide a variation in its strength as in a transformer, and, by observing proper rules, it may be reduced to any desired quantity. Moreover, the current passing through the motor when running free, is no measure for the energy absorbed, since the instruments indicate only the numerical sum of the direct and induced electromotive forces and currents instead of showing their difference.

"Regarding the other class of these motors, designed for constant speed, the objections of Dr. Duncan are, in a measure applicable to certain constructions, but it should be considered that such motors are not expected to run without any, or with a very light load; and, if so, they do not, when properly constructed, present in this respect any more disadvantage than transformers under similar conditions. Besides, both features, rotary effort and tendency to constant speed, may be combined in a motor, and any desired preponderance may be given to either one, and in this manner a motor may be obtained possessing any desired character and capable of satisfying any possible demand in practice.

"In conclusion, I will remark, with all respect to Dr. Duncan, that the advantages claimed for my system are not mere assumptions, but results actually obtained, and that for this purpose experiments have been conducted through a long period, and with an assiduity such as only a deep interest in the invention could inspire; nevertheless, although my motor is the fruit of long labour and careful investigation, I do not wish to claim any other merit beyond that of having invented it, and I leave it to men more competent than myself to determine the true laws of

the principle and the best mode of its application. What the result of these investigations will be the future will tell; but whatever they may be, and to whatever this principle may lead, I shall be sufficiently recompensed if later it will be admitted that I have contributed a share, however small, to the advancement of science."

Electrical World - N. Y.
May 25, 1889, pp. 297-298.

MR. NIKOLA TESLA ON ALTERNATING CURRENT MOTORS.

To the Editor of The Electrical World:

SIR: About a year ago I had the pleasure of bringing before the American Institute of Electrical Engineers the results of some of my work on alternate curent motors. They were received with the interest which novel ideas never fail to excite in scientific circles, and elicited considerable comment. With truly American generosity, for which, on my part, I am ever thankful, a great deal of praise through the columns of your esteemed paper and other journals has been bestowed upon the originator of the idea, in itself insignificant. At that time it was impossible for me to bring before the Institute other results in the same line of thought. Moreover, I did not think it probable - considering the novelty of the idea - that anybody else would be likely to pursue work in the same direction. By one of the most curious coincidences, however, Professor Ferraris not only came independently to the same theoretical results, but in a manner identical almost to the smallest detail. Far from being disappointed at being prevented from calling the discovery of the principle exclusively my own, I have been excessively pleased to see my views, which I had formed and carried out long before, confirmed by this eminent man, to whom I consider myself happy to be related in spirit, and toward whom, ever since the knowledge of the facts has reached me, I have entertained feelings of the most sincere sympathy and esteem. In his able essay Prof. Ferraris omitted to mention various other ways of accomplishing similar results, some of which have later been indicated by O. B. Shallenberger, who some time before the publication of the results obtained by Prof. Ferraris and myself had utilized the principle in the construction of his now well known alternate current meter, and at a still later period by Prof. Elihu Thomson and Mr. M. J. Wightman.

Since the original publications, for obvious reasons, little has been made known in regard to the further progress of the invention; nevertheless the work of perfecting has been carried on indefatigably with all the intelligent help and means which a corporation almost unlimited in its resources could command, and marked progress has been made in every direction. It is therefore not surprising that many unaquainted with this fact, in expressing their views as to the results obtained, have grossly erred.

In your issue of May 4 I find a communication from the electricians of Ganz & Co., of Budapest, relating to certain results observed in recent experiments with a novel form of alternate current motor. I would have nothing to say in regard to this communication unless it were to sincerely congratulate these gentlemen on any good results which they may have obtained, but for the article, seemingly inspired by them, which appeared in the London *Electrical Review* of April 26, wherein certain

Reprinted with permission. Reprinted from May 25, 1889, issue of *Electrical World*.
© Copyright 1889, McGraw-Hill, Inc. All rights reserved.

erroneous views are indorsed and some radically false assertions made, which, though they may be quite unintentional, are such as to create prejudice and affect material interests.

As to the results presented, they not only do not show anything extraordinary, but are, in fact, considerably below some figures obtained with my motors a long time ago. The main stress being laid upon the proposition between the apparent and real energy supplied, or perhaps more directly, upon the ratio of the energy apparently supplied to, and the real energy developed by, the motor, I will here submit, with your permission, to your readers, the results respectively arrived at by these gentlemen and myself.

Energy apparently supplied in watts.		Work performed in watts.		Ratio of energy apparently supplied to the real energy developed.	
Ganz & Co.	Westinghouse Co.	Ganz & Co.	Westinghouse Co.	Ganz & Co.	Westinghouse Co.
18,000	21,840	11,000	17,595	0.611	0.805
24,200	30,295	14,600	25,365	0.603	0.836
29,800	43,624	22,700	36,915	0.761	0.816
.....	56,800	.....	48,675	.....	0.856
.....	67,500	.....	59,440	.....	0.88
.....	79,100	.....	67,365	.....	0.851

If we compare these figures we will find that the most favorable ratio in Ganz & Co's motor is 0.761, whereas in the Westinghouse, for about the same load, it is 0.836, while in other instances, as may be seen, it is still more favorable. Notwithstanding this, the conditions of the test were not such as to warrant the best possible results.

The factors upon which the apparent energy is mainly dependent could have been better determined by a proper construction of the motor and observance of certain conditions. In fact, with such a motor a current regulation may be obtained which, for all practical purposes, is as good as that of the direct current motors, and the only disadvantage, if it be one, is that when the motor is running without load the apparent energy cannot be reduced quite as low as might be desirable. For instance, in the case of this motor the smallest amount of apparent energy was about 3,000 watts, which is certainly not very much for a machine capable of developing 90 h. p. of work; besides, the amount could have been reduced very likely to 2,000 watts or less.

On the other hand, these motors possess the beautiful feature of maintaining an absolutely constant speed no matter how the load may vary. This feature may be illustrated best by the following experiment performed with this motor. The motor was run empty, and a load of about 200 h. p., far exceeding the normal load, was thrown on suddenly. Both armatures of the motor and generator were seen to stop for an instant, the belts slipping over the pulleys, whereupon both came up to the normal speed with the full load, not having been thrown out of synchronism. The experiment could be repeated any number of times. In some cases, the driving power being sufficient, I have been enabled to throw on a load exceeding 8 to 9 times that which the motor was designed to carry, without affecting the speed in the least.

This will be easily understood from the manner in which the current regulation is effected. Assuming the motor to be running without any load, the poles of the armature and field have a certain relative position which is that of the highest self-induction or counter electromotive force. If load be thrown on, the poles are made to recede; the self-induction or counter electromotive force is thereby diminished and more current passed through the stationary or movable armature-coils. This regulation is very different from that of a direct current motor. In the latter the current is varied by the motor losing a certain number of revolutions in proportion to the load, and the regulation would be impossible if the speed would be maintained constant; here the whole regulation is practically effected during a fraction of one revolution only. From this it is also apparent that it is a practical impossibility to throw such a motor out of synchronism, as the whole work must be done in an instant, it being evident that if the load is not sufficient to make a motor lose a fraction of the first revolution it will not be able to do so in the succeeding revolutions. As to the efficiency of these motors, it is perfectly practicable to obtain 94 to 95 per cent.

The results above given were obtained on a three-wire system. The same motor has been started and operated on two wires in a variety of ways, and although it was not capable of performing quite as much work as on three wires, up to about 60 h. p. it gave results practically the same as those above-mentioned. In fairness to the electricians of Ganz & Co., I must state here that the speed of this motor was higher than that used in their experiments, it being about 1,500. I cannot make due allowance for this difference, as the diameter of the armature and other particulars of the Ganz & Co. motor were not given.

The motor tested had a weight of about 5,000 lbs. From this it will be seen that the performance even on two wires was quite equal to that of the best direct current motors. The motor being of a synchronous type, it might be implied that it was not capable of starting. On the contrary, however, it had a considerable torque on the start and was capable of starting under fair load.

In the article above referred to the assertion is made that the weight of such alternate current motor, for a given capacity, is "several times" larger than that of a direct current motor. In answer to this I will state here that we have motors which with a weight of about 850 pounds develop 10 h. p. with an efficiency of very nearly 90 per cent, and the spectacle of a direct current motor weighing, say 200 - 300 pounds and performing the same work, would be very gratifying for me to behold. The motor which I have just mentioned had no commutator or brushes of any kind nor did it require any direct current.

Finally, in order to refute various assertions made at random, principally in the foreign papers, I will take the liberty of calling to the attention of the critics the fact that since the discovery of the principle several types of motors have been perfected and of entirely different characteristics, each suited for a special kind of work, so that while one may be preferable on account of its ideal simplicity, another might be more efficient. It is evidently impossible to unite all imaginable advantages in one form, and it is equally unfair and unreasonable to judge all different forms according to a common standard. Which form of the existing motors is best, time will show; but even in the present state of the art we are enabled to satisfy any possible demand in practice.

Nikola Tesla
Pittsburgh, Pa.

The Electrical Engineer - N. Y.
April 9, 1890, p. 221

THE LOSSES DUE TO HYSTERESIS IN TRANSFORMERS.

In your issue of April 2, in referring to certain remarks made by me at the recent meeting of the American Institute of Electrical Engineers on the subject of hysteresis you make the statement: "It is this constancy of relation that, as Mr. Tesla pointed out * * * may ultimately establish the correctness of the hypothesis advanced, that in reality there is no loss due to hysteresis, and that the changes of magnetization represent a charging and discharging of molecular energy without entailing an actual expenditure of energy."

I do not recollect having made such a statement, and as I was evidently misunderstood, you will greatly oblige me in inserting the following few lines, which express the idea I meant to advance:

Up to the present no satisfactory explanation of the causes of hysteresis has been given. In the most exhaustive and competent treatise on the theory of transformers, by Fleming, static hysteresis is explained by supposing that "the magnetic molecules or molecular magnets, the arrangement of which constitutes magnetization, move stiffly, and the dissipation of energy is the work done in making the necessary magnetic displacement against a sort of magnetic friction." Commonly it is stated that this is a distinct element in the loss of energy in an iron core undergoing magnetic changes entirely independent of any currents generated therein.

Now it is difficult to reconcile these views with our present notions on the constitution of matter generally. The molecules or iron cannot be connected together by anything but elastic forces, since they are separated by an intervening elastic medium through which the forces act; and this being the case is it not reasonable to assume that if a given amount of energy is taken up to bring the molecules out of their original position an equivalent amount of energy should be restored by the molecules reassuming their original positions, as we know is the case in all molecular displacements? We cannot imagine that an appreciable amount of energy should be wasted by the elastically connected molecules swinging back and forth from their original positions, which they must constantly tend to assume, at least within the limit of elasticity, which in all probability is rarely surpassed. The losses cannot be attributed to mere displacement, as this would necessitate the supposition that the molecules are connected rigidly, which is quite unthinkable.

A current cannot act upon the particles unless it acts upon currents in the same, either previously existing or set up by it, and since the particles are held together by elastic forces the losses must be ascribed wholly to the current generated. The remarkable discovery of Ewing that the magnetization is greater on the descent than on the ascent for the same values of magnetizing force strongly points to the fact that hysteresis is intimately connected with the generation of currents either in the molecules individually or in groups of them through the space intervening. The fact observed accords perfectly with our experience on current induction, for we know that on the descent any current set up must be of the same direction with the inducing current, and, therefore, must join with the same in producing a common effect; whereas, on the ascent the contrary is the case.

Dr. Duncan stated that the ratio of increase of primary and secondary current is constant. This statement is, perhaps, not sufficiently expressive, for not only is the ratio constant but, obviously, the differential effect of primary and secondary is constant. Now any current generated - molecular or Foucault currents in the mass - must be in amount proportionate to the difference of the inductive effect of the primary and secondary, since both currents add algebraically - the ratio of windings duly considered, - and as this difference is constant the loss, if wholly

accounted for in this manner, must be constant. Obviously I mean here the transformers under consideration, that is, those with a closed magnetic circuit, and I venture to say that the above will be more pronounced when the primary and secondary are wound one on top of the other than when they are wound side by side; and generally it will be the more pronounced the closer their inductive relation.

Dr. Duncan's figures also show that the loss is proportionate to the square of the electromotive force. Again this ought to be so, for an increased electromotive force causes a proportionately increased current which, in accordance with the above statements, must entail a loss in the proportion of the square.

Certainly, to account for all the phenomena of hysteresis, effects of mechanical vibration, the behavior of steel and nickel alloy, etc., a number of suppositions must be made; but can it not be assumed that, for instance, in the case of steel and nickel alloys the dissipation of energy is modified by the modified resistance; and to explain the apparent inconsistency of this view we only need to remember that the resistance of a body as a whole is not a measure of the degree of conductivity of the particles of which it is composed.

N. Tesla
New York City

The Electrical Engineer - N. Y.
Sept. 24, 1890, p. 332

SWINBURNE'S "HEDGEHOG" TRANSFORMER.

BY NIKOLA TESLA.

Some time ago Mr. Swinburne advanced certain views on transformers which have elicited some comment. In The Electrical Engineer of Sept. 10. there are brought out further arguments on behalf of his open circuit, or, as he calls it, "hedgehog" transformer, claiming for this type a higher average efficiency than is attainable with the closed circuit forms. In regard to this, I say with Goethe, "Die Botschaft hör' ich wohl, allein mir fehlt der Glaube—I hear the message, but I lack belief."

Many of Mr. Swinburne's arguments are in my opinion erroneous. He says: "In calculating the efficiencies of transformers, the loss in the iron has generally been left completely out of account, and the loss in copper alone considered; hence, the efficiencies of 97 and 98 per cent. claimed for closed iron circuit forms." This is a statement little complimentary to those who have made such estimates, and perhaps Mr. Swinburne would be very much embarassed to cite names on behalf of his argument. He assumes the loss in the iron in the closed circuit forms to be 10 per cent. of the full load, and further "that in most stations the average use of lamps is less than two hours a day, including all lamps installed," and arrives at some interesting figures in regard to efficiency. Mr. Swinburne seems not to be aware of the improvements made in the iron. The loss with the best quality of iron will, I believe, not reach 6 per cent. of the full load by an intelligent use of the transformer, and there is no doubt that further improvements will be made in that direction.

As regards the second part of his assumption, I think that it is exaggerated. It must be remembered that in most central stations or large plants due care is taken that the load is favorably distributed and in many cases the wiring is such that entire circuits may be shut off at certain hours so that there is during these hours no loss whatever in the transformers.

In his "hedgehog" form of transformer Mr. Swinburne reduces the iron considerably and comes to the conclusion that even in small transformers the iron loss is under one per cent. of the full load, while in the closed circuit forms, it is, according to him, 10 per cent. It would strengthen this argument if the iron would be dispensed with altogether. Mr. Swinburne does not appreciate fully the disadvantages which the open circuit form, operated at the *usual period*, entails. In order that the loss in the iron should be reduced to one-tenth, it is necessary to reduce the weight of the iron core to one-tenth and subject every unit length of the same to the same magneto-motive force. If a higher magneto-motive force is used the loss in the core will—within certain limits, at least—be proportionate to the *square* of the magneto-motive force. The remark of Mr. Swinburne, "If the iron circuit is opened, the sides of the embracing core can be removed, so the loss by hysteresis is divided by three," is therefore not true; the loss will be divided by $3 \times \frac{F^2}{F_1^2}$ where $F_1 > F$. If the iron of the open circuit form is made up in a closed ring the advantage will be at once apparent, for, since the magnetic resistance will be much reduced, the magneto-motive force required will be correspondingly smaller. It is probable that, say, four Swinburne transformers may be joined in such a way as to form a closed magnetic circuit. In this case the amount of iron and copper would remain the same, but an advantage will be gained as the total magnetic resistance will be diminished. The four transformers will now demand less excitation and since—under otherwise equal conditions—the gain depends on the square of the existing current, it is by no means insignificant. From the above comparison it is evident that the core of such open circuit transformer should be very short, by far shorter than it appears from the cut in The Electrical Engineer.

Mr. Swinburne is in error as to the motives which have caused the tendency to shorten the magnetic circuit in closed circuit transformers. It was principally on account of practical considerations and not to reduce the magnetic resistance, which has little to do with efficiency. If a ring be made of, say, 10 centimetres mean length and 10 square centimetres cross-section, and if it be wound *all over* with the primary and secondary wires, it will be found that it will give the best result with a certain number of alternations. If, now, a ring is made of the same quality of iron but having, say, 20 centimetres mean length and 10 square centimetres section it will give again the best result with the *same number of alternations*, and the efficiency will be the same as before, provided that the ring is wound *all over* with the primary and secondary wires. The space inside of the ring will, in the second case, be increased in proportion to the square of the diameter, and there will be no difficulty in winding on it all the wire required. So the length may be indefinitely increased and a transformer of any capacity made, as long as the ring is completely covered by the primary and secondary wires.

If the wires be wound side by side the ring of smaller diameter will give a better result, and the same will be the case if a certain fraction of the ring is not covered by the wires. It then becomes important to shorten the magnetic circuit. But, since in practice it is necessary to enclose the transformer in a casting, if such a ring be made, it would have to be protected with a layer of laminated iron, which would increase the cost and loss. It may be inclosed in jars of some insulating material, as Mr. Swinburne does, but this is less practicable.

Owing to this, the constructors of the most practical forms, such, for instance, as the Westinghouse transformer, to which the Swinburne reasoning applies, have been prompted to enclose the wires as much as possible with the laminated iron, and then it became important to shorten the magnetic circuit, because in this form only a part of the magnetic circuit is surrounded by the wires, as well as for other practical considerations.

In practice it is desirable to get along with the least length of copper conductor on account of cheapness and regulation. Mr. Swinburne states that in his transformer the loss in iron is under one per cent. of the full load; all the balance of loss must, therefore, be in the copper. But since, according to him, the wires are of larger section, his transformer can hardly be an improvement in that direction. The gun-metal casting is also objectionable. There is no doubt some loss going on in the same, and besides it increases the resistance of the wires by a factor $\sqrt{\frac{S}{S_1}}$ where S is the total cross-section of the core and S_1 the section of the iron wires. There is one important point which seems to have escaped Mr. Swinburne's attention. Whether the open circuit transformer is an improvement, or not, will depend principally on the period. The experience of most electrical engineers has resulted in the adoption of the closed circuit transformer. I believe that I was the first to advocate an open circuit form, but to improve its efficiency I had to use a much higher period; at usual periods the closed circuit form is preferable.

Mr. Swinburne makes some other obscure statements upon which I need not dwell, as they have no bearing on the main question.

CORRESPONDENCE.

PITTSBURGH.

An Electric Process for Making "Wrought" Iron—Regulating the Wires.

A PROCESS of making wrought iron from pig metal without puddling is one of the discoveries made by Dr. Emmens, of Greensburg, near this city. The doctor accomplishes his object with the aid of electricity. He takes a vat which is filled with a chemical solution and a number of thin sheet iron plates. Then, the pig iron is also placed in the vat, after which the pig iron and the sheet iron are connected with a dynamo. The current generated by the dynamo is said to have the effect of causing the pure iron to be separated from the impurities in the pig iron and form a deposit on the sheet iron plates.

The quality of this wrought iron is stated to be superior to that of the best Swedish metal. It can be bent, rolled or twisted into any shape, while cold. Dr. Emmens says that he can take a horse shoe nail of this iron, fasten the head in a vice and twist it into an almost perfect screw without breaking.

An ordinance providing for the regulation of electric wires in the streets will be acted upon by councils within the next few days. All the electric wires must be placed at least twenty feet above the side walks, and where there are street railway wires on the same street, the former wires must be a sufficient distance above the others so as not to interfere. Underground wires, cables, tubes, conduits and subways shall be placed at least two feet under the ground and as near the street curb as practicable.

PITTSBURGH, Sept. 18, 1890.

ST. LOUIS.

Electric Railway News.—Resignations and Appointments.—The Turner Unicycle Road.

DURING the summer months the work of changing the motive power on the Lindell Railway has progressed steadily, but with some delay at times on account of scarcity of material of all kinds. The policy of the company is to construct a first-class electric railway regardless of cost and time. The new power house is finished and the machinery is being placed in position. Six boilers are set and ready for steam. Eight dynamos are on hand and being set up, and the first of the four 400 h. p. Armington & Sims engines is expected to arrive about the 20th.

The Vandeventer Avenue Street Railway will be operated as a part of the Lindell Railway. The construction of this road is being pushed to completion with the same thoroughness as the main line of the Lindell, the intention being to have it in operation by October 1 so as to accommodate visitors to the St. Louis Agricultural Fair. The Vandeventer avenue line will extend from Chouteau avenue to the fair grounds, and will thus form a direct line from Union Depot to the fair grounds. The acquisition of the Vandeventer line gives the Lindell Railway Company a total of 18 miles of double track.

Mr. E. J. Bagnall has resigned his position as superintendent of the St. Louis Illuminating Company and has accepted the position of engineer of the Lindell Railway Company, and will have complete charge of everything pertaining to mechanical and electrical engineering.

The St. Louis Unicycle Railway Company has been incorporated under the laws of the State of Missouri, with a capital stock of $200,000, with the following officers: President, L. A. Brown; vice-presidents, John H. French and J. W. Tremayne; treasurer, W. A. Adams; secretary, Chas. H. Wengler; directors, Chas. H. Gleason, Chas. H. Blake and David Strawbridge. The Unicycle railway is the invention of E. M. Turner, of Texas, and is an elevated electric railway having only one rail. A motor car propelled by a one h. p. Sprague electric motor is now in operation at the exposition.

The McKee street railway syndicate have closed a contract with the Short Electric Railway Company for 1,000 motors. This syndicate has been formed lately for the purpose of purchasing, constructing and operating electric railways, and this order is given so as to have the motors ready for use as fast as they may be required.

Mr. C. L. Abbott has resigned his position as superintendent of the Short Electric Railway, on the south end of the St. Louis railroad, and has accepted the position of superintendent of the Glenwood and Greenlawn Street Railway, Sprague system, Columbus, O., and will leave shortly for his new field of labor.

The Board of Public Improvements have appointed Andrew J. O'Reilly supervisor of city lighting in place of E. V. Matlack. No specific charges were brought against Mr. Matlack by the board, the change being made merely to quiet a general dissatisfaction which has existed since Mr. Matlack's appointment over a year

LETTERS TO THE EDITOR.

Notice to Correspondents.

We do not hold ourselves responsible for the opinions of our correspondents.
Anonymous communications cannot be noticed.
The Editor respectfully requests that all communications may be drawn up as briefly and as much to the point as possible.
In order to facilitate reference, correspondents, when referring to any letter previously inserted will oblige by mentioning the serial number of such letter, and of the page on which it appears.
Sketches and drawings for illustrations should be on separate pieces of paper.
All communications should be addressed EDITOR OF THE ELECTRICAL ENGINEER, *150 Broadway, New York city.*

TESLA'S NEW ALTERNATING MOTORS.

[139.]—I hope you will allow me the privilege to say in the columns of your esteemed journal a few words in regard to an article which appeared in *Industries* of August 22, to which my attention has been called. In this article an attempt is made to criticise some of my inventions, notably those which you have described in your issue of August 6, 1890.

The writer begins by stating: "The motor depends on a shifting of the poles under certain conditions, a principle which has been *already*[1] employed by Mr. A. Wright in his alternating current meter." This is no surprise to me. It would rather have surprised me to learn that Mr. Wright has *not yet* employed the principle in his meter, considering what, before its appearance, was known of my work on motors, and more particularly of that of Schallenberger on meters. It has cost me years of thought to arrive at certain results, by many believed to be unattainable, for which there are now numerous claimants, and the number of these is rapidly increasing, like that of the colonels in the South after the war.

The writer then good-naturedly explains the theory of action of the motive device in Wright's meter, which has greatly benefited me, for it is so long since I have arrived at this, and similar theories, that I had almost forgotten it. He then says: "Mr. Tesla has worked out some more or less complicated motors on this principle, but the curious point is that he has completely misunderstood the theory of the phenomena, and has got hold of the old fallacy of screening." This may be *curious*, but how much *more curious* it is to find that the writer in *Industries* has *completely misunderstood* everything himself. I like nothing better than just criticism of my work, even if it be severe, but when the critic assumes a certain "l'état c'est moi" air of unquestioned competency I want him to know what he is writing about. How little the writer in *Industries* seems to know about the matter is painfully apparent when he connects the phenomenon in Wright's meter with the subject he has under consideration. His further remark, "He (Mr. Tesla) winds his secondary of iron instead of copper and thinks the effect is produced magnetically," is illustrative of the care with which he has perused the description of the devices contained in the issue of THE ELECTRICAL ENGINEER above referred to.

I take a motor having, say eight poles, and wrap the exciting coils of four alternate cores with fine insulated iron wire. When the current is started in these coils it encounters the effect of the closed magnetic circuit and is retarded. The magnetic lines set up at the start close to the iron wire around the coils and no free poles appear at first at the ends of the four cores. As the current rises in the coils more lines are set up, which crowd more and more in the fine iron wire until finally the same becomes saturated, or nearly so, when the shielding action of the iron wire ceases and free poles appear at the ends of the four protected cores. The effect of the iron wire, as will be seen, is two-fold. First, it retards the energizing current; and second, it delays the appearance of the free poles. To produce a still greater difference of phase in the magnetization of the protected and unprotected cores, I connect the iron wire surrounding the coils of the former in series with the coils of the latter, in which case, of course, the iron wire is preferably wound or connected differentially, after the fashion of the resistance coils in a bridge, so as to have no appreciable self-induction. In other cases I obtain the desired retardation in the appearance of the free poles on one set of cores by a magnetic shunt, which produces a greater retardation of the current and takes up at the start a certain number of the lines set up, but becomes saturated when the current in the exciting coils reaches a predetermined strength.

In the transformer the same principle of shielding is utilized. A primary conductor is surrounded with a fine layer of laminated iron, consisting of fine iron wire or plates properly insulated and interrupted. As long as the current in the primary conductor is so small that the iron enclosure can carry all the lines of force set up by the current, there is very little action exerted upon a secondary conductor placed in vicinity to the first; but just as soon as the iron enclosure becomes saturated, or nearly so, it loses the virtue of protecting the secondary and the inducing action of the primary practically begins. What, may I ask, has all this to do with the "old fallacy of screening?"

With certain objects in view—the enumeration of which would

lead me too far—an arrangement was shown in THE ELECTRICAL ENGINEER, about which the writer in *Industries* says: "A ring of laminated iron is wound with a secondary. It is then encased in iron laminated in the *wrong direction* and the primary is wound outside of this. The layer of iron between the primary and secondary is supposed to screen the coil. Of course it cannot do so, such a thing is unthinkable." This reminds me of the man who had committed some offense and engaged the services of an attorney. "They cannot commit you to prison for that," said the attorney. Finally the man *was* imprisoned. He sent for the attorney. "Sir," said the latter, "I tell you they *cannot* imprison you for that." "But, sir," retorted the prisoner, "they *have* imprisoned me." It *may not* screen, in the opinion of the writer in *Industries*, but just the same it *does*. According to the arrangement the *principal* effect of the screen may be either a retardation of the action of the primary current upon the secondary circuit or a deformation of the secondary current wave with similar results for the purposes intended. In the arrangement referred to by the writer in *Industries* he seems to be certain that the iron layer acts like a choking coil; there again he is mistaken; it does not act like a choking coil, for then its capacity for maintaining constant current would be very limited. But it acts more like a magnetic shunt in constant current transformers and dynamos, as, in my opinion, it ought to act.

There are a good many more things to be said about the remarks contained in *Industries*. In regard to the magnetic time lag the writer says: "If a bar of iron has a coil at one end, and if the core is perfectly laminated, on starting a current in the coil the induction *all along the iron* corresponds to the excitation at that instant, unless there is a microscopic time lag, *of which there is no evidence*." Yet a motor was described, the very operation of which is dependent on the time lag of magnetization of the different parts of a core. It is true the writer uses the term "perfectly laminated" (which, by the way, I would like him to explain), but if he intends to make such a "perfectly laminated" core I venture to say there is trouble in store for him. From his remarks I see that the writer completely overlooks the importance of the size of the core and of the number of the alternations pointed out; he fails to see the stress laid on the saturation of the screen, or shunt, in some of the cases described; he does not seem to recognize the fact that in the cases considered the formation of current is reduced as far as practicable in the screen, and that the same, therefore, so far as its quality of screening is concerned, has no role to perform as *a conductor*. I also see that he would want considerable information about the time lag in the magnetization of the different parts of a core, and an explanation why, in the transformer he refers to, the screen is laminated in the *wrong direction*, etc.—but the elucidation of all these points would require more time than I am able to devote to the subject. It is distressing to find all this in the columns of a leading technical journal.

In conclusion, the writer shows his true colors by making the following withering remarks: "It is questionable whether the Tesla motor will ever be a success. Such motors will go round, of course, and will give outputs, but their efficiency is doubtful; and if they need three-wire circuits and special generators there is no object in using them, as a direct current motor can be run instead with advantage."

No man of broad views will feel certain of the success of any invention, however good and original, in this period of feverish activity, when every day may bring new and unforseen developments. At the pace we are progressing the permanence of all our apparatus it its present forms becomes more and more problematical. It is impossible to foretell what type of motor will crystalize out of the united efforts of many able men; but it is my conviction that at no distant time a motor having commutator and brushes will be looked upon as an antiquated piece of mechanism. Just how much the last quoted remarks of the writer of *Industries*—considering the present state of the art—are justified, I will endeavor to show in a few lines.

First, take the transmission of power in isolated places. A case frequently occurring in practice and attracting more and more the attention of engineers is the transmission of large powers at considerable distances. In such a case the power is very likely to be cheap, and the cardinal requirements are then the reduction of the cost of the leads, cheapness of construction and maintenance of machinery and constant speed of the motors. Suppose a loss of only 25 per cent. in the leads, at full load, be allowed. If a direct current motor be used, there will be, besides other difficulties, considerable variation in the speed of the motor—even if the current is supplied from a series dynamo—so much so that the motor may not be well adapted for many purposes, for instance, in cases where direct current transformation is contemplated with the object of running lights or other devices at constant potential. It is true that the condition may be bettered by employing proper regulating devices, but these will only further complicate the already complex system, and in all probability fail to secure such perfection as will be desired. In using an ordinary single-circuit alternate current motor the disadvantage is that the motor has no starting torque and that, for equal weight, its output and efficiency are more or less below that of a direct current motor. If, on the contrary, the armature of any alternator or direct current machine—large, low-speed, two-pole machines will give the best results—is wound with two circuits, a motor is at once obtained which possesses sufficient torque to start under considerable load; it runs in absolute synchronism with the generator—an advantage much desired and hardly ever to be attained with regulating devices; it takes current in proportion to the load, and its plant efficiency within a few per cent. is equal to that of a direct current motor of the same size. It will be able, however, to perform more work than a direct current motor of the same size, first, because there will be no change of speed, even if the load be doubled or tripled, within the limits of available generator power; and, second, because it can be run at a higher electromotive force, the commutator and the complication and difficulties it involves in the construction and operation of the generators and motors being eliminated from the system. Such a system will, of course, require three leads, but since the plant efficiency is practically equal to that of the direct current system, it will require the same amount of copper which would be required in the latter system, and the disadvantage of the third lead will be comparatively small, if any, for three leads of smaller size may perhaps be more convenient to place than two larger leads. When more machines have to be used there may be no disadvantage whatever connected with the third wire; however, since the simplicity of the generators and motors allows the use of higher electromotive forces, the cost of the leads may be reduced below the figure practicable with the direct current system.

Considering all the practical advantages offered by such an alternating system, I am of an opinion quite contrary to that of the author of the article in *Industries*, and think that it can quite successfully stand the competition of any direct current system, and this the more, the larger the machines built and the greater the distances.

Another case frequently occurring in practice is the transmission of small powers in numerous isolated places, such as mines, etc. In many of these cases simplicity and reliability of the apparatus are the principal objects. I believe that in many places of this kind my motor has so far proved a perfect success. In such cases a type of motor is used possessing great starting torque, requiring for its operation only alternating current and having no sliding contacts whatever on the armature, this advantage over other types of motors being highly valued in such places. The plant efficiency of this form of motor is, in the present state of perfection, inferior to that of the former form, but I am confident that improvements will be made in that direction. Besides, plant efficiency is in these cases of secondary importance, and in cases of transmission at considerable distances, it is no drawback, since the electromotive force may be raised as high as practicable on converters. I can not lay enough stress on this advantageous feature of my motors, and should think that it ought to be fully appreciated by engineers, for to high electromotive forces we are surely coming, and if they must be used, then the fittest apparatus will be employed. I believe that in the transmission of power with such commutatorless machines, 10,000 volts, and even more, may be used, and I would be glad to see Mr. Ferranti's enterprise succeed. His work is in the right direction, and, in my opinion, it will be of great value for the advancement of the art.

As regards the supply of power from large central stations in cities or centres of manufacture, the above arguments are applicable, and I see no reason why the three-wire motor system should not be successful. In putting up such a station, the third wire would be but a very slight drawback, and the system possesses enough advantages to over-balance this and any other disadvantage. But this question will be settled in the future, for as yet comparatively little has been done in that direction, even with the direct current system. The plant efficiency of such a three-wire system would be increased by using, in connection with the ordinary type of my motor, other types which act more like inert resistances. The plant efficiency of the whole system would, in all cases, be greater than that of each individual motor—if like motors are used—owing to the fact that they would possess different self-induction, according to the load.

The supply of power from lighting mains is, I believe, in the opinion of most engineers, limited to comparatively small powers, for obvious reasons. As the present systems are built on the two-wire plan, an efficient two-wire motor without commutator is required for this purpose, and also for traction purposes. A large number of these motors, embodying new principles, have been devised by me and are being constantly perfected. On lighting stations, however, my three-wire system may be advantageously carried out. A third wire may be run for motors and the old connections left undisturbed. The armatures of the generators may be rewound, whereby the output of the machines will be increased about 35 per cent., or even more in machines with cast iron field magnets. If the machines are worked at the same capacity, this means an increased efficiency. If power is available at the station, the gain in current may be used in motors. Those who object to the third wire, may remember that the old two-wire direct system is almost entirely superseded by the three-wire system, yet my

three-wire system offers to the alternating system relatively greater advantages, than the three-wire direct possesses over the two-wire. Perhaps, if the writer in *Industries* would have taken all this in consideration, he would have been less hasty in his conclusions.

NIKOLA TESLA.

NEW YORK, Sept. 17, 1890.

REPORTS OF COMPANIES.

WESTINGHOUSE AND PULLMAN INTERESTS.

With regard to various reports current on the subject, it now transpires that arrangements have been made between George Westinghouse, Jr., of Pittsburgh, and George M. Pullman, of Chicago, by which the Westinghouse Electric Mfg. Company will erect works conveniently close to the Pullman Palace Car Works, at Pullman, Ill., and the agreement reached, it is understood, is that the Pullman company will purchase all of their electric railway motors from the Westinghouse concern. The works to be erected are to cost between $400,000 and $500,000, and Mr. Westinghouse says 2000 men will be employed at the new shops. Work on the structures will probably begin next spring. That the immense works of Pullman's Palace Car Company and the big plant of the Westinghouse Company, at Pittsburgh, are to be consolidated both Messrs. Pullman and Westinghouse deny. Mr. Westinghouse further says that the erection of works at Pullman does not mean that the Pittsburgh business of the company is to be removed to Chicago. It will be merely an extension of their business. The works at Newark, N. J., Pittsburgh, New York City, etc., will also be continued as before.

DIVIDENDS.

THE EDISON GENERAL ELECTRIC CO. has declared its fourth quarterly dividend of 2 per cent.

STOCKS AND BONDS.

ROYAL ELECTRIC CO.—Application will be made to the Legislature of the Province of Quebec to change the value of the shares of the Royal Electric Co. from ten to one hundred dollars each.

FINANCIAL MARKET.

QUOTATIONS ON ELECTRICAL STOCKS.

Mr. F. Z. Maguire, Electrical Securities of 18 Wall street, this city, reports the following quotations of September 10th from New York, Boston and Washington :—

NEW YORK.

	BID.		BID.
W. U. Tel. Co.	84¼	Edison Gen. Elec. Co.	99
American Tele. & Cable	83	Edison Gen. Co. Def'd	....
Centl. & So. Amer.	154	Conso.'d Elec. Lt. Co	60
Mexican	205	Edison Illn'g Co. N. Y.	....
Com. Cable Co.	101½	U. S. Elec. Lt. Co.	35
Postal Tel. Cable	39	North Am. Phonograph	50

BOSTON.

	BID.		BID.
Thomson-Houston	51½	Ft. Wayne Co.	11½
" Pref'd.	25½	Am. Bell	225½
" Series C	12	Erie	48½
" " D	6	New England	51½
" Int. Co.	....	Mexican	.90 cts
Thomson Welding Co.	..	Trop. American	..
Thomson Eu. Welding	70	Edison Phon'gph Doll.	2

WASHINGTON.

	BID.		BID.
Penna. Telephone	25	U. S. Elec. Lt. (Wash)	170
Ches. & Pot. Telephone	71	Eck. & Sold. Home Elec. Ry	68
Amer Graphophone	16½		

PITTSBURGH.

	BID.
Westinghouse Electric and Manufacturing Co.	37½

LEGAL NOTES.

BRUSH ELECTRIC CO. VS. SPRAGUE ELEC. R'Y & MOTOR CO.

The Brush Electric Co. has brought an action in the U. S. circuit court against the Sprague Electric Railway and Motor Co. of New York, to restrain them from selling or using a certain dynamo electric machine on the ground of infringement. The complainants set forth in their bill that C. F. Brush was the original and first inventor of a new and useful improvement in dynamo electric machines, which was secured by letters patent. About Jan. 1, 1887, Mr. Brush assigned all his right, title and interest in said machines to complainants in this action, such assignment being duly recorded in the U. S. patent office.

The suit in question is based on the patent issued to Charles F. Brush, No. 260,652, dated July 4th, 1882, entitled Dynamo-Electric Machine. The claims cover the application of a copper sleeve surrounding the field magnets of a dynamo-electric machine, whereby the insulation of the magnets is preserved from the high potential of self-induction created by fluctuations in the exciting current. The device is no longer used on the street car motors of the defendants, who now claim that its employment makes the magnets sluggish and causes burning out of the armature by retarding the generation of counter-electromotive force in it.

A PRIZE SCHEME OF LIGHTING.

Mr. F. H. Whipple has been awarded a prize of $100 at Davenport, Ia., for the best plan of lighting that city. Mr. Whipple, with native modesty, writes us from St. Louis that there was nothing special about the plans. Owing to the many hills and hollows in the town, it was difficult to light it economically. "There was nothing technical about it; but it was more the use of common sense in the location of lights."

TELEGRAPHY DURING THE COMMUNE.

One of the first things to be done after the recent disastrous fire at the New York offices of the Western Union Company was to re-establish the identity of each of the maze of wires running into the premises. Experienced electricians being on the spot, the task was not a very difficult one, and in a single day 300 circuits were restored. The ease with which this work was carried out at New York recalls to our mind, says *La Lumière Electrique*, a very instructive historic incident which occurred during the Commune. When the Republican Government quitted Paris, the operators at the central office in the Rue Grenelle managed to mix up all the wires before leaving. The Communists were so ignorant of everything connected with telegraphy, that it was beyond their powers to unravel the wires; and during the whole time that they were in possession of the building, namely, from the end of March to the end of May, they were only able to use the military lines. M. Fabre de Lagrange, who was forced to accept the appointment of chief electrician to the Commune, took good care to keep the wires in confusion; and among other services to the State, he sent misleading telegrams, and thus saved many public and private buildings which the rebels wished to blow up by using an explosive mixture of air and coal-gas. These facts were clearly authenticated by the court-martial which tried M. Lagrange, and he was honorably aquitted.

THE TROUVE ELECTRIC ERYGMATOSCOPE.

At a recent meeting of the Académie des Sciences, M. G. Trouvé described an electrical appliance devised by him to facilitate the inspection of the geological strata pierced by the boring tool. The apparatus consists of a powerful incandescent lamp enclosed in a cylinder. One of the hemicylindrical surfaces of this cylinder constitutes the reflector; whilst the other, which is of thick glass, allows the luminous rays to pass through it, and light up the successive strata through which the lamp descends. At the base of the instrument there is an elliptical mirror, while the top is open, so as to enable an observer placed at the head of the boring and armed with suitable glasses to see on the mirror the reflected image of the stratum illuminated by the lamp, which is arranged so that its upward rays are intercepted. The whole apparatus is suspended from a cable formed by the two conducting wires. This cable is wound on a drum, the trunnions of which are insulated from one another and connected to the leads, current being obtained by two rubbing contacts attached to the poles of a portable battery. This arrangement enables the instrument to be raised and lowered without difficulty and without interrupting the observations. The erygmatoscope as at present arranged gives excellent results down to a depth of over 600 feet, and with a more powerful lamp it could be used at still greater depths. An expedition which has been sent out to the Mozambique coast by the Portuguese government, to search for coal beds and other mineral deposits, has been supplied with erygmatoscopes.

EXPERIMENTS WITH ALTERNATING CURRENTS OF HIGH FREQUENCY.

BY

Nikola Tesla

In The Electrical Engineer issue of 11th inst., I find a note of Prof. Elihu Thomson relating to some of my experiments with alternating currents of very high frequency.

Prof. Thomson calls the attention of your readers to the interesting fact that he has performed some experiments in the same line. I was not quite unprepared to hear this, as a letter from him has appeared in the *Electrician* a few months ago, in which he mentions a small alternate current machine which was capable of giving, I believe, 5,000 alternations per second, from which letter it likewise appears that his investigations on that subject are of a more recent date.

Prof. Thomson describes an experiment with a bulb enclosing a carbon filament which was brought to incandescence by the bombardment of the molecules of the residual gas when the bulb was immersed in water "rendered slightly conducting by salt dissolved therein," (?) and a potential of 1,000 volts alternating 5,000 time a second applied to the carbon strip. Similar experiments have, of course, been performed by many experimenters, the only distinctive feature in Prof. Thomson's experiment being the comparatively nigh rate of alternation. These experiments can also be performed with a steady difference of potential between the water and the carbon strip in which case, of course, conduction through the glass takes place, the difference of potential required being in proportion to the thickness of the glass. With 5,000 alternations per second, conduction still takes place, but the condenser effect is preponderating. It goes, of course, without saying that the heating of the glass in such a case is principally due to the bombardment of the molecules, partly also to leakage or conduction, but it is an undeniable fact that the glass may also be heated merely by the molecular displacement. The interesting feature in my experiments was that a lamp would light up when brought near to an induction coil, and that it could be held in the hand and the filament brought to incandescence.

Experiments of the kind described I have followed up for a long time with some practical objects in view. In connection with the experiment described by Prof. Thomson, it may be of interest to mention a very pretty phenomenon which may be observed with an incandescent lamp If a lamp be immersed in water as far as practicable and the filament and the vessel connected to the terminals of an induction coil operated from a machine such as I have used in my experiments, one may see the dull red filament surrounded by a very luminous globe around which there is a less luminous space. The effect is probably due to reflection, as the globe is sharply defined, but may also be due to a "dark space;" at any rate it is so pretty that it must be seen to be appreciated.

Prof. Thomson has misunderstood my statement about the limit of audition. I was perfectly well aware of the fact that opinions differ widely on this point. Nor was I surprised to find that arcs of about 10,000 impulses per second, emit a sound. My statement "the *curious* point is," etc. was only made in deference to an opinion expressed by Sir William Thomson. There was absolutely no stress laid on the precise number. The popular belief was that something like 10,000 to 20,000 per second, or 20,000 to 40,000, at the utmost was the limit. For my argument this was immaterial. I contended that sounds of an incomparably greater number, that is, many times even the highest number, could be heard if they could be produced with sufficient power. My statement was only speculative, but I have devised means which I think may allow me to learn something definite on that point. I have not the least doubt that it is simply a question of power. A very short arc may be silent with 10,000 per second, but just as soon as it is lengthened it begins to emit a sound. The vibrations are the same in number, but more powerful.

Prof. Thomson states that I am taking as the limit of "audition sounds from 5,000 to 10,000 complete waves per second." There is nothing in my statements from which the above could be inferred, but Prof. Thomson has perhaps not thought that there are two sound vibrations for each complete current wave, the former being independent of the direction of the current.

I am glad to learn that Prof. Thomson agrees with me as to the causes of the persistence of the arc. Theoretical considerations considerable time since have led me to the belief that arcs produced by currents of such high frequency would possess this and other desirable features. One of my objects in this direction has been to produce a practicable small arc. With these currents, for many reasons, much smaller arcs are practicable.

The interpretation by Prof. Thomson of my statements about the arc system leads me *now*, he will pardon me for saying so, to believe that what is most essential to the success of an arc system is a good management. Nevertheless I feel confident of the correctness of the views expressed. The conditions in practice are so manifold that it is impossible for any type of machine to prove best in all the different conditions.

In one case, where the circuit is many miles long, it is desirable to employ the most efficient machine with the least internal resistance; in another case such a machine would not be the best to employ. It will certainly be admitted that a machine of any type must have a greater resistance if intended to operate arc lights than if it is designed to supply incandescent lamps in series. When arc lights are operated and the resistance is small, the lamps are unsteady, unless a type of lamp is employed in which the carbons are separated by a mechanism which has no further influence upon the feed, the feeding being effected by an independent mechanism; but even in this case the resistance must be considerably greater to allow a quiet working of the lamps. Now, if the machine be such as to yield a steady current, there is no way of attaining the desired result except by putting the required resistance somewhere either inside or outside of the machine. The latter is hardly practicable, for the customer may stand a hot machine, but he looks with suspicion upon a hot resistance box. A good automatic regulator of course improves the machine and allows us to reduce the internal resistance to some extent, but not as far as would be desirable. Now, since resistance is loss, we can advantageously replace resistance in the machine by an equivalent impedence. But to produce a great impedence with small ohmic resistance, it is necessary to have self-induction and variation of current, and the greater the self-induction and the rate of change of the current, the greater the impedence may be made, while the ohmic resistance may be very small. It may also be remarked that the impedence of the circuit external to the machine is likewise increased. As regards the increase in ohmic resistance in consequence of the variation of the current, the same is, in the commercial machines now in use, very small. Clearly then a great advantage is gained by providing self induction in the machine circuit and undulating the current, for it is possible to replace a machine which has a resistance of, say, 16 ohms by one which has no more than 2 or 3 ohms, and the lights will work even steadier. It seems to me therefore, that my saying that self-induction is essential to the commercial success of an arc system is justified. What is still more important, such a machine will cost considerably less. But to realize fully the benefits, it is preferable to employ an alternate current machine, as in this case a greater rate of change in the current is obtainable. Just what the ratio of resistance to impedence is in the Brush and Thomson

machines is nowhere stated, but I think that it is smaller in the Brush machine, judging from its construction.

As regards the better working of clutch lamps with undulating currents, there is, according to my experience, not the least doubt about it. I have proved it on a variety of lamps to the complete satisfaction not only of myself, but of many others. To see the improvement in the feed due to the jar of the clutch at its best it is desirable to employ a lamp in which an independent clutch mechanism effects the feed, and the release of the rod is independent of the up and down movement. In such a lamp the clutch has a small inertia and is very sensitive to vibration, whereas, if the feed is effected by the up and down movement of the lever carrying the rod, the inertia of the system is so great that it is not affected as much by vibration, especially if, as in many cases, a dash pot is employed. During the year 1885 I perfected such a lamp which was calculated to be operated with undulating currents. With about 1,500 to 1,800 current impulses per minute the feed of this lamp is such that absolutely no movement of the rod can be observed, even if the arc be magnified fifty-fold by means of a lens; whereas, if a steady current is employed, the lamp feeds by small steps. I have, however, demonstrated this feature on other types of lamps, among them being a derived circuit lamp such as Prof. Thomson refers to. I conceived the idea of such a lamp early in 1884, and when my first company was started, this was the first lamp I perfected. It was not until the lamp was ready for manufacture that, on receiving copies of applications from the Patent Office, I learned for the first time, not having had any knowledge of the state of the art in America, that Prof. Thomson had anticipated me and had obtained many patents on this principle, which, of course, greatly disappointed and embarrassed me at that time. I observed the improvement of the feed with undulating currents on that lamp, but I recognized the advantage of providing a light and independent clutch unhampered in its movements. Circumstances did not allow me to carry out at that time some designs of machines I had in mind, and with the existing machines the lamp has worked at a great disadvantage. I cannot agree with Prof. Thomson that small vibrations would benefit a clockwork lamp as much as a clutch lamp; in fact, I think that they do not at all benefit a clockwork lamp.

It would be interesting to learn the opinion of Mr. Charles F. Brush on these points.

Prof. Thomson states that he has run with perfect success clutch lamps "in circuit with coils of such large self-induction that any but very slight fluctuations were wiped out." Surely Prof. Thomson does not mean to say that self-induction wiped out the periodical fluctuations of the current. For this, just the opposite quality, namely, capacity, is required. The self-induction of the coils in this case simply augmented the impedence and prevented the great variations occurring at large time intervals, which take place when the resistance in circuit with the lamps is too small, or even with larger resistance in circuit when the dash pots either in the lamps or elsewhere are too loose.

Prof. Thomson further states that in a lamp in which the feed mechanism is under the control of the derived circuit magnet only, the fluctuations pass through the arc without affecting the magnet to a perceptible degree. It is true that the variations of the resistance of the arc, in consequence of the variations in the current strength, are such as to dampen the fluctuation. Nevertheless, the periodical fluctuations are transmitted through the derived circuit, as one may convince himself easily of, by holding a thin plate of iron against the magnet.

In regard to the physiological effects of the currents I may state that upon reading the memorable lecture of Sir William Thomson, in which he advanced his views on the propagation of the alternate currents through conductors, it instantly occurred to me that currents of high frequencies would be less injurious. I have been looking for a proof that the mode of distribution through the body is the cause of the smaller physiological effects. At times I have thought to have been able to locate the pain in the outer portions of the body, but it is very uncertain. It is most certain, however, that the feeling with currents of very high frequencies is somewhat different from that with low frequencies. I have also noted the enormous importance of one being prepared for the shock or not. If one is prepared, the effect upon the nerves is not nearly as great as when unprepared. With alternations as high as 10,000 per second and upwards, one feels but little pain in the central portion of the body. A remarkable feature of such currents of high tension is that one receives a burn instantly he touches the wire, but beyond that the pain is hardly noticeable.

But since the potential difference across the body by a given current through it is very small, the effects can not be very well ascribed to the surface distribution of the current, and the excessively low resistance of the body to such rapidly varying currents speak rather for a condenser action.

In regard to the suggestion of Dr. Tatum, which Prof. Thomson mentions in another article in the same issue, I would state that I have constructed machines up to 480 poles, from which it is possible to obtain about 30,000 alternations per second, and perhaps more. I have also designed types of machines in which the field would revolve in an opposite direction to the armature, by which means it would be possible to obtain from a similar machine 60,000 alternations per second or more.

I highly value the appreciation of Prof. Thomson of my work, but I must confess that in his conclusion he makes a most astounding statement as to the motives of his critical remarks. I have never for a moment thought that his remarks would be dictated by anything but friendly motives. Often we are forced in daily life to represent opposing interests or opinions, but surely in the higher aims the feelings of friendship and mutual consideration should not be affected by such things as these.

WRIGHT AND WILSON'S INDUCTION PREVENTER FOR TELEPHONES.

THE accompanying illustration represents a device for which the inventors, Messrs. Thomas F. Wright and Ed. G. Wilson, of Chicago, claim prevents the disturbing

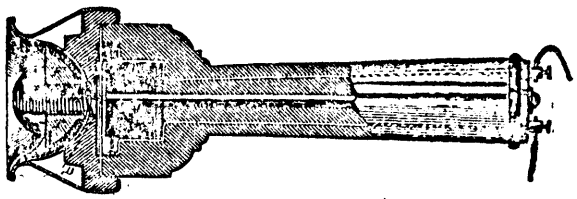

WRIGHT AND WILSON'S INDUCTION PREVENTER.

effects of induction. The device is intended for attachment to the ordinary receivers now in use, and consists of a casing of sheet metal, having the external appearance of a small cup which fits snugly within the concavity in the end of the receiver, the interior being concaved around the edges of the cup and provided with a central projecting dome intended to fit against and within the ear.

The two walls of the casing are provided with central perforations C D, between which a passage is formed by the insertion of a tube E composed of a coil of small steel wire. Surrounding this tube, but enclosed within the casing, is a spool F, grooved externally, as shown, and wound with a coil of fine copper wire, one end of which is driven into the spool, while the free end terminates immediately in front of, but out of contact with, the diaphragm of the telephone-receiver.

This induction-preventing device is attached to the receiver by the spring hook attached to the casing which engages the usual flange upon the end of the receiver.

The Electrical Engineer - London
April 3, 1891, p. 345

ALTERNATE CURRENT MOTORS

Sir - In your issue of March 6 I find the passage: "Mr. Kapp described the position as it exists. He showed how Ferraris first of all pointed out the right way to get an alternating-current motor that was self-starting, and how Tesla and others had worked in the direction indicated by Ferraris," etc.

I would be very glad to learn how Mr. Kapp succeeded in showing this. I may call his attention to the fact that the date of filing of my American patent anticipates the publication of the results of Prof. Ferraris in Italy by something like six months. The date of filing of my application is, therefore, the first public record of the invention. Considering this fact, it seems to me that it would be desireable that Mr. Kapp should modify his statement. - Yours, etc.

NIKOLA TESLA
New York, 17th March , 1891.

Electrical Review - London
April 3, 1891, p. 446.

CORRESPONDENCE.

Electro-motors.

Fifteen or sixteen years ago, when I was pursuing my course at the college, I was told by an eminent physicist that a motor could not be operated without the use of brushes and commutators, or mechanical means of some kind for commutating the current. It was then I determined to solve the problem.

After years of persistent thought I finally arrived at a solution. I worked out the theory to the last detail, and confirmed all of my theoretical conclusions by experiments. Recognising the value of the invention, I applied myself to the work of perfecting it, and after long continued labour I produced several types of practical motors.

Now all this I did long before anything whatever transpired in the whole scientific literature—as far as it could be ascertained—which would have even pointed at the possibility of obtaining such a result, but quite contrary at a time when scientific and practical men alike considered this result unattainable. In all civilised countries patents have been obtained almost without a single reference to anything which would have in the least degree rendered questionable the novelty of the invention. The first published essay—an account of some laboratory experiments by Prof. Ferraris—was published in Italy six or seven months after the date of filing of my applications for the foundation patents. The date of filing of my patents is thus the first public record of the invention. Yet in your issue of March 6th I read the passage: "For several years past, from the days of Prof. Ferraris's investigations, which were followed by those of Tesla, Zipernowsky and a host of imitators," &c.

No one can say that I have not been free in acknowledging the merit of Prof. Ferraris, and I hope that my statement of facts will not be misinterpreted. Even if Prof. Ferraris's essay would have anticipated the date of filing of my application, yet, in the opinion of all fair-minded men, I would have been entitled to the credit of having been the first to produce a practical motor; for Prof. Ferraris himself denies in his essay the value of the invention for the transmission of power, and only points out the possibility of using a properly-constructed generator, which is the only way of obtaining the required difference of phase without losses; for even with condensers—by means of which it is possible to obtain a quarter phase—there are considerable losses, the cost of the condensers not considered.

Thus, in the most essential features of the system—the generators with the two or three circuits of differing phase, the three-wire system, the closed coil armature, the motors with direct current in the field, &c.—I would stand alone, even had Prof. Ferraris's essay been published many years ago.

As regards the most practicable form of two-wire motor, namely, one with a single energising circuit and induced circuits, of which there are now thousands in use, I likewise stand alone.

Most of these facts, if not all, are perfectly well known in England; yet, according to some papers, one of the leading English electricians does not hesitate to say that I have worked in the direction indicated by Prof. Ferraris, and in your issue above referred to it seems I am called an imitator.

Now, I ask you where is that world-known English fairness? I am a pioneer, and I am called an imitator. I am not an imitator. I produce original work or none at all.

Nikola Tesla.

New York, *March 17th*, 1891.

Letters to the Editor.

PHENOMENA OF CURRENTS OF HIGH FREQUENCY.

I cannot pass without comment the note of Prof. Thomson in your issue of April 1, although I dislike very much to engage in a prolonged controversy. I would gladly let Prof. Thomson have the last word, were it not that some of his statements render a reply from me necessary.

I did not mean to imply that, whatever work Prof. Thomson has done in alternating currents of very high frequency, he had done subsequent to his letter published in the *Electrician*. I thought it possible, and even probable, that he had made his experiments some time before, and my statement in regard to this was meant in this general way. It is more than probable that quite a number of experimenters have built such machines and observed effects similar to those described by Prof. Thomson. It is doubtful, however, whether, in the absence of any publication on this subject, the luminous phenomena described by me have been observed by others, the more so, as very few would be likely to go to the trouble I did, and I would myself not have done so had I not had beforehand the firm conviction, gained from the study of the works of the most advanced thinkers, that I would obtain the results sought for. Now, that I have indicated the direction, many will probably follow, and for this very purpose I have shown some of the results I have reached.

Prof. Thomson states decisively in regard to experiments with the incandescent lamp bulb and the filament mounted on a single wire, that he cannot agree with me at all that conduction through the glass has anything to do with the phenomenon observed. He mentions the well-known fact that an incandescent lamp acts as a Leyden jar and says that "if conduction through the glass were a possibility this action could not occur." I think I may confidently assert that very few electricians will share this view. For the possibility of the condenser effect taking place it is only necessary that the rate at which the charges can equalize through the glass by conduction should be somewhat below the rate at which they are stored.

Prof. Thomson seems to think that conduction through the glass is an impossibility. Has he then never measured insulation resistance, and has he then not measured it by means of a conduction current? Does he think that there *is* such a thing as a perfect non-conductor among the bodies we are able to perceive? Does he *not* think that as regards conductivity there can be question only of degree? If glass were a perfect non-conductor, how could we account for the leakage of a glass condenser when subjected to steady differences of potential?

While not directly connected with the present controversy, I would here point out that there exists a popular error in regard to the properties of dielectric bodies. Many electricians frequently confound the theoretical dielectric of Maxwell with the dielectric bodies in use. They do not stop to think that the only perfect dielectric is ether, and that all other bodies, the existence of which is known to us, must be conductors, judging from their physical properties.

My statement that conduction is concerned to some, although perhaps negligible, extent in the experiment above described was, however, made not only on account of the fact that all bodies conduct more or less, but principally on account of the heating of the glass during the experiment. Prof. Thomson seems to overlook the fact that the insulating power of glass diminishes enormously with the increase in temperature, so much so, that melted glass is comparatively an excellent conductor. I have, moreover, stated in my first reply to Prof. Thomson in your issue of March 18, that the same experiment can be performed by means of an unvarying difference of potential. In this case it must be assumed that some such process as conduction through the glass takes place, and all the more as it is possible to show by experiment, that with a sufficiently high steady difference of potential, enough current can be passed through the glass of a condenser with mercury coating to light up a Geissler tube joined in series with the condenser. When the potential is alternating, the condenser action comes in and conduction becomes insignificant, and the more so, the greater the rate of alternation or change per unit of time. Nevertheless, in my opinion, conduction must always exist, especially if the glass is hot, though it may be negligible with very high frequencies.

Prof. Thomson states, further, that from his point of view I have misunderstood his statement about the limit of audition. He says that 10,000 to 20,000 alternations correspond to 5,000 to 10,000 complete waves of sound. In my first reply to Prof. Thomson's remarks (in your issue of March 18,) I avoided pointing out directly that Prof. Thomson was mistaken, but now I see no way out of it. Prof. Thomson will pardon me if I call his attention to the fact he seems to disregard, namely, that 10,000 to 20,000 alternations of current in an arc—which was the subject under discussion—do not mean 5,000 to 10,000, but 10,000 to 20,000 *complete waves of sound.*

He says that I have adopted or suggested as the limit of audition 10,000 waves per second, but I have neither adopted nor suggested it. Prof. Thomson states that I have been working with 5,000 to 10,000 complete waves, while I have nowhere made any such statement. He says that this would be working below the limit of audition, and cites as an argument that at the Central High School, in Philadelphia, he has heard 20,000 waves per second; but he wholly overlooks a point on which I have dwelt at some length, namely, that the limit of audition of an arc is something entirely different from the limit of audition in general.

Prof. Thomson further states, in reply to some of my views expressed in regard to the constant current machines that five or six years ago it occurred to him to try the construction of a dynamo for constant current, in which "the armature coils were of a highly efficient type, that is, of comparatively short wire length for the voltage and moving in a dense magnetic field." Exteriorly to the coils and to the field he had placed in the circuit of each coil an impedance coil which consisted of an iron core wound with a considerable length of wire and connected directly in circuit with the armature coil. He thus obtained, he thought, "the property of considerable self-induction along with efficient current generation." Prof. Thomson says he expected "that possibly the effects would be very much the same as those obtainable from the regularly constructed apparatus." But he was disappointed, he adds. With all the consideration due to Prof. Thomson, I would say that, to expect a good result from such a combination, was rather sanguine. Earth is not farther from Heaven than this arrangement is from one, in which there would be a length of wire, sufficient to give the same self-induction, wound on the armature and utilized to produce useful E. M. F., instead of doing just the opposite, let alone the loss in the iron cores. But it is, of course, only fair to remember that this experiment was performed five or six years ago, when even the foremost electricians lacked the necessary information in these and other matters.

Prof. Thomson seems to think that self-induction wipes out the periodical undulations of current. Now self-induction does not produce any such effect, but, if anything, it renders the undulation more pronounced. This is self-evident. Let us insert a self-induction coil in a circuit traversed by an undulating current and see what happens. During the period of the greatest rate of change, when the current has a small value, the self-induction opposes more than during the time of the small rate of change when the current is at, or near, its maximum value. The consequence is, that with the same frequency the maximum value of the current becomes the greater, the greater the self-induction. As the sound in a telephone depends only on the maximum value, it is clear that self-induction is the very thing required in a telephone circuit. The larger the self-induction, the louder and clearer the speech, provided the same current is passed through the circuit. I have had ample opportunity to study this subject during my telephone experience of several years. As regard the fact that a self-induction coil in series with a telephone diminishes the loudness of the sound, Prof. Thomson seems to overlook the fact that this effect is wholly due to the impedance of the coil, *i. e.*, to its property of diminishing the *current strength.* But while the current strength is diminished the undulation is rendered only more pronounced. Obviously, when comparisons are made they must be made with the same current.

In an arc machine, such as that of Prof. Thomson's, the effect is different. There, one has to deal with a make and break. There are then two induced currents, one in the opposite, the other in the same direction with the main current. If the function of the mechanism be the same whether a self-induction coil be present or not, the undulations could not possibly be wiped out. But Prof. Thomson seems, likewise, to forget that the effect is wholly due to the defect of the commutator; namely, the induced current of the break, which is of the same direction with the main current and of great intensity, when large self-induction is present, simply bridges the adjacent commutator segments, or, if not entirely so, at least shortens the interval during which the circuit is open and thus reduces the undulation.

In regard to the improvement in the feeding of the lamps by vibrations or undulations, Prof. Thomson expresses a decisive opinion. He now says that the vibrations *must* improve the feeding of a clock-work lamp. He says that I "contented myself by simply saying," that I cannot agree with him on that point.

Now, *saying it*, is not the only thing I did. I have passed many a night watching a lamp feed, and I leave it to any skilled experimenter to investigate whether my statements are correct. My opinion is, that a clock-work lamp, that is, a lamp in which the descent of the carbon is regulated not by a clutch or friction mechanism, but by an escapement, cannot feed any more perfectly than tooth by tooth, which may be a movement of, say, $\frac{1}{11}$ of an inch or less. Such a lamp will feed in nearly the same manner whether the current be perfectly smooth or undulating, providing the conditions of the circuit are otherwise stable. If there is any advantage, I think it would be in the use of a smooth current, for, with an undulating current, the lamp is likely to miss some time and feed by more than one tooth. But in a lamp in which the descent of the carbon is regulated by friction mechanism, an indulating current of the proper number of undulations per second will always give a better result. Of course, to

realize fully the benefits of the undulating current the release ought to be effected independently of the up-and-down movement I have pointed out before.

In regard to the physiological effects, Prof. Thomson says, that in such a comparatively poor conductive material as animal tissue the distribution of current cannot be governed by self-induction to any appreciable extent, but he does not consider the two-fold effect of the large cross-section, pointed out by Sir William Thomson. As the resistance of the body to such currents is low, we must assume either condenser action or induction of currents in the body.

NIKOLA TESLA.

NEW YORK, April 4, 1891.

Literature.

The Elements of Dynamic Electricity and Magnetism: By Philip Atkinson, A. M., Ph. D. New York: *D. Van Nostrand Co.*, 1891. 5x8 inches; 405 pages. Price, $2.

While there is no lack of books on the elements of electricity and magnetism, there has of late arisen a demand for a class of works which shall be adapted not only to the learner who desires to continue his studies with special reference to their future application in actual work, but also for that large class which has come to take a lively interest in electrical work, because it has been so forcibly brought to public attention during the last few years. A book to interest these learners and general readers, therefore, must present the subjects in their plainest dress, and must convey the facts through the medium of conclusive inductive reasoning rather than by the aid of formulæ. It is from this standpoint that the author has treated the subject matter contained in the book, which forms a companion work to that previously published, entitled "Elements of Static Electricity." In the present work the author has taken up the subject of dynamo electricity and magnetism, and very properly begins with definitions and a description of the voltaic battery. He describes the principal single and double fluid cells now in common use, and their method of operation. Two chapters on magnetism and electro-magnetism discuss the wide range of these phenomena. The author leads up from the natural magnet to the mariner's and surveyor's compass and gives one of the most complete short exposés of terrestrial magnetism that has come under our observation. He also discusses the form of magnets, and their polar attraction and repulsion. Passing on to electro-magnetism, we find a treatment of the laws governing the relation between currents carried in neighboring conductors and the effects of currents upon magnets and upon masses of iron. The author explains very clearly the simple rules by which all these phenomena may be remembered, and shows their application to the construction of the Ruhmkorff coil, which is described very fully.

Chapter VI is devoted to electric measurement. In it are described the various electrical units employed in practical electrical work, and this is followed by a description of the most generally employed testing instruments, among them the Thomson galvanometer, the Weston voltmeter, the Wirt voltmeter, the Cardew and others. The dynamo and motor are then taken up, and after a few short introductory paragraphs on the history of the dynamo, the author at once brings us to the types employed at the present time and their construction. This survey includes not only those of the well-known continuous current machines, but also the best known alternating current dynamos and motors. Thermo-magnetic motors are also touched upon here. Electrolysis and electric storage form the subject matter of the two following chapters, introduced by the theory of Grotthuss, which still seems to be the favorite one for text book purposes, and perhaps justly so. The application of the laws of electrolysis to electric storage is also pointed out, and the construction of the most recent types of secondary batteries is described and illustrated. The relations of electricity to heat form a chapter which will attract considerable interest as we find in it, besides the laws governing the generation of heat in conductors, a simple statement of electro-thermic phenomena and a description of the latest forms of the Thomson welding machine, and the results which have been obtained with it. The relation of electricity to light forms the subject matter of Chapter XI, in which the various phenomena of the effects of light on selenium are described, together with the magneto-optic polarization effects, and the various other photo-electric phenomena discovered by Becquerel, Kerr and others. The author then takes up the arc light and discusses its nature, and the most general types of lamps employed. This is followed by similar treatment of the incandescent lamp, in which connection the two and three wire systems of distribution are described. The telegraph and the telephone, to each of which a chapter is devoted, end the volume.

While we are not prepared to agree entirely with all the views expressed by the author, especially on points of theory, the present unsettled state of the latter might be easily made to account for divergences. If we may also be allowed to suggest, we think that the work in further editions, which will undoubtedly be called for, might be improved by a more rigid adherence to the classification of the subjects treated. The book has the undoubted merit of giving the latest information on the practical advances made, and does not burden the reader with a long and profitless review of what has been done during the last fifty years. The book is admirably printed and illustrated, and the author has evidently availed himself of the latest and best sources of information. We trust that the publishers will find their enterprise fully rewarded.

THE SWINBURNE TRANSFORMERS.

In my letter appearing in your last issue an error was made in the statement beginning; "In the communication from Mr. Swinburne a few days after the publishing of my article, Mr. Swinburne, etc." It should read as follows: "In a communication received from Messrs. Swinburne & Co. a few days after the publishing of my article, etc., they state that the leakage current in their transformers of 40 lights capacity is about 40 per cent.; allowing that this 40 per cent. is correct, the comparative leakage current in the open and closed types of transformers is approximately 10 to 1."

WM. STANLEY, JR.

PITTSFIELD, MASS.

WHAT ARE THE LIMITS OF HIGH POTENTIAL TRANSMISSION?

IN another column we describe the tests which have recently been made to demonstrate the possibility of transmitting electrical energy between Lauffen and Frankfort, in which potentials of over 30,000 volts were employed. These experiments appeared to indicate the practical success of the system, but in a letter appearing in the *Elektrotechnische Zeitschrift*, August Schnelley, of The Hague, Holland, draws attention to certain points, which, he claims, have not been fully considered. He writes as follows:

"In our technical papers, the power transmission project from Lauffen to Frankfort, on the occasion of the Frankfort Exhibition, has been the frequent object of discussion of late. Although in the carrying out of my experiments in the preparation of ozone, I have already had considerable experience with alternating currents up to 24,000 volts potential, I have up to now avoided taking part in this discussion. Since, however, this project has been seriously taken up and spoken of by his Excellency, Dr. Von Stephan, I have regarded it as my duty to testify to the enormous difficulties of transmitting power with 20,000 volts alternating current, which make its carrying out in practice impossible. The transmitted 300 h. p. may have at the primary transformer 30,000 volts and 6.2 amperes = 186,000 watts. To obtain 30,000 volts by transformation in commercially practicable apparatus, so as to be safe, is indeed difficult, but under certain construction not impossible.

"The chief difficulty in the transmission of 30,000 volts lies not, however, in the fourfold transformation and the loss thereby entailed, nor in the transformers themselves, but in the outside conductors. With 6.2 amperes, with a copper wire of 5 mm. diameter, and with 350 kilometres of wire the drop in potential amounts to only 1,830 volts = 6.1 per cent.; but the other losses which the conductors are subject to have been entirely left out of account up to the present. For the overhead conductors telegraph poles are necessary, which ought not to be more than 50 metres apart, so that altogether there will be 3,500 telegraph poles, and 7,000 oil insulators. One insulator, even an oil insulator, has an average resistance of 1,000 megohms when measured with low potential battery current. For 7,000 insulators there may then be a resistance of 150,000 ohms; then there would be, at 30,000 volts, 0.2 ampere loss, which loss of 3.2 per cent., in such an important undertaking, may almost be neglected.

"Now, however, comes the principal point: The 'charging loss,' according to my measurements, for an air dry insulator at 15,000 volts, amount to 2.3 watts; at 20,000 volts to 4.7 watts, and at 30,000 volts might reach about 15 watts. In the 7,000 insulators then, in dry weather, there would be about 100,000 watts loss. The losses in foggy or rainy weather are still left quite out of the calculation. If we assume a distance between the parallel conductors of one metre, there results, at 30,000 volts potential, a loss of 0.15 watt per metre by silent discharge; hence, for 175 kilometres, a loss of 26,000 watts. Allowing an efficiency of 95 per cent. for the primary and secondary machines and 98 per cent. for the transformers at full load, the loss in the line 6.1 per cent., the insulation loss 3.2 per cent., the 'charging loss' on the insulators at 100,000 watts, and the silent discharge in 175 kilometres of parallel conductors at 26,000 watts, then we come to the conclusion that in dry weather, from the Lauffen plant of 300 h. p. we will get in Frankfort about 37 h. p.

"There must be taken into account still further, about 6,000 square metres of condensing surface of the conductors and insulators. I have measured the sparking distance with 20,000 volts alternating current at 100 reversals per second, without any condenser, and found it to be 46 mm.; and when a condenser of 15 sq. mm. surface was included, the sparking distance was more than 80 mm.; but how great the sparking distance is with 6,000 square metres of condensing surface, goes beyond my experience. On the basis of these truths it is easily seen that the whole project is a technical impossibility."

The Electrical World - N. Y.
Oct. 8, 1892, p. 222.

The "Drehstrom" Patent.

BY NIKOLA TESLA.

In the last issue of THE ELECTRICAL WORLD I find an article on my "Drehstrom" patent which appeared originally in *Industries*, and is, I believe, from the pen of the able editor of that journal. Some of the statements made are such as to cause an erroneous opinion to gain ground, which I deem it my duty to prevent—a disagreeable one I may say, as I do not like to express my opinion on a patent, especially if it is my own.

It may be, as the writer states, that the theory of the action of my motor advanced in my paper before the American Institute in May, 1888, is a clumsy one, but this theory was formed by me a number of years before the practical results were announced, the patents being applied for only after it was undoubtedly demonstrated that the motor could fairly compete in efficiency with the direct current motor, and that the invention was one of commercial value. These patents were taken out with the help of some of the ablest attorneys in the United States, well versed in electrical matters; the specifications were drawn up with great care, in view of the importance of the invention, and with proper regard to the state of the art at that period, and had the patents been carefully studied by others there would not have been various features of my system reinvented, and several inventors would have been spared at this late date a keen disappointment.

The writer apprehends that it might be difficult for a non-technical judge to decide whether a motor with two or more separate fields and armatures, coupled together mechanically, does or does not fall under my patent. I do not share his apprehension. Judges are highly educated men, and it does not require much technical knowledge to convince one that it is the same whether two belts driving a rigid arbor are close together or far apart. Nor do I think that it is necessary for the honorable judge to be a partisan of the armature reaction theory in order to recognize the identity of the two arrangements referred to by the writer of the article in question. Indeed, I would seriously doubt the sincerity of a man capable of clear conceptions were he to uphold that the arrangements are essentially different, even if the case should stand exactly as he assumes by way of illustration of "puzzles likely to arise." For where is there a difference? Take, for instance, a form of my two-phase motor There are two sets of field magnets, one at the *neutral* parts of the other. One of the sets, therefore, might as well be removed and placed a distance sideways, but long experience shows that in output, efficiency, cost of construction and in general mechanical respects such an arrangement is inferior. The two sets are connected inductively through the armature body or the windings thereon. Part of the period one set of field magnets acts as a generator, setting up induction currents, which circulate in the field of force of the other set, which may be looked upon as a motor. Part of the period again, the second set becomes the generator and the first the motor, the action being at the same time such that the generated currents are always passed in a definite direction with respect to the field; they are commutated as it were, and a tendency to rotate in a given direction is imparted to the armature. Now place two fields side by side and connect properly the armature windings. Are not the fields again inductively connected? Do not the currents set up by one field cause currents to circulate in the other, and is the action not exactly the same in both cases? This is a fact, no matter what theory is adhered to. The writer says that in the case of two separate structures there is really nothing which may be called rotation of the field. But is there any such thing, when the two structures are merged in one? Is it not in accordance with accepted notions to conceive the imaginary lines as surging simply in the pole projections in exactly the same manner in both the arrangements? Irrespective of the view taken, be it even the more unfair to the inventor, no one is permitted to go so far as to make him responsible, in such a case, for theories and interpretations of his invention. Theories may come and go, but the motor works, a practical result is achieved and the art is advanced through his pains and efforts. But what I desire to point out principally is that in the article above referred to the writer is only assuming a case which cannot occur. He is evidently judging the state of things from my short paper before the American Institute. This paper was written in a hurry, in fact only shortly before the meeting of the Institute, and I was unable to do full justice even to those features upon which, as employé of a company owning the invention, I was permitted to dwell. Allow me to observe that my patent specification was written up more carefully than my paper and the view taken in it is a broader and truer one. While the "clumsy" theory was adapted as the best in explanation of the action of the motor, the invention is *not* represented as dependent entirely on that theory; and in showing a three phase motor with six projections, where it was manifestly more consistent with the accepted popular ideas to assume the "lines of force" as simply surging in the projecting pole pieces, this view was distinctly and advisedly taken, as the following quotation from my foundation patent will show: "The variations in the strength and intensity of the currents transmitted through these circuits (lines and armature) and traversing the coils of the motor produce a steadily progressive shifting of the *resultant attractive force* exerted by the poles upon the armature and consequently keep the armature rapidly rotating." There is, in this instance, no question of a rotating field in the common acceptance of the term of the *resultant attractive force*: there is a question simply of a diagram of force, and it is immaterial for the operation whether the fields are close together or far apart, or even whether, or not, they are inductively connected.

I do not think that in Germany, where the Patent Office is proverbially strict in upholding the rights of the inventor, an illegitimate and unfair appropriation of the invention by others will be tolerated by the courts.

Reprinted with Permission. Reprinted from Oct. 8, 1892, issue of *Electrical World*. c Copyright 1892, McGraw-Hill, Inc. All rights reserved.

Electrician - London
Dec. 17, 1892, p. 391.

THE EWING HIGH-FREQUENCY ALTERNATOR AND PARSONS STEAM ENGINE

In your issue of November 18 I find a description of Prof. Ewing's high-frequency alternator, which has pleased me chiefly because it conveyed to me the knowledge that he, and with him, no doubt, other scientific men, is to investigate the properties of high-frequency currents. With apparatus such as you describe, shortly a number of experimenters, more competent than myself, will be enabled to go over the ground as yet but imperfectly explored, which will undoubtedly result in the observation of novel facts and elimination of eventual errors.

I hope it will not be interpreted as my wishing to detract anything from Prof. Ewing's merit if I state the fact that for a considerable time past I have likewise thought of combining the identical steam turbine with a high-frequency alternator. *Anch' io sono pittore.* I had a number of designs with such turbines, and would have certainly carried them out had the turbines been here easily and cheaply obtainable, and had my attention not been drawn in a different direction. As to the combination to which you give a rather complicated name, I consider it an excellent one. The advantages of using a high speed are especially great in connection with such alternators. When a belt is used to drive, one must resort to extraordinarily large diameters in order to obtain the necessary speed, and this increases the difficulties and cost of construction in an entirely unreasonable proportion. In the machine used in my recent experiments the weight of the active parts is less than 50 pounds, but there is an additional weight of over 100 pounds in the supporting frame, which a very careful constructor would have probably made much heavier. When running at its maximum speed, and with a proper capacity in the armature circuit, two and a one-half horse-power can be performed. The large diameter (30 inches), of course, has the advantage of affording better facility for radiation; but, on the other hand, it is impossible to work with a very small clearance.

I have observed with interest that Prof. Ewing has used a magnet with alternating poles. In my first trials I expected to obtain the best results with a machine of the Mordey type - that is, with one having pole projections of the same polarity. My idea was to energize the field up to the point of the maximum permeability of the iron and vary the induction around that point. But I found that with a very great number of pole projections such a machine would not give good results, although with few projections, and with an armature without iron, as used by Mordey, the results obtained were excellent. Many experiences of similar nature made in the course of my study demonstrate that the ordinary rules for the magnetic circuit do not hold good with high frequency currents. In ponderable matter magnetic permability, and also specific inductive capacity, must undergo considerable change when the frequency is varied within wide limits. This would render very difficult the exact determination of the energy dissipated in iron cores by very rapid cycles of magnetization, and of that in conductors and condensers, by very quick reversals of current. Much valuable work remains to be done in these fields, in which it is so easy to observe novel phenomena, but so difficult to make quantitative determinations. The results of Prof. Ewing's systematical research will be awaited with great interest.

It is gratifying to note from his tests that the turbines are being rapidly improved. Though I am aware that the majority of engineers do not favor their adoption. I do not hesitate to say that I believe in their success. I think their principle uses, in no distant future, will be in connection with alternate current motors, by means of which it is easy to obtain a constant and, in any desired ratio, reduced speed. There are objections to their employment for driving direct current

generators, as the commutators must be a source of some loss and trouble, on account of the very great speed; but with an alternator there is no objectionable feature whatever. No matter how much one may be opposed to the introduction of the turbine, he must have watched with surprise the development of this curious branch of the industry, in which Mr. Parsons has been a pioneer, and everyone must wish him the success which his skill has deserved.

Nikola Tesla

THE

Electrical Engineer.

VOL. XIV. DECEMBER 21, 1892. No. 242.

ON THE DISSIPATION OF THE ELECTRICAL ENERGY OF THE HERTZ RESONATOR.

BY

Nikola Tesla

ANYONE who, like myself, has had the pleasure of witnessing the beautiful demonstrations with vibrating diaphragms which Prof. Bjerknes, exhibited in person at the Paris Exposition in 1889, must have admired his ability and painstaking care to such a degree, as to have an almost implicit faith in the correctness of observations made by him. His experiments "On the Dissipation of the Electrical Energy of the Hertz Resonator," which are described in the issue of Dec. 14, of THE ELECTRICAL ENGINEER, are prepared in the same ingenious and skillful manner, and the conclusions drawn from them are all the more interesting as they agree with the theories put forth by the most advanced thinkers. There can not be the slighest doubt as to the truth of these conclusions, yet the statements which follow may serve to explain in part the results arrived at in a different manner; and with this object in view I venture to call attention to a condition with which, in investigations such as those of Prof. Bjerknes, the experimenter is confronted.

The apparatus, oscillator and resonator, being immersed in air, or other discontinuous medium, there occurs—as I have pointed out in the description of my recent experiments before the English and French scientific societies—dissipation of energy by what I think might be appropriately called *electric sound-waves* or *sound-waves of electrified air*. In Prof. Bjerknes's experiments principally this dissipation in the resonator need be considered, though the sound-waves—if this term be permitted—which emanate from the surfaces at the oscillator may considerably affect the observations made at some distance from the latter. Owing to this dissipation the period of vibration of an air-condenser can not be accurately determined, and I have already drawn attention to this important fact.

These waves are propagated at right angles from the charged surfaces when their charges are alternated, and dissipation occurs, even if the surfaces are covered with thick and excellent insulation. Assuming that the "charge" imparted to a molecule or atom either by direct contact or inductively is proportionate to the electric density of the surface, the dissipation should be proportionate to the square of the density and to the number of waves per second. The above assumption, it should be stated, does not agree with some observations from which it appears that an atom can not take but a certain maximum charge; hence, the charge imparted may be practically independent of the density of the surface, but this is immaterial for the present consideration. This and other points will be decided when accurate quantitative determinations, which are as yet wanting, shall be made. At present it appears certain from experiments with high-frequency currents, that this dissipation of energy from a wire, for instance, is not very far from being proportionate to the frequency of the alternations, and increases very rapidly when the diameter of the wire is made exceedingly small. On the latter point the recently published results of Prof. Ayrton and H. Kilgour on "The Thermal Emissivity of Thin Wires in Air" throw a curious light. Exceedingly thin wires are capable of dissipating a comparatively very great amount of energy by the agitation of the surrounding air, when they are connected to a source of rapidly alternating potential. So in the experiment cited, a thin hot wire is found to be capable of emitting an extraordinarily great amount of heat, especially at elevated temperatures. In the case of a hot wire it must of course be assumed that the increased emissivity is due to the more rapid convection and not, to any appreciable degree, to an increased radiation. Were the latter demonstrated, it would show that a wire, made hot by the application of heat in ordinary ways, behaves in some respects like one, the charge of which is rapidly alternated, the dissipation of energy per unit of surface kept at a certain temperature depending on the curvature of the surface. I do not recall any record of experiments intended to demonstrate this, yet this effect, though probably very small, should certainly be looked for.

A number of observations showing the peculiarity of very thin wires were made in the course of my experiments. I noted, for instance, that in the well-known Crookes instrument the mica vanes are repelled with comparatively greater force when the incandescent platinum wire is exceedingly thin. This observation enabled me to produce the spin of such vanes mounted in a vacuum tube when the latter was placed in an alternating electrostatic field. This however does not prove anything in regard to radiation, as in a highly exhausted vessel the phenomena are principally due to molecular bombardment or convection.

When I first undertook to produce the incandescence of a wire enclosed in a bulb, by connecting it to only *one* of the terminals of a high tension transformer, I could not succeed for a long time. On one occasion I had mounted in a bulb a thin platinum wire, but my apparatus was not adequate to produce the incandescence. I made other bulbs, reducing the length of the wire to a small fraction; still I did not succeed. It then occurred to me that it would be desirable to have the surface of the wire as large as possible, yet the bulk small, and I provided a bulb with an exceedingly thin wire of a bulk about equal to that of the short but much thicker wire. On turning the current on the bulb the wire was instantly fused. A series of subsequent experiments showed, that when the diameter of the wire was exceedingly small, considerably more energy would be dissipated per unit surface at all degrees of exhaustion than was to be expected, even on the assumption that the energy given off was in proportion to the square of the electric density. There is likewise evidence which, though not possessing the certainty of an accurate quantitative determination, is nevertheless reliable because it is the result of a great many observations, namely, that with the increase of the density the dissipation is more rapid for thin than for thick wires.

The effects noted in exhausted vessels with high-frequency currents are merely diminished in degree when the air is at ordinary pressure, but heating and dissipation occurs, as I have demonstrated, under the ordinary atmospheric conditions. Two very thin wires attached to the

terminals of a high-frequency coil are capable of giving off an appreciable amount of energy. When the density is very great, the temperature of the wires may be perceptibly raised, and in such case probably the greater portion of the energy which is dissipated *owing to the presence of a discontinuous medium* is transformed into heat at the surface or in close proximity to the wires. Such heating could not occur in a medium possessing either of the two qualities, namely, perfect incompressibility or perfect elasticity. In fluid insulators, such as oils, though they are far from being perfectly incompressible or elastic to electric displacement, the heating is much smaller because of the continuity of the fluid.

When the electric density of the wire surfaces is small, there is no appreciable local heating, nevertheless energy is dissipated in air by waves, which differ from ordinary sound-waves only because the air is electrified. These waves are especially conspicuous when the discharges of a powerful battery are directed through a short and thick metal bar, the number of discharges per second being very small. The experimenter may feel the impact of the air at distances of six feet or more from the bar, especially if he takes the precaution to sprinkle the face or hands with ether. These waves cannot be entirely stopped by the interposition of an insulated metal plate.

Most of the striking phenomena of mechanical displacement, sound, heat and light which have been observed, imply the presence of a medium of a gaseous structure, that is, one consisting of independent carriers capable of free motion.

When a glass plate is placed near a condenser the charge of which is alternated, the plate emits a sound. This sound is due to the rythmical impact of the air against the plate. I have also found that the ringing of a condenser, first noted by Sir William Thomson, is due to the presence of the air between or near the charged surfaces.

When a disruptive discharge coil is immersed in oil contained in a tank, it is observed that the surface of the oil is agitated. This may be thought to be due to the displacements produced in the oil by the changing stresses, but such is not the case. It is the air above the oil which is agitated and causes the motion of the latter; the oil itself would remain at rest. The displacements produced in it by changing electrostatic stresses are insignificant; to such stresses it may be said to be compressible to but a very small degree. The action of the air is shown in a curious manner for if a pointed metal bar is taken in the hand and held with the point close to the oil, a hole two inches deep is formed in the oil by the molecules of the air, which are violently projected from the point.

The preceding statements may have a general bearing upon investigations in which currents of high frequency and potential are made use of, but they also have a more direct bearing upon the experiments of Prof. Bjerknes which are here considered, namely, the "skin effect," is increased by the action of the air. Imagine a wire immersed in a medium, the conductivity of which would be some function of the frequency and potential difference but such, that the conductivity increases when either or both of these elements are increased. In such a medium, the higher the frequency and potential difference, the greater will be the current which will find its way through the surrounding medium, and the smaller the part which will pass through the central portion of the wire. In the case of a wire immersed in air and traversed by a high-frequency current, the facility with which the energy is dissipated may be considered as the equivalent of the conductivity; and the analogy would be quite complete, were it not that besides the air another medium is present, the total dissipation being merely modified by the presence of the air to an extent as yet not ascertained. Nevertheless, I have sufficient evidence to draw the conclusion, that the results obtained by Prof. Bjerknes are affected by the presence of air in the following manner: 1. The dissipation of energy is more rapid when the resonator is immersed in air than it would be in a practically continuous medium, for instance, oil. 2. The dissipation owing to the presence of air renders the difference between magnetic and non-magnetic metals more striking. The first conclusion follows directly from the preceding remarks; the second follows from the two facts that the resonator receives always the same amount of energy, independent of the nature of the metal, and that the magnetism of the metal increases the impedance of the circuit. A resonator of magnetic metal behaves virtually as though its circuit were longer. There is a greater potential difference set up per unit of length, although this may not show itself in the deflection of the electrometer owing to the lateral dissipation. The effect of the increased impedance is strikingly illustrated in the two experiments of Prof. Bjerknes when copper is deposited upon an iron wire, and next iron upon a copper wire. Considerable thickness of copper deposit was required in the former experiment, but very little thickness of iron in the latter, as should be expected.

Taking the above views, I believe, that in the experiments of Prof. Bjerknes which lead him to undoubtedly correct conclusions, the air is a factor fully as important, if not more so, than the resistance of the metals.

STATISTICS OF ELECTRICAL MANUFACTURE IN GERMANY.

The following statistics with regard to the value of electrical goods manufactured in Germany, and relating to the years 1890 and 1891, were recently given by the *Elektrotechnische Zeitschrift* on the authority of Herr Fr. Vogel. Telegraphic apparatus to the value of $280,000 was made; telephones, over $400,000; railway signalling apparatus, nearly $400,000; total, with electric bells, etc., about $2,000,000. During 1890–1891: 3,500 continuous current dynamos, alternators and transformers were built each year to the value of $1,600,000. In 1886 a large German firm built 350 machines, having a total output of 2,500,000 watts. Last year the same firm turned out 760 machines, the total output of which was 10,000,000 watts, the average size of machine being, therefore, about 9½ h. p. and 17½ h. p. respectively. Accumulators are being manufactured and sold in Germany to the amount of $1,120,000 per annum. About 17,000 arc lamps are made every year, their value being about $500,000. The arc-light carbon product amounts to nearly $400,000 per annum, and the incandescent lamp product to $640,000. The value of the total annual electrical output of all sorts is placed at $6,600,000 or $6,700,000. The number of persons employed in electrical factories is about 15,000.

MAXIMUM SPEED ON ELECTRIC RAILWAYS.

In a contribution to the *Elektrotechnische Zeitschrift*, Mr. J. Kraemer comments on the current statements regarding high speed on electric railways, and presents an array of formulas for calculating the effect of air pressure, dead weight and other factors on the maximum possible speed. He thinks that 500 kilometres per hour is the highest speed yet attained by experiments made on a laboratory scale; the dead weight of the cars, engine, trucks and the fuel used reduces this to about 150 kilometres. The limited rate of reciprocation of the steam engine part of the locomotive suggests larger driving wheels, but the size of these is limited by the radius of the curves. These factors, together with the allowances for air resistance, slipping on the rails and the average grades still further reduce this speed, so that electric railways must be able to alter the conditions materially in order to attain a speed of even 200 kilometres per hour, corresponding to about 125 miles per hour—quite a promising figure.

MISCELLANEOUS.

THE PHYSIOLOGICAL AND OTHER EFFECTS OF HIGH FREQUENCY CURRENTS.

BY

Nikola Tesla

IN THE ELECTRICAL ENGINEER, of January 25, 1893, I note an article by Mr. A. A. C. Swinton, referring to my experiments with high frequency currents. Mr. Swinton uses in these experiments the method of converting described by me in my paper before the American Institute of Electrical Engineers, in May, 1891, and published in THE ELECTRICAL ENGINEER of July 8, 1891, which has since been employed by a number of experimenters; but it has somewhat surprised me to observe that he makes use of an ordinary vibrating contact-breaker, whereas he could have employed the much simpler method of converting continuous currents into alternating currents of any frequency which was shown by me two years ago. This method does not involve the employment of any moving parts, and allows the experimenter to vary the frequency at will by simple adjustments. I had thought that most electricians were at present familiar with this mode of conversion which possesses many beautiful features.

The effects observed by Mr. Swinton are not new to me and they might have been anticipated by those who have carefully read what I have written on the subject. But I cannot agree with some of the views expressed by him.

First of all, in regard to the physiological effects. I have made a clear statement at the beginning of my published studies, and my continued experience with these currents has only further strengthened me in the opinion then expressed. I stated in my paper, before mentioned, that it is an undeniable fact that currents of very high frequency are less injurious than the low frequency currents, but I have also taken care to prevent the idea from gaining ground that these currents are absolutely harmless, as will be evident from the following quotation: "If received directly from a machine or from a secondary of low resistance, they (high frequency currents) produce more or less powerful effects, and may cause serious injury, especially when used in conjunction with condensers." This refers to currents of ordinary potential differences such as are used in general commercial practice.

As regards the currents of very high potential differences, which were employed in my experiments, I have never considered the current's *strength*, but the *energy* which the human body was capable of receiving without injury, and I have expressed this quite clearly on more than one occasion. For instance, I stated that "the higher the frequency the greater the amount of electrical energy which may be passed through the body without serious discomfort." And on another occasion when a high tension coil was short-circuited though the body of the experimenter I stated that the immunity was due to the fact that less *energy* was available externally to the coil when the experimenter's body joined the terminals. This is practically what Mr. Swinton expresses in another way; namely, by saying that with "high frequency currents it is possible to obtain effects with exceedingly small currents," etc.

In regard to the experiments with lamp filaments, I have, I believe, expressed myself with equal clearness. I have pointed out some phenomena of impedance which at that time (1891) were considered very striking, and I have also pointed out the great importance of the rarefied gas surrounding the filament when we have to deal with currents of such high frequency. The heating of the filament by a comparatively small current is not, as Mr. Swinton thinks, due to its impedance or increased ohmic resistance, but principally to the presence of rarefied gas in the bulb. Ample evidence of the truth of this can be obtained in very many experiments, and to cite them would be merely lengthening this communication unduly.

Likewise, observations made when the experimenter's body was included in the path of the discharge, are, in my opinion, not impedance, but capacity, phenomena. The spark between the hands is the shorter, the larger the surface of the body, and no spark whatever would be obtained if the surface of the body were sufficiently large.

I would here point out that one is apt to fall into the error of supposing that the spark which is produced between two points on a conductor, not very distant from each other, is due to the impedance of the conductor. This is certainly the case when the current is of considerable strength, as for instance when, like in the Faraday experiment or some of Dr. Lodge's, a heavily-charged battery of Leyden jars is discharged through a bent wire. But, when there is a vibration along a wire which is constantly maintained, and the current is inappreciable whereas the potential at the coil terminal is exceedingly high, then lateral dissipation comes into play prominently. There is then, owing to this dissipation, a rapid fall of potential along the wire and high potential differences may exist between points only a short distance apart. This is of course not to be confounded with those differences of potential observed between points when there are fixed waves with ventral and nodal points maintained on a conductor. The lateral dissipation, and not the skin effect, is, I think, the reason why so great an amount of energy may be passed into the body of a person without causing discomfort.

It always affords me great pleasure to note, that something which I have suggested is being employed for some instructive or practical purpose; but I may be pardoned for mentionting that other observations made by Mr. Swinton, and by other experimenters, have recently been brought forward as novel, and arrangements of apparatus which I have suggested have been used repeatedly by some who apparently are in complete ignorance of what I have done in this direction.

ELECTRICAL RECORDING METERS.—II.

BY CARYL D. HASKINS.

There is another device, or perhaps I had better say there might be another device for accomplishing the object of this last meter in a somewhat similar manner. The actinometer is probably familiar to all who have indulged in amateur photography; it consists of a piece of glass covered with small cubes, each cube of a more intense ruby red than the one beyond it, merging, in fact, from an almost clear glass to an almost perfectly non-actinic medium. Now, it suggestd itself to a certain electrician that if a number of these squares were arranged in a piece of glass, one above the other, and a lamp whose light should vary more or less directly with the potential on the lines, be placed before this glass or actinometer, a sensitive film being rotated behind the actinometer at a constant speed, that the varying light of the lamp would draw a curved line, or rather a curved block of light and shade on the paper, which would be measured by a planimeter to get the average voltage, or could be taken at points. to see what the voltage was at certain times; in fact, a recording voltmeter. This device seemed very nice indeed. It had only one fault—it would not work. I might say that the device is my own.

There is almost an endless variety of clock meters. They are not all electricity meters by any means; some are recording voltmeters, others recording ammeters, and others have still different purposes. The familiar recording steam gauge is only a modification of this instrument. A paper is almost invariably rotated over a drum, sometimes being fixed to the drum, and sometimes being drawn from one drum to another. the paper moving at uniform speed, and generally being divided into hours or other fractions of time by abscissæ lines.

This clock mechanism can be combined with any indicating device; it is only necessary to supply the connection which shall cause the indicator to mark the paper, and draw a crooked line. First attempts of this kind are generally made with an ordinary solenoid, or sometimes with a simple coil and iron core rising and falling with the current. Whatever the character of the indicator or method of communication between the indicator and paper, it remained necessary to keep the friction of contact low.

First attempts were made with a pencil, bearing directly upon the paper, but the friction introduced by this device was fatal to accuracy. A glass pen has been substituted for the pencil with better results, but even this caused too much friction. The photographic method of line drawing is one of the best systems yet introduced, and is probably more familiar to the majority of us than other methods, because it forms a component part of the Walker meter which has attracted attention at various times.

One of the best methods of accomplishing the registration, perhaps, when all things are considered, the very best, is to attach to the pointer of the indicator, a steel point or needle with an iron armature mounted in the form of a spring, or in some similar manner. By placing an electromagnet behind the paper to be marked, and sending through this magnet an electrical impulse at fixed periods of say, one, two or five minutes, the pointer is drawn sharply down to the paper, puncturing it, and is immediately released by the cessation of energizing current in the electromagnet. Thus, the paper when removed, will have a continuous marking of punctures tantamount to a curved line. This device presents practically no friction, and is more or less simple and easy to carry out. The make-and-break necessary for the electromagnet is easily actuated by the clock movements. But we may say of these forms, as well as of the forms of clock meter which are to follow, that there is one serious objection to them all—they have to be wound up, which is certainly a fault. We may modify this statement by saying that many of these devices have an electrical attachment which makes them self-winding,

The Detroit Free Press
Feb. 16, 1896, p. 16.

FROM NI(C)OLA TESLA - HE WRITES ABOUT HIS EXPERIMENTS IN ELECTRICAL HEALING.

Some weeks ago this journal published an interesting article concerning electrical oscillations as observed by the eminent scientist, Ni(c)ola Tesla. So much interest was shown in the subject that Mr. Tesla was appealed to directly and in response to that appeal he sends to *The Detroit Free Press* this open letter:

Nos. 46 & 48 E. Houston Street
New York, February 10, 1896

During the past few weeks I have received so many letters concerning the same subject that it was entirely beyond my power to answer all of them individually. In view of this I hope that I shall be excused for the delay, which I must regret, in acknowledging the receipt, and also for addressing this general communication in answer to all inquiries.

The many pressing demands which have been made upon me in consequence of exaggerated statements of the journals have painfully impressed me with the fact that there are a great many sufferers, and furthermore that nothing finds a more powerful echo than a promise held out to improve the condition of the unfortunate ones.

The members of the medical fraternity are naturally more deeply interested in the task of relieving the suffering from their pain, and, as might be expected, a great many communications have been addressed to me by physicians. To these chiefly this brief statement of the actual facts is addressed.

Some journals have confounded the physiological effects of electrical oscillations with those of mechanical vibrations, this being probably due to the circumstance that a few years ago I brought to the attention of the scientific men some novel methods and apparatus for the production of electrical oscillations which, I learn, are now largely used in some modification or other in electro-therapeutic treatment and otherwise. To dispel this erroneous idea I wish to state that the effects of purely mechanical vibrations which I have more recently observed, have nothing to do with the former.

Mechanical vibrations have often been employed locally with pronounced results in the treatment of diseases, but it seems that the effects I refer to have either not been noted at all, or if so, only to a small degree, evidently because of the insufficiency of the means which have eventually been employed in the investigations.

While experimenting with a novel contrivance, constituting in its simplest form a vibrating mechanical system, in which from the nature of the construction the applied force is always in resonance with the natural period, I frequently exposed my body to continued mechanical vibrations. As the elastic force can be made as large as desired, and the applied force used be very small, great weights, half a dozen persons, for instance, may be vibrated with great rapidity by a comparatively small apparatus.

I observed that such intense mechanical vibrations produce remarkable physiological effects. They affect powerfully the condition of the stomach, undoubtedly promoting the process of digestion and relieving the feeling of distress, often experienced in consequence of the imperfect function of the organs concerned in the process. They have a strong influence upon the liver, causing it to discharge

freely, similarly to an application of a catharic. They also seem to affect the glandular system, noteably in the limbs; also the kidneys and bladder, and more or less influence the whole body. When applied for a longer period they produce a feeling of immense fatigue, so that a profound sleep is induced.

The excessive tiring of the body is generally accompanied by nervous relaxation, but there seems to be besides a specific action on the nerves.

These observations, though incomplete, are, in my own limited judgment, nevertheless positive and unmistakable, and in view of this and of the importance of further investigation of the subject by competent men I prepared about a year ago a machine with suitable adjustments for varying the frequency and amplitude of the vibrations, intending to give it to some medical faculty for investigation. This machine, together with other apparatus, was unfortunately destroyed by fire a year ago, but will be reconstructed as soon as possible.

In making the above statements I wish to disconnect myself with the extraordinary opinions expressed in some journals which I have never authorized and which, though they may have been made with good intent, cannot fail to be hurtful by giving rise to visionary expectations.

Yours very truly,

N. Tesla

Electrical Review - N. Y.
March 18, 1896, p. 147

TESLA'S LATEST RESULTS

HE NOW PRODUCES RADIOGRAPHS AT A DISTANCE OF MORE THAN FORTY FEET.

To The Editor of Electrical Review:

Permit me to say that I was slightly disappointed to note in your issue of Mar. 11 the prominence you have deemed to accord to my youth and talent, while the ribs and other particulars of Fig. 1, which, with reference to the print accompanying my communication, I described as clearly visible, were kept modestly in the background. I also regretted to observe an error in one of the captions, the more so, as I must ascribe it to my own text. I namely stated on page 135, third column, seventh line: "A similar impression was obtained through the body of the experimenter, etc., through a distance of four feet." The impression here referred to was a similar one to that shown in Fig. 2, whereas the shadow in Fig. 1 was taken through a distance of 18 inches. I state this merely for the sake of correctness of my communication, but, as far as the general truth of the fact of taking such a shadow at the distance given is concerned, your caption might as well stand, for I am producing strong shadows at distances of 40 *feet*. I repeat, 40 feet and even more. Nor is this all. So strong are the actions on the film that provisions must be made to guard the plates in my photographic department, located on the floor above, a distance of fully 60 feet, from being spoiled by long exposure to the stray rays. Though during my investigations I have performed many experiments which seemed extraordinary, I am deeply astonished observing these unexpected manifestations, and still more so, as even now I see before me the possibility, not to say certitude, of augmenting the effects with my apparatus at least tenfold! What may we then expect? We have to deal here, evidently, with a radiation of astonishing power, and the inquiry into its nature becomes more and more interesting and important.

Here is an unlooked-for result of an action which, though wonderful in itself, seemed feeble and entirely incapable of such expansion, and affords a good example of the fruitfulness of original discovery. These effects upon the sensitive plate at so great a distance I attribute to the employment of a bulb with a single terminal, which permits the use of practically any desired potential and the attainment of extraordinary speeds of the projected particles. With such a bulb it is also evident that the action upon a fluorescent screen is proportionately greater than when the usual kind of tube is employed, and I have already observed enough to feel sure that great developments are to be looked for in this direction. I consider Roentgen's discovery, of enabling us to see, by the use of a fluorescent screen, through an opaque substance, even a more beautiful one than the recording upon the plate.

Since my previous communication to you I have made considerable progress, and can presently announce one more result of importance. I have lately obtained shadows by *reflected rays only*, thus demonstrating beyond doubt that the Roentgen rays possess this property. One of the experiments may be cited here. A thick copper tube, about a foot long, was taken and one of its ends tightly closed by the plate-holder containing a sensitive plate, protected by a fiber cover as usual. Near the open end of the copper tube was placed a thick plate of glass at an angle of 45 degrees to the axis of the tube. A single-terminal bulb was then suspended above the glass plate at a distance of about eight inches, so that the bundle of rays fell upon the latter at an angle of 45 degrees, and the supposedly reflected rays passed along the axis of the copper tube. An exposure of 45 minutes gave a clear and sharp shadow of a metallic object. This shadow was produced by the reflected rays, as the direct action was absolutely excluded, it having been demonstrated that even under the severest tests with much stronger actions no impression whatever could be produced upon the film through a thickness of copper equal to that of the tube. Concluding from the intensity of the action by comparison with an equivalent effect due to the direct rays, I find that approximately two per cent of the latter were were reflected from the glass plate in this experiment. I hope to be able to report shortly and more fully on this and other subjects.

In my attempts to contribute my humble share to the knowledge of the Roentgen phenomena, I am finding more and more evidence in support of the theory of moving material particles. It is not my intention, however, to advance at present any view as to the bearing of such a fact upon the present theory of light, but I merely seek to establish the fact of the existence of such material streams in so far as these isolated effects are concerned. I have already a great many indications of a bombardment occurring outside of the bulb, and I am arranging some crucial tests which, I hope, will be successful. The calculated velocities fully account for actions at distances of as much as 100 feet from the bulb, and that the projection through the glass takes place seems evident from the process of exhaustion, which I have described in my previous communication. An experiment which is illustrative in this respect, and which I intended to mention, is the following; If we attach a fairly exhausted bulb containing an electrode to the terminal of a disruptive coil, we observe small streamers breaking through the side of the glass. Usually such a streamer will break through the seal and crack the bulb, whereupon the vacuum is impaired; but, if the seal is placed above the terminal, or if some other provision is made to prevent the streamer from passing through the glass at that point, it often occurs that the stream breaks out through the side of the bulb, producing a fine hole. Now, the extraordinary thing is that, in spite of the connection to the outer atmosphere, the air can not rush into the bulb as long as the hole is very small. The glass at the place where the rupture has occurred may grow very hot - to such a degree as to soften; but it will not collapse, but rather bulge out, showing that a pressure from the inside greater than that of the atmosphere exists. On frequent occasions I have observed that the glass bulges out and the hole, through which the streamer rushes out, becomes so large as to be

perfectly discernible to the eye. As the matter is expelled from the bulb the rarefaction increases and the streamer becomes less and less intense, whereupon the glass closes again, hermetically sealing the opening. The process of rarefaction, nevertheless, continues, streamers being still visible on the heated place until the highest degree of exhaustion is reached, whereupon they may disappear. Here, then, we have a positive evidence that matter is being expelled through the walls of the glass.

When working with highly strained bulbs I frequently experience a sudden, and sometimes even painful, shock in the eye. Such shocks may occur so often that the eye gets inflamed, and one can not be considered over-cautious if he abstains from watching the bulb too closely. I see in these shocks a further evidence of larger particles being thrown off from the bulb.

Nikola Tesla.

New York, March 14.

Mining and Scientific Press
May 9, 1896, p. 378.

Electrical Progress.

On Apparatus for Cathography.

By NIKOLA TESLA.

In order to produce the most intense effects, we have first to consider that, whatever their nature, they depend necessarily on the intensity of the cathode streams. Then, again, being dependent on the magnitude of the potential, it follows that the highest attainable electrical pressure is desirable.

To obtain high potentials we may avail ourselves of an ordinary induction coil, or of a static machine, or preferably of a disruptive discharge coil. If we put two electrodes in a bulb, or use one inside and another outside electrode, we limit the potential, for the presence not only of the anode, but of any conducting object, has the effect of reducing the practicable potential on the cathode. Thus, to secure the result aimed at, one is driven to the acceptance of a single electrode bulb, the other terminal being as far remote as possible.

Having selected the induction apparatus and type of bulb, the next important consideration is the vacuum. On this subject I am able to make known a fact with which I have long been acquainted, and of which I have taken advantage in the production of vacuum jackets and incandescent bulbs, and which I subsequently found to be of the utmost importance, not to say essential, for the production of intense Roentgen shadows. I refer to a method of rarefaction by electrical means to any degree desirable, far beyond that obtainable by mechanical appliances.

Though this result can be reached by the use of a static machine, as well as of an ordinary induction coil giving a sufficiently high potential, I have found that by far the most suitable apparatus, and one which secures the quickest action, is a disruptive coil. It is best to proceed in this way: The bulb is first exhausted by means of an ordinary vacuum pump to a rather high degree, though my experiences have shown that this is not absolutely necessary, as I have also found it possible to rarefy, beginning from low pressure. After being taken down from the pump, the bulb is attached to the terminal of the disruptive coil, preferably of high frequency of vibration, and usually the following phenomena are noted: First, there is a milky light spreading through the bulb, or possibly for a moment the glass becomes phosphorescent, if the bulb has been exhausted to a high degree. At any rate, the phosphorescence generally subsides quickly and the white light settles around the electrode, whereupon a dark space forms at some distance from the latter. Shortly afterwards the light assumes a reddish color and the terminal grows very hot. This heating, however, is observed only with powerful apparatus. It is well to watch the bulb carefully and regulate the potential at this stage, as the electrode might be quickly consumed.

After some time the reddish light subsides, the streams becoming again white, whereupon they get weaker and weaker, wavering around the electrode until they finally disappear. Meanwhile, the phosphorescence of the glass grows more and more intense, and the spot where the stream strikes the wall becomes very hot, while the phosphorescence around the electrode ceases and the latter cools down to such an extent that the glass near it may be actually ice-cold to the touch. The gas in the bulb has then reached the required degree of rarefaction. The process may be hastened by repeated heating and cooling and by the employment of a small electrode.

I may state here that the experimenter need not be deterred from using a glass bulb, as I believe the opacity of glass, as well as the transparency of aluminum, are somewhat exaggerated, inasmuch as I have found that a very thin aluminum sheet throws a marked shadow, while, on the other hand, I have obtained impressions through a thick glass plate.

The above method is not only valu-

able as a means of obtaining the high vacua desired, but it is still more important, because the phenomena observed throw a light on the results obtained by Lenard and Roentgen.

Though the phenomenon of rarefaction under above conditions admits of different interpretations, the chief interest centers on one of them, to which I adhere—that is, on the actual expulsion of the particles through the walls of the bulb. I have lately observed that the latter commences to act properly upon the sensitive plate only from the point when the exhaustion begins to be noticeable, and the effects produced are the strongest when the process of exhaustion is most rapid, even though the phosphorescence might not appear particularly bright. Evidently, then, the two effects are closely connected, and I am getting more and more convinced that we have to deal with a stream of material particles, which strike the sensitive plate with great velocities. Taking as a basis the estimate of Lord Kelvin on the speed of projected particles in a Crookes' bulb, we arrive easily by the employment of very high potentials to speeds of as much as a hundred kilometers a second.

It may not be known that even an ordinary streamer, breaking out suddenly and under great pressure from the terminal of a disruptive coil, passes through a thick glass plate as though the latter were not present. Unquestionably, with such coils pressures are practicable which will project the particles in straight lines even under atmospheric pressure. I have obtained distinct impressions in free air, not by streamers, as some experimenters have done, using static machines or induction coils, but by actual projection, the formation of streamers being absolutely prevented by careful static screening.

A valuable evidence of the nature of the radiations and progress in the direction of obtaining strong impressions on the plate might be arrived at by perfecting plates especially sensitive to mechanical shock or impact. There are chemicals suitable for this, and the development in this direction may lead to the abandonment of the

tion coils, but by actual projection, the formation of streamers being absolutely prevented by careful static screening.

A valuable evidence of the nature of the radiations and progress in the direction of obtaining strong impressions on the plate might be arrived at by perfecting plates especially sensitive to mechanical shock or impact. There are chemicals suitable for this, and the development in this direction may lead to the abandonment of the present plate. Furthermore, if we have to deal with streams of material particles, it seems not impossible to project upon the plate a suitable substance to insure the best chemical action.

By exposing the head to a powerful radiation strange effects have been noted. For instance, I find that there is a tendency to sleep and the time seems to pass away quickly. There is a general soothing effect, and I have felt a sensation of warmth in the upper part of the head. An assistant independently confirmed the tendency to sleep and a quick lapse of time. Should these remarkable effects be verified by men with keener sense of observation, I shall still more firmly believe in the existence of material streams penetrating the skull. Thus it may be possible to project a suitable chemical into any part of the body.

Since my above-mentioned discoveries I have made considerable progress, and can presently announce one more result of importance. I have lately obtained shadows by reflected rays only, thus demonstrating beyond doubt that the Roentgen rays possess this property. One of the experiments may be cited here. A thick copper tube, about a foot long, was taken and one of its ends tightly closed by the plate-holder containing a sensitive plate, protected by a fiber cover as usual. Near the open end of the copper tube was placed a thick plate glass at an angle of 45° to the axis of the tube. A single terminal bulb was then suspended above the glass plate at a distance of about eight inches, so that the bundle of rays fell upon the latter at an angle of 45°, and supposedly reflected rays passed along the axis of the copper tube. An exposure of forty-five minutes gave a clear and sharp shadow of a metallic object. This shadow was produced by the reflected rays, as the direct action was absolutely excluded, it having been demonstrated that, even under the severest tests with much stronger actions, no impression whatever could be produced upon the film through a thickness of copper equal to that of the tube. Concluding from the intensity of the action by comparison with an equivalent effect due to the direct rays, I find that approximately two per cent of the latter were reflected from the glass plate in this experiment.

The Electrical Engineer - N. Y.
December 23, 1896, p. 655

MR. TESLA ON THERMO ELECTRICITY.

In a letter to the editor of the Buffalo Enquirer, Mr. Nikola Tesla replies as follows in regard to an inquiry on the subject of the future of electricity:

"The transmission of power has interested me not only as a technical problem, but far more in its bearing upon the welfare of mankind. In this sense I have expressed myself in a lecture, delivered some time ago.

"Since electrical transmission of energy is a process much more economical than any other we know of, it necessarily must play an important part in the future, no matter how the primary energy is derived from the sun. Of all the ways the utilization of a waterfall seems to be the simplest and least wasteful. Even if we could, by combining carbon in a battery, convert the work of the chemical combination into electrical energy with very high economy, such mode of obtaining power would, in my opinion, be no more than a mere makeshift, bound to be replaced sooner or later by a more perfect method, which implies no consumption of any material whatever."

Cassiers Magazine - London
March, 1897, pp. 378-386.

THE AGE OF ELECTRICITY.

by Nikola Tesla

The commemoration of the recent introduction into the city of Buffalo of electric power from Niagara Falls was made the occasion of a banquet, held at the Ellicott Club, at Buffalo on January 12, 1897, the hosts being the Niagara Falls Power and Conduit Company, and the distinguished guests the men, principlally, to whose business and engineering talents the world owes the remarkable Niagara undertaking so recently brought to successful completion. Probably none among these has been more honoured than Mr. Nikola Tesla, whose electrical researches and practical accomplishments have been the talk of the world, and whose polyphase alternating current system was the one eventually adopted in the work at Niagara Falls. After the banquet, in responding to the toast, "Electricity," Mr. Tesla spoke at length of the various sciences, with special reference, naturally to electricity, and from his remarks the appended extracts have been made, picturing in a graphic and striking manner the dependence upon power of the development and wealth of cities, the success of nations, the progress of the whole human race, in fact, as he himself put it. - THE EDITOR.

For more than half a century the steam engine has served the innumerable wants of man. The work it was called to perform was of such variety, and the conditions in each case were so different that, of necessity, a great many types of engines resulted. In the vast majority of cases the problem put before the engineer was not, as it should have been, the broad one of converting the greatest possible amount of heat energy into mechanical power, but it was rather the specific problem of obtaining the mechanical power in such form as to be best suitable for general use. As the reciprocating motion of the piston was not convenient for practical purposes, except in very few instances, the piston was connected to a crank, and thus rotating motion was obtained, which was more suitable and preferable, though it involved numerous disadvantages incident to the crude and wasteful means employed. But until quite recently there were at the disposal of the engineer, for

the transformation and transmission of the motion of the piston, no better means than rigid mechanical connections.

The past few years have brought forcibly to the attention of the builder the electric motor, with its ideal features. Here was a mode of transmitting mechanical motion, simpler by far, and also much more economical. Had this mode been perfected earlier, there can be no doubt that the majority of the many types of engines would not exist, for just as soon as an engine was coupled with an electric generator a type was produced capable of almost universal use. From this moment on there was no necessity to endeavor to perfect engines of special designs capable of doing special kinds of work. The engineer's task became now to concentrate all his efforts upon one type, to perfect one kind of engine - the best, the universal, the engine of the immediate future; namely, the one which is best suitable for the generation of electricity.

The first efforts in this direction gave a strong impetus to the development of the reciprocating high-speed engine, and also to the turbine, which latter was a type of engine of very limited practical usefulness, but became, to a certain extent, valuable in connection with the electric generator and motor. Still, even the former engine, though improved in many particulars, is not radically changed, and even now has the same objectionable features and limitations. To do away with these as much as possible, a new type of engine is being perfected in which more favourable conditions for economy are maintained, which expands the working fluid with utmost rapidity and loses little heat on the walls of the engine stripped of all usual regulating mechanism - packings, oilers and other appendages - and forming part of an electric generator; and in this type, I may say, I have implicit faith.

The gas or explosive engine has been likewise profoundly affected by the comercial introduction of electric light and power, particularly in quite recent years. The engineer is turning his energies more and more in this direction, being attracted by the prospect of obtaining a higher thermodynamic efficiency. Much larger engines are now being built, the construction is constantly improved, and a novel type of engine, best suitable for the generation of electricity, is being rapidly evolved.

There are many other lines of manufacture and industry in which the influence of electrical development has been even more powerfully felt, - for instance, the manufacture of a great variety of articles of metal, and especially of chemical products. The welding of metals by electricity, though involving a wasteful process, has, nevertheless, been accepted as a legitimate art, while the manufacture of metal sheet, seamless tubes and the like affords promise of much improvement.

We are coming gradually, but surely, to the fusion of bodies and reduction of all kinds of ores - even of iron ores - by the use of electricity, and in each of these departments great realisations are probable. Again, the economical conversion of ordinary currents of supply into high-frequency currents opens up new possibilities, such as the combination of the atmospheric nitrogen and the production of its compounds; for instance, ammonia and nitric acid, and their salts, by novel processes.

To enumerate the many advances recorded is a subject for the reviewer, but I cannot pass without mentioning the beautiful discoveries of Lenard and Roentgen, particularly the latter, which have found such a powerful response throughout the scientific world that they have made us forget, for a time, the great achievement of Linde in Germany, who has effected the liquefaction of air on an industrical scale by a process of continuous cooling; the discovery of argon by Lord Raleigh and Professor Ramsay, and the splendid pioneer work of Professor Dewar in the field of low temperature research. The fact that the United States have contributed a very

liberal share to this prodigious progress must afford to all of us great satisfaction.

While honouring the workers in other countries and all those who, by profession or inclination, are devoting themselves to strictly scientific pursuits, Americans have particular reasons to mention with gratitude the names of those who so much contributed to this marvelous development of electrical industry in the United States. Bell, who, by his admirable invention enabling us to transmit speech to great distances, has profoundly affected our commercial and social relations, and even our very mode of life; Edison, who, had he not done anything else beyond his early work in incandescent lighting, would have proved himself one of the greatest benefactors of the age; Westinghouse, the founder of the commercial alternating system; Brush, the great pioneer of arc lighting; Thomson, who gave us the first practical welding machine, and who, with keen sense, contributed very materially to the development of a number of scientific and industrial branches; Weston, who once led the world in dynamo design, and now leads in the construction of electric instruments; Sprague, who, with rare energy, mastered the problem and insured the success of practical electrical railroading; Acheson, Hall, Willson and others, who are creating new and revolutionising industries here under our very eyes at Niagara.

Nor is the work of these gifted men nearly finished at this hour. Much more is still to come, for fortunately, most of them are still full of enthusiasm and vigour. All of these men and many more are untiringly at work investigating new regions and opening up unsuspected and promising fields. Weekly, if not daily, we learn through the journals of a new advance into some unexplored region, where at every step success beckons friendly, and leads the toiler on to hard and harder tasks.

But among all these many departments of research, these many branches of industry, new and old, which are being rapidly expanded, there is one dominating all others in importance - one which is of the greatest significance for the comfort and welfare, not to say for the existence, of mankind, and that is the electrical transmission of power. And in this most important of all fields long afterwards, when time will have placed the events in their proper perspective, and assigned men to their deserved places, the great event we are commemorating to-day will stand out as designating a new and glorious epoch in the history of humanity - an epoch grander than that marked by the advent of the steam engine.

We have many a monument of past ages; we have the palaces and pyramids; the temples of the Greek and the cathedrals of Christendom. In them is exemplified the power of men, the greatness of nations, the love of art and religious devotion. But that monument at Niagara has something of its own, more in accord with our present thoughts and tendencies. It is a monument worthy of our scientific age, a true monument of enlightenment and of peace. It signifies the subjugation of natural forces to the service of man, the discontinuance of barbarous methods, the relieving of millions from want and suffering.

No matter what we attempt to do, no matter to what fields we turn our efforts, we are dependent on power. Our economists may propose more economical systems of administration and utilisation of resources, our legislators may make wiser laws and treaties, it matters little; that kind of help can be only temporary. If we want to reduce poverty and misery, if we want to give to every deserving individual what is needed for a safe existence of an intelligent being, we want to provide more machinery, more power. Power is our mainstay, the primary source of our many-sided energies. With sufficient power at our disposal we can satisfy most of our wants and offer a guaranty for safe and comfortable existence to all, except perhaps to those who are the greatest criminals of all - the voluntarily idle.

The development and wealth of a city, the success of a nation, the progress of

the whole human race, is regulated by the power available. Think of the victorious march of the British! Apart from the qualities of the race, which have been of great moment, they owe the conquest of the world to - coal. For with coal they produce their iron; coal furnishes them light and heat; coal drives the wheels of their immense manufacturing establishments, and coal propels their conquering fleets. But the stores are being more and more exhausted, and labour is getting dearer and dearer, and the demand is continuously increasing.

It must be clear to every one that soon some new source of power supply must be opened up, or that at least the present methods must be materially improved. A great deal is expected from a more economical utilisation of the stored energy of the carbon in a battery; but while the attainment of such a result would be hailed as a great achievement, it would not be as much of an advance towards the ultimate and permanent method of obtaining power as some engineers seem to believe. By reason both of economy and convenience we are driven to the general adoption of a system of energy supply from central stations, and for such purposes the beauties of the mechanical generation of electricity cannot be exaggerated. The advantages of this universally accepted method are certainly so great that the probability of replacing the engine dynamos by batteries is, in my opinion, a remote one, the more so as the high-pressure steam engine and gas engine give promise of a considerably more economical thermodynamic conversion.

Even if we had this day such an economical coal battery, its introduction in central stations would by no means be assured, as its use would entail many inconveniences and drawbacks. Very likely the carbon could not be burned in its natural form as in a boiler, but would have to be specially prepared to secure uniformity in the current generation. A great many cells would be needed to make up the electromotive force usually required. The process of cleaning and renewal, the handling of nasty fluids and gases and the great space necessary for so many batteries would make it difficult, if not commercially unprofitable, to operate such a plant in a city or densely populated district.

Again, if the station be erected in the outskirts, the conversion by rotating transformers or otherwise would be a serious and unavoidable drawback. Furthermore, the regulating appliances and other accessories which would have to be provided would probably make the plant fully as much, if not more, complicated than the present. We might, of course, place the batteries at or near the coal mine, and from there transmit the energy to distant points in the form of high-tension alternating currents obtained from rotating transformers, but even in this most favourable case the process would be a barbarous one, certainly more so than the present, as it would still involve the consumption of material, while, at the same time, it would restrict the engineer and mechanic in the exercise of their beautiful art. As to the energy supply in small isolated places, as dwellings, I have placed my confidence in the development of a light storage battery, involving the use of chemicals, manufactured by cheap water power, such as some carbide of oxygen-hydrogen cell.

But we shall not satisfy ourselves simply with improving steam and explosive engines or inventing new batteries; we have something much better to work for, a greater task to fulfill. We have to evolve means for obtaining energy from stores which are forever inexhaustible, to perfect methods which do not imply consumption and waste of any material whatever. Upon this great possibility, upon this great problem, the practical solution of which means so much for humanity, I have myself concentrated my efforts for a number of years, and a few happy ideas which came to me have inspired me to attempt the most difficult, and given me strength and courage in adversity.

Nearly six years ago my confidence had become strong enough to prompt me to an expression of hope in the ultimate solution of this all-dominating problem. I have

made progress since, and have passed the stage of mere conviction such as is derived from a diligent study of known facts, conclusions and calculations. I now feel sure that the realisation of that idea is not far off. But precisely for this reason I feel impelled to point out here an important fact, which I hope will be remembered.

Having examined for a long time the possibilities of the development I refer to, namely, that of the operation of engines on any point of the earth by the energy of the medium, I find that even under the theoretically best conditions such a method of obtaining power cannot equal in economy, simplicity and many other features the present method, involving a conversion of the mechanical energy of running water into electrical energy and the transmission of the latter in the form of currents of very high tension to great distances. Provided, therefore, that we can avail ourselves of currents of sufficiently high tension, a waterfall affords us the most advantageous means of getting power from the sun sufficient for all our wants, and this recognition has impressed me strongly with the future importance of the water power, not so much because of its commercial value, though it may be very great, but chiefly because of its bearing upon our safety and welfare.

I am glad to say that also in this latter direction my efforts have not been unsuccessful, for I have devised means which will allow us the use in power transmission of electro-motive forces much higher than those practicable with ordinary apparatus. In fact, progress in this field has given me fresh hope that I shall see the fulfillment of one of my fondest dreams; namely, the transmission of power from station to station without the employment of any connecting wire. Still, whatever method of transmisssion be ultimately adopted, nearness to the source of power will remain an important advantage.

Some of the ideas I have expressed may appear to many hardly realisable; nevertheless, they are the result of long continued thought and work. With ideas it is as with dizzy heights. At first they cause you discomfort and you are anxious to get down, distrustful of your own powers; but soon the remoteness of the turmoil of life and the inspiring influence of the altitude calm your blood; your step gets firm and sure and you begin to look - for dizzier heights.

In the great enterprise at Niagara we see not only a bold engineering and commercial feat, but far more, a giant stride in the right direction as indicated both by exact science and philanthropy. Its success is a signal for the utilisation of water powers all over the world, and its influence upon industrial development is incalculable. We must all rejoice in the great achievement and congratulate the intrepid pioneers who have joined their efforts and means of bring it about. It is a pleasure to learn of the friendly attitude of the citizens of Buffalo and of the encouragement given to the enterprise by the Canadian authorities. We shall hope that other cities, like Rochester on this side and Hamilton and Toronto in Canada, will soon follow Buffalo's lead. This fortunate city herself is to be congratulated. With resources now unequalled, with commercial facilities and advantages such as few cities in the world possess, and with the enthusiasm and progressive spirit of its citizens, it is sure to become one of the greatest industrial centres of the globe.

Electrical Review - N. Y.
Jan. 5, 1898, pp. 8, 9

TESLA'S LATEST ADVANCES IN VACUUM-TUBE LIGHTING.

APPLICATION OF TUBES OF HIGH ILLUMINATING POWER TO PHOTOGRAPHY AND OTHER PURPOSES.

To the Editor of Electrical Review:

A few years ago I began a series of experiments with a view of ascertaining the applicability of the light emitted by phosphorescent vacuum tubes to ordinary photography. The results soon showed that, even with a tube giving no more light than the equivalent of one half of a candle, objects could be easily photographed with exposures of a few minutes, and the time could be reduced at will by pushing the tube to a high candlepower. Photographs of persons were likewise obtained at that time and, if I am not mistaken, these were the first likenesses produced with this kind of illumination. However, a number of facts, not pertaining to the subject presently considered, were observed in the course of the experiments which, had they been immediately published, might have materially hastened important scientific developments which have taken place since. To dwell on these and other experimental results obtained at that time, more extensively at the first opportunity, is one of my good resolutions for the coming year. A calamity unfortunately, interrupted my labors for a short period, but as soon as I was able I took up again the thread of the investigation, which was not only interesting in connection with the principal object in view, but was also useful in many other respects. So, for instance, in making observations as to the efficiency or any peculiarity of the vacuum tubes, the photographic plate was found to be an excellent means of comparison, note being taken of the distance and time of exposure, character of the phosphorescent body, degree of rarefaction and other such particulars of the moment.

A rather curious feature in the photographs obtained with tubes of moderate illuminating power, as a few candles, was that the lights and shadows came out remarkably strong, as when very short exposures are made by flashlight, but the outlines were not sharp and practically no detail was visible. By producing tubes of much greater candlepower, a notable improvement in this respect was effected, and this advance prompted me to further efforts in this direction, which finally resulted in the production of a tube of an illuminating power of equal to that of hundreds, and even thousands, of ordinary vacuum tubes. What is more, I believe that I am far from having attained the limit in the amount of light producible, and believe that this method of illumination will be eventually employed for lighthouse purposes. This probably will be considered the oddest and most unlooked-for development of the vacuum tube.

Simultaneously with this progress a corresponding improvement was made in the efficiency of the light produced. A few words on this point might not be amiss, considering that a popular and erroneous opinion still exists in regard to the power consumed by vacuum tubes lighted by ordinary means. So deeply rooted is this opinion which, I will frankly confess, I myself shared for a long time, that, shortly after my own first efforts, Sir David Solomons and Messrs. Pike & Harris undertook to introduce in England such tubes on a large scale in competition with the incandescent system of lighting. The enterprise, which was commented on in the technical periodicals, was commendable enough, but it was not difficult to foretell its fate; for although the high-frequency currents obtained from the alternator yielded better economical results than interrupted currents, and although they were obtained in a convenient and fairly economical manner, still the efficiency of the whole system was necessarily too small for competition with incandescent lamps. The reason for the great power consumption, which may often be as much as 10 times that taking place in incandescent lamps for an equivalent amount of light, are not far to seek. A vacuum tube, particularly if it be very large.

offers an immense radiating surface, and is capable of giving off a great amount of energy without rising perceptibly in temperature. What still increases the dissipation of energy is the high temperature of the rarefied gas. Generally it is supposed that the particles are not brought to a high temperature, but a calculation from the amount of matter contained in the tube, leads to results which would seem to indicate that, of all the means at disposal for bringing a small amount of matter to a high temperature, the vacuum tube is the most effective. This observation may lead to valuable uses of such tubes in astronomical researches, and a line of experiment to this end was suggested to me recently by Dr. Geo. E. Hale, of the Yerkes Observatory. As compared with these disadvantages the incandescent lamp, crude and inefficient as it undoubtedly is, possesses vastly superior features. These difficulties have been recognized by me early, and my efforts during the past few years have been directed towards overcoming these defects and have finally resulted in material advances, so that I find it possible to obtain from a tube of a volume not much greater than that of a bulb of an incandescent lamp, about the same amount of light produced by the latter, without the tube becoming overheated, which is sure to take place under ordinary conditions. Both of these improvements, the increase of candle-power as well as degree of efficiency, have been achieved by gradual perfection of the means of producing economically harmonical electrical vibrations of extreme rapidity. The fundamental principle involved is now well known, and it only remains to describe the features of the system in detail, a duty with which I expect to be able to comply soon, this being another one of my good resolutions.

The purpose of the present communication is chiefly to give an idea in how far the object here aimed at was obtained. The photographs shown were taken by a tube having a radiating surface of about two hundred square inches. The frequency of the oscillations, which were obtained from an Edison direct-current supply circuit, I estimated to be about two million a second. The illuminating power of the tube approximated about one thousand candles, and the exposures ranged from two to five seconds, the distance of the object being four to five feet from the tube. It might be asked why, with so high an illuminating power, the exposures should not be instantaneous. I would not undertake to satisfactorily answer this question, which was put to me recently by a scientific man, whose visit to my laboratory I still vividly recollect. Likenesses can, of course, be obtained with instantaneous exposures, but it has been found preferable to expose longer and at a greater distance from the tube. The results so far obtained would make it appear that this kind of light will be of great value in photography, not only because the artist will be able to exactly adjust the conditions in every experiment so as to secure the best result, which is impossible with ordinary light. He will thus be made entirely independent of daylight, and will be able to carry on his work at any hour, night or day. It might also be of value to the painter, though its use for such purposes I still consider problematical.

I anticipate that much detail will naturally be lost in the reproductions through the half-tone process and press work, however good, but I hope that enough will be shown to demonstrate the advantageous features of this light in photography and its practical usefulness in this art.

In conclusion, I wish to thank Mr. R. L. Newman for kindly consenting to the use of his photograph.

NIKOLA TESLA
New York, Jan. 3.

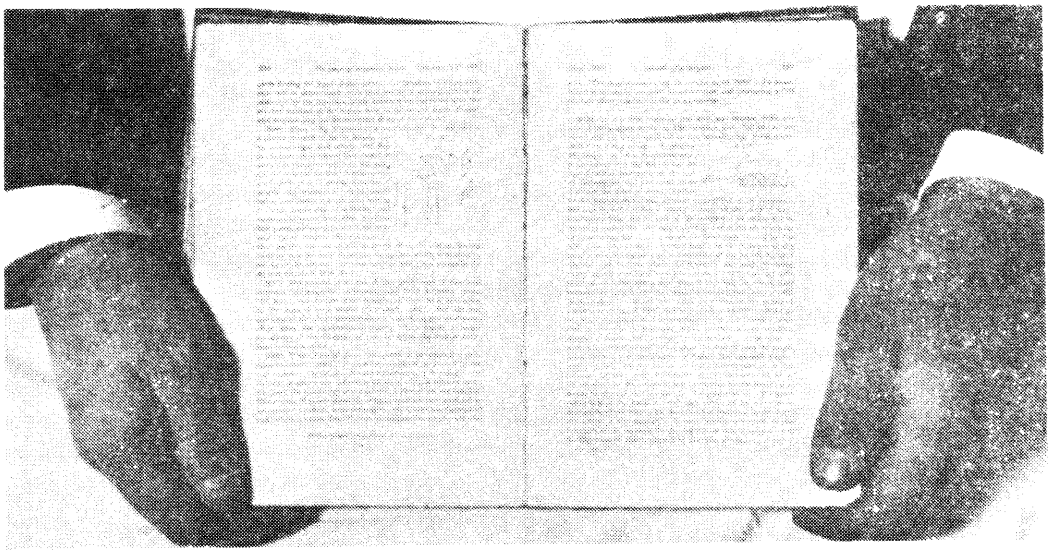

PHOTOGRAPHED BY THE LIGHT OF A SINGLE VACUUM TUBE AT A DISTANCE OF FOUR FEET; EXPOSURE TWO SECONDS.

PHOTOGRAPH OF THE EXPERIMENTER'S HAND MADE BY THE LIGHT OF A SINGLE IMPROVED VACUUM TUBE OF 1,000 CANDLES. EXPOSURE TWO SECONDS; DISTANCE FROM THE TUBE FOUR FEET.

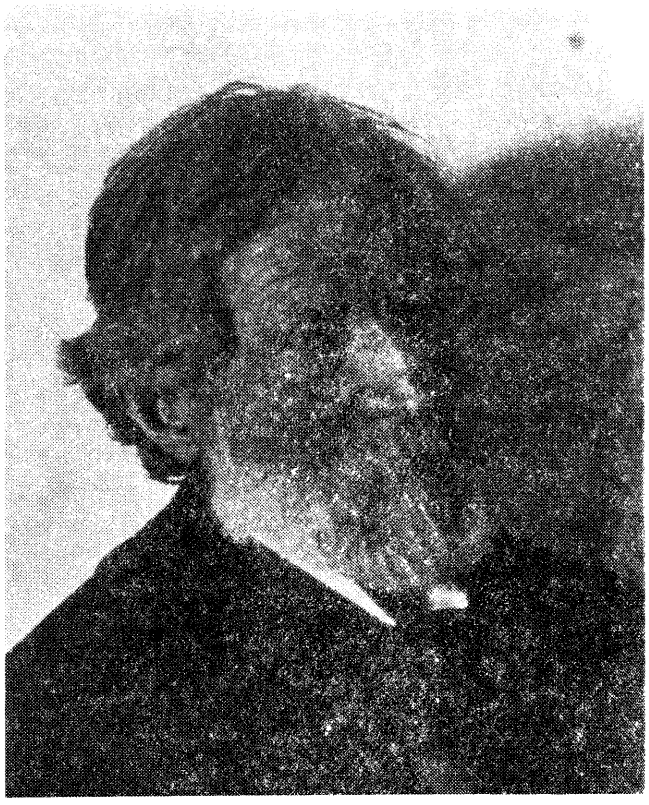

PHOTOGRAPH MADE BY THE LIGHT OF A SINGLE VACUUM TUBE, AT A DISTANCE OF FIVE FEET; EXPOSURE, FIVE SECONDS.

New York Journal
Feb. 6, 1898

TESLA ON ANIMAL TRAINING BY ELECTRICITY.

Ni(c)ola Tesla Writes of the Interesting Possibilities of This New and Successful Device of Animal Trainers in Europe.

To the Editor of the Journal:

It seems to me that there are interesting possibilities in the training of animals by electricity. Of course, it's rather out of my province, but the idea of the electrical subjugator appears feasible when one knows the power of electricity and the instinctive fear that brutes have of the unknown. And the electrical method seems more humane than those I believe are in use - the whip, red hot irons, and drugs, which are likely to do permanent injury, while the physical effects of an electric shock are soon gone, only the moral ones remaining.

The subjugator referred to will do the work, but I think an apparatus could be designed that would be less dangerous to the man. I do not desire to be understood as giving the matter deep thought, but believe that if, instead of the armored back-pad, the trainer used a wand, with two prongs at one end, better results would follow. This wand would be connected with the supply cables and could be applied to any part of the animal's body at will. Its operation would be precisely the same as the subjugator here illustrated, the two prongs supplying the positive and negative poles of contact found in the flattened wires. With this wand an animal could be simply shocked, stunned or killed, as required.

To cure animals of jumping at men in cages, a screen of stout but flexible wire could be stretched between the trainer and his subject, the wires to be alternately positive and negative, and connected through the regulator with the dynamo. After a couple of springs which would hurl him half insensible back into his corner, the taste for unexpected jumps would leave the brute.

[*The following article appeared with the above.-Ed.*]

Prague, Jan. 22.

Science has come to aid the lion tamer in subdoing the wild beast. The red hot iron will, in future, be cast aside as unnecessary and out of date. Live wires, surcharged with electricity that baffle the lion's fiercest assaults, and burn and maim him badly have taken the place of the lash and scorching iron. A lion tamer of Austria, Louis Koemmenich, has been the first to call in the assistance of the lightning to subdue wild beasts.

Koemmenich has invented what he calls the electrical subjugator. This is a shield of electric wires that fasten on the back of the lion tamer and are connected with a dynamo by a wire coil of sufficient length to allow Koemmenich to move around the cage.

In his hand he will carry a charged metal ball on an insulated handle, to be used as the red hot iron was in former days.

The dynamo is operated by an assistant outside of the cage.

Should a lion show a disposition to leap on Koemmenich, he invites attack by deliberately turning his back to the lion and apparently encouraging the onslaught.

When the beast springs his paws come in contact with the electric shield, and he receives a shock of 1,500 volts from the dynamo.

The operator can, if necessary, increase the voltage so as to shock the animal to death.

Thus far the device has worked like magic. One dose of lightning is sufficient for the average lion. Whips and even hot irons they have dared, but no animal has yet troubled Koemmenich after receiving into its body 1,500 volts from the electric subjugator. Whenever Koemmenich enters the cage after an encounter with a lion that has run against the electrical subjugator, he will cower away into a corner of the cage, and never need any further punishment.

New York Journal
Nov. 13, 1898

MY SUBMARINE DESTROYER - by Nikola Tesla

Yesterday Nikola Tesla gave to the Sunday Journal exclusively the news of his latest invention - a submarine torpedo boat. He has perfected his device after observing the defects of the torpedo boats in the recent war, and noting the fatalities of submarine boats invented up to date. His submarine boat will carry no lives to risk, but can be directed at a distance of miles from on shore or from the deck of a war ship. The power to do this will be the electric vibrations of the air used in wireless telegraphy. By this means a whole flotilla of submarine destroyers can be turned against a hostile fleet, and perhaps destroy it, without the enemy knowing how they were attacked. This seems almost incredible until the great magician of electricity explains his wonderful invention, point by point, in the following statement.

"I am now prepared to announce through the Journal my invention of a submarine torpedo boat that I am confident will be the greatest weapon of the navy from this time on.

"The almost utter uselessness of the present kind of torpedo boat has been conclusively demonstrated in the recent war. Neither the courage and skill of the Americans nor the desperate extremities of the Spaniards were able to bring the torpedo boats into successful action. These frail craft, of which so much was expected, simply made an easy target for land batteries and rapid-fire guns of opposing war ships.

"The submarine boats, on the other hand, which have up to this time been built to carry torpedoes have proved death traps for men and were consequently ineffective. The submarine boat, or, more properly speaking, the submarine destroyer, which I have invented is as compact as the torpedo itself. In fact, it is simply an enlarged torpedo shell, thirty-six and a half feet long, loaded with other torpedoes to discharge. Like a torpedo, also, it has its own propelling device. But here the likeness stops. The ordinary torpedo, once launched, plunges head on blindly and no known power can turn it one way or another. It hits or misses, according to the trueness with which it is aimed at its launching.

"But my submarine boat, loaded with its torpedoes, can start out from a protected bay or be dropped over a ship's side, make its devious way below the surface, through dangerous channels of mine beds, into protected harbors and attack a fleet at anchor, or go out to sea and circle about, watching for its prey, then dart upon it at a favorable moment, rush up to within a hundred feet if need be, discharge its deadly weapon and return to the hand that sent it. Yet through all these wonderful evolutions it will be under the absolute and instant control of a distant human hand on a far-off headland, or on a war ship whose hull is below the horizon and invisible to the enemy.

"I am aware that this sounds almost incredible and I have refrained from making this invention public till I had worked out every practical detail of it. In my laboratory I now have such a model, and my plans and description at the Patent Office at Washington show the full specifications of it.

"As to the mechanism which is to be stored in this submarine shell: The first and most essential thing is a motor, with storage battery to drive the propeller. Then there are smaller motors and batteries to operate the steering gear, on the same principle that an ordinary vessel is now steered by steam or electricity. Besides these there are still other storage batteries and motors to feed electric signal lights. But in order that the weight of the machinery shall not be too great to destroy the buoyancy or make the boat go too deep in the water compressed air motors will also be used to perform certain functions, such as to fill and empty the water tanks which raise the boat to the surface or sink it to any required depth. Pneumatic air or motors will also fire the torpedoes and pump out the water that may leak in at any time.

"This submarine destroyer will be equipped with six 14-foot Whitehead torpedoes. These will be arranged vertically in two rows in the bow. As one torpedo falls into position and is discharged by pneumatic force, another torpedo, by the force of gravity, falls into the position of the first one, the others above being held up by automatic arms. They can be fired as rapidly as a self-cocking revolver is emptied or at intervals of minutes or hours. The discharge takes place through a single tube, projecting straight ahead in the bow. The small amount of water which leaks through each time is caught by drain pipes and a compressed air pump instantly expels it. As each torpedo is expelled a buoyancy regulator will open the sea cocks and let enough water in the ballast tanks to make the buoyancy uniform and keep the boat at the same distance beneath the surface.

"This submarine destroyer will carry a charge of torpedoes greater than that of the largest destroyers now in use. Those vessels of five hundred tons each which cost the Government $500,000, carry but three or four torpedoes, while this simple submarine destroyer, which can be built for $48,000 to $50,000 or less, will carry six torpedoes. It will have, also, the incalculable advantage of being absolutely invisible to an enemy, and have no human lives to risk or steam boilers to blow up and destroy itself.

"All that is necessary to make this submarine boat subject to perfect control at any distance is to properly wire it, just like a modern house is wired so that a button here rings a bell, a lever there turns on the lights, a hidden wire somewhere else sets off a burglar alarm and a thermal device give a fire alarm.

"The only difference in the case of the submarine boat is in the delicacy of the instruments employed. To the propelling device, the steering gear, the signal apparatus and the mechanism for firing the torpedoes are attached little instruments which are attuned to a certain electro-magnetic synchronism.

"Then there is a similar set of synchronistic instruments all connected to the little switchboard, and placed either on shore or on an ordinary war ship. By moving the lever on the switchboard I can give the proper impulse to the submarine boat to go ahead, to reverse, throw the helm to port or starboard, rise, sink, discharge her torpedoes or return.

"It might be thought that some great power would be necessary to be projected across miles of distance and operate on the far-off boat. The power is all stored in the submarine boat itself - in its storage batteries and compressed air. All that is needed to affect the synchronistic instruments is a set of high alternating currents, which can be produced by my oscillator attached to any ordinary dynamo situated on shore or on a war ship.

"How such an apparently complicated mechanism can be operated and controlled at a distance of miles is no mystery. It is as simple as the messenger call to be found in almost any office. This is a little metal box with a lever on the outside. By moving the crank to a certain point it gives vibrating sounds and springs back into position, and its momentary buzzing calls a messenger. But move this same crank a third further around the dial and it buzzes still longer, and pretty soon a policeman appears, summoned by its mysterious call. Again, move the crank this time to the farthest limit of the circle and scarcely has its more prolonged hum of recoil sounded when the city fire apparatus dashes up to your place at its call.

"Now, my device for controlling the motion of a distant submarine boat is exactly similar. Only I need no connecting wires between my switchboard and the distant submarine boat, for I make use of the now well-known principle of wireless telegraphy. As I move this little lever to points which I have marked on a circular dial I cause a different number of vibrations each time. In this case two waves go forth at each half turn of the lever and affect different parts of the distant destroyer's machinery.

"How such submarine destroyers should actually be used in war I leave for naval tacticians to determine. But it seems to me that they could best be operated by taking a number on board a large fast auxiliary cruiser like the St. Louis or St. Paul, launch them, several at a time, like life boats, and direct their movements from a switch board placed in the forward fighting top.

"In order that the director of the submarine destroyer may know its exact position at every movement, two masts, at bow and stern, will project up just above the water, too minute to be seen or hit by an enemy's guns by day, and by night they will carry hooded lights.

"The lookout placed in the fighting top could detect a hostile ship off on the horizon while the auxiliary cruiser's big hull is still invisible to the enemy. Starting these little destroyers out under direction of a man with a telescope, they could attack and destroy a whole armada - destroy it utterly - in an hour, and the enemy never have a sight of their antagonists or know what power destroyed them. A big auxiliary cruiser, used to carry these submarine destroyers, could also carry a cargo of torpedoes sufficient to conduct a long campaign and go half way around the world.

"She could carry the gun cotton and other explosives needed to load the torpedoes in safe magazines below the water line, and do away with much of the danger of transporting loaded torpedoes. When necessary for use the war heads could be loaded, fitted to the torpedoes, and the submarine destroyers fully equipped.

"A high, projecting headland overlooking a harbor and the sea would also be a good point on which to establish a station and have the destroyers laid up at docks below ready to start.

"That is the whole story of my latest invention. It is simple enough, you say. Of course it is, because I have worked all my life to make each one of the details so simple that it will work as easily as the electric ticker in a stock broker's office.

Electrical Engineer - N. Y.
Nov. 24, 1898, p. 514

New York, Nov. 18, 1898
46 & 48 East Houston St.

Editor of The Electrical Engineer, 120 Liberty St., New York City:

Sir - By publishing in your columns of Nov. 17 my recent contribution to the Electro-Therapeutic Society you have finally succeeded - after many vain attempts made during a number of years - in causing me a serious injury. It has cost me great pains to write that paper, and I have expected to see it appear among other dignified contributions of its kind, and I confess, the wound is deep. But you will have no opportunity for inflicting a similar one, as I propose to take better care of my papers in the future. In what manner you have secured this one in advance of other electrical periodicals who had an equal right to the same, rests with the secretary of the society to explain.

Your editorial comment would not concern me in the least, were it not my duty to take note of it. On more than one occasion you have offended me, but in my qualities both as Christian and philosopher I have always forgiven you and only pitied you for your errors. This time, though, your offence is graver than the previous ones, for you have dared to cast a shadow on my honor.

No doubt you must have in your possession, from the illustrious men whom you quote, tangible proofs in support of your statement reflecting on my honesty. Being a bearer of great honors from a number of American universities, it is my duty, in view of the slur thus cast upon them, to exact from you that in your next issue you produce these, together with this letter, which in justice to myself, I am forwarding to other electrical journals. In the absence of such proofs, I require that, together with the preceding, you publish instead a complete and humble apology for your insulting remark which reflects on me as well as on those who honor me.

On this condition I will again forgive you; but I would advise you to limit yourself in your future attacks to statements for which you are not liable to be punished by law.

N. TESLA

Electrical Review - N. Y.
Nov, 30, 1898, pp. 344, 345

TESLA DESCRIBES HIS EFFORTS IN VARIOUS FIELDS OF WORK.

(From The Sun, New York, November 21, 1898)

TO THE EDITOR OF THE SUN - Sir: Had it not been for other urgent duties, I would before this have acknowledged your highly appreciative editorial of November 13. Such earnest comments and the frequent evidences of the highest appreciation of my labors by men who are the recognized leaders of this day in scientific speculation, discovery and invention are a powerful stimulus, and I am thankful for them. There is nothing that gives me so much strength and courage as the feeling that those who are competent to judge have faith in me.

Permit me on this occasion to make a few statements which will define my position in the various fields of investigation you have touched upon.

I can not but gratefully acknowledge my indebtedness to earlier workers, as Dr. Hertz and Dr. Lodge, in my efforts to produce a practical and economical lighting system on the lines which I first disclosed in a lecture at Columbia College in 1891. There exists a popular error in regard to this light, inasmuch as it is believed that it can be obtained without generation of heat. The enthusiasm of Dr. Lodge is probably responsible for this error, which I have pointed out early by showing the impossibility of reaching a high vibration without going through the lower or fundamental tones. On purely theoretical grounds such a result is thinkable, but it would imply a device for starting the vibrations of unattainable qualities, inasmuch as it would have to be entirely devoid of inertia and other properties of matter. Though I have conceptions in this regard, I dismiss for the present this proposition as being impossible. We can not produce light without heat, but we can surely produce a more efficient light than that obtained in the incandescent lamp, which, though a beautiful invention, is sadly lacking in the feature of efficiency. As the first step toward this realization, I have found it necessary to invent some method for transforming economically the ordinary currents as furnished from the lighting circuits into electrical vibrations of great rapidity. This was a difficult problem, and it was only recently that I was able to announce its practical and thoroughly satisfactory solution. But this was not the only requirement in a system of this kind. It was necessary also to increase the intensity of the light, which at first was very feeble. In this direction, too, I met with complete success, so that at present I am producing a thoroughly serviceable and economical light of any desired intensity. I do not mean to say that this system will revolutionize those in use at present, which have resulted from the cooperation of many able men. I am only sure that it will have its fields of usefulness.

As to the idea of rendering the energy of the sun available for industrial purposes, it fascinated me early but I must admit it was only long after I discovered the rotating magnetic field that it took a firm hold upon my mind. In assailing the problem I found two possible ways of solving it. Either power was to be developed on the spot by converting the energy of the sun's radiations or the energy of vast reservoirs was to be transmitted economically to any distance. Though there were other possible sources of economical power, only the two solutions mentioned offer the ideal feature of power being obtained without any consumption of material. After long thought I finally arrived at two solutions, but on the first of these, namely, that referring to the development of power in any locality from the sun's radiations, I can not dwell at present. The system of power transmission without wires, in the form in which I have described it recently, originated in this manner. Starting from two facts that the earth was a conductor insulated in space, and that a body can not be charged without causing an equivalent displacement of electricity in the earth, I undertook to construct a machine suited for creating as large a displacement as possible of the earth's electricity.

This machine was simply to charge and discharge in rapid succession a body insulated in space, thus altering periodically the amount of electricity in the earth, and consequently the pressure all over its surface. It was nothing but what in mechanics is a pump, forcing water from a large reservoir into a small one and back again. Primarily I contemplated only the sending of messages to great distances in this manner, and I described the scheme in detail, pointing out on that occasion the importance of ascertaining certain electrical conditions of the earth. The attractive feature of this plan was that the intensity of the signals should diminish very little with the distance, and, in fact, should not diminish at all, if it were not for certain losses occurring, chiefly in the atmosphere. As all my previous ideas, this one, too, received the treatment of Marsyas, but it forms, nevertheless, the basis of what is now known as "wireless telegraphy." This statement will bear rigorous examination, but it is not made with the intent of detracting

from the merit of others. On the contrary, it is with great pleasure that I acknowledge the early work of Dr. Lodge, the brilliant experiments of Marconi, and of a later experimenter in this line, Dr. Slaby, of Berlin. Now, this idea I extended to a system of power transmission, and I submitted it to Helmholtz on the occasion of his visit to this country. He unhesitatingly said that power could certainly be transmitted in this manner, but he doubted that I could ever produce an apparatus capable of creating the high pressures of a number of million volts, which were required to attack the problem with any chance of success, and that I could overcome the difficulties of insulation. Impossible as this problem seemed at first, I was fortunate to master it in a comparatively short time, and it was in perfecting this apparatus that I came to a turning point in the development of this idea. I, namely, at once observed that the air, which is a perfect insulator for currents produced by ordinary apparatus, was easily traversed by currents furnished by my improved machine, giving a tension of something like 2,500,000 volts. A further investigation in this direction led to another valuable fact; namely, that the conductivity of the air for these currents increased very rapidly with its degree of rarefaction, and at once the transmission of energy through the upper strata of air, which, without such results as I have obtained, would be nothing more than a dream, became easily realizable. This appears all the more certain, as I found it quite practicable to transmit, under conditions such as exist in heights well explored, electrical energy in large amounts. I have thus overcome all the chief obstacles which originally stood in the way, and the success of my system now rests merely on engineering skill.

Referring to my latest invention, I wish to bring out a point which has been overlooked. I arrived, as has been stated, at the idea through entirely abstract speculations on the human organism, which I conceived to be a self-propelling machine, the motions of which are governed by impressions received through the eye. Endeavoring to construct a mechanical model resembling in its essential, material features the human body, I was led to combine a controlling device, or organ sensitive to certain waves, with a body provided with propelling and directing mechanism, and the rest naturally followed. Originally the idea interested me only from the scientific point of view, but soon I saw that I had made a departure which sooner or later must produce a profound change in things and conditions presently existing. I hope this change will be for the good only, for, if it were otherwise, I wish that I had never made the invention. The future may or may not bear out my present convictions, but I can not refrain from saying that it is difficult for me to see at present how, with such a principle brought to great perfection, as it undoubtedly will be in the course of time, guns can maintain themselves as weapons. We shall be able, by availing ourselves of this advance, to send a projectile at much greater distance, it will not be limited in any way by weight or amount of explosive charge, we shall be able to submerge it at command, to arrest it in its flight, and call it back, and to send it out again and explode it at will, and, more than this, it will never make a miss, since all chance in this regard, if hitting the object of attack were at all required, is eliminated. But the chief feature of such a weapon is still to be told; namely, it may be made to respond only to a certain note or tune, it may be endowed with selective power. Directly such an arm is produced, it becomes almost impossible to meet it with a corresponding development. It is this feature, perhaps, more than in its power of destruction, that its tendency to arrest the development of arms and to stop warfare will reside. With renewed thanks, I remain,

Very truly, yours,

N. TESLA.

New York, November 19.

Electrical Review - N. Y.
March 29, 1899, pp. 195-197, 204.

SOME EXPERIMENTS IN TESLA'S LABORATORY WITH CURRENTS OF HIGH POTENTIAL AND HIGH FREQUENCY.

To the Editor of Electrical Review:

Since the unfortunate accident of four years ago, which crippled and delayed my labors in a number of lines so seriously, I have had but little time to devote to the fulfillment of a duty which, next to that of turning his best efforts to diligent inquiry in the fields he has chosen, is the most important to a scientific man; namely, that of giving an exact record of the results obtained. I realize with sorrow every day that, despite of all pains taken to this end, I am gaining but very slowly on the material accumulated. Ideas come through a happy inspiration, apparently without much exertion, but it is the working out of the many harassing details and putting into a presentable form which consumes time and energy. It was impossible to abandon research in new directions, in which I have felt myself irresistibly drawn, and it was equally impossible to do full justice to the work partially completed, and I can only hope to gradually retrieve my losses by the only expedient available, which is to redouble the zeal. It is not the best plan to follow, I confess, and is in radical opposition to the kindly advice given to me to the effect that I intended to live 200 years by sleeping most of the time! It may also show that it is not this mode of life which is responsible for the delay in the commercial introduction of my system of vacuum tube lighting, as has been asserted by some people who have found a singular satisfaction in dwelling extensively in their columns on my proposed glass house on Long Island, which was to cover acres of ground, and which was to be built for the purpose of catching the sun's rays; on my claims of the discoveries of Roentgen; on my invention enabling me to move and explode torpedo boats by will power, and on my efforts to annihilate the entire British navy. It is to be hoped that the limit of patience of the readers has been finally reached.

At that time, still painfully remembered, my energies were taken up principally by some mechanical problems of great importance, and the few observations in electricity which I was fortunate to make came like ever so many refreshing berries found on the road by a weary wanderer. The journey is not finished yet, and the wanderer is well-nigh exhausted. He longs for more sweet berries, and anxiously asks, "Did any one pass this road before?"

It was chiefly in three directons that electrical investigation was attractive and promising: There were the excessive electrical pressures of millions of volts, which opened up wonderful possibilities if producible in practical ways; there were currents of many hundreds of thousands of amperes, which appealed to the imagination by their astonishing effects, and, most interesting and inviting of all, there were the powerful electrical vibrations with their mysterious actions at a distance. What better work could one do than inventing methods and devising means for enabling scientific men to push investigation far out into these practically unknown regions? This work was difficult and tedious and involved a certain amount of material sacrifice, but promised a higher reward if successfully accomplished - the gratitude of those many who exercise their gifts in different directions and are compelled to rely on the expert for providing them with implements suitable for their special purpose. Who can estimate how much science has been advanced by the beautiful instruments of measure which Lord Kelvin has given us? Unfortunately, in many of the new fields such instruments are yet to be invented. Still more unfortunately, informations seems to be more needful than instruments, if one is to judge from statements frequently made in technical periodicals on a variety of subjects. An experimenter, for instance, measures the current through a make-and-break device, and, finding it small, he infers that the conversion is economical. Another suggests

to determine the efficiency of conversion through such a device by the calorimetric method. Now, as a matter of fact, if there was such a contrivance, absolutely perfect in its action, which would behave as I have explained on another occasion, and change the resistance of a gap from zero to infinity without any loss in the gap itself, which separates the terminals, it still might happen that 99 per cent of the energy supplied to the circuit would be wasted in radiations, useless for the purpose contemplated. The calorimetric method would in this, or generally in any other instance, in which the disturbances produced are very sudden, entirely fail in giving an approximation as to the energy dissipated in the circuit, for the simple reason that the friction encountered by a wave in its passage through a medium, which determines the amount of heat generated, is no measure whatever of the energy of the wave. Thus, certain well understood cases excepted, the only method at present available in such estimates is to take account of the energy consumed by the source of supply. This remark alone will show that the economical conversion of currents by make and break devices is a much more difficult problem than it appears to those who have studied it superficially. Not only must the devices used in the transformation possess certain characteristics, but the entire circuit must be properly designed. One can not help admiring the confidence and self-possession of experimenters, who put forth carelessly such views and who, with but a few days', not to say hours', experience with a device, apparently unmindful of the responsibility of such a step, and advance their imperfect results and opinions hastily formed. The sparks may be long and brilliant, the display interesting to witness, and the audience may be delighted, but one must doubt the value of such demonstrations. There is so little novelty in them, that one might easily perform a practical joke on the lecturer by describing in advance all his drawings, apparatus, experiments and theories, this placing him in an awful predicament. Though such a course would be naturally impolite, it might be found justified and excused by the circumstances, for premature expressions of opinion and demonstrations of this kind are responsible for much evil, one of these being the erroneous idea which they create in scientific circles as to the importance of an advance made. It grieves one to observed that, for example, such great work as that of Professor Dewar, which he turns out with clock regularity, is scarcely commented upon in the technical columns, whereas a worthless trap for interrupting currents, which usually consumes nine-tenths of the energy, and is, besides, useless for other reasons, and just suitable for the amusement of small boys, who are beginning their electrical experience with Leclanche batteries and $1.50 induction coils, is hailed as an important scientific discovery. An agreeable contrast is afforded by those who patiently investigate, contented to lose the credit for advances made rather than to present them to the world in an imperfect state, who form their opinions conscientiously, after a long and careful study, and have little to correct afterward.

The importance of the task of providing proper implements for research in these fields once recognized, it became the question in what line the efforts to this end would be likely to be most profitable. A little thought showed that it was in investigating high electrical pressures, for these were needed in most instances. More than a passing thought was given to static electricity, with the experiments of Franklin as starting point. Various forms of generators of static electricity were experimented upon, and some new ones designed, to which I hope to revert some time, as they present some features of interest. The most valuable outcome of these experiments was a method of conversion which I have described, and which enables the operation of any kind of devices of low tension from such a high-pressure source with perfect ease and safety, no matter how high the tension. Soon, however, it was recognized that with the above object in view generators of steady pressure were entirely impractical, quite apart from their incidental limitations. It was exactly as if one attempted to drive piles into the ground by the application of continuous pressure. This would require cumbersome and powerful machinery, and would be very

inconvenient. An incomparably better way of developing high pressure is by delivering violent blows as with a hammer. In such a case the motion of the hammer being suddenly arrested pressure is developed on the point of impact, which is all the greater the smaller the displacement caused, and if there were material absolutely rigid, incompressible and inelastic, an infinite pressure might thus be developed by a small blow. Hence one is forcibly driven to the use of a transformer or induction coil as means for producing great electrical pressures. The first difficulty encountered was that of insulation, and it might be interesting and useful to show, chiefly to those who are less familiar with this special subject, how by gradual improvement, from the ordinary inductorium capable of furnishing currents of very moderate electro-motive force, an apparatus was finally evolved in which there is practically no limit as to the pressure obtainable.

Selecting first the closed core transformer, one easily recognizes that it is unsuitable for the attainment of the object in view for obvious reasons. Nevertheless, by adopting the plan illustrated in the first diagram of Fig. 2, I succeeded in obtaining nearly 200,000 volts, and I think that more than twice this tension is practicable by means of such an arrangement, which involves the use of independent and entirely insulated sources of supplying the primaries, as will be understood from an inspection of the diagram without further explanation. The evident limitations of the closed-core type in the way of insulation, rate of change and frequency of the current impulses, led to the adoption of an open-core type, as a matter of course, and the various diagrams of the figure referred to illustrate the modifications as they were gradually made in the manner of insulating and winding of the coils. In diagram 2 the old, primitive method of insulation is indicated. In diagram 3 the succeeding layers are insulated by material increasing in thickness gradually from one end to the other, being thickest on the place of greatest difference of potential. The thickness is easily calculated beforehand, and is such that all the insulation is as nearly as possible uniformly strained. As it was impracticable to pile up many layers in the manner illustrated in diagram 3, naturally the modification illustrated in diagram 4 was made, which led to a further improvement, indicated in diagram 5. It was recognized, however, that there was no advantage in winding many coils, and that all that was needed were two secondary coils joined in the middle, as illustrated in diagram 6, the secondaries being, of course, wound as shown in diagram 3. Next, in order to increase the output of the coil and gain other advantages, the relative customary position of the primary and secondary windings was reversed and the coil as shown in diagram 7 produced, the two secondary coils being joined on their outer, instead of on their inner ends, as before. This construction was considerably better than that illustrated in diagram 6, as the primary and secondary coils were placed in closer inductive relation. But when with this coil the tension had been pushed far enough, it was found that the iron core limited the spark length, and then two insulated cores, one in each coil, were resorted to, which were finally discarded, and so the coil shown in diagram 8 resulted, which I have described on several occasions and which, of all other constructions, permits the obtainment of the highest possible tension with a two-terminal coil in a given space.

But even in this perfected type it was not possible to go beyond a certain potential difference, and a further investigation led to a new type, which I have called a single terminal coil, and which is illustrated in diagram 9 and is now well known. In this coil the adjustment is so made that the secondary is nearly equal to the quarter of the wave length, the highest potential being, under these conditions, produced on the free terminal. Subsequently I extended such adjustment also to the coils in diagram 8, improving the same materially.

During these efforts I fortunatly discovered the important part which air played in the breaking down of the insulation, and by adopting proper methods for the exclusion of gaseous matter, I was able to increase the electro-motive force to more than 10 times the value without breaking down the secondary. I have described this

method since, which I am using in the manufacture of coils and condensers, and without which it would be entirely impossible to reach any such results as I have obtained. The industrial world has profited by the recognition of the action of the air, for it has helped to extend power transmission to greater distances than heretofore practicable. It has also been useful in determining the limits of the electro-motive forces with ordinary apparatus used in power transmission, but I see that no attempt is yet made to overcome the streamers by a suitable construction of the cables, as I have indicated, and thus make higher electro-motive forces available.

Further experimentation with the original single-terminal coil, before referred to, finally led step by step to the adoption of a coil of large dimensions, which, in two typical forms, is illustrated in diagrams 10 and 11. With such a coil I found that there was practically no limit to the tension available, and it is by its means that I discovered the most important of all facts arrived at in the course of my investigation in these fields. One of these was that atmospheric air, though ordinarily a perfect insulator, conducted freely the currents of immense electro-motive force producible by such coils and suitable accessories. So great is the conductivity of the air, that the discharge issuing from a single terminal behaves as if the atmosphere were rarefied. Another fact is that this conductivity increases very rapidly with rarefaction of the atmosphere and augmentation of the electrical pressure, to such an extent that at barometric pressures which permit of no transit of ordinary currents, those generated by such a coil pass with great freedom through the air as through a copper wire. Following up these promising revelations I demonstrated conclusively by experiments that great amounts of electrical energy can be transmitted to any distance through upper air strata which are easily accessible, and since this truth has been recognized every fiber has been strained to realize such a transmission on a large scale. These two obvervations explain clearly the silent discharges noted frequently in dense air strata, but three or four miles above the earth's surface. One more equally important fact I may mention, which was simultaneously observed. The discharges of such a coil, when of an electro-motive force of a few millions of volts, excite powerful affinities in the atmospheric nitrogen, causing it to combine readily with the oxygen and other elements, particularly in the presence of aqueous vapor. So energetic are these actions and so strangely do such powerful discharges behave, that I have often experienced a fear that the atmosphere might be ignited, a terrible possibility, which Sir William Crookes, with his piercing intellect, has already considered. Who knows but such a calamity is possible? And who can tell with certitude that periodical cessations of organic life on the globe might not be caused by ignition of the air and destruction of its life-sustaining qualities, accidentally or as a consequence of some accumulative change? A lump of coal will lie for centuries unaffected in contact with oxygen, but the combustion once started, the process continues as long as there are elements to combine.

While improving the construction of the transformers, every effort was made to perfect the apparatus for generating the currents. The objective point from the outset was to obtain the greatest possible rate of variation. High-frequency alternators were first used, but their limitations were soon apparent. I then turned again and again to make and break devices, chiefly with the object of using them in connection with a novel form of transformer, which I have previously described, and which is now well known and understood. In its original form, as I first showed it, it is illustrated in diagram 12, which need not be dwelt upon, beyond saying that one of the characteristic features of such an instrument is the energizing of the primary of the induction coil by the rapidly succeeding discharges of a condenser. In a more recent type, specially adapted for ordinary supply circuits, which I have described and shown before several scientific societies, the transformer comprises, as indicated in diagram 13, three coils, there being, in addition to

the primary and secondary coils, one which receives the currents from the supply circuit, and is designated the charging coil. Preferably the latter is not in inductive relation with the former. On a number of occasions I have described high-frequency apparatus embodying this beautiful method, which has already been of great value to science in my hands as well as in those of others. But a defect, to which I called attention early, still confronted me. It lay in the make and break devices which performed the function of charging and discharging the condenser. Many of such devices, based on a variety of principles, formed the subject of experiments carried on with the aim of doing away with this imperfection. To cite one of these, the current from the source of supply was passed through a minute column of conducting liquid maintained in a variety of ways, and in this simple manner rapidly succeeding impulses were obtained. Incidentally, some useful results were secured with these contrivances, as, for example, the generation of currents of differing phase and the production of rotating fields moving with constant velocity; but, interesting as these simple devices were, they naturally precluded the possibility of economical conversion. Their study, however, was useful as a means of recognizing the requirements of such make and break apparatus, and, finally, led to forms based on scientific and economical principles. A number of these were recently described in technical periodicals and, as stated on a former occasion, they fulfill their difficult duty surprisingly well and make it possible to obtain currents of very high frequency from ordinary supply circuits with great economy. These novel contrivances lend themselves well also to the uses of the ordinary induction coil, and I have employed them with equal success in a form of Plante's rheostatic machine and for many other useful purposes. Thus, after a continuous effort extending through a number of years, I have the supreme satisfaction of having carried this hard and important task to a satisfactory end.

The annexed photographs will serve to convey an idea of what can be done with these perfected implements. Referring to Fig. 1, illustrative of the high rate of change obtained in the current, a vacuum bulb of about 12 inches in diameter is held in front of a coil of four turns of specially constructed heavy cable, through which a condenser is discharging, and, although at a distance of several inches from the coil, the gas in the bulb is brought to intense incandescence, the light emitted being fully equal to 1,500 candles. Such a powerfully energized coil, when the frequency, as in this instance, is measured in millions per second, shows little repellent action, but when the frequency of the impulses is low, closed conductors, as washers of conducting material, are thrown off with a force of a magnitude which can be only explained on the assumption that the currents have maximum values of many hundred thousand amperes.

The remaining photographs will be understood from the titles, which are made explicit for this purpose. I hope to have in the near future an opportunity for describing more of such experiments, and dwelling in detail on the apparatus used. For the present I am compelled, for want of time, to merely state that the vibrations used in most of them were from 400,000 to 800,000 per second.

In conclusion I wish to apologize for the frequent appearance of my likeness in these photographs, which is distasteful to me, but was unavoidable. Most of the advances indicated, and a number of others, have resulted from the application of the beautiful principle upon which the operation of this apparatus is based. Scientific men have honored me by identifying it with my name, and I have earnestly endeavored to show myself worthier of this great distinction by devoting to it much of my energies. No desire for material advantages has animated me in all this work, though I hope, for the sake of the continuance of my labors, that these will soon follow, naturally, as a compensation for valuable services rendered to science and industry. To the scientific experts, who are familiar, in theory and experiment, with electrical vibrations, the results here shown will, I believe, speak in eloquent language. But those readers to whom they are naturally less intelligible will ask: What are

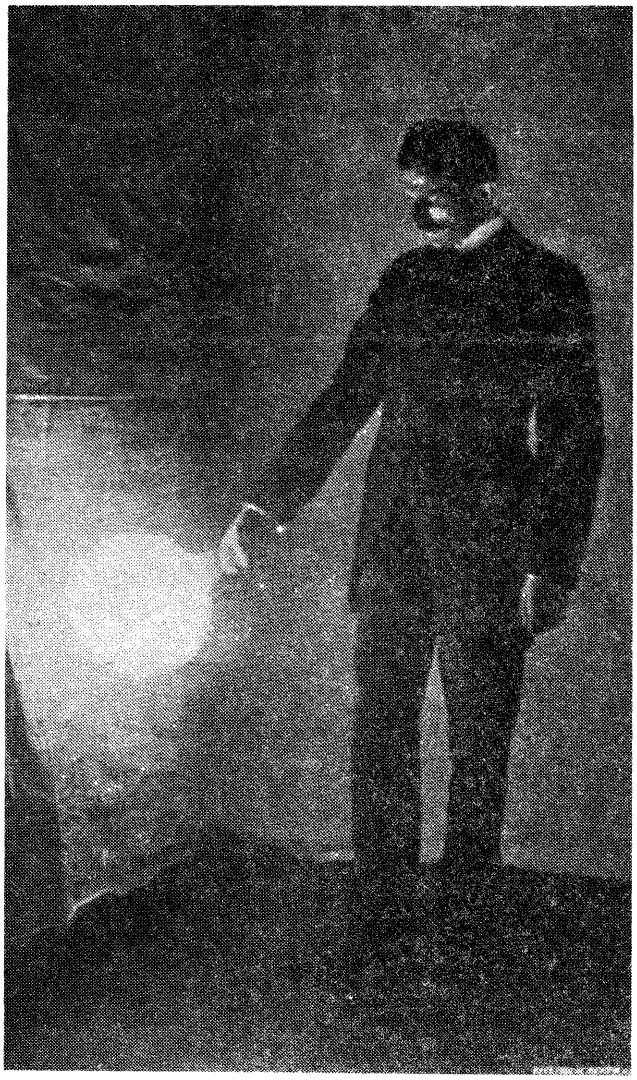

FIG. 1 - LIGHTING A DISCONNECTED VACUUM BULB OF 1,500 CANDLE POWER BY HIGH-FREQUENCY CURRENTS - PHOTOGRAPH TAKEN BY THE LIGHT OF THE BULB ITSELF, EXPOSURE ABOUT TWO SECONDS.

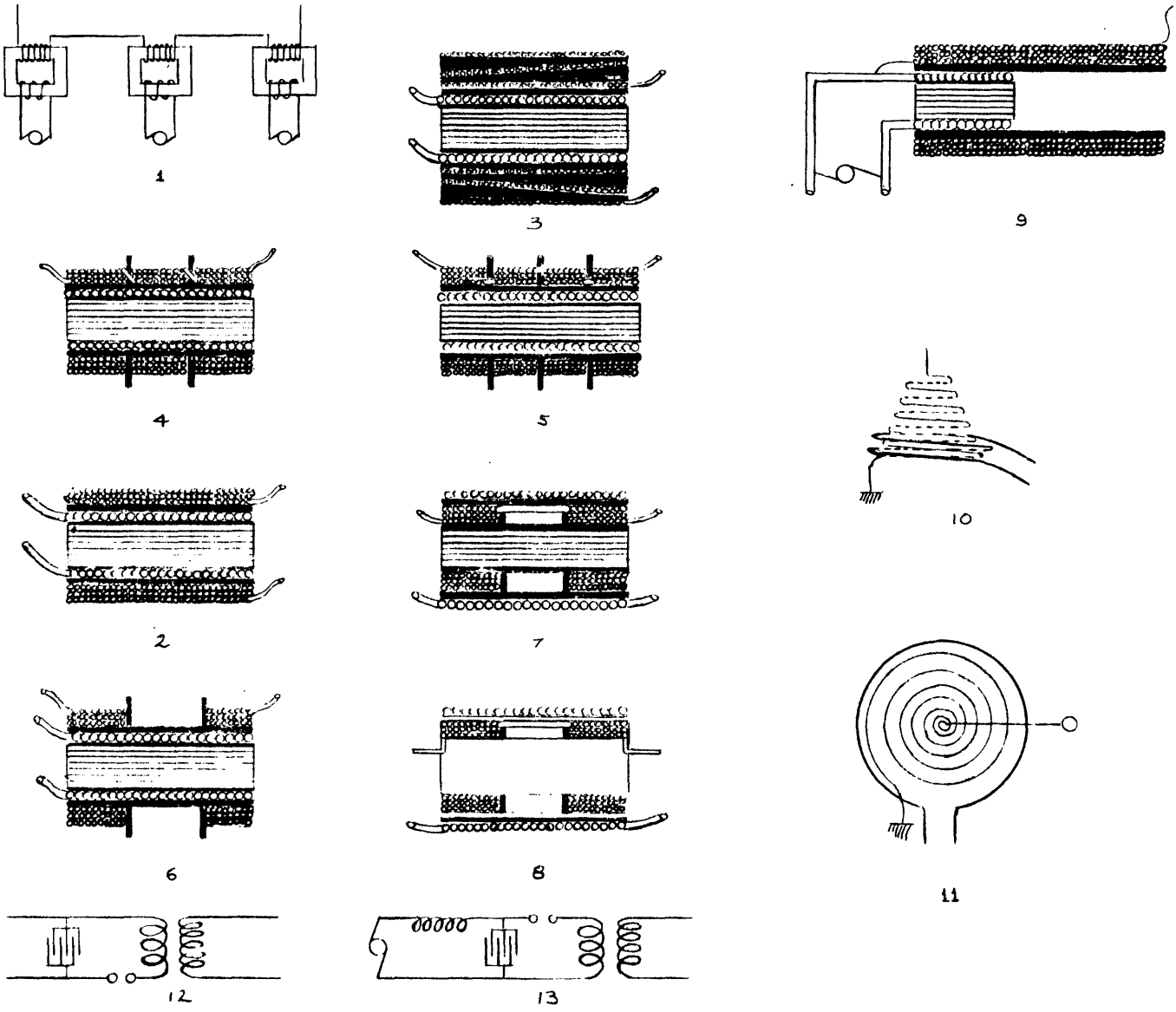

FIG. 2 - TABLE OF DIAGRAMS ILLUSTRATING THE EVOLUTION OF A HIGH-TENSION TRANSFORMER ENABLING THE PRODUCTION OF ELECTRO-MOTIVE FORCES OF MANY MILLIONS OF VOLTS.

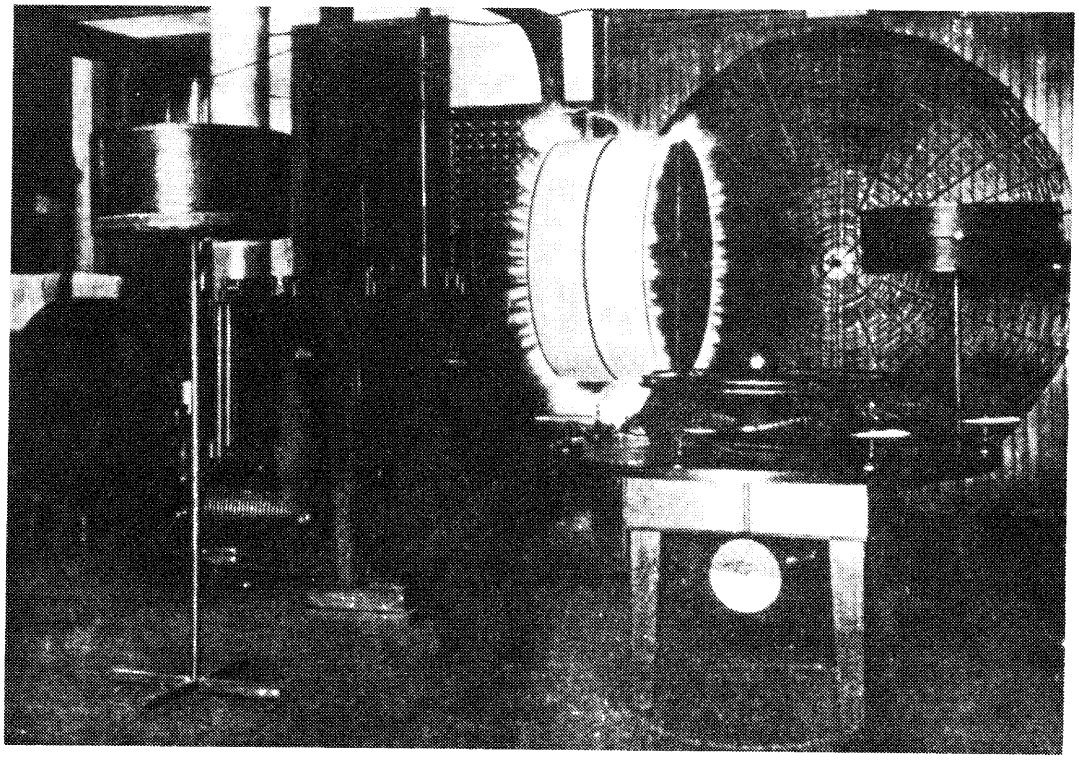

FIG. 3 - PHOTOGRAPH SHOWING A PART OF THE LABORATORY, WITH A DISCONNECTED RESONATING COIL SUPPORTED ON AN INSULATING STAND, AND ILLUMINATED BY THE STREAMERS PRODUCED, OTHER COILS REMAINING UNAFFECTED - THE PRESSURE DEVELOPED IN THE RESONATING COIL IS OVER HALF A MILLION VOLTS.

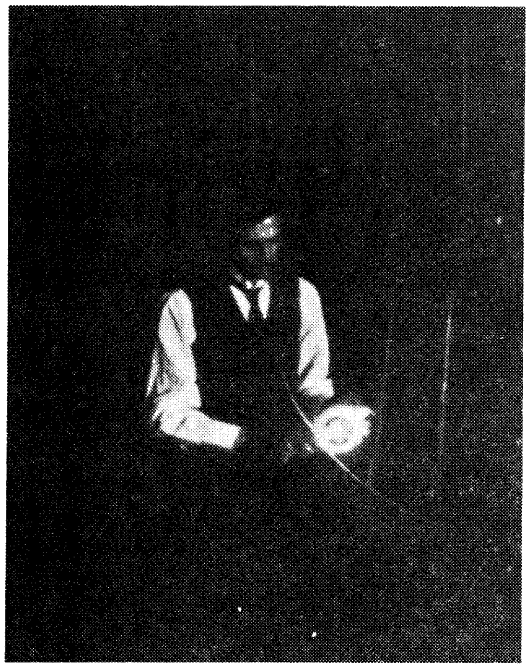

FIG. 4 - PHOTOGRAPH SHOWING AN INCANDESCENT LAMP LIGHTED BY A SYNCHRONIZED CIRCUIT COMPOSED OF A WIRE LOOP AND CONDENSER, AND ENERGIZED BY WAVES TRANSMITTED FROM A DISTANCE.

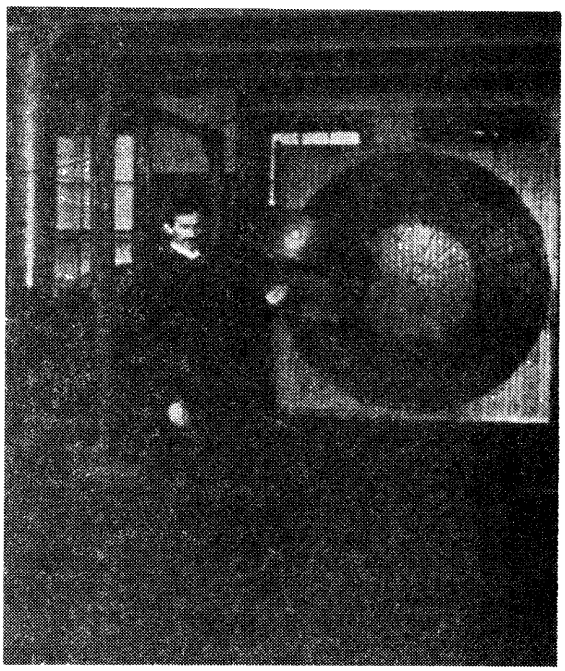

FIG. 5 - PHOTOGRAPH SHOWING AN INCANDESCENT LAMP LIGHTED BY MEANS OF WAVES TRANSMITTED THROUGH SPACE TO A COIL WITHOUT A CONDENSER.

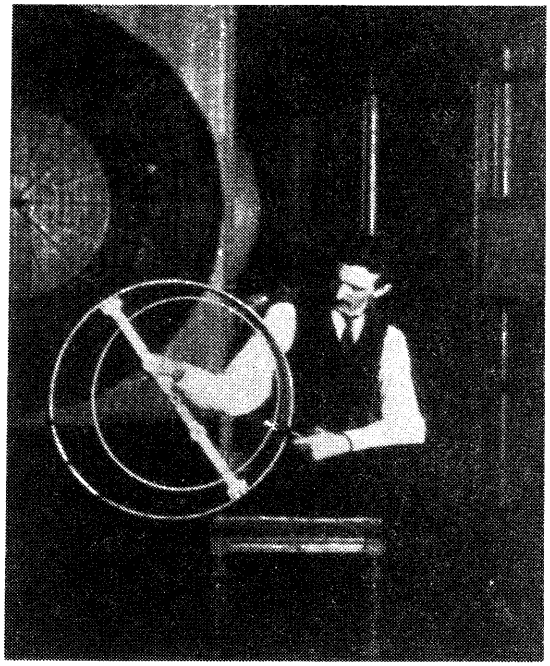

FIG. 6 - EXPERIMENT ILLUSTRATING THE ACTION OF A SYNCHRONIZED CIRCUIT ENERGIZED BY WAVES TRANSMITTED FROM A DISTANT OSCILLATOR - THE ENERGY RECEIVED IS TRANSFERRED UPON ANOTHER UNRESPONSIVE CIRCUIT, LIGHTING THE INCANDESCENT LAMP ATTACHED TO THE SAME.

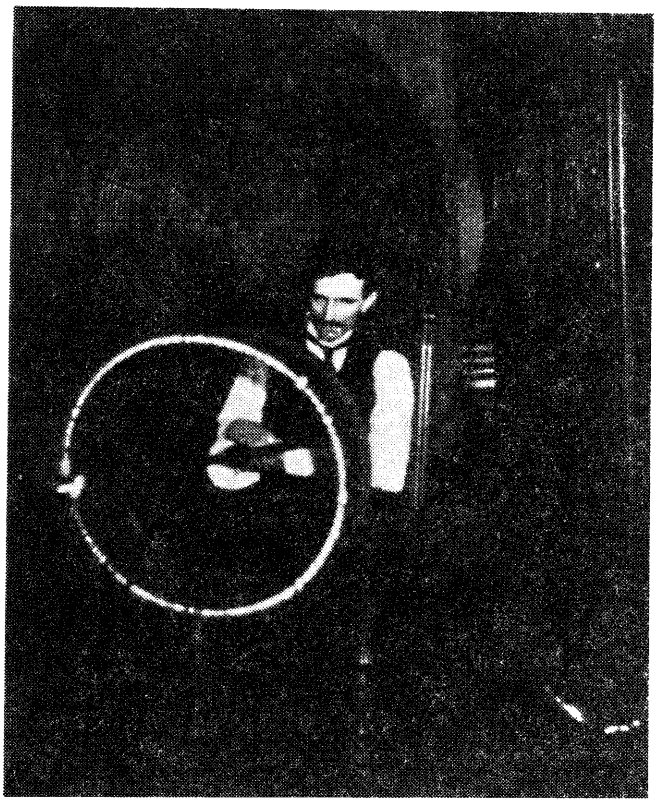

FIG. 7 - EXPERIMENT SHOWING A COIL ENERGIZED BY THE WAVES OF A DISTANT OSCILLATOR AND ADJUSTED TO THE CAPACITY OF THE BODY OF THE OPERATOR, WHO PRESERVES HIMSELF FROM INJURY BY MAINTAINING A POSITION AT THE NODAL POINT, WHERE THE INTENSE VIBRATION IS LITTLE FELT - THE PRESSURE ON THE END OF THE COIL TOWARDS THE READER, WHICH IS ILLUMINATED BY THE POWERFUL STREAMERS, IS NEARLY HALF A MILLION VOLTS.

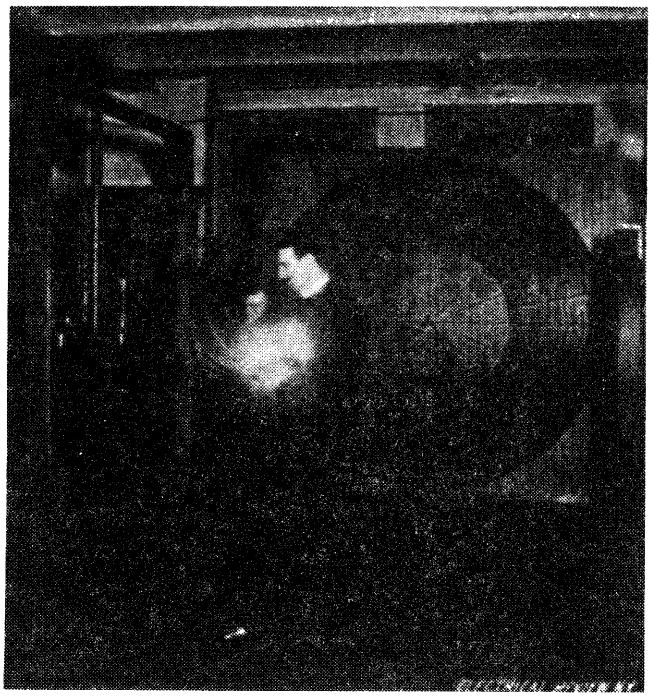

FIG. 8 - PHOTOGRAPH OF THE EXPERIMENTER STANDING IN THE MIDDLE OF THE LABORATORY AND LIGHTING A VACUUM BULB BY WAVES FROM A DISTANT OSCILLATOR - HIS BODY IS, IN THIS CASE, SUBJECTED TO GREAT ELECTRICAL PRESSURE.

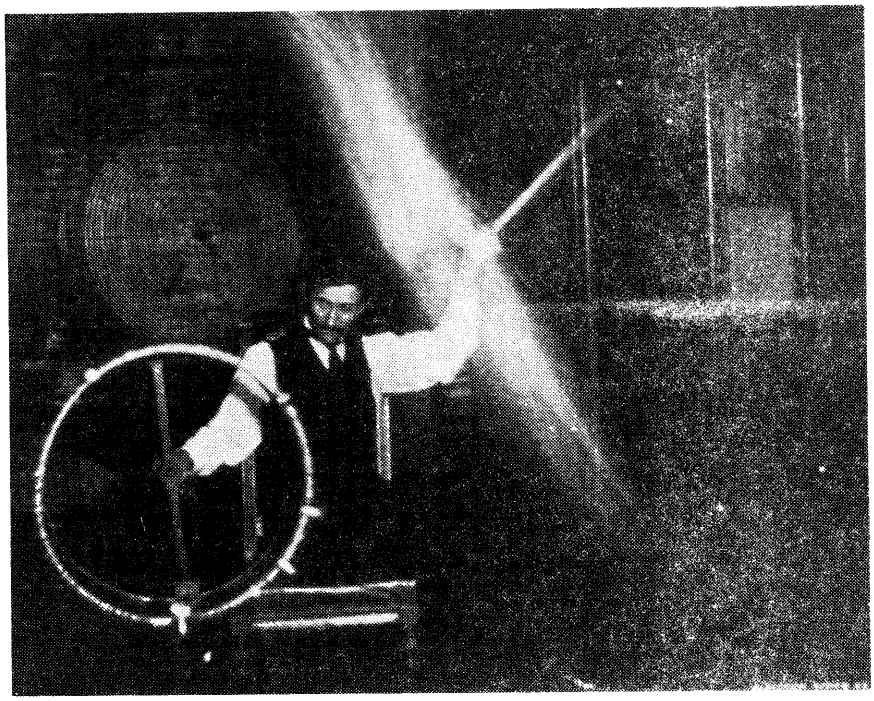

FIG. 9 - THE OPERATOR'S BODY, IN THIS EXPERIMENT, IS CHARGED TO A HIGH POTENTIAL BY MEANS OF A COIL RESPONSIVE TO THE WAVES TRANSMITTED TO IT FROM A DISTANT OSCILLATOR, AND A LONG GLASS TUBE WAVED IN THE HAND IS LIGHTED TO GREAT BRILLIANCE BY THE ELECTRICAL CHARGES CONVEYED TO IT THROUGH THE BODY.

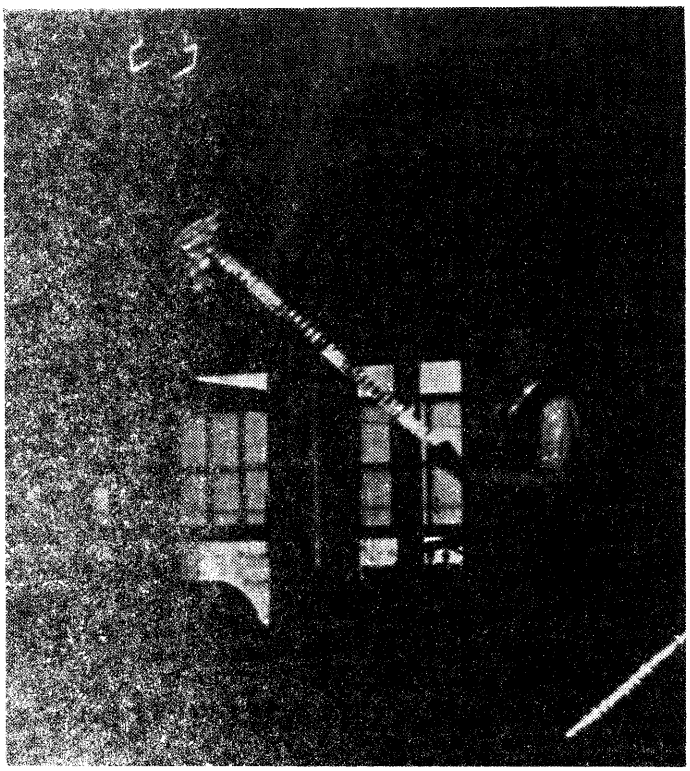

FIG. 10 - IN THIS EXPERIMENT THE OPERATOR'S BODY IS CHARGED TO A GREAT PRESSURE BY A DIRECT CONNECTION WITH AN OSCILLATOR - THE PHOTOGRAPH SHOWS A SHEET OF TIN OF DETERMINED SIZE, HELD IN HAND - THE OPERATOR IS ON THE TOP OF A STATIONARY ELECTRICAL WAVE, AND THE BAR AND SHEET ARE BOTH ILLUMINATED BY THE VIOLENTLY AGITATED AIR SURROUNDING THEM - ONE OF THE VACUUM TUBES GLOWS BRIGHTLY, BEING AFFECTED BY THE VIBRATIONS TRANSMITTED TO IT FROM THE OPERATOR'S BODY.

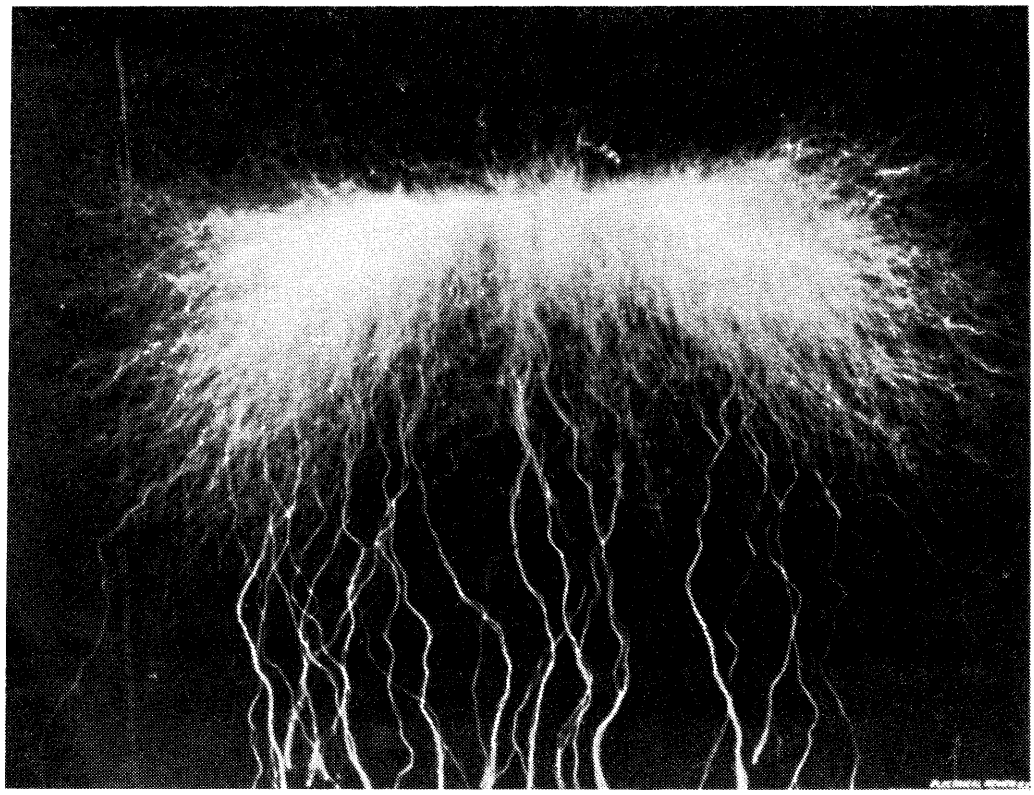

FIG. 11 - PHOTOGRAPH OF AN ACTIVE TERMINAL OF AN IMPROVED OSCILLATOR, USED IN TESLA'S EXPERIMENTS FOR TRANSMITTING ELECTRICAL ENERGY TO GREAT DISTANCES WITHOUT WIRES - WIDTH OF ILLUMINATED SPACE IS 18 FEET- THE PRESSURE ON THE TERMINAL IS ABOUT EIGHT MILLION VOLTS.

they good for, and what do they or have they demonstrated? To them it may be said that they have shown and proved among many other things: That ordinary currents can be transformed with high economy into electrical vibrations of any pitch, which are needed in many novel arts; they have shown that electrical energy in great amounts can be efficiently and safely transmitted without the use of wires to any point of the globe, however distant; they have furnished proof that the movements and operation of bodies and machinery carried by the same can be controlled from a great distance without any tangible connection whatever and with absolute precision; they have proved the practicability of a system of signaling without wires, not with the imperfect appliances as before attempted, which can not be tuned and are rendered useless by the play of a small induction coil, but by means of apparatus producing powerful oscillations and circuits in exact synchronism, with which it is impossible to interfere; they have shown that atmospheric nitrogen can be readily combined and valuable products manufactured, merely by the application of cheap water power, and that light, diffusive like that of the sun, can be produced with an economy greater than obtainable in the usual ways and with lamps that never consume.

N. Tesla.

New York, March 26, 1899

New York Sun
Jan. 30, 1901

TESLA'S NEW DISCOVERY

Capacity of Electrical Conductors is Variable.

Not Constant, and Formulas Will Have to Be Rewritten - Capacity Varies With Absolute Height Above Sea Level, Relative Height From Earth and Distance From the Sun.

Nikola Tesla announced yesterday another new discovery in electricity. This time it is a new law and by reason of it, Mr. Tesla asserts, a large part of technical literature will have to be rewritten. Ever since anything has been known about electricity, scientific men have taken for granted that the capacity of an electrical conductor is constant. When Tesla was experimenting in Colorado he found out that this capacity is not constant - but variable. Then he determined to find out the law governing this phenomenon. He did so, and all this he explained to *The Sun* yesterday. Here is what he said:

"Since many years scientific men engaged in the study of physics and electrical research have taken it for granted that certain quantities, entering continuously in their estimates and calculations, are fixed and unalterable. The exact determination of these quantities being of particular importance in electrical vibrations, which are engrossing more and more the attention of experimenters all over the world, it seems to be important to acquaint others with some of my observations, which have finally led me to the results now attracting universal attention. These observations, with which I have long been familiar, show that some of the quantities referred to are variable and that, owing to this, a large portion of the technical literature is defective. I shall endeavor to convey the knowledge of the facts I have discovered in plain language, devoid as much as possible of technicalities.

"It is well known that an electric circuit compacts itself like a spring with a weight attached to it. Such a spring vibrates at a definite rate, which is determined by two quantities, the pliability of the spring and the mass of the weight. Similarly an electric circuit vibrates, and its vibration, too, is dependent on two quantities, designated as electrostatic capacity and inductance. The capacity of the electric circuit corresponds to the pliability of the spring and the inductance to the mass of the weight.

"Exactly as mechanics and engineers have taken it for granted that the pliability of the spring remains the same, no matter how it be placed or used, so electricians and physicists have assumed that the electrostatic capacity of a conducting body, say of a metallic sphere, which is frequently used in experiments, remains a fixed and unalterable quantity, and many scientific results of the greatest importance are dependent on this assumption. Now, I have discovered that this capacity is not fixed and unalterable at all. On the contrary, it is susceptible to great changes, so that under certain conditions it may amount to many times its theoretical value, or may eventually be smaller. Inasmuch as every electrical conductor, besides possessing an inductance, has also a certain amount of capacity, owing to the variations of the latter, the inductance, too, is seemingly modified by the same causes that tend to modify the capacity. These facts I discovered some time before I gave a technical description of my system of energy transmission and telegraphy without wires, which, I believe, became first known through my Belgian and British patents.

"In this system, I then explained, that, in estimating the wave-length of the electrical vibration in the transmitting and receiving circuits, due regard must be had to the velocity with which the vibration is propagated through each of the circuits, this velocity being given by the product of the wave-length and the number of vibrations per second. The rate of vibration being, however, as before stated, dependent on the capacity and inductance in each case, I obtained discordant values.

Continuing the investigation of this astonishing phenomenon I observed that the capacity varied with the elevation of the conducting surface above the ground, and I soon ascertained the law of this variation. The capacity increased as the conducting surface was elevated, in open space, from one-half to three-quarters of 1 per cent per foot of elevation. In buildings, however, or near large structures, this increase often amounted to 50 per cent per foot of elevation, and this alone will show to what extent many of the scientific experiments recorded in technical literature are erroneous. In determining the length of the coils or conductors such as I employ in my system of wireless telegraphy, for instance, the rule which I have given is, in view of the above, important to observe.

"Far more interesting, however, for men of science is the fact I observed later, that the capacity undergoes an annual variation with a maximum in summer, and a minimum in winter. In Colorado, where I continued with improved methods of investigations begun in New York, and where I found the rate of increase slightly greater, I furthermore observed that there was a diurnal variation with a maximum during the night. Further, I found that sunlight causes a slight increase in capacity. The moon also produces an effect, but I do not attribute it to its light.

"The importance of these observations will be better appreciated when it is stated that owing to these changes of a quantity supposed to be constant an electrical circuit does not vibrate at a uniform rate, but its rate is modified in accordance with the modifications of the capacity. Thus a circuit vibrates a little slower at an elevation than when at a lower level. An oscillating system, as used in telegraphy without wires, vibrates a little quicker when the ship gets into the harbor than when on open sea. Such a circuit oscillates quicker in the winter than in the summer, though it be at the same temperature, and a trifle quicker at night than in daytime, particularly if the sun is shining.

"Taking together the results of my investigations I find that this variation of the capacity and consequently of the vibration period is evidently dependent, first, on the absolute height above sea level, though in a smaller degree; second, on the relative height of the conducting surface or capacity with respect to the bodies surrounding it; third, on the distance of the earth from the sun, and fourth, on the relative change of the circuit with respect to the sun, caused by the diurnal rotation of the earth. These facts may be of particular interest to meteorologists and astronomers, inasmuch as practical methods of inquiry may result from these observations, which may be useful in their respective fields. It is probable that we shall perfect instruments for indicating the altitude of a place by means of a circuit, properly constructed and arranged, and I have thought of a number of other uses to which this principle may be put.

"It was in the course of investigations of this kind in Colorado that I first noted certain variations in electrical systems arranged in peculiar ways. These variations I first discovered by calculating over the results I had previously noted, and it was only subsequently that I actually perceived them. It will thus be clear that some who have ventured to attribute the phenomena I have observed to ordinary atmospheric disturbances have made a hasty conclusion."

Scientific American
Feb. 2, 1901, p. 67.

TESLA'S WIRELESS LIGHT.

Nikola Tesla has given to *The New York Sun* an authorized statement concerning his new experiments on the production of light without the aid of wires. Mr. Tesla says:

"This light is the result of continuous efforts since my early experimental demonstrations before scientific societies here and abroad. In order to make it suitable for commercial use, I had to overcome great difficulties. One of these was to produce from ordinary currents of supply electrical oscillations of enormous rapidity in a simple and economical manner. This, I am glad to say, I have now accomplished, and the results show that with this new form of light a higher economy is practicable than with the present illuminants. The light offers, besides, many specific advantages, not the least of which is found in its hygienic properties. It is, I believe, the closest approach to daylight which has yet been reached from any artificial source.

"The lamps are glass tubes which may be bent in any ornamental way. I most generally use a rectangular spiral, containing about twenty to twenty-five feet of tubing making some twelve to fourteen convolutions. The total illuminating surface of a lamp is from 300 to 400 square inches. The ends of the spiral tube are covered with a metallic coating, and provided with hooks for hanging the lamp on the terminals of the source of oscillations. The tube contains gases rarefied to a certain degree, determined in the course of long experimentation as being conductive to the best results.

"The process of light production is, according to my views, as follows: The street current is passed through a machine which is an electrical oscillator of peculiar construction and transforms the supply current, be it direct or alternating, into electrical oscillations of very high frequency. These oscillations, coming to the metallically-coated ends of the glass tube, produce in the interior corresponding electrical oscillations, which set the molecules and atoms of the inclosed rarefied gases into violent commotion, causing them to vibrate at enormous rates and emit those radiations which we know as light. The gases are not rendered incandescent in the ordinary sense, for if it were so, they would be hot, like an incandescent filament. As a matter of fact, there is very little heat noticeable, which speaks well for the economy of the light, since all heat would be loss.

"This high economy results chiefly from three causes: First, from the high rate of the electrical oscillations; second, from the fact that the entire light-giving body, being a highly attenuated gas, is exposed and can throw out its radiations unimpeded, and, third, because of the smallness of the particles composing the light-giving body, in consequence of which they can be quickly thrown into a high rate of vibration, so that comparatively little energy is lost in the lower or heat vibrations. An important practical advantage is that the lamps need not be renewed like the ordinary ones, as there is nothing in them to consume. Some of these lamps I have had for years, and they are now in just as good a condition as they ever were. The illuminating power of each of these lamps is, measured by the photometric method, about fifty candle power, but I can make them of any power desired, up to that of several arc lights. It is a remarkable feature of the light that during the day it can scarcely be seen, whereas at night the whole room is

(Reprinted with permission. Copyright © 1901 by Scientific American. All rights reserved.)

brilliantly illuminated. When the eye becomes used to the light of these tubes, an ordinary incandescent lamp or gas burner produces a violent pain in the eye when it is turned on, showing in a striking manner to what a degree these concentrated sources of light which we now use are detrimental to the eye.

"I have found that in almost all its actions the light produces the same effects as sunlight, and this makes me hopeful that its introduction into dwellings will have the effect of improving, in a measure now impossible to estimate, the hygienic conditions. Since sunlight is a very powerful curative agent, and since this light makes it possible to have sunlight, so to speak, of any desired intensity, day and night in our homes, it stands to reason that the development of germs will be checked and many diseases, as consumption, for instance, successfully combated by continually exposing the patients to the rays of these lamps. I have ascertained unmistakably that the light produces a soothing action on the nerves, which I attribute to the effect which it has upon the retina of the eye. It also improves vision just exactly as the sunlight, and it ozonizes slightly the atmosphere. These effects can be regulated at will. For instance, in hospitals, where such a light is of paramount importance, lamps may be designed which will produce just that quality of ozone which the physician may desire for the purification of the atmosphere, or if necessary, the ozone production can be stopped altogether.

"The lamps are very cheap to manufacture, and by the fact that they need not be exchanged like ordinary lamps or burners they are rendered still less expensive. The chief consideration is, of course, in commercial introduction, the energy consumption. While I am not yet prepared to give exact figures, I can say that, given a certain quantity of electrical energy from the mains, I can produce more light than can be produced by the ordinary methods. In introducing this system of lighting my transformer, or oscillator, will be usually located at some convenient place in the basement, and from there the transformed currents will be led as usual through the building. The lamps can be run with one wire alone, as I have shown in my early demonstrations, and in some cases I can dispense entirely with the wires. I hope that ultimately we shall get to this ideal form of illumination, and that we shall have in our rooms lamps which will be set aglow no matter where they are placed, just as an object is heated by heat rays emanating from a stove. The lamps will then be handled like kerosene lamps, with this difference, however, that the energy will be conveyed through space. The ultimate perfection of apparatus for the production of electrical oscillations will probably bring us to this great realization, and then we shall finally have the light without heat or 'cold' light. I have no difficulty now to illuminate the room with such wireless lamps, but a number of improvements must be made yet before it can be generally introduced."

Collier's Weekly
Feb. 9, 1901, pp. 4-5.

TALKING WITH PLANETS - by Nikola Tesla

Editor's Note. - *Mr. Nikola Tesla has accomplished some marvelous results in electrical discoveries. Now, with the dawn of the new century, he announces an achievement that will amaze the entire universe, and which eclipses the wildest dream of the most visionary scientist. He has received communication, he asserts, from out the great void of space; a call from inhabitants of Mars, or Venus, or some other sister planet! And, furthermore, noted scientists like Sir Norman Lockyer are disposed to agree with Mr. Tesla in his startling deductions.*

Mr. Tesla has not only discovered many important principles, but most of his inventions are in practical use; notably in the harnessing of the Titanic forces of Niagara Falls, and the discovery of a new light by means of a vacuum tube. He has, he declares, solved the problem of telegraphing without wires or artificial conductors of any sort, using the earth as his medium. By means of this principle he expects to be able to send messages under the ocean, and to any distance on the earth's surface. Interplanetary communication has interested him for years, and he sees no reason why we should not soon be within talking distance of Mars or of all worlds in the solar system that may be tenanted by intelligent beings.

At the request of COLLIER'S WEEKLY Mr. Tesla present herewith a frank statement of what he expects to accomplish and how he hopes to establish communication with the planets.

The idea of communicating with the inhabitants of other worlds is an old one. But for ages it has been regarded merely as a poet's dream, forever unrealizable. And yet, with the invention and perfection of the telescope and the ever-widening knowledge of the heavens, its hold upon our imagination has been increased, and the scientific achievements during the latter part of the nineteenth century, together with the development of the tendency toward the nature ideal of Goethe, have intensified it to such a degree that it seems as if it were destined to become the dominating idea of the century that has just begun. The desire to know something of our neighbors in the immense depths of space does not spring from idle curiosity nor from thirst for knowledge, but from a deeper cause, and it is a feeling firmly rooted in the heart of every human being capable of thinking at all.

Whence, then, does it come? Who knows? Who can assign limits to the subtlety of nature's influences? Perhaps, if we could clearly perceive all the intricate mechanism of the glorious spectacle that is continually unfolding before us, and could, also, trace this desire to its distant origin, we might find it in the sorrowful vibrations of the earth which began when it parted from its celestial parent.

But in this age of reason it is not astonishing to find persons who scoff at the very thought of effecting communication with a planet. First of all, the argument is made that there is only a small probability of other planets being inhabited at all. This argument has never appealed to me. In the solar system, there seem to be only two planets - Venus and Mars - capable of sustaining life such as ours; but this does not mean that there might not be on all of them some other forms of life. Chemical processes may be maintained without the aid of oxygen, and it is still a question whether chemical processes are absolutely necessary for the sustenance of organized beings. My idea is that the development of life must lead to forms of existence that will be possible without nourishment and which will not be shackled by consequent limitations. Why should a living being not be able to obtain all the energy it needs for the performance of its life-functions from the environment, instead of through consumption of food, and transforming, by a complicated process, the energy of chemical combinations into life-sustaining energy?

If there were such beings on one of the planets we should know next to nothing about them. Nor is it necessary to go so far in our assumptions, for we can readily conceive that, in the same degree as the atmosphere diminishes in density, moisture disappears and the planet freezes up, organic life might also undergo corresponding modifications, leading finally to forms which, according to our present ideas of life, are impossible. I will readily admit, of course, that if there should be a sudden catastrophe of any kind all life process might be arrested; but if the changes, no matter how great, should be gradual, and occupied ages, so that the ultimate results could be intelligently foreseen, I cannot but think that reasoning beings would still find means of existence. They would adapt themselves to their constantly changing environment. So I think it quite possible that in a frozen planet, such as our moon is supposed to be, intelligent beings may still dwell, in its interior, if not on its surface.

SIGNALLING AT 1,000,000 MILES!

Then it is contended that it is beyond human power and ingenuity to convey signals to the almost inconceivable distances of fifty million or one hundred million miles. This might have been a valid argument formerly. It is not so now. Most of those who are enthusiastic upon the subject of interplanetary communication have reposed their faith in the light-ray as the best possible medium of such communication. True, waves of light, owing to their immense rapidity of succession, can penetrate space more readily than waves less rapid, but a simple consideration will show that by their means an exchange of signals between this earth and its companions in the solar system is, at least now, impossible. By way of illustration, let us suppose that a square mile of the earth's surface - the smallest area that might possibly be within reach of the best telescopic vision of other world's - were covered with incandescent lamps, packed closely together so as to form, when illuminated, a continuous sheet of light. It would require not less than one hundred million horse power to light this area of lamps, and this is many times the amount of motive power now in the service of man throughout the world.

But with the novel means, proposed by myself, I can readily demonstrate that, with an expenditure not exceeding two thousand horse-power, signals can be transmitted to a planet such as Mars with as much exactness and certitude as we now send messages by wire from New York to Philadelphia. These means are the result of long continued experiment and gradual improvement.

Some ten years ago, I recognized the fact that to convey electric currents to a distance it was not at all necessary to employ a return wire, but that any amount of energy might be transmitted by using a single wire. I illustrated this principle by numerous experiments, which, at that time, excited considerable attention among scientific men.

This being practically demonstrated, my next step was to use the earth itself as the medium for conducting the currents, thus dispensing with wires and all other artificial conductors. So I was led to the development of a system of energy transmission and of telegraphy without the use of wires, which I described in 1893. The difficulties I encountered at first in the transmission of currents through the earth were very great. At that time I had at hand only ordinary apparatus, which I found to be ineffective, and I concentrated my attention immediately upon perfecting machines for this special purpose. This work consumed a number of years, but I finally vanquished all difficulties and succeeded in producing a machine which, to explain its operation in plain language, resembled a pump in its action, drawing electricity from the earth and driving it back into the same at an enormous rate, thus creating ripples or disturbances which, spreading through the earth as through a wire, could be detected at great distances by carefully attuned receiving circuits. In this manner I was able to transmit to a distance, not only feeble effects

for purposes of signalling, but considerable amounts of energy, and later discoveries I made convince me that I shall ultimately succeed in conveying power without wires, for industrial purposes, with high economy, and to any distance, however great.

EXPERIMENTS IN COLORADO

To develop these inventions further, I went to Colorado in 1899, where I continued my investigations along these and other lines, one of which in particular I now consider of even greater importance than the transmission of power without wires. I constructed a laboratory in the neighborhood of Pike's Peak. The conditions in the pure air of the Colorado mountains proved extremely favorable for my experiments, and the results were most gratifying to me. I found that I could not only accomplish more work, physically and mentally, than I could in New York, but that electrical effects and changes were more readily and distincly perceived. A few years ago it was virtually impossible to produce electrical sparks twenty or thirty feet long; but I produced some more than one hundred feet in length, and this without difficulty. The rates of electrical movement involved in strong induction apparatus had measured but a few hundred horse-power, and I produced electrical movements of rates of one hundred and ten thousand horse-power. Prior to this, only insignificant electrical pressures were obtained, while I have reached fifty million volts.

The accompanying illustrations, with their descriptive titles, taken from an article I wrote for the "Century Magazine," may serve to convey an idea of the results I obtained in the directions indicated.

Many persons in my own profession have wondered at them and have asked what I am trying to do. But the time is not far away now when the practical results of my labors will be placed before the world and their influence felt everywhere. One of the immediate consequences will be the transmission of messages without wires, over sea or land, to an immense distance. I have already demonstrated, by crucial tests, the practicability of signalling by my system from one to any other point of the globe, no matter how remote, and I shall soon convert the disbelievers.

I have every reason for congratulating myself that throughout these experiments, many of which were exceedingly delicate and hazardous, neither myself nor any of my assistants received an injury. When working with these powerful electrical oscillations the most extraordinary phenomena take place at times. Owing to some interference of the oscillations, veritable balls of fire are apt to leap out to a great distance, and if any one were within or near their path, he would be instantly destroyed. A machine such as I have used could easily kill, in an instant, three hundred thousand persons. I observed that the strain upon my assistants was telling, and some of them could not endure the extreme tension of the nerves. But these perils are now entirely overcome, and the operation of such apparatus, however powerful, involves no risk whatever.

As I was improving my machines for the production of intense electrical actions, I was also perfecting the means for observing feeble effects. One of the most interesting results, and also one of great practical importance, was the development of certain contrivances for indicating at a distance of many hundred miles an approaching storm, its direction, speed and distance travelled. These appliances are likely to be valuable in future meteorological observations and surveying, and will lend themselves particularly to many naval uses.

It was in carrying on this work that for the first time I discovered those mysterious effects which have elicited such unusual interest. I had perfected the apparatus referred to so far that from my laboratory in the Colorado mountains I could feel the pulse of the globe, as it were, noting every electrical change that occurred within a radius of eleven hundred miles.

TERRIFIED BY SUCCESS

I can never forget the first sensations I experienced when it dawned upon me that I had observed something possibly of incalculable consequences to mankind. I felt as though I were present at the birth of a new knowledge or the revelation of a great truth. Even now, at times, I can vividly recall the incident, and see my apparatus as though it were actually before me. My first observations positively terrified me, as there was present in them something mysterious, not to say supernatural, and I was alone in my laboratory at night; but at that time the idea of these disturbances being intelligently controlled signals did not yet present itself to me.

The changes I noted were taking place periodically, and with such a clear suggestion of number and order that they were not traceable to any cause then known to me. I was familiar, of course, with such electrical disturbances as are produced by the sun, Aurora Borealis and earth currents, and I was as sure as I could be of any fact that these variations were due to none of these causes. The nature of my experiments precluded the possibility of the changes being produced by atmospheric disturbances, as has been rashly asserted by some. It was some time afterward when the thought flashed upon my mind that the disturbances I had observed might be due to an intelligent control. Although I could not decipher their meaning, it was impossible for me to think of them as having been entirely accidental. The feeling is constantly growing on me that I had been the first to hear the greeting of one planet to another. A purpose was behind these electrical signals; and it was with this conviction that I announced to the Red Cross Society, when it asked me to indicate one of the great possible achievements of the next hundred years, that it would probably be the confirmation and interpretation of this planetary challenge to us.

Since my return to New York more urgent work has consumed all my attention; but I have never ceased to think of those experiences and of the observations made in Colorado. I am constantly endeavoring to improve and perfect my apparatus, and just as soon as practicable I shall again take up the thread of my investigations at the point where I have been forced to lay it down for a time.

COMMUNICATING WITH THE MARTIANS

At the present stage of progress, there would be no insurmountable obstacle in constructing a machine capable of conveying a message to Mars, nor would there be any great difficulty in recording signals transmitted to us by the inhabitants of that planet, if they be skilled electricians. Communication once established, even in the simplest way, as by a mere interchange of numbers, the progress toward more intelligible communication would be rapid. Absolute certitude as to the receipt and interchange of messages would be reached as soon as we could respond with the number "four," say, in reply to the signal "one, two, three." The Martians, or the inhabitants of whatever planet had signalled to us, would understand at once that we had caught their message across the gulf of space and had sent back a response. To convey a knowledge of form by such means is, while very difficult, not impossible, and I have already found a way of doing it.

What a tremendous stir this would make in the world! How soon will it come? For that it will some time be accomplished must be clear to every thoughtful being.

Something, at least, science has gained. But I hope that it will also be demonstrated soon that in my experiments in the West I was not merely beholding a vision, but had caught sight of a great and profound truth.

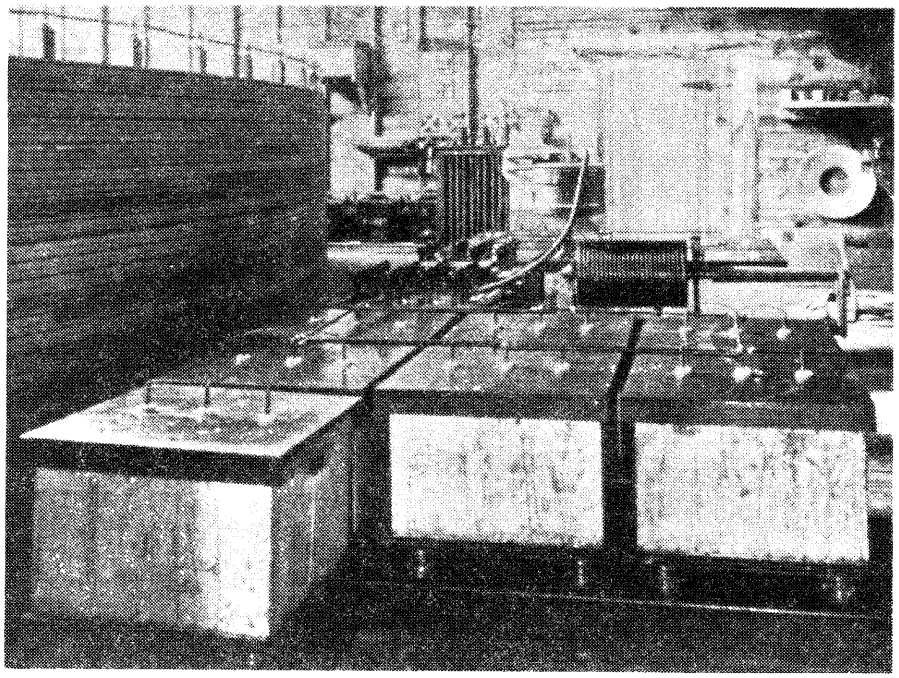

VIEW OF THE ESSENTIAL PARTS OF THE ELECTRICAL OSCILLATOR USED IN THE EXPERIMENTS DESCRIBED.

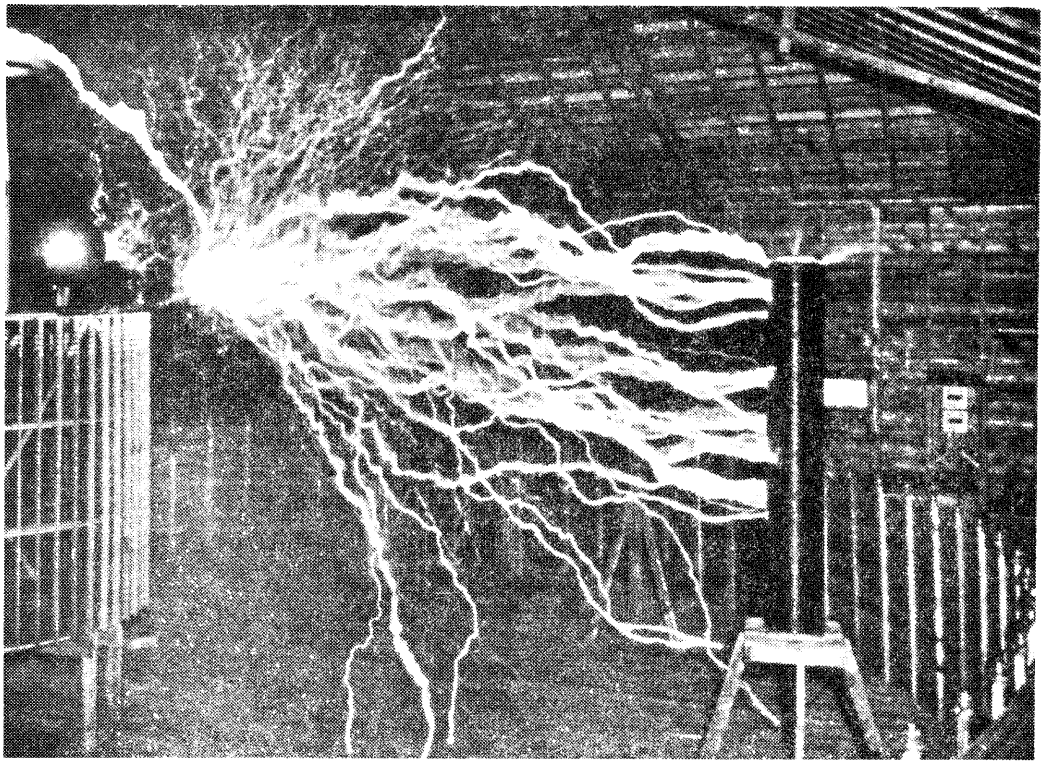

EXPERIMENT TO ILLUSTRATE THE CAPACITY OF THE OSCILLATOR FOR PRODUCING ELECTRICAL EXPLOSIONS OF GREAT POWER.

Philadelphia - North American
May 18, 1902

STARTLING PREDICTION OF THE WORLD'S GREATEST LIVING SCIENTIST IN AN ARTICLE WRITTEN FOR THE SUNDAY NORTH AMERICAN

Lord Kelvin's article containing the astonishing prophecy that windmills will furnish the future power of the world was written expressly for the Sunday North American during his recent visit to the United States. It is the only article that came from his pen while he was in America. Emanating from a less famous source the prediction that one day the earth will return to its most primitive motive power would be received with little less than ridicule. In view of the fact that Lord Kelvin is beyond question the greatest scientific authority, as is shown by the reverence with which he was received by American savants, his opinion in this matter is of the utmost importance to the world at large.

In discussing the subject with a reporter for the Sunday North American, Lord Kelvin asserted that from the present outlook the windmill will be the only source of motive power to which man will be able to turn once the supply of coal is exhausted. Storehouses of power, such as Niagara Falls, he said, appear, upon their face, to be enormous, but when the tremendous amount of energy required to move the wheels of the earth's energy is considered, they sink into insignificance. Once the coal fields are stripped of their precious contents, he stated, efforts will doubtless be made to raise at least a partial supply of fuel upon the farms of the land. This is not so unreasonable as at first it seems. The farmers in Iowa and Nebraska, where coal is scarce and very expensive, are even now burning their excess of corn as fuel. The supply from this source, will, as Lord Kelvin points out, necessarily be very limited, as years go by and the population of the world increases. The supply of air, however, is inexhaustible and Lord Kelvin believes man will be obliged to have recourse to it as a motive power, just as he did hundreds of years ago.

Commenting on the motive power of the future, Nikola Tesla, the electrical scientist, agrees with Lord Kelvin that the world must one day fall back upon the force of the wind. Thomas A. Edison, who in addition to being the world's greatest electrician is a man of varied achievements, admits that one day the fuel supply will be exhausted. This day he believes will be exceedingly remote, estimating that the South American forests alone could provide fuel, in wood, for fifty thousand years. When the last bit of fuel has been consumed, the wind may be utilized in generating electricity which will turn a good portion of the world's machinery. It is suggested by Professor Langley, in speaking of Lord Kelvin's prophecy, that the sun may one day share with the wind in furnishing power, if indeed it does not do all the work. Admiral Bradford, who has been busy for the past few years locating sites for United States coaling stations at the four corners of the earth, takes the most optimisitic view of all. He believes that when the coal supply is exhausted some other means of furnishing motive power equally good will be found to take its place, and that the world will not be seriously affected.

WINDMILLS MUST BE THE FUTURE SOURCE OF POWER - by Lord Kelvin
(The only article written by Lord Kelvin during his recent visit to the United States)

To predict that the world's industrial progress will one day be halted and then rolled back in primitive methods is not a very daring prophecy when the conditions are studied closely.

Coal is king of the industrial world. The king's reign is limited. Sooner or later, it has been estimated that the world's supply of coal will have been exhausted. The commission appointed to inquire into the all-important matter in Great

Britain has even said that a few hundred years at the outside will see the last basket of coal taken from the mines of England. In other quarters the supply is rapidly diminishing.

The enormous amount of coal required to run our great ocean steamships, our leviathans of the deep, and the innumerable factories of our cities is making such inroads upon the available store that nature cannot forever supply the demand. When all the coal of the earth is used, what then?

Perplexed humanity confronted with the possibility of its industrial machinery being stopped for want of power, will be forced to turn from earth to air. In the world there is to be found a force that has stood man in good stead from time immemorial. Long before the days of the steam engine or the ocean liners, ships were wafted from shore to shore by means of the force that lurks in the air. The time will come, unless man's ingenuity devises some means of replacing the exhausted coal supply with a fuel that will be equally efficacious - when the swift steaming greyhounds of the oceans will be dry-docked and their vitals torn out. Then the lightened ships will be fitted with the masts and sails of the old sailing days, and once more the seas will be dotted with vessels propelled by the method that is at present in decline. The day upon which the last shovelful of coal is taken from the bowels of the earth will mark the passing of the magnificent battleship, the swift cruiser and the torpedo boat. The navies of the nations will perish in a day for want of life-giving fire in the furnace rooms. In their place will arise white-winged fleets depending alone on their sailing power, as in the days of Nelson; the question of which ocean liner can cut down time of the passage from New York to Liverpool will no longer interest voyagers, for the trip will depend, as of old, on the favorable winds and the sailing capacity of the ship.

On land the effect of the exhaustion of the coal supply will be even more marked than on sea. Every building could be supplied with its own windmill, to use the motive power that wanders where it listeth on its roof top to turn wheels that will lift its elevators, generate electricity for its machinery, pump its water supply and do all that coal now makes possible in the machine room; sails on our factories, sails on our mills and in our shipyards to catch the slightest breath that blows and turn it into a means of moving the wheels of progress; wind power utilized everywhere as the servant of man, free for every one, working silently as a great force while the world sleeps. Possibly the exhaustion of the coal supply of the earth may turn out to be something of a blessing when it is considered how difficult and dangerous it is to wrest from the ground the hidden resources of nature for use as fuel, and how natural and easy it is to make the power of wind do the work now done by coal.

Then, in the great land changes of the coalless age I see vast fields of vegetation planted especially to serve as fuel. Each agriculturist will have his own reservation where the family fuel will be grown; a new industry will be born - the cultivation of fuel.

Water power will be largely useful, but the power to be derived from this source is not very great. Niagara is a vast force to look at, but measured in the horsepower it is not so tremendous. The tides cannot furnish any power worth speaking of; firewood must do much more.

ACHIEVEMENTS THAT HAVE MADE LORD KELVIN FAMOUS

He Established the Doctrine of the Conservation of Energy.
His Siphon Recorder Made Transatlantic Telegraphy Feasible-
Business Man and Able Politician

It is not exaggeration to say that no living scientist ranks higher than Lord Kelvin. His fame is world-wide. The savants of all countries recognize in him the

greatest of physicists, and the rare combinations of an abstruse thinker and a practical inventor.

Merely to mention a few of the directions in which he has achieved success is to show the extraordinary activity that has marked his career.

His fame as an electrician almost equals his eminence as a physicist. He is an unequaled mathematician, the inventor of a hundred valuable devices which are in daily use, a great teacher, an expounder of popular science, and a clever and successful politician.

What he has done in any one of these lines would suffice to make a proud reputation, and in addition he has found time to be a keen business man and to build up a considerable fortune.

And all this is the achievement of a man who started poor and had his own way to make practically without assistance.

Kelvin, then plain William Thomson, first became noted for the part he played in the invention and installation of the Atlantic cable.

This was in 1857. The greatest obstacle which had to be overcome before the system could be established was a certain sluggishness in the flow of the current which had the effect of making the message almost inaudible. Thomson promptly remedied this defect, and then set himself to the discovery of an instrument for taking down cable messages.

The result was the "siphon recorder", which is still in use throughout the world in all ocean telegraphy. With it as many as 130 words per minute have been sent, where two or three were formerly the rule.

Along the same line Kelvin also invented numerous instruments for measuring both strong and feeble currents. For his work in connection with the cable Thomson was knighted. Twenty-five years later, in 1892, he was elevated to the peerage as Lord Kelvin.

Even before his great success with the cable the young inventor had been recognized as a scientist of exceptional attainments. It is a fact, indeed, that he began doing great things when little more than a boy.

His chair as professor of natural philosophy at Glasgow he won when only 22 years of age. The attention of English scholars had been drawn to him at that time because of his mathematical prowess - he won ten prizes and wrote many important papers while at Cambridge.

For fifty-three years he held his chair at Glasgow, and the passing of the half century was signalized by a celebration in which the scientists of practically the whole world took part. It was a great spontaneous demonstration entirely without precedent or parallel.

The distinctive feature of Lord Kelvin's activities, the keynote to his career, so to speak, is his power of combining the abstract with the practical. Although a profound thinker and scholar, to whom the most advanced lines of human research are as simple as the alphabet to the ordinary layman, he has been the inventor of a legion of the little things that men need in their everyday lives. Not only has he dealt in theory, but he has done things.

His various measuring and testing devices have kept a firm of instrument makers in Glasgow busy for years.

Among these, probably the best known is his magnetic compass for the use of mariners. This was such a radical improvement on any existing instrument that it displaces the others, and still remains a factor of incalculable value in securing the safety of ocean travel.

Another important invention much used on ships is a deep-sea sounding apparatus, which permits what previously had never even been dreamed of, the taking of soundings in 100 fathoms from a ship running 16 knots.

Many of Lord Kelvin's researches have dealt with the doctrine of the conservation of energy. He was, indeed, one of the six or eight men, who, living in different countries and working in entire independence of each other, simultaneously established this important theory. Another subject which he has made a specialty, is the age of the earth, and his controversies with the extravagant claims of the geologists are renowned.

The present theory of the ether, the light-bearing, electricity-carrying something which fills all space, has been in large part his creation, and his famous idea that what we call matter is merely vortices or whirlpools in this ether may be regarded as one of the most far-reaching speculations in modern physics. The mechanical principle by which we obtain liquid air - that a compressed gas expanding freely, without doing work, cools slightly more than the theory demands - is a discovery Kelvin made in conjunction with his friend Joule.

So great an authority has Lord Kelvin become on all matters dealing with either speculative or practical science that in England he is called upon to pass on the practicability of almost every important scientific proposition that comes up for discussion.

His laboratory contains the best equipment in the world for making tests. The first storage batteries imported into England from France were sent to him for a verdict. When American capitalists conceived the plan of utilizing the power of Niagara Falls for commercial purposes and of transmitting it for distances, it was Lord Kelvin whom they placed at the head of the committee of experts which passed on the original plans.

Lord Kelvin's achievements as physicist, electrician and inventor would have made at least three eminent reputations. His marvelous works have not only been recognized by Great Britain, but nearly all the nations of Europe have showered their honors upon him. He is a member of the Prussian Order pour le Merite, grand officer of the Legion of Honor of France, commander of the Order of King Leopold of Belgium, order of the first class of Sacred Treasure of Japan, foreign associate of the Berlin Academy of Science, president of the Royal Society of England and many others. Fifteen universities have conferred on him the honor of their degrees.

EDISON, TESLA, ADMIRAL BRADFORD AND PROF. LANGLEY DISCUSS FROM THEIR POINTS OF VIEW HIS AMAZING PROPHECY

TESLA THINKS WIND POWER SHOULD BE USED MORE NOW - by Nikola Tesla

The power of the wind has been overlooked. Some day it will be forcibly brought to the position it deserves through the need of a substitute for the present method of generating power. Given a good breeze, I have estimated that there is as much as half a horse-power to every square foot of area exposed. Imagine what energy is left unused with all this force at hand.

The contrivance that has been at the disposal of mankind from all time, the windmill, is now seen in the rural districts only. The popular mind cannot grasp the power there is in the wind. Many a deluded inventor has spent years of his life in endeavoring to harness the tides, and some have even proposed to compress air by tide or wave power for supplying energy, never understanding the signs of the old windmill on the hill as it sorrowfully waves its arms about and bids them stop.

The fact is that the wave or tide motor would have but small chance of competing commercially with the windmill, which is by far the better machine, allowing a much greater amount of energy to be obtained in a simpler way.

Wind power has been in all times of inestimable value to man, if for nothing else than for enabling him to cross the seas, and it is even now a very important factor in transportation. But there are limitations in this simple method of utilizing the sun's energy. The machines are large for a given output and the power is intermittent, thus necessitating a storage of energy and increasing the cost of the plant. But there is no question as to its usefulness as a substitute for the energy derived from fuel, and the fact that this power is literally as free as air makes it a wonderful factor in the future of the world of industry.

Apart from the views expressed by Lord Kelvin regarding the future, when the coal supply shall have been exhausted, there is need of more attention being paid to it in the present day.

The man who cannot afford to have a furnace in his house may have a windmill on the roof. In this labor-saving age it is astonishing that farmers are the only citizens who call the wind their friend. Dwellers in cities toil up and down stairs hauling and carrying while above them is a good-natured giant who can do all this work for them if they will but force him into service. Why wait for the coal supply of the earth to be exhausted before enlisting the aid of this vast aerial force?

The power to run elevators, pump water to roof tanks, cool houses in the summer and heat them in the winter is above us, at any one's beck and call.

A little ingenuity will enable any householder to harness the wind and leave it to do the work that he has considered part of the curse of Adam.

SUN'S RAYS WILL BE HARNESSED, SUGGESTS PROFESSOR LANGLEY - by Professor S. P. Langley, of the Smithsonian Institution.

Lord Kelvin's suggestion of the return to wind as a motive power is pregnant of suggestion.

The problem is one that must engage the scientific mind until pressure of circumstances forces a solution. But, at the same time, while I do not wish to place myself in the position of flatly contradicting so eminent a thinker and student as his Lordship, I feel that his solution of the problem is but partial at the best, and that the true substitute for coal will be found in another direction.

The power that exists in the sun's rays will, in all probability, be the force that will drive the wheels of factories and propel ships and railroads. The tremendous energy that is stored in these rays has long been known to science and several practical attempts have been made to utilize them. As I have already pointed out in my work, "The New Economy," the idea is beginning to pass into the region of the practical utility, and is the form of the latest achievement of Mr. Ericsson's ever young genius is ready for actual work on an economical scale. His new solar engine, which there is every reason to believe is more efficient than Mouchot's would probably be capable of economical use for pumping water in the desert regions of our own country. We must consider the growing demand for power in the world and the fact that its stock of coal, though vast, is strictly limited in the sense that when it is gone we can get absolutely no more. The sun has been making a little every day for millions of years - so little and for so long that it is as though time had daily dripped a single penny into the bank for our credit for untold ages, until an enormous fund had been thus slowly accumulated in our favor. We are now drawing on this fund like a prodigal who thinks his means endless, but the day will come when our check will no longer be honored, and what shall we do then?

The exhaustion of some of the coal beds is an affair of the immediate future, by comparison with the vast period of time we have been speaking of. The English coal beds, it is asserted, will be quite used up in about three hundred years more.

Three hundred years ago the sun, looking down on the England of our forefathers, saw a fair land of green woods and quiet waters, a land unvexed with noisier machinery than the spinning wheel. Because of the coal which has been dug from its soil, he sees it now soot-blackened, furrowed with railway cuttings, covered with noisy manufactories, filled with grimy operatives, while the island shakes with the throb of coal-driven engines, and its once quiet waters are churned by the wheels of steamships. Many generations of men have passed to make the England of Elizabeth into the England of King Edward, but what a brief moment this is compared with the vast lapse of ages during which the coal was being stored! What a moment in the life of the "all-beholding sun", who in a few hundred years may send his beams through rents in the ivy-grown walls of deserted factories, upon silent engines brown with rust, while the mill hand has gone to other lands, the rivers are clean again, the harbors show only white sails and England's "black country" is green once more! To America, too, such a time may come, though at a more distant date.

Future ages may see the seat of empire transferred to regions of the earth now barren and desolated under intense solar heat - countries which, for that very cause, will not improbably become the seat of mechanical and hence of political power.

Whoever finds the way to make industrially useful, the vast sun power now wasted on the deserts of North Africa or the shores of the Red Sea will effect a greater change in men's affairs than any conqueror in history has done. He will once more people those waste places with the life that swarmed there in the best days of Carthage and of old Egypt, but under another civilization, where man no longer shall worship the sun as a god, but shall have learned to make it his servant.

EDISON PUTS OFF THE EVIL DAY FOR MORE THAN 50,000 YEARS - by Thomas A. Edison

I cannot altogether agree with Lord Kelvin as to the nearness of time when the fuel supply of the world will be exhausted.

There is wood enough in the forests of South America to supply the world with fuel for 50,000 years. Wood as fuel takes up more space than coal, but it must be remembered that we are constantly economizing on the amount of fuel necessary to do a given amount of work. The quantity of fuel used to run a locomotive is being reduced as the machine is perfected and the engineers learn to make the coal box smaller without reducing the speed of the engine. By the time the coal supply is exhausted it may be possible to burn wood with equally good results.

A windmill is a big cumbersome thing and I cannot think it possible that progressive men will settle down contented to go back to this primitive method of obtaining power. I have a windmill on my own property, but I never thought it amounted to much, except for pumping water. Wind power, as every schoolboy knows, can be used for generating electricity, but the horsepower thus obtained would not be adequate to the demands of this bustling age.

Additional energy could be obtained by ships at sea from the motion of the vessel being utilized as a generative agent. While the ship moves through the water, propelled by the force of the wind on its sails, the wave power could be caught up and turned into a means of providing electricity. Then, too, seamen will probably explain that the wind that drives a ship is not the only force to be obtained from the air. There are aerial currents that can be made use of by means of appropriate appliances for catching their force.

MAN'S WIT WILL SOLVE THE PROBLEM - by Rear Admiral R. B. Bradford

Rear Admiral R. B. Bradford, chief of the Bureau of Equipment, at Washington, regards the question of the future motive power from an extremely practical standpoint.

"Lord Kelvin," he said, "is a scientist, a great scientist, but I think he is borrowing trouble. The problem that is before us now is not what the motive power will be two hundred or three hundred years from to-day. It is how best may we conserve the energy we have already stored away in coal. The supply of this article is strictly limited, and its consumption is increasing in almost arithmetical ratio.

"Unless some force is discovered to replace it, we will soon be at the end of our resources. But it is also true that unless something is discovered to take the place of coal and steam, we shall be compelled to fall back in the end upon the two great forces of nature - the sun's rays and the wind. Both of these can be utilized to generate power, but the trouble with both is that they are variable.

"Power cannot, of course, be generated from the sun's rays at night, nor on a cloudy day, and we have periods of calm, when the wind is scarcely perceptible.

"On the other hand, to say what the power of the future will be is pure speculation and prophecy. I am no seventh son of a seventh son, and do not care to go into the prophesying business. But fifty years before the discovery of the steam engine or the discovery of coal, who would have dared to predict the present mechanical development of civilization?

"Something of the same sort may occur during the next fifty years. Some ingenious man may discover a force of nature that will entirely supersede steam. But this I can say, that unless such a discovery is made, the windmills will in time throw their arms to the breeze, and the solar engines will pump our water and drive our factories."

Electrical World and Engineer
Feb. 6, 1904, p. 256.

A STRIKING TESLA MANIFESTO

We reproduce herewith in slightly reduced facsimile the first page of a four-page circular which has been issued this week by Mr. Nikola Tesla in a large square envelope bearing a large red wax seal with the initials, "N.T." At the back of the page which we reproduce is given a list of 93 patents issued in this country to Mr. Tesla. The fourth page is blank. The third page has a little vignette of Niagara Falls and is devoted to quotations from various utterances of Mr. Tesla. The first of these is from his lecture delivered in 1893 before the Franklin Institute and the National Electric Light Association, as to transmission of intelligible signals and power to any distance without the use of wires. The second quotation is from his article on the problem of increasing human energy, which appeared in the *Century Magazine* in June, 1900, dealing with virtually the same subject. The third item quotes from his patents, Nos. 645,576 and 649,621, dealing with the transmission of electrical energy in any quantity to any distance, with transmitting and receiving apparatus movable as in ships or balloons. The circular is an extremely interesting one. It is most sumptuously got up on vellum paper and altogether constitutes a manifesto worthy of the original genius issuing it. It is to be gathered from the circular that Mr. Tesla proposes to enter the field of consulting engineership, in which he already has enjoyed an extensive connection here and abroad.

Reprinted with permission. Reprinted from Feb. 6, 1904, issue of *Electrical World*.
© Copyright 1904, McGraw-Hill, Inc. All rights reserved.

NIHIL IN BACCULO QUOD NON FUERIT IN CAPITE

Electrical oscillator activity ten million horsepower

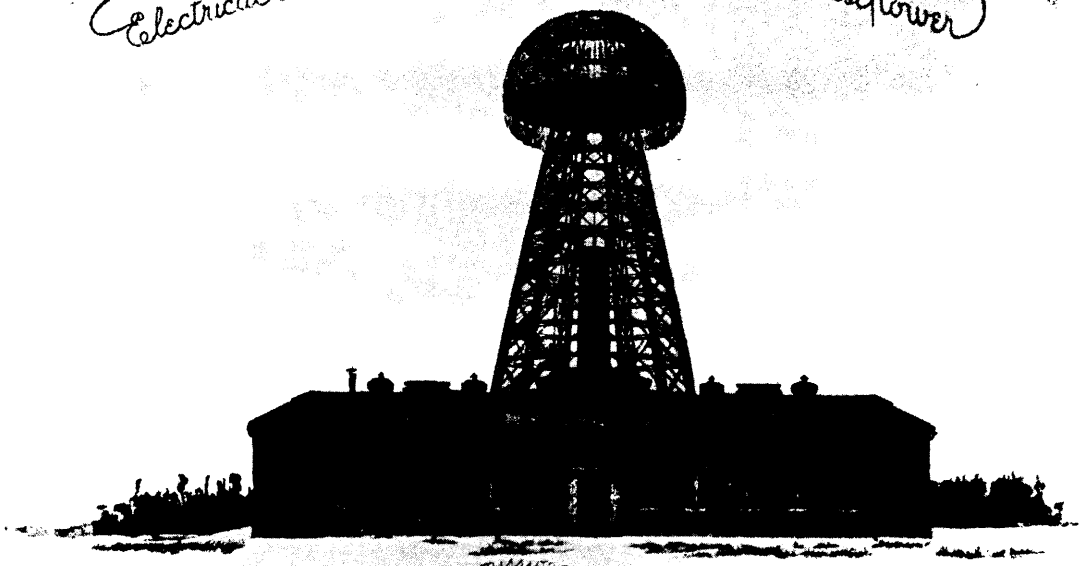

Power transmission without wires

New York, January 1, 1904

I wish to announce that in connection with the commercial introduction of my inventions I shall render professional services in the general capacity of consulting electrician and engineer.

The near future, I expect with confidence, will be a witness of revolutionary departures in the production, transformation and transmission of energy, transportation, lighting, manufacture of chemical compounds, telegraphy, telephony and other arts and industries.

In my opinion, these advances are certain to follow from the universal adoption of high-potential and high-frequency currents and novel regenerative processes of refrigeration to very low temperatures.

Much of the old apparatus will have to be improved, and much of the new developed, and I believe that while furthering my own inventions, I shall be more helpful in this evolution by placing at the disposal of others the knowledge and experience I have gained.

Special attention will be given by me to the solution of problems requiring both expert information and inventive resource—work coming within the sphere of my constant training and predilection.

I shall undertake the experimental investigation and perfection of ideas, methods and appliances, the devising of useful expedients and, in particular, the design and construction of machinery for the attainment of desired results.

Any task submitted to and accepted by me, will be carried out thoroughly and conscientiously.

Laboratory, Long Island, N. Y.
Residence, Waldorf, New York City.

Nikola Tesla

Burning atmospheric nitrogen by high frequency discharge twelve million volts

Secrecy in emergency and multiplicity of messages

New York Sun
November 27, 1904

Letter from Nikola Tesla:

"My attention has been called to numerous comments on my letter, published in your issue of November 1, and relating to the electrical equipment of the newly opened catacomb in this city. Some of them are based on erroneous assumptions, which it is necessary for me to correct.

"When I stated that my system was adopted, I did not mean that I originated every electrical appliance in the subway. For instance, the one which that ill-fated electrician was repairing when he was killed, two days after the catacomb was ready for public use, was not invented by me. Nor was that other device on the sidetracked car, which, as will be remembered, caused the burning of two men. I also must deny any connection with that switch or contrivance which was responsible for the premature death of a man immediately afterward, as well as with that other, which cut short the life of his unfortunate successor. None of these funeral devices, I emphatically state, or any of the other which brought on collisions, delays and various troubles and were instrumental in the loss of arms and legs of several victims, are of my invention, nor do they form, in my opinion, necessary appurtenances of an intelligently planned scheme for the propulsion of cars. Referring to these contrivances, it is significant to read in some journals of the 8th inst. that a small firm failed because their bid was too low. This is indicative of keen competition and sharp cutting of prices, and does not seem in keeping with the munificence claimed for the Interborough Company.

"I merely intended to say in my letter that my system of power transmission with three-phase generators and synchronous motor converters was adopted in the subway, the same as on the elevated road. I devised it many years ago for the express purpose of meeting the varied wants of a general electrical distribution of light and power. It has been extensively introduced all over the world because of its great flexibility, and under such conditions of use has been found of great value. But the idea of employing in this great city's main artery, in a case presenting such rigid requirements, this flexible system, offering innumerable chances for breakdowns, accidents and injuries to life and property, is altogether too absurd to dignify it with any serious comment. Here only my multiphase system, with induction motors and closed coil armatures - apparatus unfailing in its operation and minimizing the dangers of travel - should have been installed. Nothing, not even ignorance, will prevent its ultimate adoption; and the sooner the change is made the better it will be for all concerned. Personally, I have no financial or other interest in the matter, except that as a long resident of this city I would have been glad to see my inventions properly used to the advantage of the community. Under the circumstances I must forego this gratification.

"The consequences of the unpardonable mistake of the Interborough Company are not confined to this first subway or even to this city. We are driven to travel underground. The elevated road is the eighth wonder, as colossal and imposing in the feature of public forbearance as the Pyramid of Cheops in its dimensions. Sooner or later all interurban railways must be transformed into subterranean. This will call for immense investments of capital, and if defective electrical apparatus is generally adopted the damage to life and property will be incalculable, not to speak of inconvenience to the public.

"It seems proper to me to acknowledge on this occasion the painstaking suggestions of some friends of mine, mostly unknown to me, both in the large domain of electrical achievement and in the small sphere of my friendship, to again address

the American Institute. It is customary with scientific men to present an original subject only once. I have done so and do not desire to depart from this established precedent. A lecture on the defects of the subway offers great opportunities, but would not be original. In view of certain insinuations I may cite a recently published statement of Mr. C. F. Scott, formerly president of the American Institute: 'As a matter of history it is the Tesla principle and the Tesla system which have been the directing factors in modern electrical engineering practice.' There are but a few men whose acknowledgment of my own work I would quote. Mr. Scott is one of them, as the man whose co-operation was most efficient in bringing about the great industrial revolution through these inventions. But the suggestions of my good friends have fallen on fruitful ground, and should it be possible for me to spare time and energy I may ask the city authorities for power to investigate the subway, and make a sworn report to them on all the defects and deficiencies I may discover, in the interest of public welfare.

"A few more words in relation to the signs. With all due respect to general opinion, I entertain quite a different view on that subject. Advertising is a useful art, which is being lifted continually to a higher plane, and will soon be quite respectable. It should not be hampered, but rather encouraged. I would give the Interborough Company every facility for exploiting it, restricting it only in so far as the artistic execution is concerned. A commission of capable men comprising a painter, a sculptor, an architect, a literary man, an engineer and an executive business man might be appointed, to pass upon the merits of the signs submitted for acceptance. I do not see why the public should object to them if they were regulated in this manner. They will further business, make travel less tedious, and help many skillful artisans. The subways are bound to become municipal property, and the city will then derive a revenue from them. What is most important for the safety of life and property, quickness and security of travel, should be first considered. All this depends on the electrical equipment. The engineers have built a good tunnel, and proper apparatus should be installed to match it.

Nikola Tesla
New York, Nov. 26

Manufacturers' Record
Dec. 29, 1904, p. 583.

ELECTRIC AUTOS.

Ni(c)ola Tesla's View of the Future in Motive Power.

(Special Cor. *Manufacturers' Record.*)

New York, December 27

In view of the great interest which is being taken in the articles published by the Manufacturers' Record and some of the magazines on the development of new power-producers, through the internal-combusion engine, for use for transportation purposes both by land and sea, the following signed statement, made by Mr. Ni(c)ola Tesla after a discussion of a new type of auto-bus designed by Mr. Charles A. Lieb, mechanical engineer of the Manhattan Transit Co., will doubtless be read with much general interest:

New York, December 17

Mr. Albert Phenis, Special Correspondent Manufacturers' Record, New York:

Dear Sir - Replying to your inquiry of yesterday, the application of electricity to the propulsion of automobiles is certainly a rational idea. I am glad to know that Mr. Lieb has undertaken to put it into practice. His long experience with the General Electric Co. and other concerns must have excellently fitted him for the task.

There is no doubt that a highly-successful machine can be produced on these lines. The field is inexhaustible, and this new type of automobile, introducing electricity between the prime mover and the wheels, has, in my opinion, a great future.

I have myself for many years advocated this principle. Your will find in numerous technical publications statements made by me to this effect. In my article in the Century, June, 1900, I said, in dealing with the subject: 'Steamers and trains are still being propelled by the direct application of steam power to shafts or axles. A much greater percentage of the heat energy of the fuel could be transformed in motive energy by using, in place of the adopted marine engines and locomotives, dynamos driven by specially designed high-pressure steam or gas engines, by utilizing the electricity generated for the propulsion. A gain of 50 to 100 percent, in the effective energy derived from the fuel could be secured in this manner. It is difficult to understand why a fact so plain and obvious is not receiving more attention from engineers.

At first glance it may appear that to generate electricity by an engine and then apply the current to turn a wheel, instead of turning it by means of some mechanical connection with the engine, is a complicated and more or less wasteful process. But it is not so; on the contrary, the use of electricity in this manner secures great practical advantages. It is but a question of time when this idea will be extensively applied to railways and also to ocean liners, though in the latter case the conditions are not quite so favorable. How the railroad companies can persist in using the ordinary locomotive is a mystery. By providing an engine generating electricity and operating with the current motors under the cars a train can be propelled with greater speed and more economically. In France this has already been done by Heilman, and although his machinery was not the best, the results he obtained were creditable and encouraging. I have calculated that a notable gain in speed and economy can also be secured in ocean

liners, on which the improvement is particularly desirable for many reasons. It is very likely that in the near future oil will be adopted as fuel, and that will make the new method of propulsion all the more commendable. The electric manufacturing companies will scarcely be able to meet this new demand for generators and motors.

In automobiles practically nothing has been done in this direction, and yet it would seem they offer the greatest opportunities for application of this principle. The question, however, is which motor to employ - the direct-current or my induction motor. The former has certain preferences as regards the starting and regulation, but the commutators and brushes are very objectionable on an automobile. In view of this I would advocate the use of the induction motor as an ideally simple machine which can never get out of order. The conditions are excellent, inasmuch as a very low frequency is practicable and more than three phases can be used. The regulation should offer little difficulty, and once an automobile on this novel plan is produced its advantages will be readily appreciated.

Yours very truly,

N. Tesla.

Electrical World and Engineer
January 7, 1905, pp. 21-24

The Transmission of Electrical Energy Without Wires As a Means for Furthering Peace.

By NIKOLA TESLA.

UNIVERSAL PEACE, assuming it to be in the fullest sense realizable, might not require eons for its accomplishment, however probable this may appear, judging from the imperceptibly slow growth of all great reformatory ideas of the past. Man, as a mass in movement, is inseparable from sluggishness and persistence in his life manifestations, but it does not follow from this that any passing phase, or any permanent state of his existence, must necessarily be attained through a *stataclitic* process of development.

Our accepted estimates of the duration of natural metamorphoses, or changes in general, have been thrown in doubt of late. The very foundations of science have been shaken. We can no longer believe in the Maxwellian hypothesis of transversal ether-undulations and the literal truth of its corollaries. The practical utilization of electrical vibrations, this most important field of human endeavor, particularly in the advancement of philanthropy and peace, was in no small measure retarded by that fascinating illusion, which I since long hoped to dispel. I have noted with satisfaction the first signs of a change of scientific opinion. The brilliant discovery of the exceptionally "radio-active" substances, radium and polonium, by Mrs. Sklodowska Curie, has likewise afforded me much personal gratification, being an eclatant confirmation of my early experimental demonstrations, of electrified radiant streams of primary matter or corpuscular emanations (*Electrical Review*, New York, 1896-1897), which were then received with incredulity. They have awakened us from the poetical dream of an intangible conveyor of energy, weightless, structureless ether, to the plain, palpable reality of a ponderous medium of coarse particles, or bodily carriers of force. They have led us to a radically new interpretation of the changes and transformations we perceive. Enlightened by this recognition, we cannot say the sun is hot, the moon is cold, the star is bright, for all these might be purely electrical phenomena. If this be the case, then even our conceptions of time and space may have to be modified.

So, too, as regards the organic world, a similar revolution of thought is distinctly observable. In biological and zoological research the bold ideas of Haensel have found support in recent discoveries. A heretic belief in such possibilities as the artificial production of simple living material aggregates, the spontaneous natural creation of complex organisms and willful sex control, is gaining ground. We still brush it aside, but not with pedantic disdain as before. The fact is—our faith in the orthodox theory of slow evolution is being destroyed!

Thus a state of human life vaguely defined by the term "Universal Peace," while a result of cumulative effort through centuries past, might come into existence *quickly*, not unlike a crystal suddenly forms in a solution which has been slowly prepared. But just as no effect can precede its cause, so this state can never be *brought on* by any pact between nations, however solemn. Experience is made before the law is formulated, both are related like cause and effect.

Reprinted with permission. Reprinted from Jan. 7, 1905, issue of *Electrical World*.
© Copyright 1905, McGraw-Hill, Inc. All rights reserved.

So long as we are clearly conscious of the expectation, that peace is to result from such a parliamentary decision, so long have we a conclusive evidence that we are not fit for peace. Only then when we shall feel that such international meetings are mere formal procedures, unnecessary except in so far as they might serve to give definite expression to a common desire, will peace be assured.

To judge from current events we must be, as yet, very distant from that blissful goal. It is true that we are proceeding towards it rapidly. There are abundant signs of this progress everywhere. The race enmities and prejudices are decidedly waning. A recent act of His Excellency, the President of the United States, is significant in this respect. We begin to think cosmically. Our sympathetic feelers reach out into the dim distance. The bacteria of the "Weltschmerz," are upon us. So far, however, universal harmony has been attained only in a single sphere of international relationship. That is the postal service. Its mechanism is working satisfactorily, but—how remote are we still from that scrupulous respect of the sanctity of the mail bag! And how much farther again is the next milestone on the road to peace—an international judicial service equally reliable as the postal!

The coming meeting at the Hague, now indefinitely postponed, can only consider temporary expedients. General disarmament being for the present entirely out of question, a proportionate reduction might be recommended. The safety of any country and of the world's commerce depending not on the absolute, but relative amount of war material, this would be evidently the first reasonable step to take towards universal economy and peace. But it would be a hopeless task to establish an equitable basis of adjustment. Population, naval strength, force of army, commercial importance, water-power, or any other natural resource, actual or prospective, are equally unsatisfactory standards to consider.

In view of this difficulty a measure suggested by Carnegie might be adopted by a few strong countries to scare all the weaker ones into peace. But while for the time being such a course may seem advisable, the beneficial effects of this homœopathic treatment of the martial disease could hardly be lasting. In the first place, a coalition of the leading powers could not fail to create an organized opposition, which might result in a disaster all the greater as it was long deferred. The ultimate falling out of the virtuous, peace-dictating nations, as *certain* as the law of gravitation, should be all the more reckoned with, as it would be extremely demoralizing. Again, it is by no means demonstrated that any combination of a few powers would have sufficient authority.

To conquer by sheer force is becoming harder and harder every day. Defensive is getting continuously the advantage of offensive, as we progress in the satanic science of destruction. The new art of controlling electrically the movements and operations of individualized automata at a distance without wires, will soon enable any country to render its coasts impregnable against all naval attacks. It is to be regretted, in this connection, that my proposal to the United States Navy four years ago, to introduce this invention, did not receive the least encouragement. Also that my offer to Secretary Long to establish telegraphic communication across the Pacific Ocean by my wireless system was thrown in the naval waste basket in Washington, quite *sans façon*. At that time I had already announced in the *Century Magazine* of June, 1900, my successful "girdling" of the globe with electrical impulses (stationary waves), and my "telautomata" had been publicly exhibited. But that was not the fault of the naval officials, for then these inventions of mine were decried as bald, visionary schemes, loudest indeed by those who have since become Crœsuses of Promise—in "light" storage batteries, "Ocean" telephony and "transatlantic" wireless telegraphy, yet remained to this day—Sisyphuses of Attainment. Had only a few "telautomatic" torpedoes been constructed and adopted by our navy, the mere moral influence of this would have been powerfully and most beneficially felt in the present Eastern complication.

Not to speak of the advantages which might have been secured through the direct and instantaneous transmission of messages to our distant colonies and scenes of the present barbarous conflicts. Since advancing that principle, I have invented a number of improvements, making it possible to direct such a torpedo, submersible at will, from a distance much greater than the range of the largest gun, with *unerring* precision, upon the object to be destroyed. What is still more surprising, the operator will not need to see the infernal engine or even know its location, and the enemy will be unable to interfere, in the slightest, with its movements by any electrical means. One of these devil-telautomata will soon be constructed, and I shall bring it to the attention of governments. The development of this art must unavoidably arrest the construction of expensive battleships as well as land fortifications, and revolutionize the means and methods of warfare. The distance at which it can strike, and the destructive power of such a *quasi-intelligent* machine being for all practical purposes unlimited, the gun, the armor of the battleship and the wall of the fortress, lose their import and significance. One can prophesy with a Daniel's confidence that skilled electricians will settle the battles of the near future. But this is the least. In its effect upon war and peace, electricity offers still much greater and more wonderful possibilities. To stop war by the perfection of engines of destruction alone, might consume centuries and centuries. Other means must be employed to hasten the end. What are these to be? Let us consider.

Fights between individuals, as well as governments and nations, invariably result from misunderstandings in the broadest interpretation of this term. Misunderstandings are always caused by the inability of appreciating one another's point of view. This again is due to the ignorance of those concerned, not so much in their *own*, as in their *mutual* fields. The peril of a clash is aggravated by a more or less predominant sense of combativeness, possessed by every human being. To resist this inherent fighting tendency the best way is to dispel ignorance of the doings of others by a systematic spread of general knowledge. With this object in view, it is most important to aid exchange of thought and intercourse.

Mutual understanding would be immensely facilitated by the use of one universal tongue. But which shall it be, is the great question. At present it looks as if the English might be adopted as such, though it must be admitted that it is not the most suitable. Each language, of course, excels in some feature. The English lends itself to a terse, forceful expression of facts. The French is precise and finely distinctive. The Italian is probably the most melodious and easiest to learn. The Slavic tongues are very rich in sound but extremely difficult to master. The German is unequaled in the facility it offers for coining and combining words. A practical answer to that momentous question must perforce be found in times to come, for it is manifest that by adopting one common language the onward march of man would be prodigiously quickened. I do not believe that an artificial concoction, like Volapuk, will ever find universal acceptance, however time-saving it might be. That would be contrary to human nature. Languages have grown into our hearts. I rather look to the possibility of a reversion to the old Latin or Greek mother tongues, basing myself in this conclusion on the Spencerian law of rhythm. It seems unfortunate that the English-speaking nations, who are now fittest to rule the world, while endowed with extraordinary energy and practical intelligence, are singularly wanting in linguistic talent.

Next to speech we must consider permanent records of all kinds as a means for disseminating general information, or that knowledge of *mutual* endeavor which is chiefly conducive to harmony. Here the newspapers play by far the most important part. They are undoubtedly more effective than institutions of learning, libraries, museums and individual correspondence, all combined. The knowledge they convey is, on the whole, superficial anl sometimes defective, but it is poured out in a mighty stream that reaches

far and wide. Disregarding the force of electrical invention, that of journalism is the greatest in urging us to peace. Our schools are instrumental, mainly, in the furtherance of special thorough knowledge in our *own* fields, which is destructive of concordance. A world composed of crass specialists only would be perpetually at war. The diffusion of general knowledge through libraries and similar sources of information is very slow. As to individual correspondence, it is principally useful as an indispensable ingredient of the cement of commercial interest, that most powerful binding material between heterogeneous masses of humanity. It would be hard to overestimate the beneficial influence of the marvelous and precise art of photography, nor can that of other arts or means of recording be ignored. But a simple reflection will show that the peace-making force of all permanent, printed or other records, resides not in themselves. It must be sought elsewhere. This is also true of speech.

Our senses enable us to perceive only a minute portion of the outside world. Our touch, taste and smell, require actual contact. Our hearing extends to a small distance. Our sight is impeded by intervening bodies and shadows. To know each other we must reach beyond the sphere of our sense perceptions. We must transmit our intelligence, travel, transport the materials and transfer the energies necessary for our existence. Following this thought we now realize, forcibly enough to dispense with argument, that of all other conquests of man, without exception, that which is most desirable, which would be most helpful in the establishment of universal peaceful relations is—the complete *ANNIHILATION OF DISTANCE.*

To achieve this wonder, electricity is the one and only means. Inestimable good has already been done by the use of this all-powerful agent, the nature of which is still a mystery. Our astonishment at what has been accomplished would be uncontrollable were it not held in check by the expectation of greater miracles to come. That one, the greatest of all, can be viewed in three aspects: *Dissemination of intelligence, transportation, and transmission of power.*

Referring to the first, the present systems of telegraphic and telephonic communication are very limited in scope. The conducting channels are costly and of small working capacity. There is serious inductive disturbance, and storms render the service unsafe which, moreover, is too expensive: A vast improvement will be effected by placing the wires underground and insulating them artificially, by refrigeration. Their working capacity also could be indefinitely augmented by resorting to the new principle of "individualization," which I have more recently announced, permitting the simultaneous transmission of thousands of telegraphic and telephonic messages, without interference, over a single wire. The public would be already profiting from these great advances were it not for the stolid indifference of the leading companies engaged in the transmission of intelligence. But new concerns are springing into existence and the near future will witness a great transformation along these two lines of invention. The submarine cables are subject to still greater limitations. Some obstacles to rapid signaling, through them, seem insuperable. The attempts to overcome these have been numerous, but so far all have proved futile. The celebrated mathematician, O. Heaviside, and several able electricians following in his footsteps, have fallen into the singular error that rapid telegraphy and even telephony through ocean cables would be made practicable by the use of induction coils. Inductances might be to some extent helpful on comparatively short lines with thick paper insulation; on long lines insulated with rubber or gutta-percha they would be positively detrimental. Improvements will, undoubtedly, be made, but great electrostatic capacity and unavoidable loss of energy in the insulation and surrounding conductors will always restrict the usefulness of these delicate and precious nerves of commerce. Apart from all this, the transmission through artificial conductors is necessarily confined to a small number of stations.

It is therefore evident that the abolishment of all these drawbacks by the conveyance of signals or messages without wires, as I have undertaken in my "world" telegraphy and telephony, will be of the greatest moment in the furtherance of peace. The unifying influence of this advance will be felt all the more, as it will not only completely annihilate distance, but also make it possible to operate from a single "world" telegraphy plant, an unlimited number of receiving stations distributed all over the globe, and with equal facility, irrespective of location. Within a few years a simple and inexpensive device, readily carried about, will enable one to receive on land or sea the principal news, to hear a speech, a lecture, a song or play of a musical instrument, conveyed from any other region of the globe. The invention will also meet the crying need for cheap transmission to great distances, more especially over the oceans. The small working capacity of the cables and the excessive cost of messages are now fatal impediments in the dissemination of intelligence which can only be removed by transmission without wires.

The deficiencies of Hertzian telegraphy have created in the public mind the impression that exclusive or private messages without the use of artificial channels are impracticable. As a matter of fact, nothing could be more erroneous. Ever since its first appearance in 1891, I have denied the commercial possibilities of the system of signaling by Hertzian or electromagnetic waves, and my forecasts have been fully confirmed. It lends itself little to tuning, still less to the higher artifices of "individualization," and transmission to considerable distances is wholly out of the question. Portentous claims for this method of communication were made three years ago, but they have been unable to stand the hard, cruel test of time. Moreover, I have recently learned through the leading British electrical journal (*Electrician*, London, February 27, 1903), that some experimenters have abandoned all their own and have been "converted" to my methods and appliances, without my approval and officiation. I was both astonished and pained—astonished at the nonchalance and lack of appreciation of these men, pained at the inability exhibited in the construction and use of my apparatus. My high hopes raised by that excellent journal, however, are still to be realized, for I have ascertained that His Majesty the King of England, His Excellency the President of the United States, and other persons of exalted positions have, after all, not conferred upon me the imperishable honor of graciously condescending to the use of my coils, transformers and high-potential methods of transmission, but have exchanged their august greetings through the medium of a cable in the old-fashioned way. What has been actually achieved by Hertzian telegraphy can only be conjectured.

Quite different conditions exist in my system in which the electromagnetic waves or radiations are designedly minimized, the connection of one of the terminals of the transmitting circuit to the ground having, itself, the effect of reducing the energy of these radiations to about one-half. Under observance of proper rules and artifices the distance is of little or no consequence, and by skillful application of the principle of "individualization," repeatedly referred to the messages may be rendered both non-interfering and non-interferable. This invention, which I have described in technical publications, attempts to imitate, in a very crude way, the nervous system in the human body. It was the outcome of long-continued tests demonstrating the impossibility of satisfying rigorous commercial requirements by my earlier system, based on simple tuning, in which the selective quality is dependent on a single characteristic feature. In this later improvement the exclusiveness and non-interferability of impulses transmitted through a common channel result from cooperative association of a *number* of distinctive elements, and can be pushed as far as desired. In actual practice it is found that by combining only two vibrations or tones, a degree of privacy sufficient for most purposes is attained. When three vi-

brations are combined, it is extremely difficult, even for a skilled expert, to read or to disturb signals not intended for him, with four it is a vain undertaking. The probability of his getting the secret combinations at the right moments and in proper order, is much smaller than that of drawing an ambo, terno or quaterno, respectively, in a lottery. From experimental facts, I conclude that the invention will permit the simultaneous transmission of several millions of separately distinguishable messages through the earth, which, strangely enough, is in this respect much superior to an artificial conductor. This number ought to be sufficient to meet all the pressing necessities of intelligence transmission for at least one century to come. It is important to observe that but one "world" telegraphy plant, such as I am now completing, will have a greater working capacity than *all the ocean cables combined.* Once these facts are recognized this new art, which I am inaugurating, will sweep the world with the force of a uragan.

In transportation a great change is now going on. The trolley lines are being extended, the steam locomotive is making place for the electric motor. The ocean liners are adopting the turbine. Land travel is being improved by the automobile. The waterfalls are being harnessed and the energy used in the propulsion of cars. The advantages of first generating electricity by a prime mover, and then applying the current to produce mechanical motion, are being more and more appreciated. To the majority, this may appear a roundabout way of doing, but in reality it is as direct as the driving of a pulley from another by a belt. The idea is already being applied to railroads, and automobiles of this new type are making their appearance. The ocean vessels are bound to follow. An immense and virgin field will be thus opened up to the manufacturers of electric machinery. Effort towards saving time and money is characteristic of all modern methods of transportation. In many of these new developments, the artificial insulation of the high-tension mains by refrigeration will be very useful. However paradoxical, it is true, that by the use of this invention, power for all industrial purposes can be transmitted to distances of many hundreds of miles, not only without any loss, but with appreciable *gain* of energy. This is due to the fact that the conductor is much colder than the surrounding medium. The operativeness of this method is restricted to the use of a gaseous refrigerant, no known liquid permitting the attainment of a sufficiently low temperature of the transmission line. Hydrogen is by far the best cooling agent to employ. By its use electric railways can be extended to any desired distance. Owing to the smallness of ohmic loss, the objections to the multiphase system disappear and induction motors with closed coil armatures can be adopted. I find that even transmission through a submarine cable, as from Sweden to England, of great amounts of power is perfectly practicable. But the ideal solution of the problem of transportation will be arrived at only when the complete annihilation of distance in the transmission of power in large amounts shall have become a commercial reality. That day we shall invade the domain of the bird. When the vexing problem of aerial navigation, which has defied his attempts for ages, is solved, man will advance with giant strides.

That electrical energy can be economically transmitted without wires to any terrestrial distance, I have unmistakably established in numerous observations, experiments and measurements, qualitative and quantitative. These have demonstrated that it is practicable to distribute power from a central plant in unlimited amounts, with a loss not exceeding *a small fraction of one per cent.* in the transmission, even to the greatest distance, twelve thousand miles—to the opposite end of the globe. This seemingly impossible feat can now be readily performed by any electrician familiar with the design and construction of my "high-potential magnifying transmitter," the most marvelous electrical apparatus of which I have knowledge, enabling the production of effects of unlimited intensities

in the earth and its ambiant atmosphere. It is, essentially, a freely vibrating secondary circuit of definite length, very high self-induction and small resistance, which has one of its terminals in intimate direct or inductive connection with the ground and the other with an elevated conductor, and upon which the electrical oscillations of a primary or exciting circuit are impressed under conditions of resonance. To give an idea of the capabilities of this wonderful appliance, I may state that I have obtained, by its means, spark discharges extending through more than one hundred feet and carrying currents of one thousand amperes, electromotive forces approximating twenty million volts, chemically active streamers covering areas of several thousand square feet, and electrical disturbances in the natural media *surpassing* those caused by lightning, in itensity.

Whatever the future may bring, the universal application of these great principles is fully assured, though it may be long in coming. With the opening of the first power plant, incredulity will give way to wonderment, and this to ingratitude, as ever before. The time is not distant when the energy of falling water will be man's life energy. So far only about three million horse-power have been harnessed by my system of alternating-current transmission. This is little, but corresponds, nevertheless, to the adding of sixty million indefatigable laborers, working virtually without food and pay, to the world's population. The projects which have come to my own attention, however, contemplate the exploitation of water-powers aggregating something like one hundred and fifty million horse-power. Should they be carried out in a quarter of a century, as seems probable from present indications, there will be, on the average two such untiring laborers for every individual. Long before this consummation, coal and oil must cease to be important factors in the sustenance of human life on this planet. It should be borne in mind that electrical energy obtained by harnessing a waterfall is probably fifty times more effective than fuel energy. Since this is the most perfect way of rendering the sun's energy available, the direction of the future material development of man is clearly indicated. He will live on "white coal." Like a babe to the mother's breast will he cling to his waterfall. "Give us our daily waterfall," will be the prayer of the coming generations. *Deus futurus est deus aquae deiectus!*

But the fact that stationary waves are producible in the earth is of special and, in many ways, still greater significance in the intellectual development of humanity. Popularly explained, such a wave is a phenomenon generically akin to an echo—a result of reflection. It affords a positive and uncontrovertible experimental evidence that the electric current, after passing into the earth travels to the diametrically opposite region of the same and rebounding from there, returns to its point of departure with virtually undiminished force. The outgoing and returning currents clash and form nodes and loops similar to those observable on a vibrating cord. To traverse the entire distance of about twenty-five thousand miles, equal to the circumference of the globe, the current requires a certain time interval, which I have approximately ascertained. In yielding this knowledge, nature has revealed one of its most precious secrets, of inestimable consequence to man. So astounding are the facts in this connection, that it would seem as though the Creator, himself, had electrically designed this planet just for the purpose of enabling us to achieve wonders which, before my discovery, could not have been conceived by the wildest imagination. A full account of my discoveries and improvements will be given to the world in a special work which I am preparing. In so far, however, as they relate to industrial and commercial uses, they will be disclosed in patent specifications most carefully drawn.

As stated in a recent article (ELECTRICAL WORLD AND ENGINEER, March 5, 1904), I have been since some time at work on designs of a power plant which is to transmit ten thousand horse-power

without wires. The energy is to be collected all over the earth at many places and in varying amounts. It should not be understood that the practical realization of this undertaking is *necessarily* far off. The plans could be easily finished this winter, and if some preliminary work on the foundations could be done in the meantime the plant might be ready for operation before the close of next fall. We would then have at our disposal a unique and invaluable machine. Just this *one* oscillator would advance the world a century. Its civilizing influence would be felt even by the humblest dweller in the wilderness. Millions of instruments of all kinds, for all imaginable purposes, could be operated from that one machine. Universal time could be distributed by simple inexpensive clocks requiring no attention and running with nearly mathematical precision. Stock-tickers, synchronous movements and innumerable devices of this character could be worked in unison all over the earth. Instruments might be provided for indicating the course of a vessel at sea, the distance traversed, the speed, the hour at any particular place, the latitude and longitude. Incalculable commercial advantages could be thus secured and countless accidents and disasters avoided. Here and there a house might be lighted or some other work requiring a few horse-power performed. What is far more important than this, flying machines might be driven in any part of the world. They could be made to travel swiftly because of their small weight and great motive power. My intention would be to utilize this first plant rather as means of enlightenment, to collect its power in very small amounts, and at as many places as possible. The knowedge that there is throbbing through the earth energy readily available everywhere, would exert a strong stimulus on students, mechanics and inventors of all countries. This would be productive of infinite good. Manufacture would receive a fresh and powerful incentive. Conditions, such as never existed before in commerce, would be brought about. Supply would be ever inadequate to demand. The industries of iron, copper, aluminum, insulated wire and many others, could not fail to derive great and lasting benefits from this development.

The economic transmission of power without wires is of all-surpassing importance to man. By its means he will gain complete mastery of the air, the sea and the desert. It will enable him to dispense with the necessity of mining, pumping, transporting and burning fuel, and so do away with innumerable causes of sinful waste. By its means, he will obtain at any place and in any desired amount, the energy of remote waterfalls—to drive his machinery, to construct his canals, tunnels and highways, to manufacture the materials of his want, his clothing and food, to heat and light his home—year in, year out, ever and ever, by day and by night. It will make the living glorious sun his obedient, toiling slave. It will bring peace and harmony on earth.

Over five years have elapsed since that providential lightning storm on the 3d of July, 1899, of which I told in the article before mentioned, and through which I discovered the terrestrial stationary waves; nearly five years since I performed the great experiment which, on that unforgettable day, the dark God of Thunder mercifully showed me in his vast, awe-sounding laboratory. I thought then that it would take a year to establish commercially my wireless girdle around the world. Alas! my first "world telegraphy" plant is not yet completed, its construction has progressed but slowly during the past two years. And this machine I am *building* is but a plaything, an oscillator of a maximum activity of only ten million horse-power, just enough to throw this planet into feeble tremors, by sign and word—to telegraph and to telephone. *When* shall I see completed that first power plant, that big oscillator which I am *designing?* From which a current stronger than that of a welding machine, under a tension of one hundred million volts, is to rush through the earth! Which will deliver energy

at the rate of one thousand million horse-power—one hundred Falls of Niagara combined in one, striking the universe with blows—blows that will wake from their slumber the sleepiest electricians, if there be any, on Venus or Mars! . . . It is not a dream, it is a *simple feat of scientific electrical engineering,* only expensive—blind, faint-hearted, doubting world! . . . Humanity is not yet sufficiently advanced to be willingly led by the discoverer's keen searching sense. But who knows? Perhaps it is better in this present world of ours that a revolutionary idea or invention instead of being helped and patted, be hampered and ill-treated in its adolescence—by want of means, by selfish interest, pedantery, stupidity and ignorance; that it be attacked and stifled; that it pass through bitter trials and tribulations, through the heartless strife of commercial exisence. *So* do we get our light. So all that was great in the past was ridiculed, condemned, combatted, suppressed—only to emerge all the more powerfully, all the more triumphantly from the struggle.

Electrical World and Engineer
June 24, 1905, p. 1162

TESLA ON SUBWAY DANGERS

The New York *Sun* of June 16 printed the following letter from Mr. Nikola Tesla:

The flooding of the subway is a calamity apt to repeat itself. As your readers will remember, it did not occur for the first time last Sunday. Water, like fire, will break loose occasionally in spite of precautions. It will never be possible to guard against a casual bursting of a main; for while the conduit can be safely relied upon under normal working conditions, any accidental obstruction to the flow may cause a pressure which no pipe or joint can withstand.

In fact, if we are to place faith in the gloomy forecasts of Commissioner Oakley, who ought to know, such floods may be expected to happen frequently in the future. In view of this it seems timely to call to public attention a danger inherent to the electrical equipment which has been thrust upon the Interborough Company by incompetent advisers.

The subway is bound to be successful, and would be so if the cars were drawn by mules, for it is the ideal means of transportation in crowded cities. But the full measure of success of which it is capable will be attained only when the financiers shall say to the electric companies: "Give us the best, regardless of expense."

It is to be regretted that this important pioneering enterprise, in other respects ably managed and engineered, should have been treated with such gross neglect in its most vital feature. No opportunity was given to myself, the inventor and patentee of the system adopted in the subway and the elevated roads, for offering some useful suggestion, nor was a single electrician or engineer of the General Electric and Westinghouse companies consulted, the very men who should have been thought of first of all.

Once large sums of money are invested in a defective scheme it is difficult to make a change, however desirable it may be. The movement of new capital is largely determined by previous investment. Even the new roads now planned are likely to be equipped with the same claptrap devices, and so the evil will grow. "Das eben ist der Fluch der boesen Thut, das sie fortzeugend Boeses muss gebaeren."

The danger to which I refer lies in the possibility of generating an explosive mixture by electrolytic decomposition and thermic dissociation of the water through the direct currents used in the operation of the cars. Such a process might go on for hours and days without being noticed; and with currents of this kind it is scarcely practicable to avoid it altogether.

It will be recalled that an expert found the percentage of free oxygen in the subway appreciably above that which might reasonably have been expected in such a more or less stagnated channel. I have never doubted the correctness of that analysis and have assumed that oxygen is being continuously set free by stray currents passing through the moist ground. The total amperage of the normal working current in the tunnel is very great, and in case of flooding would be sufficient to generate not far from 100 cubic feet of hydrogen per minute. Inasmuch, however, as in railway operation the fuses must be set hard, in order to avoid frequent interruption of the service by their blowing out, in such an emergency the current would be of much greater volume and hydrogen would be more abundantly liberated.

Reprinted with permission. Reprinted from June 24, 1905, issue of *Electrical World*.
© Copyright 1905, McGraw-Hill, Inc. All rights reserved.

It is a peculiar property of this gas that it is capable of exploding when mixed with a comparatively large volume of air, and any engineer can convince himself by a simple calculation that, say, 100,000 cubic feet of explosive might be formed before the danger is discovered, reported and preventive measures taken. What the effect of such an explosion might be on life and property is not pleasant to contemplate. True, such a disaster is not probable, but the present electrical equipment makes it possible, and this possibility should be, by all means, removed.

The oppressiveness of the tunnel atmosphere is in a large measure due to the heat supplied by the currents, and to the production of nitrous acid in the arcs, which is enhanced by rarefaction of the air through rapid motion. Some provision for ventilation is imperative. But ventilation will not do away with the danger I have pointed out. It can be completely avoided only by discarding the direct current.

I should say that the city authorities, for this if for no other reason, should forbid its use by a proper act of legislation. Meanwhile, the owners of adjacent property should object to its employment, and the insurance companies should refuse the grant of policies on such property except on terms which it may please them to make.

English Mechanic and World of Science
July 14, 1905, p. 515.

TESLA'S REPLY TO EDISON.

Says "We Shall Soon be Talking Round the World".

As we said last week, Mr. Edison was reported to have said in an interview of the *New York World* that he did not believe with Tesla in being able to talk round the world, but that he thought Marconi would, sooner or later, perfect his system.

Nikola Tesla has replied. He says:-

In the course of certain investigations which I carried on for the purpose of studying the effects of lightning discharges upon the electrical condition of the earth I observed that sensitive receiving instruments arranged so as to be capable of responding to electrical disturbances created by the discharges at times failed to respond when they should have done so, and upon inquiring into the causes of this unexpected behavior I discovered it to be due to the character of the electrical waves which were produced in the earth by the lightning discharges, and which had nodal regions following at definite distances the shifting source of the disturbances. From data obtained in a large number of observations of the maxima and minima of these waves I found their length to vary approximately from twenty-five to seventy kilometres, and these results and theoretical deductions led me to the conclusion that waves of this kind may be propagated in all directions over the globe, and that they may be of still more widely differing lengths, the extreme limits being imposed by the physical dimensions and properties of the earth. Recognising in the existence of these waves an unmistakable evidence that the disturbances created had been conducted from their origin to the most remote portions of the globe, and had been thence reflected, I conceived the idea of producing such waves in the earth by artificial means, with the object of using them for many useful purposes for which they are or might be found applicable.

Beat Lightning Flashes.

This problem was rendered extremely difficult, owing to the immense dimensions of the planet, and consequently enormous movement of electricity or rate at which electrical energy had to be delivered in order to approximate, even in a remote degree, movements or rates which are manifestly attained in the displays of electrical forces in nature, and which seemed at first unrealizable by any human agencies; but by gradual and continuous improvements of a generator of electrical oscillations, which I have described in my Patents Nos. 645,576 and 649,621, I finally succeeded in reaching electrical movements or rates of delivery of electrical energy not only approximately, but, as shown in comparative tests and measurements, actually surpassing those of lightning discharges and by means of this apparatus I have found it possible to reproduce, whenever desired, phenomena in the earth the same as or similar to those due to such discharges. With the knowledge of the phenomena discovered by me, and the means at command for accomplishing these results, I am enabled, not only to carry out many operations by the use of known instruments, but also to offer a solution for many important problems involving the operation or control of remote devices which, for want of this knowledge and the absence of these means, have heretofore been entirely impossible. For example, by the use of such a generator of stationary waves and receiving apparatus properly placed and adjusted in any other locality, however remote, it is practicable to transmit intelligible signals, or to control or actuate at will any one or all of such apparatus for many other important and valuable purposes, as for indicating whenever desired the correct time of an observatory, or for ascertaining the relative position of a body or distance of the same with reference to the given point, or for determining the course of a moving object, such as a vessel at sea, the distance traversed by the same or its speed; or for producing many other useful effects at a distance dependent on the intensity, wavelength, direction or velocity of movements, or other feature or property of disturbances of this character.

A Bit of Sarcasm.

Permit me to say on this occasion that if there exist to-day no facilities for wireless telegraphic and telephone communication between the most distant countries, it is merely because a series of misfortunes and obstacles have delayed the consummation of my labours, which might have been completed three years ago. In this connection I shall well remember the efforts of some, unwise enough to believe that they can gain an advantage by throwing sand in the eyes of the people and retarding the progress of invention. Should the first messages across the seas prove calamitous to them, it will be a punishment regrettable but fully deserved.

New York *Sun*
July 16, 1905

TESLA ON THE PEARY NORTH POLE EXPEDITION.

To the Editor of the New York *Sun*:-

Everybody must have been pleased to learn that Commodore Peary has finally obtained the financial assistance which will enable him to start without further delay on his important journey. Let us wish the bold navigator the most complete success in his perilous undertaking, in the interest of humanity as well as for his own and his companions' sake and the gratification of the generous donors who have aided him. But, while voicing these sentiments, let us hope that Peary's will be the last attempt to reach the pole in this slow, penible and hazardous way.

We have already sufficiently advanced in the knowledge of electricity and its applications to avail ourselves of better means of transportation, enabling us to reach and to explore without difficulty and in a more perfect manner not only the North, but also the South Pole, and any other still unknown regions of the earth's surface. I refer to the facilities afforded in this respect by the transmission of electrical energy without wires and aerial navigation, which has found in the novel art its ideal solution.

Many of your readers will, no doubt, be under the impression that I am speaking merely of possibilities. As a matter of fact, from the principles involved and the experiments which I have actually performed, not only is the practical success of such distribution of power reduced to a degree of mathematical certitude, but the transmission can be effected with an economy much greater than possible by the present method involving the use of wires.

It would not take long to build a plant for purposes of aerial navigation and geographical research, nor would it cost as much as might be supposed. Its location would be perfectly immaterial. It might be at the Niagara, or at the Victorian Falls in Africa, without any appreciable difference in the power collected in a flying machine or other apparatus.

A popular error, which I have often opportunity to correct, is to believe that the energy of such a plant would dissipate itself in all directions. This is not so, as I have pointed out in my technical publications. Electricity is displaced by the transmitter in all directions, equally through the earth and the air; that is true, but energy is expended only at the place where it is collected and used to perform some work. To illustrate, a plant of 10,000 hp, such as I have been planning, might be running full blast at Niagara, and there might be but one flying machine, of, say, 50 hp operating in some distant place, the location being of absolutely no consequence. In this case 50 hp would be all the power furnished by the plant to the rest of the universe. Although the electrical oscillations would manifest themselves all over the earth, at the surface as well as high in the air, virtually no power would be consumed. My experiments have shown that the entire electrical movement which keeps the whole globe a-tremble can be maintained with but a few horsepower. Apart from the transmitting and receiving apparatus, the only loss incurred is the energy radiated in the form of Hertzian or electro-magnetic waves, which can be reduced to any entirely insignificant quantity.

I appreciate the difficulty which your non-technical readers must experience in comprehending the working of this system. To gain a rough idea, let them imagine the transmitter and the earth to be two elastic bags, one very small and the other immense, both being connected by a tube and filled with some incompressible fluid. A pump is provided for forcing the fluid from one into the other, alternately and in rapid succession. Now, to produce a great movement of the fluid in a bag of

such enormous size as the earth would require a pump so large that it would be a greater task to construct it than to build a thousand Egyptian pyramids. But there is a way of accomplishing this with a pump of very small dimensions. The bag connected to the earth is elastic, and when suddenly struck vibrates at a certain rate. The first artifice consists in so designing and adjusting the parts that the natural vibrations of the bag are in synchronism with the strokes of the pump. Under such conditions the bag is set into violent vibrations, and the fluid is made to rush in and out with terrific force. But the immense bag - the earth, is still comparatively undisturbed. Its size, however, does not exempt it from the laws of nature, and just as the small bag, so too the earth, responds to certain impulses. This fact I discovered in 1899.

The second artifice is to so adjust the transmitter that it will furnish these particular impulses. When all is properly done the large bag is thrown into spasms of vibration, and the effects are bewildering. But no power is yet transmitted, and all this colossal movement requires little energy to maintain. It is like an engine running without load.

Next let your readers imagine that at any place where it may be desired to deliver energy a small elastic bag, not unlike the first, is connected to the large one through a tube. The third artifice consists in so proportioning the parts that the attachment will be responsive to the impulse transmitted, this resulting in a great intensification of the vibration of the bag. Still the pump will not furnish power until these vibrations are made to do work of some kind.

To conduce to an understanding of the fourth artifice, that of "individualization," let your readers follow me a step further, and conceive the flow of energy to any point can be controlled from the place where the pump is located at will, and with equal facility and precision, regardless of distance, and, furthermore, through a device such as the combination lock of a safe, they will then have a crude idea of the processes involved. But only when they realize that all these and many other processes not mentioned, and related to one another like the links of a chain, are completed in a fraction of a second, will your readers be able to appreciate the magical potencies of electrical vibrations and form a conception of the miracles which a skilled electrician can perform by the use of these appliances.

I earnestly hope that in the near future the conditions will be favorable for the construction of a plant such as I have proposed. As soon as this is done it will be possible to adapt electrical motors to flying machines of the type popularized by Santos Dumont. There will be no necessity of carrying a generator or store of motive energy and consequently the machine will be much lighter and smaller. Owing to this and also to the greater power available for propulsion, the speed will be considerably increased. But a few of such machines, properly equipped with photographic and other appliances, will be sufficient to give us in a short time an exact knowledge of the entire earth's surface. It should be borne in mind, however, that for the ordinary uses of a single person a very small machine of not more than one-quarter horse-power, corresponding to the work of two men, would be amply sufficient so that when the first plant of 10,000 hp is installed, the commodity of aerial flight can be offered to a great many individuals all the world over. I can conceive of no improvement which would be more efficient in the furtherance of civilization than this.

N. TESLA

Harvard Illustrated
March, 1907

SIGNALLING TO MARS - A PROBLEM OF ELECTRICAL ENGINEERING.

By Nikola Tesla.

In the early part of 1900, still vividly impressed by certain observations, I had made shortly before, and feeling that the time had come to prepare the world for an experiment which will soon be undertaken, I dwelt on the practicability of interplanetary signalling in an article which appeared in the June number of *Century Magazine* of the same year. In order to correct an erroneous report which gained wide circulation, a statement was published in *Collier's Weekly* of Feb. 9, 1901, defining my position in general terms. Ever since, my thoughts have been centred on the subject, and my original conviction has been strengthened both by reflection and suggestion.

Chief among the stimulating influences was the revelatory work of Percival Lowell, described in a volume with which the observatory, bearing his name, has honored me. No one can look at his globe of Mars without a feeling of profound astonishment, if not awe. These markings, still imperfectly discerned and incomprehensible, but evidently intended for a useful purpose, may they not contain a record of deep meaning left by a superior race, perhaps extinct, to tell its young brethren in other worlds of secrets discovered, of life and struggle, of their own terrible fate? What mighty pathos and love in such a gigantic drama of the universe! But let us hope that the astronomer has seen true, that Mars is not a cold grave, but the abode of happy intelligent creatures, from whom we may learn. In the light of this glorious possibility, signalling to that planet presents itself as a preeminently practical proposition which, to carry out, no human sacrifice could be too great. Can it be done? What chance is there that it will be done?

These questions will be answered definitely the moment all doubt as to the existence of highly developed beings on Mars is dispelled. The straightness of the lines on Lowell's map, their uniform width and other geometrical peculiarities, do not, themselves, appeal to me as strong proofs of artificiality. I should think that a planet large enough not to be frozen stiff in a spasm of volcanic action, like our moon, must, in the course of eons, have all its mountains leveled, the valleys filled, the rocks ground to sand, and ultimately assume the form of a smooth spheroid, with all its rivers flowing in geodetically straight lines. The uniform width of the waterways can be consistently explained, their crossings, however odd and puzzling, might be accidental. But I quite agree with Professor Morse, that this whole wonderful map produces the absolute and irresistible conviction, that these "canals" owe their existence to a guiding intelligence. Their great size is not a valid argument to the contrary. It would merely imply that the Martians have harnessed the energy of waterfalls. We know of no other source of power competent to explain such tremendous feats of engineering. They could not be accomplished by capturing the sun's rays or abstracting heat imparted to the atmosphere, for this, according to our best knowledge, would require clumsy and inefficient machinery. Large falls could be obtained near the polar caps by extensive dams. While much less effective than our own, they could well furnish several billions of horse-power. It should be borne in mind that many Martian tasks in mechanical engineering are much easier than the terrestrial, on account of the smaller mass of the planet and lesser density, which, in the superficial layers, may be considerably below the mean. To a still greater degree this is

true of electrical engineering. Taking into account the space encompassed by Mars, a system of wireless transmission of energy, such as I have perfected, would be there much more advantageously applied, for, under similar conditions, a receiving circuit would collect sixteen times as much energy as on the earth.

The astonishing evidences furnished by Lowell are not only indicative of organic life, but they make it appear very probable that Mars is still populated; and furthermore, that its inhabitants are highly developed intelligent beings. Is there any other proof of such existence? I answer, emphatically, yes, prompted both by an instinct which has never yet deceived me, and observation. I refer to the strange electrical disturbances, the discovery of which I announced six years ago. At that time I was only certain that they were of planetary origin. Now, after mature thought and study, I have come to the positive conclusion that they must emanate from Mars.

Life, as a great philosopher has said, is but a continuous adjustment to the environment. Similar conditions must bring forth similar automata. We can have no idea what a Martian might be like, but he certainly has sensitive organs, much as our own, responsive to external stimuli. The indications of these instruments must be real and true. A straight line, a geometrical figure, a number, must convey to his mind a clear and definite conception. He ought to think and reason like ourselves. If he breathes, eats and drinks, he is moved by motives and desires not very different from our own. Such colossal transformation as is observable on the face of Mars could not have been wrought except by beings ages ahead of us in development. What wonder, then, if they have maps of this, our globe, as perfect as Professor Pickering's photographs of the moon? What wonder if they are signalling to us? We are sufficiently advanced in electrical science to know that their task is much easier than ours. The question is, can we transmit electrical energy to that immense distance? This I think myself competent to answer in the affirmative.

N. Tesla

English Mechanic and World of Science
March 8, 1907, pp. 107, 108

TUNED LIGHTNING
by Nikola Tesla

I read with interest an article in the *Sunday World* of Jan. 20 on "Tuned Lightning," described as a mysterious new energy, which is to turn every wheel on earth, and is supposed to have been recently discovered by the Danish inventors Waldemar Poulsen and P. O. Pederson.

From other reports I have gathered that these gentlemen have so far confined themselves to the peaceful production of miniature bolts not many inches long, and I am wondering what an account of their prospective achievements would read like if they had succeeded in obtaining, like myself, electrical discharges of 100 ft., far surpassing lightning in some features of intensity and power.

In view of their limited Jovian experience, the programme outlined by the Danish engineers is rather extensive, Lord Armstrong's vast resources notwithstanding. Naturally enough, I shall look with interest to their telephoning across the Atlantic, supplying light and propelling airships without wires. *Anch in suito pittore.* (I, too, am a painter.) In the mean time it may not be amiss to state here incidentally that all the essential processes of and appliances for the generation, transmission, transformation, distribution, storage, regulation, control, and economic utilisation of "tuned lightning" have been patented by me, and that I have long since undertaken, and am sparing no effort to render these advances instrumental in insuring the welfare, comfort, and convenience, primarily, of my fellow citizens.

There is nothing remarkable in the demonstration reported to have been made before Sir William Preece and Prof. Sylvanus P. Thompson, nor is there any novelty in the electrical devices employed. The lighting of arc lamps through the human body, the fusing of a piece of copper in mid-air, as described, are simple experiments which by the use of my high-frequency transformers any student of electricity can readily perform. They teach nothing new, and have no bearing on wireless transmission, for the actions virtually cease at a distance of a few feet from the source of vibratory energy. Years ago I gave exhibitions of similar and other much more striking experiments with the same kind of apparatus, many of which have been illustrated and explained in technical journals. The published records are open to inspection.

Regardless of all that, the Danish inventors have not as yet offered the slightest proof that their expectations are realisable, and before advancing seriously the claim that an efficient wireless distribution of light and power to great distances is possible, they should, at least, repeat those of my experiments which have furnished this evidence.

A scientific audience cannot help being impressed by a display of interesting phenomena, but the originality and significance of a demonstration such as that referred to can only be judged by an expert possessed of full knowledge and capable of drawing correct conclusions. A novel effect, spectacular and surprising, might be quite unimportant, while another, seemingly trifling, is of the greatest consequence.

To illustrate, let me mention here two widely different experiments of mine. In one the body of a person was subjected to the rapidly-alternating pressure of an electrical oscillator of two and a half million volts; in the other a small incandescent lamp was lighted by means of a resonant circuit grounded on one end, all the energy being drawn through the earth electrified from a distant transmitter.

The first presents a sight marvellous and unforgettable. One sees the experimenter standing on a big sheet of fierce, blinding flame, his whole body enveloped in a mass of phosphorescent wriggling streamers like the tentacles of an octopus. Bundles of light stick out from his spine. As he stretches out the arms, thus forcing the electric fluid outwardly, roaring tongues of fire leap from his fingertips. Objects in his vicinity bristle with rays, emit musical notes, glow, grow hot. He is the centre of still more curious actions, which are invisible. At each throb of the electric force myriads of minute projectiles are shot off from him with such velocities as to pass through the adjoining walls. He is in turn being violently bombarded by the surrounding air and dust. He experiences sensations which are indescribable.

A layman, after witnessing this stupendous and incredible spectacle, will think little of the second modest exhibit. But the expert will not be deceived. He realizes at once that the second experiment is ever so much more difficult to perform and immensely more consequential. He knows that to make the little filament glow, the entire surface of the planet, two hundred million square miles, must be strongly electrified. This calls for peculiar electrical activities, hundreds of times greater than those involved in the lighting of an arc lamp through the human body. What impresses him most, however, is the knowledge that the little lamp will spring into the same brilliancy anywhere on the globe, there being no appreciable diminution of the effect with the increase of distance from the transmitter.

This is a fact of overwhelming importance, pointing with certitude to the final and lasting solution of all the great social, industrial, financial, philanthropic, international, and other problems confronting humanity, a solution of which will be brought about by the complete annihilation of distance in the conveyance of intelligence, transport of bodies and materials, and the transmission of the energy necessary to man's existence. More light has been thrown on this scientific truth lately through Prof. Slaby's splendid and path-breaking experiment in establishing perfect wireless telephone connection between Naum and Berlin, Germany, a distance of twenty miles. With apparatus properly organised such telephonic communication can be effected with the same facility and precision at the greatest terrestrial distance.

The discovery of the stationary terrestrial waves, showing that, despite its vast extent, the entire planet can be thrown into resonant vibration like a little tuning fork; that electrical oscillations suited to its physical properties and dimensions pass through it unimpeded, in strict obedience to a simple mathematical law, has proved beyond the shadow of a doubt that the earth, considered as a channel for conveying electrical energy, even in such delicate and complex transmissions as human speech or musical composition, is infinitely superior to a wire or cable, however well designed.

Very soon it will be possible to talk across an ocean as clearly and distinctly as across a table. The first practical success, already forecast by Slaby's convincing demonstration, will be the signal for revolutionary improvements which will take the world by storm.

However great the success of the telephone, it is just beginning its evidence of usefulness. Wireless transmission of speech will not only provide new but also enormously extend existing facilities. This will be merely the forerunner of ever so much more important development, which will proceed at a furious pace until, by the application of these same great principles, the power of waterfalls can be focussed whenever desired; until the air is conquered, the soil fructified and embellished; until, in all departments of human life distance has lost its meaning, and even the immense gulf separating us from other worlds is bridged.

New York Times
March 20, 1907, p. 8, col. 5.

TESLA'S WIRELESS TORPEDO

Inventor Says He Did Show That it Worked Perfectly

To the Editor of *The New York Times:*

A report in the Times of this Morning says that I have attained no practical results with my dirigible wireless torpedo. This statement should be qualified. I have constructed such machines, and shown them in operation on frequent occasions. They have worked perfectly, and everybody who saw them was amazed at their performance.

It is true that my efforts to have this novel means for attack and defense adopted by our Government have been unsuccessful, but this is no discredit to my invention. I have spent years in fruitless endeavor before the world recognized the value of my rotating field discoveries which are now universally applied. The time is not yet ripe for the telautomatic art. If its possibilities were appreciated the nations would not be building large battleships. Such a floating fortress may be safe against an ordinary torpedo, but would be helpless in a battle with a machine which carries twenty tons of explosive, moves swiftly under water, and is controlled with precision by an operator beyond the range of the largest gun.

As to projecting wave-energy to any particular region of the globe, I have given a clear description of the means in technical publications. Not only can this be done by the use of my devices, but the spot at which the desired effect is to be produced can be calculated very closely, assuming the accepted terrestrial measurements to be correct. This, of course, is not the case. Up to this day we do not know a diameter of the globe within one thousand feet. My wireless plant will enable me to determine it within fifty feet or less, when it will be possible to rectify many geodetical data and make such calculations as those referred to with greater accuracy.

Nikola Tesla

New York, March 19, 1907

New York Times
March 26, 1907, p. 8, col. 7.

WIRELESS ON RAILROADS

Nikola Tesla Says It Is Perfectly Practical and Will Soon Be In Use.

To the Editor of *The New York Times:*

No argument is needed to show that the railroads offer opportunities for advantageous use of a practical wireless system. Without question, its widest field of application is the conveyance to the trains of such general information as is indispensable for keeping the traveler in touch with the world. In the near future a telegraphic printer of news, a stock ticker, a telephone, and other kindred appliances will form parts of the regular wireless equipment of a railroad train. Success in this sphere is all the more certain, as the new is not antagonistic, but, on the contrary, very helpful to the old. The technical difficulties are minimized by the employment of a transmitter the effectiveness of which is unimpaired by distance.

In view of the great losses of life and property, improved safety devices on the cars are urgently needed. But upon careful investigation it will be found that the outlook in this direction is not very promising for the wireless art. In the first place the railroads are rapidly changing to electric motive power, and in all such cases the lines become available for the operation of all sorts of signaling apparatus, of which the telephone is by far the most important. This valuable improvement is due to Prof. J. Paley, who introduced it in Germany eight years ago. By enabling the engineer or conductor of any train to call up any other train or station along the track and obtain full and unmistakable information, the liability of collisions and other accidents will be greatly reduced. Public opinion should compel the immediate adoption of this invention.

Those roads which do not contemplate this transformation might avail themselves of wireless transmission for similar purposes, but inasmuch as every train will require in addition to a complete outfit an expert operator, many roads may prefer to use a wire, unless a wireless telephone can be offered to them.

NIKOLA TESLA

New York, March 25, 1907

New York Times
May 2, 1907, p. 8, col. 6.

NI(C)OLA TESLA OBJECTS.

Thinks He Should Receive Credit for His Own Inventions.

To the Editor of *The New York Times:*

I have been much surprised to read in The Times of Sunday, April 21, that Admiral H. N. Manney, U.S.N. attributes a well-known invention of mine, a process for the production of continuous electrical oscillations by means of the electric arc and condenser, to Valentine Poulsen, the Danish engineer. This improvement has been embodied by me in numerous forms of apparatus identified with my name, and I have described it minutely in patents and scientific articles. To quote but one of many references, I may mention my experimental lecture on "Light and Other High-Frequency Phenomena," published under the auspices of the Franklin Association, for which both of these societies have distinguished me.

I share with Admiral Manney in the gratification that we are in the lead, and particularly that wireless messages have been transmitted from Pensacola to Point Lorne. Inasmuch, however, as this feat could not have been accomplished except by the use of some of my own devices, it would have been a graceful act on his part to bring this feat to the attention of the wireless conference. My theory has always been that military men are superior to civilians in courtesy. I have not been discouraged by the refusal of our Government to adopt my wireless system six years ago, when I offered it, not by the unpleasant prospect of my passing through the experiences described by Mark Twain in his story of the beef contract, but I see no reason why I should be deprived of a well-earned honor and satisfaction.

The Times has hurt me grievously; not by accusing me of commercialism, nor by its unkind editorial comments on those letters I wrote, in condemnation of my system of power transmission in the Subway. It is another injury, perhaps, unintentional, which I have felt most keenly.

The editor of The Times may not have known that I am a student of applied mathematics when he permitted a fellow student of mine to insinuate in The Times of

March 28 that I avail myself of inventions of others. I cannot permit such ideas to gain ground in this community, and, just to illuminate the situation, I shall quote from the leading electrical paper, *The London Electrician,* referring to some wireless plants of Braun and Marconi: "The spark occurs between balls in the primary circuit of a Tesla coil. The air wire***is in series with a Tesla transformer ***The generating plant is virtually a Poldhu in miniature. Evidently Braun, like Marconi, has been converted to the high-potential methods introduced by Tesla." Needless to add that this substitution of the old, ineffective Hertzian appliances for my own has not been authorized by me.

My fellow-student can rest assured that I am scrupulously respecting the rights of others. If I were not prompted to do so by a sense of fairness and pride I would be by the power I have of inventing anything I please.

N. TESLA

New York, April 30, 1907

English Mechanic and World of Science
May 3, 1907, p. 296.
(From the *New York World*)

TESLA'S TIDAL WAVE TO MAKE WAR IMPOSSIBLE.
by Nikola Tesla

Just at this time, when all efforts towards peaceful arbitration notwithstanding, the nations are preparing to expend immense sums in the design and construction of monstrous battleships, it may be useful to bring to the attention of the general public a singular means for naval attack and defense, which the telautomatic art has made possible, and which is likely to become a deciding factor in the near future.

A few remarks on this invention, of which the wireless torpedo is but a special application, are indispensable to the understanding and full appreciation of the naval principle of destruction.

The telautomatic art is the result of endeavours to produce an automaton capable of moving and acting as if possessed of intelligence and distinct individuality. Disconnected from its higher embodiment, an organism, such as a human being, is a heat - or thermodynamic engine - comprising:- (1) a complete plant for receiving, transforming, and supplying energy; (2) apparatus for locomotion and other mechanical performance; (3) directive organs; and (4) sensitive instruments responsive to external influences, all these parts constituting a whole of marvelous perfection.

The ambient medium is alive with movement and energy, in a state of unceasing agitation which is beyond comprehension. Strangely enough, to most of this terrible turmoil the human machine is insensible. The automaton does not feel the weight of the atmosphere crushing him with a force of 16 tons. He is unaffected by the shower of particles shooting through his body of cloud and the hurricane of finer substance rushing through him with the speed of light. He is unconcious that he is being whisked through space at the fearful rate of 70,000 miles an hour. But when gentle waves of light or sound strike him his eye and ear respond, his resonant nerve-fibres transmit the vibrations and his muscles contract and relax. Thus, like a float on a turbulent sea, swayed by external influences, he moves and acts. The average person is not aware of this constant dependence on his environment, but a trained observer has no difficulty in locating the primary disturbance which prompts

him into action, and continued exercise soon satisfies him that virtually all of his purely mechanical motions are caused by visual impressions, directly or indirectly received.

USING THE PRINCIPLES OF HUMAN ACTION.

A machine of such inconceivable complexity as the body of an organised being, capable of an infinite variety of actions, with controlling organs supersensitive, responsive to influences almost immaterial, cannot be manufactured by man; but the mechanical principles involved in the working of the living automaton are also applicable to an inanimate engine, however crude.

An automobile boat was first employed to carry out the idea. Its storage battery and motor furnished the power; the propeller and rudder, respectively, served as locomotive and directive organs, and a very delicate electrical device, actuated by a circuit tuned to a distant transmitter, took the place of the ear. This mechanism followed perfectly the wireless signals or comments of the operator in control of the transmitter, performing every movement and action as if it had been gifted with intelligence.

The next step was to individualise the machine. The attunement of the controlling circuits gave it a special feature, but this was not sufficiently distinctive. An individuality implies a number of characteristic traits which, though perhaps extant elsewhere, are unique in that particular combination. Here again the animated automaton, with its nerve-signal system, was coarsely imitated. The action of the delicate device - the ear - was made dependent on a number of sensitised receiving circuits, each recognisable by its own free vibrations, and all together by the character of their operative combination. Correspondingly the transmitter was designed to emit a wave-complex exactly matching the combination in the number and pitch of individual vibrations, their groupment and order of succession.

WONDERS OF THE NEW TELAUTOMATON.

That much is done, but more is to come. A mechanism is being perfected which without operator in control, left to itself, will behave as if endowed with intelligence of its own. It will be responsive to the faintest external influences and from these, unaided, determine its subsequent actions as if possessed of selective qualities, logic, and reason. It will perform the duties of an intelligent slave. Many of us will live to see Bulwer's dream realised.

The reader for whom the preceding short explanation of this novel art is intended may think it simple and easy of execution, but it is far from being so. It has taken years of study and experiment to develop the necessary methods and apparatus, and five inventions, all more or less fundamental and difficult to practise, must be employed to operate successfully and individualised telautomaton.

Such a novel engine of war - a vessel of any kind, submarine or aerial - carrying an agent of unlimited potency of destruction, with no soul aboard, yet capable of doing all it is designed for, as if fully equipped with a fearless crew in command of its captain, must needs bring on a revolution in the present means of attack and defence.

Since ages human ingenuity has been bent upon inventing infernal machines. Of these the modern cannon has been so far the most remarkable. A 12 in. gun charged with cordite is said to hurl a projectile of 850 lb. with the initial velocity of nearly 2,900 ft. per second, imparting to it the energy of 110,000,000 ft. lb. Were it not for the resistance of the air such a projectile would travel about fifty miles before striking the ground. It would take 3,300 H. P. more than a minute to accumulate its mechanical energy. Bear in mind, however, that all this energy is

imparted to the projectile while it is being urged through the gun-barrel with a mean force of 1,100 tons. If the barrel is 50 ft. long and the average velocity through it 1,500 ft. per second, the whole energy is transferred to a moving mass in 1/30th of a second; hence the rate of performance is 1,800 times the above-that is about 6,000,000 H.P. This seems wonderful indeed, but is nothing as compared with rates obtained by other means. Electricity can be stored in the form of explosive energy of a violence against which the detonation of cordite is but a breath. With a magnifying transmitter as diagrammatically illustrated, rates of 25,000,000 H.P. have already been obtained. A similar and much improved machine, now under construction, will make it possible to attain maximum explosive rates of over 800,000,000 H.P., twenty times the performance of the *Dreadnought's* broadside of eight 12 in. guns simultaneously fired. These figures are so incredible that astronomers unacquainted with the marvellous applicance have naturally doubted the practicability of signaling to Mars. In reality, by its means the seemingly visionary project has been reduced to a rational engineering problem.

The time is not far distant when all the tremendous wastes of war will be stopped, and then, if there are battles, they will be fought with water-power and electrical waves. That humanity is moving fast towards this realisation is evident from many indications.

What is most to be regretted in the present war *régime* is that the effort of so many exquisite intelligences must be uneconomically applied, since it cannot be entirely governed by the wavering struggle of opposing principles. This feverish striving to meet the instant demand, to create type after type, one to devour the other, to merge into one contrasting element, leads, like a nightmare, from one to another absurdity. Such a monstrosity is the latest creation of the naval constructor - a 20,000 ton battleship. In theory it is condemned by competent authorities.

Everything points to the development of a small vessel with internal combustion engines, extreme speed, and few weapons of great destructiveness. But the new leviathan is admirably adapted to the practical requirements of the day. In attack it could alone annihilate a nation's fleet. It is equally effective in defence. If equipped with proper acoustic and electrical appliances it has little to fear from a submarine, and an ordinary torpedo will scarcely hurt it. That is why the first of these monsters, built in England, has been name *Dreadnought*. Now, there is a novel means for attacking a fortress of this kind, from shore or on the high seas, against which all its gun-power and armour resistance are of no avail. It is the tidal wave.

WHAT THE TESLA TIDAL WAVE WILL DO.

Such a wave can be produced with twenty or thirty tons of cheap explosive, carried to its destination and ignited by a non-interferible telautomaton.

The tidal disturbance, as here considered, is a peculiar hydrodynamic phenomenon, in many respects different from the commonly occurring, characterised by a rhythmical succession of waves. It consists generally of but a single advancing swell succeeded by a hollow, the water if not otherwise agitated being perfectly calm in front and very nearly so behind. The wave is produced by some sudden explosion or upheaval, and is, as a rule, asymmetrical for a large part of its course. Those who have encountered a tidal wave must have observed that the sea rises rather slowly, but the descent into the trough is steep. This is due to the fact that the water is lifted, possibly very slowly, under the action of a varying force, great at first, but dying out quickly, while the raised mass is urged downward by the constant force of gravity. When produced by natural causes these waves are not very dangerous to ordinary vessels, because the disturbance originated at a great depth.

To give a fairly accurate idea of the efficacy of this novel means of destruction, particularly adapted for the coast defence, it may be assumed that thirty tons of nitro-glycerine compound, as dynamite, be employed to create the tidal disturbance. This material, weighing about twice as much as water, can be stored in a cubical tank 8 ft. each way, or a spherical vessel of 10 ft. diameter. The reader will now understand that this charge is to be entrusted to a non-interferible tel-automaton, heavily protected, and partly submerged or submarine, which is under perfect control of a skilled operator far away. At the propitious moment the signal is given, the charge sunk to the proper depth and ignited.

The water is incompressible. The hydrostatic pressure is the same in all directions. The explosion propagates through the compound with a speed of three miles a second. Owing to all this, the whole mass will be converted into gas before the water can give way appreciably, and a spherical bubble 10 ft. in diameter will form. The gaseous pressure against the surrounding water will be 20,000 atmospheres, or 140 tons per square inch. When the great bubble has expanded to twice its original volume it will weigh as much as the water it displaces, and from that moment on, its lower end tapering more and more into a cone, it will be driven up with a rapidly-increasing force tending towards 20,000 tons. Under the terrific impulsion it would shoot up the surface like a bullet were it not for the water resistance, which will limit its maximum speed to 80 ft. per second.

Consider not the quantity and energy of the upheaval. The caloric potential energy of the compound is 2,800 heat units per pound, or, in mechanical equivalent, almost 1,000 ft.-tons. The entire potential energy of the explosive will thus be 66,000,000 ft.-tons. Of course, only a part of this immense store is transformable into mechanical effort. Theoretically, 40 lb. of good smokeless powder would be sufficient to impart to the *Dreadnought's* 850 lb. projectile the tremendous velocity mentioned above, but it actually takes a charge of 250 lb. The tidal wave generator is a dynamic transformer much superior to the gun, its greatest possible efficiency being as high as 44 per cent. Taking, to be conservative, 38 per cent, instead, there will be the total potential store about 25 million foot-tons obtained in mechanical energy.

HOW THE ENEMY WOULD BE ENGULFED.

Othewise stated, 25,000,000 tons - that is, 860,000,000 cu. ft. of water, could be raised 1 ft., or a smaller quantity to a correspondingly greater elevation. The height and length of the wave will be determined by the depth at which the disturbance originated. Opening in the centre like a volcano, the great hollows will belch forth a shower of ice. Some sixteen seconds later a valley of 600 ft. depth, counted from normal ocean level, will form, surrounded by a perfectly circular swell, approximately of equal height, which will enlarge in diameter at the rate of about 220 ft. per second.

It is futile to consider the effect of such an eruption on a vessel situated near by, however large. The entire navy of a great country, if massed around, would be destroyed. But it is instructive to inquire what such a wave could do to a battleship of the Dreadnought type at considerable distance from it origin. A simple calculation will show that when the outer circle has expanded to three-quarters of a mile, the swell, about 1,250 ft. long, would still be more than 100 ft. in height, from crest to normal sea level, and when the circle is one and one-quarter mile in diameter the vertical distance from crest to trough will be over 100 ft.

The first impact of the water will produce pressures of three tons per square foot, which all over the exposed surface of, say, 20,000 sq. ft., may amount to 60,000 tons, eight times the force of the recoil of the broadside. That first

impact may in itself be fatal. During more than ten seconds the vessel will be entirely submerged and finally dropped into the hollow from a height of about 75 ft., the descent being effected more or less like a free fall. It will then sink far below the surface, never to rise.

N. Y. World
May 19, 1907

THE PEOPLE'S FORUM.

Mr. Tesla on the Wireless Transmission of Power.
To the Editor of The World:

I have enjoyed very much the odd prediction of Sir Hugh Bell, President of the Iron and Steel Institute, with reference to the wireless transmission of power, reported in The World of the 10th inst.

With all the respect due to that great institution I would take the liberty to remark that if its President is a genuine prophet he must have overslept himself a trifle. Sir Hugh would honor me if he would carefully peruse my British patent No. 8,200, in which I have recorded some of my discoveries and experiments, and which may influence him to considerably reduce his conservative estimate of one hundred years for the fulfillment of his prophecy.

Personally, basing myself on the knowledge of this art to which I have devoted my best energies, I do not hesitate to state here for future reference and as a test of accuracy of my scientific forecast that flying machines and ships propelled by electricity transmitted without wire will have ceased to be a wonder in ten years from now. I would say five were it not that there is such a thing as "inertia of human opinion" resisting revolutionary ideas.

It is idle to believe that because man is endowed with higher attributes his material evolution is governed by other than general physical laws. If the genius of invention were to reveal to-morrow the secret of immortality, of eternal beauty and youth, for which all humanity is aching, the same inexorable agents which prevent a mass from changing suddenly its velocity would likewise resist the force of the new knowledge until time gradually modifies human thought.

What has amused me still more, however, is the curious interview with Lewis Nixon, the naval contractor, printed in the World of the 11th inst. Is it possible that the famous designer of the Oregon is not better versed in editorial matters than some of my farming neighbors of Shoreham? One cannot escape that conviction.

We are not in the dark as regards the electrical energy contained in the earth. It is altogether too insignificant for any industrial use. The current circulating through the globe is of enormous volume but of small tension, and could perform but little work. Beside, how does Nixon propose to coax the current from the natural path of low resistance into an artificial channel of high resistance? Surely he knows that water does not flow up hill. It is absurd of him to compare the inexhaustible dynamic energy of wind with the magnetic energy of the earth, which is minute in amount and in a static condition.

The torpedo he proposes to build is not novel. The principle is old. I could refer him to some of my own suggestions of nine years ago. There are many practical difficulties in the carrying out of the idea, and as much better means for destroying a submarine are available it is doubtful that such a torpedo will ever be constructed.

Nixon has failed to grasp that in my wireless system the effect does not diminish with distance. The Hertz waves have nothing to do with it except that some of my apparatus may be used in their production. So too a Kohinoor might be employed to cut window-glass. And yet, the seeming paradox can be easily understood by any man of ordinary intelligence.

Imagine only that the earth were a hollow shell or reservoir in which the transmitter would compress some fluid, as air, for operating machinery in various localities. What difference would it make when this reservoir is tapped to supply the compressed fluid to the motor? None whatever, for the pressure is the same everywhere. This is also true of my electrical system, with all considerations in its favor. In such a mechanical system of power distribution great losses are unavoidable and definite limits in the quality of the energy transmitted exist. Not so in the electrical wireless supply. It would not be difficult to convey to one of our liners, say, 50,000 horsepower from a plant located at Niagara, Victoria or other waterfall, absolutely irrespective of location. In fact, there would not be a difference of more than a small fraction of one per cent, whether the source of energy be in the vicinity of the vessel or 12,000 miles away, at the antipodes.

NIKOLA TESLA
New York, May 16, 1907.

New York Times
June 23, 1907

CAN BRIDGE THE GAP TO MARS.

Nikola Tesla on His Wireless System for the Transmission of Energy.
To the Editor of the New York Times:

You have called me an "inventor of some useful pieces of electrical apparatus". It is not quite up to my aspirations, but I must resign myself to my prosaic fate. I cannot deny that you are right.

Nearly four million horse power of waterfalls are harnessed by my alternating current system of transmission, which is like saying that one hundred million men-untiring, consuming nothing, receiving no pay - are laboring to provide for one hundred million tons of coal annually. In this great city the elevated roads, the subways, the street railways are operated by my system, and the lamps and other electrical appliances get the current through machinery of my invention. And as in New York so all the world over where electricity is introduced. The telephone and incandescent lamp fill specific and minor demands, electric power meets the many general and sterner necessities of life. Yes, I must admit, however reluctantly, the truth of your unflattering contention.

But the greater commercial importance of this invention of mine is not the only advantage I have over my celebrated predecessors in the realm of the useful, who have given us the telephone and the incandescent lamp. Permit me to remind you that I did not have, like Bell, such powerful help as the Reis telephone, which reproduced music and only needed a deft turn of an adjusting screw to repeat the human voice; or such vigorous assistance as Edison found in the incandescent lamps of King and Starr, which only needed to be made of high resistance. Not at all. I had to cut the path myself, and my hands are still sore. All the army of my opponents and detractors was ever able to drum up against me in a fanatic contest has simmered down to a short article by an Italian - Prof. Ferraris - dealing with

an abstract and meaningless idea of a rotating magnetic pole and published years after my discovery, months even after my complete disclosure of the whole practically developed system in all its essential universally adopted features. It is a publication, pessimistic and discouraging, devoid of the discoverer's virility and force, devoid of results, utterly wanting in the faith and devotion of the inventor, a defective and belated record of a good but feeble man whose only response to my whole-souled brother greeting was a plaintive cry of priority - a sad contrast to the strong and equanimous Schallenberger, a true American engineer, who stoically bore the pain that killed him.

A fundamental discovery or original invention is always useful, but it is often more than that. There are physicists and philosophers to whom the marvelous manifestations of my rotating magnetic field, the suggestive phenomena of rotation without visible connection, the ideal beauty of my induction motor with its contactless armature, mean quite as much as the thousands of millions of dollars invested in enterprises of which it is the foundation.

And this is true of all my discoveries, inventions, and scientific results which I have since announced, for I have never invented what immediate necessity suggested, but what I found as most desirable to invent, irrespective of time. Let me tell you only of one - my "magnifying transmitter", a machine with which I have passed a current of one hundred amperes around the globe, with which I can make the whole earth loudly repeat a word spoken in the telephone, with which I can easily bridge the gulf which separates us from Mars. Do you mean to say that my transmitter is nothing more than a "useful piece of electrical apparatus"?

I do not wish to enlarge on this for obvious reasons. To be compelled by taciturn admirers to dwell on my own achievements is hurting my delicate sensibilities, but as I observe your heroic and increasing efforts in praising your paper, while your distinguished confreres maintain on its merits a stolid silence, I feel that there is, at least, one man in New York able to appreciate the incongeniality of the correspondence. Allow me to ask you just one or two questions in regard to a work which I began in 1892, inspired by a high tribute from Lord Rayleigh at the Royal Institution, most difficult labor which I have carried on for years, encouraged by the sympathetic interest and approval of Hemholtz, Lord Kelvin, and my great friends, Sir William Crookes and Sir James Dewar, ridiculed by small men whose names I have seen displayed in vulgar and deceptive advertisements. I refer to my system of wireless transmission of energy.

The principles which it involves are eternal. We are on a conducting body, insulated in space, of definite and unchangeable dimensions and properties. It will never be possible to transmit electrical energy economically through this body and its environment except by essentially the same means and methods which I have discovered, and the system is so perfect now that it admits of but little improvement. Since I have accepted as true your opinion, which I hope will not be shared by posterity, would you mind telling a reason why this advance should not stand worthily beside the discoveries of Copernicus? Will you state why it should not be ever so much more important and valuable to the progress and welfare of man?

We could still believe in the geocentric theory and yet advance virtually as we do. The work of the astronomer would suffer, for some of his deductions would rest on erroneous assumptions. But, after all, we shall never know the intimate nature of things. So long as our perceptions are accurate our logic will be true. No one can estimate to what an extent the great knowledge he conveyed has been instrumental in developing the power of our minds and furthering discovery and invention. Yet, it has left all the pressing material problems confronting us unsolved.

Now my wireless system offers practical solutions for all. The aerial navigation, which now agitates the minds, is only one of its many and obvious applications equally consequential. The waterfalls of this country alone, its greatest wealth, are adequate to satisfy the wants of humanity for thousands of years to come. Their energy can be used with the same facility to dig the Panama Canal as to operate the Siberian Railway or to irrigate and fertilize the Sahara. The Anglo-Saxon race has a great past and present, but its real greatness is in the future, when the water power it owns or controls shall supply the necessities of the entire world.

As to universal peace - if there is nothing in the order of nature which makes war indispensable to the safe and sane progress of man, if that utopian existence is at all possible, it can be only attained through this very means, for all international friction can be traced to but one cause - the immense extension of the planet. My system of wireless transmission completely annihilates distance in all departments of human activity.

If this does not appeal to you sufficiently to recognize in me a discoverer of principles, do me, at least, the justice of calling me an "inventor of some beautiful pieces of electrical apparatus."

NIKOLA TESLA

New York, June 21, 1907

New York Times
Oct. 19, 1907, p. 8, col. 5.

SLEEP FROM ELECTRICITY.

Nikola Tesla Noted Narcotic Influences of Periodic Currents in 1898.
To the Editor of The New York Times:

I have read with interest the reports in The Times of the 13th and 15th inst. referring to Prof. Leduc's discovery of causing sleep by electric means. While it is possible that he has made a distinct advance there is no novelty in the effect itself.

The narcotic influence of certain periodic currents was long ago discovered by me and has been pointed out in some of my technical publications, among which I may mention a paper on "High Frequency Oscillators for Electro Therapeutic and Other Purposes", read before the American Electro Therapeutic Association, Sept. 13, 1898. I have also shown that human tissues offer little resistance to the electric flow and suggested an absolutely painless method of electrocution by passing the currents through the brain. It is very likely that Prof. Leduc has taken advantage of the same general principles though he applies the currents in a different manner.

In one respect, however, my observations are at variance with those reported. From the special dispatch in The Times of the 13th inst. it would appear that sleep is induced the moment the currents are turned on, and that awakening follows as soon as the electrodes are withdrawn. It is, of course, impossible to tell how strong a current was employed, but the resistance of the head might have been, perhaps, 3,000 ohms, so that at thirty volts the current could have been only about 1-100 of an ampere. Now, I have passed a current of at least 5,000 times stronger through my head and did not lose consciousness, but I invariably fell into a lethargic sleep some time after. This fact impresses me with certain arguments of

Prof. Barker of Columbia University in your issue of Sept. 15.

I have always been convinced that electric anaesthesia will become practical, but the application of currents to the brain is so delicate and dangerous an operation that the new method will require long and careful experimentation before it can be used with certitude.

NIKOLA TESLA

New York, Oct. 16, 1907.

New York Times
Oct. 22, 1907, p. 8, col. 6.

POSSIBILITIES OF "WIRELESS"

Nikola Tesla Says Distance Forms No Obstacle to Transmission of Energy.
To the Editor of The New York Times:

In your issue of the 19th inst. Edison makes statements which cannot fail to create erroneous impressions.

There is a vast difference between primitive Hertzwave signalling, practicable to but a few miles, and the great art of wireless transmission of energy, which enables an expert to transmit, to any distance, not only signals, but power in unlimited amounts, and of which the experiments across the Atlantic are a crude application. The plants are quite inefficient, unsuitable for finer work, and totally doomed to an effect less than one percent of that I attained in my test in 1899.

Edison thinks that Sir Hiram Maxim is blowing hot air. The fact is my Long Island plant will transmit almost its entire energy to the antipodes, if desired. As to Martin's communication I can only say, that I shall be able to attain a wave activity of 800,000,000 horse power and a simple calculation will show, that the inhabitants of that planet, if there be any, need not have a Lord Raleigh to detect the disturbance.

Referring to your editorial comment of even date, the question of wireless interference is puzzling only because of its novelty. The underlying principle is old, and it has presented itself for consideration in numerous forms. Just now it appears in the novel aspects of aerial navigation and wireless transmission. Every human effort must of necessity create a disturbance. What difference is there in essence, between the commotion produced by any revolutionary idea or improvement and that of a wireless transmitter? The spectre of interference has been conjured by Hertzwave or radio telegraphy in which attunement is absolutely impossible, simply because the effect diminishes rapidly with distance. But to my system of energy transmission, based on the use of impulses not sensibly diminishing with distance, perfect attunement and the higher artifice of individualization are practicable. As ever, the ghost will vanish with the wireless dawn.

NIKOLA TESLA

New York, Oct. 21, 1907.

New York Daily Tribune
Oct. 25, 1907

TESLA ON WIRELESS.

Electrical Inventor Thinks Marconi's Plants Inefficient.

To the Editor of The Tribune:

Sir: In so far as wireless art is concerned there is a vast difference between the great inventor Thomas A. Edison and myself, integrally in my favor. Mr. Edison knows little of the theory and practice of electrical vibrations; I have, in this special field, probably more experience than any of my contemporaries. That you are not as yet able to impart your wisdom by wireless telephone to some subscriber in any other part of the world, however remote, and that the presses of your valuable paper are not operated by wireless power is largely due to your own effort and those of some of your distinguished confreres of this city, and to the efficient assistance you have received from my celebrated colleagues, Thomas A. Edison and Michael Pupin, assistant consulting wireless engineers. But it was all welcome to me. Difficulty develops resource.

The transmission across the Atlantic was not made by any device of Mr. Marconi's, but by my system of wireless transmission of energy, and I have already given notice by cable to my friend Sir James DeWar and the Royal Institution of this fact. I shall also request some eminent man of science to take careful note of the whole apparatus, its mode of operation, dimensions, linear and electrical, all constants and qualitative performance, so as to make possible its exact reproduction and repetition of the experiments. This request is entirely impersonal. I am a citizen of the United States, and I know that the time will come when my busy fellow citizens, too absorbed in commercial pursuits to think of posterity, will honor my memory. A measurement of the time interval taken in the passage of the signal necessary to the full and positive demonstration will show that the current crosses the ocean with a mean speed of 625,000 miles a second.

The Marconi plants are inefficient, and do not lend themselves to the practice of two discoveries of mine, the "art of individualization", that makes the message non-interfering and non-interferable, and the "stationary waves", which annihilate distance absolutely and make the whole earth equivalent to a conductor devoid of resistance. Were it not for this deficiency, the number of words per minute could be increased at will by "individualizing".

You have already commented upon this advance in terms which have caused me no small astonishment, in view of your normal attitude. The underlying principle is to combine a number of vibrations, preferably slightly displaced, to reduce further the danger of interference, active and passive, and to make the operation of the receiver dependent on the co-operative effect of a number of attuned elements. Just to illustrate what can be done, suppose that only four vibrations were isolated on each transmitter. Let those on one side be respectively a, b, c, and d. Then the following individualized lines would be ab, ac, ad, bc, bd, cd, abc, abd, acd, bcd and abcd. The same article on the other side will give similar combinations, and both together twenty-two lines, which can be simultaneously operated. To transmit one thousand words a minute, only forty-six words on each combination are necessary. If the plants were suitable, not ten years, as Edison thinks, but ten hours would be necessary to put this improvement into practice. To do this Marconi would have to construct the plants, and it will then be observed that the indefatigable Italian has departed from universal engineering customs for the fourth time.

NIKOLA TESLA
New York, Oct. 24, 1907

New York Times
Dec. 20, 1907, p. 4, col. 4.

MY APPARATUS, SAYS TESLA.

Confident, However, That Wireless Telephony is Entirely Possible.

To the Editor of the New York Times:

I have read with great interest the report in your issue of to-day that the Danish engineer, Waldemar Poulson, the inventor of the interesting device known as the "telegraphone", has succeeded in transmitting accurately wireless telephonic messages over a distance of 240 miles.

I have looked up the description of the apparatus he has employed in the experiment and find that it comprises:

(1) My grounded resonant transmitting circuit; (2) my inductive exciter; (3) the so-called "Tesla transformer"; (4) my inductive coils for raising the tension on the condenser; (5) my entire apparatus for producing undamped or continuous oscillations; (6) my concatenated tuned transforming circuits; (7) my grounded resonant receiving transformer; (8) my secondary receiving transformer. I note other improvements of mine, but those mentioned will be sufficient to show that Denmark is a land of easy invention.

The claim that transatlantic wireless telephone service will soon be established by these means is a modest one. To my system distance has absolutely no significance. My own wireless plant will transmit speech across the Pacific with the same precision and accuracy as across the table.

Nikola Tesla
New York, Dec. 19, 1907

WIRELESS TELEGRAPHY & TELEPHONY
By Walter W. Massie & Charles R. Underhill, 1908, pp. 67-71.

THE FUTURE OF THE WIRELESS ART

Mr. Nikola Tesla, in a recent interview by the authors, as to the future of the Wireless Art, volunteered the following statement which is herewith produced in his own words.

"A mass in movement resists change of direction. So does the world oppose a new idea. It takes time to make up the minds to its value and importance. Ignorance, prejudice and inertia of the old retard its early progress. It is discredited by insincere exponents and selfish exploiters. It is attacked and condemned by its enemies. Eventually, though, all barriers are thrown down, and it spreads like fire. This will also prove true of the wireless art.

"The practical applications of this revolutionary principle have only begun. So far they have been confined to the use of oscillations which are quickly damped out in their passage through the medium. Still, even this has commanded universal attention. What will be achieved by waves which do not diminish with distance, baffles comprehension.

"It is difficult for a layman to grasp how an electric current can be propagated to distances of thousands of miles without diminution of intention. But it is simple after all. Distance is only a relative conception, a reflection in the mind of

physical limitation. A view of electrical phenomena must be free of this delusive impression. However surprising, it is a fact that a sphere of the size of a little marble offers a greater impediment to the passage of a current than the whole earth. Every experiment, then, which can be performed with such a small sphere can likewise be carried out, and much more perfectly, with the immense globe on which we live. This is not merely a theory, but a truth established in numerous and carefully conducted experiments. When the earth is struck mechanically, as is the case in some powerful terrestrial upheaval, it vibrates like a bell, its period being measured in hours. When it is struck electrically, the charge oscillates, approximately, twelve times a second. By impressing upon it current waves of certain lengths, definitely related to its diameter, the globe is thrown into resonant vibration like a wire, stationary waves forming, the nodal and ventral regions of which can be located with mathematical precision. Owing to this fact and the spheroidal shape of the earth, numerous geodetical and other data, very accurate and of the greatest scientific and practical value, can be readily secured. Through the observation of these astonishing phenomena we shall soon be able to determine the exact diameter of the planet, its configuration and volume, the extent of its elevations and depressions, and to measure, with great precision and with nothing more than an electrical device, all terrestrial distances. In the densest fog or darkness of night, without a compass or other instruments of orientation, or a timepiece, it will be possible to guide a vessel along the shortest or orthodromic path, to instantly read the latitude and longitude, the hour, the distance from any point, and the true speed and direction of movement. By proper use of such disturbances a wave may be made to travel over the earth's surface with any velocity desired, and an electrical effect produced at any spot which can be selected at will and the geographical position of which can be closely ascertained from simple rules of trigonometry.

"This mode of conveying electrical energy to a distance is not 'wireless' in the popular sense, but a transmission through a conductor, and one which is incomparably more perfect than any artificial one. All impediments of conduction arise from confinement of the electric and magnetic fluxes to narrow channels. The globe is free of such cramping and hinderment. It is an ideal conductor because of its immensity, isolation in space, and geometrical form. Its singleness is only an apparent limitation, for by impressing upon it numerous non-interfering vibrations, the flow of energy may be directed through any number of paths which, though bodily connected, are yet perfectly distinct and separate like ever so many cables. Any apparatus, then, which can be operated through one or more wires, at distances obviously limited, can likewise be worked without artificial conductors, and with the same facility and precision, at distances without limit other than that imposed by the physical dimensions of the globe.

"It is intended to give practical demonstrations of these principles with the plant illustrated. As soon as completed, it will be possible for a business man in New York to dictate instructions, and have them instantly appear in type at his office in London or elsewhere. He will be able to call up, from his desk, and talk to any telephone subscriber on the globe, without any change whatever in the existing equipment. An inexpensive instrument, not bigger than a watch, will enable its bearer to hear anywhere, on sea or land, music or song, the speech of a political leader, the address of an eminent man of science, or the sermon of an eloquent clergyman, delivered in some other place, however distant. In the same manner any picture, character, drawing, or print can be transferred from one to another place. Millions of such instruments can be operated from but one plant of this kind. More important than all of this, however, will be the transmission of power, without wires, which will be shown on a scale large enough to carry conviction. These few indications will be sufficient to show that the wireless art offers greater possibilities than any invention or discovery heretofore made, and if the conditions are

favorable, we can expect with certitude that in the next few years wonders will be wrought by its application."

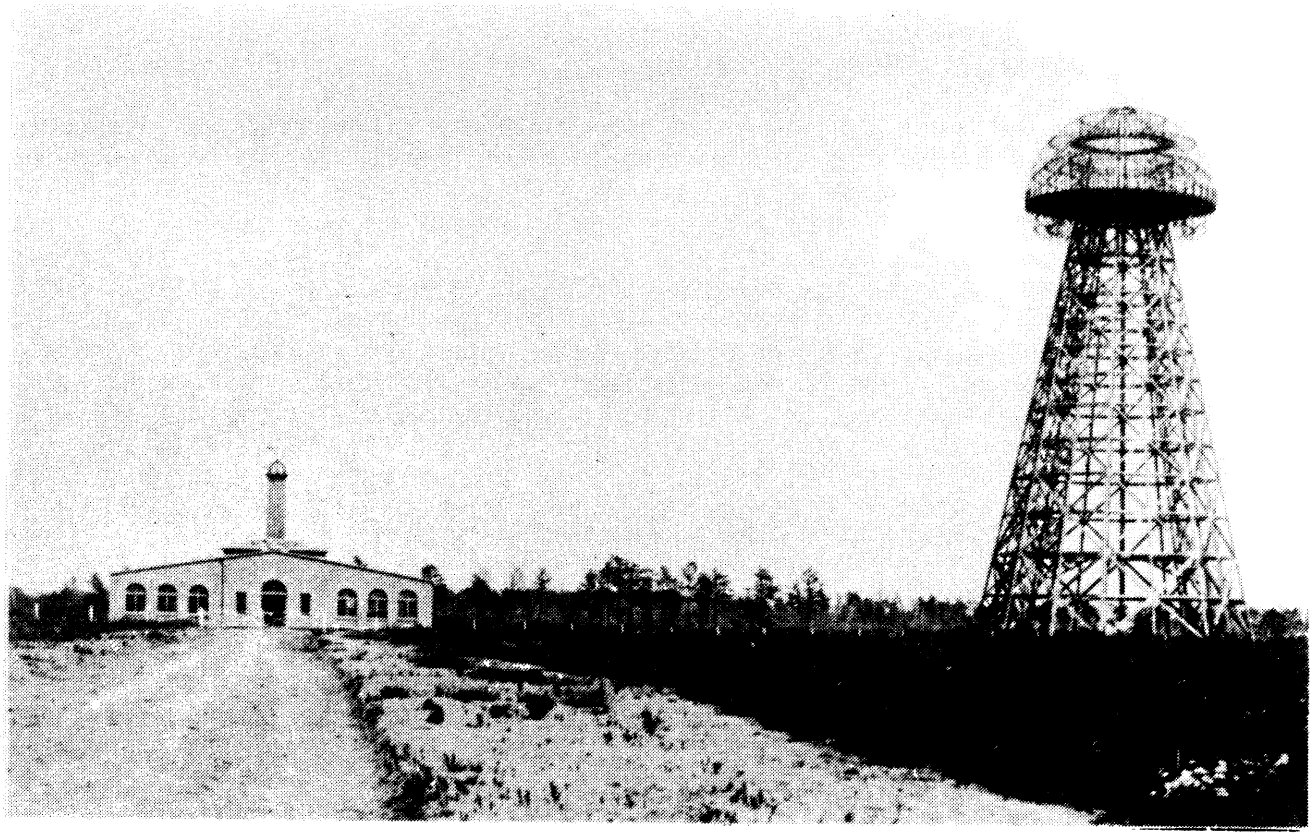

THE TESLA WIRELESS PLANT ON LONG ISLAND

N. Y. World
Jan. 5, 1908

NIKOLA TESLA'S FORECAST FOR 1908.

Aerial and Sea Navigation and Wireless Telegraphy to Make Astounding Strides.

To the Editor of The World:

A forecast - not a prophecy!

Constant and careful study of the state of things in this particular sphere enables an expert to make a forecast fairly accurate of the next state. The seemingly isolated events are to him but links of a chain. As a rule, the signs he notes are so pronounced that he can predict the changes about to take place with certitude. The performance is a mere banality as compared with the piercing view of the inspired into the distant future. This is a forecast - not a prophecy.

The coming year will be great in thought and result. It will mark the end of a number of erroneous ideas which, by their paralyzing effect on the mind, have throttled independent research and hampered progress and development in various departments of science and engineering.

The first to be dispelled is the illusion of the Hertz or electro-magnetic waves. The expert already realizes that practical wireless telegraphy and telephony are possible only by minimizing this wasteful radiation. The results recently attained in this manner with comparatively crude applicances illustrate strikingly the possibilities of the genuine art. Before the close of the year wireless transmission across the Pacific and trans-Atlantic wireless telephony may be expected with perfect confidence. The use of the wireless telephone in isolated districts will spread like fire.

The year will mark the fall of the illusionary idea that action must diminish with distance. By impressing upon the earth certain vibrations to which it responds resonantly, the whole planet is virtually reduced to the size of a little marble, thus enabling the reproduction of any kind of effect, as human speech, music, picture or character whatever, and even the transmission of power in unlimited amounts with exactly the same facility and economy at any distance, however great.

The next twelve months will witness a similar revolution of ideas regarding radio-activity. That there is no such element as radium, pollonium or ronium is becoming more and more evident. These are simply deceptive appearances of a modern phlogiston. As I have stated in my early announcement of these emanations before the discovery of Mme. Curie, they are emitted more or less by all bodies, and are all of the same kind - merely effects of shattered molecules, differentiated not by the nature of substance but by size, speed and electrification.

The coming year will dispel another error which has greatly retarded progress of aerial navigation. The aeronaut will soon satisfy himself that an aeroplane proportioned according to data obtained by Langley is altogether too heavy to soar, and that such a machine, while it will have some uses, can never fly as fast as a dirigible balloon. Once this is fully recognized the expert will concentrate his efforts on the latter type, and before many months are passed it will be a familiar object in the sky.

There is abundant evidence that distinct improvements will be made in ship propulsion. The numerous theories are giving place to the view that what propels the vessel is a reactive jet; hence the propeller is doomed in efficiency at high speed. A new principle will be introduced.

The World is invited to test the accuracy of this forecast at the close of the year.

NIKOLA TESLA

New York Times
April 21, 1908, p. 5, col. 6.

MR. TESLA'S VISION

How the Electrician's Lamp of Aladdin May Construct New Worlds.

To the Editor of the New York Times:

From a report in your issue of March 11, which escaped my attention, I notice that some remarks I made on the occasion referred to have been misunderstood. Allow me to make a correction.

When I spoke of future warfare I meant that it should be conducted by direct application of electrical waves without the use of aerial engines or other implements of destruction. This means, as I pointed out, would be ideal, for not only would the energy of war require no effort for the maintenance of its potentiality, but it would be productive in times of peace. This is not a dream. Even now wireless power plants could be constructed by which any region of the globe might be rendered uninhabitable without subjecting the population of other parts to serious danger or inconvenience.

What I said in regard to the greatest achievement of the man of science whose mind is bent upon the mastery of the physical universe, was nothing more than what I stated in one of my unpublished adresses, from which I quote: "According to an adopted theory, every ponderable atom is differentiated from a tenuous fluid, filling all space merely by spinning motion, as a whirl of water in a calm lake. By being set in movement this fluid, the ether, becomes gross matter. Its movement arrested, the primary substance reverts to its normal state. It appears, then, possible for man through harnessed energy of the medium and suitable agencies for starting and stopping ether whirls to cause matter to form and disappear. At his command, almost without effort on his part, old worlds would vanish and new ones would spring into being. He could alter the size of this planet, control its seasons, adjust its distance from the sun, guide it on its eternal journey along any path he might choose, through the depths of the universe. He could make planets collide and produce his suns and stars, his heat and light; he could originate life in all its infinite forms. To cause at will the birth and death of matter would be man's grandest deed, which would give him the mastery of physical creation, make him fulfill his ultimate destiny."

Nothing could be further from my thought than to call wireless telephony around the world "the greatest achievement of humanity" as reported. This is a feat which, however stupifying, can be readily performed by any expert. I have myself constucted a plant for this very purpose. The wireless wonders are only seeming, not results of exceptional skill, as popularly believed. The truth is the electrician has been put in possession of a veritable lamp of Aladdin. All he has to do is to rub it. Now, to rub the lamp of Aladdin is no achievement.

If you are desirous of hastening the accomplishment of still greater and further-reaching wonders you can do no better than by emphatically opposing any measure tending to interfere with the free commercial exploitation of water power and the wireless art. So absolutely does human progress depend on the development of these that the smallest impediment, particularly through the legislative bodies of this country, may set back civilization and the cause of peace for centuries.

Nikola Tesla
New York, April 19, 1908

New York Times
June 8, 1908 p. 6, col. 5

LITTLE AEROPLANE PROGRESS

So Says Nikola Tesla - But He is Working on One of His Own.

To the Editor of the New York Times:

It was not a little amusing to read a short time ago how the "great secret" of the aeroplane was revealed. By surrounding that old device with an atmosphere of mystery one gives life and interest to the report; but the plain fact is that all forms of aerial apparatus are well known to engineers, and can be designed for any specific duty without previous trials and with a fair degree of accuracy. The flying machine has materialized - not through leaps and bounds of invention, but by progress slow and imperceptible, not through original individual effort, but by a combination of the same forces which brought forth the automobile, and the motor-boat. It is due to the enterprise of the steel, oil, electrical, and other concerns, who have been instrumental in the improvement of materials of construction and in the production of high-power fuels, as well as to the untiring labors of the army of skilled but unknown mechanics, who have been for years perfecting the internal combustion engine.

There is no salient difference between the dirigible balloon of Renard and Krebs of thirty years ago and that of Santos Dumont with which the bold Brazilian performed his feats. The Langley and Maxim aerodromes, which did not soar, were in my opinion better pieces of mechanism than their very latest imitations. The powerful gasoline motor which has since come into existence is practically the only radical improvement.

So far, however, only the self-propelled machine or aerial automobile is in sight. While the dirigible balloon is rapidly nearing the commercial stage, nothing practical has as yet been achieved with the heavier-than-air machine. Without exception the apparatus is flimsy and unreliable. The motor, too light for its power, gives out after a few minutes run; the propeller blades fly off; the rudder is broken, and, after a series of such familiar mishaps, there comes the inevitable and general smash-up. In strong contrast with these unnecessarily hazardous trials are the serious and dignified efforts of Count Zeppelin, who is building a real flying machine, safe and reliable, to carry a dozen men and provisions over distances of thousands of miles, and with a speed far in excess of those obtained with aeroplanes.

The limits of improvement in the flying machine, propelled by its own power, whether light or heavy, are already clearly defined. We know very closely what we may expect from the ultimate perfection of the internal combustion engine, the resistances which are to be overcome, and the limitations of the screw propeller. The margin is not very great. For many reasons the wireless transmission of power is the only perfect and lasting solution to reach very high speeds.

In this respect many experts are mistaken. The popular belief that because the air has only one-hundredth the density of water, enormous velocities should be practicable. But it is not so. It should be borne in mind that the air is one hundred times more viscous than water, and because of this alone the speed of the flying machine could not be much in excess of a properly designed aqueous craft.

The aeroplanes of the Langley type, such as was used by Farman and others with some success, will hardly ever prove a practical aerial machine, because no provision is made for maintaining it in the air in a downward current. This and the perfect balance independently of the navigator's control is absolutely essential to the

success of the heavier-than-air machine. These two improvements I am myself endeavoring to embody in a machine of my own design.

Nikola Tesla
New York, June 6, 1908

New York Times
Sept. 15, 1908

TESLA ON AEROPLANES.

Says Successful Heavier-Than-Air Flier Will be Different.

To the Editor of The New York Times:

The chronicler of current events is only too apt to lose sight of the true perspective and real significance of the phases of progress he records. Naturally enough, his opinions on subjects out of the sphere of his special training are frequently defective, but this is inseparable from the very idea of journalism. If an editor were to project himself into the future and view the happenings of the present or of the past in their proper relations he would make a dismal failure of his paper.

The comments upon the latest performances with aeroplanes afford interesting examples in this respect. What is there so very different between a man flying half an hour and another, using a more powerful machine, an hour, or two, or three? To be sure, in one instance the supporting planes are larger and the gasoline tank bigger, but there is nothing revolutionary in these departures. No one can deny the merit of the accomplishments. The feats are certainly remarkable and of great educational value.

The majority of human beings are unreceptive to novel ideas. The practical demonstrator comes with forceful arguments which enlighten and convince. But they are nothing more than obvious consequences of what has preceded, steps in advance which, taken singly, are of no particular importance, but which, in their totality, make up the conquest of the world by the new idea. If any one stands out more strongly than the other it is merely because it chances to occur at the psychological moment, when incredulity and doubt are giving way to confidence and expectancy. Such work is often brilliant, never great, as some would make believe. To be great it must be original. Of such feature it is absolutely devoid.

Place any of the later aeroplanes beside that of Langley, their prototype, and you will not find as much as one decided improvement. There are the same old propellers, the same old inclined planes, rudders, and vanes - not a single notable difference. Some have tried to hide their "discoveries." It is like the hiding of an ostrich who buries his head in the sand. Half a dozen aeronauts have been in turn hailed as conquerors and kings of the air. It would have been much more appropriate to greet John D. Rockefeller as such. But for the abundant supply of high-grade fuel we would still have to wait for an engine capable of supporting not only itself but several times its own weight against gravity.

The capabilities of the Langley aerodrome have been most strikingly illustrated. Notwithstanding this, it is not a practical machine. It has a low efficiency of propulsion, and the starting, balancing, and alighting are attended with difficulties. The chief defect, however, is that it is doomed if it should encounter a downward gust of wind. The helicopter is in these respects much preferable, but is objectionable for other reasons. The successful heavier-than-air flier will be based on principles radically novel and will meet all requirements. It will soon

materialize, and when it does it will give an impetus to manufacture and commerce such as was never witnessed before, provided only that the Governments do not resort to the methods of the Spanish Inquisition, which have already proved so disastrous to the wireless art, the ideal means for making man absolute master of the air.

Ni(c)ola Tesla
New York, Sept. 13, 1908

New York Times
May 23, 1909, p. 10, col. 6,7.

HOW TO SIGNAL MARS

Wireless the Only Way Now, Says Nikola Tesla - Mirror Plans Not Practicable.

To the Editor of the New York Times:

Of all the evidence of narrow mindedness and folly, I know of no greater than the stupid belief that this little planet is singled out to be the seat of life, and that all other heavenly bodies are fiery masses or lumps of ice. Most certainly, some planets are not inhabited, but others are, and among these there must exist life under all conditions and phases of development.

In the solar system Venus, the Earth, and Mars represent respectively, youth, full growth, and old age. Venus, with its mountains rising dozens of miles into the atmosphere, is probably as yet unfitted for such existence as ours, but Mars must have passed through all terrestrial states and conditions.

Civilized existence rests on the development of the mechanical arts. The force of gravitation on Mars is only two-thirds of that on earth, hence all mechanical problems must have been much easier of solution. This is even more so of the electrical. The planet being much smaller, the contact between individuals and the mutual exchange of ideas must have been much quicker, and there are many other reasons why intellectual life should have been on that planet, phenomenal in its evolution.

To be sure, we have no absolute proof that Mars is inhabited. The straightness of the canals, which has been held out as a convincing indication to this effect, is not at all such. We can conclude with mathematical certitude that as a planet grows older and the mountains are leveled down, ultimately every river must flow in a geodetically straight line. Such straightening is already noticeable in some rivers of the earth.

Believes Mars Signaled Him.

But the whole arrangement of the so-called waterways, as pictured by Lowell, would seem to have been designed. Personally I base my faith on the feeble planetary electrical disturbances which I discovered in the summer of 1899, and which, according to my investigations, could not have originated from the sun, the moon, or Venus. Further study since has satisfied me that they must have emanated from Mars. All doubt in this regard will be soon dispelled.

To bring forth arguments why an attempt should be made to establish interplanetary communication would be a useless and ungrateful undertaking. If we had no other reason, it would be justified by the universal interest which it will command, and by the inspiring hopes and expectations to which it would give rise. I shall rather concentrate my efforts upon the examination of the plans proposed and the

description of a method by which this seemingly impossible task can be readily accomplished.

The scheme of signaling by rays of light is old, and has been often discussed, perhaps, more by that eloquent and picturesque Frenchman, Camille Flammarion, than anybody else. Quite recently Prof. W. H. Pickering, as stated in several issues of the New York Times, has made a suggestion which deserves careful examination.

The total solar radiation falling on a terrestrial area perpendicular to the rays amounts to eighty-three foot pounds per square foot per second. This activity measured by the adopted standard is a little over fifteen one-thousandth of a horse-power. But only about 10 per cent of this whole is due to waves of light. These, however, are of widely different lengths, making it impossible to use all in the best advantage, and there are specific losses unavoidable in the use of mirrors, so that the power of sunlight reflected from them can scarcely exceed 5.5 foot pounds per square foot per second, or about one one-hundredth of a horse-power.

A Giant Reflector Needed.

In view of this small activity, a reflecting surface of at least one-quarter million square feet should be provided for the experiment. This area, of course, should be circular to insure the greatest efficiency, and, with due regard to economy, it should be made up of mirrors rather small, such as to meet best the requirements of cheap manufacture.

The idea has been advanced by some experts that a small reflector would be as efficient as a large one. This is true in a degree, but holds good only in heliographic transmission to small distances when the area covered by the reflected beam is not vastly in excess of that of the mirror. In signaling to Mars, the effect would be exactly proportionate to the aggregate surface of the reflections. With an area of one-quarter million square feet the activity of the reflected sunlight, at the origin would be about 2,500 horse-power.

It scarcely need be stated that these mirrors would have to be ground and polished most carefully. To use ordinary commercial plates, as has been suggested, would be entirely out of the question, for at such an immense distance the imperfections of surface would fatally interfere with efficeincy. Furthermore, expensive clock work would have to be employed to rotate the reflectors in the manner of heliostats, and provision would have to be made for protection against destructive atmospheric influence. It is extremely doubtful that so formidable an array of apparatus could be produced for $10,000,000, but this is a consideration of minor importance to this argument.

Sight Unlimited in a Vacuum.

If the reflected rays were paralled and the heavenly bodies devoid of atmospheres, nothing would be simpler than signaling to Mars, for it is a truth accepted by physicists that a bundle of parallel rays, in vacuo, would illuminated an area with the same intensity, whether it be near or infinitely remote. In other words, there is no sensible loss in the transportation of radiant energy through interplanetary or vacuous space. This being the case, could we but penetrate the prison wall of the atmosphere, we could clearly perceive the smallest object on the most distant star, so inconceivably tenuous, frictionless, rigid, and elastic is the medium pervading the universe.

The sun's rays are usually considered to be parallel, and are virtually so through a short trajectory, because of the immense distance of the luminary. But the radiations, coming from a distance of 93,000,000 miles, emanate from a sphere 865,000 miles in diameter, and, consequently, most of them will fall on the mirrors at an angle less than 90 degrees, with the result of causing a corresponding

divergence of the reflected rays. Owing to the equality of the angles of incidence and reflection, it follows that if Mars were at half the sun's distance, the rays reaching the planet would cover an area of about one-quarter of that of the solar disc, or in round numbers, 147,000,000,000 square miles, which is nearly 16,400,000,000 times larger than that of the mirrors. This means that the intensity of the radiation received on Mars would be just that many times smaller.

To convey a definite idea, it may be stated that the light we get from the moon is 600,000 times feebler that that of the sun. Accordingly, even under these purely theoretical conditions the Pickering apparatus could do no more than produce an illumination 27,400,000 times feebler than that of the full moon, or 1,000 times weaker than that of Venus.

Atmosphere the Chief Obstacle.

The preceeding is based on the assumption that there is nothing in the path of the reflected rays except the tenuous medium filling all space. But the planets have atmospheres which absorb and refract. We see remote objects less distinctly, we perceive stars long after they have fallen below the horizon. This is due to absorption and refraction of the rays passing through the air. While these effects cannot be exactly estimated it is certain that the atmosphere is the chief impediment to the study of the heavens.

By locating our observatories one mile above sea level the quantity of matter which the rays have to traverse on their way to the planet is reduced to one-third. But, as the air becomes less dense, there is comparatively little gain to be derived from greater elevation. What chance would there be that the reflected rays, reduced to an intensity far below that estimated above, would produce a visible signal on Mars? Though I do not deny this possibility, all evidence points to the contrary.

Lowell, a trained and restless observer, who has made the study of Mars his specialty, and is working under ideal conditions, has been so far unable to perceive a light effect of the magnitude such as the proposed signaling apparatus might produce there. Phobos, the smaller of the two satellites of Mars - from seven to 10 miles in diameter - can only be seen at short intervals when the planet is in opposition. The satellite presents to us an area of approximately fifty square miles, reflecting sunlight at least as well as ordinary earth, which has little over one-twelfth of the power of a mirror.

Stated otherwise, an equivalent effect at that distance would be produced by mirrors covering four square miles, which means two square miles of the same reflectors if located on earth, as it receives sunlight of twice the intensity. Now this is an area 222 times larger than that of the ten million dollar reflector, and yet Phobos is hardly perceptible. It is true that the observation of the satellite is rendered difficult by the glare of its mother planet. But this is offset by the fact that it is in vacuum and that its rays suffer little diminution through absorption and refraction of the earth's atmosphere.

Mirror Signal Impossible Now.

What has been stated is thought sufficient to convince the reader that there is little to be expected from the plan under discussion. The idea naturally presents itself that mirrors might be manufactured which will reflect sunlight in parallel beams. For the time being this is a task beyond human power, but no one can set a limit to the future achievement of man.

Still more ineffective would be the attempt of signaling in the manner proposed by Dr. William R. Brooks and others, by artificial light, as the electric arc. In order to obtain a reflected light activity of 2,500 horsepower it would be necessary to install a power plant of not less than 75,000 horsepower, which, with its

turbines, dynamos, parabolic reflectors and other paraphernalia, would probably cost more than $10,000,000. While this method would permit operation at favorable times, when the earth is nearer to, and has its dark side turned toward Mars, it has the disadvantage of involving the use of reflected rays necessarily more divergent than those of the sun, it being impossible to construct mirrors of the required perfection and without their use the rays would be scattered to such an extent that the effect would be much smaller.

Reflecting surfaces of great extent can be had readily. Prof. R. W. Wood makes the odd suggestion of using the white alkali desert of the southwest for the purpose. Prof. E. Doolittle advises the employment of large geometric figures. In my opinion none of these suggestions is feasible. The trouble is, that the earth itself is a reflector, not efficient, it is true, but what it lacks in this respect is more than made up by the immensity of its area. To convey a perceptible signal in this manner it might require as much as 100 square miles reflecting surface.

Wireless Offers the Best Plan.

But there is one method of putting ourselves in touch with other planets. Though not easy of execution, it is simple in principle. A circuit properly designed and arranged is connected with one of its ends to an insulated terminal at some height and with the other to earth. Inductively linked with it is another circuit in which electrical oscillations of great intensity are set up by means now familiar to electricians. This combination of apparatus is known as my wireless transmitter.

By careful attunement of the circuits the expert can produce a vibration of extraordinary power, but when certain artifices, which I have not yet described are resorted to the oscillation reaches transcending intensity. By this means, as told in my published technical records, I have passed a powerful current around the globe and attained activities of many millions of horsepower. Assuming only a rate of 15,000,000, readily obtainable, it is 6,000 times more than that produced by the Pickering mirrors.

But, my method has other and still greater advantages. By its employment the electrician on Mars, instead of utilizing the energy received by a few thousand square feet of area, as in a parabolic reflector, is enabled to concentrate in his instrument the energy received by dozens of square miles, thus multiplying the effect many thousands of times. Nor is this all. By proper methods and devices he can magnify the received effect as many times again.

It is evident, then, that in my experiments in 1899 and 1900 I have already produced disturbances on Mars incomparably more powerful than could be attained by any light reflectors, however large.

Electrical science is now so far advanced that our ability of flashing a signal to a planet is experimentally demonstrated. The question is, when will humanity witness that great triumph. This is readily answered. The moment we obtain absolute evidences that an intelligent effort is being made in some other world to this effect, interplanetary transmission of intelligence can be considered an accomplished fact. A primitive understanding can be reached quickly without difficulty. A complete exchange of ideas is a greater problem, but susceptible of solution.

Nikola Tesla

Denver Rocky Mountain News
Jan. 16, 1910, Section 2, p. 4, cols. 4,5.

WHAT SCIENCE MAY ACHIEVE THIS YEAR

New Mechanical Principle for Conservation of Energy

The spread of civilization may be likened to that of fire: First, a feeble spark, next a flickering flame, then a mighty blaze, ever increasing in speed and power. We are now in this last phase of development.

Human activity has become so widespread and intense that years count as centuries of progress. There is no more groping in the dark or accidentally stumbling upon discoveries. The results follow one another like the links of a chain. Such is the force of the accumulated knowledge and the insight into natural laws and phenomena that future events are clearly projected before our vision. To foretell what is coming would be no more than to draw logical conclusions, were it not for the difficulty in accurately fixing the time of accomplishment.

The practical success of an idea, irrespective of its inherent merit, is dependent on the attitude of the contemporaries. If timely it is quickly adopted; if not, it is apt to fare like a sprout lured out of the ground by warm sunshine, only to be injured and retarded in its growth by the succeeding frost. Another determining factor is the amount of change involved in its introduction. To meet with instant success an invention or discovery must come not only as a rational, but a welcome solution. The year 1910 will mark the advent of such an idea. It is a new mechanical principle.

Since the time of Archimedes certain elementary devices were known, which were finally reduced to two, the lever and the inclined plane. Another element is to be added to these, which will give rise to new conceptions and profoundly affect both the practical and theoretical science of mechanics.

This novel principle is capable of embodiment in all kinds of machinery. It will revolutionize the propulsion apparatus on vessels, the locomotive, passenger car and the automobile. It will give us a practical flying machine entirely different from those made heretofore in operation and control, swift, small and compact and so safe that a girl will be able to fly in it to school without the governess. But the greatest value of this improvement will be in its application in a field virtually unexplored and so vast that it will take decades before the ground is broken. It is the field of waste.

We build but to tear down. Most of our work and resource is squandered. Our onward march is marked by devastation. Everywhere there is an appalling loss of time, effort and life. A cheerless view, but true. A single example out of many will suffice for illustration.

The energy necessary to our comfort and safe existence is largely derived from coal. In this country alone nearly one million tons of the life-sustaining material are daily extracted from the bowels of the earth with pain and sacrifice. This is about seven hundred tons per minute, representing a theoretical activity of, say, four hundred and fifty-million horsepower. But only a small percentage of this is usefully applied.

In heating, most of the precious energy escapes through the flue. The chimneys of New York City puff out into the air several million horsepower. In the use of coal for power purposes, we hardly capture more than 10 percent. The exhaust of engines carries off more energy than obtained from live steam.

In many modern plants the power has been actually doubled by obviating this waste.

but the machinery employed is cumbersome and expensive. The manufacture of light is in a barbarous state of imperfection, and this may also be said of many industrial processes. Consider just one case, the manufacture of iron and steel.

America produces approximately 30,000,000 tons of pig iron per year. Each ton of iron requires about one and a half tons of coal, hence, in providing the iron market, 70,000,000 tons of coal per annum, or 133 tons per minute, are consumed. In the manufacture of coke a ton of coal yields, roughly, 10,000 cubic feet of gas of a mean heating capacity of 600 heat units per cubic foot.

Bearing in mind that 133 tons are used per minute, the total heat units developed in that time would be 798,000,000, the mechanical equivalent of which is about 19,000,000 horsepower. By the use of the new principle 7,000,000 horsepower might be rendered available. A furnace of 200 tons produces approximately 17,000 cubic feet of gas per minute of heat value of 100 units, corresponding to a theoretical performance of 40,000 horsepower, of which not less than 13,000 might be utilized in the improved apparatus referred to. The power derived by this method from all blast furnaces in the United States would be considerably above 5,000,000 horsepower.

The preceding figures, which are conservative, show that it would be possible to obtain 12,000,000 horsepower merely from the waste gasses in the iron and steel manufacture. The value of this power, fairly estimated, is $180,000,000 per annum, and it must be made worth much more by systematic exploitation.

A part of the power could be advantageously employed for operating the blowers, rollers and other indispensable machinery and supplying electricity for smelting, steel making and other purposes. The bulk might be used in the manufacture of nitrates, aluminum, carbides and ice. The production of nitrates would be particularly valuable from the point of view of national economy. Assuming that 5,000,000 horsepower were apportioned for that purpose, the annual yield would be not less than 10,000,000 tons of concentrated nitric compound, adequate to fertilizing 40,000,000 acres of land. A great encouragement would be given to agriculture and the condition of the steel and iron workers ameliorated by offering to them a fertilizer at a reduced rate, thus enabling them to cultivate their farms with exceptional profit. Other conveniences and necessities, as light, power, ice and ozonized water could be similarly offered and numerous other improvements, both to the advantage of capital and labor, carried out.

To appreciate the above it should be borne in mind that the iron and steel industry is one of the best regulated in the world. In many other fields the waste is even greater. For example, in the operation of steam railroads, not less than 98 per cent of the total energy of coal burned is lost. An enormous saving could be effected by replacing the present apparatus with new gas turbines and other improved devices for transmitting and storing mechanical energy. A study of this subject will convince that for the time being, at least, there is more opportunity for invention in the utilization of waste than in the opening up of new resources.

N. Tesla

Modern Electrics
May, 1912 p. 126

MR. TESLA ON THE FUTURE

On Tesla Day, at the Northwest Electric Show, held at Minneapolis, Minn., March 16th to 23rd, Mr. Tesla sent, through Archbishop Ireland, the following message to the people of the Twin Cities and the Northwest:

New York, N. Y., March 18, 1912. His Grace, The Most Reverend Archbishop Ireland:

I bespeak your Grace's far-famed eloquence in voicing sentiments and ideas to which I can give but feeble expression. May the exposition prove a success befitting the cities of magical growth, the courage and energy of western enterprise, a credit to its organization, a lasting benefit to the communities and the world through its lessons and stimulating influence as a bewildering, unforgettable record of the triumphant progress of the art. Great as are the past achievements, the future holds out more glorious promise. We are getting an insight into the essence of things; our means and methods are being refined, a new and specialized race is developing with knowledge deep and precise, with greater powers and keener perceptions. Mysterious as ever before, nature yields her precious secrets more readily and the spirit of man asserts its mastery over the physical universe. The day is not distant when the very planet which gave him birth will tremble at the sound of his voice; he will make the sun his slave, harness the inexhaustible and terribly intense energy of microcosmic movement; cause atoms to combine in predetermined forms; he will draw the mighty ocean from its bed, transport it through the air and create lakes and rivers at will; he will command the wild elements; he will push on and on from great to greater deeds until with his intelligence and force he will reach out to spheres beyond the terrestrial.

I am your Grace's most obedient servant.

Nikola Tesla

Electrical Review and Western Electrician
July 6, 1912

THE DISTURBING INFLUENCE OF SOLAR RADIATION ON THE WIRELESS TRANSMISSION OF ENERGY.

By Nikola Tesla

When Heinrich Hertz announced the results of his famous experiments in confirmation of the Maxwellian electromagnetic theory of light, the scientific mind at once leaped to the conclusion that the newly discovered dark rays might be used as a means for transmitting intelligible messages through space. It was an obvious inference, for heliography, or signalling by beams of light, was a well recognized wireless art. There was no departure in principle, but the actual demonstration of a cherished scientific idea surrounded the novel suggestion with a nimbus of originality and atmosphere of potent achievement. I also caught the fire of enthusiasm but was not long deceived in regard to the practical possibilities of this method of conveying intelligence.

Granted even that all difficulties were successfully overcome, the field of application was manifestly circumscribed. Heliographic signals had been flashed to a distance of 200 miles, but to produce Hertzian rays of such penetrating power as those of light appeared next to impossible, the frequencies obtainable through electrical discharges being necessarily of a much lower order. The rectilinear propagation

would limit the action on the receiver to the extent of the horizon and entail interference of obstacles in a straight line joining the stations. The transmission would be subject to the caprices of the air and, chief of all drawbacks, the intensity of disturbances of this character would rapidly diminish with distance.

But a few tests with apparatus, far ahead of the art of that time, satisfied me that the solution lay in a different direction, and after a careful study of the problem I evolved a new plan which was fully described in my addresses before the Franklin Institute and National Electric Light Association in February and March, 1893. It was an extension of the transmission through a single wire without return, the practicability of which I had already demonstrated. If my ideas were rational, distance was of no consequence and energy could be conveyed from one to any point of the globe, and in any desired amount. The task was begun under the inspiration of these great possibilities.

While scientific investigation had laid bare all the essential facts relating to Hertz-wave telegraphy, little knowledge was available bearing on the system proposed by me. The very first requirement, of course, was the production of powerful electrical vibrations. To impart these to the earth in an efficient manner, to construct proper receiving apparatus, and develop other technical details could be confidently undertaken. But the all important question was, how would the planet be affected by the oscillations impressed upon it? Would not the capacity of the terrestrial system, composed of the earth and its conducting envelope, be too great? As to this, the theoretical prospect was for a long time discouraging. I found that currents of high frequency and potential, such as had to be necessarily employed for the purpose, passed freely through air moderately rarefied. Judging from these experiences, the dielectric stratum separating the two conducting spherical surfaces could be scarcely more than 20 kilometers thick and, consequently, the capacity would be over 220,000 microfarads, altogether too great to permit economic transmission of power to distances of commercial importance. Another observation was that these currents cause considerable loss of energy in the air around the wire. That such waste might also occur in the earth's atmosphere was but a logical inference.

A number of years passed in efforts to improve the apparatus and to study the electrical phenomena produced. Finally my labors were rewarded and the truth was positively established; the globe did not act like a conductor of immense capacity and the loss of energy, due to absorption in the air, was insignificant. The exact mode of propagation of the currents from the source and the laws governing the electrical movement had still to be ascertained. Until this was accomplished the new art could not be placed on the plane of scientific engineering. One could bridge the greatest distance by sheer force, there being virtually no limit to the intensity of the vibrations developed by such a transmitter, but the installment of economic plants and the predetermination of the effects, as required in most practical applications, would be impossible.

Such was the state of things in 1899 when I discovered a new difficulty which I had never thought of before. It was an obstacle which could not be overcome by any improvement devised by man and of such nature as to fill me with apprehension that transmission of power without wires might never be quite practicable. I think it useful, in the present phase of development, to aquaint the profession with my investigations.

It is a well know fact that the action on a wireless receiver is appreciably weaker during the day than at night and this is attributed to the effect of sunlight on the elevated aerials, an explanation naturally suggested through an early observation of Heinrich Hertz. Another theory, ingenious but rather fine-spun, is that some of the energy of the waves is absorbed by ions or electrons, freed in sunlight and caused to move in the direction of propagation. THE ELECTRICAL REVIEW AND WESTERN ELECTRICIAN of June 1, 1912, contains a report of a test, during the

recent solar eclipse, between the station of the Royal Dock Yard in Copenhagen and the Blaavandshuk station on the coast of Jutland, in which it was demonstrated that the signals in that region became more distinct and reliable when the sunlight was partially cut off by the moon. The object of this communication is to show that in all the instances reported the weakening of the impulses was due to an entirely different cause.

It is indispensable to first dispel a few errors under which electricians have labored for years, owing to the tremendous momentum imparted to the scientific mind through the work of Hertz which has hampered independent thought and experiment. To facilitate understanding, attention is called to the annexed diagrams in which Fig. 1 and Fig. 2 represent, respectively, the well known arrangements of circuits in the Hertz-wave system and my own. In the former the transmitting and receiving conductors are separated from the ground through spark gaps, choking coils, and high resistances. This is necessary, as a gound connection greatly reduces the intensity of the radiation by cutting off half of the oscillator and also by increasing the length of the waves from 40 to 100 percent, according to the distribution of capacity and inductance. In the system devised by me a connection to earth, either directly or through a condenser is essential. The receiver, in the first case, is affected only by rays transmitted through the air, conduction being excluded; in the latter instance there is no appreciable radiation and the receiver is energized through the earth while an equivalent electrical displacement occurs in the atmosphere.

Now, an error which should be the focus of investigation for experts is, that in the arrangement shown in Fig. 1 the Hertzian effect has been gradually reduced through the lowering of frequency, so as to be negligible when the usual wavelengths are employed. That the energy is transmitted chiefly, if not wholly, by conduction can be demonstrated in a number of ways. One is to replace the vertical transmitting wire by a horizontal one of the same effective capacity, when it will be found that the action on the receiver is as before. Another evidence is afforded by quantitative measurement which proves that the energy received does not diminish with the square of the distance, as it should, since the Hertzian radiation propagates in a hemisphere. One more experiment in support of this view may be suggested. When transmission through the ground is prevented or impeded, as by severing the connection or othewise, the receiver fails to respond, at least when the distance is considerable. The plain fact is that the Hertz waves emitted from the aerial are just as much of a loss of power as the short radiations of heat due to frictional waste in the wire. It has been contended that radiation and conduction might both be utilized in actuating the receiver, but this view is untenable in the light of my discovery of the wonderful law governing the movement of electricity through the globe, which may be conveniently expressed by the statement that the projection of the wave-lengths (measured along the surface) on the earth's diameter or axis of symmetry of movement are all equal. Since the surfaces of the zones so defined are the same the law can also be expressed by stating *that the current sweeps in equal times over equal terrestrial areas.* (See among others "Handbook of Wireless Telegraph," by James Erskine-Murray.) Thus the velocity propagation through the superficial layers is variable, dependent on the distance from the transmitter, the mean value being $\pi/2$ times the velocity of light, while the ideal flow along the axis of propagation takes place with a speed of approximately 300,000 kilometers per second.

To illustrate, the current from a transmitter situated at the Atlantic Coast will traverse that ocean - a distance of 4,800 kilometers - in less than 0.006 second with an average speed of 800,000 kilometers. If the signalling were done by Hertz waves the time required would be 0.016 second.

Bearing, then, in mind, that the receiver is operated simply by currents

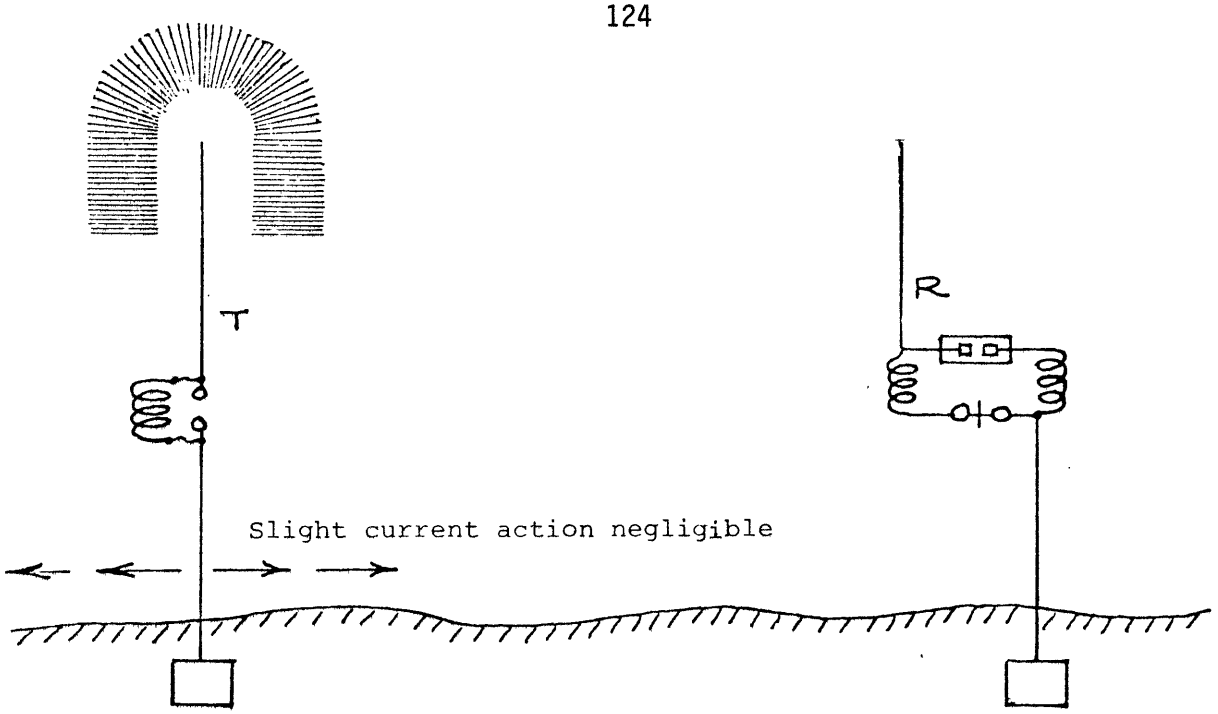

Fig. 1 - Hertz Wave System

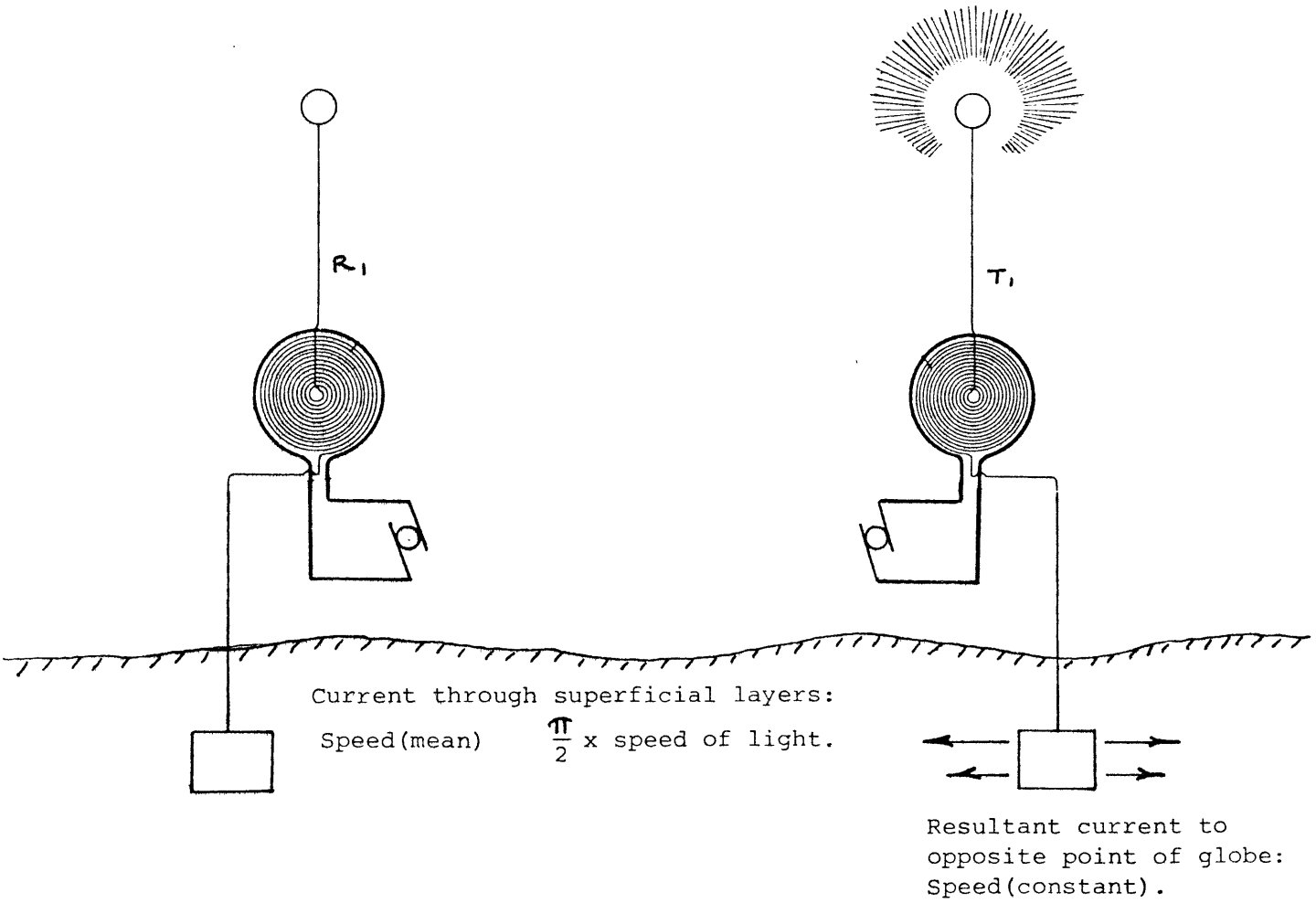

Fig. 2 - System Devised by Tesla

conducted along the earth as through a wire, energy radiated playing no part, it will be at once evident that the weakening of the impulses could not be due to any changes in the air, making it turbid or conductive, but should be traced to an effect interfering with the transmission of the current through the superficial layers of the globe. The solar radiations are the primary cause. that is true, not those of light, but of heat. The loss of energy, I have found, is due to the evaporation of the water on that side of the earth which is turned toward the sun, the conducting particles carrying off more or less of the electrical charges imparted to the ground. This subject has been investigated by me for a number of years and on some future occasion I propose to dwell on it more extensively. At present it may be sufficient, for the guidance of experts, to state that the waste of energy is proportional to the product of the square of the electric density induced by the transmitter at the earth's surface and the frequency of the currents. Expressed in this manner it may not appear of very great practical significance. But remembering that the surface density increases with the frequency it may also be stated that the loss is proportional to the cube of the frequency. With waves 300 meters in length economic transmission of energy is out of the question, the loss being too great. When using wave-lengths of 6,000 meters it is still noticeable though not a serious drawback. With wave-lengths of 12,000 meters it becomes quite insignificant and on this fortunate fact rests the future of wireless transmission of energy.

To assist investigation of this interesting and important subject, Fig. 3 has been added, showing the earth in the position of summer solstice with the transmitter just emerging from the shadow. Observation will bring out the fact that the weakening is not noticeable until the aerials have reached a position, with reference to the sun, in which the evaporation of the water is distinctly more rapid. The maximum will not be exactly when the angle of incidence of the sun's rays is greatest, but some time after. It is noteworthy that the experimenters who watched the effect of the recent eclipse, above referred to, have observed the delay.

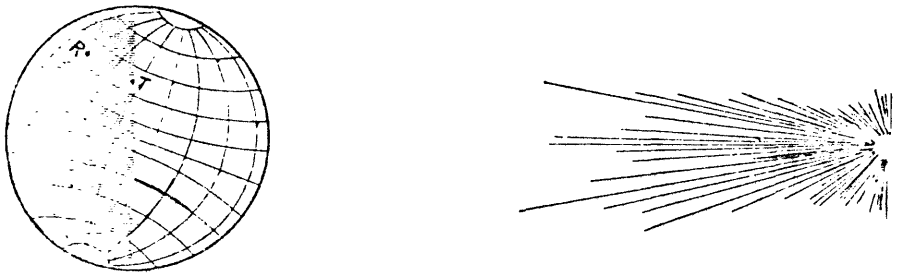

Fig. 3 - Illustrating Disturbing Effect of the Sun on Wireless Transmission.

New York Press
Nov. 9, 1913

NIKOLA TESLA'S PLAN TO KEEP "WIRELESS THUMB" ON SHIPS AT SEA

Suggests Transmitters Powerful Enough to Cause the Earth to Vibrate at the Poles and Equator.

He would Determine Vessel's Latitude and Longitude by Measuring the Length of Electric Waves.

Nikola Tesla has come forward to refute the claims of men who recently excited the scientific world with announcements of discovery and invention calculated to crowd the bugbear of scientific warfare back into the primer class, and to safeguard the lives of seafarers. First he takes up and disposes of the announcement of an invention said to enable a receiving ship equipped with wireless to tell the longitude and latitude of a sending ship without the latter vessel offering its own calculations. "It hasn't been done, and it probably will be years before the means for so doing can be applied successfully," he says. As to the power of ultra-violet rays to explode the powder magazine of a warship from a distance, he insists it can't be done through that medium. If charges of powder have been so exploded, he contends, the detonation was accomplished with the familiar waves now utilized by the wireless. But Mr. Tesla admits that in all probability there will come a time when science has so harnessed and developed the means at hand that such results may be obtained. Mr. Tesla sets forth for readers of The Press his views on the two subjects as follows:

By Nikola Tesla

The first and incomplete announcements of technical advances should always be taken with a grain of salt. It is true that the newspapers are getting more and more accurate and reliable in putting forth such information, but, nevertheless, the news frequently is misleading.

For instance, not long ago reports widely circulated that powder had been exploded at distance by infra-red or ultra-violet rays, and that a British battleship had been used in a test of this kind, which proved successful. The dispatches gave great opportunity to sensational speculation, but the truth is that there was no novelty whatever in what was done.

A mine or magazine may have been blown up, but this was accomplished in a well-known manner through the application of a kind of electrical waves which are now generally adopted in the transmission of signals without wires. Similar experiments were performed in this country many years ago by myself and others, and quite recently John Hays Hammond, Jr., has done credible work in this direction through the application of an art which has been named "Telautomatics," or wireless control of moving mechanism at a distance.

By means of such telautomatic vessels, surface, and submarine or aerial, a perfect system of coast defense can be established. Torpedoes on this plan also can be controlled from battleships, and there is no doubt they sooner or later will be adopted and their introduction will have a revolutionary effect on the methods of warfare.

The results described are, however, not impossible. It is quite practicable to explode by rays of light a mine at a distance, as by acting, on a mixture of chlorine and hydrogen. Certain dark rays also can be employed to produce destructive effects. As far back as 1897, I disclosed before the New York Academy of Sciences the discovery that Roentgen, or X-rays, projected from certain bulbs have the property of strongly charging an electrical condenser at a distance. The energy so

accumulated readily can be discharged and cause the ignition of some explosive compound.

Says They Can't Penetrate Steel.

But ultra-violet rays are of very short wave lengths and cannot penetrate steel shells, while the longer and more penetrative waves of the infra-red rays are chemically much less active. There is no doubt in my mind that we soon shall be able to project energy at a distance not only in small, but in large amounts, and what the effect of such an achievement will be on existing conditions, words cannot express.

As regards the determination of latitude and longitude of a vessel at sea by wireless, there is nothing in use as yet which would make such direct observation possible. Some suggestions, however, which I have since many years advocated, have been adopted. They are the flashing of time signals over a wide area and the employment of an instrument known as a wireless compass.

Plan for Finding Locations.

These means enable an expert on a vessel to ascertain the exact hour at any sending station within reach, and also, in an imperfect manner, the direction in which it is situated, and from these data it is possible to get a rough idea of the position of the ship relative to the points of reference.

A perfect means for determining not only such and other data important to the navigator already is available, but it may require years to apply it. I refer to the use of the stationary waves, which were discovered by me fourteen years ago. The subject is too technical to be explained in detail, but the average reader can be made to understand the general principle.

The earth is a conductor of electricity, and as such has its own electrical period of vibration. The time of one complete swing is about one-twelfth of a second. In other words, this is the interval the current requires in passing to, and returning from, the diametrically opposite point of the globe.

Now, the wonderful fact is, that notwithstanding its immense size, the earth responds to a great number of vibrations and can be resonantly excited just like a wire of limited dimensions. When this takes place there are formed on its surface stationary parallel circles of equal electrical activity, which can be revealed by properly attuned instruments.

Transmitter at One of the Poles.

Imagine that a transmitter capable of exciting the earth were placed at one of the Poles. Then the crests and hollows of the stationary waves would be in parallel circles with their planes at right angles to the axis of the earth, and from readings of a properly graduated instrument the distance of a vessel carrying the same from the Pole could be at once read, giving accurately the geographical latitude.

In like manner, if a transmitter were placed at a point on the Equator, the longitude could be precisely determined by the same means. But the best plan would be to place three transmitters at properly chosen points on the globe so as to establish three non-interferable systems of stationary waves at right angles to one another. If this were done, innumerable results of the greatest practical value could be realized.

Electrical World - N. Y.
March 21, 1914, p. 637.

FROM NIKOLA TESLA

The first impressions are those to which we cling most in later life. I like to think of George Westinghouse as he appeared to me in 1888, when I saw him for the first time. The tremendous potential energy of the man had only in part taken kinetic form, but even to a superficial observer the latent force was manifest. A powerful frame, well proportioned, with every joint in working order, an eye as clear as a crystal, a quick and springy step - he presented a rare example of health and strength. Like a lion in a forest, he breathed deep and with delight the smoky air of his factories. Though past forty then, he still had the enthusiasm of youth. Always smiling, affable and polite, he stood in marked contrast to the rough and ready men I met. Not one word which would have been objectionable, not a gesture which might have offended - one could imagine him as moving in the atmosphere of a court, so perfect was his bearing in manner and speech. And yet no fiercer adversary than Westinghouse could have been found when he was aroused. An athlete in ordinary life, he was transformed into a giant when confronted with difficulties which seemed unsurmountable. He enjoyed the struggle and never lost confidence. When others would give up in despair he triumphed. Had he been transferred to another planet with everything against him he would have worked out his salvation. His equipment was such as to make him easily a position of captain among captains, leader among leaders. His was a wonderful career filled with remarkable achievements. He gave to the world a number of valuable inventions and improvements, created new industries, advanced the mechanical and electrical arts and improved in many ways the conditions of modern life. He was a great pioneer and builder whose work was of far-reaching effect on his time and whose name will live long in the memory of men.

Nikola Tesla

Reprinted with permission. Reprinted from March 21, 1914, issue of *Electrical World*.
© Copyright 1914, McGraw-Hill, Inc. All rights reserved.

New York Sun
May 22, 1914

TESLA AND MARCONI.

The Servian Expert's Claim to and Earlier Patent on Sundry Wireless Devices.

To the Editor of The Sun - Sir: The reports contained in The Sun and other journals regarding the issue of a recent wireless patent suit are of a nature to create an erroneous impression. Two of the patents mentioned, namely, Nos. 11,913 and 609,154, granted respectively to William Marconi and Sir Oliver Lodge, are of no importance, but another patent of the former expert, dated June 28, 1904, contains arrangements on which I obtained full protection more than three years before and which are essential to the successful practice of the wireless art at any considerable distance.

My patents bear the numbers 645,576 and 649,621 and were secured through Kerr, Page & Cooper, attorneys for the General Electric and Westinghouse companies. The apparatus described by me comprises four circuits peculiarly arranged and carefully attuned so as to secure the greatest possible flow of electrical energy through them. The generator is a transformer of my invention and the oscillations employed are of

a kind which are now known in technical literature as the Tesla currents. Every one of these elements, even to the last detail, is contained in the Marconi patent which was involved in the suit, and its use constitutes an infringement of all the fundamental features of my wireless system.

Nikola Tesla
New York, March 21, 1914.

New York Times
Sunday, Oct. 3, 1915, p. 14, cols. 1,2,3.

NIKOLA TESLA SEES A WIRELESS VISION

Thinks His "World System" Will Allow Hundreds To Talk At Once Through The Earth.

Ends Static Disturbance.

Inventor Hopes Also To Transmit Pictures By The Same Medium Which Carries The Voice.

Nikola Tesla announced to The Times last night that he had received a patent on an invention which would not only eliminate static interference, the present bugaboo of wireless telephony, but would enable thousands of persons to talk at once between wireless stations and make it possible for those talking to see one another by wireless, regardless of the distance separating them. He said also that with his wireless station now in the process of construction on Long Island he hoped to make New York one of the central exchanges in a world system of wireless telephony.

Mr. Tesla has been working on wireless problems for many years. Yesterday he exhibited an article published in the Electrical World eleven years ago, in which he predicted not only wireless telephony on a commercial basis but that it would be possible to identify the voice of an acquaintance over any distance. That its operator in Hawaii was able to distinguish the voice of an engineer friend at Arlington, Va., was announced by the American Telephone and Telegraph Company as the most marked triumph of its communication by wireless telephone from the naval radio station at Arlington to Pearl Harbor, Hawaii, a distance of 4,000 miles.

The inventor, who has won fame by his electrical inventions, dictated this statement yesterday.

"The experts carrying out this brilliant experiment are naturally deserving of great credit for the skill they have shown in perfecting the devices. These are of two kinds: First, those serving to control transmission, and, second, those magnifying the received impulse. That the control of transmission is perfect is plain to experts from the fact the Arlington, Mare Island, and Pearl Harbor plants are all inefficient and that the distance of telephonic transmission is equal to that of telegraphic transmission. It is also perfectly apparent that the chief merit of the application lies in the magnification of the microphonic impulse. It must not be imagined that we deal here with new discoveries. The improvement simply concerns the control of the transmitted and the magnification of the received impulse, but the wireless system is the same. This can never be changed.

"That it is practicable to project the human voice not only to a distance of 5,000 miles, but clear across the globe, I demonstrated by experiments in Colorado in 1899. Among my publications I would refer to an article in the Electrical World of March 5, 1904, but describing really tests I made in 1899. The facts which I pointed out in the article were of much greater significance than that of the experiments reported, although this should be taken in a scientific sense, as the experiments were

simply scientific demonstrations. I pointed out then that the modulations of the human voice can be reproduced more clearly through the earth than through wire. It is difficult for the layman to understand, but it is an absolute fact that transmission through the earth with the proper apparatus is not more difficult than the sending of a message on a wire strung across a room. This wonderful property of the planet, that, electrically speaking, is through its very bigness, small, is of incalculable significance for the future of mankind.

"These tests made between Washington and Honolulu will act as an immense stimulus to wireless telephony and would be of much more value to the world if the principles of the transmission were understood. But they are not. Even now, fifteen years after the fundamental principles have been demonstrated and the possibilities shown, there are many experts in the dark.

"For instance, it is claimed that static disturbances will fatally interfere with the transmission, while, as a matter of fact, there is no static disturbance possible in properly designed transmission and receiving circuits. Quite recently I have described in a patent, circuits which are absolutely immune to static and other interferences - so much so that when a telephone is attached, there is absolute silence, even lightning in the immediate vicinity not producing a click of the diaphragm, while in the ordinary telephonic conversation there are all kinds of noises. Transmission without static interference has many wonderful properties, besides, first of which is that unlimited amounts of power can be transmitted with very small loss.

"Another contention is that there can be no secrecy in wireless telephone conversation. I say it is absurd to raise this contention when it is positively demonstrated by experiments that the earth is more suitable for transmission than any wire could ever be. A wireless telephone conversation can be made as secret as thought.

"I have myself erected a plant for the purpose of connecting by wireless telephone the chief centres of the world, and from this plant as many as a hundred will be able to talk absolutely without interference and with absolute secrecy. This plant would simply be connected with the telephone central exchange of New York City, and any subscriber will be able to talk to any other telephone subscriber in the world, and all this without any change in his apparatus. This plan has been called my "world system". By the same means I propose also to transmit pictures and project images, so that the subscriber will not only hear the voice, but see the person to whom he is talking. Pictures transmitted over wires is a perfectly simple art practiced today. Many inventors have labored on it, but the chief credit is due Professor Korn of Munich.

"His apparatus can be attached to a wireless plant and at any other wireless plant can be reproduced. I have undertaken this in the hope of establishing a service which would greatly facilitate the work of the press. A picture could be sent from a battlefield in Europe to New York in five munutes if the proper instruments were available.

"A further advantage would be that transmission is instant and free of the unavoidable delay experienced with the use of wires and cables. As I have already made known, the current passes through the earth, starting from the transmission station with infinite speed, slowing down to the speed of light at a distance of 6,000 miles, then increasing in speed from that region and reaching the receiving station again with infinite velocity.

"It's all a wonderful thing. Wireless is coming to mankind in its full meaning like a hurricane some of these days. Some day there will be, say, six great wireless telephone stations in a world system connecting all the inhabitants on this earth to one another, not only by voice, but by sight. It's surely coming.

New York Times
Oct. 4, 1915 p. 4, col. 3

CORRECTION BY MR. TESLA

Of Wireless Apparatus He meant to Say "Ineffective," not "Inefficient."

The Times received last night from Nikola Tesla a letter saying the inventor wished to correct a statement in his forecast of the possibilities of wireless, published in the Times of yesterday morning, when he was quoted as saying that the apparatus used by the American Telephone and Telegraph Co. to talk from Arlington to Hawaii was "inefficient." The inventor wrote that he wished to say that the apparatus was "ineffective."

"Although I can guess the character of the apparatus which was employed in projecting the human voice through 4,600 miles of space," Mr. Tesla wrote, "I am unable to judge of its efficiency, but from the technical particulars available I know that the plants are ineffective, inasmuch as they would have furnished currents of much greater volume and tension had they been differently designed. Incidentally, they would then have been immune against static disturbances, unfailing in their operation and adapted to secure secrecy of messages.

"In calling attention to this fact I have meant to give testimony to the excellence of the means of control and magnification resorted to by the experimenters. Had the same devices been used in connection with plants designed for maximum effect the results would have been such as to cause a most profound sensation and to stir great commercial interests all the world over, perhaps to the point of powerfully affecting and hastening the finish of the awful struggle in which nations of the earth are now engaged."

NUMBER (Series of 1915), 309182

1916

(EX'R'S BOOK) 101/100

DIV. 39

PATENT No. 1329559

Name Nikola Tesla

of New York

County of

State of New York

Invention Valvular Conduit

	ORIGINAL	RENEWED
Petition	Feb 21, 1916	July 8, 1
Affidavit	" " , 1916	
Specification	" " , 1916	
Drawing	(1) " " , 1916	
Photo Copy	, 191	, 191
First Fee Cash	$15 Feb 21, 1916	$15 July 8, 191
" " Cert.	, 191	, 191
Appl. filed complete	Feb 21, 1916	July 8, 191

PARTS OF APPLICATION FILED

...ned and Passed for Issue	Jan 6, 1919	July 15, 191
...thur W. Cowles Exr. Div.	39	Arthur W. Cowles Exr. D
...otice of Allowance	Jan 6, 1919 By Commissioner	July 15 By C
Final Fee Cash	, 191	$20 Jan. 5
" " Cert.	, 191	

Patented

Attorney Kerr, Page, Cooper & Hayward 55 L New York, N. Y. Ste

Associate Attorney

(No. of Claims Allowed 7) Title as Allowed Valvular Conduit

(Print Claim 1 in O.G.) (Cl. 1

(For additional patent histories see *Dr. Nikola Tesla - Selected Patent Wrappers From the National Archives* - 4 vols., compiled by John T. Ratzlaff, Tesla Book Co.-Ed.)

13A-169
15/72:37-3-1
10591

1916

CONTENTS:

53A1
15/32:1
10,5

SK

1. *Application* 1 *papers:*
2. Rej June 3, 1916
3. Rej Nov 25, 1916
4. Amdt A Nov 24 1917
5. Rej Dec 17, 1917
6. Amdt B Dec 16, 1918
7.
11.
12.
13.
14.
15.
16.
17.
18.
19.
20.
21.
22.
23.
24.
25.
26.
27.
28.
29.
30.
31.
32.
33.
34.
35.
36.
37.
38.
39.
40.
41.
42.
43.
44.
45.
46.
47.
48.
49.
50.

18

Serial No. 79703 Paper No. 1
Application.

Petition.

To the Commissioner of Patents:

Your petitioner Nikola Tesla, a citizen of the United States,

557

residing at New York, in the County and State of New York,

Post Office address 8 West 40th Street, New York, N.Y.,

prays that Letters Patent may be granted to him *for the new and useful improvements in*

Valvular Conduit,

set forth in the annexed specification;

And he *hereby appoints* Kerr, Page, Cooper & Hayward *(a firm composed of Thomas B. Kerr, Parker W. Page, Drury W. Cooper, John C. Kerr, and Jonathan B. Hayward, Reg. No. 8894), of No. 55 Liberty Street, New York, N. Y.,* his *attorneys, with full power of substitution and revocation, to prosecute this application, to make alterations and amendments therein, to sign the drawings, to receive the patent, and to transact all business in the Patent Office connected therewith.*

Inventor's full name here: Nikola Tesla

Specification.

To all whom it may concern:

Be it known that I, Nikola Tesla, a citizen of the United States,

residing at New York, in the County and State of New York,

have invented certain new and useful improvements in

Valvular Conduit,

of which the following is a full, clear, and exact description.

1/
Ecc 1

N. TESLA.

VALVULAR CONDUIT.

APPLICATION FILED FEB. 21, 1916. RENEWED JULY 8, 1919.

1,329,559. Patented Feb. 3, 1920.

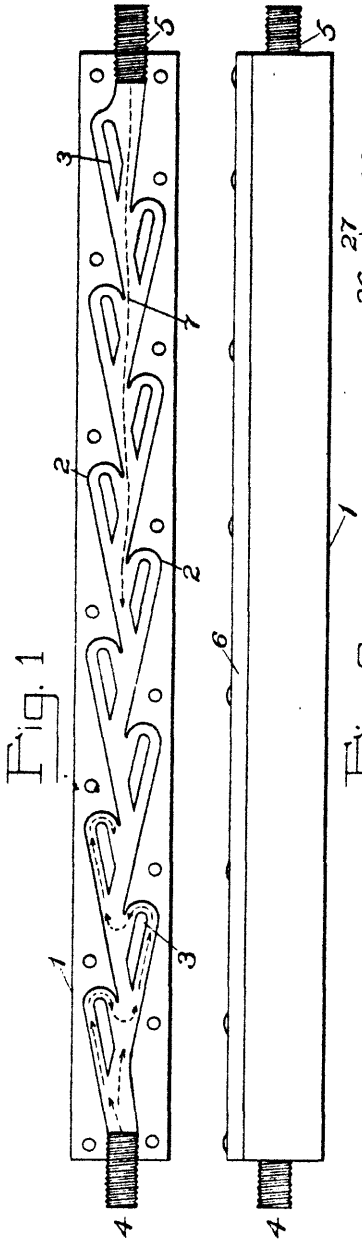

Fig. 1

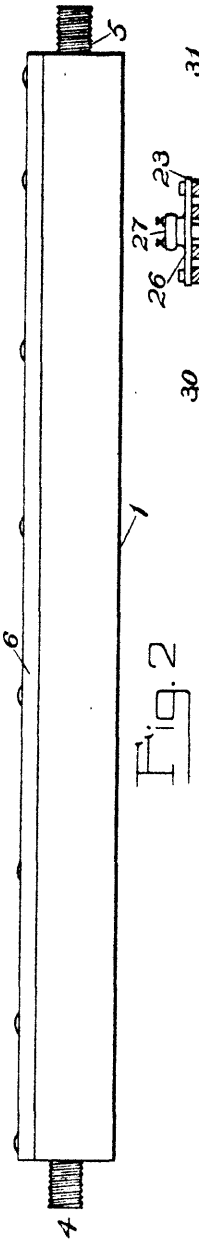

Fig. 2

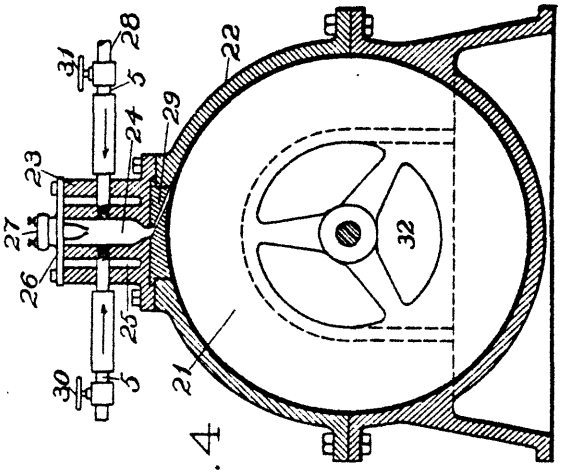

Fig. 4

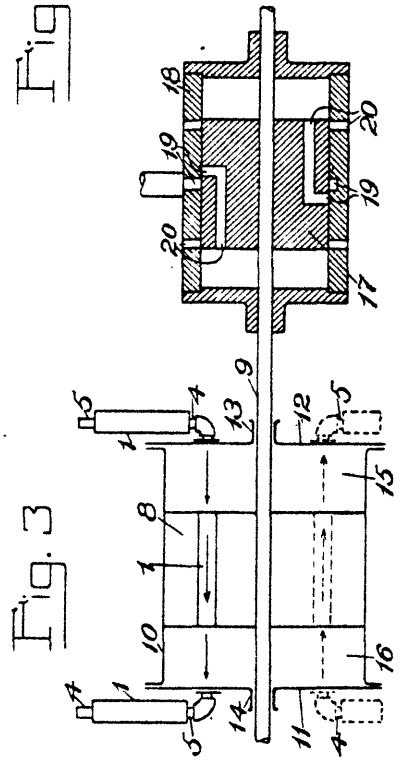

Fig. 3

INVENTOR

Nikola Tesla

BY

Stern, Page, Cooper & Maynard

ATTORNEY.

In most of the machinery universally employed for the development, transmission and transformation of mechanical energy, fluid impulses are made to pass, more or less freely, through suitable channels or conduits in one direction while their return is effectively checked or entirely prevented. This function is generally performed by devices designated as valves, comprising carefully fitted members the precise relative movements of which are essential to the efficient and reliable operation of the apparatus. The necessity of, and absolute dependence on these, limits the machine in many respects, detracting from its practical value and adding greatly to its cost of manufacture and maintenance. As a rule the valve is a delicate contrivance, very liable to wear and get out of order and thereby imperil ponderous, complex and costly mechanism and, moreover, it fails to meet the requirements when the impulses are extremely sudden or rapid in succession and the fluid is highly heated or corrosive.

Though these and other correlated facts were known to the very earliest pioneers in the science and art of mechanics, no remedy has as yet been found or proposed to date so far as I am aware, and I believe that I am the first to discover or invent any means, which permit the performance of the above function without the use of moving parts, and which it is the object

of this application to describe.

Briefly expressed, the advance I have achieved consists in the employment of a peculiar channel or conduit characterized by valvular action.

The invention can be embodied in many constructions greatly varied in detail, but for the explanation of the underlying principle it may be broadly stated that the interior of the conduit is provided with enlargements, recesses, projections, baffles or buckets which, while offering virtually no resistence to the passage of the fluid in one direction, other than surface friction, constitute an almost impassable barrier to its flow in the opposite sense by reason of the more or less sudden expansions, contractions, deflections, reversals of direction, stops and starts and attendant rapidly succeeding transformations of the pressure and velocity energies.

For the full and complete disclosure of the device and of its mode of action reference is made to the accompanying drawings in which

Fig. 1 is a horizontal projection of such a valvular conduit with the top plate removed,

Fig. 2 is side view of the same in elevation;

Fig. 3 is a diagram illustrative of the application of the device to a fluid propelling machine such as, a reciprocating pump or compressor, and

Fig. 4 is a plan showing the manner in which the invention is, or may be used, to operate a fluid propelled rotary engine or turbine.

Referring to Fig. 1, 1 is a casing of metal or other suitable material which may be cast, milled or pressed from sheet in the desired form. From its sidewalls extend alternatively projections terminating in buckets 2 which, to facilitate manufacture are congruent and spaced at equal distances, but need not be. In addition to these there are independent partitions 3 which are deemed of advantage and the purpose of which will be made clear. Nipples 4 and 5, one at each end, are provided for pipe connection. The bottom is solid and the upper or open side is closed by a fitting plate 6 as shown in fig. 2. When desired any number of such pieces may be joined in series, thus making up a valvular conduit of such length as the circumstances may require.

In elucidation of the mode of operation let it be assumed that the medium under pressure be admitted at 5. Evidently, its approximate path will be as indicated by the dotted line 7, which is nearly straight, that is to say, if the channel be of adequate cross-section, the fluid will encounter a very small resistance and pass through freely and undisturbed, at least to a degree. Not so if the entrance be at the opposite end 4. In this case the flow will not be smooth and continuous, but intermittent, the fluid being quickly deflected and reversed in direction, set in whirling motion, brought to rest and again accelerated, these processes following one another in rapid succession. The partitions 3 serve to direct the stream upon the buckets and to intensify the actions causing violent surges and eddies which interfere

very materially with the flow through the conduit. It will be readily observed that the resistance offered to the passage of the medium will be considerable even if it be under constant pressure, but the impediments will be of full effect only when it is supplied in pulses and, more especially, when the same are extremely sudden and of high frequency. In order to bring the fluid masses to rest and to high velocity in short intervals of time energy must be furnished at a rate which is unattainable, the result being that the impulse cannot penetrate very far before it subsides and gives rise to movement in the opposite direction. The device not only acts as a hinderment to the bodily return of particles but also, in a measure, as a check to the propagation of a disturbance through the medium. Its efficacy is chiefly determined; first, by the magnitude of the ratio of the two resistances offered to disturbed and to undisturbed flow, respectively, in the directions from 4 to 5 and from 5 to 4, in each individual element of the conduit; second, by the number of complete cycles of action taking place in a given length of the valvular channel and, third, by the character of the impulses themselves. A fair idea may be gained from simple theoretical considerations.

Examining more closely the mode of operation it will be seen that, in passing from one to the next bucket in the direction of disturbed flow, the fluid undergoes two complete reversals or deflections through 180 degrees while it suffers only two small deviations from about 10 to 20 degrees when moving in the opposite sense. In each

case the loss of head will be proportionate to a hydraulic coefficient dependent on the angle of deflection from which it follows that, for the same velocity, the ratio of the two resistances will be as that of the two coefficients. The theoretical value of this ratio may be 200 or more, but must be taken as appreciably less although the surface friction too is greater in the direction of disturbed flow. In order to keep it as large as possible, sharp bonds should be avoided, for these will add to both resistances and reduce the efficiency. Whenever practicable, the piece should be straight; the next best is the circular form.

That the peculiar function of such a conduit is enhanced by increasing the number of buckets or elements and, consequently, cyclic processes in a given length is an obvious conclusion, but there is no direct proportionality because the successive actions diminish in intensity. Definite limits, however, are set constructively and otherwise to the number of elements per unit length of the channel, and the most economical design can only be evolved through long experience.

Quite apart from any mechanical features of the device the character of the impulses has a decided influence on its performance and the best results will be secured, when there are produced at 4, sudden variations of pressure in relatively long intervals, while a constant pressure is maintained at 5. Such is the case in one of its most valuable industrial applications which will be specifically described.

In order to conduce to a better understanding, reference may first be made to Fig. 3 which illustrates another special use and in which 8 is a piston fixed to

a shaft 9 and fitting freely in a cylinder 10. The latter is closed at both ends by flanged heads 11 and 12 having sleeves or stuffing boxes 13 and 14 for the shaft. Connection between the two compartments, 15 and 16, of the cylinder is established through a valvular conduit and each of the heads is similarly equipped. For the sake of simplicity these devices are diagrammatically shown, the solid arrows indicating the direction of undisturbed flow. An extension of the shaft 9 carries a second piston 17 accurately ground to and sliding easily in a cylinder 18 closed at the ends by plates and sleeves as usual. Both piston and cylinder are provided with inlet and outlet ports marked, respectively, 19 and 20. This arrangement is familiar, being representative of a prime mover of my invention, termed "mechanical oscillator", with which it is practicable to vibrate a system of considerable weight many thousand times per minute.

Suppose now that such rapid oscillations are imparted by this or other means to the piston 8. Bearing in mind the proceeding, the operation of the apparatus will be understood at a glance. While moving in the direction of the solid arrow, from 12 to 11, the piston 8 will compress the air or other medium in the compartment 16 and expel it from the same, the devices in the piston and head 11 acting, respectively, as closed and open valves. During the movement of the piston in the opposite direction, from 11 to 12, the medium which has meanwhile filled the chamber 15 will be transferred to compartment 16, egress being prevented by the device in head 12 and that in the piston allowing free passage. These processes will be repeated in very quick succession. If the nipples 4

and 5 are put in communication with independent reservoirs, the oscillations of the piston 8 will result in a compression of the air at 4 and rarefaction of the same at 5. Obviously, the valvular channels being turned the other way, as indicated by dotted lines in the lower part of the figure, the opposite will take place. The devices in the piston have been shown merely by way of suggestion and can be dispensed with. Each of the chambers 15 and 16 being connected to two conduits as illustrated, the vibrations of a solid piston as 8 will have the same effect and the machine will then be a double acting pump or compressor. It is likewise unessential that the medium should be admitted to the cylinder through such devices for in certain instances ports, alternately closed and opened by the piston, may serve the purpose. As a matter of course, this novel method of propelling fluids can be extended to multistage working in which case a number of pistons will be employed, preferably on the same shaft and of different diameters in conformity with well established principles of mechanical design. In this way any desired ratio of compression or degree of rarefaction may be attained.

Fig.4 exemplifies a particularly valuable application of the invention to which reference has been made above. The drawing shows in vertical cross section a turbine which may be of any type but is in this instance one invented and described by me and supposed to be familiar to engineers. Suffice it to state that the rotor 21 of the same is composed of flat plates which are set in motion through the adhesive and viscous action of the working fluid, entering the system tangentially at the periphery and leaving it at the center. Such a machine is a thermo-

dynamic transformer of an activity surpassing by far that of any other prime mover, it being demonstrated in practice that each single disk of the rotor is capable of performing as much work as a whole bucketwheel. Besides, a number of other advantages, equally important, make it especially adapted for operation as an internal combustion motor. This may be done in many ways, but the simplest and most direct plan of which I am aware is the one illustrated here. Referring again to the drawing, the upper part of the turbine casing 22 has bolted to it a separate casting 23, the central cavity 24 of which forms the combustion chamber. To prevent injury through excessive heating a jacket 25 may be used, or else water injected, and when these means are objectionable recourse may be had to air cooling, this all the more readily as very high temperatures are practicable. The top of casting 23 is closed by a plate 26 with a sparking or hot wire plug 27 and in its sides are screwed two valvular conduits communicating with the central chamber 24. One of these is, normally, open to the atmosphere while the other connects to a source of fuel supply as a gas main 28. The bottom of the combustion chamber terminates in a suitable nozzle 29 which consists of separate piece of heat resisting material. To regulate the influx of the explosion constituents and secure the proper mixture the air and gas conduits are equipped, respectively, with valves 30 and 31. The exhaust openings 32 of the rotor should be in communication with a ventilator, preferably carried on the same shaft and of any suitable construction. Its use, however, while advantageous, is not indispensable the suction produced by the turbine rotor itself being, in some cases at least, suffi-

cient to insure proper working. This detail is omitted from the drawing as unessential to the understanding.

But a few words will be needed to make clear the mode of operation. The air valve 30 being open and sparking established across terminals 27, the gas is turned on slowly until the mixture in the chamber 24 reaches the critical state and is ignited. Both the conduits behaving, with respect to efflux, as closed valves, the products of combustion rush out through the nozzle 29 acquiring still greater velocity by expansion and, imparting their momentum to the rotor 21, start it from rest. Upon the subsidence of the explosion the pressure in the chamber sinks below the atmospheric owing to the pumping action of the rotor or ventilator and new air and gas is permitted to enter, cleaning the cavity and channels and making up a fresh mixture which is detonated as before, and so on, the successive impulses of the working fluid producing an almost continuous rotary effort. After a short lapse of time the chamber becomes heated to such a degree that the ignition device may be shut off without disturbing the established regime. This manner of starting the turbine involves the employment of an unduly large combustion chamber which is not commendable from the economic point of view, for not only does it entail increased heat losses but the explosions cannot be made to follow one another with such rapidity as would be desirable to insure the best valvular action. When the chamber is small an auxilliary means for starting, as compressed air, may be resorted to and a very quick succession of explosions can then be obtained. The frequency will be the greater the stronger the suction, and may, under

certain conditions, reach hundred and even thousands per second. It scarcely need be stated that instead of one several explosion chambers may be used for cooling purposes and also to increase the number of active pulses and the output of the machine.

Apparatus as illustrated in Fig.4 presents the advantages of extreme simplicity, cheapness and reliability, there being no compressor, buckets or troublesome valve mechanism. It also permits, with the addition of certain well-known accessories, the use of any kind of fuel and thus meets the pressing necessity of a self-contained, powerful, light and compast internal combustion motor for general work. When the attainment of the highest efficiency is the chief object, as in machines of large size, the explosive constituents will be supplied under high pressure and provision madefor maintaining a vacuum at the exhaust. Such arrangements are quite familiar and lend themselves so easily to this improvement that an enlargement on this subject is deemed unnecessary.

The foregoing description will readily suggest to experts modifications both as regards construction and application of the device and I do not wish to limit myself in these respects. The broad underlying idea of the invention is to permit the free passage of a fluid through a channel in the direction of the flow and to prevent its return through friction and mass resistance, thus enabling the performance of valve functions without any moving parts and thereby extending the scope and usefulness of an immense variety of mechanical appliances.

I do not claim the methods of and apparatus for the propulsion of fluids and thermo-dynamic transforma-

tion of energy herein disclosed, as these will be made subjects of separate applications.

What I claim is:

1: A valvular conduit having interior walls of such conformation as to permit the free passage of fluid through it in the direction of flow, but to prevent its return by friction and mass resistance.

2: A valvular conduit composed of a closed passageway having recesses in its walls so formed as to permit a fluid to pass freely through it in the direction of flow, but to deflect said fluid and thereby interpose friction and mass resistance to the return passage of the same.

3: A valvular conduit composed of a tube or passage way with rigid interior walls formed with a series of recesses or pockets with surfaces that deflect a fluid tending to flow in one direction therein, and to check or prevent the flow of the fluid in that direction.

4: A valvular conduit with rigid interior walls of such character as to offer substantially no obstacle to the passage through it of fluid impulses in one direction, but to oppose and check those in the opposite direction.

5: A valvular conduit with rigid interior walls formed to permit fluid impulses under pressure to pass freely through it in one direction, but to deflect them and check their progress when impelled in the opposite direction.

6: A valvular conduit with rigid interior walls which permit fluid impulses to flow through it freely in one direction, formed at a plurality of points to deflect

such fluid impulses when impelled in the opposite direction and check their flow.

7. A valvular conduit with rigid interior walls having pockets or recesses, and transversely inclined intermediate baffles to permit the free passage of fluid impulses in one direction but to deflect and check them when impelled in the opposite direction.

In testimony whereof I *affix* my *signature*, ~~*in the presence of two subscribing witnesses.*~~

~~*Witnesses:*~~ ~~[redacted]~~ { Nikola Tesla

Oath.

State of New York, }
County of New York. } *ss.*

Nikola Tesla,

the above-named petitioner

being duly sworn, deposes and says that he is a *citizen of* the United States, *and resident of* New York, in the County and State of New York,

that he *verily believes* himself *to be the original, first, and* sole *inventor of the improvements in*

Valvular Conduit,

described and claimed in the annexed specification; that he *does not know and does not believe the same were ever known or used before* his *invention or discovery thereof, or patented or described in any printed publication in the United States of America or in any foreign country before* his *invention or discovery thereof, or more than two years prior to this application; or in public use or on sale in the United States for more than two years prior to this application; that said invention has not been patented in any country foreign to the United States, on an application filed by* him *or* his *legal repesentatives or assigns more than twelve months prior to this application, and that no application for patent on said improvements has been filed by* him *or* his *legal representatives or assigns in any country foreign to the United States.*

Inventor's full name here: { Nikola Tesla

Sworn to and subscribed before me this 18th *day of* February, *19*16.

M. Lawson Dyer
(Signature of Justice or Notary)
Notary Public N.Y. Co.
(Official Character)

(Affix Seal here.)

Div. 39 Room 321 — 2-960 — AWC/D — Paper No. 2-P.

Address only "The Commissioner of Patents, Washington, D. C.," and not any official by name.

All communications respecting this application should give the serial number, date of filing, title of invention, and name of the applicant.

DEPARTMENT OF THE INTERIOR

UNITED STATES PATENT OFFICE

WASHINGTON June 3, 1916.

Kerr, Page, Cooper & Haywood,
55 Liberty St.,
New York, N. Y.

U.S. PATENT OFFICE, JUN 3 1916 MAILED

Please find below a communication from the EXAMINER in charge of the application of

Nikola Tesla, filed Feb. 21, 1916, #79,703. VALVULAR CONDUIT.

Thomas Ewing
Commissioner of Patents.

6—2631

This case has been examined.

The claims are all rejected on either patent:

German to Lobe, 501 of 1877, Class 137.75

" " Luppa, 199,580 of 1908, Class 137.75 (x)

" " Overhoff, 224,759, of 1910," " "

Examiner.

Div. 39 Room 321 — 2-260 — Paper No. 5

Address only "The Commissioner of Patents, Washington, D. C.," and not any official by name.

LM/MTH

All communications respecting this application should give the serial number, date of filing, title of invention, and name of the applicant.

DEPARTMENT OF THE INTERIOR

UNITED STATES PATENT OFFICE

WASHINGTON Nov. 25, 1916.

Kerr, Page, Cooper and Hayward,
55 Liberty St.,
New York City.

U.S. PATENT OFFICE NOV 25 1916 MAILED

Please find below a communication from the EXAMINER in charge of the application of

Nikola Tesla, Ser. No. 79,703, filed Feb. 21, 1916 for
Valvular Conduit.

Thomas Ewing
Commissioner of Patents.

c 6—2631

This is supplementary to the Office action of June 3, 1916.

The claims are all rejected upon the Swiss patent to Edwards, 18,298 of 1898, (Klasse 95), 137-112.

See especially Fig. 1a, Fig. 3 and Fig. 4 in this patent.

The Examiner regrets that the Swiss patent was not discovered in the first search, it having been found now in another class of art in the Office.

Applicant has one year from this date in which to amend his case.

L. M.

Examiner, Div. 39.

Serial No. 7970 Paper No. 4
Amendment a

Nikola Tesla
Valvular Conduit
Filed February 12, 1916
Serial No. 79,703

Chicago, Ill., November 23, 1917.

Hon. Commissioner of Patents,
Washington, D. C.

Sir:

In response to Patent Office action dated November 25, 1916, I amend as follows:

Add to the specification the following, after line 2 of page 11;

a'

- - - I am aware that asymmetrical conduits have been constructed and their use proposed in connection with engines, but these have no similiarity either in their construction or manner of employment with my valvular conduit. They were incapable of acting as valves proper, for the fluid was merely arrested in pockets and deflected through 90°, this result having at best only 25% of the efficiency attained in the construction herein described. In the conduit I have designed the fluid, as stated above, is deflected in each cycle through 360°, and a co-efficient approximating 200 can be obtained so that the device acts as a slightly leaking valve, and for that reason the term "valvular" has been given to it in contrast to asymmetrical conduits, as heretofore proposed, which were not valvular in action, but merely asymmetrical as to resistance.

Furthermore, the conduits heretofore constructed were intended to be used in connection with slowly reciprocating machines, in which case enormous conduit-length would be necessary, all this rendering them devoid of practical value. By the use of an effective valvular conduit, as herein described, and the

[*This page retyped from original for better readability - Ed.*]

employment of pulses of very high frequency. I am able to condense my apparatus and secure such perfect action as to dispense successfully with valves in numerous forms of reciprocating and rotary engines.

Insert B'

Cancel claims 1 to 6 inclusive, and substitute --

a^2

1. A valvular conduit having interior walls of such conformation as to permit the free passage of fluid through it in the direction of flow but to subject it to rapid reversals of direction when impelled in the opposite sense and thereby to prevent its return by friction and mass resistance.

2. A valvular conduit composed of a closed passageway having recesses in its walls so formed as to permit a fluid to pass freely through it in the direction of flow, but to subject it to rapid reversals of direction when impelled in an opposite sense and thereby interpose friction and mass resistance to the return passage of the same.

3. A valvular conduit composed of a tube or passageway with rigid interior walls formed with a series of recesses or pockets with surfaces that reverse a fluid tending to flow in one direction therein and thereby check or prevent flow of the fluid in that direction.

4. A valvular conduit with rigid interior walls of such character as to offer substantially no obstacle to the passage through it of fluid impulses in one direction, but to subject the fluid to rapid reversals of direction and thereby oppose and check impulses in the opposite sense.

5. A valvular conduit with rigid interior walls formed to permit fluid impulses under pressure to pass freely through it in one direction, but to subject them to rapid reversals of direction through 360° and thereby check their progress

[*This page retyped from original for better readability. - Ed.*]

when impelled in the opposite sense.

6. A valvular conduit with rigid interior walls which permit fluid impulses to flow through it freely in one direction, formed at a plurality of points to reverse such fluid impulses when impelled in the opposite direction and check their flow.

Reconsideration of claim 7 is requested.

It is thought that the foregoing matter added to the specification makes clear the broader differentiations of the invention set forth in this application from the Swiss patent of reference, and that the claims as amended define applicant's invention in important matters of novelty. Since the Examiner will readily grasp the distinctions thus made, upon his comparative consideration of the specification and claims of this case and the disclosure of the reference, it is believed to be needless to burden the record with more detailed statements of the inadequacy of the reference to meet this case as above presented.

As to claim 7, the intermediate baffles are distinctive.

Chicago, Illinois, this 23rd day
of November, 1917.

Nikola Tesla

[*This page retyped from original for better readability - Ed.*]

Div. 39 Room 220 | 2-260 | JWM/D | Paper No. 5-R

Address only "The Commissioner of Patents, Washington, D. C.," and not any official by name.

All communications respecting this application should give the serial number, date of filing, title of invention, and name of the applicant.

DEPARTMENT OF THE INTERIOR

UNITED STATES PATENT OFFICE

WASHINGTON Dec. 17, 1917

Kerr, Page, Cooper & Hayward,
55 Liberty St.,
New York, N. Y.

Please find below a communication from the ***EXAMINER*** *in charge of the application of*

Nikola Tesla, filed Feb. 21, 1916, #79,703.

VALVULAR CONDUIT.

James T. Newton
Commissioner of Patents.

This is in reply to the amendment filed Nov. 24,1917.

Applicant's new claim and his argument have been carefully considered.

The advantages of applicant's device over any that appears in the record are recognized but the broadest reasonable interpretation must be given to the language of claims. Inasmuch as neither in applicant's device nor in the reference of record is there a complete prevention of the reversal of flow,apparently the term "valvular" may be correctly applied to the devices patented and especially in those shown in the Swiss patent and cited in the last Office letter. If this position is correct apparently present claims 1, 4, and 6 are clearly anticipated by the Swiss patent.

Claims 2 and 3 which recite a construction in which the pockets are formed not by thickening the wall by means of projections but by removing portions of the wall appear to be allowable as advised.

Claim 5 recites a capacity in the device of producing reversals of direction through 360°. Even in connection with applicant's addition to the specification this feature is not quite clear, inasmuch as the "cycle" referred to in the added text is not certainly defined. Action on the merits of claim 5 is therefore deferred.

Claim 7 retained is now thought to be allowable as advised.
Claims 1, 4, and 6 must be rejected.

JWM

Arthur W. Cowles
Examiner.

TESLA COMPANY, INC.

STEAM AND GAS TURBINES
BLOWERS COMPRESSORS
VACUUM PUMPS FOUNTAINS
MECHANICAL OSCILLATORS
PRECISION INSTRUMENTS

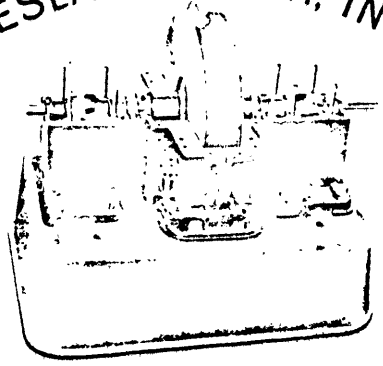

HIGHFREQUENCY DYNAMOS
LIGHTNING PROTECTORS
INTERFERENCE PREVENTERS
OSCILLATION TRANSFORMERS
SCIENTIFIC NOVELTIES

NEW YORK, 8 WEST 40TH. ST.
TEL. 23 VANDERBILT.

2722

Nikola Tesla

Valvular Conduit

Filed February 12,1916

Serial No. 79,703

December 14, 1918

Hon. Commissioner of Patents,

Washington, D. C.

Sir:

Referring to Official Letter of December 17, 1917 in regard to the above application and argument submitted November 24, 1917, I beg to amend as follows:

Add to last named argument on line 4, page 2, following statement:

The high efficiency of the device, irrespective of the character of the pulses, is due to two causes: first, rapid reversal of direction of flow and, second, great relative velocity of the colliding fluid columns. As will be readily seen each bucket causes a

deviation through an angle of 180°, and another change of 180° occurs in each of the spaces between two adjacent buckets. That is to say, from the time the fluid enters or leaves one of the recesses to its passage into, or exit from, the one following a complete cycle, or deflection through 360°, is effected. Observe now that the velocity is but slightly reduced in the reversal so that the incoming and deflected fluid columns meet with a relative speed, twice that of the flow, and the energy of their impact is four times greater than with a deflection of only 90°, as might be obtained with pockets such as have been employed in asymmetrical conduits for various purposes. The fact is, however, that in these such deflection is not secured, the pockets remaining filled with comparatively quiescent fluid and the latter following a winding path of least resistance between the obstacles interposed. In such conduits the action cannot be characterized as "valvular" because some of the fluid can pass almost unimpeded in a direction opposite to the normal flow. In my construction, as above indicated, the resistance in the reverse may be 200 times that in the normal direction. Owing to this a comparatively very small number of buckets or elements is required for checking the fluid. To give a concrete idea, suppose that the leak from the first element is represented by the fraction $\frac{1}{X}$, then after the nth bucket is traversed, only a quantity $\left(\frac{1}{X}\right)^n$ will escape and it is evident that X need not be a

large number to secure a nearly perfect valvular action.

I believe that the preceding will meet the Examiner's wish for explicitness in regard to claim 5 and also satisfy him that the characterisation of the action of my device is entirely justified in fact and also as distinctive from the prior art. I trust, therefore, that in view of the importance of the invention and the desirability of using a fitting term, claims 1, 4 and 6 may be allowed in their present form.

Reconsideration is respectfully requested.

Nikola Tesla

22

ADDRESS ONLY
THE COMMISSIONER OF PATENTS,
WASHINGTON, D. C.

2—181 **Serial No.**

DEPARTMENT OF THE INTERIOR

UNITED STATES PATENT OFFICE

WASHINGTON Jan. 6, 1919.

Nikalo Tesla,

Sir: Your APPLICATION for a patent for an IMPROVEMENT in Valvular Conduit.

filed Feb. 21, 1916. , has been examined and ALLOWED.

The final fee, TWENTY DOLLARS, must be paid not later than SIX MONTHS from the date of this present notice of allowance. If the final fee be not paid within that period, the patent on this application will be withheld, unless renewed with an additional fee of $15, under the provisions of Section 4897, Revised Statutes.

The office delivers patents upon the day of their date, and on which their term begins to run. The printing, photolithographing, and engrossing of the several patent parts, preparatory to final signing and sealing, will require about four weeks, and such work will not be undertaken until after payment of the necessary fee.

When you send the final fee you will also send, DISTINCTLY AND PLAINLY WRITTEN, the name of the INVENTOR, TITLE OF INVENTION, AND SERIAL NUMBER AS ABOVE GIVEN, DATE OF ALLOWANCE (which is the date of this circular), DATE OF FILING, and, if assigned, the NAMES OF THE ASSIGNEES.

If you desire to have the patent issue to ASSIGNEES, an assignment containing a REQUEST to that effect, together with the FEE for recording the same, must be filed in this office on or before the date of payment of final fee.

After issue of the patent uncertified copies of the drawings and specifications may be purchased at the price of FIVE CENTS EACH. The money should accompany the order. Postage stamps will not be received.

Final fees will NOT be received from other than the applicant, his assignee or attorney, or a party in interest as shown by the records of the Patent Office.

Respectfully,

James T. Newton
Commissioner of Patents.

Kerr, Page, Cooper and Hayward,
55 Liberty St.,
New York, N. Y.

6—1641

23

IN REMITTING THE FINAL FEE GIVE THE SERIAL NUMBER AT THE HEAD OF THIS NOTICE.

UNCERTIFIED CHECKS WILL NOT BE ACCEPTED

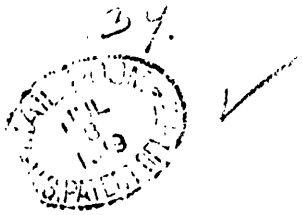

PETITION.

Your petitioner, NIKOLA TESLA, a citizen of the United States and a resident of New York, in the County and State of New York, whose postoffice address is 8 West 40th Street, New York, N.Y., represents that on February 21, 1916, he filed an application for letters patent for an improvement in Valvular Conduits, Serial No. 79,703, which application was allowed on January 6, 1919, but that he failed to make payment of the final fee within the time allowed by law. He now makes renewed application for letters patent for said invention, and prays that the original specification, oath and drawings may be used as a part of this application

Nikola Tesla

Signed at New York, N.Y.,
this 21st day of July, 1919.

ADDRESS ONLY
THE COMMISSIONER OF PATENTS.
WASHINGTON, D. C.

2—181

Serial No. 309,482

DEPARTMENT OF THE INTERIOR

UNITED STATES PATENT OFFICE

WASHINGTON July 15, 1919.

IN REMITTING THE FINAL FEE GIVE THE SERIAL NUMBER AT THE HEAD OF THIS NOTICE.

UNCERTIFIED CHECKS WILL NOT BE ACCEPTED.

Nikola Tesla,
Sir: Your APPLICATION for a patent for an IMPROVEMENT in
VALVULAR CONDUIT.

filed Feb. 21, 1916. , has been examined and ALLOWED.

The final fee, TWENTY DOLLARS, must be paid not later than SIX MONTHS from the date of this present notice of allowance. If the final fee be not paid within that period, the patent on this application will be withheld, unless renewed with an additional fee of $15, under the provisions of Section 4897, Revised Statutes.

The office delivers patents upon the day of their date, and on which their term begins to run. The printing, photolithographing, and engrossing of the several patent parts, preparatory to final signing and sealing, will require about four weeks, and such work will not be undertaken until after payment of the necessary fee.

When you send the final fee you will also send, DISTINCTLY AND PLAINLY WRITTEN, the name of the INVENTOR, TITLE OF INVENTION, AND SERIAL NUMBER AS ABOVE GIVEN, DATE OF ALLOWANCE (which is the date of this circular), DATE OF FILING, and, if assigned, the NAMES OF THE ASSIGNEES.

If you desire to have the patent issue to ASSIGNEES, an assignment containing a REQUEST to that effect, together with the FEE for recording the same, must be filed in this office on or before the date of payment of final fee.

After issue of the patent uncertified copies of the drawings and specifications may be purchased at the price of FIVE CENTS EACH. The money should accompany the order. Postage stamps will not be received.

Final fees will NOT be received from other than the applicant, his assignee or attorney, or a party in interest as shown by the records of the Patent Office.

Respectfully,

James T. Newton
Commissioner of Patents.

Kerr, Page, Cooper & Hayward,
55 Liberty St.,
New York, N. Y.

6—1041

34

Collier's Weekly
Dec. 2, 1916

WONDERS OF THE FUTURE

By Nikola Tesla

Nikola Tesla is an inventor, electrical wizard, and seer. He is the discoverer of alternating-current power transmission, the system of electrical conversion and distribution by oscillatory discharges, transmission of energy through a single wire without return, a system of wireless transmission of intelligence, transformer, etc. His laboratory is at Shoreham, L. I.

Many a would-be discoverer, failing in his efforts, has felt regret at having been born at a time when, as he thinks, everything has been already accomplished and nothing is left to be done. This erroneous impression that, as we are advancing, the possibilities of invention are being exhausted is not uncommon. In reality it is just the opposite. What has been so far done by electricity is nothing as compared with what the future has in store. Not only this, but there are now innumerable things done in old-fashioned ways which are much inferior in economy, convenience, and many other respects to the new method. So great are the advantages of the latter that whenever an opportunity presents itself the engineer advises his client to "do it electrically."

Water power offers great opportunities for novel electrical applications, particularly in the department of electrochemistry. The harnessing of waterfalls is the most economical method known for drawing energy from the sun. This is due to the fact that both water and electricity are incompressible. The net efficiency of the hydroelectric process can be as high as 85 per cent. The initial outlay is generally great, but the cost of maintenance is small and the convenience offered ideal. My alternating system is invariably employed, and so far about 7,000,000 horsepower as been developed. As generally used, we do not get more than six-hundredths of a horsepower per ton of coal per year. This water energy is therefore equivalent to that obtainable from an annual supply of 120,000,000 tons of coal, which is from 25 to 50 per cent of the total output of the United States.

Great possibilities also lie in the use of coal. From this valuable mineral we chiefly draw the sun's stored energy, which is required to meet our industrial and commercial needs. According to statistical records the output in the United States during an average year is 480,000,000 tons. In perfect engines this fuel would be sufficient to develop 500,000,000 horsepower steadily for one year, but the squandering is so reckless that we do not get more than 5 per cent of its heating value on the average. A comprehensive electrical plan for mining, transporting, and using coal could much reduce this appalling waste. What is more, inferior grades, billions of tons of which are being thrown away, might be turned to profitable use.

Similar considerations apply to natural gas and mineral oil, the annual loss of which amounts to hundreds of millions of dollars. In the very near future such waste will be looked upon as criminal and the introduction of the new methods will be forced upon the owners of such properties. Here, then, is an immense field for the use of electricity in many ways. The manufacture of iron and steel offers another large opportunity for the effective application of electricity.

In the production of pig iron about one ton of coke is employed for every ton. Thus 31,000,000 tons of coke are used a year. There are 4,000,000 cubic feet of gases from the blast furnaces which may be used for power purposes. It is practicable to obtain 2,500,000 horsepower electrical energy in this way.

In the manufacture of coke some 41,000,000 tons of coal are employed in this country. From the gases produced in this process some 1,500,000 horsepower could

be produced in the form of electrical energy.

I have devoted much thought to this industrial proposition, and find that with new, efficient, extremely cheap, and simple thermodynamic transformers not less than 4,000,000 horsepower could be developed in electric generators by utilizing the heat of these gases, which, if not entirely wasted, are only in part and inefficiently employed.

With systematic improvements and refinements much better results could be secured and an annual revenue of $50,000,000 or more derived. The electrical energy could be advantageously used in the fixation of atmospheric nitrogen and production of fertilizers, for which there is an unlimited demand and the manufacture of which is restricted here on account of the high cost of power. I expect confidently the practical realization of this project in the very near future, and look to exceptionally rapid electrical development in this direction.

But the time is very near when we shall have the precipitation of the moisture of the atmosphere under complete control, and then it will be possible to draw unlimited quantities of water from the oceans, develop any desired amount of energy, and completely transform the globe by irrigation and intensive farming. A greater achievement of man through the medium of electricity can hardly be imagined.

The present limitations in the transmission of power to distance will be overcome in two ways: through the adoption of underground conductors insulated by power, and through the introduction of the wireless art.

When these advanced ideas are practically realized we shall get the full benefit of water power, and it will become our chief dependence in the supply of electricity for domestic, public, and other uses in the arts of peace and war.

A vast and absolutely untouched field is the use of electricity for the propulsion of ships. The leading electrical company in this country equipped a large vessel with high-speed turbines and electric motors. The new equipment was a signal success. Applications of this kind will multiply at a rapid rate, for the advantages of the electrical drive are not patent to everybody. Gyroscopic apparatus will probably play an important part, as its general adoption on vessels is sure to come. Very little has yet been done in the introduction of electrical drive in the various branches of industry and manufacture, but the prospects here are unlimited.

Books have already been written on the uses of electricity in agriculture, but the fact is that very little has been practically done. The beneficial effects of electricity of high tension have been unmistakably established, so that we are warranted in believing that a revolution will be brought about through the extensive adoption of agricultural electrical apparatus. The safeguarding of forests against fires, the destruction of microbes, insects, and rodents will, in due course, be accomplished by electricity.

In the not far distant future we shall see a great many new uses of electricity that will aim at safety. The safety of vessels at sea will be particularly affected. We shall have electrical instruments which will prevent collisions, and we shall even be able to disperse fogs by electric force and powerful and penetrative rays. I am hopeful that within the next few years wireless plants will be installed for the purpose of illuminating the oceans. The project is perfectly feasible; if carried out it will contribute more than any other provision to the safety of property and human lives at sea. The same plant could also produce stationary electrical waves and enable ships to get any time accurate bearings and other valuable practical data, thus making the present means unnecessary. It could also be used for time signaling and many other such purposes.

In the great departments of electric light and power great opportunities are offered through the introduction of many kinds of novel devices which can be attached

to the circuits at convenient hours to equalize the loads and increase the revenues from the plants. I myself have knowledge of a number of new appliances of this kind. The most important of them is probably an electrical ice machine which obviates entirely the use of dangerous and otherwise objectional chemicals. The new machine will also require no attention and will be very economical in operation. In this way refrigeration will be effected very cheaply and conveniently in every household.

An interesting fountain, electrically operated, has already been brought out. It will very likely be extensively introduced, and will afford an unusual and pleasing sight in squares, parks, and hotels.

Cooking devices for all domestic purposes are now being made, and there is a large demand for practical designs and suggestions in this field, and for electric signs and other attractive means of advertising which can be electrically operated. Some of the effects which it is possible to produce by electric currents are wonderful and lend themselves to exhibitions. There is no doubt that much can be done in this direction. Theatres, public halls, and private dwellings are in need of a great many devices and instruments for convenience, and offer ample opportunities to ingenious and practical inventors.

Great improvements are also still possible in telegraphy and telephony. The use of a new receiving device, the sensitiveness of which can be increased almost without limit, will enable us to telephone through aerial lines or cables of any length by reducing the necessary working current to an infinitesimal value. This invention will enormously extend the wireless transmission of intelligence in all its departments.

The next art to be introduced is that of picture transmission telegraphically. Existing apparatus will be used. This idea of telegraphing or telephoning pictures was arrived at long ago, but practical difficulties have hampered commercial realization. There have been promising experiments, and there is every reason to believe that success will soon be achieved. Another valuable invention will be a typewriter electrically operated by the human voice. This advance will be of the utmost value, as it will do away with the operator and save a great deal of labor and time in business offices.

Many municipal improvements based on the use of electricity are soon to be introduced. There will be smoke annihilators, dust absorbers, ozonizers, sterilizers of water, air, food, and clothing, and accident preventers on streets, elevated roads, and in subways. It will become next to impossible to contract diseases from germs or get hurt in the city. Country folk will go to town to rest and get well.

Electrotherapy is another great field in which there are unlimited possibilities for the application of electricity. High-frequency currents especially have a great future. The time is bound to come when this form of electrical energy will be on tap in every private residence. It is possible that we may be able to do away with the customary bath. The cleaning of the body can be instantaneously effected simply by connecting it to a source of electric energy of very high potential, which will result in the throwing off of dust or any small particles adhering to the skin. Such a bath, besides being dry and time-saving would also be of beneficial therapeutic influence. New electric devices that will be a blessing to the deaf and blind are coming.

Electrical instruments will soon become an important factor in the prevention of crime. In court proceedings electric evidence can be made decisive. It will, no doubt, be possible before very long to flash any image formed in the mind on a screen and make it visible to a spectator at any place desired. The perfection of this sort of reading thought will create a revolution for the better in all our social relations. It is true that cunning lawbreakers will avail themselves of the

same means to further their nefarious business.

The present international conflict is a powerful stimulus to invention of destructive devices and implements. An electric gun will soon be brought out. The wonder is that it was not invented long ago. Dirigibles and aeroplanes will be furnished with small electric generators of high tension, from which the deadly currents will be conveyed through thin wires to the ground. Battleships and submarines will be provided with electric and magnetic feelers so delicate that the approach of any body under water or in darkness may be easily detected. Torpedoes and floating mines will direct themselves automatically and without fail get in fatal contact with the object to be destroyed - in fact, these are almost in sight. The art of telautomatics, or wireless control of automatic machines at a distance, will play a very important role in future wars and, possibly, in the later phases of the present one. Such contrivances, which act as if endowed with intelligence, may take the shape of aeroplanes, balloons, automobiles, surface, or underwater boats, or any other form according to the requirement in each special case. They will have far greater ranges and will be much more destructive than the implements now employed. I believe that the telautomatic aerial torpedo will make the large siege gun, on which so much dependence is now placed, utterly obsolete.

New York Herald
April 15, 1917

NIKOLA TESLA TELLS OF COUNTRY'S WAR PROBLEMS

Needs in Aerial and Naval Spheres and Means for Combating Hostile Attack Described - Numerous Devices of American Invention Already Exist - Others Required

By Nikola Tesla

The conquest of elements, annihilation of distance in the transmission of force and numerous other revolutionary advances have brought us face to face with problems new and unforeseen. To meet these is an imperative necessity rendered especially pressing through the struggle which is now being waged between nations on a stupendous scale unprecedented in history.

This country, finding it impossible to remain an inactive witness of medieval barbarism and disregard of sacred rights, has taken up arms in a spirit broad and impartial and in the interest of humanity and peace. Its participation will be absolutely decisive as regards the final result, but those who expect a speedy termination of the conflict should undeceive themselves.

War, however complex, is essentially a mechanical process, and, in conformity with a universal principle, its duration must be proportionate to the masses set in motion. The truth of this law is borne out by previous records, from which it may be calculated that, barring conditions entirely out of the ordinary, the period should be from five to six years.

Great freedom of institutions, such as we are privileged to enjoy, is not conducive to safety. Militarism is objectionable, but a certain amount of organized discipline is indispensable to a healthy national body. Fortunately, the recognition of this fact has not come too late, for there is no immediate danger, as alarmists would make us believe. The geographical position of this country, its vast resources and wealth, the energy and superior intelligence of its people, make it virtually unconquerable.

We Would Win in the End.

There is no nation to attack us that would not be ultimately defeated in the attempt. But events of the last three years have shown that a combination of many inimical powers is possible, and for such an emergency the United States is wholly unprepared. The first efforts must therefore be devoted to the perfection of the best plea for national protection. This idea has taken hold of the minds of people and great results may be expected from its creative imagination fired by this occasion, such as may in a larger measure recompense for the awful wastage of war.

While the chief reliance in this perilous situation must be placed on the army and navy, it is of the greatest importance to provide a big fleet of aeroplanes and dirigibles for quick movement and observation; also a great number of small high speed craft capable of fulfilling various vital duties as carriers and instruments of defence. These, together with the wireless, will be very effective against the U-boat, of which the cunning and scientific enemy has made a formidable weapon, threatening to paralyze the commerce of the world.

As the first expedient for breaking the submarine blockade, the scheme of employing hundreds of small vessels, advanced by Mr. W. Denman, chairman of the United States Shipping Board, is a most excellent one, which cannot fail to succeed. Another measure which will considerably reduce the toll is to use every possible means for driving the lurking enemy far out into the sea, thus extending the distance at which he must operate and thereby lessening his chances. But a perfect apparatus for revealing his presence is what is most needed at this moment.

Several Devices Known.

A number of devices, magnetic, electric, electro-magnetic or mechanical, more or less known, are available for this purpose. In my own experience it was demonstrated that the small packet boat is capable of affecting a sensitive magnetic indicator at a distance of a few miles. But this effect can be nullified in several ways. With a different form of wireless instrument devised by me some years ago it was found practicable to locate a body of metallic ore below the ground, and it seems that a submarine could be similarly detected.

Sound waves may also be resorted to, but they cannot be depended upon. Another method is that of reflection, which might be rendered practicable, though it is handicapped by experimental difficulties well nigh insuperable. In the present state of the art the wireless principle is the most promising of all, and there is no doubt that it will be applied with telling effect. But we must be prepared for the advent of a large armored submarine of great cruising radius, speed and destructive power which will have to be combatted in other ways.

For the time being no effort should be spared to develop aerial machines and motor boats. The effectiveness of these can be largely increased by the use of a turbine, which has been repeatedly referred to in the HERALD and is ideally suited for such purposes on account of its extreme lightness, reversibility and other mechancial features.

MINUTES OF THE ANNUAL MEETING OF THE AMERICAN INSTITUTE OF ELECTRICAL ENGINEERS, HELD AT THE ENGINEERING SOCIETIES BUILDING, NEW YORK CITY, FRIDAY EVENING, MAY 18, 1917.

PRESENTATION OF THE EDISON MEDAL TO NIKOLA TESLA.

President Buck called the meeting to order at 8:30 o'clock.

THE PRESIDENT: As you know, gentlemen, this is the Annual Meeting of the Institute, and the first thing on the program will be the presentation of the Report of the Board of Directors by our Secretary, Mr. Hutchinson.

SECRETARY HUTCHINSON: The annual report of the Institute for the year has been printed and distributed, and it is not my intention to take the time to read it. It consists of a brief resume of the activities of the institute for the entire year, and includes abstracts of the reports of the various committees.

(Secretary Hutchinson then abstracted the Report of the Board of Directors.)

THE PRESIDENT: Gentlemen, the next order of business of the evening will be the announcement of the election of officers and managers for the coming year. The report of the Tellers will be presented by the Secretary, Mr. Hutchinson.

Secretary Hutchinson then presented the report of the Tellers, which showed elections as follows:

President:	W. W. Rice, Jr.
Vice-Presidents:	Frederich Bedell, John H. Finney, A. S. McAllister
Managers: (Term expiring July 31, 1921)	Walter A. Hall, E. H. Martindale, William A. DelMar, Wilfred Sykes
Treasurer:	George A. Hamilton

(The president then declared the foregoing-named gentlemen as duly elected officers and managers of the Institute as indicated.)

THE PRESIDENT: It is our privilege from time to time to honor those in the electrical profession who have rendered conspicuous service towards this advance. We have the pleasure this evening of so honoring Mr. Nikola Tesla. Dr. Kennelly, who is Chairman of the Edison Medal Committee, will tell us what the Edison Medal is and what it stands for. I take pleasure in introducing Dr. A. E. Kennelly.

DR. A. E. KENNELLY: Mr. President, Ladies and Gentlemen: It is my privilege to say a few words to you upon the origin and purpose of the Edison Medal. First of all, many people suppose that the Edison Medal is a medal presented by Mr. Edison. That is a mistake. Mr. Edison has been so busy during his life receiving medals that he has not time for the delivery of any. The Edison Medal owes its existence to the action of a group of his admirers who in a very remarkable Deed of Gift, a printed copy of which I have here, have set apart a fund for the purpose of the annual award of a medal for meritorious achievement in the electrical science and art. This deed of gift originally recited, in 1904, that the medal should be annually awarded for the best graduating thesis by the students of electrical engineering in the United States and Canada, but in the years that elapsed between 1904 and 1908, I tnink I am correct in saying that there were no successful candidates, at least for the medal under those terms, although there may have been many aspirants. It is

supposed that the dignity of the medal and the junior character of the tyros restrained them in their modesty from making proper application.

Be that as it may, finding that the applicants held back under the original terms of the deed of gift, the matter was taken up further and the original body of men redrafted the deed and placed it in the hands of the American Institute of Electrical Engineers to award the medal, under the choice of a Committee, annually, for meritorious achievement, as indicated, to any resident of the United States, its dependencies, or Canada, during each administration year. The monument which they raised to Mr. Edison by their act is, I think you will admit, one of the most wonderful that has ever been raised to any scientist.

The Deed of Gift says that there shall be twenty-four members appointed by the American Institute of Electrical Engineers, sixteen from the membership at large, three ex officio members, the President, Secretary and Treasurer, and the balance from the Board of Directors.

Every year the medal is due to be awarded. There have been already six medals awarded, not counting the medal which is to be awarded to-night, and the recipients of these medals have been Elihu Thomson, Frank J. Sprague, George Westinghouse, William Stanley, Charles F. Brush, Alexander Graham Bell. I think you will say that is a fitting selection for the galaxy of names that we look forward to in the future, all of them, in honoring Mr. Edison's achievements, which have been so noteworthy, that every household in the land holds his name as a cherished household word. We may look forward to a time say a thousand years hence, when, like this evening, the American Institute of Electrical Engineers, or its successors or assigns, shall be convoked, and at which the medal of the year will be awarded to its One Thousand and Seventh recipient, and all that long galaxy of names will represent those individuals who have contributed to the recognition of the achievements of Mr. Edison and his gift to humanity.

In addition to what this deed of gift shows in honor of Mr. Edison himself, there is, of course, the very great honor that it bestows upon the recipient. The Deed of Gift says there shall be twenty-four jurors, which you see is twice the number of jurors that is allowed in the palladium of our liberties, but whereas the jurors of ordinary life convict by unanimous vote, the twenty-four jurors of the Edison Medal convict, at least, by a two-thirds vote, so I think I am correct in saying that their convictions have hitherto been entirely unanimous, and in this particular case I can certainly declare that it has been unanimous.

The galaxy of names that will be produced and has already been produced under this deed of gift will be great and noteworthy. It will not be necessary to look into a "Who's Who" to see who has been great and notorious and worthy of merit in electrical science and art. The historian of the future will simply say - "Give me the list of the Edison Medallists."

This deed of gift is also wonderful in other respects. It has marvelous flexibility and marvelous rigidity in certain directions. It provides for the possibility of a change of personnel, a change of procedure and a change of administration as time and things may change. It only makes one rigid restriction, and that is that the name "Edison Medal" shall never be changed. Times may change and persons and institutions, the Institute itself may go out of existence, and there is provided machinery whereby if the Institute should say it is tired, or it has gone out of existence, or can no longer administer the medal, that the five oldest universities of the country, maintaining a course in electrical engineering, shall be able to place the administration of the medal by their vote in the hands of some new institution, so you see that this is a very wonderful Deed of Gift that I have the honor of bringing to your notice here this evening in connection with the bestowal of this medal. Another great advantage that the medal presents is that its

recipient shall be alive, that is to say he must not only have been convicted of great merit and meritorious achievement, but he must also have escaped being run over by automobiles up to the time of the presentation. That represents a great advance over those methods of awarding distinction which depend upon the demise of the individual. You know somebody has said that a great statesman is a successful politician who is dead, but we may say that the Edison Medallist is a great electrician who is alive, and you know it is wonderful how little is known sometimes about a man's demise, however much may be known about his work. The other day I met a negro in the South, and I happened to mention Washington, and what was done by George Washington who died so many years ago, and he said, "For de Lawd's sake, I doant even heard the man was sick." So you see that even George Washington, no matter how meritorious he might have been in electrical matters, could not possibly be the recipient of an Edison medal.

We have recently received the sad news in this country of the demise of the great English electrical engineer Silvanus P. Thomson, a man who had many admirers and many friends in this country, many students here, a man whose name and work is dear to so many of us, and efforts are now being made to contribute to a fitting memorial for him by the purchase of his library as an appendix to the great library of the British Institution of Electrical Engineers, and a notice is given on page 126 of the May Proceedings of the Institute regarding that movement, and you will find it a very worthy movement. Subscription lists are open to the members of this Institute, as a matter of courtesy, and a matter of recognition, that so many of his friends in this country could be allowed to give some contribution to this great Thomson Memorial. It is a fact, as I dare say many of you know, that the funds for Lord Kelvin's Memorial Window in Westminster Abbey were largely raised in America, more largely, I believe, than they were in England itself. In this case I am led to believe that they do not want the funds so much, as they want the names of sympathizers with the project, the support of those who recognize the work and merit of Silvanus P. Thomson. But how much better it would be if we were presenting a memorial to Silvanus P. Thomson living, as we are able to do in the case of the Edison Medal, than presenting a memorial to Silvanus P. Thomson passed away.

Then one thing more: This deed of gift between its lines suggests a third and by no means least important purpose, and that is a safeguard, lest we forget. We in this time and of this continent, particularly we of the electrical profession, with our faces ever turned to the rising sun, are so apt to forget that there has been a preceding night of trouble, difficulty and dismay, and that the tools of our trade which lie to our hand were only secured by hard work and toil against all sorts of distress and discouragements. The Edison Medal is our means for reviving your memories of the past and pointing out that the things we look upon as the sunshine of heaven now have been arrived at by the hard work, the inspiration, or, as Edison himself would say, the perspiration of those who have worked in the past.

We remember that beautiful book, "The Twins", where Budge and Toddy the children always insisted at all times of the day and night to see the wheels go 'round and have their father's watch opened for them. The medallist to-night was a man who saw in his mind wheels going around when there was no means of getting alternating current motors to rotate, when the alternating current would do everything but make wheels go 'round, and he devised the rotating magnetic field so prophetically in his mind's eye that the rotating magnetic wheel would set wheels going 'round all over the land and all over the world, and the vision is carried out, and we recognize that vision here, and the Medal is partly as a reminder that we should not forget the fact, that the medallist also made the phenomenon of high frequency known to us all practically for the first time, and that what he showed was a revelation to science and art unto all time.

For this third purpose the Edison Medal has been created, and we may look far

forward into the future and see it given year after year for, let us hope, a thousand years from now, in the year 2917, to witness the ceremony which we may well expect will be furnished at that time. (Applause)

THE PRESIDENT: Dr. Kennelly has referred to the struggles of the past, and we are very fortunate in having with us to-night one who was associated with Mr. Tesla in his struggles of the past. Gentlemen, I want to introduce to you Mr. Charles A. Terry, who will tell us something about these struggles and the early work of Mr. Tesla, for which we assign to him the Medal to-night.

CHARLES A. TERRY: Mr. Kennelly spoke of the thousandth award of the Medal. I think there is a peculiar significance in the fact that Mr. Tesla is to receive the seventh medal - the seventh in most calculations is considered a most excellent number to have.

The convolutions of the brain of one man impel him to paint upon canvas the visions of his soul; another conceives beauty of form which he must express in plastic art or in architectural structure; others are driven by an inner force to devote their lives to the discovery of the secrets of unexplored regions of the earth, or to search out the mysteries of the stars; some find themselves compelled by an irresistable desire to learn through archeological research the forgotten achievements of ancient races; still others seek to ascertain and formulate the physical laws which govern the processes of nature, and men with other talents find themselves urged by a like persistent force to devise and disclose new means whereby those laws may be utilized for the further benefit of mankind.

It is this God-given desire to accomplish and to give, that has produced the Michelangelos, the Galileos, the Sir Christopher Wrens, the Livingstons, Newtons, Franklins, Westinghouses, Edisons and scores of other makers of history; men whose names we retain in affectionate remembrance, because they earnestly responded to the call from within and by patient toil conceived thoughts and discovered things of value which they promulgated for the benefit of their fellow men.

Although hope of reward may and properly should exist as an added impulse to such endeavors, the chiefly effective force compelling to the long hours of hard work and personal sacrifices of such men is the "I must" which speaks from within the soul, and with our truly great men the desire for reward is better satisfied by a consciousness of achieving their aims and by the just commendation of their fellows than by material gain, except insofar as the latter may aid in the further advancement of their tasks.

Fortunately, men generally are not jealous nor envious of the doers of great deeds and the givers of large benefits, but from the depths of their hearts are grateful and they are satisfied only when evidence of their gratitude can be brought home to the giver.

It is because of this desire to show gratitude to, and appreciation of, one of our fellow members, whose name history will rightly record in the same distinguished class with those we have mentioned that we are gathered to-night.

Twenty-nine years ago this month, there was presented before this Institute, a paper of unusual import. It is entitled "A New System of Alternate Current Motors and Transformers". The author, Nikola Tesla, was then only 31 years of age, and but four years a resident of this country. His early life was spent near his birthplace not far from the Eastern Adriatic Coast. His father a Greek Clergyman and his mother, herself of an inventive mind, secured for their young son a comprehensive training in mathematics, physics and philosophy. At the age of 22 he had completed his studies in engineering at the Polytechnic School in Gratz and also a course in the University of Prague; and in 1881 began his practical work at Budapest. In 1883 he was located in Strasbourg, engaged in completing the lighting of a newly

erected railway station. Shortly after finishing this task he came to the United States. Mr. Tesla's first work in this country was upon new designs of direct current arc and incandescent lighting systems for the Edison Company.

Throughout all these years his desire had been to find an opportunity to demonstrate the truth of a conviction which became fixed in his mind while studying direct current motors in school at Gratz in 1878; the conviction was that it should be possible to create a rotating magnetic field without the use of commutators. While at Strasbourg, Tesla had succeeded in producing the rotation of a pivoted iron disc placed in a coil traversed by alternating currents, a steel bar being projected into the coil in the neighborhood of the disc. His conception of the reason for this rotation at that time was that a lag occurred in the subsidence of the magnetism of both the disc and the steel bar between successive current waves, and that the mutual repulsions caused the disc to revolve. By some fortunate process of reasoning he conceived while in Budapest (in 1882) that by using two or more out-of-phase alternating currents respectively passing through geometrically displaced coils it would be possible to develop his long sought progressively shifting magnetic field.

Lack of funds and facilities for working out his theory compelled still further postponement, but in 1885 Tesla had the good fortune to interest men of means in a direct current arc light which he had devised, and subsequently a laboratory was equipped for him in Liberty Street, New York, and here at last he found opportunity to demonstrate the correctness of his long cherished theory. In 1887 he was able to exhibit to his business associates and to Professor William A. Anthony, whose expert opinion they sought, motors having such progressively shifting fields without the use of commutators, as he had foreseen nine years before.

Having thus demonstrated the correctness of his theory and the feasibility of its application, it remained for Tesla to work out various practical methods of applying the principle, and the rapidity and wonderful way in which he surrounded the entire field of constant speed, synchronous, induction and split-phase motors is beautifully set forth in his paper of May 18th, and in the numerous patents issued May 1st, 1888, and succeeding years, covering the forms of electric motors which have since become the almost universal means for transforming the energy of alternating currents into mechanical energy.

It is somewhat difficult to eliminate from our minds the developments of the past thirty years which have now become every day features of the electrical industry, and to realize the meagreness of the then existing knowledge of alternating current phenomena. The commercial use of alternating current systems of distributions was then scarcely two years old. The Gaulard & Gibbs system of series transformers had been used abroad in a limited way for a slightly longer period but the multiple arc system based upon the so-called "Stanley Rule" which initiated the great development of the present system, was not put in practical operation in the pioneer Great Barrington plant until March 1886. It was then recognized that while the alternating current possessed wonderful possibilities for electrical distribution for lighting purposes, two almost necessary devices were lacking to render it a complete success, one a meter, the other a power motor. Professor Elihu Thomson promptly devised a successful form of meter, the motive portion of which comprised a laminated field and armature, the coils of the latter being periodically close-circuited during revolution by a commutator. To fill the demand for a power motor, however, the most promising device then suggested was a series commutator motor with laminated field and armature cores, but no satisfactory results had been obtained. Such was the situation when Tesla's achievement was announced in the Institute paper to which reference has been made.

His Honor Judge Townsend of the United States Circuit Court, in an opinion

rendered in August, 1900, as the outgrowth of some patent litigation on the Tesla inventions, concisely defines the underlying characteristic of the Tesla motor as follows:

> "Tesla's invention, considered in it essence, was the production of a continuously rotating or whirling field of magnetic forces for power purposes by generating two or more displaced or differing phases of the alternating current, transmitting such phases, with their independence preserved, to the motor, and utilizing the displaced phases as such in the motor."

Among the first to recognize the immense importance of Mr. Tesla's motors were Mr. Westinghouse and his advisors, Mr. T. B. Kerr, Mr. Byllesby, Mr. Shallenberger and Mr. Schmid, and in June Mr. Westinghouse secured an option which shortly resulted in the purchase of the patents, thus bringing under one ownership the alternating current transformer system of distribution, and the Tesla motor. It is interesting to here note that Mr. Shallenberger had about two weeks before the publication of the Tesla patents independently devised an alternating current meter, the principle of operation of which was that of the Tesla motor, and whatever might have been Mr. Shallenberger's natural disappointment upon finding himself thus anticipated, he at once recognized that to Mr. Tesla belonged the honor of being the first to solve the great fundamental problem of an alternating current motor. A warm friendship between these two men began at once and continued throughout Mr. Shallenberger's life, and Mr. Tesla rejoiced to accord to Mr. Shallenberger full credit for the latter's brilliant work in producing what is now the standard meter for alternating currents.

As illustrating the generous gentleness of Tesla's character, I wish to here quote from testimony given by him in 1903. Referring to Shallenberger, Tesla said:

> "I clearly remember that in the first days when I came to Pittsburgh he took me to lunch at the Duquesne Hotel, and when I told him that I was sorry that I had anticipated him, I saw tears in his eyes. That incident I remember vividly; but what has preceded it I cannot remember now. Perhaps it is because this impression was so vivid that it has destroyed the preceding ones, which were weaker."

It is characteristic of Tesla that he should so deeply regret the disappointments of another.

Owing in a measure to the circumstance that the then prevailing rate of alternation of the alternating current system was 16,000, the commercial introduction of Tesla motors was somewhat retarded during the first few years, that rate being found less adapted to the motor work than a lower rate. Today, however, wherever alternating current systems are used Tesla motors abound. Without such motors the alternating current system would have remained seriously restricted in its use.

Before passing to a consideration of other of Tesla's activities, it will be appropriate to refer again to the opinion of Judge Townsend, from which I quote the following:

> "The Tesla discovery for which these patents were granted revolutionized the art of electrical power transmission, as well demonstrated in the record from both judicial and scientific standpoints."

In the closing passage of the opinion, Judge Townsend pays further tribute to Tesla in the following words:

> "It remained to the genius of Tesla to capture the unruly, unrestrained, and hitherto opposing elements in the field of nature and art and to harness them to draw the machines of man. It was he who first showed

how to transform the toy of Arago into an engine of power, the "Laboratory experiment" of Baily into a practically successful motor, the indicator into a driver. He first conceived the idea that the very impediments of reversal in direction, the contradictions of alternations, might be transformed into power-producing rotation, a whirling field of force.

What others looked upon as only invincible barriers, impassable currents, and contradictory forces, he brought under control and by harmonizing their directions taught how to utilize in practical motors in distant cities the power of Niagara."

Imagination developed to a high degree is a marked characteristic of all great inventors, so it is of our great poets, artists, philosophers, generals, and, in fact, of all great originators of thought and motion. The power to picture in the mind things not yet existent is an underlying characteristic of most great men. But imagination to be effective must be combined with a just sense of proportion, a logical appreciation of limitations, and a capacity for unremitting application. Mr. Tesla combines these qualities in a marked degree, and particularly does he possess the faculty of projecting his thought far into unexplored regions, not only of science but of philosophy. His passion for searching out the ultimate is charmingly evidenced by the following extract from his lecture before this Institute at Columbia College, May 20th, 1891;

"In how far we can understand the world around us is the ultimate thought of every student of nature. The coarseness of our senses prevents us from recognizing the ulterior construction of matter, and astronomy, this grandest and most positive of natural sciences, can only teach us something that happens, as it were, in our immediate neighborhood; of the remoter portions of the boundless universe, with its numberless stars and suns, we know nothing. But far beyond the limit of perception of our senses the spirit still can guide us, and so we may hope that even these unknown worlds - infinitely small and great - may in a measure become known to us. Still, even if this knowledge should reach us, the searching mind will find a barrier, perhaps forever unsurpassable, to the true recognition of that which seems to be, the mere appearance of which is the only and slender basis of all our philosophy.

Of all the forms of nature's immeasurable, all-pervading energy, which, ever and ever changing and moving, like a soul animates the inert universe, those of electricity and magnetism are perhaps the most fascinating."

The impress made upon the world by the deeds of a great inventor cannot be measured by the number of patents which he has received nor by the monetary reward secured nor by the mere exploitation of his name. Often his greatest gifts are in the form of inspiring contributions to the literature, filled with suggestions of lines of thought which lead others to work in untried fields. This is especially true of a series of lectures delivered by Mr. Tesla upon the subject of high frequency, high potential currents. The first of the series was given at Columbia College in 1891, before this Institute. During 1892 and 1893 this lecture with additional data and experiments was repeated in London, Paris, Philadelphia and St. Louis.

Referring to an interesting interview with Mr. Tesla appearing in a New York daily in 1893 regarding the St. Louis lecture the Editor of the Electrical World says:

"Mr. Tesla, in his own graceful way, tells the story of his life and the history of some of his more important inventions. Perhaps there is no living scientist in whose life and work the general public takes a deeper

interest, especially in this country."

Tesla's fundamental purpose was to publish the results of an extended research and of a series of experiments patiently conducted at his laboratory and elsewhere through many years. During these lectures he exhibited to the audience numerous experiments displaying striking and instructive phenomena. He also described many novel pieces of apparatus such, for instance, as his high-frequency generator and induction coils and his magnetically quenched arc. Mr. Erskine Murray in his treatise upon Wireless Telegraphy, referring to certain of these early inventions of Tesla says:

> "Among many other inventions, made as early as 1893, perhaps the most important to wireless telegraphists is his method of producing long trains of waves of high frequency, and of transforming them to higher voltage. After several unsuccessful attempts he completed an alternator which could be run at 30,000 periods per second, and designed a form of transformer capable of transforming these currents to very high voltage. He also showed that his transformer, or "Tesla coil" as it is usually called nowadays, could transform currents of much higher frequencies than were obtainable from his alternator, even currents of 100,000 or 1,000,000 periods per second, such as are produced by the oscillatory discharge of a Leyden jar."

The London lecture was given under the auspices of the British Institution of Electrical Engineers and because of the intense public interest manifested after its announcement the ample capacity of the Theatre of the Royal Institution was required to accommodate the audience.

At the completion of the lecture Prof. Aytron spoke as follows:

> "It is my most pleasing duty to propose a very hearty vote of thanks to our lecturer, who has entertained us, it is true, for two hours, but we would willingly wait for another hour's similar entertainment."

Mr. Fleming in his authoritative book on wireless telegraphy and telephony pays the following tribute:

> "In 1892 Nikola Tesla captured the attention of the whole scientific world by his fascinating experiments on high frequency electric currents. He stimulated the scientific imagination of others as well as displayed his own, and created a widespread interest in his brilliant demonstrations.
>
> Amongst those who witnessed these things no one was more able to appreciate their inner meaning than Sir William Crookes."

An article by E. Raverot appearing in the Electrical World of March 26, 1892, closes a review of the Tesla Paris lecture with the following appreciative comment:

> "One sees from this lecture the deep interest which the works and discoveries of Mr. Tesla have inspired among physicists since the first appearance of his publication, and it is with great satisfaction that we are able to express the feeling of admiration which his experiments have inspired in us."

In his London lecture delivered in February, 1892, Tesla had occasion to describe a special construction of insulated cable designed to guard against electro-static disturbances, but immediately added the following significant prediction:

> "But such cables will not be constructed, for ere long intelligence - transmitted without wires - will throb through the earth like a pulse through a living organism. The wonder is that, with the present state

> of knowledge and experiences gained, no attempt is being made to disturb the electrostatic or magnetic condition of the earth and transmit, if nothing else, intelligence."

This was Tesla's prophecy twenty-five years ago.

In his lecture before the National Electric Light Association at St. Louis in March, 1893, Mr. Tesla elaborated certain views regarding the importance of resonance effects in this field and stated:

> "I would say a few words on a subject which constantly fills my thoughts and which concerns the welfare of all. I mean the transmission of intelligible signals or perhaps even power to any distance without the use of wires."

He then announced that his conviction had grown so strong that he no longer looked upon the plan of transmitting intelligence as a mere theoretical possibility, and referring to the existing belief of some that telephony to any distance might be accomplished "by induction through the air", concisely set forth his theory as follows:

> "I cannot stretch my imagination so far, but I do firmly believe that it is practical to disturb by means of powerful machines the electro-static condition of the earth and thus transmit intelligible signals and perhaps power."

Enlarging upon this theory, he states that, although we have no possible evidence of a charged body existing in space without other oppositely electrified bodies being near, there is a fair probability that the earth is such a body, for by whatever process it was separated from other bodies it must have retained a charge and that the upper strata of the air may be conducting and contain this opposite charge. He further expanded the theory that with proper means for producing electrical oscillations it might be possible to produce electrical disturbances sufficiently powerful to be perceptible by suitable instruments at any point on the Earth's surface. He thus forecast the theory at present accepted by leading scientists as the true basis of wireless telegraphy.

Continuing the same line of thought Mr. Tesla in an interview which appeared in the New York Herald in 1893 said:

> "One result of my investigations, the possibility of which has been proven by experiment, is the transmission of energy through the air. I advanced that idea some time ago, and I am happy to say it is now receiving some attention from scientific men.
>
> The plan I have suggested is to disturb by powerful machinery the electricity of the earth, thus setting it in vibration. Proper appliances will be constructed to take up the energy transmitted by these vibrations, transforming them into suitable form of power to be made available for the practical wants of life."

Testifying in a patent suit regarding these early predictions Mr. John Stone Stone, the well-known authority on wireless telegraphy has but recently made the following striking comment:

> "I misunderstood Tesla. I think we all misunderstood Tesla. We thought he was a dreamer and visionary. He did dream and his dreams came true, he did have visions but they were of a real future, not an imaginary one. Tesla was the first man to lift his eyes high enough to see that the rarified stratum of atmosphere above our earth was destined to play an important role in the radio telegraphy of the future, a fact which had to obtrude itself on the attention of most of us before we saw it. But

> Tesla also perceived what many of us did not in those days, namely, the currents which flowed away from the base of the antenna over the surface of the earth and in the earth itself."

Seldom is it that an art springs into being through the efforts of one man alone, but rather as a growth to which many have contributed. This is peculiarly true of the wireless art, and without detracting in the slightest from the honor which is justly due to those who have brought the system to its present wonderful efficiency, it is just to accord to Tesla highest praise not alone for his exposition of principles as set forth in his lectures but also for the more definitive work which followed, much of which is evidenced by his many patents dealing with the wireless art.

Before leaving this branch of Tesla's work, I wish to quote again from the testimony of Mr. Stone, presenting his view of the indebtedness of the wireless art to Tesla:

> "Some of those whose work or whose writings during that early period must be noted are Nikola Tesla, Prof. Elihu Thomson, Prof. M. I. Pupin, Prof. Lodge, Prof. Northrup, Prof. Pierce, Hutin & Leblanc, Mr. Marconi and myself. Among all these, the name of Nikola Tesla stands out most prominently. Tesla, with his almost preternatural insight into alternating current phenomena that had enabled him some years before to revolutionize the art of electric power transmission through the invention of the rotary field motor, knew how to make resonance serve, not merely the role of microscope to make visible the electric oscillations, as Hertz had done, but he made it serve the role of a stereopticon to render spectacular to large audiences the phenomena of electric oscillations and high frequency currents.*****He did more to excite interest and create an intelligent understanding of these phenomena in the years 1891-92-93 than any one else, and the more we learn about high frequency phenomena, resonance and radiation today, the nearer we find ourselves approaching what we at one time were inclined, through a species of intellectual myopia, to regard as the fascinating but fantastical speculations of a man who we are now compelled, in the light of modern experience and knowledge, to admit was a prophet. He saw to the fulfillment of his prophesies and it has been difficult to make any but unimportant improvements in the art of radio-telegraph without traveling part of the way at least, along a trail blazed by this pioneer who, though eminently ingenious, practical and successful in the apparatus he devised and constructed, was so far ahead of his time that the best of us then mistook him for a dreamer."

Another well recognized wireless authority, Professor Slaby in a personal letter to Tesla took occasion to say:

> "I am devoting myself since some time to investigations in wireless telegraph, which you have first founded in such a clear and precise manner. It will interest you, as father of this telegraph, to know, etc."

Throughout Tesla's work with high potential currents he had persistently in mind the wireless transmission of power in large quantities. It was in the furtherance of this line of investigation that he expended large amounts of money and years of labor at Wardenclyffe, Long Island, and at Telluride, Colorado. Late in 1914 he secured a patent upon an application filed twelve years before upon an apparatus for transmitting electric energy with which he hopes to be able to transmit unlimited power with high economy to any distance without wires. While as yet these efforts have not resulted in commercial exploitation, the future may prove that his dream of thus transmitting energy in substantial amounts is of that class which

in time come true, as in the case of his dream of wireless telegraphy.

Another use to which Tesla adapted the results of his high frequency investigations was the control of the movements of torpedoes and boats. In 1898 he patented such an apparatus and also built and successfully operated such a craft. The movements of the propelling engine, the steering and other mechanisms were controlled wirelessly from the shore or other point through a distance of two miles. Apparently this, like some of his other inventions, was ahead of its time. Tesla, however, evidenced his entire faith in the future of the apparatus in an interview which appeared in 1898 from which I quote:

> "But I have no desire that my fame should rest on the invention of a merely destructive device, no matter how terrible. I prefer to be remembered as the inventor who succeeded in abolishing war. That will be my highest pride. But there are many peaceful uses to which my invention can be put, conspicuously that of rescuing the shipwrecked.
>
> It will be perfectly feasible to equip our lifesaving stations with life cars, or boats, directed and controlled from the shores, which will approach stranded vessels and bring off the passengers and crews without risking the lives of the brave fellows who are now forced to fight their way to the rescue through the raging surf. It may also be used for the propulsion of pilot boats, for carrying letters or provisions or instruments to inaccessible regions******."

On March 12th, 1895, Mr. Tesla met with a disastrous loss by the destruction of his laboratory at 33 and 35 South 5th Avenue, New York. In the Electrical Review of March 20th, 1895, there is published an interview with Mr. Tesla regarding this fire. In it he says:

> "I am congratulating myself all the time it is no worse. I begin all over again, but I have the knowledge and experience of what has gone before, and fortunately I was able to show with completed apparatus that my ideas and theories are correct. Had the fire occurred a few months ago I should have been robbed of the opportunity of many highly successful demonstrations."

In his laboratory were stored a vast quantity of old models and trial apparatus with which he would have been unwilling to part for any amount of money. He further states that he was at the time engaged upon four main lines of work and investigation: his oscillator, and improved method of electric lighting, the transmission of intelligence without wires, and, an investigation relating to the nature of electricity. Mr. Tesla deeply appreciated the expressions of sympathy received from his many friends and with unabated zeal applied himself to a continuation of the work thus unfortunately interrupted.

Another field of investigation in which Mr. Tesla has contributed valuable material is related to the Roentgen Ray. In the Electrical Review of March and April, 1896, there appeared a number of communications from Mr. Tesla which while giving full credit to Roentgen for his magnificent discovery made public much additional data derived from his own careful experiments in this line of research. From an editorial in the Electrical Review of March 18th, 1896, the following is quoted:

> "The announcement of Nikola Tesla's achievements in the new art first published in the Electrical Review of March 11th, in the author's own modest language has added fresh impetus to the work in this direction. His disruptive discharge coil has been universally used where the best results in radiography have been obtained, and his two marked improvements, namely, the single electrode tube and his method of rarefaction, promise great results. Other important points about Tesla's work are

> the fine details he has obtained in his radiographs, the great distance at which the radiographs have been made, and brief time of exposure."

and again:

> "Mr. Tesla is pursuing quietly his work and giving all credit to Roentgen; and it is significant, we think, that the first radiograph he produced in his laboratory was the name of the discoverer. We wish that such courtesies among scientists would always be practiced."

Mr. J. Mount Bleyer commenting upon these investigations said:

> "The results obtained by Tesla are simply marvelous, but are just what I expected."

Among the many other inventions to which Mr. Tesla has devoted much time and energy may be mentioned a thermo-magnetic motor and a pyro-magnetic generator, anti-sparking dynamo brush and commutator, auxiliary brush regulation of direct current dynamos, uni-polar dynamos, mechanical and electrical oscillators, electro-therapeutic apparatus, the oxidation of nitrogen by high frequency currents, and an electrolytic registering meter. The last named device was based upon an exceedingly interesting theory. The current to be measured was passed through two parallel conductors arranged in series. The current established a difference of potential between these conductors proportional to the strength of the current passing. This results in a transference of the metal from one conductor to the other, thereby decreasing the resistance of one and increasing that of the other. From such variations in resistance of one or both, the current energy expended is computed.

One other line of endeavor entirely outside of electricity to which Tesla has given much attention is the development of a bladeless steam turbine in which the friction of the passing steam as distinguished from its direct impact is availed of. The steam is admitted between plain parallel rotating discs and passing spirally from the circumference toward the axial center imparts energy to the discs. Such a turbine can be run at exceedingly high temperatures, is readily reversible and having no blades is extremely simple and free from liability to accidental derangement. With great ingenuity Tesla has succeeded in producing such machines of considerable power and having exceedingly interesting characteristics. It is to be hoped that with his indefatigable zeal Tesla will soon succeed in perfecting the commercial application of this invention.

It is not possible in this brief survey even to touch upon many of the lines of Mr. Tesla's activities, but we must content ourselves with this inadequate presentation of typical evidences of the fascinating genius of this man whom we delight to welcome as a citizen of our country - the country which he twenty-five years ago adopted as his own - the country of which he once said:

> "When I arrived upon your hospitable shores I eagerly applied myself to work and to learn, and I have persevered in that course. If I have made any special success in this country, I attribute it largely to a feature which is characteristic of both the English and American races; that is, their keen and generous appreciation of any work that they think is good."

Mr. Tesla, we would indeed be woefully lacking in the attributes which you so kindly ascribe to us were we not most cordially appreciative of your work, work which we know is good.

THE PRESIDENT: Gentlemen, we are fortunate in having with us to-night another man who has been familiar with Mr. Tesla's work for many years and can tell us something further about his work. I introduce Mr. B. A. Behrend.

B. A. BEHREND: Mr. Chairman: Mr. President of the American Institute of Electrical Engineers: Fellow Members: Ladies and Gentlemen:

BY AN EXTRAORDINARY COINCIDENCE, it is exactly twenty-nine years ago, to the very day and hour, that there stood before this Institute Mr. Nikola Tesla, and he read the following sentences:

> "To obtain a rotary effort in these motors was the subject of long thought. In order to secure this result it was necessary to make such a disposition that while the poles of one element of the motor are shifted by the alternate currents of the source, the poles produced upon the other elements should always be maintained in the proper relation to the former, irrespective of the speed of the motor. Such a condition exists in a continuous current motor; but in a synchronous motor, such as described, the condition is fulfilled only when the speed is normal.
>
> "The object has been attained by placing within the ring properly subdivided cylindrical iron core wound with several independent coils closed upon themselves. Two coils at right angles are sufficient, but a greater number may be advantageously employed. It results from this disposition that when the poles of the ring are shifted, currents are generated in the closed armature coils. These currents are the most intense at or near the points of the greatest density of the lines of force, and their effect is to produce poles upon the armature at right angles to those of the ring, at least theoretically so; and since this action is entirely independent of the speed - that is, as far as the location of the poles is concerned - a continuous pull is exerted upon the periphery of the armature. In many respects these motors are similar to the continuous current motors. If load is put on, the speed, and also the resistance of the motor, is diminished and more current is made to pass through the energizing coils, thus increasing the effort. Upon the load being taken off, the counter-electromotive force increases and less current passes through the primary or energizing coils. Without any load the speed is very nearly equal to that of the shifting poles of the field magnet.
>
> "It will be found that the rotary effort in these motors fully equals that of the continuous current motors. The effort seems to be greatest when both armature and field magnets are without any projections."

Not since the appearance of Faraday's Experimental Researches in Electricity has a great experimental truth been voiced so simply and so clearly as this description of Mr. Tesla's great discovery of the generation and utilization of polyphase alternating currents. He left nothing to be done for those who followed him. His paper contained the skeleton even of the mathematical theory.

Three years later, in 1891, there was given the first great demonstration, by Swiss engineers, of the transmission of power at 30,000 volts from Aauffen to Frankfort by means of Mr. Tesla's system. A few years later this was followed by the development of the Cataract Construction Company, under the presidency of our member, Mr. Edward D. Adams, and with the aid of the engineers of the Westinghouse Company. It is interesting to recall here to-night that in Lord Kelvin's report to Mr. Adams, Lord Kelvin recommended the use of direct current for the development of power at Niagara Falls and for the transmission to Buffalo.

The due appreciation or even enumeration of the results of Mr. Tesla's invention is neither practicable nor desirable at this moment. There is a time for all things. Suffice it to say that, were we to seize and to eliminate from our industrial world the results of Mr. Tesla's work, the wheels of industry would cease to turn, our

electric cars and trains would stop, our towns would be dark, our mills would be dead and idle. Yea, so far reaching is this work, that it has become the warp and woof of industry.

The basis for the theory of the operating characteristics of Mr. Tesla's rotating field induction motor, so necessary to its practical development, was laid by the brilliant French savant, Prof. Andre Blondel, and by Prof. Kapp of Birmingham. It fell to my lot to complete their work and to coordinate, - by means of the simple "circle diagram," - the somewhat mysterious and complex experimental phenomena. As this was done twenty-one years ago, it is particularly pleasing to me, upon the coming of age of this now universally accepted theory, - tried out by application to several million horse power of machines operating in our great industries, - to pay my tribute to the inventor of the motor and the system which have made possible the electric transmission of energy. HIS name marks an epoch in the advance of electrical science. From THAT work has sprung a revolution in the electrical art.

We asked Mr. Tesla to accept this medal. We did not do this for the mere sake of conferring a distinction, or of perpetuating a name; for so long as men occupy themselves with our industry, his work will be incorporated in the common thought of our art, and the name of Tesla runs no more risk of oblivion than does that of Faraday, or that of Edison.

Nor indeed does this Institute give this medal as evidence that Mr. Tesla's work has received its official sanction. His work stands in no need of such sanction.

No, Mr. Tesla, we beg you to cherish this medal as a symbol of our gratitude for the new creative thought, the powerful impetus, akin to revolution, which you have given to our art and to our science. You have lived to see the work of your genius established. What shall a man desire more than this? There rings out to us a paraphrase of Pope's lines on Newton:

> Nature and Nature's laws lay hid in night
> God said, 'Let Tesla be,' and all was light.

THE PRESIDENT: It is easy, I think, for engineers and scientists to take for granted things that have been done in years past. When we sit under an apple tree and see the apples fall, it is an obvious phenomenon of nature. We can understand the laws of gravitation, but to Sir Isaac Newton, many years ago, this phenomenon, which to us to-day is so simple, helped him to an act of creative imagination of the most extraordinary kind.

So, later on, the phenomenon of electromagnetic induction, which to us to-day has become a matter of second nature, to Faraday was an act of the most extraordinary creative imagination.

Thirty years ago when Mr. Tesla was doing his very great work, we sometimes forget the conditions of electrical engineering which prevailed at that time. Direct-current or continuous current was universally used, and the conceptions of electrical engineers with respect to electric currents were all unidirectional, so to speak. We had not arrived at that conception of currents which went first in one direction and then in another, to say nothing of electrical currents which differed by phase relations, and the work of Nikola Tesla at that time in his great conception of the rotary field seems to me one of the greatest feats of imagination which has ever been attained by human mind. To-day we take the rotary field motor, the rotary field transmission, as a matter of course, because we have become used to it, and we forget what it required of the human intellect to create it thirty or thirty-five years ago.

At the time the great Niagara Falls enterprise was instituted, we were under the direct-current regime. As Mr. Behrend says, such a great authority on electrical engineering as Lord Kelvin, and also Mr. Edison, recommended direct-current for

transmission of energy from Niagara Falls to Buffalo, and as a system for universal use in their great waterpower development. I think we all realize to-day where we should be at the present time if direct-current had been used in the development of that enterprise. There would have been a radiating copper mine running out from Niagara Falls which would have wrecked the enterprise in the first year of its existence. Mr. Tesla came along with his great mind and at the psychological moment devised the principle which made that enterprise a success, and made hundreds of other enterprises all over the world an equal success. We owe him the greatest possible debt of gratitude for what he has done for electrical engineers.

And so again, in another field of endeavor in which he was most conspicuous, that of high voltage and high frequency alternating-current, he devised and discovered phenomena which were entirely new to electrical engineers, and he introduced to the world the conception of alternating-current as being elastic or oscillating media. The direct-current engineers at the time never thought of the electric current being something that could oscillate, and Mr. Tesla showed it could, and he also showed many of the phenomena which resulted from oscillating currents. From his work followed the great work of Roentgen, who discovered the Roentgen rays, and all that work which has been carried on throughout the world in the following years by J. J. Thompson and others, which has really led to the conception of modern physics. His work, as has been stated, antedated that of Marconi and formed the basis of wireless telegraphy, which is one of the most scientific applications of the present day, and so on throughout all branches of science and engineering we find from time to time some important evidence of what Tesla has contributed to the sciences and engineering of the present day. So, Mr. Tesla, you hear to-night the many compliments which have been paid to you, but they are not bouquets merely cast for the adornment of the occasion - they have been given with the sincere appreciation of the electrical profession, and we give this medal to you in recognition of this, with full appreciation of what you have done for us, and with great hope that you may continue to contribute to our profession in the future. (Great applause)

NIKOLA TESLA: Mr. President, Ladies and Gentlemen. - I wish to thank you heartily for your kind sympathy and appreciation. I am not deceiving myself in the fact, of which you must be aware, that the speakers have greatly magnified my modest achievements. One should in such a situation be neither diffident nor self-assertive, and in that sense I will concede that some measure of credit may be due to me for the first steps in certain new directions; but the ideas I advanced have triumphed, the forces and elements have been conquered, and greatness achieved, through the co-operation of many able men some of whom, I am glad to say, are present this evening. Inventors, engineers, designers, manufacturers and financiers have done their share until, as Mr. Behrend said, a gigantic revolution has been wrought in the transmission and transformation of energy. While we are elated over the results achieved we are pressing on, inspired with the hope and conviction that this is just a beginning, a forerunner of further and still greater accomplishments.

On this occasion, you might want me to say something of a personal and more intimate character bearing on my work. One of the speakers suggested: "Tell us something about yourself, about your early struggles." If I am not mistaken in this surmise I will, with your approval, dwell briefly on this rather delicate subject.

Some of you who have been impressed by what has been said, and would be disposed to accord me more than I have deserved, might be mystified and wonder how so much as Mr. Terry has outlined could have been done by a man as manifestly young as myself. Permit me to explain this. I do not speak often in public, and wish to address just a few remarks directly to the members of my profession, so that there will be no mistake in the future. In the first place, I come from a very wiry and long-lived race. Some of my ancestors have been centenarians, and one of them lived

one hundred and twenty-nine years. I am determined to keep up the record and please myself with prospects of great promise. Then again, nature has given me a vivid imagination which, through incessant exercise and training, study of scientific subjects and verification of theories through experiment, has become very accurate and precise, so that I have been able to dispense, to a large extent, with the slow, laborious, wasteful and expensive process of practical development of the ideas I conceive. It has made it possible for me to explore extended fields with great rapidity and get results with the least expenditure of vital energy. By this means I have it in my power to picture the objects of my desires in forms real and tangible and so rid myself of that morbid craving for perishable possessions to which so many succumb. I may say, also, that I am deeply religious at heart, although not in the orthodox meaning, and that I give myself to the constant enjoyment of believing that the greatest mysteries of our being are still to be fathomed and that, all the evidence of the senses and the teachings of exact and dry sciences to the contrary notwithstanding, death itself may not be the termination of the wonderful metamorphosis we witness. In this way I have managed to maintain an undisturbed peace of mind, to make myself proof against adversity, and to achieve contentment and happiness to a point of extracting some satisfaction even from the darker side of life, the trials and tribulations of existence. I have fame and untold wealth, more than this, and yet - how many articles have been written in which I was declared to be an impractical unsuccessful man, and how many poor, struggling writers, have called me a visionary. Such is the folly and shortsightedness of the world!

Now that I have explained why I have preferred my work to the attainment of worldly rewards, I will touch upon a subject which will lend me to say something of greater importance and enable me to explain how I invent and develop ideas. But first I must say a few words regarding my life which was most extraordinary and wonderful in its varied impressions and incidents. In the first place, it was charmed. You have heard that one of the provisions of the Edison Medal was that the recipient should be alive. Of course the men who have received this medal have fully deserved it, in that respect, because they were alive when it was conferred upon them, but none has deserved it in anything like the measure I do, when it comes to that feature. In my youth my ignorance and lightheartedness brought me into innumerable difficulties, dangers and scrapes, from which I extricated myself as by enchantment. That occasioned my parents great concern more, perhaps, because I was the last male than because I was of their own flesh and blood. You should know that Serbians desperately cling to the preservation of the race. I was nearly drowned a dozen times. I was almost cremated three or four times and just missed being boiled alive. I was buried, abandoned and frozen. I have had narrow escapes from mad dogs, hogs and other wild animals. I have passed through dreadful diseases - have been given up by physicians three or four times in my life for good. I have met with all sorts of odd accidents - I cannot think of anything that did not happen to me, and to realize that I am here this evening, hale and hearty, young in mind and body, with all these fruitful years behind me, is little short of a miracle.

But my life was wonderful in another respect - in my capacity of inventor. Not so much, perhaps, in concentrated mentality, or physical endurance and energy; for these are common enough. If you inquire into the career of successful men in the inventor's profession you will find, as a rule, that they are as remarkable for their physical as for their mental performance. I know that when I worked with Edison, after all of his assistants had been exhausted, he said to me: "I never saw such a thing, you take the cake." That was a characteristic way for him to express what I did. We worked from half past ten in the morning until five o'clock the next morning. I carried this on for nine months without a single day's exception; everybody else gave up. Edison stuck, but he occasionally dozed off on

the table. What I wish to say particularly is that my early life was really extraordinary in certain experiences which led to everything I ever did afterwards. It is important that this should be explained to you as otherwise you would not know how I discovered the rotating field. From childhood I was afflicted in a singular way - I would see images of objects and scenes with a strong display of light and of much greater vividness than those I had observed before. They were always images of objects and scenes I had actually seen, never of such as I imagined. I have asked students of psychology, physiology and other experts about it, but none of them has been able to explain the phenomena which seems to have been unique, although I was probably predisposed, because my brother also saw images in the same way. My theory is that they were simply reflex actions from the brain on the retina, superinduced by hyper-excitation of the nerves. You might think that I had hallucinations. That is impossible. They are produced only in diseased and anguished brains. My head was always clear as a bell, and I had no fear. Do you want me to tell of my recollections bearing on this? (Turning to the gentlemen on the platform). This is traditional with me, for I was too young to remember anything of what I said. I had two old aunts, I recall, with wrinkled faces, one of them with two great protruding teeth which she used to bury into my cheek when she kissed me. One day they asked me which of the two was prettier. After looking them over I answered: "This one is not as ugly as the other one." That was evidence of good sense. Now as I told you, I had no fear. They used to ask me, "Are you afraid of robbers?" and I would reply "No". "Of wolves?" "No". Then they would ask, "Are you afraid of crazy Luka?" (A fellow who would tear through the village and nothing could stop him) "No, I am not afraid of Luka." "Are you afraid of the gander?" "Yes, I am," I would reply and cling to my mother. That was because once they put me in the court yard with nothing on, and that beast ran up and grabbed me by the soft part of the stomach tearing off a piece of flesh. I still have the mark.

These images I saw caused me considerable discomfort. I will give you and illustration: Suppose I had witnessed a funeral. In my country the rites are but intensified torture. They smother the dead body with kisses, then they bathe it, expose it for three days, and finally one hears the dull thuds of the earth, when all is over. Some of the pictures as that of the coffin, for instance, would not appear vividly but were somethimes so persistent that when I would stretch my hand out I would see it penetrate the image. As I look at it now these images were simply reflex actions through the optic nerve on the retina, producing on the same an effect identical to that of a projection through the lens, and if my view is correct, then it will be possible, (and certainly my experience has demonstrated that), to project the image of any object one conceives in thought on a screen and make it visible. If this could be done it would revolutinaize all human relations. I am convinced that it can and will be accomplished.

In order to free myself of these tormenting appearances, I tried to fix my mind on some other picture or image which I had seen, and in this way I would manage to get some relief; but in order to get this relief I had to let the images come one after the other very fast. Then I found that I soon exhausted all I had at my command, my "reel" was out, as it were. I had seen little of the world, only objects around my own home, and they took me a few times to some neighbors, that was all I knew. When I did so the second or third time, in order to chase the appearance from my vision, I found that this remedy lost all the force. Then I began to make excursions beyond the limits of the little world I knew, and I saw new scenes. These were at first very blurred and indistinct, and would flit away when I tried to concentrate my attention upon them, but by and by I succeeded in fixing them; they gained in force and distinctness and finally assumed the intensity of real things. Soon I observed that my best comfort was attained if I simply went on in my vision farther and farther, getting new impressions all the time, and so I started to travel - of course, in my mind. You know that there have been great

discoveries made - when Columbus found America that was one, but when I hit upon the idea of traveling it seemed to me that was the greatest discovery possible to man. Every night (and sometimes during the day), as soon as I was alone I would start on my travels. I would see new places, cities and countries, I would live there, meet people and make friendships and acquaintances, and these were just as dear to me as those in real life and not a bit less intense. That is the way I did until I reached almost manhood. When I turned my thoughts to invention, I found that I could visualize my conceptions with the greatest facility. I did not need any models, drawings or experiments, I could do it all in my mind, and I did. In this way I have unconsciously evolved what I consider a new method of materializing inventive concepts and ideas, which is exactly opposite to the purely experimental of which undoubtedly Edison is the greatest and most successful exponent. The moment you construct a device to carry into practice a crude idea you will find yourself inevitably engrossed with the details and defects of the apparatus. As you go on improving and reconstructing, your force of concentration diminishes and you lose sight of the great underlying principle. You obtain results, but at the sacrifice of quality. My method is different, I do not rush into constructive work. When I get an idea, I start right away to build it up in my mind. I change the stucture, I make improvements, I experiment, I run the device in my mind. It is absolutely the same to me whether I operate my turbine in thought or test it actually in my shop. It makes no difference, the results are the same. In this way, you see, I can rapidly develop and perfect an invention, without touching anything. When I have gone so far that I have put into the device every possible improvement I can think of, that I can see no fault anywhere, I then construct this final product of my brain. Every time my device works as I conceive it should and my experiment comes out exactly as I plan it. In twenty years there has not been a single solitary experiment which did not turn out precisely as I thought it would. Why should it not? Engineering, electrical and mechanical, is positive in results. Almost any subject presented can be mathematically treated and the effects calculated; but if it is such that results cannot be had by simple methods of mathematics or short cuts, there is all the experience, and all the data on which to draw and from which to build; - why, then, should one carry out the crude idea? It is not necessary, it is a waste of energy, money and time. Now, that is just the way I produced the rotating field.

If I am to give you in a few words the history of that invention, I must begin with my birthday, and you will see the reason why. I was born exactly at midnight, I have no birthday and I never celebrate it. But something else must have happened on that date. I have learned that my heart beat on the right side and did so for many years after. As I grew up it beat on both sides, and finally settled on the left. I remember that I was surprised, when I developed into a very strong man, to find my heart on the left side. Nobody understands how it happened. I had two or three falls and on one occasion nearly all my chest bones were crushed in. Something that was quite unusual must have occurred at my birth and my parents destined me for the clergy then and there. When I was six years old I managed to have myself imprisoned in a little chapel at an inaccessible mountain, and visited only once a year. It was a place of many bloody encounters and there was a grave yard near by. I was locked in there while looking for some sparrows' nests, and had the most dreadful night I ever passed in my life, in company with the ghosts of the dead. American boys will not understand it, of course, for there are no ghosts in America - the people are too sensible; but my country was full of them, and every one from the small boy to greatest hero, who was plastered all over with medals for courage and bravery, had a fear of ghosts. Finally, as by a wonder, they rescued me, and then my parents said: "Surely he must go to the clergy, he must become a churchman." Whatever happened after that, no matter what it was, simply fortified them in that resolution. One day, to tell you a little story, I fell from the top of one of the farm buildings into a large kettle of milk, which was boiling over a

roaring fire. Did I say boiling milk? - It was not boiling - not according to the thermometer - though I would have sworn it was when I fell into it, and they pulled me out. But I only got a blister on the knee where I struck the hot kettle. My parents said again: "Was not that wonderful? Did you ever hear of such a thing? He will surely be a bishop, a metropolitan, perhaps a patriarch." In my eighteenth year I came to the cross roads. I had passed through the preliminary schools and had to make up my mind either to embrace the clergy or to run away. I had a profound respect for my parents, and so I resigned myself to take up studies for the clergy. Just then one thing occurred, and if it had not been for that, I would not have had my name connected with the occasion of this evening. A tremendous epidemic of cholera broke out, which decimated the population and, of course, I got immediately. Later it developed into dropsy, pulmonary trouble, and all sorts of diseases until finally my coffin was ordered. In one of the fainting spells when they thought I was dying, my father came to my bedside and cheered me: "You are going to get well." "Perhaps," I replied, "if you will let me study engineering." "Certainly I will," he assured me, "you will go to the best polytechnic school in Europe." I recovered to the amazement of everybody. My father kept his word, and after a year of roaming through the mountains and getting myself in good physical shape, I went to the Polytechnic School at Gratz, Styria, one of the oldest institutions. Something else occurred, however, of which I must tell you as it is vitally linked with this discovery. In the preparatory schools there was no liberty in the choice of subjects, and unless a student was proficient in all of them he could not pass. I found myself in this predicament every year. I could not draw. My faculty for imagining things paralyzed whatever gift I might have had in this respect. I have made some mechanical drawings, of course; practicing so many years one must needs learn to make simple sketches, but if I draw for half an hour I am all exhausted. I never was qualified and passed only through my father's influence. Now, when I went to the polytechnic school I had free choice of subjects and proposed myself to show my parents what I could do. The first year at the polytechnic school was spent in this way - I got up at three o'clock in the morning and worked until eleven o'clock at night, for one whole year, with a single day's exception. Well, you know when a man with a reasonably healthy brain works that way he must accomplish something. Naturally, I did. I graduated nine times that year and some of the professors were not satisfied with giving me the highest distinction, because they said, that did not express their idea of what I did, and here is where I come to the rotating field. In addition to the regular graduating papers they gave me some certificates which I brought to my father believing that I had achieved a great triumph. He took the certificates and threw them into the waste basket, remarking contemptuously: "I know how these testimonials are obtained." That almost killed my ambition; but later, after my father had died, I was mortified to find a package of letters, from which I could see that there had been considerable correspondence going on between him and the professors who had written to the effect that unless he took me away from school I would kill myself with work. Then I understood why he had slighted my success, which I was told was greater than any previous one at that institution; in fact the best students had only graduated twice. My record in the first year had the result that the professors became very much interested in and attached to me, particularly three of them; Prof. Rogner who was teaching arithmetical subjects and geometry; Prof. Alle, one of the most brilliant and wonderful lecturers I have ever seen, who specialized in differential equations, about which he wrote quite a number of works in German, and Prof. Poeschl, who was my instructor in physics. These three men were simply in love with me and used to give me problems to solve. Prof. Poeschl was a curious man. I never saw such feet in my life. They were about that size. (Indicating) His hands were like paws, but when he performed experiments they were so convincing and the whole went off so beautifully that one never realized how they were done. It was all in the method. He did all with the precision of a clock work, and everything succeeded.

It was in the second year of my studies that we received a Gramme machine from Paris, having a horse-shoe form of laminated magnet, and a wound armature with a commutator. We connected it up and showed various effects of currents. During the time Prof. Poeschl was making demonstrations running the machine as a motor we had some trouble with the brushes. They sparked very badly, and I observed: "Why should not we operate without the brushes?" Prof. Poeschl declared that it could not be done, and in view of my success in the past year he did me the honor of delivering a lecture touching on the subject. He remarked: "Mr. Tesla may accomplish great things, but he certainly never will do this," and he reasoned that it would be equivalent to converting a steadily pulling force, like that of gravity, into a rotary effort, a sort of perpetual motion scheme, an impossible idea. But you know that instinct is something which transcends knowledge. We have, undoubtedly, certain finer fibers that enable us to perceive truths when logical deduction, or any other willful effort of the brain, is futile. We cannot reach beyond certain limits in our reasoning, but with instinct we can go to very great lengths. I was convinced that I was right and that it was possible. It was not a perpetual motion idea, it could be done, and I started to work at once.

I will not tire you with an extended account of this undertaking, but will only say that I began in the summer of 1877 and I proceeded as follows: I would picture first of all, a direct-current machine, run it and see how the currents changed in the armature. Then I would imagine an alternator and do the same thing. Next I would visualize systems comprising motors and generators, and so on. Whatever apparatus I imagined, I would put together and operate in my mind, and I continued this practice incessantly until 1882. In that year somehow or other, I began to feel that a revelation was near. I could not yet see just exactly how to do it, but I knew that I was approaching the solution. While on my vacation, in 1882, sure enough, the idea came to me and I will never forget the moment. I was walking with a friend of mine in the city park of Budapest reciting passages from Faust. It was nothing for me to read from memory the contents of an entire book, with every word between the covers, from the first to the last. My sister and brother, however, could do much better than myself. I would like to know whether any of you has that kind of memory. It is curious, entirely visual and retroactive. To be explicit - when I made my examens, I had always to read the books three or four days if not a week before, because in that time I could reconstruct the images and visualize them; but if I had an examination the next day after reading, images were not clear and the remembrance was not quite complete. As I say, I was reciting Goethe's poem, and just as the sun was setting I felt wonderfully elated, and the idea came to me like a flash. I saw the whole machinery clearly, the generator, the motor, the connections, I saw it work as if it had been real. With a stick I drew on the sand the diagrams which were shown in my paper before the American Institute of Electrical Engineers and illustrated in my patents, as clearly as possible, and from that time on I carried this image in my mind. Had I been a man possessed of the practical gifts of Edison, I would have gone right away to perform an experiment and push the invention along, but I did not have to do this. I could see pictures so vividly, and what I imagined was so real and palpable, that I did not need any experimenting, nor would it have been particularly interesting to me. I went on and improved the plan continuously, inventing new types, and the day I came to America, practically every form, every kind of construction, every arrangement of apparatus I described in my thirty or forty patents was perfected, except just two or three kinds of motors which were the result of later development.

In 1883, I made some tests in Strasburg, as Mr. Terry pointed out, and there at the railroad station obtained the first rotation. The same experiment was repeated twice.

Now I come to an interesting chapter of my life, when I arrived in America. I had made some improvements in dynamos for a French company who were getting their

machinery from here. The improved forms were so much better that the manager of the works said to me: "You must go to America, and design the machines for the Edison Company." So, after ineffectual efforts on the other side to get somebody to interest himself in my plans financially, I came to this country. I wish that I could only give you an idea how what I saw here impressed me. You would be very much astonished. You have all undoubtedly read those charming Arabian Nights tales, in which the genie transports people into wonderful regions, to go through all sorts of delightful adventures. My case was just the opposite. The genie transported me from a world of dreams into one of realities. My world was beautiful, ethereal, as I could imagine it. The one I found here was a machine world; the contact was rough, but I liked it. I realized from the very moment I saw Castle Garden that I was a good American before I landed. Then came another event. I met Edison, and the effect he produced upon me was extraordinary. When I saw this wonderful man, who had had no theoretical training at all, no advantages, who did all himself, getting great results by virtue of his industry and application, I felt mortified that I had squandered my life. I had studied a dozen languages, delved in literature and art and had spent my best years in ruminating through libraries and reading all sorts of stuff that fell into my hands. I thought to myself, what a terrible thing it was to have wasted my life in those useless efforts. If I had only come to America earlier and devoted all of my brain power to inventive work, what might I have done? In later life though, I realized I would not have produced anything without the scientific training I got, and it is a question whether my surmise as to my possible accomplishment was correct. In Edison's works I passed nearly a year of the most strenuous labor, and then certain capitalists approached me with the project to form my own company. I went into the proposition, and developed the arc light. To show you how prejudiced people were against the alternating-current, as the President has indicated, when I told these friends of mine that I had a great invention relating to alternating-current transmission, they said: "No, we want the arc lamp. We do not care for this alternating-current." Finally I perfected my lighting system and the city adopted it. Then I succeeded in organizing another company, in April, 1886, and a laboratory was put up, where I rapidly developed these motors, and eventually the Westinghouse people approached us, and an arrangement was made for their introduction. You know what has happened since then. The invention has swept the world.

I should like to say just a few words regarding the Niagara Falls enterprise. We have a man here to-night to whom belongs really the credit for the early steps and for the first financiering of the project, which was difficult at that time. I refer to Mr. E. D. Adams. When I heard that such authorities as Lord Kelvin and Prof. W. C. Unwin had recommended - one the direct-current system and the other compressed air - for the transmission of power from Niagara Falls to Buffalo, I thought it was dangerous to let the matter go further, and I went to see Mr. Adams. I remember the interview perfectly. Mr. Adams was much impressed with what I told him. We had some correspondence afterwards, and whether it was in consequence of my enlightening him on the situation, or owing to some other influence, my system was adopted. Since that time, of course, new men, new interests have come in, and what has been done I do not know, except that the Niagara Falls enterprise was the real starting impulse in the great movement inaugurated for the transmission and transformation of energy on a huge scale.

Mr. Terry has referred to other inventions of mine. I will just make a few remarks relative to these as some of my work has been misunderstood. It seems to me that I ought to tell you a few words about an effort that absorbed my attention later. In 1892 I delivered a lecture at the Royal Institution and Lord Rayleigh surprised me by acknowledging my work in very generous terms, something that is not customary, and among other things he stated that I had really an extraordinary gift for invention. Up to that time, I can assure you, I had hardly realized that I was

an inventor. I remembered, for instance, when I was a boy, I could go out into the forest and catch as many crows as I wanted, and nobody else could do it. Once, when I was seven years of age, I repaired a fire engine which the engineers could not make work, and they carried me in triumph through the city. I constructed turbines, clocks and such devices as no other boy in the community. I said to myself: "If I really have a gift for invention, I will bend it to some great purpose or task and not squander my efforts on small things." Then I began to ponder just what was the greatest deed to accomplish. One day as I was walking in the forest a storm gathered and I ran under a tree for shelter. The air was very heavy, and all at once there was a lightning flash, and immediately after a torrent of rain fell. That gave me the first idea. I realized that the sun was lifting the water vapor, and wind swept it over the regions where it accumulated and reached a condition when it was easily condensed and fell to earth again. This life-sustaining stream of water was entirely maintained by sun power, and lightning, or some other agency of this kind, simply came in a trigger-mechanism to release the energy at the proper moment. I started out and attacked the problem of constructing a machine which would enable us to precipitate this water whenever and wherever desired. If this was possible, then we could draw unlimited amounts of water from the ocean, create lakes, rivers and water falls, and indefinitely increase the hydroelectric power, of which there is now a limited supply. That led me to the production of very intense electrical effects. At the same time my wireless work, which I had already begun, was exactly in that direction, and I devoted myself to the perfection of that device, and in 1908, I filed an application describing an apparatus with which I thought the wonder could be achieved. The Patent Office Examiner was from Missouri, he would not believe that it could be done, and my patent was never granted. But in Colorado I had constructed a transmitter by which I produced effects in some respects at least greater than those of lightning. I do not mean in potential. The highest potential I reached was something like 20,000,000 volts, which is insignificant as compared to that of lightning, but certain effects produced by my apparatus were greater than those of lightning. For instance, I obtained in my antennae currents of from 1,000 to 1,100 amperes. That was in 1899 and you know that in the biggest wireless plants of today only 250 amperes are used. In Colorado I succeeded one day in precipitating a dense fog. There was a mist outside, but when I turned on the current the cloud in the laboratory became so dense that when the hand was held only a few inches from the face it could not be seen. I am positive in my conviction that we can erect a plant of proper design in an arid region, work it according to certain observations and rules, and by its means draw from the ocean unlimited amounts of water for irrigation and power purposes. If I do not live to carry it out, somebody else will, but I feel sure that I am right.

As to the transmission of power through space, that is a project which I considered absolutely certain of success long since. Years ago I was in the position to transmit wireless power to any distance without limit other than that imposed by the physical dimensions of the globe. In my system it makes no difference what the distance is. The efficiency of the transmission can be as high as 96 or 97 per cent, and there are practically no losses except such as are inevitable in the running of the machinery. When there is no receiver there is no energy consumption anywhere. When the receiver is put on, it draws power. That is the exact opposite of the Hertz-wave system. In that case, if you have a plant of 1,000 horsepower, it is radiating all the time whether the energy is received or not; but in my system no power is lost. When there are no receivers the plant consumes only a few horsepower necessary to maintain the electric vibration; it runs idle, as the Edison plant when the lamps and motors are shut off.

I have made advances along this line in later years which will contribute to the practical features of the system. Recently I have obtained a patent on a transmitter with which it is practicable to transfer unlimited amount of energy to any distance.

I had a very interesting experience with Mr. Stone, whom I consider, if not the ablest, certainly one of the ablest living experts. I said to Mr. Stone: "Did you see my patent?" He replied: "Yes, I saw it, but I thought you were crazy." When I explained it to Mr. Stone he said, "Now, I see; why, that is great," and he understood how the energy is transmitted.

To conclude, gentlemen, we are coming to great results, but we must be prepared for a condition of paralysis for quite a while. We are facing a crisis such as the world has never seen before, and until the situation clears the best thing we can do is to devise some scheme for overcoming the submarines, and that is what I am doing now. (Applause)

ALFRED H. COWLES: Here are some pictures you gave to me twenty years ago, relating to your experiments of 1899, I think you will be interested in seeing them. (Hands pictures to Mr. Tesla)

NIKOLA TESLA: I have learned how to put up a plant that will develop a tension of 100,000,000 volts and handle it with perfect safety. This plant (indicating) was in Colorado. If anybody, who had not been dabbling in these experiments as long as myself, had done such work, he would surely have been killed. In this plant I had the narrowest escape ever. It was a square building, in which there was a coil 52 feet in diameter, about nine feet high. When it was adjusted to resonance, the streamers passed from top to bottom and it was a most beautiful sight. You see, that was about fifteen hundred, perhaps two thousand square feet of streamer surface. To save money I had calculated the dimensions as closely as possible, and the streamers came within six or seven inches from the sides of the building. As boys had been looking through a single window provided in the rear, I nailed it up. For handling the heavy currents, I had a special switch. It was hard to pull, and I had a spring arranged so that I could just touch the handle and it would snap in. I sent one of my assistants down town and was experimenting alone. I threw up the switch and went behind the coil to examine something. While I was there the switch snapped in, when suddenly the whole room was filled with streamers, and I had no way of getting out. I tried to break through the window but in vain as I had no tools, and there was nothing else to do than to throw myself on my stomach and pass under. The primary carried 500,000 volts, and I had to crawl through the narrow place here (pointing) with the streamers going. The nitrous acid was so strong I could hardly breathe. These streamers rapidly oxidize nitrogen because of their enormous surface, which makes up for what they lack in intensity. When I came to the narrow space they closed on my back. I got away and barely managed to open the switch when the building began to burn. I grabbed a fire extinguisher and succeeded in smothering the fire. Then I had enough, I was all in. But now I can operate a plant without any fear of its destruction by fire. Mr. Cowles is responsible for excursion into this matter. (Applause)

THE PRESIDENT: If there is no further business, we will consider this meeting adjourned.

Feb. 7, 1918

A LIGHTING MACHINE ON NOVEL PRINCIPLES - by Nikola Tesla

A machine built on novel and original lines is about to be placed on the market. It consists of a turbine and electric generator, both employing basically new principles in construction as well as operation, and intimately associated to constitute a unit. The former has been pronounced revolutionary in its design and performance. It is simplicity itself, being devoid of buckets, deflecting blades, guide passages, vanes and the like, and presents many other decisive advantages over the ordinary prime mover.

In the first place there is no windage, which is the cause of a most serious loss of power in bucket turbines, often amounting to a large percentage of the integral mechanical effort. What is still more important, the new turbine is capable of taking up the whole velocity of the motive fluid in one continuous process, thus saving the expense and avoiding the complication incident to "staging". Furthermore, it has the precious quality of transforming into useful work frictional energy irretrievably spent in other heat motors.

The corrosion and erosion of buckets and vanes in the present turbines is the cause of another great and irremediable waste of energy, the water rate frequently increasing 30% to 40% after but a few months of use. No such hurtful actions exist in the new turbine, and if they did, they would not impair the performance to any appreciable degree. Again, the former are subject to considerable loss owing to unpreventable wear and deterioration of the nozzles. It is essential that the high velocity streams of fluid issuing from them be directed upon the curved blades with great precision, as a failure of this is fatal to good results. To such an extent is this the case that even a slight roughening of the polished surfaces will reduce the useful energy as much as 25%. The new turbine is entirely free from this defect. However the nozzle may be used up, the fluid is made to flow through the wheel smoothly and evenly in natural stream lines, transmitting power to the same with undiminished efficiency. Another feature of superiority is found in its adaptability to high temperatures far beyond those practicable in bucket turbines. For every hundred degrees of increase in temperature, the steam consumption is reduced from 10% to 12%. Great economies are thus made possible by the use of the new prime mover.

In every turbine the device regulating the speed of rotation and controlling the admission of the working fluid to the nozzles is of vital importance. With scarcely an exception it is of the centrifugal type driven from the shaft in some or other way and constituting an assemblage of gears, flying weights, links, levers, sleeves, thrust bearings and other parts. It is an apparatus complex and delicate, expensive to construct and easily deranged, often with disastrous consequences. All this has been done away in the new turbine which is controlled in a novel and striking manner. The regulator is elementary in its construction, positive and unfailing in its action, and yet so sensitive as to respond to variations of load amounting to less than 1% of the normal. This simple device is rendered still more valuable by the fact that it adjusts itself instantaneously to pressure changes so that the effects of these on the lamps are inappreciable. To illustrate, the steam gauge on the boiler may indicate fluctuations from 100 to 200 pounds or more and following each other however rapidly without the slightest observable change in the intensity of the light. This remarkable action of the device is independent of its function as regulator of speed.

Another advantage deserving the most careful consideration of the user is the perfect safety of the new turbine. There is an ever present danger in a machine of the old type, that the wheel might burst and destroy life and property. Such a deplorable accident is absolutely impossible with the new turbine rotor, composed of thin

discs which expand slightly and come to rest, invariably without damage, as has been shown in exhaustive experiments.

The one feature, however, which has most amazed experts, is the extraordinary power of this form of prime mover. Owing to the great effectiveness of the underlying principle and peculiar construction, ten times more power can be produced than with any other machine known. For example, a rotor of 9" in diameter, weighing less than 20 pounds, can readily develop 200 brake horsepower, and this is by no means the limit of performance.

But the merits of this lighting outfit do not rest on the turbine alone. The dynamo associated with the same is perhaps equally noteworthy by its simplicity of construction, high efficiency and rare and valuable properties it possesses. It consists of a smooth cylindrical body mounted on the turbine shaft and arranged to rotate within a magnetic field of novel form. There is no brush or sliding contact whatever, the current being taken from stationary terminals to which the ends of the generating coils are connected. By employing the best materials and workmanship and resorting to artifices of design, a most economical electrical generator is produced, the efficiency being over 90% even in machines of very small size having rotors of not more than 2½" in diameter. This generator possesses extraordinary qualities, especially desirable in electric lighting. It is capable of furnishing a current constant within a minute fraction of 1% through a very wide range of speed variation, and as such is ideally suited for running arc lamps or kindred electrical devices in series. More surprising still and also of greater commercial import is its capability of maintaining a constant potential. Such results as are obtainable with it are wholly impossible with other types of electrical generators. It has been found in practice that all lamps but one can be turned off suddenly without the slightest perceptible flicker and even without any observable effect on the needle of a delicate instrument indicating the voltage.

That an apparatus of such simplicity and presenting so many salient advantages should find an extensive use in electric lighting might be naturally expected, but its overwhelming superiority will be better appreciated when it is stated that it occupies hardly more than one-tenth of the space of apparatus of the usual forms and weighs less in proportion. A machine capable of developing 1-kilowatt, for instance, goes into a space of 8 x 8 x 10" and weighs but 40 pounds. It takes not more than one-third of the steam consumed in other turbo-generators of that size.

The guiding idea in the development of this new machine was to evolve a mechanism approximating a static transformer of energy in simplicity, efficiency and reliability of operation. Every detail has been worked out with this object in view. There is no exciter, no commutator, brush or sliding contact whatever, no centrifugal regulator, voltage controller or any such complicated and hazardous device. The machine consists of but a stationary solid frame and two smooth cylindrical steel bodies mounted on a strong shaft arranged to rotate in bearings virtually frictionless. No oiling is required, although a small quantity of lubricant is provided rather as a precaution than necessity. A perfect dynamic balance is secured in a novel manner and insures a steady and quiet running without tremor and vibration. The whole apparatus can be boxed up and depended upon to operate uninterruptedly through long periods of time. The outfit can be constructed in various sizes up to 100-kilowatt or more, and should meet more satisfactorily than any yet devised the varied requirements of electric lighting on railroads, boats, in public buildings, factories and mines, and may also be advantageously utilized in connection with existing plants for replacing belt driven dynamos and storage batteries, and relieving larger engines through the night and hours of small load.

(This material previously unpublished - Ed.)

Famous Scientific Illusions

By NIKOLA TESLA

Written specially for the Electrical Experimenter

In this original and revolutionizing discussion, Nikola Tesla gives us something really new to think about. First—Does the moon rotate on its axis? Second—Is the Franklin pointed lightning rod correct in theory and operation? Third—Do wireless signals fly thru space by means of so-called Hertzian waves in the ether, or are they propagated thru the earth at prodigious velocity by means of earth-bound oscillations? World-famous conundrums these—questions which have been answered in many ways by some of the greatest scientists. Dr. Tesla explains these three predominant scientific fallacies in a masterly way, so that everyone can understand them.

THE human brain, with all its wonderful capabilities and power, is far from being a faultless apparatus. Most of its parts may be in perfect working order, but some are atrophied, undeveloped or missing altogether. Great men of all classes and professions—scientists, inventors, and hard-headed financiers—have placed themselves on record with impossible theories, inoperative devices, and unrealizable schemes. It is doubtful that there could be found a single work of any one individual free of error. There is no such thing as an infallible brain. Invariably, some cells or fibers are wanting or unresponsive, with the result of impairing judgment, sense of proportion, or some other faculty. A man of genius eminently practical, whose name is a household word, has wasted the best years of his life in a visionary undertaking. A celebrated physicist was incapable of tracing the direction of an electric current according to a childishly simple rule. The writer, who was known to recite entire volumes by heart, has never been able to retain in memory and recapitulate in their proper order the words designating the colors of the rainbow, and can only ascertain them after long and laborious thought, strange as it may seem.

Our organs of reception, too, are deficient and deceptive. As a semblance of life is produced by a rapid succession of inanimate pictures, so many of our perceptions are but trickery of the senses, devoid of reality. The greatest triumphs of man were those in which his mind had to free itself from the influence of delusive appearances. Such was the revelation of Buddha that self is an illusion caused by the persistence and continuity of mental images; the discovery of Copernicus that, contrary to all observation, this planet rotates around the sun; the recognition of Descartes that the human being is an automaton, governed by external influence and the idea that the earth is spherical, which led Columbus to the finding of this continent. And tho the minds of individuals supplement one another and science and experience are continually eliminating fallacies and misconceptions, much of our present knowledge is still incomplete and unreliable. We have sophisms in mathematics which cannot be disproved. Even in pure reasoning, free of the shortcomings of symbolic processes, we are often arrested by doubt which the strong-

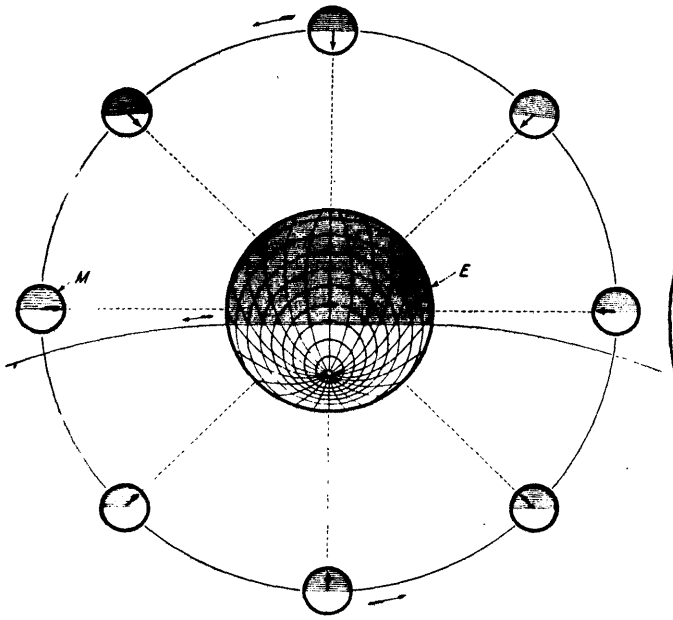

Fig 1

It Is Well Known That the Moon, M., Always Turns the Same Face Toward the Earth, E, as the Black Arrows Indicate. The Parallel Rays From the Sun Illuminate the Moon in Its Successive Orbital Positions as the Unshaded Semi-circles Indicate. Bearing This in Mind, Do You Believe That the Moon Rotates on Its Own Axis?

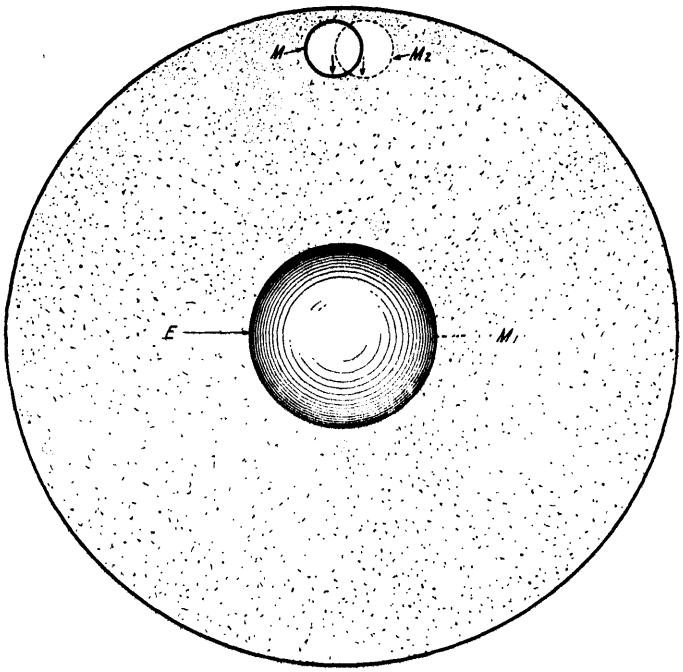

Fig. 2.—Tesla's Conception of the Rotation of the Moon, M, Around the Earth, E; the Moon, in This Demonstration Hypothesis, Being Considered as Embedded in a Solid Mass, M_1. If, As Commonly Believed, the Moon Rotates, This Would Be Equally True For a Portion of the Mass M_2, and the Part Common to Both Bodies Would Turn Simultaneously in "Opposite" Directions.

FOR over a century and a half the whole world, educated and otherwise, thought that the moon revolved around its axis. Nikola Tesla in the present highly instructive article disproves that theory and will convince scientists and all others alike that the moon does no such thing.

For thousands of years it was thought that the sun and stars revolved around the earth and all kinds of experimental proofs were furnished to substantiate this theory. The illustrious Galileo thought different, and everyone today knows that the earth revolves around the sun.

So it is with Tesla's discovery. Tesla also, in the second part of the present paper, shows us that the ancient and time-worn theory advanced by Benjamin Franklin as to the lightning conductor is not substantially correct as viewed by latter day science. It will come as a shock even to our professors that the lightning rod actually aids the lightning in hitting the building. The reason is that the lightning rod helps in ionizing (making conductive) the surrounding air.

Mr. Tesla has devised a lightning conductor with no points, and there is no doubt whatsoever that his theory is right. Scientists the world over will acknowledge this very shortly.

In a third section of the same paper Tesla explodes still another popular delusion, viz., that wireless waves follow the curvature of the earth when messages are transmitted, let us say from a point in the United States to a point in Europe. In his revolutionary arguments, supported by facts as well as by logic, Tesla shows why the currents do not travel around the earth but directly thru it. In other words, Tesla maintains that wireless communication is accomplished ONLY thru the medium of the earth itself. His contention seems very sound. If it were not so, let every wireless station, commercial or otherwise, do away with its ground connection. None could then operate as is well known, except perhaps over very limited distances.

Mr. Tesla's present article will arouse world-wide comment due to the revolutionary philosophy contained therein. We are sure our readers will appreciate Mr. Tesla's most timely and illuminating article on this but little understood subject.

est intelligences have been unable to dispel. Experimental science itself, most positive of all, is not unfailing.

In the following I shall consider three exceptionally interesting errors in the interpretation and application of physical phenomena which have for years dominated the minds of experts and men of science.

I. The Illusion of the Axial Rotation of the Moon.

It is well known since the discovery of Galileo that the moon, in travelling thru space, always turns the same face towards the earth. This is explained by stating that while passing once around its mother-planet the lunar globe performs just one revolution on its axis. The spinning motion of a heavenly body must necessarily undergo modifications in the course of time, being either retarded by resistances internal or external, or accelerated owing to shrinkage and other causes. An unalterable rotational velocity thru all phases of planetary evolution is manifestly impossible. What wonder, then, that at this very instant of its long existence our satellite should revolve exactly so, and not faster or slower. But many astronomers have accepted as a physical fact that such rotation takes place. It does not, but only appears so; it is an illusion, a most surprising one, too.

I will endeavor to make this clear by reference to Fig. 1, in which E represents the earth and M the moon. The movement thru space is such that the arrow, firmly attached to the latter, always occupies the position indicated with reference to the earth. If one imagines himself as looking down on the orbital plane and follows the motion he will become convinced that the moon *does* turn on its axis as it travels around. But in this very act the observer will have deceived himself. To make the delusion complete let him take a washer similarly marked and supporting it rotatably in the center, carry it around a stationary object, constantly keeping the arrow pointing towards the latter. Tho to his bodily vision the disk will revolve on its axis, such movement does not exist. He can dispel the illusion at once by holding the washer fixedly while going around. He will now readily see that the supposed axial rotation is only apparent, the impression being produced by successive changes of position in space.

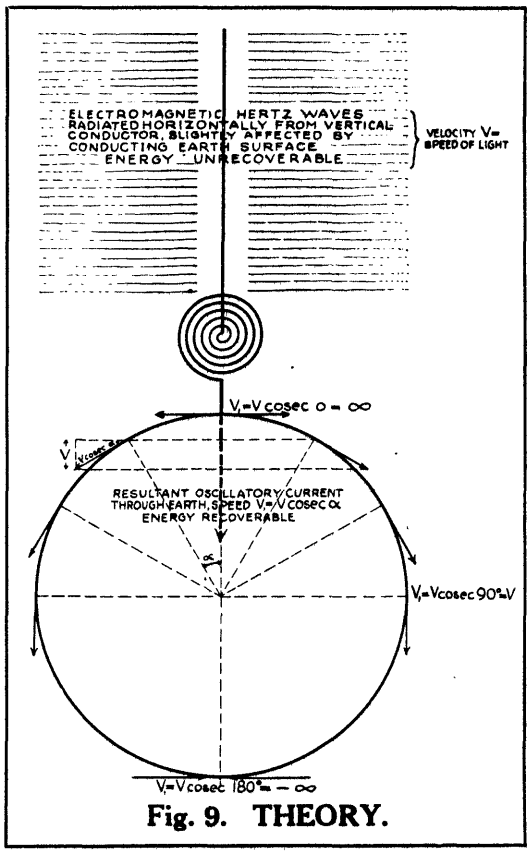

Fig. 9. THEORY.

But more convincing proofs can be given that the moon does not, and cannot revolve on its axis. With this object in view attention is called to Fig. 2, in which both the satellite, M, and earth, E, are shown embedded in a solid mass, M_1 (indicated by stippling) and supposed to rotate so as to impart to the moon its normal translatory velocity. Evidently, if the lunar globe could rotate as commonly believed, this would be equally true of any other portion of mass M_1, as the sphere M_2, shown in dotted lines, and then the part common to both bodies would have to turn *simultaneously in opposite directions*. This can be experimentally illustrated in the manner suggested by using instead of one, two overlapping rotatable washers, as may be conveniently represented by circles M and M_2, and carrying them around a center as E, so that the plain and dotted arrows are always pointing towards the same center. No further argument is needed to demonstrate that the two gyrations cannot co-exist or even be pictured in the imagination and reconciled in a purely abstract sense.

The truth is, the so-called "axial rotation" of the moon is a phenomenon deceptive alike to the eye and mind and devoid of physical meaning. It has nothing in common with real mass revolution characterized by effects positive and unmistakable. Volumes have been written on the subject and many erroneous arguments advanced in support of the notion. Thus, it is reasoned, that if the planet did *not* turn on its axis it would expose the whole surface to terrestrial view; as only one-half is visible, it *must* revolve. The first statement is true but the logic of the second is defective, for it admits of only one alternative. The conclusion is not justified as the same appearance can also be produced in another way. The moon does rotate, not on its own, but about an axis passing thru the center of the earth, the true and only one.

The unfailing test of the spinning of a mass is, however, the existence of

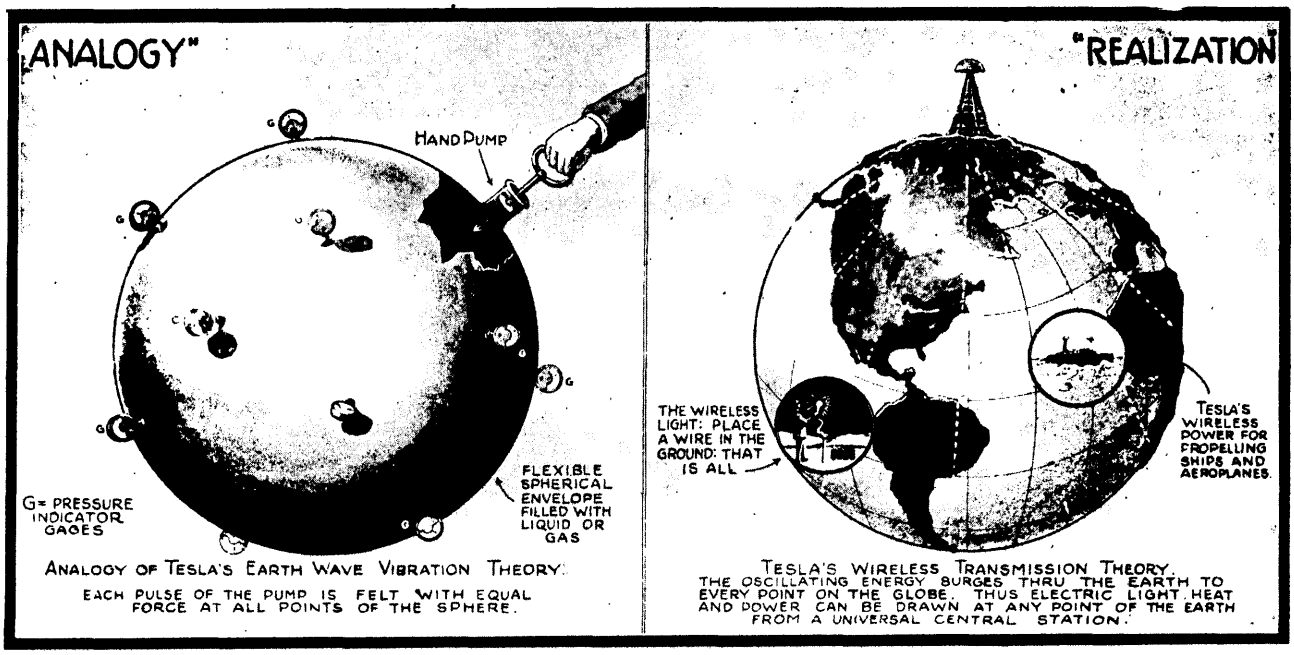

Tesla's World-Wide Wireless Transmission of Electrical Signals, As Well As Light and Power, Is Here Illustrated In Theory, Analogy and Realization. Tesla's Experiments With 100 Foot Discharges At Potentials of Millions of Volts Have Demonstrated That the Hertz Waves Are Infinitesimal In Effect and Unrecoverable; the Recoverable Ground Waves of Tesla Fly "Thru the Earth". Radio Engineers Are Gradually Beginning to See the Light and That the Laws of Propagation Laid Down by Tesla Over a Quarter of a Century Ago Form the Real and True Basis of All Wireless Transmission To-Day.

energy of motion. The moon is not possest of such *vis viva*. If it were the case then a revolving body as M_1 would contain mechanical energy other than that of which we have experimental evidence. Irrespective of this so exact a coincidence between the axial and orbital periods is, in itself, immensely improbable for this is not the permanent condition towards which the system is tending. Any axial rotation of a mass left to itself, retarded by forces external or internal, must cease. Even admitting its perfect control by tides the coincidence would still be miraculous. But when we remember that most of the satellites exhibit this peculiarity, the probability becomes infinitestimal.

Three theories have been advanced for the origin of the moon. According to the oldest suggested by the great German philosopher Kant, and developed by Laplace in his monumental treatise "Mécanique Céleste", the planets have been thrown off from larger central masses by centrifugal force. Nearly forty years ago Prof. George H. Darwin in a masterful essay on tidal friction furnished mathematical proofs, deemed unrefutable, that the moon had separated from the earth. Recently this established theory has been attacked by Prof. T. J. J. See in a remarkable work on the "Evolution of the Stellar Systems", in which he propounds the view that centrifugal force was altogether inadequate to bring about the separation and that all planets, including the moon, have come from the depths of space and have been captured. Still a third hypothesis of unknown origin exists which has been examined and commented upon by Prof. W. H. Pickering in "Popular Astronomy of 1907", and according to which the moon was torn from the earth when the later was partially solidified, this accounting for the continents which might not have been formed otherwise.

Undoubtedly planets and satellites have originated in both ways and, in my opinion, it is not difficult to ascertain the character of their birth. The following conclusions can be safely drawn:

1. A heavenly body thrown off from a larger one cannot rotate on its axis. The mass, rendered fluid by the combined action of heat and pressure, upon the reduction of the latter immediately stiffens, being at the same time deformed by gravitational pull. The shape becomes permanent upon cooling and solidification and the smaller mass continues to move about the larger one as tho it were rigidly connected to it except for pendular swings or librations due to varying orbital velocity. Such motion precludes the possibility of axial rotation in the strictly physical sense. The moon has never spun around as is well demonstrated by the fact that the most precise measurements have failed to show any measurable flattening in form.

2. If a planetary body in its orbital movement turns the same side towards the central mass this is a positive proof that it has been separated from the latter and is a true satellite.

3. A planet revolving on its axis in its passage around another cannot have been thrown off from the same but must have been captured.

Fig. 5

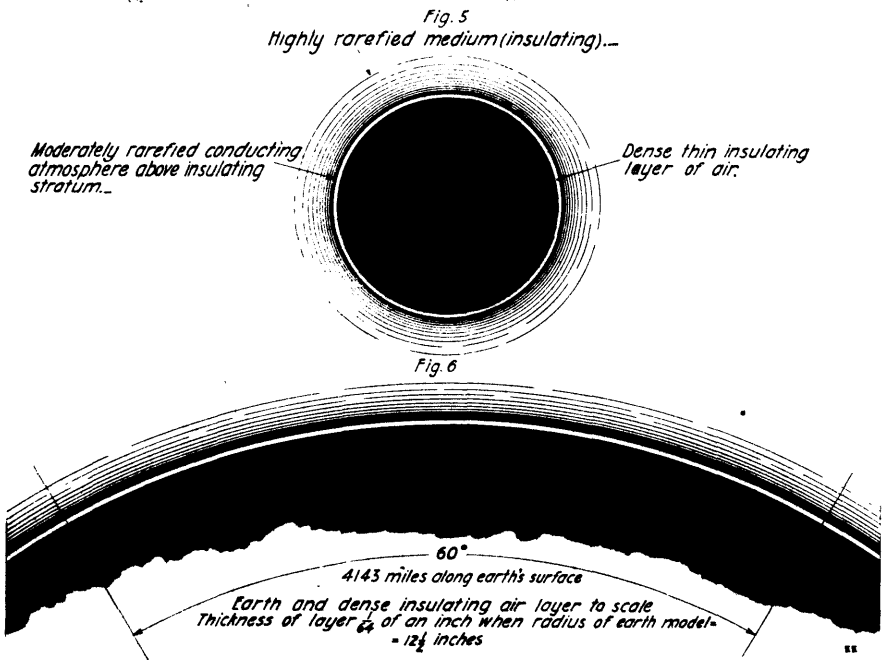

A Section of the Earth and Its Atmospheric Envelope Drawn to Scale. It Is Obvious That the Hertzian Rays Cannot Traverse So Thin a Crack Between Two Conducting Surfaces For Any Considerable Distance, Without Being Absorbed, Says Dr. Tesla, in Discussing the Ether Space Wave Theory.

II. The Fallacy of Franklin's Pointed Lightning-Rod.

The display of atmospheric electricity has since ages been one of the most marvelous spectacles afforded to the sight of man. Its grandeur and power filled him with fear and superstition. For centuries he attributed lightning to agents god-like and supernatural and its purpose in the scheme of this universe remained unknown to him. Now we have learned that the waters of the ocean are raised by the sun and maintained in the atmosphere delicately suspended, that they are wafted to distant regions of the globe where electric forces assert themselves in upsetting the sensitive balance and causing precipitation, thus sustaining all organic life. There is every reason to hope that man will soon be able to control this life-giving flow of water and thereby solve many pressing problems of his existence.

Atmospheric electricity became of special scientific interest in Franklin's time. Faraday had not yet announced his epochal discoveries in magnetic induction but static frictional machines were already generally used in physical laboratories. Franklin's powerful mind at once leaped to the conclusion that frictional and atmospheric electricity were identical. To our present view this inference appears obvious, but in his time the mere thought of it was little short of blasphemy. He investigated the phenomena and argued that if they were of the same nature then the clouds could be drained of their charge exactly as the ball of a static machine, and in 1749 he indicated in a publisht memoir how this could be done by the use of pointed metal rods.

(*Continued on page 728*)

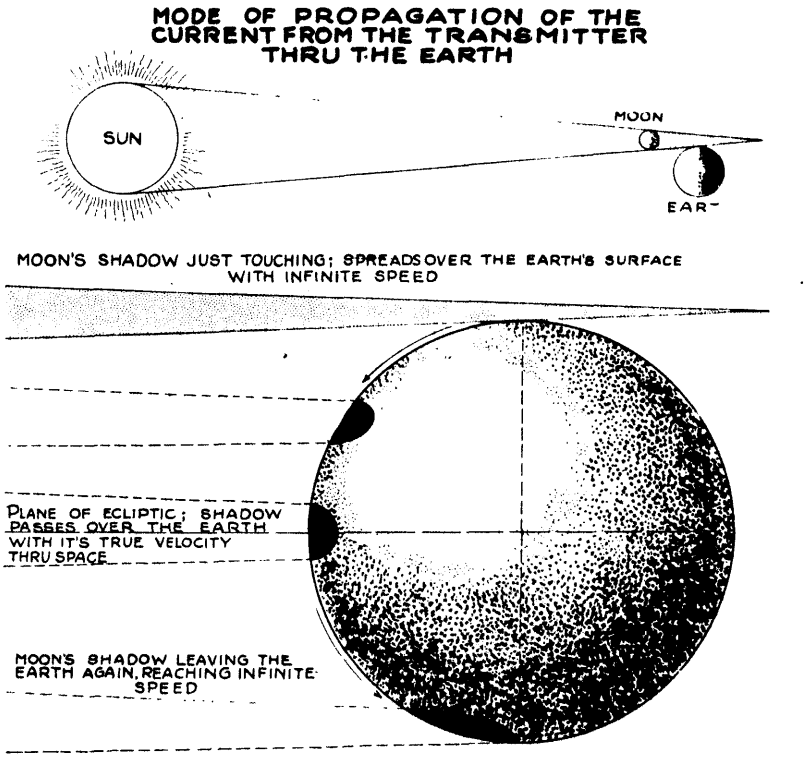

Fig. 8.—This Diagram Illustrates How, During a Solar Eclipse, the Moon's Shadow Passes Over the Earth With Changing Velocity, and Should Be Studied in Connection With Fig. 9. The Shadow Moves Downward With Infinite Velocity at First, Then With Its True Velocity Thru Space, and Finally With Infinite Velocity Again.

BE A BOY CHEMIST

Test water, foods and other things you use and wear. Make soap, ink, dye; fire-proof cloth and wood, and work hundreds of useful, fascinating experiments just like a real chemist. Perform weird, puzzling tricks of chemical magic. You can, with "CHEMCRAFT". Outfits contain all chemicals and laboratory supplies to work each experiment many times; also a Manual of Instruction. "CHEMCRAFT" is absolutely harmless; made by a practical chemist and is scientifically correct.

Chemcraft No. 1—$1.50
West of Mississippi River and in Canada—$2.00
Chemcraft No. 2—$3.00
West of Mississippi River and in Canada—$3.50
Chemcraft No. 3—$5.00
West of Mississippi River and in Canada—$6.00

Be sure you get "CHEMCRAFT," the original and most complete and scientific chemical outfit. Ask for it by name at your Toy Store, or send price and we will deliver direct prepaid.

THE PORTER CHEMICAL CO.
Industrial Bldg., W. Washington St.
Hagerstown Maryland

BOYS
Build and Fly
Your Own
Training Plane

Train yourself in Aviation. Be an Amateur Aviator with an Aeroplane of your own. Learn how Aeroplanes are built; learn the principles of construction, operation and control. We sell IDEAL Accurate Scale Drawings, and Building and Flying Instructions which show you how to build a perfect Model Aeroplane, 3 ft. size, that will rise from the ground by its own power and fly like a big one. Send now for the Drawings and Instructions for the one you want to build.

Drawings and Instructions for
Curtiss Military Tractor
Bleriot Monoplane
Nieuport Monoplane
Taube Monoplane
Curtiss Flying Boat
Wright Biplane
Cecil Peoli Racer
25c EACH
Set of Seven $1.50 postpaid

Ideal Model Aeroplane Catalog 5c—None Free
Tells about Model Aeroplanes, Racing Aeroplanes, Flying Toys, and parts and supplies to build them with. 48 pages. Sent only upon receipt of 5 cents.

IDEAL AEROPLANE & SUPPLY COMPANY
70-82 West Broadway New York City

The Electric Safety razor makes shaving a pleasure. Blade vibrating 7,200 times a minute cuts the beard smoothly and without slightest pull or irritation—feels like a gentle message. Can be used with or without electric current.

All users of the Lek-Tro-Shav speak well of it

A barber says—"Have shaved for years and have never used any shaving device near its equal."
A home user says—"The most pleasing shave I've ever had in my life. Shaves my face closer than I used to shave, but there is no after irritation or ill effects as I usually get from another razor."
No. 1 Made for use from Light Socket.
No. 2 Made for use from Dry Battery.
Write for illustrated circular describing Lek-Tro-Shav Safety Razor fully.

VIBRATING ELECTRIC RAZOR CO.
Dept. 122. Omaha, Nebr.

Printing Cheap
Cards, circulars, labels, book, paper. Press $6. Larger $20 Job press $26 up. Save money. Print for others, big profit. All easy, rules sent. Write factory for press catalog, TYPE, cards, paper. THE PRESS CO. D-47 Meriden, Conn.

Famous Scientific Illusions

(*Continued from page 694*)

The earliest trials were made by Dalibrand in France, but Franklin himself was the first to obtain a spark by using a kite, in June, 1752. When these atmospheric discharges manifest themselves today in our wireless station we feel annoyed and wish that they would stop, but to the man who discovered them they brought tears of joy.

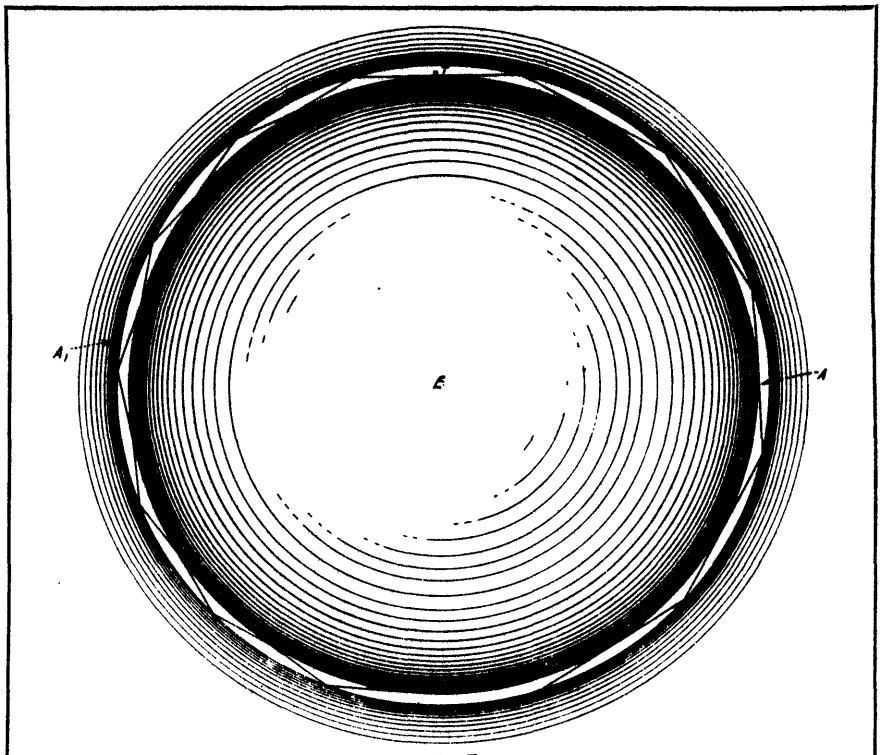

Fig. 7

The Theory Has Been Seriously Advanced and Taught that the Radio Ether Wave Oscillations Pass Around the Earth by Successive Reflections, as Here Shown. The Efficiency of Such a Reflector Cannot be more than 25 Per Cent; the Amount of Energy Recoverable in a 12,000-mile Transmission being but One Hundred and Fifteen Billionth Part of One Watt, with 1,000 Kilowatts at the Transmitter.

The lightning conductor in its classical form was invented by Benjamin Franklin in 1755 and immediately upon its adoption proved a success to a degree. As usual, however, its virtues were often exaggerated. So, for instance, it was seriously claimed that in the city of Piatermaritzburg (capital of Natal, South Africa) no lightning strokes occurred after the pointed rods were installed, altho the storms were as frequent as before. Experience has shown that just the opposite is true. A modern city like New York, presenting innumerable sharp points and projections in good contact with the earth, is struck much more often than equivalent area of land. Statistical records, carefully compiled and publisht from time to time, demonstrate that the danger from lightning to property and life has been reduced to a small percentage by Franklin's invention, but the damage by fire amounts, nevertheless, to several million dollars annually. It is astonishing that this device, which has been in universal use for more than one century and a half, should be found to involve a gross fallacy in design and construction which impairs its usefulness and may even render its employment hazardous under certain conditions.

For explanation of this curious fact I may first refer to Fig. 3, in which s is a metallic sphere of radius r, such as the capacity terminal of a static machine, provided with a sharply pointed pin of length h, as indicated. It is well known that the latter has the property of quickly dissipating the accumulated charge into the air. To examine this action in the light of present knowledge we may liken electric potential to temperature. Imagine that sphere s is heated to T degrees and that the pin or metal bar is a perfect conductor of heat so that its extreme end is at the same temperature T. Then if another sphere of larger radius, r_1, is drawn about the first and the temperature along this boundary is T_1, it is evident that there will be between the end of the bar and its surrounding a difference of temperature $T - T_1$, which will determine the outflow of heat. Obviously, if the adjacent medium was not affected by the hot sphere this temperature difference would be greater and more heat would be given off. Exactly so in the electric system. Let q be the quantity of the charge, then the sphere—and owing to its great conductivity also the pin—will be at the potential $\frac{q}{r}$. The medium around the point of the pin will be at the potential $\frac{q}{r_1} = \frac{q}{r+h}$ and, consequently, the difference $\frac{q}{r} - \frac{q}{r+h} = \frac{qh}{r(r+h)}$. Suppose now that a sphere S of much larger radius $R = nr$ is employed containing a charge Q this difference of potential will be, analogously $\frac{Qh}{R(R+h)}$. According to elementary principles of electro-statics the potentials of the two spheres s and S will be equal if $Q = nq$ in which case $\frac{Qh}{R(R+h)} =$

(*Continued on page 730*)

Mesco Telegraph Practice Set

For Learning Telegraph Codes

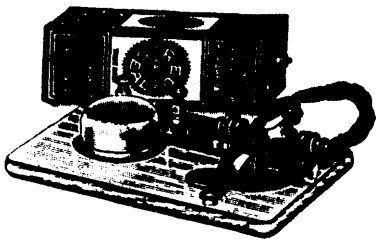

The Practice Set comprises a regular telegraph key, without circuit breaker, a special high pitch buzzer, one cell Red Seal Dry Battery, and four feet of green silk covered flexible cord.

The key and buzzer are mounted on a highly finished wood base, and three nickel plated binding posts are so connected that the set may be used for five different purposes.

List No. Price
342 Telegraph Practice Set, with Battery and Cord.....$3.24
Weighs 4 lbs. packed.
Price does not include postage.

MESCO Combination Practice Set for learning the Morse and Continental Visual and Audible Codes

This outfit is the only reliable instrument which will enable students to become proficient operators in the U. S. Naval Service, because it is equipped with a buzzer and miniature lamp enabling the user to master both the visual and audible signals quickly.

List No. 52—Practice Set with Red Seal Battery and Cord.....$4.65
Weighs 6 lbs. packed. Price does not include postage.

Send for the New Edition of Our Catalog W28

It is pocket size, contains 248 pages, with over 1,000 illustrations, and describes in plain, clear language all about Bells, Push Buttons, Batteries, Telephone and Telegraph Material, Electric Toys, Burglar and Fire Alarm Contrivances, Electric Call Bells, Electric Alarm Clocks, Medical Batteries, Motor Boat Horns, Electrically Heated Air Stoves, Battery Connectors, Switches, Batteries, Gauges, Wireless Telegraph Instruments, Ignition Supplies, etc.

Send for the Catalog Now

Manhattan Electrical Supply Co., Inc.

NEW YORK: 17 Park Place | CHICAGO: 114 S. Wells St. | ST. LOUIS: 1106 Pine St.
San Francisco Office: 604 Mission St.

MECHANICALLY RIGHT—A REAL LATHE
A Regular lathe, not a toy

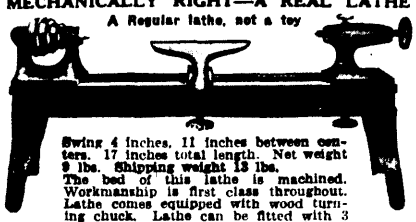

Swing 4 inches. 11 inches between centers. 17 inches total length. Net weight 9 lbs. Shipping weight 13 lbs.
The bed of this lathe is machined. Workmanship is first class throughout. Lathe comes equipped with wood turning chuck. Lathe can be fitted with 3 inch face plate and drill chuck as special equipment. Order one today. Price $5.00 cash with order.
SYPHER MFG. CO., Dept. C., TOLEDO, OHIO

Feldman's "Geyser" Electric Water Heater

Instantaneous Hot Water

FELDMAN MFG. CO.

1500 Times Bldg. New York City

HAVE *You* SENT

for our booklet No. 4, giving diagrams and experiments with the Steco Button?

STECO. 2134 N. Clark St., Chicago, Ill.

FAMOUS SCIENTIFIC ILLUSIONS.

(*Continued from page 728*)

$\frac{nqh}{nr(nr+h)} = \frac{qh}{r(nr+h)}$. Thus the difference of potential between the point of the pin and the medium around the same

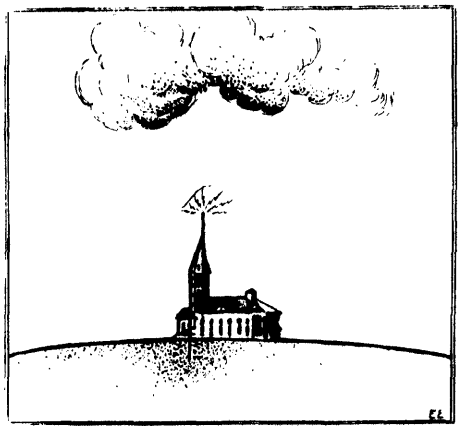

Fig. 4. Tesla Explains the Fallacy of the Franklin Pointed Lightning Rod, Here Illustrated, and Shows that Usually Such a Rod Could Not Draw Off the Electricity in a Single Cloud in Many Years. The Density of the Dots Indicates the Intensity of the Charges.

will be smaller in the ratio $\frac{r+h}{nr+h}$ when the large sphere is used. In many scientific tests and experiments this important observation has been disregarded with the result of causing serious errors. Its significance is that the behavior of the pointed rod entirely depends on the linear dimensions of the electrified body. Its quality to give off the charge may be entirely lost if the latter is very large. For this reason, all points or projections on the surface of a conductor of such vast dimensions as the earth would be quite ineffective were it not for other influences. These will be elucidated with reference to Fig. 4, in which our artist of the Impressionist school has emphasized Franklin's notion that his rod was drawing electricity from the clouds. If the earth were not surrounded by an atmosphere which is generally oppositely charged it would behave, despite all its irregularities of surface, like a polished sphere. But owing to the electrified masses of air and cloud the distribution is greatly modified. Thus in Fig. 4, the positive charge of the cloud induces in the earth an equivalent *opposite* charge, the density at the surface of the latter diminishing with the cube of the distance from the static center of the cloud. A brush discharge is then formed at the point of the rod and the action Franklin anticipated takes place. In addition, the surrounding air is ionized and rendered conducting and, eventually, a bolt may hit the building or some other object in the vicinity. The virtue of the pointed end to dissipate the charge, which was uppermost in Franklin's mind is, however, infinitesimal. *Careful measurements show that it would take many years before the electricity stored in a single cloud of moderate size would be drawn off or neutralized thru such a lightning conductor.* The grounded rod has the quality of rendering harmless most of the strokes it receives, tho occasionally the charge is diverted with damaging results. But, what is very important to note, it invites danger and hazard on account of the fallacy involved in its design. The sharp point which was thought advantageous and indispensable to its operation, is really a defect detracting considerably from the practical value of the device. I have produced a much improved form of lightning protector characterized by the employment of a terminal of considerable area and large radius of curvature which makes impossible undue density of the charge and ionization of the air.* *These protectors act as quasi-repellents and so far have never been struck tho exposed a long time.* Their safety is experimentally demonstrated to greatly exceed that invented by Franklin. By their use property worth millions of dollars which is now annually lost, can be saved.

III. The Singular Misconception of the Wireless.

To the popular mind this sensational advance conveys the impression of a single invention but in reality it is an art, the successful practise of which involves the employment of a great many discoveries and improvements. I viewed it as such when I undertook to solve wireless problems and it is due to this fact that my insight into its underlying principles was clear from their very inception.

In the course of development of my induction motors it became desirable to operate them at high speeds and for this purpose I constructed alternators of relatively

*Refer to the October, 1918, issue of this journal wherein Dr. Tesla's new form of non-pointed lightning rod was fully described and illustrated.

(*Continued on page 732*)

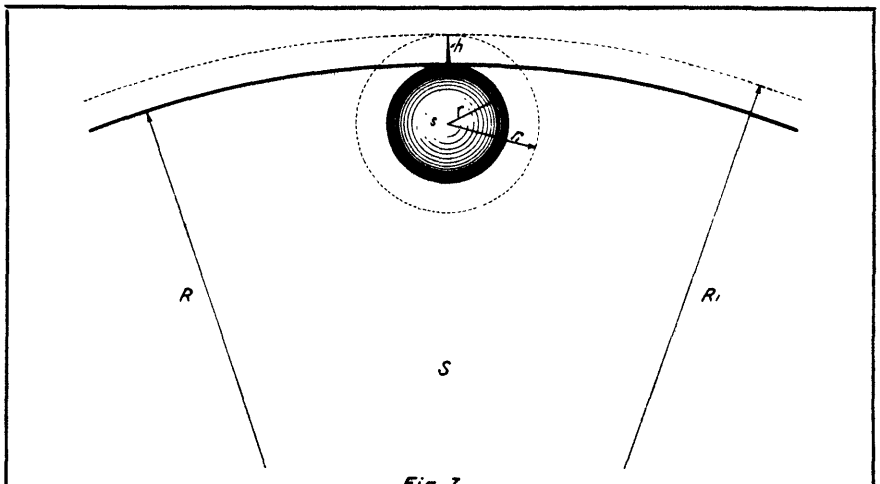

Fig. 3

Diagram Used to Explain the Fallacy of the Franklin Pointed Lightning Rod, and an Analogy Whereby the Author Shows in a Clear Manner How the Charged Sphere May for Illustration be Considered as Heated to a High Degree, and the Heat Allowed to Escape at a Known Rate

You can be quickly cured, if you

STAMMER

Send 10 cents coin or stamps for 70-page book on Stammering and Stuttering, "Its Cause and Cure." It tells how I cured myself after stammering for 20 years.

Benjamin N. Bogue, 751 Bogue Building, Indianapolis

With the consent of **NIKOLA TESLA**

We have prepared a genuine, handsome photograph, autographed in facsimile by the great inventor. This photograph, taken in December, 1918, was posed especially for the cover design of the February, 1919, issue of the "Electrical Experimenter". It shows Tesla as he is today, holding his famous wireless-lighted globe. No advertising whatsoever on this photo, except for the autograph. Size about 9 x 12". Ready for framing. A striking picture of the world's greatest inventor for your den, library, laboratory, workshop or radio station. Sent prepaid in strong cardboard tube. Price $1.00.

EXPERIMENTER PUBLISHING CO
231 Fulton St. Book Department N. Y. City

FAMOUS SCIENTIFIC ILLUSIONS

(*Continued from page 730*)

high frequencies. The striking behavior of the currents soon captivated my attention and in 1889 I started a systematic investigation of their properties and the possibilities of practical application. The first gratifying result of my efforts in this direction was the transmission of electrical energy thru *one wire* without return, of which I gave demonstrations in my lectures and addresses before several scientific bodies here and abroad in 1891 and 1892. During that period, while working with my oscillation transformers and dynamos of frequencies up to 200,000 cycles per second, the idea gradually took hold of me that the earth might be used in place of the wire, thus dispensing with artificial conductors altogether. The immensity of the globe seemed an unsurmountable obstacle but after a prolonged study of the subject I became satisfied that the undertaking was rational, and in my lectures before the Franklin Institute and National Electric Light Association early in 1893 I gave the outline of the system I had conceived. In the latter part of that year, at the Chicago World's Fair, I had the good fortune of meeting Prof. Helmholtz to whom I explained my plan, illustrating it with experiments. On that occasion I asked the celebrated physicist for an expression of opinion on the feasibility of the scheme. He stated unhesitatingly that it was practicable, provided I could perfect apparatus capable of putting it into effect but this, he anticipated, would be extremely difficult to accomplish.

I resumed the work very much encouraged and from that date to 1896 advanced slowly but steadily, making a number of improvements the chief of which was my system of *concatenated tuned circuits* and method of regulation, now universally adopted. In the summer of 1897 Lord Kelvin happened to pass thru New York and honored me by a visit to my laboratory where I entertained him with demonstrations in support of my wireless theory. He was fairly carried away with what he saw but, nevertheless, condemned my project in emphatic terms, qualifying it as something impossible, "an illusion and a snare." I had expected his approval and was pained and surprised. But the next day he returned and gave me a better opportunity for explanation of the advances I had made and of the true principles underlying the system I had evolved. Suddenly he remarked with evident astonishment: "Then you are not making use of Hertz waves?" "Certainly not," I replied, "*these are radiations.* No energy could be economically transmitted to a distance by any such agency. In my system the process is one of *true conduction* which, theoretically, can be effected at the greatest distance without appreciable loss." I can never forget the magic change that came over the illustrious philosopher the moment he freed himself from that erroneous impression. The skeptic who would not believe was suddenly transformed into the warmest of supporters. He parted from me not only thoroly convinced of the scientific soundness of the idea but strongly exprest his confidence in its success. In my exposition to him I resorted to the following mechanical analogues of my own and the Hertz wave system.

Imagine the earth to be a bag of rubber filled with water, a small quantity of which is periodically forced in and out of the same by means of a reciprocating pump, as illustrated. If the strokes of the latter are effected in intervals of more than one hour and forty-eight minutes, sufficient for the transmission of the impulse thru the whole mass, the entire bag will expand and contract and corresponding movements will be imparted to pressure gauges or movable pistons with the same intensity, irrespective of distance. By working the pump faster, shorter waves will be produced which, on reaching the opposite end of the bag, may be reflected and give rise to stationary nodes and loops. but in any case, the fluid being incompressible, its inclosure perfectly elastic, and the frequency of oscillations not very high, the energy will be economically transmitted and very little power consumed so long as no work is done in the receivers. This is a crude but correct representation of my wireless system in which, however, I resort to various refinements. Thus, for instance, the pump is made part of a resonant system of great inertia, enormously magnifying the force of the imprest impulses. The receiving devices are similarly conditioned and in this manner the amount of energy collected in them vastly increased.

The Hertz wave system is in many respects the very opposite of this. To explain it by analogy, the piston of the pump is assumed to vibrate to and fro at a terrific rate and the orifice thru which the fluid passes in and out of the cylinder is reduced to a small hole. There is scarcely any movement of the fluid and almost the whole work performed results in the production of radiant heat, of which an infinitesimal part is recovered in a remote locality. However incredible, it is true that

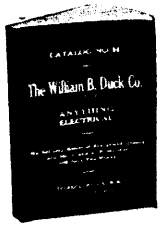

Wireless Stations Will Shortly Re-open

Date, only, uncertain

Heed Our Advice ***ORDER NOW***

As a matter of law Congress loses all control over wireless receiving stations and transmitting stations with a range within the borders of the state where located as soon as peace is declared. The Radio Inspector of this district has already asked our co-operation in printing in the next edition of our catalog the necessity of securing licenses for transmitting sets with a range beyond the borders of the state. No wireless manufacturer wants the stations to open tomorrow. They could not take care of the business. Order now and be prepared. We have a big stock of wireless instruments.

No. 11 is our latest catalog. No new price list.

Please do not write for catalog if you have No. 11. Paper costs three times as much as formerly. Let the amateur without a catalog secure one. Write for prices in advance. Just now we have no price list, because the changes have been so frequent. Will advise through this magazine when revised price list is ready, which will be as quickly as possible.

Send 8c in coin or stamps today for our big 300 page No. 11 Electrical and Wireless Catalog. Any wireless amateur will tell you it is the one catalog to have. You need no others. Our catalog contains most everything in wireless worth while, and is a guarantee that the goods are dependable.

THE WILLIAM B. DUCK CO., 230-232 Superior St., Toledo, Ohio

"THERE'S MONEY IN IT"

LEARN TELEGRAPHY AT HOME

MORSE AND WIRELESS

TEACH YOURSELF

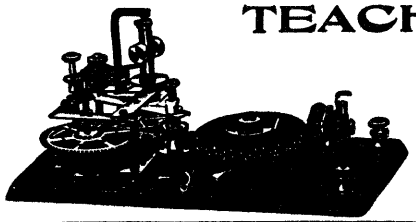

In half the usual time, at trifling cost, with the wonderful Automatic Transmitter. **THE OMNIGRAPH.** Sends unlimited Morse or Continental messages, at any speed, just as an expert operator would.

Adopted by U. S. Gov't. 4 styles. Catalogue free.

OMNIGRAPH MFG. CO.

39L Cortlandt St. New York

MAGNETIC RECTIFIER

Patented April 18, 1916

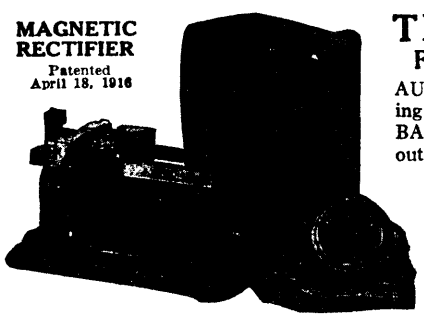

The F-F Battery Booster

For Home Charging of Storage Batteries

AUTOMOBILE OWNERS: Eliminate your starting and lighting troubles by the use of an F-F BATTERY BOOSTER in your own garage, without breaking any electrical connections or removing battery from car. Keeps your battery 100% efficient and prolongs its life indefinitely at a cost of about six cents a month. Write for bulletin No. 12 today.

The French Manufacturing Company

Cleveland, Ohio U. S. A.

the minds of some of the ablest experts have been from the beginning, and still are, obsest by this monstrous idea, and so it comes that the true wireless art, to which I laid the foundation in 1893, has been retarded in its development for twenty years. This is the reason why the "statics" have proved unconquerable, why the wireless shares are of little value and why the Government has been compelled to interfere.

We are living on a planet of well-nigh inconceivable dimensions, surrounded by a layer of insulating air above which is a rarefied and conducting atmosphere (Fig. 5). This is providential, for if all the air were conducting the transmission of electrical energy thru the natural media would be impossible. My early experiments have shown that currents of high frequency and great tension readily pass thru an atmosphere but moderately rarefied, so that the insulating stratum is reduced to a small thickness as will be evident by inspection of Fig. 6, in which a part of the earth and its gaseous envelope is shown to scale. If the radius of the sphere is 12½", then the non-conducting layer is only 1/64" thick and it will be obvious that the Hertzian rays cannot traverse so thin a crack between two conducting surfaces for any considerable distance, without being absorbed. The theory has been seriously advanced that these radiations pass around the globe by *successive reflections*, but to show the absurdity of this suggestion reference is made to Fig. 7 in which this process is diagrammatically indicated. Assuming that there is no refraction, the rays, as shown on the right, would travel along the sides of a polygon drawn around the solid, and inscribed into the conducting gaseous boundary in which case the length of the side would be about 400 miles. As one-half the circumference of the earth is approximately 12,000 miles long there will be, roughly, thirty deviations. The efficiency of such a reflector cannot be more than 25 per cent, so that if none of the energy of the transmitter were lost in other ways, the part recovered would be measured by the fraction $(¼)^{30}$. Let the transmitter radiate Hertz waves at the rate of 1,000 kilowatts. Then about *one hundred and fifteen billionth part of one watt* is all that would be collected in a *perfect* receiver. In truth, the reflections would be much more numerous as shown on the left of the figure, and owing to this and other reasons, on which it is unnecessary to dwell, the amount recovered would be a vanishing quantity.

Consider now the process taking place in the transmission by the instrumentalities and methods of my invention. For this purpose attention is called to Fig. 8, which gives an idea of the mode of propagation of the current waves and is largely self-explanatory. The drawing represents a solar eclipse with the shadow of the moon just touching the surface of the earth at a point where the transmitter is located. As the shadow moves downward it will spread over the earth's surface, first with infinite and then gradually diminishing velocity until at a distance of about 6,000 miles it will attain its true speed in space. From there on it will proceed with increasing velocity, reaching infinite value at the opposite point of the globe. It hardly need be stated that this is merely an illustration and not an accurate representation in the astronomical sense.

The exact law will be readily understood by reference to Fig. 9, in which a transmitting circuit is shown connected to earth and to an antenna. The transmitter being in action, two effects are produced: Hertz waves pass thru the air, and a current traverses the earth. The former propagate with the speed of light and their energy is *unrecoverable* in the circuit. The latter proceeds with the speed varying as the cosecant of the angle which a radius drawn from any point under consideration forms

Increase Your Will Power In One Hour

Author of This Article Tells How He Quickly Acquired a Dominating Will Power That Earns Him Between **$50,000** *and* **$70,000** *a Year*

FOUR YEARS ago a man offered me a wonderful bargain. He was hard up for money and wanted to sell me some shares in a young, growing company for $1,000. Based on the earnings of the Company the stock offered me was easily worth $5,000—in fact, the man who finally bought the shares sold them again in five months at a profit of $4,300.

The reason I didn't buy the shares was that I could no more raise a thousand dollars than I could hop, skip, and jump across the Atlantic Ocean. A thousand dollars! And my income only twenty-five a week.

The second chapter in my life began a few months later, when another opportunity came to me. It required an investment of $20,000 during the first year. I raised the money easily, paid back every penny I borrowed, and had $30,000 left at the end of the first year! To date, in less than four years, my business has paid me a clear profit of over $200,000 and is now earning between $50,000 and $70,000 a year. Yet for twelve years before, the company had been losing money every year!

The natural question for my reader to ask is, "How could you borrow $20,000 to invest in a business which had previously been a failure, after being unable to borrow $1,000 for an investment that seemed secure?" It is a fair question. Andd the answer can be given in two little words— **WILL POWER.**

When the first proposition came to me I passed it by simply because I didn't have the money and couldn't borrow it. I went from one friend to the next and all turned me down. Several refused to talk business with me at all. They all liked me personally, and they asked me about the kiddies, but when it came to money matters I hadn't a chance. I was scared stiff every time I talked to one of them. I pleaded with them, almost begged them. But everybody had their "money all tied up in other investments." It was an old excuse, but I accepted it meekly. I called it hard luck. But I know today that it was nothing in the world except my lack of Will Power, or rather my weak Will Power, which kept me from getting what I wanted.

When I heard that the man sold those shares at a profit of $4,300, it seemed that my sorrow could not be greater. That profit was just about what my salary amounted to for four years! But instead of grieving over my "hard luck," I decided to find out why I was so easily beaten in everything I tried to accomplish. It must be that there was something vital that made the difference between success and failure. It wasn't lack of education, for many illiterate men become wealthy. What was this vital spark? What was this one thing which successful men had and which I did not have?

Partial List of Contents

The Law of Great Thinking
The Four Factors on which it depends.
How to develop analytical power.
How to think "all around" any subject.
How to throw the mind into deliberate, controlled, productive thinking.
Detailed directions for Perfect Mind Concentration.
How to acquire the power of Consecutive Thinking, Reasoning, Analysis.
How to acquire the skill of Creative Writing.
How to guard against errors in Thought.
How to drive from the mind all unwelcome thoughts.
How to follow any line of thought with keen, concentrated Powers.
How to develop Reasoning Power.
How to handle the mind in Creative Thinking.
The secret of Building Mind Power
How the Will is made to act.
How to test your Will.
How a Strong Will is Master of Body.
What creates Human Power.
The Six Principles of Will Training.
Definite Methods for developing Will.
The NINETY-NINE METHODS for using Will Power in the Conduct of Life.
Seven Principles of drill in Mental, Physical, Personal power
FIFTY-ONE MAXIMS for Applied Power of Perception, Memory, Imagination, Self-Analysis, Control.
How to develop a strong, keen gaze.
How to concentrate the eye upon what is before you—object, person, printed page, work.
These are only a few of the many subjects treated.

I began to read books about psychology and mental power. But everything I read was too general. There was nothing definite — nothing that told me what to do.

After several months of discouraging effort, I finally encountered a book called "Power of Will," by Prof. Frank Channing Haddock. The very title came to me as a shock. When I opened the book I was amazed. I realized that will power was the vital spark—the one thing that I lacked. And here in this book were the very rules, lessons and exercises through which anyone could increase their will power. Eagerly I read page after page; including such articles as, The Law of Great Thinking; How to Develop Analytical Power; How to Concentrate Perfectly; How to Guard Against Errors in Thought; How to Develop Fearlessness; How to Acquire a Dominating Personality.

An hour after I opened the book I felt like a new person. My sluggish will power was beginning to awaken. There was a new light in my eye, a new spring in my step, a new determination in my soul. I began to see, in my past, the many mistakes I had made, and I knew I would never make them again.

I practiced some of the simple exercises. They were more fascinating than any game of cards or any sport.

Then came an opportunity to acquire the business which had lost money for twelve years, and which I turned into a $50,000 a year money maker. Instead of cringing before the moneyed people, I won them over by my sheer force of will. I would not be denied. And my every act and word since then has been the result of my training in will power.

I am convinced that every man has within himself every essential quality of success except a strong will. Any man who doubts that statement need only analyze the successful men he knows, and he will find himself their equal, or their superior, in every way except in will power. Without a strong will, education counts for little, money counts for nothing, opportunities are useless.

I earnestly recommend Prof. Haddock's great work, "Power of Will," to those who feel that success is just out of reach—to those who lack that something which they cannot define, yet which holds them down to the grind of a small salary.

Never before have business men and women needed this help so badly as in these trying times. Hundreds of real and imaginary obstacles confront us every day, and only those who are masters of themselves and who hold their heads up will succeed. "Power of Will" as never before is an absolute necessity—an investment in self-culture which no one can afford to deny himself.

I am authorized to say that any reader who cares to examine "Power of Will" for five days may do so without sending any money in advance. If after one hour you do not feel that your will power has increased, and if after a week's reading you do not feel that this great book supplies that one faculty you need most to win success, return it and you will owe nothing. Otherwise send only $3, the small sum asked.

Some few doubters will scoff at the idea of will power being the fountainhead of wealth, position and everything we are striving for, but the great mass of intelligent men and women will at least investigate for themselves by sending for the book at the publisher's risk. I am sure that any book that has done for me—and for thousands of others—what "Power of Will" has done—is well worth investigating. It is interesting to note that among the 250,000 owners of "Power of Will" are such prominent men as Supreme Court Justice Parker; Wu Ting Fang, Ex-U. S. Chinese Ambassador; Gov. McKelvie, of Nebraska; Assistant Potmaster-General Britt; General Manager Christeson, of Wells-Fargo Express Co.; E. St. Elmo Lewis; Senator Arthur Capper of Kansas and thousands of others. In fact, today "Power of Will" is just as important, and as necessary to a man's or woman's equipment for success, as a dictionary. To try to succeed without Power of Will is like trying to do business without a telephone.

As your first step in will training, I suggest immediate action in this matter before you. It is not even necessary to write a letter. Use the form below, if you prefer, addressing it to the Pelton Publishing Company, 30-B Wilcox Block, Meriden, Conn., and the book will come by return mail. You hold in your hand, this very minute, the beginning of a new era in your life. Over a million dollars has been paid for "Power of Will" by people who sent for it on free examination. Can you, in justice to yourself, hesitate about sending in the coupon? Can you doubt, blindly, when you can see, without a penny deposit, this wonder-book that will increase your will power in one hour.

The cost of paper, printing and binding has almost doubled during the past three years, in spite of which "Power of Will" has not been increased in price. The publisher feels that so great a work should be kept as low-priced as possible, but in view of the enormous increase in the cost of every manufacturing item, the present edition will be the last sold at the present price. The next edition will cost more. I urge you to send in the coupon now.

PELTON PUBLISHING COMPANY
30-B Wilcox Block, Meriden, Conn.

I will examine a copy of "Power of Will," at your risk. I agree to remit $3 or remail book in 5 days.

Name.....

Address.....

City.....State.....

1/4 H.P., 110 volts, A.C. 60 cycle, single phase, 1750 R.P.M.

MOTORS

We have 1000 NEW WASHING MACHINE MOTORS. These are of standard manufacture and carry the regular factory guarantee. Shipped in original boxes. Complete as cut.

Bought from Bankruptcy Stock

Suitable for operating Coffee Grinders, Cream Seperators, Bottle Washers, Air Compressors Small Lathes, Etc.

Mail $3.00 cash or Money Order. We will send C.O.D. subject to full examination.

MONEY BACK GUARANTEE

$18.50 EACH

Special Quantity Prices Regular Value $34

MANUFACTURERS' DISTRIBUTER

BARGAINS in Small Motors and Generators Write for Catalogue.

CHAS. H. JOHNSTON - West End - Pittsburgh, Pa.

Wireless Taught By Mail

Merchant Marine Needs THOUSANDS of Operators

Men also needed for big Land Wireless Stations—Aerial Mail Service—Railroad and Telegraph companies. Salaries up to $200 a month. Excellent opportunities to win promotion to Radio Engineer—Inspector—or Draftsman. Chance to travel the world over or locate at Land Station in America.

Complete Course by Mail in Ten Weeks

Our students actually pass the commercial examination in Ten Weeks or less. Start studying NOW in spare time at home. We send you Complete Set Practice Instruments for receiving and sending messages, with first lessons. We help you secure position in any branch of Commercial or Government Radio Service. Write TODAY for Free Particulars. A postal will do.

NATIONAL RADIO INSTITUTE

Dept. 68 Washington, D. C.

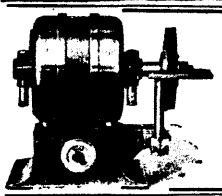

Grinding and Buffing Motors

An indispensable tool in any shop or laboratory. Your equipment is not complete without a BODINE grinding and buffing motor.

Save time and money by keeping your lathe tools, milling cutters and drills sharp.

Send for bulletin No. 522 giving full details of this handy machine.

BODINE ELECTRIC COMPANY, 2254 W. Ohio St., Chicago.

with the axis of symmetry of the waves. At the origin the speed is infinite but gradually diminishes until a quadrant is traversed, when the velocity is that of light. From there on it again increases, becoming infinite at the antipole. Theoretically the energy of this current is *recoverable* in its entirety, in properly attuned receivers.

Some experts, whom I have credited with better knowledge, have for years contended that my proposals to transmit power without wires are sheer nonsense but I note that they are growing more cautious every day. The latest objection to my system is found in the cheapness of gasoline. These men labor under the impression that the energy flows in all directions and that, therefore, only a minute amount can be recovered in any individual receiver. But this is far from being so. The power is conveyed in only one direction, from the transmitter to the receiver, and none of it is lost elsewhere. It is perfectly practicable to recover at any point of the globe energy enough for driving an airplane, or a pleasure boat or for lighting a dwelling. I am especially sanguine in regard to the lighting of isolated places and believe that a more economical and convenient method can hardly be devised. The future will show whether my foresight is as accurate now as it has proved heretofore.

SHIP RADIO OPERATORS ASK INCREASED WAGES.

Increased wages and the fixing of a standard wage scale for radio operators on vessels operating under Government direction was asked of the Shipping Board recently by a delegation representing the Marconi Radio Telegraphers' Association. The radio operators included in the request made of the Board are those on vessels operating in transatlantic and Gulf waters. Assurances were given the radio representatives by Board officials that their request would be taken under advisement for immediate consideration.

SKINDERVIKEN TRANSMITTER BUTTON

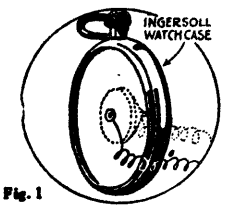

Fig. 1

Fig. 2

THE SKINDERVIKEN TRANSMITTER BUTTON presents the latest advance in microphones and marks a revolution in transmitter construction. It works on an entirely new principle, takes up practically no room, and marks the end of all telephone transmitter troubles.

The SKINDERVIKEN TRANSMITTER BUTTON can be placed in any position and it will talk loudly and distinctly and is at the same time extraordinarily sensitive. It was primarily designed to replace the old damaged or burnt out transmitter. Simply unscrew and remove the telephone transmitter front, disconnect the two inside wires, unscrew and remove the bridge and the old electrode. There remains only the diafram. These wires are then connected with the Skinderviken button, the latter screwed to the diafram, and after screwing the old transmitter housing together again, the telephone is ready for work.

ELECTRICAL EXPERIMENTER readers will be particularly interested in all the different experiments that can be performed with the Skinderviken Button. Fig. 1 shows the Skinderviken button attached to the back of an Ingersol watch case. When speaking towards the inside of the case, it will be found that the voice is reproduced clearly and loudly Fig. 2 shows another interesting stunt. By attaching the button to a tin diafram about the size of half a dollar, and by holding the diafram at the side of the throat, as shown, speech can be transmitted with surprising clarity. Fig. 3 illustrates the same arrangement placed on the chest, as shown. In this position the transmitter will talk clearly and loudly. Fig. 4 shows an arrangement whereby the Skinderviken button is attached on a thin wood board at the preacher's pulpit. His voice is clearly transmitted so that people hard of hearing can readily hear the sermon. Fig. 5 shows an interesting stunt, whereby a hole is drilled in the side of a thin glass water-tumbler; the sides of the glass thus acting as a diafram, the voice is clearly transmitted. Fig. 6 shows a simple match box Detectophone. The Skinderviken button is concealed inside of the box, only the small brass nut showing on the outside. This can be camouflaged as well. This device talks well. Fig. 7 shows how to transmit phonograph music at a distance merely by drilling a small hole in the phonograph arm and attaching the Skinderviken button; a very favorite experiment with all experimenters. Fig. 8 shows how a very sensitive Detectophone can be made by placing one of the buttons in the center of a lithographed cardboard picture, so that only the small brass nut shows. The large surface of the picture acts as a big diafram, and the voice is well reproduced.

Fig. 3

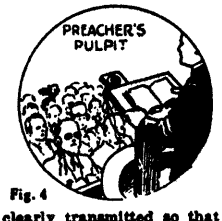

Fig. 4

$1.00 prepaid

We have such unlimited confidence in the Skinderviken transmitter button that we make the following remarkable offer. Send us one dollar ($1.00) for which we will mail one button prepaid. If you do not wish to keep it, return it within five days and your money will be refunded. Boys! send stamp for booklet No. 4. It gives diagrams and experiments using the Skinderviken Transmitter Button, and prices of telephone equipment.

Fig. 5

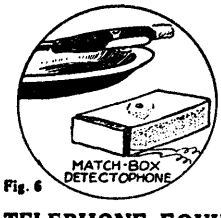

Fig. 6

Fig. 7

Fig. 8

SKINDERVIKEN TELEPHONE EQUIPMENT CO. Address us as STECO, 2134 N. Clark St., Chicago, Ill.

New York Tribune
Feb. 23, 1919

Tesla answers Mr. Manierre and further explains the axial rotation of the moon.

Sirs:

In your article of February 2, Mr. Charles E. Manierre, commenting upon my article in "The Electrical Experimenter" for February, which appeared in The Tribune of January 26, suggests that I give a definition of axial rotation.

I intended to be explicit on this point, as may be judged from the following quotation: "The unfailing test of the spinning of a mass is, however, the existence of energy of motion. The moon is not possessed of such vis viva." By this I meant that "axial rotation" is not simply "rotation upon an axis" as nonchalantly defined in dictionaries, but is circular motion in the true physical sense - that is, one in which half the product of the mass with the square of velocity is a definite and positive quantity.

The moon is a nearly spherical body, of a radius of about 1,081.5 miles, from which I calculate its volume to be approximately 5,300,216,300 cubic miles. Since its mean density is 3.27, one cubic foot of material composing it weighs close to 205 pounds. Accordingly, the total weight of the satelite is about 79,969,000,000,000,000,000 and its mass 2,483,500,000,000,000,000 terrestrial short tons. Assuming that the moon does physically rotate upon its axis, it performs one revolution in 27 days 7 hours 43 minutes and 11 seconds, or 2,360,591 seconds. If, in conformity with mathematical principles, we imagine the entire mass concentrated at a distance from the centre equal to two-fifths of the radius, then the calculated rotational velocity is 3.04 feet per second, at which the globe would contain 11,474,000,000,000,000,000 short foot tons of energy, sufficient to run 1,000,000,000 horsepower for a period of 1,323 years. Now, I say that there is not enough energy in the moon to run a delicate watch.

In astronomical treatises usually the argument is advanced that "if the lunar globe did not turn upon its axis it would expose all parts to terrestrial view. As only a little over one-half is visible it must rotate." But this inference is erroneous, for it admits of one alternative. There are an infinite number of axes besides its own on each of which the moon might turn and still exhibit the same peculiarity.

I have stated in my article that the moon rotates about an axis, passing through the centre of the earth, which is not strictly true, but does not vitiate the conclusions I have drawn. It is well known, of course, that the two bodies revolve around a common centre of gravity which is at a distance of a little over 2,899 miles from the earth's centre.

Another mistake in books on astronomy is made in considering this motion equivalent to that of a weight whirled on a string or in a sling. In the first place, there is an essential difference between these two devices though involving the same mechanical principle. If a metal ball attached to a string is whirled around and the latter breaks an axial rotation of the missile results which is definitely related in magnitude and direction to the motion preceding. By way of illustration: If the ball is whirled on the string clockwise, ten times a second, then when it flies off it will rotate on its axis twenty times a second, likewise in the direction of the clock. Quite different are the conditions when the ball is thrown from a sling. In this case a much more rapid rotation is imparted to it in the opposite sense. There is not true analogy to these in the motion of the moon. If the gravitational string, as it were, would snap, the satellite would go off in a tangent without the slightest swerving or rotation, for there is no momentum about the

axis and, consequently, no tendency whatever to spinning motion.

Mr. Manierre is mistaken in his surmise as to what would happen if the earth were suddenly eliminated. Let us suppose that this would occur at the instant when the moon is in opposition. Then it would continue on its elliptical path around the sun, presenting to it steadily the face which was always exposed to the earth. If, on the other hand, the latter would disappear at the moment of conjunction, the moon would gradually swing around through 180 degrees and, after a number of oscillations, revolve again with the same face to the sun. In either case there would be no periodic changes, but eternal day and night, respectively, on the sides turned toward and away from the luminary.

NIKOLA TESLA

The Moon's Rotation

By NIKOLA TESLA

SINCE the appearance of my article entitled the "Famous Scientific Illusions" in your February issue, I have received a number of letters criticizing the views I exprest regarding the moon's "axial rotation." These have been partly answered by my statement to the *New York Tribune* of February 23, which allow me to quote:

In your issue of February 2, Mr. Charles E. Manierre, commenting upon my article in the *Electrical Experimenter* for February which appeared in the *Tribune* of January 26, suggests that I give a definition of axial rotation.

I intended to be explicit on this point as may be judged from the following quotation: "The unfailing test of the spinning of a mass is, however, the existence of *energy of motion.* The moon is not posest of such *vis viva.*" By this I meant that "axial rotation" is not simply "rotation upon an axis nonchalantly defined in dictionaries, but is a circular motion in the true physical sense—that is, one in which half the product of the mass with the square of velocity is a definite and positive quantity. The moon is a nearly spherical body, of a radius of about 1,087.5 miles, from which I calculate its volume to be approximately 5,300,216,300 cubic miles. Since its mean density is 3.27, one cubic foot of material composing it weighs close on 205 lbs. Accordingly, the total weight of the satellite is about 79,969,000,000,000,000,000, and its mass 2,483,500,000,000,000,000 terrestrial short tons. Assuming that the moon does physically rotate upon its axis, it performs one revolution in 27 days, 7 hours, 43 minutes and 11 seconds, or 2,360,591 seconds. If, in conformity with mathematical principles, we imagine the entire mass concentrated at a distance from the center equal to two-fifths of the radius, then the calculated rotational velocity is 3.04 feet per second, at which the globe would contain 11,474,000,000,000,000,000 short foot tons of energy sufficient to run 1,000,000,000 horsepower for a period of 1,323 years. Now, I say, that there is not enough of that energy in the moon to run a delicate watch.

In astronomical treatisies usually the argument is advanced that "if the lunar globe did not turn upon its axis it would expose all parts to terrestrial view. As only a little over one-half is visible it *must* rotate." But this inference is erroneous, for it only admits of one alternative. There are an infinite number of axis besides its own in each of which the moon might turn and still exhibit the same peculiarity.

I have stated in my article that the moon rotates about an axis passing thru the center of the earth, which is not strictly true, but it does not vitiate the conclusions I have drawn. It is well known, of course, that the two bodies revolve around a common center of gravity, which is at a distance of a little over 2,899 miles from the earth's center.

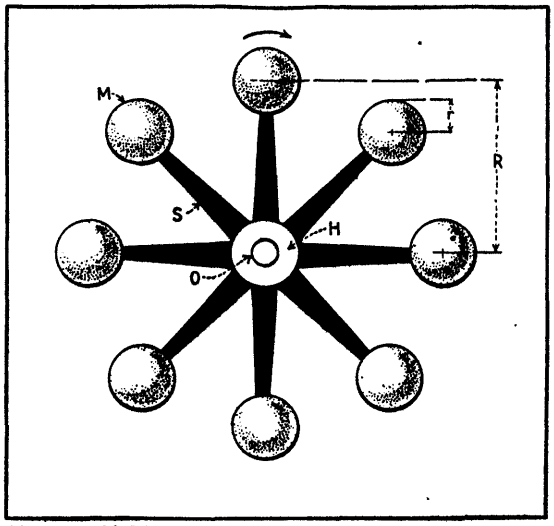

If You Still Think That the Moon Rotates on Its Axis, Look at This Diagram and Follow Closely the Successive Positions Taken by One of the Balls M While It Is Rotated by a Spoke of the Wheel. Substitute Gravity for the Spoke and the Analogy Solves the Moon Rotation Riddle.

Another mistake in books on astronomy is made in considering this motion equivalent to that of a weight whirled on a string or in a sling. In the first place there is an essential difference between these two devices tho involving the same mechanical principle. If a metal ball, attached to a string, is whirled around and the latter breaks, an axial rotation of the missile results which is definitely related in magnitude and direction to the motion preceding. By way of illustration—if the ball is whirled on the string clockwise ten times per second, then when it flies off, it will rotate on its axis ten times per second, likewise in the direction of a clock. Quite different are the conditions when the ball is thrown from a sling. In this case a *much more rapid* rotation is imparted to it in the *opposite sense.* There is no true analogy to these in the motion of the moon. *If the gravitational string, as it were, would snap, the satellite would go off in a tangent without the slightest swerving or rotation, for there is no moment about the axis and, consequently, no tendency whatever to spinning motion.*

Mr. Manierre is mistaken in his surmise as to what would happen if the earth were suddenly eliminated. Let us suppose that this would occur at the instant when the moon is in *opposition.* Then it would continue on its eliptical path around the sun, presenting to it steadily the face which was always exposed to the earth. If, on the other hand, the latter would disappear at the moment of *conjunction,* the moon would gradually swing around thru 180° and, after a number of oscillations, revolve, again with the same face to the sun. In either case there would be no periodic changes but eternal day and night, respectively, on the sides turned towards, and away from, the luminary.

Some of the arguments advanced by the correspondents are ingenious and not a few comical. None, however, are valid.

One of the writers imagines the earth in the center of a circular orbital plate, having fixedly attached to its periperal portion a disk-shaped moon, in frictional or geared engagement with another disk of the same diameter and freely rotatable on a pivot projecting from an arm entirely independent of the planetary system. The arm being held continuously parallel to itself, the pivoted disk, of course, is made to turn on its axis as the orbital plate is rotated. This is a well-known drive, and the rotation of the pivoted disk is as palpable a fact as that of the orbital plate. But, the moon in this model only revolves about the center of the system *without the slightest angular displacement* on its own axis. The same is true of a cart-wheel to which this writer refers. So long as it advances on the earth's surface it turns on the axle in the true physical sense; when one of its spokes is always kept in a perpendicular position the wheel still *revolves* about the earth's center, *but axial rotation has ceased.* Those who think that it then still exists are laboring under an illusion.

An obvious fallacy is involved in the following abstract reasoning. The orbital plate is assumed to gradually shrink, so that finally the centers of the earth and the satellite coincide when the latter revolves simultaneously about its own and the earth's axis. We may reduce the earth to a mathematical point and the distance between the two planets to the radius of the moon without affecting the system in principle, but a further diminution of the distance is mani- (*Cont. on p.* 892)

WE believe the accompanying illustration and its explanation will dispel all doubts as to whether the moon rotates on its axis or not. Each of the balls, as M, depicts a different position of, and rotates exactly like, the moon keeping always the same face turned towards the center O, representing the earth.

But as you study this diagram, can you conceive that any of the balls turn on their axis? Plainly this is rendered physically impossible by the spokes. But if you are still unconvinced, Mr. Tesla's experimental proof will surely satisfy you. A body rotating on its axis must contain rotational energy. Now it is a fact, as Mr. Tesla shows, that no such energy is imparted to the ball as, for instance, to a projectile discharged from a gun. It is therefore evident that the moon, in which the gravitational attraction is substituted for a spoke, cannot rotate on its axis or, in other words, contain rotational energy. If the earth's attraction would suddenly cease and cause it to fly off in a tangent, the moon would have no other energy except that of translatory movement, and it would not spin like the ball.—Editor.

Tobacco Habit BANISHED in 48 to 72 Hours

No craving for tobacco in any form when you begin taking Tobacco Redeemer. Don't try to quit the tobacco habit unaided. It's a losing fight against heavy odds and means a serious shock to the nervous system. Let the tobacco habit quit YOU. It will quit you, if you will just take Tobacco Redeemer, according to directions for two or three days. It is a most marvelously quick and thoroughly reliable remedy for the tobacco habit.

Not a Substitute

Tobacco Redeemer contains no habit-forming drugs of any kind. It is in no sense a substitute for tobacco. After finishing the treatment you have absolutely no desire to use tobacco again or to continue the use of the remedy. It makes not a particle of difference how long you have been using tobacco, how much you use or in what form you ure it—whether you smoke cigars, cigarettes, pipe, chew plug or fine cut or use snuff, Tobacco Redeemer will positively banish every trace of desire in from 48 to 72 hours. This we absolutely guarantee in every case or money refunded.

Write today for our free booklet showing the deadly effect of tobacco upon the human system and positive proof that Tobacco Redeemer will quickly free you of the habit.

Newell Pharmacal Company,
Dept. 821 St. Louis, Mo.

BOYS! *Write For New AUTO-WHEEL BOOKLET, and*

FREE FELT PENNANT

Send us the names of three coaster wagon dealers, mentioning which handle the AUTO-WHEEL, and we'll send you a beautiful Felt Pennant FREE and tell you all about the wonderful Auto-Wheel Coaster and the patented Auto-Wheel Convertible Roadster.

Wouldn't YOU Like to Organize a Coaster Club?

It's great fun. Every member receives a cap and the Captain a special cap. When you write, be sure to ask for full information and the new Auto-Wheel Booklet. It's brimful of information you should have.

The Buffalo Sled Co.
Dept. 163 N. Tonawanda, N. Y.

In Canada: Preston, Ont.

Get an

Auto-Wheel

BOYS BUILD THIS CAR

This nifty little car driven by gasoline motor, can be built by any boy. Parts are furnished by us and are very cheap. Send 26 cents for building plans and price list of parts showing how to build this lads' car.

SYPHER MFG. CO.
186 Warren Street
TOLEDO, OHIO.

BUSH CAR—FREE

This Five Passenger 37 N. P. car, 116 in. wb. Imp. All bearings Timken. Delco ign.—Dynaets Stz. and Ltg. Write at once for my great Free Offer and 48-page catalog. Agents wanted to drive and demonstrate. Territory open. Prompt shipments. Big money. Cars guaranteed or money back. 1919 cars ready. Address J. H. Bush, President. Dept. 918

BUSH MOTOR CO., Bush Temple, Chicago, Illinois

The Moon's Rotation

(*Continued from page 866*)

festly absurd and of no bearing on the question under consideration.

In all the communications I have received, tho different in the manner of presentation, the successive changes of position in space are mistaken for axial rotation. So, for instance, a positive refutation of my arguments is found in the observation that the moon exposes all sides to other planets! It revolves, to be sure, but none of the evidences is a proof that it turns on its axis. Even the well-known experiment with the Foucault pendulum, altho exhibiting similar phenomena as on our globe, would merely demonstrate a motion of the satellite about *some* axis. The view I have advanced is NOT BASED ON A THEORY but on facts *demonstrable by experiment*. It is not a matter of *definition* as some would have it. A MASS REVOLVING ON ITS AXIS MUST BE POSEST OF MOMENTUM. If it has none, there is no axial rotation, all appearances to the contrary notwithstanding.

A few simple reflections based on well establisht mechanical principles will make this clear. Consider first the case of two equal weights w and w_1, in Fig. 1, whirled about the center O on a string s as shown. Assuming the latter to break at a both weights will fly off on tangents to their circles of gyration, and, being animated with different velocities, they will rotate around their common center of gravity o. If the weights are whirled n times per second then the speed of the outer and the inner one will be, respectively, $V = 2(R + r)\,n$ and $V_1 = 2\pi(R - r)\,n$, and the difference $V - V_1 = 4\pi r n$, will be the length of the circular path of the outer weight. Inasmuch, however, as there will be equalization of the speeds until the mean value is attained, we shall have $\frac{V - V_1}{2} = 2\pi r n = 2\pi r N$, N being the number of revolutions per second of the weights around their center of gravity. Evidently then, the weights continue to rotate at the original rate and in the same direction. I know this to be a fact from actual experiments. It also follows that a ball, as that shown in the figure, will behave in a similar manner for the two half-spherical masses can be concentrated at their centers of gravity and m and m_1, respectively, which will be at a distance from o equal to $\frac{1}{8}r$.

This being understood, imagine a number of balls M carried by as many spokes S radiating from a hub H, as illustrated in Fig. 2, and let this system be rotated n times per second around center O on frictionless bearings. A certain amount of work will be required to bring the structure to this speed, and it will be found that it equals exactly half the product of the masses with the square of the tangential velocity. Now if it be true that the moon rotates in reality on its axis *this must also hold good for EACH of the balls as it performs the same kind of movement.* Therefore, in imparting to the system a given velocity, energy must have been used up in the axial rotation of the balls. Let M be the mass of one of these and R the radius of gyration, then the rotational energy will be $E = \frac{1}{2}M\,(2\pi Rn)^2$. Since for one complete turn of the wheel every ball makes one revolution on its axis, according to the prevailing theory, the energy of axial rotation of each ball will be $e = \frac{1}{2}M\,(2\pi r_1 n)^2$, r_1 being the radius of gyration about the axis and equal to 0.6325 r. We can use as large balls as we like, and so make e a considerable percentage of E and yet, it is positively established by experiment that each of the rotating balls contain only the energy E, no power whatever being consumed in the supposed axial rotation, which is, consequently, wholly illusionary. Something even more interesting may, however, be stated. As I have shown before, a ball flying off will rotate at the rate of the wheel and in the same direction. But this whirling motion, unlike that of a projectile, neither adds to, nor detracts from, the energy of the translatory movement which is exactly equal to the work consumed in giving to the mass the observed velocity.

From the foregoing it will be seen that in order to make one physical revolution on its axis the moon should have twice its present angular velocity, and then it would contain a quantity of stored energy as given in my above letter to the *New York Tribune*, on the assumption that the radius of gyration is 2/5 that of figure. This, of course, is uncertain, as the distribution of density in the interior is unknown. But from the character of motion of the satellite it may be concluded with certitude *that it is devoid of momentum about its axis.* If it be bisected by a plane tangential to the orbit, the masses of the two halves are inversely as the distances of their centers of gravity from the earth's center and, therefore, if the latter were to disappear suddenly, no axial rotation, as in the case of a weight thrown off, would ensue.

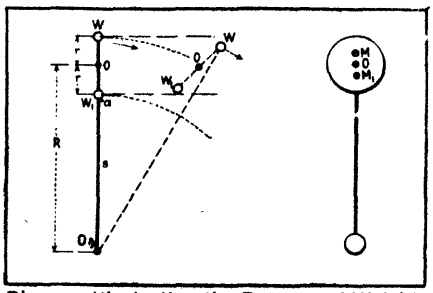

Diagram Illustrating the Rotation of Weights Thrown Off By Centrifugal Force.

WHAT IS MAN?

A man weighing 150 pounds will contain approximately 3,500 cubic feet of gas,—oxygen, hydrogen and nitrogen in his constitution, which at eighty cents per thousand cubic feet would be worth $2.80 for illuminating purposes. He also contains all the necessary fats to make a 15-pound candle, and thus, together with his 3,500 cubic feet of gases, he possesses considerable *illuminating* possibilities. His system contains 22 pounds and ten ounces of carbon, or enough to make 780 dozen, or 9,360 lead pencils. There are about fifty grains of iron in his blood and the rest of the body would supply enough of this metal to make one spike large enough to hold his weight. A healthy man contains 54 ounces of phosphorus. This deadly poison would make 800,000 matches, or enough poison to kill five hundred persons. This, with two ounces of lime, make the stiff bones and brains. No difference how *sour* a man looks, he contains about 60 lumps of sugar of the ordinary cubical dimensions, and to make the seasoning complete, there are 20 *spoonfuls of salt.* If a man were distilled into water, he would make about 38 quarts, or more than half his entire weight. He also contains a great deal of starch, chlorid of potash, magnesium, sulfur, and hydrochloric acid in his wonderful human system.

Break the shells of 1,000 eggs into a huge pan or basin, and you have the contents to make a man from his toe-nails to the most delicate tissues of his brain. And this is the scientific answer to the question, "What is Man?"

The Moon's Rotation

By NIKOLA TESLA

In this article Dr. Tesla proves conclusively by theory and experiment that all the kinetic energy of a rotating mass is purely translational and that the moon contains absolutely no rotational energy, in other words, does not rotate on its axis.—EDITOR.

IN revising my article on "The Moon's Rotation", which appeared in the April issue of the ELECTRICAL EXPERIMENTER, I appended a few remarks to the original text in further support and eluci-

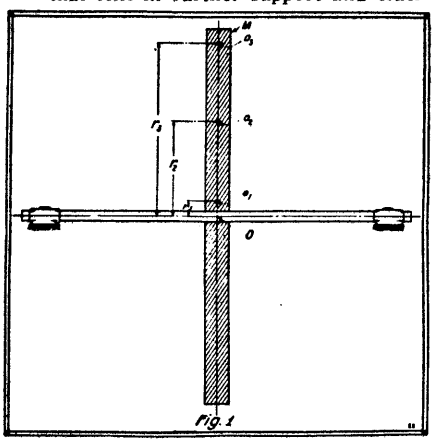

Fig. 1. In Determining the Kinetic Energy of a Rotating Mass, This Figure Shows the Selection of a Number of Points Taken Within the Straight Rod or Mass M, at Successive Distances from the Axis of Rotation O, Knowing These Values and the Speed of Rotation the Kinetic Energy of the Mass Is Readily Computed.

dation of the theory advanced. Due to the printer's error these were lost and, in consequence, I found it necessary to forward another communication which, unfortunately, was received too late for embodiment in the May number. Meanwhile many letters have reached me in which certain phenomena presented by rotating bodies, as the moon's librations of longitude, are cited as evidences of energy due to spinning motion, i. e., proofs of axial rotation of the satellite in the true physical sense. I trust that the following amplified statement will meet all of the objections raised and convert to my views those who are still unconvinced.

The kinetic energy of a rotating mass can be determined in four ways which are illustrated in diagrams, Figs. 1, 2, 3 and 4 and may be found more or less suitable.

Referring to Fig. 1, the method consists in selecting judiciously a number of points as o_1, o_2, o_3, etc., within the straight rod or mass M, respectively at distances r_1, r_2, r_3, etc., from the axis of rotation 0 and calculating the square root of the mean square of these distances. Its value being R_g, denoted radius of gyration, the *effective* velocity of the mass at n revolutions per second will be $V_n = 2\pi R_g n$ and its kinetic energy $E = \frac{1}{2} M V_n^2 = \frac{1}{2} M (2\pi R_g n)^2$.

In Fig. 2 the mass M, rotating n times per second about an axis 0 at right angles to the plane of the paper, is divided into numerous elements or small parts, most conveniently very thin concentric laminae, as l_1, l_2, l_3, etc., at distances r_1, r_2, r_3, etc., from 0. Since the kinetic energy of each part is equal to half the product of its mass and the square of the velocity, the sum of all these elemental energies $E = \frac{1}{2} \Sigma m V^2 = \frac{1}{2} m_1 V_1^2 + \frac{1}{2} m_2 V_2^2 + \frac{1}{2} m_3 V_3^2 + \ldots\ldots = \frac{1}{2} m_1 (2\pi r_1 n)^2 + \frac{1}{2} m_2 (2\pi r_2 n)^2 + \frac{1}{2} m_3 (2\pi r_3 n)^2 + \ldots\ldots$

A different form of expression for the energy of a rotating body may be obtained by determining its moment of inertia. For this purpose the mass M (in Fig. 3), rotating n times per second about an axis 0, is separated into minute parts, as m_1, m_2, m_3, etc., respectively at distances r_1, r_2, r_3, etc., from the same. The sum of the products of all these small masses and the squares of their distances is the moment of inertia I, and then $E = \frac{1}{2} I \omega^2$, $\omega = 2\pi n$ being the angular velocity.

It is obvious that in all these instances many points or elements will be required for great accuracy but, as a rule, very few are sufficient in practice.

Still another way to compute the kinetic energy is illustrated in Fig. 4, in which case the quantity I is given in terms of the moment of inertia I_c about another axis parallel to 0 and passing thru the center of gravity C of mass M. In conformity with this the energy of motion $E = \frac{1}{2} M V^2 + \frac{1}{2} I_c \omega^2$ in which equation V is the velocity of the center of gravity.

The preceding is deemed indispensable as I note that the correspondents, even those who seem thoroly familiar with mechanical principles, fail to make a distinction between theoretical and physical truths which is essential to my argument.

In estimating the kinetic energy of a rotating mass in any of the ways indicated we arrive, thru suitable conceptions and methods of approximation, at expressions which may be made quantitatively precise to any desired degree, but do not truly de-

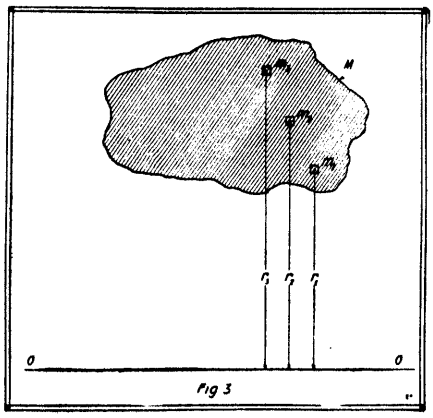

Fig. 3. Another Form of Expression for the Energy of a Rotating Body May Be Obtained by Determining Its Moment of Inertia. Here the Mass M Is Subdivided Into Minute Parts m_1, m_2, m_3, ... etc. The Sum of the Products of These Masses and the Squares of Their Distances Is the Moment of Inertia, Which with the Angular Speed, Gives the Kinetic Energy E.

fine the actual condition of the body. To illustrate, when proceeding according to the plan of Fig. 1, we find a certain hypothetical velocity with which the entire mass should

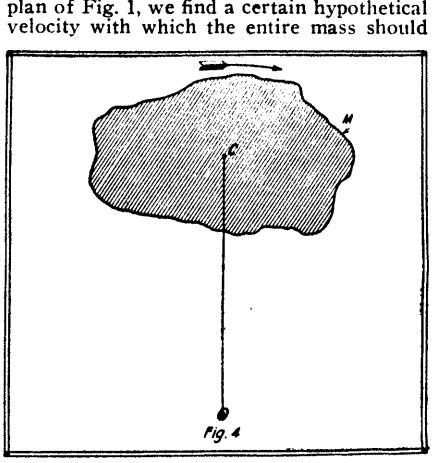

Fig. 4. In this Case the Motion Is Resolved Into Two Separate Components—One Translational About O and the Other Rotational About C. The Total Kinetic Energy of the Mass Equals the Sum of These Two Energies.

move in order to contain the same energy, a state wholly imaginary and irreconcilable with the actual. Only, when *all* particles of the body have the same velocity, does the

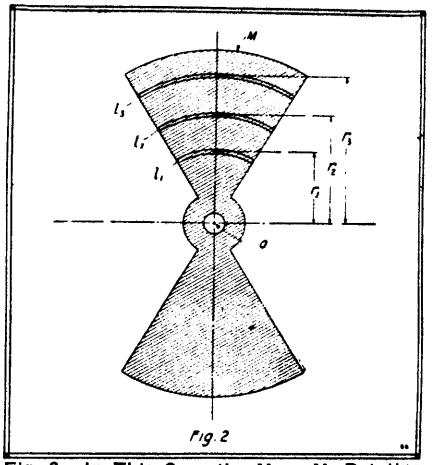

Fig. 2. In This Case the Mass M, Rotating n Times Per Second, About An Axis O, Is Divided Into Numerous Elements or Small Parts at Various Radii from O. Knowing the Kinetic Energy of Each Part, the Whole Kinetic Energy of the Mass Is Easily Determined by Taking a Summation of the Individual Quantities.

product $\frac{1}{2} M V^2$ specify a physical fact and is numerically and descriptively accurate. Still more remote from palpable truth is the equation of motion obtained in the manner indicated in Fig. 4, in which the first term represents the kinetic energy of translation of the body as a whole and the second that of its axial rotation. The former would demand a movement of the mass in a definite path and direction, all particles having the same velocity, the latter its simultaneous motion in another path and direction, the particles having different velocities. This abstract idea of angular motion is chiefly responsible for the illusion of the moon's axial rotation, which I shall endeavor to dispel by additional evidences.

With this object attention is called to Fig. 5 showing a system composed of eight balls M, which are carried on spokes S, radiating from a hub H, rotatable around a central axis 0 in bearings supposed to be frictionless. It is an arrangement similar to that before illustrated with the exception that the balls, instead of forming parts of the spokes, are supported in screw pivots s, which are normally loose but can be tightened so as to permit both free turning and rigid fixing as may be desired. To facilitate observation the spokes are provided with radial marks and the lower sides of the balls are shaded. Assume, first, that the drawing depicts the state of rest, the balls being rotatable without friction, and let an angular velocity $\omega = 2\pi n$ be imparted to the system in the clockwise direction as indicated by the long solid arrow. Viewing a ball as M, its successive positions 1, 2, 3—8 in space, and also relatively to the spoke, will be just as drawn, and it is evident from an inspection of the diagram that while moving with the angular velocity ω about 0, in the clockwise direction, the ball turns, with respect to its axis, at the same angular velocity but in the opposition direction, that of the dotted arrow. The combined result of these two motions is a translatory movement of the ball such that all particles are animated with the same velocity V, which is that of its center of gravity. In this case, granted that there is absolutely no friction the

kinetic energy of each ball will be given by the product of ½ M V² not approximately, but with mathematical rigor. If now the pivots are screwed tight and the balls fixt rigidly to the spokes, this angular motion relatively to their axes becomes physically impossible and then it is found that the kinetic energy of each ball is increased, the increment being exactly the energy of rotation of the ball on its axis. This fact, which is borne out both by theory and experiment, is the foundation of the general notion that a gyrating body—in this instance ball M—presenting always the same face towards the center of motion, *actually* rotates upon its axis in the same sense, as indicated by the short full arrow. *But it does not tho to the eye it seems so.* The fallacy will become manifest on further inquiry.

To begin with, observe that when a mass, say the armature of an electric motor, rotating with the angular velocity ω, is reversed, its speed is $-\omega$ and the difference $\omega - (-\omega) = 2\omega$. Now, in fixing the ball to the spoke, the change of angular velocity is only ω; therefore, an additional velocity ω would have to be imparted to it in order to cause a clockwise rotation of the ball on its axis in the true significance of the word. The kinetic energy would then be equal to the sum of the energies of the translatory and axial motions, not merely in the abstract mathematical meaning, but as a physical fact. I am well aware that, according to the prevailing opinion, when the ball is free on the pivots it does not turn on its axis at all and only rotates with the angular velocity of the frame when rigidly attached to the same, but the truth will appear upon a closer examination of this kind of movement.

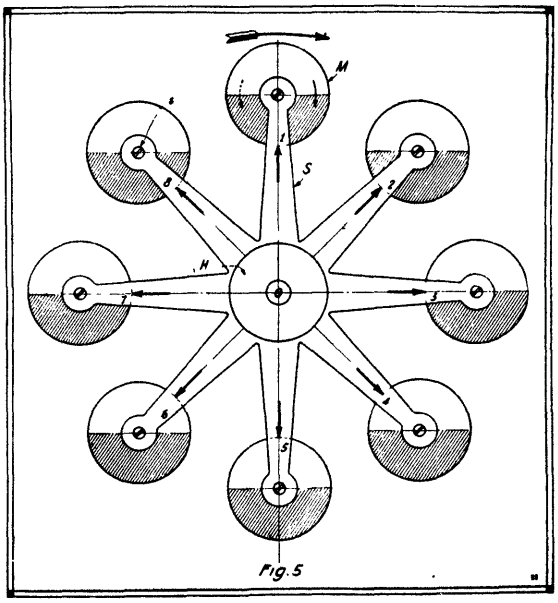

Fig. 5. This Diagram Represents a System Composed of 8 Balls M, Carried on Spokes S, and Rotating Around Center O. The Balls Are Freely Rotatable on Pivots Which Can Be Tightened. With This Model the Fallacy of the Moon's Rotation on Its Axis Is Demonstrable.

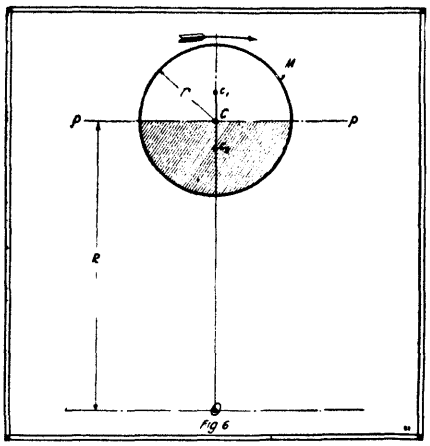

Fig. 6. Diagram Showing a Ball Having Mass M, of Radius r, Rotating About Center O, and Used in the Theoretical Analysis of the Moon's Motion.

Let the system be rotated as first assumed and illustrated, the balls being perfectly free on the pivots, and imagine the latter to be gradually tightened to cause friction slowly reducing and finally preventing the slip. At the outset all particles of each ball have been moving with the speed of its center of gravity, but as the bearing resistance asserts itself more and more the translatory velocity of the particles nearer to the axis 0 will be *diminishing*, while that of the diametrically opposite ones will be *increasing*, until the maxima of these changes are attained when the balls are firmly held. In this operation we have thus deprived those parts of the masses which are nearer to the center of motion, of some kinetic energy of *translation* while adding to the energy of those which are farther and, obviously, the gain was greater than the loss so that the *effective* velocity of each ball as a whole was increased. *Only so* have we augmented the kinetic energy of the system, not by causing *axial rotation* of the balls. The energy E of each of these is *solely* that of translatory movement with an effective velocity V_e as above defined such that $E = \frac{1}{2} M V_e^2$. The axial rotations of the ball in either direction are but apparent; *they have no reality whatever* and call for no mechanical effort. It is merely when an extraneous force acts independently to turn the whirling body on its axis that energy comes into play. Incidentally it should be pointed out that in true axial rotation of a rigid and homogenous mass all symmetrically situated particles contribute equally to the momentum which is not the case here. That there exists not even the slightest tendency to such motion can, however, be readily established.

For this purpose I would refer to Fig. 6 showing a ball M of radius *r*, the center C of which is at a distance R from axis 0 and which is bisected by a tangential plane *pp* as indicated, the lower half sphere being shaded for distinction. The kinetic energy of the ball when whirled *n* times per second about 0 is according to the first form of expression $E = \frac{1}{2} M V_e^2 = \frac{1}{2} M (2\pi R_g n)^2$, M being the mass and R_g the radius of gyration. But, as explained in connection with Fig. 4, we have also $E = \frac{1}{2} M V^2 + \frac{1}{2} I_c \omega^2, V = 2\pi R n$ being the velocity of the center of gravity C and I_c the moment of inertia of the ball, about the parallel axis passing thru C and equal to $\frac{2}{5} M i^2$ so that $E = \frac{1}{2} M (2\pi R n)^2 + \frac{1}{5} M r^2 (2\pi n)^2$. Neither of these two expressions for E describes the actual state of the body but the first is certainly preferable conveying, as it does, the idea of a single motion instead of two, one of which moreover is devoid of existence. I shall first undertake to demonstrate that there is no torque or rotary effort about center C and that the kinetic energy of the supposed axial rotation of the ball is mathematically equal to zero. This makes it necessary to consider the two halves separated by the tangential plane *pp* wholly independent from one another. Let c_1 and c_2 be their centers of gravity, then $Cc_1 = Cc_2 = \frac{3}{8} r$. In order to ascertain the kinetic energy of the hemispheres we have to find their radii of gyration which can be done by determining the moments of inertia I_{c_1} and I_{c_2} about parallel axes passing thru c_1 and c_2. Complex calculation will be avoided by remembering that the moment of inertia of either one of the half spheres about an axis thru C is $I_C = \frac{1}{2} \times \frac{2}{5} M r^2, = \frac{1}{5} M r^2$, and since $M = 2$ m, $I_C = \frac{2}{5}$ m r^2. This can be exprest in terms of the moments I_{c_1} and I_{c_2}; namely, $I_C = I_{c_1} + m (\frac{3}{8} r)^2 = I_{c_2} + m (\frac{3}{8} r)^2$. Hence $I_{c_1} = I_{c_2} = I_C - m (\frac{3}{8} r)^2 = \frac{2}{5}$ m $r^2 - 9/64$ m $r^2 = 83/320$ m r^2. Following the same rule the moments of inertia of the half spheres about the axis passing thru the center of motion 0 can be found. Designating the moments for the upper and lower halves of the ball, respectively, I_{O_1} and I_{O_2} we have $I_{O_1} = m (R + \frac{3}{8} r)^2 + I_{c_1} = m (R + \frac{3}{8} r)^2 + 83/320$ m r^2 and $I_{O_2} = m (R - \frac{3}{8} r)^2 + I_{c_2} = m (R - \frac{3}{8} r)^2 + 83/320$ m r^2. Thus for the upper half sphere the radius of gyration $R_{g_1} =$

$$\sqrt{\frac{I_{O_1}}{m}} = \sqrt{(R + \tfrac{3}{8} r)^2 + 83/320\ r^2}$$

and for the lower one $R_{g_2} =$

$$\sqrt{\frac{I_{O_2}}{m}} = \sqrt{(R - \tfrac{3}{8} r)^2 + 83/320\ r^2}$$

These are the distances from center 0, at which the masses of the half spheres may be concentrated and then the algebraic sum of their energies—which are wholly translatory those of axial rotation being nil—will be exactly equal to the total kinetic energy of the ball as a unit. The

(*Continued on page* 156)

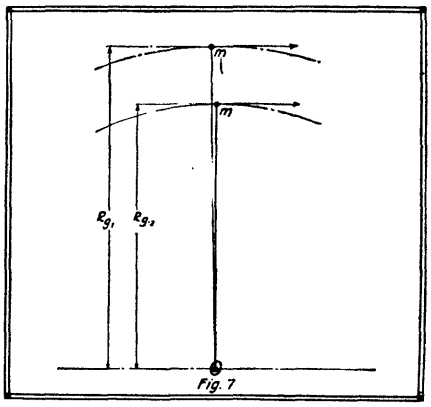

Fig. 7. Here Two Masses m-m, Are Considered as Condensed Into Points, Attached to Weightless Strings of Different Radii. If Both Strings Are Cut, and the Masses Considered as Joined, Then There Will Be No Rotation About the Common Center of Gravity.

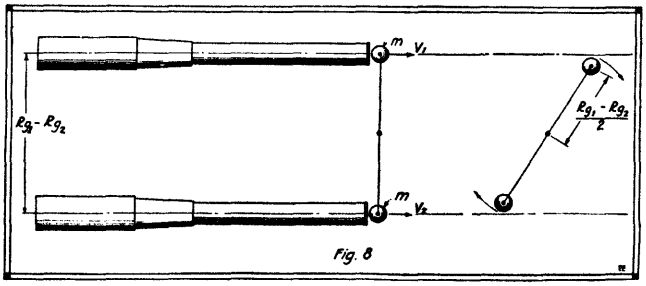

Fig. 8. To Make the Problem Shown In Fig. 7 Clear, Imagine Two Rifle Barrels Parallel to Each Other. If Two Balls M-M Are Fired Simultaneously, Joined by a Theoretical Bond, They Will Revolve About Their Common Center of Gravity, Proving That the Moon Possesses Only Kinetic Energy of Translation.

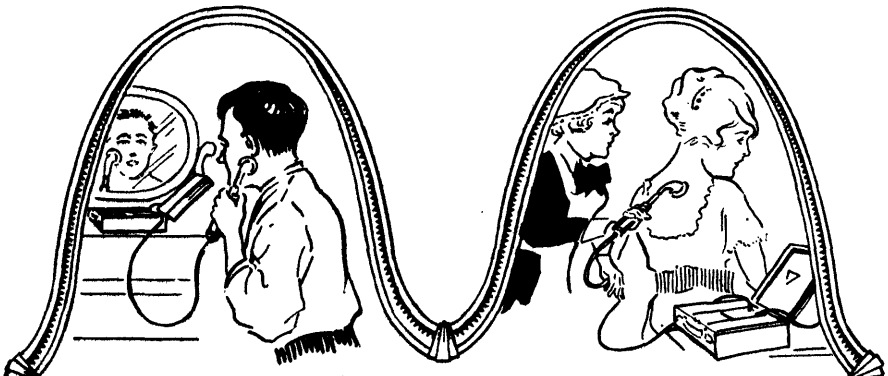

For Perfect Health, Strength, Unlimited Vitality & Improved Personal Appearance

The STERLING HIGH FREQUENCY VIOLET RAY

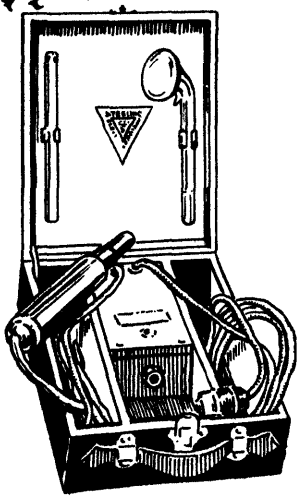

CELEBRATED Physicians and leading Beauty Specialists receive fabulous fees for treating with the Violet Ray. *You* can have a health doctor and beauty specialist right in your own home for your daily service at an average cost of less than a penny stamp.

The Sterling High Frequency Violet Ray was specially designed for home use—fitted to work from the ordinary lamp socket—easy to manipulate—under control at all times—and contains within its covers the Services of a servant, a doctor of medicine, and a nerve and beauty specialist—all in one, ready for instant service.

The Sterling Violet Ray is invaluable in the treatment of diseases of the skin, mouth, throat and lungs, derangements of the liver, kidneys, stomach and intestines—soreness in muscles and joints—tired or "sick" brains or lack of "nerve tone." It strengthens heart action—cleanses the blood—brings the flush of youth to the skin—enlivens the hair—puts a "spring in your step" and creates a clear eye and brain.

Six hundred thousand vibrations per second saturate the entire body with electricity—fill the blood with oxygen—eliminate waste, toxins, and poisons—ALL enemies of youthfulness.

Sterling Violet Ray Generators are the creations of Mr. Anthony Longoria, our Chief Designing Engineer, whose long years of practical experience in the designing and operation of Violet Ray Generators entitle him to the commanding position he holds in their manufacture. They are based upon the original discoveries of Nikola Tesla, first given to the world in May, 1891, but have been developed to the highest state of perfection ever reached in this type of generators.

Book and Valuable Information Free

We want to send you our book and full particulars about the Sterling Violet Ray Machines. Read how you can treat innumerable diseases and ailments, improve your personal charm, add strength and vitality and help yourself in hundreds of ways. Just mail the coupon or drop a postal. Do it now, this minute, before you forget it.

THE STERLING ELECTRICAL CORPORATION

1278 West Third Street **Cleveland Ohio**

STERLING ELECTRICAL SPECIALTIES

MAIL THIS COUPON FOR FREE BOOK

The Sterling Electrical Corporation, 1278 West 3rd St., Cleveland, Ohio.

Gentlemen:—

As per your offer in Electrical Experimenter, please mail me at once, free and postpaid, your book and full information about the Sterling Violet Ray Generators.

NAME .....

ADDRESS .....

CITY .....STATE .....

The Moon's Rotation

By Nikola Tesla

(*Continued from page* 133)

significance of this will be understood by reference to Fig. 7 in which the two masses, condensed into points, are represented as attached to independent weightless strings of lengths R_{g1} and R_{g2} which are purposely shown as displaced but should be imagined as coincident. It will be readily seen that if both strings are cut in the same instant the masses will fly off in tangents to their circular orbits, the angular movement becoming rectilinear without any transformation of energy occurring. Let us now inquire what will happen if the two masses are rigidly joined, the connection being assumed imponderable. *Here we come to the real bug in the question under discussion.* Evidently, so long as the whirling motion continues, and both the masses have precisely the same angular velocity, this connecting link will be of no effect whatever, not the slightest turning effort about the common center of gravity of the masses or tendency of equalization of energy between them will exist. The moment the strings are broken and they are thrown off they will begin to rotate but, as pointed out before, this motion neither adds to or detracts from the energy stored. **The rotation is, however, not due to an exclusive virtue of angular motion, but to the fact that the tangential velocities of the masses or parts of the body thrown off are different.**

To make this clear and to investigate the effects produced, imagine two rifle barrels, as shown in Fig. 8, placed parallel to each other with their axes separated by a distance $R_{g1} - R_{g2}$ and assume that two balls of same diameter, each having mass m, are discharged with muzzle velocities V_1 and V_2, respectively equal to $2\pi n R_{g1}$ and $2\pi n R_{g2}$ as in the case just considered. If it be further supposed that at the instant of leaving the barrels the balls are joined by a rigid but weightless link they will rotate about their common center of gravity and in accordance with the statement in my previous article above mentioned, the relation will exist $\frac{V_1 - V_2}{2} = \pi n (R_{g1} - R_{g2})$ n being the number of revolutions per second. The equalization of the speeds and kinetic energies of the balls will be, under these circumstances, very rapid but in two heavenly bodies linked by gravitational attraction, the process might require ages. Now, this whirling movement is real and requires energy which, obviously, must be derived from that originally imparted and, consequently, must reduce the velocity of the balls in the direction of flight by an amount which can be easily calculated. At the moment of discharge the total kinetic energy was $E = \frac{1}{2} m V_1^2 + \frac{1}{2} m V_2^2$ which is evidently equal to $m V_3^2$, V_3 being the effective velocity of the common center of gravity, from which follows that $V_3 = \sqrt{\frac{V_1^2 + V_2^2}{2}}$. The speed of revolution of the masses is, of course, $\frac{V_1 - V_2}{2}$ and the rotational energy of both balls, which must be considered as points, is $e = m\left(\frac{V_1 - V_2}{2}\right)$ The kinetic energy of translation in the direction of flight is then $\frac{1}{2} m V_1^2 + \frac{1}{2} m V_2^2 - m\left(\frac{V_1 - V_2}{2}\right)^2 = m\left(\frac{V_1 + V_2}{2}\right)^2 = m V_4^2$, $V_4 = \frac{V_1 + V_2}{2}$ being the speed of the

AK TABLETS FOR All Pain

Headaches
Neuralgias
Colds and La Grippe

Women's Aches and Ills
Rheumatic and Sciatic Pains

Ask Your Druggist for A-K Tablets
(If he cannot supply you, write us)

Small Size 10c — Dozen Size 25c

AK Fac-Simile

See Monogram AK on the Genuine

The Antikamnia Remedy Company, St. Louis, Mo.

Write for Free Samples

The Electric Safety razor makes shaving a pleasure. Blade vibrating 7,200 times a minute cuts the beard smoothly and without slightest pull or irritation—feels like a gentle massage. Can be used with or without electric current.

All users of the **Lek-Tro-Shav** speak well of it

A barber says—"Have shaved for years and have never used any shaving device near its equal."
A home user says—"The most pleasing shave I've ever had in my life. Shaves my face closer than I used to shave, but there is no after irritation or ill effects as I usually get from another razor."
No. 1 Made for use from Light Socket.
No. 2 Made for use from Dry Battery.
Write for illustrated circular describing Lek-Tro-Shav Safety Razor fully.

VIBRATING ELECTRIC RAZOR CO.
Dept. 122. Omaha, Nebr.

Noiseless Target Practice

Fit your .22 with a Maxim Silencer and get no end of fun this summer practicing in your back yard and on your vacation.

MAXIM SILENCER MAKES YOU A BETTER MARKSMAN

It eliminates recoil and all noise of the report, and steadies your aim. Direct from Dealer or Factory $5.00. Write for Free Book of Stories.

FREE BOOK

MAXIM SILENCER CO.
89 Homestead Ave., Hartford, Conn.

A Cigarette With One Hand

Don't drop everything every time you want a smoke. Let

The "HANDY" Cigarette Case

Hand it to you. Pull the cover down, then up, and the cigarette is ready. Fits the pocket. Full Nickel-Plated, shipped Post-Paid on receipt of price..... 50c

CASE MFG. CO., 241 W. 23rd St., New York

common center of gravity, so that $V_3 - V_4$ is the loss of velocity in the direction of flight owing to the rotation of the two mass points. If instead of these we would deal with the balls as they are, their rotational energy

$$e_1 = e + i\omega^2 = m\left(\frac{V_1 + V_2}{2}\right)^2 + i(2\pi n)^2$$

i being the moment of inertia of each ball about its axis.

As will be seen, we arrive at precisely the same results whether the movement is rectilinear or in a circle. In both cases the total kinetic energy can be divided into two parts, respectively of the same numerical values, *but there is an essential difference.* In angular motion the axial rotation is nothing more than an *abstract conception;* in rectilinear movement it is a *positive event.*

Virtually all satellites rotate in like manner and the probability, that the acceleration or retardation of their axial motions—if they ever existed—should come to a stop precisely at a definite angular velocity, is infinitesimal while it is almost absolutely certain that all movement of this kind would ultimately cease. The most plausible view is that no true moon has ever rotated on its axis, for at the time of its birth there must have been some deformation and displacement of its center of gravity thru the attractive force of the mother planet so as to make its peculiar position in space, relative to the latter, in which it persists irrespective of distance, more or less stable. In explanation of this, suppose that one of the balls as M in Fig 5 is not of homogenous material and that it is similarly supported but on an axis passing thru its center of gravity instead of form. Then, no matter in what position the ball is fixed on the pivots, its kinetic energy and centrifugal pull will be the same. Nevertheless a directive tendency will exist as the two centers do not coincide and there is, consequently, no *dynamic* balance. When permitted to turn freely on the axis of gravity the body, of whatever shape it may be, will tend to place itself so that the line joining the two centers points to O and there may be two positions of stability but, generally, if the center of gravity is not greatly displaced, the heavier side will swing outwardly. Such condition may obtain in the moon if it had solidified before receding from the earth to great distance, when the

(*Continued on page* 160)

POPULAR ASTRONOMY

The Evolution of the Stars

(*Continued from page* 121)

Canopus, one of the giants of the universe. The transition of this type into the solar type stars of class G, to which our sun belongs, occurs when the group of iron lines known as group G begins to appear (see diagram I). The lines of calcium and hydrogen still remain more intense than any other lines in the spectrum, but many fine metallic lines now appear in ever-increasing intensity. The transition of this type into the advanced solar type K occurs when some of the metallic lines surpass the hydrogen lines in intensity. The group of iron lines has also greatly increased in intensity until it becomes one of the most conspicuous features of the K type stars. Stars of the solar type such as Capella and the sun are yellow, and stars of the advanced solar type, such as Arcturus and Aldebaran, are orange colored bordering on red. Their atmospheres are filled with dense metallic vapors. (See photos of solar and advanced solar type spectra.)

Class M is divided into giant and dwarf

Drake's Practical Mechanical Books

For Home Study

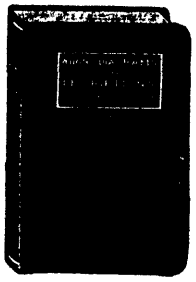

Pave the way for the big positions—the fat pay-envelopes. Written in non-technical language—easy to read—easy to understand. We will send any book postpaid—keep them five days—if not entirely satisfied return the books and your money will be refunded in full. Order direct from this page. Use the coupon.

Electrical Books

Electric Motor Control Systems and Methods. Leatherette.....$1.50
Electrical Tables and Engineering Data. Leatherette 1.50
Motion Picture Operation. Leatherette.. 1.50
Alternating Current. Leatherette..... 1.50
Wiring Diagrams and Descriptions. Leatherette 1.50
Armature and Magnet Winding. Leatherette 1.50
Modern Electric Illumination. Leatherette 1.50
Modern Electrical Construction. Leatherette 1.50
Electricians' Operating and Testing Manual. Leatherette..... 1.50
Drake's Electrical Dictionary. Leatherette 1.50
Electric Motors, D and A. Leatherette.. 1.50
Electrical Measurements and Meter Testing. Leatherette..... 1.50
Drake's Telephone Handbook. Leatherette 1.50

Automobile Books

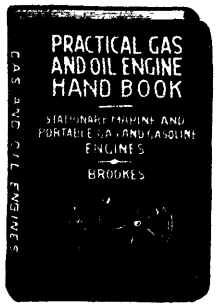

Automobile Ignition. Leatherette, $2.00
Brookes' Automobile Handbook. Leatherette ..$2.00
Automobile Starting and Lighting. Leatherette ..$1.50
Ford Motor Car, Truck and Tractor Attachments. Cloth, $1.00
Ford Motor Car, Truck and Tractor Attachments. Leatherette ..$1.50
Automobile Catechism and Repair Manual. Leatherette.....$1.25
Gas and Oil Engine Handbook. Cloth... 1.00
Gas and Oil Engine Handbook. Leatherette 1.50

Modern Language Courses

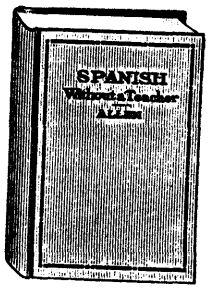

French Without a Teacher, Spanish Without a Teacher, German Without a Teacher. By Professor Phillip Schuyler Allen, University of Chicago. An entirely new home series of modern foreign languages. Simplest, easiest-to-master language method ever devised. French, Spanish or German. Pocket size. Each $1.25

Mail the Coupon NOW

Order on our five day money back plan.

FREDERICK J. DRAKE & CO.,
1009 Michigan Ave., Chicago, Ill.

Enclosed find ($.....), for which please send me prepaid the books checked in this adv. (or list attached). It is agreed that I may return same in 5 days if not entirely satisfied, and money will be refunded in full.

Name .....

Address .....

MY NEW BOOK
"Muscular Development"
will tell you how to get a wonderful muscular development like mine, perfect health, abundance of vitality and great strength as I have.
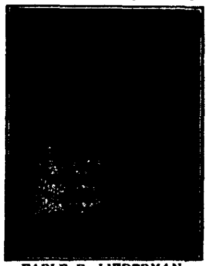
EARLE E. LIEDERMAN
Why not look as healthy and be as strong as I am?
The results of my system are shown on my own person and that is recommendation enough. To give every one the opportunity to profit by what I have learned, I will mail my book, for a limited time only, on receipt of
10c Stamps or Coin
This wonderful book will help you. It is profusely illustrated and contains pictures of many of the world's strongest men whom I have trained. Send for it to-day. Right now, while it is on your mind.
EARLE LIEDERMAN, Dept. 209, 203 Broadway, N.Y.

RIGHT NOW—You Can Make Big Profits In BATTERY CHARGING
Owners of HB Chargers everywhere are making $100 to $400 *Clear Profit* every month. Business better than ever. YOU can do as well. Don't delay. Get out and get this business with sturdy, dependable HB Equipment.
THIS HB 500 WATT CHARGER WILL PAY $100 to $200 CLEAR PROFIT EACH MONTH
No electrical knowledge required to install or operate. Recharges 7 6-volt batteries at once. Costs 12c to 15c each to recharge, customer pays 75c to $1.50. Big, quick, clean profits—easily made. No burnouts or expensive renewals. Steady service 24 hours a day. Economical to run, requires no attention, save occasional oiling.
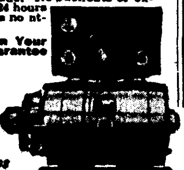
$25 Puts This Money-Maker in Your Garage on Money-Back Guarantee
Balance in 9 monthly payments of $20 each. Earnings easily pay for machine. Pin $25 initial payment check to this ad and send today for trial order. Sold under HB Absolute Money-Back Guarantee. Order NOW. Don't delay. Get busy! Get those Profits!
HOBART BROTHERS COMPANY
Box 6E, Troy, Ohio
Successful Manufacturers Since 1893

Mining Engineering
For Your Profession
A wide and profitable field, not overcrowded, is open to forward-looking young men. The Michigan College of Mines (established 1886) offers a comprehensive four year course which can be completed in three years. Its breadth provides foundation for expert specialization in that field of engineering which most appeals to the student. All phases of technical knowledge and instruction relative to mine development and operation thoroughly presented by constructive methods. Practical experience is here combined with theoretical work in a rare way. *College is located in center of one of the world's greatest copper mining districts.* Close relations are constantly maintained with mines, mills, smelters, electrolytic and power plants which are practically a part of the College equipment and a factor of enormous value in instruction. "M. C. M. Men Make Good." For descriptive book address Administrative officer, Houghton, Mich.
Michigan College of Mines

Do You Want to Know
HOW TO DEVELOP
Vitality, Energy, Endurance, Nerve Strength, Muscular Strength, Perfect Physique?
My FREE BOOKS, "The Whys of Exercise" and "The First and Last Law of Physical Culture," tell you if you are weak or underdeveloped, how to grow strong; if strong, how to grow stronger. They explain how to develop the lungs and muscle, the strong heart and vigorous digestion—in short, how to improve health and strength internally as well as externally. SEND TODAY—NOW—for these FREE BOOKS. Enclose 4c in stamps to cover postage.
PROF. H. W. TITUS
56-58 Cooper Sq. Dept. 602. New York City

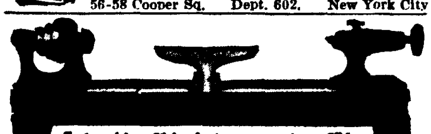
Swing 4 in., 11 in. between centers, 17 in. total length. Shipping weight 13 lbs. Bed of lathe is machined. Workmanship first-class. Equipped with wood turning chuck. Can be fitted with 3 in. face plate and drill chuck as special equipment. Order one today. Price $5.00 cash with order. SYPHER MFG. CO., DEPT. C TOLEDO, OHIO

Learn to PAINT SIGNS and SHOW CARDS

I teach you personally, by mail, in a short time. Oldest and largest School. Big field, work interesting. You can
EARN $18 TO $45 A WEEK
Pritzner, Minn., wrote, "Did job after first lesson, got $10, profit $7.05." Crawford, B. C., says: "Earned $200.00 while taking course." Get literature, samples, guarantee; all FREE.
DETROIT SCHOOL OF LETTERING
Established 1899. 606 D. S. of L. Bldg., DETROIT, MICH.

The Moon's Rotation

By Nikola Tesla

(*Continued from page* 157)

arrangement of the masses in its interior became subject to gravitational forces of its own, vastly greater than the terrestrial. It has been suggested that the planet is egg-shaped or ellipsoidal but the departure from spherical form must be inconsiderable. It may even be a perfect sphere with the centers of gravity and symmetry coinciding and still rotate as it does. Whatever be its origin and past history, the fact is, that at present all its parts have the same angular velocity as though it were rigidly connected with the earth. This state must endure forever unless forces from without the luna-terrestrial system bring about different conditions and thus the hope of the star-gazers that its other side may become visible some day must be indefinitely deferred.

A motion of this character, as I have shown, precludes the possibility of axial rotation. The easiest way to free ourselves of this illusion is to conceive the satellite subdivided into minute and entirely independent parts, as dust particles, which have different orbital, but rigorously the same angular, velocities. One must at once recognize that the kinetic energy of such an agglomeration is solely translational, there being absolutely no tendency to axial rotation. This makes it also perfectly clear why the moon, provided its distance does not greatly increase, *must* always turn the same face to us even *without any inherent directive tendency* nor so much as *the slightest effort from the earth.*

Referring to the librations of longitude, I do not see that they have any bearing on this question. In astronomical treatises the axial rotation of the moon is accepted as a material fact and it is thought that its angular velocity is constant while that of the orbital movement is not, this resulting in an apparent oscillation revealing more of its surface to our view. To a degree this may be true, but I hold that the mere change of orbital velocity, as will be evident from what has been stated before could not produce these phenomena, for no matter how fast or slow the gyration, the position of the body relative to the center of attraction remains the same. The real cause of these axial displacements is the changing distance of the moon from the earth owing to which the tangential components of velocity of its parts are varied. In *apogee,* when the planet recedes, the radial component of velocity decreases while the tangential increases but, as the decrement of the former is the same for all parts, this is more pronounced in the regions facing the earth than in those turned away from it, the consequence being an axial displacement exposing more of the eastern side. In *perigee,* on the contrary, the radial component increases and the effect is just the opposite with the result that more of the western side is seen. The moon actually swings on the axis passing thru its center of gravity on which it is supported like a ball on a string. The forces involved in these pendular movements are incomparably smaller than those required to effect changes in orbital velocity. If we estimate the radius of gyration of the satellite at 600 miles and its mean distance from the earth at 240,000 miles, then the energy necessary to rotate it once in a month would be only

$$\left(\frac{600}{240{,}000}\right)^2 = \frac{1}{160{,}000}$$ of the kinetic energy of the orbital movement.

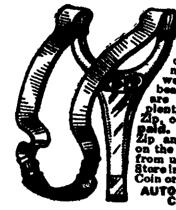
ZIP-ZIP Patented Sept. 3rd, 1918
The Greatest 50 Ct. Article on the Market. Shipped right from the factory the same day we receive your order. The Prong is made of beautiful metal; never break or wear out; scientifically made and best workmanship. The rubbers are elastic and lasting, with plenty of pep and force. Zip-Zip, complete, only 50c prepaid. Be sure the name Zip-Zip and our address appear on the article you buy. Order from us or any Sporting Goods Store in your city. Send Stamps, Coin or Money Order.
AUTOMATIC RUBBER CO. COLUMBIA, S. C.

Telegraph Pictures
BY ELECTRICITY
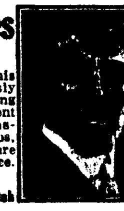
Complete sets of two machines of this marvelous equipment at ridiculously low prices. Instructive, mystifying and useful. This picture of President Wilson was telegraphed by these machines. Will transmit pictures, maps, drawings and hand writing. Picture telegraphing is the coming science. Write today.
J. LEISHMAN CO., Dept. T Ogden, Utah

CLEARTONE PHONOGRAPHS
$4.00 to $200.00 Retail
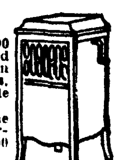
Needles 45c per thousand in lots of 500,000 Motors $1.35 to $14.75 each. Tone Arms and Reproducers $1.30 to $5.75 per set. Main Springs 20c to 90c each. Records, Needles, Sapphire Points and Parts at reasonable prices.
Write for our 84 page catalogue, the only one of its kind in America, illustrating 33 different styles of Talking Machines and over 500 different Phonographic Parts.
LUCKY 13 PHONOGRAPH COMPANY
Export Dept. 46B E. 12th St., N. Y., U.S.A.

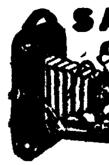
SAVE 25% to 60%
on slightly used
GRAFLEX-KODAKS
Cameras and Lenses of every description. Equal to new. Save money. Write now for Free Bargain Book and Catalog listing hundreds of money-saving bargains in slightly used and new cameras and supplies. All goods sold on 10 days' Free Trial. Money back if not satisfied. You take no chances dealing with us. We have been in the photographic business over 15 years. Write now.
CENTRAL CAMERA CO., Dept. 176 124 S. Wabash Ave., Chicago

UMAKEM
Airplane Workchest, containing aircraft work table with mitre cutting board and length gauge, steel drill, steel hammer, Model Maker's steel square, screwdriver, sandpaper block, 10" scroll saw, together with finest quality reed and bass wood, aluminum, silk, para rubber, full set of blueprints, directions, and all fittings for building one 36" Bleriot Model flying Monoplane. Price $10.00. Other UmakeM Outfits 50c to $50.
W. R. PRICE, Inc.
No. 2 UmakeM Building, 127 Fifth Avenue, New York

RAISE BELGIAN HARES For Us
HUGE PROFITS easily and pleasantly made We furnish stock and pay you $6.00 a pair and express charges for all you raise. Contract and book "Fortunes in Hares", by mail Free.
NATIONAL FOOD & FUR ASSOCIATION
Dept. 24 MILWAUKEE, WISC.

EARN MONEY
Stamping Names on Key Tags. $50
Either sex. Spare time. Some make Send 25c for Tag with your name on and instructions. Returned if required. Exp. Key Tag Co., Cohoes, N. Y.

STAMMERER
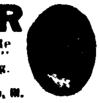
Send 10 cents for my remarkable book, "How To Stop Stammering." Kill the fear of stammering. Re education the key.
The Hatfield Institute, 109 N. Dearborn St., Chicago, Ill.

TYPEWRITERS
$10 AND UP. ALL MAKES. SAVE $25 TO $50 on rebuilt at the factory by the well-known "Young Process." Sold for low cash—installment or rented. Rental applies on purchase price. Write for full details and guarantee. Free trial. YOUNG TYPEWRITER CO., Dept. 818, Chicago

BE A C.P.A. ACCOUNTANCY
The Highest Paid Profession taught thoroughly in a few months of home study by new system.
FREE BOOK International Accountants Society Dept. 39F, 2626 S. Mich. Ave. Chicago

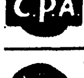
158 Genuine Foreign Stamps—Mexican War Issues, Venezuela, Salvador and India Service, Guatemala, China, etc., only 10c. 100 all diff., fine, 15c; 200 all diff., 25c. FINEST APPROVAL SHEETS 60% to 80%. AGENTS WANTED. Big 72-page Lists FREE! We Buy Stamps. Est. 25 years. C. E. HUSSMAN STAMP CO., Dept. 6 ST. LOUIS, MO.

Learn Watchwork, Jewelrywork and Engraving
A fine trade commanding a good salary, and your services are always in demand. Address HOROLOGICAL Department, Bradley Institute, Peoria, Ill., for our latest catalog.

Reconstruction
July, 1919, pp. 196-198

NIKOLA TESLA TELLS HOW WE MAY FLY EIGHT MILES HIGH AT 1,000 MILES AN HOUR - by Nikola Tesla

In an interview with Frederick M. Kerby.

As the inventor of the alternating current, the world is indebted to Mr. Tesla for the use of electricity carried long distances. He now discusses the probability that airplanes will rise to great heights and travel at speeds that seem incredible. This article is written, in part by Mr. Tesla himself. The rest is written from stenographic notes. It gives, very likely, a glimpse of the immediate future.

Sitting in his office on the twenty-fifth floor of the Woolworth Tower, Mr. J. Pierpont Jones, American business man, will one day glance at his watch and discover it is 3 o'clock in the afternoon.

"By George," he will say, buzzing for his secretary, "If I don't hurry I'll be late for that dinner engagement at the Savoy!" And as his secretary answers the buzzer:

"Charles, when does the next London bus leave?"

"Three-thirty, sir," says Charles. "You can make it if you hurry. The car is waiting."

And fifteen minutes later Mr. J. Pierpont Jones will emerge from the elevator on the aeronautic landing stage of lower Manhattan, climb into the hermetically sealed steel fuselage of the New York-London Limited, which will rise promptly at 3:30 p. m. At seven that night he will climb out of his compartment on the landing stage on the Thames Embankment, and descend to meet his friend for dinner.

The three-hour aeroplane trip from New York to London, flying above the storm level at eight miles above the earth's surface is the possibility of the immediate future.

This is not my own prediction. It is the result of sixteen pages of close calculations in higher mathematics made by Nikola Tesla, to test and check up other pages of intricate calculations made by Samuel D. Mott, charter member of the Aero Club of America.

Mr. Mott asserts that the three-hour trip to London from New York is a question of rising into rarefied air where the air pressure is only one-fifth what it is at the earth's surface, at which point the "altiplane", as he has named the flying machine of the future, may be expected to fly five times as fast as at the earth's surface. And if the speed of the aeroplane is increased not five times but only one-fifth, Mr. Mott says the trip will be made anyhow in the rarefied air eight miles above the earth's surface in not more than twelve hourse running time.

And Nikola Tesla agrees that taking a plane to such an altitude must result in great increase in speed, although he does not wish, in the absence of exact knowledge of certain factors entering into the problem, to predict exact speeds.

Speaking before the Pan-American Aeronautic Convention at Atlantic City, Mr. Mott asserted that in order to avoid being weather-bound as were the aviators at Newfoundland, it will be necessary to construct planes that will rise above the storm limit.

"I submit," he said, "that waiting indefinitely for ideal weather conditions for long-distance flying over land or sea will not do for the demands of commerce. Therefore I would bring to your attention the possibilities from the airplane or

or hydroplane, to go into the stillness of nature above the weather.

What The Problem Is

"The problem is evidently one of equipment of our planes to function in rarefied air, and protection of navigators against its tenuity; likewise protection of their body warmth and comfort in extremes of temperature. How high we may go no one may know until tested. Personally I believe it possible to go fifteen or twenty miles aloft, if necessary. It is obviously a matter of equipment plus climbing ability of aircraft designed for the purpose.

"What is the object of high flying? Daily experience shows us that high speed and density are incompatible. We know that we must furnish aircraft with four times the power to go twice as fast, and the marine engineer knows that he must furnish eight times the power to go twice as fast. In other words, from the ultimate height of the air to the earth's core pressure is progressive. Thirty-three feet below the ocean's surface the pressure doubles. For every 1,000 feet ascent the pressure diminishes roughly one-half pound per square inch. The pressure two miles high is 9.8 pounds per square inch; at one mile high, 10.88; at three-quarters of a mile, 12.06; one-half mile, 13.33; one-quarter mile, 14.2, and at sea level, 14.7 pounds, or, in round numbers, 15 pounds per square inch.

"The unknown factor in the high altitude problem is this: Will an altiplane in one-fifth density (eight miles high), with equal push, go five times faster or one-fifth faster? The rest is a matter of simple equipment and good construction. In either case the gain is substantial. If the former were true a voyage between New York and London can be made in about three hours by going eight miles high. If the latter is true the same voyage can be made in about twelve hours running time, assuming a surface speed of 200 miles an hour, which is practically a question of power.

"To my mind it is plain that the high altitudes will be determining factors in long distance flying. Greater speed, greater distance, more comfort and less danger because when we double the time to do a risky thing we double the risk incurred; less gasolene, less weight and expense, for if environment permits us to go 100 miles with twice the fuel we formerly used to go twenty-five miles our economic gain is obviously 100 per cent, because we may then go 100 miles with the amount of fuel we formerly consumed to go fifty miles."

That aerial navigation at higher altitudes will undoubtedly result in great increase of speed is also the opinion of Nikola Tesla, to whom I took Mr. Mott's conclusions in order to get the opinion of this man who has made a life-time study of the air as a medium for the transmission of electrical energy.

"In the propulsion of aerial vessels problems are involved entirely different from those presented in the navigation of the water," said Tesla. "The atmosphere may be likened to a vast ocean, but if one imagines a submarine vessel constructed like an aeroplane one immediately realizes how inefficient it would be. The energy used in propelling a body through a medium of any kind is wasted in three different ways; first, by skin friction; second, wave making; third, production of eddies. On general principles, however, the resistance can be divided into two parts: one which is due to the friction of the medium and the other to its stickiness, or viscosity, as it is termed. The first is proportionate to the density; the second to this peculiar property of the fluid.

"Everybody will readily understand that the denser the medium the harder it is to push a body through it, but it might not be clear to every person what this other resistance - this viscosity - means. This will be understood if we compare, for instance, water and oil. The latter is lighter, but much more sticky, so that it is a greater obstacle to propulsion than water. Air is a very viscous substance

and that part of resistance which is due to this quality is considerable. We must take this latter resistance into account in calculating how fast an aeroplane could fly in the upper reaches of the air.

"Now, the idea is to fly at a great height where the air is rarefied, and therefore much less power is required to propel the machine through it. If we take the pressure at sea-level at 14.7 pounds and the temperature at 15 degrees centigrade, then, without introducing several corrections that would make for greater accuracy, the pressures at different heights are about as follows: At 1,000 feet above sea-level, 14.178 lbs.; at one-mile, 12.1457 lbs.; at two miles, 10.035 lbs.; at eight miles, 3.1926 lbs.; at fifteen miles, 0.8392 lbs. and at twenty miles, 0.323 lbs.

Condition Eight Miles Up

"According to these figures that I have worked out, at a height of eight miles the density of the air is 0.2172 or about 22-100th of that at sea level; at fifteen miles it is 0.057, and at twenty miles only 0.0219, or nearly 22-1000th of that at sea-level.

"Let us suppose then that an aeroplane rises to a height of eight miles where the pressure of the air will be only 3.1926 lbs., or, in other words, the density 0.2172 of that at sea-level. Since, as pointed out, the purely frictional resistance is proportionate to the density of the air, it is obvious that, if there were no other resitance to overcome, only about 22 per cent of power or roughly one-fifth, would be required to propel the vessel at that height, so that extremely high speed, as Mr. Mott points out, would be obtainable.

"And though the other resistance, which is due to the stickiness of the medium, will not be diminished at the same ratio, and therefore the gain will not be strictly in proportion to the decrease of density of the air, nevertheless, the total resistance will be reduced, if not to 22 per cent, perhaps to 30 per cent, so that there will be a great excess of power available for more rapid flight.

"Even allowing for the decreased thrust of the propeller due to the thinness of the air, which cannot be overcome by driving the screw faster, there still will be the very considerable gain and the aircraft will be propelled at a higher speed.

"Of course many incertitudes still exist in the theoretical treatment of a question like this, as there are a number of factors which affect the result and in regard to which we have not yet complete information.

At An Altitude of Twenty Miles

"I doubt that it will be possible to rise as high as fifteen or twenty miles, which is the opinion expressed by Mr. Mott. At the height of twenty miles there is only about 7 per cent of oxygen in the air instead of 21 per cent which is present close to the ground, and there would be great trouble in securing the oxygen supply for the combustion of the fuel, not to speak of other limitations.

"However, at a height of eight miles the decrease of oxygen can be overcome for both engine and aviator. Of course provision would have to be made for supplying the aviator and passengers with oxygen. In all probability they would have to be entirely enclosed just as a diver is enclosed. Our highest mountains are five miles and the rarefication of the air makes climbing them difficult. About five miles provision would certainly have to be made for supplying the aviator. If he were not enclosed the decrease of pressure due to the thinner air would result disastrously. The human mechanism is adjusted to a pressure of nearly 15 pounds per square inch; and if that pressure is reduced to about three pounds, as it would be at an altitude of eight miles, the aviator's ear drums would burst, and even the

blood would be forced through the pores and would ooze out of the body.

Tesla explained that the effect would be the same as that of bringing a deep-sea fish, accustomed to live a mile below the surface, to the surface of the water. The fish simply explodes, for lack of the pressure which its body is built to withstand.

With proper protection of the aviator and an artificial supply of oxygen Tesla believes that flights at the eight-mile altitude are quite possible.

"Then there will be great progress with the lighter than air machine and we may soon expect the advent of a dirigible of the Zeppelin type as a common vehicle for travel. Contrary to the general belief, such a vessel can be propelled more rapidly than an airplane and it will be, on the whole, much safer. Furthermore it will give to the passengers the comforts that are necessary in order to make this form of travel popular. Of course in the practical use of these monstrous structures, formidable obstacles will be encountered. They are susceptible to damage by storms, and I believe also from certain danger from lightning, which will not be obviated by the use of helium gas. But I expect to see these difficulties overcome.

The dirigible, supplied with sufficient power, need not fear the storm; it can rise above it, or go around it. The only danger from storm in any case lies in being blown from the course, for while the ship is moving with the storm it is in no danger, since it travels at the same speed as the wind, and the passengers would be in absolutely quiet air, so that a candle might be lighted on deck. Methods of docking and housing the big ships must be devised, but several have been proposed that reduce the danger of landing by making it unnecessary for the ship to come to earth. "

But the revolutionizing influence on aircraft of the future Mr. Tesla believes to lie in the possibility of transmitting power to them through the air.

"For years," he said, " I have advocated my system of wireless transmission of power which is now perfectly practicable and I am looking confidently to its adoption and further development. In the system I have developed, distance is of absolutely no consequence. That is to say, a Zeppelin vessel would receive the same power whether it was 12,000 miles away or immediately above the power plant. The application of wireless power for aerial propulsion will do away with a great deal of complication and waste, and it is difficult to imagine that a more perfect means will ever be found to transport human beings to great distances economically. The power supply is virtually unlimited, as any number of power plants can be operated together, supplying energy to airships just as trains running on tracks are now supplied with electrical energy through rails or wires.

"The transmission of power by wireless will do away with the present necessity for carrying fuel on the airplane or airship. The motors of the plane or airship will be energized by this transmitted power, and there will be no such thing as a limitation on their radius of action, since they can pick up power at any point on the globe.

The advance of science to this point, however, is attended with terrible risks for the world. We are facing a condition that is positively appalling if we ever permit warfare to invade the earth again. For up to the present war the main destructive force was provided by guns which are limited by the size of the projectile and the distance it can be thrown. *In the future nations will fight each other thousands of miles apart. No soldier will see his enemy. In fact future wars will not be conducted by men directly but by the forces which if let loose may well destroy civilization completely.* If war comes again, I look for the extensive use of self-propelled air vehicles carrying enormous charges of explosive which will be sent from any point to another to do their destructive work, with no human being

aboard to guide them. The distance to which they can be sent is practically unlimited and the amount of explosive they can carry is likewise practically unlimited. It is practicable to send such an air vessel say to a distance of four or five thousand miles and so control its course either gyroscopically or electrically that it will land at the exact spot where it is intended to have it land, within a few feet, and its cargo of explosive can there be detonated.

"This cannot be done by means of the present wireless plants, but with a proper plant it can be done, and we have here the appalling prospect of a war between nations at a distance of thousands of miles, with weapons so destructive and demoralizing that the world could not endure them. That is why there must be no more war."

Can Radio Ignite Balloons?

AS a result of the newest theory, that powerful induced currents emanating from the Naval Radio Station in Chicago produced the spark that ignited the Goodyear dirigible airship which plunged in flames thru the roof of a bank building in that city, resulting in death for thirteen persons and injury to twenty-seven others, naval communication officers will aid the authorities in fixing responsibility for the disaster. It was ascertained that technical experts had suggested *this* theory, because the big ship sailed over or near the Transportation building, from the roof of which are projected the antennae of the Naval Radio Station. The building thru the skylight of which the blazing dirigible fell was the Illinois Trust and Savings Bank.

The Opinions of Nikola Tesla and Other Radio Experts

Lieut. F. S. Mason, of the Great Lakes Naval Training Station, district communication service officer, while refraining from agreeing with the theory, said he would cooperate with the investigating officials. Pilot John Boettner, of the ill-fated dirigible, said he had not been aware of the location of the naval radio station. H. M. Byllesby, head of a large engineering corporation and foreman of the coroner's jury of technical men, said experts had suggested the *radio theory* to him.

Col. J. C. Morrow, chief air officer of the central department of the army, the principal witness at the inquest, was a passenger in the dirigible on a trip preceding the fatal one. At that time he said the ship was in safe condition. The pilot he considered competent. He thought the possibility of sparks from the exhaust igniting the gas bag very remote, but said he had not formed an opinion as to the cause of the accident.

(*Continued on page* 591)

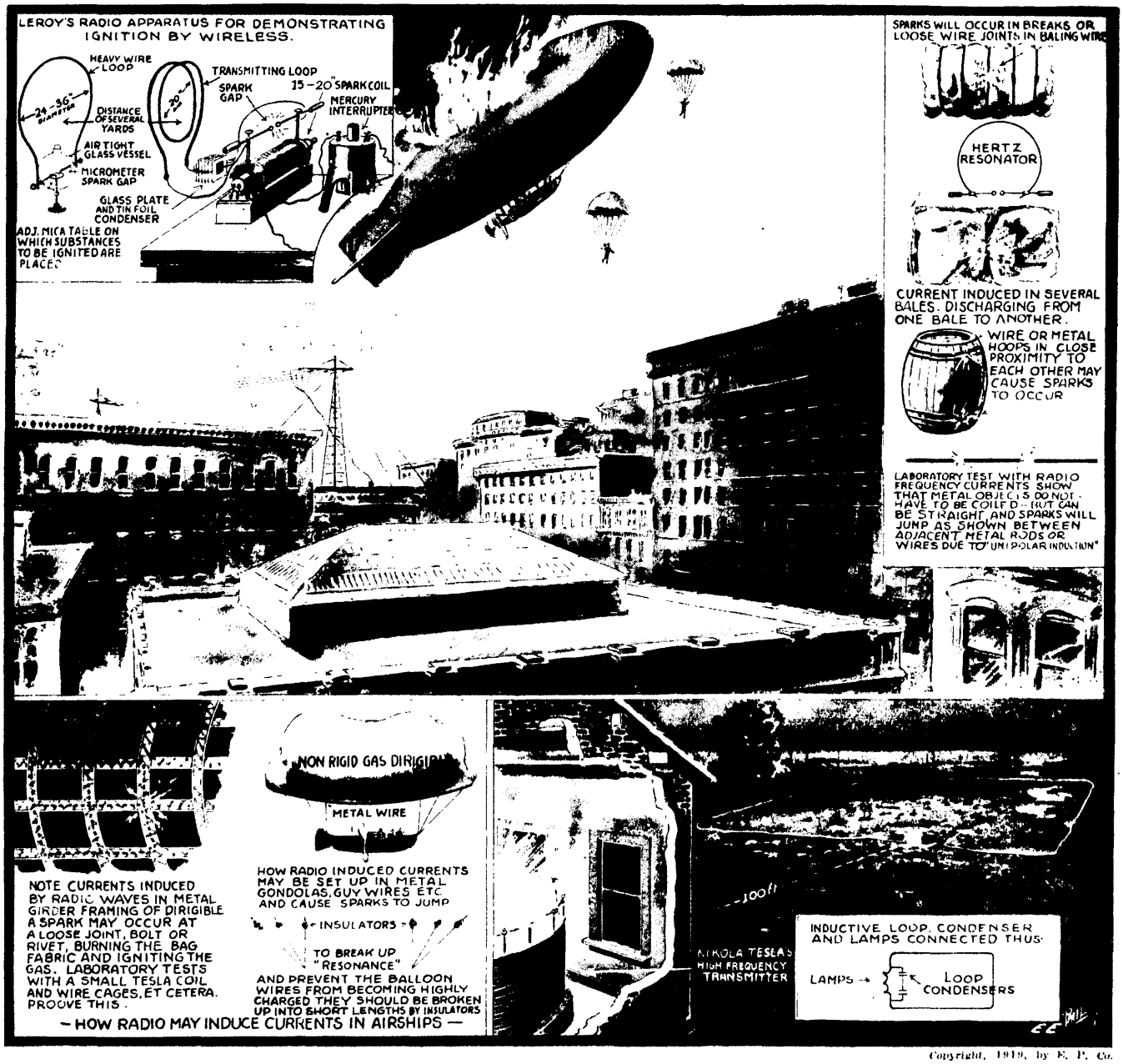

Copyright, 1919, by E. P. Co.

Herewith Are Shown Some of the Plausible Reasons Why the Recent Chicago "Blimp" Disaster Might Have Been Caused By a Spark Induced By An Adjacent Radio Station. The Photo In the Lower Right-hand Corner Shows Three Incandescent Lamps Lighted to Full Candlepower, At a Distance of 100 Feet from Dr. Nikola Tesla's Colorado High Frequency Power Plant. The Oscillator Was Worked At Less Than Five Per Cent of Its Total Capacity.

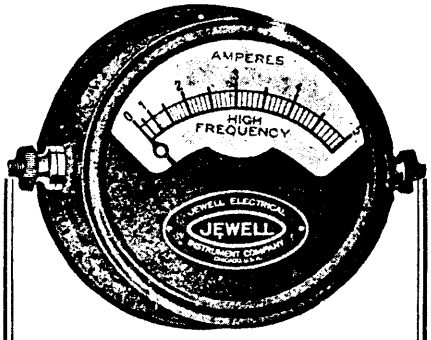

RADIO FREQUENCY AMMETER

4 inch Face

0 to 3, 0 to 5 or 0 to 10 Amperes. Specify Reading Required.

$11.00 Net

The Jewell Electrical Instrument Co. is prepared to fill the instrument needs of the amateur experimenter in radio and general electrical work, as well as those who desire more precise and accurate measurements of electrical quantities.

We show above our high frequency ammeter, of the thermo couple type, especially desirable for medium sized installations.

For receiving panels, we are supplying small D. C. instruments for plate voltage and filament current, at a very reasonable price.

Write for our special radio instrument bulletin.

JEWELL ELECTRICAL INSTRUMENT CO.
1640 Walnut St. Chicago

Audion Control Panel

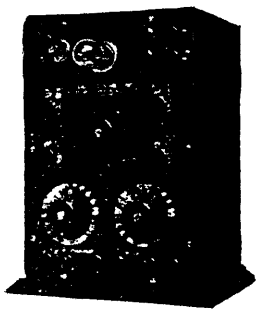

Type P-100 —combining in a single compact set the **Peerless De Forest Audion Detector, oscillator and audion amplifier,** built for the audion as only the makers of the audion can build it. No other set like it has ever been built to sell for less than $150.00. Our Price without the bulb $65.00. Descriptions of lower priced models sent on application.

The latest in Amplifier design sufficient to give amplifications up to 20,000 times. **Panel quickly removable making all parts accessible, and the replacing of the new type en block "B" batteries but a mement's work.** Workmanship of the highest grade. Price without the bulbs $69.50.

DeForest Radio Telephone & Telegraph Co.
1415 Sedgwick Avenue
New York City

Can Radio Ignite Balloons?

(*Continued from page* 516)

WHAT NIKOLA TESLA SAYS

Probably no other living electrician could be found today who can more authoritatively state just what effect can be produced at a distance by radio currents, than Dr. Nikola Tesla. He has produced and measured the greatest electrical discharges ever developed by man—sparks 70 to 100 feet in length, which manifested their influence 12 miles and more distant. In a special interview with the ELECTRICAL EXPERIMENTER representative, Dr. Tesla said in regard to the present blimp disaster:

"Referring to electrical or radio wave action at a distance, I know from experience that if proper precautions are not taken, fires of all kinds and explosions can be produced by wireless transmitters. In my experiments in Colorado, when the plant was powerfully excited, the lightning arresters for *twelve miles around* were bridged with continuous arcs, much stronger and more persistent than those which ordinarily took place during an electric storm. I have excited loops (coil aerials) and lighted incandescent lamps at a considerable distance from the laboratory without even using more than five or ten per cent of the capacity of the transmitter. When the oscillator was excited to about 4,000,000 volts and an incandescent lamp was held in the hand about *fifty or sixty feet from the laboratory,* the filament was often broken by the vibration set up, giving some idea of the magnitude of the electromotive forces generated in the space. The accompanying illustration shows one of my experiments in which I lighted several lamps at a distance of 100 feet from the laboratory, purely by wireless energy. Such induced currents might easily fire a gas balloon under the proper conditions. When the large transmitter coil, 51 feet in diameter, which I had in the center of the laboratory, was powerfully energized, butterflies were carried around in a circle as in a hurricane and could not get out, no matter how they tried. I was unable to satisfactorily explain the gyrations in the circle, altho I can well understand that the charged coil might, by repulsion, keep them in the center. Perhaps the most remarkable of all the observations was the production of sparks in the sand when one walked at some distance from the building. At night a continuous stream of tiny sparks could be seen between the heels and the earth and between the grains of sand. Another most curious effect was the action on horses, which shows how very sensitive they are to electric shock. When I operated with undamped waves, the oscillator being perfectly silent (no streamers whatever), a horse at a distance of perhaps *one-half a mile,* would become scared and gallop away the instant the switch was thrown on. I suppose the capacity of the body was sufficiently great to derive a rather strong current thru the legs which would frighten the animal. When using damped waves the roar was so strong that it could be plainly heard ten miles away and despite all precautions, such as using cotton in the ears, one would get a singular sensation in the head as if something was bursting, similar to that I observed with Röntgen Rays in 1896 or '97, when I was operating with a powerful apparatus designed for their production.

"In my experiments in New York in the laboratories at 35 South Fifth Avenue and at Houston Street, I have exhibited to thousands of people effects of loops or coil antennae. In one experiment, for instance, I would tune a coil about 30 inches in diameter with which I would collect at

Fit Yourself for the Big Job

Don't hesitate any longer. There is a greater demand for trained men now than ever before — greater opportunities — bigger pay — more rapid advancement. It's training that counts now—accurate knowledge—a complete grasp of your trade.

Drake's Practical Mechanical Books

For Home Study

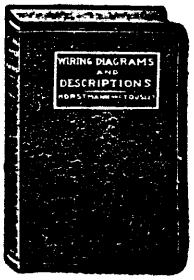

Pave the way to the fat pay envelope. Written in non-technical language that any man can grasp. Send the price of any book listed below. We will send the books postpaid—you keep them five days—if not entirely satisfied return the books and your money will be refunded in full. Order direct from this page. Use the Coupon.

Electrical Books

Electric Motor Control Systems and Methods. Leatherette.....$1.50
Electrical Tables and Engineering Data. Leatherette 1.50
Motion Picture Operation. Leatherette.. 1.50
Alternating Current. Leatherette..... 1.50
Wiring Diagrams and Descriptions. Leatherette 1.50
Armature and Magnet Winding. Leatherette 1.50
Modern Electric Illumination. Leatherette 1.50
Modern Electrical Construction. Leatherette 1.50
Electricians' Operating and Testing Manual. Leatherette..... 1.50
Drake's Electrical Dictionary. Leatherette 1.50
Electric Motors, D and A. Leatherette.. 1.50
Electrical Measurements and Meter Testing. Leatherette..... 1.50
Drake's Telephone Handbook. Leatherette 1.50

Automobile Books

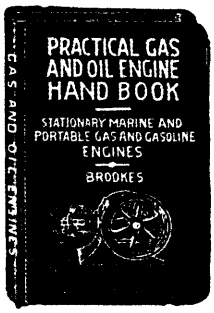

Automobile Ignition. Leatherette, $2.00.
Brookes' Automobile Handbook. Leatherette ..$2.00
Automobile Starting and Lighting. Leatherette ..$1.50
Ford Motor Car, Truck and Tractor Attachments. Cloth, $1.00
Ford Motor Car, Truck and Tractor Attachments. Leatherette ..$1.50
Automobile Catechism and Repair Manual. Leatherette.....$1.25
Gas and Oil Engine Handbook. Cloth... 1.00
Gas and Oil Engine Handbook. Leatherette 1.50

Modern Language Courses

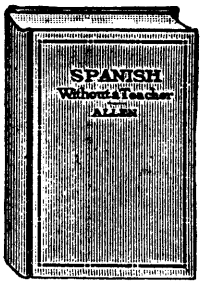

FRENCH, SPANISH, GERMAN } Without a Teacher

By Professor Philip Schuyler Allen, University of Chicago. An entirely new home series of modern foreign languages. Simplest, easiest-to-master language method ever devised. French, Spanish or German. Pocket size.

Each $1.25

Drake books are for sale at all leading book stores. Do not accept Substitutes.

Mail the Coupon NOW

Order on our five day money back plan.

FREDERICK J. DRAKE & CO.,
1009 Michigan Ave., Chicago, Ill.

Enclosed find ($.....), for which please send me prepaid the books checked in this adv. (or list attached). It is agreed that I may return same in 5 days if not entirely satisfied, and money will be refunded in full.

Name.....

Address.....

DEPENDABLE KNAPP ELECTRIC SPECIALTIES

Motors and Electrical Specialties Are Best

Knapp Goods have stood the test for 29 years. No detail in construction has been spared to make them the best that money can buy. The complete Knapp line includes Toy and Power Motors, Generators and Dynamos. Specialties and Novelties that amuse and instruct. Fans, Rheostats, Compasses, etc. And Knapp prices are always lowest. Always insist on Knapp Goods.

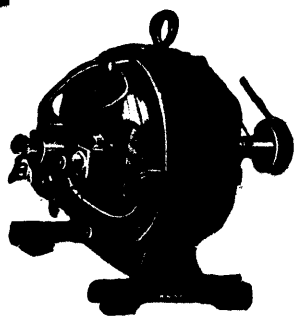

KNAPP DYNAMO MOTOR

Will electroplate, charge storage batteries, run lamps, motors, train of cars, induction coils,—in fact, the number of experiments it can be used for is unlimited. Runs on 4 to 6 Volts or can be connected to run on 110 Volts through a transformer.

Price, Complete, $8.00

KNAPP "LEADER"

An efficient and reliable motor that greatly resembles the big motors of real power plants. Drives from either pulley. Two speeds and reverse. A motor that you will be proud to own and one that will give you unlimited service.

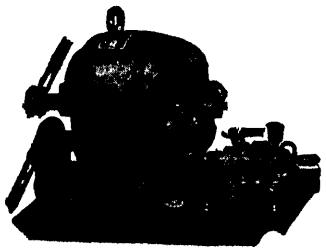

Price, Complete, $4.00

Order to-day. Or your dealer can secure them for you. DESCRIPTIVE CIRCULAR and CATALOG of celebrated **KNAPP MOTORS** *and Electrical Specialties from 10c up mailed FREE on request.*

KNAPP ELECTRIC & NOVELTY CO., 523 West 51st Street, New York City

ARE YOU GETTING THE MOST OUT OF YOUR RECEIVER?

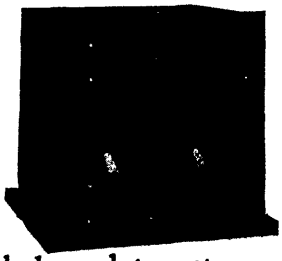

The ether is full of signals these days, some easy to hear and some inaudible. Inaudible because the proper apparatus is not being used.

It is to make those inaudible signals audible that the Grebe RORB two-stage audio-frequency amplifier has been designed. Here is a properly balanced two-stage amplifier, which gets the most out of available vacuum tubes without distortion. A telephone cam switch with auxiliary contactors accomplishes the change from the "off" position to either one or two stages without necessitating any other manipulations. The filaments, as well as the stage circuits, are controlled by this cam switch. This is a feature not found in other amplifiers available at present. Send for bulletin R-108.

TYPE RORB, TWO STAGE AMPLIFIER, PRICE, $45.00

A. H. GREBE & CO.

RICHMOND HILL **NEW YORK**

Boys! You Can Make Your Own Electrical Apparatus with the aid of these wonderful books

Home-made Electrical Apparatus

By A. M. Powell

Three wonderful big books, chuck full of just the sort of information you have been looking for and at a price within reach of your pocket book. Each volume is printed on heavy paper, contains **75 pages and over 60 illustrations, complete working drawings for making every sort of electrical apparatus.** Written so you can understand them. **The price is only 30 cents per copy**—practically the cost of publication. See partial table of contents below and order now. The supply is limited.

Vol. I Contains *working drawings* and directions for making all sorts of Static Machines, Static Apparatus, Home-made Batteries, Storage Cells, Transformers, Rectifiers, etc.

Vol. II contains *working drawings* and directions for all sorts of Voltmeters, Ammeters, Galvanometers, Switches, Rheostats, Telegraph Keys, Sounders, Telephones, Shocking Coils, Spark Coils, Experiments, etc., etc.

Vol. III contains *working drawings* and directions for making all sorts of Dynamos, Motors, Electric Engines, Miniature Lighting Plants, Wireless Telegraph Apparatus, Tesla Coils, Wireless Telephone, Electroplating, Experiments, etc., etc.

Any one of these wonderful books will be sent to you *postpaid* for 30 cents.

COLE & MORGAN, Inc., *Publishers and Booksellers*

P. O. Box 473, C. H. Sta., New York City

Arnold **Loose Couplers**

Combination Loose Coupler Parts and accessories.

Send 3c stamp for literature which is sure to interest you.

J. F. ARNOLD **2082 Lexington Av. N.Y. Established 1910**

ADVANCED EXPERIMENTERS

Our specialty is to serve you. We build high-grade apparatus or models to specifications, furnish standard apparatus, parts, materials and supplies and do special machine work. Tell us your needs.

JUNIOR EXPERIMENTERS

We are getting out a line of electrical and wireless apparatus especially for you. Each article is well made, practical and instructive as well as inexpensive. Cat. E and code sent for 3c stamp.

THE WILCOX LABORATORIES, Lansing, Mich.

any place in a large hall, *nearly three-quarters of a horsepower,* lighting incandescent lamps, producing long discharges, streamers, etc. One of my exhibits, which was particularly appreciated, was a coil carried on the head which, when resonantly excited, would develop streamers several feet long.

"As regards that deplorable accident to the blimp in Chicago, of course a powerful wireless plant is capable of setting up, at a few hundred feet distance, electro-motive forces of such magnitude that if there is even moderate rise thru resonance, long sparks may result. *In Colorado I drew 1-inch sparks between my body and an iron pipe buried in the ground about 100 feet from the laboratory.* I think it perfectly practicable to produce an explosion by wireless designedly at a considerable distance from a wireles transmitter, and I look upon the accident as very likely having been due to some such cause. By taking proper precautions, however, it is possible to entirely eliminate this danger and I have devoted much thought to the subject, having early recognized the peril to such bags filled with hydrogen. According to my ideas, the accident is not so much chargeable to the plant as to the neglect of proper precautions on the aërial vessel itself. Such a vessel has a considerable span and the guy wires, gondola and other metallic parts constitute a considerable capacity, so that an appreciable amount of energy can be deprived from a wireless plant at a great distance, as it is well shown in the ease with which messages are transmitted to, and received from, aërial vessels.

"Why do the naval and other authorities allow such forms of aircraft to use an explosive gas like *hydrogen?* A short time ago the press was filled with the wondrous stories of how the U. S. Government experts had perfected the manufacture of the new and non-inflammable balloon gas—*helium,* to such an extent that it was very cheap and readily obtainable in quantities. Funny, how these "new" inventions require so long a time to reach the public and those who need them. Helium, extracted from illuminating gas, is not new or wonderful at all. My friend, Sir James Dewar, showed me experiments with it over 20 years ago."

How radio waves, even at distances of several miles, can cause sparks to occur among bales of cotton, baled with wire hoops, etc., is shown in one of the accompanying illustrations. The cotton bale wires have currents induced in them every time a radio message is sent from the ship or in its vicinity. This induced current is practically never strong enough to heat up the wire, but should one of these wires break and form a spark gap, then very often the induced current will cause a spark to jump the gap. That is enough to start a fire. Where wired bales are packed close together in the hold of a steamer, in trains, or warehouses, here also radio waves are liable to cause fairly strong electrical oscillations to be set up by resonance in adjacent loops on the bales, as the diagram shows. Result, a spark occurs, and another fire of "unknown origin" has started.

M. George A. Leroy, a French chemist, in his municipal laboratory at Rouen, France, very ably demonstrated that wireless waves could without doubt cause fires at a distance. His apparatus is shown schematically herewith.

Mr. Leroy's apparatus has been christened by him the "Igniting Resonator." The apparatus he used consists of a glass bulb having four apertures; one at either side and one at the top and bottom, respectively. The substance to be tested with this igniter resonator can be placed in the airtight glass compartment and the two electrodes very accurately adjusted by micrometer screws fitted to them. The transmitter comprises a spark coil giving a 15-to-20-

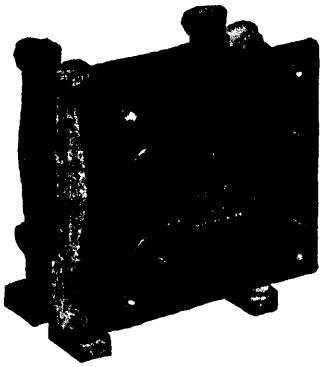

BUY THE BEST

The Audion or V T Detector has been vastly improved in recent years. To keep pace with this improvement we have developed the Amplifying Transformer to a degree hitherto unapproached.

These Instruments are carefully made of the best materials obtainable.

Ratio of Turns 4 to 1.

Ratio of Amplification about 25 to 1 per step.

Peak Amplification Approx. 1000 Cycles.

Price $10.00 Mounted. $7.50 Unmounted.

If your Dealer cannot Supply you, immediate delivery can be made direct from the factory.

ACME APPARATUS CO.
28 WINDSOR ST., CAMBRIDGE, MASS.

NEW catalog just off the press. Seventy-six pages of new apparatus for the Radio Experimenter. Send 4c for this complete catalog.

Haller, Cunningham Electric Co.,

428 Market Street, San Francisco, Cal.

Get Our Prices

on the Wireless Apparatus you need, before buying.

We handle new and second hand instruments on which we can save you money.

All Second Hand Instruments guaranteed to be in perfect working order.

WHAT DO U NEED?

Send us your list now

Radio Equipment Co.
630X Washington St. Boston, Mass.

NATIONAL TRADE DENTAL SCHOOL

506 S. Wabash Ave., Chicago, Ill.
LEARN MECHANICAL DENTISTRY—DEMAND UNLIMITED

A paying professional trade: You will be a trained dental mechanic and receive our diploma when competent. Students given advantage of thoroughly up to date laboratory, and services of graduate Dental Surgeons on practical cases. No effort spared to place graduates advantageously. No age limit. Day or Evening. Individual instruction. No educational requirements. No book or home study. Easy terms. Highest references. Especially attractive proposition to those who write at once for catalog H.

inch spark, which was connected with a spark gap, glass plate and tin-foil condenser and a loop antenna or spiral comprising a few turns of heavy wire, about 2 feet in diameter. Several yards distant, Mr. Leroy placed his receiving coil or igniting resonator, which included a loop or heavy copper conductor about three feet in diameter. The action on the device was similar to that of the Hertzian resonator, i. e., whenever the spark coil or transmitting helix were excited, allowing a spark to jump the gap, electromagnetic waves were set up in the intervening ether, causing corresponding currents to be induced or set up in the receiving loop. As in the historic experiments of Hertz, this loop will gather sufficient energy from the etheric waves to cause a small spark to jump a gap connected across the terminals of the loop, as the accompanying diagram clearly shows.

Mr. Leroy carried out many different experiments with his apparatus, placing the glass spark chamber of the igniting resonator in a bath of oil or vaseline, which can be heated when desired by incandescent lamps, etc.

One of the most interesting experiments carried out by Mr. Leroy was that with miniature bales of cotton, which were enclosed in jute wrappers and provided with iron wire bands, in the way cotton is usually packed for shipment. "Spontaneous combustions in cotton warehouses and in shipholds loaded with cotton or similar material, are not always what they seem," says Mr. Leroy, in describing his experiments and results with the radio igniter. One of the hoops encircling the bale of raw cotton may break or become loose under the action of shock or from some other cause, and the gap created by the breaking of the wire, forms a miniature Hertzian resonator. When a wireless station situated in the immediate vicinity, or perhaps at some quite distant point, starts in to transmit (and the more powerful the station the more pronounced the effect and danger from fire of course), currents will be induced in the iron wire around the bales or other packages, and sparks may pass between the various metal members. Especially will they be inclined to jump small gaps in the wire which occur in the immediate loop. We may say right here, that to a layman all of this phenomena may seem somewhat far-fetched, and not within the realm of everyday possibilities, but anyone who has experimented with high frequency currents, as generated from even a small size oscillator, will at once be convinced that these effects can and do take place under most unbelievable conditions. Of course, one objection that the average electrical and radio reader will probably think of, is that if the cotton bales, et cetera, are placed in a steel vessel, that this metallic hull will act as a screen, and that the bales will not have any current induced in their wire loops, but while this may be partially so, in some cases it is not always so by any means; especially when the home transmitting station, such as on ship-board, starts in operating. In this case, the steel hull of the boat is charged whenever the transmitting key is deprest.

The secret, if so we may call it, of the production of inflammatory sparks or discharges in metallic bodies such as here described, lies in the phenomena known as "resonance." This means that the nearer the metallic members come in tune with the radio waves, the more pronounced the induction effects produced in any instance. It is of course readily conceivable that a cargo of cotton bales presents many peculiar conditions of resonance, due to the varying capacities and inductances of the various loops. In fact, so obvious and possible is this condition, that a wooden vessel carrying bales of cotton or other material having wire or metal members to hold them, and providing she is fitted with a

MATHEMATICIANS

Engineers, Astronomers, Surveyors, Scientists—

The Mathematical Multiplex contains the characters and signs used for writing in higher and lower mathematics, and for engineering, mechanics, etc., as well as type for all the ordinary work that can be done on any typewriter.

Write for special Folder showing scientific type-sets.

"Just Turn the Knob"

on the

Hammond MULTIPLEX

"Many Typewriters In One"

—and you have a

Different Style of Type

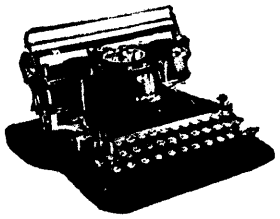

A few Samples of Multiplex Type:

Types for all purposes

and for all languages

Spacing to suit size of type

Perfect alignment

Automatic Type Impression

All on one MULTIPLEX

Over 365

Different Type-Sets

Including All Languages, to Select From

Any one of which may be substituted in a few seconds: "Just Turn the Knob"

The Multiplex does *all* that *any* other typewriter will do, and many other things that *no* other typewriter *can* do.

The six samples of the Multiplex type reproduced above, show how **you can make your writing TALK**—a revelation in typewriterdom!

This marvelous **INSTANTLY interchangeable-type feature** is only one of the many reasons why these, and thousands of other prominent men and women in all walks of life, and in all four corners of the globe, **prefer and personally use the Multiplex:**

President Wilson
Queen Alexandria of England
King and Crown Prince of Sweden
Caliph of Morocco
King and Queen of Norway
William Dean Howells Cardinal Merry del Val
Bertha M. Clay Sir James Matthew Barrie
John Kendrick Bangs Walt Mason, Poet
Leigh Mitchell Hodges Wallace Irwin
Prof. L. A. Loiseaux Etc., Etc

Mail the Coupon for FREE BOOKLET

It will show you how, with the Multiplex, you can put the **force of emphasis** into your typed matter—how you can **drive home** with strength of accent the fullness of **your argument**—how you can write with the same convincing force that you use in speaking—an **exclusive feature** of the Multiplex.

We will also send our pamphlet, **"The President and His Typewriter."**

Also—An Aluminum PORTABLE Model

For Traveling — for Home. Weighs only about 11 lbs. Full capacity. Ask for special folder.

Write your name, address and occupation in the margin below and mail the margin to—

Hammond Typewriter Co., 589 E. 69th St., New York City

YOUR OPPORTUNITY

Canceled Government Contracts

We have secured a large quantity of Small Motors, Generators and Charging Outfits. This material is new, still in original cases and carries the full factory guarantee.

This is Your Opportunity to buy new, guaranteed Electrical Apparatus of Standard Manufacture

Battery Charging Outfits

For use on 110 volt, A. C., 60 cycle, single phase current only.

80 watts, 8 volts, 10 amperes . $48.50

150 watts, 30 volts, 5 amperes . $68.50

150 watts, 15 volts, 10 amperes . $68.50

300 watts, 30 volts, 10 amperes $94.50

All outfits complete with switchboard as cut shown.

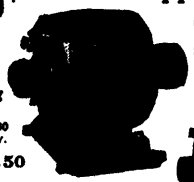

1/2 H. P. INDUCTION MOTOR 110 or 220 volts, A. C. 60 cycle, single phase, 1750 R. P. M. **$32.50**

ALL MOTORS COMPLETE AS CUT

Mail $5.00 cash or Money Order. We will send C. O. D. subject to full examination.

MONEY BACK GUARANTEE

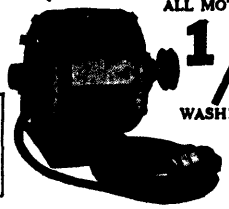

1/4 H. P. 110 volts A. C., 60 cycle, single phase 1760 R. P. M.

WASHING MACHINE MOTOR

Suitable for operating Small Compressors, Coffee Grinders, Bottle Washers, Lathes Drill Presses, etc. **$18.50**

WRITE FOR CATALOGUE. BARGAINS IN MOTORS AND GENERATORS. SPECIAL QUANTITY PRICES

220 volts **POLYPHASE MOTORS** 1750 R.P.M. 60 cycle, 3 or 3 phase. Complete, pulley and base

1 H. P. $55.50 3 H. P. $ 84.50

2 H. P. $72.50 5 H. P. $102.50

NEW MOTORS

110-220 volts **REPULSION MOTORS** 1800 R.P.M. 60 cycle, single phase. Complete with pulley.

1/2 Hp. $44.50 1 Hp. $67.50

MANUFACTURERS' DISTRIBUTER

CHAS. H. JOHNSTON - West End - PITTSBURGH, PA.

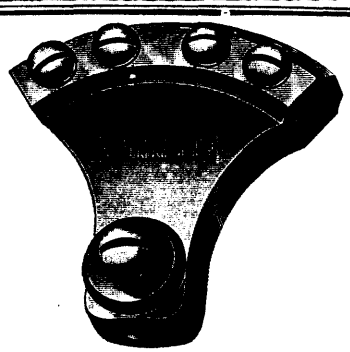

Manufacturers and Distributors of

HIGH GRADE

Amateur Wireless Apparatus

Send Stamp for Catalog 40E

J. H. Bunnell & Company

32 Park Place

New York City, New York

TEL. BACK BAY 5964

699 Boylston St. Boston - Mass.

RADIO—Splendid opportunities now in the Merchant Marine for Wireless Operators. Big salaries! New Schedule: Junior operators, $100 per month; Chief operators, $125; food and quarters besides. Equivalent ashore from $40 to $50 a week. Graduates in all parts of the world as Inspectors, Instructors, Engineers, Operators, etc.

The oldest, largest and best equipped radio school in New England. Recommended by Marconi and Government officials. DAY AND EVENING CLASSES. START ANY MONDAY.

"The Eastern" is a Large Achromatic Telescope

MADE UPON NEW SCIENTIFIC PRINCIPLES.

Positively such a good Telescope was never sold for this price before. **Eastern Telescopes** are made by one of the largest manufacturers of telescopes in America; we control entire production; measure closed 9 inches and open over 3 feet in 4 sections. They are nicely brass bound, with scientifically ground lenses. **Guaranteed by the maker.** Every sojourner in the country or at the seaside resorts should certainly secure one of these instruments, and no farmer should be without one. The scenery just now is beautiful, a Telescope will aid you in taking views. Objects are brought to view with astonishing clearness. Sent by mail or express, safely packed, prepaid, for only **99 cents.** Our new Catalogue of Watches, etc., sent with each order. This is a grand offer and you should not miss it. **We warrant** each telescope just as represented or money refunded. **Send 99 cents** by Registered Letter, Post Office Money Order, Express Money Order, or Bank Draft payable to our order, or your newsdealer or store-keeper will order one for you. Whether consumer or dealer, send cash with order. **To dealers 6 for Four Dollars.**

EASTERN NOVELTY CO., 67, 177 E. 93d STREET, NEW YORK

SMOKE IT BEFORE YOU PAY FOR IT

Order on your Business Stationery

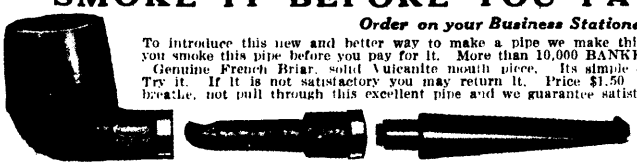

To introduce this new and better way to make a pipe we make this extraordinary offer, we will let you smoke this pipe before you pay for it. More than 10,000 BANKERS HAVE BOUGHT BY MAIL. Genuine French Briar, solid Vulcanite mouth piece. Its simple construction makes cleaning easy. Try it. If it is not satisfactory you may return it. Price $1.50. Straight or Bent Models. You breathe, not pull through this excellent pipe and we guarantee satisfaction.

THE CALUMET CO.

CINCINNATI, OHIO

(Mail Sales Division Dept. A)

wireless station of even a few kilowatts, that the Editors would prefer to stay on land than go to sea on such a ship.

One of the accompanying photographs shows how a great multitude of close oscillatory circuits are provided unwittingly in all-framed or rigid gas airships, and even in the non-rigid gas airships there is usually a sufficient amount of metal present in the gondola, wires and other fittings to form one or more resonant circuits, which may cause a spark at an imperfect joint or other gap. It should be remembered, as laboratory tests have demonstrated beyond cavil, that it is not necessary to have a metal wire coil *in spiral form* in order to have powerful currents induced of sufficient strength to cause a spark to jump from it; a straight metallic wire, bar or even tools, lying within a few yards of a small high frequency coil, will pick up sufficient energy to cause sparks to jump from them, and they will sometimes glow with a vivid brush discharge when viewed in a darkened room.

NATIONAL INSTITUTE OF INVENTORS.

The installation of the officers of the National Institute of Inventors, 118 Fulton Street, New York City, N. Y., was held at the Broadway Central Hotel recently, in the presence of 1,000 guests and members. After a very fine entertainment in which the well-known coloratura-soprano, Miss Edna Blanche Showalter, had rendered selections, and Miss Cecelia Bornstein executed in remarkable fashion her salome dance, the newly elected officers were installed.

Addresses were given by Prof. Chandler, a chemist of international reputation and patent expert; Joseph H. Choate, Jr., who spoke of the founding of the Chemical Foundation, Inc., to which foundation all the German chemical patents had been turned over by former Alien Custodian, Attorney-General Palmer, and an address was made by Thomas Howard, executive chairman of the institute, on the severance and dissociation of the patent office from the Department of the Interior, and the establishing of a Court of Appeals to pass upon patent litigation. He was presented with a medal for faithful services. Refreshments were served and the guests danced until the wee hours of the morning.

The newly elected officers, to serve until 1920, were L. J. Wing, President, pioneer inventor of exhaust fans; Carl Schonert, manufacturer of automobile accessories, of Newark, First Vice-President; Robert C. Lafferty, architect, New York City, Second Vice-President; George Julian Houtain, attorney at law, of 44 Court Street, Brooklyn, Third Vice-President; Milton F. Williams, manufacturer of pulverizers, St. Louis, Mo., Fifth Vice-President; W. H. Kennedy, Recording Secretary; Nathan Langer, Treasurer; Paul Revere Fay, one of the fighting Sixty-ninth, Executive Secretary, and R. Nerenstone, Assistant Executive Secretary.

On the Board of Governors to serve for five years were elected: David Moss, New York City; L. Kenner, New Orleans; Julius Glantz, New York City; Michael Quinane, Paterson, N. J.; J. M. Harding, New York City.

AND WOMAN IS LUCKY TO MAKE ONE MATCH.

One of our newspaper friends—the Oklahoma City *Times*—quotes us as follows:

"The ELECTRICAL EXPERIMENTER tells us that a man contains phosphorous enough to make 800,000 matches, and it might be added that a woman does well to make even one."—(Yes, very well, we'll say she does! With shoes at $25.00 a throw, dresses at $100.00 a piece, and food—Ach! Hoover—the needle!! The thought of H. C. L. to-day gives us a fever of 114° in the shade.—ED.)

New York Herald
Sunday, Oct. 12, 1919, Magazine Section

SIGNALS TO MARS BASED ON HOPE OF LIFE ON PLANET

Written Specially for the Herald by Nikola Tesla

The idea that other planets are inhabited by intelligent beings might be traced to the very beginnings of civilization. This, in itself, would have little significance, for many of the ancient beliefs had their origin in ignorance, fear or other motives - good or evil, and were nothing more than products of untrained or tortured imagination. But when a conception lives through ages in the minds, growing stronger and stronger with increasing knowledge and intellectual development, it may be safely concluded that there is a solid truth underlying the instinctive perception. The individual is short lived and erring; man, relatively speaking, is imperishable and infallible. Even the positive evidences of the sense and the conclusions of science must be hesitatingly accepted when they are directed against the testimony of the entire body of humanity and the experience of centuries.

Modern investigation has disclosed the fact that there are other worlds, situated much the same as ours, and that organic life is bound to develop wherever there is heat, light and moisture. We know now that such conditions exist on innumerable heavenly bodies. In the solar system, two of these are particularly conspicuous - Venus and Mars. The former is, in many repects like the earth and must undoubtedly be the abode of some kind of life, but as to this we can only conjecture, for the surface is hidden from our view by a dense atmosphere. The latter planet can be readily observed and its periodic changes, which have been exhaustively studied by the late Percival Lowell, are a strong argument in support of the supposition that it is populated by a race vastly superior to ours in the mastery of the forces of nature.

If such be the case then all that we can accomplish on this globe is of trifling importance as compared with the perfection of means putting us in possession of the secrets they must have discovered in their struggle against merciless elements. What a tragedy it would be were we to find some day that this wonderful people had finally met its inevitable fate and that all the precious intelligence they might have and, perhaps, had tried to convey to us, was lost. But although scientific research during the last few decades has given substance to the traditional belief, no serious attempt to establish communication could have been made until quite recently for want of proper instrumentalities.

Light Ray Project.

Long ago it was proposed to employ rays of light for this purpose and a number of men of science had devised specific plans which were discussed in the periodicals from time to time. But a careful examination shows that none of them is feasible, even on the assumption that the interplanetary space is devoid of gross matter, being filled only with a homogeneous and inconceivably tenuous medium called the ether. The tails of comets and other phenomena, however, would seem to disprove the theory, so that the successful exchange of signals by that kind of agency is very improbable.

While we can clearly discern the surface of Mars, it does not follow that the reverse is true. In perfect vacuum, of course, a parallel beam of light would be ideally suited for the transmission of energy in any amount for, theoretically, it could pass through infinite distance without any diminution of intensity. Unfortunately, this as well as other forms of radiant energy are rapidly absorbed in traversing the atmosphere.

It is possible that a magnetic force might be produced on the earth sufficient to bridge the gap of 50,000,000 miles and, in fact, it has been suggested to lay a cable around the globe with the object of magnetizing it. But certain electrical

observations I made in studying terrestrial disturbances prove conclusively that there can not be much iron or other magnetic bodies in the earth beyond the insignificant quantity in the crust. Everything indicates that it is virtually a ball of glass and it would require many energizing turns to produce perceptible effects at great distance in this manner. Moreover, such an undertaking would be costly and, on account of the low speed of the current through the cable, the signalling would be extremely slow.

The Miracle Performed.

Such was the state of things until twenty years ago when a way was found to perform this miracle. It calls for nothing more than a determined effort and a feat in electrical engineering which, although difficult, is certainly realizable.

In 1899 I undertook to develop a powerful wireless transmitter and to ascertain the mode in which the waves were propagated through the earth. This was indispensable in order to apply my system intelligently for commercial purposes and, after careful study, I selected the high plateau of Colorado (6,000 feet above sea level) for the plant which I erected in the first part of that year. My success in overcoming the technical difficulties was greater than I had expected and in a few months I was able to produce electrical actions comparable to, and in a certain sense surpassing those of lightning. Activities of 18,000,000 horsepower were readily attained and I frequently computed the intensity of the effect in remote localities. During my experiments there, Mars was at a relatively small distance from us and, in that dry and rarefied air, Venus appeared so large and bright that it might have been mistaken for one of those military signaling lights. Its observation prompted me to calculate the energy transmitted by a powerful oscillator at 50,000,000 miles, and I came to the conclusion that it was sufficient to exert a noticeable influence on a delicate receiver of the kind I was, in the meanwhile, perfecting.

My first announcements to this effect were received with incredulity but merely because the potencies of the instrument I had devised were unknown. In the succeeding year, however, I designed a machine for a maximum activity of 1,000,000,000 horsepower which was partly constructed on Long Island in 1902 and would have been put in operation but for reverses and the fact that my project was too far in advance of the time.

It was reported at that period that my tower was intended for signalling to Mars, which was not the case, but it is true that I made a special provision for rendering it suitable to experiments in that direction. For the last few years there has been such a wide application of my wireless transmitter that experts have become, to an extent, familiar with its possibilities, and, if I am not mistaken, there are very few "doubting Thomases" now. But our ability to convey a signal across the gulf separating us from our neighboring planets would be of no avail if they are dead and barren or inhabited by races still undeveloped. Our hope that it might be different rests on what the telescope has revealed, but not on this alone.

Vast Power Found.

In the course of my investigations of terrestrial electrical disturbances in Colorado I employed a receiver, the sensitiveness of which is virtually unlimited. It is generally believed that the so-called audion excels all others in this respect and Sir Oliver Lodge is credited with saying that it has been the means of achieving wireless telephony and transforming atomic energy. If the news is correct that scientist must have been victimized by some playful spirits with whom he is communicating. Of course, there is no conversion of atomic energy in such a bulb and many devices are known which can be used in the art with success.

My arrangements enable me to make a number of discoveries, some of which I have already announced in technical periodicals. The conditions under which I operated

were very favorable for no other wireless plant of any considerable power existed and the effects I observed were thereafter due to natural causes, terrestrial or cosmic. I gradually learned how to distinguish in my receiver and eliminate certain actions and on one of these occasions my ear barely caught signals coming in regular succession which could not have been produced on the earth, caused by any solar or lunar action or by the influence of Venus, and the possibility that they might have come from Mars flashed upon my mind. In later years I have bitterly regretted that I yielded to the excitement of ideas and pressure of business instead of concentrating all my energies on that investigation.

The time is ripe now to make a systematic study of this transcending problem, the consummation of which may mean untold blessings to the human race. Capital should be liberally provided and a body of competent experts formed to examine all the plans proposed and to assist in carrying out the best. The mere initiation of such a project in these uncertain and revolutionary times would result in a benefit which cannot be underestimated. In my early proposals I have advocated the application of fundamental mathematical principles for reaching the first elementary understanding. But since that time I have devised a plan akin to picture transmission through which knowledge of form could be conveyed and the barriers to the mutual exchange of ideas largely removed.

Success in Trials

Perfect success cannot be attained in any other way for we know only what we can visualize. Without perception of form there is not precise knowledge. A number of types of apparatus have been already invented with which transmission of pictures has been effected through the medium of wires, and they can be operated with equal facility by the wireless method. Some of these are of primitively simple construction. They are based on the employment of like parts which move in synchronism and transmit in this manner records, however complex. It would not require an extraordinary effort of the minds to hit upon this plan and devise instruments on this or similar principles and by gradual trials finally arrive at a full understanding.

The Herald of Sept. 24 contains a dispatch announcing that Prof. David Todd, of Amhurst College, contemplates an attempt to communicate with the inhabitants of Mars. The idea is to rise in a balloon to a height of about 50,000 feet with the manifest purpose of overcoming the impediments of the dense air stratum. I do not wish to comment adversely upon this undertaking beyond saying that no material advantage will be obtained by this method, for what is gained by height is offset a thousandfold by the inability of using powerful and complex transmitting and receiving apparatus. The physical stress and danger confronting the navigator at such an altitude are very great and he would be likely to lose his life or be permanently injured. In their recent record flights Roelfs and Schroeder have found that at a height of about six miles all their force was virtually exhausted. It would not have taken much more to terminate their careers fatally. If Prof. Todd wants to brave these perils he will have to provide special means of protection and these will be an obstacle to his observations. It is more likely, however, that he merely desires to look at the planet through a telescope in the hope of discerning something new. But it is by no means certain this instrument will be efficient under such conditions.

Electrical World
Sept. 24, 1921 p. 620

INTERPLANETARY COMMUNICATION

To the Editors of the Electrical World:

There are countless worlds such as ours in the universe - planets revolving around their suns in elliptical orbits and spinning on their axes like gigantic tops. They are composed of the same elements and subject to the same forces as the earth. Inevitably at some period in their evolution light, heat and moisture are bound to be present, when inorganic matter will begin to run into organic forms. The first impulse is probably given by heliotropism; then other influences assert themselves, and in the course of ages, through continuous adjustment to the environment, automata of inconceivable complexity of structure result. In the workshop of nature these automatic engines are turned out in all essential respects alike and exposed to the same external influences.

The identity of construction and sameness of environment result in a concordance of action, giving birth to reason; thus intelligence, as the human, is gradually developed. The chief controlling agent in this process must be radiant energy acting upon a sense organ as the eye, which conveys a true conception of form. We may therefore conclude with certitude that, however constructively different may be the automata on other planets, their response to rays of light and their perceptions of the outside world must be similar to a degree so that the difficulties in the way of mutual understanding should not be insuperable.

Irrespective of astronomical and electrical evidences, such as have been obtained by the late Percival Lowell and myself, there is a solid foundation for a systematic attempt to establish communication with one of our heavenly neighbors, as Mars, which through some inventions of mine is reduced to a comparatively simple problem of electrical engineering. Others may scoff at this suggestion or treat it as a practical joke, but I have been in deep earnest about it ever since I made the first observations at my wireless plant in Colorado Springs from 1889 to 1900. Those who are interested in the subject may be referred to my articles in the *Century Magazine* of June, 1900, *Collier's Weekly* of Feb. 9, 1901, the *Harvard Illustrated Magazine* of March, 1907, the New York *Times* of May 23, 1909, and the New York *Herald* of Oct. 12, 1919.

At the time I carried on those investigations there existed no wireless plant on the globe other than mine, at least none that could produce a disturbance perceptible in a radius of more than a few miles. Furthermore, the conditions under which I operated were ideal, and I was well trained for the work. The arrangement of my receiving apparatus and the character of the disturbances recorded precluded the possibility of their being of terrestrial origin, and I also eliminated the influence of the sun, moon and Venus. As I then announced, the signals consisted in a regular repetition of numbers, and subsequent study convinced me that they must have emanated from Mars, this planet having been just then close to the earth.

Since 1900 I have spent a great deal of my time in trying to develop a thoroughly practical apparatus for the purpose and have evolved numerous designs. In one of these I find that an activity of 10,000,000,000 hp in effective wave energy could be attained. Assuming the most unfavorable conditions - namely, half-spherical propagation - then at a distance of 34,000,000 miles the energy rate would be about 1/730,000 hp per square mile, which is far more than necessary to affect a properly designed receiver. In fact, apparatus similar to that used in the transmission of pictures could be operated, and in this manner mathematical, geometrical and other accurate information could be conveyed.

I was naturally very much interested in reports given out about two years ago that similar observations had been made, but soon ascertained that these supposed

planetary signals were nothing else than interfering undertones of wireless transmitters, and since I announced this fact other experts have apparently taken the same view. These disturbances I observed for the first time from 1906 to 1907. At that time they occurred rarely, but subsequently they increased in frequency. Every transmitter emits undertones, and these give by interference long beats, the wave length being anything from 50 miles to 300 or 400 miles. In all probability they would have been observed by many other experimenters if it were not so troublesome to prepare receiving circuits suitable for such long waves.

The idea that they would be used in interplanetary signaling by any intelligent beings is too absurd to be seriously commented upon. These waves have no suitable relation to any dimensions, physical constants or succession of events, such as would be naturally and logically considered in an intelligent attempt to communicate with us, and every student familiar with the fundamental theoretical principles will readily see that such waves would be entirely ineffective. The activity being inversely as the cube of the wave length, a short wave would be immensely more efficient as a means for planetary signaling, and we must assume that any beings who had mastered the art would also be possessed of this knowledge. On careful reflection I find, however, that the disturbances as reported, if they have been actually noted, cannot be anything else but forced vibrations of a transmitter and in all likelihood beats of undertones.

While I am not prepared to discuss the various aspects of this subject at length, I may say that a skillful experimenter who is in the position to expend considerable money and time will undoubtedly detect waves of about 25,470,000 m.

Nikola Tesla
New York City.

Reprinted with permission. Reprinted from September 24, 1921, issue of *Electrical World*. © Copyright 1921, McGraw-Hill, Inc. All rights reserved.

New York Evening Post
Sept. 26, 1921

NIKOLA TESLA ON ELECTRIC TRANSMISSION

To the Editor of the New York Evening Post:

Sir: Your issue of the 14th inst. contains a report relative to an experimental demonstration at the Pittsfield plant of the General Electric Company in which a pressure of one million volts was used for transmission of power by alternating currents. This is said to be the result of more than thirty years' work and to constitute a dramatic advance in electrical development so much, indeed, that it was deemed proper to record the time of its consummation with greater precision than that when Joshua commanded the sun to stand still over Gibeon and the moon in the Valley of Ajalon. But the prosaic fact is that I have long ago perfected and patented the invention instrumental in this achievement and applied it successfully in the production of pressures amounting to many millions of volts. It may not be amiss to state furthermore that a license was offered to the General Electric Company under my basic patent which bears the No. 1,119,732 and was granted December 1, 1914, the original application having been filed January 16, 1902.

The economic transmission of electrical energy at great distances necessitates the employment of very high pressures and at the outset two serious difficulties were encountered in their application. One was the breaking down of the insulation under the excessive stress. Upon careful investigation of the causes, I found that this was due to the presence of air or gas bubbles which were heated by the action of the currents and impaired the resisting quality of the dielectric. The trouble was done away with entirely by a process of manufacture developed by me which has been universally adopted. But the second obstacle was much harder to overcome. It was met in the apparent impossibility of confining the high tension flow to the conductors. In my early experiments I covered them with the best insulating material, several inches thick, but it was of no avail. Finally my efforts were rewarded and I found a simple and perfect remedy.

An idea of the underlying principle of the invention and its practical significance may be conveyed by an analogue. Alternating currents transmitted through a wire can be likened to pulses of some liquid, as water, forced through a woven hose. So long as the pressure is moderate the fluid entering one end will be integrally discharged at the other, but if the pressure is increased beyond a certain critical value the hose will leak and a large portion of the fluid may thus be wasted. Similarly in electric transmission, when the voltage becomes excessive the prison walls of the dielectric yield and the charge escapes. The loss of energy occasioned thereby, although emphasized by engineers, is not a fatal drawback; the real harm lies in the limitation thus imposed to the attainment of many results of immense value. Now, what I did was equivalent to making the hose capable of withstanding any desired pressure, however great. This was accomplished by so constructing the transmitting conductor that its outer surface has itself a large radius of curvature or is composed of separate parts which, irrespective of their own curvature, are arranged in proximity to one another and on an ideal enveloping symmetrical surface of large radius. These parts may be in the shape of shells, hoods, discs, cylinders, or strands, according to the requirement in each special case, but it is always essential that the aggregate outer conducting area be considerable.

I believe that many arts and industries will be revolutionized through the application of the enormous electric pressures which are easily producible by this means, but perhaps the purely scientific results will be more important than the commercial.

N. Tesla
New York, September 23.

New York Herald Tribune
Sept. 22, 1929, pp. 1, 29.

NIKOLA TESLA TELLS OF NEW RADIO THEORIES - Does Not Believe in Hertz Waves and Heaviside Layer, Interview Discloses

The model of a "Tesla Coil" which will be featured in the historic exhibit of the radio show reawakens interest in its inventor.

It is not generally appreciated that this curious apparatus, often associated with pretty or spectacular demonstrations of high voltage electricity, is really a fundamental part of modern radio. For all the tuning apparatus and circuits in every transmitting and receiving set are simply variations of Tesla coils and Tesla coil circuits.

It was for this invention, and other inventions and principles concerned with tuning, heterodyning, and the generation of continuous waves, which were made at least several years before the very first experiments of Marconi, that many of our most reputable engineers have conceded to Nikola Tesla the title of "Father of Radio".

Mr. Tesla, still actively working, was interviewed last week to get his ideas regarding the prospects of the radio of 1930, and beyond. As a prophet, however, he balked. He had repeated time and again his visions for the future. As far back as 1900, he had contemplated a world-wireless system which included broadcasting, picture transmission, international time service, and in addition television and the distribution of electrical power. Part of this early prophecy has been realized -- what remained, still stood as his prediction.

Disputes Hertz Waves.

What, then, about power transmission by radio? Laurence M. Cockaday, the technical editor of this radio section, had expressed the opinion several weeks ago that, with present apparatus at least, it was hardly feasible. Mr. Tesla agreed to discuss the point at length. As a result, he made public for the first time one of the most extraordinary conclusions - that Hertz waves do not exist! If his theory is true, there may be found in it more adequate explanations of "dead spots", fading, reflection and a dozen other problems that have always puzzled the profession.

The inventor began by referring to Cockaday's article:

"I have read the article, and I quite agree with the opinion expressed -- that wireless power transmission is impractical with present apparatus. This conclusion will be naturally reached by any one who recognizes the nature of the agent by which the impulses are transmitted in present wireless practice.

"When Dr. Heinrich Hertz undertook his experiments from 1887 to 1889 his object was to demonstrate a theory postulating a medium filling all space, called the ether, which was structureless, of inconceivable tenuity and yet solid and possessed of rigidity incomparably greater than that of the hardest steel. He obtained certain results and the whole world acclaimed them as an experimental verification of that cherished theory. But in reality what he observed tended to prove just its fallacy.

"I had maintained for many years before that such a medium as supposed could not exist, and that we must rather accept the view that all space is filled with a gaseous substance. On repeating the Hertz experiments with much improved and very powerful apparatus, I satisfied myself that what he had observed was nothing else but effects of longitudinal waves in a gaseous medium, that is to say, waves, propagated by alternate compression and expansion. He had observed waves in the ether much of the nature of sound waves in the air.

"Up to 1896, however, I did not succeed in obtaining a positive experimental proof of the existence of such a medium. But in that year I brought out a new form of vacuum tube capable of being charged to any desired potential, and operated it with effective pressures of about 4,000,000 volts. I produced cathodic and other rays of transcending intensity. The effects, according to my view, were due to minute particles of matter carrying enormous electrical charges, which, for want of a better name, I designated as matter not further decomposable. Subsequently those particles were called electrons.

"One of the first striking observations made with my tubes was that a purplish glow for several feet around the end of the tube was formed, and I readily ascertained that it was due to the escape of the charges of the particles as soon as they passed out into the air; for it was only in a nearly perfect vacuum that these charges could be confined to them. The coronal discharge proved that there must be a medium besides air in the space, composed of particles immeasurably smaller than those of air, as otherwise such a discharge would not be possible. On further investigation I found that this gas was so light that a volume equal to that of the earth would weigh only about one-twentieth of a pound.

"The velocity of any sound wave depends on a certain ratio between elasticity and density, and for this ether or universal gas the ratio is 800,000,000,000 times greater than for air. This means that the velocity of the sound waves propagated through the ether is about 300,000 times greater than that of the sound waves in air, which travel at approximately 1,085 feet a second. Consequently the speed in ether is 900,000 x 1,085 feet, or 186,000 miles, and that is the speed of light.

"As the waves of this kind are all the more penetrative the shorter they are, I have for years urged the wireless experts to use such waves in order to get good results, but it took a long time before they settled upon this practice.

"Although the world is still skeptical as to the feasibility of my undertaking, I note that some advanced experts, at least, share my views, and I hope that before long wireless power transmission will be as common as transmission by wires."

According to Mr. Tesla, the present broadcasting station does not propagate Hertzian waves, as has always been supposed, but acts more like an "ether whistle" - transmitting waves through the ether similar to the waves transmitted by an ordinary whistle through the air. He also expressed his disbelief in the Heavenside layer, and claimed that the reflection of waves back toward the earth was due to the change of medium encountered at the vacuous boundary of the atmosphere.

At Colorado Springs, about thirty years ago, this scientist had a Tesla coil seventy-five feet in diameter which produced voltages above 12,000,000, and sparks over 100 feet long. Electrical flashes were created which were the nearest approach to lightning that man has ever made. During his experiments there, of over a year, Tesla claims that he transmitted a considerable amount of electrical current to the other side of the earth. It was upon these, and later experiments that he bases his present prediction.

New York World
Nov. 29, 1929, p. 10, cols. 4,5.

MR. TESLA SPEAKS OUT

To the Editor of the World:

Permit me a few words of comment relative to The World editorial of Oct. 21 in which I am directly concerned.

Edison's work on the incandescent lamp and direct-current system of distribution was more like the performance of an extraordinarily energetic and horse-sensed pioneer than that of an inventor; it was prodigious in amount, but not creative. The lamp itself, consisting of a carbon filament in an exhausted globe, was well known and even patented years before. Crookes had employed incandescent conductors with leading-in platinum wires sealed in the glass and obtained extremely high vacua: the multiple-arc arrangement was frequently shown at institutions of learning, display windows and exhibitions with Geissler tubes; electric generators had been constructed, means for regulating current and voltage described and canalization of electricity was as obvious as that of water, gas, compressed air or other commodity.

Irrespective of this, however, his primitive scheme of lighting was subject to fatal economic limitations and could have never proved a commercial success in competition. Indeed, during the past thirty-five years it has been almost wholly displaced by a more practical and efficient system based on my rotating magnetic field, a discovery which even hard-headed engineers and patent lawyers have declared to be "one of the greatest triumphs of the human mind." To convey an idea of the extent of its use I only need to quote Dr. B. A. Behrend, one of the foremost electrical experts, who in his book on the induction motor says: "Were we to eliminate from our industrial world the results of Mr. Tesla's work the wheels of industry would cease to turn, our electric trains and cars would stop, our towns would be dark, our mills dead and idle. So far-reaching is this work that it has become the warp and woof of industry."

Edison and his associates bitterly opposed the introduction of my system, raising a clamor against the "deadliness" of the alternating current, which proved very effective and led to the adoption of a commercial type of machine in electrocution of criminals, an apparatus monstrously unsuitable, for the poor wretches are not despatched in a merciful manner but literally roasted alive. To the observer their sufferings seem to be of short duration; it must be borne in mind, though, that an individual under such conditions, while wholly bereft of the conciousness of the lapse of time, retains a keen sense of pain, and a minute of agony is equivalent to that through all eternity.

Had the Edison companies not finally adopted my invention they would have been wiped out of existence, and yet not the slightest acknowledgment of my labors has ever been made by any of them, a most remarkable instance of the proverbial unfairness and ingratitude of corporations. But the reason is not far to see. One of their prominent men told me that they are spending $10,000,000 every year to keep Edison's name before the public, and he added that it is worth more to them. Of course, in all that unceasing and deafening shouting from the housetops any voice raised to apprise people of the real state of things is like the chirp of a little sparrow in the roar of Niagara. So it comes that very few have a clear idea of the situation.

In truth, my system has not only provided energy for all purposes throughout the world but also revolutionized electric lighting and made it a great commercial success by reducing the cost of power and increasing enormously the distance of transmission. The greater part of the $60,000,000,000 which, according to

President Hoover's statement, represented the value of electric business, can be traced to my system and its effect on the lighting and other industries. In view of this I feel that I also have done much to dispel darkness. Surely, my system is more important than the incandescent lamp, which is but one of the known electric illuminating devices and admittedly not the best. Although greatly improved through chemical and metallurgical advances and skill of artisans it is still inefficient, and the glaring filament emits hurtful rays responsible for millions of bald heads and spoiled eyes. In my opinion, it will soon be superseded by the electrodeless vacuum tube which I brought out thirty-eight years ago, a lamp much more economical and yielding a light of indescribable beauty and softness. The technical resources of that time were inadequate to make it a practical success, but most of the difficulties will be overcome when cheap quartz glass becomes available.

No amount of praise is too much to bestow upon Edison for his vigorous pioneer work, but all he did was wrought in known and passing forms. What I contributed constitutes a new and lasting addition to human knowledge. Like his lamp, my induction motor may be discarded and forgotten in the continuous evolution of the arts, but my rotating field with its marvelous phenomena and manifestations of force will live as long as science itself.

NIKOLA TESLA
New York, Nov. 5

New York World
April 13, 1930

To the Editor of The World:

The World editorial March 28 must have instilled a holy fear in the minds of some of your readers. Of course Marconi could not help astounding people, but surely it was wrong of him at this critical time to scare the United States Navy by the statement that he could halt the progress of electrically driven dreadnoughts, which would mean certain doom in an engagement with the enemy. The thought that my beautiful induction motors used in their propulsion might be consigned to Davy Jones' locker in this easy manner caused me some anxiety until I satisfied myself by a little calculation that the maximum power transmitted - expressed in units more appropriate than the conventional - did not exceed one-millionth of a "mouse-power."

Except to the layman there was nothing remarkable in the performance, considering that sea water has only one five-hundredths of the resistance of solid ground and that there were no towering objects in the vicinity, thus reducing very much the size of the plant, Marconi accomplished nothing more than was known before. The infinitesimal currents received were amplified, relayed repeatedly and made to actuate local means, as usual. This can be brought about in more than one way; but as a rule, a form of amplifying three-electrode tubes is employed which I described in my experimental lectures before the Franklin Institute and National Electric Light Association early in 1893. The modern tubes embodying the same principle are marvels of workmanship, but less sensitive, because they lend themselves only to relatively small voltages. If suitable means were provided, any wireless amateur could magnify as feeble a disturbance as the patter of feet of a fly sufficiently to precipitate a veritable earthquake at the antipodes. The shrewd Italian did not give a description of his apparatus, but from his previous records one may safely infer that it is old and well known. It is gratifying, however, that he has abandoned the ridiculous arrangement of a "beam system," which he claimed to offer "limitless possibilities."

Your reference to this first announcement thirty years ago has stirred up in my memory unpleasant recollections. To the public the transmission of a weak wireless signal across the Atlantic appeared almost like a miracle, but, even if a fact, it was a paltry engineering achievement, for I had already shown by experiment over a year before that the earth may be excited like a wire of small dimensions and that current impulse from a powerful transmitter could travel through it as much as a million times before its energy was exhausted. But this is immaterial. I only wish to call the attention of your readers to the circumstances.

Some time after the experiments with the classical Hertz devices conducted under the auspices of the Imperial Post Office in England, Sir William Preece, then head of the department, wrote me a letter conveying the information that the tests had been adandoned as of no value, but that he believed good results possible by my system. In reply I offered to prepare two sets for trial and asked him to give me the technical particulars necessary to the design. Just then Marconi came out with the emphatic assertion that he had tried out my apparatus and that it did not work. Evidently he succeeded in his purpose, for nothing was done in regard to my proposal.

He furthermore declared at a later date that wireless communication across the Atlantic was impossible because there was a wall of water several miles high between the two continents which the rays could not traverse. But subsequent developments showed that he had used my system in secret all the time, received the plaudits of the world and accepted stolidly even my own congratulations, and it was only a long time after that he admitted it.

NIKOLA TESLA.
New York, April 11.

Our Future

By NIKOLA

IN this instructive article, the great scientist and inventor who revolutionized industry and communication with his alternating current motors and distributing system, and opened the way for radio with his high-frequency researches, analyzes the problem of obtaining power to replace our wasted fuel, and indicates the method of tapping the earth's hidden resources which will support the industry of future generations.

THE material as well as intellectual progress of Man is becoming ever more dependent on the natural forces and energies he is putting to his service. While not exactly a true measure of well being and enlightenment, the amount of power used is a reliable indication of the degree of safety, comfort and convenience, without which the human race would be subject to increasing suffering and want and civilization might perish.

Virtually all our energies are derived from the sun, and the greatest triumph we have achieved in the utilization of its undying fire is the harnessing of waterfalls. The hydro-electric process, now universally employed, enables us to obtain as much as eighty-five per cent of the solar energy with machines of elementary simplicity which, by resorting to the latest improvements in the technical arts, might be made capable of enduring for centuries. These advantages are entirely exceptional, very serious handicaps and great, unavoidable losses confronting us in all other transformations of the forces of nature. It is, therefore, desirable in the interest of the world as a whole, that this precious resource should be exploited to the limit. Judging from the average height of the water discharged annually from the clouds, and the mean fall over the aggregate land surface, the total terrestrial water power may be theoretically estimated at ten billions of horse power. Of course, only a part of that is suited for practical development and relatively little is actually utilized—twenty-five per cent, perhaps, in the most advanced countries, less in others, and there are some in which not even the ground has been broken. Great waterfalls exist in many inaccessible regions of the globe and new ones are being discovered, all of which will be eventually harnessed when the wireless transmission of energy is commercialized. There is foundation for hope, however, that our present limitations in the amount of the available power may be removed in the future. Three-quarters of the earth's surface are covered by the oceans and the rainfall over all this vast area is useless for our purpose. Much thought has been given to artificial production of rain, but none of the means proposed offers the slightest chance of success. Besides, so far only the precipitation in a limited region was contemplated, leaving the total quantity of moisture for the entire land unchanged except as modified through the natural tendency of the oceans to divert more and more water from the continents. The real and important problem for us to solve is not to bring about precipitation in any chosen locality, but to reverse this natural process, draw the vapors from the seas and thereby increase, at will, the rainfall on the land. Can this be done?

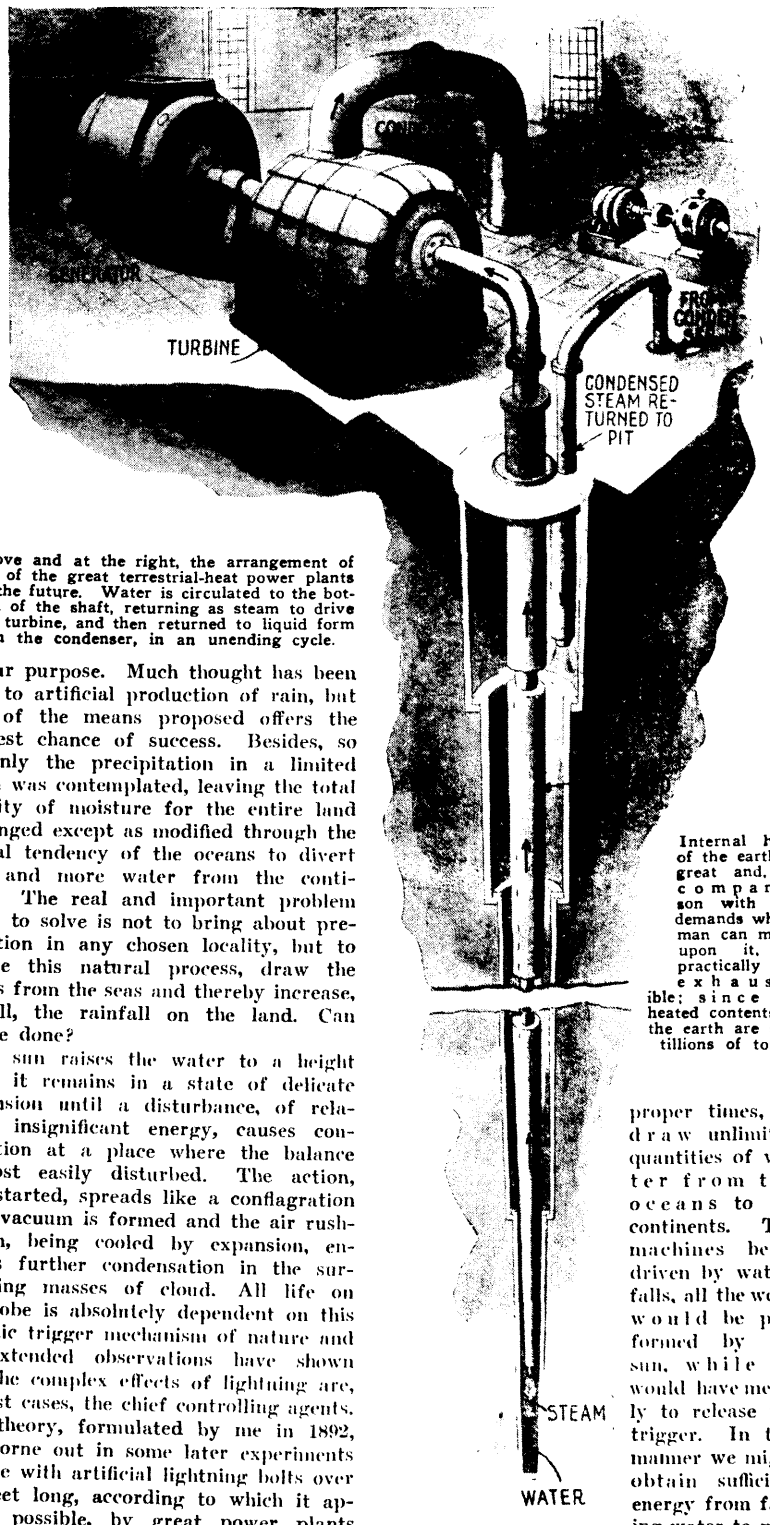

Above and at the right, the arrangement of one of the great terrestrial-heat power plants of the future. Water is circulated to the bottom of the shaft, returning as steam to drive the turbine, and then returned to liquid form in the condenser, in an unending cycle.

Internal heat of the earth is great and, in comparison with the demands which man can make upon it, is practically inexhaustible; since the heated contents of the earth are sextillions of tons.

The sun raises the water to a height where it remains in a state of delicate suspension until a disturbance, of relatively insignificant energy, causes condensation at a place where the balance is most easily disturbed. The action, once started, spreads like a conflagration for a vacuum is formed and the air rushing in, being cooled by expansion, enhances further condensation in the surrounding masses of cloud. All life on the globe is absolutely dependent on this gigantic trigger mechanism of nature and my extended observations have shown that the complex effects of lightning are, in most cases, the chief controlling agents. This theory, formulated by me in 1892, was borne out in some later experiments I made with artificial lightning bolts over 100 feet long, according to which it appears possible, by great power plants suitably distributed and operated at the proper times, to draw unlimited quantities of water from the oceans to the continents. The machines being driven by waterfalls, all the work would be performed by the sun, while we would have merely to release the trigger. In this manner we might obtain sufficient energy from falling water to provide for all our

Motive Power •

TESLA

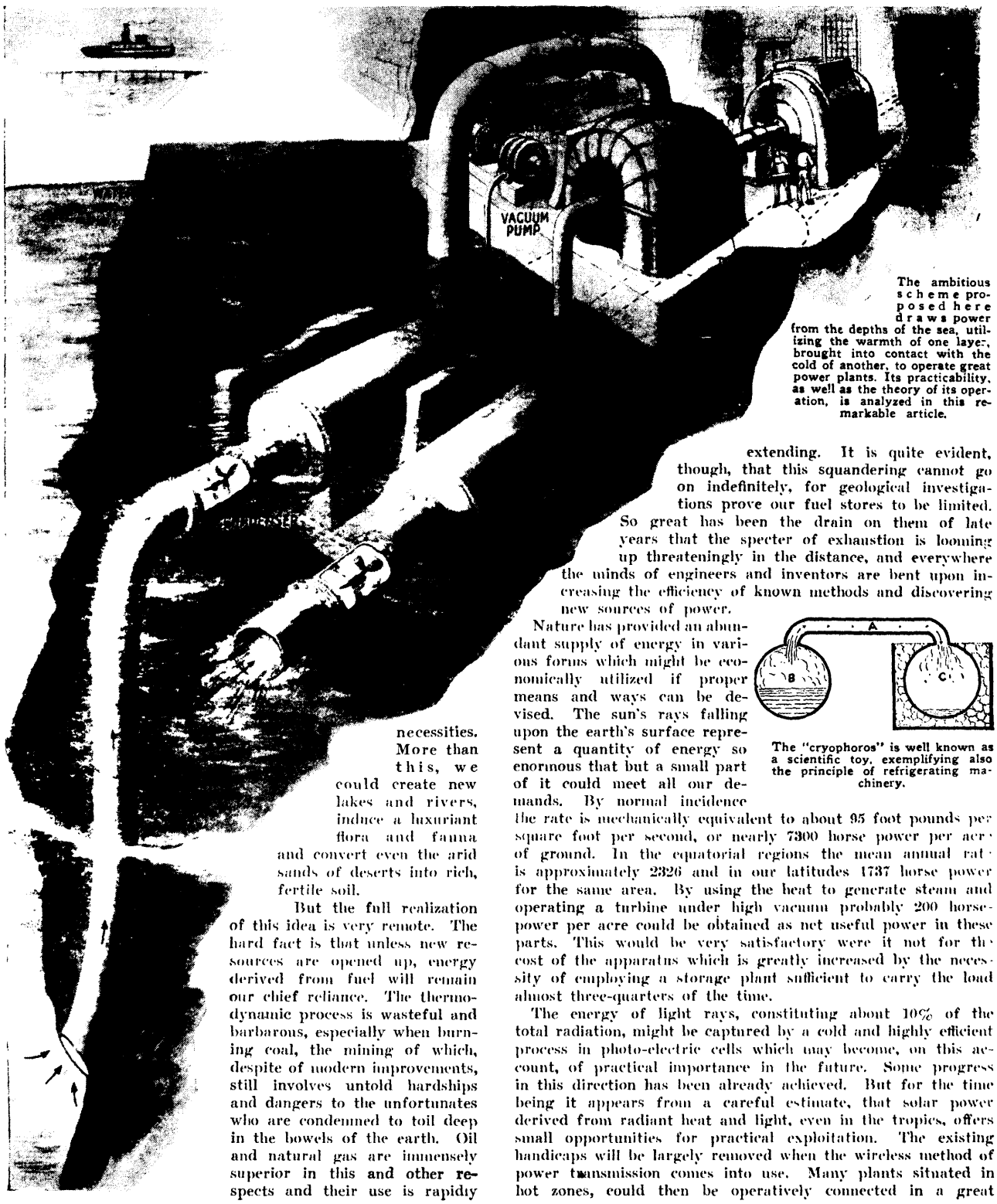

The ambitious scheme proposed here draws power from the depths of the sea, utilizing the warmth of one layer, brought into contact with the cold of another, to operate great power plants. Its practicability, as well as the theory of its operation, is analyzed in this remarkable article.

necessities. More than this, we could create new lakes and rivers, induce a luxuriant flora and fauna and convert even the arid sands of deserts into rich, fertile soil.

But the full realization of this idea is very remote. The hard fact is that unless new resources are opened up, energy derived from fuel will remain our chief reliance. The thermodynamic process is wasteful and barbarous, especially when burning coal, the mining of which, despite of modern improvements, still involves untold hardships and dangers to the unfortunates who are condemned to toil deep in the bowels of the earth. Oil and natural gas are immensely superior in this and other respects and their use is rapidly extending. It is quite evident, though, that this squandering cannot go on indefinitely, for geological investigations prove our fuel stores to be limited. So great has been the drain on them of late years that the specter of exhaustion is looming up threateningly in the distance, and everywhere the minds of engineers and inventors are bent upon increasing the efficiency of known methods and discovering new sources of power.

The "cryophoros" is well known as a scientific toy, exemplifying also the principle of refrigerating machinery.

Nature has provided an abundant supply of energy in various forms which might be economically utilized if proper means and ways can be devised. The sun's rays falling upon the earth's surface represent a quantity of energy so enormous that but a small part of it could meet all our demands. By normal incidence the rate is mechanically equivalent to about 95 foot pounds per square foot per second, or nearly 7300 horse power per acre of ground. In the equatorial regions the mean annual rate is approximately 2326 and in our latitudes 1737 horse power for the same area. By using the heat to generate steam and operating a turbine under high vacuum probably 200 horse-power per acre could be obtained as net useful power in these parts. This would be very satisfactory were it not for the cost of the apparatus which is greatly increased by the necessity of employing a storage plant sufficient to carry the load almost three-quarters of the time.

The energy of light rays, constituting about 10% of the total radiation, might be captured by a cold and highly efficient process in photo-electric cells which may become, on this account, of practical importance in the future. Some progress in this direction has been already achieved. But for the time being it appears from a careful estimate, that solar power derived from radiant heat and light, even in the tropics, offers small opportunities for practical exploitation. The existing handicaps will be largely removed when the wireless method of power transmission comes into use. Many plants situated in hot zones, could then be operatively connected in a great

super-power system to supply energy, at a constant rate, to all points of the globe.

The sun emits, however, a peculiar radiation of great energy which I discovered in 1899. Two years previous I had been engaged in an investigation of radio-activity which led me to the conclusion that the phenomena observed were not due to molecular forces residing in the substances themselves, but were caused by a cosmic ray of extraordinary penetrativeness. That it emanated from the sun was an obvious inference, for although many heavenly bodies are undoubtedly possessed of a similar property, the total radiation which the earth receives from all the suns and stars of the universe is only a little more than one-quarter of one per cent of that it gets from our luminary. Hence, to look for the cosmic ray elsewhere is much like *"chercher le midi dans les environs de quatorze heures." My theory was strikingly confirmed when I found that the sun does, indeed, emit a ray marvelous in the inconceivable minuteness of its particles and transcending speed of their motion, vastly exceeding that of light. This ray, by impinging against the cosmic dust generates a secondary radiation, relatively very feeble but fairly penetrative, the intensity of which is, of course, almost the same in all directions. German scientists who investigated it in 1901 assumed that it came from the stars and since that time the fantastic idea has been advanced that it has its origin in new matter constantly created in interstellar space!! We may be sure that there is no place in the universe where such a flagrant violation of natural laws, as the flowing of water uphill, is possible. Perhaps, some time in the future when our means of investigation will be immeasurably improved, we may find ways of capturing this force and utilizing it for the attainment of results beyond our present imagining.

* "To look for noon around 2 o'clock."

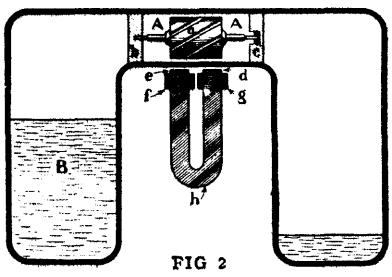

FIG 2

Fundamental plan of a system whereby the transfer of vapor between two vessels at different temperatures drives the armature of an electrical generator.

The tides are often considered as a source of motive power and not a few engineers have expressed themselves favorably in regard to their use. But as a matter of fact, the energy is, in most places, insignificant, the harnessing of the waterfall over an acre of ground yielding but little more than one horse power. Only in exceptional locations can the power of the tides be profitably developed.

It has been the dream of many an inventor to utilize the energy of ocean waves, which is considerable. But although numerous schemes have been advanced and much ingenuity shown in devising the mechanical means, nothing of commercial value has so far resulted and the prospects are very poor on account of technical difficulties and the erratic character of this power source.

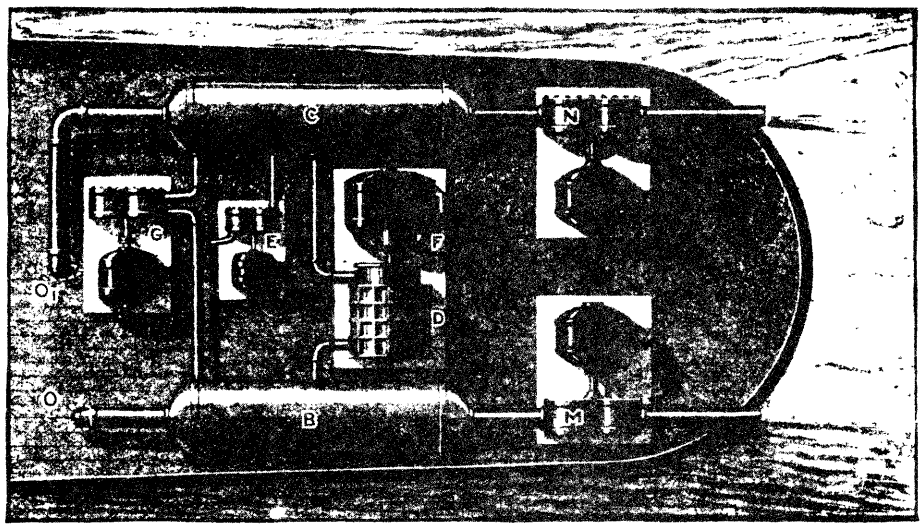

FIG. 7

Design of a vessel to be propelled by energy derived from temperature differences in the water. The symbols designating the operating mechanism are explained in the text.

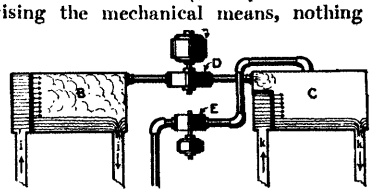

FIG. 3

A more complete sketch of the thermodynamic system, in which the necessary degree of vacuum is produced by the suction pump E.

The force of the wind can be much more easily put to our service and has been in practical use since times immemorial. It is invaluable in ship propulsion and the windmill must be seriously regarded as a power generator. If the cost of this commodity should greatly increase we will be likely to see the countries dotted with these time-honored contrivances.

Unfortunately, the value of all these resources is very much reduced by periodic and casual variations, and we are driven to search for a source of constant twenty-four hour power comparable to that of a waterfall. Thus we are led to consider terrestrial heat as a possible fountain of unvarying energy supply.

Terrestrial Energy

It is noteworthy that already in 1852 Lord Kelvin called attention to natural heat as a source of power available to Man. But, contrary to his habit of going to the bottom of every subject of his investigations, he contented himself with the mere suggestion. Later, when the laws of thermo-dynamics became well understood, the prospects of utilizing temperature differences in the ocean, solid earth or the atmosphere, have been often examined. It is well known that there exists, in tropical seas, a difference of 50° F. between the surface water and that three miles below. The temperature of the former, being subject to variations, averages 82° F., while that of the latter is normally at least, at 32° F., or nearly so, as the result of the slow influx of the ice-cold polar stream. In solid land these relations are reversed, the temperature increasing about one degree Fahr. for every 64 feet of descent. Very great differences are also known to exist in the atmosphere, the temperature diminishing with the distance above the earth's surface according to a complex function.

But while all this was of common knowledge for at least 75 years and the utilization of the heat of the earth for power purposes a subject of speculation, no decided attempt to this end seems to have been made until an American engineer, whose name I have been unable to ascertain, proposed to operate engines by steam generated in high vacuum from the warm surface water and condensed by the cold water pumped from a great depth. A fully and (*Continued on page 78*)

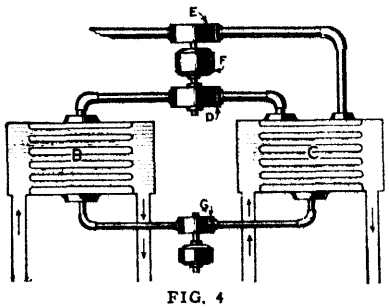

FIG. 4

Here the water, or other fluid operating the turbine D is kept in a closed system, circulating through condensers immersed in water of different temperatures.

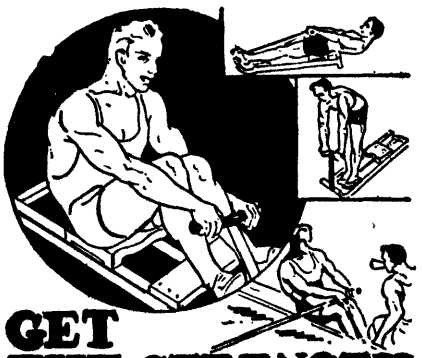

GET THE STRENGTH OF AN OARSMAN

A Gym at Home to Make You Strong

Get Strong! Enjoy the thrill which giant strength gives to the varsity oarsman. He must be "there" to stand the strain and endure the greatest and most terrific strength test put to any athlete. If you want massive shoulders—a mighty chest—arms like iron,—a powerful back—legs like pillars of steel and an all around perfect athlete's body, stop dreaming. Wake up! The invention of the Vig-Row is the answer to your dream. The Vig-Row was created and built by a man who built his own body from a weakling to that of a champion—the Vig-Row offers body-building principles never revealed to the public before because it is the only machine of its kind built by a man who understands muscle building. The Vig-Row is the perfect device for keeping fit and getting strong. Be sure to investigate the VIG-ROW!—You will agree that it is the greatest and most perfect rowing machine ever marketed, regardless of price. Its many features and beauty will amaze you—our slogan is "FACTS FIRST"—then the sale—send no money—write now for additional free information.

Examine VIG-ROW First

Space doesn't permit the entire story about the Vig-Row. It has too many real features. There are too many reasons why you should select the Vig-Row. We don't ask you to purchase from this advertisement—we do ask that you write for our large photographic circular so you can see and realize the difference yourself. Write for free facts now. Don't buy now, from us or anyone else—compare—examine—test—don't buy a cat in the bag—write us now and get the wonderful complete Vig-Row story that brings you the reason why you will be proud to own a Vig-Row.

FREE Instructions

We don't think it enough to just sell you the finest rowing machine in the world and trust to luck that you will use it and get strong. No! We furnish a course of instructions without extra cost, that are complete in every detail. Shows how to develop every part of the body with the Vig-Row—Prepared and written by a master of Physical Culture—and it's yours free, if you write at once.

Exclusive VIG-ROW Features

1 Inclined frame for true rowing motion
2 Rubber wheels, oilless bearings
3 Arch supporting foot rest
4 Rolling, form-fitting aluminum seat
5 Polished hardwood frame
6 Instantly adjustable progressive exercising, nickeled steel springs
7 Platform for standing exercises.
8 Aluminum front
9 Double rollers
10 Ventilated handles

$11.85

Rush Coupon

Don't send a cent! Fill in coupon and mail. Full details free by return mail.

AMERICAN ATHLETIC APPLIANCE CO.,
239 Broadway, Dept. 2712, New York

Please send absolutely free and without obligation full details about your wonderful Vig-Row rowing machine. Also reserve one of those free instruction courses. I have checked plan of purchase that interests me, if I decide to purchase a Vig-Row.
☐ Cash Price ☐ Installment Plan

Name .....Age .....
Street .....
City .....State .....

Our Future Motive Power •

(*Continued from page* 28)

carefully worked out plan of this kind, supported by figures and estimates, was submitted by him to prominent capitalists and business men of New York about 50 years ago. He not only contemplated the production and distribution of power for general use but intended even to propel boats by energy derived in the same manner, using, preferably, ether as working fluid. On account of his death, or for other reasons, the project was not carried into practice.

Of this I learned much later when I interested in my alternating system Alfred S. Brown, a well known technical expert, called upon to examine the merits of my inventions, and C. F. Peck, a distinguished lawyer, who organized a company for their commercial introduction. These men were among the first approached by the engineer and considered his plan rational in principle, but the pipe lines, pumps, engines, boilers and condensers involved too great an outlay and, besides, a profitable disposal of the power was difficult and uncertain. My discovery of the rotating magnetic field brought about a change in the situation and in their attitude. They thought that if the energy could be economically transmitted to distant places by my system and the cost of the ocean plant substantially reduced, this inexhaustible source might be successfully exploited. Mr. Peck had influential connections, among them John C. Moore, the founder of the banking house bearing his name. With the exception of the late J. P. Morgan, who towered above all the Wall Street people like Samson over the Philistines, Moore was probably the strongest personality. I was given to understand that if I could evolve a plan satisfactory to Mr. Brown and other engineers, all the capital required for an enterprise on a very large scale, as contemplated by them, would be promptly furnished. No encouragement from my associates was needed for determining me to undertake the task, as the idea appeared, at first, wonderfully promising and attractive although there was nothing about it fundamentally new.

Undoubtedly, the essential conditions required to operate a steam or other thermodynamic engine could be fulfilled, a considerable temperature difference being available at all times. No proof had to be furnished that heat would flow from a higher to a lower level and could be transformed into mechanical work. Nor was it necessary to show that the surface water, although much below its normal boiling point of 212° F., can be readily converted into steam by subjecting it to a vacuum which causes ebullition at any temperature however low. It is of common knowledge that, due to this same effect, beans cannot be cooked or eggs hard-boiled on high mountains. Also, for a like reason turbines have been wrecked in steam power plants with the boilers completely shut off, the slightly warm water in the system of connecting pipes being evaporated under a high vacuum inadvertently applied. This behavior of water, or liquids in general, was long before beautifully exemplified in the classical device called "cryophoros" consisting of two communicating and exhausted bulbs partially filled with liquid, which is evaporated in one and condensed in the other. It was invented by W. H. Wollaston, a great English scientific man and investigator (1766-1828), who first commercialized platinum and was credited by some to have anticipated Faraday in the discovery of electromagnetic rotation. The original instrument brought out at the beginning of the nineteenth century had one of the bulbs packed in ice with the result of freezing water in the other. Conformably to the views of that time it was thought that the cold of the ice was carried to the water and so the Greek name, meaning "cold-carrier," was given to the device. But now we know that the process is of opposite character, the freezing being brought about by the transport of the latent heat of evaporation from the warm to the cold bulb. One would naturally infer that the operation would cease as soon as the water is frozen at the surface, but curiously enough **the ice itself continues to yield steam** and it is only because of this that all of the water is solidified. We may imagine how puzzling this phenomenon appeared more than one century ago!

The ocean plant proposed by the engineer was nothing else but Wollaston's device of huge proportions, adapted for continuous operation and having an engine interposed between the two communicating vessels. In estimating its thermo-dynamic performance the first results I arrived at through the medium of pad and pencil fairly bewildered me. To illustrate by an example, suppose that equal quantities, say, one-half pound of the warm and of the cold water, respectively, at 82° and 32° Fahrenheit, are mixed or put in thermal equilibrium otherwise. The first will then give up to the second 12.5 heat units, mechanically equivalent to 9725 foot pounds—the same energy which would be developed in the fall of one pound from so great an altitude as 9725 feet. The dream of my life had been to harness Niagara, but here was a fall sixty times higher and of unlimited volume. To raise the cold water to the surface from any depth whatever, required but a trifling effort and as other losses also seemed negligible I concluded that if only a small portion of this hypothetical fall could be utilized, one of the greatest problems confronting humanity would be solved for all times to come.

I knew that it was too good to be true, nevertheless I followed this ignis fatuus for years until, little by little, through close reasoning, calculation and experiment, I got the true bearings in the swamp of my ignorance and doubt. Then this scheme of harnessing the ocean revealed itself to my mind as one of the crudest imaginable. Just to transport a little heat, water has to be pumped and disposed of in quantities so enormous that a large installation of this type would present new problems in engineering. Contrary to the opinion I had previously formed, this involved the expenditure of a great amount of energy. Then I realized that the gases contained in the water can be only partially extracted and have to be continuously removed from the condenser to prevent the rise of back pressure which might reduce the speed and eventually stop the engine.

Furthermore, due to certain conditions, the deep sea water must enter the pipe warmer than it should conformably to soundings, so that the full temperature difference cannot be obtained, and I discovered other peculiar causes which, after some time, might seriously interfere with the proper functioning of the mechanism. The steam, raised directly from the surface water, is of the poorest quality, mere mist under small pressure, and its consumption per horsepower hour was likely to be twenty times greater than in modern plants. In hydro-electric stations, as before stated, eighty-five per cent of the energy of falling water may be captured, while in this case hardly more than two-tenths of one per cent of the theoretical fall can be utilized. Worst of all, the size and cost of the equipment is utterly out of proportion to the greatest possible returns. These and other limitations and difficulties forced themselves upon me in studying the plans as first submitted.

The introduction of my alternating system started a scramble for the most valuable water power sites and no attempt was made to harness the ocean. But my interest was aroused to such a degree that

LOOK-FELLOWS-LOOK

Model Aviator-Featherweight Motor

For Use on Model Planes and Model Boats

New rock bottom prices. All parts bent, formed, timed and drilled. Knock-down 3-cyl. Kit postpaid NOW ONLY

Finished Motor postpaid, $2.95 99 CENTS

Air Tank Kit, 3"x3"x30" or smaller Postpaid $1.95.

Tank Complete, ready to use, 3"x24" or 30" long. Postpaid $4.95.

MODEL PLANE PLANS 10c

3 Plans for 25c

Stinson Monoplane, Travelair Mystery "S," S. E. 5 Pursuit, Lockheed Vega, Rocket Plane, Fokker Amphibian, Ott Hydro Model A-21 Seaplane.

Boeing P12-B—American. D-H Tiger Moth—English. Ansaldo—Italian. Gloster-325 M.P.H. Seaplane Racer.

WATCH FOR 4 NEW PLANS EVERY MONTH

CATALOGUE 10c

DEALERS: Write for Discount on Plans

MODEL AVIATOR PRODUCTS

Dept. 99 3335 Eastwood Ave., Chicago

PROTECT YOUR LIFE with TEAR GAS FOUNTAIN PEN!

Brand New Instant Protection without injury to anyone. Agents can make up to $400.00 monthly. One agent sold 1 dozen in 5 hours. One minute demonstration gets the order everytime. Sells on sight. Protection for everybody against robbers, criminals, morons, vicious dogs, etc. Every autoist, store, bank, theatre and every home prospect.

AGENTS: Grab This Money Maker

Step into this new, unlimited, money-making field. You take orders. Collect your big pay daily. Devote part or full time. Exclusive territory still open. Write quick for starting offer.

ATLAS CO., Chesterfield Station, Dept. 1812 Chicago

How To Obtain A Better Looking Nose

Improve Your Personal Appearance

My free book tells you how I guarantee to improve the shape of your nose by remolding the cartilage and fleshy parts, quickly, safely, and painlessly, or refund your money. The very fine, precise adjustments which only my new patented Model 25 Nose Shaper possesses, make results satisfactory and lasting. Worn night or day. Over 100,000 users. Send for free book to

M. TRILETY, Pioneer Noseshaping Specialist, Dept. 295, Binghamton, N.Y.

HIDDEN METALS

Such as Buried Treasure, Lost Oil Rig Equipment, etc., may now be accurately located by Radio and Electric Methods. Send Red Stamp today for full details—no obligation.

EXCHANGE, P. O. Box 607-M,

El Monte California

Make PHOTOGRAPHY Your CAREER

This two billion dollar industry offers splendid opportunities as

"Motion Picture Cameraman and Projectionist

or "Still" Photographer and Photo Finisher

Easy to learn by our simplified method.

TODAY SEND FOR FREE BOOK

giving full Details. State which Interests you.

NEW YORK INSTITUTE OF PHOTOGRAPHY. 10 West 33rd St. (Dept. 34) New York.

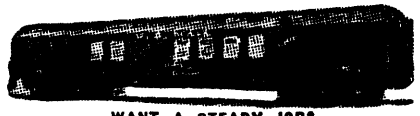

WANT A STEADY JOB?

$158 to $225 month. Railway Postal Clerks. Many other Government jobs. Write IMMEDIATELY for free 32-page book with list of U. S. Gov't positions open to men and women, 18 to 50, and particulars telling how to get them.

FRANKLIN INSTITUTE

Dept. K304 ROCHESTER, N. Y.

I continued the work and made a number of improvements which are thought to possess some merit. Satisfied that pipes supported by floats or hung in submarine abysses were impracticable, I proposed a sloping tunnel, lined with heat insulating cement, affording a smooth and unbroken passage for the deep sea water. I found ways of simplifying and cheapening the apparatus and making it more effective by reducing the moisture of the steam and otherwise, and these advances may eventually prove of practical value.

To conduce to a more ready understanding of the evolution of the ocean power plant from the cryophoros and of the nature of some of my improvements, reference may be made to the drawings in which Fig. 1 represents the original device of Wollaston, comprising two highly exhausted vessels B and C, respectively, the boiler and condenser, connected through a channel A. The first named vessel being partly filled with water or other liquid and the second packed in a freezing mixture, the vacuum causes the water when slightly warmed to boil furiously and the well known effect is observed. As the steam generated in the boiler rushes into the condenser with great speed, it is capable of producing a considerable mechanical effort.

Fig. 2 illustrates how the thermo-dynamic transformation of energy may be effected to obtain useful external work. This particular arrangement is chosen in order to dispense with the necessity of a connection to the outside which would call for the employment of a vacunm pump. A steel armature a, of a diameter nearly equal to that of the channel A, connecting vessels B and C, and shaped like a fan, is supported in virtnally frictionless bearings b and c, of which the latter may be designed for taking up the thrust. Surrounding the armature, or turbine rotor, and in close proximity to the same, are soft-iron projections as d and e, wound with coils f and g and forming part of a permanent magnet h. The rapid rotation of the armature results in a periodic shifting of magnetic lines from one to the other set of projections, this inducing in the coils currents which may be utilized.

The next step is to adapt the device for continuous operation. This may be done in two ways: by supplying the evaporating and condensing water directly to the vessels B and C, or by merely transmitting and abstracting heat through their walls, in which case the working fluid is entirely separated and circulated in a closed circuit.

The first plan is diagrammatically shown in Fig. 3. The vessels B and C are cylinders joined by a turbine D through suitable pipe connections. A suction pump E, constructed for producing a very high vacuum, is attached to the condenser C and may be driven by the turbine through a gear or, as indicated, by an induction motor energized with alternating currents from the dynamo F coupled to the turbine. The water being under atmospheric pressure would flow into the evacuated vessels at too great a speed occasioning corresponding losses, and for this reason it is necessary to supply and drain it through balancing barometric columns i i and k k of proper height thereby insuring the desired circulation, the direction of which is indicated by arrows. Since the latent heat absorbed in evaporation and set free in condensation is very great, an immense quantity of water must be circulated through the vessels in order to prevent changes of temperature sufficient to seriously reduce the performance of the apparatus. In addition to the devices shown, separators must be employed for extracting gases from the water before its entrance into the boiler and condenser. These cannot be of the effective centrifugal type as they would entail too great a loss of energy. The only kind practicable is that used from the earliest beginnings of modern hydraulics, the action of which is based on a slow reversal of direction of flow and accomplishes only partial degasification. It should be noted that the gases, by rapid expansion and attendant cooling, impair greatly the quality of the steam and also, more or less, the vacuum in the vessels. One of my improvements is to supply the water in the form of jets, as represented, which furnish the necessary evaporating and condensing surface while at the same time carrying away gases which would be liberated if the water were admitted as usual.

A careful study of the scheme illustrated in Fig. 3 has satisfied me that it is, for a number of reasons, disadvantageous and less practicable than that shown in Fig. 4. In this instance the vessels B and C are surface condensers of ordinary design but of very great active areas in view of the excessive steam consumption and small differences of temperature applied. They may be of the same size, for although the passage of heat from the hot to the cold water takes place through the steam, the law of mixtures is obeyed, the maximum transfer occurring when the quantities of both are equal. Were it not for that the performance might be appreciably improved by supplying the hot water, which has to pass only through short pipes, in greater quantity. The vessels are connected through a turbine D coupled to a generator F, as before, and besides the suction pump E a deep well pump G is employed to force the condensate into the boiler. The water should be sweet and thoroughly degasified yielding steam of good quality and greatly reducing the work of the pumps, and both boiler and condenser should be completely immersed in the circulating media to minimize the heat losses. The important practical advantages of this plan are that any suitable working fluids and units of very great capacity may be used.

Technical experts who may examine the merits of the ocean power scheme will be apt to dismiss lightly the loss of energy involved in the propulsion of the hot and cold water which in reality, may be very serious on account of the lift above the mean ocean level. The outlets are unavoidably very large and if their centers are from three to four feet above the mean level to insure normal functioning at high tide the pumping losses will be considerable. Furthermore, the water is subjected to repeated changes in direction and velocity and suffers a frictional loss of head, especially in the long conduit, all of which may be equivalent to an additional life of a few feet, making the total, say, 7 feet, conservatively estimated.

Now, in the Gulf of Mexico or in Cuban waters, where my associates intended to build plants, the temperature difference between the hot and cold water will be hardly more than 36° F. as an annual average, and with the poor steam obtainable the circulation may be as much as 12 lbs. of each per horse power per second. Consequently, the

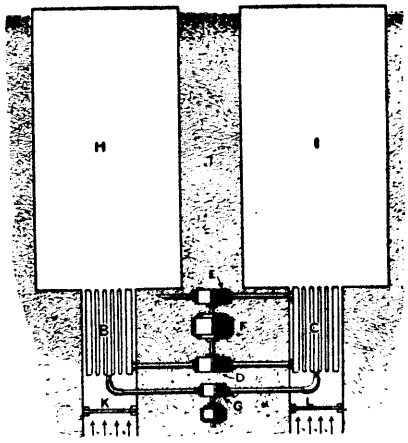

FIG. 5

The basins H and I are filled and emptied by the tide, saving much of the energy otherwise expended in pumping.

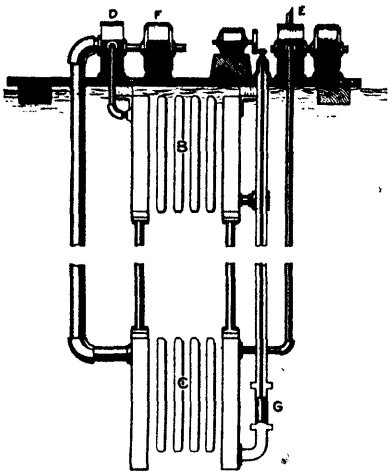

FIG. 6

A floating thermo-electric power plant, in which the condenser C is suspended beneath the boiler B and the condensate circulates vertically.

mechanical work may be estimated at 168 foot pounds per second and this figure must be almost doubled because the over-all efficiency of induction motor-driven pump units, which have to be employed, is not much above fifty per cent, as a rule. Since one horse power is a rate of 550 foot pounds per second this means a loss of about 40 per cent. Besides, the operation of the degasifiers, vacuum and deep well pumps, will consume energy which has to be supplied from the turbo-generator and taken at nearly twice its value for the reason pointed out. All these losses may be reduced in various ways but not to a very great extent, and the example clearly shows the desirability of doing away with them. This argument is applicable, even with greater force, to the cost of the pumping outfits of which I will endeavor to convey an idea by assuming that a 30,000 horse power plant is installed, requiring not less than 300,000 pounds of hot and of cold water per second, which means, approximately, 4,700 cubic feet of each. As a velocity of 3 feet per second should not be exceeded, two pumps capable of meeting the requirements would have intake and outlet openings of 1800 square feet, with the usual allowances. Evidently such monstrous machines could not be used, for one reason, not to mention others, that the lift would be very great and the loss incurred prohibitive. This brings to light a bad feature of the scheme illustrated in Fig. 3, namely, that it is impracticable to have recourse to very large units and thereby secure the customary advantages. A great number of small units must be of necessity used and it follows that the larger the plant the poorer it will be. Instead of the two pumps each with openings of 1800 square feet, at least one hundred motor-driven pumps with orifices of 36 square feet and a corresponding number of boilers and condensers with enormous inlet and outlet pipes would have to be employed, and at a staggering cost.

These and other similar considerations have prompted me to devise the plan schematically shown in Fig. 5 in which I do away entirely with the water pumps by relying wholly on ebb and tide to bring about the required circulation of the heating and cooling media, thus simplifying the plant and obviating great losses and expenditures. The installation comprises two very large basins lined with heat insulating cement designated by H and I and provided with suitable supports for heat-insulating roofs or covers the function of which is to minimize losses by radiation and influx of heat, respectively, from the hot and to the cold water. Each of the basins has a controllable opening, respectively K and L situated close to the bottom, where also the boiler B and condenser C, are located. The latter are connected through a turbine D coupled to a generator F, constituting a unit of large capacity. As in the case before described, a suction pump E and a deep well pump G are provided, driven by induction motors energized from the generator. All this machinery is placed on a common foundation, as indicated. The basins are filled at high tide and the outflow during the period of ebb is controlled so as to secure the best results. Although the power is subject to periodic variations, the plant can be operated satisfactorily without the employment of batteries or other means of storage and thus the cost of this commodity may be greatly reduced.

Another way of deriving power from the temperature differences in the ocean without the use of water pumps is illustrated in Fig. 6. The apparatus comprises the same essential parts which have been already described, namely, a tubular boiler B and like condenser C connected through a turbine D driving a generator F, a high vacuum pump E and a small reciprocating deep-well pump G for lifting the condensate from the condenser into the boiler. The latter is supported in the warm surface water by a floating structure carrying all the machinery, while the former is suspended at a suitable depth in the cold water. Both of these parts are arranged with the tubes in vertical position insuring a good circulation of the heating and cooling media. This arrangement is very simple and effective but the raising of the condensate by pump G consumes considerable work. I have designed wireless power plants on this plan with practical objects in view and they may perhaps find valuable uses in the future.

Fig. 7 represents a partial view of a boat with apparatus for propelling it solely by the heat energy abstracted from the water. I was not informed just how the American engineer intended to propel his vessel and the scheme illustrated is my own. Two rotary pumps M and N are employed to force the warm and cold water, respectively, through the tubes of the boiler B and condenser C. This apparatus is placed slightly below the waterline for minimizing the losses involved in the circulation of the heating and cooling media. The pumps are supposed to be driven by induction motors, as illustrated, and are connected to the discharge pipes and other parts in such a way that the water cannot enter the hold of the vessel. The boiler intake O is near the ocean's surface while that of the condenser is at the requisite depth; a streamline shaped duct O1, open in front, being employed for the purpose. As the temperature of the water diminishes very rapidly through a limited distance from the surface of the ocean, sufficient energy can be abstracted from the water using a duct of fifty feet length to propel the boat by the streams escaping through the discharge pipes. No other means of propulsion is necessary and even the steering can be accomplished by suitably regulating the volume of the two streams discharged astern as shown. The turbine D, generator F, high vacuum pump E, deepwell pump G and other parts serve the same purposes as before. Some stored energy must be provided to start the vacuum pump and thereby initiate the operation of the apparatus.

The ocean power plan of the illustration on page 27 seems very inviting when considering that the energy obtained is proportionate to the quantity of the water pumped and, therefore, virtually unlimited. But it must be remembered that the true merit of such a scheme can only be measured by the returns. We have still greater and more readily available resources which are unused because they are unprofitable. On closer investigation many discouraging facts are unearthed. The deep sea water is, normally, at a low temperature but at any time a warm current of water may be produced and render the plant useless. It has been

(Continued on page 96)

NEW "Driver" MAGAZINE

10¢ FULL SIZE BLUEPRINT in every issue

In This Issue

AN END TABLE BECOMES A BRIDGE TABLE

Half-Hour Lathe Projects

How a Naval Engineer Uses *Driver* Tools

What Driver Owners Are Doing

The Old Timer Speaks

Questions and Answers

Child's Clothes Rack

Jig Saw Projects

Inlaying and Overlaying

New Things to Make

Homecrafting has developed to the stage where craftsmen deserve a magazine of their own, devoted exclusively to wood working.

Realizing this need, "Driver," the leading manufacturer in the field, has developed The HOME CRAFTSMAN so that every workshop owner can derive keener satisfaction from his hobby and his equipment.

The HOME CRAFTSMAN describes new things for you to make. New projects for the advanced craftsman. Simpler projects for the beginner. Shows you just how to start each job, gives all dimensions. Describes new tools. Tells how to Inlay. Sponsors "Questions and Answers" column to solve your problems. Includes many other features. Has 24 pages of selected material. Edited at the work bench where every article described has been previously made. Full size blueprint in EVERY issue.

Send for this Issue

Complete Blueprint 17" x 22"

Get this first issue containing complete blueprint of unique Bridge Table-End Table. If unable to buy The Home Craftsman at your local "Driver" store, send coupon directly to us.

WALKER-TURNER CO., Inc.
Plainfield, N. J.

The HOME CRAFTSMAN Dept. S
Plainfield, N. J.

Editor: You may send me the first issue of your "Driver" Magazine, The Home Craftsman, containing complete blueprint 17" x 22" of the Bridge Table-End Table. I am enclosing 10 cents.

Name and address

• Index to Advertisers •

A
American Athletic Appliance Co. 78
American School 3
Atlas Company 80
Auburn Automobile Company .....Back cover
Audel & Company, Theo. 79

B
B & L Engineering Company 95
Barbasol Company, The .....Inside Back Cover
Benner & Company 93

C
Capitol Radio Engineering Inst..... 91
Chemical Institute of N. Y. Inc..... 86
Classified Section 6
Coyne Electric School 5, 97
Culver Sales Company .....Inside Front Cover
Cutting, T. A. 95

D
Delta Specialty Company 73

E
Electric R. & S. Co. 95
Evans & Co., Victor 77
Exchange 80

F
Franklin Institute 80

G
Gernsback Publications, Inc.....82, 88, 94
Gernsback Corp., S. 84

H
High School Home Study Bureau..... 93
Hotel Graham 93

K
Keeley Institute 90
Kelsey Company 93

L
Lancaster, Allwine & Rommel 74
LaSalle Extension University 85
Loftis Bros. & Company 91

M
McGraw-Hill Book Company 83
Metal Cast Products Company..... 85
Model Aviator Products 80

N
National Radio Institute 98
National Salesmen's Training Assoc. 87
New Method Mfg. Company 95
New York Institute of Photography..... 80
Norley Book Company 76
North American Institute 8

O
Clarence A. O'Brien 75

P
Polachek, Z. H. 74
Popular Book Corporation 90
Popular Homecraft 92

R
Radio & Television Institute 7
Radio Trading Company 82
Randolph & Company 74
Roth Press 95

S
Schiercke, Henry C. 95
Standard Business Training Inst. 95

T
Trilety, M. 80

U
U. S. School of Music 89

W
Walker-Turner Company 81
Wilson Chemical Company 93
Winefholt Sales Company 95

Y
York Tire & Rubber Company..... 93

(While every precaution is taken to insure accuracy, we cannot guarantee against the possibility of an occasional change or omission in the preparation of this index.)

• Hearing Radio Without a Loud Speaker •

(*Continued from page 59*)

even more, with music. The sounding body, corresponding to the diaphragm of the speaker, and giving out vibrations to the air, is a piece of ordinary brass tubing, such as curtain rod, 20 to 40 inches long and, say, 1¼ inches in diameter, so that it affords a good grip. The walls are thin, 1/48-inch. The rod has insulators over its ends, and clips are attached to the metal. The speaker terminal (positive) of an A. F. amplifier is connected to one end of the tube; and the operator touches the negative terminal and rubs his fingers over the tube. ***Both electrode and fingers must be dry!*** It is possible to transmit the impulse through two or even more individuals. The investigator reports that the hand rubbing over the metal seems to stick to it; and that the vibration of the tube is manifested by dust arising from its surface.

Considerable encouragement for the deaf is held up by experiments of the type in the lowest photograph. German physicians have found that electric currents produce "hearing" in the deaf and increased range of audible pitches in the hard-of-hearing.—*Die Umschau.*

• Our Future Motive Power •

(*Continued from page 81*)

observed that there may be differences of 35° F. or even more in the temperature of water at the same depth. Just as convection currents occur in the air so they may also be produced in the ocean and this is an ever present menace to an undertaking of this kind. It also appears the actually obtainable temperature difference must be always appreciably smaller than might be inferred from soundings. The raising of the denser water below a certain niveau into the less dense above it involves a performance of work which must be done by the pump but is not lost as the volume of the water discharged at the top of the deep-sea duct is correspondingly increased. This does not hold true of the water above the niveau and, consequently, the flow into the intake of the duct takes place preponderatingly from above, that is, in the direction of the downward convection current. Owing to this, warm water from above enters the intake thus reducing the temperature difference. Another curious fact cannot be ignored. The sea is densely populated with organisms which are subject to changes caused by age. As they grow older the life stream deposits more and more solid matter, they become specifically heavier and sink gradually until finally at great depths life is extinct. If this floating matter could be removed by the pump at a constant rate, as the water, it would give relatively little trouble. But as water is removed the concentration of this matter continuously increases and may become so great as to interfere seriously with the operation of the plant. Impairment of performance, if not interruption, might also be brought about by rust and deposits in the pipes, loosening of joints and other mishaps and for this reason I consider a tunnel as the practicable means for transporting the cold water.

I have studied this plan of power production from all angles and have devised apparatus for bringing down all losses to what I might call the irreducible minimum and still I find the performance too small to enable successful competition with the present methods.

The utilization of temperature differences in the solid earth presents several important advantages. It would make it unnecessary to go to the tropics where power is of smaller value. Indeed, the colder the climate the better. A shaft could be sunk in the midst of a densely populated district and a great saving effected in the cost of distribution. The shaft would be costly, of course, but the apparatus cheap, simple and efficient. The first drawing, on page 26, illustrates its essential parts comprising a boiler at a great depth, a condenser, cooled by river or other water available, on the ground, a turbine coupled to a generator, and a motor-driven high vacuum pump. The steam or vapor generated in the boiler is conveyed to the turbine and condenser through an insulated central pipe while another smaller pipe, likewise provided with an adiathermanous covering serves to feed the condensate into the boiler by gravity. All that is necessary to open up unlimited resources of power throughout the world is to find some economic and speedy way of sinking deep shafts.

* * * * *

Whether we shall have to rely on power derived from terrestrial heat must be left to the future. If we should exhaust our present resources without opening up new ones, this possibility might arise. Undoubtedly, our stores of coal and oil will be eventually used up and there is not enough water power to supply our needs. The idea of obtaining motive energy from atoms or change of elements is unscientific and illusionary and cannot be condemned too emphatically. The same is true of the scheme of harnessing the energy supposed to be liberated at such temperatures as 40,000,000 degrees C (Centigrade) recently suggested. The fundamental fallacy in all these proposals is that it takes more energy to disintegrate than can be usefully recovered even in an ideal process.

Glaringly fallacious theories are responsible for such chimerical hopes. Probably the worst of these is the electron theory. Of the four or five atomic structures which have been suggested not a single one is possible. Not more than one in a thousand men of science knows that an electron—whatever it be—can only exist in the perfect vacuum of intermolecular and interstellar spaces or highly exhausted tubes and that the nucleus stripped of electrons, is devoid of energy.

It was clear to me many years ago that a new and better source of power had to be discovered to meet the ever increasing demands of mankind. In a lecture delivered before the American Institute of Electrical Engineers at Columbia University May 20, 1891, I said: "We are whirling through endless space with inconceivable speed, all around us everything is spinning, everything is moving, everywhere is energy. There must be some way of availing ourselves of this energy more directly. Then, with the light obtained from the medium, with the power derived from it, with every form of energy obtained without effort, from the store forever inexhaustible, humanity will advance with giant strides."

I have thought and worked with this object in view unremittingly and am glad to say that I have sufficient theoretical and experimental evidence to fill me with hope, not to say confidence, that my efforts of years will be rewarded and that we shall have at our disposal a new source of power, superior even to the hydro-electric, which may be obtained by means of simple apparatus everywhere and in almost constant and unlimited amount.

New York Times
Feb. 6, 1932, P. 16, col. 8

DR. TESLA WRITES OF VARIOUS PHASES OF HIS DISCOVERY.

To the Editor of The New York Times:

You have given considerable space to the subject of cosmic rays, which seems to have aroused general attention to an unusual degree. Inasmuch as I discovered this wonderful phenomenon and investigated it long before others began their researches, your readers may perhaps be interested in my own findings.

The original idea was advanced and discussed by me in a series of articles on Röntgen rays and radioactivity, published from 1896 to 1898 in The Electrical Review. The results of my discoveries were reported all over the world through the Associated Press and found a powerful echo. But at that time scientific men were emphatically opposed to my theories, holding that the new actions were due to some kind of wave motion, while, according to my observations, they were produced by electrified particles of matter projected with great velocity. It was only years later that the views I then propounded were gradually accepted.

The experiments I undertook in 1896 were greatly facilitated through my invention of a novel form of vacuum tube suitable for operation by currents of many millions of volts and yielding effects of transcending intensities. This instrument has since been adopted by other investigators and most of the progress in several fields was achieved by its use.

When radioactivity was discovered, it was thought to be an entirely new manifestation of energy limited to a few substances. I obtained sufficient evidence to convince me that such actions were general and in nature the same as those exhibited by my tubes. In these, minute corpuscles, regarding which we are still in doubt, are shot from a highly electrified terminal against a target where they generate Röntgen or other rays by impact. Now, according to my theory, a radioactive body is simply a target which is continuously bombarded by infinitesimal bullets projected from all parts of the universe, and if this, then unknown, cosmic radiation could be wholly intercepted, radioactivity would cease.

I made some progress in solving the mystery until in 1899 I obtained mathematical and experimental proofs that the sun and other heavenly bodies similarly conditioned emit rays of great energy which consist of inconceivably small particles animated by velocities vastly exceeding that of light. So great is the penetrative power of these rays that they can traverse thousands of miles of solid matter with but slight diminution of velocity. In passing through space, which is filled with cosmic dust, they generated a secondary radiation of constant intensity, day and night, and pouring upon the earth equally from all directions. As the primary rays projected from the suns and stars can pass through distances measured in light-years without great diminution of velocity, it follows that whether a secondary ray is generated near a sun or at any distance from it, however great, its intensity is the same. Consequently, if our sun, or any other, would be snuffed out of existence, it would have no appreciable effect on the secondary radiation. The latter is not very penetrative and is partly absorbed by the atmosphere. According to my determinations, its intensity beyond the atmosphere is about 50 per cent greater than at sea level. The whole atmosphere being equivalent to about 36 inches of lead, it is easy to determine the intensity of this radiation by making a measurement of the penetration at any known altitude. This theory is borne out strikingly in experiments with my vacuum tubes, but even if I did not have such proofs I would consider it plausible.

While the exploration of the upper regions of the atmosphere may yield many important results in other fields, I do not think that it will contribute considerably

to our knowledge of the cosmic rays. In view of this, I believe that we will make much more rapid progress if those who are now taking interest in it will accept my theory and build further on this foundation, instead of embarking on useless errands in quest of mythical rays coming from nowhere.

Nikola Tesla
New York, Feb. 4, 1932

The following is Tesla's statement relating to force and matter, to Einstein's theories, and Tesla's own theory of gravitation. Courtesy of Nikola Tesla Papers, Rare Book and Manuscript Library, Columbia University.

We read a great deal about matter being changed into force and force being changed into matter by the cosmic rays. This is absurd. It is the same as saying that the body can be changed into the mind, and the mind into the body. We know that the mind is a functioning of the body, and in the same manner force is a function of matter. Without the body there can be no mind, without matter there can be no force.

Einstein has for years developed formulas explaining the mechanism of the cosmos. In doing this he overlooked an important factor, namely the fact that some of the heavenly bodies are increasing in distance from the sun. This is the same as writing a business letter and forgetting the subject you wish to write about. In order to explain this phenomenon Einstein has invented the quantity "lambda".

My theory of gravitation explains this phenomenon perfectly.

N. T.

April 15, 1932

New York World Telegram
Aug. 10, 1932

CHEWING GUM MORE FATAL THAN RUM, SAYS TESLA - by Nikola Tesla

(Nikola Tesla, dean of inventors at 76 and pioneer of radio, believes it is essential for the welfare of the country that prohibition end soon. In this article, which he wrote for the World-Telegram, he expresses somewhat unusual arguments against it.)

Much has been said about prohibition and its disastrous consequences, but the sheer folly and perniciousness of this measure cannot be fully appreciated until it is considered from the scientific point of view. It then appears not only unsound in principle but utterly devoid of validity.

Chiefly as a result of dry propaganda people have been led to believe that alcoholic beverages cause serious injuries to mind and body, while other stimulants, as tea and coffee, are almost harmless. I know from careful observation and lifelong experience that the reverse is more nearly true.

Beginning with the enactment of the Volstead law I have been a moderate consumer of alcohol and it never hurt me in the least. On the contrary it helped me many times effectively over the peak of the effort.

It is in striking contrast in its medicinal and dietetic value to all other stimulants which, without exception, are injurious. Even smoking, snuffing or chewing tobacco will eventually impair the health, though not quite so much as chewing gum, which, by exhaustion of the salivary glands, puts many a foolish victim into an early grave.

But by far the greatest number of victims are claimed by tea and coffee. Dr. Alexander Haig, foremost authority on uric acid and founder of his famous diet, says of the former: - "Tea drinking is just like drug taking, in fact, and has just as terrible and fatal results."

Women, in particular, should shun tea as it is a means of committing beauty suicide. In this respect coffee is the very opposite, imparting sometimes to the face a fascinating aristocratic pallor.

I have read books and articles depicting the horrible effect of alcohol on human beings, but always found that the few individuals under observations were either hopeless drunkards or had been weakened by heredity and environment. Obviously every form of excess is injurious. Such an investigation, to be of value, should be limited to moderate drinkers who number in legions and experience no ill effects. They are, as a rule, long lived and considered by life insurance companies the safest policy holders.

Alcohol is not a poison, nor is it a drug. It is not classed as a poison in books on chemistry.

The truth about alcohol is that it acts as a caustic and a solvent. In small quantities it cleans and sterilizes the alimentary channels, thereby preventing infections, and proves a beneficial stimulant to thought, speech and physical exertion.

Alcohol is produced in the normal chemical reactions of the stomach and can be found in every part of the body, even in the brain of a total abstainer.

It is formed, not as a toxic inimical to life, but as a substance indispensable to vital processes.

To illustrate prohibitions's utter folly and danger it is only necessary to point out that a sudden change of diet or the omission of an essential element, especially

in advanced years, may induce high blood pressures, cause malnutrition or otherwise imperil life. When the Volstead act became a law I realized that, accustomed as I was to alcohol, it would be very difficult for me to break off. Only a few days of abstinence made me a very sick man and my health became precarious. Finally, after several months of suffering, little by little I gained and ever since have been a total abstainer.

If an attempt is made to enforce such a law as prohibition and thereby subject a citizen to suffering, danger and possible loss of life he or his relatives should be entitled to substantial reparation and these suits once begun would soon exhaust the treasury.

The Volstead act put the country into panic and unprecedented distress. This is but an unavoidable result of depriving the nation of a revenue of about $200,000,000 a year and compelling it besides to pay to bootleggers nearly twice that sum annually. The tyrannical rule is killing business in some of its most important departments. The hotels and similar institutions are being rapidly forced to the wall.

I remember that in Austria a law compelled every community to keep fires going in the streets during an epidemic of cholera.

In the seventies when I myself contracted the disease all the streets of the city were filled with smoke and stench. Nevertheless the inhabitants died in heaps. It was passed by legislators unacquainted with vital facts of life out of their own sphere. In imposing this measure the legislative bodies have evidently exceeded their authority. Under such circumstance I fail to see why a repeal should be required. Nothing more need be done than to forget the law and so permit it to pass to a state of innocuous desuetude.

New York Herald Tribune
Sept. 11, 1932

PIONEER RADIO ENGINEER GIVES VIEWS ON POWER

Tesla Says Wireless Waves Are Not Electromagnetic, But Sound In Nature

Holds Space Not Curved

Predicts Power Transmission to Other Planets

by Nikola Tesla

The assumption of the Maxwellian ether was thought necessary to explain the propagation of light by transverse vibrations, which can only occur in a solid. So fascinating was this theory that even at present it has many supporters, despite the manifest impossibility of a medium, perfectly mobile and tenuous to a degree inconceivable, and yet extremely rigid, like steel. As a result some illusionary ideas have been formed and various phenomena erroneously interpreted. The so-called Hertz waves are still considered a reality proving that light is electrical in its nature, and also that the ether is capable of transmitting transverse vibrations of frequencies however low. This view has become untenable since I showed that the universal medium is a gaseous body in which only longitudinal pulses can be propagated, involving alternating compressions and expansions similar to those produced by sound waves in the air. Thus, a wireless transmitter does not emit Hertz waves which are a myth, but sound waves in the ether, behaving in every respect like those in the air, except that, owing to the great elastic force and extremely small density of the medium, their speed is that of light.

Suggested Short Waves Early

Since waves of this kind are all the more penetrating, the shorter they are, I have urged the experts engaged in the commercial application of the wireless art to employ very short waves, but for a long time my suggestions were not heeded. Eventually, though, this was done, and gradually the wave lengths were reduced to but a few meters. Invariably it was found that these waves, just as those in the air, follow the curvature of the earth and bend around obstacles, a peculiarity exhibited to a much lesser degree by transverse vibrations in a solid. Recently, however, ultrashort waves have been experimented with and the fact that they also have the same property was hailed as a great discovery, offering the stupendous promise to make wireless transmission infinitely simpler and cheaper.

It is of interest to know what wireless experts have expected, knowing that waves a few meters long are transmitted clear to the antipodes. Is there any reason that they would behave radically different when their length is reduced to about half of one meter?

Waves Go Around World.

As the general knowledge of this subject seems very limited, I may state, that even waves only one or two millimeters long, which I produced thirty-three years ago, provided that they carry sufficient energy, can be transmitted around the globe. This is not so much due to refraction and reflection as to the properties of a gaseous medium and certain peculiar action which I shall explain some time in the future. At present it may be sufficient to call attention to an important fact in this connection, namely, that this bending of the beam projected from reflector does not affect in the least its behavior in other respects. As regards deflection in a horizontal plane, it acts just as though it were straight. To be explicit the horizontal deviations are comparatively slight. In a proposed ultrashort wave transmission, the vertical bending, far from being an advantage, is a serious drawback, as it increased greatly the liability of disturbances by obstacles at the earth's surface. The downward deflection always occurs, irrespective of wave length, and also if the beam is thrown upward at an angle to the horizontal, and this tendency is, according to my finding, all the more pronounced the bigger the planet. On a body as large as the sun, it would be impossible to project a disturbance of this kind to any considerable distance except along the surface.

It might be inferred that I am alluding to the curvature of space supposed to exist according to the teachings of relativity, but nothing could be further from my mind. I hold that space cannot be curved, for the simple reason that it can have no properties. It might as well be said that God has properties. He has not, but only attributes and these are of our own making. Of properties we can only speak when dealing with matter filling the space. To say that in the presence of large bodies space becomes curved, is equivalent to stating that something can act upon nothing. I, for one, refuse to subscribe to such a view.

Need Radio Channels.

The chief object of employing very short waves is to provide an increased number of channels required to satisfy the ever-growing demand for wireless appliances. But this is only because the transmitting and receiving apparatus, as generally employed, is ill-conceived and not well adapted for selection. The transmitter generates several systems of waves, all of which, except one, are useless. As a consequence, only an infinitesimal amount of energy reaches the receiver and dependence is placed on extreme amplification, which can be easily affected by the use of the so-called three-electrode tubes. This invention has been credited to others, but as a matter of fact, it was brought out by me in 1892, the principle being described and illustrated in my lecture before the Franklin Institute and

National Electric Light Association. In my original device I put around the incandescent filament a conducting member, which I called a "sieve." This device is connected to a wire leading outside of the bulb and serves to modify the stream of particles projected from the filament according to the charge imparted to it. In this manner a new kind of detector, rectifier and amplifier was provided. Many forms of tubes on this principle were constructed by me and various interesting effects obtained by their means shown to visitors in my laboratory from 1893 to 1899, when I undertook the erection of an experimental world-system wireless plant at Colorado Springs.

During the last thirty-two years these tubes have been made veritable marvels of mechanical perfection, but while helpful in many ways they have drawn the experts away from the simpler and much superior arrangement which I attempted to introduce in 1901. My plans involved the use of a highly effective and efficient transmitter conveying to any receiver at whatever distance, a relatively large amount of energy. The receiver is itself a device of elementary simplicity partaking of the characteristics of the ear, except that it is immensely more sensitive. In such a system resonant amplification is the only one necessary and the selectivity is so great that any desired number of separate channels can be provided without going to waves shorter than a few meters.

For this reason, and because of other shortcomings, I do not attach much importance to the employment of waves which are now being experimented with. Besides, I am contemplating the practical use of another principle, which I have discovered and which is almost unlimited in the number of channels and in the energy three-electrode tubes. This invention has been credited to others, but as a matter of fact, it was brought out by me in 1892, the principle being transmitted. It should enable us to obtain many important results heretofore considered impossible. With the knowledge of the facts before me, I do not think it hazardous to predict that we will be enabled to illuminate the whole sky at night and that eventually we will flash power in virtually unlimited amounts to planets. It would not surprise me at all if an experiment to transmit thousands of horsepower to the moon by this new method were made in a few years from now.

N. Y. Evening Post
June 5, 1933

MR. TESLA WRITES

To the Editor of the Evening Post:

Sir - Many of your readers, like myself, will feel indebted to you for your courageous and telling editorials relating to the investigation of the affairs of J. P. Morgan & Co. You have condemned these unfair proceedings in terms none too strong. Their undignified character is brought into evidence more and more, and it is becoming apparent even to the dullest observer that the honor and reputation of this famous banking house is resting on a foundation as solid as the Rock of Gibraltar. Perhaps it is fortunate that this investigation has been pushed so far, for in these times when confidence is most needed, the Morgans, in meeting these attacks, may be rendering the country service of inestimable value.

The general public has not even a remote idea of the position of this firm as a factor in the development of America. More than any other force, they were instrumental in the furtherance of American interests throughout the world and in the building up of this country's power and prestige. Scores and scores of vast enterprises could not have been carried out but for their financial assistance. They helped Edison in commercializing his inventions and contributed to my own scientific researches with princely generosity. Edison and myself were only two among hundreds of inventors, engineers, artists and scientific men whose work they made possible. They advanced capital when all other doors were closed, stabilized the markets and fought depressions, not half-heartedly like others but with all their energies and resources, and at a peril to themselves. What they have added to national wealth staggers imagination.

I was intimately acquainted with the founder of this great house and know that his spirit is still with his successors. He set the example and they are endeavoring to emulate him with almost religious fervor. Persons worthy of respect can be found everywhere, but I have observed in the House of Morgan a largeness, nobility and firmness of character the like of which is very scarce indeed.

I can only smile when I read of the attempts to find something discreditable in the transactions of J. P. Morgan & Co. Not a hundred of such investigations will ever uncover anything which an unprejudiced judge would not consider strictly honorable, fair, decent and in every way conforming to the high ideals and ethical standards of business. I would be willing to stake my life on it.

NIKOLA TESLA.

New York, June 2, 1933.

Breaking Up Tornadoes

By NIKOLA TESLA

EVERY year whirling tornadoes cause great damage in the United States; and this disaster, like earthquakes, has hitherto been accepted as unavoidable. But the great scientist and inventor, Nikola Tesla, who has given the matter special study, both experimentally and theoretically, here proposes a practicable plan for the organization of a national government service to combat and break up tornadoes, when forming; just as a fire department responds to an alarm and overwhelms the blaze while it is still small. It is to be hoped that this proposal will be met by official investigation and adequate action at Washington.—EDITOR.

● MANY reports of tidal air waves, cyclones, and especially of tornadoes describe actions which are unbelievable; and to account for them some observers have assumed velocities of the order of those attained in explosives.

Just to get an idea, suppose that one pound of dynamite occupying the whole volume of its container is ignited. The maximum theoretical velocity *(See Note A at end of article for calculation)* attained in a perfect nozzle is 11,400 feet per second, which is obviously far above that actually attained at the mouth. In such an explosion, however, the gases are projected through a hemispherical opening of great area with correspondingly smaller speed, which is further reduced in accelerating the free air. Thus, at a small distance from the center of the disturbance, the tidal wave advances with the speed of sound; that is, 1089 feet per second.

I have had many opportunities for checking this value by observation of explosions and lightning discharges. An ideal case of this kind presented itself at Colorado Springs in July, 1899, while I was

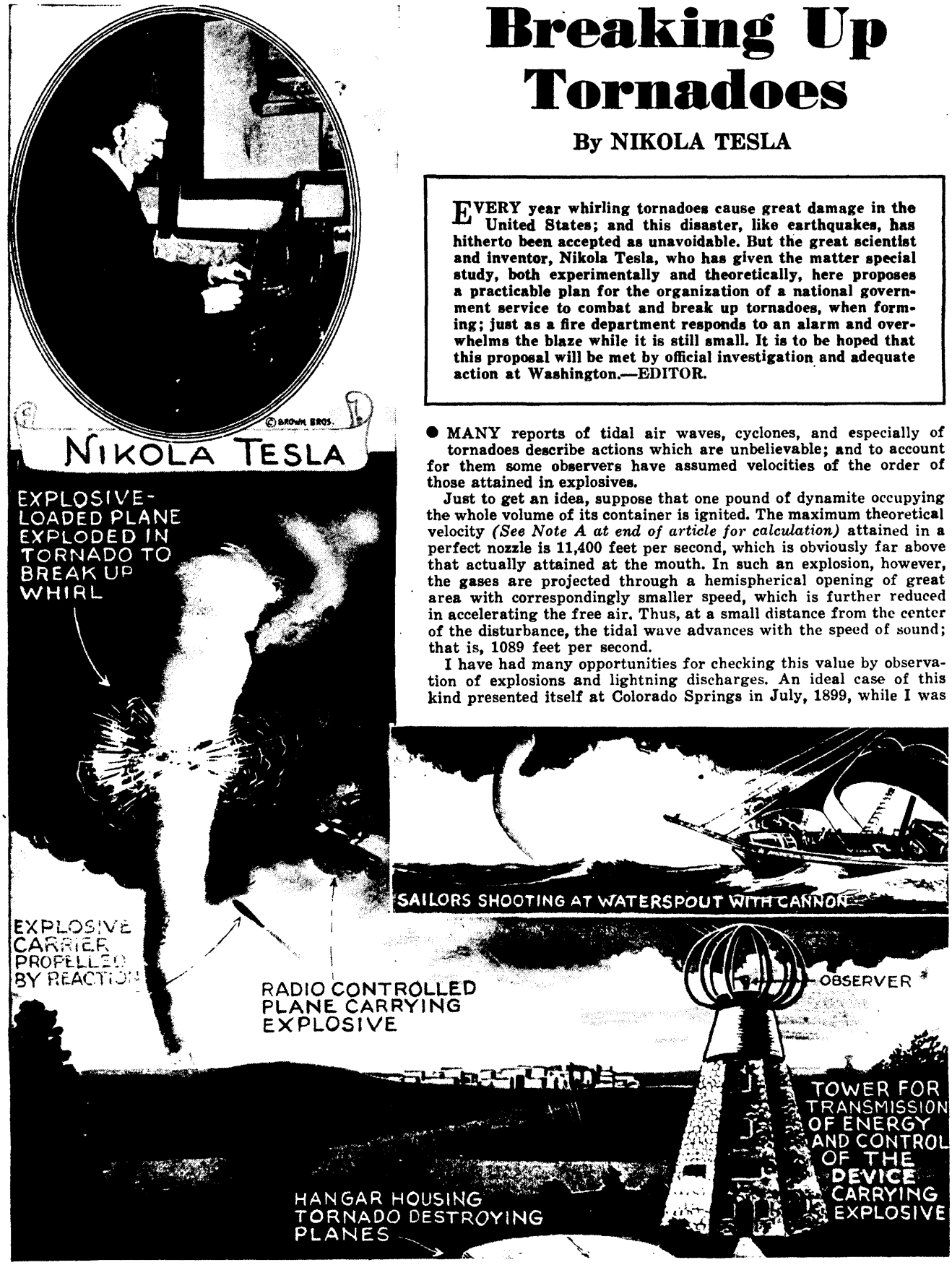

The old idea of shooting at a waterspout was correct in principle, but insufficient in force. Yet, as calculated here, the force of a tornado can be overcome by modern explosives, which might be efficiently and safely applied as shown.

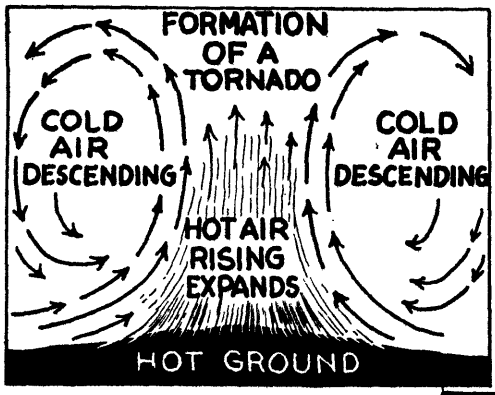

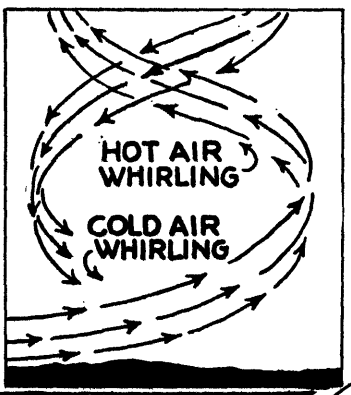

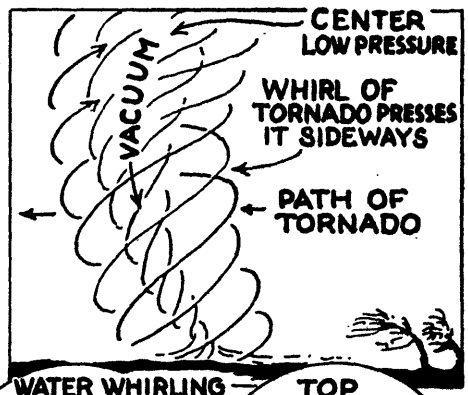

carrying on tests with my broadcasting power station (which was the only wireless plant in existence at that time). A heavy cloud had gathered over Pike's Peak range, and suddenly lightning struck at a point just ten miles away. I timed the flash instantly and, upon making a quick computation, told my assistants that the tidal wave would arrive in 48½ seconds. With exactly the lapse of this time interval, a terrific blow struck the building, which might have been thrown off the foundations had it not been strongly braced. All the windows on the exposed side and a door were demolished, and much damage was done in the interior. Taking into account the energy of the electric discharge and its duration, as well as that of an explosion, I estimated that the concussion was about equivalent to that which might have been produced by the ignition of twelve tons of dynamite. Though the mechanical effects of lightning bolts diminish with the square of the distance, they are still plainly observable within the range of six hundred miles.

It should be borne in mind that these actions are of very small duration, and that a steady gale of such velocity would produce appalling effects. It would quickly erode and grind up the hardest materials, fuse metals by friction and impact and burn up anything that is combustible. Objects, no matter how large and heavy, would be carried off like feathers, and even a mountain range could not resist for any considerable period of time; since

the pressure on an area normal (perpendicular) to the direction of the air blast would be close to three thousand pounds per square foot. Certainly, the inhabitants of this globe have reasons to congratulate themselves that such storms are impossible. Tornadoes, such as actually occur, are bad enough.

The fact is that relatively very small velocities of the wind are quite capable of producing the actions noted even though they may appear astonishing and puzzling at first thought. To illustrate, consider the mechanical effect of a stalk of dry grass or straw hurled normally against a wooden plank with a speed of only 150 feet per

(Continued on page 905)

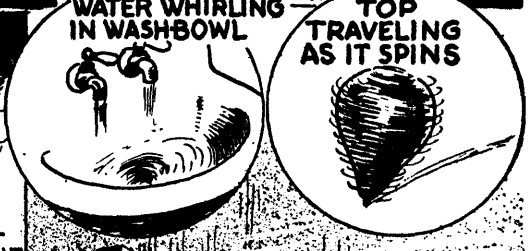

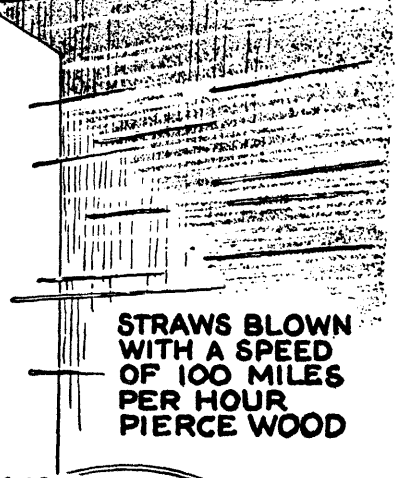

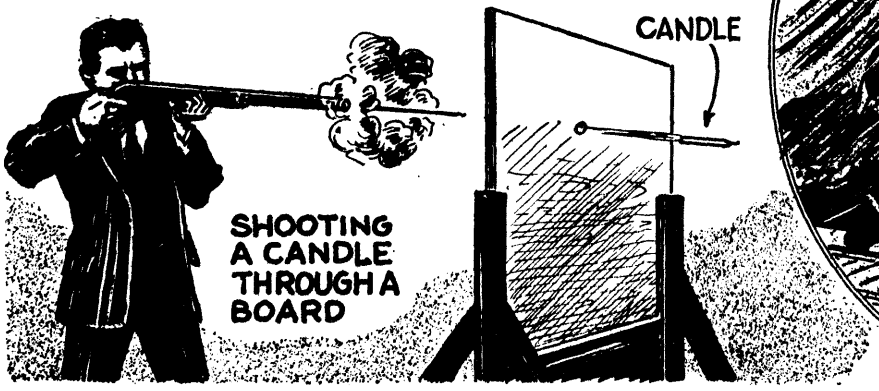

The formation of a tornado is shown above; it spins, as do the waste water and the top. Its tremendous velocity of rotation enables it to accomplish many of the freak results shown; just as when the soft candle is shot undamaged through a hard board.

Breaking Up Tornadoes

(Continued from page 871)

second. (See Note B) The force of 2929.5 pounds per square inch is much more than the plank can withstand; the compressive strength of oak perpendicular to the grain being less than half of that. Evidently, then, an effect of this kind can be surely expected even with much smaller speed, especially if the stalk is pointed.

In this connection it is of interest to mention a classical experiment, which used to be shown to students in some European institutions of learning. It consisted in firing from a gun a tallow or stearin candle at a board 0.4-inch thick. To the amazement of the onlookers, the soft missile not only went through the wood but did not appear much worse for the experience. The secret of success was in the quickness of the transit, not giving enough time for the mass of the candle to yield. The obvious inference from such action is that an exposure to a windstorm is always fraught with danger to life; for bits of flying material, not excluding pieces of straw, may penetrate deeply into the flesh. If my memory serves me right, I have read of serious accidents of this sort.

But the highest air velocities observed in storms are not, in themselves, adequate to explain certain stupendous performances of the wind, such as lifting loaded cars and locomotives and hurling them to great distance. When I first read such reports, many years ago, they afforded me amusement as I took them for original American **canards**, often sprung on unsophisticated foreigners. When I found, to my unspeakable astonishment, that they were substantially true I endeavored again and again to prove them by theories and calculations; but it was only lately that I solved this long-standing riddle.

Whirling movements of the atmosphere have been known and dreaded since time immemorial, but, beyond accounts of their destructive actions, mostly uncertain, little positive information can be found about them. In 1862 was published by H. W. Dove an important work, entitled "The Law of Storms"; dealing chiefly with cyclones, which frequently extend over a large portion of the globe and travel thousands of miles before their energy is spent. These are easily studied and the chief facts concerning them are now well known. Not so the incomparably more dangerous **local storms, the real tornadoes**, which are sudden, erratic, ephemeral (short-lived) and extremely violent manifestations difficult to investigate.

Of late years the U. S. Weather Bureau and the Smithsonian Institution have been supplying data which are reliable and of value in connection with the subject; nevertheless, our knowledge of tornadoes is still fragmentary. Ignoring newspaper reports, which are not quite reliable, and confining myself to facts unmistakably established, I have come to certain conclusions regarding these phenomena, which might be important, and can be summarized as follows:

(1) The maximum velocity of the air forming the funnel probably never exceeds, say, 235 feet per second or about 160 miles an hour; which I think ample to explain all the actions observed. In his "Manual of Meteorology," an exhaustive treatise lately published, Sir William Napier Shaw makes the state-

(Continued on page 920)

Learn at Home to Make More Money

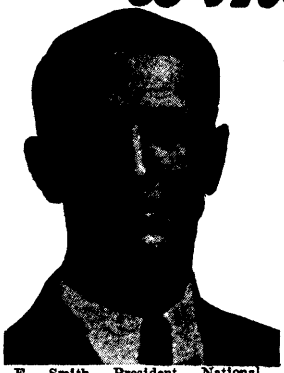

J. E. Smith, President, National Radio Institute, the man who has directed the Home-Study training of more men for the Radio Industry than any other man in America.

I'll train You Quickly for Radio's GOOD spare time and full time Jobs . . .

Why slave your life away in a no-future job? Why skimp, why scrape trying to pay your bills? I'll train you quickly for the live-wire field—the field with a future—RADIO. $40, $60, $75 a week—that's what many Radio Experts make. $5, $10, $15 a week extra money—that's what many of my students make in their spare time shortly after enrolling. My free books tells you about Radio's spare-time and full-time opportunities—about my tested training—about my students and graduates—what they are doing and making. Get this book. Be a Radio Expert. The Radio field is big enough to absorb many more properly trained men.

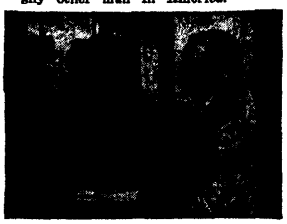

Jobs in Broadcasting Stations are fascinating, interesting, and pay well.

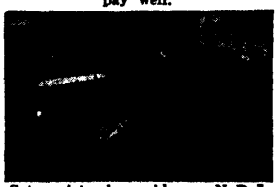

Set servicing has paid many N. R. I. men $200 to $1,000 a year for their spare time. Full-time men make as much as $40, $60, $75 a week.

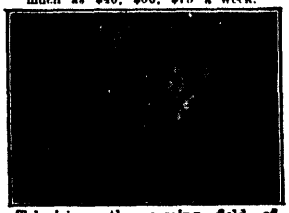

Television, the coming field of great opportunities, is covered in my Course.

Some Other Jobs N.R.I. Trains Men For

Broadcast Engineer.
Operator in Broadcast Station.
Aircraft Radio Operator.
Operator of Airway Beacons.
Government Radio Operator.
Ship Operator.
Serviceman on Loud Speaker Systems.
Installation Engineer on Loud Speaker Systems.
Sales Manager for Retail Stores.
Service Manager for Retail Stores.
Auto Radio Installation and Serviceman.
Television Broadcast Operator.
Television Engineer.
Set Servicing Expert.

I'll train you for jobs like these

Spare-time and full-time Radio Servicing, Operating Broadcast, Aircraft Radio, Commercial Land, Ship, and Television stations, a Radio service business of your own. I'll train you for these and other good jobs in the manufacture, sale, and service of Radio and Television apparatus. My FREE book tells you about the many money-making opportunities in Radio.

Save—learn at home in your spare time

You don't have to leave home and spend $500 to $1,000 to study Radio. I'll train you quickly and inexpensively right in your own home and in your spare time for a good Radio job. You don't need a high school or college education. Many of my successful graduates didn't even finish grade school. My amazingly practical 50-50 method of training—half with lessons, half with Radio equipment—gives you broad practical experience—makes learning at home easy, fascinating, practical, and rapid.

Many make $5, $10, $15 a week extra in spare time almost at once

My book shows how my special training, instruction material, plans, ideas and my nineteen years' experience training men for Radio careers have helped many students make $200 to $1,000 a year quickly in their spare time. My Course is famous as "the one that pays for itself."

Your money back if not satisfied

I'm so sure you will be satisfied with my training that I agree in writing to refund every penny of your money if you are not entirely satisfied with my Lessons and Instruction Service when you finish.

Find out what Radio offers you

Act today. Mail the coupon. My 64-page book will be sent free to any ambitious fellow over 15 years of age. It tells about Radio's opportunities—explains the eighteen star features of my Course—shows letters of what others are doing and making. There is no obligation. Mail the coupon.

J. E. SMITH, President
National Radio Institute
Department $NC
Washington, D. C.

Here's Proof

"Made $6,000 in 2 years"

"Soon after the depression started, I found myself without a job, but I was well protected with N. R. I. training. I swung right to full-time Radio servicing and I have made over $6,000 in a little over two years."—WM. SPARTIVENT, Sparty Radio Service, 93 Broadway, Newark, N. J.

"$500 a Year in Spare Time"

"Although doing spare-time Radio work only, I have averaged about $500 a year extra in addition to my regular income. Full-time Radio work would net me many times that amount."—EDW. H. FAWCETT, Slough Rd., Ladner, B. C., Canada.

"Good Position, Good Pay"

"I am Chief Operator at Radio Station WSMK. This is a good position with good pay. I have advanced in Radio right along. I recommend N. R. I. to anyone who wants to be successful in Radio."—JOHN HAJDUK, JR., 3 Broxey Apts., Southern Hills, Dayton, Ohio.

ACT TODAY

MAIL THIS NOW for FREE book

J. E. SMITH, President
National Radio Institute, Department $NC
Washington, D. C.

Dear Mr. Smith: Without obligating me, send your book which points out the spare-time and full-time job opportunities in Radio and explains your amazingly practical 50-50 method of training men quickly and inexpensively at home in their spare time to be Radio Experts. (Please print plainly)

NAME.....AGE.....

ADDRESS.....

CITY.....STATE.....

Opportunity Ad-lets

Advertisements in this section fifteen cents a word for each insertion. Name, initial, and address must be included at the above rate. Cash should accompany all classified advertisements unless placed by an accredited advertising agency. No advertisement for less than 10 words accepted. Ten per cent discount for 6 issues, 20 per cent discount for 12 issues. Objectionable or misleading advertisements not accepted. Advertisements for the January, 1934, issue must reach us not later than October 28th. EVERYDAY SCIENCE AND MECHANICS, 100 Park Place, New York, N. Y.

Advertising Agencies

ADVERTISE: 24 Words in 250 newspapers $10.00. Lists free. Advertising Service Bureau, 4650 Drexel, Chicago.

Agents Wanted

FREE Booklet describes 87 plans for making $20-$100 weekly in home or office. Business of your own. Elite Co., 214-J Grand Street, New York.

BIG Money applying gold initials on automobiles. Easiest thing today. No experience needed. Free Samples. "RALCO," 1084 Washington, Boston, Mass.

FREE Literature describing many money-making plans. K-Belfort, 4042 N. Keeler, Chicago.

MAKE Your own products. Employ agents yourself. Toilet articles, soap, extracts. We furnish everything. Valuable book free. National Scientific Laboratories, 1970W Broad, Richmond, Va.

MAKE money. Collect $8, keep $5. Two quick-selling, dollar per month, "hard times" life policies. Fidelity Mutual Benefit Association, Department A, Rockford, Ill.

WINDOW SIGN LETTERS
500% profit. Free Sample.
METALLIC CO., 441 N. Clark, Chicago.

CASH income daily resilvering mirrors at home. Re-plating auto parts, reflectors, tableware, etc. Outfit furnished. Write SPRINKLE, Plater, 955, Marion, Indiana.

MAKE Products yourself—Tested Formulas. Catalog free. Grinstead Laboratory, Edwardsville, Illinois.

GOOD income plating auto parts, reflectors, mirrors, by new method. Outfits furnished; free particulars. Gunmetal Co., Ave. E, Decatur, Ill.

Boats

BUILD 12-foot rowboat, blueprint, 30c; 16-foot utility outboard, 50c. Robert Steward, 2541 East 19th, Brooklyn, N. Y.

Business Opportunities

PROFITS Quick, enormous, no soliciting. Men, women, get facts. McArthur Co., Desk 21, Butte, Montana.

MAKE Products yourself. Tested formulas—catalog free. Grinstead Laboratory, Edwardsville, Illinois.

LIQUID Marble—anyone can make! Applied with brush or molded. Rubberlastic molds; liquid porcelain; composition flooring. Big money-making these! Particulars free. Rapid Service, Edwardsville, Illinois.

Chemistry

EXPERIMENTERS—Join Science Club. Apparatus and monthly magazine given free! Membership, 25c now. Sciencecraft, T-5049 Bernard, Chicago.

Clubs

JOIN: American Amateur Physicists' Society. Journal, particulars, 10c. Westtown, Penna.

Detectives

BE A Detective. Make secret investigations. Experience unnecessary. Write, Ray Stults, 1623 W. Grand, Chicago, Ill.

Dogs

BEAUTIFUL Registered bull pups, $15. Bulldogs, 501-ESM, Rockwood, Dallas, Texas.

Educational Bargains

USED Correspondence Courses and Educational Books sold or rented. Inexpensive. Money-back agreement. Catalog listing 3000 bargains—FREE. (Courses Bought.) Lee Mountain, Pisgah, Alabama.

Formulas and Trade Secrets

FORMULAS—All kinds. Guaranteed. Catalog free. "KEMICO," R-17, Parkridge, Ill.

FORMULAS—Interesting literature free. K-Belfort, 4042 N. Keeler, Chicago.

TESTED Formulas. Newest—guaranteed. Catalog free. Grinstead Laboratory, Edwardsville, Ill.

"CHEESE CHIPS"! Genuine formula! Big money maker! Tremendous profits! Easily made. Information free. W. J. Lynch, 119-K, North Fifth, Springfield, Ill.

SUCCEED with your own products. Formulas, processes, analytical service. Formula catalog free. D. Thaxly Co., Washington, D. C.

For Inventors

INVENTORS—Sell your inventions before patenting. Free particulars. Write W. T. Greene, 943 Barrister Bldg., Washington, D. C.

INVENTIONS now salable before patenting. Safe, practical. For information, write Chartered Institute, 550 Barrister Bldg., Washington, D. C.

WANTED: New meritorious articles to manufacture or sell on a royalty basis. Chas. Muller, 809 West Madison St., Chicago.

Hypnotism

"THE Master Hypnotist"—25c. Dr. Lonk, (Hypnotist), D-1913, Palatine, Illinois.

Instruction

WANTED: Men—women, age 18 to 50, qualify for steady future government positions; commence $105-$175 month. Common education sufficient. Write, Instruction Bureau, 149, St. Louis, Mo.

FORESTRY Work easily available. $175 month. Cabin, Hunt, trap, patrol. Get details immediately. Rayson Bureau, K-19, Denver, Colorado.

Magic

WE Supply every noted magician with magic. Illus-trated catalogue, 25c. Holden, 234 West 42nd St., New York City.

Mail Service

FOR Personal or business purposes. New York address is an asset to you. Prompt, reliable service. $2.00 monthly. (Remailed daily.) New York Mail Service, 15 Park Row, New York City.

Modelmaking

LARGEST Assortment of model airplanes and boat accessories in the world. Send 10c complete catalog. Selley Company, 1873E Gates Avenue, Brooklyn, N. Y.

Motorcycles and Bicycles

SEND 15c for illustrated used Motorcycle catalog. Large stock. Bargains. Indian parts. Accessories. Indian Motorcycle Sales, Kansas City, Mo.

Motor Winding Data

MOTOR Winders: Winding data, 100 motors, special selection, various horsepower and voltage, $1.00. Motor Data Service, 3002 Monroe, Kansas City, Mo.

Patent Attorneys

PATENTS Secured. Low cost. Write for book "How to Get Your Patent" and Record of Inventor's Certificate. Personal skillful service assured. 35 years experience. Preliminary advice free. L. F. Randolph, 347 Victor Building, Washington, D. C.

PATENT—Small ideas may have large commercial possibilities. Write immediately for information on how to proceed and "Record of Invention" form. Delays are dangerous to patent matters. Clarence A. O'Brien, 5447 Adams Building, Washington, D. C.

PATENTS. Booklet free. Highest references, best re-sults. Promptness assured. Watson E. Coleman, Registered Patent Attorney, Victor Building, Washington, D. C.

Photo Developing

FILMS Developed 5c per roll; prints 3c each. Ask for special bargain list. Roanoke Photo Finishing Company, 157 Bell Ave., Roanoke, Va.

Printing

500 TWO-Color letterheads, $1.75. Samples free. Delmar, 947-D North Rural, Indianapolis.

Salesmen

WONDERFUL Opportunity. $20.00 a day can be earned. No experience necessary. You can start at once. Showing the latest thing out. Self-protection and home protection at cost. Ages 1 to 80. Not insurance but provides benefits up to $1000.00 natural or accidental death. $20.00 per week if sick or injured. Address National Aid Society, Dept. F, Springfield, Illinois.

Songwriters

SONGWRITERS! Poems, melodies. Amazing opportunity. Hibbeler, D26, 2104 Keystone, Chicago.

Stuttering and Stammering

STUTTERING and stammering easily and effectively cured at home. Booklet free. Box 807, Butler, Penna.

FOR SALE, BARTER AND EXCHANGE

As an aid to our readers, all advertisements to be inserted in this department are accepted at 2c a word; name, address, street number, etc., each counting for one word. No advertisements for less than fifteen (15) words accepted. The Publishers are not responsible for difficulties arising out of the trades. In this department, only advertisements for private individuals can be accepted. EVERYDAY SCIENCE AND MECHANICS reserves the right to reject any advertisement that conflicts with the policy of this magazine. Send all "Swap" advertisements to EVERYDAY SCIENCE AND MECHANICS, 100 Park Place, New York, N. Y.

BOYS! YOUNG MEN! LEARN TO FLY! GUARAN-teed home-study course in aviation, only $1.00, postpaid. Complete, accurate, reliable. Special offer. Rush dollar now. Your money back if not satisfied. Address—Aviation Service, Box 182, Robertsdale, Penna. Fathers! An entire flying education for your boy. A wonderful Christmas Gift.

WILL SWAP ENCYCLOPEDIA BRITTANICA. 9th edition. 25 massive volumes, over 21,000 pages crammed with useful knowledge. What have you to offer. Albert Taylor, Steele Peace, Amityville, New York.

Breaking Up Tornadoes

(Continued from page 905)

ment that speeds of 300 miles per hour or 440 feet per second, and even more, may be attained, which is most unlikely to be the case. It must be borne in mind that an air blast of 150 feet per second readily carries off bricks and other such heavy objects.

(2) Contrary to popular notion, attributing to the tornado immense energy, it has much of the peculiarity of an explosive. Its power is great because of concentration and swiftness of action, but the energy is surprisingly small. Just to give a rough approximation, consider a whirl of an outside diameter of 1200 feet at the top, about the same height, and a diameter of 300 feet at the base (**See Note C**). The same energy would be developed by the consumption of 1.24 tons of gasolene or 5.74 tons of dynamite. It should be stated, however, that this estimate is by far too high; for the whole funnel is not filled with air of uniform density and not all of it spun at maximum speed.

(3) The tornado whirl is a huge pump, drawing air through the opening at the top and discharging it from the periphery (rim) at the same rate, simultaneously producing rarefaction in the interior. In this respect its action may be likened to that of a multi-staged vacuum pump; for, as the air rushes from the top to the base, more and more of it is drawn to the periphery, increasing progressively the vacuum which may thus attain a high value near the ground. That accounts for the gradual contraction of the whirl. What degree of rarefaction is actually reached in this monstrous contrivance of nature may be roughly estimated when considering that, for any horizontal section of the funnel, the centrifugal force of the air is balanced by the oppositely-directed differential pressure existing between the outside and interior of the whirl. Other things being alike, the centrifugal force is inversely as the **radius of gyration** (average distance of the mass from the center); therefore the contraction of the funnel is, at least, a coarse measure of the rarefaction.

To be explicit, if the diameter close to the ground is one quarter of that near the top, then it may be safely inferred that the vacuum at the base must be about four times higher than in the top region, where there is no appreciable contraction.

As the measured pressure difference in pumps is somewhat greater than that given by the formula (**Note D**) it is tolerably certain that in the case considered a vacuum of not less than four inches would be attained.

(4) Most of the mechanical effects of a tornado are, as a rule, greatly intensified through water, dust, sand and other objects carried by the blast. Even though these materials may be present in a very small percentage by volume, they are hundreds or thousands of times heavier than the air, and may add enormously to the momentum and impact.

(5) The translatory (from place to place) motion of the funnel is rather across, and not in the direction of the wind, as commonly believed. This is due to its rapid rotation, causing the so-called Bernouilli or Magnus effect, only much more intense. The force pushing it across the wind may be many times greater than that urging it along the same. The whirl is propelled from the side of greater static pressure, where the rotation is **against the wind and to-**

NEW MORALS *for* OLD

Now comes a daring new book about sex, different from any other you may have ever read before. It is a book written especially for men and women who are not afraid to face the facts, and who want to learn the real truth about sex and sexual intimacies.

This startling new book, by Dr. William J. Robinson, discusses in the plainest language everything pertaining to the sex life, both in marriage and out of it. Is it wise to think of morals only as it concerns sex? Is it right to think of love as being possible only in marriage? These vital questions, and many more are discussed openly and frankly in this great book. It gives you an amazing new view of the whole question of sex, as seen by a famous Sexologist whose works are praised the world over.

This Partial Table of Contents gives you a faint idea of the value and the completeness of Dr. Wm. J. Robinson's wonderful new book, entitled:

SEX, LOVE *and* MORALITY

Principles of General and Sexual Morality
Promiscuous Relations
Extra-Marital Relations, with 10 Illustrations
When Love Complicates the Problem
Frankness Between Husband and Wife
The Domestic Trio
Love and Sexual Intercourse
Wrong View of Sanctions and Duties of Love
Sexual Favors
The Double Standard
Unnatural Methods of Love
Definition of Prostitution
Prostitute's Moral Level
Prostitute's Mental Level
Ethics of Prostitution
Does Prostitution Supply a Genuine Need?
Will Prostitution Ever Disappear Entirely?
What to Do With the Prostitute
Three Kinds of Prostitutes
Homosexuality, Transvestitism, and Sadism
Rape
Incest
Masturbation
Abortion
Prevention or Birth Control
Divorce
Alimony
Breach of Promise
Illegitimacy
Miscegenation
Sex—What to Do About It.

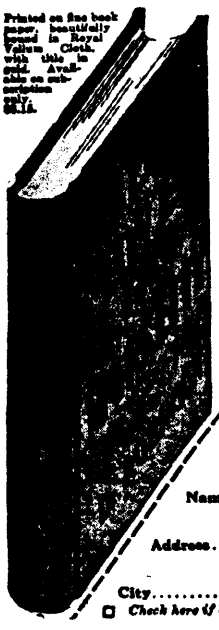

Printed on fine book paper, beautifully bound in Royal Vellum Cloth, with title in gold. Available on subscription only. $3.15.

Limited Edition, Write Today

Because of its unusual frankness, this great book may be obtained *only by subscription*. The number of copies on hand is strictly limited, and once they are gone you may never have another opportunity to obtain "Sex, Love and Morality." Take no risks. Make certain that YOU will own a copy of this vitally important work. Mail your order at once. Fill in the coupon now, before you turn this page.

Grenpark Company
965 Park Place,
New York, N. Y.

Enclosed is my remittance for $3.15, for which please send me prepaid in *plain wrapper*, a copy of the Limited Edition of "Sex, Love and Morality" by Dr. William J. Robinson.

Name.....

Address.....

City.....State.....

☐ *Check here if book is to be sent C. O. D.*

wards which it leans, in the direction of the opposite side where the reverse condition exists. It is well to remember this in such a storm. If the observer sees a leaning funnel, he is in no immediate danger, but if the funnel appears straight he should run for shelter at once.

It will now be easy to show how a large and very heavy body, such as a loaded railroad car or locomotive, can be lifted by the tornado and transported to considerable distance. American locomotives, which are the biggest in the world, may have a length of 66 and a width of 11½ feet, presenting thus 760 square feet in horizontal projection. At the moment the whirl strikes the vehicle, the wheels, connections and other obstacles under the main body arrest the motion of the air, causing a static pressure of 138 pounds per square foot in excess of that of the atmosphere. But as determined above, owing to the vacuum, a pressure difference of four inches of mercury (that is, two pounds per square inch or 288 pounds per square foot) is maintained, making the whole difference of pressure between the spaces under and above the locomotive 288+138=426 pounds per square foot. The total upward push exerted on the exposed area of 760 square feet is thus 323,760 pounds, which is much more than the weight of such a locomotive (estimated at 280,000 pounds when fully equipped for service).

Ordinarily, the weight should be much smaller; and one can readily see that the vehicle may be instantly raised in a spiral, accelerated and hurled away tangentially to great distance. The average person may be surprised that an insignificant vacuum is sufficient for so stupendous a display of force; but the figures afford an unmistakable proof. I may add that I have assumed minimum values which will be, in all probability, greatly exceeded.

The constant fear of danger from tornadoes and the great losses of life and property which they cause in certain parts make it very desirable to find some means of effectively combating, if not preventing them. Whenever man attempts to interfere with the order of things determined by immutable laws, he finds that his efforts are utterly insignificant when compared with the vast movements of energy in Nature.

One of the greatest possible achievements of the human race would be the control of the precipitation of rain. The sun raises the waters of the ocean and winds carry them to distant regions, where they remain in a state of delicate suspension until a relatively feeble impulse causes them to fall to earth. The terrestrial mechanism operates much like an apparatus releasing great energy through a trigger or priming cap.

If man could perform this relatively trifling work, he could direct the life-giving stream of water wherever he pleased, create lakes and rivers and transform the arid regions of the globe. Many means have been proposed to this end, but only one is operative. **It is lightning, but of a certain kind.**

More than 35 years ago, I undertook the production of these phenomena and, in 1899, I actually succeeded, using a generator of 2,000 horsepower, in obtaining discharges of 18,000,000 volts carrying currents of 1,200 amperes, which were of such power as to be audible at a distance of 13 miles. I also learned how to produce just such lightnings as occur in Nature, and mastered all the technical difficulties in this connection. But I found that even the small

FREE RADIO CATALOG
1934 RADIO CATALOG
Write for our new catalog . . . . most complete line of latest radio sets, service men's supplies, replacement parts at lowest wholesale prices.
ALLIED RADIO CORP.
833 W. Jackson Blvd. Dept: F Chicago

"What Makes It Light" ?
Make Big Money Asking this Question
MYSTERY CIGAR LIGHTER New Scientific Marvel
Entirely new principle of ignition. It surprises, it amazes, it sells like wildfire. No Flint or Friction. All guaranteed. Sample with Sales Plan 25c. Sample Gold, Silver or Chromium Plated $1. Agents write for a real money-making proposition.
NEW METHOD MFG. CO., Desk ES-12, Bradford, Pa.

RAISE-SELL MUSHROOMS earn MONEY IN YOUR HOME
MAKE $40 or more EVERY WEEK in spare time, many work; big profits. Growing cellar, shed, etc. We supply materials; TEACH YOU to earn big profits and buy your crop. Send for FREE illustrated, booklet containing COMPLETE plans. Write today. Ask for free $1 thermometer offer.
ILLINOIS MUSHROOM INDUSTRIES
84 W. Illinois St. Dept. 589 Chicago, Ill.

MAKE 200 TOYS an Hour for 1 Each
Fun and profit, making and selling metal toys. Complete casting and coloring outfit only $2.75. Each casting mold makes three different figures. Ask your dealer; if he can't supply, write us. State choice of U. S. Soldiers, Indians, Machine Gunners, Sailors, Continental Soldiers, Football or Baseball players.
FREE BOOK of illustrations and instructions sent on request
RAPAPORT BROS.
715 W. Ohio St.
Chicago

TRICKS WITH 110 VOLTS
Electric Fun! Make toy motors, buzzers, tops, machine guns, arcs, shockers, lights obedient to the voice, window novelties, floating rings, spirit rapping—all kinds amusing and practical electrical devices. Our book gives full directions for doing 200 stunts with 110 volts, A. C. Price postpaid $1.00.
Cutting & Sons, 123 E. St., Campbell, Calif.

3 DIMES WILL BUY THIS UNIQUE TYPEWRITER
A REAL SURPRISE SIZE ... WELL BUILT METAL TYPE SEND 3 DIMES WELL WRAPPED
FOR BOYS AND GIRLS

MYSTERY CLUB
Join "The Junior Magician's Club." Headquarters in Magic City of Hollywood. Send two dimes for secret catalog. Club pin and Membership card. Also FREE "puzzler."
PALACE OF MYSTERY
Dept. A Box 65 Hollywood, Calif.

RAISE RABBITS FOR US
WE SUPPLY STOCK AND BUY WHAT YOU RAISE
PAYING YOU HIGHEST PRICES—Established 20 Yrs.
Rabbit book catalog and monthly market bulletin showing prices we pay our breeders, 10c. Address
OUTDOOR ENTERPRISE CO., Inc., Box 436 NEW CITY, N. Y.

$50 A WEEK AT HOME!
Experience unnecessary. Grow year 'round in basement, cellar, garage, idle places. We buy crop. FREE BOOK.
MUSHROOM GROWERS ASSOCIATION
431-FY N. Clark St. Chicago, Illinois

Print Your Own
Cards, Stationery, Circulars, Paper, etc. Save money. Print for others, big profit. Complete outfits $8.85, $11, $29. Job press $11, $29. Rotary $149. All easy, rules sent. Write for catalog presses type etc. THE KELSEY CO., P-15, Meriden, Conn.

Make Money at Home!
Experience unnecessary, we tell you how. Big demand! Write for Mushroom Book free.
American Mushroom Industries, Ltd.
175 Wellington Bldg., Toronto, Ont.
Grow Mushrooms
EARN up to $25 A WEEK or More

FOR CHRISTMAS
A Gift Supreme for any occasion, for Machinists and Toolmakers. Free catalog.
GERSTNER TOOL CHESTS
724 Columbia St., Dayton, Ohio

New! New!! New!!!

Two New 25c Short Wave Books

HERE IS GREAT NEWS

These new books will be welcomed by all short wave experimenters, short wave fans and short wave enthusiasts, the same as our former two books, HOW TO BUILD AND OPERATE SHORT WAVE RECEIVERS, and HOW TO BECOME AN AMATEUR RADIO OPERATOR, were welcomed by thousands of our short wave friends.

In conformity with the times these books have been priced at 25c instead of 50c, which is the price of our other books. Yet the two new 25c volumes contain a tremendous amount of information. The type and illustrations have been chosen in such a manner as to give you almost as much for your 25c as you received for your 50c before.

You make no mistake in getting either or both of these new books and we know from our many years of experience with short wave enthusiasts that you will thank us for having made these books possible.

Ten Most Popular Short Wave Receivers. How to Make and Work Them

This new volume is a revelation to all those who wish to build their own short wave receivers. The editors of SHORT WAVE CRAFT have selected ten outstanding short wave receivers and these are described in the volume. Everything worthwhile about every one of the ten receivers is described in the text. Each receiver is fully illustrated and each receiver has a complete layout, pictorial representation, photographs of the set complete, hookup and all worthwhile specifications. Everything from the simplest one-tube set to a 5-tube TRF receiver is presented. Complete lists of parts are given to make each set as complete as it is humanly possible to do.

Contents

2 R.F. Pentode SW receiver having two stages of TRF—2-Tube receiver that reaches 12,500 mile mark—My DeLuxe SW receiver—Pioneer 2-tube 12,000 mile DX receiver—"Brief Case" SW receiver—Denton 2-tube All-Wave receiver—Denton "Stand-By"—The "Stand-By" Electrified—Short Wave Megadyne—Coat Pocket SW receiver—SW Pentode-4—My idea of a good SW receiver—A Good "One-Tuber."

IMPORTANT

THERE IS NO DUPLICATION WHATSOEVER BETWEEN THIS BOOK AND OUR OTHER VOLUME—"HOW TO BUILD AND OPERATE SHORT WAVE RECEIVERS." ALL THE MATERIAL PUBLISHED IN THE NEW BOOK HAS NEVER APPEARED IN ANY BOOK BEFORE.

A Short Wave Beginner's Book

Here is a book that will solve your problems if you are new to the short wave game. It contains positively everything that you would wish to know in connection with short waves, leading you in easy stages from the simplest fundamentals to the present stage of the art in short waves as it is known today. It is the only low-priced reference book on short waves for the beginner, whether he be a short wave enthusiast, short wave listener or short wave amateur.

The book is profusely illustrated with all sorts of illustrations, explanations and everything worthwhile knowing about short waves in this interesting and growing field. Yet withal, the book is not "technical."

It abounds with many illustrations, photographs, simple charts, hook ups, etc., all in simple language.

The book is just chock full of information and you will never regret having gotten this important volume.

Contents in Brief

Getting Started in Short Waves—Short Hand Symbols of Radio—Short Wave Coils and Aerials—Reducing Man-Made Static—Beginner's Short Wave Set—Increasing Volume by Adding Amplifier to One-Tube Set—Tuning Short Wave Sets—Regeneration Control—Audio Amplifiers for SW Sets—Coupling Speaker to Set—Learning Code—Wave Length and Kilocycle Chart—Wiring Chart—Kinks in Short Wave Construction.

Each book contains 40 pages — over 75 illustrations — 25c each

NOT SOLD ON NEWSSTANDS—MAIL COUPON TODAY!

SHORT WAVE CRAFT, ES-1033
96-98 Park Place, New York City.

Gentlemen:

[ ] I enclose herewith 25c, for which please send me, prepaid, a copy of your new book "Ten Most Popular Short Wave Receivers. How to Make and Work Them."

[ ] I enclose herewith 25c for which please send me, prepaid, a copy of your new book, "The Short Wave Beginner's Book."

[ ] I enclose 50c for which please send me, prepaid, your two books, "Ten Most Popular Short Wave Receivers. How to Make and Work Them" and "The Short Wave Beginner's Book."

(Send money order, check, or cash or new U. S. stamps. Register letter if it contains currency or stamps.)

Name..... Address.....

City..... State.....

WOOD CARVING

CARVING in wood is one of the most fascinating of pastimes. With a few inexpensive hand tools you can decorate furniture and wood objects and create many beautiful carvings.

Clyde Lammey, an authority on wood carvings wrote a series of articles that have run in early issues of Popular Homecraft and we have gathered these together in a big 9 x 12 book solidly made that will give you the finest instruction possible on this most interesting subject.

It is profusely illustrated and there are many designs showing you step by step how to proceed.

You'll be delighted with this book. 60 cents—stamps—coin—add 5c exchange to checks.

HOMECRAFT BOOK SHOP

148 EAST SUPERIOR ST. CHICAGO, ILL.

manifestations are of comparatively small energy. It is entirely within our power to destroy them, or at least render them harmless; and all the more easily, since meterorology is becoming a positive science and weather forecasting reliable.

A service with standard bombing planes or swifter types might be organized for this purpose by the Government, for the necessity is real. The tornado, owing to its small energy, extreme mobility and delicate balance between the external and internal pressure, is a very vulnerable object and can be undoubtedly destroyed by comparatively small charges of suitable explosive. The whirling mass can also be easily deflected in any desired direction by exploding a charge even at a considerable distance from it. The task would be further facilitated by the relatively small translatory velocity of the tornado, especially in view of the present means for instant signalling.

I believe, however, that telautomatic devices offer effective means for combating tornadoes. Since I exhibited the first apparatus of this kind, John Hays Hammond, Jr., who has acquired a great mastery of the art, made demonstrations on a large scale, showing the practicability of distant control of complex machinery. It would not be difficult to provide special automata for this purpose, carrying explosive charges, liquid air or other gas, which could be put into action, automatically or otherwise, and which would create a sudden pressure or suction, breaking up the whirl. The missiles themselves might be made of material capable of spontaneous ignition. Many experts are now available for such service and manufacturers can be found competent to carry out any plans.

A Government department might be organized, headed by such a man as John Hays Hammond, Jr., and a systematic study of the problem made. The carrying out of the scheme would give new opportunities for manufacture and employment, besides securing other advantages. There is no doubt that, if such an undertaking were inaugurated and many minds set to work, effective methods and means would be eventually developed and great loss of life and damage to property prevented.

NOTE A: Taking the heating value of the compound as 4100 B.T.U., a constant pressure of twelve thousand atmospheres should be attained; the theoretical temperature of the combustion products being about 8000° F. The highest possible speed would be reached if the gases were to escape into the atmosphere through a perfect divergent nozzle. In this case, the initial absolute temperature would be $T_1 = 8460°$ F.; hence the absolute temperature of the fully-expanded gases $T_2 = \frac{0.285}{8460/12000} = 583°$ F. Accordingly, assuming the specific heat at constant volume Cv = 0.33, the available energy is $W = 7877 \times 0.33 = 2600$ B.T.U., and the maximum theoretical velocity $V = \sqrt{64.4 \times 778 \times 2600} = 11400$ feet per second.

NOTE B: Let the stalk be one foot long, one-eighth of an inch in diameter and of a specific gravity of 0.4 as compared with that of water. The section is then about $\frac{1}{80}$ of a square inch or $\frac{1}{144 \times 80} = \frac{1}{11520}$ of a square foot and, consequently, the volume $\frac{1}{11520}$ of one cubic foot. Since one cubic foot of water weighs 62.45 pounds, the weight of an equal volume of straw will be $0.4 \times 62.45 = 25$ pounds, hence the weight of the piece of straw $\frac{25}{11520}$ pounds and its mass $M = \frac{25}{32 \times 11520}$. Then the kinetic energy is $\frac{1}{2} M V^2 = \frac{25 \times 22500}{64 \times 11520}$ foot pounds and will be exhausted in overcoming a resisting force r which the stalk encounters while piercing the wood. If the distance of penetration is 1/2 inch or 1/24 of a foot, then the equation will hold true

$$\frac{22500 \times 25}{64 \times 11520} = r \times \frac{1}{24}$$

from which follows

$$r = \frac{24 \times 22500 \times 25}{64 \times 11520} = 18.31 \text{ pounds}$$

This is the mean value of the force or pressure produced, its maximum being $2 \times 18.31 = 36.62$ pounds

As this pressure is exerted on an area of $\frac{1}{80}$ of a square inch, the force per square inch will be $F = 36.62 \times 80 = 2929.5$ pounds

NOTE C: The volume is $0.2618 H (D^2 + d^2 + d D) = 0.2618 \times 1200 (1200^2 + 300^2 + 1200 \times 300) = 0.2618 \times 1200 (1200^2 + 1200 \times 300) = 593760000$ cubic feet, the weight about $593760000 \times \frac{8}{100} = 47500000$ and the mass $M = \frac{47500000}{32} = 1484400$ pounds. If all of it would rotate at the top speed V = 235 feet per second, the kinetic energy would be $\frac{1}{2} M V^2 = 742200 \times 55225 = 40988000000$ foot pounds, equivalent to $\frac{40988000000}{778} = 52700000$ B.T.U.

NOTE D: When a mass of air is rotated in a casing with inlet and outlet openings, by a system of discs or other means, the peripheral velocity being V feet per second, a pressure difference of approximately $w = \frac{V^2 \times 0.08}{64} = \frac{V^2}{800}$ pounds per square foot is produced between the suction and discharge orifices. If V = 235 feet per second, then $\frac{V^2}{800} = \frac{55225}{800} = 69$ pounds per square foot, or $\frac{69}{144} = 0.48$ pounds per square inch; corresponding to a vacuum of a little less than one inch.

New Devices

(Continued from page 877)

The last item is another household utility which takes into consideration the fact that all have not electric power. It is a standard washer type, equipped by its maker with a small four-cylinder gas engine, which is started by a foot-pedal. A friction-drive pump will empty the tub in less than two minutes. It holds ten gallons of water, and washes six pounds of clothes at one time.

Scientific American
March, 1934, pp. 132-134, 163-165

POSSIBILITIES OF ELECTRO-STATIC GENERATORS - by Nikola Tesla

The knowledge of static electricity dates back to the earliest dawn of civilization but for ages it remained merely an interesting and mystifying phenomenon. Virtually nothing was done towards the development and useful application of the principle. The first distinct stimulus in this direction was given by the discoveries of Franklin and Leyden in the latter part of the 18th Century.

In 1777 Cavallo devised a cylindrical friction machine and from that time on there was a slow but steady evolution of friction and influence machines until the modern Wimshurst, Holtz, Toepler, and other types were produced. Among these machines the one invented by Wommelsdorf 30 years ago was, probably, the most effective. It yielded a current of six-tenths of a milli-ampere and in the present state of science it could be successfully employed for charging large aerial capacities and stepping up its terminal tension of 150,000 to many millions of volts.

Numerous attempts have also been made to generate static electricity by friction of fluids and solid particles but from the earliest records to this day the belt has proved to be the simplest and most convenient means for the purpose. Static electricity from this source gained in importance when evidences accumulated that it was capable of interfering seriously with operations and causing accidents in paper factories, flour mills, and similar establishments. In the early nineties my electrodeless vacuum tubes became extremely popular and were frequently lighted from belts and later Roentgen tubes were operated in the same manner. It is quite easy to improvise such a generator and obtain interesting results under favorable atmospheric conditions.

A remarkable device of this kind, embodying new features, has been recently developed by Dr. R. J. Van de Graaff at the Massachusetts Institute of Technology, and is attracting extraordinary attention. (See page 96, February, 1934, SCIENTIFIC AMERICAN. - Ed.) It is hailed as a revolutionary invention with which wonders will be achieved. The technical papers refer to it as a Colossus, a Master Key expected to unlock the secrets of nature. Naturally enough imaginative scribes have built Spanish castles on this foundation. So it comes that even such an ably edited paper as *The New York Times* informs its readers of a contemplated use of this generator for long distance transmission of power. According to a *bona fide* report in its issue of December 5, 1933, "the possibilities of the colossal generator have been worked out in theory and it now remains to apply it in practice." However visionary this scheme may appear it is not absolutely impossible. A wise Macedonian king said: "No wall is so high that a mule loaded with gold could not jump over it." With unlimited capital and regardless of returns, it might be carried out.

In view of many articles and editorials written in the same vein, which have amazed the layman and amused the expert, it may not be amiss to examine the merits of this odd contrivance in the light of well demonstrated scientific facts.

But first I want to point out an apparent discrepancy in the descriptive reports and photographs showing the apparatus in action, which is illustrated in the accompanying photographs, and consists of two aluminum spheres 15 feet in diameter supported on insulating columns six feet in diameter. Elecricity is supplied to the spheres by paper belts charged from a "sprayer." With terminals of such dimensions much higher voltages should be obtained. In most of the treatises it is assumed

Reprinted with permission. Copyright © 1934 by Scientific American, Inc.
All rights reserved.

that the surface density, that is, the quantity of electricity stored per square centimeter of a spherical conductor, can not exceed eight electrostatic units without break-down of the surrounding air. As a matter of fact the density can be pushed up to 20 units before power-consuming streamers appear.

This being the case, the limiting voltage of a sphere having a diameter of 15 feet should be 16,964,700 and, consequently, the potential difference between two such oppositely charged spheres, very far apart is 33,929,400 volts. It may be useful to state, however, that such large spheres placed at a distance of 55 feet between centers, as contemplated, will influence each other to a considerable extent, increasing their capacities. At this distance the increase will be about 16 percent, which should be taken into consideration when estimating the charge.

The desired difference of potential could be obtained with much smaller spheres and it would seem preferable to employ them as they would yield sparks in quicker succession. Some of the photographs under the terminal pressure of 7,000,000 volts are puzzling because the surface density in this case was only a little over 4 electrostatic units. Furthermore, sparks are shown to pass copiously along the insulating supports. This is a serious difficulty encountered in working with very high tensions but by properly shaping the under side of the sphere and resting it on a support well up in its interior, besides providing a liberal side clearance, the discharges are prevented from following the column and no further trouble is experienced even with the highest potentials. My wireless tower on Long Island, erected in 1902, carried a sphere which had a diameter of 67½ feet and was mounted in this manner. It was to be charged to 30,000,000 volts by a simple device for supplying static electricity and power.

Most people, and not a few electricians, will think that very long and noisy sparks are indicative of great energy, which is far from being the case. An impressive display of this kind, at several million volts, can be readily obtained with any wide leather or fabric belt in dry weather. The only requirement is that the outward surfaces of the highly charged capacity elements be arranged along an ideal boundary everywhere of small curvature. But the electrical energy is trifling and this applies to all electrostatic generators which have been proposed, irrespective of size.

One does not need be an expert to understand that a device of this kind is not a producer of electricity, like a dynamo, but merely a receiver or collector with amplifying qualities. All its energy is derived from electricity which is generated through friction or supplied by the sprayer and pumped into the terminals by the belts. If the columns were as tall as the Empire State Building and the spheres 500 feet in diameter the monstrous machine could not have any more energy than is supplied to it by the electrified belts and no matter how much improved, this type is fatally doomed to small output and low efficiency on account of the existing limitations and the wastefulness of the process of conveying the charges from their sources to the terminals.

As the writers of articles regarding the "Colossus" confine themselves to controlling its size, voltage and possibilities, but give little hint regarding its mode of operation and power performance, I shall endeavor to advance the needed knowledge. With this object let it be assumed that the spheres are placed at a distance of 55 feet from center to center and that the potential difference between them is 10,000,000 volts. Ordinarily, the electric capacity of such a sphere is equal to its radius, namely 225 centimeters, but as before explained, 16 percent should be added to this , making 261 centimeters equivalent to 0.00029 microfarad. Consequently, when the regime is established, each sphere being at a potential of 5,000,000 volts, the electricity stored on each will be 0.00145 coulomb. If this quantity were supplied every second, the current would be 0.00145 ampere. An incandescent lamp of 25 watts requires a current 150 times more intense.

In estimating the amount of electricity furnished to each terminal per second, only the sprayer need be considered as it supplies much more than could be generated by friction of the belts. The device used has not been clearly described but it is sufficient for the purpose of this dissertation to know that it operates at 20,000 volts and energizes, through rows of points, the two belts which are said to be four feet, or 120 centimeters, wide. Assuming that they are run at a speed of 100 feet or 3,000 centimeters per second, the area covered in this time interval would be 120 x 3,000 = 360,000 square centimeters. If it were possible to charge the belts uniformly to a surface density anything like that existing on an electrified particle, the output of the machine would be very great. But this can never be realized. The following approximate estimate will show what may be reasonably expected.

The discharge of electricity from points has been extensively investigated and from the data available and my own observations I find that the current through each point at 20,000 volts will be about 0.0001655 ampere. No advantage would be gained by a very close spacing of the points on account of their mutual reaction but I shall make allowance for as great a number as seems practicable, say, 200, in which case the integral current would be 200 x 0.0001655 = 0.0331 ampere.

Now, electricity is transferred from the points to the belt by minute bodily carriers - the molecules of the air. When such an electrified particle comes in contact with a large conducting body it gives up almost all of its charge to the same, but to an insulator, as the belt, it can impart only a very small portion owing to the strong repulsion between the charge deposited and that remaining on the particle. From theoretical considerations it appears that the part usefully applicable will, in all probability, not exceed 1/150 of the whole charge on any particle thrown against the belt. The current from the sprayer is 0.0331 ampere, that is to say, it conveys a total charge of 0.0331 coulomb per second and of this the belt will carry off only 0.00022 coulomb equivalent to a current of 0.00022 ampere. This means that 99.33 percent of the energy supplied by the sprayer is lost, and illustrates the appalling inefficiency of this method of electrification.

As will be seen, the device delivers to each belt energy at the insignificant rate of 4.4 watts and is, therefore, virtually of no effect on the power output of the machine except that it imposes a limit to the same. This is important to remember in view of the general impression created by the earlier reports that all energy is drawn from the sprayer. Since the quantity of electricity stored on the spheres remains constant it is evident that the overflow current between them under normal working conditions must be 0.00022 ampere so that at the potential difference of 10,000,000 volts the machine should develop 2200 watts. As the supply from the exciter is entirely negligible the questions will be asked: Whence come energy and power? How is it produced? The answer is simple. It is derived from the belts which perform the work of transporting the charges imparted to them against the repulsion exerted by the spheres. This force can be approximately determined. The permanent charge on a sphere will be, as shown above, 0.00145 coulomb or 4,350,000 electrostatic units. But 16 percent of this quantity is "bound" and should be left out of consideration. With due regard to the opening on the underside, the free capacity of each terminal may be estimated 222 centimeters, so that at five million volts Q = 222 x 5,000,000/300 = 3,700,000 electrostatic units. The moving charge will be distributed over a length of the belt about equal to the height of the insulating column and with some allowances it may be taken at 24 feet. Assuming a belt speed of 6000 feet per minute this distance will be traversed in 0.24 of a second and, consequently the belt charge to be considered is 0.24 of the whole carried per second; that is, 0.0000528 coulomb or 158,400 electrostatic units. The upper end of the charged area is 7½ feet and the lower 31½ feet from the center of the sphere. The former is thus r = 225 c.m. and the latter d = 945 c.m. The charged area of the belt being 120 x 720 = 86400 c.m., it follows that the density of the

charge is 158400/86400 = 1.8333 electrostatic units. Accordingly, if the distribution of the charge is perfectly uniform a transversal strip of the belt one centimeter long will contain a quantity q = 120 x 1.8333 = 220 e.s.u.

Considering now a surface element of vanishing length dx, the charge on the same will be qdx = 220 dx e.s. units of quantity and that on the sphere being Q = 3,7000,000 e.s. units, the repulsive force acting on the surface element at a distance x from the center of the sphere, will be $\frac{Qq}{2}$ dx. Integrating this expression between the limits r and d, and substituting the values for Q and q, the force repelling the charged side of the belt is found to be $F = \frac{Qq(d-r)}{rd}$ = 2,756,420 dynes or 2.81093 kilograms. At a speed of 100 feet or 30 meters per second the work is 84.3279 kilogram meters per second, equivalent to 0.82691 kilowatt. Both belts will therefore perform the work of 1.65382 kilowatts. This is 33 percent less than the theoretical electrical activity of the machine and as the power developed by the belts must be, at least, equal to the electric power one is apt to reach the conclusion that the sucking points do not draw off the entire charge, as has been tacitly assumed, and the current, instead of being 0.00022 will be proportionately smaller, that is, 0.0001654 ampere. But this view is found untenable for the limit to performance is imposed by natural law and not by the defects of a device which, moreover, could be readily improved. The discrepancy between the calculated power of the belts and the electric activity of the machine was all the more puzzling as the two quantities could not be harmonized by imagining any kind of theoretical working conditions. Finally, however, I recognized that the charge can not be uniformly distributed on the belt but must increase from the lower to the upper portion of the same. Indeed, such an effect might have been expected although the surface charge on an insulating body is not very mobile.

Supposing that the belt carried a film of oil meeting with a downward current of air. The obvious result would be a thickening of the film toward the top. Similarly, the electric film on the belt is "thickened" through the repulsion exerted by the terminal and the attendant piling up of the charge and it is only so that the exact balance between the mechanical and electrical power can be, under all conditions, automatically established. (See explanatory note on page 165.) The equality of these two quantities is an absolute and inevitable consequence of the law of conservation of energy, the remarkable feature of this process of dynamo-electric transformation being that it is effected with the highest efficiency, apparently without evolution of heat. Of course, there are great losses in the operation of the machine, but they do not concern the process itself.

In an instrument designed primarily for scientific investigation, the efficiency is of relatively small importance and I shall dwell on it for the sole purpose of showing that in any application as a power producer such a generator would be hopelessly handicapped. The air friction of the belts at a speed of 30 meters per second will require about 3.73 kilowatt. With the repulsion work, the load on them will be 5.93 kilowatt. Under the working conditions as outlined, the belt drive may have an efficiency of 90 percent and the motor 85 percent so that energy will be drawn from the electric mains at the rate of 7.75 kilowatt. The net performance of the sprayer at 20,000 volts will be 1.324 kilowatt but taking into account the efficiency of the whole apparatus, at least 1.6 kilowatt must be assumed. There are also dielectric, magnetic, and radiation losses, making the total power input, perhaps, 9.5 kilowatt while the output is only 2.2 kilowatt. If this estimate is reasonably approximate, an over-all efficiency of 23 percent is about as high as can be expected from any electrostatic generator of this kind.

It was shown that the charge on each sphere at 5,000,000 volts is 0.00145 coulomb but as only 0.00022 coulomb can be furnished per second, it will take about 6.6 seconds to charge the spheres to the full potential. I have assumed that the

current from the sprayer is continuous and not a rectified one, in which case the efficiency will be appreciably smaller. The streamers from pointed electrodes are generally considered as a sort of corona involving an insignificant loss of energy, but this view is erroneous. Such a discharge is very concentrated, approximating an arc in intensity, so much, in fact, that the heat evolved sometimes imposes a limit to the use of points.

In the absence of a detailed description, the performance of this sensational generator can not be closely determined and the actual results may be different from those I have indicated, but not greatly so. While the energy supply may be increased by raising the tension of the sprayer and increasing the number of the discharging and sucking points, there are limitations in this respect and it is perfectly evident that, no matter how big, such a contrivance is nothing more than a toy compared with the commercial machines employed in the transformation and transmission of electrical energy.

In view of this, and the low efficiency, its application will be confined to scientific experiments in which useful results may be achieved either by a feeble working current under high tension or by successive explosions. The latter method seems more promising because under proper conditions it is possible to discharge spheres in a time interval incomparably shorter than consumed in charging them and so amplify enormously the intensity of the actions.

Any device depending on static electricity carried by a belt will fail in damp weather and will have to be operated in a closed space in which the air is properly conditioned. Also, the belts are apt to deteriorate rapidly through the action of ozone, nitrous and nitric acid produced by the point discharge.

Although there is nothing radically new involved in the construction and working of this high voltage generator, it is, nevertheless, a distinct advance over its predecessors, the result of a scholarly effort towards producing an instrument suitable for scientific research, I think though, that whatever can be accomplished with it by virtue of the continuity of action, can be even better achieved by the use of cosmic rays. Moreover, the time consumed in the passage of a charged particle from one to the other end of the tube is so brief that it makes practically no difference whether the current is direct or alternating. In availing ouselves of the latter we are doing away with all the limitations as to voltage and strength of the current and, consequently, the intensity of the effects which it is the chief object to produce.

As far back as 1899 I made experiments with 18,000,000 volts and in some tests I was able to pass a current of 1100 amperes through the air. With my transformers a potential difference of 30,000,000 volts, or more, could be easily obtained and in the present state of the technical arts a tube or other device capable of taking up very great energy might be manufactured. I do not say this in disparagement of electrostatic generators; on the contrary, I believe that when new types are developed and sufficiently improved a great future will be assured to them.

At first thought it might appear that the performance of such a generator could be doubled by using the free side of the belt for carrying away electricity of opposite sign. In this case the repulsion on one side of the belt would be balanced by the attraction on the other so that, theoretically, the spheres could be charged without expenditure of power. But this is contrary to fundamental laws of nature and it may, therefore, be safely inferred that such a plan would not work.

Static electricity may be eventually harnessed for driving motors and this prospect is attractive on account of the enormous power output of such a machine at very high voltages. The efficient generation and control of these is the chief impediment in this direction. As an interesting experiment the two units of the generator described might be separated and so an electric drive improvised. It would

be operative but inefficient.

While it is quite evident that exceptionally favorable conditions for accurate observation will be realized in this instrument, it is highly probable that the attempts to smash the atomic nucleus and to transmute elements will yield results of doubtful value. Certainly, much of the ingenuity and skill now devoted to these illusionary tasks might be better employed. The nucleous is a neutral body consisting of tightly packed particles of the same kind which were originally positive and negative. When the body is smashed the particles again acquire their charges, without distinction and instantly form neutral pairs so that we have nothing for our pains. It is folly to expect useful results from transmutation brought about through such bombarding of targets. If anything of considerable practical value is ever achieved in this direction it will be by the use of quasi-intelligent agent causing a sorting and regimentation of the particles and their orderly arrangement as required in the formation of a new structure. Such a power is possessed by a catalyst and it will be eventually harnessed and controlled successfully for all sorts of purposes.

Author's note: Reference to pages 252, 253

The required increment of density can be determined by a simple calculation. At the spraying points, due to their constant action, there can be no change in the value 1.8333 found before, but from there on the density will increase and at the very top of the charged area it may be 1.8333 + a. Since the law of variation is quite immaterial to this argument it may be assumed that the increment is proportionate to the distance from the spraying points, expecially as this is most likely to be the case. Under such conditions, a transversal strip of the belt one centimeter long and at a distance X from the center of the sphere, will contain a charge $q = 120(1.8333+a\frac{d-x}{d-r})$ e.s.u. Hence the repelling force exerted by the charge Q on the terminal will be $F = \int_r^d Q \times 120(1.8333 + \frac{d-x}{d-r}\frac{dx}{x^2}$ This integral can be readily solved by expanding and yields the value F = 2756352 + 1088367a dynes. The mechanical work at the normal belt speed of 3000 centimeters per second will, consequently, be equivalent to W = 0.8269056 + 0.3265101a kilowatt seconds and must be equal to the electrical work of the machine with an overflow current of 0.00022 ampere under a tension of 5,000,000 volts; namely, 1.1 kilowatt seconds for each terminal so that $a = \frac{1.1 - 0.8269056}{0.3265101} = 0.8364$ electro-static units.

With this excess density and distribution of the charge as set forth, the net power of both belts, expressed in electrical units, will be 2.2 kilowatts which is exactly the performance of the generator with the overflow current of 0.00022 ampere and terminal tension of 10,000,000 volts. It is evident that just as water finds its level so this balance is instantly established under all working conditions and is effected by a varying slip of the charge; that is to say, by reduction or increase of its translatory velocity according to the changes of the load.

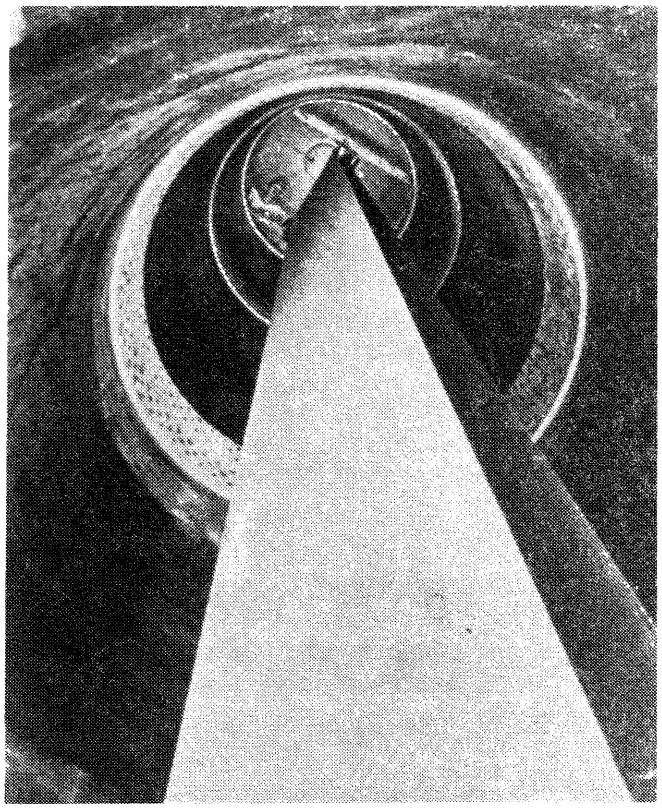

Looking up through one of the insulating columns of the Van de Graaff generator, showing the endless paper belt

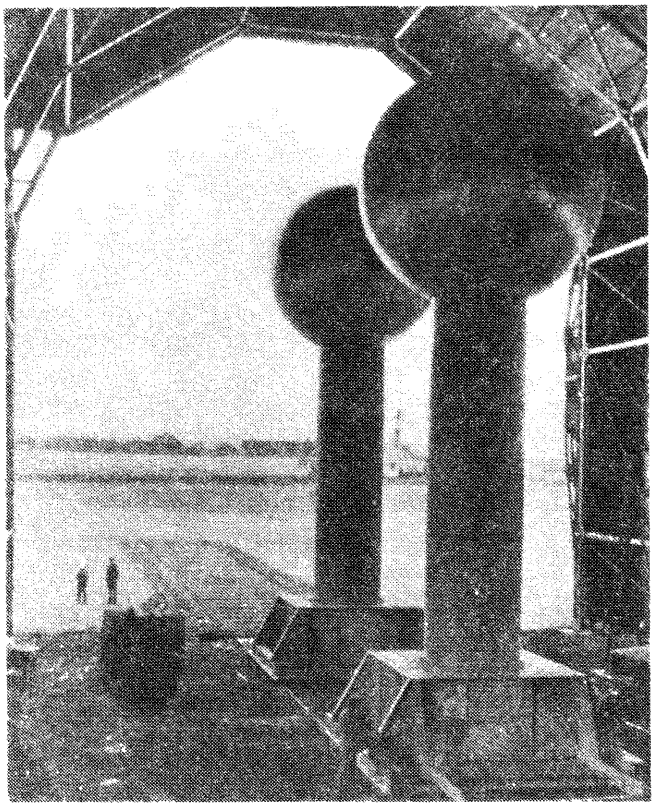

Another view of the high-voltage generator. Tracks are provided so that the equipment may be rolled into the open

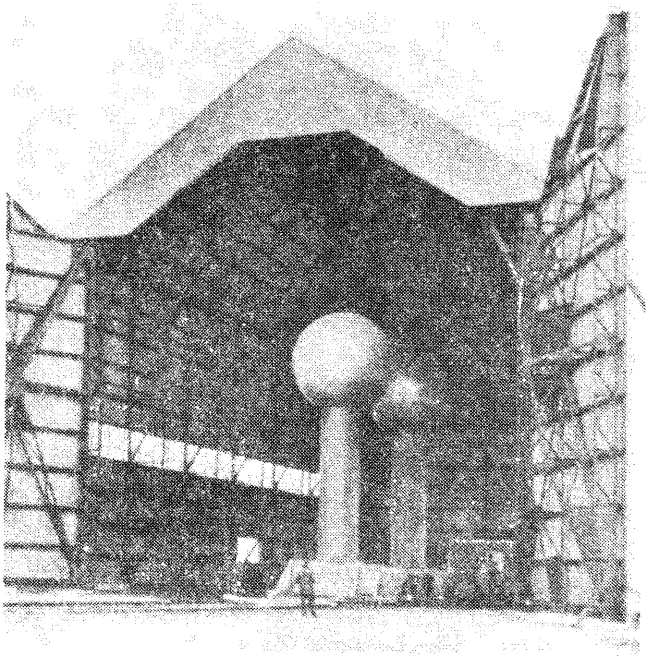

The Van de Graaff generator, shown housed in an aircraft hangar, is discussed by Dr. Tesla in the accompanying article

Scientific American
April, 1934

NIKOLA TESLA WRITES:

Editor, Scientific American:

Engineers attach no importance whatever to static electricity generated by belt friction or otherwise. They are apt to dismiss it with the thought that the energy is infinitesmal. That is true. A little water pumped through some joint in a big low-pressure main is of no consequence, but in a pump designed for an extremely high pressure and very small delivery it is all-important. Exactly so in the electrical case. The belt or equivalent device is simply a pump capable of forcing the minute quantity of electricity produced into a condenser against a pressure and increasing the power up to a limit of working capacity of the means employed. Thus mechanical energy, in any desired amount, can be transformed into electric energy yielding direct and constant currents of many millions of volts.

Besides it value as an instrument of research, the Van de Graaff generator will be helpful in stimulating the interest in this neglected field of science and engineering which is of great promise. My comment upon it (Page 132, March, 1934, SCIENTIFIC AMERICAN. - *Ed.)* was based on publications in which the device was described in its primitive form. No signal improvements were suggested or mention made of the classical methods for increasing the output. According to the latest report, the normal performance is now 20 kilowatts, from which I infer that the belts are run in a medium under pressure exceeding that of the atmosphere. This is evident since at 10 kilowatts per unit, the density of the charge on the belt, conformably to my calculations, must be about 16.66 at the spraying and 24.27 at the sucking points, which is too high for ordinary conditions. In all probability, an absolute pressure of 30 to 35 pounds per square inch is used to prevent leakage of the moving charge. This method was first resorted to by Hempel in 1885 and more thoroughly investigated by Lehmann in 1891. Other experimenters confirmed these early findings and showed that the output of a static generator is proportionate to the pressure of the gas in which it is operated.

A still better way, also known for many years, is to employ a high vacuum for the same purpose. Both of these methods have their disadvantages. Compression increases proportionately the windage loss, while the vacuum is destructive. The real limit, however, is found in the mechanical strength of the belt and even under the best conditions the performance of such a machine, considering its size, will be small although, by the employment of a Diesel drive, the efficiency might be raised to a satisfactory figure.

The generator, operating with 10,000,000 volts, will accelerate a particle, as the electron, to a speed of 3.662×10^9 centimeters, equal to about 0.122 times that of light, but if projectiles 1800 times heavier are used, as proposed, their striking speed will be only 863 kilometers which is utterly insignificant as compared with that of the cosmic rays.

Nikola Tesla
New York, February 8, 1934

Reprinted with permission. Copyright © 1934 by Scientific American, Inc.
All rights reserved.

New York Times
April 8, 1934, Section X, p. 9, col. 1.

TESLA SEES EVIDENCE RADIO AND LIGHT ARE SOUND

An Inventor's Seasoned Ideas

Nikola Tesla, Pointing to 'Grevious Errors' of the Past, Explains Radio as He Sees It at Age of 77 - He Expects Television

By Orrin E. Dunlap, Jr.

A tall, lean inventor in a cutaway walked into his skyscraper parlor thirty-three floors above the sidewalks of New York, laid his black derby on the table, opened the window and then was ready to talk about radio's past, present and future. He was Nikola Tesla, the inventor whose discovery of the rotary magnetic field made possible the alternating current motor. He described a system of wireless transmission of energy in 1892.

Seven milestones beyond three-score and ten, this electrical wizard, who came to America in 1884, looked back across the years, recalled where theorists often chose wrong paths at the crossroads of science and then turned his thoughts to the future in which television lurks.

A Spectacle That Frightens.

"There is something frightening about the universe when we consider that only our senses of sound and sight make it beautiful," said Mr. Tesla as his furrowed brow indicated he is puzzled with its destiny. "Just think, the universe is darker than the darkest ink; colder than the coldest ice and more silent than a silent tomb with all the bodies rushing through it at terrific speeds. What an awe-inspiring picture, isn't it? Yet it is our brain that gives merely a physical impression. Sight and sound are the only avenues through which we can perceive it all. Often I have wondered if there is a third sense which we have failed to discover. I'm afraid not," he said after some hesitation in thought.

Looking back to the mauve decade, to the turn of the century when the world was being thrilled with new ideas and discoveries, Mr. Tesla observes a vast change in the art of invention. Man, he finds, in this streamlined era of speed, has little chance to think.

Fruits of Seclusion

The big, modern research laboratories are but the incubators of ideas as he has watched them function. Seldom, if ever, he explains, has an original idea of consequence been born in an elaborate laboratory. The egg of science is laid in the nest of solitude. True, it may later be incubated, hatched and nursed in the million dollar laboratory.

"It is providential that the youth or man of inventive mind is not 'blessed' with a million dollars," said Mr. Tesla. "He would find it difficult to think. The mind is sharper and keener in seclusion and uninterrupted solitude. No big laboratory is needed in which to think. Originality thrives in seclusion free of outside influences beating upon us to cripple the creative mind. Be alone, that is the secret of invention; be alone, that is when ideas are born. That is why many of the earthly miracles have had their genesis in humble surroundings."

Radio experimenters of this age are following ancient theories, Mr. Tesla believes, and he warns that progress will be more rapid when they discard the old and adopt the new ideas. His directions for getting on the right track of radio, television and sundry other branches of science follow:

"The fascinatiion of the electro-magnetic theory of light, advanced by Maxwell and subsequently experimentally investigated by Hertz, was so great that even now, although controverted, the scientific minds are under its sway. This theory supposed the existence of a medium which was solid, yet permitted bodies to pass through it without resistance; tenuous beyond conception, and yet, according to our conceptions of mechanical principles and ages of experience, such a medium was absolutely impossible. Nevertheless, light was considered essentialy a phenomenon bound up in that kind of a medium; namely, one capable of transmitting transverse vibrations like a solid.

A Question Tesla Asked.

"It is true," said Mr. Tesla, "that many scientific minds envisaged the theory of a gaseous ether, but it was rejected again and again because in such a medium longitudinal waves would be propogated with infinite velocity. Lord Kelvin conceived the so-called contractile ether, possessing properties which would result in a finite velocity of longitudinal waves. In 1885, however, an academic dissertation was published by Prof. De Volson Wood, an American, at a Hoboken institution, which dealt with a gaseous ether in which the elasticity, density and specific heat were determined with rare academic elegance. But, so far, everything pertaining to the subject was purely theoretical."

What, then can light be if it is not a transverse vibration? That was the question he asked himself and set out to find the answer.

"I consider this extremely important," said Mr. Tesla. "Light cannot be anything else but a longitudinal disturbance in the ether, involving alternate compressions and rarefactions. In other words, light can be nothing else than a sound wave in the ether."

This appears clearly, Mr. Tesla explained, if it is first realized that, there being no Maxwellian ether, there can be no transverse oscillation in the medium. The Newtonian theory, he believes, is in error, because it fails entirely in not being able to explain how a small candle can project particles with the same speed as the blazing sun, which has an immensely higher temperature.

"We have made sure by experiment," said Mr. Tesla, "that light propagates with the same velocity irrespective of the character of the source. Such constancy of velocity can only be explained by assuming that it is dependent solely on the physical properties of the medium, especially density and elastic force.

Micro-Wave Possibilities.

Coming now to the wireless waves, it is still true that they are of the same character as light waves, only they are not transversal but longitudinal. As a matter of fact, radio transmitters emit nothing else but sound waves in the ether, and if the experts will realize this they will find it very much easier to explain the curious observations made in the application of these waves.

"It being a fact that radio waves are essentially like sound waves in the air, it is evident that the shorter the waves the more penetrative they would be. In 1899 I produced electromagnetic waves from one to two millimeters long and observed their actions at a distance. There has been a great hope expressed by various workers that introduction of these waves will have a revolutionary effect, but I am not sharing the opinion. They will be used, of course, but to a very limited extent. It is manifest that applications of the very short waves will not produce any appreciable effect upon the wireless art.

"Errors" Retard Wireless Power.

What about the possibilities of power transmission by wireless? the inquirer asked.

Here again Mr. Tesla blames "a strange misconception of the experts" and "grievous errors" for retarding the idea. He believes that when it is accomplished, the power will travel on long waves. He said he could vouch that the scheme of wireless power transmission is entirely practical.

"The application of short waves for power purposes," said Mr. Tesla, "involves complicated and expensive apparatus for rectification or frequency transformation, which would make any serious attempt to carry out a project of this kind much more difficult from an economical point of view."

When will television come around the corner? he was asked.

"It ought to be with us soon, and some day it will be on a par of perfection with broadcasting of music." Then with a circular sweep of his arm and added, "There will be large pictures thrown on the wall."

Modern Mechanix and Inventions
July, 1934

Radio Power will Revolutionize

Tesla's World of Tomorrow

"We are on the threshold of a gigantic revolution, based on the commercialization of the wireless transmission of power.

"Motion pictures will be flashed across limitless spaces . . .

"The same energy (wireless transmission of power) will drive airplanes and dirigibles from one central base.

". . . In rocket-propelled machines . . . it will be practicable to attain speeds of nearly a mile a second (3600 m.p.h.) through the rarefied medium above the stratosphere.

". . . We will be enabled to illuminate the whole sky at night . . . Eventually we will flash power in virtually unlimited amounts to planets."

—Nikola Tesla.

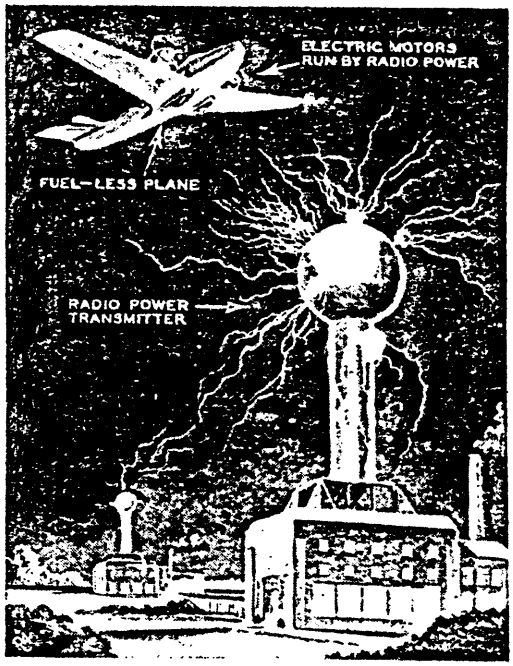

Nikola Tesla, electrical wizard, foresees the day when airplanes will be operated by radio-transmitted power supplied by ground stations, as shown in the drawing above.

THE world will soon enjoy the benefits of electricity transmitted by radio. Huge and expensive transmission lines will be unnecessary. Bulky and unsightly distribution systems will be done away with. A little receiving device in your home will give you all the power you can use—and for only a fraction of present-day costs.

We will soon be communicating with other planets, where it is entirely possible that there is civilization far ahead of ours.

Tomorrow we will see rocket planes flying through stratosphere at a speed of a mile a second or 3600 miles an hour.

Fanciful dreams? No! Just conclusions based upon knowledge of what has been done, what is being done and what can be done in the future. I speak along practical lines and with a practical knowledge of what I am talking about.

Power transmission by radio is going to change our present civilization materially. The transmission of energy to another planet is now only a matter of engineering. I have solved the problem so well I no longer regard it as doubtful. I am also certain there are creatures on other planets whose ways are like ours. The new era will see amazing developments in interplanetary relations.

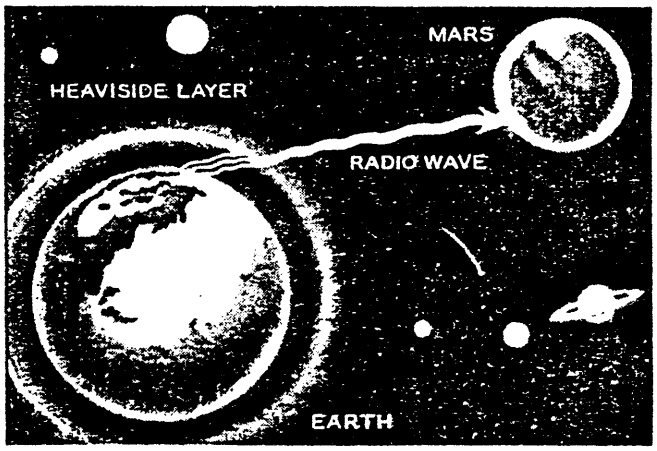

By using ultra-short waves, science expects to penetrate the heaviside layer, or gaseous medium surrounding the earth, and establish radio communication with Mars and other distant planets, as shown in drawing above.

Every other planet has to pass through the same phase of existence this earth did, and life is started on them during that favorable phase by the rays of some sun. It develops in the presence of moisture, heat and light in much the same manner as life does here. We know that light propagates in straight lines, and consequently our perceptions of the forms through the images projected on the retina must be true.

Therefore, it should not be hard to establish intelligent exchange of ideas between two

the WORLD

by NIKOLA TESLA
As told to
ALFRED ALBELLI

Who Is Tesla?

Radio Pioneer Nikola Tesla was born in Hungary, came to the United States in 1884 and has since developed more than 100 devices and improvements in electrical technology.

Once associated with the late Thomas A. Edison, Tesla sent a radio impulse around the world almost 40 years ago. He discovered the rotating field principle in alternating currents and is considered one of the greatest living electrical scientists and radio authorities.

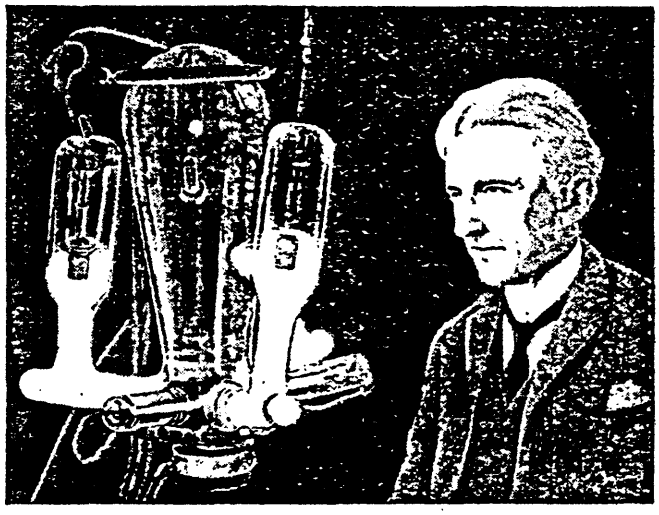

Nikola Tesla is shown in his laboratory with late type mercury arc rectifier tubes. When operating, these tubes give off a violet glow.

planets. The earth we inhabit might be the beneficiary. It is conceivable that there is civilization on other planets far ahead of ours. If communication could be established by the earth the benefits to human beings would be incalculable.

As far back as June, 1900, in discussing my experiments at the beginning of the century, I said that my measurements and calculations showed that it was perfectly practicable to produce on our globe an electrical movement of such magnitude that, without the slightest doubt, its effect would be perceptible on some of our nearer planets, as Venus and Mars.

Interplanetary Communication Probable

Thus, from mere possibility, interplanetary communication has entered the stage of probability. In fact, that we can produce a distinct effect on one of these planets in this novel manner, namely, by disturbing the electrical condition of the earth, is beyond any doubt.

In order to make myself clearer I shall delve still further into the preliminary discoveries made in what I call my pioneering days, which was long before any other scientist had made any progress in this field. I have always chosen to remain in the background.

Some years ago I urged the experts engaged in the commercial application of the wireless art to employ very short waves, but for a long time my suggestions were not heeded. Eventually, though, this was done, and gradually the wave lengths were reduced to but a few meters.

Invariably it was found that these waves, just as those in the air, follow the curvature of the earth and bend around obstacles, a peculiarity exhibited to a much lesser degree by transverse vibrations in a solid.

Recently, however, ultra-short waves have been experimented with and the fact that they also have that same property was hailed as a great discovery, offering the stupendous promise of making wireless transmission infinitely simpler and cheaper.

It is of interest to know what wireless

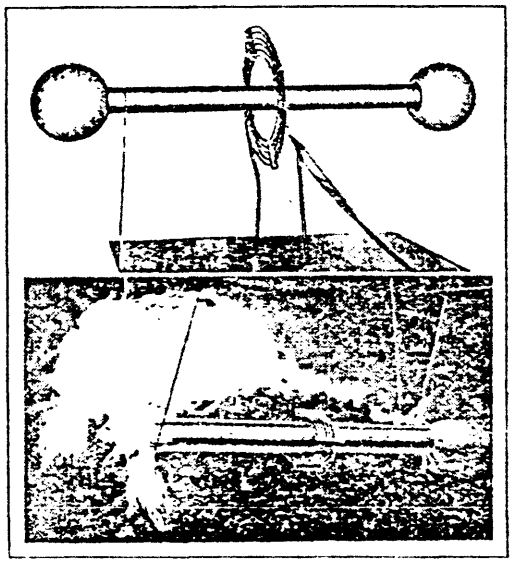

Top photo shows the famous Tesla coil, used to transmit early radio signals. Below, the coil in actual operation.

Rocket Ships to Circle Globe in 5½ Hours; Night to Change Into Day

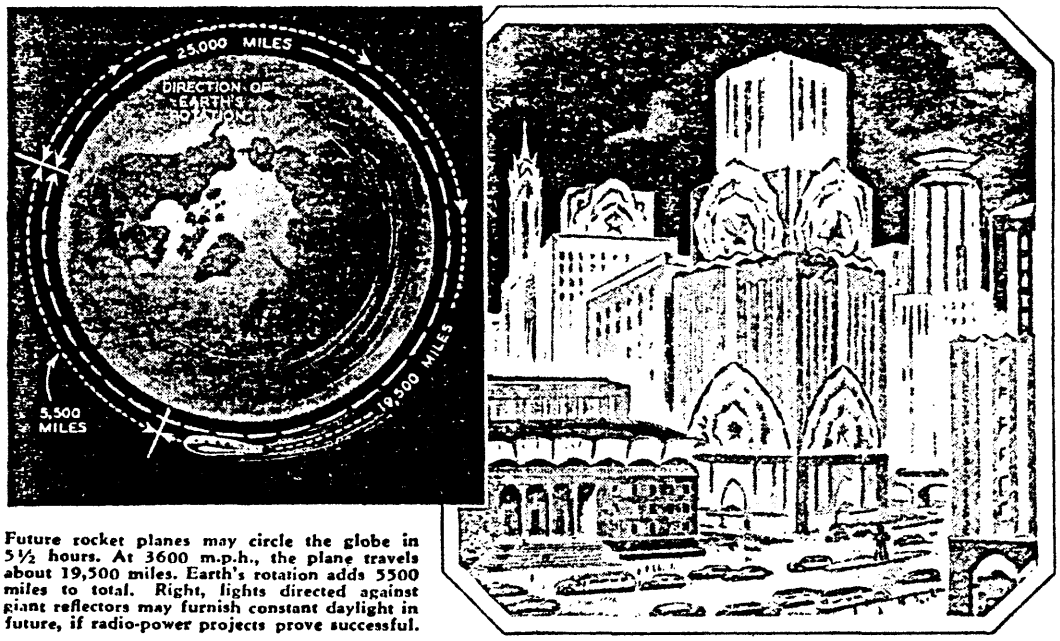

Future rocket planes may circle the globe in 5½ hours. At 3600 m.p.h., the plane travels about 19,500 miles. Earth's rotation adds 5500 miles to total. Right, lights directed against giant reflectors may furnish constant daylight in future, if radio-power projects prove successful.

experts have expected, knowing that waves a few meters long are transmitted clear to the antipodes. Is there any reason that they should behave radically different when their length is reduced to about half of one meter?

As the knowledge of this subject seems very limited, I may state that even waves only one or two millimeters long, which I produced thirty-four years ago, provided that they carry sufficient energy, can be transmitted around the globe. This is not so much due to refraction and reflection as to the properties of a gaseous medium and certain peculiar action.

Short Waves Provide Increased Channels

The chief object of employing very short waves is to provide an increased number of channels required to satisfy the ever-growing demand for radio appliances. But this is only because the transmitting and receiving apparatus, as generally employed, is ill-conceived and not well adapted for selection.

Because of this and other shortcomings, I do not attach much importance to the employment of waves which are now being experimented with. Besides, I am contemplating the use of another principle which I have discovered and which is almost unlimited in the number of channels and in the energy three-electrode tubes.

This invention has been credited to others, but as a matter of fact it was brought out by me in 1892, the principle being transmitted.

It should enable us to obtain many important results heretofore considered impossible. With the knowledge of the facts before me, I do not think it hazardous to predict that we will be enabled to illuminate the whole sky at night and that eventually we will flash power in virtually unlimited amounts to planets.

I would not be surprised at all if an experiment to transmit thousands of horsepower to the moon by this new method were made in a few years from now. We must establish transmission of power in all its innumerable applications. This has been my life work, and although I am now close to 78, I unhesitatingly say that I hope to see its fruition.

I have been fortunate in the evolution of new ideas, and the thought that a number of them will be remembered by posterity makes me happy indeed. I am confident

(Continued on page 117)

What About Today's Scientists?

"The scientists from Franklin to Morse were clear thinkers and did not produce erroneous theories. The scientists of today think deeply instead of clearly. One must be sane to think clearly, but one can think deeply and be quite insane.

"Today's scientists have substituted mathematics for experiments and they wander off through equation after equation and eventually build a structure which has no relation to reality."

—Nikola Tesla.

Radio Power to Revolutionize World

(Continued from page 42)

that my rotating field and induction motor and the wireless system I have given to the world will live long after I have gone.

You ask me about atomic energy? I experimented with the atom, and achieved similar ends, long before the wave of ballyhoo swept over the country in recent years. The idea of atomic energy is illusionary but it has taken a powerful hold on the mind and there are still some who believe it be be realizable.

Tesla's Vacuum Tube

I have disintegrated atoms in my experiments with a high potential vacuum tube I brought out in 1896 which I consider one of my best inventions. I have operated it with pressures ranging from 4,000,000 to 18,000,000 volts. More recently I have designed an apparatus for 50,000,000 volts which should produce many results of great scientific importance.

But as to atomic energy, my experimental observations have shown that the process of disintegration is not accompanied by a liberation of such energy as might be expected from the present theories.

And as for the cosmic ray: I called attention to this radiation while investigating Roentgen rays and radioactivity. In 1899 I erected a broadcasting plant at Colorado Springs, the first and only wireless plant in existence at that time, and there confirmed my theory by actual observation. My findings are in disagreement with the theories more recently advanced.

I have satisfied myself that the rays are not generated by the formation of new matter in space, a process which would be like water running up hill. According to my observations, they come from all the suns of the universe and in such abundance that the part contributed by our own sun is very insignificant by percentage. Some of these rays are of such terrific power that they can traverse through thousands of miles of solid matter.

Properties of Solar Rays

They have, furthermore, other extraordinary properties. This ray, which I call the primary solar ray, gives rise to a secondary radiation by impact against the air and the cosmic dust scattered through space. It is now commonly called the cosmic ray, and comes, of course, equally from all directions in space. If radium could be screened effectively against this ray it would cease to be radioactive.

The scientists from Franklin to Morse were clear thinkers and did not produce erroneous theories. The scientists of today think deeply instead of clearly. One must be sane to think clearly, but one can think deeply and be quite insane.

Today's scientists have substituted mathematics for experiments, and they wander off through equation after equation, and

(Continued on page 118)

I'm Going to Get THAT JOB!

—Accountant & Auditor
—Architect & Builder
—Automotive Engineer
—Business Executive
—Civil Engineer
—Diesel Engineer
—Draftsman & Designer
—Electrical Engineer
—High School Graduate
—Highway Engineer
—Lawyer
—Mechanical Engineer
—Salesman
—Steam Engineer

American School
Dept. GB-23, Drexel Ave. at 58th St., Chicago, Ill.
Tell me how to qualify for job checked. No obligation.
Name.....Age.....
Address.....

The Job You Want Means— *More Money and Greater Opportunities*

Accidents happen—but getting the good job is not an accident and does not just happen. It is a combination of training — experience — and a willingness to use your ability in the interests of your employer.

Every time you apply for a job, you are asked to make out an application stating exactly what training and experience you have to offer. Your record automatically decides the question. So landing the job you want is not so much a question of whether the employment manager likes you personally, but whether your training and experience fit you to fill the position satisfactorily.

Who Will O. K. You for the Job You Want?

Daily we present the qualifications of students and graduates to over 150 employers. We search out openings and O. K. the student as being fitted for the job—all without extra charge. Hundreds have been helped to "cash in" on their training.

Let us help you increase your training, and so get you ready for the job ahead. Promotion is a step-by-step process, and a reasonable amount of extra training will win you an increase of pay several times the cost of the training. And as soon as you are ready, we shall be glad to help you land the coveted position.

It is not an accident that well-trained men secure good positions. Avoid accidents and "play safe" by preparing yourself to fill satisfactorily higher-grade and better-paid positions. Take the first step toward that better-paying job by checking above the kind of work that interests you, and let us send you full information.

American School
Dept. GB23, Drexel Ave. at 58th St., Chicago
THE UNIVERSITY OF THE HOME

ALL OTHER SIZES IN STOCK

TIRE USERS by thousands all over the U.S.A. vouch for LONG, HARD SERVICE, under severest road conditions of our standard brand Tires reconstructed by the ORIGINAL SECRET YORK PROCESS. OUR **18 YEARS in business** makes it possible to offer tires at LOWEST PRICES in history with 12 month guarantee.—*Don't Delay—Order Today*

BALLOON TIRES

Size	Rim	Tires	Tubes	Size	Rim	Tires	Tubes
29x4.40-21		$2.15	$0.85	30x5.25-20		$2.95	1.15
29x4.50-20		2.35	0.85	31x5.25-21		3.25	1.15
30x4.50-21		2.40	0.85	28x5.50-18		3.35	1.15
28x4.75-19		2.45	0.95	29x5.50-19		3.35	1.15
29x4.75-20		2.50	0.95	30x6.00-18		3.40	1.15
29x5.00-19		2.85	1.05	31x6.00-19		3.40	1.15
30x5.00-20		2.85	1.05	32x6.00-20		3.45	1.25
28x5.25-18		2.90	1.15	33x6.00-21		3.65	1.25
29x5.25-19		2.95	1.15	32x6.50-20		3.75	1.35

REGULAR CORD TIRES

Size	Tires	Tubes	Size	Tires	Tubes
30x3	$2.25	$0.65	32x4½	$3.35	1.15
30x3½	2.35	0.75	33x4½	3.45	1.15
31x4	2.55	0.85	34x4½	3.45	1.15
32x4	2.95	0.85	30x5	3.65	1.35
33x4	2.95	0.85	33x5	3.75	1.45
34x4	3.25	0.85	35x5	3.95	1.55

HEAVY DUTY TRUCK TIRES

Size	Tires	Tubes
30x5 Truck	$4.25	$1.95
34x5 Truck	4.25	2.00
32x6 8 ply. Truck	6.95	2.75
32x6 10 ply. Truck	7.95	2.75
36x6 Truck	8.95	3.95
34x7 Truck	9.95	3.25
36x8 Truck	11.45	3.95
40x8 Truck	13.25	4.15

SEND ONLY $1.00 DEPOSIT with each tire ordered. ($4.00 deposit on each Truck Tire.) We ship balance C.O.D. Deduct 5 per cent if cash is sent in full with order. **ALL TUBES BRAND NEW — GUARANTEED.** Tires failing to give 12 months' service replaced at half price.

TAKE TIRE PRESSURE THRU SIDE WALL OF TIRE NO FUSS • NO DIRT

DEALERS WANTED N.R.A.

YORK TIRE & RUBBER CO.
3855-59 Cottage Grove Ave. Dept. 4239, Chicago

HOW TO WIN PRIZE CONTESTS This book can make you rich, or at least help you make a good living. The purpose of this book, "How to Win Prize Contests," is to help you win by setting forth the best-known principles and methods. Send 25c to **HALDEMAN-JULIUS CO. Box 757 GIRARD, KANSAS**

COMPLETE ELECTRIC PLANTS

$99.50

ONAN A.C. PLANTS furnish same current as city service. Operates Radio, Water System and Household Appliances.

SIZES 300 WATTS UP

Models low as $99. No battery used. Easy to install. Ideal for farms, lake homes, commercial purposes.

D. W. ONAN & SONS
851 Royalston Ave. Minneapolis, Minn.

Radio Power to Revolutionize World

(Continued from page 117)

eventually build a structure which has no relation to reality.

I work every hour that I am awake but not with a feverish tempo. Although I live in the midst of the hustle and bustle of New York, I do not time my scientific experiments to the hectic, jazz rhythm of the hysterical metropolis. I work for the future—build for the future. Just as today I see the realization of experiments carried on fifty years ago, I am now working with a view toward still greater achievements which will come to pass a half century hence.

That is my method. After experiencing a desire to invent a certain thing, I go on for days, months, even years with the idea in the back of my head. Whenever I feel like it, I play around with the problem without giving it any deliberate consideration. This is the incubation period.

How Tesla Works

Next comes the stage of direct effort. At this point the solution is somewhere in my subconscious mind, although it may take some time before it reaches the level of consciousness.

As my conceived device begins to take form, I make mental changes in the construction, improvements are figured out, and I even operate it. All of this is preliminary work—all in my mind. When the machine itself is finished, I slip my imaginary job over it and find they coincide to the minutest detail.

A great development can be expected in rocket propelled machines for purposes of peace and war. With such machines it will be practicable to attain speeds of nearly a mile a second (3600 miles per hour), through the rarefied medium above the stratosphere.

I anticipate that such machines will be of tremendous importance in international conflicts of the future. I foresee that in times not too distant, wars between various countries will be carried on without a single combatant passing over the border.

Infernal Gas Machines

At this very time it is possible to construct infernal machines which will carry any desired quantity of poison gases and explosives, launch them against a target thousands of miles away and destroy a whole city or community.

If wars are not done away with, we are bound to come eventually to this kind of warfare, because it is the most economical means of inflicting injury and striking terror in the hearts of the enemy that has ever been imagined.

My paramount desire today, which guides me in everything I do, is an ambition to harness the forces of nature for the service of mankind. As I see it, we are on the threshold of a gigantic revolution based on the commercialization of the wireless trans-

Radio Power to Revolutionize World

mission of power. The principles for this have been discovered by me.

As this wireless energy is converted into a commodity for the use of the masses, transport and transmission will be subjected to tremendous changes. Motion pictures will be flashed across limitless spaces by my system. The same energy will drive airplanes and dirigibles from one central base.

In this new era man will be able to travel safely, and at great speed, to any part of the world—the jungle—the arctic—the desert—mountain tops—over oceans. The instruments by which these wonders will be achieved will be amazingly simple.

These things will come to pass. Some of them are already within the realm of realization. But like those wonders which I predicted and helped perfect nearly fifty years ago—in the early 80's—power transmission is just around the corner. It's coming.

Today I repeat again what I said to contemporary scientists of those earlier pioneering days:

The scientific man does not aim at an immediate result. He does not expect that his advanced ideas will be readily taken up. His work is like that of the planter—for the future. His duty is to lay the foundation for those who are to come, and point the way. He lives and labors and hopes.

How President Roosevelt Keeps Fit

(Continued from page 65)

est in the outdoors than the present President. Before illness robbed him of the full use of his legs he was an all-around athlete, enjoying tennis, hunting, iceboating, swimming, baseball and football.

But although the President's enormous energy is geared to the production peak of a precision-tooled machine, he does not allow his energy to run away with him. He knows when to work and when to rest—a lesson brought home to him in force when in 1921 paralysis struck him down. Deprived of the use of both his arms and his legs and given scant aid from physicians who knew next to nothing about his disease, Roosevelt was forced to work out his own salvation. His subsequent victory was two-fold: physical recovery and a basic knowledge of mental discipline.

Today, a great part of the President's health program is given over to mental relaxation. He is a great reader, enjoys moving pictures, likes to listen to the radio and is enthusiastic about music, both popular and classical tunes.

Indoor games are one of the President's favorite methods of relieving mental pressure. He enjoys rummy, solitaire, bridge and parchesi, playing them all with his characteristic gusto, but never worrying about their outcome. The President is also one of America's leading hobbyists. His stamp collection is noteworthy and his group of ship models and naval paintings and lithographs is one of the most extensive in existence.

AIR CONDITIONING

THE NEXT BIG INDUSTRY

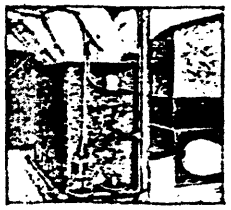

Its opportunities are as big in winter as in summer. Plumbing and heating engineers must know Air Conditioning—the field in its broader aspects invites ambitious men. Write for information on the new, up-to-the-minute course on Air Conditioning now offered by the International Correspondence Schools.

. . . INVENTION—a field of opportunity for men with ideas

If you have an inventive turn of mind, this new International Correspondence Schools Course in inventing and patenting will teach you all the basic knowledge you must have in order to earn real money from your talents. The coupon will bring full information.

CHEMISTRY—a career of service and profit

No field of human endeavor offers greater possibilities today than chemistry. All progress is dependent upon this fascinating science. And right at home, in spare time, you can learn the fundamentals by study of the International Correspondence Schools modern course. Today, ask us for complete information. Send for an interesting booklet—free.

RADIO holds great rewards for trained men

Almost in a decade radio has become a giant industry. The opportunities created will be enjoyed by trained men. The International Correspondence Schools Radio Course, prepared by leading authorities and constantly revised, will make you a trained man! A fascinating book—FREE. Mail the coupon.

INTERNATIONAL CORRESPONDENCE SCHOOLS

Box 2322-X, Scranton, Penna.

Without obligation, send me full information on subject checked below:

☐ Air Conditioning
☐ Chemistry
☐ Inventing and Patenting
☐ Radio

☐ Architecture
☐ Concrete Construction
☐ Mechanical Engineering
☐ Reading Shop Blueprints
☐ Civil Engineering
☐ Electrical Engineering
☐ Diesel Engines
☐ Gas Engine Operating
☐ Refrigeration
☐ Aviation Engines
☐ Highway Engineering
☐ Poultry Farming
☐ Drafting
☐ Accounting
☐ Good English
☐ Salesmanship
☐ Advertising
☐ Show Card Lettering
☐ Civil Service
☐ High School Subjects

Name_____

Address_____

New York Times
Oct. 21, 1934, Sec. IV, p. 5, col. 4,5.

TRIBUTE TO KING ALEXANDER

To The Editor of The New York Times:

Much has been said about Yugoslavia and its people, but many Americans may be under a wrong impression for political enemies and agitators have spread the idea that its inhabitants belong to different nations animated by mutual hate and held together against their will, by a tyrannical power. The fact is that all Yugoslavs- Serbians, Slavonians, Bosnians, Herzegovinians, Dalmations, Montenagrins, Croatians ans Slovenes - are of the same race, speak the same language and have common national ideals and traditions.

At the termination of the World War, Alexander brought about a political union creating a powerful and resourceful State. This was hailed with joy by all the Slavs of the Balkans, but it took time before the people found themselves in the new conditions.

Serbs Did the Fighting.

I was born in Croatia. The Croatians and Slovenes were never in a position to fight for their independence. It was the Serbians who fought the battles for freedom and the price of liberty was paid in Serbian blood. All true Croatians and Slovenes remember that gratefully. They also know that the Serbians have an unequaled aptitude and experience in warfare and are best qualified to direct the forces of the country in a crisis.

Ever since united Yugoslavia came into being through Alexander's efforts, political enemies have done all they could to disrupt it by sowing seeds of discord and disseminating malicious reports. An instance of the kind is a book by Louis Adamic, "The Native's Return," which he is supposed to have written under the provisions of the Guggenheim award for literature and in which he indulges in political defamation, denunciation of the ruler of the country and promulgation of ideas as unwelcome here as in Yugoslavia.

His denunciations of the King and reflections on his character can be contemptuously passed, but one thing cannot be ignored. The book contains statements representing the great and fearless man, who has led his people in sanguinary battles, as a weakling in mortal fear of assassination, so much so that he retired every night to a different room and did not show himself until hundreds of his aides had cleared the place and made safe his appearance. This has cut deep into the heart of every loyal Yugoslav.

Dissensions Denied.

Mr. Adamic is very loud in telling of the hatred and dissensions between Croatians and Slovenes and the Serbians, but recent events have disproved his statements. The countries, which according to his accounts, should be in open revolt, have shown themselves as devoted to the King of Serbia. This has been reflected in several reports of The New York Times, among which is the extraordinarily vivid and dramatic description of the obsequies.

The death of the King has shaken the country to its very foundations, but the enemies who say that it means the disruption of Yugoslavia will hope in vain, for the noble blood of the great man has only served to cement its parts more firmly and strengthen the national structure. Alexander will live long in the memory of his people, a heroic figure of imposing stature, both the Washington and Lincoln of the Yugoslavs; like Washington an able and intrepid general who freed his country from oppression; like Lincoln a wise and patriotic leader who suffered martyrdom.

Nikola Tesla, New York, Oct. 19, 1934

New York Herald Tribune
March 3, 1935

GERMAN COSMIC RAY THEORY QUESTIONED

Nikola Tesla Doubts Link Between Rays and Outburst of Nova Herculis. Inventor Says Light and Particles do Not Travel at the Same Speed.

By Nikola Tesla

The Herald Tribune of January 20, 1935, contained a report relating to some observations of cosmic rays made by Dr. Werner Kolhoester, director of the Observatory of Potsdam, in connection with the outburst of Nova Herculis (the "new" star) noted in December of last year. I had intended to offer a few words of comment upon the same at that time, but thought it advisable to read first the original statement published in the Supplement of the "Berliner Tageblatt" of January 20, 1935, which has been forwarded to me through the courtesy of the German Consulate.

Would Confirm His Theory

This news item has interested me, as the results announced, if valid, would be another confirmation of my theory of cosmic rays advanced in 1896 according to which these radiations can only emanate from such vast and incandescent heavenly bodies as our sun, placed in an almost perfect vacuum and charged to tremendous potentials, sufficient for imparting to minute similarly electrified particles immense speeds and energies by electrostatic repulsion. I have proved this theory rigorously by experiments and deductions, but had I not done so, it would still be established as a scientific truth, for there is no force or effect produced in the universe which, even if amplified millions of times, could account for the cosmic phenomena discovered by me.

Now, a Nova, in its phase of greatest brightness and transcending temperature at the surface, is a generator of cosmic rays incomparably more powerful than our sun. But while this is unquestionably true, the findings of the German radiologist are open to serious objections.

In the first place, calculation conformable to my theory shows that in order to cause an increase in the intensity of the rays of the order found, the surface temperature of the star, assuming its distance 1,200 light years, could not have been much less than 5,000,000 degrees centigrade. Such a high value is extremely improbable although in a Nova, in which radiation of heat from the inside is greatly facilitated by expansion, the difference in the temperatures of the central and peripheral parts may not be very great.

Then, again, the increase recorded, amounting to about 1 percent of the intensity of cosmic rays emitted by our sun, is too small for drawing a reliable conclusion in view of the influence of weather conditions and other disturbing causes. It must also be borne in mind that the coincidence method adopted is far from being accurate.

There exists, however, an element of incertitude which in itself is sufficient to invalidate completely the results obtained and of which Dr. Kolhoerster does not seem to have thought. Light is a wave motion of definite velocity, determined by the elastic force and density of the medium. Cosmic rays are particles of matter, the speed of which depends on the propelling force and mass and may be much smaller or greater than that of light.

Difference in Speeds

Consequently, there can be no concordance in the phases of the two disturbances at the place of observation. The cosmic rays, generated during the maximum brightness of the star, may reach the place many centuries sooner or later than the light,

according to their speed. It thus appears that the results announced cannot have been due to Nova Herculis. Considering further the briefness and small number of star outburts, it is evident that the Novae cannot contribute appreciably to the steady rain of cosmic particles pouring upon the earth from the countless suns of the universe.

Detroit Times
Sept. 22, 1935, p. 3.

NIKOLA TESLA TELLS HOW HE'D DEFEND ETHIOPIA AGAINST ITALIAN INVASION

Dense Tropical Growth Will Frustrate Bombs and Gas Hurled from Airplane.

By Nikola Tesla - World Famous Scientist and Discoverer in the Field of Modern Electrical Invention. In an Interview With George Sylvester Viereck.

"What would you do, if you were Emporer of Ethiopia?"

This question, addressed to Nikola Tesla, suggested itself to me when I remembered the recent announcement by the discoverer of the rotating electric field, that he had perfected certain inventions by which the weak could protect themselves against the strong.

These inventions, it was claimed, could destroy whole cities and put an attacking fleet of airplanes out of commission at great distance.

Could these means be employed by Ethiopia to hold off Mussolini?

I sought out the inventor in a skyscraper hotel, where he ponders over new scientific devices.

Tesla was deeply absorbed in thought, but his sternness melted and his pale face was illuminated by an understanding smile.

"Why do you ask me this question? I bear no ill will against Italians; they have brought forth great men in science, literature and art, and supplied workmen and artisans who have advanced humanity.

"This alleviates their contemplated act of piracy. Other nations have done worse. Nations cannot be judged by the same standards as individuals.

"If I were the ruler of Ethiopia, I would rigorously utilize every natural advantage of my country to nullify the effectiveness of this superior armament and, above all, to prevent him from staging a sensational air-attack, destructive to the morale of my simple-minded subjects.

MUST USE THEIR WITS.

"As a first and absolutely indispensable measure I would order the complete evacuation of Addis Ababa and all other places of importance without a moment's delay. I believe that Haile Selassie already contemplates some such course.

"I would leave no civilians behind in dealing with Mussolini. Though a man of genius and culture, the Duce has a strain of ferocity in his make-up, which appears in some of his outbursts. Savagely bent upon avenging the crushing Italian defeat at Adowa, Mussolini would command ruthless destruction.

"I would scatter my people in the thickly wooded regions and tell them that they must match with cunning what they lack in might to escape annihilation.

"Italian air fleets will darken the sky to overawe the population, probably. But will they bomb towns and settlements, deserted and stripped of all things of value?

That would be a costly sport. It would incur the scorn and ridicule of the world. If my directions were strictly followed, the Italian airman could never find the Ethiopian in the tropical underbrush."

"Knowing that the Ethiopians are hidden there, would the Italians not scatter their bombs over their forests?"

"The noise of bombs hurled from airplanes under such conditions would be entirely out of proportion to their destructiveness; they would kill very few people," Tesla replied with a laugh.

"The dense tropical growth is an ideal impediment against gases and bombs and greatly reduces the range of such devices. Remember also that Ethiopia has a surface of 350,000 square miles, and a population of only 10,000,000, or, on the average 25 inhabitants per square mile. Even to clean out an insignificant jungle requires thousands of ordinary bombs."

"But if the Italians resort to poison gas, what then?"

POISON GAS CERTAIN TO FAIL.

"Such attacks must fail. It is a common mistake to disregard the character of the terrain in estimating the military value of modern arms.

"Weapons that could be used with disastrous results in Europe, will prove futile in Ethiopia. Poison gas is released by bursting bombs or sprinkled from reservoirs. The weight of these gases is insignificant compared with that of the containers and accessories required for their transportation. To provide 1,000 cubic feet of gas, a plane must carry equipment weighing one ton, and 1,000 cubic feet of gas is no more than a drop in a barrel.

"If I were the King, I would teach my subjects how to render themselves immune to poison gas. To explain the scheme, I must go back to my young days in Yugoslavia. As a boy I was very fond of running against the wind and observed that in the summer there was a steady breeze from the land covered with vegetation to a desolate region, barren of growth and strewn with rocks.

"'Why does the wind always blow that way?' I asked my mother. 'Because God has willed it so, my boy.' 'But why has God willed it so?' My curiosity was not satisfied until I acquired some knowledge of physics and mechanics.

"Then I understood that the bleak region exposed to the direct glare of the sun became very hot. The expanded air rose, reducing the static pressure. Then, the cooler and denser air from the surrounding country rushed in, to be in turn heated and caused to rise.

PREVAILING WINDS DISPEL GASES.

"In Ethiopia, where the thermometer registers as much as 140 degrees in the shade, the exposed regions attain scorching heat and the ensuing air-current is swift and of large volume.

"Travelers, noting the prevalence of winds, have not attached any significance to them. Yet, here lies the salvation of Ethiopia. These winds are of supreme importance in gas war. They dilute the gases very greatly and quickly and at the same time supply the vivifying oxygen.

"If I were Haile Selassie, I would station my subjects behind natural or artificial barriers sheltering them from the wind. The gas, released in front of them, will be rendered innocuous, because it will be carried off by the wind from which they are protected. The gas released behind them will be extremely diluted. Streaming past the barrier, it will cause little harm.

"Perhaps my suggesting this remedy in my wholly hypothetical role, I may be

rendering a service to both combatants.

"But the Italians have been preparing long for this war; they may spring surprises. It was reported that their chemists have produced a powder which will burn the feet of the Ethiopians and put them out of combat.

"That must be the proposition of a practical joker or an ignoramus. It would not be possible to manufacture 1 percent of the powder necessary for this purpose. If a limited quantity were sprinkled on the roads and pathways, the Ethiopians would soon find out and beware.

"In my opinion the Italians will be wise to abstain from the use of poison in any form. The natives could retaliate by poisoning all wells. This kind of warfare could not fail to prove a calamity; it would bring about a holocaust among the animals. Their putrifying bodies would bring on pestilence. Water would carry the germ-infection far and wide.

"No, I do not think that the Ethiopians will be in danger from such devices. The airplane will be of value only in open battle and for scouting purposes. It is not a peril to the Ethiopians.

"Their greatest peril is their own impetuosity. If they permit themselves to be detected and enveloped, if they do not confine themselves entirely to guerrilla tactics, the Italians will smash them."

"Have you thought of tanks? How would you meet that menace?"

"I admit, the task is not easy. The modern tank may be compared to the rhinoceros in the days when no bullet could pierce its hide. The heavy armor of the vehicle protects it from guns of considerable calibre.

MERCURIC FULMINATE TO PIERCE TANKS.

"But this would not discourage me, if I were the Lion of Judah. Under my guidance and the pressure of necessity my few mechanical and chemical experts would quickly perfect an efficient defense - possibly rifles of large bore, adapted to fire charges of mercuric fulminate.

"This is an extraordinarily powerful explosive. The extreme suddenness of its detonation is such that, even if unconfined, it will punch a hole in a thick steel plate.

"The chief difficulty is to prevent premature explosion of the gun barrel. I think this could be overcome by an elastic resistance and slow acceleration, which is practicable as the range can be short.

"The charges exploding in contact with the tank would put the propelling engines and machine gun equipment out of order. My Ethiopians, sallying forth from ambush, would do the rest."

"What will be the outcome of the war - if it comes to pass?"

"This question is easily answered. The Ethiopians must hide in the day and strike in the dark. In doing so, they can prevent the aggressors from achieving the important military results during the present dry season. When the rain comes again, their battle will be half won.

ITALIANS ALWAYS POOR COLONIZERS.

"But we are dealing with a hypothesis. I am still convinced that Mussolini will not dare to embark upon a large-scale invasion of Ethiopia. The price he must pay in equipment and men is too great. He must envisage disastrous consequences to Italy, even in case of victory.

"Should Ethiopia be conquered, it would prove a cancer eating away the substance

of Italy. The Italians have never been successful colonizers.

"I perceive more and more clearly that Mussolini is making bold gestures to attain valuable concessions through the mediation of the Peace Conference.

"Holding over the heads of the spineless League of Nations, like a sword of Damocles, the threat of another World War more frightful than the first, he has succeeded in scaring its members, so that they are making ready to deal unfairly with a nation whose only offense is its weakness - a nation that existed before Romulus and Remus were born and maintained its independence for over three thousand years.

"No matter what compromises may be adopted the Ethiopians will rather die than surrender their independence; hence, whether the issue be peace or war, there is much trouble ahead."

Prepared Statement by Nikola Tesla
July 10, 1937 (Prior to interviews with the press on his 81st birthday observance.)

At the close of 1889, having worked one year in the shops of George Westinghouse, Pittsburgh, I experienced so great a longing for resuming my interrupted investigations that, notwithstanding a very tempting proposition by him, I left for New York to take up my laboratory work, But owing to pressing demands by several foreign scientific societies I made a trip to Europe where I lectured before the Institution of Electrical Engineers and Royal Institution of London and the Societe de Physique in Paris. After this and a brief visit to my home in Yugoslavia I returned to this country in 1892 eager to devote myself to the subject of predilection on my thoughts: the study of the universe.

During the succeeding two years of intense concentration I was fortunate enough to make two far-reaching discoveries. The first was a dynamic theory of gravity, which I have worked out in all details and hope to give to the world very soon. It explains the causes of this force and the motions of heavenly bodies under its influence so satisfactorily that it will put an end to idle speculations and false conceptions, as that of curved space. According to the relativists, space has a tendency to curvature owing to an inherent property or presence of celestial bodies. Granting a semblance of reality to this fantastic idea, it is still self-contradictory. Every action is accompanied by an equivalent reaction and the effects of the latter are directly opposite to those of the former. Supposing that the bodies act upon the surrounding space causing curvature of the same, it appears to my simple mind that the curved spaces must react on the bodies and, producing the opposite effects, straighten out the curves. Since action and reaction are coexistent, it follows that the supposed curvature of space is entirely impossible. But even if it existed it would not explain the motions of the bodies as observed. Only the existence of a field of force can account for them and its assumption dispenses with space curvature. All literature on this subject is futile and destined to oblivion. So are also all attempts to explain the workings of the universe without recognizing the existence of the ether and the indispensable function it plays in the phenomena.

My second discovery was a physical truth of the greatest importance. As I have searched the scientific records in more than half dozen languages for a long time without finding the least anticipation, I consider myself the original discoverer of this truth, which can be expressed by the statement: There is no energy in matter other than that received from the environment. On my 79th birthday I made a brief reference to it, but its meaning and significance have become clearer to me since then. I applies rigorously to molecules and atoms as well as the largest heavenly bodies, and to all matter in the universe in any phase of its existence from its very formation to its ultimate disintegration.

Being perfectly satisfied that all energy in matter is drawn from the environment, it was quite natural that when radioactivity was discovered in 1896 I immediately started a search for the external agent which caused it. The existence of radioactivity was positive proof of the existence of external rays. I had previously investigated various terrestrial disturbances affecting wireless circuits but none of them or any others emanating from the earth could produce a steady sustained action and I was driven to the conclusion that the activating rays were of cosmic origin. This fact I announced in my papers on Roentgen rays and Radiations contributed to the Electrical Review of New York, in 1897. However, as radioactivity was observed equally well in other widely separated parts of the world, it was obvious that the rays must be impinging on the earth from all directions. Now, of all bodies in the Cosmos, our sun was most likely to furnish a clue as to their origin and character. Before the electron theory was advanced, I had established that radioactive rays consisted of particles of primary matter not further decomposable, and the first question to answer was whether the sun is charged to a sufficiently high potential to produce the effects noted. This called for a prolonged investigation which culminated in my finding that the sun's potential was 216 billions of volts and that all such large and hot heavenly bodies emit cosmic rays. Through further solar research and observation of Novae this has been proved conclusively, and to deny it would be like denying the light and heat of the sun. Nevertheless, there are still some doubters who prefer to shroud the cosmic rays in deep mystery. I am sure that this is not true for there is no place where such a process occurs in this or any other universe beyond our ken.

A few words will be sufficient in support of this contention. The kinetic and potential energy of a body is the result of motion and determined by the product of its mass and the square of velocity. Let the mass be reduced, the energy is diminished in the same proportion. If it be reduced to zero the energy is likewise zero for any finite velocity. In other words, it is absolutely impossible to convert mass into energy. It would be different if there were forces in nature capable of imparting to a mass infinite velocity. Then the product of zero mass with the square of infinite velocity would represent infinite energy. But we know that there are no such forces and the idea that mass is convertible into energy is rank nonsense.

While the origin and character of the rays observed near the earth's surface are sufficiently well ascertained, the so-called cosmic rays observed at great altitudes presented a riddle for more than 26 years, chiefly because it was found that they increased with altitude at a rapid rate. My investigations have brought out the astonishing fact that the effects at high altitudes are of an entirely different nature, having no relation whatever to cosmic rays. These are particles of matter projected from celestial bodies at very high temperature and charged to enormous electrical potentials. The effects at great elevations, on the other hand, are due to waves of extremely small lengths produced by the sun in a certain region in the atmosphere. This is the discovery which I wish to make known. The process involved in the generation of the waves is the following: The sun projects charged particles constituting an electric current which passes through a conducting stratum of the atmosphere approximately 10 kilometers thick enveloping the earth. This is a transmission of energy exactly as I illustrated in my experimental lectures in which one end of a wire is connected to an electric generator of high potential, its other end being free. In this case the generator is represented by the sun and the wire by the conducting air. The passage of the solar current involves the transference of electric charges from particle to particle with the speed of light, thus resulting in the production of extremely short and penetrating waves. As the air stratum mentioned is the source of the waves it follows that the so-called cosmic rays observed at great altitudes must increase as this stratum is approached. My researches and calculations have brought to light the following facts in this connection: (1) the intensity of the so-called cosmic rays must be greatest in the zenithal portion of

atmosphere; (2) the intensity should increase more and more rapidly up to an elevation of about 20 kilometers where the conducting air stratum begins; (3) from there on the intensity should fall, first slowly and then more rapidly, to an insignificant value at an altitude of about 30 kilometers; (4) the display of high potential must occur on the free end of the terrestrial wire, that is to say, on the side turned away from the sun. The current from the latter is supplied at a pressure of about 216 billion volts and there is a difference of 2 billion volts between the illuminated and the dark side of the globe. The energy of this current is so great that it readily accounts for the aurora and other phenomena observed in the atmosphere and at the earth's surface.

For the time being I must content myself with the announcement of the salient facts, but in due course I expect to be able to give more or less accurate technical data relating to all particulars of this discovery.

To go to another subject, I have devoted much of my time during the year to the perfecting of a new small and compact apparatus by which energy in considerable amounts can now be flashed through interstellar space to any distance without the slightest dispersion. I had in mind to confer with my friend George E. Hale, the great astronomer and solar expert, regarding the possible use of this invention in connection with his own researches. In the meantime, however, I am expecting to put before the Institute of France an accurate description of the devices with data and calculations and claim the Pierre Guzman Prize of 100,000 francs for means of communication with other worlds, feeling perfectly sure that it will be awarded to me. The money, of course, is a trifling consideration, but for the great historical honor of being the first to achieve this miracle I would be almost willing to give my life.

My most important invention from a practical point of view is a new form of tube with apparatus for its operation. In 1896 I brought out a high potential targetless tube which I operated successfully with potentials up to 4 million volts from '96 to '98. This device was adopted by many imitators and with slight modifications it is employed even now in all research laboratories and scientific institutions here and in other countries, and virtually all atomic investigations are carried on with it. At a later period I managed to produce very much higher potentials up to 18 million volts, and then I encountered unsurmountable difficulties which convinced me that it was necessary to invent an entirely different form of tube in order to carry out successfully certain ideas I had conceived. This task I found far more difficult than I had expected, not so much in the construction as in the operation of the tube. For many years I was baffled in my efforts, although I made a steady slow progress. Finally though, I was rewarded with complete success and I produced a tube which it will be hard to improve further. It is of ideal simplicity, not subject to wear and can be operated at any potential, however high, that can be produced. It will carry heavy currents, transform any amount of energy within practical limits, and it permits easy control and regulation of the same. I expect that this invention, when it becomes known, will be universally adopted in preference to other forms of tubes, and that it will be the means of obtaining results undreamed of before. Among others, it will enable the production of cheap radium substitutes in any desired quantity and will be, in general, immensely more effective in the smashing of atoms and the transmutation of matter. I am hopeful that it will be possible by its use to carry out a process in which there should be no misses whatever, but only hits. However, this tube will not open up a way to utilize atomic or subatomic energy for power purposes. According to the physical truth I have discovered there is no available energy in atomic structure, and even if there were any, the input will always greatly exceed the output, precluding profitable, practical use of the liberated energy.

Some papers have reported that I had promised to give a full description of my

tube and its accessories on the present occasion. This has caused me a considerable annoyance as, owing to some obligations I have undertaken regarding the application of the tube for important purposes, I am unable to make a complete disclosure now. But as soon as I am relieved of these obligations a technical description of the device and of all the apparatus will be given to scientific institutions.

There is one more discovery which I want to announce at this time, consisting of a new method and apparatus for the obtainment of vacua exceeding many times the highest heretofore realized. I think that as much as one-billionth of a micron can be attained. What may be accomplished by means of such vacua is a matter of conjecture, but it is obvious that they will make possible the production of much more intense effects in electron tubes. My ideas regarding the electron are at variance with those generally entertained. I hold that it is a relatively large body carrying a surface charge and not an elementary unit. When such an electron leaves an electrode of extremely high potential and in very high vacuum, it carries an electrostatic charge many times greater than the normal. This may astonish some of those who think that the particle has the same charge in the tube and outside of it in the air. A beautiful and instructive experiment has been contrived by me showing that such is not the case, for as soon as the particle gets out into the atmosphere it becomes a blazing star owing to the escape of the excess charge. The great quantity of electricity stored on the particle is responsible for the difficulties encountered in the operation of certain tubes and the rapid deterioration of the same.

Nikola Tesla

(The following article has been included in conjunction with the previous prepared statement by Nikola Tesla - Ed.)

New York Times
July 11, 1937, p. 13, col. 2.

SENDING OF MESSAGES TO PLANETS PREDICTED BY DR. TESLA ON BIRTHDAY

Inventor, 81, Talks of Key to Interstellar Transmission and Tube to Produce Radium Copiously and Cheaply - Decorated by Yugoslavia and Czechoslovakia.

Reports of discoveries by which it will be possible to communicate with the planets and to produce radium in unlimited quantity for $1 a pound were announced by Dr. Nikola Tesla yesterday at a luncheon on his eighty-first birthday at which he was honored with high orders from the Yugoslav and Czechoslovak Governments.

Dr. Tesla, whose discoveries in electrical science have won for him recognition as the father of modern methods of generating and distributing electrical energy, asserted his "absolute" belief that he would win the Pierre Guzman prize of the Institute of France for his discovery relating to the instellar transmission of energy.

Following his annual custom, Dr. Tesla played host to a group of newspaper men at his birthday luncheon at the Hotel New Yorker and issued the announcement of his discoveries of the last year. No apparatus or sketches were shown, but Dr. Tesla said in announcing perfection of the principle of a new tube, which he said would make it possible to smash the atom and produce cheap radium, that he would be able to give a demonstration in "only a little time."

Guests at Dr. Tesla's luncheon included Constantin Fotitch, Minister from Yugoslavia; Vladimir Hurban, Minister from Czechoslovakia; R. Petrovich, first secretary of the Yugoslav delegation; B. P. Stoyanovitch, Yugoslav Consul General in New York; Dr. J. Nemeck, counselor of the Czechoslav Legation, and J. Hajny, Acting Consul General in New York for Czechoslovakia.

Presenting to Dr. Tesla the Grand Cordon of the White Eagle, highest order of Yugoslavia, Mr. Fotitch announced it was the first time the order had been granted to an American for civil accomplishments. The honor was bestowed by order of King Peter through the Regent, Prince Paul.

Dr. Tesla's career has been an inspiration to the youth of his native country, the Minister said. Evidently referring to Dr. Tesla's report several years ago of inventing a "death beam" for use as a defense weapon, the Minister said:

"All your efforts are directed to find a way, by means of some new magic invention of yours, by which you will check and render futile as much as possible all those inventions which men have invented to destroy mutually one another. You feel, as we all feel in your old country, that the world has seen enough of horror and that after so many examples of heroism displayed in the Great War, humanity has found a better way only in peace."

Mr. Hurban, presenting the Grand Cordon of the White Lion, which has been granted to such other distinguished Americans as Secretary Kellogg, Elihu Root and Dr. Nicholas Murray Butler, said "our Czechoslovak nation's brotherly feeling toward you as a son of Yugoslavia made it a duty, not a privilege, to give you this decoration in the name of the president of our nation, Dr. Eduard Benes." He also presented a diploma certifying Dr. Tesla's honorary degree as a doctor of the University of Prague.

Outlines His Discoveries

Dr. Tesla, in responding, said he considered Czechoslovakia "one of the most

enlightened countries in the world."

In a ten-page typewritten statement outlining his discoveries, Dr. Tesla gave a resume of his work in the fields of gravity and cosmic rays. Asserting that "the so-called cosmic rays observed at great altitudes presented a riddle for more than twenty-six years chiefly because it was found that they increased with altitude at a rapid rate," Dr. Tesla said he had discovered "the astonishing fact that the effects at high altitudes are of an entirely different nature, having no relation whatever to cosmic rays."

He gave a detailed technical description of his conclusions from research and calculations concerning the cosmic ray, and continued:

"For the time being, I must content myself with the announcement of the salient facts, but in due course I expect to be able to give more or less accurate technical data relating to all particulars of this discovery."

Digressing from his prepared statement, he said: "I am proud of these discoveries, because many have denied that I am the original discoverer of the cosmic ray. I was fifteen years ahead of other fellows who were asleep. Now no one can take away from me the credit of being the first discoverer of the cosmic ray on earth."

Dr. Tesla's audience stirred as he took up the next phase of his discoveries.

"I have devoted much of my time during the year past," he said, "to the perfecting of a new small and compact apparatus by which energy in considerable amounts can now be flashed through interstellar space to any distance without the slightest dispersion."

To Claim French Award

Explaining that he did not refer to his "universal peace discovery" Dr. Tesla continued.

"I am expecting to put before the Institute of France an accurate description of the devices with data and calculations and claim the Pierre Guzman prize of 100,000 francs for means of communication with other worlds, feeling perfectly sure that it will be awarded to me. The money, of course, is a trifling consideration, but for the great historical honor of being the first to achieve this miracle I would be almost willing to give my life.

"I am just as sure that prize will be awarded to me as if I already had it in my pocket. They have got to do it. It means it will be possible to convey several thousand units of horsepower to other planets, regardless of the distance. This discovery of mine will be remembered when everything else I have done is covered with dust."

Reporters questioned Dr. Tesla closely on his report of an interplanetary communication system. He said he had been working in several laboratories, but refused to disclose where they were. Asked if he had a working model of the apparatus, he said "it employs more than three dozen of my inventions, it is a complex apparatus, an agglomeration of parts."

"It is absolutely developed," he declared. "I wouldn't be any surer that I can transmit energy 100 miles than I am of the fact that I can transmit energy 1,000,000 miles up."

A different kind of energy than is commonly employed must be used, however, he said, explaining further that "you must realize it travels through a channel of less than one-half of one-millionth of a centimeter."

"I could undertake a contract to manufacture the apparatus," he asserted.

Dr. Tesla declared that "life on other planets is an infinite probability, a certitude." A difficulty in using his apparatus, he said, would lie in hitting other moving planets with "the needlepoint of tremendous energy," but astronomers could help solve this problem.

The point of energy could be aimed at the moon and "we very easily could see the effects, see the splash and the volatilization of matter." He also pictured the possibility of advanced thinkers living on other planets and also experimenting in this field, but mistaking the Tesla energy rays for some form of cosmic rays.

Dr.Tesla provoked a new stir with his next announcement.

"My most important invention from a practical point of view," he said, "is a new form of tube with apparatus for its operation."

Reports Tube of New Type

Recalling experiments with other tubes, he said he had been "rewarded with complete success and had "produced a tube which it will be hard to improve further."

"It is of ideal simplicity," he said, "not subject to wear and can be operated at any potential, however high - even 100,000,000 volts - that can be produced. It will carry heavy currents, transform any amount of energy within practical limits and it permits easy control and regulation of the same.

"I expect that this invention, when it becomes known, will be universally adopted in preference to other form of tubes and that it will be the means of obtaining results undreamed of before.

"Among others, it will enable the production of cheap radium substitutes in any desired quantity and will be, in general, immediately more effective in the smashing of atoms and the transmutation of matter. However, this tube will not open up a way to utilize atomic or subatomic energy for power purposes."

"It will cheapen radium so," Dr. Tesla added, "that it will be just a cheap - well, it will get down to $1 a pound, in any quantity."

Expressing "annoyance" that some newspapers had indicated he would "give a full description" of his atom-smashing tube at yesterday's luncheon, Dr. Tesla said he was bound by financial obligations "involving vast sums of money" against releasing this information.

"But it is not an experiment." he declared. "I have built, demonstrated and used it. Only a little time will pass before I can give it to the world."

A final discovery announced by Dr. Tesla involved a new method and apparatus for further perfection of vacuum tubes.

"What may be accomplished by means of such vacua is a matter of conjecture, but it is obvious that they will make possible the production of much more intense effects in electron tubes," he said.

Before and during the luncheon, Dr. Tesla entertained his guests with colorful personal reminiscences and observations including his opinions on dieting and immortality.

New York Herald Tribune
July 27, 1937

DR. TESLA'S HONORS

To the New York Herald Tribune:

I have been a reader of your excellent paper for more than fifty years and feel much obliged to you for the pleasure and enlightenment derived from its perusal. Many of your admirable editorials are on my files. Under these circumstances it is unfortunate that your issue of Sunday, July 11, contained a report very injurious to me.

The particularly damaging statement is: "The decorations made very little impression on Dr. Tesla. 'They mean nothing - take them away,' said Dr. Tesla."

I should say that the expression on my face in the photograph accompanying the report, would be sufficient to disprove the above assertion. When it became necessary to clear the table I was very anxious that the precious objects be placed in safe hands and requested my old friend, George Scherff, auditor of the Union Sulphur Company, who was one of the honored guests, to take care of them. Moreover, as soon as I was free, I cabled His Royal Highness Prince Regent Paul of Yugoslavia and to His Excellency Dr. Eduard Benes, President of Czechoslovakia, expressing my profound gratitude for the rare distinctions conferred upon me and my great pride of possessing them. It was desireable to show in the photograph the Yugoslav Minister handing me the order of the White Eagle but His Excellency Konstantin Fotitch, besides being a master in diplomacy, is a man of commanding stature in other respects, and he did not insist. However, a more charming dignitary than Dr. Vladimir Hurban, Minister of Czechoslovakia, could not be imagined.

NIKOLA TESLA

New York, July 24, 1937

Nikola Tesla, electrical scientist, Felix Frankfurter, of the Harvard Law School, and Giovanni Martinelli, Metropolitan Opera tenor, were recipients of awards from the National Institute of Immigrant Welfare at the Hotel Biltmore, New York City, on May 11, 1938. Due to an illness, the following letter from Nikola Tesla was read at the presentation. A report of the presentation is given in The New York Times, May 12, 1938, p. 26, col. 1.

Mr. Chairman,
Members of the Institute of Immigrant Welfare,
Ladies and Gentlemen:

I can not find words to express adequately my keen regret for being unable to receive, in person, the high distinction which the Institute of Immigrant Welfare has conferred upon me. Although my recovery from injuries sustained in an automobile accident six months ago is almost complete, I do not feel equal to the task of appearing in public and meeting the obligations which this would impose upon me.

My coming to this country was a great adventure - every detail of which is still vivid in my memory. Early in 1884, while employed by a French Company in Paris, I made important improvements in dynamos and motors and was engaged by the Edison interests in New York to design and construct similar machines for them. It had been the height of my ambition and my most ardent wish to come in contact with Edison and see America. Accordingly, I undertook the voyage and after losing my money and tickets and passing through a series of mishaps, including a mutiny in which I nearly lost my life, I landed on these blessed shores with four cents in my pocket. My first intention was to look up a close American friend before going to the Edison establishment. On my way uptown I came to a small machine shop in which the foreman was trying to repair an electric machine of European make. He had just given up the task as hopeless and I undertook to put it in order without a thought of compensation. It was not easy but I finally had it in perfect running condition. I was astonished when he gave me twenty dollars and wished that I had come to America years before. The next day I was thrilled to the marrow by meeting Edison who began my American education right then and there. I wanted to have my shoes shined, something I considered below my dignity. Edison said: "Tesla, you will shine the shoes yourself and like it. He impressed me tremendously. I shined my shoes and liked it.

I began the work for which I was engaged immediately and after nine months of strenuous effort I fulfilled my contract rigorously. The manager had promised me fifty thousand dollars but when I demanded payment, he merely laughed. "You are still a Parisian," remarked Edison, "when you become a full-fledged American you will appreciate an American joke." I felt deeply hurt as I had expected to use the money in the development of my alternating system and when some people proposed to form a company under my name, I accepted eagerly. Here was the opportunity I had vainly sought for years but my new friends were adamant in their resolve not to have anything to do with the worthless alternating currents which Edison condemned as deadly. They desired an arclight system and I had to comply with their request though the delay of my cherished plans was agonizing. In one year of day and night application, I managed to perfect the system which was adopted for lighting the city and some factories in the neighborhood. Then came the hardest blow I ever received. Through some local influences, I was forced out of the company losing not only all my interest but also my reputation as engineer and inventor. After that I lived through a year of terrible heartaches and bitter tears, my suffering being intensified by material want. Very often I was compelled to work as a laborer and my high education in various branches of science, mechanics and literature seemed to me like a mockery. Finally, I had the good fortune of meeting two capable and honest men who listened to me and came to my assistance. They organized a company, provided a laboratory and gave me a modest but sure financial support. I perfected my motors quickly having nothing else to do except to carry out plans I had formed years

before. My inventions proved a success and attracted the attention of George Westinghouse. He was, in my opinion, the only man on this globe who could take my alternating system under the circumstances then existing and win the battle against prejudice and money power. He was a pioneer of imposing stature, one of the world's true noblemen of whom America may well be proud and to whom humanity owes an immense debt of gratitude.

I have to add that in all my troubles I did not neglect to declare my intention of becoming a citizen of this glorious country and in due course I secured my papers making me a proud and happy man.

Nikola Tesla

Science News Letter
Oct. 8, 1938, p. 238.

Reference to Compass in 13th Century Poem.

By Nikola Tesla

Among the oldest references to the mariner's compass is a passage in a poem by a little known French writer, Guyot de Provins, who wrote early in the thirteeth century, I first came upon this reference many years ago, during a period of omnivorous reading while I was convalescing from a nearly fatal attack of cholera morbus.

Among the many books I received there was a large volume of citations, gems of literature of all nations in a dozen languages, which aroused my special interest. Most of the excerpts from famous works, in verse or prose, collected by the author, impressed me so strongly by their beauty of thought and expression that even now I can recite many of them without a miss.

It was in this volume that I found the reference to the compass mentioned in the introduction. It was credited to Guyot de Provins, a French poet of the twelfth and thirteenth centuries, and, if my memory serves me well, worded as follows:

"Quand la mer est obscure et brune
Qu'on ne voit ni étoile ni lune
Donc font l'aiguille allumer,
Puis n'ont garde de s'égarer
Contre l'étoile va la pointe."

I translate freely:

"When gloomy darkness hides the sea
And one no star and moon can see
They turn on the needle the light,
Then from the straying they have no fright
For the needle points to the star."

As a rule, medieval records do not commend themselves for clarity; in fact, not a few are of very small value to the searcher. It is therefore remarkable that this ancient reference to the compass should be so strikingly clear and explicit.

After reading Guyot's verses one is impelled by the wish to know something more about him. With this intention I tried to obtain information from the New York Public Library but his name was not mentioned in any of the catalogues. I then made a thorough examination of the General Index, which was equally unsuccessful, but found a brief notice in the Grande Encyclopédie Francaise.

This item being of unusual interest I have an English translation:

Guyot de Provins, French poet, towards 1200. Undoubtedly, after being a minstrel and going perhaps to Jerusalem, he became a Benedictine in Clairvaux and later in Cluny. He composed between 1203 and 1208, in a style lively and original, but harsh and hard, a satirical work consisting of 2691 octosyllabic verses, which he entitled "Bible," probably to indicate that he intended to say only what is true, and in which he passed in review almost the whole contemporary society. Especially noteworthy is his criticism of the Pope, expressed with great independence, and that of the high clergy and physicians, and a number of passages in which he argues that the compass was known in his time.

Reprinted with permission from SCIENCE NEWS, the weekly news magazine of science, copyright 1938 by Science Service, Inc.

New York Herald
July 26, 1939

THE SOVIET SACRIFICE FOR SPAIN

An Estimate That Republic Received Billion and a Half Dollars

To the New York Herald Tribune:

Your issue of July 9, 1939, contains an article relating to the seizure of Spanish gold by the Soviet government. Another one, dealing with the same subject, appeared in "The Saturday Evening Post" of April 15, 1939. Without entering into a discussion of the merits of these comments upon the question raised, I may remark that, for obvious reasons, any expression of opinion concerning this matter by Americans is likely to be very unfavorable to the Soviet government, and in the interest of common justice it should be weighed without prejudice. What I wish to bring to the attention of fair-minded readers is that the articles referred to do not give the slightest hint in regard to the chief fact to be ascertained, which had a profound bearing on the course decided upon by the Soviets - namely, the sacrifice their struggle on behalf of the oppressed party in Spain involved. They fought vigorously for a cause considered rightful by a large portion of the population, and the ownership of gold and other property was undecided until the termination of the conflict.

Everybody knows that modern warfare is desperately expensive, but few will realize how costly it must have been for the Soviet government, under the disadvantages, obstacles and handicaps confronting it. I was desirous of making an approximate estimate of the cost, and with this object in view I gathered all the available data. Considering carefully the actual outlays in money, the loss of men, of airplanes, guns and other implements of war, ships and munitions, and the supply of food, oil and all kinds of provisions transported from great distance, etc., I have satisfied myself that the Soviet government must have spent, at the very least $1,500,000,000. If this estimate is reasonably accurate, the Spanish gold appropriated amounted to about one-third of the cost. Any government would have acted so under similar circumstances. England, France, Germany and Italy are on record with deeds not at all commendable. What the Soviet government did was perfectly legitimate, in view of the preceding events.

The idea that the boxes brought from Spain were sufficient to cover Red Square is absurd. It would mean not five but something like one hundred times that amount of gold. The metal always is shipped in ounces and its value determined from the prevailing market quotations.

Through the attitude of England and France the Soviet government found itself isolated, and Stalin then made a proposal for non-interference. But Italy and

Germany paid no attention to it and poured tens of thousands of men into Spain to Franco's assistance. Even then Russia was ready to carry on the war. She could swallow Italy in a gulp and not suffer dyspepsia, and if Hitler dared to attack her he would have been badly defeated and Germany would have become again an empire under the Hohenzollern dynasty, probably with the restoration of the status quo ante Hitler regime and recreated free Czechoslovakia. England and France being emphatically against Russian infuence in Spain, Stalin had to withdraw, but in so doing he certainly did not "knife" the Spanish republic.

NIKOLA TESLA

New York, July 23, 1939

HOTEL NEW YORKER

1939

A STORY OF YOUTH TOLD BY AGE

DEDICATED TO

MISS POLA FOTITCH

BY ITS AUTHOR

NIKOLA TESLA

My dear Miss Fotitch:

I am forwarding to you the "Calendar of Yugoslavia" of 1939 showing the house and community in which I had many joyful and sad experiences and odd adventures and in which also, by a coincidence bizarre, I was born. As you may see from the photograph on the sheet for June, the old-fashioned building is located at the foot of a wooded hill called Bogdanić. Adjoining it is a church and behind it a little further up a graveyard. Our nearest neighbors were two miles away and in the winter, when the snow was six or seven feet deep, our isolation was complete.

My mother was indefatigable and worked regularly from four o'clock in the morning till eleven in the evening. From four to breakfast time, 6 A.M., while others slumbered, I never closed my eyes but watched my mother with intense pleasure as she attended quickly - sometimes running - to her many self-imposed duties. She directed the servants to take care of all domestic animals, milked the cows, performed all sorts of labor unassisted, set the table, prepared breakfast for the whole household and only when it was ready to be served did the rest of the family get up. After breakfast everybody followed by mother's inspiring example. All did their work diligently, liked it and so achieved a measure of contentment. But I was the happiest of them, the fountain of my enjoyment being our magnificent Mačak - the finest of all cats in the world. I wish that I could give you an adequate idea of the depth of affection which existed between me and him. You would look vainly in the mythological and historical records for such a case. We simply lived one for the other. Wherever I went Mačak followed primarily owing to our mutual love and then again moved by the desire to protect me. When such a necessity presented itself he would rise to twice his normal height, buckle his back and with the tail as rigid as a metal bar and whiskers like steel wires he would give vent to his rage by explosive puffs Pfftt! Pfftt! It was a terrifying sight and whatever provoked him, human being or animal, beat a hasty retreat.

In the evening we went through our usual program. I would run from the house

along the church and he would rush after me and grab me by the trousers. He tried hard to make me believe that he would bite, but the instant his needle sharp incisors penetrated the clothing the pressure ceased and their contact with my skin was as gentle and tender as that of a butterfly alighting on a petal. He liked best to roll on the grass with me. While we were doing this he bit and clawed and purred in rapturous pleasure. He fascinated me so completely that I too bit and clawed and purred. We just could not stop and rolled and rolled and rolled and rolled in a delerium of delight. We indulged in this enchanting sport day by day except on rainy weather. In respect to water Mačak was very fastidious. He would jump six feet to avoid wetting his paws. On such occasions we went into the house and, selecting a nice cosy place, abandoned ourselves for each other in affectionate embracement. Mačak was scrupulously clean, had no fleas or bugs whatever, shed no hair and showed none of the objectionable traits and habits of cats as I knew them later. He was touchingly delicate in signifying his wish to be let out at night and scratched the door gently for readmittance.

Now I must tell you of a strange and unforgettable experience which bore fruit in my later life. Our home is about eighteen hundred feet above sea level and in the winter we had dry weather as a rule, but sometimes it happened that a warm wind from the Adriatic would blow persistently for a long time, melting rapidly the snow, flooding the land and causing great loss of property and life. We would then witness the terrifying spectacle of a mighty seething river carrying wreckage and tearing down everything moveable in its way. Since I often visualize the events of my youth to find relief from great and dangerous mental strain and when I think of the scene the roar of the waters fills my ears and I see as vividly as then, their tumultuous flow and the mad dance of the wreckage. This leaves me, for a while, sad and depressed. But always agreeable are my recollections of winter with its dry cold and snow of immaculate white.

It happened that on the day of my experience we had a cold drier than ever observed before. People walking in the snow left a luminous trail behind them and a snowball thrown against an obstacle gave a flare of light like a loaf of sugar hit with a knife. It was dusk of the evening and I felt impelled to stroke Mačak's back. Mačak's back was a sheet of light and my hand produced a shower of sparks loud enough to be heard all over the place. My father was a very learned man, he had an answer for every question. But this phenomenon was new even to him. Well, he finally remarked, this is nothing but electricity, the same thing you see on the trees in a storm. My mother seemed alarmed. Stop playing with the cat, she said, he might start a fire. I was thinking abstractedly. Is nature a gigantic cat? If so, who strokes its back? It can only be God, I concluded. You may know that Pascal was an extraordinarily precocious child who attracted attention before he reached the age of six years. But here I was, only three years old, and already philosophising!

I can not exaggerate the effect of this marvellous sight on my childish imagination. Day after day I asked myself what is electricity and found no answer. Eighty years have gone by since and I still ask the same question, unable to answer it. Some pseudo scientist of whom there are only too many may tell you that he can, but do not believe him. If any of them knew what it is I would also know and the chances are better than any of them for my laboratory and practical experiences are more extensive and my life covers three generations of scientific research.

My childhood in Mačak's delightful company and undying friendship would have passed blissfully if I did not have a powerful enemy, relentless and irreconcilable. This was our gander, a monstrous ugly brute, with a neck of an ostrich, mouth of a crocodile and a pair of cunning eyes radiating intelligence and understanding like the human. I aroused his ire by throwing pebbles at him, a most foolish and reckless act which I bitterly regretted afterwards. I liked to feed our pigeons,

chickens, and other fowl, take one or the other under my arm and hug and pet it. But the brute would not let me. The moment I entered the poultry yard he would attack me and as I fled grab me by the seat of my trousers and shake me viciously. When I finally managed to free myself and run away he would flap his huge wings in glee and raise an unholy chatter in which all the geese joined. When I grew up two aunts of mine used to tell me how I answered certain questions they asked. One was Aunt Veva who had two protruding teeth like the tusks of an elephant. She loved me passionately and buried them deep in my cheek in kissing me. I cried out from pain but she thought it was from pleasure and dug them in still deeper. Nevertheless I preferred her to the other aunt whose name has slipped from my memory and she used to glue her lips to mine and suck and suck until by frantic efforts I managed to free myself gasping for breath. These two aunts amused themselves by asking me all sorts of questions of which I remember a few. Are you afraid of Luka Bogić? No! Luka always carried a gun and threatened to shoot. He robbed other boys of pennies and gave them to me. Are you afraid of the cow? No! That was one of our cows and very nice until one day I slid from a fence on her back for a ride when she made off with me bellowing and threw me. I was none the worse for the experience. Are you afraid of the bad wolf? No! No! This was the wolf I met in the woods near the church. He was looking at me fixedly and approaching slowly. I shouted as usual when a wolf is around and he trotted away slowly. My present visualization of this scene is astonishingly sharp and clear. After a number of such questions one of the aunts asked me; Are you afraid of the gander? Yes! Yes! I replied emphatically, I am afraid of the gander! I had good reason to be. One summer day my mother had given me a rather cold bath and put me out for a sun warming in Adam's attire. When she stepped in the house the gander espied me and charged. The brute knew where it would hurt most and seized me by the nape almost pulling out the remnant of my umbilical cord. My mother, who came in time to prevent further injury, said to me: "You must know that you can not make peace with a gander or a cock whom you have taunted. They will fight you as long as they live." But now and then I would play in the poultry yard to my heart's content for on certain days our geese, led by the gander, rose high in the air and flew down to the meadow and brook where they sported like swans in the water and probably found some food. I would then feed and pet the pigeons, the poultry and our grand resplendant cock who liked me. In the evening the gander brought back his flock who made a few turns above the house and then came down with a deafening noise. The sight of the flying geese was a joy and inspiration to see.

MECHANICAL THERAPY

by

NIKOLA TESLA

(No Date)

In order to convey a clear idea of the significance and revolutionary character of this discovery it is indispensable to make a brief statement regarding ELECTRICAL THERAPY.

Fifty years ago, while investigating high frequency currents developed by me at that time, I observed that they produced certain physiological effects offering new and great possibilities in medical treatment. My first announcement spread like fire and experiments were undertaken by a host of experts here and in other countries. When a famous French physician, Dr. D'Arsonval, declared that he had made the same discovery, a heated controversy relative to priority was started. The French, eager to honor their countryman, made him a member of the Academy, ignoring entirely my earlier publication. Resolved to take steps for vindicating my claim, I went to Paris, where I met Dr. D'Arsonval. His personal charm disarmed me completely and I abandoned my intention, content to rest on the record. It shows that my disclosure antedated his and also that he used my apparatus in his demonstrations. The final judgment is left to posterity.

Since the beginning, the growth of the new art and industry has been phenomenal, some manufacturers turning out daily hundreds of sets. Many millions are now in use throughout the world. The currents furnished by them have proved an ideal tonic for the human nerve system. They promote heart action and digestion, induce healthful sleep, rid the skin of destructive exudations and cure colds and fever by the warmth they create. They vivify atrophied or paralyzed parts of the body, allay all kinds of suffering and save annually thousands of lives. Leaders in the profession have assured me that I have done more for humanity by this medical treatment than by all my other discoveries and inventions. Be that as it may, I feel certain that the MECHANICAL THERAPY, which I am about to give to the world, will be of incomparably greater benefit. Its discovery was made accidentally under the following circumstances.

I had installed at the laboratory, 35 South Fifth Avenue, one of my mechanical oscillators with the object of using it in the exact determination of various physical constants. The machine was bolted in vertical position to a platform supported on elastic cushions and, when operated by compressed air, performed minute oscillations absolutey isochronous, that is to say, consuming rigorously equal intervals of time. So perfect was its functioning in this respect that clocks driven by it indicated the hour with astronomical precision. One day, as I was making some observations, I stepped on the platform and the vibrations imparted to it by the machine were transmitted to my body. The sensation experienced was as strange as agreeable, and I asked my assistants to try. They did so and were mystified and pleased like myself. But a few minutes later some of us, who had stayed longer on the platform, felt an unspeakable and pressing necessity which had to be promptly satisfied, and then a stupendous truth dawned upon me. Evidently, these isochronous rapid oscillations stimulated powerfully the peristaltic movements which propel the food-stuffs through the alimentary channels. A means was thus provided whereby their contents can be perfectly regulated and controlled at will, and <u>without the use of drugs, specific remedies or internal applications whatever.</u>

When I began to practice with my assistants MECHANICAL THERAPY we used to finish our meals quickly and rush back to the laboratory. We suffered from dyspepsia and various stomach troubles, biliousness, constipation, flatulence and other disturbances, all natural results of such irregular habit. But after only a week of

application, during which I improved the technique and my assistants learned how to take the treatment to their best advantage, all those forms of sickness disappeared as by enchantment and for nearly four years, while the machine was in use, we were all in excellent health. I cured a number of people, among them my great friend Mark Twain whose books saved my life. He came to the laboratory in the worst shape suffering from a variety of distressing and dangerous ailments but in less than two months he regained his old vigor and ability of enjoying life to the fullest extent. Shortly after, a great calamity befell me: my laboratory was destroyed by fire. Nothing was insured and the loss of priceless apparatus and records gave me a terrific shock from which I did not recover for several years. The enforced discontinuance of MECHANICAL THERAPY also caused me deep regret. I had evolved a wonderful remedy for ills of inestimable value to mankind and invented apparatus offering unbounded commercial possibilities but when I came to consider practical introduction I realized that it was entirely unsuitable. It was big, heavy and noisy, called for a continuous supply of oil, part of which was discharged in the room as fine spray; it consumed considerable power and required a number of objectionable accessories. During the succeeding years I made great improvements and finally evolved a design which leaves nothing to be desired. The machine will be very small and light, operate noiselessly without any lubricant, consume a trifling amount of energy and will be, to my knowledge, the most beautiful device ever put on the market. The intention is to exhibit it in action at the occasion of my annual reception in honor of the Press which has been, unfortunately, delayed this year, and I anticipate that it will elicit great interest and receive wide publicity. Unless I am grossly mistaken it will be introduced very extensively and, eventually, there will be one in every household.

The practical application of MECHANICAL THERAPY through my oscillators will profoundly affect human life. By insuring perfect regularity of evacuations the body will function better in every respect and life will become ever so much safer and more enjoyable. One of the most important results will be the great reduction - amounting possibly to seventy-five per cent - in the number of heart failures, which are mostly caused by some acute upset of the digestive process and normal operation of the stomach. Another vital improvement will be derived from the quickened removal of toxic excretions of organs affected by disesse. It is reasonable to expect that through this and other healthful actions ulcers and similar internal lesions or absesses will be cured and relief might be obtained even in case of a cancer or other malignant growth . Skilled physicians and surgeons will be able to perform veritable miracles with such oscillations. They stimulate strongly the liver, spleen, kidneys, bladder and other organs and by these desirable actions they must contribute not a little to well being. Persons suffering from anemia of any form will be especially helped by the treatment. But the greatest benefit will be derived from it by women who will be able to reduce without the usual tantalizing abstinence, privation, sacrifice of time and money and torture they have to endure. They will improve much in appearance, acquire clear eyes and complexions and it may be safely predicted that long continued treatment will bring forth feminine beauty never seen before. It is not to be forgotten that the elimination of countless drugs, patent medicines and specific remedies of all kinds taken internally, by which millions of people doom themselves to an early grave, will be of untold good to humanity.

Courtesy of Nikola Tesla Papers, Rare Book and Manuscript Library,
Columbia University.

THE NEW TESLA ELECTRIC HEATER - by Nikola Tesla

(No Date)

STRICTLY CONFIDENTIAL

This device is greatly superior to the usual flat core type in efficiency and other respects. It consists of a thin polished metal tube acting as reflector and a base equipped with switch and connecting terminals and carrying spaced resistor wires concentric with the tube and at a certain distance from the inner surface of the same. In this arrangement the diffuse radiation is virtually eliminated, and the heater operates as if the resistor were not present, the rays being projected from the reflector radially to the central or focal region occupied by the boiling pot.

The principal advantages thus secured are the following:

1. A very high efficiency, as much as 96% being attainable.

2. The efficiency is practically the same whether the pot is large or small since the density of the rays is inversely as the diameter of the vessel.

3. Due to these features the current consumption is hardly more than half of that in the best heaters of the type referred to.

4. The resistor has a relatively much longer life and can be made to last almost indefinitely in some cases. Also less wire can be used if desired.

5. The heat being largely confined to the range, the kitchen remains comparatively cool.

6. Another practical advantage is greater safety from a variety of accidents frequently occurring with ordinary ranges.

7. The new heater is especially adapted for use on shipboard, Pullman cars, aerial vehicles and automobiles.

8. Likewise, it is suitable for all kinds of service on the table, being free from the objections of the present type.

9. It saves considerable time in certain applications.

10. Owing to simplicity, the cost of manufacturing is low.

This material courtesy of Nikola Tesla Papers,
Rare Book and Manuscript Library, Columbia University.

TESLA'S NEW SYSTEM OF FLUID PROPULSION - by Nikola Tesla

(No Date)

In subduing the forces of Nature to his service man must invariably avail himself of some process in which a fluid acts as carrier of energy, this being an essential step in any industrial undertaking dependent on mechanical power. Evidently then, a discovery or radical departure in that domain must be of extreme importance and far-reaching influence on the existing conditions and phases of modern life.

Fluid propulsion is now effected by means of pistons, vanes or blades, which entail complexity of construction and impose many limitations on the propelling as well as propelled mechanism and its performance. Tesla has dispensed with these devices and produced machines of extraordinary simplicity which, moreover, are in many other repects superior to the old types universally employed. A few words will be sufficient to convey a clear idea of his invention.

Every fluid, as water or air, possesses two salient properties: adhesion and viscosity. Owing to the first it is attracted and clings to a metallic surface; by virtue of the second it resists the separation of its own particles. As an inevitable consequence a certain amount of fluid is dragged along by a body propelled through it; conversely, if a body be placed in a fluid in motion it is impelled in the direction of movement. The practical forms of Tesla's apparatus consist of flat, circular disks, with central openings, mounted on a shaft and enclosed in a casing provided with ports at the peripheral and central portions, when deriving energy from any kind of fluid it is admitted at the periphery and escapes at the centre; when, on the contrary, the fluid is to be energized, it enters in the centre and is expelled at the periphery. In either case it traverses the interstices between the disks in a spiral path, power being derived from, or imparted to it, by purely molecular action. In this novel manner the heat energy of steam or explosive mixtures can be transformed with high economy into mechanical effort; motion transmitted from one shaft to another without solid connection; vessels may be propelled with great speed; water raised or air compressed; an almost perfect vacuum can be attained, substances frozen and gases liquefied.

While this improvement has the broadness and applicability of a fundamental mechanical concept, the widest field for its commercial exploitation is, obviously, the thermodynamic conversion of energy.

The commercial value of a prime mover is determined by its efficiency, specific performance relative to weight and space occupied, cheapness of manufacture, safety and reliability of operation, adaptability to construction in large units, capability of running at high peripheral velocity, reversibility, and a number of other features of lesser importance. In the majority of these a machine, operating on the new principle, excels. But there is one quality which is most desirable in a thermo-dynamic transformer from the economic point of view, and that is great resistance to deterioration and impairment of efficiency by heat.

The employment of high temperature is of such vital bearing on the efficiency of prime movers that it is of paramount importance to extend the thermal range as far as practicable. In the present state of the art radical progress towards more economical transformation of the energy of fuel can only be achieved in that direction. Such being the case, the capability of the machine to withstand deteriorating effects of great heat is the controlling factor in determining its commercial value. In that most desired quality the Tesla turbine surpasses all the older types of heat motors. The Diesel and other internal combustion engines are fatally limited in this respect by their complete dependence on closely fitting sliding joints and unfailing supply of clean lubricant; while in the present forms of turbine buckets, blades and inherent mechanical deficiencies impose similar restrictions. These

parts are too delicate and perishable to serve as elements of a gas turbine and this has been the main obstacle in the way of its successful realization. The rotor of the Tesla turbine presents a relatively enormous active area and the wear is quite insignificant as the fluid, instead of striking against the propelling organs in the usual destructive manner, flows parallel with the same, imparting its momentum by adhesion and viscosity instead of impact. Moreover, it has been shown that the efficiency of this form of rotor is not impaired to any appreciable degree by a roughening of the disks and that it operates satisfactorily even if the working medium is corrosive to an extent.

The universal adoption of steam as motive power under certain standard conditions, settled upon in the course of time, gradually forced upon the minds of engineers the Rankine Cycle Efficiency as criterion of performance and long continued endeavors to improve the same have finally resulted in complex multistage constructions entirely unsuitable for high temperatures. The Tesla turbine, by virtue of its exceptional heat-resisting and other unique properties, makes possible the attainment of great fuel economy with but a single stage, incidentally offering the additional advantages of an extremely simple, small, compact, and realiable mechanism. But perhaps the chief commercial value of this new prime mover will be found in the fact that it can be operated with the cheapest grade of crude oil, colloidal fuel, or powdered coal, containing considerable quantities of grit, sulphur and other impurities, thus enabling vast sums of money to be saved annually in the production of power from fuel.

The Tesla turbine also lends itself to use in conjunction with other types, especially with the Parsons with which it forms an ideal combination. Although its practical introduction has been delayed by the force of circumstances, a number of years have been spent in exhaustive investigations and experiments on the basis of which the performance in any given case can be closely calculated. The first public tests were made before the outbreak of the war at the Waterside Station of the New York Edison Company where several machines, ranging from 100 to 5000 h.p., were installed and operated with satisfactory results. That the invention was appreciated by the technical profession may be seen from the excerpts of statements by experts and periodicals printed on the annexed page.

The salient advantages of the Tesla turbine may be summed up as follows:

EFFICIENCY: The most economical of the present prime movers is the Diesel engine. But, quite apart of many practical and commercial drawbacks, inseparable from this type, it is entirely dependent on comparatively expensive oil, so that the Tesla Gas Turbine, working with much cheaper fuel, would have the better in competition even if its efficiency as a thermodynamic transformer were appreciably lower, all the more so in view of its greater mechanical perfection.

Referring to turbines, all of which are surpassed by the Parsons in economy as well as extent of use, definite limits have already been reached and the only possibilities of saving fuel exist in the employment of steam at very high superheat and utilization of gas or oil as motive fuel. But none of the prime movers mentioned is adapted for such operation and although every effort has been made in this direction, no signal success has been achieved. The superheat is at most 250° F, this being considered the maximum permissible. All attempts to considerably extend the thermal range have failed chiefly because of the inability of bucket structures to withstand the action of intense heat. The Tesla Turbine can operate quite satisfactorily with the motive agent at very high temperature and, owing to this quality, lends itself exceedingly well to these purposes.

SPECIFIC PERFORMANCE: In this particular it is superior to all other forms. Each disk is virtually the equivalent of a whole bucket wheel, and as many of them take up but a small width the output of the machine, considering its weight and size, is surprisingly great. This, while not being a measure of efficiency, is nevertheless

a feature of considerable importance in many instances.

CHEAPNESS OF MANUFACTURE: The new turbine can be produced without a single machined part except the shaft, all the disks being punched and the casing pressed. By this method, with proper machinery installed on a large scale, the cost of production may be reduced to a figure never deemed possible in the construction of an engine. What is more, this can be done without material sacrifice of efficiency as small clearances are not essentially required.

SAFETY AND RELIABILITY OF OPERATION: There is an ever present danger in the running of high speed machines. A bucket turbine may at any moment run away and wreck the plant. Such accidents have happened again and again and this peril has often proved to be a deterrent to investment. A remarkable quality of this turbine is its complete safety. As regards the wear and tear of the propelling organs it is significant and, in any event, of no consequence on the performance.

ADAPTABILITY TO CONSTRUCTION IN LARGE UNITS: In all the present machines there is a distinct limit to capacity, for although large units can be manufactured, they are very costly and difficult to manage. The new turbine is so simple and the output so large that the limits in this direction can be greatly extended.

RESISTANCE TO DETERIORATION BY HEAT AND OTHER AGENTS: In this feature it has an overwhelming advantage over the old type in which the maintenance of smooth surfaces and sharp edges is indispensable to efficient working. In the Tesla turbine, for the reasons already stated, the destructive actions of heat and corrosive agents are much less pronounced and of relatively negligible effect. This fact has a most important bearing on the saving of fuel.

CAPABILITY OF RUNNING AT HIGH PERIPHERAL SPEED: In this respect also it is superior to others. The rotating structure carries no load and is excellently adapted to withstand tensile stresses. Judging from the most recent turbine practice this quality should be of special value.

REVERSIBILITY: The present turbines are greatly handicapped by their incapability of reversal which is a very serious defect in certain applications, as the propulsion of vessels, necessitating the employment of auxiliary turbines which detracts from the propulsive power and adds materially to the cost of production and maintenance of the equipment. The Tesla turbine has the unique property of being reversible; not only this but it operates with the same efficiency in either direction. For marine purposes it therefore constitutes an ideal motor whether used alone or in conjunction with older types.

Besides the above it possesses other desireable features, constructive and operative, which will add to its value and adaptability to many industrial and commercial uses as, railroading, marine navigation, aerial propulsion, generation of electricity, refrigeration, operation of trucks and automobiles, hydraulic gearing, agriculture, irrigation, mining and similar purposes.

EXPRESSIONS OF OPINION ON THE TESLA TURBINE

C. B. Richards, Professor Emeritus of Mechanics, Yale University:
"I am amazed at the development of power given by the turbine and stunned by the exhibit."

F. Sargent, Chief Engineer and Turbine Expert:
"I am impressed with the newness and novelty of the underlying principle of this invention. It is such as will claim the attention and admiration of anyone of a scientific turn of mind in a mechanical direction."

Reynold Janney, Chief Engineer, Universal Transmisssion Co.:
"It is a great invention."

Brigadier Allen of the War Department:
"Something new in the world. Officers are greatly impressed with it."

Miller Reese Hutchinson, Chief Engineer:
"It is the greatest invention of the age."

Arnold Trinyi, Chief Engineer, Oelfeurungs-Gesellschaft, Germany:
"The ideal of the turbine engine."

B. R. T. Colline (Power Plant Economist):
"It is a wonderful turbine."

The Motor World:
"The new principle unquestionably is a great contribution to science and engineering, great in its simplicity and breadth of application."

Scientific American:
"Considered from the mechanical standpoint, the turbine is astonishingly simple and economical in construction, should prove to possess such a durability and freedom from wear and breakdown as to place it, in these respects, far in advance of any type of steam or gas motor of the present day."

Engineering Magazine:
"An entirely new form of prime mover with interesting possibilities."

Technical World Magazine:
"The Tesla Turbine is the apotheosis of simplicity. It is so violently opposed to all precedent that it seems unbelievable."

From Numerous Articles and Comments:

"The turbine is different in principle to any heretofore in use and one which will take less room and less coal that the best engine now running" . . ."Turbine of revolutionary design" . . . "Improvement in dynamics which promises revolutionary results". . . "Results seem revolutionary to the point of staggering the imagination" . . . "This motor will revolutionize the turbine industry" . . . "Wonderful motor. Extraordinary mechanical principle" . . . etc., etc.

This material courtesy of Nikola Tesla Papers, Rare Book and Manuscript Library, Columbia University.

BOOKS AVAILABLE FROM TESLA BOOK COMPANY

Dr. Nikola Tesla Bibliography-by John T. Ratzlaff and Leland I. Anderson. Contains approx. 3,000 references, partially annotated. 8½ x 11, perfect bound, soft cover, 230 pp.

Dr. Nikola Tesla, I English/Serbo-Croatian Diary Comparison, II Serbo-Croatian Diary Commentary, III Tesla/Scherff Colorado Springs correspondence-by John T. Ratzlaff and Fred A. Jost. Contains important supplementary information to Nikola Tesla, Colorado Springs Notes, 1899-1900. 8½ x 11, soft cover, GBC punched, 182 pp.

Dr. Nikola Tesla-Complete Patents-compiled by John T. Ratzlaff. Contains all 111 U.S. patents, plus one reissue. 8½ x 11, hard cover, 500 pp.

Dr. Nikola Tesla-Selected Patent Wrappers from the National Archives (4 Vols.)-compiled by John T. Ratzlaff. Complete history of twenty of Tesla's most important patents. Contains new, unpublished material. Necessary information for completion and understanding of Tesla's inventions. 8½ x 11, soft cover, GBC punched, 922 pp.

Part I-Solutions to Tesla's Secrets and the Soviet Tesla Weapons-by T. E. Bearden and Part II-Reference Articles for Solutions to Tesla's Secrets-compiled by John T. Ratzlaff A sensational and exciting breakthrough. The long searched for Tesla secrets have been solved by Tom Bearden. 8½ x 11, soft cover, 188 pp.

The New Tesla Electromagnetics and the Secrets of Free Energy-by T. E. Bearden; Proof of Free Energy Devices and Supporting Date-by Dr. Rolf Schaffranke. The first major breakthrough in free energy. Soft cover, 35 pp. 8½ x 11.

Toward a New Electromagnetics. Part III: Clarifying the Vector Principle-by T. E. Bearden. Extension of previous papers relating to Tesla technology. Soft cover, 8½ x11, 33pp.

Toward a New Electromagnetics. Part IV: Vectors and Mechanisms Clarified-by T. E. Bearden. Includes principles of virtual state (ether) technology leading to tapping of new energy source. Well illustrated. Soft cover, 8½ x 11, 62 pp.

Video Tape - Solutions to Tesla's Secrets & The Soviet Tesla Weapons - by Tom Bearden. 2 hours. VHS or Betamax, ½".

The Tesla Experiment - by Charles A. Yost. Earth harmonics found in lightning flashes. Confirms Tesla currents through the earth. New method of investigation. Soft cover, 8½ x 11, 38 pp.

Transverse Paraphysics - The New Science of Space, Time and Gravity Control - by J. G. Gallimore. Completely new and fundamental concepts of matter, particle physics, gravity, anti-gravity and bio-physics. A most complete work. Soft cover, 8½ x 11, GBC punched, 359 pp.

Harmonic Mathematics - A Phi-Ratioed Universe As Seen Through Tone-Number Harmonics -by William B. Conner. System of harmonic math establishes connection between Great Pyramid values, tachion motion, Walter Russell physics, and the work of Bruce Cathie. Soft cover, 8½ x 11, 46 pp.

Part I-Math's Metasonics-Creativity Through Calculator Harmonic Braiding, and Part II-Music's Metasonics-Creativity Through Keyboard Harmonic Braiding, by William B. Conner, 2 volumes, 8½ x 11, soft cover, GBC punched, 353 pp. A blending of religious and scientific concepts in which chemical elements, nature and the universe are comprehended as calculated mathematical harmonics and musical tones.

Electromagnetic Phenomena in Complex Geometries and Nonlinear Phenomena, Non-Hertzian Waves and Magnetic Monopoles-by Elizabeth A. Rauscher, Ph.D. A major mathematical breakthrough in properties of Tesla's non-Hertzian waves, point to development of communication systems. Soft cover, GBC punched, 8½ x 11, 141 pp.

Tesla Said-compiled by John T. Ratzlaff. Includes 100 articles and papers in Tesla's own words, not previously published in book form. 8½ x 11, soft cover, 292 pp.

Bedini's Free Energy Generator-by John C. Bedini. The first publication of details for building and operating a free energy unit. 8½ x 11, soft cover, 18 pp.

Lightning in His Hand-by Inez Hunt and W. W. Draper, hard cover, 269 pp. Complete biography of Tesla's life and work - photographs.

Prodigal Genius-by John J. O'Neill, soft cover, 326 pp. Complete biography of Tesla's life and work.

Nikola Tesla-His Inventions, Researches and Writings-by T. C. Martin. Hard cover, 496 pp. This volume contains all of Tesla's early lectures, miscellaneous articles, discussions and inventions through the year 1894.

Experiments with Alternate Currents of High Potential & High Frequency-by Nikola Tesla. Hard cover, 176 pp. A lecture delivered before the Institution of Electrical Engineers, London, and an appendix on The Transmission of Energy Without Wires.

Nikola Tesla - Colorado Springs Notes 1899-1900. Hard cover, 440 pp. Important details of Tesla's experimental work. Contains approx. 200 drawings and 63 photographs.

Nikola Tesla - Lectures, Patents, Articles. Soft cover, GBC punched, 1065 pp. 8½ x 11. Reprint of Tesla Museum publication.

The Problem of Increasing Human Energy - by Nikola Tesla. Soft cover, 8½ x 11. Reprint of June, 1900, Century magazine article.

Dr. Nikola Tesla - The Forgotten Superman of Our Age - by Ralph Bergstresser, 8½ x 11, soft cover, 15 pp. Review of Tesla's accomplishments.

Nikola Tesla, Dreamer - by Allan L. Benson. Soft cover, 36 pp., 8½ x 11. His Three-Day Ship to Europe & His Scheme to Split the Earth, plus other articles and information.

Introducing Nikola Tesla Through Some of His Achievements. Soft cover, 76 pp.. 7 x 8½. Includes articles, patents, photos, and bibliographical data.

Enigma Fantastique - by W. Gordon Allen. Soft cover, GBC punched, 8½ x 11, 197 pp. An account of the work and the philosophies of Nikola Tesla and Rudolph Steiner.

Return of the Dove - by Margaret Storm. Soft cover, GBC punched, 294 pp. Reprint. Spiritual interpretation of the lives of Nikola Tesla, Arthur Mathews and Otis T. Carr.

The Wall of Light - by Arthur H. Mathews. Soft cover, 8½ x 11, 117 pp. Biographical notes on Nikola Tesla and an account of experiences of the author.

Nikola Tesla Research. Soft cover, 8½ x 11, 64 pp. Assorted Tesla articles and information.

Tesla - Man Out of Time - by Margaret Cheney. Prentice-Hall publication, hard cover, 450 pp. Recently published biography of life and work of Nikola Tesla.

Nikola Tesla - Savant Genius of the 20th Century - by Anthony Shennan. Assorted articles and information. Soft cover, 8½ x 11, 39 pp.

Ether Technology - A Rational Approach to Gravity Control - by Rho Sigma (Dr. Rolf Schaffranke). Basic background data on ether concept. Soft cover, perfect binding, 6 x 9, 108 pp.

My Inventions - by Nikola Tesla, soft cover, 111 pp. Autobiography by Tesla, first appeared in issues of Electrical Experimenter magazine in 1919.

Overlords and Olympians - by W. Gordon Allen. Introduction to Para-Psycho-Physics. Achievements of creative people, including Tesla. UFO discussion. Soft cover, 8½ x 11, 178 pp.

The Cosmic Conspiracy-by Stan Deo. Sections on Tesla, evidences of the ether theory, gravity, classified activities in Australia, and age-old light and dark forces at work. 200 pp. Soft cover.

Tuning In To Nature-by Philip S. Callahan. Fundamental information on solar energy, infrared radiation, and insect communication system. Includes important relationships to Tesla's work. 240 pp. Hard cover.

The Soul of The Ghost Moth-by Philip S. Callahan. Traces author's development as a scientist and philosopher. Includes fundamental concepts of nature and reference to Tesla's basic works. 108 pp. Hard cover.

Write for price information
Tesla Book Company
1580 Magnolia Avenue
Millbrae, CA 94030

Bright Skies - Part I

Top-Secret Weapons Testing?

Extracted from Nexus Magazine, Volume 4, #3 (April-May 1997).
PO Box 30, Mapleton Qld 4560 Australia.
Telephone: +61 (0)7 5442 9280; Fax: +61 (0)7 5442 9381.
From our web page at: http://www.peg.apc.org/~nexus

© 1997 All Rights Reserved by Harry Mason, B.Sc., M.Sc.
1313 Armstrong Road, Jarrahdale WA 6203, Australia.
Phone: +61 (0)9 525 5999, Fax: +61 (0)9 525 5944

Note: Any person seeing, or having seen, exotic "meteor fireballs", or knowing anything about same or exotic EM weapons systems, is invited to contribute to this research project by telephoning the author on +61 (0)9 525 5999 (after 10.00 am WA time = gmt + 8 hours), faxing on +61 (0)9 525 5944, or e-mailing on E-mail: orbitx@ois.com.au.

My research into the subject of Australian fireballs began about two years ago in early 1995. A colleague and friend, John Watts, of geological consultants Mackay & Schnellmann Pty Ltd, asked for my opinion on earthquake risk in an isolated area of the Eastern Goldfields of Western Australia (WA). John knew of my long experience in the Laverton region, conducting geological and geophysical field exploration surveys there for gold mineralisation - hence his approach to me for scientific advice concerning an odd series of events that occurred in this area of WA in May 1993.

The Banjawarn Fireball Events

Whilst visiting a small underground gold-mine John had noticed a *"Kalgoorlie Miner"* newspaper article, dated 1 June 1993, attached to the barracks' kitchen fridge door. This reported that on 28 May 1993 at 23.03 hrs a meteor fireball was seen by several observers to be flying from south to north between Leonora and Laverton. This was immediately followed by a significant 3.9 Richter-scale earthquake - picked up by 23 seismic receivers around WA and the Northern Territory (NT). Ed Paul, a geophysicist at the AGSO (Australian Geological Survey Organisation) Mundaring Seismic Observatory near Perth, had received several telephone calls from the public, as had the Laverton Police. Ed had reasoned that there was a possible connection between the meteor fireball and the quake due to an impact with the ground.

The small gold-mine (the Alycia mine) experienced this quake event as underground three-inch steel pipes sheared clean in half and drives and shafts collapsed. My friend John has done a considerable amount of earthquake risk assessment during his consulting career and thought that this damage pattern was more like instantaneous blast damage, as is normally caused by big explosions, rather than standard earthquake damage. T he key to this was the underground damage, and the type of damage caused, in comparison to the more normal quake mine damage which is usually limited to surface building collapse caused by quake-induced seismic ground waves.

Many observers reported that the fireball passed overhead making a pulsed roaring noise, similar to a very loud road-train diesel engine, and that after the seismic wave hit they heard a huge, long-drawn-out explosion - similar to a very major, but long-drawn-out mine blast, but somehow peculiarly different. (Note: The seismic ground wave moves much faster than the speed of sound from an explosion).

At the time we reasoned that Ed Paul was probably correct and that a meteor fireball (a bolide) could have impacted explosively into the ground and caused the apparent "earthquake" by impact or by airburst-explosion shock-wave induction. This area of WA has had no recorded quakes since seismographs were first installed in 1900, nor Aboriginal racial memory of any quakes.

As such an impact event is a major geological curiosity, often observed in the Earth's geological record but rarely recorded as occurring in human history, we decided to embark upon a private research project to document the event - leading, we hoped, to scientific fame and glory. We did not then appreciate just where this research work and interest would lead...

I visited the area in May and June 1995 and began to interview, by personal visit or telephone, the inhabitants of a 300-kilometre-radius area centred upon Laverton. This Eastern Goldfields region of WA is semi-desert and very isolated with an extremely low population density. It contains several very large sheep stations, a couple of small gold-mining towns (Leonora and Laverton), plus several isolated gold-mine sites, a few gravel or dirt roads, a lot of thick mulga bush and gum-tree scrub vegetation with some sand dune fields and spinifex-grass cover.

I hired a light plane so I could visit outlying stations and Aboriginal settlements to search for eyewitnesses and for "ground zero". This took some three weeks. A summary of all currently available witness data follows:

A large orange-red spherical "fireball" with a very small bluish-white conical tail had flown from low down in the south over observers to the north. Some observers reported that the fireball was cylindrical in form and more yellow-blue-white in colour. It was heard as a pulsed, roaring or loud diesel-engine sound - well before it passed overhead. It dropped off no glowing fragments, and had no long, luminous tail or sparks - as is common meteor activity. Its speed was similar to a 747 jetliner or a fast jet-plane and was obviously less than the speed of sound since loud noises were heard in advance of its arrival.

The sounds heard before the "object" arrived were most definitely not "normal" electrophonic sounds as have been quite commonly reported from historical meteor fireball events. Such electrophonic sounds are experienced as weird "pings" and "whees" of low-volume intensity and are not fully understood at this time, but they are believed to be due to hertzian electromagnetic (EM) waves produced in the bolide plasma trail and propagated at the speed of light to the observer - in advance of the bolide. These sounds are thought to couple harmonically with the inner ear or cause nearby objects to vibrate sympathetically, thus producing the characteristic low-volume sounds. No sonic booms were reported, and no observer believed that any explosion was heard until the object had got to ground level, or very nearly so, behind low hills or treeline cover and then exploded or impacted.

The fireball object flew apparently parallel to the Earth's curvature in a long, "nap-of-the-Earth" arcing trajectory at low altitude (possibly some 1,000 to 2000 metres), from low down on the southern horizon - not with a "normal" meteor's inbound high-angle, high-altitude trajectory.

The fireball lit up some observers and their vicinity as it passed overhead. Its flight trajectory was observed over a distance of least 250 km - although it probably had a much longer flight path well out over the southern Indian Ocean from Antarctica. It then appeared to arc down towards the ground before it disappeared out of sight behind trees or low hills.

This was followed by a near-blinding, massive high-energy burst of blue-white light that rippled for about three to five seconds. This lit up the windless, cloudless, moonless night sky as if it were daylight. Observers could see for some 100 km in every direction at ground level - "as clear as day". The energy intensity involved in this light flash was similar to the light flash generated by a significant nuclear blast, and in many respects the incident strongly resembled a night-time nuclear test.

A huge red-coloured flare then shot vertically skywards for some considerable distance (several kilometres?). This event was immediately followed by a massive seismic ground wave that hit the observers nearest to "ground zero" such that rocks and beer cans vibrated off tables and the ground shook so violently that persons tending a campfire fell over.

Then followed a very loud, major explosive blast that was heard over a 250 km by 150 km corridor. Minor quake damage was reported as far as 150 km southeast of ground zero (the other directions, excepting Leonora to the southwest, being largely uninhabited). Located that night in Laverton was an engineer - with Gulf War experience of missiles and aircraft breaking the sound barrier - who described it as "definitely a major explosive concussion-wave blast [not a sonic boom], similar to, but much bigger than, a normal open-pit mine blast".

A large, deep-red-orange-coloured hemisphere of opaque light, with a silver outer-shell lining, then rose from ground level to hover around over the "ground zero location". This structure, when fully developed, was approximately three times the size of a typical Goldfields setting Moon, as seen by observers located 30 to 50 km away (in other words, it was very big), and it "bobbed around a bit for nearly two hours before disappearing suddenly - as if someone threw the light switch off".

This "half-soup-plate structure", looking like a "deep-red, very large and half-set Sun", was seen by two observers from widely separated locations, one at the Banjawarn station buildings and one at the Deleta station buildings. Dogs at both locations went totally berserk, whining and howling and attempting to get off their leads whilst the aerial light hemisphere was up. Presumably there was an ultrasonic or EM wave propagation to which the dogs were extremely sensitive.

Aboriginal prospectors who were camped very near to ground zero at the Freeman's Find gold prospect were extremely spooked by the event, believing that it was "the end of the world". Some of them thought that they had witnessed a "jumbo jet" crash behind a range of low hills. They gathered their swags (bed rolls) close together as they were too scared to sleep apart. In the morning they climbed a hill to look for fires in the distance but could see no smoke. They quickly departed the area for the safety of Leonora.

One Aboriginal stockman observer, located at the Banjawarn station buildings, believed that he was witnessing a fairly slow-moving "UFO" and became very worried that they were going to land and abduct him and his two companions - since it flew directly at him and then passed, very noisily, low overhead before going into its final downwards-arcing plunge.

Almost exactly one hour after the first big event, three observers located at the Banjawarn station buildings saw a second, much smaller fireball which they described as being more of a blue-green-white colour. It appeared to rise from ground level, but definitely rose from behind distant trees well south of the station perimeter, and then flew to the north in a high mortar-shell-type arc before coming down to ground level behind distant bush. Its flight path was divergent to the north-northeast when compared to that of the first major fireball event of that night.

This later event then created a second but very small explosion and concomitant minor ground shake, similar to the first event but much smaller in size and with no resultant rising hemisphere of opaque light. A prospector located north of the Mulga Queen Aboriginal settlement also reported seeing parts of this second event.

This second event does not appear to have been of sufficient enough magnitude to register on AGSO seismographs. However, analysis of the best AGSO seismic records by USGS (US Geological Survey) energy conversion equations suggests that the energy involved in the first main event quake was probably of the order of one to two kilotonnes of TNT equivalent. The blast itself was probably bigger, as not all such explosive energy is transmitted efficiently into the ground and along the Earth wave path to the seismic observatories.

The main fireball eyewitness "explosion ground zero" was located near to the northern edge of Banjawarn station, whereas the calculated AGSO quake epicentre fix was close to the southern perimeter of Banjawarn station, the difference reflecting the difficulties involved in calculating accurate quake epicentres from remote seismographic locations.

In spite of the excellent eyewitness "ground zero impact" cross-fixes, a considerable time in the air in a Cessna-172 failed to find any crater or ground anomaly of any kind there or anywhere else in a 300-km-diameter search area. Ground and air examination of the nearby Celia fault lineament produced no evidence of any movement on this structure.

Banjawarn is arguably the most isolated station area in the Eastern Goldfields region of WA. This sheep station has gained notoriety since its purchase the same year (1993) by the Japanese Aum Supreme Truth (Aum Shinrikyo) sect - of 1995 Tokyo subway gas-attack fame. Research soon showed that a Japanese Aum Supreme Truth sect representative - deputy leader Hayakawa - had been inspecting sheep stations for sale, around and including Banjawarn, in early April 1993.

Hayakawa initiated purchase procedure for Banjawarn in late April 1993, desiring to "conduct experiments there for the benefit of mankind". The station actually changed hands when papers were signed and a bank cheque was provided on 1 June 1993 - only three days after the fireball event. However, the agreement regarding the sale to the Aum sect was completed on 23 April 1993 - some 35 days prior to the fireball event.

As the 28 May 1993 event did not appear to fit any normal meteor impact scenario, we began to joke that the Aum sect had probably sent a cruise missile with a pulse jet engine and detonated a nuclear weapon on the uninhabited desert fringe immediately north of Banjawarn station...

Meteors usually travel at hypervelocities, greater than 25,000 mph, and do not normally fly low-speed, "nap-of-the-Earth", low-level (1,000-to-2,000-metre-altitude) trajectories. They usually have long, luminous tails and drop-off fragments, and are not documented as triggering earthquakes.

Pressure changes due to storms (or, possibly, pressure waves created by a meteor flypast) are known to trigger quakes in stressed-plate regions of the crust, but this region can hardly be assigned a high-stress fault signature, given the total lack of such quake events in human memory. It is a very stable Archaean Age cratonic shield area, with the nearest location demonstrating quake activity being located in the Fraser Ranges, some 500 to 600 km to the south, east of Norseman.

In response to recent ABC radio interviews given by the author, three truckies reported seeing yet another fireball soon after starting work at 5.00 am one day (exact date unknown) in May or June of 1993. Their "Moon-sized" fireball flew from south to north at low level (some 1,000 metres) with a high-speed jet-plane velocity. It was yellow-orange-red in colour and had a very small blue-white tail. It lit up the early morning dark sky in an intense blue- white light flash that silhouetted the countryside as it headed immediately west of Laverton directly for Banjawarn station. As the truckies were sitting next to loud diesel engines of their own, they do not know if this third Banjawarn fireball made any pulsed, roaring noise.

This third fireball held a course that would not only pass over Banjawarn but might ultimately have reached the Exmouth Peninsula in far northwest WA.

Now, for three fireballs to be heading towards Banjawarn is just too much of a coincidence for a meteor-type event. Meteors of this size are very rare events, let alone three heading around May-June 1993 into one small space on the Earth's surface at Banjawarn. If we assume that fireball no. 3 was seen at 5.00 am on 29 May 1993 - and thus followed fireball no. 1 by six hours, as in, say, a south-to-north-travelling chain of bolides (rather like the recent Comet Shoemaker-Levy 9 impacts on Jupiter) - we have a problem with the

meteor theory, for in that six-hour period the Earth would have rotated 90 degrees about its north-south axis and fireball no. 3 should have come in over East Africa!

Other Fireball Events in Australia and NZ

Since the May 1993 event, there have been many other reports (in excess of 1,000 and often of multiple events) concerning aerial fireballs and associated light-energy emissions. They involve exotic, spherical fireballs making diesel freight-train noises (although there are some noiseless variants), flying long trajectories over different parts of Australia. Isolated but similar reports have also originated recently from New Zealand.

These fireballs have been observed in all our Australian states (as late as 4 February 1997), and in many cases have exhibited variations on and combinations of the following actions: very-low-altitude; nap-of-Earth trajectories; small-to-nonexistent tails; no fragment drop-off; apparent velocity often very slow and commonly less than that of sound; no associated sonic booms; considerable and sudden changes in course, as well as speeding up, stopping dead, reversing course and flying vertically upwards into space; creation of intense vibration of ground and housing during flypast; explosion in massive blue-white arcing light displays with major explosive sound events or silent, intense light-flashes; regular creation of power generation overvoltage outages and other electrical effects.

The Banjawarn case demonstrates a cause-effect relationship with a 3.9 Richter-scale earthquake, and other fireballs have possibly been related on at least two occasions to 3.0 to 4.0 Richter-scale earthquakes in eastern Australia.

If meteors are the source of these observations, then lately we appear to be continually encountering a very odd species of meteor that exhibits a previously undocumented, very exotic behaviour and a very high statistical rate of arrival in Australia, apparently (until recently, i.e., 1996) largely ignoring the rest of the world.

Other possible causes such as natural-gas fireballs, min-min lights and earthquake stress lights may be easily discounted by many aspects of these multiple fireball events - but not least because of their usually very-low-energy output when compared to the very large energies involved in these recent Banjawarn fireball incidents.

However, possible scenarios such as off-planet alien UFOs, or Earthbound powers testing new exotic power-plant, military spacecraft and/or EM weapons systems, cannot be so easily discounted.

The Perth Fireball Event

Probably the most spectacular of these fireball events was that which occurred at approx. 2.00 am on 1 May 1995 above Perth, WA. At that time, a large spherical orange-red fireball with a small conical blue-white tail was observed as it flew from the Indian Ocean over Bunbury, in southwestern WA, in a north-northeasterly direction at a relatively high altitude, apparently with a trajectory that was parallel to the Earth's curvature. The altitude of this fireball is open to question as many observers thought that it was not very high in the sky, but newspaper reports later placed it at several kilometres in altitude.

The fireball soon arrived above the eastern side of the City of Perth (population >1 million) and was seen and heard by many eyewitnesses over its 150-kilometre land-flight trajectory. Observers reported that the "object" emitted a loud, roaring, pulsed noise - similar to a diesel freight train - before it arrived, and that it flew at a steady velocity similar to a high-speed jet aircraft. There was no report of a sonic boom.

Whilst moving over the eastern part of Perth, near Midland, the fireball reportedly stopped dead in the sky and the tail inverted through the fireball to point towards the previous direction of travel! Then there was an enormous burst of blue-white arcing light-energy that briefly lit up the city and its suburbs as clear as daylight for many kilometres. In many ways the event was similar in force level to a nuclear blast. A loud, vibrating, massive explosion-cum-seismic wave reverberated around Perth, causing the city buildings to shake and books and objects to fall off shelves.

Several observers reported that, at the instant of the explosion, four white lights raced apart from the centre of the main "object" and formed a right-angled white cross in the sky. No actual object was seen at any time - just a bright orange-red fireball of light emission and its very small blue-white-light conical tail.

One observer reportedly told the Perth Astronomical Observatory of seeing sparks drop off the fireball during its flight and that it had a long tail or streak of orange colour. All other police and public eyewitnesses reported that the fireball had no tail (or, at best, a rudimentary, very short tail) and that they definitely saw no sparks. They noted that it was spherical or cylindrical in form, as defined by light-energy emission.

About half the city's population, some 500,000 people were estimated to have been woken up by the violence of this explosive, seismic-wave event. The ground vibration wave was picked up by the AGSO Mundaring Seismic Observatory as a paper analogue recording lasting some two minutes, timed at 17.57 UTC, i.e., commencing at 1.57 am WA time.

This event raised some discussion in the WA press over the next few weeks and was generally explained in the media by the Perth Astronomical Observatory as the explosion of a meteor fireball with a power of one or more megatonnes of TNT equivalent, at an altitude of several kilometres. Surprisingly, this event was apparently not widely reported in the world press. One would think that something with a force level equivalent to a large hydrogen bomb detonating above a city like Perth would be worthy of great discussion. Obviously it was not loud enough to wake Canberra...

Reports soon came in of small lights and strange aerial noises that had moved to the north-northeast of Perth towards the small town of Toodyay and beyond, on the night in question. Amateur meteor astronomers spent a considerable amount of time interviewing farmers out that way but no meteor fragments have been recovered to date (December 1996).

Later reports noted that on the same night, some 1,900 km to the north-northeast of Perth, a couple situated on Sunday Island, near One Arm Point north of Broome in the Kimberley region of WA, were woken some time around 3.00 am by a loud, roaring, pulsed diesel-engine noise, "similar to a D9 bulldozer or tank engine", advancing directly towards their front door. This noise rose to a crescendo and books and objects fell from their shelves. The seismic ground-vibration wave and sound event lasted for one to two minutes.

Believing they had experienced an earthquake, the family listened to the early morning ABC radio, but the only story was of the explosive meteor fireball event above Perth. A check of the Mundaring seismic records has shown that no earthquakes of any magnitude at all occurred at Sunday Island or anywhere else in their region that night.

One possible interpretation of these events is that a meteor fireball exploded on contact with the Earth's denser atmosphere high above the east of Perth and that small fragments, including a very large fragment, flew north-northeast over Toodyay, eventually to be heard flying low over Sunday Island in the Kimberley region.

This meteor interpretation ignores the fact of the fireball's slow speed, reportedly similar to that of a jet plane. Due to its roaring sound being heard before it arrived, the fireball apparently travelled at less than the speed of sound at some 750 mph. Most meteors are generally hypervelocity objects flying at many thousands of miles per hour, often greater than 25,000 mph.

The meteor hypothesis also ignores the strange aerodynamics of an "object" that reportedly stopped dead in the sky, whilst the very small luminous tail inverted through the spherical fireball. Moreover, it ignores the lack of recovered fragments from so great an explosive event, and the accumulated evidence from many other similar fireball events that have occurred throughout Australia in recent years.

Observations of the fireball's flight, or effects associated with the event, cover some 2,000 km in strike across WA and thus allow a reasonably reliable attempt at reconstruction on a globe from a planetary perspective. The trajectory starts somewhere to the south-southwest of Perth - possibly in the Indian Ocean or in Antarctica - and projects north-northeast towards the northeastern coast of Japan and across the centre of the Siberian Kamchatka Peninsula. If continued, the trajectory would cross over northern Alaska and over Arctic Canada to emerge into the Atlantic somewhere near Nova Scotia.

It is interesting that the projected trajectory skims Antarctica along its coast near Enderby Land. At this location is a complex of three research bases: the Japanese bases of Syowa (approx. 40º East) and Mizuho (approx. 45º East and inland), and the former USSR base of Molodezhnaya (approx. 45º East on the coast). Further northwest, the former USSR base of Novolazarevskaya (approx. 15º East on the coast) also lies approximately upon the projected trajectory. The former USSR also has bases ringing the coast of Antarctica at the following approximate locations: 92º E (Queen Mary Land), 105º E (Vostok, inland near the South Magnetic Pole), 163º E (Oates Land), and 224ºE/44ºW) (opposite the Rockefeller Plateau). These bases effectively give a good arc-coverage of the entire globe from the radio transmission viewpoint.

The Kamchatka Peninsula in Siberia was the site of the infamous KAL 007 incident. Recent research by David Pearson, published in his book, *"KAL 007: The Cover-up"*, concerning this 747 jumbo-jet shoot-down by the Soviets, suggests that KAL 007 was attempting to gain intelligence on a very large transmitter site located in the central part of the peninsula.

It has been suggested by Japanese journalists (*"Archipelago"* magazine) as well as American scientific researcher Tom Bearden that this Kamchatka transmitter is one of a series of former Soviet EM weapons complexes.

Such weapons are believed to have the ability to transmit explosive and other effects, such as earthquake induction, across inter-continental distances to any selected target site on the globe, with force levels equivalent to major nuclear explosions.

Evidence for the existence of such exotic weapons is given in part in a "Voice of Russia" radio broadcast on their Science and Engineering program of 23 December 1996, where they discussed modern Russian electromagnetic weapons of the microwave plasma variety. The following is a part-transcript of that program, featuring the interviewer Yekimenko and the science authority Boris Belitsky:

Yekimenko: How would a microwave generator be used "in anger", Boris?

Belitsky: It would be used to fire a plasmoid - that is, a blob of plasma - into the path of an incoming missile, its warhead or an aircraft. The plasmoid would effectively ionise that region of space and, in this way, disturb the aerodynamics of the flight of the missile, warhead or aircraft and terminate its flight. This makes such a generator and its plasmoid a practically invulnerable weapon, providing protection against attack via space or the atmosphere.

Yekimenko: Boris, I hate to ask this question, but still... The generals and scientists who speak of this weapon - they couldn't be bluffing, could they?

Belitsky: Oh, no. This is evident if only from the fact that a few years ago, in 1993, at the Russian-American summit in Vancouver, the Russians proposed a joint experiment in testing such generators - or plasma weapons, as they are called here - as an alternative to the Strategic Defense Initiative, SDI. In such an experiment, which was proposed to be code-named *Trust*, the system would be used to repulse a missile attack. In this way, Russia hoped to strengthen the new climate of post-Cold War security in the world.

These comments of course emphasise that many observed "objects" in the night sky may in fact have no mass associated with them at all, and are actually holograms of light being given off by slugs of dense EM energy, these being held in place by three or more transmitters' Tesla wave outputs manipulating plasmoid blobs in 3D space.

Silent Fireball

Another fairly typical (but silent) fireball event occurred in October 1994 at the iron ore mining town of Tom Price in the Pilbara region of Western Australia.

One night in mid-October 1994 a family was having a patio barbecue at about 8.30 pm. They saw a very large red-orange-coloured ball of fire moving at very low altitude directly towards them at a steady, slow, light-aircraft speed (100 mph?) at an altitude of 200 to 300 metres. It was bigger than the Moon in apparent size.

They rang the local police to alert them to a possible aircraft on fire. The two policemen raced outside to watch. By now, half the town (population of some 4,000) was outside watching the fireball. From front-on it appeared to be a fiery orange-red-yellow colour; from the side it appeared to be yellow-white and pulsing up and down in light intensity (as captured on video).

Our original barbecue observers, by now some 200 metres directly below the "object", reported that it was an intense ball of orange-red fire or plasma with the fire swirling in a spiral pattern and the flames disappearing internally upwards into "a central black hole" or void within the spherical mass of flames. The fireball had no tail and made no noise at all, and there was no ground seismic/noise wave as experienced in many other recent Australian fireball events. It was described as a sort of "implosion ball of flames", with all the fire or flames originating in local space outside the fiery, spherical form, and then being sucked into the centre where they disappeared - "like a moving plasma ball in a local space-time warp around a central black hole". "Never ever seen anything like it before, therefore difficult to describe accurately." (Really aware people, these outback mining families!)

The observers said that the fireball took about five to seven minutes to cover the distance from a line of hills west of Tom Price to a line of hills to their east. At this point it flashed a bright blue-white colour that lit up the area; then it took off at very high speed, moving very quickly to the east and disappearing almost instantly. Other observers simply believed that it just disappeared with the intense, bright blue-white light-energy emission flash/explosion, but with no explosive noise.

The observers turned around to look back to the west. Immediately, a second fireball appeared in the west, following the path of the first. It flew slightly lower, but at the same slow light-aircraft speed (i.e., about 100 mph) and, similarly, at constant altitude. Again it flew directly over the barbecue observers and was identical in all respects to the first fireball. Likewise, it moved at very high velocity to the east and disappeared in a massive blue-white flash of light-energy.

This was followed by a third fireball that was exactly the same size and travelled exactly the same low-level altitude (nearly in the treetops), exactly the same slow flight-speed, exactly the same course, and again disappeared at high speed to the east in exactly the same kind of light flash.

The time between the appearance of each separate fireball "pulse" was almost identical. Observers reported that after the first one had disappeared to the east, they swung around to look west, only to find that another fireball had arrived; and after that second one disappeared, they turned again to the west to see that a third fireball had arrived straight away - just like clockwork!

There remains a difference of opinion between observers as to exactly how many fireballs were seen in sequence that night. All observers agree that two fireballs were seen, but several claim that three were actually seen, but that strange time-space-mind distortion effects were in operation (emanating from the fireballs) such that confusion reigned immediately, during and after the sightings, leading to disagreement and argument over the exact number of discrete fireball events.

This entire sequence of events (or parts thereof) was seen by many of the inhabitants of Tom Price, i.e., possibly well over 2,000 people. Many eyewitnesses attempted to take photographs, but when they got their developed film rolls back from Perth they discovered their photos showed good family snaps and only white blanks where the fireballs had been! The films were developed by friends and were not tampered with, suggesting that X-ray or similar EM radiation from the fireball may have fogged the film.

One videocamera tape recording was made, but later accidental over-recording meant that only two minutes of this incident remained - taped as a pulsing light or fireball, as seen from well south of the fireball track. This videotape has since been appropriated by a UFO researcher in New South Wales and has never since seen the light of day.

All residents were shocked by what they had observed, eventually believing that someone deliberately wanted them to see these fireballs as some sort of test over an isolated outback town. They confirm that the object appeared to have no solid mass when seen close up, but from a distance many thought they were seeing an aircraft on fire - but the second and third fireballs disabused them of this idea. No one could align their sighting with anything within their experiential memory. Some thought that "it was like the end of the world" - that same expression yet again!

The two policemen were taken the next day to a point halfway to the Paraburdoo townsite (residents there also saw the fireballs to their north that night), located some 50 km south of Tom Price. The policemen were briefed by "officials" on what had occurred and thereafter refused to discuss the evening's events with their friends in Tom Price.

Being a small town with few inhabitants, and pretty lonely if the other residents cold-shoulder you, one policeman later admitted that he would like to say what it was all about but had been ordered to keep his mouth shut and it was more than his job and life were worth to say more.

The residents of Tom Price discussed these events for days, but attempts to go public on Perth TV were met with ridicule and loony epithets.

They noticed that the fireballs had flown from the direction of the Exmouth Peninsula "US radio communications base" and knew that, in spite of recent newspaper publicity claiming that "this base has been deserted by the USA and handed over to the Australian government", there were still many Americans to be seen in the town of Exmouth who continued to live and work at the base (as is the case even now, in early 1997). Many suspect that there is a secret underground part to this base which contains peculiar, large aerial systems at ground level.

It was later discovered that the Dampier power station, further northeast, went off line at the time of the Tom Price fireballs due to a huge overvoltage pulse on the transmission lines.

Residents of this district have commonly seen or even been followed by bright white lights whilst traversing roads at night near the coast and adjacent to the Exmouth base area. They report that these lights move at low or high speed, at low or high altitude and commonly alter their courses.

Very bright white glows have been observed at night emanating from uninhabited bushland just to the east of Tom Price. Fireballs have been reported on several occasions in the period 1973 to 1994 as flying from Exmouth towards the east and the Great Sandy Desert.

Secret Weapons Testing and Other Scenarios

In this Tom Price instance we appear to have a possible direct link to US bases. hus it is feasible that high-powered EM weapons systems are being tested by the USA - or some other foreign government - on Australian soil, or that off-planet alien UFO interest in the Exmouth US base is being demonstrated in these sightings.

Regular passage of three such slow-speed fireballs, ultimately increasing rapidly to very high speed, occurring at exactly equally-timed intervals, along the same very-low-altitude trajectory and course, cannot involve any normal meteor or bolide-train event. These fireball events do not appear to represent any known natural phenomenon, and certainly appear to fit the alien UFO, secret military spaceplane-testing or EM weapons-testing scenarios.

Eyewitness information about the interior of the Exmouth Peninsula "US VLF submarine communication base" proves to be extremely interesting. The main transmitter (Tx) site consists of one very high central aerial called "Tower Zero" positioned upon a low hilltop and surrounded by 11 equispaced smaller towers (each about 1,000 feet high). Each tower is connected by aerial wire forming a series of three concentric circular loops (in excess of 2.5 km diameter). Tower Zero is encased in wood/asbestos sheeting to form a very high, enclosed oblong box, and has a two-man elevator running up the inside of the tower. The top inner aerial shape is surrounded by a larger enclosed box.

The aerial array utilises enormous quantities of copper tube and wire "ground counterpoise" arrays buried in the ground under the entire complex.

Access into the hillside tunnel opening takes one into a large (at least three-storey) underground section at the base of Tower Zero. Here is something like the innards of a giant "transistor radio" with a huge heavy-duty copper-wire coil some 50 feet high and 15 feet in diameter - all supported on hardwood (Jarrah) frames fixed with wooden (Jarrah) nuts and bolts! Sections are lined with stainless-steel sheeting. There may be further and deeper sections under the copper coil which were not seen by this eyewitness.

There is a large power station at the site, possibly running on gas from boreholes into a large natural-gas reservoir nearby.

Although officially recently handed over by the US Navy to Australian Navy control, the base still has many US "consultants" who live in the nearby town of Exmouth. The Jarrah fittings and copper coil in Tower Zero were installed in 1968, after the main building contractor teams had left the facility.

Supposedly this Exmouth Tx site is transmitting VLF or ELF radio messages to submarines. However, this eyewitness description of the underground wooden frame and giant coil is a dead giveaway. It perfectly describes major elements of Tesla's Wardenclyffe, Long Island, Magnifying Energy Transmitter - and his earlier Colorado Springs research versions. The wooden construction is required to handle very high voltages and very high frequencies (possibly as high as microwave-band frequencies) by containing the induced coil electrostatic wave from discharge. It is not needed to handle very low frequencies (VLF) or extremely low frequencies (ELF).

Tesla claimed in 1908 that he could hit any antipodean planetary city with an enormous EM energy pulse, delivered in microseconds, that would "create an explosion equivalent to more than the power of the extant world navies' combined "Dreadnought" battleship broadsides" (i.e., a huge force similar to that of a nuclear explosion) from just such a device.

Therefore, it would appear that the Exmouth US Tx site contains "Tesla" or "scalar" EM weapons systems and has been active since about 1969, i.e., in time to conduct the 1970 and earlier tests for which we see evidence, due east of there in the Great Sandy Desert, as many grid rows of 10-km-spaced earthquakes, looking like a chessboard - each of 3 to 5 Richter power.

Earthquakes To Order

In 1965, this section of the Great Sandy Desert area was (uniquely for Australia) covered by high-altitude U2 aerial photography, paid for by the US Government. Why?

In 1966, the French oil company Aquitaine Oil (now called ELF Aquitaine) took out a large oil exploration permit in this most isolated and difficult-to-access area of Australia. Canberra even paid half the exploration costs to help explore the hinterland. No other company known to me ever got this type of deal - especially to explore an area of poor conceptual potential in a poor geological environment when many easier-access and far better geological environments with excellent conceptual potential existed elsewhere in Australia and were open for acquisition and exploration.

Aquitaine commenced exploration in 1967 and carried out aeromagnetic, ground gravity, seismic traverse, and ground VLF/ELF EM studies. (These EM techniques were quite rare and odd exploration techniques to be used in oil exploration.)

In 1968-69, Australian Army MPs with 4WD Jeeps were airlifted into the Great Sandy Desert to round up a couple of hundred nomadic Aboriginal tribespeople and ship them out to Broome. This region was declared "off limits to the public", and all access tracks into the desert were guarded by Military Police. The published reason for this was the danger from a series of test launches from Woomera in South Australia, over the Great Sandy Desert and Broome, of the British *Blue Streak* missiles, and of the European four-

stage space rocket satellite-launching system. (They even got this one into orbit eventually in early 1970 and 1971.) Thereafter, the British missile program and the European space effort were rather mysteriously and suddenly closed down.

In 1970 Aquitaine did no field work. In late March 1970, a series of concentrated 3.0 to 5.0 Richter-scale earthquakes commenced in the eastern Great Sandy Desert. (Note: no earthquakes have ever been known there since seismometers were installed in WA in 1900; also, there is no Aboriginal racial memory of quakes in this region.)

These quakes stopped in early October 1970, only to recommence the following year. Isolated quakes have continued every year since 1970. The late March to early October period is the only viable field period in this region - due to the extreme temperatures of 50+ degrees Centigrade in the months of November to February.

In 1972-73, Aquitaine drilled two stratigraphic holes (both dry) and walked away from the permit. Their annual exploration work reports (1966-1973) should be on "open file" at the WA Mines Department library in Perth; however, they are listed as confidential. No copies exist in Perth as they are held under lock and key in Canberra at the AGSO (ex-BMR) offices. This situation is unique in all my WA exploration experience.

In 1973 the BMR (Bureau of Mineral Resources) published a report about the strange explosion of new earthquakes in the eastern Great Sandy Desert. This report contained incorrect quake epicentre maps - apparently biased not to show the strange, regular positioning of these quakes along a 10-square-kilometre-spaced grid over an 80 km by 70 km area, with a central two-kilometre-spaced series of quakes along two lines forming an apparently central "aiming point" cross.

The 1996 AGSO Mundaring Observatory epicentre data demonstrates this regular quake epicentre pattern very well. The accuracy of epicentre determination is thought to be +/-10 km. Other Australian areas of dense quake distribution show chaotic elliptical area spreads clustered statistically around central points - not regular grid lines of quakes marching through the desert. These quakes are not due to seismic explosives - unless they used several kilotonnes at each shot hole!

The Great Sandy Desert earthquakes are distributed almost exactly due east of the Exmouth VLF Tx site and, intriguingly, are also located upon a Magnetic North Pole great circle route from Exmouth's sister transmitter complex located at Cutler, Maine, on the northeastern seaboard of the USA near the Canadian border.

Thus, if the several sightings concerning fireballs emanating from Exmouth (reported during the period 1973 to 1994) to the east towards the Great Sandy Desert are taken into account, it would appear that this area of Australia has been utilised for the testing and eventual deployment of a diabolical EM weapons system of prodigious power.

Slugs of EM energy could have been fired from Exmouth and steered or explosively initiated from Cutler, and/or other US global transmitter sites onto the target test range within the Great Sandy Desert to initiate major earthquakes in a region previously and totally devoid of same.

On a globe one can see that the great circle geographic polar route north from Exmouth passes through the following locations: Hong Kong; Thule (US air base in Greenland); Cutler, Maine (known VLF Tx); Arecibo, Puerto Rico (known VLF Tx); Tucuman, Argentina (known VLF Tx); Palmer and Amundsen-Scott US Antarctic bases; back to Exmouth Tx in NW Australia. Such a series of Tx sites would allow good coverage of the entire planet.

Interestingly, the Puerto Rico site is a near exact antipodean site for Exmouth, and both sites are areas where UFO sightings are common - especially Arecibo, where I suspect the sightings are mainly atmospheric Tesla light-energy-emission "UFOs" from the testing and operation of both Tx EM weapon sites.

There are many fascinating coincidences in this research. Take for instance the case of Harold E. Holt, Prime Minister of Australia from 26 January 1966 to 19 December 1967. He disappeared whilst swimming one Sunday - apparently after reporting to family and close colleagues over the preceding days that he had discovered something about the USA, its activities here and its future intentions, that deeply offended and worried him. Intending to raise these issues in Cabinet and then Parliament on the following Monday, he was never seen again.

Rumours of CIA assassination, shark attack or removal by Chinese submarine have continually surfaced over the years. Recent stories even suggest that Holt is alive and well in China...

The Exmouth Peninsula communications base is now called the "Harold E. Holt Naval Communication Station". One would think that the Australian Federal Police or ASIO/ASIS could have solved the disappearance and/or possible murder of an Australian Prime Minister in some 30 years. One does not have to look too far for a connection and possible line of enquiry.

Then there is the case of the two young cattle-station hands who died under very mysterious circumstances a few years ago in the Great Sandy Desert - on the very seismic grid-lines put in by Aquitaine Oil, and within the very area of the Great Sandy Desert "earthquake test range"...

It would appear to be high time for Australians to do something about this state of affairs - since we actually host a weapons system that has led clandestinely to the deaths not only of Australians but quite probably of tens of thousands of fellow humans in many countries across the globe.

But all of that - the science of earthquake-inducing EM weapons systems and their recent deployment and use on planet Earth by Russian, Japanese and American forces - must wait until the next article in this series.

About the Author

Harry Mason, BSc, MSc, MAIMM, MIMM, FGS., is a UK-born geologist/geophysicist, resident in Perth, Western Australia. His 30-year career in mineral exploration has had him stationed all over the world, including Alaska, India, Norway, Mexico, Morocco, Sudan and UK. He has extensive field experience in geo-recce, geological mapping, geophysics/geochemistry, prospecting, remote-sensing/computer imaging technologies, and seismic and electromagnetic studies. He specialises in the geology and resource exploration of WA's Eastern Goldfields. Lately he has been devoting his time and expertise to researching mysterious Australian outback phenomena of natural and man-made origins.

Bright Skies - Part III

Top-Secret Weapons Testing?

Extracted from Nexus Magazine, Volume 4, #5 (Aug-Sep 1997).
PO Box 30, Mapleton Qld 4560 Australia.
Telephone: +61 (0)7 5442 9280; Fax: +61 (0)7 5442 9381.
From our web page at: http://www.peg.apc.org/~nexus

© 1997 All Rights Reserved by Harry Mason, B.Sc., M.Sc.
1313 Armstrong Road, Jarrahdale WA 6203, Australia.
Phone: +61 (0)9 525 5999, Fax: +61 (0)9 525 5944

Note: Any person seeing, or having seen, exotic "meteor fireballs", or knowing anything about same or exotic EM weapons systems, is invited to contribute to this research project by telephoning the author on +61 (0)9 525 5999 (after 10.00 am WA time = gmt + 8 hours), faxing on +61 (0)9 525 5944, or e-mailing on E-mail: orbitx@ois.com.au.

"Banjawarn-Bang" Revisited

Part 1 of this "Bright Skies" series of articles described an anomalous event-consisting of a bright, flat-trajectory fireball, a huge flash of white light, a major explosion, a red flare rising skywards to a great height, and a 3.6-3.9 Richter-scale earthquake-which occurred on the late evening of 28 May 1993 on or close to Banjawarn sheep station (ranch) in the northeastern Goldfields region of Western Australia.

The majority of eyewitness evidence placed the "ground zero" of the 1-2 kilotonne explosion on the northwestern edge of this Banjawarn property.

A large hemisphere (some two times as large as a half-setting Sun) of opaque orange-red colour with a silver lining then rose from ground level to bob around for two hours before turning off as if a light switch had been thrown.

The Banjawarn sheep station soon became newsworthy due to its purchase and occupation in 1993 by the Japanese sect, the Aum Supreme Truth (Aum Shinrikyo), of Tokyo subway gas-attack fame. The sect's stated purpose at that time was "to conduct experiments there [at Banjawarn] for the benefit of mankind". It was reported in the media in 1995 that Aum sect members had experimented there with sarin nerve gas on sheep-as a prelude to the Tokyo gas attack on 20 March 1995.

The Aum sect's deputy leader, Kiyohide Hayakawa, visited Perth in April 1993. Aided by Perth-based Japanese Mahikari sect agent, Japanese-born Yasuko Shimada, he hired a light plane and flew with a Perth real estate consultant (Japanese-Australian, Micky Webb) out to the northeastern Goldfields to view several "for sale" sheep stations.

Interestingly, in his pre-Aum days, Hayakawa had studied for his Masters degree at Osaka University in "Greening Technology". His thesis is marked highly confidential and is under top-secret wraps. The University authorities originally stated that he studied "Anti-Desertification" in the Climate Engineering department. However, Japanese investigative journalist Yoichi Shimatsu (see web site www.pelago.com) has uncovered strong evidence that this department is a cover for secret Japanese electromagnetic (EM) weapons research.

More recently, in response to Shimatsu's published story concerning Hayakawa's true area of study, Osaka University now insists that Hayakawa studied "Landscape Engineering". The outcome of the deployment of certain types of EM weapons is, if you like, a higher order of "Landscape Engineering"!

These weapons systems appear to be candidates, amongst many other examples, for the geophysical environmental warfare weapons originally envisaged by Professor Gordon McDonald in Nigel Calder's 1968 book, *"Unless Peace Comes."*

Hayakawa left Osaka University and soon found his way into the Unification Church-the Korean Moonies sect. The Reverend Moon was a long-time friend of the recently deceased North Korean "Great Leader", and is now known as an associate of George Bush in new Moonies ventures in South America. After some years, Hayakawa became a high-ranking member but broke with this sect under

cloudy circumstances in 1987. He left the Moonies (with their permission?)-with US$20 million of their funds, the deeds to several Tokyo buildings, and the rights to several Moonies businesses-and joined the Aum sect.

According to an analyst for the Japanese Police, Hayakawa was under surveillance at this time-believed to be a possible spy for the North Korean military. He inadvertently led them straight to the relatively unknown Aum sect.

Hayakawa apparently utilised these Moonies assets to buy his way into the Aum sect-to whom he brought some 35 fellow Moonies. He rose almost immediately to the position of deputy leader, running a nearly separate organisation surrounded by his ex-Moonies cadres, in his so-called "Aum Construction Ministry". Hayakawa reportedly began to use the multi-faceted Aum organisation as a convenient cover for a variety of drugs, arms and high-tech scientific equipment (of use in weapons manufacture) dealings around the world. For instance, during the Gulf War, Saddam Hussein was among his trading partners.

Hayakawa visited Russia 22 times, and North Korea 17 times since 1992. He traded with KGB official Vitaly Masenko-operating under cover of the Ukraine Ministry of Industry and Trade. Masenko had previously worked closely with the Ukrainian chapter of the Unification Church since at least the mid-1980s.

Japanese Cults: Covert Political Support

Yasuko Shimada, Hayakawa's contact and helper in Western Australia, also had an interesting career prior to her 1993 Banjawarn role, according to author Garry Greenwood.

In his 1997 book, *"All The Emperor's Men"*, Greenwood discusses his experiences with the international Japanese cult Mahikari. He was a devoted member of this "New Civilisation" spiritual healing religion for some 17 years and was their number-two spiritual leader/executive in Australia for about 10 years.

Several years ago Greenwood left this sect upon discovering that its founder, Lt Colonel Yoshikazu Okada (ex-Emperor's bodyguard and Imperial Guards), had been instrumental in planning the Japanese Army's infamous "Rape of Nanking" in China prior to World War II. He also found out that at the higher Japanese Mahikari command levels the cult was viewed as designed with just one purpose: to initiate the placement of the current Emperor of Japan back to his "rightful" position as Emperor of Planet Earth within our lifetime. Apparently these people believe that in an earlier lifetime, many of thousands of years ago, the present Japanese Emperor ruled this entire planet, and it is now his ordained destiny to rule the Earth again.

Greenwood noted that Yasuko Shimada, Hayakawa's 1993 Perth contact, was instrumental in establishing Mahikari in Australia in 1974. This cult has only some 2,000 members here, but it concentrates on the rich and powerful.

Jo Court, the wife of Western Australian Premier Richard Court, has been a member for some 15 years, and she and her husband celebrated his February 1993 election win all the next day at the Perth Mahikari temple, before leaving two weeks later on a holiday tour of Japan, reportedly involving many meetings with powerful and influential Mahikari-sponsored Japanese "businessmen".

It is interesting just how many events in this Banjawarn story happened in sequence during early 1993.

In April 1993, yet another Japanese group arrived in WA. The Japanese Environment Ministry approached the Western Australian Government with a plan to undertake an "Anti-Desertification" study in the eastern Goldfields area of WA. This project went silent after the Aum affair exploded into the world news, but after help by Richard Court and Deputy Premier Hendy Cowan it is now in full swing around Kalgoorlie and Laverton. Japanese university post-graduate students are tending electronic monitoring equipment installed all over these areas of the eastern Goldfields-"in order to learn how to green third-world deserts".

Joint research by Yoichi Shimatsu in Japan and Garry Greenwood has uncovered a trail of connections between the covert Japanese money-power supporters of both the Aum and Mahikari sects. These included prominent LDP (Liberal Democratic Party) politicians such as Shintaro Ishihara, co-author (with the late Sony chairman Akio Morita) of a book entitled *"e;The Japan That Can Say No"*. This 1989 book's basic thesis suggested that Japan should ally with Russia, and that by mating Japanese microchips to Russian super-weapons they could put the finger up to the USA and jointly rule the world. It appears to describe the plan that is currently being followed by a covert money-power group that controls the Japanese Government.

Much evidence suggests that both the Japanese Aum and Mahikari sects are offshoots of covert Japanese God-Emperor worship groups and serve mainly as deniable political (and military technology) action arms intended to aid their particular Japanese brand of world hegemony. It is unlikely that most international members are aware of this or their dupe roles in this scenario. Jo Court was informed of this Mahikari-Emperor scenario by her (now ex-) friend Garry Greenwood, but she refused to believe it.

Hayakawa's Fieldwork

In April 1993 Hayakawa, aided by the Perth real estate consultant, spent 12 days examining sheep station properties in the Leonora-Laverton outback region of Western Australia.

Flying in to each station, Hayakawa strangely and openly asked to be shown immediately the uranium prospects that were located there. Hayakawa took small rock samples away for assay from each uranium prospect that he was shown. He then requested a station 4WD vehicle to "tour the station alone to view the property potential and make up his mind re purchase".

According to information from the consultant, Hayakawa drove to locations within the central areas of the properties, often over the soil-covered granites. At first he attempted to drill two small holes into the ground with a small portable rock-drill, but the drill soon failed and he had to dig small holes by spade. He placed an electrode into each ground-hole, connected the two electrodes to a small electrical instrument about the size of a fax machine, and proceeded to record some electrical or electromagnetic variable for several hours at each site. He did not move the electrodes at all during this process.

Back at the station quarters he would "number-crunch" this data all night long on a powerful portable computer.

Hayakawa was rather touchy when the consultant asked him what these procedures were all about, and he mumbled that it was necessary for the Aum's future experiments "for the benefit of mankind" to choose the correct location. In fact, he carried out these ground geophysical surveys without the knowledge of any of the station owners, who thought he was merely sightseeing around their properties in station 4WD vehicles.

As a geophysicist often involved in geophysical surveys of many types for mineral exploration purposes, I could not immediately understand or deduce what electrical system Hayakawa was utilising or for what purpose. Normal electrical and electromagnetic ground surveys involve moving the sensors along lines over the prospective ore-body location, not measuring some parameter for hours at one static location, and they never involve number-crunching measurements all night long.

Hayakawa repeated this procedure of uranium sampling, ground geophysics and all-night number-crunching at each sheep station that he visited.

Eventually, after further aerial surveying of Banjawarn, Hayakawa decided that this station was ideal for Aum's purposes. It appears that he chose Banjawarn due to its isolation rather than its contained uranium prospects which, if anything, were much smaller and lower in grade than those located on the other stations he had inspected.

Banjawarn is arguably the most isolated sheep station in the eastern Goldfields, and the area lying along its northern, northeastern and eastern perimeter is even more isolated sand-dune/spinifex country linked to the edge of the Gibson Desert. The entire area is almost totally devoid of inhabitants.

Hayakawa attempted to purchase the station then and there in mid-April 1993, showing the owner a briefcase full of Australian paper money notes. The owner, being a prudent man and well aware of colour ink-jet printers, refused to deal in that manner and requested a properly signed legal purchase document and the handover of a reputable WA bank cheque.

Obviously Hayakawa was keen for the Aum to own the Banjawarn station right away, in mid-April 1993-which suggests he was operating to a tight time schedule.

Hayakawa then immediately returned to Perth and left for Tokyo, but in early May 1993 he travelled to the Soviet naval base at Cam Ranh Bay in Vietnam-according to Japanese Police inspection of his travel agent's ticket stub lists.

Later in April 1993 two other Aum personnel arrived in Perth from Tokyo, whereupon they utilised the services of a firm of solicitors to establish a WA company and draw up a legal purchase document which would be satisfactory to the owners of Banjawarn station. These Aum representatives had a poor command of English and were quite agitated at the slow and lengthy legal process necessary to effect the purchase agreement-which again suggests a tight timetable for their agenda.

This Banjawarn purchase agreement was signed on 23 April 1993. Yasuko Shimada, being an Australian resident, was co-signatory on the Banjawarn ownership papers in order to help the Aum get past Australian land ownership regulations. Without her Mahikari help, the Aum would have had severe problems gaining title to Banjawarn and conducting experiments there "for the benefit of mankind".

I find it interesting that the Mahikari sect includes amongst its members the wife of the Premier of Western Australia; the same Premier who had an investigation conducted into the Aum sect's activities in connection with the "Banjawarn Bang". He was

prompted by my 1995 report to him regarding the early fireball/explosion/quake data that suggested this event could have been nuclear in nature and was certainly suspicious enough to warrant a full scientific investigation.

Premier Court stated in a letter to me (dated 15 May 1996) that this WA Police inquiry had established that the Banjawarn event was natural in origin. Yet not one of the eyewitnesses (whose testimony was detailed in my report) was ever approached by the WA Police (or anyone else) during the alleged investigation. It appears there is room here for some interesting scenarios and, at least, a few important questions require answering.

The exchange of Aum's bank cheque to the owner of Banjawarn took place on 1 June 1993. Thus, actual ownership of Banjawarn station was in the hands of the Aum sect via a front company only three days after the fireball event of 28 May 1993, though this had been guaranteed by signed agreement some 35 days before the Banjawarn fireball event.

The WA Government's Pastoral Board finally registered the official change of ownership on 1 September 1993.

The Aum That Never Was

In mid-1995 the chief lawyer of the US Senate inquiry into the Aum sect informed this author of the Aum's great interest in Nikola Tesla's EM earthquake-inducing weapons technology. This suggested an interesting line of research and posed the question of whether there was a connection between the bizarre fireball events of the night of 28 May 1993 and the interest shown by Hayakawa and the Aum sect in Banjawarn station.

On 26 May 1993 a party of Australian and Japanese amateur astronomers was touring the Goldfields en route from Leonora to Meekatharra when they encountered several Japanese people camped in the bush north of Leonora. The Japanese astronomers remarked to their companions that these people were quite strange in their demeanour and conversation, and they were seen to be very oddly attired. It is quite possible they were Aum members, as the sect is renowned in Japan for strange dress and behaviour.

From where they were camped it was only about one hour by 4WD vehicle on bush roads to the 28 May event's ground-zero location near or on Banjawarn station. These people were ideally placed to cover the fireball events that occurred just two days later. Japanese tourists are very rare in this region which is well off the beaten track.

The Australian Federal Police informed me in April 1995 that Aum sect personnel, including their science minister Hideo Murai (a nuclear physicist, regarded as "the most intelligent living Japanese"), were at Banjawarn on 28 May 1993, having arrived in Australia in mid-May. (Interestingly, Murai also had a pre-Aum background in EM technology. He had worked at Kobe Steel, researching microwave and other EM ray/wave technology applications for cold moulding of steel, having graduated as an astrophysicist specialising in cosmic X-ray analysis. His Kobe Steel laboratory was at the epicentre of the great 1995 Kobe earthquake.)

About one month later the Federal Police retracted this story, stating that there was no evidence of any Aum members being at Banjawarn (or in Australia) at the time of the fireball event, therefore the Aum could not have been involved in the event of 28 May.

The amateur astronomers' information suggests that the Federal Police were at best mistaken. Unknown Aum members could easily have arrived in eastern Australia posing as Japanese tourists and might have been missed by Australian immigration authorities.

The Australian Federal Police also claimed later that ownership of the Banjawarn station was only transferred to the Aum sect as late as September 1993, hence there was no possible tie-up with the fireball events. Technically this is correct, since this was when the WA Pastoral Board registered the change of ownership. However, this claim is very misleading since the purchase agreement was signed by both parties on 23 April 1993, and Aum handed over the bank cheque on 1 June 1993.

At the time of the "fireball" event at 23.03 hours on Friday evening 28 May 1993, the Aum knew that Banjawarn was theirs by legally enforceable right. They also knew there was rarely anyone in residence at the station buildings during weekends from Friday to Monday when, typically, the station owner and his wife would drive 100 km to the southwest to stay with relatives.

The party of strangely dressed Japanese persons (Aum?) could easily have checked that all tracks in the event ground-zero were devoid of personnel-if this was even considered necessary. They could certainly have filmed the events of 28 May and/or carried out monitoring of field scientific parameters.

In late September 1993 Shoko Asahara, the bearded guru-leader of the Aum sect, arrived in Perth with deputy leader Hayakawa and several group members (including young teenage girls), carrying excess air freight baggage reportedly costing some A$330,000.

This "baggage" included laboratory and "mining equipment" in the cargo hold, as well as dangerous chemicals (hydrochloric acid) concealed in toiletry containers and sake bottles in personal luggage. Many of these items were confiscated by Australian Customs, and two Aum members spent time in detention over their infringement of air safety regulations.

The Aum entourage hired a couple of twin-engined planes to fly them out to Banjawarn. They later utilised the planes for low-level aerial recce around the entire station area as well as examination of areas outside the station to the east, south and north.

The Australian Federal Police alleges that the Aum sect tested sarin nerve gas on sheep at Banjawarn station during its September 1993 occupation. The evidence for this is slim and would probably fall down if ever tested in court. Moreover, there is copious evidence that sarin was not the gas used in the Tokyo subway gas attack.

Gas attacks on the Japanese railway system, and strange (possibly terrorist-initiated) "accidents" in Japanese nuclear power plants, have continued well after Asahara's incarceration. There is some evidence that points to North Korean terrorist activities being the source of all of these incidents-including the original Tokyo subway gas attack.

Today, Asahara is generally being vilified in the Japanese/world media and is kept in a cold cell; but Hayakawa is hardly ever heard of while under house arrest (where his 'warders' call him "Sir"!).

It appears likely that the Aum was simply nominated as the source of the gas attack to shut down a compromised intelligence asset and hide the true state of affairs regarding North Korea.

Nuclear Bomb Scenario

The eyewitness observations of the Banjawarn explosion of 28 May 1993 resemble a description of a night-time nuclear blast. Calculations utilising the seismic signals received around WA suggested that the energies involved in the explosion were at least 1-2 kilotonnes of TNT equivalent, i.e., similar to a small nuclear bomb. Following mid-1995 press reports that linked the Aum to attempts to procure nuclear weapons, I decided that this possibility was serious enough to alert the US Senate inquiry and the Australian authorities. However, a lack of radioactive dust particles in Australian collectors for that month, as well as intelligence information and other considerations, soon led me to discount the nuclear bomb theory. However, the US Senate is still researching this possibility.

During their brief one-month occupation of Banjawarn station in 1993, the Aum entourage established a field chemical laboratory in one of the Banjawarn station houses. They also built a new graded track down to the edge of the large salt lake south of the station buildings, presumably to allow better access for uranium sampling.

There is solid evidence from Australian Federal Police sources that the Aum re-sampled many uranium mineral shows in the district and air-freighted a trunkload of local uranium ore back to Japan. Samples of this ore left in the Banjawarn laboratory and found by the Federal Police have been analysed in the WA Government Laboratory in Perth. These rocks contained such low levels of uranium that the chemists and Police laughed at the Aum's apparent stupidity in attempting to use these ores for nuclear-bomb-making purposes. There is no other evidence of any illegal uranium mining or large-scale sampling by the Aum at or near Banjawarn.

Thus Hayakawa had undertaken geochemical sampling of the local uranium shows before and after the 28 May '93 Banjawarn fireball event with its associated explosion, earthquake and two-hour orange-red hemispherical structure.

Later news reports, sourced from an Aum detainee imprisoned in Tokyo, suggested that Aum had attempted to extract fissionable uranium from the Banjawarn ore.

This nuclear technology story fitted the earlier press releases of US Senator Sam Nunn, who, as senior member of the US Senate inquiry into the Aum sect and Weapons of Mass Destruction (Oct-Nov 1995), had argued that there was evidence the Aum had attempted to acquire nuclear weapons from their Russian contacts, and had also attempted to develop their own nuclear weapons in Aum factories.

On the available evidence, Nunn was worried that the Aum may have succeeded in either endeavour and had therefore acquired nuclear weapons. His worry was justified, given media information suggesting that Aum leader Asahara was not only predicting a future major nuclear war between Japan and the USA, but was also plotting to initiate such a war by detonating a clandestine nuclear weapon within continental USA.

The ore available to the Aum at Banjawarn was very low grade, and, in common with all uranium ore, consisted of 99.999% 238U with only very minuscule amounts of 235U-the highly reactive, fissionable bomb-making uranium isotope. Until the recent development of laser extraction technology, it would take years to acquire useful amounts of this isotope-using large centrifuge and

gas extraction industrial plants operating on huge amounts of ore with massive electrical power requirements. It still takes large amounts of ore but can now be achieved in months rather than years.

It was obviously impossible for the Aum to effect recovery of sufficient 235U for a standard uranium nuclear bomb in their field laboratory and with their limited mining actions at Banjawarn. But a "dirty" bomb (238U-cased tactical or micro-nuke, as acquired from Russia?) could possibly have been achieved by the Aum's actions.

However, Hayakawa had expended a great deal of effort in his geophysical all-night-long number-crunching surveys and in his geochemical sampling of the local uranium shows. What was his purpose, and was there a link with the events of 28 May 1993?

The possible links between the Aum sect and the Banjawarn events can be summarised as:

1. The Aum's interest in the same piece of Planet Earth as the strange "fireball" and its associated events, and at approximately the same time;
2. Hayakawa's earlier "Landscape Engineering", i.e., EM weapons studies at Osaka University, and Murai's EM work at Kobe Steel;
3. The US Senate inquiry chief lawyer's comments re the Aum's interest in Tesla's earthquake-inducing EM weapons systems;
4. The strange nature of the "fireball" events, as reported by eyewitnesses, apparently not fitting a normal, natural meteorite scenario.

Soviet/Russion-Japanese EM Weapons Scenario

Japanese seismologists' first inkling of EM earthquake-inducing weapons technology came at a joint meeting between them and Soviet seismologists after the huge Armenian earthquake of 1988.

Strongly supportive evidence about these weapons came from a Moscow source developed by Japanese investigative journalists. This person was present during a conference in Moscow (January 1990) when a top Japanese delegation, led by Foreign Minister Shintaro Abe, met with USSR President Gorbachev and his aide, Politburo member Alexander Yakovlev. Their intent was to establish "bilateral cooperation".

At further meetings in January 1991, Gorbachev via Yakovlev offered the Japanese the USSR's super-secret intercontinental EM weapons technology-capable of producing earthquakes-for US$900 million. This EM weapon system had been on active service in the USSR since the early 1960s.

Gorbachev also agreed with Japanese Diet member Toshio Yamaguchi to the setting up of a joint Japan-Russia University in Moscow that would be tasked with co-opting the brightest young nuclear physicist minds of both countries to develop new second- and third-generation EM super-weapons by mating Japanese microchip and electronics know-how to Russian first-generation weapons technology. Note the scenario similarity to that of the book, *"The Japan That Can Say No"*.

This university was soon formed, and under the cover of "Cultural Studies" was administered by the Aum sect and one Lobov. Lobov became Yeltsin's head of the Security Council-after the late 1991 coup that removed Gorbachev. The Aum cadres first arrived in Moscow in late 1991. Under the support of Lobov, given many hours of free time on Radio Moscow and access to the Russian Army, the Aum soon had more Russian members (over 50,000) than Japanese (around 30,000).

The Aum sect was utilised to effect many covert arms purchases in Russia as cover for the Japanese Government. Yakovlev still managed the Japanese/Aum relationship-but from behind Lobov, due to this close association with the now-tainted Gorbachev. Both met Hayakawa repeatedly over the next few years.

The asking price for this EM weapons technology exchange was US$900 million-but it was not destined for the USSR exchequer. The US Senate inquiry into the Aum found evidence that very large sums of money had indeed been transferred to Lobov's Swiss bank account, but did not know why! Several people ended up very dead in Russia whilst attempting to research this scenario.

This intelligence raises the possibility that a test site would be required for demonstrating the intercontinental range and effectiveness of said EM weapon system to the purchaser. The weapon would need to be 'fired' from an existing KGB transmitter (Tx) site somewhere inside Russia, and/or from a KGB-controlled naval vessel. (Remember, Hayakawa visited the Russian Navy at Cam Ranh Bay soon after his April 1993 visit to WA.) Probably two or three actual transmitters would be required to effect the fireball and associated events. This test site could not be in highly populated Japan for obvious reasons; nor could it be inside Russia's borders, where the Russians totally controlled the target site, since the purchaser might suspect a sham-set up to extract their money.

Western Australia demonstrates a similar intercontinental test-range distance from, say, the Siberian Kamchatka Peninsula, as that from Japan to the eastern seaboard cities of the USA.

Kamchatka contains a huge, 30-km-diameter, circular EM weapons Tx site-which the infamous flight KAL 007 was attempting to gain intelligence on, before being shot down by Soviet forces on 31 August 1983.

Obviously one or several test-firing demonstrations of the EM weapon system's many capabilities would be in order before any US$900 million could be handed over for the weapon. What better way than to purchase an isolated Australian outback station to act as the independent Japanese target and test range? Practically no one lives in this desert to notice the tests. If someone did, they would dismiss them as natural meteorites. The biggest and most explosive test, and the one involving major earthquake initiation, was best conducted prior to the Aum's official residency there.

US nuclear physicist and former US Army Lt Colonel Tom Bearden has researched Soviet EM weapons systems for over 20 years. He has documented many eyewitness accounts from around the world of "Tesla fireballs" and large spherical or hemispherical orange-red "Tesla shields". Bearden believes that the Banjawarn incident and associated events fit perfectly to known Soviet/Russian EM weapons technology.

A Tesla fireball is created by two or more transmitters broadcasting Tesla rays to create a slug of very high 'infolded' EM energy that is moved across three-dimensional space by manipulation of the ray parameters. When over or in the target, their contained EM energy is released in microseconds to create nuclear bomb-sized explosions or large earthquakes.

A Tesla shield consists of highly charged scalar EM field-generated plasmas capable of blowing electrical circuits in missiles or aircraft, thus downing them or removing their threat potential for accurate weapons delivery. A Tesla shield is also believed to be capable of engineering changes within the atomic nucleus such that slow application of low-level EM energy transmutes the nuclear isotopes within a warhead from, say, 235U to 238U; i.e., this technology can 'dud' nuclear warheads in their silos or in flight. Alternatively, rapid application of high EM energy levels may cause warheads to be prematurely detonated.

Hayakawa's Real Purpose Around Banjawarn

So why was Hayakawa carrying out a recce field geophysical survey on the sheep stations around Banjawarn in April 1993? The following scenario is considered plausible.

Hayakawa needed to know the local 'infolded' EM (Tesla ray) telluric or magneto-telluric parameters. This data would allow for accurate targeting of the Russian EM weapon, and for a study to detect changes induced during and after the actual fireball-explosion-quake weapon test. Obviously the Japanese powers wanted to know all they could about the technology.

For test purposes Hayakawa also required knowledge of the U208/U205 ratio in the local uranium ore shows around the district. Repeating these analyses during and after the tests would allow an assessment of the nuclear warhead 'dudding' ability of the Tesla rays within the huge orange-red hemisphere that formed north of Banjawarn on the night of 28 May '93.

Thus, the simple Aum Banjawarn field laboratory could easily handle analysis to determine the 238U/235U ratios of the local uranium ore samples. Any changes in these ratios would demonstrate the Russian claims about the transmutation of radioactive warhead material. Such a scenario appears more plausible than the impossibility of the Aum attempting to extract 235U from the Banjawarn ores in the field laboratory.

A second fireball was reportedly seen at Banjawarn that night, at 24.00 hours. It appeared to arc up from ground level, high over Banjawarn, before crashing to Earth inside the orange-red hemisphere structure. Was this a small test missile, with electronic navigation and a payload of uranium ore, designed to aid testing of this Tesla shield's ability to dud both electronic and radioactive nuclei?

American EM Weapons Testing Scenario

A third large fireball was seen over Banjawarn at 5.00 am by truck drivers in May or June of '93. It flew a nearly identical low-level nap-of-the-Earth trajectory and track to the first fireball of 28 May '93. It was similar in all respects, except we do not know if it made a Diesel-engine roaring noise in flight. Another low-level, large roaring fireball was observed by a dogger (dingo trapper) flying this same track from Laverton to Banjawarn in about 1988-89. Other "Tesla shield" structures consisting of orange-red hemispheres and spheres were seen north of Banjawarn much earlier in the 1980s, and in late 1988-89 and during 1992.

This data suggests either that a very strange natural Earth EM system is operational in this region, or possibly that alien activity has been ongoing in this area for some time. Or perhaps a group other than the Japanese Aum has been utilising the area as its EM testing ground for some years.

Certainly I and several witnesses experienced odd effects just west of this area in 1988 whilst engaged in a gold exploration project. Three HF radio systems, a computer and three 4WD vehicles all suffered burnt-out electrical circuits at 11.00 am one morning. All of these systems were isolated from each other and spread apart by distances varying from 10 to 50 kilometres. At the time we joked about nuclear EMP blasts and UFOs (none seen!).

This electronics burn-out incident now looks like a strike from an OTHR EMP plasma wave system-such as is currently being deployed at Laverton, WA, Alice Springs, NT, and Longreach, Qld. Sold to the public as simply "Over-the-Horizon Radar" (OTHR) utilising HF hertzian waves, these systems actually have other, hidden effects. By utilising pulsed radar beams of high power, they can create and project a charged EM plasma via waveguide layers in the ionosphere. This can be triggered to create severe Earth-dielectric induced currents, causing electronic damage, human electrocution, and other collateral damage upon targets located thousands of miles distant - a modern on-off switch equivalent of a nuclear bomb EMP blast.

Over recent years the Laverton district has had a history of strange electrical events involving the burn-out of power station generators, overvoltage blow-out of power lines, interference on microwave telephone links, and radio receivers picking up powerful, sparking current-flow interference at specific times.

It is quite possible that Hayakawa and Aum were actually eavesdropping on someone else's EM weapons tests in this area. If so, the best source candidate is the "ex-US base" at the Exmouth Peninsula VLF/HF microwave transmitter site, located in northwestern Australia. This is where so many reported fireball flights appear to have originated. However, other fireballs have been seen to fly towards this facility (due to Tx-reversed Tesla wave polarity?). The Banjawarn "fireballs" also appear to have been on course for Exmouth.

This Exmouth site also contains a large "mushroom farm" (HAARP clone) aerial system-believed to be a prototype experimental OTHR plasma weapon. Presumably this system has been carrying out propagation tests for several years across the outback to target sites located on Australian soil.

Hayakawa would still have needed to check for the Exmouth Tx ground-infolded Tesla ray-wave, and ordinary EM hertzian wave, signal strengths-in order to deduce which was the best sheep station area to purchase for eavesdropping on these presumably US-controlled tests. The Aum would probably still have wished to test the nuclear dudding ideas by sampling the local uranium ores in an attempt to study the effects of the local Tesla shield developments.

On a related note, there is evidence that in April 1993 the Japanese Mitsui Corporation sent a field crew into Australia to study "ground truth" geology obtained by their high-definition Earth Resources Satellite. (The images produced by this system appear to be of very high military-intelligence-resolution definition, rather than standard Earth resource exploration resolution.)

This Japanese team recruited the services of an Australian prospector to help them survive in the outback-and obtain stereo aerial photography over the Exmouth Tx site.

This request was queried by Canberra, but they allowed the sale of these photos when he notified Canberra that they were for oil exploration. The prospector noted the Japanese team's interest not only in outback geology but in the Exmouth, Laverton, Alice Springs (Pine Gap) and Longreach OTHR Tx sites (planned or constructed).

It would appear that certain powers in Japan viewed these locations as dangerous and in need of urgent covert intelligence-gathering. They were most likely alerted to these OTHR systems by the Russian KGB.

This intelligence and spying scenario probably also explains the many lone Japanese motorcyclists who, from 1990 to the present, have been mapping the entire system of WA/NT outback bush tracks at 1:50,000 scale on Mitsui Corporation satellite imagery (searching for other hidden US-Australian defence bases?).

Similar reasoning could explain the strange Japanese "desert greening" research being conducted in the eastern Goldfields. Could this work be a cover for field instrumentation emplacement across the region for observing the Laverton OTHR EM weapon system and any Exmouth Tx field emissions? Remember Hayakawa's research at Osaka University in "Greening Technology", i.e., EM weapons?

US Surprise at "Ground Zero" Calculations

The US Senate inquiry under Senator Sam Nunn sent my early 1995 Banjawarn fireball incident report to the Incorporated Research Institutions for Seismology (IRIS). IRIS is charged with developing US seismological methods and technology to search for violations of the United Nations nuclear test-ban treaty using chains of seismograph receivers located around the world.

IRIS has published a preliminary report by Gregory van der Vink et. al., suggesting that although this Banjawarn incident in many ways resembles a clandestine test scenario, it was not caused by an explosion (nuclear or otherwise) or a normal quake, but was probably due to a three-metre iron-nickel meteorite impact.

Van der Vink has been interviewed by (Australian) ABC radio and continues to propagate the meteorite impact theory in spite of the lack of any impact crater discovery, the peculiar evidence from eyewitnesses on the nature of the fireball flight and its associated events (e.g., the large orange-red hemisphere structure), and the evidence of multiple fireball flights along the same track at Banjawarn-each occurring on different dates/times and demonstrating very odd, sentient, meteorite behaviour.

Continuing its research, IRIS established the best possible fix on the 28 May 1993 earthquake epicentre. This brilliant work was achieved by studying the seismic energy paths from recent mine blasts at the newly developed Bronzewing gold-mine (located some 50 kilometres west of Banjawarn).

IRIS recomputed the Banjawarn quake epicentre using new algorithms deduced from this mine-blast wave-path research, coupled with input from the seismographic record data provided by the chain of AGSO (Australian Geological Survey Organisation) receivers.

AGSO data has always shown that the 3.6-3.9 Richter-scale quake epicentre was south of Banjawarn-but with wildly varying results from three different calculations, due to a lack of knowledge of the regional seismic wave propagation. Earlier Leonora-Laverton mine blasts demonstrated errors of +/-100 kilometres in standard AGSO algorithms and calculations.

IRIS proudly sent me a map detailing the small rectangular area that, with 95 per cent confidence, contained the Banjawarn 28 May '93 quake epicentre. It exactly coincided with the plan outline of the Laverton-Jindalee Rx (receiver) site.

IRIS was presumably operating on a "need to know" basis within US Government circles and was unaware of the existence of this Laverton OTHR Rx site.

In fact, I supplied IRIS with most of its detailed topographic maps of this area, and I had not included information about the Laverton-Jindalee Rx site as it seemed irrelevant at the time.

This OTHR system consists of a Tx site located east of Laverton at White Cliffs, and an Rx site west of Laverton, close to the southern boundary of Banjawarn station.

About five per cent of eyewitnesses to the "Banjawarn Bang" suggested that this Rx site area, where the fireball exploded into a huge red flare, was "ground zero"

Most other eyewitnesses placed "ground zero" much further north, so I discounted these few isolated reports, but I searched this location in mid-1995 from the air and on the ground-just in case.

The reason for this discrepancy between 95 per cent of eyewitness evidence of the explosion site and the quake epicentre calculation remains unexplained at this time. (The five per cent of eyewitnesses who saw an explosive flare at the Rx site were present that night with the many other witnesses who observed the explosion well north of that location.)

At the time of the 28 May '93 "Banjawarn Bang", the location was virgin bush and just a planned rectangle noted on the local Mines Department maps-to warn prospectors that no mines could be allowed in this area due to future OTHR developments.

In mid-1995 whilst flying an aerial search for the Banjawarn "meteorite crater", I flew over this site and later visited it on the ground. Bulldozer clearing of bush scrub was in progress over an area of a few square kilometres.

Unfortunately for IRIS, there was no meteor impact structure there; nor has one been found anywhere else within 300 kilometres of Banjawarn. The bulldozers were not filling in a crater, either!

However, one is left with the strong impression that this site is a very bad place to install an OTHR military system, possibly due to rare and highly accurate "meteorite impacts", rapidly evolving exotic "natural" Earth EM events, strangely coincident earthquakes (in a region where no quake has ever been recorded since detectors were first set up in 1900), or other alien phenomena.

Or perhaps someone else knows that it is not just a radar system but also a projective plasma weapon system, and this someone sent one of his own EM weapon blasts to hit the target fair and square at 23.03 hours on 28 May 1993 with a warning: "I can take out your proposed weapons asset whenever I like."

Perhaps this same someone is responsible for the 1,000+ major fireball events known to have occurred in Australia over the last four years (right up to 24 June 1997) - 100 of these involving huge aerial explosions of nuclear-bomb-force levels, and 10 of these involving huge aerial explosions coincident with medium-power 3.6-4.0 Richter-scale earthquakes (equivalent to 1-2 kilotonnes of TNT explosive).

Who, or what, is that "someone"?

Whatever the source or cause, it is now obvious that these events pose a severe and rapidly evolving threat to human life and property. It is only a matter of time before a modern "fly-by-wire" electronics-controlled airliner is brought down by a ray-wave field coupling with onboard electronics.

Ground or air-burst explosions or induced earthquakes obviously threaten many "ground zero" deaths if any of these events occur within a built-up area.

Unfortunately, it appears we have to wait for a fireball event to destroy Canberra before any government action will occur. We probably won't have to wait too long!

About the Author

Harry Mason, BSc, MSc, MAIMM, MIMM, FGS., is a UK-born geologist/geophysicist, resident in Perth, Western Australia. His 30-year career in mineral exploration has had him stationed all over the world, including Alaska, India, Norway, Mexico, Morocco, Sudan and UK. He has extensive field experience in geo-recce, geological mapping, geophysics/geochemistry, prospecting, remote-sensing/computer imaging technologies, and seismic and electromagnetic studies. He specialises in the geology and resource exploration of WA's Eastern Goldfields. Lately he has been devoting his time and expertise to researching mysterious Australian outback phenomena of natural and man-made origins.

Bright Skies - Part II

Top-Secret Weapons Testing?

Extracted from Nexus Magazine, Volume 4, #4 (Jun-Jul 1997).
PO Box 30, Mapleton Qld 4560 Australia.
Telephone: +61 (0)7 5442 9280; Fax: +61 (0)7 5442 9381.
From our web page at: http://www.peg.apc.org/~nexus

© 1997 All Rights Reserved by Harry Mason, B.Sc., M.Sc.
1313 Armstrong Road, Jarrahdale WA 6203, Australia.
Phone: +61 (0)9 525 5999, Fax: +61 (0)9 525 5944

Note: Any person seeing, or having seen, exotic "meteor fireballs", or knowing anything about same or exotic EM weapons systems, is invited to contribute to this research project by telephoning the author on +61 (0)9 525 5999 (after 10.00 am WA time = gmt + 8 hours), faxing on +61 (0)9 525 5944, or e-mailing on E-mail: orbitx@ois.com.au.

Recent Exotic Australian Light-Energy Events

Whilst researching the 1993 Banjawarn fireball-explosion-earthquake incident, I became aware of an entirely different spectrum of bizarre, non-fireball-related light phenomena events reportedly being observed in our skies by very reliable Western Australian bush observers (such as those who described the fireballs over the town of Tom Price). In common with the fireball events, these events were rarely, if ever, being reported in the press and do not appear to have been commented upon by our scientific community.

These events vary in style, but nearly all involve essentially static atmospheric light- emission events that have apparently never been reported or observed before the 1980s, have been reported rarely post-1985, but now have an increasing event periodicity in post-1993 years.

One such event type commonly reported consists of massive high-energy five-to-ten-second bursts of blue-white light seen in the night-time skies of the upper atmosphere. Such events have been reported in WA by many observers including meteor experts and amateur astronomers who are categorically certain that these are not transient light bursts due to single meteors or multiple meteor showers.

Normally, no massive object or moving light source is seen in association with these events. However, the massive blue-white light energy emissions are at times quite similar in power output to those very bright, blue-white light flash events often reported occurring in conjunction with fireballs and their "explosion" (as described in Part 1 of this article series).

Similar events involving massive blue-white light burst emissions have also been reported as occurring at ground level. For example, one October 1994 incident that was seen from Minara station (50 kilometres east of Leonora in the Eastern Goldfields of WA) possibly involved a night-time UFO landing and small beings with torches combing around the station buildings. The exotic, brilliant blue-white flare was observed at ground level as the alleged alien spacecraft accelerated off the nearby Minara airstrip. The light from this flash lit up the entirely dark station buildings in a brilliant and "beautiful" blue-grey glow silhouette.

Another 1996 night-time incident was observed near Rocky Gully in the south-west of WA and was described as a very scary event where massive blue-white streamers of arcing electricity issued from the forest floor into the atmosphere, creating an intense, violent, blue-white glow (and an attendant "electrical noise") that was visible for miles-"like someone with a giant arc welder". This event persisted for at least several minutes. The observers fled the area in fear for their lives, phased out by the apparently enormous energy involved in the event.

These massive energy bursts of high-altitude, blue-white light and/or ground-level electrical arcs are reasonably common and I have about 100 such documented events in the WA database. Publicity from my first NEXUS article has resulted in three similar events-one of them from eastern Victoria-being reported to me. I am unaware of any such similar events being reported historically in the literature anywhere on planet Earth-except as referred to below in connection with circa-1900 high-frequency, high-voltage EM wave experiments by Nikola Tesla.

Other exotic events involve post-1993 night-time and daytime observations of golden-orange or silver-blue-white beams or cylinders of energy propagating vertically downward from high altitude and hitting the Earth's surface-with no noise or surface damage and no thunderstorm activity reported-usually in isolated outback areas.

Another style of light-energy emission event being observed involves orange-red- coloured forms hanging statically in the night sky. Commonly pencil-beam-shaped (vertical or at 45 degrees), but including rare spherical forms, this style of event has been reported since about 1985, with an apparent increase since about 1990 but with many more sightings reported since 1993. Some 100 such events have been reported.

Luckily, in this case, an alert amateur meteor astronomer, experienced in night-time astrophotography, has captured one such case on film. John Goldsmith photographed this beam from his home in Bedfordale (east of Fremantle in the Darling Ranges) at about 9.50 pm on 24 May 1990. John's photographs are shown on the following pages.

Roger's Notes: Photos not included in the Internet version of this article. Refer to original article in magazine.

I took a compass reading (at the spot indicated by John Goldsmith near his telescope observing platform) across the trees as visible in photos 2-4. The bearing was about 262-263 degrees magnetic (local deviation is a degree or less as is the compass and reconstruction accuracy). The beam bearing is on a direct line to the "prohibited" area of the Fremantle Garden Island Naval Base.

This "island", or promontory, is riddled with underground installations from World War II when it was used as a submarine base by the US Navy/British Royal Navy/Royal Australian Navy. The southern end of Garden Island is occupied by HMAS Stirling-our current submarine base-where most of the Australian Collins Class subs are to be based. Naval yards are also present under the beam bearing on the mainland.

Although we cannot deduce the exact range of the beam, it has to be fairly close to the observer as it is in front of the clouds and lights up some of them. It is therefore a good bet that this beam was hanging above, or very close to, the Garden Island naval facility.

John Goldsmith had come out of his house that night to do some astronomical telescope work. He saw the orange beam hanging vertically in the sky and raced back inside for his camera. Being used to capturing transient meteorite events, he knew exactly how to set up the photo. He used 400 ASA film on settings of 30 seconds, 60 seconds, 120 seconds and 120 seconds for photos 1 to 4 respectively.

John stated that the beam lit up some clouds and was not as bright as the images captured on film-probably due to light capture in the exposure time, or perhaps his recall of the intensity is a bit out. The beam did not appear to move around or change much over the five to six minutes that it was in view, but John was concentrating hard on the camera.

A video reconstruction utilising his four photos, each registered on the same bright stars, demonstrates that, indeed, the beam location is entirely static over the duration of the event. Finally, after about five to six minutes, the beam just faded away to nothing. There was no sound event.

The stars are seen to move over the exposure time, and possibly the centre of orange light intensity changes a bit, downwards along the beam. The overall beam light energy varies up and down in intensity from photo to photo-possibly due to the varying film exposure times or variations in the beam's actual light-emission intensity.

On the original colour photos one can see beside the orange beam a band of weaker red lines, then blue lines, then an even weaker band of red lines, and then blue lines again, as follows (to the left of the major beam): O RRR BBB rrr bbb, and so on. Note that similar spectra also exist to the right side of the beam. The spectral lines are distributed either side of the major orange beam across a considerable width of sky-at least twice the length of the visible beam length and possibly more. These photos also suggest that a "ghost" basal tail of the central major beam goes much lower, possibly to ground level.

The photos were taken in the dark at about 9.50 pm (sunset here in WA on 24 May 1990 was at about 5.30 pm). Note that the near-vertical white line on the left hand side of image no. 2 is an original film glitch and not an event of the time.

It was originally suggested that this beam was an effect created by a ground-based laser, but checks by atmospheric scientists who employ such devices in Australia and the USA have completely discounted such a theory. One major problem is that the light-form appears well up in the atmosphere and is not connected to any ground-based laser. Another problem is the large width of the beam when compared to normal pencil-thick laser probes which are normally only visible within two kilometres of the beam. In addition, there are harmonic spectral lines visible across the image.

Another suggestion was that the beam is a searchlight, yet it cannot be a normal searchlight as it appears at high altitude with no connection from ground level. It also has no conical section diverging upwards, and it has exotic parallel harmonic spectral lines.

In 1991 a Japanese astronomy magazine published an article with a very poor black/white version of the photo, suggesting the main beam was caused by refraction of ships' lights by a horizontal layer of different density air. If so, why has this effect not been previously documented anywhere over the world's oceans?

I now have many eyewitness accounts of such vertical orange beams seen at night over land over the past two years here in WA. These land locations are generally uninhabited and have no light sources (such as searchlights, etc.) for refraction by air layers as suggested by the Japanese magazine. One 1996 Brisbane beam event report was very significant as the observers saw very-high-voltage, blue-white discharge streamers issuing from their house wall-mounted mains power box as an orange beam hovered nearby in the sky. Members of another household reported their power box hummed violently as the orange beam hovered some distance away in the sky.

This data confirms the probability that Tesla-style longitudinal scalar EM potentials were involved in this Brisbane event (and therefore were possibly present during the other beam events), probably created by a remote Tesla EM transmitter and issuing from local space-time "vacuum" at the standing wave target node, i.e., the beam location.

One quite feasible explanation for the orange beams is that they are due to electromagnetic "holograms" of light-energy being emitted from invisible but concentrated slugs of EM standing waves. Such waves may be of natural (e.g. Earth stress lights), human or alien origin, but all involving multiple scalar EM wave interference.

The massive, high-altitude, blue-white light energy flashes are possibly due to Tesla EM wave emission coupling briefly with the upper atmosphere, whereas the ground-level flashes are possibly due to the operation of a Tesla Magnifying Transmitter (located either in Australia or overseas) that is transmitting EM energy through the planet to the antipodean target site where electrical arc energy is being violently released.

None of the reported events involving either blue-white light energy flashes or orange-red beams or spheres occurred during or near any kind of electrical storm or unsettled weather pattern. There is a possibility of some unknown natural phenomenon electrically charging selected Earth fault plane systems across WA, thence creating huge "Earth stress lights" hanging above selected energy concentrations.

Solar charged-particle output, coupling in some peculiar style with the Earth's ionosphere/surface, is a further possibility, but this implies that there has been a very significant recent change in the Earth-Sol electromagnetic and/or electrostatic equilibrium.

Such powerful and localised exotic light events, occurring in large numbers and in such a relatively short time-span of a few years, have never been previously reported from WA, or anywhere else on planet Earth, in documented scientific history.

However, on occasion, isolated single high-energy (Earth stress light?) events have been reported; e.g., in Eastern Tibet in 1947, prior to the Red Chinese invasion, a large earthquake struck this border area and was followed by huge, high-power, orange-red glows of spherical light-forms which hung for days over the eastern sky. Buddhist monks reported that these apparitions were visible from Lhasa and they considered them at the time to be very evil omens (and correctly so!).

These Australian events are very high-power events and should not mistakenly be compared with the average, isolated and very rare, low-power "Earth stress light" and/or "min-min light" reports as occasionally observed near seismically active earthquake zones and only rarely reported in historical literature.

The concentrated high energies involved in the recent Australian fireball and associated events and in the exotic static light events, as well as their increasing event periodicities, suggest a non-natural origin, or possibly a rapidly evolving natural system of unknown type.

At this time, scalar EM wave interference is the preferred physics mechanism for the formation of both fireballs and their associated phenomena as well as the exotic static light emission events.

Alien UFO activities cannot be completely discounted, but they do not fit the available human intelligence pattern which strongly points to Earth-based technological activity.

Banhawarn Nuclear Bomb Scenario?

During my early research enquiries in 1995 into the "Banjawarn Bang" of 28 May 1993, Australia's ABC radio broadcast a news item from the USA referring to US Senator Sam Nunn who was chairman of a US Senate Inquiry into the "Japanese Aum Sect and Weapons of Mass Destruction". Nunn was reported to have stated that the Senate inquiry team had evidence that the Aum Supreme Truth (Aum Shinrikyo) sect had attempted to purchase nuclear weapons from the Russians and had also attempted to develop same from their own scientific laboratory base-and had probably succeeded. I became worried that, since the 28 May 1993 Goldfields event did have characteristics similar to a nuclear blast, possibly these Aum sect loonies had indeed acquired nuclear weapons and some sort of pulse jet (i.e., Nazi V1 type cruise missile) delivery system.

I contacted Dan Gelber, chief counsel of the US Senate inquiry, and told him of my data and research. His agitated response was: "Please express airpack everything that you have to us asap-at our expense." I complied with his request, and also spoke to him and his assistant several times more on the phone.

I now believe that, although the energies involved in the Banjawarn event were of nuclear-bomb power level, the explosion was not of nuclear but of scalar EM technology origin.

The Tesla Connection

In an early telephone call, Dan Gelber informed me that the US had found evidence that in 1992 the Aum sect had sent a research team to study at the Nikola Tesla Museum in Belgrade, Yugoslavia. Their objective was to get data on Tesla's electromagnetic wave transmission technology, as related to an earthquake-inducing weapons system. Gelber, being a lawyer, did not seem to understand much about this weapons system, but discussed it "in passing" as evidence for the Aum sect's deep desire to obtain exotic new weapons systems with potential for mass destruction-such as nuclear bombs, nerve gas technology, etc.

Nikola Tesla (1856-1943) was the scientific genius who singlehandedly invented modern AC electrical rotating fields and electrical generators, motors, plus radio (Marconi apparently stole Tesla's ideas whilst apprenticed at Tesla's New York laboratory) and a host of other electrical and electromagnetic devices. Most of the foundations of modern 20th century electrical civilisation is due to Tesla's pioneering work in the period 1880-1908.

As it happens, I have a large library of Tesla's works and many books written about him. Tesla's electromagnetics and his understanding of physics have always intrigued me and I have spent many hours pouring over his patents, attempting to visualise the circuits and his understanding.

I was greatly intrigued by Gelber's comments and pondered over their possible significance, if any, to the Banjawarn events of 28 May 1993. I began to reread my Tesla library, searching for any possibly relevant information.

Telegeodynamics and Tesla Waves

I found references to Tesla constructing a vibrating mechanical oscillator with a perfect periodicity that he used to "ping" the Earth. He also tried it out on his laboratory building structure and found that when it received a return signal of longitudinal (i.e., scalar) seismic or sound wave energy it added a new impulse "ping" to the return. After a few minutes this wave reinforcement built to such a level that harmonic oscillatory forces created local ground earthquakes and/or began to vibrate the target building to pieces. Tesla built this device to provide a mechanical analogy to his EM wave research and to help him visualise the system dynamics.

Tesla describes taking a sledgehammer to one of his first devices, as this was the only method capable of stopping the rapid collapse of his laboratory and nearby buildings which were all vibrating increasingly violently and in sympathy with the mechanical oscillator's seismic wave packets.

There were vague references in the literature to Tesla's mechanical telegeodynamics theories coupled to suggestions that he could create the same seismic effects with EM "Tesla waves", as produced by his "Magnifying Energy Transmitter"-a giant Tesla coil linked to a special circuit design and a large, spherically shaped "aerial".

Tesla utilised these "Tesla waves"-longitudinal (scalar) EM waves (like sound waves) of pure electrostatic potential with no 'E' (electrical) or 'H' (magnetic) transverse vibrational fields. He certainly proved that he could transmit usable electrical energy in very large quantities, without any wires and with only minor energy losses, via his EM Magnifying Energy Transmitter. He claimed that he was bouncing these Tesla waves through the Earth's core to the antipodes and back to the transmitter (Tx) site. A relatively small, 10 kW-generator energy supply of just a few horsepower would rapidly allow the buildup by resonance of millions of horsepower in the coil circuits of this Magnifying Energy Transmitter device.

Sheets of man-made lightning and blue-white electrical streamers would arc out of the circuit to Earth grounding points, or from the top spherical aerial system. Locals, many miles away from Tesla's Colorado Springs laboratory, complained of experiencing sparks and blue-white streamers of electrical energy issuing from power lines, generators, electric motors, etc., and even from the soles of their boots to the ground.

Tesla had previously demonstrated that fire and flames can be exactly reproduced by very-high-tension, high-frequency, electrostatic potential waves (in fact, that is all a fire is when considered in physics)-dimensions higher than the standard "burning of, say, carbon in oxygen" philosophy of atomic molecular chemistry.

In his patent for the EM Magnifying Energy Transmitter, Tesla mentions that it can transmit electrostatic potential energy to the planetary antipodes, or create a grid of standing waves and nodes of pure electrostatic potential energy across the entire planet. He provides a method for steering the antipodean target site by utilising two or more waves of differing frequency and amplitude from two or more widely separated Tx sites.

It is important to realise that he was not transmitting standard Hertzian waves which vibrate transversely to the string direction in normal 3D space with a constant rate of time flow-as in standard HF radio transmission. Lord Kelvin of the London Royal Society of Physics once had a serious argument with Tesla at a scientific meeting in New York as Kelvin considered transverse vibrational 'E'- and 'H'-field Hertzian waves to be the only form of EM wave propagation.

However, when invited to Tesla's laboratory, Kelvin was astounded to see by experimental demonstration that Tesla was indeed creating longitudinal vibrational or scalar EM waves of pure electrostatic potential-or, as Tesla called them, non-Hertzian radiations. Kelvin then apologised in public and confirmed the existence and nature of the new Tesla wave.

Recent private research in the USA has demonstrated that Tesla wavescan propagate in 'n'-dimensional space and may be engineered to operate in a non-linear time dimension at any speed from zero to infinite (not being limited to 'c', the speed of light).

Several Tesla waves sent from different transmitters may also be engineered to combine by interferometry to produce an EM slug of very-high-level infolded or contained energy, with any desired light emission shape, colour and intensity. This slug of EM energy may be moved around the planet at will-visibly or invisibly). The contained energy may be released by a further specific transmission. The EM slug can be moved into the Earth, through the air or into the sea. If 'detonated' in the Earth, an earthquake is the result. In a building or a city, a violent explosion of pseudo nuclear style is the result (even up to nuclear force levels).

Tesla's "Death Rays" and Suppressed EM Weapons Technology

In his later years Tesla claimed that he could produce a "death ray", with a range of hundreds of miles, which would be useful against aircraft. Tesla also stated that another of his inventions would allow entire cities to be devastated by explosive EM transmissions across intercontinental distances, to anywhere on the planet, with no defence possible; and that EM "Tesla shields", produced by the same new device, could defend an entire country or a city against aircraft and shells.

He certainly made several public announcements about the "death-ray" and "city-buster" EM weapons systems in the 1920s and 1930s, but no details of techniques have survived in the public domain to my knowledge.

In 1924 a plethora of "death ray" and "anti-aircraft ray" stories appeared in the New York Times. The Western Australian Kalgoorlie Miner newspaper also published stories on these inventions during the 1920s.

Various inventions were linked to scientists from several nations, e.g., Grindell H. Mathews (UK), Dr T. F. Wall (USA), Herr Wolle (Germany), and Grammachikoff (USSR) (as revealed by belligerent statements by Trotsky). Details of the technology allegedly employed by these systems are currently unavailable in the Western literature.

An Australian inventor of such a "death-ray" device, Charles Sidney Way, was found dead-shot through the heart under mysterious circumstances-on the promenade of an English seaside resort in late 1937.

News stories were also published in the USA about Tesla's "death ray" inventions in 1924, 1934 and, finally, in 1938.

The 1938 press releases stated that Tesla would employ 50 million volts in a new form of ray wave, only one-hundred-millionth of a centimetre in diameter, based upon an entirely new principle of physics that produced a great repelling force. Tesla stated that this device could melt any engine and that there was no defence against it. It could travel through interstellar space faster than light and, if aimed at the Moon, it would turn a spot on the surface into incandescence.

It would appear that Tesla was referring to something vaguely similar to modern concepts of laser or particle beam weapons, but possibly utilising micro-wave EM transmissions of enormous power, travelling at speeds greater than 'c', the velocity of light. In actual fact, physicists call waves with dimensions of one-hundred-millionth of a centimetre (i.e., 10-9 metres) X-rays, but the size mentioned by Tesla is also quite close to the arbitrary boundary designated for even smaller radiations-defined as gamma rays.

To achieve such wave-packet velocities of greater than 'c' was thought to be impossible in Einsteinian Western physics-until the recent redevelopment of new ideas in physics concerning the theoretical relativistic hyperspace transmission of scalar EM waves-or Tesla waves.

It is also now known that longitudinal scalar EM waves do indeed produce a great repelling force on the atomic nucleus, bypassing the outer electron shells and directly engineering or interfering with the components of the nucleus.

Tesla was not known to make idle statements, but some of his ideas were so incredible and beyond the 'ken' of so many other physics peers that mainstream academics commonly just ignored his work. Only in recent years have some brave souls come out with experimental and theoretical studies that confirm the brilliance of this amazingly practical and innovative mind. Most modern Western university physicists simply ignore Tesla's work. Only Eastern European and Russian universities normally include a study of Tesla's work in their curricula.

As early as 1914, Tesla predicted the electrical control of atmospheric moisture, and he gave some thought to how this 'weather control' could be achieved using his magnifying transmitter. He implied that it would be possible even to affect the Sun's EM fields and output, or certainly modify its effects upon the Earth, by means of EM Tesla wave transmitters.

Tesla suggested a means for lighting the ionosphere by EM waves to produce a dull white glow-to turn night into day and make sea and air navigation safer. This apparently magical thesis would work along the lines of an analogy between the rarefied upper atmosphere or ionosphere and a standard evacuated fluorescent tube: both can be lit up by a Tesla coil radiating Tesla waves, without any wires having to be used.

Tesla believed that nuclear radiation from specific isotopes, such as radium or uranium, was not just the result of atomic nucleus instability, but that the decay was caused by interaction of the nucleus with a special ray emanating throughout the universe. He stated that it would be possible to engineer EM "shielding" to stop the rays and hence terminate the action of nuclear disintegration, and that therefore, presumably, it would be possible to generate concentrations of such rays and stimulate the nucleus into explosive or rapid general transmutation.

Tesla's radiation and other theories, as well as more recent theoretical studies by US physicist Tom Bearden, have enabled a full elucidation of the reasons for a series of quite bizarre activities associated with the Japanese Aum Supreme Truth sect at Banjawarn station, Western Australia, during 1993, and demonstrated the sect's close connection to the Banjawarn fireballs, explosion and mini-Tunguska earthquake events.

As research into the "Banjawarn Bang" has progressed, an entire collection of bizarre events and coincidences has begun to unravel-but you will have to wait for Part 3 for that...

The next article in this series will cover intelligence on the Japanese Aum sect as regards their interest in EM weapons and their activities in Australia. It will also summarise the known physics and effects of modern scalar EM weapons systems, including their wave-transmission health effects on human and other life-forms, and will detail a variety of recent Earth history events where such weapons are believed to have been employed by Russian, Japanese and covert US power groups.

About the Author

Harry Mason, BSc, MSc, MAIMM, MIMM, FGS., is a UK-born geologist/geophysicist, resident in Perth, Western Australia. His 30-year career in mineral exploration has had him stationed all over the world, including Alaska, India, Norway, Mexico, Morocco, Sudan and UK. He has extensive field experience in geo-recce, geological mapping, geophysics/geochemistry, prospecting, remote-sensing/computer imaging technologies, and seismic and electromagnetic studies. He specialises in the geology and resource exploration of WA's Eastern Goldfields. Lately he has been devoting his time and expertise to researching mysterious Australian outback phenomena of natural and man-made origins.

11

No. 158.495

DEPARTMENT OF AGRICULTURE

PATENT BRANCH

New York. N.Y.

November 22/24 1910

Nikola Tesla

PATENT No. 135174

N. Van Oldenneel
38 Park Row

APPLICATION FOR PATENT.

FOR Fluid Propulsion

COST OF COPIES.

PATENT & SPECIFICATION, $
SPECIFICATION 2.25
DRAWING .50
PETITION
OATH

$ 20.00 Receipt No. 189457

Action. Ack'd by Cir. Rmild spec. retd. Tiegs 26/11/10 Let & comments
Paper rec'd Dec 6/9/10
Ack'd by cir. 3 Dec. 13/10.
Letter, June 19/21/11
Ack'd by Cir. 6, July 20/11

Action continued

PATENT MAY ISSUE

W. J. Lynch

14 8 11 Chief Clerk

PATENT DATED AUG 22 1911

MAILED AUG 1911

Aug. 20, 1911

S P E C I F I C A T I O N.

TO ALL WHOM IT MAY CONCERN:

Be it known that I NIKOLA TESLA an engineer residing at The Waldorf Astoria, corner Fifth Avenue and Thirty Fourth Street, in the Borough of Manhattan, City and State of New York, United States of America, having invented certain new and useful improvements in FLUID PROPULSION, do hereby declare the following is a full, clear and exact description of the same.

In the practical application of mechanical power based on the use of a fluid as vehicle of energy it has been demonstrated that, in order to attain the highest economy, the changes in velocity and direction of movement of the fluid should be as gradual as possible. In the present forms of such apparatus more or less sudden changes, shocks and vibrations, are unavoidable. Besides the employment of the usual devices for imparting to, or deriving energy from a fluid, as pistons, paddles, vanes and blades, necessarily introduces numerous defects and limitations and adds to the complication, cost of production and maintenance of the machine.

The object of my invention is to overcome these deficiencies and to effect the transmission and transformation of mechanical energy through the agency of fluids in a more perfect manner, and by means simpler and more economical than those heretofore employed.

I accomplish this by causing the propelled or propelling fluid to move in natural paths or stream lines of least resistance, free from constraint and disturbance such as occasioned by vanes or kindred devices, and to change its velocity and direction of movement by imperceptible degrees, thus avoiding the losses due to sudden variations while the fluid is receiving or imparting energy.

It is well known that a fluid possesses, among others, two salient properties; adhesion and viscosity.

Owing to these a body propelled through such a medium encounters a peculiar impediment known as "lateral" or "skin resistance", which is two-fold; one arising from the shock of the fluid against the asperities of the solid substance, the other from internal forces opposing molecular separation. As an inevitable consequence a certain amount of the fluid is dragged along by the moving body. Conversely, if the body be placed in a fluid in motion, for the same reasons, it is impelled in the direction of movement.

These effects, in themselves, are of daily observation, but I believe that I am the first to apply them in a practical and economical manner of fluid propulsion. The nature of my discovery and the principles of construction of the apparatus which I have designed for carrying it out, I shall now proceed to describe by reference to the accompanying drawings which illustrate an operative and efficient embodiment of the same.

Fig. 1 is a partial end view, and Fig. 2 a vertical cross section of a pump or compressor, which Figs. 3 and 4 represent, respectively, in corresponding views, a rotary engine or turbine, both machines being constructed and adapted to be operated in accordance with my invention.

Figs. 1 and 2 show a runner composed of a plurality of flat rigid disks 1 of a suitable diameter, keyed to a shaft 2 and held in position by a threaded nut 3, a shoulder 4 and washers 5 of the requisite thickness. Each disk has a number of central openings 6, the solid portions between which form spokes 7 preferably curved, as shown, for the purpose of reducing the loss of energy due to the impact of the fluid.

This runner is mounted in a two-part volute casing 8 having stuffing boxes 9 and inlets 10 leading to its central portion. In addition a gradually widening and rounding outlet 11 is provided formed with a flange for connection to a pipe as usual. The casing 8 rests upon a base 12 shown only in part and supporting the bearings for the shaft 2, which being of ordinary construction are omitted from the drawings.

An understanding of the principle embodied in this device will be gained from the following description of its mode of operation.

Power being applied to the shaft and the runner set in rotation in the direction of the solid arrow, the fluid by reason of its properties of adherence and viscosity, upon entering through the inlets 10 and coming in contact with the disks 1 is taken hold of by the same and subjected to two forces, one acting tangentially in the direction of rotation, and the other radially outward. The combined effect of these tangential and centrifugal forces is to propel the fluid with continuously increasing velocity in a spiral path until it reaches the outlet 11 from which it is ejected. This spiral

movement, free and undisturbed and essentially dependent on these properties of the fluid, permitting it to adjust itself to natural paths or stream lines and to change its velocity and direction by insensible degrees, is characteristic of this method of propulsion and advantageous in its application.

While traversing the chamber enclosing the runner, the particles of the fluid may complete one or more turns, or but a part of one turn. In any given case their path can be closely calculated and graphically represented, but fairly accurate estimates of turns can be obtained simply by determining the number of revolutions required to renew the fluid passing through the chamber and multiplying it by the ratio between the mean speed of the fluid and that of the disks.

I have found that the quantity of fluid propelled in this manner is, other conditions being equal, approximately proportionate to the active surface of the runner and to its effective speed. For this reason, the performance of such machines augments at an exceedingly high rate with the increase of their size and speed of revolution.

The dimensions of the device as a whole, and the spacing of the disks in any given machine will be determined by the conditions and requirements of special cases. It may be stated that the intervening distance should be the greater, the larger the diameter of the disks, the longer the spiral path of the fluid and the greater its viscosity. In general the spacing should be such that the entire mass of the fluid, before leaving the runner, is accelerated to a nearly uniform velocity, not much below that of the periphery of the disks under normal working conditions and almost equal to it when the outlet is closed and the particles move in concentric circles.

It may also be pointed out that such a pump can be made without openings and spokes in the runner, as by using one or more solid disks, each in its own casing, in which form the machine will be eminently adapted for sewage, dredging and the like, when the water is charged with foreign bodies and spokes or vanes especially objectionable.

Another application of this principle which I have discovered to be not only feasible, but thoroughly practicable and efficient, is the utilization of machines such as above described for the compression or rarefaction of air, or gases in general. In such cases it will be found that most of the general considerations obtaining in the case of liquids, properly interpreted, hold true.

When, irrespective of the character of the fluid, considerable pressures are desired, staging or compounding may be resorted to in the usual way the individual runners being, preferably, mounted on the same shaft.

It should be added that the same end may be attained with one single runner by suitable deflection of the fluid through rotative or stationary passages.

The principles underlying the invention are capable of embodiment also in that field of mechanical engineering which is concerned in the use of fluids as motive agents, for while in some respects the actions in the latter case are directly opposite to those met with in the propulsion of fluids, the fundamental laws applicable in the two cases are the same. In other words, the operation above described is reversible, for if water or air under pressure be admitted to the opening 11 the runner is set in rotation in the direction of the dotted arrow by reason of the peculiar properties of the fluid which, travelling in a spiral path and with continuously diminishing velocity, reaches the orifices 6 and 10 through which it is discharged. If the runner be allowed to turn freely, in nearly frictionless bearings, its rim will attain a speed closely approximating the maximum of that of the fluid in the volute channel and the spiral path of the particles will be comparatively long, consisting of many almost circular turns. If load is put on and the runner slowed down, the motion of the fluid is retarded, the turns are reduced, and the path is shortened.

Owing to a number of causes affecting the performance, it is difficult to frame a precise rule which would be generally applicable, but it may be stated that within certain limits, and other conditions being the same, the torque is directly proportionate to the square of the velocity of the fluid relatively to the runner and to the effective area of the disks and, inversely, to the distance separating them. The machine will, generally, perform its maximum work when the effective speed of the runner is one half of that of the fluid. But to attain the highest economy the relative speed or slip, for any given performance, should be as small as possible. This condition may be to any desired degree approximated by increasing the active area and reducing the space between the disks.

When apparatus of the kind described is employed for the transmission of power certain departures from similarity between transmitter and reciver may be necessary for securing the best result. It is evident that, when transmitting power from one shaft to another by such machines, any desired ratio between the speeds of rotation may be obtained by proper selection of the diameters of the disks, or by suitably staging the transmitter, the receiver, or both. But it may be pointed out that in one respect, at least, the two machines are essentially different. In the pump, the radial or static pressure, due to centrifugal force, is added to the tangential or dynamic, thus increasing the effective head and assisting in the expulsion of the fluid. In

the motor, on the contrary, the first named pressure, being opposed to that of supply, reduces the effective head and the velocity of radial flow towards the center. Again, in the propelled machine a great torque is always desirable, this calling for an increased number of disks and smaller distance of separation, while in the propelling machine, for numerous economic reasons, the rotary effort should be the smallest and the speed the greatest practicable. Many other considerations, which will naturally suggest themselves, may affect the design and construction, but the preceding is thought to contain all necessary information in this regard.

The greatest value of this invention will be found in its use for the thermo-dynamic conversion of energy. Reference is now made to figs. 3 and 4, illustrative of the manner in which it is, or may be, so applied.

As in the previous figures, a runner is provided made up of disks 13 with openings 14 and spokes 15 which, in this case, may be straight. The disks are keyed to and held in position on a shaft 16, mounted to turn freely in suitable bearings, not shown, and are separated by washers 17 conforming in shape with the spokes and firmly united thereto by rivets 18. For the sake of clearness but a few disks, with comparatively wide intervening spaces, are indicated.

The runner is mounted in a casing comprising two end castings 19 with outlets 20 and stuffing boxes 21, and a central ring 22, which is bored out to a circle of a diameter slightly larger than that of the disks, and has flanged extensions 23 and inlets 24 into which finished ports, or nozzles, 25 are inserted. Circular grooves 26 and labyrinth packings 27 are provided on the sides of the runner. Supply pipes 28, with valves 29, are connected to the flanged extensions of the central ring one of the valves being, normally, closed.

With the exception of certain particulars, which will be hereinafter elucidated, the mode of operation will be understood from the preceding description. Steam or gas under pressure being allowed to pass through the valve at the side of the solid arrow, the runner is set in rotation in clockwise direction.

In order to bring out a distinctive feature assume, in the first place, that the motive medium is admitted to the disk chamber through a port, that is, a channel which it traverses with nearly uniform velocity. In this case, the machine will operate as a rotary engine, the fluid continuously expanding on its tortuous path to the central outlet. The expansion takes place chiefly along the spiral path, for the spread inward is opposed by the centrifugal force due to the velocity of whirl and by the great resistance to radial exhaust. It is to be observed that the resistance to the passage

of the fluid between the plates is, approximately proportionate to the square of the relative speed, which is maximum in the direction towards the center and equal to the full tangential velocity of the fluid. The path of least resistance, necessarily taken in obedience to a universal law of motion is, virtually, also that of least relative velocity.

Next, assume that the fluid is admitted to the disk chamber not through a port, but a diverging nozzle, a device converting, wholly or in part, the expansive into velocity-energy. The machine will then work rather like a turbine, absorbing the energy of kinetic momentum of the particles as they whirl, with continuously decreasing speed, to the exhaust.

The above description of the operation, I may add, is suggested by experience and observation, and is advanced merely for the purpose of explanation. The undeniable fact is that the machine does operate, both expansively and impulsively. When the expansion in the nozzle is complete, or nearly so, the fluid pressure in the peripheral clearance space is small; as the nozzle is made less divergent and its section enlarged, the pressure rises, finally approximating that of the supply. But the transition from purely impulsive to expansive action may not be continuous throughout, on account of critical states and conditions and comparatively great variations of pressure may be caused by small changes of nozzle velocity.

In the preceding it has been assumed that the pressure of supply is constant or continuous, but it will be understood that the operation will be, essentially, the same if the pressure be fluctuating or intermittent, as that due to explosions occurring in more or less rapid succession.

A very desirable feature, characteristic of machines constructed and operated in accordance with this invention, is their capability of reversal of rotation. Fig. 3, while illustrative of a special case, may be regarded as typical in this respect. If the right hand valve be shut off and the fluid supplied through the second pipe, the runner is rotated in the direction of the dotted arrow the operation, and also the performance, remaining the same as before, the central ring being bored to a circle with this purpose in view. The same result may be obtained in many other ways by specially designed valves, ports or nozzles for reversing the flow, the description of which is omitted here in the interest of simplicity and clearness. For the same reasons but one operative port or nozzle is illustrated which might be adapted to a volute but does not fit best a circular bore. It will be understood that a number of suitable inlets may be provided around the periphery of the runner to improve the action and that the construction of the machine may

be modified in many ways.

Still another valuable and probably unique quality of such motors or prime movers may be described. By proper construction and observance of working conditions the centrifugal pressure, opposing the passage of the fluid, may, as already indicated, be made nearly equal to the pressure of supply when the machine is running idle. If the inlet section be large, small changes in the speed of revolution will produce great differences of flow which are further enhanced by the concommittant variations in the length of the spiral path. A self-regulating machine is thus obtained bearing a striking resemblance to a direct-current electric motor in this respect that, with great differences of impressed pressure in a wide open channel the flow of the fluid through the same is prevented by virtue of rotation. Since the centrifugal head increases as the square of the revolutions, or even more rapidly, and with modern high grade steel great peripheral velocities are practicable, it is possible to attain that condition in a single stage machine, more readily if the runner be of large diameter. Obviously this problem is facilitated by compounding, as will be understood by those skilled in the art. Irrespective of its bearing on economy, this tendency which is, to a degree, common to motors of the above description, is of special advantage in the operation of large units, as it affords a safeguard against running away and destruction.

Besides these, such a prime mover possesses many other advantages, both constructive and operative. It is simple, light and compact, subject to but little wear, cheap and exceptionally easy to manufacture as small clearances and accurate milling work are not essential to good performance. In operation it is reliable, there being no valves, sliding contacts or troublesome vanes. It is almost free of windage, largely independent of nozzle efficiency and suitable for high as well as for low fluid velocities and speeds of revolution.

It will be understood that the principles of construction and operation above generally set forth, are capable of embodiment in machines of the most widely different forms, and adapted for the greatest variety of purposes. In my present application I have sought to describe and explain only the general and typical applications of the principle which I believe I am the first to realize and turn to useful account.

Having now particularly described and ascertained the nature of this said invention, and in what manner the same is to be performed, I declare that what I claim is:

1. The method of imparting energy to or deriving it from a fluid, based on adhesive and viscous action, which consists in admitting the fluid to the central or peripheral portion of a rotatably arranged system and causing it to flow, under the combined action of radial and tangential forces, in a spiral path towards the periphery, or the axis, of the rotating system, as set forth.

2. As an improvement in the transmission of power the method of imparting energy to or deriving it from a fluid, based on adhesive and viscous action, which consists in causing the fluid to flow, under the combined action of radial and tangential forces, in curved paths away from, or towards the axis of a rotatably arranged rigid system, as set forth.

3. The method of imparting energy to or deriving it from a fluid, based on adhesive and viscous action, which consists in admitting the fluid to the central or peripheral portion of a rotably arranged system and causing it to flow, under the combined action of radial and tangential forces, in a spiral path with gradually increasing or diminishing velocity towards the periphery, or the axis, of the rotating system, as set forth.

4. The method of deriving energy from a moving fluid, based on adhesive and viscous action, which consists in admitting the fluid to the peripheral portion of a runner and causing it to give up its energy of movement while flowing with continuously diminishing velocity in a spiral path towards the axis of the runner, as set forth.

5. The method of imparting energy to a fluid, based on adhesive and viscous action, which consists in admitting the fluid to the central portion of a runner and causing it to flow, by the combined effect of the tangential and radial forces, in a spiral path with continuously increasing velocity towards the periphery of the runner, as set forth.

6. A fluid propelling or fluid propelled machine consisting in the combination of a shaft, a plurality of disks spaced apart and mounted on the same, and ports or passages of inlet and outlet adjacent to the center and periphery of said disks, as set forth.

7. A fluid motor or engine comprising in combination a plurality of spaced plane rotably mounted disks, and means for admitting or discharging the fluid at the center and periphery of said disks, as set forth.

8. A fluid propelled machine comprising in combination a plurality of spaced plane rotably mounted disks, an enclosing casing and ports or passages of inlet and outlet at the center and periphery of the casing, as set forth.

9. A fluid motor or engine comprising in combination a runner composed of a plurality of disks rotably mounted with intervening spaces, and a casing enclosing the runner provided with ports or passages of inlet and outlet at the axis and periphery of the runner respectively, as set forth.

10. A fluid motor or engine comprising in combination a runner composed of a plurality of disks mounted at intervals and formed with openings near their centers, and means for admitting a liquid to or discharging it from the spaces between the disks and located respectively at the center and periphery of the same.

11. A thermo-dynamic converter comprising a shaft, a plurality of disks spaced thereon, an inlet for the motive fluid at the periphery of the disks and tangential thereto, and an outlet at the central portions of the same, as set forth.

Fig 1

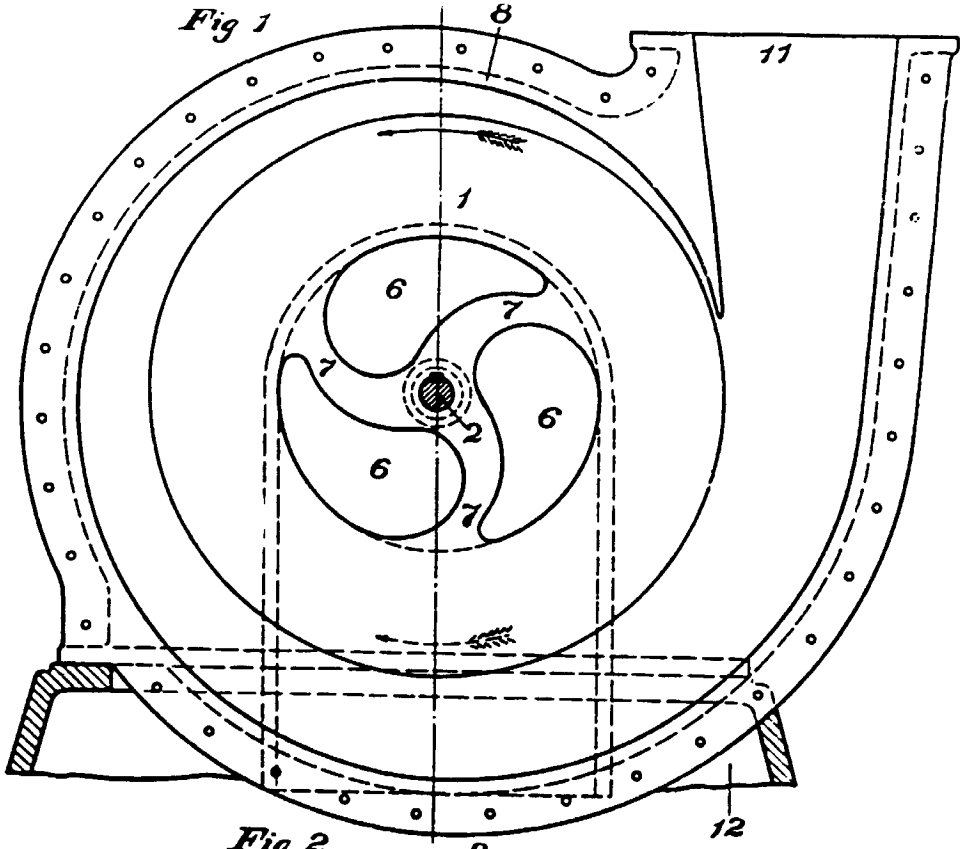

Fig 2

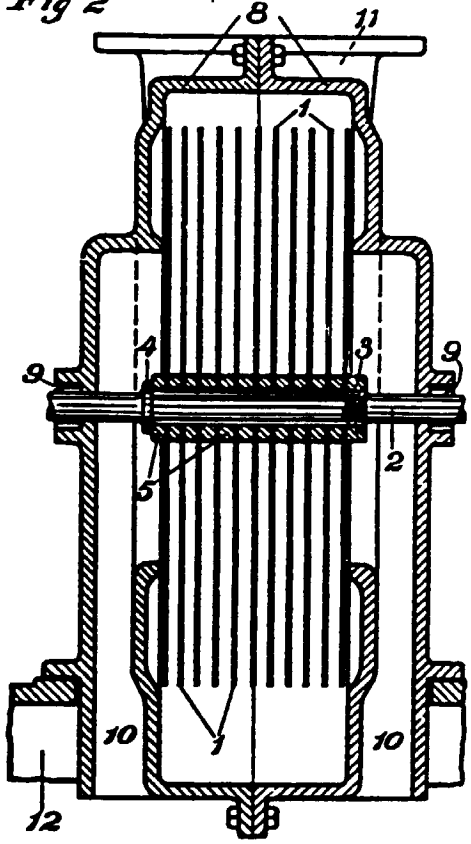

Certified to be the drawing referred to in the specification hereunto annexed.

New York, Nov. 21st 1910.

INVENTOR

NIKOLA TESLA

by Frank Lemmel

Attorney

WITNESSES:

H. J. Corrigan

John A. Horning

Fig 3

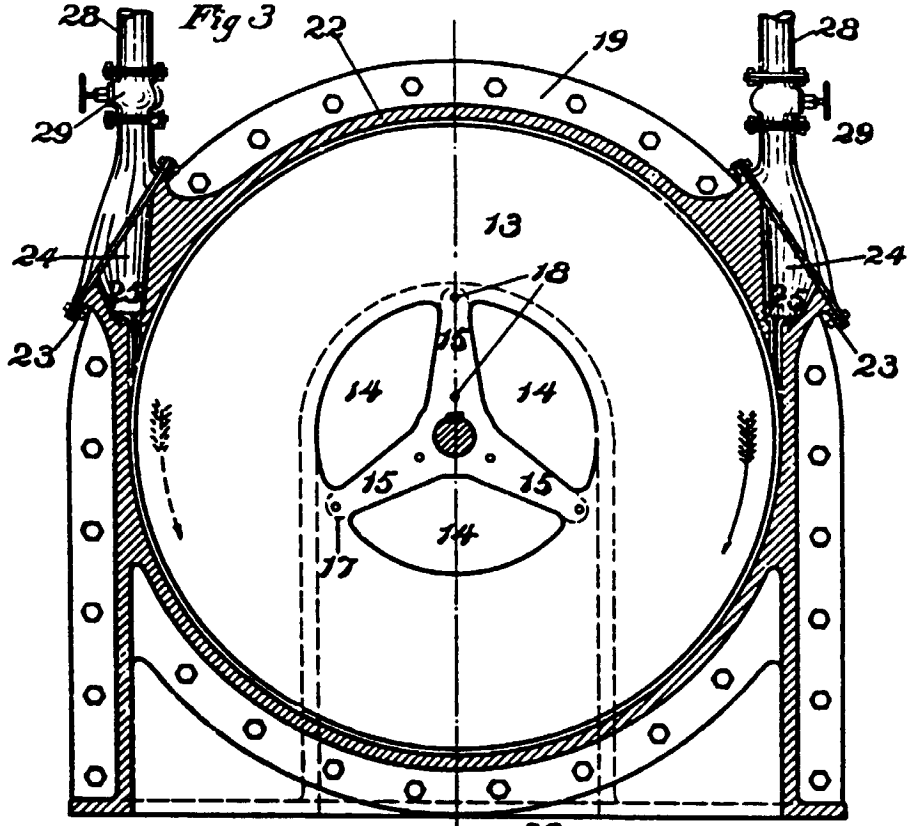

Fig 4

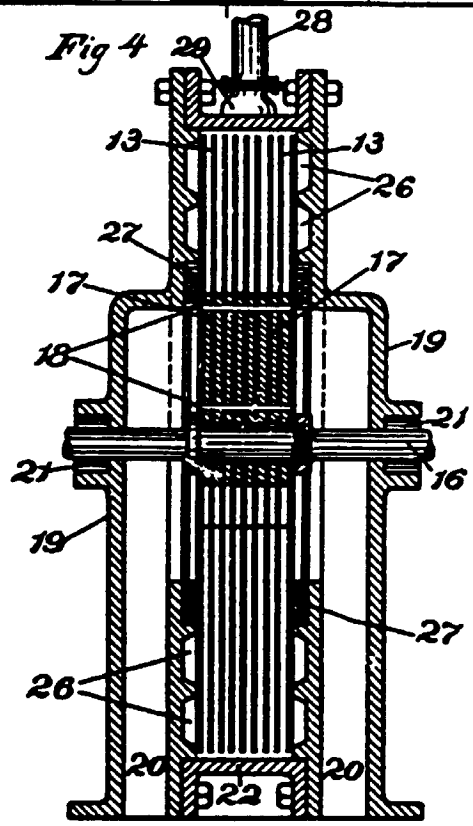

Certified to be the drawing referred to in the specification hereunto annexed.

New York, Nov. 21st 1910

WITNESSES:
[signature]
John H. Hoving

INVENTOR
NIKOLA TESLA
by [signature]
Attorney

PATENT No. 142352

142352

COMPARED

MMF

COST OF COPIES.

PATENT & SPECIFICATION $
SPECIFICATION 4.00
DRAWING 25
PETITION
OATH

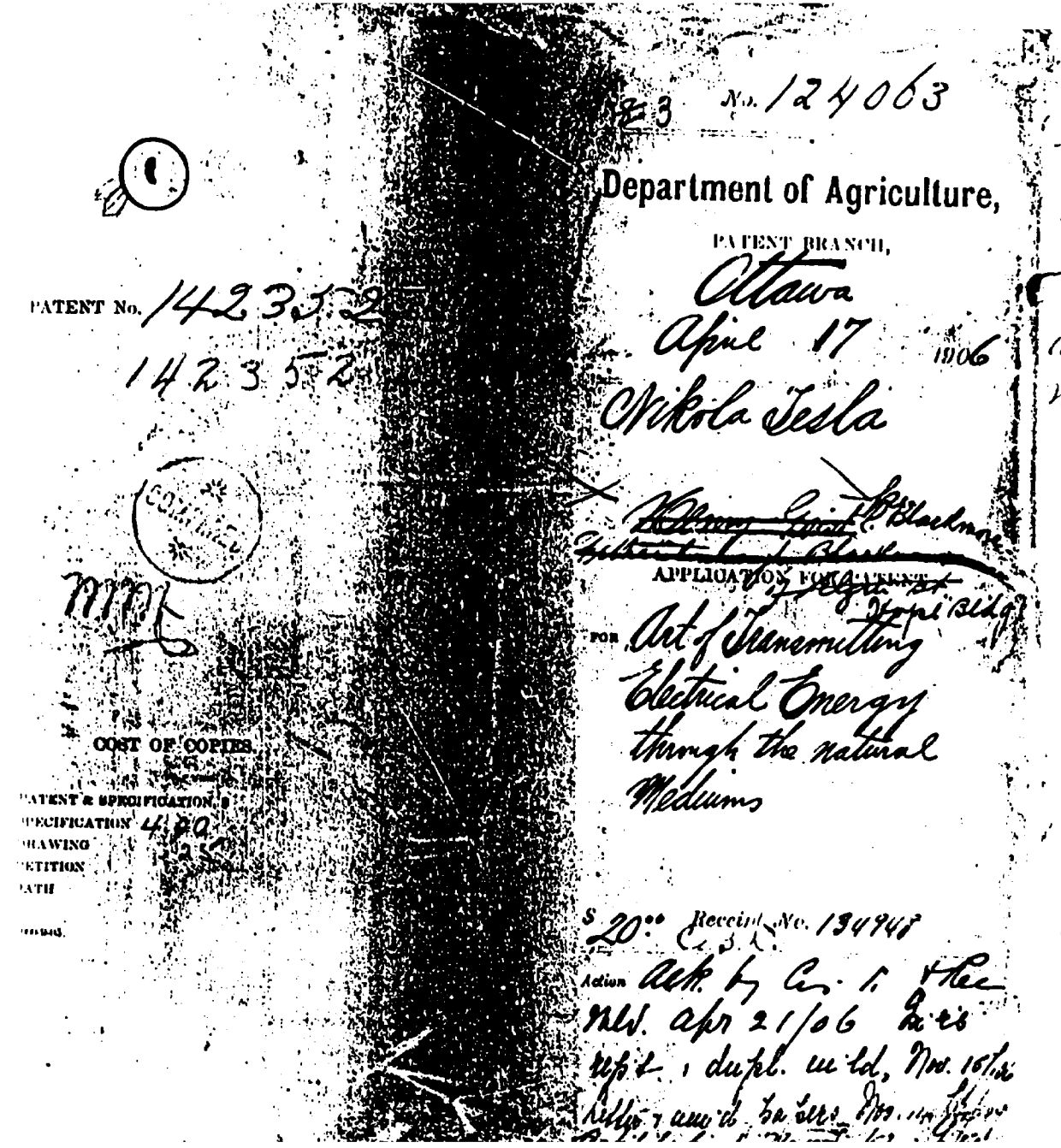

No. 124063

Department of Agriculture,

PATENT BRANCH,

Ottawa

April 17 1906

Nikola Tesla

~~Henry Grant~~ Blackmore

~~Herbert [illegible] Blackmore~~

APPLICATION FOR PATENT

FOR Art of Transmitting Electrical Energy through the natural Mediums

$20.00 Receipt No. 134948

Action Ack. by Cir. 1. & Rec. Mld. Apr 21/06 Cir's rept. & dupl. mld. Nov. 16/06 Letter & amd. papers Nov. [illegible]

Action Continued

Let & amd. papers & [illegible] Atty rec. Feby [illegible] Ack'd by cir. 6 Feb. 12 [illegible] Sheet of Tracing [illegible] 13/09 Ex's rept. mld. June 15/09 Let & amd. June 13/14/10. Ack'd by cir. 6 June 15/[illegible] rept & dupl. mld. Aug 10/10 Let & amd. paper Ack'd by cir. 6 Aug 17/11. Ex's rept & [illegible] mld. Sept. 26/11 Let & amd. papers [illegible] 3/4 Ack'd by cir 6 July 10/12.

3-8-12

PATENT MAY ISSUE

[illegible]

Chief of Patent Office.

Patent dated 1912

Mailed 1912

To all whom it may concern:

Be it known that I, Nikola Tesla, a citizen of the United States, residing in the Borough of Manhattan, in the City, County, and State of New York, have discovered a new and useful Improvement in the Art of Transmitting Electrical Energy Through the Natural Mediums of which the following is a specification, reference being had to the drawings accompanying and forming a part of the same.

It is known since a long time that electric currents may be propagated through the earth, and this knowledge has been utilized in many ways in the transmission of signals and the operation of a variety of receiving devices remote from the source of energy, mainly with the object of dispensing with a return conducting-wire. It is also known that electrical disturbances may be transmitted through portions of the earth by grounding only one of the poles of the source, and this fact I have made use of in systems which I have devised for the purposes of transmitting through the natural media intelligible signals or power and which are now familiar; but all experiments and observations heretofore made have tended to confirm the opinion held by the majority of scientific men that the earth, owing to its immense extent, although possessing conducting properties, does not behave in the manner of a conductor of limited dimensions with respect to the disturbances produced, but, on the contrary, much like a vast reservoir or ocean, which, while it may be locally disturbed by a commotion of some kind remains unresponsive and quiescent in a large part or as a whole. Still another fact now of common knowledge is that when electrical waves or oscillations are impressed upon such a conducting-path as a metallic wire reflection takes place under certain condi-

tions from the ends of the wire, and in consequence of the interference of the impressed and reflected oscillations the phenomenon of "stationary waves" with maxima and minima in definite fixed positions is produced. In any case the existence of these waves indicates that some of the outgoing waves have reached the boundaries of the conducting-path and have been reflected from the same. Now I have discovered that notwithstanding its vast dimensions and contrary to all observations heretofore made the terrestrial globe may in a large part or as a whole behave toward disturbances impressed upon it in the same manner as a conductor of limited size, this fact being demonstrated by novel phenomena, which I shall hereinafter describe.

In the course of certain investigations which I carried on for the purpose of studying the effects of lightning discharges upon the electrical condition of the earth I observed that sensitive receiving instruments arranged so as to be capable of responding to electrical disturbances created by the discharges at times failed to respond when they should have done so, and upon inquiring into the causes of this unexpected behavior I discovered it to be due to the character of the electrical waves which were produced in the earth by the lightning discharges and which had nodal regions following at definite distances the shifting source of the disturbances. From data obtained in a large number of observations of the maxima and minima of these waves I found their length to vary approximately from twenty-five to seventy kilometers, and these results and certain theoretical deductions led me to the conclusion that waves of this kind may be propagated in all directions over the globe and that they may be of still more widely differing lengths, the extreme limits being imposed by the physical dimensions and

properties of the earth. Recognizing in the existence of these waves an unmistakable evidence that the disturbances created had been conducted from their origin to the most remote portions of the globe and had been thence reflected, I conceived the idea of producing such waves in the earth by artificial means with the object of utilizing them for many useful purposes for which they are or might be found applicable. This problem was rendered extremely difficult owing to the immense dimensions of the planet, and consequently enormous movement of electricity or rate at which electrical energy had to be delivered in order to approximate, even in a remote degree, movements or rates which are manifestly attained in the displays of electrical forces in nature and which seemed at first unrealizable by any human agencies; but by gradual and continuous improvements of a generator of electrical oscillations, which I have described in my United States patents Nos. 645,576 and 649,621, I finally succeeded in reaching electrical movements or rates of delivery of electrical energy not only approximating, but, as shown in many comparative tests and measurements, actually surpassing those of lightning discharges, and by means of this apparatus I have found it possible to reproduce whenever desired phenomena in the earth the same as or similar to those due to such discharges. With the knowledge of the phenomena discovered by me and the means at command for accomplishing these results I am enabled not only to carry out many operations by the use of known instruments, but also to offer a solution for many important problems involving the operation or control of remote devices which for want of this knowledge and the absence of these means have heretofore been entirely impossible. For example, by the use of such a generator of stationary waves and receiving

apparatus properly placed and adjusted in any other locality, however remote, it is practicable to transmit intelligible signals or to control or actuate at will any one or all of such apparatus for many other important and valuable purposes, as for indicating wherever desired the correct time of an observatory or for ascertaining the relative position of a body or distance of the same with reference to a given point or for determining the course of a moving object, such as a vessel at sea, the distance traversed by the same or its speed, or for producing many other useful effects at a distance dependent on the intensity, wave length, direction or velocity of movement, or other feature or property of disturbances of this character.

I shall typically illustrate the manner of applying my discovery by describing one of the specific uses of the same - namely, the transmission of intelligible signals or messages between distant points - and with this object reference is now made to the accompanying drawings, in which -

Figure 1 represents diagrammatically the generator which produces stationary waves in the earth, and Fig. 2 an apparatus situated in a remote locality for recording the effects of these waves.

In Fig. 1, A designates a primary coil forming part of a transformer and consisting generally of a few turns of a stout cable of inappreciable resistance, the ends of which are connected to the terminals of a source of powerful electrical oscillations, diagrammatically represented by G. This source is usually a condenser charged to a high potential and discharged in rapid succession through the primary, as in a type of transformer invented by me and now well known; but when it is desired to produce stationary waves of great lengths an alternating

dynamo of suitable construction may be used to energize the primary A. C is a spirally-wound secondary coil within the primary having the end nearer to the latter connected to the ground E and the other end to an elevated terminal D. The physical constants of coil C, determining its period of vibration, are so chosen and adjusted that the secondary system E C D is in the closest possible resonance with the oscillations impressed upon it by the primary A. It is, moreover, of the greatest importance in order to still further enhance the rise of pressure and to increase the electrical movement in the secondary system that its resistance be as small as practicable and its self-induction as large as possible under the conditions imposed. The ground should be made with great care, with the object of reducing its resistance. Instead of being directly grounded, as indicated, the coil C may be joined in series or otherwise to the primary A, in which case the latter will be connected to the plate E; but be it that none or a part or all of the primary or exciting turns are included in the coil C the total length of the conductor from the ground-plate E to the elevated terminal D should be equal to one-quarter of the wave length of the electrical disturbance in the system E C D or else equal to that length multiplied by an odd number. This relation being observed, the terminal D will be made to coincide with the points of maximum pressure in the secondary or excited circuit, and the greatest flow of electricity will take place in the same. In order to magnify the electrical movement in the secondary as much as possible, it is essential that its inductive connection with the primary A should not be very intimate, as in ordinary transformers, but loose, so as to permit free oscillation - that is to say, their mutual induction should

be small. The spiral form of coil C secures this advantage, while the turns near the primary A are subjected to a strong inductive action and develop a high initial electromotive force. These adjustments and relations being carefully completed and other constructive features indicated rigorously observed, the electrical movement produced in the secondary system by the inductive action of the primary A will be enormously magnified, the increase being directly proportionate to the inductance and frequency and inversely to the resistance of the secondary system. I have found it practicable to produce in this manner an electrical movement thousands of times greater than the initial- that is, the one impressed upon the secondary by the primary A - and I have thus reached activities or rates of flow of electrical energy in the system E C D measured by many tens of thousands of horsepower. Such immense movements of electricity give rise to a variety of novel and striking phenomena, among which are those already described. The powerful electrical oscillations in the System E C D being communicated to the ground cause corresponding vibrations to be propagated to distant parts of the globe, whence they are reflected and by interference with the outgoing vibrations produce stationary waves the crests and hollows of which lie in parallel circles relatively to which the ground-plate E may be considered to be the pole. Stated otherwise, the terrestrial conductor is thrown into resonace with the oscillations impressed upon it just like a wire. More than this, a number of facts ascertained by me clearly show that the movement of electricity through it follows certain laws with nearly mathematical rigor. For the present it will be sufficient to state that the planet behaves like a perfectly smooth or polished conductor of inappreciable resistance with

capacity and self induction uniformly distributed along the axis of symmetry of wave propagation and transmitting slow electrical oscillations without sensible distortion and attenuation.

Besides the above three requirements seem to be essential to the establishment of the resonating condition.

First. The earth's diameter passing through the pole should be an odd multiple of the quarter wave length - that is, of the ratio between the velocity of light - and four times the frequency of the currents.

Second. It is necessary to employ oscillations in which the rate of radiation of energy into space in the form of hertzian or electromagnetic waves is very small. To give an idea, I would say that the frequency should be smaller than twenty thousand per second, though shorter waves might be practicable. The lowest frequency would appear to be six per second, in which case there will be but one node, at or near the ground-plate, and, paradoxical as it may seem, the effect will increase with the distance and will be greatest in a region diametrically opposite the transmitter. With oscillations still slower the earth, strictly speaking, will not resonate, but simply act as a capacity, and the variation of potential will be more or less uniform over its entire surface.

Third. The most essential requirement is, however, that irrespective of frequency the wave or wave-train should continue for a certain interval of time, which I have estimated to be not less than one-twelfth or probably 0.08484 of a second and which is taken in passing to and returning from the region diametrically opposite the pole over the earth's surface with a mean velocity of about four hundred and seventy-one thousand two hundred and forty kilometers per second.

The presence of the stationary waves may be detected in many ways. For instance, a circuit may be connected directly or inductively to the ground and to an elevated terminal and tuned to respond more effectively to the oscillations. Another way is to connect a tuned circuit to the ground at two points lying more or less in a meridian passing through the point E or, generally stated, to any two points of a different potential.

In Fig. 2 I have shown a device for detecting the presence of the waves such as I have used in a novel method of magnifying feeble effects which I have described in my United States patents Nos. 685,953 and 685,955. It consists of a cylinder of insulating material, which is moved at a uniform rate of speed by clockwork or other suitable motive power and is provided with two metal rings B B, upon which bear brushes a and a', connected, respectively, to the terminal plates P and P'. From the rings B B extend narrow metallic segments s and s', which by the rotation of the cylinder are brought alternately into contact with double brushes b and b', carried by and in contact with conducting-holders h and h', supported in metallic bearings D' D', as shown. The latter are connected to the terminals T and T' of a condenser C', and it should be understood that they are capable of angular displacement as ordinary brush-supports. The object of using two brushes, as b and b', in each of the holders h and h' is to vary at will the duration of the electric contact of the plates P and P' with the terminals T and T', to which is connected a receiving-circuit including a receiver R and a device d, performing the duty of closing the receiving-circuit at predetermined intervals of time and discharging the stored energy through the receiver. In the present case this device consists of a cylinder made partly of conducting and partly of

insulating material e and e', respectively, which is rotated at the desired rate of speed by any suitable means. The conducting part e is in good electrical connection with the shaft S and is provided with tapering segments f f, upon which slides a brush k, supported on a conducting-rod l, capable of longitudinal adjustment in a metallic support m. Another brush, n, is arranged to bear upon the shaft S, and it will be seen that whenever one of the segments f comes in contact with the brush k the circuit including the receiver R is completed and the condenser discharged through the same. By an adjustment of the speed or rotation of the cylinder d and a displacement of the brush k along the cylinder the circuit may be made to open and close in as rapid succession and remain open or closed during such intervals of time as may be desired. The plates P and P', through which the electrical energy is conveyed to the brushes a and a', may be at a considerable distance from each other in the ground or one in the ground and the other in the air, preferably at some height. If but one plate is connected to earth and the other maintained at an elevation, the location of the apparatus must be determined with reference to the position of the stationary waves established by the generator, the effect evidently being greatest in a maximum and zero in a nodal region. On the other hand, if both plates be connected to earth the points of connection must be selected with reference to the difference of potential which it is desired to secure, the strongest effect being of course obtained when the plates are at a distance equal to half the wave length.

In illustration of the operation of the system let it be assumed that alternating electrical impulses from the generator are caused to produce stationary waves in the earth, as above

described, and that the receiving apparatus is properly located with reference to the position of the nodal and ventral regions of the waves. The speed of rotation of the cylinder first described is varied until it is made to turn in synchronism with the alternate impulses of the generator, and the position of the brushes b and b' is adjusted by angular displacement or otherwise, so that they are in contact with the segments s and s' during the periods when the impulses are at or near the maximum of their intensity. These requirements being fulfilled, electrical charges of the same sign will be conveyed to each of the terminals of the condanser, and with each fresh impulse it will be charged to a higher potential. The speed of rotation of the cylinder d being adjustable at will, the energy of any number of separate impulses may thus be accumulated in potential form and discharged through the receiver R upon the brush k coming in contact with one of the segments f. It will be understood that the capacity of the condenser should be such as to allow the storing of a much greater amount of energy than is required for the ordinary operation of the receiver. Since by this method a relatively great amount of energy and in a suitable form may be made available for the operation of a receiver, the latter need not be very sensitive; but when the impulses are very weak or when it is desired to operate a receiver very rapidly any of the well-known sensitive devices capable of responding to very feeble influences may be used in the manner indicated or in other ways. Under the conditions described it is evident that during the continuance of the stationary waves the receiver will be acted upon by current impulses more or less intense, according to its location with reference to the maxima and minima of said waves; but upon interrupting or reducing

the flow of the current the stationary waves will disappear or diminish in intensity. Hence a great variety of effects may be produced in a receiver, according to the mode in which the waves are controlled. It is practicable, however, to shift the nodal and ventral regions of the waves at will from the sending-station, as by varying the length of the waves under observance of the above requirements. In this manner the regions of maximum and minimum effect may be made to coincide with any receiving station or stations. By impressing upon the earth two or more oscillations of different wave length a resultant stationary wave may be made to travel slowly over the globe, and thus a great variety of useful effects may be produced. Evidently the course of a vessel may be easily determined without the use of a compass, as by a circuit connected to the earth at two points, for the effect exerted upon the circuit will be greatest when the plates P P' are lying on a meridian passing through ground-plate E and will be nil when the plates are located at a parallel circle. If the nodal and ventral regions are maintained in fixed positions, the speed of a vessel carrying a receiving apparatus may be exactly computed from observations of the maxima and minima regions successively traversed. This will be understood when it is stated that the projections of all the nodes and loops on the earth's diameter passing through the pole or axis of symmetry of the wave-movement, are all equal. Hence, in any region at the surface the wave-length can be ascertained from simple rules of geometry. Conversely, knowing the wave-length, the distance from the source can be readily calculated. In like ways the distance of one point from another, the latitude and longitude, the hour, etc., may be determined from the observation of such stationary waves. If several such genera-

tors of stationary waves - preferably of different lengths - were installed in judiciously selected localities, the entire globe could be sub-divided in definite zones of electric activity and such and other important data could be at once obtained by simple calculation or readings from suitably graduated instruments.

The specific plan of producing the stationary waves, herein described, might be departed from. For example, the circuit which impresses the powerful oscillations upon the earth might be connected to the latter at two points.

In collecting the energy of these disturbances in any terrestrial region at a distance from their source, for any purpose and, more especially, in appreciable amounts, the most economical results will be generally secured by the employment of my synchronized receiving transformer. This invention, forming part of my system of transmission of energy through the natural media, has been fully explained in the patents first cited here, but for the better understanding of the present description it is diagrammatically illustrated in Fig. 3. Its most essential part is a circuit E_1 C_1 D_1 which is connected, arranged and adjusted similarly to the transmitting circuit E C D and which is inductively linked with a secondary circuit A_1. The latter, it scarcely need be stated, may be wound with any desired number of turns, such as will be best suited for the operation of the device designated by M. The receiving transformer is closely attuned to the oscillations of the transmitting circuit so that, irrespective of the length of the conductor E_1 C_1 D_1 the points of maximum potential coincide with the elevated terminal D_1 under which conditions the greatest amount of wave energy may be collected and rendered available in the secondary circuit A_1

for useful purposes.

To complete this description, it may be stated that when it is desired to operate, independently, a great many receiving devices, by such stationary waves of different lengths, the principles which I have set forth in my British patent 14,579 (1901) and in my United States patents Nos. 723,188 and 725,605 (1903) may be resorted to for rendering the signals or quantities of energy intended for any ~~particular~~ particular receiver or receivers non-interfering and non-interferable.

In the above I have briefly outlined my discovery and indicated only a few uses of the same, but it will be readily seem, that it is of transcending importance for the advancement of many arts and industries, new and old, and capable of innumerable valuable applications.

What I claim as my invention is:

1. The art herein described for transmitting electrical energy to a distance consisting in establishing stationary electrical waves in the earth by impressing thereon electrical oscillations of definite frequency.

2. The art herein described for transmitting electrical energy to a distance consisting in establishing electrical oscillations and impressing said oscillations upon the earth and producing therein stationary electric waves.

3. The art herein described for transmitting and utilizing electrical energy consisting in establishing stationary electrical waves in the earth, and operating thereby one or more receiving devices remote from the source of energy.

4. The art herein described for transmitting and utilizing electrical energy consisting in establishing stationary electrical waves in the earth, and operating thereby one or more receiving devices remote from the source of energy and properly located with respect to the position of said waves.

5. The art herein described for transmitting and utilizing electrical energy consisting in establishing stationary electrical waves in the earth, and varying the length of such waves.

6. The art herein described for transmitting and utilizing electrical energy consisting in establishing stationary electrical waves in the earth, and shifting the nodal and ventral regions of said waves.

7. The art herein described for transmitting electrical energy consisting in producing stationary electrical oscillations of definite lengths, impressing said oscillations upon the natural conducting medium and causing thereby a resultant wave or affect to travel slowly over said medium.

8. The art herein described for transmitting electrical energy which consists in establishing stationary electrical waves of different lengths varying the lengths of said waves and causing thereby a resultant wave or affect to travel with the desired velocity throughout the natural medium.

9. The art herein described for transmitting and utilizing electrical energy consisting in establishing stationary electrical waves, impressing said waves upon the natural conducting medium, varying the intensity of said waves and producing thereby perceptible affects in distant receivers.

10. The art of producing affects at a distance consisting in establishing stationary electrical waves, impressing said waves upon the terrestrial globe, varying the characteristics and relations of said waves and causing thereby affects in distant receivers.

11. The art herein described for transmitting and utilizing electrical energy consisting in establishing stationary electrical waves, impressing the affect of said waves upon the natural medium, positioning receiving apparatus at different places through said medium and determining from the affects or indications of said receiving apparatus the condition of said medium.

12. The art herein described for transmitting electrical energy consisting in establishing electrical waves of definite length and duration and impressing said waves upon the natural medium and thereby throwing said natural medium into resonance.

13. The art herein described for creating great electrical movements in the natural medium, which consists in establishing electrical waves of definite length and duration and impressing said waves upon said natural medium until the same becomes resonant.

14. In a system for the transmission of electrical energy, transmitting apparatus comprising a primary exciting circuit energized by a generator of alternating currents and a resonant secondary circuit of high self-induction and small resistance loosely linked with the primary and adapted for throwing the terrestrial globe into resonance, as set forth.

15. In the system for the transmission of electrical energy, a source of primary electrical oscillations such as a condenser circuit and a secondary circuit inductively linked with the same and adapted for throwing the terrestrial globe into resonance, as specified.

Fig. 1.

Fig. 2.

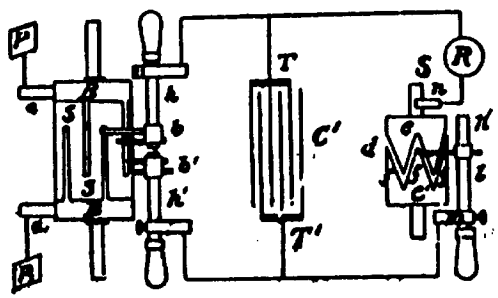

Fig. 3.

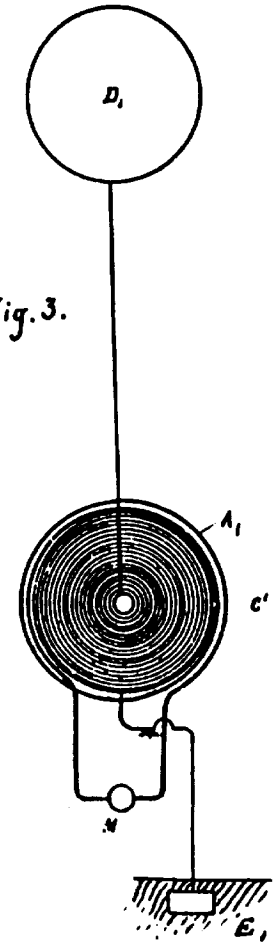

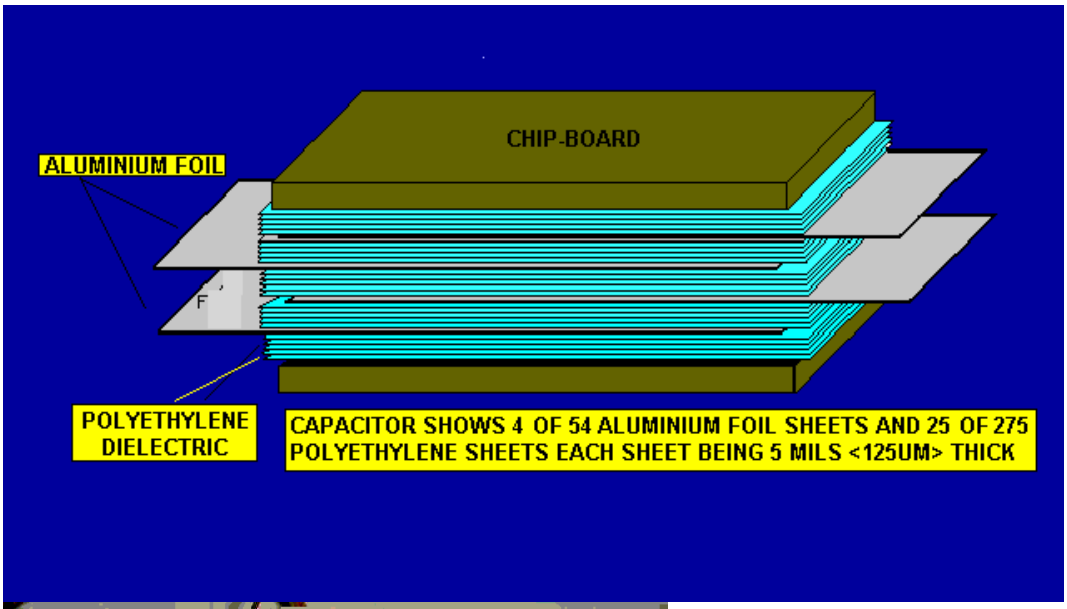

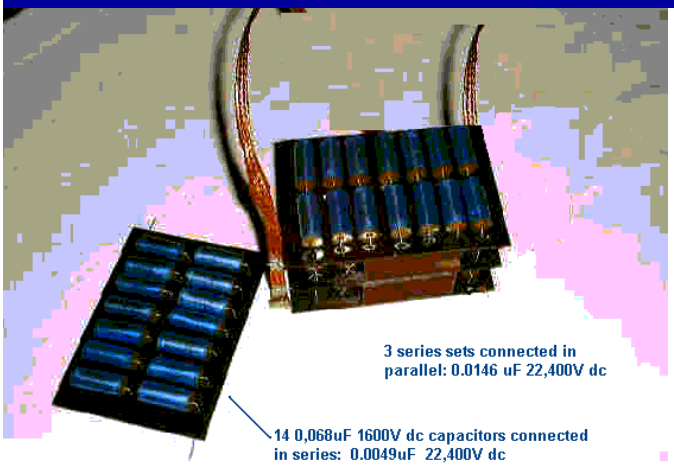

Figure 2 MMC CAPACITORS

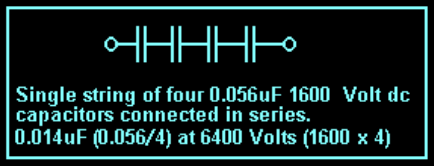

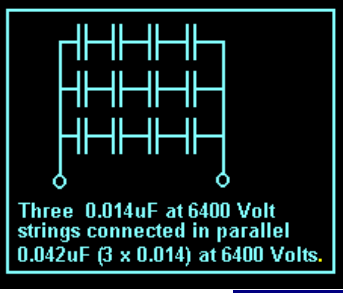

Figure 1 MMC CAPACITOR (12 capacitors connected in series parallel)

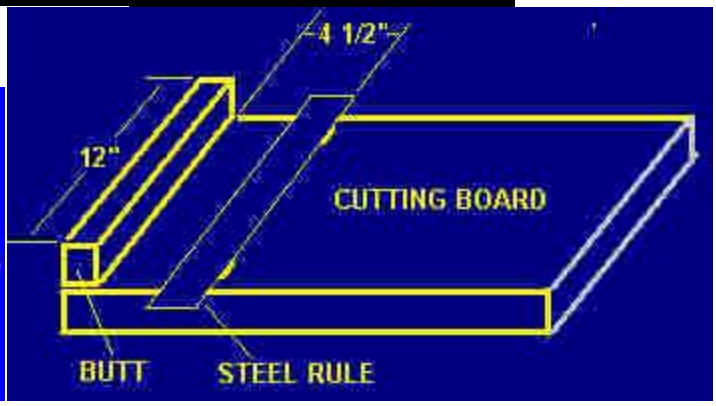

Original date 21 October 2000
Revision date 14 March 2001

CAPACITORS

General: The primary circuit capacitor (Cp) is the heart of the Tesla Coil. It must withstand 8-20kV ac and be relatively lossless at RF frequencies of 50-500kHz. Furthermore, it must be able to handle large RF currents of 50 to several hundreds of amperes. Such capacitors are not normally available commercially, so most Tesla Coil builders resort to building them to meet these specifications. The most popular types of construction are sandwich and Swiss roll using heavy duty aluminium foil and polyethylene sheet. Such units are usually immersed in mineral oil to prevent corona discharge and to keep them cool.

Recently, coilers started putting together commercially available pulse current grade capacitors in series parallel arrangements to meet the voltage and capacitance requirements. Such capacitors work well at RF frequencies and individually have voltage ratings in excess of a 1000 Volts. They are connected in series strings to provide the necessary voltage rating, and the strings are then connected in parallel to provide the necessary capacity. The capacitors are of tubular construcion, use polypropolene dielectric, and their axial leads are heavy duty for pulse current operation.

Home Made Polyethylene Capacitors: A large amount of care and patience is needed to build these capacitors. Single units built to operate at around 10kV are vulnerable to corona. The most vulnerable point is the air pocket between the dielectric and foil where corona occurs at high voltages. It eventually destroys the dielectric and results in short circuits, a common failure amongst these capacitors. It is far better to build larger capacity units and place them in series to distribute the voltage across them. Destructive corona is virtually none existent at a voltages below 5kV.

Sandwich Type Construction Example: The following capacitor, 0.026uF, is good only for light duty tesla coil operation, It has been used with an 8kV 35mA Neon Sign Transformer with modest success. It did arc externally at the ends and resulted in some foil damage. I subsequently immersed the entire capacitor in high quality mineral oil to solved that particular problem. The mineral oil soaked immediately into the Conti board (chip board), but did not weaken it. A slight swelling of the polyethylene did occur.

CONSTRUCTION DETAILS:

a. Dielectric: Polyethylene sheets 4.5" x 9", 0.005" thick, 5 sheets between foils
b. Plates: Aluminium baking foil dimensions, 3.5" x 11"
c. Stack: 54 Foils (27 on each end), and 275 polyethylene sheets
d. Leads: Foils clamped together each end with aluminium strips and 5mm nuts ....bolts.
e. Effective foil area for capacitance: 3 1/2" x 7" (0.0153m square)

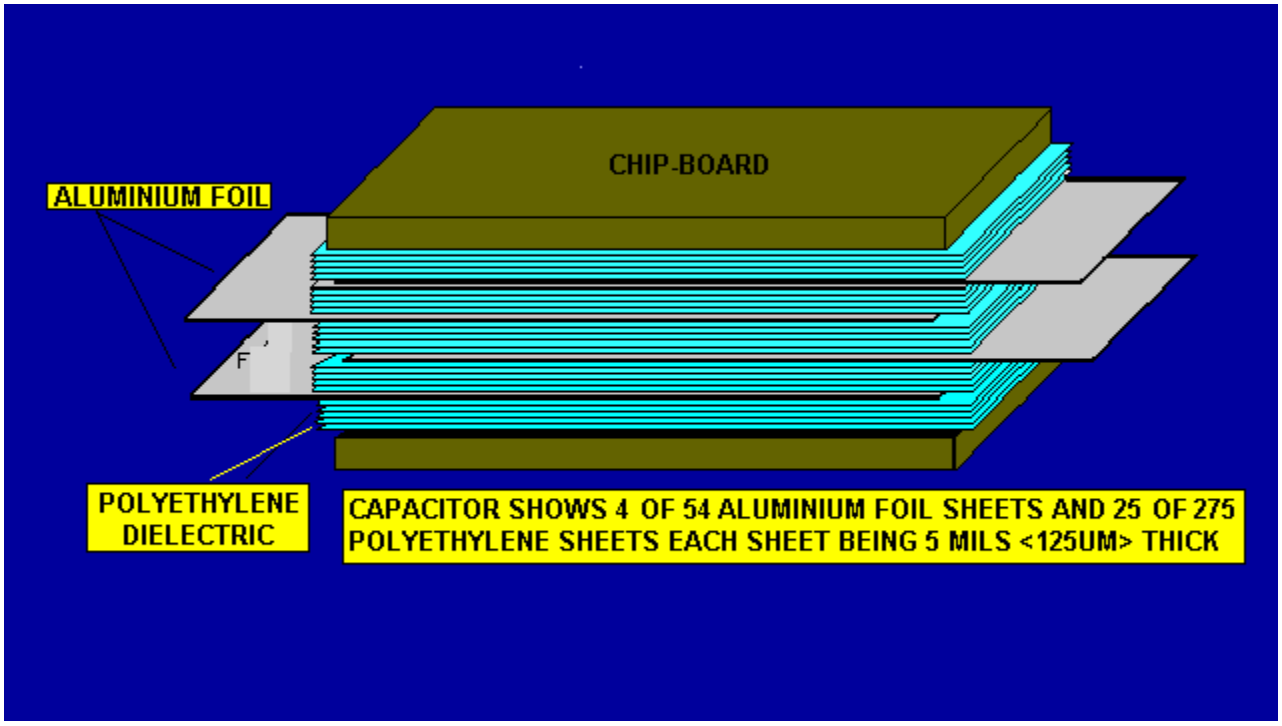

SOME CONSTRUCTION TIPS:

a. Purchasing polyethylene sheet: Ask for clear heavy duty (5 to 6 mils thick). It is sold by the metre off the roll. It will actually be 3 metres wide folded along its length in four places. So buying about four metres will give you 12 square metres, enough to build the above capacitor.

b. Cutting the polyethylene sheet: Unroll the sheet on a non-abrasive surface and cut it along the folds. This will give you 4 half metre (20") wide strips 4 metres long and one strip in 1 metre wide (40") and 4 metres long. From here on you will need to measure accurately and and cut carefully to obtain the necessary 275 pieces (4 1/2" x 9") of dielectric. For this you will need a Stanley knife with fresh new blades, a large carpenter's metal square (Iused one 15" x 24"), and some plastic electrical tape. The tape is used for marking your measurement on the polyethylene. To make the long strips manageable, I cut each of them to 9" wide and about 40" long. The edges of the purchased material are not even, so beware. Make certain the width is within 1/32" of 4 1/2 inches and one end is properly squared up with the sides.

c. Eight 4 1/2" x 9" can now be cut from each strip with relative ease using a cutting block as shown below.

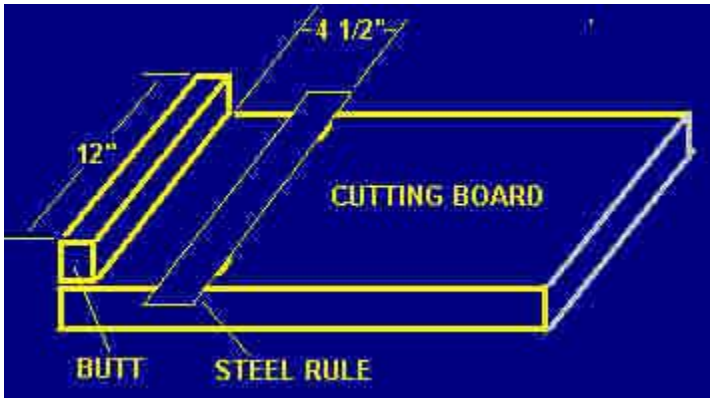

The nine inch wide polyethylene strip is slipped under the steel rule and pushed against the butt for cutting with a Stanley knife. Double adhesive wall fasteners are used to hold the steel rule in place.

d. The steel rule can be repositioned to 3 1/2 inches for cutting the aluminium foil tsheets. To obtain clean cuts, use fresh new Stanley knife replacement blades, and hold the knife at a low angle when cutting.

MMC CAPACITORS:

A relatively easy and inexpensive method for making a capacitor suitable for Tesla Coils is to use a quantity of commercially available capacitors connected in series parallel combinations. Most experienced Tesla Coilers are going this route now. Typical capacitors are those designed for pulse applications. Generally they are rated 0.056uF or 0.068 uF at 1600 volt although you may find other suitable values around. Their dielectric is polyproponal which has reasonably good RF characteristics at Tesla Coil frequencies.

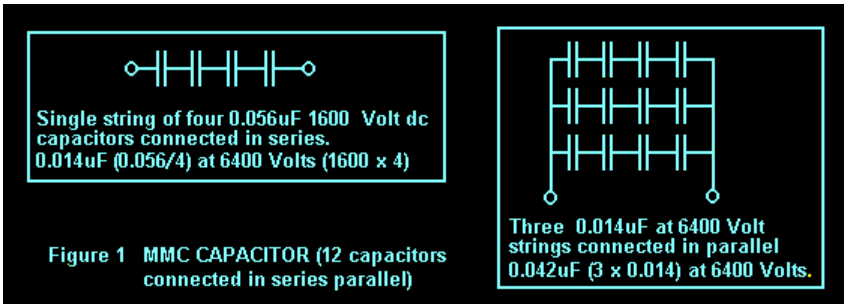

Figure 1 MMC CAPACITOR (12 capacitors connected in series parallel)

When you connect capacitors of the same value in series, the dc voltage rating of the series string is the sum of the voltages of the individual capaitors. For example, the voltage rating of four 1600 volt 0.056uF capacitors is 6400 volts dc. However, the string capacity is 1/4th that of the individual capacitors or .014uF (14nF). When you put the strings in parallel, you increase the capacity. three strings of 0.014uF capacitors in parallel gives you 0.042uF at 6400 volts. See figure 1 at right..

The photo , Figure 2, is an MMC arrangement used by the author. The strings are stacked to give capacitances in approximately 5nF increments at 22,400V dc. Paxolin, a high dielectric strength material is used to mount capacitors. The capacitors are connected and soldered together in a zig zap path along the board.

<=""> (return to home page)

Comments on this page

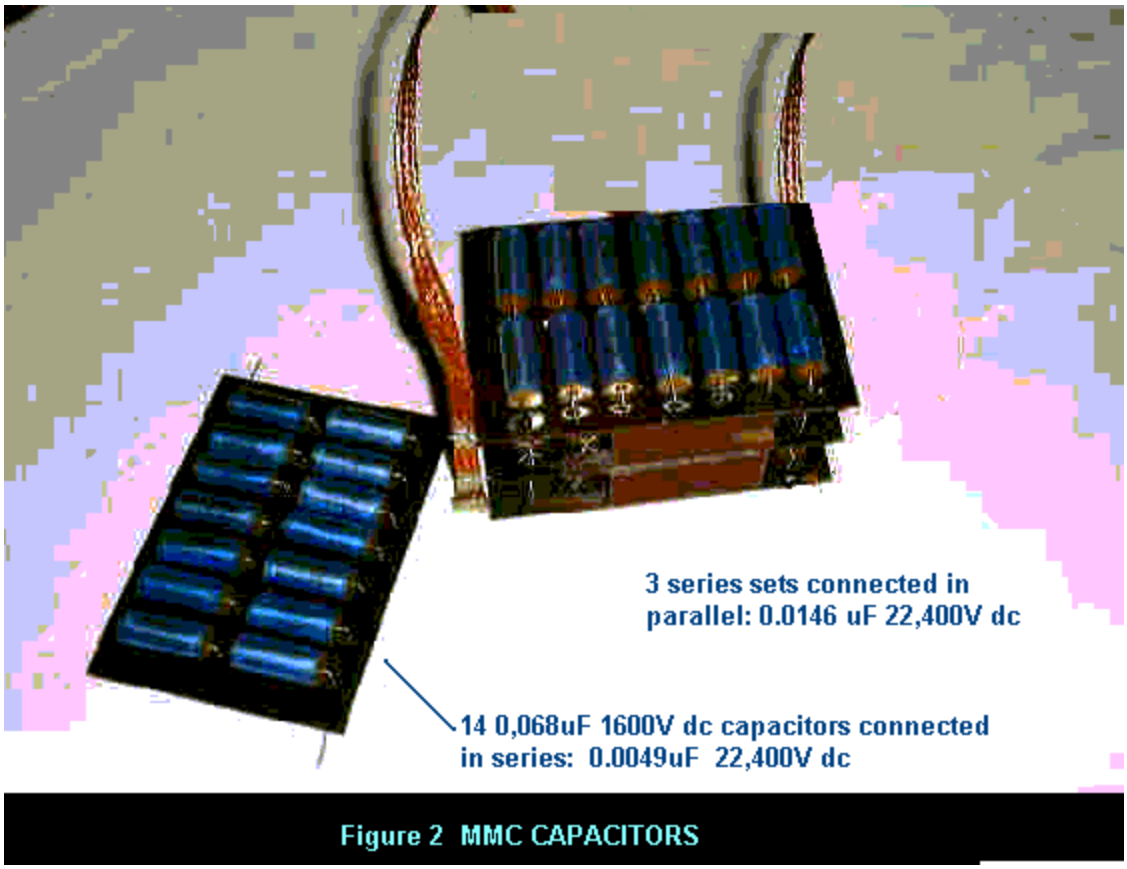

Figure 2 MMC CAPACITORS

Dielectric Constants Of Various Materials Table

Material	Min.	Max.
Air	1	1
Amber	2.6	2.7
Asbestos fiber	3.1	4.8
Bakelite	5	22
Barium Titanate	100	1250
Beeswax	2.4	2.8
Cambric	4	4
Carbon Tetrachloride	2.17	2.17
Celluloid	4	4
Cellulose Acetate	2.9	4.5
Durite	4.7	5.1
Ebonite	2.7	2.7
Epoxy Resin	3.4	3.7
Ethyl Alcohol	6.5	25
Fiber	5	5
Formica	3.6	6
Glass	3.8	14.5
Glass Pyrex	4.6	5
Gutta Percha	2.4	2.6
Isolantite	6.1	6.1
Kevlar	3.5	4.5
Lucite	2.5	2.5

Material	Min.	Max.
Nylon	3.4	22.4
Paper	1.5	3
Paraffin	2	3
Plexiglass	2.6	3.5
Polycarbonate	2.9	3.2
Polyethylene	2.5	2.5
Polyimide	3.4	3.5
Polystyrene	2.4	3
Porcelain	5	6.5
Quartz	5	5
Rubber	2	4
Ruby Mica	5.4	5.4
Selenium	6	6
Shellac	2.9	3.9
Silicone	3.2	4.7
Slate	7	7
Soil dry	2.4	2.9
Steatite	5.2	6.3
Styrofoam	1.03	1.03
Teflon	2.1	2.1
Titanium Dioxide	100	100
Vaseline	2.16	2.16

Mica	4	9	Vinylite	2.7	7.5
Micarta	3.2	5.5	Water distilled	34	78
Mycalex	7.3	9.3	Waxes, Mineral	2.2	2.3
Neoprene	4	6.7	Wood dry	1.4	2.9

Eng 24 Nikola Tesla: The Genius Who Lit the World

Prof. Jasmina Vujic

Freshman Seminar for Spring 2006

The 150th Anniversary of Nikola Tesla's Birth

(1856 - 1943)

Nature and Nature's laws lay hid in night:
God said, "Let Tesla be", and all was light.
B.A. Behrend, AIEE annual meeting, New York City, May 18, 1917.

On February 22, 2000, in his speech at the National Press Club, Neil Armstrong, the first man on the Moon, presented "The Twenty Greatest Engineering Achievements of the 20th Century" organized by the National Academy of Engineering (NAE). Widespread electrification was chosen as the greatest feat of the century because ``its impact is vast and it has touched the majority of people on the planet." The name of Nikola Tesla was omitted from the NAE's justification of this decision. Nikola Tesla was one of the most accomplished inventor-scientists of the late nineteenth and early twentieth centuries. He created the polyphase alternating current system of motors and generators that powers our world. Without his inventions the widespread electrification that " touched the majority of people on the planet" would not have been possible. He gave us every essential of radio, and laid the foundation for much of today's technology. He is most known for his "Tesla coil," a high voltage, high frequency transformer originally used in radios. However, Tesla's greatest contributions, A.C. power transmission and fundamentals of radio, are either not known or challenged bitterly. Tesla's great inventions include: a telephone repeater, rotating magnetic field principle, polyphase alternating-current system, induction motor, alternating-current power transmission, Tesla coil transformer, wireless communication, radio, fluorescent lights, and more than 700 other patents. Tesla is one of only two Americans to have a unit of electrical measurement named in

his honor. In this seminar we will talk about Tesla's life and his greatest inventions, as well as about famous "War of the Currents" and "The Great Radio Controversy" which is still going on among Tesla's "followers" on one side and Edison's and Markoni's "followers" on the other side.

Outline of the Freshman Seminar

Eng 24 Nikola Tesla: The Genius Who Lit the World

There are no prerequisites required, and the seminar is open for engineering and non-engineering freshmen. Grading is P/NP.

The short outline of the course is presented below:

EARLY LIFE OF NIKOLA TESLA

Tesla was convinced that his childhood experiences were decisive for his future work. In his autobiography, Tesla explains his traits and qualities by heredity and attributed them to the influence of his parents and ancestors. The circumstances of Tesla's youth were very hard. His father was a country priest in a very poor region of Lika, who straggled to give his son an education, the cost of which was extremely high as compared with his income. Tesla was torn between his strong desire and actual opportunities, and this left an imprint on his whole life.(1,2)

TESLA'S FIRST EFFORTS IN INVENTION

Being born in poverty, Tesla often, as a young boy, had to invent his toys and tools. In his autobiography, Tesla talks about his frog-catching "apparatus", his first "motor" powered by May-bugs, his "pop-gun" made of hollow wooden tubes, and many others.(1)

THE DISCOVERY OF THE ROTATING MAGNETIC FIELD

Tesla's discovery of the rotating magnetic field produced by the interactions of two and three phase alternating currents in a motor winding was one of his most significant achievements, and formed the basis of his induction motor and polyphase system for the generation and distribution of electricity. Large amounts of electrical power could be generated and transmitted efficiently over long distances. To this day, the three-phase form of Tesla's polyphase system is still used for the generation and transmission of most electricity. Moreover, the conversion of electricity into mechanical power is made possible by updated versions of Tesla's three-phase and split phase motors.(3)

THE DISCOVERY OF THE TESLA COIL AND TRANSFORMER

His experiments with high frequency and high potential alternating currents resulted in the development of the "Tesla coil" which is still used as a major component in numerous electronic devices. This device is a transformer with an air core that has both its primary and secondary tuned in resonance. As part of other experiments Tesla also developed the precursors of modern neon and florescent lights. He constructed these lights, elongated glass tubes filled with gas and coated with phosphor, excited in his high voltage experiments. He also discovered that high voltage current could be made harmless by using alternating current scheme at very large frequencies.(3)

WAR OF THE CURRENTS

In May 1885, George Westinghouse, head of the Westinghouse Electric Company in Pittsburgh, bought the patent rights to Tesla's polyphase system of alternating-current dynamos, transformers, and motors. The transaction precipitated a titanic power struggle between Edison's direct-current systems and the Tesla-Westinghouse alternating-current approach, which eventually won out. A similar media blitz is responsible for Thomas Alva Edison becoming a familiar household name. In reality Mr. Edison did not create or develop our system of alternating current electricity. History of "The War of the Currents" shows how he fought its adoption bitterly, choosing instead to promote a system of direct current that had already been invented by others. In short, Mr. Edison's brief role in the electrical power industry was that of an entrepreneur who failed, rather than an inventor. It was Nikola Tesla's discovery of the rotating magnetic field principle in 1882 and patented in 1888 that gives us our modern day system of electrical power distribution. (2, 4)

THE GREAT RADIO CONTROVERSY

Marchese Guglielmo Marconi was the first to send a message across the ocean and, as a result of his business interests later, he is partly responsible for 'developing' radio...but he did NOT invent it. Tesla did. Most people are unaware of what happened June 21, 1943: The United States Supreme Court made a landmark decision that essentially settled the long dispute between Marchese Guglielmo Marconi and Nikola Tesla. The court's decision, Case No. 369, identified as "Marconi Wireless Telegraph Company of America vs. United States," rendered invalid Marconi's basic patent No. 763,772 dated June 28, 1904. Tesla's patent No. 645,576 of March 20, 1900, and its subdivision patent for apparatus No. 649,621 dated May 15, 1900, had priority. (2,4)

REMOTE CONTROL AND AUTOMATION

In the development of receivers and transmitters Tesla applied them in remote ship control, and he was granted a patent in 1898 for “The Method of and Apparatus for Controlling Mechanism of Moving Vessels or Vehicles “. This invention made Tesla an originator of remote control.(1,2,4)

THE GREAT SMITHSONIAN CONTROVERSY

The Smithsonian Book of Invention is a prodigious 3/4 inch thick book of America's greatest inventors and their inventions. Tesla's name does not appear anywhere in that publication. One wonders how such an august institution with all the learned historians in their employ could possibly ignore Tesla's contributions in their chapter depicting the evolution of electric power and radio. Further evidence of history gone amuck is seen in the Smithsonian's publication, "The Beginning of the Electrical Age." The curator meticulously traces the history of electricity from Volta to Edison, naming 43 significant contributors, yet Nikola Tesla's name is missing. Instead, the curator shows pictures of the Niagara Falls Power project, and readers are carefully guided into believing that this was the work of Edison. Yet it was Tesla's polyphase AC system that the power commission adopted and licenses had to be issued to use Tesla's patents. Money for this publication came from the Thomas Alva Edison Foundation. (5,6)

REFERENCES

(1) Nikola Tesla, “My Inventions,” Skolska Knjiga, Zagreb, 1990

(2) Margaret Cheney, “Tesla, Man Out of Time,” New Jersey: Prentice-Hall, Inc., 1981

(3) Encyclopedia Americana, Vol 26, Grolier Inc: Connecticut, 1997, Pp. 527-528.

(4) Marc J. Seifer, “Wizard: The Life and Times of Nikola Tesla: Biography of a Genius,” New Jersey: Carol Publishing Group, 1996.

(5) John Wagner, personal communication

(6) Z. Herskovits, “To the Smithsonian or Bust: The Scientific Legacy of Nikola Tesla,” Yale Scinetific Magazine, Volume 71, Issue 4 (1999)

Nikola Tesla: Short Biography

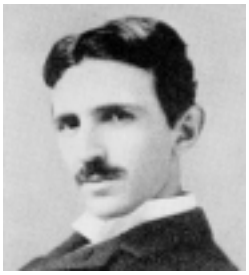

(b. July 9/10, 1856, Smiljan, Austro-Hungary--d. Jan. 7, 1943, New York City), Serbian-American inventor and researcher who discovered the rotating magnetic field, the basis of most alternating-current machinery. He emigrated to the United States in 1884 and sold the patent rights to his system of alternating-current dynamos, transformers, and motors to George Westinghouse the following year. In 1891 he invented the Tesla coil, an induction coil widely used in radio technology. Tesla was from a family of Serbian origin. His father was an Orthodox priest; his mother was unschooled but highly intelligent. A dreamer with a poetic touch, as he matured Tesla added to these earlier qualities those of self-discipline and a desire for precision.

Training for an engineering career, he attended the Technical University at Graz, Austria, and the University of Prague. At Graz he first saw the Gramme dynamo, which operated as a generator and, when reversed, became an electric motor, and he conceived a way to use alternating current to advantage. Later, at Budapest, he visualized the principle of the rotating magnetic field and developed plans for an induction motor that would become his first step toward the successful utilization of alternating current. In 1882 Tesla went to work in Paris for the Continental Edison Company, and, while on assignment to Strassburg in 1883, he constructed, in after-work hours, his first induction motor. Tesla sailed for America in 1884, arriving in New York, with four cents in his pocket, a few of his own poems, and calculations for a flying machine. He first found employment with Thomas Edison, but the two inventors were far apart in background and methods, and their separation was inevitable.

In May 1885, George Westinghouse, head of the Westinghouse Electric Company in Pittsburgh, bought the patent rights to Tesla's polyphase system of alternating-current dynamos, transformers, and motors. The transaction precipitated a titanic power struggle between Edison's direct-current systems and the Tesla-Westinghouse alternating-current approach, which eventually won out. Tesla soon established his own laboratory, where his inventive mind could be given free rein. He experimented with shadowgraphssimilar to those that later were to be used by Wilhelm Röntgen when he discovered X-rays in 1895. Tesla's countless experiments included work on a carbon button lamp, on the power of electrical resonance, and on various types of lighting.

Tesla gave exhibitions in his laboratory in which he lighted lamps without wires by allowing electricity to flow through his body, to allay fears of alternating current. He

was often invited to lecture at home and abroad. The Tesla coil, which he invented in 1891, is widely used today in radio and television sets and other electronic equipment. That year also marked the date of Tesla's United States citizenship.

Westinghouse used Tesla's system to light the World's Columbian Exposition at Chicago in 1893. His success was a factor in winning him the contract to install the first power machinery at Niagara Falls, which bore Tesla's name and patent numbers. The project carried power to Buffalo by 1896.

In 1898 Tesla announced his invention of a teleautomatic boat guided by remote control. When skepticism was voiced, Tesla proved his claims for it before a crowd in Madison Square Garden. In Colorado Springs, Colo., where he stayed from May 1899 until early 1900, Tesla made what he regarded as his most important discovery-- terrestrial stationary waves. By this discovery he proved that the Earth could be used as a conductor and would be as responsive as a tuning fork to electrical vibrations of a certain frequency. He also lighted 200 lamps without wires from a distance of 25 miles (40 kilometres) and created man-made lightning, producing flashes measuring 135 feet (41 metres). At one time he was certain he had received signals from another planet in his Colorado laboratory, a claim that was met with derision in some scientific journals.

Returning to New York in 1900, Tesla began construction on Long Island of a wireless world broadcasting tower, with $150,000 capital from the American financier J. Pierpont Morgan. Tesla claimed he secured the loan by assigning 51 percent of his patent rights of telephony and telegraphy to Morgan. He expected to provide worldwide communication and to furnish facilities for sending pictures, messages, weather warnings, and stock reports. The project was abandoned because of a financial panic, labour troubles, and Morgan's withdrawal of support. It was Tesla's greatest defeat.

Tesla's work then shifted to turbines and other projects. Because of a lack of funds, his ideas remained in his notebooks, which are still examined by engineers for unexploited clues. In 1915 he was severely disappointed when a report that he and Edison were to share the Nobel Prize proved erroneous. Tesla was the recipient of the Edison Medal in 1917, the highest honour that the American Institute of Electrical Engineers could bestow.

Tesla allowed himself only a few close friends. Among them were the writers Robert Underwood Johnson, Mark Twain, and Francis Marion Crawford. He was quite impractical in financial matters and an eccentric, driven by compulsions and a progressive germ phobia. But he had a way of intuitively sensing hidden scientific secrets and employing his inventive talent to prove his hypotheses.

Tesla was a godsend to reporters who sought sensational copy but a problem to editors who were uncertain how seriously his futuristic prophecies should be regarded. Caustic criticism greeted his speculations concerning communication with other planets, his assertions that he could split the Earth like an apple, and his claim of having invented a death ray capable of destroying 10,000 airplanes at a distance of 250 miles (400 kilometres).

After Tesla's death the custodian of alien property impounded his trunks, which held his papers, his diplomas and other honours, his letters, and his laboratory notes. These were eventually inherited by Tesla's nephew, Sava Kosanovich, and later housed in the Nikola Tesla Museum in Belgrade. Hundreds filed into New York City's Cathedral of St. John the Divine for his funeral services, and a flood of messages acknowledged the loss of a great genius. Three Nobel Prize recipients addressed their tribute to "one of the outstanding intellects of the world who paved the way for many of the technological developments of modern times." (I.W.H.)

Reproduced with permission from Britannica Online. Copyright (c) 1996 by Encyclopaedia Britannica, Inc.

Bibliography

1. CHENEY, MARGARET. ***Tesla, man out of time*** / Margaret Cheney. Englewood Cliffs, N.J. Prentice-Hall, c1981.

2. HUNT, INEZ. ***Lightning in his hand; the life story of Nikola Tesla***, by Inez Hunt and Wanetta W. Draper. Denver, Sage Books [1964].

3. MUZEJ NIKOLE TESLE. ***Tribute to Nikola Tesla. Presented in articles, letters, documents***. Beograd, Nikola Tesla Museum, 1961.

4. O'NEILL, JOHN JOSEPH, ***Prodigal genius; the life of Nikola Tesla,*** by John J. O'Neill. New York, N.Y., I. Washburn, inc. [1944].

5. TESLA, NIKOLA, ***The complete patents of Nikola Tesla*** / edited by Jim Glenn. New York : Barnes & Noble Books, 1994.

6. TESLA, NIKOLA, ***The fantastic inventions of Nikola Tesla*** / by Nikola Tesla & David H. Childress. Stelle, Ill. : Adventures Unlimiteds, [c1993]. Series title: Lost science series.

7. TESLA, NIKOLA, ***My inventions : the autobiography of Nikola Tesla*** / edited, with an introduction, by Ben Johnston. 1st Hart Bros. ed. Williston, Vt. : Hart Bros., 1982.

8. TESLA, NIKOLA, ***Nikola Tesla on his work with alternating currents and their application to wireless telegraphy, telephony, and transmission of power*** : an extended interview / Leland I. Anderson, editor. Denver, Colo. : Sun Pub. : Breckinridge, Colo. : Distributed exclusively in the USA by Twenty First Century Books, 1992.

9. VIDEORECORDING — The Mechanical universe and beyond. Part 37-38. Electromagnetic induction ; Alternating currents / a co-production of the California Institute of Technology and the Corporation for Community College Television. Santa Barbara, Calif. : Intellimation [distributor], c1987.1 videodisc (60 min.) : sd., col. ; 12 in.Laserdisc. UCB Media Ctr VIDEO/D 97

The above listed books and materials are available form the UCB Libraries. Listed below are newer books and materials that we would like to obtain:

10. VUJOVIC, IWONA — ***Tesla Bibliography, 1896-1920***, Publ. Tesla Project (1998)

11. HULL, RICHARD L.. — ***The Tesla Coil Builder's Guide to the Colorado Springs Notes of Nikola Tesla***, Publisher:Twenty First Century Books, Date:July 1999

12.STEWART, DANIEL B. — ***Tesla: The Modern Sorcerer***, Publisher:Frog, Limited, Date:Aug. 1999

13. SEIFER, MARC J. — ***Wizard: The Life and Times of Nikola Tesla***, Publisher:Carol Publishing Group, Date:March 1998

14. CHENEY, MARGARET. — ***Tesla***, Publisher:Doubleday, Date:Nov. 1998

15. TESLA, NIKOLA. — ***Nikola Tesla - Lecture Before the New York Academy of Sciences***, April 6, 1897; The Streams of Lenard & Roentgen: a Novel Apparatus for Their Production, Publisher:Twenty First Century Books, Date:Dec. 1994 T

16. TESLA, NIKOLA — ***Nikola Tesla on His Work with Alternating Currents & Their Application to Wireless Telegraphy, Telephony, & Transmission of Power***, Publisher:Sun Publishing, Denver, Date:May 1992

17. CHENEY, MARGARET AND ROBERT UTH — ***Tesla: Master of Lightning***, Barnes and Noble Books, 1999

18. PBS DOCUMENTARY — ***Tesla: Master of Lightning, http://www.pbs.org/tesla/***

THE STRANGE LIFE OF NIKOLA TESLA

Editors Note, August 28, 1995

This text has been entered by John R.H. Penner from a small booklet found in a used bookstore for $2.50. The only form of date identification is the name of the original purchaser, Arthua Daine (?), dated April 29, 1978.

The book appears to be considerably older, made with typewriters, and then photocopied and stapled. The only other significant features of the booklet is that it contains four photocopied photographs of Tesla, and was originally forty pages long. I must apologise for the qualitty of the scans, but the originals were of very poor quality, and this is the best that could be obtained after touching-up in Photoshop.

The book has no Copyright identification, nor any means of contacting the publishers. As far as I am aware, this autobiography is no longer available in printed form anywhere.

In the interest of making this important text available to the wider public, I have retyped the entire text word-for-word as it originally appears into this electronic format. The only words which appear in this file, that are not in the original book are this Editors Note, and the Introduction. I have exactly maintained page numbers as they appear in the original – including the somewhat odd artifact of Chapter 1 starting on page two.

If anyone knows how to reach the original publisher, please contact me at the below address, so proper credit may be given where it is due.

John Roland Hans Penner
464 Scott Street
St. Catharines, Ontario
L2M 3W7, Canada
Phone: 905.646.3551
eMail: J.Penner@GEnie.GEIS.com

This file may be freely redistributed as long as it's content is not modified in any way. It may not be sold or published for profit unless specifically authorised prior to publication by the express permission of Kolmogorov- Smirnov Publishing, or John R.H. Penner. Unless otherwise notified, this work is Copyright ©1995 by John R.H. Penner.

Introduction

Nikola Tesla was born in Croatia (then part of Austria-Hungary) on July 9, 1856, and died January 7, 1943. He was the electrical engineer who invented the AC (alternating current) induction motor, which made the universal transmission and distribution of electricity possible. Tesla began his studies in physics and mathematics at Graz Polytechnic, and then took philosophy at the University of Prague. He worked as an electrical engineer in Budapest, Hungary, and subsequently in France and Germany. In 1888 his discovery that a magnetic field could be made to rotate if two coils at right angles are supplied with AC current 90° out of phase made possible the invention of the AC induction motor. The major advantage of this motor being its brushless operation, which many at the time believed impossible.

Tesla moved to the United States in 1884, where he worked for Thomas Edison who quickly became a rival – Edison being an advocate of the inferior DC power transmission system. During this time, Tesla was commissioned with the design of the AC generators installed at Niagara Falls. George Westinghouse purchased the patents to his induction motor, and made it the basis of the Westinghouse power system which still underlies the modern electrical power industry today.

He also did notable research on high-voltage electricity and wireless communication; at one point creating an earthquake which shook the ground for several miles around his New York laboratory. He also devised a system which anticipated world-wide wireless communications, fax machines, radar, radio-guided missiles and aircraft.

NIKOLA TESLA IS THE TRUE UNSUNG PROPHET OF THE ELECTRIC AGE!; without whom our radio, auto ignition, telephone, alternating current power generation and transmission, radio and television would all have been impossible.

Yet his life and times have vanished largely from public access.

This AUTOBIOGRAPHY is released to remedy this situation, and to fill this “BLACK HOLE” in information space.

©Kolmogorov- Smirnov Publishing.

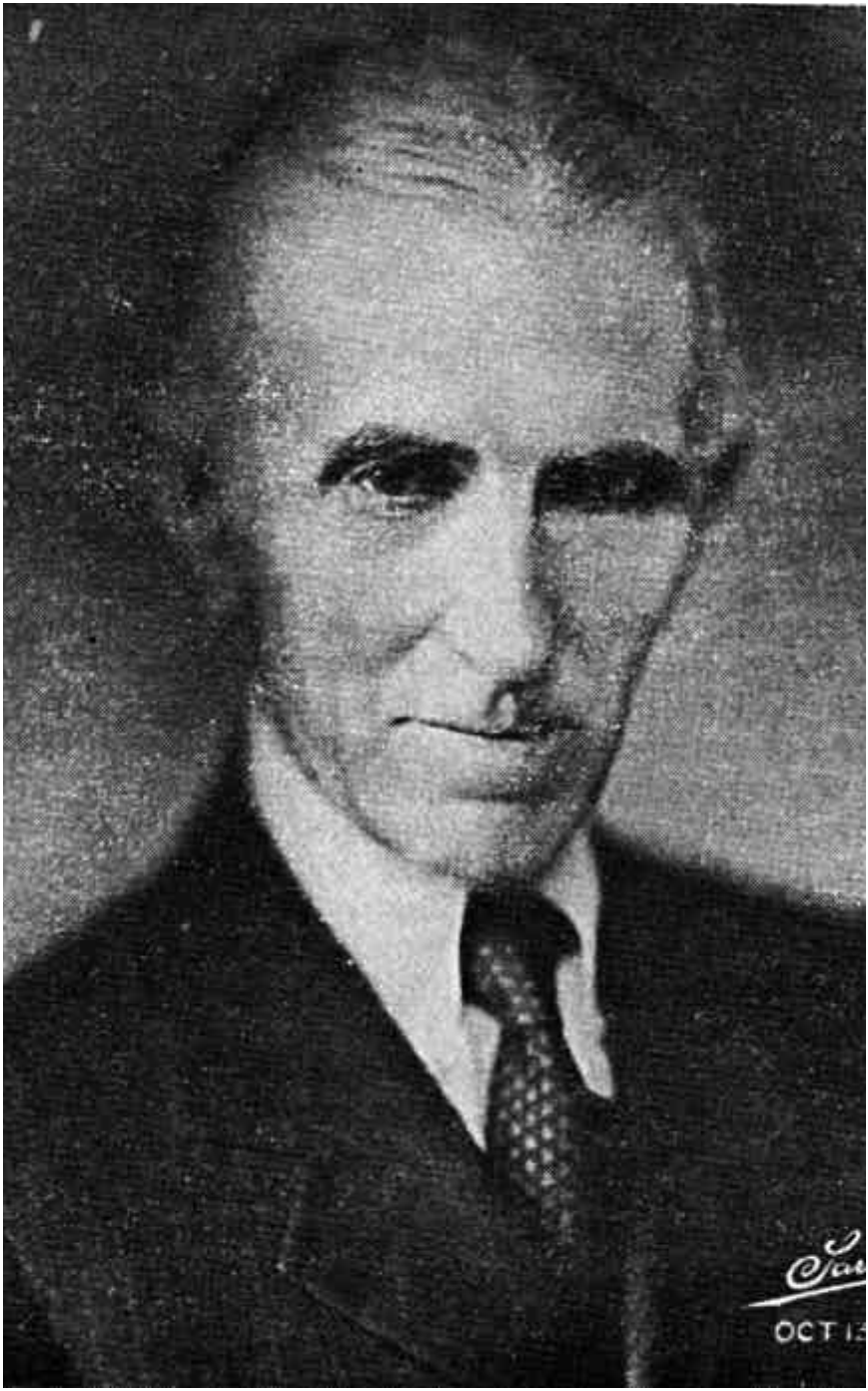

October 13, 1933

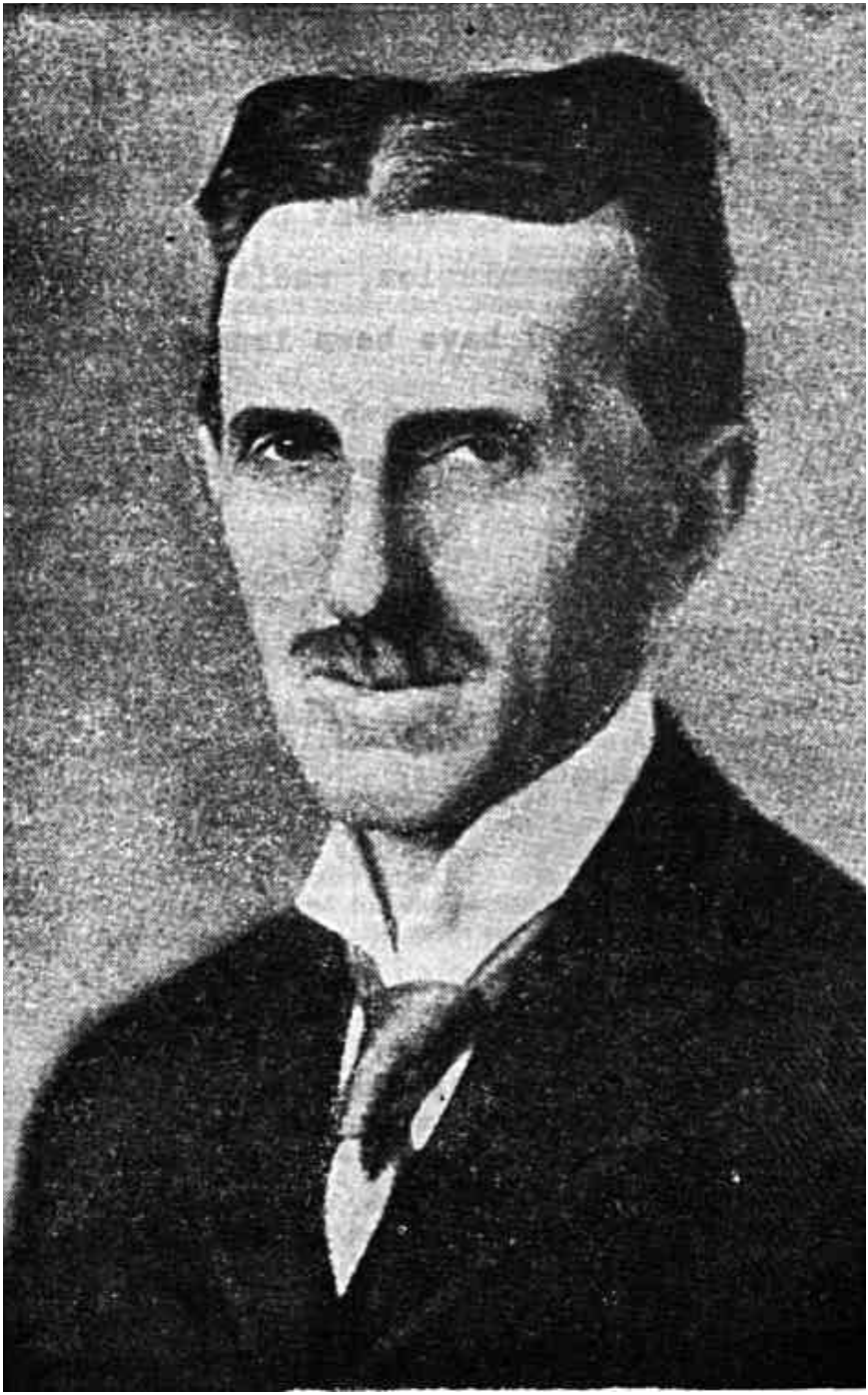

Chapter 1
My Early Life

By Nikola Tesla

The progressive development of man is vitally dependent on invention. It is the most important product of his creative brain. Its ultimate purpose is the complete mastery of mind over the material world, the harnessing of the forces of nature to human needs. This is the difficult task of the inventor who is often misunderstood and unrewarded. But he finds ample compensation in the pleasing exercises of his powers and in the knowledge of being one of that exceptionally privileged class without whom the race would have long ago perished in the bitter struggle against pitiless elements. Speaking for myself, I have already had more than my full measure of this exquisite enjoyment; so much, that for many years my life was little short of continuous rapture. I am credited with being one of the hardest workers and perhaps I am, if thought is the equivalent of labour, for I have devoted to it almost all of my waking hours. But if work is interpreted to be a definite performance in a specified time according to a rigid rule, then I may be the worst of idlers.

Every effort under compulsion demands a sacrifice of life-energy. I never paid such a price. On the contrary, I have thrived on my thoughts. In attempting to give a connected and faithful account of my activities in this story of my life, I must dwell, however reluctantly, on the impressions of my youth and the circumstances and events which have been instrumental in determining my career. Our first endeavours are purely instinctive promptings of an imagination vivid and undisciplined. As we grow older reason asserts itself and we become more and more systematic and designing. But those early impulses, though not immediately productive, are of the greatest moment and may shape our very destinies. Indeed, I feel now that had I understood and cultivated instead of suppressing them, I would have added substantial value to my bequest to the world. But not until I had attained manhood did I realise that I was an inventor.

This was due to a number of causes. In the first place I had a brother who was gifted to an extraordinary degree; one of those rare phenomena of mentality which biological investigation has failed to explain. His premature death left my earth parents disconsolate. (I will explain my remark about my “earth parents” later.) We owned a horse which had been presented to us by a dear friend. It was a magnificent animal of Arabian breed, possessed of almost human intelligence, and was cared for and petted by the whole family, having on one occasion saved my dear father’s life under remarkable circumstances.

My father had been called one winter night to perform an urgent duty and while crossing the mountains, infested by wolves, the horse became frightened and ran away, throwing him violently to the ground. It arrived home bleeding and exhausted, but after the alarm was sounded, immediately dashed off again, returning to the spot, and before the searching party were far on the way they were met by my father, who had recovered consciousness and remounted, not realising that he had been lying in the snow for several hours. This horse was responsible for my brother’s injuries from which he died. I witnessed the tragic scene and although so many years have elapsed since, my visual impression of it has lost none of its force. The recollection of his attainments made every effort of mine seem dull in comparison. Anything I did that was creditable merely caused my parents to feel their loss more keenly. So I grew up with little confidence in myself.

But I was far from being considered a stupid boy, if I am to judge from an incident of which I have still a strong remembrance. One day the Aldermen were passing through a street where I was playing with other boys. The oldest of these venerable gentlemen, a wealthy citizen, paused to give a silver piece to each of us. Coming to me, he suddenly stopped and commanded, "Look in my eyes." I met his gaze, my hand outstretched to receive the much valued coin, when to my dismay, he said, "No, not much; you can get nothing from me. You are too smart."

They used to tell a funny story about me. I had two old aunts with wrinkled faces, one of them having two teeth protruding like the tusks of an elephant, which she buried in my cheek every time she kissed me. Nothing would scare me more then the prospects of being by these affectionate, unattractive relatives. It happened that while being carried in my mother's arms, they asked who was the prettier of the two. After examining their faces intently, I answered thoughtfully, pointing to one of them, "This here is not as ugly as the other."

Then again, I was intended from my very birth, for the clerical profession and this thought constantly oppressed me. I longed to be an engineer, but my father was inflexible. He was the son of an officer who served in the army of the Great Napoleon and in common with his brother, professor of mathematics in a prominent institution, had received a military education; but, singularly enough, later embraced the clergy in which vocation he achieved eminence. He was a very erudite man, a veritable natural philosopher, poet and writer and his sermons were said to be as eloquent as those of Abraham a-Sancta-Clara. He had a prodigious memory and frequently recited at length from works in several languages. He often remarked playfully that if some of the classics were lost he could restore them. His style of writing was much admired. He penned sentences short and terse and full of wit and satire. The humorous remarks he made were always peculiar and characteristic. Just to illustrate, I may mention one or two instances.

Among the help, there was a cross-eyed man called Mane, employed to do work around the farm. He was chopping wood one day. As he swung the axe, my father, who stood nearby and felt very uncomfortable, cautioned him, "For God's sake, Mane, do not strike at what you are looking but at what you intend to hit."

On another occasion he was taking out for a drive, a friend who carelessly permitted his costly fur coat to rub on the carriage wheel. My father reminded him of it saying, "Pull in your coat; you are ruining my tire."

He had the odd habit of talking to himself and would often carry on an animated conversation and indulge in heated argument, changing the tone of his voice. A casual listener might have sworn that several people were in the room.

Although I must trace to my mother's influence whatever inventiveness I possess, the training he gave me must have been helpful. It comprised all sorts of exercises - as, guessing one another's thoughts, discovering the defects of some form of expression, repeating long sentences or performing mental calculations. These daily lessons were intended to strengthen memory and reason, and especially to develop the critical sense, and were undoubtedly very beneficial.

My mother descended from one of the oldest families in the country and a line of inventors. Both her father and grandfather originated numerous implements for household, agricultural and other uses. She was a truly great woman,

of rare skill, courage and fortitude, who had braved the storms of life and passed through many a trying experience. When she was sixteen, a virulent pestilence swept the country. Her father was called away to administer the last sacraments to the dying and during his absence she went alone to the assistance of a neighbouring family who were stricken by the dread disease. She bathed, clothed and laid out the bodies, decorating them with flowers according to the custom of the country and when her father returned he found everything ready for a Christian burial.

My mother was an inventor of the first order and would, I believe, have achieved great things had she not been so remote from modern life and its multifold opportunities. She invented and constructed all kinds of tools and devices and wove the finest designs from thread which was spun by her. She even planted seeds, raised the plants and separated the fibres herself. She worked indefatigably, from break of day till late at night, and most of the wearing apparel and furnishings of the home were the product of her hands. When she was past sixty, her fingers were still nimble enough to tie three knots in an eyelash.

There was another and still more important reason for my late awakening. In my boyhood I suffered from a peculiar affliction due to the appearance of images, often accompanied by strong flashes of light, which marred the sight of real objects and interfered with my thoughts and action. They were pictures of things and scenes which i had really seen, never of those imagined. When a word was spoken to me the image of the object it designated would present itself vividly to my vision and sometimes I was quite unable to distinguish weather what I saw was tangible or not. This caused me great discomfort and anxiety. None of the students of psychology or physiology whom i have consulted, could ever explain satisfactorily these phenomenon. They seem to have been unique although I was probably predisposed as I know that my brother experienced a similar trouble. The theory I have formulated is that the images were the result of a reflex action from the brain on the retina under great excitation. They certainly were not hallucinations such as are produced in diseased and anguished minds, for in other respects i was normal and composed. To give an idea of my distress, suppose that I had witnessed a funeral or some such nerve-wracking spectacle. The, inevitably, in the stillness of night, a vivid picture of the scene would thrust itself before my eyes and persist despite all my efforts to banish it. If my explanation is correct, it should be possible to project on a screen the image of any object one conceives and make it visible. Such an advance would revolutionise all human relations. I am convinced that this wonder can and will be accomplished in time to come. I may add that I have devoted much thought to the solution of the problem.

I have managed to reflect such a picture, which i have seen in my mind, to the mind of another person, in another room. To free myself of these tormenting appearances, I tried to concentrate my mind on something else I had seen, and in this way I would often obtain temporary relief; but in order to get it I had to conjure continuously new images. It was not long before I found that I had exhausted all of those at my command; my ‘reel’ had run out as it were, because I had seen little of the world — only objects in my home and the immediate surroundings. As I performed these mental operations for the second or third time, in order to chase the appearances from my vision, the remedy gradually lost all its force. Then I instinctively commenced to make excursions beyond the limits of the small world of which I had knowledge, and I saw new scenes. These were at first very blurred and indistinct, and would flit away when I tried to concentrate my attention upon them. They gained in strength

and distinctness and finally assumed the concreteness of real things. I soon discovered that my best comfort was attained if I simply went on in my vision further and further, getting new impressions all the time, and so I began to travel; of course, in my mind. Every night, (and sometimes during the day), when alone, I would start on my journeys — see new places, cities and countries; live there, meet people and make friendships and acquaintances and, however unbelievable, it is a fact that they were just as dear to me as those in actual life, and not a bit less intense in their manifestations.

This I did constantly until I was about seventeen, when my thoughts turned seriously to invention. Then I observed to my delight that i could visualise with the greatest facility. I needed no models, drawings or experiments. I could picture them all as real in my mind. Thus I have been led unconsciously to evolve what I consider a new method of materialising inventive concepts and ideas, which is radially opposite to the purely experimental and is in my opinion ever so much more expeditious and efficient.

The moment one constructs a device to carry into practice a crude idea, he finds himself unavoidably engrossed with the details of the apparatus. As he goes on improving and reconstructing, his force of concentration diminishes and he loses sight of the great underlying principle. Results may be obtained, but always at the sacrifice of quality. My method is different. I do not rush into actual work. When I get an idea, I start at once building it up in my imagination. I change the construction, make improvements and operate the device in my mind. It is absolutely immaterial to me whether I run my turbine in thought or test it in my shop. I even note if it is out of balance. There is no difference whatever; the results are the same. In this way I am able to rapidly develop and perfect a conception without touching anything. When I have gone so far as to embody in the invention every possible improvement I can think of and see no fault anywhere, I put into concrete form this final product of my brain. Invariably my device works as I conceived that it should, and the experiment comes out exactly as I planned it. In twenty years there has not been a single exception. Why should it be otherwise? Engineering, electrical and mechanical, is positive in results. There is scarcely a subject that cannot be examined beforehand, from the available theoretical and practical data. The carrying out into practice of a crude idea as is being generally done, is, I hold, nothing but a waste of energy, money, and time.

My early affliction had however, another compensation. The incessant mental exertion developed my powers of observation and enabled me to discover a truth of great importance. I had noted that the appearance of images was always preceded by actual vision of scenes under peculiar and generally very exceptional conditions, and I was impelled on each occasion to locate the original impulse. After a while this effort grew to be almost automatic and I gained great facility in connecting cause and effect. Soon I became aware, to my surprise, that every thought I conceived was suggested by an external impression. Not only this but all my actions were prompted in a similar way. In the course of time it became perfectly evident to me that I was merely an automation endowed with power OF MOVEMENT RESPONDING TO THE STIMULI OF THE SENSE ORGANS AND THINKING AND ACTING ACCORDINGLY. The practical result of this was the art of teleautomatics which has been so far carried out only in an imperfect manner. Its latent possibilities will, however be eventually shown. I have been years planning self-controlled automata and believe that mechanisms can be produced which will act as if possessed of reason, to a limited degree, and will create a revolution in many commercial and industrial departments. I was about twelve years of age when I first succeeded in banishing an image from my vision by wilful effort, but I never had any control over the flashes of light to which

I have referred. They were, perhaps, my strangest and [most] inexplicable experience. They usually occurred when I found myself in a dangerous or distressing situations or when i was greatly exhilarated. In some instances i have seen all the air around me filled with tongues of living flame. Their intensity, instead of diminishing, increased with time and seemingly attained a maximum when I was about twenty-five years old.

While in Paris in 1883, a prominent French manufacturer sent me an invitation to a shooting expedition which I accepted. I had been long confined to the factory and the fresh air had a wonderfully invigorating effect on me. On my return to the city that night, I felt a positive sensation that my brain had caught fire. I was a light as though a small sun was located in it and I passed the whole night applying cold compressions to my tortured head. Finally the flashes diminished in frequency and force but it took more than three weeks before they wholly subsided. When a second invitation was extended to me, my answer was an emphatic NO!

These luminous phenomena still manifest themselves from time to time, as when a new idea opening up possibilities strikes me, but they are no longer exciting, being of relatively small intensity. When I close my eyes I invariably observe first, a background of very dark and uniform blue, not unlike the sky on a clear but starless night. In a few seconds this field becomes animated with innumerable scintillating flakes of green, arranged in several layers and advancing towards me. Then there appears, to the right, a beautiful pattern of two systems of parallel and closely spaced lines, at right angles to one another, in all sorts of colours with yellow, green, and gold predominating. Immediately thereafter, the lines grow brighter and the whole is thickly sprinkled with dots of twinkling light. This picture moves slowly across the field of vision and in about ten seconds vanishes on the left, leaving behind a ground of rather unpleasant and inert grey until the second phase is reached. Every time, before falling asleep, images of persons or objects flit before my view. When I see them I know I am about to lose consciousness. If they are absent and refuse to come, it means a sleepless night. To what an extent imagination played in my early life, I may illustrate by another odd experience.

Like most children, I was fond of jumping and developed an intense desire to support myself in the air. Occasionally a strong wind richly charged with oxygen blew from the mountains, rendering my body light as cork and then I would leap and float in space for a long time. It was a delightful sensation and my disappointment was keen when later I undeceived myself. During that period I contracted many strange likes, dislikes and habits, some of which I can trace to external impressions while others are unaccountable. I had a violent aversion against the earing of women, but other ornaments, as bracelets, pleased me more or less according to design. The sight of a pearl would almost give me a fit, but I was fascinated with the glitter of crystals or objects with sharp edges and plane surfaces. I would not touch the hair of other people except, perhaps at the point of a revolver. I would get a fever by looking at a peach and if a piece of camphor was anywhere in the house it caused me the keenest discomfort. Even now I am not insensible to some of these upsetting impulses. When I drop little squares of paper in a dish filled with liquid, I always sense a peculiar and awful taste in my mouth. I counted the steps in my walks and calculated the cubical contents of soup plates, coffee cups and pieces of food, otherwise my meal was unenjoyable. All repeated acts or operations I performed had to be divisible by three and if I missed I felt impelled to do it all over again, even if it took hours. Up to the age of eight years, my

character was weak and vacillating. I had neither courage or strength to form a firm resolve. My feelings came in waves and surges and variated unceasingly between extremes. My wishes were of consuming force and like the heads of the hydra, they multiplied. I was oppressed by thoughts of pain in life and death and religious fear. I was swayed by superstitious belief and lived in constant dread of the spirit of evil, of ghosts and ogres and other unholy monsters of the dark. Then all at once, there came a tremendous change which altered the course of my whole existence.

Of all things I liked books best. My father had a large library and whenever I could manage I tried to satisfy my passion for reading. He did not permit it and would fly in a rage when he caught me in the act. He hid the candles when he found that I was reading in secret. He did not want me to spoil my eyes. But I obtained tallow, made the wicking and cast the sticks into tin forms, and every night I would bush the keyhole and the cracks and read, often till dawn, when all others slept and my mother started on her arduous daily task.

On one occasion I came across a novel entitled 'Aoafi,' (the son of Aba), a Serbian translation of a well known Hungarian writer, Josika. This work somehow awakened my dormant powers of will and I began to practice self-control. At first my resolutions faded like snow in April, but in a little while I conquered my weakness and felt a pleasure I never knew before — that of doing as I willed.

In the course of time this vigorous mental exercise became second to nature. At the outset my wishes had to be subdued but gradually desire and will grew to be identical. After years of such discipline I gained so complete a mastery over myself that I toyed with passions which have meant destruction to some of the strongest men. At a certain age I contracted a mania for gambling which greatly worried my parents. To sit down to a game of cards was for me the quintessence of pleasure. My father led an exemplary life and could not excuse the senseless waste of my time and money in which I indulged. I had a strong resolve, but my philosophy was bad. I would say to him, 'I can stop whenever I please, but it it worth while to give up that which I would purchase with the joys of paradise?' On frequent occasions he gave vent to his anger and contempt, but my mother was different. She understood the character of men and knew that one's salvation could only be brought about through his own efforts. One afternoon, I remember, when I had lost all my money and was craving for a game, she came to me with a roll of bills and said, 'Go and enjoy yourself. The sooner you lose all we possess, the better it will be. I know that you will get over it.' She was right. I conquered my passion then and there and only regretted that it had not been a hundred times as strong. I not only vanquished but tore it from my heart so as not to leave even a trace of desire.

Ever since that time I have been as indifferent to any form of gambling as to picking teeth. During another period I smoked excessively, threatening to ruin my health. Then my will asserted itself and I not only stopped but destroyed all inclination. Long ago I suffered from heart trouble until I discovered that it was due to the innocent cup of coffee I consumed every morning. I discontinued at once, though I confess it was not an easy task. In this way I checked and bridled other habits and passions, and have not only preserved my life but derived an immense amount of satisfaction from what most men would consider privation and sacrifice.

After finishing the studies at the Polytechnic Institute and University, I had a complete nervous breakdown and while the malady lasted I observed many phenomena, strange and unbelievable...

Chapter 2

I shall dwell briefly on these extraordinary experiences, on account of their possible interest to students of psychology and physiology and also because this period of agony was of the greatest consequence on my mental development and subsequent labours. But it is indispensable to first relate the circumstances and conditions which preceded them and in which might be found their partial explanation.

From childhood I was compelled to concentrate attention upon myself. This caused me much suffering, but to my present view, it was a blessing in disguise for it has taught me to appreciate the inestimable value of introspection in the preservation of life, as well as a means of achievement. The pressure of occupation and the incessant stream of impressions pouring into our consciousness through all the gateways of knowledge make modern existence hazardous in many ways. Most persons are so absorbed in the contemplation of the outside world that they are wholly oblivious to what is passing on within themselves. The premature death of millions is primarily traceable to this cause. Even among those who exercise care, it is a common mistake to avoid imaginary, and ignore the real dangers. And what is true of an individual also applies, more or less, to a people as a whole.

Abstinence was not always to my liking, but I find ample reward in the agreeable experiences I am now making. Just in the hope of converting some to my precepts and convictions I will recall one or two.

A short time ago I was returning to my hotel. It was a bitter cold night, the ground slippery, and no taxi to be had. Half a block behind me followed another man, evidently as anxious as myself to get under cover. Suddenly my legs went up in the air. At the same instant there was a flash in my brain. The nerves responded, the muscles contracted. I swung 180 degrees and landed on my hands. I resumed my walk as though nothing had happened when the stranger caught up with me. “How old are you?” he asked, surveying me critically.

“Oh, about fifty-nine,” I replied, “What of it?”

“Well,” said he, “I have seen a cat do this but never a man.” About a month ago I wanted to order new eye glasses and went to an oculist who put me through the usual tests. He looked at me incredulously as I read off with ease the smallest print at considerable distance. But when I told him I was past sixty he gasped in astonishment. Friends of mine often remark that my suits fit me like gloves but they do not know that all my clothing is made to measurements which were taken nearly fifteen years ago and never changed. During this same period my weight has not varied one pound. In this connection I may tell a funny story.

One evening, in the winter of 1885, Mr. Edison, Edward H. Johnson, the President of the Edison Illuminating Company, Mr. Batchellor, Manager of the works, and myself, entered a little place opposite 65 Firth Avenue, where the offices of the company were located. Someone suggested guessing weights and I was induced to step on a scale. Edison felt me all over and said: “Tesla weighs 152 lbs. to an ounce,” and he guessed it exactly. Stripped I weighed 142 pounds, and that is still my weight. I whispered to Mr. Johnson; “How is it possible that Edison could guess my weight so closely?”

“Well,” he said, lowering his voice. “I will tell you confidentially, but you must not say anything. He was employed for a long time in a Chicago slaughter-house where he weighed thousands of hogs every day. That’s why.”

My friend, the Hon. Chauncey M. Dupew, tells of an Englishman on whom he sprung one of his original anecdotes and who listened with a puzzled expression, but a year later, laughed out loud. I will frankly confess it took me longer than that to appreciate Johnson’s joke. Now, my well-being is simply the result of a careful and measured mode of living and perhaps the most astonishing thing is that three times in my youth I was rendered by illness a hopeless physical wreck and given up by physicians. MORE than this, through ignorance and lightheartedness, I got into all sorts of difficulties, dangers and scrapes from which I extricated myself as by enchantment. I was almost drowned, entombed, lost and frozen. I had hair-breadth escapes from mad dogs, hogs, and other wild animals. I passed through dreadful diseases and met with all kinds of odd mishaps and that I am whole and hearty today seems like a miracle. But as I recall these incidents to my mind I feel convinced that my preservation was not altogether accidental, but was indeed the work of divine power. An inventor’s endeavour is essentially life saving. Whether he harnesses forces, improves devices, or provides new comforts and conveniences, he is adding to the safety of our existence. He is also better qualified than the average individual to protect himself in peril, for he is observant and resourceful. If I had no other evidence that I was, in a measure, possessed of such qualities, I would find it in these personal experiences. The reader will be able to judge for himself if I mention one or two instances.

On one occasion, when about fourteen years old, I wanted to scare some friends who were bathing with me. My plan was to dive under a long floating structure and slip out quietly at the other end. Swimming and diving came to me as naturally as to a duck and I was confident that I could perform the feat. Accordingly I plunged into the water and, when out of view, turned around and proceeded rapidly towards the opposite side. Thinking that I was safely beyond the structure, I rose to the surface but to my dismay struck a beam. Of course, I quickly dived and forged ahead with rapid strokes until my breath was beginning to give out. Rising for the second time, my head came again in contact with a beam. Now I was becoming desperate. However, summoning all my energy, I made a third frantic attempt but the result was the same. The torture of suppressed breathing was getting unendurable, my brain was reeling and I felt myself sinking. At that moment, when my situation seemed absolutely hopeless, I experienced one of those flashes of light and the structure above me appeared before my vision. I either discerned or guessed that there was a little space between the surface of the water and the boards resting on the beams and, with consciousness nearly gone, I floated up, pressed my mouth close to the planks and managed to inhale a little air, unfortunately mingled with a spray of water which nearly choked me. Several times I repeated this procedure as in a dream until my heart, which was racing at a terrible rate, quieted down, and I gained composure. After that I made a number of unsuccessful dives, having completely lost the sense of direction, but finally succeeded in getting out of the trap when my friends had already given me up and were fishing for my body. That bathing season was spoiled for me through recklessness but I soon forgot the lesson and only two years later I fell into a worse predicament.

There was a large flour mill with a dam across the river near the city where I was studying at the time. As a rule the height of the water was only two or three inches above the dam and to swim to it was a sport not very dangerous in which I often indulged. One day I went alone to the river to enjoy

myself as usual. When I was a short distance from the masonry, however, I was horrified to observe that the water had risen and was carrying me along swiftly. I tried to get away but it was too late. Luckily, though, I saved myself from being swept over by taking hold of the wall with both hands. The pressure against my chest was great and I was barely able to keep my head above the surface. Not a soul was in sight and my voice was lost in the roar of the fall. Slowly and gradually I became exhausted and unable to withstand the strain longer. Just as I was about to let go, to be dashed against the rocks below, I saw in a flash of light a familiar diagram illustrating the hydraulic principle that the pressure of a fluid in motion is proportionate to the area exposed and automatically I turned on my left side. As if by magic, the pressure was reduced and I found it comparatively easy in that position to resist the force of the stream. But the danger still confronted me. I knew that sooner or later I would be carried down, as it was not possible for any help to reach me in time, even if I had attracted attention. I am ambidextrous now, but then I was left-handed and had comparatively little strength in my right arm. For this reason I did not dare to turn on the other side to rest and nothing remained but to slowly push my body along the dam. I had to get away from the mill towards which my face was turned, as the current there was much swifter and deeper. It was a long and painful ordeal and I came near to failing at its very end, for I was confronted with a depression in the masonry. I managed to get over with the last ounce of my strength and fell in a swoon when I reached the bank, where I was found. I had torn virtually all the skin from my left side and it took several weeks before the fever had subsided and I was well. These are only two of many instanced, but they may be sufficient to show that had it not been for the inventor's instinct, I would not have lived to tell the tale.

Interested people have often asked me how and when I began to invent. This I can only answer from my present recollection in the light of which, the first attempt I recall was rather ambitious for it involved the invention of an apparatus and a method. In the former I was anticipated, but the later was original. It happened in this way. One of my playmates had come into the possession of a hook and fishing tackle which created quite an excitement in the village, and the next morning all started out to catch frogs. I was left alone and deserted owing to a quarrel with this boy. I had never seen a real hook and pictured it as something wonderful, endowed with peculiar qualities, and was despairing not to be one of the party. Urged by necessity, I somehow got hold of a piece of soft iron wire, hammered the end to a sharp point between two stones, bent it into shape, and fastened it to a strong string. I then cut a rod, gathered some bait, and went down to the brook where there were frogs in abundance. But I could not catch any and was almost discouraged when it occurred to me dangle the empty hook in front of a frog sitting on a stump. At first he collapsed but by and by his eyes bulged out and became bloodshot, he swelled to twice his normal size and made a vicious snap at the hook. Immediately I pulled him up. I tried the same thing again and again and the method proved infallible. When my comrades, who in spite of their fine outfit had caught nothing, came to me, they were green with envy. For a long time I kept my secret and enjoyed the monopoly but finally yielded to the spirit of Christmas. Every boy could then do the same and the following summer brought disaster to the frogs.

In my next attempt, I seem to have acted under the first instinctive impulse which later dominated me, — to harness the energies of nature to the service of man. I did this through the medium of May bugs, or June bugs as they are called in America, which were a veritable pest in that country and sometimes broke the branches of trees by the sheer weight of their bodies. The

bushes were black with them. I would attach as many as four of them to a cross-piece, rotably arranged on a thin spindle, and transmit the motion of the same to a large disc and so derive considerable 'power.' These creatures were remarkably efficient, for once they were started, they had no sense to stop and continued whirling for hours and hours and the hotter it was, the harder they worked. All went well until a strange boy came to the place. He was the son of a retired officer in the Austrian army. That urchin ate May-bugs alive and enjoyed them as though they were the finest blue-point oysters. That disgusting sight terminated my endeavours in this promising field and I have never since been able to touch a May-bug or any other insect for that matter.

After that, I believe, I undertook to take apart and assemble the clocks of my grandfather. In the former operation I was always successful, but often failed in the latter. So it came that he brought my work to a sudden halt in a manner not too delicate and it took thirty years before I tackled another clockwork again.

Shortly thereafter, I went into the manufacture of a kind of pop-gun which comprised a hollow tube, a piston, and two plugs of hemp. When firing the gun, the piston was pressed against the stomach and the tube was pushed back quickly with both hands. the air between the plugs was compressed and raised to a high temperature and one of them was expelled with a loud report. The art consisted in selecting a tube of the proper taper from the hollow stalks which were found in our garden. I did very well with that gun, but my activities interfered with the window panes in our house and met with painful discouragement.

If I remember rightly, I then took to carving swords from pieces of furniture which I could conveniently obtain. At that time I was under the sway of the Serbian national poetry and full of admiration for the feats of the heroes. I used to spend hours in mowing down my enemies in the form of corn-stalks which ruined the crops and netted me several spankings from my mother. Moreover, these were not of the formal kind but the genuine article.

I had all this and more behind me before I was six years old and had passed through one year of elementary school in the village of Smiljan where my family lived. At this juncture we moved to the little city of Gospic nearby. This change of residence was like a calamity to me. It almost broke my heart to part from our pigeons, chickens and sheep, and our magnificent flock of geese which used to rise to the clouds in the morning and return from the feeding grounds at sundown in battle formation, so perfect that it would have put a squadron of the best aviators of the present day to shame. In our new house I was but a prisoner, watching the strange people I saw through my window blinds. My bashfulness was such that I would rather have faced a roaring lion than one of the city dudes who strolled about. But my hardest trial came on Sunday when I had to dress up and attend the service. There I met with an accident, the mere thought of which made my blood curdle like sour milk for years afterwards. It was my second adventure in a church. Not long before, I was entombed for a night in an old chapel on an inaccessible mountain which was visited only once a year. It was an awful experience, but this one was worse.

There was a wealthy lady in town, a good but pompous woman, who used to come to the church gorgeously painted up and attired with an enormous train and attendants. One Sunday I had just finished ringing the bell in the belfry and rushed downstairs, when this grand dame was sweeping out and I jumped on her train. It tore off with a ripping noise which sounded like a salvo of musketry

fired by raw recruits. My father was livid with rage. He gave me a gentle slap on the cheek, the only corporal punishment he ever administered to me, but I almost feel it now. The embarrassment and confusion that followed are indescribably. I was practically ostracised until something else happened which redeemed me in the estimation of the community.

An enterprising young merchant had organised a fire department. A new fire engine was purchased, uniforms provided and the men drilled for service and parade. The engine was beautifully painted red and black. One afternoon, the official trial was prepared for and the machine was transported to the river. The entire population turned out to witness the great spectacle. When all the speeches and ceremonies were concluded, the command was given to pump, but not a drop of water came from the nozzle. The professors and experts tried in vain to locate the trouble. The fizzle was complete when I arrived at the scene. My knowledge of of the mechanism was nil and I knew next to nothing of air pressure, but instinctively I felt for the suction hose in the water and found that it had collapsed. When I waded in the river and opened it up, the water rushed forth and not a few Sunday clothes were spoiled. Archimedes running naked through the streets of Syracuse and shouting Eureka at the top of his voice did not make a greater impression than myself. I was carried on the shoulders and was hero of the day.

Upon settling in the city I began a four years course in the so-called Normal School preparatory to my studies at the College or Real-Gymnasium. During this period my boyish efforts and exploits as well as troubles, continued.

Among other things, I attained the unique distinction of champion crow catcher in the country. My method of procedure was extremely simple. I would go into the forest, hide in the bushes, and imitate the call of the birds. Usually I would get several answers and in a short while a crow would flutter down into the shrubbery near me. After that, all I needed to do was to throw a piece of cardboard to detract its attention, jump up and grab it before it could extricate itself from the undergrowth. In this way I would capture as many as I desired. But on one occasion something occurred which made me respect them. I had caught a fine pair of birds and was returning home with a friend. When we left the forest, thousands of crows had gathered making a frightful racket. In a few minutes they rose in pursuit and soon enveloped us. The fun lasted until all of a sudden I received a blow on the back of my head which knocked me down. Then they attacked me viciously. I was compelled to release the two birds and was glad to join my friend who had taken refuge in a cave.

In the school room there were a few mechanical models which interested me and turned my attention to water turbines. I constructed many of these and found great pleasure in operating them. How extraordinary was my life an incident may illustrate. My uncle had no use for this kind of pastime and more than once rebuked me. I was fascinated by a description of Niagara Falls I had perused, and pictured in my imagination a big wheel run by the falls. I told my uncle that I would go to America and carry out this scheme. Thirty years later I was my ideas carried out at Niagara and marvelled at the unfathomable mystery of the mind.

I made all kinds of other contrivances and contraptions but among those, the arbalests I produced were the best. My arrows, when short, disappeared from sight and at close range traversed a plank of pine one inch thick. Through the continuous tightening of the bows I developed a skin on my stomach much like that of a crocodile and I am often wondering whether it is due to this exercise

that I am able even now to digest cobble-stones! Nor can I pass in silence my performances with the sling which would have enabled me to give a stunning exhibit at the Hippodrome. And now I will tell of one of my feats with this unique implement of war which will strain to the utmost the credulity of the reader.

I was practising while walking with my uncle along the river. The sun was setting, the trout were playful and from time to time one would shoot up into the air, its glistening body sharply defined against a projecting rock beyond. Of course any boy might have hit a fish under these propitious conditions but I undertook a much more difficult task and I foretold to my uncle, to the minutest detail, what I intended doing. I was to hurl a stone to meet the fish, press its body against the rock, and cut it in two. It was no sooner said than done. My uncle looked at me almost scared out of his wits and exclaimed "Vade retra Satanae!" and it was a few days before he spoke to me again. Other records, however great, will be eclipsed but I feel that I could peacefully rest on my laurels for a thousand years.

Chapter 3
How Tesla Conceived The Rotary Magnetic Field

At the age of ten I entered the Real gymnasium which was a new and fairly well equipped institution. In the department of physics were various models of classical scientific apparatus, electrical and mechanical. The demonstrations and experiments performed from time to time by the instructors fascinated me and were undoubtedly a powerful incentive to invention. I was also passionately fond of mathematical studies and often won the professor's praise for rapid calculation. This was due to my acquired facility of visualising the figures and performing the operation, not in the usual intuitive manner, but as in actual life. Up to a certain degree of complexity it was absolutely the same to me whether I wrote the symbols on the board or conjured them before my mental vision. But freehand drawing, to which many hours of the course were devoted, was an annoyance I could not endure. This was rather remarkable as most of the members of the family excelled in it. Perhaps my aversion was simply due to the predilection I found in undisturbed thought. Had it not been for a few exceptionally stupid boys, who could not do anything at all, my record would have been the worst.

It was a serious handicap as under the then existing educational regime drawing being obligatory, this deficiency threatened to spoil my whole career and my father had considerable trouble in rail-roading me from one class to another.

In the second year at that institution I became obsessed with the idea of producing continuous motion through steady air pressure. The pump incident, of which I have been told, had set afire my youthful imagination and impressed me with the boundless possibilities of a vacuum. I grew frantic in my desire to harness this inexhaustible energy but for a long time I was groping in the dark. Finally, however, my endeavours crystallised in an invention which was to enable me to achieve what no other mortal ever attempted. Imagine a cylinder freely rotatable on two bearings and partly surrounded by a rectangular trough which fits it perfectly. The open side of the trough is enclosed by a partition so that the cylindrical segment within the enclosure divides the latter into two compartments entirely separated from each other by air-tight sliding joints. One of these compartments being sealed and once for all exhausted, the other remaining open, a perpetual rotation of the cylinder would result. At least, so I thought.

A wooden model was constructed and fitted with infinite care and when I applied the pump on one side and actual observed that there was a tendency to turning, I was delirious with joy. Mechanical flight was the one thing I wanted to accomplish although still under the discouraging recollection of a bad fall I sustained by jumping with an umbrella from the top of a building. Every day I used to transport myself through the air to distant regions but could not understand just how I managed to do it. Now I had something concrete, a flying machine with nothing more than a rotating shaft, flapping wings, and; - a vacuum of unlimited power! From that time on I made my daily aerial excursions in a vehicle of comfort and luxury as might have befitted King Solomon. It took years before I understood that the atmospheric pressure acted at right angles to the surface of the cylinder and that the slight rotary effort I observed was due to a leak! Though this knowledge came gradually it gave me a painful shock.

I had hardly completed my course at the Real Gymnasium when I was prostrated with a dangerous illness or rather, a score of them, and my condition became so desperate that I was given up by physicians. During this period I was permitted to read constantly, obtaining books from the Public Library which had been neglected and entrusted to me for classification of the works and preparation of catalogues.

One day I was handed a few volumes of new literature unlike anything I had ever read before and so captivating as to make me utterly forget me hopeless state. They were the earlier works of Mark Twain and to them might have been due the miraculous recovery which followed. Twenty-five years later, when I met Mr. Clements and we formed a friendship between us, I told him of the experience and was amazed to see that great man of laughter burst into tears...

My studies were continued at the higher Real Gymnasium in Carlstadt, Croatia, where one of my aunts resided. She was a distinguished lady, the wife of a Colonel who was an old war-horse having participated in many battles, I can never forget the three years I passed at their home. No fortress in time of war was under a more rigid discipline. I was fed like a canary bird. All the meals were of the highest quality and deliciously prepared, but short in quantity by a thousand percent. The slices of ham cut by my aunt were like tissue paper. When the Colonel would put something substantial on my plate she would snatch it away and say excitedly to him; “Be careful. Niko is very delicate.”

I had a voracious appetite and suffered like Tantalus.

But I lived in an atmosphere of refinement and artistic taste quite unusual for those times and conditions. The land was low and marshy and malaria fever never left me while there despite the enormous amounts of qunine I consumed. Occasionally the river would rise and drive an army of rats into the buildings, devouring everything, even to the bundles of fierce paprika. These pests were to me a welcome diversion. I thinned their ranks by all sorts of means, which won me the unenviable distinction of rat-catcher in the community. At last, however, my course was completed, the misery ended, and I obtained the certificate of maturity which brought me to the cross-roads.

During all those years my parents never wavered in their resolve to make me embrace the clergy, the mere thought of which filled me with dread. I had become intensely interested in electricity under the stimulating influence of my Professor of Physics, who was an ingenious man and often demonstrated the principles by apparatus of his own invention. Among these I recall a device in the shape of a freely rotatable bulb, with tinfoil coating, which was made to spin rapidly when connected to a static machine. It is impossible for me to convey an adequate idea of the intensity of feeling I experienced in witnessing his exhibitions of these mysterious phenomena. Every impression produced a thousand echoes in my mind. I wanted to know more of this wonderful force; I longed for experiment and investigation and resigned myself to the inevitable with aching heart. Just as I was making ready for the long journey home I received word that my father wished me to go on a shooting expedition. It was a strange request as he had been always strenuously opposed to this kind of sport. But a few days later I learned that the cholera was raging in that district and, taking advantage of an opportunity, I returned to Gospic in disregard to my parent’s wishes. It is incredible how absolutely ignorant people were as to the causes of this scourge which visited the country in intervals of fifteen to twenty years. They thought that the deadly agents were transmitted through the air and filled it with pungent odours and smoke. In the meantime they drank infested water and died in heaps. I contracted the dreadful

disease on the very day of my arrival and although surviving the crisis, I was confined to bed for nine months with scarcely any ability to move. My energy was completely exhausted and for the second time I found myself at Death's door.

In one of the sinking spells which was thought to be the last, my father rushed into the room. I still see his pallid face as he tried to cheer me in tones belying his assurance. "Perhaps," I said, "I may get well if you will let me study engineering." "You will go to the best technical institution in the world," he solemnly replied, and I knew that he meant it. A heavy weight was lifted from my mind but the relief would have come too late had it not been for a marvellous cure brought through a bitter decoction of a peculiar bean. I came to life like Lazarus to the utter amazement of everybody.

My father insisted that I spend a year in healthful physical outdoor exercise to which I reluctantly consented. For most of this term I roamed in the mountains, loaded with a hunter's outfit and a bundle of books, and this contact with nature made me stronger in body as well as in mind. I thought and planned, and conceived many ideas almost as a rule delusive. The vision was clear enough but the knowledge of principles was very limited.

In one of my invention I proposed to convey letters and packages across the seas, through a submarine tube, in spherical containers of sufficient strength to resist the hydraulic pressure. The pumping plant, intended to force the water through the tube, was accurately figured and designed and all other particulars carefully worked out. Only one trifling detail, of no consequence, was lightly dismissed. I assumed an arbitrary velocity of the water and, what is more, took pleasure in making it high, thus arriving at a stupendous performance supported by faultless calculations. Subsequent reflections, however, on the resistance of pipes to fluid flow induced me to make this invention public property.

Another one of my projects was to construct a ring around the equator which would, of course, float freely and could be arrested in its spinning motion by reactionary forces, thus enabling travel at a rate of about one thousand miles an hour, impracticable by rail. The reader will smile. The plan was difficult of execution, I will admit, but not nearly so bad as that of a well known New York professor, who wanted to pump the air from the torrid to temperate zones, entirely forgetful of the fact that the Lord had provided a gigantic machine for this purpose.

Still another scheme, far more important and attractive, was to derive power from the rotational energy of terrestrial bodies. I had discovered that objects on the earth's surface owing to the diurnal rotation of the globe, are carried by the same alternately in and against the direction of translatory movement. From this results a great change in momentum which could be utilised in the simplest imaginable manner to furnish motive effort in any habitable region of the world. I cannot find words to describe my disappointment when later I realised that I was in the predicament of Archimedes, who vainly sought for a fixed point in the universe.

At the termination of my vacation I was sent to the Poly-Technic School in Gratz, Styria (Austria), which my father had chosen as one of the oldest and best reputed institutions. That was the moment I had eagerly awaited and I began my studies under good auspices and firmly resolved to succeed. My previous training was above average, due to my father's teaching and opportunities afforded. I had acquired the knowledge of a number of languages and waded through the books of several libraries, picking up information more or

less useful. Then again, for the first time, I could choose my subjects as I liked, and free-hand drawing was to bother me no more.

I had made up my mind to give my parents a surprise, and during the whole first year I regularly started my work at three o'clock in the morning and continued until eleven at night, no Sundays or holidays excepted. As most of my fellow-students took things easily, naturally I eclipsed all records. In the course of the year I passed through nine exams and the professors thought I deserved more than the highest qualifications. Armed with their flattering certificated, I went home for a short rest, expecting triumph, and was mortified when my father made light of these hard-won honours.

That almost killed my ambition; but later, after he had died, I was pained to find a package of letters which the professors had written to him to the effect that unless he took me away from the Institution I would be killed through overwork. Thereafter I devoted myself chiefly to physics, mechanics and mathematical studies, spending the hours of leisure in the libraries.

I had a veritable mania for finishing whatever I began, which often got me into difficulties. On one occasion I started to read the works of Voltaire, when I learned, to my dismay that there were close to one hundred large volumes in small print which that monster had written while drinking seventy-two cups of black coffee per diem. It had to be done, but when I laid aside that last book I was very glad, and said, "Never more!"

My first year's showing had won me the appreciation and friendship of several professors. Among these, Professor Rogner, who was teaching arithmetical subjects and geometry; Professor Poeschl, who held the chair of theoretical and experimental physics, and Dr. Alle, who taught integral calculus and specialised in differential equations. This scientist was the most brilliant lecturer to whom I ever listened. He took a special interest in my progress and would frequently remain for an hour or two in the lecture room, giving me problems to solve, in which I delighted. To him I explained a flying machine I had conceived, not an illusory invention, but one based on sound, scientific principles, which has become realisable through my turbine and will soon be given to the world. Both Professors Rogner and Poeschl were curious men. The former had peculiar ways of expressing himself and whenever he did so, there was a riot, followed by a long embarrassing pause. Professor Poeschl was a methodical and thoroughly grounded German. He had enormous feet, and hands like the paws of a bear, but all of his experiments were skilfully performed with clock-like precision and without a miss. It was in the second year of my studies that we received a Gramoe Dyname from Paris, having the horseshoe form of a laminated field magnet, and a wire wound armature with a commutator. It was connected up and various effects of the currents were shown. While Professor Poeschl was making demonstrations, running the machine was a motor, the brushes gave trouble, sparking badly, and I observed that it might be possible to operate a motor without these appliances. But he declared that it could not be done and did me the honour of delivering a lecture on the subject, at the conclusion he remarked, "Mr. Tesla may accomplish great things, but he certainly will never do this. It would be equivalent to converting a steadily pulling force, like that of gravity into a rotary effort. It is a perpetual motion scheme, an impossible idea." But instinct is something which transcends knowledge. We have, undoubtedly, certain finer fibres that enable us to perceive truths when logical deduction, or any other wilful effort of the brain, is futile.

For a time I wavered, impressed by the professor's authority, but soon

became convinced I was right and undertook the task with all the fire and boundless confidence of my youth. I started by first picturing in my mind a direct-current machine, running it and following the changing flow of the currents in the armature. Then I would imagine an alternator and investigate the progresses taking place in a similar manner. Next I would visualise systems comprising motors and generators and operate them in various ways.

The images I saw were to me perfectly real and tangible. All my remaining term in Gratz was passed in intense but fruitless efforts of this kind, and I almost came to the conclusion that the problem was insolvable.

In 1880 I went to Prague, Bohemia, carrying out my father's wish to complete my education at the University there. It was in that city that I made a decided advance, which consisted in detaching the commutator from the machine and studying the phenomena in this new aspect, but still without result. In the year following there was a sudden change in my views of life.

I realised that my parents had been making too great sacrifices on my account and resolved to relieve them of the burden. The wave of the American telephone had just reached the European continent and the system was to be installed in Budapest, Hungary. It appeared an ideal opportunity, all the more as a friend of our family was at the head of the enterprise.

It was here that I suffered the complete breakdown of the nerves to which I have referred. What I experienced during the period of the illness surpasses all belief. My sight and hearing were always extraordinary. I could clearly discern objects in the distance when others saw no trace of them. Several times in my boyhood I saved the houses of our neighbours from fire by hearing the faint crackling sounds which did not disturb their sleep, and calling for help. In 1899, when I was past forty and carrying on my experiments in Colorado, I could hear very distinctly thunderclaps at a distance of 550 miles. My ear was thus over thirteen times more sensitive, yet at that time I was, so to speak, stone deaf in comparison with the acuteness of my hearing while under the nervous strain.

In Budapest I could hear the ticking of a watch with three rooms between me and the time-piece. A fly alighting on a table in the room would cause a dull thud in my ear. A carriage passing at a distance of a few miles fairly shook my whole body. The whistle of a locomotive twenty or thirty miles away made the bench or chair on which I sat, vibrate so strongly that the pain was unbearable. The ground under my feet trembled continuously. I had to support my bed on rubber cushions to get any rest at all. The roaring noises from near and far often produced the effect of spoken words which would have frightened me had I not been able to resolve them into their accumulated components. The sun rays, when periodically intercepted, would cause blows of such force on my brain that they would stun me. I had to summon all my will power to pass under a bridge or other structure, as I experienced the crushing pressure on the skull. In the dark I had the sense of a bat, and could detect the presence of an object at a distance of twelve feet by a peculiar creepy sensation on the forehead. My pulse varied from a few to two hundred and sixty beats and all the tissues of my body with twitchings and tremors, which was perhaps hardest to bear. A renowned physician who have me daily large doses of Bromide of Potassium, pronounced my malady unique and incurable.

It is my eternal regret that I was not under the observation of experts in physiology and psychology at that time. I clung desperately to life, but

never expected to recover. Can anyone believe that so hopeless a physical wreck could ever be transformed into a man of astonishing strength and tenacity; able to work thirty-eight years almost without a day's interruption, and find himself still strong and fresh in body and mind? Such is my case. A powerful desire to live and to continue the work and the assistance of a devoted friend, an athlete, accomplished the wonder. My health returned and with it the vigour of mind.

In attacking the problem again, I almost regretted that the struggle was soon to end. I had so much energy to spare. When I understood the task, it was not with a resolve such as men often make. With me it was a sacred vow, a question of life and death. I knew that I would perish if I failed. Now I felt that the battle was won. Back in the deep recesses of the brain was the solution, but I could net yet give it outward expression.

One afternoon, which is ever present in my recollection, I was enjoying a walk with my friend in the City Park and reciting poetry. At that age, I knew entire books by heart, word for word. One of these was Goethe's "Faust." The sun was just setting and reminded me of the glorious passage, "Sie ruckt und weicht, der Tag ist uberlebt, Dort eilt sie hin und fordert neues Leben. Oh, daß kein Flugel mich vom Boden hebt Ihr nach und immer nach zu streben! Ein schöner Traum indessen sie entweicht, Ach, au des Geistes Flügein wird so leicht Kein korperlicher Flugel sich gesellen!" As I uttered these inspiring words the idea came like a flash of lightening and in an instant the truth was revealed. I drew with a stick on the sand, the diagram shown six years later in my address before the American Institute of Electrical Engineers, and my companion understood them perfectly. The images I saw were wonderfully sharp and clear and had the solidity of metal and stone, so much so that I told him, "See my motor here; watch me reverse it." I cannot begin to describe my emotions. Pygmalion seeing his statue come to life could not have been more deeply moved. A thousand secrets of nature which I might have stumbled upon accidentally, I would have given for that one which I had wrested from her against all odds and at the peril of my existence...

Chapter 4
The Discovery of the Tesla Coil and Transformer

(The Basic Part of Every Radio and T.V.)

For a while I gave myself up entirely to the intense enjoyment of picturing machines and devising new forms. It was a mental state of happiness about as complete as I have ever known in life. Ideas came in an uninterrupted stream and the only difficulty I had was to hold them fast. The pieces of apparatus I conceived were to me absolutely real and tangible in every detail, even to the minutest marks and signs of wear. I delighted in imagining the motors constantly running, for in this way they presented to the mind's eye a fascinating sight. When natural inclination develops into a passionate desire, one advances towards his goal in seven-league boots. In less than two months I evolved virtually all the types of motors and modifications of the system which are now identified with my name, and which are used under many other names all over the world. It was, perhaps, providential that the necessities of existence commanded a temporary halt to this consuming activity of the mind.

I came to Budapest prompted by a premature report concerning the telephone enterprise and, as irony of fate willed it, I had to accept a position as draughtsman in the Central Telegraph Office of the Hungarian Government at a salary which I deem it my privilege not to disclose. Fortunately, I soon won the interest of the Inspector-in-Chief and was thereafter employed on calculations, designs and estimates in connection with new installations, until the Telephone exchange started, when I took charge of the same. The knowledge and practical experience I gained in the course of this work, was most valuable and the employment gave me ample opportunities for the exercise of my inventive faculties. I made several improvements in the Central Station apparatus and perfected a telephone repeater or amplifier which was never patented or publicly described but would be creditable to me even today. In recognition of my efficient assistance the organiser of the undertaking, Mr. Puskas, upon disposing of his business in Budapest, offered me a position in Paris which I gladly accepted.

I never can forget the deep impression that magic city produced on my mind. For several days after my arrival, I roamed through the streets in utter bewilderment of the new spectacle. The attractions were many and irresistible, but, alas, the income was spent as soon as received. When Mr. Puskas asked me how I was getting along in the new sphere, I described the situation accurately in the statement that "The last twenty-nine days of the month are the toughest." I led a rather strenuous life in what would now be termed "Rooseveltian fashion." Every morning, regardless of the weather, I would go from the Boulevard St. Marcel, where I resided, to a bathing house on the Seine; plunge into the water, loop the circuit twenty-seven times and then walk an hour to reach Ivry, where the Company's factory was located. There I would have a wood-chopper's breakfast at half-past seven o'clock and then eagerly await the lunch hour, in the meanwhile cracking hard nuts for the Manager of the Works, Mr. Charles Batchellor, who was an intimate friend and assistant of Edison. Here I was thrown in contact with a few Americans who fairly fell in love with my because of my proficiency in Billiards! To these men I explained my invention and one of them, Mr. D. Cunningham, foreman of

the Mechanical Department, offered to form a stock company. The proposal seemed to me comical in the extreme. I did not have the faintest conception of what he meant, except that it was an American way of doing things. Nothing came of it, however, and during the next few months I had to travel from one place to another in France and Germany to cure the ills of the power plants.

On my return to Paris, I submitted to one of the administrators of the Company, Mr. Rau, a plan for improving their dynamos and was given an opportunity. My success was complete and the delighted directors accorded me the privilege of developing automatic regulators which were much desired. Shortly after, there was some trouble with the lighting plant which had been installed at the new railroad station in Straßburg, Alsace. The wiring was defective and on the occasion of the opening ceremonies, a large part of a wall was blown out through a short-circiut, right in the presence of old Emperor William I. The German Government refused to take the plant and the French Company was facing a serious loss. On account of my knowledge of the German language and past experience, I was entrusted with the difficult task of straightening out matters and early in 1883, I went to Straßburg on that mission.

Some of the incidents in that city have left an indelible record on my memory. By a curious coincidence, a number of the men who subsequently achieve fame, lived there about that time. In later life I used to say, “There were bacteria of greatness in that old town.” Others caught the disease, but I escaped!” The practical work, correspondence, and conferences with officials kept me preoccupied day and night, but as soon as I was able to manage, I undertook the construction of a simple motor in a mechanical shop opposite the rail-road station, having brought with me from Paris some material for that purpose. The consummation of the experiment was, however, delayed until the summer of that year, when I finally had the satisfaction of seeing the rotation effected by alternating currents of different phase, and without sliding contacts or commutator, as I had conceived a year before. It was an exquisite pleasure but not to compare with the delirium of joy following the first revelation.

Among my new friends was the former Mayor of the city, Mr. Sauzin, whom I had already, in a measure, acquainted with this and other inventions of mine and whose support I endeavoured to enlist. He was sincerely devoted to me and put my project before several wealthy persons, but to my mortification, found no response. He wanted to help me in every possible way and the approach of the first of July, 1917, happens to remind me of a form of “assistance” I received from that charming man, which was not financial, but none the less appreciated. In 1870, when the Germans invaded the country, Mr. Sauzin had buried a good sized allotment of St. Estephe of 1801 and he came to the conclusion that he knew no worthier person than myself, to consume that precious beverage. This, I may say, is one of the unforgettable incidents to which I have referred. My friend urged me to return to Paris as soon as possible and seek support there. This I was anxious to do, but my work and negotiations were protracted, owing to all sorts of petty obstacles I encountered, so that at times the situation seemed hopeless. Just to give an idea of German thoroughness and “efficiency,” I may mention here a rather funny experience.

An incandescent lamp of 16 c.p. was to be placed in a hallway, and upon selected the proper location, I ordered the “monteur” to run the wires. After working for a while, he concluded that the engineer had to be consulted and this was done. The latter made several objections but ultimately agreed that the lamp should be placed two inches from the spot I had assigned, whereupon the work proceeded. Then the engineer became worried and told me that Inspector Averdeck should be notified. That important person was called,

he investigated, debated, and decided that the lamp should be shifted back two inches, which was the placed I had marked! It was not long, however, before Averdeck got cold feet himself and advised me that he had informed Ober-Inspector Hieronimus of the matter and that I should await his decision. It was several days before the Ober-Inspector was able to free himself of other pressing duties, but at last he arrived and a two hour debate followed, when he decided to move the lamp two inches further. My hopes that this was the final act, were shattered when the Ober-Inspector returned and said to me, "Regierungsrath Funke is particular that I would not dare to give an order for placing this lamp without his explicit approval." Accordingly, arrangements for a visit from that great man were made. We started cleaning up and polishing early in the morning, and when Funke came with his retinue he was ceremoniously received. After two hours of deliberation, he suddenly exclaimed, "I must be going!," and pointing to a place on the ceiling, he ordered me to put the lamp there. It was the exact spot which I had originally chosen! So it went day after day with variations, but I was determined to achieve, at whatever cost, and in the end my efforts were rewarded.

By the spring of 1884, all the differences were adjusted, the plant formally accepted, and I returned to Paris with pleasing anticipation. One of the administrators had promised me a liberal compensation in case I succeeded, as well as a fair consideration of the improvements I had made to their dynamos and I hoped to realise a substantial sum. There were three administrators, whom I shall designate as A, B, and C for convenience. When I called on A, he told me that B had the say. This gentleman thought that only C could decide, and the latter was quite sure that A alone had the power to act. After several laps of this circulus viciousus, it dawned upon me that my reward was a castle in Spain.

The utter failure of my attempts to raise capital for development was another disappointment, and when Mr. Bachelor pressed me to go to America with a view of redesigning the Edison machines, I determined to try my fortunes in the Land of Golden Promise. But the chance was nearly missed. I liquefied my modest assets, secured accommodations and found myself at the railroad station as the train was pulling out. At that moment, I discovered that my money and tickets were gone. What to do was the question. Hercules had plenty of time to deliberate, but I had to decide while running alongside the train with opposite feeling surging in my brain like condenser oscillations. Resolve, helped by dexterity, won out in the nick of time and upon passing through the usual experience, as trivial and unpleasant, I managed to embark for New York with the remnants of my belongings, some poems and articles I had written, and a package of calculations relating to solutions of an unsolvable integral and my flying machine. During the voyage I sat most of the time at the stern of the ship watching for an opportunity to save somebody from a watery grave, without the slightest thought of danger. Later, when I had absorbed some of the practical American sense, I shivered at the recollection and marvelled at my former folly. The meeting with Edison was a memorable event in my life. I was amazed at this wonderful man who, without early advantages and scientific training, had accomplished so much. I had studied a dozen languages, delved in literature and art, and had spent my best years in libraries reading all sorts of stuff that fell into my hands, from Newton's "Principia" to the novels of Paul de Kock, and felt that most of my life had been squandered. But it did not take long before I recognised that it was the best thing I could have done. Within a few weeks I had won Edison's confidence, and it came about in this way.

The S.S. Oregon, the fastest passenger steamer at that time, had both of

its lighting machines disabled and its sailing was delayed. As the super-structure had been built after their installation, it was impossible to remove them from the hold. The predicament was a serious one and Edison was much annoyed. In the evening I took the necessary instruments with me and went aboard the vessel where I stayed for the night. The dynamos were in bad condition, having several short-circuits and breaks, but with the assistance of the crew, I succeeded in putting them in good shape. At five o'clock in the morning, when passing along Fifth Avenue on my way to the shop, I met Edison with Bachelor and a few others, as they were returning home to retire. "Here is our Parisian running around at night," he said. When I told him that I was coming from the Oregon and had repaired both machines, he looked at me in silence and walked away without another word. But when he had gone some distance I heard him remark, "Bachelor, this is a good man." And from that time on I had full freedom in directing the work. For nearly a year my regular hours were from 10:30 A.M. until 5 o'clock the next morning without a day's exception. Edison said to me, "I have had many hard working assistants, but you take the cake." During this period I designed twenty-four different types of standard machines with short cores and uniform pattern, which replaced the old ones. The Manager had promised me fifty thousand dollars on the completion of this task, but it turned out to be a practical joke. This gave me a painful shock and I resigned my position.

Immediately thereafter, some people approached me with the proposal of forming an arc light company under my name, to which I agreed. Here finally, was an opportunity to develop the motor, but when I broached the subject to my new associates they said, "No, we want the arc lamp. We don't care for this alternating current of yours." In 1886 my system of arc lighting was perfected and adopted for factory and municipal lighting, and I was free, but with no other possession than a beautifully engraved certificate of stock of hypothetical value. Then followed a period of struggle in the new medium for which I was not fitted, but the reward came in the end, and in April, 1887, the TESLA Electric Co. was organised, providing a laboratory and facilities. The motors I built there were exactly as I had imagined them. I made no attempt to improve the design, but merely reproduced the pictures as they appeared to my vision and the operation was always as I expected.

In the early part of 1888, an arrangement was made with the Westinghouse Company for the manufacture of the motors on a large scale. But great difficulties had still to be overcome. My system was based on the use of low frequency currents and the Westinghouse experts had adopted 133 cycles with the objects of securing advantages in transformation. They did not want to depart with their standard forms of apparatus and my efforts had to be concentrated upon adapting the motor to these conditions. Another necessity was to produce a motor capable of running efficiently at this frequency on two wire, which was not an easy accomplishment.

At the close of 1889, however, my services in Pittsburgh being no longer essential, I returned to New York and resumed experimental work in a Laboratory on Grand Street, where I began immediately the design of high-frequency machines. The problems of construction in this unexplored field were novel and quite peculiar, and I encountered many difficulties. I rejected the inductor type, fearing that it might not yield perfect sine waves, which were so important to resonant action. Had it not been for this, I could have saved myself a great deal of labour. Another discouraging feature of the high-frequency alternator seemed to be the inconstancy of speed which threatened to impose serious limitations to its use. I had already noted in my demonstrations before the American Institution of Electrical Engineers, that several times

the tune was lost, necessitating readjustment, and did not yet foresee what I discovered long afterwards, – a means of operating a machine of this kind at a speed constant to such a degree as not to vary more than a small fraction of one revolution between the extremes of load. From many other considerations, it appeared desirable to invent a simpler device for the production of electric oscillations.

In 1856, Lord Kelvin had exposed the theory of the condenser discharge, but no practical application of that important knowledge was made. I saw the possibilities and undertook the development of induction apparatus on this principle. My progress was so rapid as to enable me to exhibit at my lecture in 1891, a coil giving sparks of five inches. On that occasion I frankly told the engineers of a defect involved in the transformation by the new method, namely, the loss in the spark gap. Subsequent investigation showed that no matter what medium is employed, –be it air, hydrogen, mercury vapour, oil, or a stream of electrons, the efficiency is the same. It is a law very much like the governing of the conversion of mechanical energy. We may drop a weight from a certain height vertically down, or carry it to the lower level along any devious path; it is immaterial insofar as the amount of work is concerned. Fortunately however, this drawback is not fatal, as by proper proportioning of the resonant, circuits of an efficiency of 85 percent is attainable. Since my early announcement of the invention, it has come into universal use and wrought a revolution in many departments, but a still greater future awaits it.

When in 1900 I obtained powerful discharges of 1,000 feet and flashed a current around the globe, I was reminded of the first tiny spark I observed in my Grand Street laboratory and was thrilled by sensations akin to those I felt when I discovered the rotating magnetic field.

Chapter 5

As I review the events of my past life I realise how subtle are the influences that shape our destinies. An incident of my youth may serve to illustrate. One winter's day I managed to climb a steep mountain, in company with other boys. The snow was quite deep and a warm southerly wind made it just suitable for our purpose. We amused ourselves by throwing balls which would roll down a certain distance, gathering more or less snow, and we tried to out-do one another in this sport. Suddenly a ball was seen to go beyond the limit, swelling to enormous proportions until it became as big as a house and plunged thundering into the valley below with a force that made the ground tremble. I looked on spell-bound incapable of understanding what had happened. For weeks afterward the picture of the avalanche was before my eyes and I wondered how anything so small could grow to such an immense size.

Ever since that time the magnification of feeble actions fascinated me, and when, years later, I took up the experimental study of mechanical and electrical resonance, I was keenly interested from the very start. Possibly, had it not been for that early powerful impression I might not have followed up the little spark I obtained with my coil and never developed my best invention, the true history of which I will tell.

Many technical men, very able in their special departments, but dominated by a pedantic spirit and near-sighted, have asserted that excepting the induction motor, I have given the world little of practical use. This is a grievous mistake. A new idea must not be judged by its immediate results. My alternating system of power transmission came at a psychological moment, as a long sought answer to pressing industrial questions, and although considerable resistance had to be overcome and opposing interests reconciled, as usual, the commercial introduction could not be long delayed. Now, compare this situation with that confronting my turbines, for example. One should think that so simple and beautiful an invention, possessing many features of an ideal motor, should be adopted at once and, undoubtedly, it would under similar conditions. But the prospective effect of the rotating field was not to render worthless existing machinery; on the contrary, it was to give it additional value. The system lent itself to new enterprise as well as to improvement of the old. My turbine is an advance of a character entirely different. It is a radical departure in the sense that its success would mean the abandonment of the antiquated types of prime movers on which billions of dollars have been spent. Under such circumstances, the progress must needs be slow and perhaps the greatest impediment is encountered in the prejudicial opinions created in the minds of experts by organised opposition.

Only the other day, I had a disheartening experience when I met my friend and former assistant, Charles F. Scott, now professor of Electric Engineering at Yale. I had not seen him for a long time and was glad to have an opportunity for a little chat at my office. Our conversation, naturally enough, drifted on my turbine and I became heated to a high degree. "Scott," I exclaimed, carried away by the vision of a glorious future, "My turbine will scrap all the heat engines in the world." Scott stroked his chin and looked away thoughtfully, as though making a mental calculation. "That will make quite a pile of scrap," he said, and left without another word!

These and other inventions of mine, however, were nothing more than steps

forward in a certain directions. In evolving them, I simply followed the inborn instinct to improve the present devices without any special thought of our far more imperative necessities. The "Magnifying Transmitter" was the product of labours extending through years, having for their chief object, the solution of problems which are infinitely more important to mankind than mere industrial development.

If my memory serves me right, it was in November, 1890, that I performed a laboratory experiment which was one of the most extraordinary and spectacular ever recorded in the annal of Science. In investigating the behaviour of high frequency currents, I had satisfied myself that an electric field of sufficient intensity could be produced in a room to light up electrodeless vacuum tubes. Accordingly, a transformer was built to test the theory and the first trial proved a marvellous success. It is difficult to appreciate what those strange phenomena meant at the time. We crave for new sensations, but soon become indifferent to them. The wonders of yesterday are today common occurrences. When my tubes were first publicly exhibited, they were viewed with amazement impossible to describe. From all parts of the world, I received urgent invitations and numerous honours and other flattering inducements were offered to me, which I declined. But in 1892 the demand became irresistible and I went to London where I delivered a lecture before the institution of Electrical Engineers.

It has been my intention to leave immediately for Paris in compliance with a similar obligation, but Sir James Dewar insisted on my appearing before the Royal Institution. I was a man of firm resolve, but succumbed easily to the forceful arguments of the great Scotchman. He pushed me into a chair and poured out half a glass of a wonderful brown fluid which sparkled in all sorts of iridescent colours and tasted like nectar. "Now," said he, "you are sitting in Faraday's chair and you are enjoying whiskey he used to drink." (Which did not interest me very much, as I had altered my opinion concerning strong drink). The next evening I have a demonstration before the Royal Institution, at the termination of which, Lord Rayleigh addressed the audience and his generous words gave me the first start in these endeavours. I fled from London and later from Paris, to escape favours showered upon me, and journeyed to my home, where I passed through a most painful ordeal and illness.

Upon regaining my health, I began to formulate plans for the resumption of work in America. Up to that time I never realised that I possessed any particular gift of discovery, but Lord Rayleigh, whom I always considered as an ideal man of science, had said so and if that was the case, I felt that I should concentrate on some big idea.

At this time, as at many other times in the past, my thoughts turned towards my Mother's teaching. The gift of mental power comes from God, Divine Being, and if we concentrate our minds on that truth, we become in tune with this great power. My Mother had taught me to seek all truth in the Bible; therefore I devoted the next few months to the study of this work.

One day, as I was roaming the mountains, I sought shelter from an approaching storm. The sky became overhung with heavy clouds, but somehow the rain was delayed until, all of a sudden, there was a lightening flash and a few moments after, a deluge. This observation set me thinking. It was manifest that the two phenomena were closely related, as cause and effect, and a little reflection led me to the conclusion that the electrical energy involved in the precipitation of the water was inconsiderable, the function of the lightening being much like that of a sensitive trigger. Here was a stupendous possibility of

achievement. If we could produce electric effects of the required quality, this whole planet and the conditions of existence on it could be transformed. The sun raises the water of the oceans and winds drive it to distant regions where it remains in a state of most delicate balance. If it were in our power to upset it when and wherever desired, this might life sustaining stream could be at will controlled. We could irrigate arid deserts, create lakes and rivers, and provide motive power in unlimited amounts. This would be the most efficient way of harnessing the sun to the uses of man. The consummation depended on our ability to develop electric forces of the order of those in nature.

It seemed a hopeless undertaking, but I made up my mind to try it and immediately on my return to the United States in the summer of 1892, after a short visit to my friends in Watford, England; work was begun which was to me all the more attractive, because a means of the same kind was necessary for the successful transmission of energy without wires.

At this time I made a further careful study of the Bible, and discovered the key in Revelation. The first gratifying result was obtained in the spring of the succeeding year, when I reaching a tension of about 100,000,000 volts — one hundred million volts — with my conical coil, which I figured was the voltage of a flash of lightening. Steady progress was made until the destruction of my laboratory by fire, in 1895, as may be judged from an article by T.C. Martin which appeared in the April number of the Century Magazine. This calamity set me back in many ways and most of that year had to be devoted to planning and reconstruction. However, as soon as circumstances permitted, I returned to the task.

Although I knew that higher electric-motive forces were attainable with apparatus of larger dimensions, I had an instinctive perception that the object could be accomplished by the proper design of a comparatively small and compact transformer. In carrying on tests with a secondary in the form of flat spiral, as illustrated in my patents, the absence of streamers surprised me, and it was not long before I discovered that this was due to the position of the turns and their mutual action. Profiting from this observation, I resorted to the use of a high tension conductor with turns of considerable diameter, sufficiently separated to keep down the distributed capacity, while at the same time preventing undue accumulation of the charge at any point. The application of this principle enabled me to produce pressures of over 100,000,000 volts, which was about the limit obtainable without risk of accident. A photograph of my transmitter built in my laboratory at Houston Street, was published in the Electrical Review of November, 1898.

In order to advance further along this line, I had to go into the open, and in the spring of 1899, having completed preparations for the erection of a wireless plant, I went to Colorado where I remained for more than one year. Here I introduced other improvements and refinements which made it possible to generate currents of any tension that may be desired. Those who are interested will find some information in regard to the experiments I conducted there in my article, “The Problem of Increasing Human Energy,” in the Century Magazine of June 1900, to which I have referred on a previous occasion.

I will be quite explicit on the subject of my magnifying transformer so that it will be clearly understood. In the first place, it is a resonant transformer, with a secondary in which the parts, charged to a high potential, are of considerable area and arranged in space along ideal enveloping surfaces of very large radii of curvature, and at proper distances from one another, thereby

insuring a small electric surface density everywhere, so that no leak can occur even if the conductor is bare. It is suitable for any frequency, from a few to many thousands of cycles per second, and can be used in the production of currents of tremendous volume and moderate pressure, or of smaller amperage and immense electromotive force. The maximum electric tension is merely dependent on the curvature of the surfaces on which the charged elements are situated and the area of the latter. Judging from my past experience there is no limit to the possible voltage developed; any amount is practicable. On the other hand, currents of many thousands of amperes may be obtained in the antenna. A plant of but very moderate dimensions is required for such performances. Theoretically, a terminal of less than 90 feet in diameter is sufficient to develop an electromotive force of that magnitude, while for antenna currents of from 2,000-4,000 amperes at the usual frequencies, it need not be larger than 30 feet in diameter. In a more restricted meaning, this wireless transmitter is one in which the Hertzwave radiation is an entirely negligible quantity as compared with the whole energy, under which condition the damping factor is extremely small and an enormous charge is stored in the elevated capacity. Such a circuit may then be excited with impulses of any kind, even of low frequency and it will yield sinusoidal and continuous oscillations like those of an alternator. Taken in the narrowest significance of the term, however, it is a resonant transformer which, besides possessing these qualities, is accurately proportioned to fit the globe and its electrical constants and properties, by virtue of which design it becomes highly efficient and effective in the wireless transmission of energy. Distance is then ABSOLUTELY ELIMINATED, THERE BEING NO DIMINUATION IN THE INTENSITY of the transmitted impulses. It is even possible to make the actions increase with the distance from the plane, according to an exact mathematical law. This invention was one of a number comprised in my "World System" of wireless transmission which I undertook to commercialise on my return to New York in 1900.

As to the immediate purposes of my enterprise, they were clearly outlined in a technical statement of that period from which I quote, "The world system has resulted from a combination of several original discoveries made by the inventor in the course of long continued research and experimentation. It makes possible not only the instantaneous and precise wireless transmission of any kind of signals, messages or characters, to all parts of the world, but also the inter-connection of the existing telegraph, telephone, and other signal stations without any change in their present equipment. By its means, for instance, a telephone subscriber here may call up and talk to any other subscriber on the Earth. An inexpensive receiver, not bigger than a watch, will enable him to listen anywhere, on land or sea, to a speech delivered or music played in some other place, however distant."

These examples are cited merely to give an idea of the possibilities of this great scientific advance, which annihilates distance and makes that perfect natural conductor, the Earth, available for all the innumerable purposes which human ingenuity has found for a line-wire. One far-reaching result of this is that any device capable of being operated through one or more wires (at a distance obviously restricted) can likewise be actuated, without artificial conductors and with the same facility and accuracy, at distances to which there are no limits other than those imposed by the physical dimensions of the earth. Thus, not only will entirely new fields for commercial exploitation be opened up by this ideal method of transmission, but the old ones vastly extended. The World System is based on the application of the following import and inventions and discoveries:

1) The Tesla Transformer: This apparatus is in the production of elec-

trical vibrations as revolutionary as gunpowder was in warfare. Currents many times stronger than any ever generated in the usual ways and sparks over one hundred feet long, have been produced by the inventor with an instrument of this kind.

2) The Magnifying Transmitter: This is Tesla's best invention, a peculiar transformer specially adapted to excite the earth, which is in the transmission of electrical energy when the telescope is in astronomical observation. By the use of this marvellous device, he has already set up electrical movements of greater intensity than those of lightening and passed a current, sufficient to light more than two hundred incandescent lamps, around the Earth.

3) The Tesla Wireless System: This system comprises a number of improvements and is the only means known for transmitting economically electrical energy to a distance without wires. Careful tests and measurements in connection with an experimental station of great activity, erected by the inventor in Colorado, have demonstrated that power in any desired amount can be conveyed, clear across the Globe if necessary, with a loss not exceeding a few per cent.

4) The Art of Individualisation: This invention of Tesla is to primitive Tuning, what refined language is to unarticulated expression. It makes possible the transmission of signals or messages absolutely secret and exclusive both in the active and passive aspect, that is, non-interfering as well as non-interferable. Each signal is like an individual of unmistakable identity and there is virtually no limit to the number of stations or instruments which can be simultaneously operated without the slightest mutual disturbance.

5) The Terrestrial Stationary Waves: This wonderful discovery, popularly explained, means that the Earth is responsive to electrical vibrations of definite pitch, just as a tuning fork to certain waves of sound. These particular electrical vibrations, capable of powerfully exciting the Globe, lend themselves to innumerable uses of great importance commercially and in many other respects. The "first World System" power plant can be put in operation in nine months. With this power plant, it will be practicable to attain electrical activities up to ten million horse-power and it is designed to serve for as many technical achievements as are possible without due expense. Among these are the following:

1) The inter-connection of existing telegraph exchanges or offices all over the world;
2) The establishment of a secret and non-interferable government telegraph service;
3) The inter-connection of all present telephone exchanges or offices around the Globe;
4) The universal distribution of general news by telegraph or telephone, in conjunction with the Press;
5) The establishment of such a "World System" of intelligence transmission for exclusive private use;
6) The inter-connection and operation of all stock tickers of the world;
7) The establishment of a World system — of musical distribution, etc.;
8) The universal registration of time by cheap clocks indicating the hour with astronomical precision and requiring no attention whatever;
9) The world transmission of typed or hand-written characters, letters, checks, etc.;
10) The establishment of a universal marine service enabling the navigators of all ships to steer perfectly without compass, to determine the exact location, hour and speak; to prevent collisions and disasters, etc.;

11) The inauguration of a system of world printing on land and sea;
12) The world reproduction of photographic pictures and all kinds of drawings or records..."

I also proposed to make demonstration in the wireless transmission of power on a small scale, but sufficient to carry conviction. Besides these, I referred to other and incomparably more important applications of my discoveries which will be disclosed at some future date. A plant was built on Long Island with a tower 187 feet high, having a spherical terminal about 68 feet in diameter. These dimensions were adequate for the transmission of virtually any amount of energy. Originally, only from 200 to 300 K.W. were provided, but I intended to employ later several thousand horsepower. The transmitter was to emit a wave-complex of special characteristics and I had devised a unique method of telephonic control of any amount of energy. The tower was destroyed two years ago (1917) but my projects are being developed and another one, improved in some features will be constructed.

On this occasion I would contradict the widely circulated report that the structure was demolished by the Government, which owing to war conditions, might have created prejudice in the minds of those who may not know that the papers, which thirty years ago conferred upon me the honour of American citizenship, are always kept in a safe, while my orders, diplomas, degrees, gold medals and other distinctions are packed away in old trunks. If this report had a foundation, I would have been refunded a large sum of money which I expended in the construction of the tower. On the contrary, it was in the interest of the Government to preserver it, particularly as it would have made possible, to mention just one valuable result, the location of a submarine in any part of the world. My plant, services, and all my improvements have always been at the disposal of the officials and ever since the outbreak of the European conflict, I have been working at a sacrifice on several inventions of mine relating to aerial navigation, ship propulsion and wireless transmission, which are of the greatest importance to the country. Those who are well informed know that my ideas have revolutionised the industries of the United States and I am not aware that there lives an inventor who has been, in this respect, as fortunate as myself, — especially as regards the use of his improvements in the war.

I have refrained from publicly expressing myself on this subject before, as it seemed improper to dwell on personal matters while all the world was in dire trouble. I would add further, in view of various rumours which have reached me, that Mr. J. Pierpont Morgan did not interest himself with me in a business way, but in the same large spirit in which he has assisted many other pioneers. He carried out his generous promise to the letter and it would have been most unreasonable to expect from him anything more. He had the highest regard for my attainments and gave me every evidence of his complete faith in my ability to ultimately achieve what I had set out to do. I am unwilling to accord to some small-minded and jealous individuals the satisfaction of having thwarted my efforts. These men are to me nothing more than microbes of a nasty disease. My project was retarded by laws of nature. The world was not prepared for it. It was too far ahead of time, but the same laws will prevail in the end and make it a triumphal success.

Chapter 6

No subject to which I have ever devoted myself has called for such concentration of mind, and strained to so dangerous a degree the finest fibres of my brain, as the systems of which the Magnifying transmitter is the foundation. I put all the intensity and vigour of youth in the development of the rotating field discoveries, but those early labours were of a different character. Although strenuous in the extreme, they did not involve that keen and exhausting discernment which had to be exercised in attacking the many problems of the wireless.

Despite my rare physical endurance at that period, the abused nerves finally rebelled and I suffered a complete collapse, just as the consummation of the long and difficult task was almost in sight. Without doubt I would have paid a greater penalty later, and very likely my career would have been prematurely terminated, had not providence equipped me with a safety device, which seemed to improve with advancing years and unfailingly comes to play when my forces are at an end. So long as it operates I am safe from danger, due to overwork, which threatens other inventors, and incidentally, I need no vacations which are indispensable to most people. When I am all but used up, I simply do as the darkies who "naturally fall asleep while white folks worry."

To venture a theory out of my sphere, the body probably accumulates little by little a definite quantity of some toxic agent and I sink into a nearly lethargic state which lasts half an hour to the minute. Upon awakening I have the sensation as though the events immediately preceding had occurred very long ago, and if I attempt to continue the interrupted train of thought I feel veritable nausea. Involuntarily, I then turn to other and am surprised at the freshness of the mind and ease with which I overcome obstacles that had baffled me before. After weeks or months, my passion for the temporarily abandoned invention returns and I invariably find answers to all the vexing questions, with scarcely any effort. In this connection, I will tell of an extraordinary experience which may be of interest to students of psychology.

I had produced a striking phenomenon with my grounded transmitter and was endeavouring to ascertain its true significance in relation to the currents propagated through the earth. It seemed a hopeless undertaking, and for more than a year I worked unremittingly, but in vain. This profound study so entirely absorbed me, that I became forgetful of everything else, even of my undermined health. At last, as I was at the point of breaking down, nature applied the preservative inducing lethal sleep. Regaining my senses, I realised with consternation that I was unable to visualise scenes from my life except those of infancy, the very first ones that had entered my consciousness. Curiously enough, these appeared before my vision with startling distinctness and afforded me welcome relief. Night after night, when retiring, I would think of them and more and more of my previous existence was revealed. The image of my mother was always the principal figure in the spectacle that slowly unfolded, and a consuming desire to see her again gradually took possession of me. This feeling grew so strong that I resolved to drop all work and satisfy my longing, but I found it too hard to break away from the laboratory, and several months elapsed during which I had succeeded in reviving all the impressions of my past life, up to the spring of 1892. In the next picture that came out of the mist of oblivion, I saw myself at the Hotel de la Paix in Paris, just coming to from one of my peculiar sleeping spells, which had

been caused by prolonged exertion of the brain. Imagine the pain and distress I felt, when it flashed upon my mind that a dispatch was handed to me at that very moment, bearing the sad news that my mother was dying. I remembered how I made the long journey home without an hour of rest and how she passed away after weeks of agony.

It was especially remarkable that during all this period of partially obliterated memory, I was fully alive to everything touching on the subject of my research. I could recall the smallest detail and the least insignificant observations in my experiments and even recite pages of text and complex mathematical formulae.

My belief is firm in a law of compensation. The true rewards are ever in proportion to the labour and sacrifices made. This is one of the reasons why I feel certain that of all my inventions, the magnifying Transmitter will prove most important and valuable to future generations. I am prompted to this prediction, not so much by thoughts of the commercial and industrial revolution which it will surely bring about, but of the humanitation consequences of the many achievements it makes possible. Considerations of mere utility weigh little in the balance against the higher benefits of civilisation. We are confronted with portentous problems which can not be solved just by providing for our material existence, however abundantly. On the contrary, progress in this direction is fraught with hazards and perils not less menacing than those born from want and suffering. If we were to release the energy of atoms or discover some other way of developing cheap and unlimited power at any point on the globe, this accomplishment, instead of being a blessing, might bring disaster to mankind in giving rise to dissension and anarchy, which would ultimately result in the enthronement of the hated regime of force. The greatest good will come from technical improvements tending to unification and harmony, and my wireless transmitter is preeminently such. By its means, the human voice and likeness will be reproduced everywhere and factories driven thousands of miles from waterfalls furnishing power. Aerial machines will be propelled around the earth without a stop and the sun's energy controlled to create lakes and rivers for motive purposes and transformation of arid deserts into fertile land. Its introduction for telegraphic, telephonic and similar uses, will automatically cut out the statics and all other interferences which at present, impose narrow limits to the application of the wireless. This is a timely topic on which a few words might not be amiss.

During the past decade a number of people have arrogantly claimed that they had succeeded in doing away with this impediment. I have carefully examined all of the arrangements described and tested most of them long before they were publicly disclosed, but the finding was uniformly negative. Recent official statement from the U.S. Navy may, perhaps, have taught some beguilable news editors how to appraise these announcements at their real worth. As a rule, the attempts are based on theories so fallacious, that whenever they come to my notice, I can not help thinking in a light vein. Quite recently a new discovery was heralded, with a deafening flourish of trumpets, but it proved another case of a mountain bringing forth a mouse. This reminds me of an exciting incident which took place a year ago, when I was conducting my experiments with currents of high frequency.

Steve Brodie had just jumped off the Brooklyn Bridge. The feat has been vulgarised since by imitators, but the first report electrified New York. I was very impressionable then and frequently spoke of the daring printer. On a hot afternoon I felt the necessity of refreshing myself and stepped into

one of the popular thirty thousand institutions of this great city, where a delicious twelve per cent beverage was served, which can now be had only by making a trip to the poor and devastated countries of Europe. The attendance was large and not over-distinguished and a matter was discussed which gave me an admirable opening for the careless remark, "This is what I said when I jumped off the bridge." No sooner had I uttered these words, than I felt like the companion of Timothens, in the poem of Schiller. In an instant there was pandemonium and a dozen voices cried, "It is Brodie!" I threw a quarter on the counter and bolted for the door, but the crowd was at my heels with yells, – "Stop, Steeve!", which must have been misunderstood, for many persons tried to hold me up as I ran frantically for my haven of refuge. By darting around corners I fortunately managed, through the medium of a fire escape, to reach the laboratory, where I threw off my coat, camouflaged myself as a hard-working blacksmith and started the forge. But these precautions proved unnecessary, as I had eluded my pursuers. For many years afterward, at night, when imagination turns into spectres the trifling troubles of the day, I often thought, as I tossed on the bed, what my fate would have been, had the mob caught me and found out that I was not Steve Brodie!

Now the engineer who lately gave an account before a technical body of a novel remedy against statics based on a "heretofore unknown law of nature," seems to have been as reckless as myself when he contended that these disturbances propagate up and down, while those of a transmitter proceed along the earth. It would mean that a condenser as this globe, with its gaseous envelope, could be charged and discharged in a manner quite contrary to the fundamental teachings propounded in every elemental text book of physics. Such a supposition would have been condemned as erroneous, even in Franklin's time, for the facts bearing on this were then well known and the identity between atmospheric electricity and that developed by machines was fully established. Obviously, natural and artificial disturbances propagate through the earth and the air in exactly the same way, and both set up electromotive forces in the horizontal, as well as vertical sense. Interference can not be overcome by any such methods as were proposed. The truth is this: In the air the potential increases at the rate of about fifty volts per foot of elevation, owing to which there may be a difference of pressure amounting to twenty, or even forty thousand volts between the upper and lower ends of the antenna. The masses of the charged atmosphere are constantly in motion and give up electricity to the conductor, not continuously, but rather disruptively, this producing a grinding noise in a sensitive telephonic receiver. The higher the terminal and the greater the space encompast by the wires, the more pronounced is the effect, but it must be understood that it is purely local and has little to do with the real trouble.

In 1900, while perfecting my wireless system, one form of apparatus compressed four antennae. These were carefully calibrated in the same frequency and connected in multiple with the object of magnifying the action in receiving from any direction. When I desired to ascertain the origin of the transmitted impulse, each diagonally situated pair was put in series with a primary coil energising the detector circuit. In the former case, the sound was loud in the telephone; in the latter it ceased, as expected, – the two antennae neutralising each other, but the true statics manifested themselves in both instances and I had to devise special preventives embodying different principles. By employing receivers connected to two points of the ground, as suggested by me long ago, this trouble caused by the charged air, which is very serious in the structures as now built, is nullified and besides, the liability of all kinds of interference is reduced to about one-half because of the directional character of the circuit. This was perfectly self-evident, but

came as a revelation to some simple-minded wireless folks whose experience was confined to forms of apparatus that could have been improved with an axe, and they have been disposing of the bear's skin before killing him. If it were true that strays performed such antics, it would be easy to get rid of them by receiving without aerials. But, as a matter of fact, a wire buried in the ground which, conforming to this view, should be be absolutely immune, is more susceptible to certain extraneous impulses than one placed vertically in the air. To state it fairly, a slight progress has been made, but not by virtue of any particular method or device. It was achieved simply by discerning the enormous structures, which are bad enough for transmission but wholly unsuitable for reception and adopting a more appropriate type of receiver. As I have said before, to dispose of this difficulty for good, a radical change must be made in the system and the sooner this is done the better.

It would be calamitous, indeed, if at this time when the art is in its infancy and the vast majority, not excepting even experts, have no conception of its ultimate possibilities, a measure would be rushed through the legislature making it a government monopoly. This was proposed a few weeks ago by Secretary Daniels and no doubt that distinguished official has made his appeal to the Senate and House of Representatives with sincere conviction. But universal evidence unmistakably shows that the best results are always obtained in healthful commercial competition. there are, however, exceptional reasons why wireless should be given the fullest freedom of development. In the first place, it offers prospects immeasurably greater and more vital to betterment of human life than any other invention or discovery in the history of man. Then again, it must be understood that this wonderful art has been, in its entirety, evolved here and can be called "American" with more right and propriety than the telephone, the incandescent lamp or the aeroplane.

Enterprising press agents and stock jobbers have been so successful in spreading misinformation, that even so excellent a periodical as the *Scientific American*, accords the chief credit to a foreign country. The Germans, of course, gave us the Hertz waves and the Russian, English, French and Italian experts were quick in using them for signalling purposes. It was an obvious application of the new agent and accomplished with the old classical and unimproved induction coil, scarcely anything more than another kind of heliography. The radius of transmission was very limited, the result attained of little value, and the Hertz oscillations, as a means for conveying intelligence, could have been advantageously replaced by sound waves, which I advocated in 1891. Moreover, all of these attempts were made three years after the basic principles of the wireless system, which is universally employed today, and its potent instrumentalities had been clearly described and developed in America.

No trace of those Hertzian appliances and methods remains today. We have proceeded in the very opposite direction and what has been done is the product of the brains and efforts of citizens of this country. The fundamental patents have expired and the opportunities are open to all. The chief argument of the Secretary is based on interference. According to his statement, reported in the New York Herald of July 29th, signals from a powerful station can be intercepted in every village in the world. In view of this fact, which was demonstrated in my experiments in 1900, it would be of little use to impose restrictions in the United States.

As throwing light on this point, I may mention that only recently an odd looking gentleman called on me with the object of enlisting my services in the construction of world transmitters in some distant land. "We have no money,"

he said, “but carloads of solid gold, and we will give you a liberal amount.” I told him that I wanted to see first what will be done with my inventions in America, and this ended the interview. But I am satisfied that some dark forces are at work, and as time goes on the maintenance of continuous communication will be rendered more difficult. The only remedy is a system immune against interruption. It has been perfected, it exists, and all that is necessary is to put it in operation.

The terrible conflict is still uppermost in the minds and perhaps the greatest importance will be attached to the magnifying Transmitter as a machine for attack and defence, more particularly in connection with TELAUTAMATICS. This invention is a logical outcome of observations begun in my boyhood and continued throughout my life. When the first results were published, the Electrical Review stated editorially that it would become one of the “most potent factors in the advance of civilisation of mankind.” The time is not distant when this prediction will be fulfilled. In 1898 and 1900, it was offered by me to the Government and might have been adopted, were I one of those who would go to Alexander’s shepherd when they want a favour from Alexander!

At that time I really thought that it would abolish war, because of its unlimited destructiveness and exclusion of the personal element of combat. But while I have not lost faith in its potentialities, my views have changed since. War can not be avoided until the physical cause for its recurrence is removed and this, in the last analysis, is the vast extent of the planet on which we live. Only though annihilation of distance in every respect, as the conveyance of intelligence, transport of passengers and supplies and transmission of energy will conditions be brought about some day, insuring permanency of friendly relations. What we now want most is closer contact and better understanding between individuals and communities all over the earth and the elimination of that fanatic devotion to exalted ideals of national egoism and pride, which is always prone to plunge the world into primeval barbarism and strife. No league or parliamentary act of any kind will ever prevent such a calamity. These are only new devices for putting the weak at the mercy of the strong.

I have expressed myself in this regard fourteen years ago, when a combination of a few leading governments, a sort of Holy alliance, was advocated by the late Andrew Carnegie, who may be fairly considered as the father of this idea, having given to it more publicity and impetus than anybody else prior to the efforts of the President. While it can not be denied that such aspects might be of material advantage to some less fortunate peoples, it can not attain the chief objective sought. Peace can only come as a natural consequence of universal enlightenment and merging of races, and we are still far from this blissful realisation, because few indeed, will admit the reality – that God made man in His image – in which case all earth men are alike. There is in fact but one race, of many colours. Christ is but one person, yet he is of all people, so why do some people think themselves better than some other people?

As I view the world of today, in the light of the gigantic struggle we have witnessed, I am filled with conviction that the interests of humanity would be best served if the United States remained true to its traditions, true to God whom it pretends to believe, and kept out of “entangling alliances.” Situated as it is, geographically remote from the theatres of impending conflicts, without incentive to territorial aggrandisement, with inexhaustible resources and immense population thoroughly imbued with the spirit of liberty and right, this country is placed in a unique and privileged position. It is

thus able to exert, independently, its colossal strength and moral force to the benefit of all, more judiciously and effectively, than as a member of a league.

I have dwelt on the circumstances of my early life and told of an affliction which compelled me to unremitting exercise of imagination and self-observation. This mental activity, at first involuntary under the pressure of illness and suffering, gradually became second nature and led me finally to recognise that I was but an automaton devoid of free will in thought and action and merely responsible to the forces of the environment. Our bodies are of such complexity of structure, the motions we perform are so numerous and involved and the external impressions on our sense organs to such a degree delicate and elusive, that it is hard for the average person to grasp this fact. Yet nothing is more convincing to the trained investigator than the mechanistic theory of life which had been, in a measure, understood and propounded by Descartes three hundred years ago. In his time many important functions of our organisms were unknown and especially with respect to the nature of light and the construction and operation of the eye, philosophers were in the dark.

In recent years the progress of scientific research in these fields has been such as to leave no room for a doubt in regard to this view on which many works have been published. One of its ablest and most eloquent exponents is, perhaps, Felix le Dantec, formerly assistant of Pasteur. Professor Jacques Loeb has performed remarkable experiments in heliotropism, clearly establishing the controlling power of light in lower forms of organisms and his latest book, "Forced Movements," is revelatory. But while men of science accept this theory simply as any other that is recognised, to me it is a truth which I hourly demonstrate by every act and thought of mine. The consciousness of the external impression prompting me to any kind of exertion, – physical or mental, is ever present in my mind. Only on very rare occasions, when I was in a state of exceptional concentration, have I found difficulty in locating the original impulse. The by far greater number of human beings are never aware of what is passing around and within them and millions fall victims of disease and die prematurely just on this account. The commonest, every-day occurrences appear to them mysterious and inexplicable. One may feel a sudden wave of sadness and rack his brain for an explanation, when he might have noticed that it was caused by a cloud cutting off the rays of the sun. He may see the image of a friend dear to him under conditions which he construes as very peculiar, when only shortly before he has passed him in the street or seen his photograph somewhere. When he loses a collar button, he fusses and swears for an hour, being unable to visualise his previous actions and locate the object directly. Deficient observation is merely a form of ignorance and responsible for the many morbid notions and foolish ideas prevailing. There is not more than one out of every ten persons who does not believe in telepathy and other psychic manifestations, spiritualism and communion with the dead, and who would refuse to listen to willing or unwilling deceivers?

Just to illustrate how deeply rooted this tendency has become even among the clear-headed American population, I may mention a comical incident. Shortly before the war, when the exhibition of my turbines in this city elicited widespread comment in the technical papers, I anticipated that there would be a scramble among manufacturers to get hold of the invention and I had particular designs on that man from Detroit who has an uncanny faculty for accumulating millions. So confident was I, that he would turn up some day, that I declared this as certain to my secretary and assistants. Sure enough, one fine morning a body of engineers from the Ford Motor Company presented them-

selves with the request of discussing with me an important project. “Didn’t I tell you?,” I remarked triumphantly to my employees, and one of them said, “You are amazing, Mr. Tesla. Everything comes out exactly as you predict.”

As soon as these hard-headed men were seated, I of course, immediately began to extol the wonderful features of my turbine, when the spokesman interrupted me and said, “We know all about this, but we are on a special errand. We have formed a psychological society for the investigation of psychic phenomena and we want you to join us in this undertaking.” I suppose these engineers never knew how near they came to being fired out of my office.

Ever since I was told by some of the greatest men of the time, leaders in science whose names are immortal, that I am possessed of an unusual mind, I bent all my thinking faculties on the solution of great problems regardless of sacrifice. For many years I endeavoured to solve the enigma of death, and watched eagerly for every kind of spiritual indication. But only once in the course of my existence have I had an experience which momentarily impressed me as supernatural. It was at the time of my mother’s death.

I had become completely exhausted by pain and long vigilance, and one night was carried to a building about two blocks from our home. As I lay helpless there, I thought that if my mother died while I was away from her bedside, she would surely give me a sign. Two or three months before, I was in London in company with my late friend, Sir William Crookes, when spiritualism was discussed and I was under the full sway of these thoughts. I might not have paid attention to other men, but was susceptible to his arguments as it was his epochal work on radiant matter, which I had read as a student, that made me embrace the electrical career. I reflected that the conditions for a look into the beyond were most favourable, for my mother was a woman of genius and particularly excelling in the powers of intuition. During the whole night every fibre in my brain was strained in expectancy, but nothing happened until early in the morning, when I fell in a sleep, or perhaps a swoon, and saw a cloud carrying angelic figures of marvellous beauty, one of whom gazed upon me lovingly and gradually assumed the features of my mother. The appearance slowly floated across the room and vanished, and I was awakened by an indescribably sweet song of many voices. In that instant a certitude, which no words can express, came upon me that my mother had just died. And that was true. I was unable to understand the tremendous weight of the painful knowledge I received in advance, and wrote a letter to Sir William Crookes while still under the domination of these impressions and in poor bodily health. When I recovered, I sought for a long time the external cause of this strange manifestation and, to my great relief, I succeeded after many months of fruitless effort.

I had seen the painting of a celebrated artist, representing allegorically one of the seasons in the form of a cloud with a group of angels which seemed to actually float in the air, and this had struck me forcefully. It was exactly the same that appeared in my dream, with the exception of my mother’s likeness. The music came from the choir in the church nearby at the early mass of Easter morning, explaining everything satisfactorily in conformity with scientific facts.

This occurred long ago, and I have never had the faintest reason since to change my views on psychical and spiritual phenomena, for which there is no foundation. The belief in these is the natural outgrowth of intellectual development. Religious dogmas are no longer accepted in their orthodox meaning, but every individual clings to faith in a supreme power of some kind.

We all must have an ideal to govern our conduct and insure contentment, but it is immaterial whether it be one of creed, art, science, or anything else, so long as it fulfils the function of a dematerialising force. It is essential to the peaceful existence of humanity as a whole that one common conception should prevail. While I have failed to obtain any evidence in support of the contentions of psychologists and spiritualists, I have proved to my complete satisfaction the automatism of life, not only through continuous observations of individual actions, but even more conclusively through certain generalisations. these amount to a discovery which I consider of the greatest moment to human society, and on which I shall briefly dwell.

I got the first inkling of this astonishing truth when I was still a very young man, but for many years I interpreted what I noted simply as coincidences. Namely, whenever either myself or a person to whom I was attached, or a cause to which I was devoted, was hurt by others in a particular way, which might be best popularly characterised as the most unfair imaginable, I experienced a singular and undefinable pain which, for the want of a better term, I have qualified as "cosmic" and shortly thereafter, and invariably, those who had inflicted it came to grief. After many such cases I confided this to a number of friends, who had the opportunity to convince themselves of the theory of which I have gradually formulated and which may be stated in the following few words: Our bodies are of similar construction and exposed to the same external forces. This results in likeness of response and concordance of the general activities on which all our social and other rules and laws are based. We are automata entirely controlled by the forces of the medium, being tossed about like corks on the surface of the water, but mistaking the resultant of the impulses from the outside for the free will. The movements and other actions we perform are always life preservative and though seemingly quite independent from one another, we are connected by invisible links. So long as the organism is in perfect order, it responds accurately to the agents that prompt it, but the moment that there is some derangement in any individual, his self-preservative power is impaired.

Everybody understands, of course, that if one becomes deaf, has his eyes weakened, or his limbs injured, the chances for his continued existence are lessened. But this is also true, and perhaps more so, of certain defects in the brain which drive the automaton, more or less, of that vital quality and cause it to rush into destruction. A very sensitive and observant being, with his highly developed mechanism all intact, and acting with precision in obedience to the changing conditions of the environment, is endowed with a transcending mechanical sense, enabling him to evade perils too subtle to be directly perceived. When he comes in contact with others whose controlling organs are radically faulty, that sense asserts itself and he feels the "cosmic" pain.

The truth of this has been borne out in hundreds of instances and I am inviting other students of nature to devote attention to this subject, believing that through combined systematic effort, results of incalculable value to the world will be attained. The idea of constructing an automaton, to bear out my theory, presented itself to me early, but I did not begin active work until 1895, when I started my wireless investigations. During the succeeding two or three years, a number of automatic mechanisms, to be actuated from a distance, were constructed by me and exhibited to visitors in my laboratory.

In 1896, however, I designed a complete machine capable of a multitude of operations, but the consummation of my labours was delayed until late in 1897.

This machine was illustrated and described in my article in the Century Magazine of June, 1900; and other periodicals of that time and when first shown in the beginning of 1898, it created a sensation such as no other invention of mine has ever produced. In November, 1898, a basic patent on the novel art was granted to me, but only after the Examiner-in-Chief had come to New York and witnessed the performance, for what I claimed seemed unbelievable. I remember that when later I called on an official in Washington, with a view of offering the invention to the Government, he burst out in laughter upon my telling him what I had accomplished. Nobody thought then that there was the faintest prospect of perfecting such a device. It is unfortunate that in this patent, following the advice of my attorneys, I indicated the control as being affected through the medium of a single circuit and a well-known form of detector, for the reason that I had not yet secured protection on my methods and apparatus for individualisation. As a matter of fact, my boats were controlled through the joint action of several circuits and interference of every kind was excluded.

Most generally, I employed receiving circuits in the form of loops, including condensers, because the discharges of my high-tension transmitter ionised the air in the (laboratory) so that even a very small aerial would draw electricity from the surrounding atmosphere for hours.

Just to give an idea, I found, for instance, that a bulb twelve inches in diameter, highly exhausted, and with one single terminal to which a short wire was attached, would deliver well on to one thousand successive flashes before all charge of the air in the laboratory was neutralised. The loop form of receiver was not sensitive to such a disturbance and it is curious to note that it is becoming popular at this late date. In reality, it collects much less energy than the aerials or a long grounded wire, but it so happens that it does away with a number of defects inherent to the present wireless devices.

In demonstrating my invention before audiences, the visitors were requested to ask questions, however involved, and the automaton would answer them by signs. This was considered magic at the time, but was extremely simple, for it was myself who gave the replies by means of the device.

At the same period, another larger telautomatic boat was constructed, a photograph of which was shown in the October 1919 number of the Electrical Experimenter. It was controlled by loops, having several turns placed in the hull, which was made entirely water-tight and capable of submergence. The apparatus was similar to that used in the first with the exception of certain special features I introduced as, for example, incandescent lamps which afforded a visible evidence of the proper functioning of the machine. These automata, controlled within the range of vision of the operator, were, however, the first and rather crude steps in the evolution of the art of Telautomatics as I had conceived it.

The next logical improvement was its application to automatic mechanisms beyond the limits of vision and at great distances from the centre of control, and I have ever since advocated their employment as instruments of warfare in preference to guns. The importance of this now seems to be recognised, if I am to judge from casual announcements through the press, of achievements which are said to be extraordinary but contain no merit of novelty, whatever. In an imperfect manner it is practicable, with the existing wireless plants, to launch an aeroplane, have it follow a certain approximate course, and perform some operation at a distance of many hundreds of miles. A machine of this kind can also be mechanically controlled in several ways and I have no doubt

that it may prove of some usefulness in war. But there are to my best knowledge, no instrumentalities in existence today with which such an object could be accomplished in a precise manner. I have devoted years of study to this matter and have evolved means, making such and greater wonders easily realisable.

As stated on a previous occasion, when I was a student at college I conceived a flying machine quite unlike the present ones. The underlying principle was sound, but could not be carried into practice for want of a prime-mover of sufficiently great activity. In recent years, I have successfully solved this problem and am now planning aerial machines *devoid of sustaining planes, ailerons, propellers, and other external* attachments, which will be capable of immense speeds and are very likely to furnish powerful arguments for peace in the near future. Such a machine, sustained and propelled *entirely by reaction*, is shown on one of the pages of my lectures, and is supposed to be controlled either mechanically, or by wireless energy. By installing proper plants, it will be practicable to *project a missile of this kind into the air and drop it* almost on the very spot designated, which may be thousands of miles away.

But we are not going to stop at this. Telautomats will be ultimately produced, capable of acting as if possessed of their own intelligence, and their advent will create a revolution. As early as 1898, I proposed to representatives of a large manufacturing concern the construction and public exhibition of an automobile carriage which, left to itself, would perform a great variety of operations involving something akin to judgment. But my proposal was deemed chimerical at the time and nothing came of it.

At present, many of the ablest minds are trying to devise expedients for preventing a repetition of the awful conflict which is only theoretically ended and the duration and main issues of which I have correctly predicted in an article printed in the SUN of December 20, 1914. The proposed League is not a remedy but, on the contrary, in the opinion of a number of competent men, may bring about results just the opposite.

It is particularly regrettable that a punitive policy was adopted in framing the terms of peace, because a few years hence, it will be possible for nations to fight without armies, ships or guns, by weapons far more terrible, to the destructive action and range of which there is virtually no limit. Any city, at a distance, whatsoever, from the enemy, can be destroyed by him and no power on earth can stop him from doing so. If we want to avert an impending calamity and a state of things which may transform the globe into an inferno, we should push the development of flying machines and wireless transmission of energy without an instant's delay and with all the power and resources of the nation.

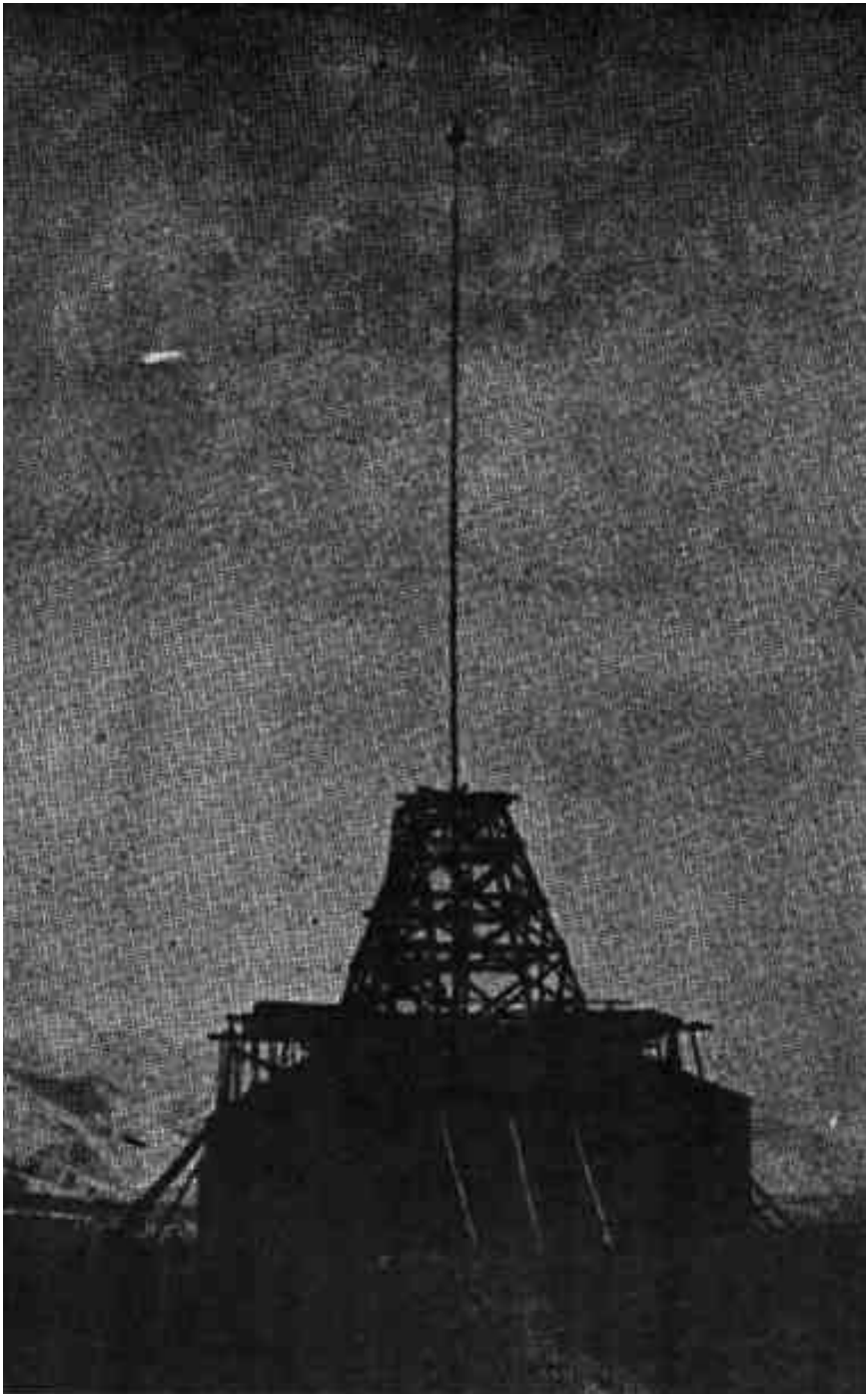

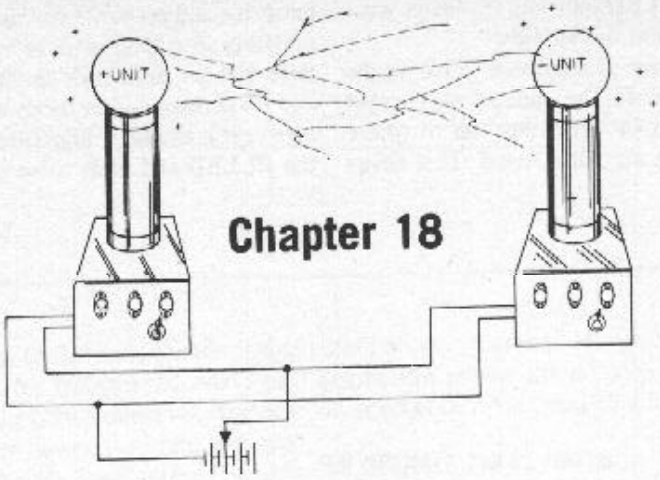

Chapter 18

Solid-state Tesla Coil (TCL3)

The following project shows how to construct a high-frequency, high-voltage device capable of causing a fluorescent lamp to light (without wires), the corona effect (St. Elmo's Fire), and the wireless transmissions of radio-frequency energy. The device as a safety feature may be powered from a 12-volt battery source as well as 120 Vac. It is completely solid-state, simple to construct, and is to be considered as an introduction to the larger generating devices such as the 250 kV Tesla Coil and other high-powered devices.

CIRCUIT THEORY

As can be seen by the schematic (Fig. 18-1 and Table 18-1) the device is a high-voltage inverter circuit taking advantage of the high step up in voltage and low capacitance resonant secondary properties inherent in TV flyback transformers. This high-voltage, high-frequency output energy can light lamps without wires and perform many otherwise impossible feats. Power is obtained either by an external battery or a conventional transformer full-bridge rectifier circuit.

T2 TRANSFORMER REWORK

1. Two new windings ("*primary*" and "*feedback*" windings) are added to the flyback transformer T1 (Fig. 18-2) that connects to the switching transistors Q1, 2. These windings are hand-wound on the bottom leg of the ferrite core where the original two-turn filament winding was located. In its place, wind a ten-turn, center-tapped winding (designated P1 and P2) using approximately 30 inches of #18 or heavier insulated hook-up wire. This is easily accomplished by winding five turns at one end of the core and bringing out a loop and twisting for a center-tap lead (PCT) before adding the second five turns. The complete ten-turn winding should then be held in place with a turn or two of electrical tape with the two ends (P1 and P2) and the center-tap (PCT) loop all protruding. Connection can be made to the center-tap loop when the insulation has been carefully removed. If it becomes

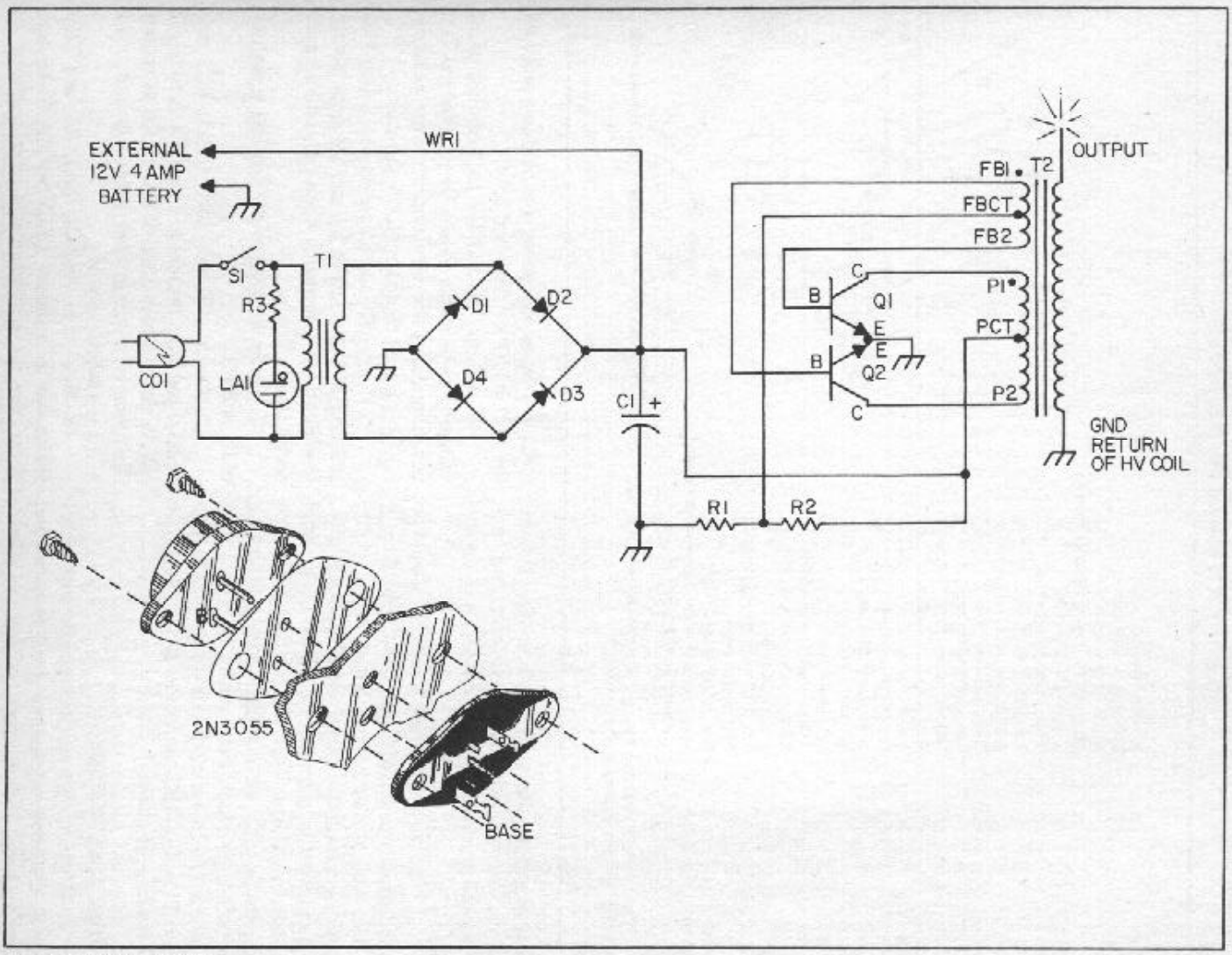

Fig. 18-1. Circuit schematic.

Table 18-1. TCL3 Universal Solid-State Tesla Coil

R1	(1)	27 ohm ½ watt resistor
R2	(1)	270 ohm ¼ watt resistor
R3	(1)	100 k ½ watt resistor
C1	(1)	8000 μF/16 V electrolytic capacitor
D1,2,3,4	(4)	3 amp 50 volt rectifier
T1	(1)	12 V 3 amp transformer
T2	(1)	TV flyback 20-25 kV
Q1,2	(2)	2N3055 npn TO3 transistor
MK1,2	(2)	TO3 mounting kit
LA1	(1)	Neon lamp with leads
CO1	(1)	Molded power cord
S1	(1)	Toggle switch 3 amps
EN1	(1)	7 × 5 × 3" al box
HS1	(1)	Dual TO3 heatsink
BU1	(1)	Cord clamp bushing
BU2	(1)	⅜" plastic bushing
BU3	(1)	½" plastic bushing
WR1	(3')	#18 stranded hook-up wire
WR3	(2')	#24 stranded hook-up wire
TE1	(1)	7 terminal strip
EN2	(1)	3½ × 4" sked 40 PVC tubing
CA1	(1)	3½" plastic cap
LAB1	(1)	Danger HV label
TER1	(1)	Large smooth metal door knob for output terminal

Complete kit available through Information Unlimited, Inc., P.O. Box 716, Amherst, N.H. 03031. Write above or call 1-603-673 4730 for pricing and delivery.

necessary to cut the center loop, be sure that the two ends are scraped and joined to form a mechanical as well as an electrical connection to the winding.

2. The second winding (feedback) should be wound directly on top of the first, but it should only have a total of four turns—two each side of the center tap. Wind two turns of #22 hook-up wire, pull and twist a center-tap loop (FBCT) and wind the other two turns. Tape this winding in place on top of the first. Do not let the center-tap loops of the two windings touch each other, however, they should not be more than one-quarter of an inch apart. (Note Fig. 18-2 that shows larger separation for the sake of clarity.)

GENERAL CONSTRUCTION

3. Fabricate the metal case as shown from a 7 × 5 × 3" aluminum minibox. Drill holes for the indicator lamp, feed-through bushing for power, switch on the front panel, three holes for T2, shield EN2, four holes for rubber feet, and two holes for the heatsink (Figs. 18-3 and 18-4).

4. Mount Q1 and Q2 to heatsink using mounting hardware as shown. Be sure that the TO3 mounting cases are insulated from the heatsink. Apply heatsink compound for best results.

5. Solder R1 and R2 as shown. Solder FB1 and FB2 to bases (B) of Q1 and Q2 respectively. Use pliers as a heatsink whenever soldering directly to a transistor.

6. Solder lead from FBCT to TE1 at junction of R1 and R2.

7. Attach +12 volt power lead to PCT connect Q1 and Q2 collectors to P1 and P2. Attach −12 Vdc to emitter buss jump of Q1 and Q2 as shown. This point is chassis ground, connect ground return of T2 to chassis ground.

8. Final wire T1, C1, LA1, R3, and TE1. Watch out for primary 120 V wiring. Make sure there are no ac grounds. Cover leads of A1 with RTV or equivalent.

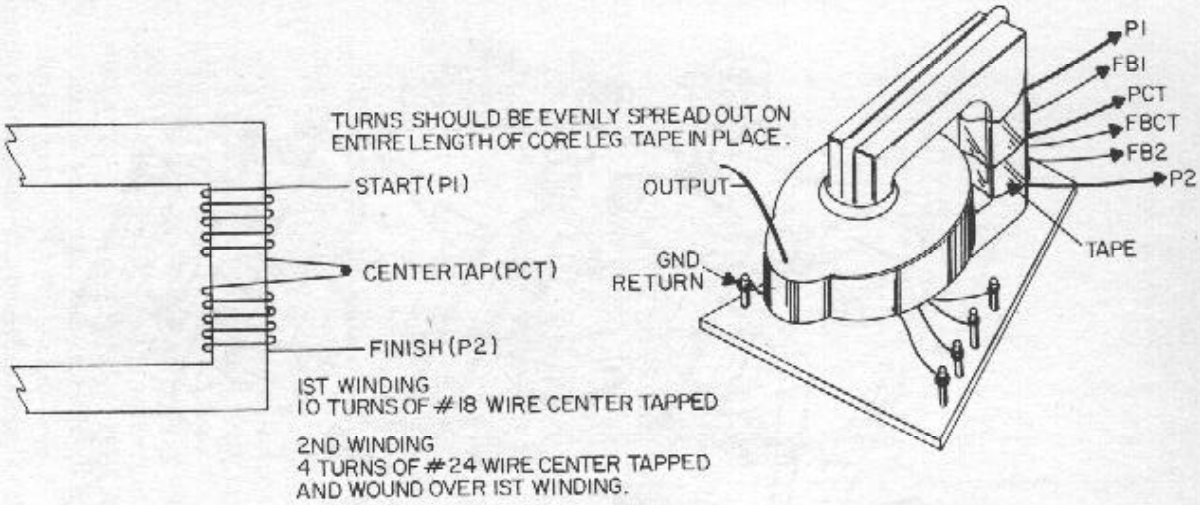

WINDING I

TWO NEW WINDINGS ("PRIMARY" AND "FEEDBACK" WINDINGS) ARE ADDED TO THE FLYBACK TRANSFORMER (T2) THAT CONNECTS TO THE DRIVER TRANSISTORS. THESE WINDINGS ARE HAND WOUND ON THE BOTTOM LEG OF THE FERRITE CORE WHERE THE ORIGINAL TWO TURN FILAMENT WINDING WAS LOCATED. REMOVE AND DISCARD THE ORGINAL FILAMENT WINDING. IN ITS PLACE, WIND FIRST A TEN-TURN, CENTER-TAPPED WINDING (DESIGNATED P1-P2) USING APPROXIMATELY 30 INCHES OF #18 OR LARGER INSULATED HOOKUP WIRE. THIS IS EASLY ACCOMPLISHED BY WINDING FIVE TURNS AT ONE END OF THE CORE AND THEN TWISTING A LOOP IN THE FREE END BEFORE ADDING THE SECOND FIVE TURNS. THE COMPLETE TEN TURN WINDING SHOULD THEN BE HELD IN PLACE WITH A TURN OR TWO OF ELECTRICAL TAPE WITH THE TWO ENDS (P1 & P2) AND THE CENTER TAP (PCT) LOOP ALL PROTRUDING. CONNECTION CAN BE MADE TO THE CENTER TAP LOOP WHEN THE INSULATION HAS BEEN CAREFULLY REMOVED. IF IT BECOMES NECESSARY TO CUT THE CENTER LOOP, BE SURE THAT THE TWO ENDS ARE SCRAPED AND JOINED TO FORM A MECHANICAL AS WELL AS AN ELECTRICAL CENTER TAP CONNECTION TO THE WINDING.

WINDING II

THE SECOND WINDING (FEEDBACK) SHOULD BE WOUND DIRECTLY ON TOP OF THE FIRST, BUT IT SHOULD ONLY HAVE A TOTAL OF FOUR TURNS - TWO EACH SIDE OF THE CENTER TAP. WIND TWO TURNS OF #22 HOOK-UP WIRE, PULL AND TWIST A CENTER TAP LOOP (FBCT) AND WIND THE OTHER TWO TURNS. TAPE THIS WINDING IN PLACE ON TOP OF THE FIRST. DO NOT LET THE CENTER TAP LOOPS OF THE TWO WINDINGS TOUCH EACH OTHER

Fig. 18-2. T2 rework winding instructions.

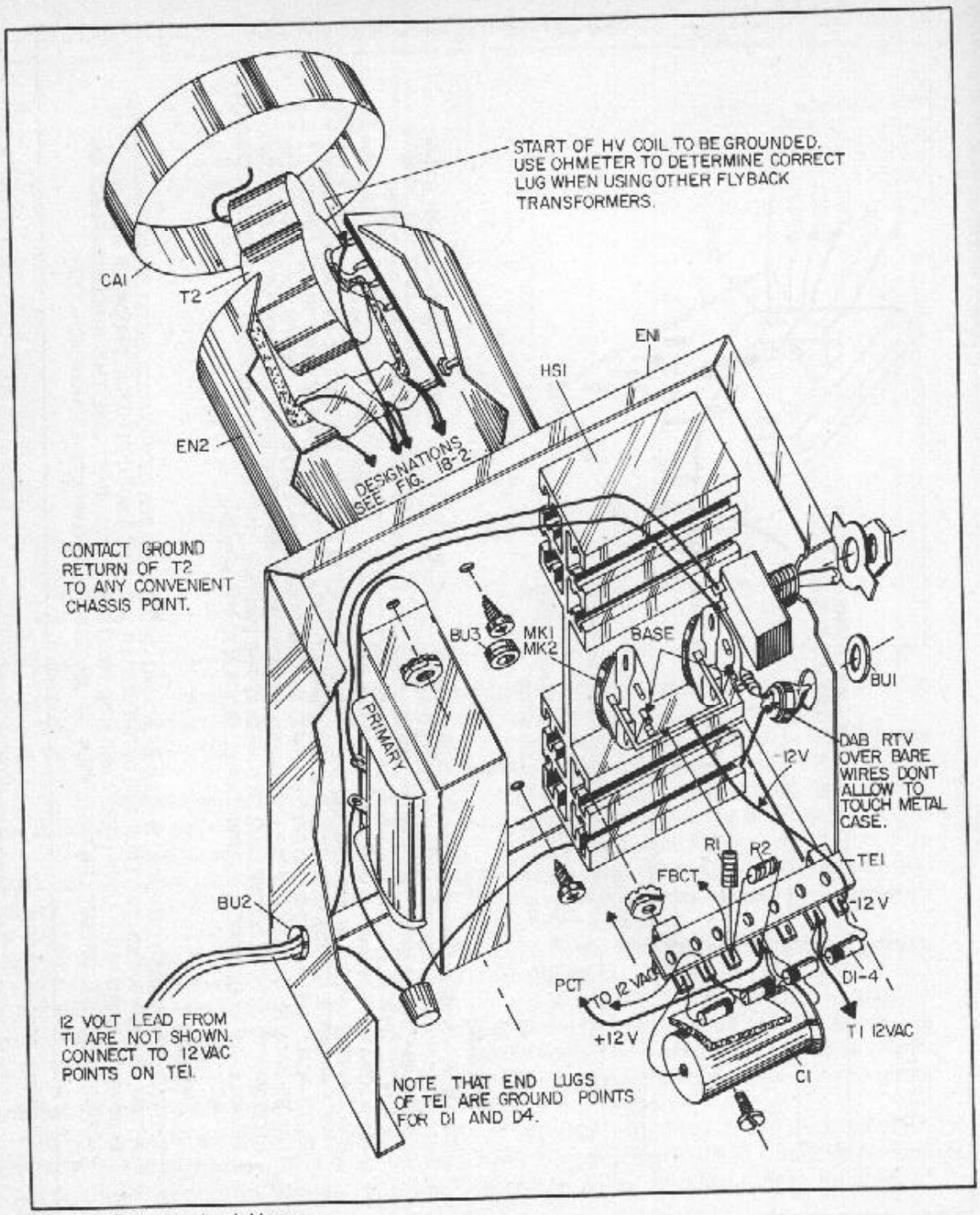

Fig. 18-3. Assembly sketch blowup.

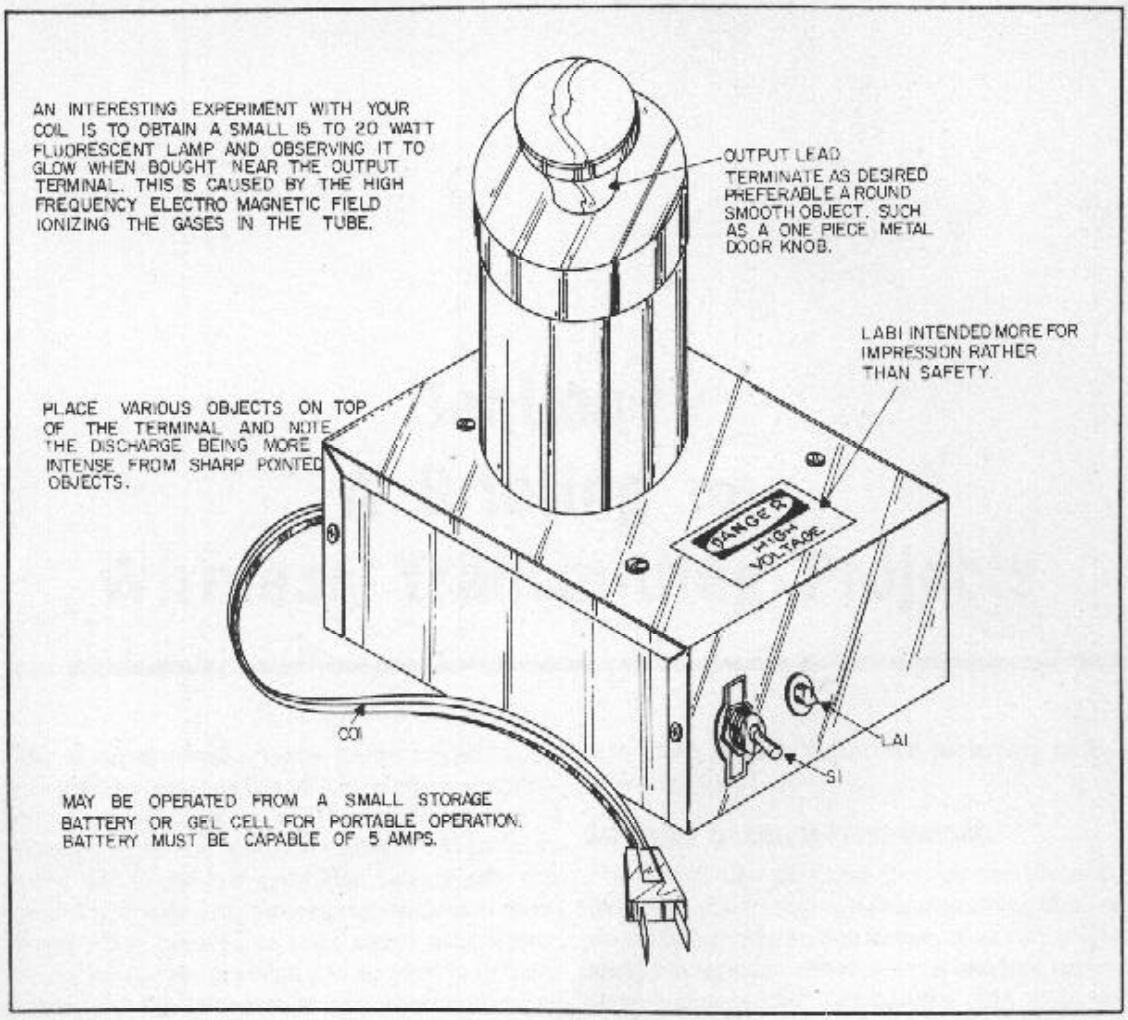

Fig. 18-4. Final assembly.

9. Tape and insulate all bare leads where possible shorting can occur. Check for wiring and shorts.

10. *The following should be done with a dc meter indicating current flow.* Apply power and immediately note that high voltage lead of T1 secondary (usually white lead with cap) emits a corona discharge (purplish sparks) when brought near ground. This should arc to about one inch. If the unit does not work, reverse wires FB1 and FB2, check wire and soldering for accuracy, base and emitter leads of Q1 and Q2 reversed, improper mounting of transistors (without insulating mounting kits). Q1 and Q2 must be completely electrically insulated from the heatsink.

11. Once the unit is functioning properly, check the transistors for heating. You should be able to touch them with your finger after several minutes of operation. If not, a larger heatsink may be necessary for prolonged operation.

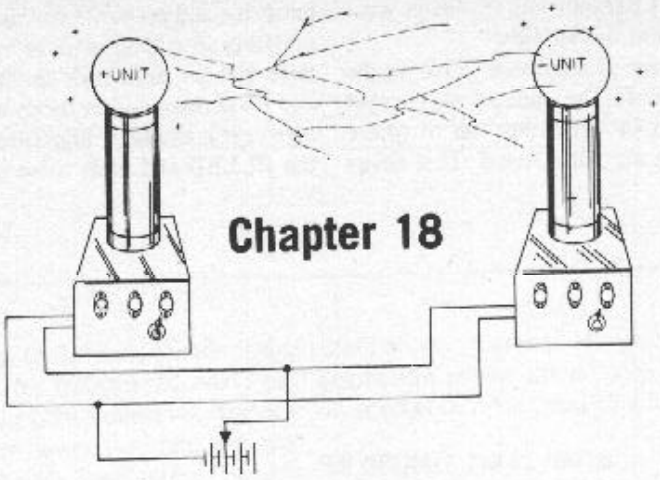

Chapter 18

Solid-state Tesla Coil (TCL3)

The following project shows how to construct a high-frequency, high-voltage device capable of causing a fluorescent lamp to light (without wires), the corona effect (St. Elmo's Fire), and the wireless transmissions of radio-frequency energy. The device as a safety feature may be powered from a 12-volt battery source as well as 120 Vac. It is completely solid-state, simple to construct, and is to be considered as an introduction to the larger generating devices such as the 250 kV Tesla Coil and other high-powered devices.

CIRCUIT THEORY

As can be seen by the schematic (Fig. 18-1 and Table 18-1) the device is a high-voltage inverter circuit taking advantage of the high step up in voltage and low capacitance resonant secondary properties inherent in TV flyback transformers. This high-voltage, high-frequency output energy can light lamps without wires and perform many otherwise impossible feats. Power is obtained either by an external battery or a conventional transformer full-bridge rectifier circuit.

T2 TRANSFORMER REWORK

1. Two new windings ("*primary*" and "*feedback*" windings) are added to the flyback transformer T1 (Fig. 18-2) that connects to the switching transistors Q1, 2. These windings are hand-wound on the bottom leg of the ferrite core where the original two-turn filament winding was located. In its place, wind a ten-turn, center-tapped winding (designated P1 and P2) using approximately 30 inches of #18 or heavier insulated hook-up wire. This is easily accomplished by winding five turns at one end of the core and bringing out a loop and twisting for a center-tap lead (PCT) before adding the second five turns. The complete ten-turn winding should then be held in place with a turn or two of electrical tape with the two ends (P1 and P2) and the center-tap (PCT) loop all protruding. Connection can be made to the center-tap loop when the insulation has been carefully removed. If it becomes

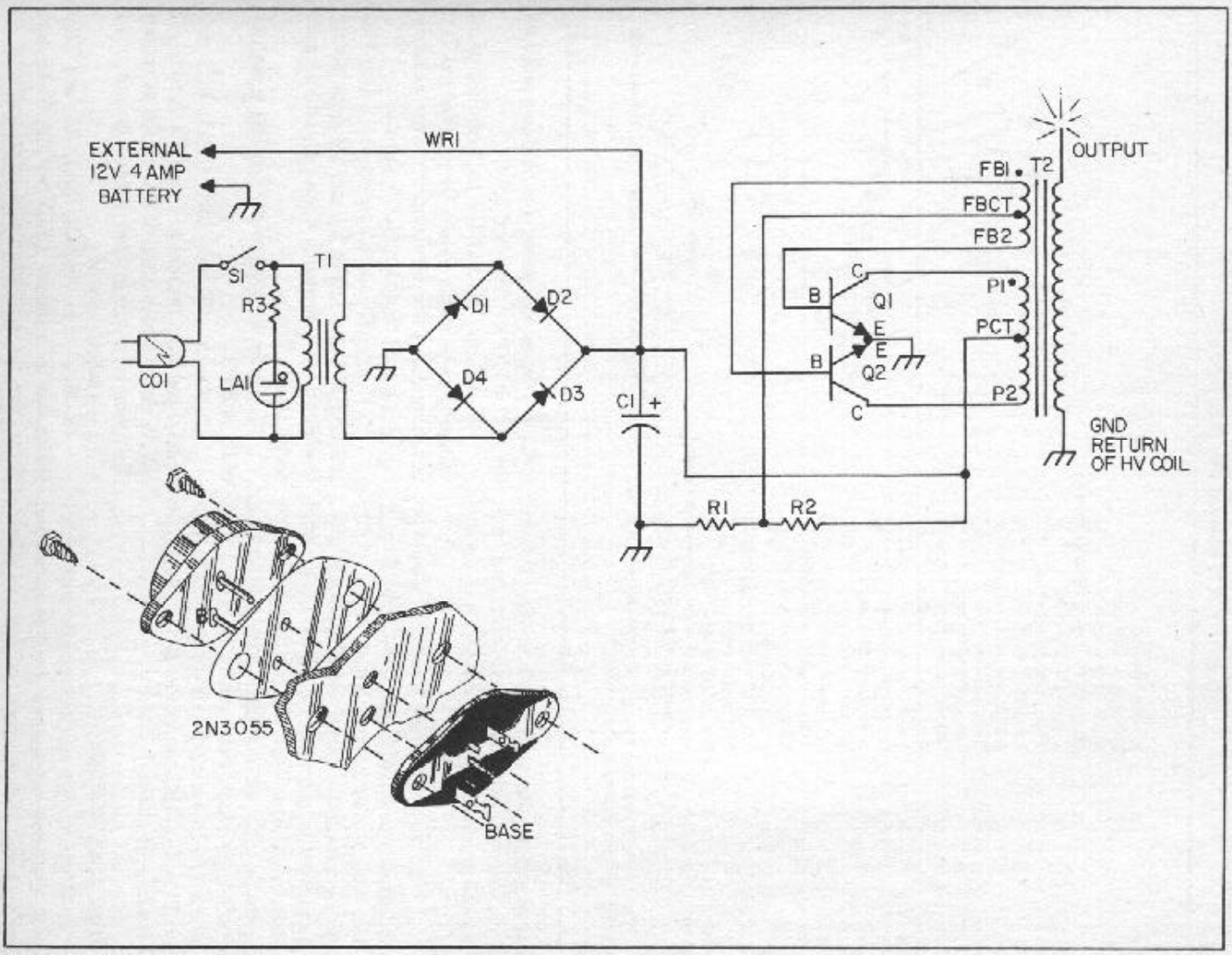

Fig. 18-1. Circuit schematic.

Table 18-1. TCL3 Universal Solid-State Tesla Coil

R1	(1)	27 ohm ½ watt resistor
R2	(1)	270 ohm ¼ watt resistor
R3	(1)	100 k ½ watt resistor
C1	(1)	8000 μF/16 V electrolytic capacitor
D1,2,3,4	(4)	3 amp 50 volt rectifier
T1	(1)	12 V 3 amp transformer
T2	(1)	TV flyback 20-25 kV
Q1,2	(2)	2N3055 npn TO3 transistor
MK1,2	(2)	TO3 mounting kit
LA1	(1)	Neon lamp with leads
CO1	(1)	Molded power cord
S1	(1)	Toggle switch 3 amps
EN1	(1)	7 × 5 × 3" al box
HS1	(1)	Dual TO3 heatsink
BU1	(1)	Cord clamp bushing
BU2	(1)	⅜" plastic bushing
BU3	(1)	½" plastic bushing
WR1	(3')	#18 stranded hook-up wire
WR3	(2')	#24 stranded hook-up wire
TE1	(1)	7 terminal strip
EN2	(1)	3½ × 4" sked 40 PVC tubing
CA1	(1)	3½" plastic cap
LAB1	(1)	Danger HV label
TER1	(1)	Large smooth metal door knob for output terminal

Complete kit available through Information Unlimited, Inc., P.O. Box 716, Amherst, N.H. 03031. Write above or call 1-603-673 4730 for pricing and delivery.

necessary to cut the center loop, be sure that the two ends are scraped and joined to form a mechanical as well as an electrical connection to the winding.

2. The second winding (feedback) should be wound directly on top of the first, but it should only have a total of four turns—two each side of the center tap. Wind two turns of #22 hook-up wire, pull and twist a center-tap loop (FBCT) and wind the other two turns. Tape this winding in place on top of the first. Do not let the center-tap loops of the two windings touch each other, however, they should not be more than one-quarter of an inch apart. (Note Fig. 18-2 that shows larger separation for the sake of clarity.)

GENERAL CONSTRUCTION

3. Fabricate the metal case as shown from a 7 × 5 × 3" aluminum minibox. Drill holes for the indicator lamp, feed-through bushing for power, switch on the front panel, three holes for T2, shield EN2, four holes for rubber feet, and two holes for the heatsink (Figs. 18-3 and 18-4).

4. Mount Q1 and Q2 to heatsink using mounting hardware as shown. Be sure that the TO3 mounting cases are insulated from the heatsink. Apply heatsink compound for best results.

5. Solder R1 and R2 as shown. Solder FB1 and FB2 to bases (B) of Q1 and Q2 respectively. Use pliers as a heatsink whenever soldering directly to a transistor.

6. Solder lead from FBCT to TE1 at junction of R1 and R2.

7. Attach +12 volt power lead to PCT connect Q1 and Q2 collectors to P1 and P2. Attach −12 Vdc to emitter buss jump of Q1 and Q2 as shown. This point is chassis ground, connect ground return of T2 to chassis ground.

8. Final wire T1, C1, LA1, R3, and TE1. Watch out for primary 120 V wiring. Make sure there are no ac grounds. Cover leads of A1 with RTV or equivalent.

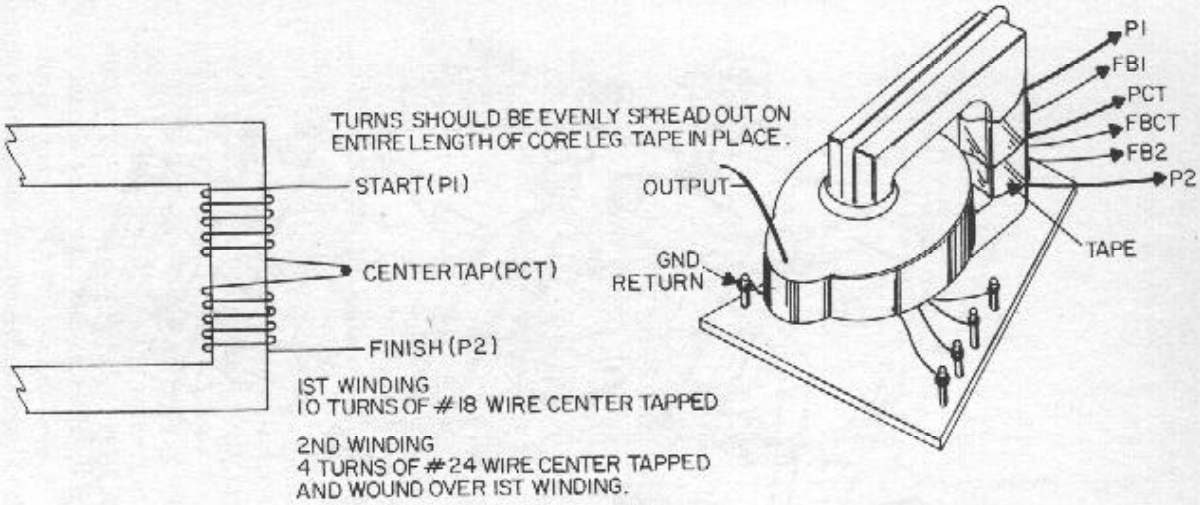

WINDING I

TWO NEW WINDINGS ("PRIMARY" AND "FEEDBACK" WINDINGS) ARE ADDED TO THE FLYBACK TRANSFORMER (T2) THAT CONNECTS TO THE DRIVER TRANSISTORS. THESE WINDINGS ARE HAND WOUND ON THE BOTTOM LEG OF THE FERRITE CORE WHERE THE ORIGINAL TWO TURN FILAMENT WINDING WAS LOCATED. REMOVE AND DISCARD THE ORGINAL FILAMENT WINDING. IN ITS PLACE, WIND FIRST A TEN-TURN, CENTER-TAPPED WINDING (DESIGNATED P1-P2) USING APPROXIMATELY 30 INCHES OF #18 OR LARGER INSULATED HOOKUP WIRE. THIS IS EASLY ACCOMPLISHED BY WINDING FIVE TURNS AT ONE END OF THE CORE AND THEN TWISTING A LOOP IN THE FREE END BEFORE ADDING THE SECOND FIVE TURNS. THE COMPLETE TEN TURN WINDING SHOULD THEN BE HELD IN PLACE WITH A TURN OR TWO OF ELECTRICAL TAPE WITH THE TWO ENDS (P1 & P2) AND THE CENTER TAP (PCT) LOOP ALL PROTRUDING. CONNECTION CAN BE MADE TO THE CENTER TAP LOOP WHEN THE INSULATION HAS BEEN CAREFULLY REMOVED. IF IT BECOMES NECESSARY TO CUT THE CENTER LOOP, BE SURE THAT THE TWO ENDS ARE SCRAPED AND JOINED TO FORM A MECHANICAL AS WELL AS AN ELECTRICAL CENTER TAP CONNECTION TO THE WINDING.

WINDING II

THE SECOND WINDING (FEEDBACK) SHOULD BE WOUND DIRECTLY ON TOP OF THE FIRST, BUT IT SHOULD ONLY HAVE A TOTAL OF FOUR TURNS - TWO EACH SIDE OF THE CENTER TAP. WIND TWO TURNS OF #22 HOOK-UP WIRE, PULL AND TWIST A CENTER TAP LOOP (FBCT) AND WIND THE OTHER TWO TURNS. TAPE THIS WINDING IN PLACE ON TOP OF THE FIRST. DO NOT LET THE CENTER TAP LOOPS OF THE TWO WINDINGS TOUCH EACH OTHER

Fig. 18-2. T2 rework winding instructions.

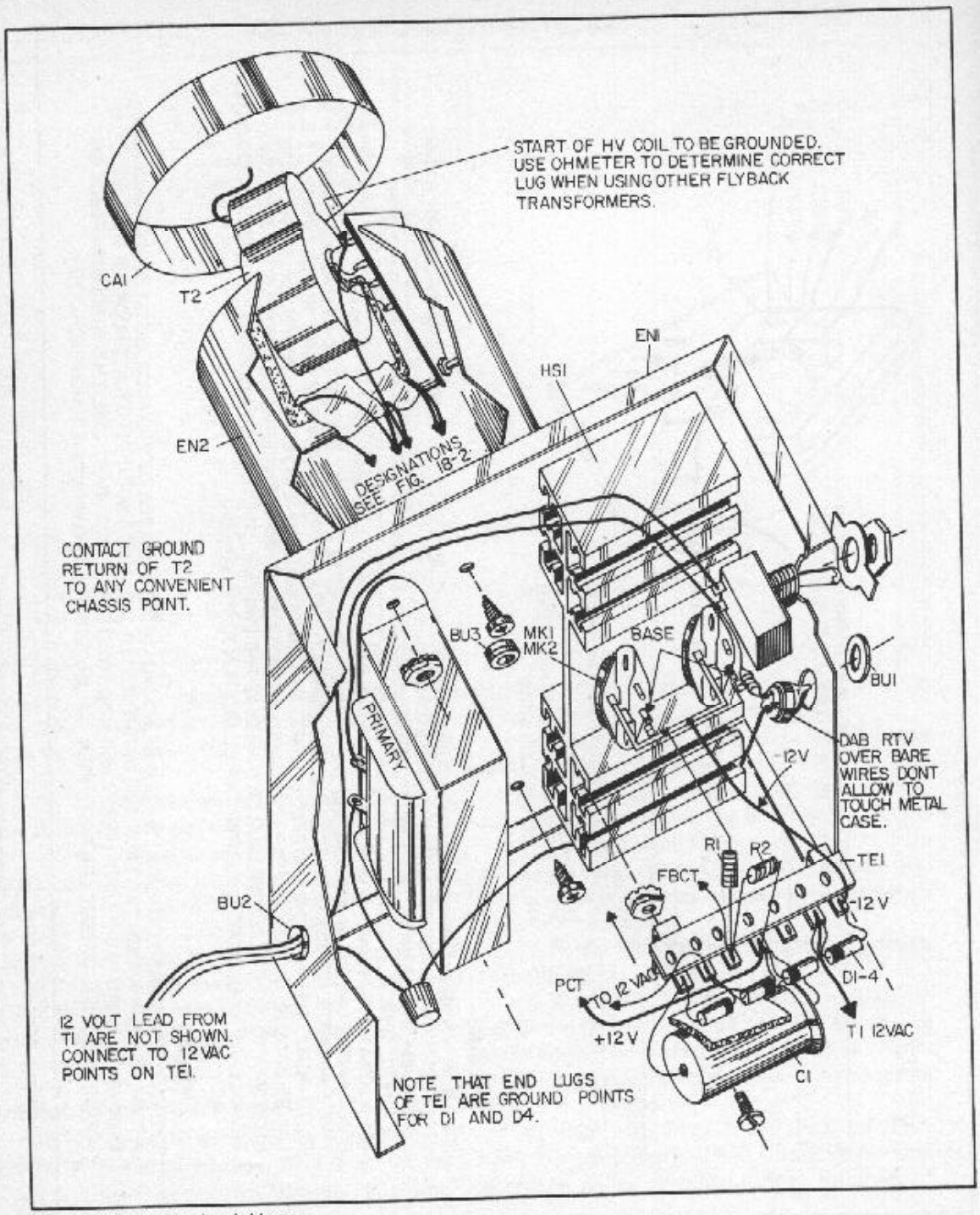

Fig. 18-3. Assembly sketch blowup.

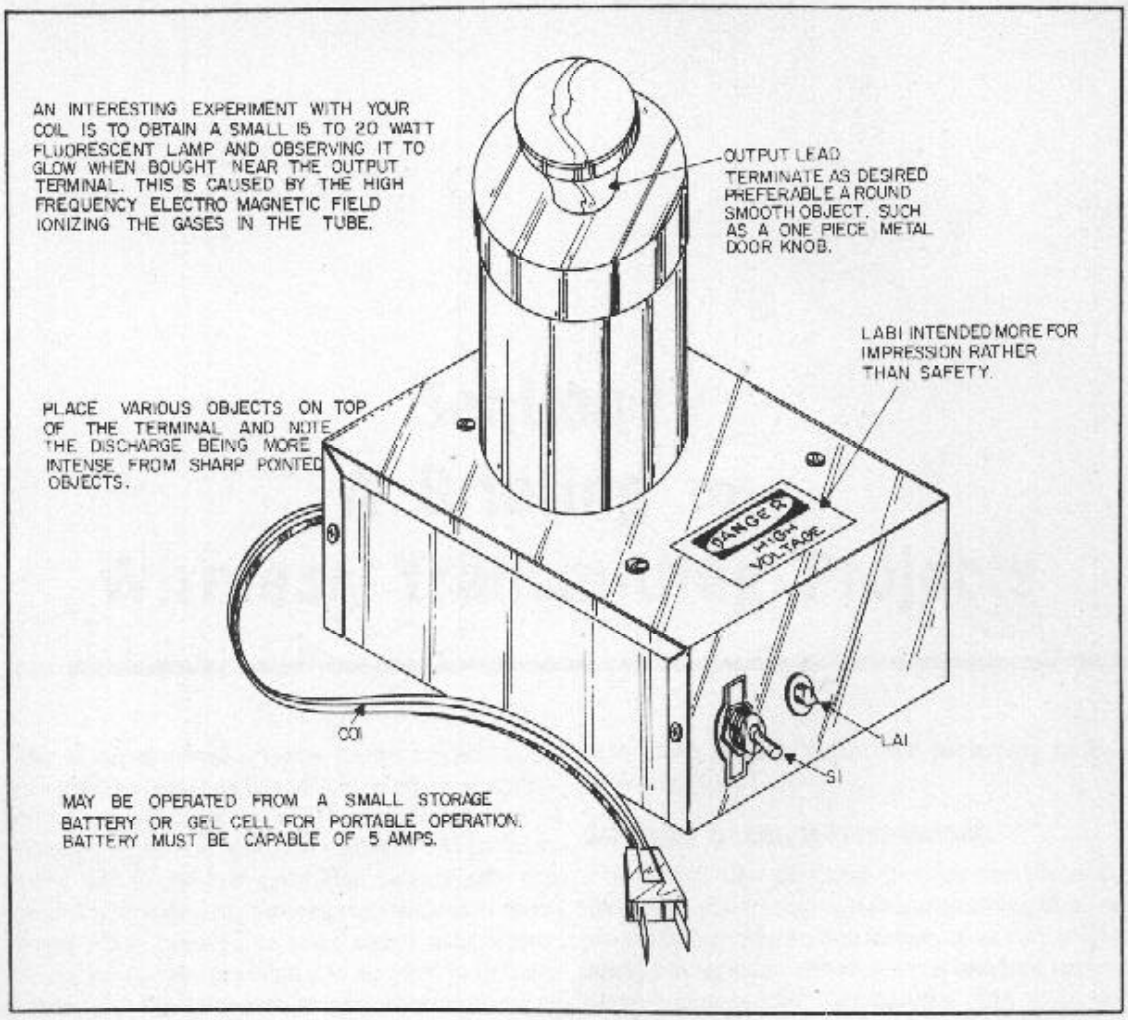

Fig. 18-4. Final assembly.

9. Tape and insulate all bare leads where possible shorting can occur. Check for wiring and shorts.

10. *The following should be done with a dc meter indicating current flow.* Apply power and immediately note that high voltage lead of T1 secondary (usually white lead with cap) emits a corona discharge (purplish sparks) when brought near ground. This should arc to about one inch. If the unit does not work, reverse wires FB1 and FB2, check wire and soldering for accuracy, base and emitter leads of Q1 and Q2 reversed, improper mounting of transistors (without insulating mounting kits). Q1 and Q2 must be completely electrically insulated from the heatsink.

11. Once the unit is functioning properly, check the transistors for heating. You should be able to touch them with your finger after several minutes of operation. If not, a larger heatsink may be necessary for prolonged operation.

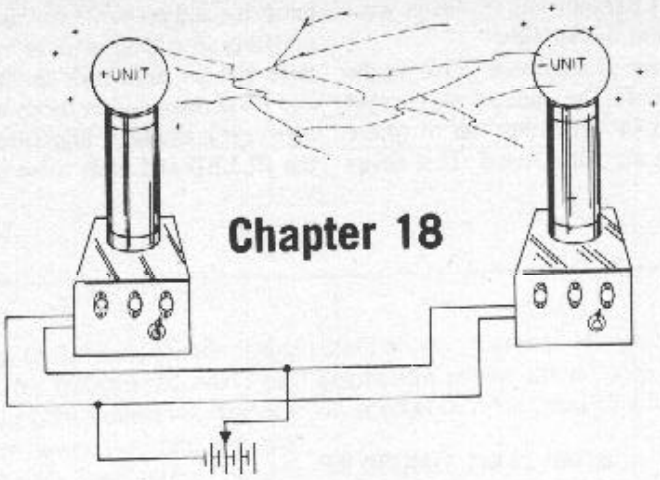

Chapter 18

Solid-state Tesla Coil (TCL3)

The following project shows how to construct a high-frequency, high-voltage device capable of causing a fluorescent lamp to light (without wires), the corona effect (St. Elmo's Fire), and the wireless transmissions of radio-frequency energy. The device as a safety feature may be powered from a 12-volt battery source as well as 120 Vac. It is completely solid-state, simple to construct, and is to be considered as an introduction to the larger generating devices such as the 250 kV Tesla Coil and other high-powered devices.

CIRCUIT THEORY

As can be seen by the schematic (Fig. 18-1 and Table 18-1) the device is a high-voltage inverter circuit taking advantage of the high step up in voltage and low capacitance resonant secondary properties inherent in TV flyback transformers. This high-voltage, high-frequency output energy can light lamps without wires and perform many otherwise impossible feats. Power is obtained either by an external battery or a conventional transformer full-bridge rectifier circuit.

T2 TRANSFORMER REWORK

1. Two new windings ("*primary*" and "*feedback*" windings) are added to the flyback transformer T1 (Fig. 18-2) that connects to the switching transistors Q1, 2. These windings are hand-wound on the bottom leg of the ferrite core where the original two-turn filament winding was located. In its place, wind a ten-turn, center-tapped winding (designated P1 and P2) using approximately 30 inches of #18 or heavier insulated hook-up wire. This is easily accomplished by winding five turns at one end of the core and bringing out a loop and twisting for a center-tap lead (PCT) before adding the second five turns. The complete ten-turn winding should then be held in place with a turn or two of electrical tape with the two ends (P1 and P2) and the center-tap (PCT) loop all protruding. Connection can be made to the center-tap loop when the insulation has been carefully removed. If it becomes

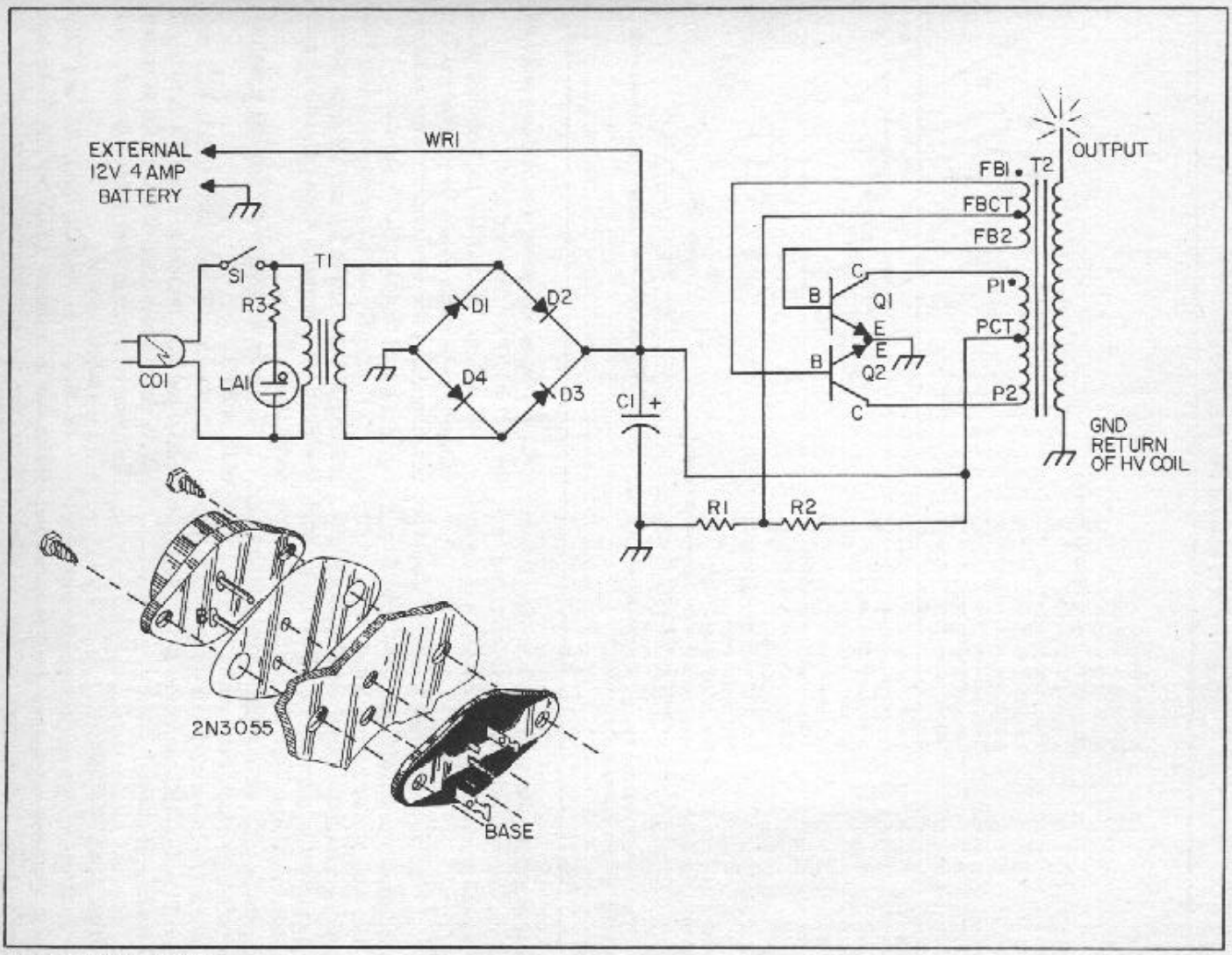

Fig. 18-1. Circuit schematic.

Table 18-1. TCL3 Universal Solid-State Tesla Coil

R1	(1)	27 ohm ½ watt resistor
R2	(1)	270 ohm ¼ watt resistor
R3	(1)	100 k ½ watt resistor
C1	(1)	8000 μF/16 V electrolytic capacitor
D1,2,3,4	(4)	3 amp 50 volt rectifier
T1	(1)	12 V 3 amp transformer
T2	(1)	TV flyback 20-25 kV
Q1,2	(2)	2N3055 npn TO3 transistor
MK1,2	(2)	TO3 mounting kit
LA1	(1)	Neon lamp with leads
CO1	(1)	Molded power cord
S1	(1)	Toggle switch 3 amps
EN1	(1)	7 × 5 × 3" al box
HS1	(1)	Dual TO3 heatsink
BU1	(1)	Cord clamp bushing
BU2	(1)	⅜" plastic bushing
BU3	(1)	½" plastic bushing
WR1	(3')	#18 stranded hook-up wire
WR3	(2')	#24 stranded hook-up wire
TE1	(1)	7 terminal strip
EN2	(1)	3½ × 4" sked 40 PVC tubing
CA1	(1)	3½" plastic cap
LAB1	(1)	Danger HV label
TER1	(1)	Large smooth metal door knob for output terminal

Complete kit available through Information Unlimited, Inc., P.O. Box 716, Amherst, N.H. 03031. Write above or call 1-603-673 4730 for pricing and delivery.

necessary to cut the center loop, be sure that the two ends are scraped and joined to form a mechanical as well as an electrical connection to the winding.

2. The second winding (feedback) should be wound directly on top of the first, but it should only have a total of four turns—two each side of the center tap. Wind two turns of #22 hook-up wire, pull and twist a center-tap loop (FBCT) and wind the other two turns. Tape this winding in place on top of the first. Do not let the center-tap loops of the two windings touch each other, however, they should not be more than one-quarter of an inch apart. (Note Fig. 18-2 that shows larger separation for the sake of clarity.)

GENERAL CONSTRUCTION

3. Fabricate the metal case as shown from a 7 × 5 × 3" aluminum minibox. Drill holes for the indicator lamp, feed-through bushing for power, switch on the front panel, three holes for T2, shield EN2, four holes for rubber feet, and two holes for the heatsink (Figs. 18-3 and 18-4).

4. Mount Q1 and Q2 to heatsink using mounting hardware as shown. Be sure that the TO3 mounting cases are insulated from the heatsink. Apply heatsink compound for best results.

5. Solder R1 and R2 as shown. Solder FB1 and FB2 to bases (B) of Q1 and Q2 respectively. Use pliers as a heatsink whenever soldering directly to a transistor.

6. Solder lead from FBCT to TE1 at junction of R1 and R2.

7. Attach +12 volt power lead to PCT connect Q1 and Q2 collectors to P1 and P2. Attach −12 Vdc to emitter buss jump of Q1 and Q2 as shown. This point is chassis ground, connect ground return of T2 to chassis ground.

8. Final wire T1, C1, LA1, R3, and TE1. Watch out for primary 120 V wiring. Make sure there are no ac grounds. Cover leads of A1 with RTV or equivalent.

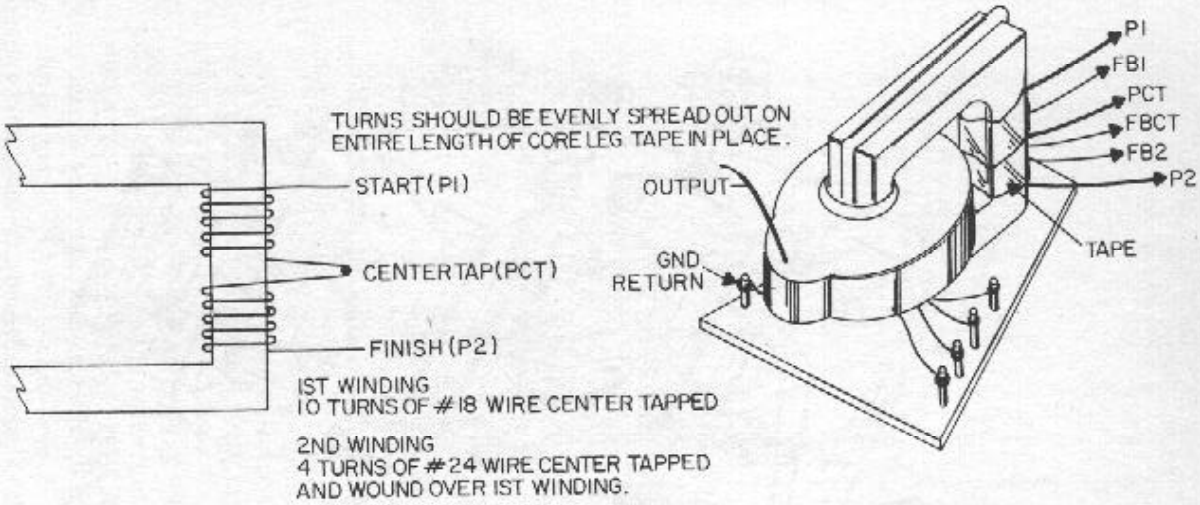

WINDING I

TWO NEW WINDINGS ("PRIMARY" AND "FEEDBACK" WINDINGS) ARE ADDED TO THE FLYBACK TRANSFORMER (T2) THAT CONNECTS TO THE DRIVER TRANSISTORS. THESE WINDINGS ARE HAND WOUND ON THE BOTTOM LEG OF THE FERRITE CORE WHERE THE ORIGINAL TWO TURN FILAMENT WINDING WAS LOCATED. REMOVE AND DISCARD THE ORGINAL FILAMENT WINDING. IN ITS PLACE, WIND FIRST A TEN-TURN, CENTER-TAPPED WINDING (DESIGNATED P1-P2) USING APPROXIMATELY 30 INCHES OF #18 OR LARGER INSULATED HOOKUP WIRE. THIS IS EASLY ACCOMPLISHED BY WINDING FIVE TURNS AT ONE END OF THE CORE AND THEN TWISTING A LOOP IN THE FREE END BEFORE ADDING THE SECOND FIVE TURNS. THE COMPLETE TEN TURN WINDING SHOULD THEN BE HELD IN PLACE WITH A TURN OR TWO OF ELECTRICAL TAPE WITH THE TWO ENDS (P1 & P2) AND THE CENTER TAP (PCT) LOOP ALL PROTRUDING. CONNECTION CAN BE MADE TO THE CENTER TAP LOOP WHEN THE INSULATION HAS BEEN CAREFULLY REMOVED. IF IT BECOMES NECESSARY TO CUT THE CENTER LOOP, BE SURE THAT THE TWO ENDS ARE SCRAPED AND JOINED TO FORM A MECHANICAL AS WELL AS AN ELECTRICAL CENTER TAP CONNECTION TO THE WINDING.

WINDING II

THE SECOND WINDING (FEEDBACK) SHOULD BE WOUND DIRECTLY ON TOP OF THE FIRST, BUT IT SHOULD ONLY HAVE A TOTAL OF FOUR TURNS - TWO EACH SIDE OF THE CENTER TAP. WIND TWO TURNS OF #22 HOOK-UP WIRE, PULL AND TWIST A CENTER TAP LOOP (FBCT) AND WIND THE OTHER TWO TURNS. TAPE THIS WINDING IN PLACE ON TOP OF THE FIRST. DO NOT LET THE CENTER TAP LOOPS OF THE TWO WINDINGS TOUCH EACH OTHER

Fig. 18-2. T2 rework winding instructions.

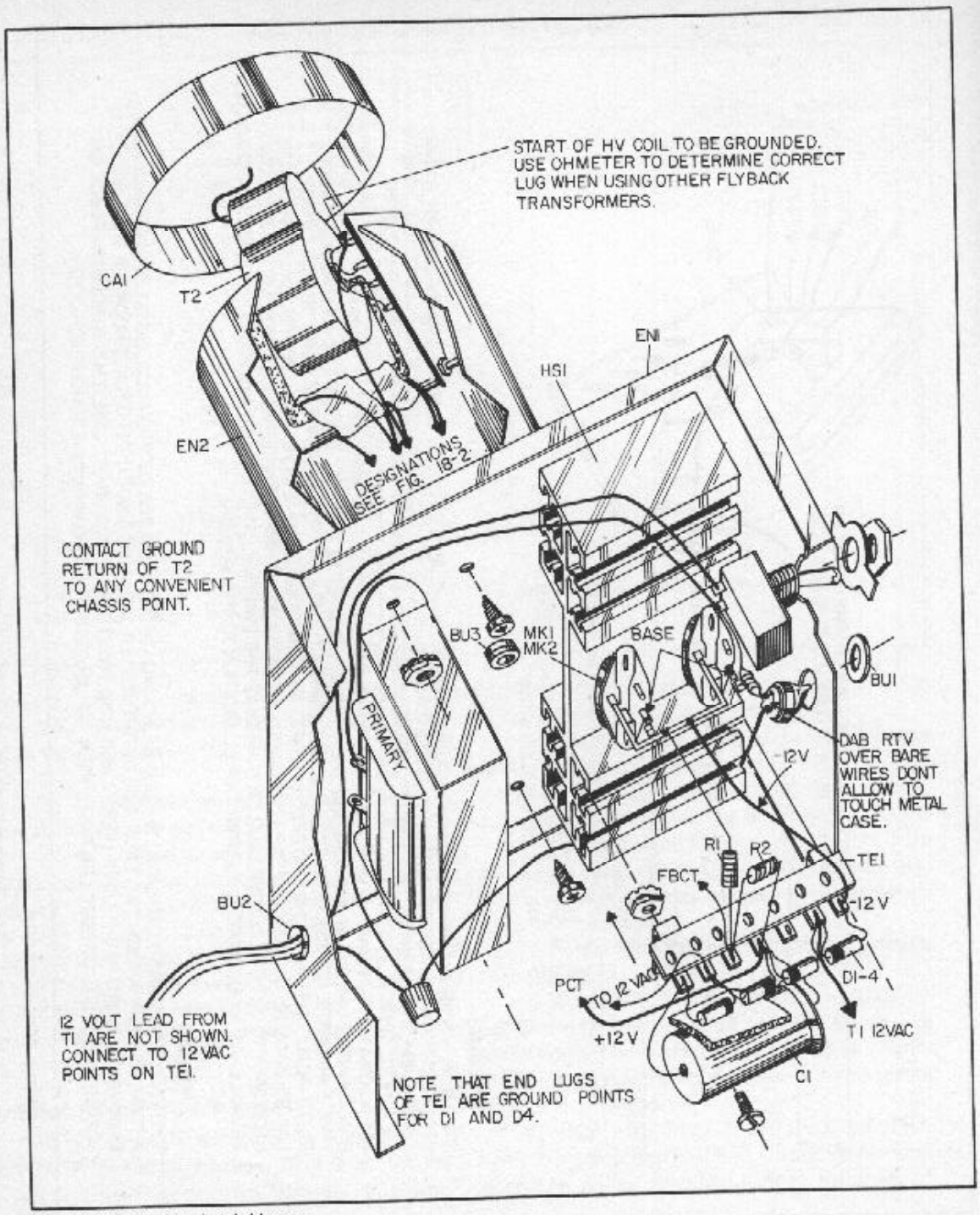

Fig. 18-3. Assembly sketch blowup.

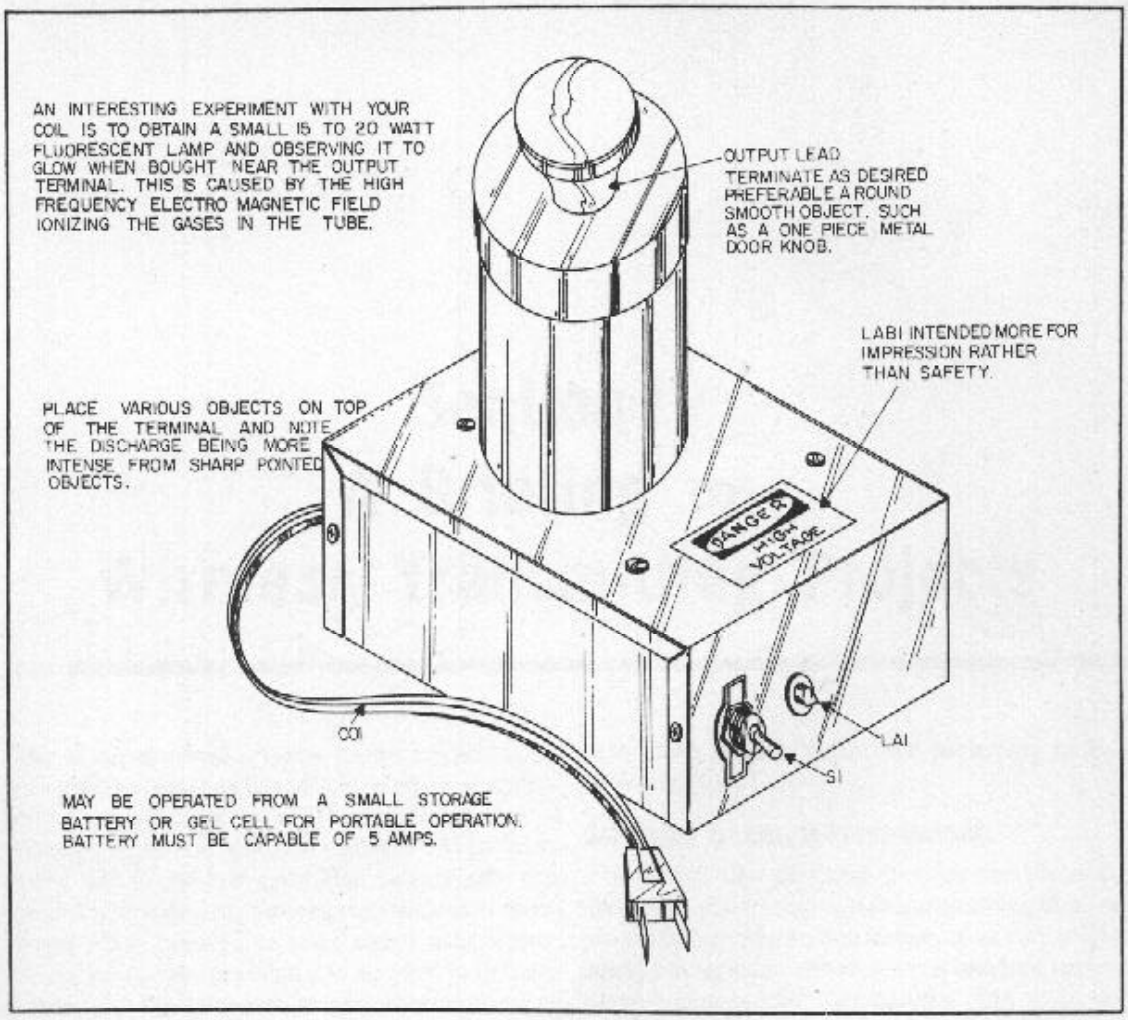

Fig. 18-4. Final assembly.

9. Tape and insulate all bare leads where possible shorting can occur. Check for wiring and shorts.

10. *The following should be done with a dc meter indicating current flow.* Apply power and immediately note that high voltage lead of T1 secondary (usually white lead with cap) emits a corona discharge (purplish sparks) when brought near ground. This should arc to about one inch. If the unit does not work, reverse wires FB1 and FB2, check wire and soldering for accuracy, base and emitter leads of Q1 and Q2 reversed, improper mounting of transistors (without insulating mounting kits). Q1 and Q2 must be completely electrically insulated from the heatsink.

11. Once the unit is functioning properly, check the transistors for heating. You should be able to touch them with your finger after several minutes of operation. If not, a larger heatsink may be necessary for prolonged operation.

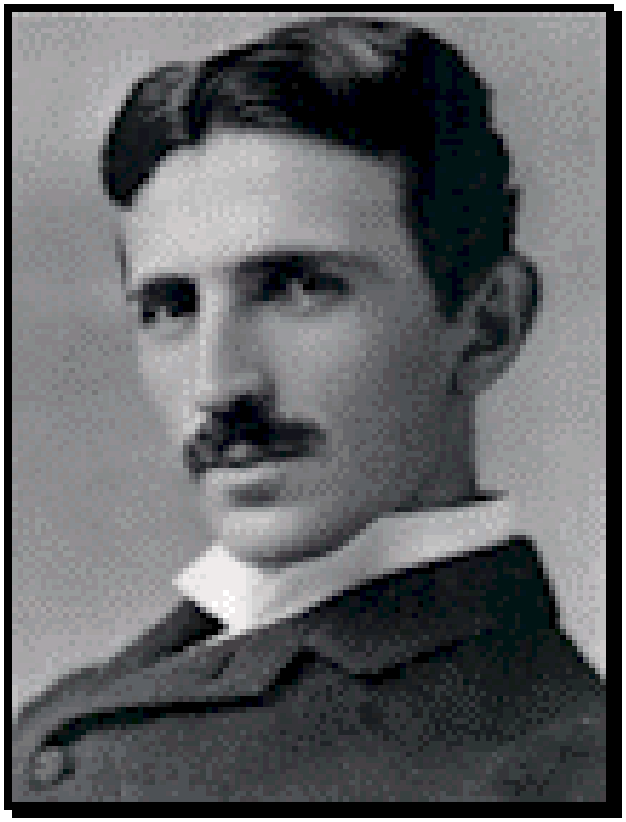

The U.S. Patents of Nikola Tesla

Freely available at the
U.S. Patent and Trademark Office

.pdf assembled at
The Bipolar Planet
Using
PdfEdit995

(No Model.)

N. TESLA.

COMMUTATOR FOR DYNAMO ELECTRIC MACHINES.

No. 334,823. Patented Jan. 26, 1886.

Fig. 1.

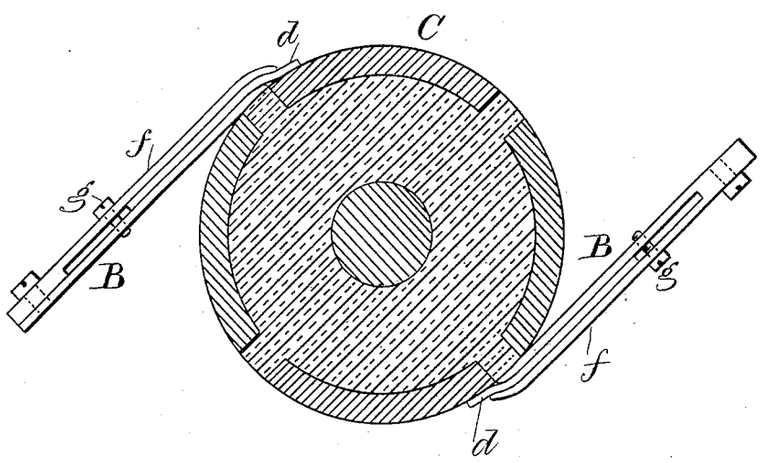

Fig. 2.

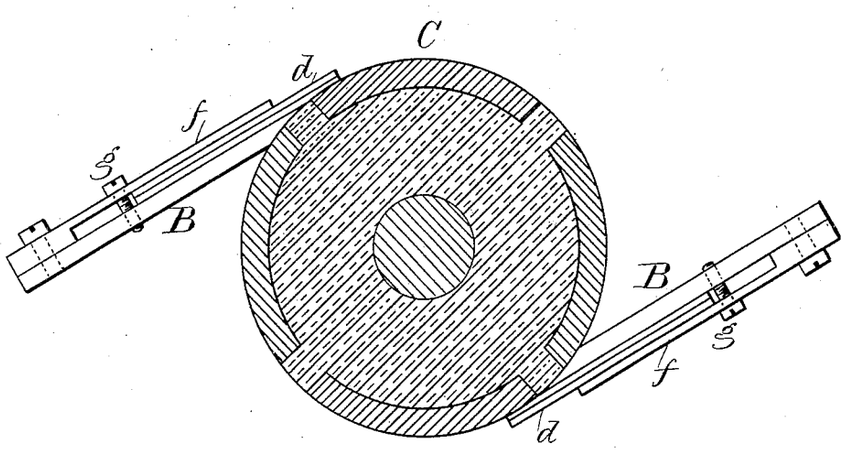

Witnesses
Chas. H. Smith
J. Staib

Inventor
Nikola Tesla.
By Lemuel W. Serrell
Atty.

N. PETERS. Photo-Lithographer, Washington, D. C.

UNITED STATES PATENT OFFICE.

NIKOLA TESLA, OF SMILJAN LIKA, AUSTRIA-HUNGARY, ASSIGNOR TO THE TESLA ELECTRIC LIGHT AND MANUFACTURING COMPANY, OF RAHWAY, NEW JERSEY.

COMMUTATOR FOR DYNAMO-ELECTRIC MACHINES.

SPECIFICATION forming part of Letters Patent No. 334,823, dated January 26, 1886.

Application filed May 6, 1885. Serial No. 164,534. (No model.)

To all whom it may concern:

Be it known that I, NIKOLA TESLA, of Smiljan Lika, border country of Austria-Hungary, have invented an Improvement in Dynamo-Electric Machines, of which the following is a specification.

My invention relates to the commutators on dynamo-electric machines, especially in machines of great electromotive force, adapted to arc lights; and it consists in a device by means of which the sparking on the commutator is prevented

It is known that in machines of great electromotive force—such, for instance, as those used for arc lights—whenever one commutator bar or plate comes out of contact with the collecting-brush a spark appears on the commutator. This spark may be due to the break of the complete circuit, or of a shunt of low resistance formed by the brush between two or more commutator-bars. In the first case the spark is more apparent, as there is at the moment when the circuit is broken a discharge of the magnets through the field-helices, producing a great spark or flash which causes an unsteady current, rapid wear of the commutator bars and brushes, and waste of power. The sparking may be reduced by various devices, such as providing a path for the current at the moment when the commutator segment or bar leaves the brush, by short-circuiting the field-helices, by increasing the number of the commutator-bars, or by other similar means; but all these devices are expensive or not fully available, and seldom attain the object desired.

My invention enables me to prevent the sparking in a simple manner. For this purpose I employ with the commutator-bars and intervening insulating material mica, asbestus paper or other insulating and preferably incombustible material, which I arrange to bear on the surface of the commutator, near to and behind the brush.

My invention will be easily understood by reference to the accompanying drawings.

In the drawings, Figure 1 is a section of a commutator with an asbestus insulating device; and Fig. 2 is a similar view, representing two plates of mica upon the back of the brush.

In Fig. 1, C represents the commutator and intervening insulating material; B B, the brushes. *d d* are sheets of asbestus paper or other suitable non-conducting material. *f f* are springs, the pressure of which may be adjusted by means of the screws *g g*.

In Fig. 2 a simple arrangement is shown with two plates of mica or other material. It will be seen that whenever one commutator-segment passes out of contact with the brush the formation of the arc will be prevented by the intervening insulating material coming in contact with the insulating material on the brush.

My invention may be carried out in many ways; and I do not limit myself to any particular device, as my invention consists, broadly, in providing a solid non-conducting body to bear upon the surface of the commutator, by the intervention of which body the sparking is partly or completely prevented.

I prefer to use asbestus paper or cloth impregnated with zinc-oxide, magnesia, zirconia, or other suitable material, as the paper and cloth are soft, and serve at the same time to wipe and polish the commutator; but mica or any other suitable material may be employed, said material being an insulator or a bad conductor of electricity.

My invention may be applied to any electric apparatus in which sliding contacts are employed.

I claim as my invention—

1. The combination, with the commutator-bars and intervening insulating material and brushes in a dynamo electric machine, of a solid insulator or bad conductor of electricity arranged to bear upon the surface of the commutator adjacent to the end of the brush, for the purpose set forth.

2. In an electric apparatus in which sliding contacts with intervening insulating material are employed, the combination, with the contact springs or brushes, of a solid insulator or bad conductor of electricity, as and for the purposes set forth.

Signed by me this 2d day of May, A. D. 1885.

NIKOLA TESLA.

Witnesses:
GEO. T. PINCKNEY,
WILLIAM G. MOTT.

(No Model.) 2 Sheets—Sheet 1.

N. TESLA.

ELECTRIC ARC LAMP.

No. 335,786. Patented Feb. 9, 1886.

Fig. 1.

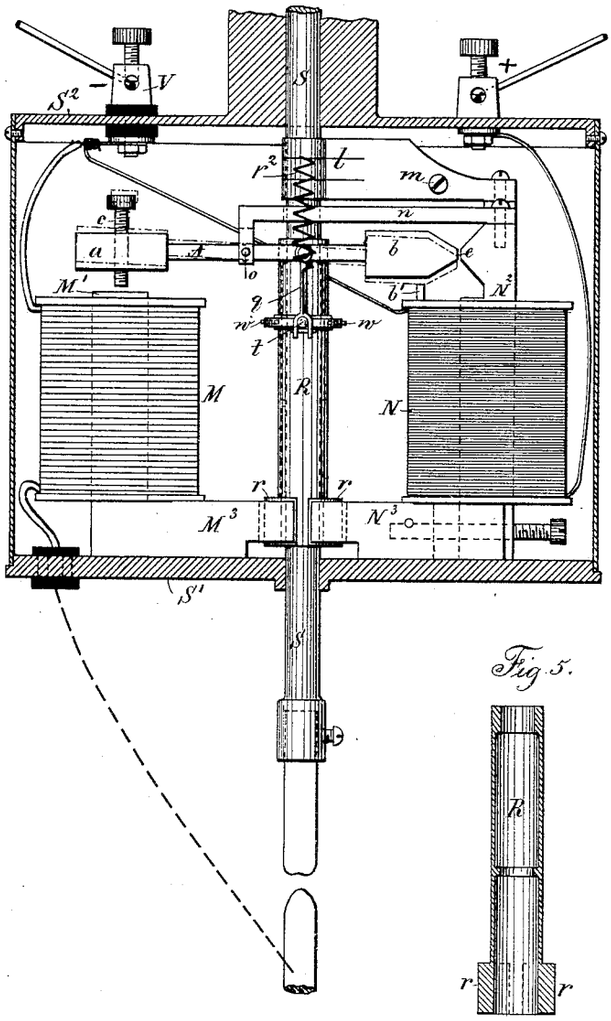

Fig. 5.

Fig. 4.

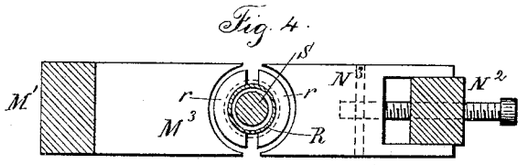

Witnesses:
I. Stair
Chas. A. Smith

Inventor:
Nikola Tesla
per Lemuel W. Serrell
Atty

N. PETERS. Photo-Lithographer, Washington, D. C.

(No Model.) 2 Sheets—Sheet 2.

N. TESLA.

ELECTRIC ARC LAMP.

No. 335,786. Patented Feb. 9, 1886.

Fig. 2.

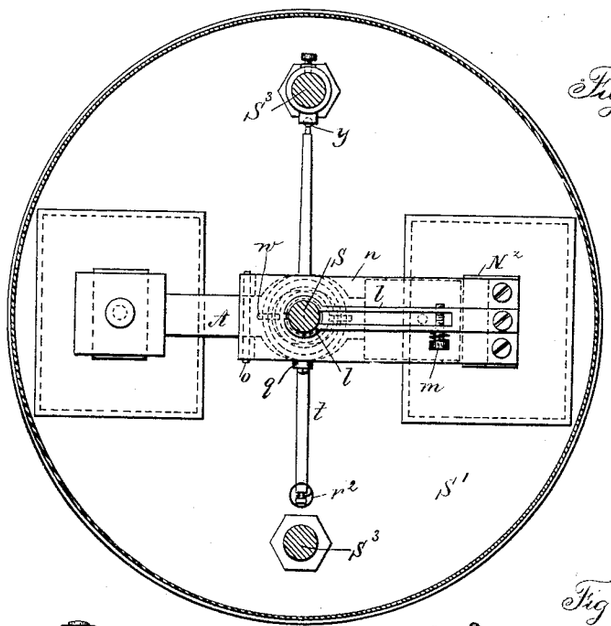

Fig. 3.

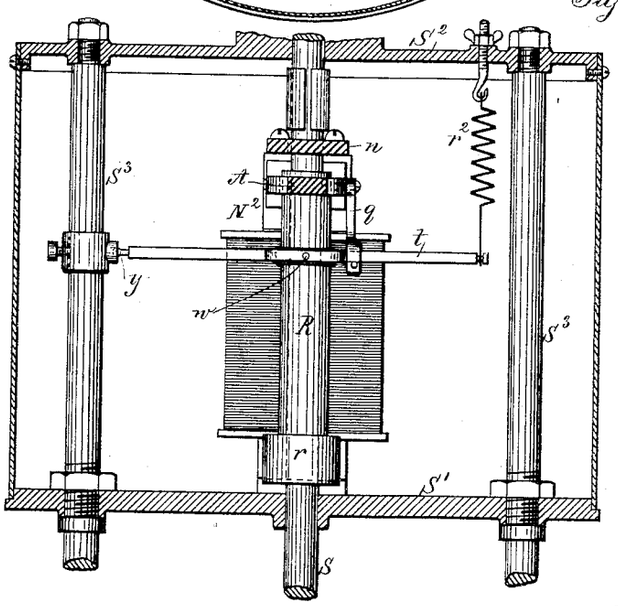

Witnesses:
I. Stair
Chas. N. Smith

Inventor:
Nikola Tesla
per Lemuel W. Serrell
Atty.

N. PETERS, Photo-Lithographer, Washington, D. C.

UNITED STATES PATENT OFFICE.

NIKOLA TESLA, OF SMILJAN LIKA, AUSTRIA-HUNGARY, ASSIGNOR TO THE TESLA ELECTRIC LIGHT AND MANUFACTURING COMPANY, OF RAHWAY, NEW JERSEY.

ELECTRIC-ARC LAMP.

SPECIFICATION forming part of Letters Patent No. 335,786, dated February 9, 1886.

Application filed March 30, 1885. Serial No. 160,574. (No model.)

To all whom it may concern:

Be it known that I, NIKOLA TESLA, of Smiljan Lika, border country of Austria-Hungary, have invented certain new and useful Improvements in Electric-Arc Lamps, of which the following is a specification.

My invention relates more particularly to those arc lamps in which the separation and feed of the carbon electrodes or their equivalents is accomplished by means of electro-magnets or solenoids in connection with suitable clutch-mechanism; and it is designed to remedy certain faults common to the greater part of the lamps heretofore made.

The objects of my invention are to prevent the frequent vibrations of the movable electrode and flickering of the light arising therefrom, to prevent the falling into contact of the electrodes, to dispense with the dash-pot, clock-work, or gearing and similar devices heretofore used, and to render the lamp extremely sensitive, and to feed the carbon almost imperceptibly, and thereby obtain a very steady and uniform light.

In that class of lamps where the regulation of the arc is effected by forces acting in opposition on a free movable rod or lever directly connected with the electrode, all or some of the forces being dependent on the strength of the current, any change in the electrical condition of the circuit causes a vibration and a corresponding flicker in the light. This difficulty is most apparent when there are only a few lamps in circuit. To lessen this difficulty, lamps have been constructed in which the lever or armature, after the establishing of the arc, is kept in a fixed position and cannot vibrate during the feed operation, the feed mechanism acting independently; but in these lamps, when a clamp is employed, it frequently occurs that the carbons come into contact and the light is momentarily extinguished, and, frequently, parts of the circuit are injured. In both these classes of lamps it has been customary to use dash-pot, clock-work, or equivalent retarding devices; but these are generally unreliable and objectionable, and increase the cost of construction.

My invention is intended to effect the desired objects and to remedy the before-mentioned defects. I combine two electro-magnets—one of low resistance in the main or lamp circuit, and the other of comparatively high resistance in a shunt around the arc—a movable armature-lever, and a novel feed mechanism, the parts being arranged so that in the normal working position of the armature-lever the same is kept almost rigidly in one position, and is not effected even by considerable changes in the electric circuit; but if the carbons fall into contact the armature will be actuated by the magnets so as to move the lever and start the arc, and hold the carbons until the arc lengthens and the armature-lever returns to the normal position. After this the carbon-rod holder is released by the action of the feed mechanism, so as to feed the carbon and restore the arc to its normal length.

My invention consists, mainly, in the particular manner in which the armature is combined with the magnets and acted upon by them and in the feed-controlling mechanism.

In the drawings, Figure 1 is an elevation of the mechanism made use of in the electric lamp. Fig. 2 is a plan view of the same below the line $x\ x$. Fig. 3 is an elevation of the balancing lever and spring, and Fig. 4 is a detached plan view of the pole-pieces and armatures upon the friction-clamp, and Fig. 5 is a section of the clamping-tube.

M is a helix of coarse wire in a circuit from the lower-carbon holder to the negative binding-screw −.

N is a helix of fine wire in a shunt between the positive binding-screw + and the negative binding-screw −. The upper-carbon holder S is a parallel rod sliding through the plates S' S^2 of the frame of the lamp, and hence the electric current passes from the positive binding-post + through the plate S^2, carbon-holder S, and upper carbon to the lower carbon, and thence by the holder and a metallic connection to the helix M.

The carbon-holders are of any desired character, and to insure electric connections the springs *l* are made use of to grasp the upper-carbon holding rod S, but to allow the rod to

slide freely through the same. These springs *l* may be adjusted in their pressure by the screw *m*, and the spring *l* may be sustained upon any suitable support. I have shown them as connected with the upper end of the core of the magnet N.

Around the carbon-holding rod S, between the plates S′ S², there is a tube, R, which forms a clamp. This tube is counterbored, as seen in the section Fig. 5, so that it bears upon the rod S at its upper end and near the middle, and at the lower end of this tubular clamp R there are armature-segments *r* of soft iron. A frame or arm, *n*, extending, preferably, from the core N², supports the lever A by a fulcrum-pin, *o*. This lever A has a hole, through which the upper end of the tubular clamp R passes freely, and from the lever A is a link, *q*, to the lever *t*, which lever is pivoted at *y* to a ring upon one of the columns S³. This lever *t* has an opening or bow surrounding the tubular clamp R, and there are pins or pivotal connections *w* between the lever *t* and this clamp R, and a spring, *r*², serves to support or suspend the weight of the parts and balance the same, or nearly so. This spring is preferably adjustable.

At one end of the lever A is a soft-iron armature block, *a*, over the core M′ of the helix M, and there is preferably a limiting-screw, *c*, passing through this armature-block *a*, and at the other end of the lever A is a soft-iron armature-block, *b*, with the end tapering or wedge-shaped, and the same comes close to and in line with the lateral projection *e* on the core N². The lower ends of the cores M′ N² are made with lateral projecting pole-pieces M³ N³, respectively, and these pole-pieces are concave at their outer ends, and are at opposite sides of the armature-segments *r* at the lower end of the tubular clamp R.

The operation of these devices is as follows: In the condition of inaction the upper carbon rests upon the lower one, and when the current is turned on the electricity passes freely, by the frame and spring *l*, through the rod S and carbons to the coarse wire and helix M, and to the negative binding-post V, and the core M′ thereby is energized. The pole-piece M³ attracts the armature *r*, and by the lateral pressure causes the clamp R to grasp the rod S′, and the lever A is simultaneously moved from the position shown by dotted lines, Fig. 1, to the normal position shown in full lines, and in so doing the link *q* and lever *t* are raised, lifting the clamp R and rod S, separating the carbons and forming the arc. The magnetism of the pole-piece *e* tends to hold the lever A level, or nearly so, the core N² being energized by the current in the shunt which contains the helix N. In this position the lever A is not moved by ordinary variation in the electric current because the armature *b* is strongly attracted by the magnetism of *e*, and these parts are close to each other, and the magnetism of *e* acts at right angles to the magnetism of the core M′. If, now, the arc becomes too long, the current through the helix M is lessened, and the magnetism of the core N³ is increased by the greater current passing through the shunt, and this core N³ attracting the segmental armature *r* lessens the hold of the clamp R upon the rod S, allowing the latter to slide and lessen the length of the arc, which instantly restores the magnetic equilibrium and causes the clamp R to hold the rod S. If it happens that the carbons fall into contact, then the magnetism of N² is lessened so much that the attraction of the magnet M will be sufficient to move the armature *a* and lever A so that the armature *b* passes above the normal position, so as to separate the carbons instantly; but when the carbons burn away a greater amount of current will pass through the shunt until the attraction of the core N² will overcome the attraction of the core M′ and bring the armature-lever A again into the normal horizontal position, and this occurs before the feed can take place. The segmental armature pieces *r* are shown as nearly semicircular. They may be square or of any other desired shape, the ends of the pole-pieces M³ N³ being made to correspond in shape.

I claim as my invention—

1. The combination, in an electric-arc lamp, of the electro-magnets in the main and shunt circuits, respectively, an armature-lever and connection to the movable carbon-holder, the core of the shunt-magnet passing across the end of the armature-lever, substantially as set forth, so that the two magnets act in conjunction on the armature-lever in moving the carbon to form the arc and in opposition to each other beyond the normal position of the armature-lever, substantially as specified.

2. The combination, with the carbon-holders, of two magnets, one in the main circuit and the other in a shunt-circuit, and an armature-lever to draw the arc, and a feeding mechanism and pole-pieces upon the electro-magnets to act upon the feeding mechanism, substantially as specified.

3. The combination, with the carbon-holders, of two magnets, one in the main circuit and the other in a shunt-circuit, and an armature-lever between two poles of such electro-magnets to draw the arc, and a feeding mechanism and pole-pieces upon the other two poles of the electro-magnets to act upon the feeding mechanism, substantially as specified.

4. The combination, with the carbon-holding rod in an electric-arc lamp, of the clamp R, lever *t*, spring *r*², armature-lever A, and electro-magnets M N in the main and shunt circuits, respectively, the pole-pieces M³ N³, and armature-segments *r*, substantially as set forth.

5. The combination, with the carbon-holder, of a tubular clamp surrounding the same, an armature-lever connected to said tubular clamp, and electro-magnets in the main and shunt circuits, respectively, and armature-seg-

ments upon the tubular clamp adjacent to the lateral poles of the electro-magnets, substantially as set forth.

6. In an electric-arc lamp, the combination, with the carbon-holding rod, of a clamp, two armatures upon the clamp, and electro-magnets in the main and shunt circuits, respectively, the poles of which act upon the armatures of the clamp for bringing the same into action or releasing it, substantially as set forth.

Signed by me this 25th day of March, A. D. 1885.

NIKOLA TESLA.

Witnesses:
GEO. T. PINCKNEY,
CHAS. H. SMITH.

(No Model.) 2 Sheets—Sheet 1.

N. TESLA.

ELECTRIC ARC LAMP.

No. 335,787. Patented Feb. 9, 1886.

Fig. 1.

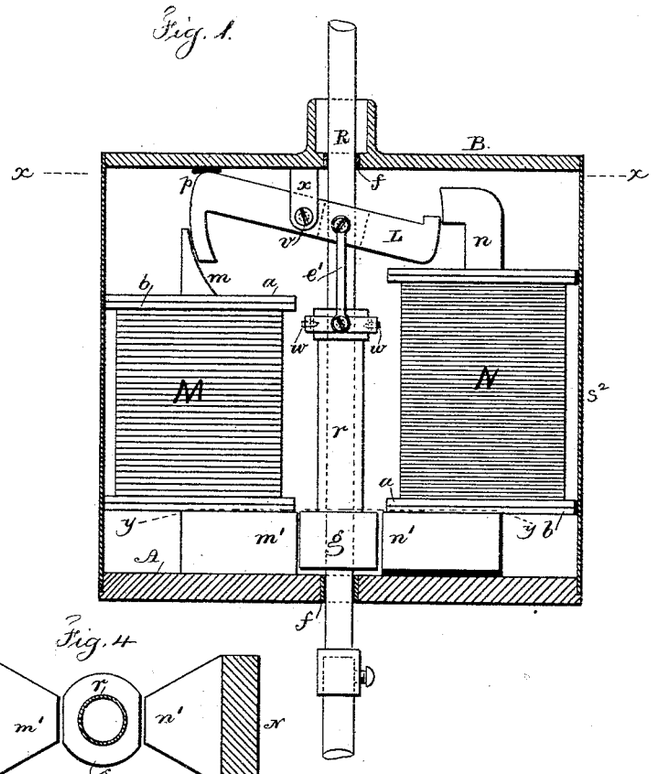

Fig. 6.

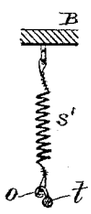

Fig. 4.

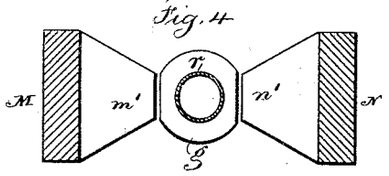

Fig. 2.

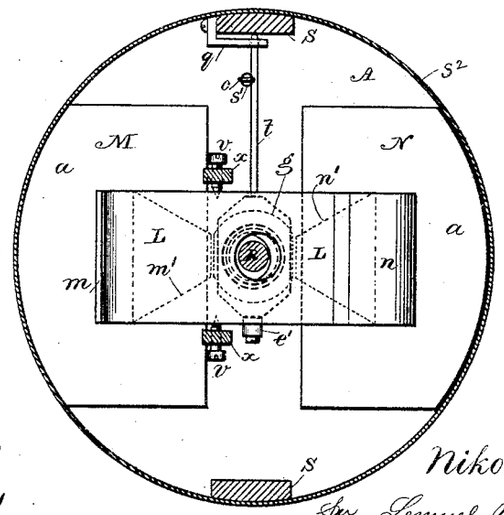

Witnesses

Chas. H. Smith

Geo. T. Pinckney

Inventor

Nikola Tesla

per Lemuel W. Serrell

atty

N. PETERS, Photo-Lithographer, Washington, D. C.

(No Model.)

2 Sheets—Sheet 2.

N. TESLA.

ELECTRIC ARC LAMP.

No. 335,787. Patented Feb. 9, 1886.

Fig. 5

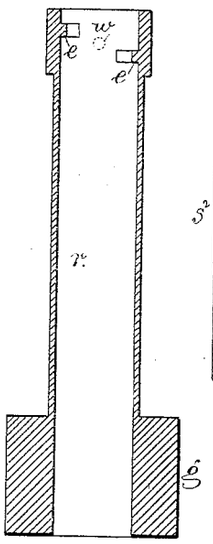

Fig. 3.

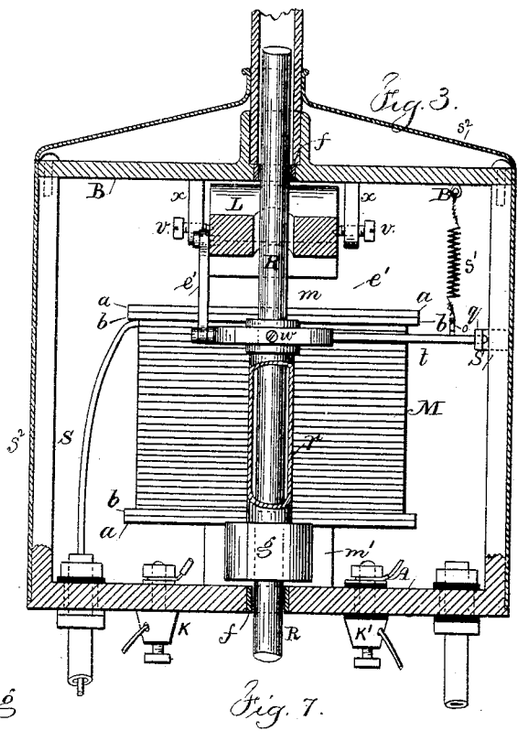

Fig. 7.

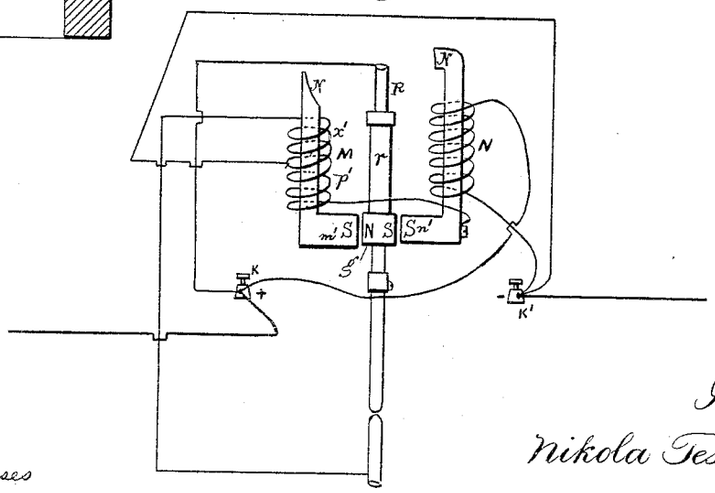

Witnesses

Chas. A. Smith

Geo. T. Pinckney

Inventor

Nikola Tesla

per Samuel W. Serrell

atty

N. PETERS, Photo-Lithographer, Washington, D. C.

UNITED STATES PATENT OFFICE.

NIKOLA TESLA, OF SMILJAN LIKA, AUSTRIA-HUNGARY, ASSIGNOR TO THE TESLA ELECTRIC LIGHT AND MANUFACTURING COMPANY, OF RAHWAY, NEW JERSEY.

ELECTRIC-ARC LAMP.

SPECIFICATION forming part of Letters Patent No. 335,787, dated February 9, 1886.

Application filed July 13, 1885. Serial No. 171,416. (No model.)

To all whom it may concern:

Be it known that I, NIKOLA TESLA, of Smiljan Lika, border country of Austria-Hungary, have invented certain Improvements in Electric-Arc Lamps, of which the following is a specification.

In another application, No. 160,574, filed by me March 30, 1885, I have shown and described a lamp having two magnets, in the main and shunt circuits, respectively, an armature-lever, and feed-mechanism connected to the armature-lever.

My present invention consists in some modifications of and improvements upon the devices shown in the application referred to.

In my present invention I further provide means for automatically withdrawing a lamp from the circuit, or cutting out the same, when, from a failure of the feed, the arc reaches an abnormal length, and also means for automatically reinserting such lamp in the circuit when the rod drops and the carbons come into contact.

My invention will be understood with reference to the accompanying drawings.

In the drawings, Figure 1 is an elevation of the lamp with the case in section. Fig. 2 is a sectional plan at the line *x x*. Fig. 3 is an elevation, partly in section, of the lamp at right angles to Fig. 1. Fig. 4 is a sectional plan at the line *y y* of Fig. 1. Fig. 5 is a section of the clamp in about full size. Fig. 6 is a detached section illustrating the connection of the spring to the lever that carries the pivots of the clamp, and Fig. 7 is a diagram showing the circuit-connections of the lamp.

In the drawings, Fig. 1, M represents the main and N the shunt magnet, both securely fastened to the base A, which, with its side columns, S S, is preferably cast in one piece of brass or other diamagnetic material. To the magnets are soldered or otherwise fastened the brass washers or disks *a a a a*. Similar washers, *b b*, of fiber or other insulating material, serve to insulate the wires from the brass washers.

The magnets M and N are made very flat, so that their width exceeds three times their thickness, or even more. In this way a comparatively small number of convolutions is sufficient to produce the required magnetism, besides a greater surface is offered for cooling off the wires.

The upper pole-pieces, *m n*, of the magnets are curved, as indicated in the drawings, Fig. 1. The lower pole-pieces, *m' n'*, are brought near together, tapering toward the armature *g*, as shown in Figs. 2 and 4. The object of this taper is to concentrate the greatest amount of the developed magnetism upon the armature, and also to allow the pull to be exerted always upon the middle of the armature *g*. This armature *g* is a piece of iron in the shape of a hollow cylinder, having on each side a segment cut away, the width of which is equal to the width of the pole-pieces *m' n'*.

The armature is soldered or otherwise fastened to the clamp *r*, which is formed of a brass tube, provided with gripping-jaws *e e*, Fig. 5. These jaws are arcs of a circle of the diameter of the rod R, and are made of some hard metal, preferably of hardened German silver. I also make the guides *f f*, through which the carbon-holding rod R slides, of the same material. This has the advantage to reduce greatly the wear and corrosion of the parts coming in frictional contact with the rod, which frequently causes trouble. The jaws *e e* are fastened to the inside of the tube *r*, so that one is a little lower than the other. The object of this is to provide a greater opening for the passage of the rod when the same is released by the clamp. The clamp *r* is supported on bearings *w w*, Figs. 1, 3 and 5, which are just in the middle between the jaws *e e*. I find this disposition to be the best. The bearings *w w* are carried by a lever, *t*, one end of which rests upon an adjustable support, *q*, of the side columns, S, the other end being connected by means of the link *e'* to the armature-lever L. The armature-lever L is a flat piece of iron in Z shape, having its ends curved so as to correspond to the form of the upper pole-pieces of the magnets M and N. It is hung upon the pivots *v v*, Fig. 2, which are in the jaw *x* of the top plate, B. This plate B, with the jaw, is preferably cast in one piece and screwed to the side columns, S S, that extend up from the base A. To partly balance the overweight of the moving parts a spring, *s'*,

Figs. 2 and 6, is fastened to the top plate, B, and hooked to the lever *t*. The hook *o* is toward one side of the lever or bent a little sidewise, as seen in Fig. 6. By this means a slight tendency is given to swing the armature toward the pole-piece *m'* of the main magnet.

The binding-posts K K' are preferably screwed to the base A. A manual switch, for short-circuiting the lamp when the carbons are renewed, is also to be fastened to the base. This switch is of ordinary character, and is not shown in the drawings.

The rod R is electrically connected to the lamp-frame by means of a flexible conductor or otherwise. The lamp-case receives a removable ornamental cover, s^2, around the same to inclose the parts.

The electrical connections are as indicated diagrammatically in Fig. 7.

The wire in the main magnet consists of two parts, *x'* and *p'*. These two parts may be in two separated coils or in one single helix, as shown in the drawings. The part *x'* being normally in circuit, is, with the fine wire upon the shunt-magnet, wound and traversed by the current in the same direction, so as to tend to produce similar poles, *n n* or *s s*, on the corresponding pole-pieces of the magnets M and N. The part *p'* is only in circuit when the lamp is cut out, and then the current being in the opposite direction produces in the main magnet magnetism of the opposite polarity.

The operation is as follows: At the start the carbons are to be in contact, and the current passes from the positive binding-post K to the lamp-frame, carbon-holder, upper and lower carbon, insulated return-wire in one of the side rods, and from there through the part *x'* of the wire on the main magnet to the negative binding-post. Upon the passage of the current the main magnet is energized and attracts the clamping-armature *g*, swinging the clamp and gripping the rod by means of the gripping-jaws *e e*. At the same time the armature-lever L is pulled down and the carbons separated. In pulling down the armature-lever L the main magnet is assisted by the shunt-magnet N, the latter being magnetized by magnetic induction from the magnet M.

It will be seen that the armatures L and *g* are practically the keepers for the magnets M and N, and owing to this fact both magnets with either one of the armatures L and *g* may be considered as one horseshoe-magnet, which we might term a "compound magnet." The whole of the soft-iron parts *m*, *m'*, *g*, *n'*, *n*, and L form a compound magnet.

The carbons being separated, the fine wire receives a portion of the current. Now, the magnetic induction from the magnet M is such as to produce opposite poles on the corresponding ends of the magnet N; but the current traversing the helices tends to produce similar poles on the corresponding ends of both magnets, and therefore as soon as the fine wire is traversed by sufficient current the magnetism of the whole compound magnet is diminished.

With regard to the armature *g* and the operation of the lamp, the pole *m'* may be termed as the "clamping" and the pole *n'* as the "releasing" pole.

As the carbons burn away, the fine wire receives more current and the magnetism diminishes in proportion. This causes the armature-lever L to swing and the armature *g* to descend gradually under the weight of the moving parts until the end *p*, Fig. 1, strikes a stop on the top plate, B. The adjustment is such that when this takes place the rod R is yet gripped securely by the jaws *e e*. The further downward movement of the armature-lever being prevented, the arc becomes longer as the carbons are consumed, and the compound magnet is weakened more and more until the clamping-armature *g* releases the hold of the gripping-jaws *e e* upon the rod R, and the rod is allowed to drop a little, shortening thus the arc. The fine wire now receiving less current, the magnetism increases, and the rod is clamped again and slightly raised, if necessary. This clamping and releasing of the rod continues until the carbons are consumed. In practice the feed is so sensitive that for the greatest part of the time the movement of the rod cannot be detected without some actual measurement. During the normal operation of the lamp the armature-lever L remains stationary, or nearly so, in the position shown in Fig. 1.

Should it arise that, owing to an imperfection in the rod, the same and the carbons drop too far, so as to make the arc too short, or even bring the carbons in contact, then a very small amount of current passes through the fine wire, and the compound magnet becomes sufficiently strong to act as on the start in pulling the armature-lever L down and separating the carbons to a greater distance.

It occurs often in practice that the rod sticks in the guides. In this case the arc reaches a great length, until it finally breaks. Then the light goes out, and frequently the fine wire is injured. To prevent such an accident, I provide my lamp with an automatic cut-out. This cut-out operates as follows: When, upon a failure of the feed, the arc reaches a certain predetermined length, such an amount of current is diverted through the fine wire that the polarity of the compound magnet is reversed. The clamping-armature *g* is now moved against the shunt-magnet N until it strikes the releasing-pole *n'*. As soon as the contact is established, the current passes from the positive binding-post over the clamp *r*, armature *g*, insulated shunt-magnet, and the helix *p'* upon the main magnet M to the negative binding-post. In this case the current passes in the opposite direction and changes the polarity of the magnet M, at the same time maintaining by magnetic induction in the core of shunt-magnet the required magnetism without reversal of polarity, and the armature *g* remains

against the shunt-magnet pole n'. The lamp is thus cut out as long as the carbons are separated. The cut-out may be used in this form without any further improvement; but I prefer to arrange it so that if the rod drops and the carbons come in contact the arc is started again. For this purpose I proportion the resistance of the part p' and the number of the convolutions of the wire upon the main magnet so that when the carbons come in contact a sufficient amount of current is diverted through the carbons and the part x' to destroy or neutralize the magnetism of the compound magnet. Then the armature g, having a slight tendency to approach to the clamping-pole m', comes out of contact with the releasing-pole n'. As soon as this happens, the current through the part p' is interrupted, and the whole current passes through the part x. The magnet M is now strongly magnetized, the armature g is attracted, and the rod clamped. At the same time the armature-lever L is pulled down out of its normal position and the arc started. In this way the lamp cuts itself out automatically when the arc gets so long, and reinserts itself automatically in the circuit if the carbons drop together.

It will be seen that the cut-out may be modified without departing from the spirit of my invention, as long as the shunt-magnet closes a circuit including a wire upon the main magnet and continues to keep the contact closed, being magnetized by magnetic induction from the main magnet. It is also obvious to say that the magnets and armatures may be of any desired shape.

I claim as my invention—

1. The combination, in an arc-lamp, of a main and a shunt magnet, an armature-lever to draw the arc, a clamp, and an armature to act upon the clamp, a clamping-pole and a releasing-pole upon the respective cores, the cores, poles, armature-lever, and clamping-armature forming a compound electro-magnet, substantially as set forth.

2. The combination, in an electric-arc lamp, of a carbon-holder and its rod, a clamp for such carbon-holder, a clamping-armature connected to the clamp, a compound electro-magnet controlling the action of the clamping-armature, and electric-circuit connections, substantially as set forth, for lessening the magnetism of the compound magnet when the arc between the carbons lengthens and augmenting the magnetism of the same when the arc is shortened, substantially as described.

3. The combination, with the carbon-holders in an electric lamp, of a clamp around the rod of the upper-carbon holder, the clamping-armature connected with said clamp, the armature-lever and connection from the same to the clamp, the main and shunt magnets, and the respective poles of the same to act upon the clamping-armature and armature-lever, respectively, substantially as set forth.

4. In an electric-arc lamp, a cut-out consisting of a main magnet, an armature, and a shunt-magnet having an insulated pole-piece, and the cut-out circuit-connections through the pole-piece and armature, substantially as set forth.

5. In an electric-arc lamp, the combination, with the carbon-holder and magnets, of the armatures L and g, link e', clamp r, and lever t, and the spring s', for the purpose set forth.

6. In an electric-arc lamp, the combination, with two upright magnets in the main and shunt circuits, respectively, having curved pole-pieces on one end and converging pole-pieces on the other end, of a flat Z-shaped armature-lever between the curved pole-pieces and a clamping-armature between the convergent pole-pieces, substantially as described.

7. The combination, in an electric-arc lamp, of an electro-magnet in the main circuit and an electro-magnet in the shunt-circuit, an armature under the influence of the poles of the respective magnets, and circuit-connections controlled by such armature to cut out or shunt the lamp, substantially as specified, whereby the branch circuit is closed by the magnetism of the shunt-magnet, and then kept closed by induced magnetism from the main magnet, substantially as set forth.

8. The combination, with the carbon-holder and rod and the main and shunt magnets, of a feeding-clamp, an armature for the same, clamping and releasing poles upon the cores of the respective magnets, and circuit-connections through the clamping-armature, substantially as specified, for shunting the current when the electric arc between the carbons becomes abnormally long, substantially as set forth.

9. The combination, with the carbon-holding rod and a clamp for the same, of an armature upon the clamp, a shunt-magnet the pole of which acts to release the clamp, and a main magnet with a two-part helix, one portion being in the main circuit and the other portion in a shunt or cut-out circuit, the clamping-armature acting to close said cut-out circuit when the arc becomes too long and to break the shunt-circuit when the carbons come together, substantially as set forth.

Signed by me this 11th day of July, A. D. 1885.

NIKOLA TESLA.

Witnesses:
GEO. T. PINCKNEY,
WILLIAM G. MOTT.

(No Model.) 2 Sheets—Sheet 1.

N. TESLA.

REGULATOR FOR DYNAMO ELECTRIC MACHINES.

No. 336,961. Patented Mar. 2, 1886.

Fig. 1.

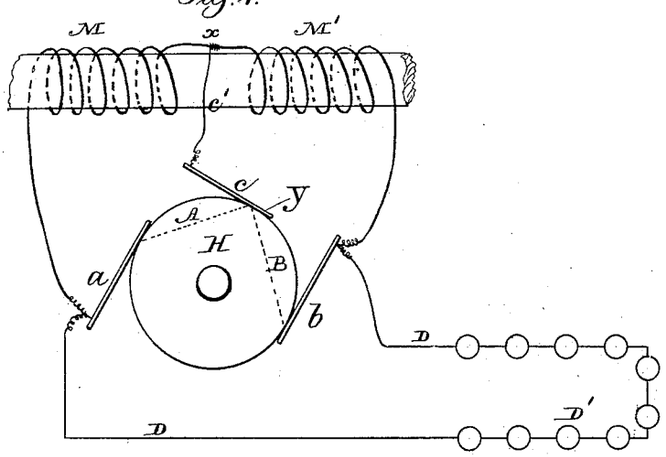

Fig. 2.

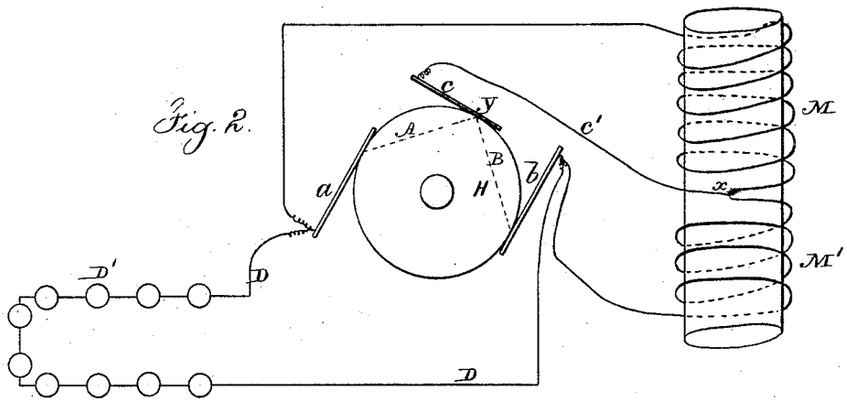

Fig. 3.

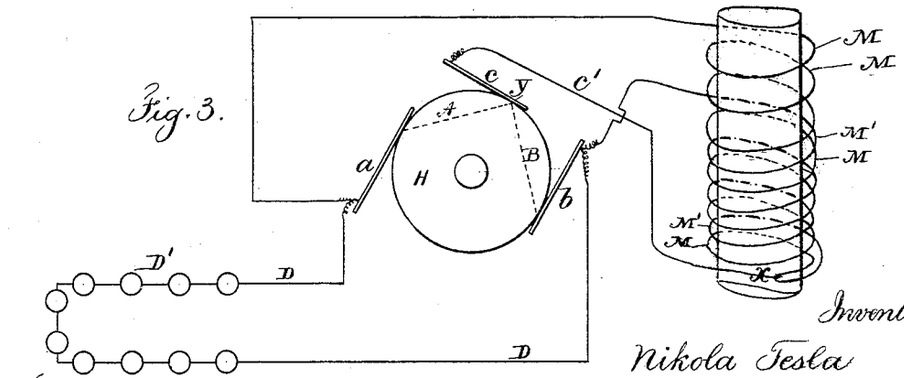

Witnesses
Chas. H. Smith
Geo. T. Pinckney

Inventor
Nikola Tesla
per Samuel W. Perrell
Atty

N. PETERS, Photo-Lithographer, Washington, D. C.

(No Model.) 2 Sheets—Sheet 2.

N. TESLA.

REGULATOR FOR DYNAMO ELECTRIC MACHINES.

No. 336,961. Patented Mar. 2, 1886.

Fig. 4

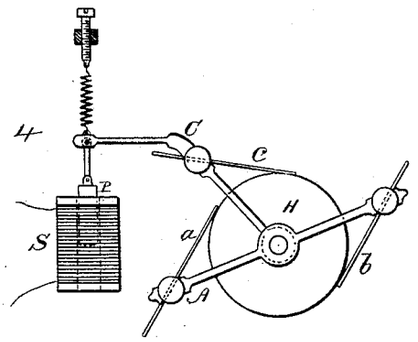

Fig. 5.

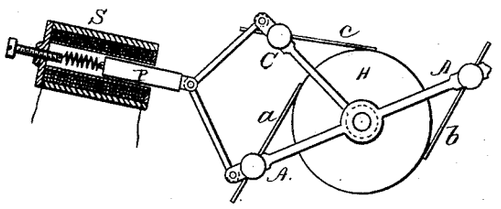

Fig. 6

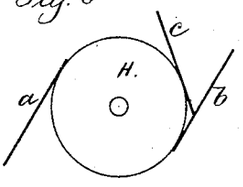

Witnesses

Chas. H. Smith

J. Stair

Inventor

Nikola Tesla

per Lemuel W. Serrell

atty

N. PETERS. Photo-Lithographer. Washington, D. C.

UNITED STATES PATENT OFFICE.

NIKOLA TESLA, OF SMILJAN LIKA, AUSTRIA-HUNGARY, ASSIGNOR TO THE TESLA ELECTRIC LIGHT AND MANUFACTURING COMPANY, OF RAHWAY, NEW JERSEY.

REGULATOR FOR DYNAMO-ELECTRIC MACHINES.

SPECIFICATION forming part of Letters Patent No. 336,961, dated March 2, 1886.

Application filed May 18, 1885. Serial No. 165,793. (No model.)

To all whom it may concern:

Be it known that I, NIKOLA TESLA, of Smiljan Lika, border country of Austria-Hungary, have invented an Improvement in Dynamo-Electric Machines, of which the following is a specification.

The object of my invention is to provide an improved method for regulating the current on dynamo-electric machines.

In my improvement I make use of two main brushes, to which the ends of the helices of the field-magnets are connected, and an auxiliary brush and a branch or shunt connection from an intermediate point of the field-wire to the auxiliary brush.

The relative positions of the respective brushes are varied, either automatically or by hand, so that the shunt becomes inoperative when the auxiliary brush has a certain position upon the commutator; but when said auxiliary brush is moved in its relation to the main brushes, or the latter are moved in their relation to the auxiliary brush, the electric condition is disturbed and more or less of the current through the field-helices is diverted through the shunt or a current passed over said shunt to the field-helices.

By varying the relative position upon the commutator of the respective brushes automatically in proportion to the varying electrical conditions of the working-circuit the current developed can be regulated in proportion to the demands in the working-circuit.

Devices for automatically moving the brushes in dynamo-electric machines are well known, and those made use of in my machine may be of any desired or known character.

In the drawings, Figure 1 is a diagram illustrating my invention, showing one core of the field-magnets with one helix wound in the same direction throughout. Figs. 2 and 3 are diagrams showing one core of the field-magnets with a portion of the helices wound in opposite directions. Figs. 4 and 5 are diagrams illustrating the electric devices that may be employed for automatically adjusting the brushes, and Fig. 6 is a diagram illustrating the positions of the brushes when the machine is being energized on the start.

a and *b* are the positive and negative brushes of the main or working circuit, and *c* the auxiliary brush. The working-circuit D extends from the brushes *a* and *b*, as usual, and contains electric lamps or other devices, D′, either in series or in multiple arc.

M M′ represent the field-helices, the ends of which are connected to the main brushes *a* and *b*. The branch or shunt wire *c′* extends from the auxiliary brush *c* to the circuit of the field-helices, and is connected to the same at an intermediate point, X.

H represents the commutator, with the plates of ordinary construction. It is now to be understood that when the auxiliary brush *c* occupies such a position upon the commutator that the electro-motive force between the brushes *a* and *c* is to the electro-motive force between the brushes *c* and *b* as the resistance of the circuit *a* M *c′ c* A to the resistance of the circuit *b* M′ *c′ c* B, the potentials of the points X and Y will be equal, and no current will flow over the auxiliary brush; but when the brush *c* occupies a different position the potentials of the points X and Y will be different, and a current will flow over the auxiliary brush to or from the commutator, according to the relative position of the brushes. If, for instance, the commutator-space between the brushes *a* and *c*, when the latter is at the neutral point, is diminished, a current will flow from the point Y over the shunt C to the brush *b*, thus strengthening the current in the part M′, and partly neutralizing the current in the part M; but if the space between the brushes *a* and *c* is increased, the current will flow over the auxiliary brush in an opposite direction, and the current in M will be stregthened, and in M′ partly neutralized.

By combining with the brushes *a*, *b*, and *c* any known automatic regulating mechanism the current developed can be regulated in proportion to the demands in the working-circuit. The parts M and M′ of the field-wire may be wound in the same direction. (In this case they are arranged as shown in Fig. 1; or, the part M may be wound in the opposite direction, as shown in Figs. 2 and 3.)

It will be apparent that the respective cores of the field-magnets are subjected to the neutralizing or intensifying effects of the current

in the shunt through c', and the magnetism of the cores will be partially neutralized or the point of greatest magnetism shifted, so that it will be more or less remote from or approaching to the armature, and hence the aggregate energizing actions of the field magnets on the armature will be correspondingly varied.

In the form indicated in Fig. 1 the regulation is effected by shifting the point of greatest magnetism, and in Figs. 2 and 3 the same effect is produced by the action of the current in the shunt passing through the neutralizing-helix.

The relative positions of the respective brushes may be varied by moving the auxiliary brush or the brush c may remain quiescent and the core p be connected to the main-brush holder A', so as to adjust the brushes $a\,b$ in their relation to the brush c. If, however, an adjustment is applied to all the brushes, as seen in Fig. 5, the solenoid should be connected to both A and C, so as to move them toward or away from each other.

There are several known devices for giving motion in proportion to an electric current. I have shown the moving cores in Figs. 4 and 5 as convenient devices for obtaining the required extent of motion with very slight changes in the current passing through the helices. It is understood that the adjustment of the main brushes causes variations in the strength of the current independently of the relative position of said brushes to the auxiliary brush. In all cases the adjustment may be such that no current flows over the auxiliary brush when the dynamo is running with its normal load.

In Figs. 4 and 5, A A indicate the main-brush holder, carrying the main brushes, and C the auxiliary-brush holder, carrying the auxiliary brush. These brush-holders are movable in arcs concentric with the center of the commutator-shaft. An iron piston, P, of the solenoid S, Fig. 4, is attached to the auxiliary-brush holder C. The adjustment is effected by means of a spring and screw or tightener.

In Fig. 5, instead of a solenoid, an iron tube inclosing a coil is shown. The piston of the coil is attached to both brush-holders A A and C. When the brushes are moved directly by electrical devices, as shown in Figs. 4 and 5, these are so constructed that the force exerted for adjusting is practically uniform through the whole length of motion.

I am aware that auxiliary brushes have been used in connection with the helices of the field-wire; but in these instances the helices received the entire current through the auxiliary brush or brushes, and said brushes could not be taken off without breaking the circuit through the field. These brushes caused, however, a great sparking upon the commutator. In my improvement the auxiliary brush causes very little or no sparking, and can be taken off without breaking the circuit through the field-helices.

My improvement has, besides, the advantage to facilitate the self-exciting of the machine in all cases where the resistance of the field-wire is very great comparatively to the resistance of the main circuit at the start—for instance, on arc-light machines. In this case I place the auxiliary brush c near to or in preference in contact with the brush b, as shown in Fig. 6. In this manner the part M' is completely cut out, and as the part M has a considerably smaller resistance than the whole length of the field-wire the machine excites itself, whereupon the auxiliary brush is shifted automatically to its normal position.

I claim as my invention—

The combination, with the commutator having two or more main brushes and an auxiliary brush, of the field-helices having their ends connected to the main brushes, and a branch or shunt connection from an intermediate point of the field-helices to the auxiliary brush, and means for varying the relative position upon the commutator of the respective brushes, substantially as set forth.

Signed by me this 13th day of May, A. D. 1885.

NIKOLA TESLA.

Witnesses:
GEO. T. PINCKNEY,
WALLACE L. SERRELL.

(No Model.) 2 Sheets—Sheet 1.

N. TESLA.

REGULATOR FOR DYNAMO ELECTRIC MACHINES.

No. 336,962. Patented Mar. 2, 1886.

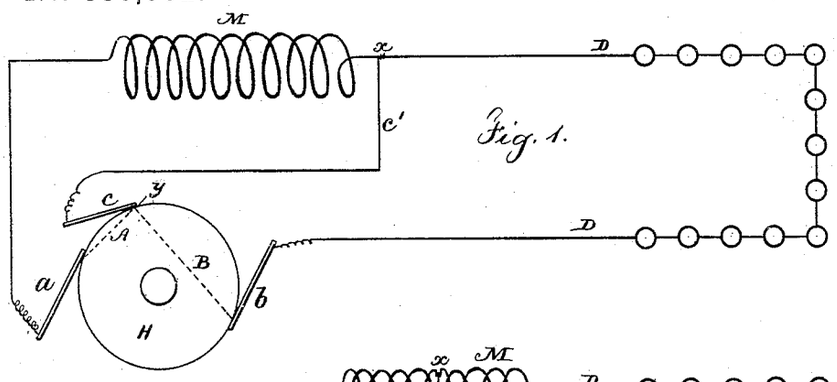

Fig. 1.

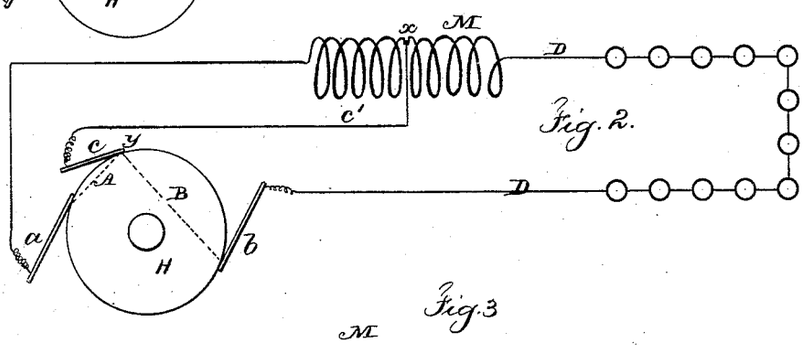

Fig. 2.

Fig. 3

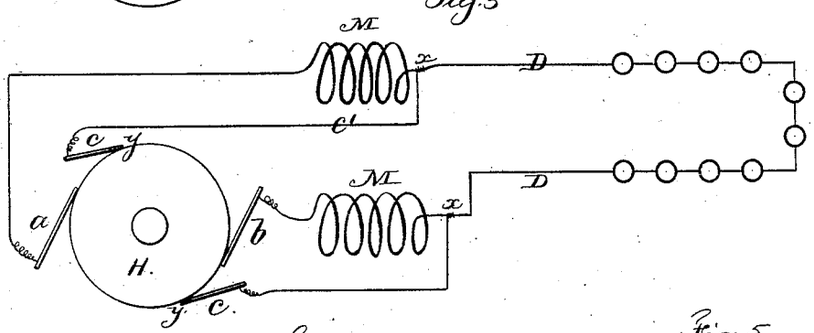

Fig. 4

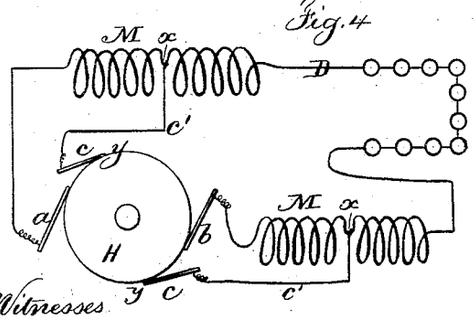

Fig. 5.

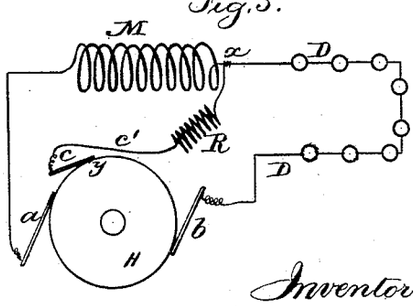

Witnesses

Chas. H. Smith

J. Stahl

Inventor

Nikola Tesla

per Lemuel W. Serrell

atty

N. PETERS. Photo-Lithographer, Washington, D. C.

(No Model.) 2 Sheets—Sheet 2.

N. TESLA.

REGULATOR FOR DYNAMO ELECTRIC MACHINES.

No. 336,962. Patented Mar. 2, 1886.

Fig. 6

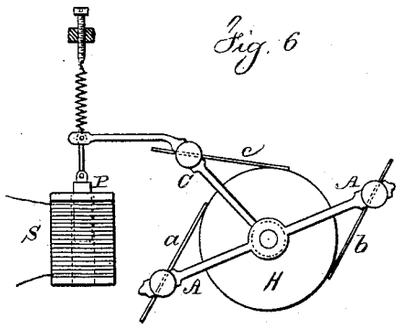

Fig. 7

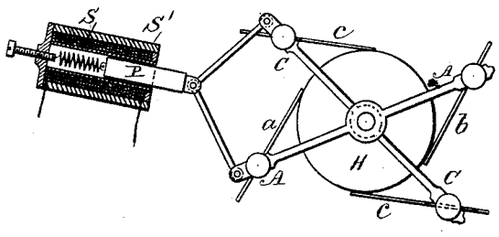

Witnesses

Chas. H. Smith

I. Staily

Inventor

Nikola Tesla

Lemuel W. Serrell

N. PETERS. Photo-Lithographer, Washington, D. C.

UNITED STATES PATENT OFFICE.

NIKOLA TESLA, OF SMILJAN LIKA, AUSTRIA-HUNGARY, ASSIGNOR TO THE TESLA ELECTRIC LIGHT AND MANUFACTURING COMPANY, OF RAHWAY, NEW JERSEY.

REGULATOR FOR DYNAMO-ELECTRIC MACHINES.

SPECIFICATION forming part of Letters Patent No. 336,962, dated March 2, 1886.

Application filed June 1, 1885. Serial No. 167,136. (No model.)

To all whom it may concern:

Be it known that I, NIKOLA TESLA, of Smiljan Lika, border country of Austria-Hungary, have invented an Improvement in Dynamo-Electric Machines, of which the following is a specification.

My invention is designed to provide an improved method for regulating the current in dynamo-electric machines.

In another application, No. 165,793, filed by me May 18, 1885, I have shown a method for regulating the current in a dynamo having the field-helices in a shunt. My present application relates to a dynamo having its field-helices connected in the main circuit.

In my improvement I employ one or more auxiliary brushes, by means of which I shunt a portion or the whole of the field-helices. According to the relative position upon the commutator of the respective brushes more or less current is caused to pass through the helices of the field, and the current developed by the machine can be varied at will by varying the relative positions of the brushes.

In the drawings the present invention is illustrated by diagrams, which are hereinafter separately referred to.

In Figure 1, *a* and *b* are the positive and negative brushes of the main circuit, and *c* an auxiliary brush. The main circuit D extends from the brushes *a* and *b*, as usual, and contains the helices M of the field-wire and the electric lamps or other working devices. The auxiliary brush *c* is connected to the point *x* of the main circuit by means of the wire *c'*. H is a commutator of ordinary construction.

From that which has been said in the application above referred to it will be seen that when the electro-motive force between the brushes *a* and *c* is to the electro-motive force between the brushes *c* and *b* as the resistance of the circuit *a* M *c' c* A to the resistance of the circuit *b* C B *c c'* D, the potentials of the points *x* and *y* will be equal, and no current will pass over the auxiliary brush *c;* but if said brush occupies a different position relatively to the main brushes the electric condition is disturbed, and current will flow either from *y* to *x* or from *x* to *y*, according to the relative position of the brushes. In the first case the current through the field-helices will be partly neutralized and the magnetism of the field-magnets diminished. In the second case the current will be increased and the magnets will gain strength. By combining with the brushes *a b c* any automatic regulating mechanism the current developed can be regulated automatically in proportion to the demands in the working-circuit.

In Figs. 6 and 7 I have represented some of the automatic means that may be used for moving the brushes. The core P, Fig. 6, of the solenoid-helix S, is connected with the brush *c* to move the same, and in Fig. 7 the core P is shown as within the helix S, and connected with both brushes *a* and *c*, so as to move the same toward or from each other, according to the strength of the current in the helix, the helix being within an iron tube, S', that becomes magnetized and increases the action of the solenoid.

In practice it is sufficient to move only the auxiliary brush, as shown in Fig. 6, as the regulation is very sensitive to the slightest changes; but the relative position of the auxiliary brush to the main brushes may be varied by moving the main brushes, or both main and auxiliary brushes may be moved, as illustrated in Fig. 7. In the latter two cases, it will be understood, the motion of the main brushes relatively to the neutral line of the machine causes variations in the strength of the current independently of their relative position to the auxiliary brush. In all cases the adjustment may be such that when the machine is running with the ordinary load no current flows over the auxiliary brush.

The field-helices may be connected as shown in Fig. 1, or a part of the field-helices may be in the outgoing and the other part in the return circuit, and two auxiliary brushes may be employed as shown in Figs. 3 and 4. Instead of shunting the whole of the field-helices, a portion only of such helices may be shunted, as shown in Figs. 2 and 4.

The arrangement shown in Fig. 4 is advantageous, as it diminishes the sparking upon the commutator, the main circuit being closed through the auxiliary brushes at the moment of the break of the circuit at the main brushes.

The field-helices may be wound in the same direction, or a part may be wound in opposite directions.

The connection between the helices and the auxiliary brush or brushes may be made by a wire of small resistance, or a resistance may be interposed (R, Fig. 5) between the point *x* and the auxiliary brush or brushes to divide the sensitiveness when the brushes are adjusted.

I am aware that it is not new to use auxiliary brushes on the commutator, and that auxiliary brushes have been connected to the field helices; but I am not aware that the helices of a series dynamo have been shunted by means of auxiliary brushes, and that the relative position of the respective brushes has been varied for the purpose of regulating the current developed by the machine.

In instances where auxiliary brushes have been used in connection with the field-helices said auxiliary brushes received the current continuously and caused great sparking, whereas in my invention the auxiliary brush receives current only when the normal electrical conditions of the circuit are disturbed.

I claim as my invention—

The combination, with the commutator and main brushes and one or more auxiliary brushes, of the field-helices in the main circuits and one or more shunt-connections from the field-helices to the auxiliary brushes, the relative positions upon the commutator of the respective brushes being adjustable, for the purpose set forth.

Signed by me this 16th day of May, A. D. 1885.

NIKOLA TESLA.

Witnesses:
GEO. T. PINCKNEY,
WALLACE L. SERRELL.

(No Model.)

N. TESLA.

REGULATOR FOR DYNAMO ELECTRIC MACHINES.

No. 350,954. Patented Oct. 19, 1886.

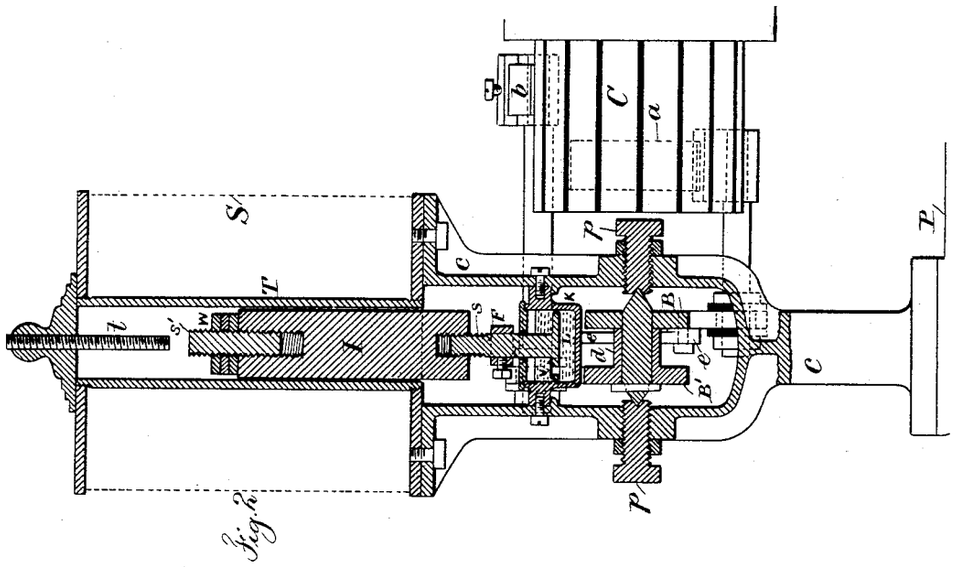

Fig. 2.

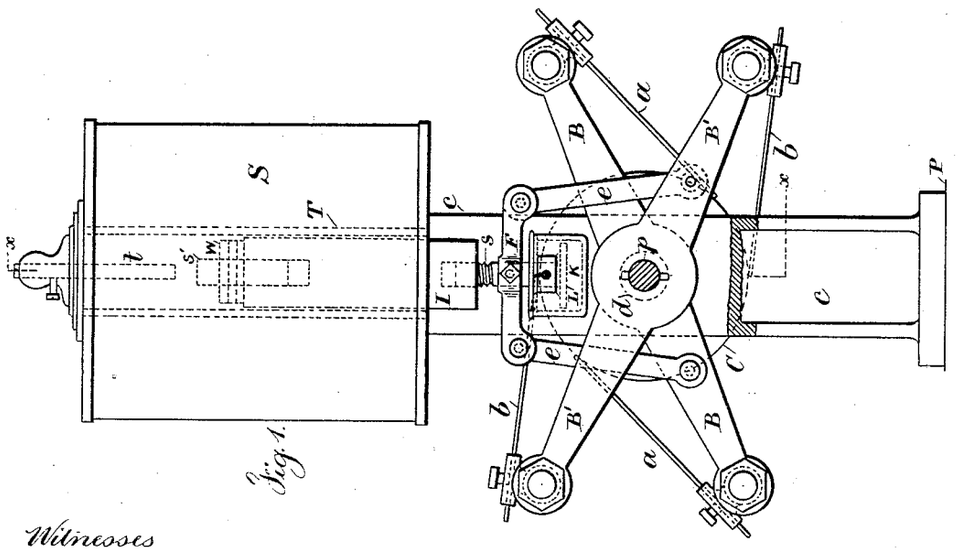

Fig. 1.

Witnesses

Chas. H. Smith

J. Stail

Inventor

Nikola Tesla.

per Lemuel W. Serrell

attor

N. PETERS, Photo-Lithographer, Washington, D. C.

UNITED STATES PATENT OFFICE.

NIKOLA TESLA, OF SMILJAN LIKA, AUSTRIA-HUNGARY, ASSIGNOR TO THE TESLA ELECTRIC LIGHT AND MANUFACTURING COMPANY, OF RAHWAY, NEW JERSEY.

REGULATOR FOR DYNAMO-ELECTRIC MACHINES.

SPECIFICATION forming part of Letters Patent No. 350,954, dated October 19, 1886.

Application filed January 14, 1886. Serial No. 188,539. (No model.)

To all whom it may concern:

Be it known that I, NIKOLA TESLA, from Smiljan Lika, border country of Austria-Hungary, have invented certain Improvements in Dynamo-Electric Machines, of which the following is a specification.

In other applications I have shown the commutator of a dynamo-machine with the main brushes connected in an electric circuit, and one or more auxiliary brushes serving to shunt a part or the whole of the field-coils, the regulation of the current being effected by shifting the respective brushes automatically upon the commutator in proportion to the varying resistances of the circuit.

My present invention relates to the mechanical devices which I employ to effect the shifting of the brushes.

My invention is clearly shown in the accompanying drawings, in which Figure 1 is an elevation of the regulator with the frame partly in section; and Fig. 2 is a section at the line *xx*, Fig. 1.

C is the commutator; B and B′, the brush-holders, B carrying the main brushes *a a′* and B′ the auxiliary or shunt brushes *b b*. The axis of the brush-holder B is supported by two pivot-screws, *p p*. The other brush-holder, B′, has a sleeve, *d*, and is movable around the axis of the brush-holder B. In this way both brush-holders can turn very freely, the friction of the parts being reduced to a minimum. Over the brush-holders is mounted the solenoid S, which rests upon a forked column, *c*. This column also affords a support for the pivots *p p*, and is fastened upon a solid bracket or projection, P, which extends from the base of the machine, and is preferably cast in one piece with the same. The brush-holders B B′ are connected by means of the links *e e* and the cross-piece F to the iron core I, which slides freely in the tube T of the solenoid. The iron core I has a screw, *s*, by means of which it can be raised and adjusted in its position relatively to the solenoid, so that the pull exerted upon it by the solenoid is practically uniform through the whole length of motion which is required to effect the regulation. In order to effect the adjustment with a greater precision the core I is provided with a small iron screw, *s′*. The core being first brought very nearly in the required position relatively to the solenoid by means of the screw *s*, the small screw *s′* is then adjusted until the magnetic attraction upon the core is the same when the core is in any position. A convenient stop, *t*, serves to limit the upward movement of the iron core.

To check somewhat the movement of the core I, a dash-pot, K, is used. The piston L of the dash-pot is provided with a valve, V, which opens by a downward pressure and allows an easy downward movement of the iron core I, but closes and checks the movement of the core when the same is pulled up under the action of the solenoid.

To balance the opposing forces, the weight of the moving parts, and the pull exerted by the solenoid upon the iron core, the weights W W may be used. The adjustment is such that when the solenoid is traversed by the normal current it is just strong enough to balance the downward pull of the parts.

The electrical circuit-connections are substantially the same, as indicated in my former applications, the solenoid being in series with the circuit when the translating devices are in series and in a shunt when the devices are in multiple arc.

The operation of the device is as follows: When upon a decrease of the resistance of the circuit or some other reason the current is increased, the solenoid S gains in strength and pulls up the iron core I, thus shifting the main brushes in the direction of rotation and the auxiliary brushes in the opposite way. This diminishes the strength of the current until the opposing forces are balanced and the solenoid is traversed by the normal current; but if from any cause the current in the circuit is diminished, then the weight of the moving parts overcomes the pull of the solenoid, the iron core I descends, thus shifting the brushes the opposite way and increasing the current to the normal strength. The dash-pot connected to the iron core I may be of ordinary construction; but I prefer, especially in machines for arc lights, to provide the piston of

the dash-pot with a valve, as indicated in the drawings. This valve permits a comparatively easy downward movement of the iron core, but checks its movement when it is drawn up by the solenoid. Such an arrangement has the advantage that a great number of lights may be put on without diminishing the light-power of the lamps in the circuit, as the brushes assume at once the proper position. When lights are cut out, the dash-pot acts to retard the movement; but if the current is considerably increased the solenoid gets abnormally strong and the brushes are shifted instantly.

The regulator being properly adjusted, lights or other devices may be put on or out with scarcely any perceptible difference.

It is obvious that instead of the dash-pot any other retarding device may be used.

I claim as my invention—

1. The combination, with the main and auxiliary brushes, of two brush-holders, an axis fastened to one of the brush-holders, supporting-screws for the same, a support for the other brush-holder surrounding the axis, a solenoid, a core for the same, and links connecting the core to the respective brush-holders, substantially as set forth.

2. The combination, with the brushes, brush-holders, and the axis upon which the brush-holders swing, of a solenoid and core, connections from the same to the brush-holders, and an adjusting-screw to limit the movements of the core, substantially as set forth.

3. The combination, with the brush-holders and their axes, of a solenoid and core, and a connection from the core to the brush-holders, and an iron screw at the inner end of the core to adjust the action of the magnetism on the core, substantially as set forth.

4. The combination, with the brushes, the brush-holders and their axes, of a solenoid and core, and connections to move the brush-holders, and a dash-pot provided with a valve, substantially as described, to diminish the speed of movement of the core in one direction more than the other, substantially as set forth.

5. The combination, with the brushes, the brush-holders and their axes, of a solenoid and core, and connections to move the brush-holders, and a dash-pot to diminish the speed of movement of the core, substantially as set forth.

6. The combination, with the brush-holders and the solenoid and core, of links connecting to the holders, and a screw to adjust the position of the core in relation to the solenoid, substantially as set forth.

Signed by me this 12th day of January, A. D. 1886.

NIKOLA TESLA.

Witnesses:
GEO. T. PINCKNEY,
WILLIAM G. MOTT.

(No Model.) 3 Sheets—Sheet 1.

N. TESLA.

DYNAMO ELECTRIC MACHINE.

No. 359,748. Patented Mar. 22, 1887.

Fig. 1.

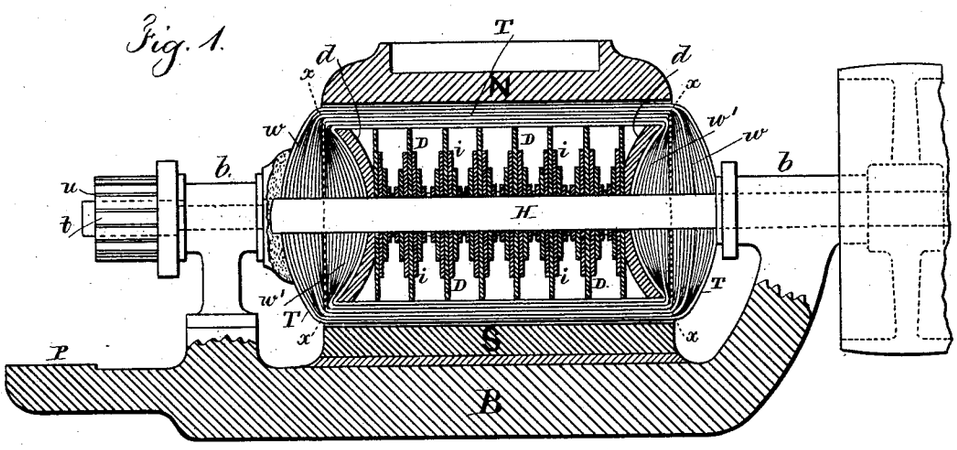

Fig. 3.

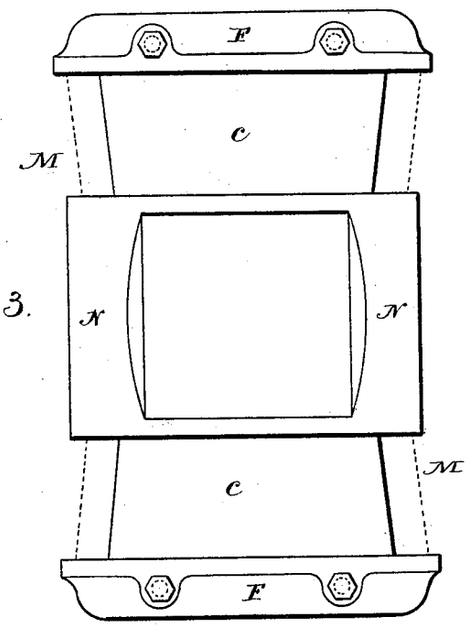

Witnesses

Chas. N. Smith

J. Stahl

Inventor

Nikola Tesla

per Lemuel W. Serrell

N. PETERS, Photo-Lithographer, Washington, D. C.

(No Model.) 3 Sheets—Sheet 2.

N. TESLA.

DYNAMO ELECTRIC MACHINE.

No. 359,748. Patented Mar. 22, 1887.

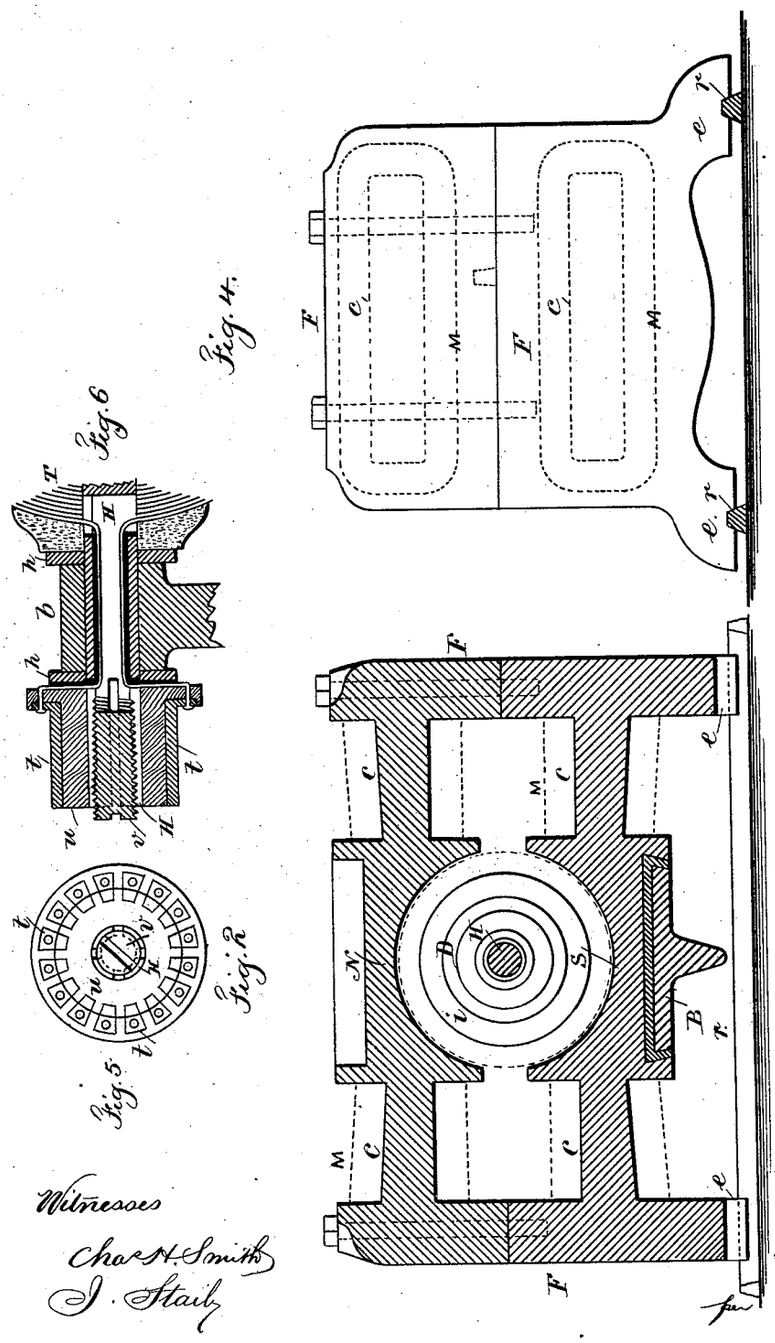

Witnesses
Chas. A. Smith
J. Stahl

Inventor
Nikola Tesla
L. W. Serrell
Atty

N. PETERS. Photo-Lithographer, Washington, D. C.

(No Model.) 3 Sheets—Sheet 3.

N. TESLA.

DYNAMO ELECTRIC MACHINE.

No. 359,748. Patented Mar. 22, 1887.

Fig. 7.

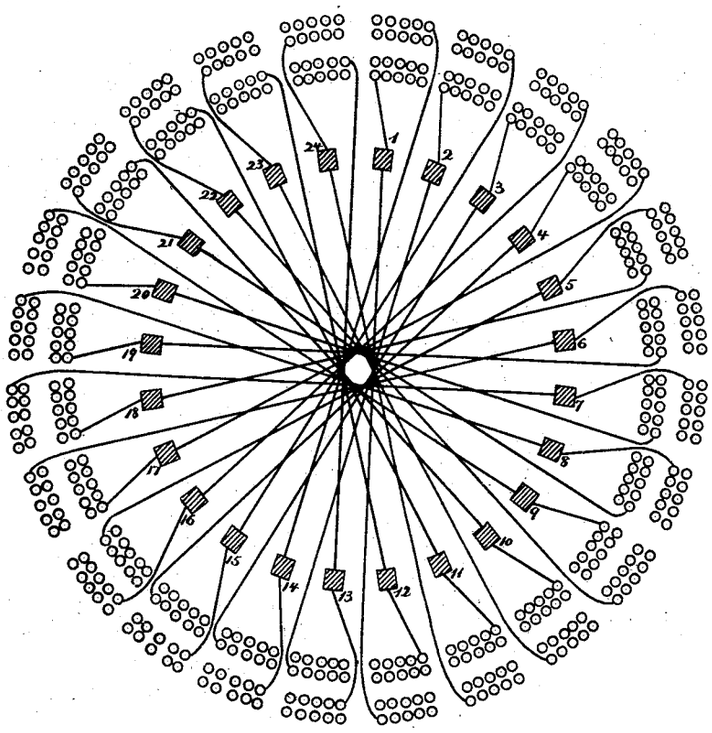

Witnesses

Chas. H. Smith

Geo. T. Pinckney

Inventor

Nikola Tesla

per Lemuel W. Serrell

atty

N. PETERS, Photo-Lithographer, Washington, D. C.

UNITED STATES PATENT OFFICE.

NIKOLA TESLA, OF SMILJAN LIKA, AUSTRIA-HUNGARY, ASSIGNOR TO THE TESLA ELECTRIC LIGHT AND MANUFACTURING COMPANY, OF RAHWAY, NEW JERSEY.

DYNAMO-ELECTRIC MACHINE.

SPECIFICATION forming part of Letters Patent No. 359,748, dated March 22, 1887.

Application filed January 14, 1886. Renewed December 1, 1886. Serial No. 220,370. (No model.)

To all whom it may concern:

Be it known that I, NIKOLA TESLA, of Smiljan Lika, border country of Austria-Hungary, have invented certain Improvements in Dynamo-Electric Machines, of which the following is a specification.

The main objects of my invention are to increase the efficiency of the machine and to facilitate and cheapen the construction of the same; and to this end my invention relates to the magnetic frame and the armature, and to other features of construction, hereinafter more fully explained.

My invention is illustrated in the accompanying drawings, in which Figure 1 is a longitudinal section, and Fig. 2 a cross-section, of the machine. Fig. 3 is a top view, and Fig. 4 a side view, of the magnetic frame. Fig. 5 is an end view of the commutator-bars, and Fig. 6 is a section of the shaft and commutator-bars. Fig. 7 is a diagram illustrating the coils of the armature and the connections to the commutator-plates.

The cores *c c c c* of the field-magnets may be tapering in both directions, as shown, for the purposes of concentrating the magnetism upon the middle of the pole-pieces.

The connecting-frame F F of the field-magnets is in the form indicated in the side view, Fig. 4, the lower part being provided with the spreading curved cast legs *e e*, so that the machine will rest firmly upon two base-bars, *r r*.

To the lower pole, S, of the field-magnet M is fastened, preferably by means of Babbitt or other fusible diamagnetic material, the base B, which is provided with bearings *b* for the armature-shaft H. The base B has a projection, P, which supports the brush-holders and the regulating devices, which may be of any ordinary character, or may be such as shown in an application of like date herewith.

The armature is constructed with the view to reduce to a minimum the loss of power due to the transversal or Foucault currents and to the change of polarity, and also to shorten as much as possible the length of the inactive wire wound upon the armature-core.

It is well known that when the armature is revolved between the poles of the field-magnets currents are generated in the iron body of the armature which develop heat, and consequently cause a waste of power. Owing to the mutual action of the lines of force, the magnetic properties of iron, and the speed of the different portions of the armature-core, these currents are generated principally on and near the surface of the armature-core, diminishing in strength gradually toward the center of the core. Their quantity is under same conditions proportional to the length of the iron body in the direction in which these currents are generated. By subdividing the iron core electrically in this direction the generation of these currents can be reduced to a great extent. For instance, if the length of the armature-core is twelve inches, and by a suitable construction the same is subdivided electrically, so that there are in the generating direction six inches of iron and six inches of intervening air-spaces or insulating material, the currents will be reduced to fifty per cent.

As shown in the drawings, the armature is constructed of thin iron disks D D D, of various diameters, fastened upon the armature-shaft in a suitable manner and arranged according to their sizes, so that a series of iron bodies, *i i i*, is formed, each of which diminishes in thickness from the center toward the periphery. At both ends of the armature the inwardly-curved disks *d d*, preferably of cast-iron, are fastened to the armature-shaft.

The armature-core being constructed as shown, it will be easily seen that on those portions of the armature that are the most remote from the axis, and where the currents are principally developed, the length of iron in the generating direction is only a small fraction of the total length of the armature-core, and besides this the iron body is subdivided in the generating direction, and therefore the Foucault currents are greatly reduced. Another cause of heating is the shifting of the poles of the armature-core. In consequence of the subdivision of the iron in the armature and the increased surface for radiation the risk of heating is lessened.

The iron disks D D D may be insulated or coated with some insulating-paint, a very care-

ful insulation being unnecessary, as an electrical contact between several disks can only occur on places where the generated currents are comparatively weak. An armature-core constructed in the manner described may be revolved between the poles of the field-magnets without showing the slightest increase of temperature.

The end disks, *d d*, which are of sufficient thickness and, for the sake of cheapness, preferably of cast-iron, are curved inwardly, as indicated in the drawings. The extent of the curve is dependent on the amount of wire to be wound upon the armatures. In my present invention the wire is wound upon the armature in two superimposed parts, and the curve of the end disks, *d d*, is so calculated that the first part—that is, practically half of the wire—just fills up the hollow space to the line *x x;* or, if the wire is wound in any other manner, the curve is such that when the whole of the wire is wound the outside mass of wires, *w*, and the inside mass of wires, *w'*, are equal at each side of the plane *x x*. In this case it will be seen the passive or electrically-inactive wires are of the smallest length practicable. The arrangement has further the advantage that the total lengths of the crossing wires at the two sides of the plane *x x* are practically equal.

To further equalize the armature-coils at both sides of the plates that are in contact with the brushes, the winding and connecting up is effected in the following manner: The whole wire is wound upon the armature-core in two superimposed parts, which are thoroughly insulated from each other. Each of these two parts is composed of three separated groups of coils. The first group of coils of the first part of wire being wound and connected to the commutator-bars in the usual manner, this group is insulated and the second group wound; but the coils of this second group instead of being connected to the next following commutator-bars, are connected to the directly-opposite bars of the commutator. The second group is then insulated and the third group wound, the coils of this group being connected to those bars to which they would be connected in the usual way. The wires are then thoroughly insulated and the second part of wire wound and connected in the same manner. Suppose, for instance, that there are twenty-four coils—that is, twelve in each part—and consequently twenty-four commutator-plates. There will be in each part three groups, each containing four coils, and the coils will be connected as follows:

	Groups.	*Commutator-bars.*
First part of wire	First	1— 5
	Second	17—21
	Third	9—13
Second part of wire	First	13—17
	Second	5— 9
	Third	21— 1

In constructing the armature-core and winding and connecting the coils in the manner indicated, the passive or electrically-inactive wire is reduced to a minimum, and the coils at each side of the plates that are in contact with the brushes are practically equal, and in this way the electrical efficiency of the machine is increased.

The commutator-plates *t* are shown as outside the bearing *b* of the armature-shaft. The shaft H is tubular and split at the end portion, and the wires are carried through the same in any usual manner and connected to the respective commutator-plates. The commutator-plates are upon a cylinder, *u*, and insulated, and this cylinder is to be properly placed and secured by expanding the split end of the shaft by a tapering screw-plug, *v*.

I do not claim herein the cores of the field-magnets converging toward the pole-pieces; nor do I claim the method of fastening the base to the lower field-magnet, as this has been claimed in my former application on dynamo-electric machines.

What I claim is—

1. In a dynamo-electric machine, the armature constructed of iron disks of various diameters arranged upon the shaft in such a manner that a series of iron bodies is formed, each diminishing in thickness from the center to the periphery, substantially as and for the purposes set forth.

2. In a dynamo-electric machine, the armature-core having iron disks of various diameters, in combination with inwardly-curved end disks, for the purposes and substantially as set forth.

3. In a dynamo-electric machine, an armature-core having inwardly-curved ends, in combination with the armature-coils, the crossing wires of which coils pass into the concave heads and project equally, substantially as set forth.

4. In a dynamo-electric machine, an armature having separate coils superimposed and connected to the commutator-plates in alternating groups, substantially as set forth.

5. An armature for dynamo-electric machines, having a core composed of disks of various diameters, in combination with separate superimposed coils connected to the commutator-plates in alternate groups, substantially as set forth.

6. In a dynamo-electric machine, the magnetic frame composed of the cores *c c c c*, the curved pole-pieces N S, and the connecting-frame with the curved and outwardly-projecting legs *e e*, substantially as described.

Signed by me this 12th day of January, A. D. 1886.

NIKOLA TESLA.

Witnesses:
GEO. T. PINCKNEY,
WALLACE L. SERRELL.

(No Model.) 4 Sheets—Sheet 1.

N. TESLA.

ELECTRO MAGNETIC MOTOR.

No. 381,968. Patented May 1, 1888.

Fig. 1.

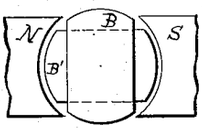

Fig. 2.

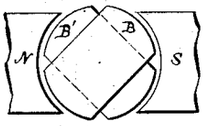

Fig. 3.

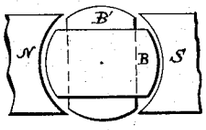

Fig. 4.

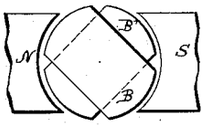

Fig. 5.

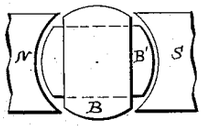

Fig. 6.

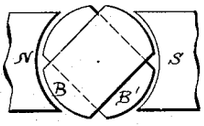

Fig. 7.

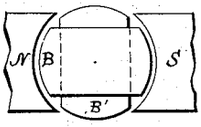

Fig. 8.

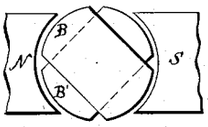

Fig. 1a.

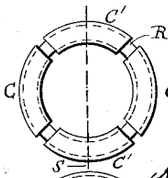

Fig. 2a.

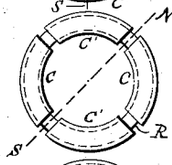

Fig. 3a.

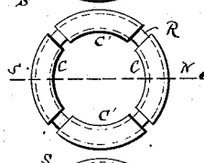

Fig. 4a.

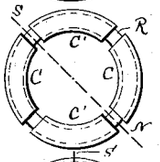

Fig. 5a.

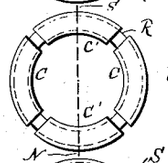

Fig. 6a.

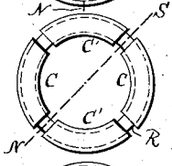

Fig. 7a.

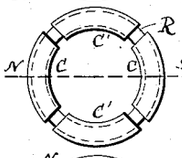

Fig. 8a.

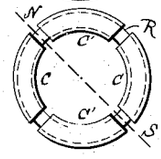

WITNESSES:

Frank E. Hartley
Frank B. Murphy.

INVENTOR.

Nikola Tesla,
BY
Duncan, Curtis & Page
ATTORNEYS.

(No Model.) 4 Sheets—Sheet 2.

N. TESLA.

ELECTRO MAGNETIC MOTOR.

No. 381,968. Patented May 1, 1888.

Fig: 9.

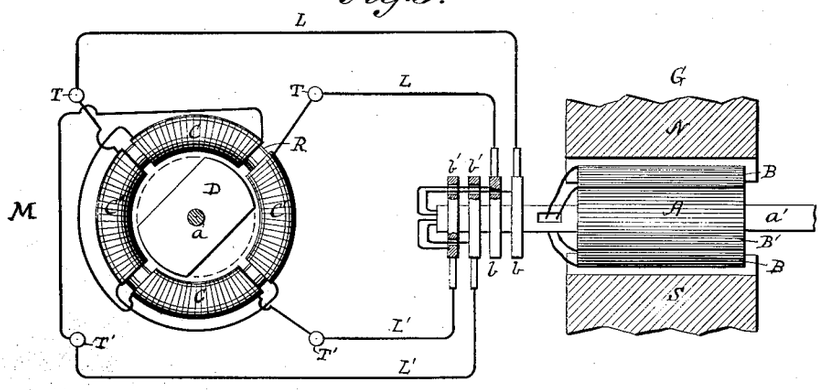

Fig: 10.

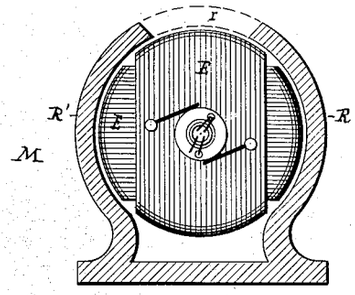

Fig: 11.

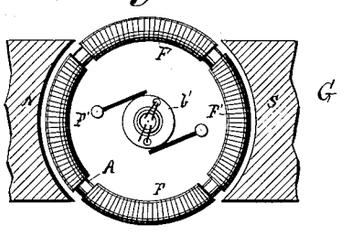

Fig: 12.

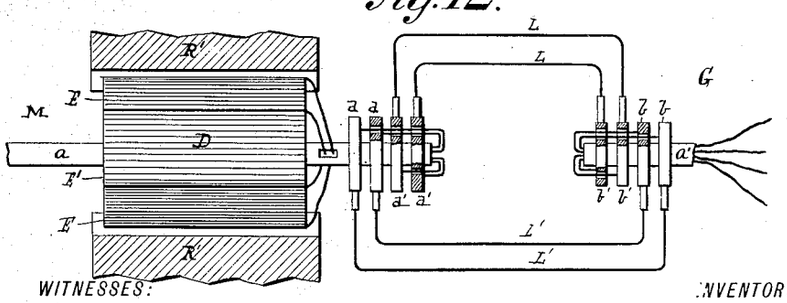

WITNESSES:

Frank E. Hartley.

Frank B. Murphy.

INVENTOR.

Nikola Tesla.

BY

Duncan, Curtis & Page

ATTORNEYS.

(No Model.) 4 Sheets—Sheet 3.

N. TESLA.

ELECTRO MAGNETIC MOTOR.

No. 381,968. Patented May 1, 1888.

Fig. 13.

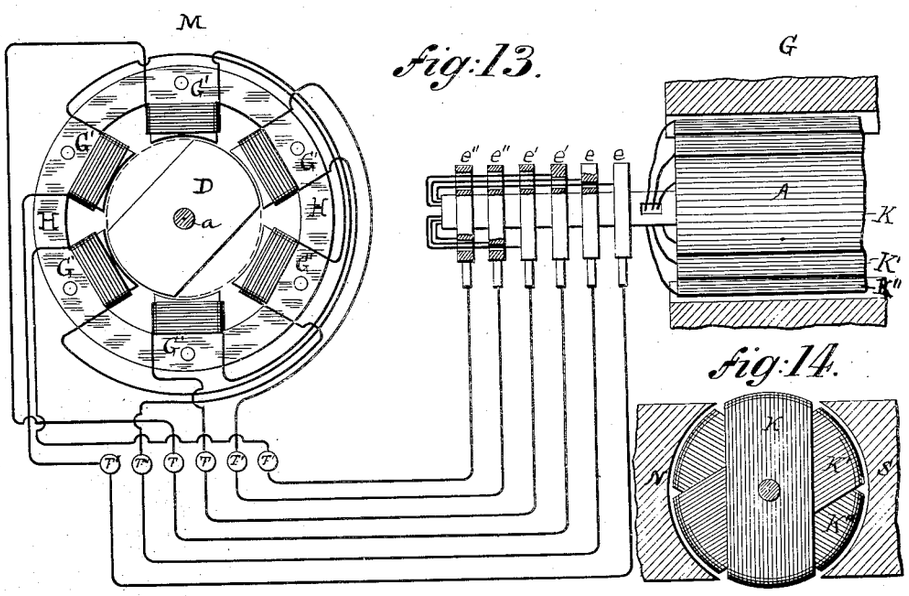

Fig. 14.

Fig. 15.

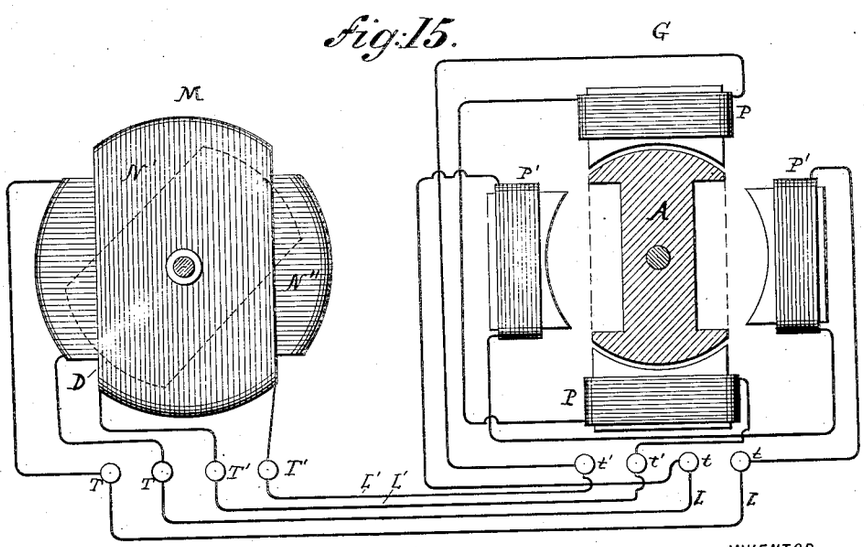

Fig. 16.

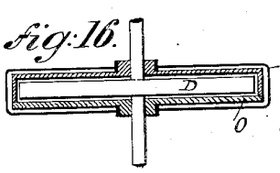

WITNESSES:

Frank E. Hartley.

Frank B. Murphy.

INVENTOR.

Nikola Tesla.

BY

Duncan, Curtis & Page

ATTORNEYS.

(No Model.) 4 Sheets—Sheet 4.

N. TESLA.

ELECTRO MAGNETIC MOTOR.

No. 381,968. Patented May 1, 1888.

Fig. 17.

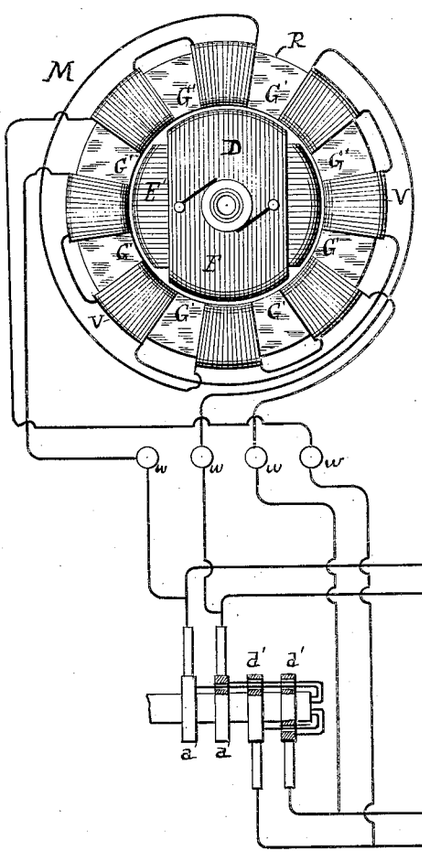

Fig. 18.

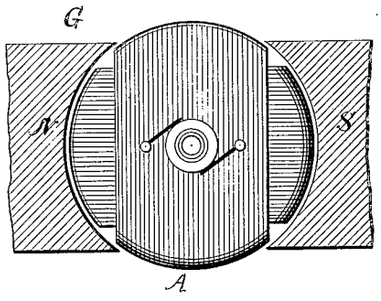

Fig. 19

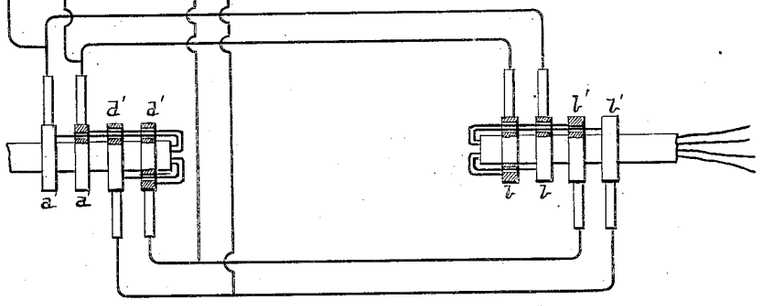

WITNESSES:

Frank E. Hartley.
Frank B. Murphy.

INVENTOR.
Nikola Tesla,
BY
Duncan, Curtis & Page
ATTORNEYS.

UNITED STATES PATENT OFFICE.

NIKOLA TESLA, OF NEW YORK, N. Y., ASSIGNOR OF ONE-HALF TO CHARLES F. PECK, OF ENGLEWOOD, NEW JERSEY.

ELECTRO-MAGNETIC MOTOR.

SPECIFICATION forming part of Letters Patent No. 381,968, dated May 1, 1888.

Application filed October 12, 1887. Serial No. 252,132. (No model.)

To all whom it may concern:

Be it known that I, NIKOLA TESLA, from Smiljan Lika, border country of Austria-Hungary, residing at New York, N. Y., have invented certain new and useful Improvements in Electro-Magnetic Motors, of which the following is a specification, reference being had to the drawings accompanying and forming a part of the same.

The practical solution of the problem of the electrical conversion and transmission of mechanical energy involves certain requirements which the apparatus and systems heretofore employed have not been capable of fulfilling. Such a solution, primarily, demands a uniformity of speed in the motor irrespective of its load within its normal working limits. On the other hand, it is necessary, to attain a greater economy of conversion than has heretofore existed, to construct cheaper and more reliable and simple apparatus, and, lastly, the apparatus must be capable of easy management, and such that all danger from the use of currents of high tension, which are necessary to an economical transmission, may be avoided.

My present invention is directed to the production and improvement of apparatus capable of more nearly meeting these requirements than those heretofore available, and though I have described various means for the purpose, they involve the same main principles of construction and mode of operation, which may be described as follows: A motor is employed in which there are two or more independent circuits through which alternate currents are passed at proper intervals, in the manner hereinafter described, for the purpose of effecting a progressive shifting of the magnetism or of the "lines of force" in accordance with the well-known theory, and a consequent action of the motor. It is obvious that a proper progressive shifting of the lines of force may be utilized to set up a movement or rotation of either element of the motor, the armature, or the field-magnet, and that if the currents directed through the several circuits of the motor are in the proper direction no commutator for the motor will be required; but to avoid all the usual commutating appliances in the system I prefer to connect the motor-circuits directly with those of a suitable alternate-current generator. The practical results of such a system, its economical advantages, and the mode of its construction and operation will be described more in detail by reference to the accompanying diagrams and drawings.

Figures 1 to 8 and 1^a to 8^a, inclusive, are diagrams illustrating the principle of the action of my invention. The remaining figures are views of the apparatus in various forms by means of which the invention may be carried into effect, and which will be described in their order.

Referring first to Fig. 9, which is a diagrammatic representation of a motor, a generator, and connecting-circuits in accordance with my invention, M is the motor, and G the generator for driving it. The motor comprises a ring or annulus, R, preferably built up of thin insulated iron rings or annular plates, so as to be as susceptible as possible to variations in its magnetic condition. This ring is surrounded by four coils of insulated wire symmetrically placed, and designated by C C′ C C′. The diametrically-opposite coils are connected up so as to co-operate in pairs in producing free poles on diametrically-opposite parts of the ring. The four free ends thus left are connected to terminals T T T′ T′, as indicated. Near the ring, and preferably inside of it, there is mounted on an axis or shaft, *a*, a magnetic disk, D, generally circular in shape, but having two segments cut away, as shown. This disk is mounted so as to turn freely within the ring R. The generator G is of any ordinary type, that shown in the present instance having field-magnets N S and a cylindrical armature-core, A, wound with the two coils B B′. The free ends of each coil are carried through the shaft *a′* and connected, respectively, to insulated contact-rings *b b′ b′*. Any convenient form of collector or brush bears on each ring and forms a terminal by which the current to and from a ring is conveyed. These terminals are connected to the terminals of the motor by the wires L and L′ in the manner indicated, whereby two complete circuits are formed—one including, say, the coils B of

the generator C' C' of the motor, and the other the remaining coils B' and C C of the generator and the motor.

It remains now to explain the mode of operation of this system, and for this purpose I refer to the diagrams, Figs. 1 to 8, and 1ª to 8ª, for an illustration of the various phases through which the coils of the generator pass when in operation, and the corresponding and resultant magnetic changes produced in the motor. The revolution of the armature of the generator between the field-magnets N S obviously produces in the coils B B' alternating currents, the intensity and direction of which depend upon well-known laws. In the position of the coils indicated in Fig. 1 the current in the coil B is practically *nil*, whereas the coil B' at the same time is developing its maximum current, and by the means indicated in the description of Fig. 9 the circuit including this coil B' may also include, say, the coils C C of the motor, Fig. 1ª. The result, with the proper connections, would be the magnetization of the ring R', the poles being on the line N S. The same order of connections being observed between the coil B and the coils C', the latter, when traversed by a current, tend to fix the poles at right angles to the line N S of Fig. 1ª. It results, therefore, that when the generator-coils have made one eighth of a revolution, reaching the position shown in Fig. 2, both pairs of coils C and C' will be traversed by currents and act in opposition, in so far as the location of the poles is concerned. The position of the poles will therefore be the resultant of the magnetizing forces of the coils—that is to say, it will advance along the ring to a position corresponding to one-eighth of the revolution of the armature of the generator. In Fig. 3 the armature of the generator has progressed to one-quarter of a revolution. At the point indicated the current in the coil B is maximum, while in B' it is *nil*, the latter coil being in its neutral position. The poles of the ring R in Fig. 3ª will, in consequence, be shifted to a position ninety degrees from that at the start, as shown. I have in like manner shown the conditions existing at each successive eighth of one revolution in the remaining figures. A short reference to these figures will suffice for an understanding of their significance. Figs. 4 and 4ª illustrate the conditions which exist when the generator-armature has completed three eighths of a revolution. Here both coils are generating current; but the coil B', having now entered the opposite field, is generating a current in the opposite direction, having the opposite magnetizing effect; hence the resultant pole will be on the line N S, as shown. In Fig. 5 one-half of one revolution of the armature of the generator has been completed, and the resulting magnetic condition of the ring is shown in Fig. 5ª. In this phase coil B is in the neutral position while coil B' is generating its maximum current, which is in the same direction as in Fig. 4. The poles will consequently be shifted through one half of the ring. In Fig. 6 the armature has completed five-eighths of a revolution. In this position coil B' develops a less powerful current, but in the same direction as before. The coil B, on the other hand, having entered a field of opposite polarity, generates a current of opposite direction. The resultant poles will therefore be in the line N S, Fig. 6ª, or, in other words, the poles of the ring will be shifted along five-eighths of its periphery. Figs. 7 and 7ª in the same manner illustrate the phases of the generator and ring at three-quarters of a revolution, and Figs. 8 and 8ª the same at seven-eighths of a revolution of the generator-armature. These figures will be readily understood from the foregoing. When a complete revolution is accomplished, the conditions existing at the start are re-established and the same action is repeated for the next and all subsequent revolutions, and, in general, it will now be seen that every revolution of the armature of the generator produces a corresponding shifting of the poles or lines of force around the ring. This effect I utilize in producing the rotation of a body or armature in a variety of ways—for example, applying the principle above described to the apparatus shown in Fig. 9. The disk D, owing to its tendency to assume that position in which it embraces the greatest possible number of the magnetic lines, is set in rotation, following the motion of the lines or the points of greatest attraction.

The disk D in Fig. 9 is shown as cut away on opposite sides; but this, I have found, is not essential to effecting its rotation, as a circular disk, as indicated by dotted lines, is also set in rotation. This phenomenon I attribute to a certain inertia or resistance inherent in the metal to the rapid shifting of the lines of force through the same, which results in a continuous tangential pull upon the disk, causing its rotation. This seems to be confirmed by the fact that a circular disk of steel is more effectively rotated than one of soft iron, for the reason that the former is assumed to possess a greater resistance to the shifting of the magnetic lines.

In illustration of other forms of my invention, I shall now describe the remaining figures of the drawings.

Fig. 10 is a view in elevation and part vertical section of a motor. Fig. 12 is a top view of the same with the field in section and a diagram of connections. Fig. 11 is an end or side view of a generator with the fields in section. This form of motor may be used in place of that shown above. D is a cylindrical or drum-armature core, which, for obvious reasons, should be split up as far as practicable to prevent the circulation within it of currents of induction. The core is wound longitudinally with two coils, E and E', the ends of which are respectively connected to insulated contact-rings *d d d' d'*, carried by the shaft *a*, upon which the armature is mounted. The armature is set to revolve within an iron shell, R',

which constitutes the field-magnet, or other element of the motor. This shell is preferably formed with a slot or opening, *r*, but it may be continuous, as shown by the dotted lines, and in this event it is preferably made of steel. It is also desirable that this shell should be divided up similarly to the armature and for similar reasons. As a generator for driving this motor I may use the device shown in Fig. 11. This represents an annular or ring armature, A, surrounded by four coils, F F F′ F′, of which those diametrically opposite are connected in series, so that four free ends are left, which are connected to the insulated contact-rings *b b b′ b′*. The ring is suitably mounted on a shaft, *a′*, between the poles N S. The contact-rings of each pair of generator-coils are connected to these of the motor, respectively, by means of contact-brushes and the two pairs of conductors L L and L′ L′, as indicated diagrammatically in Fig. 12. Now it is obvious from a consideration of the preceding figures that the rotation of the generator-ring produces currents in the coils F F′, which, being transmitted to the motor-coils, impart to the core of the latter magnetic poles constantly shifting or whirling around the core. This effect sets up a rotation of the armature owing to the attractive force between the shell and the poles of the armature, but inasmuch as the coils in this case move relative to the shell or field-magnet the movement of the coils is in the opposite direction to the progressive shifting of the poles.

Other arrangements of the coils of both generator and motor are possible, and a greater number of circuits may be used, as will be seen in the two succeeding figures.

Fig. 13 is a diagrammatic illustration of a motor and a generator constructed and connected in accordance with my invention. Fig. 14 is an end view of the generator with its field-magnets in section. The field of the motor M is produced by six magnetic poles, G′ G′, secured to or projecting from a ring or frame, H. These magnets or poles are wound with insulated coils, those diametrically opposite to each other being connected in pairs so as to produce opposite poles in each pair. This leaves six free ends, which are connected to the terminals T T T′ T′ T″ T″. The armature, which is mounted to rotate between the poles, is a cylinder or disk, D, of wrought-iron, mounted on the shaft *a*. Two segments of the same are cut away, as shown. The generator for this motor has in this instance an armature, A, wound with three coils, K K′ K″, at sixty degrees apart. The ends of these coils are connected, respectively, to insulated contact-rings *e e e′ e′ e″ e″*. These rings are connected to those of the motor in proper order by means of collecting-brushes and six wires, forming three independent circuits. The variations in the strength and direction of the currents transmitted through these circuits and traversing the coils of the motor produce a steadily-progressive shifting of the resultant attractive force exerted by the poles G′ upon the armature D, and consequently keep the armature rapidly rotating. The peculiar advantage of this disposition is in obtaining a more concentrated and powerful field. The application of this principle to systems involving multiple circuits generally will be understood from this apparatus.

Referring, now, to Figs. 15 and 16, Fig. 15 is a diagrammatic representation of a modified disposition of my invention. Fig. 16 is a horizontal cross-section of the motor. In this case a disk, D, of magnetic metal, preferably cut away at opposite edges, as shown in dotted lines in Fig. 15, is mounted so as to turn freely inside two stationary coils, N′ N″, placed at right angles to one another. The coils are preferably wound on a frame, O, of insulating material, and their ends are connected to the fixed terminals T T T′ T′. The generator G is a representative of that class of alternating-current machines in which a stationary induced element is employed. That shown consists of a revolving permanent or electro magnet, A, and four independent stationary magnets, P P′, wound with coils, those diametrically opposite to each other being connected in series and having their ends secured to the terminals *t t t′ t′*. From these terminals the currents are led to the terminals of the motor, as shown in the drawings. The mode of operation is substantially the same as in the previous cases, the currents traversing the coils of the motor having the effect to turn the disk D. This mode of carrying out the invention has the advantage of dispensing with the sliding contacts in the system.

In the forms of motor above described only one of the elements, the armature or the field-magnet, is provided with energizing-coils. It remains, then, to show how both elements may be wound with coils. Reference is therefore had to Figs. 17, 18, and 19. Fig. 17 is an end view of such a motor. Fig. 18 is a similar view of the generator with the field-magnets in section, and Fig. 19 is a diagram of the circuit-connections. In Fig. 17 the field-magnet of the motor consists of a ring, R, preferably of thin insulated iron sheets or bands with eight pole pieces, G′, and corresponding recesses, in which four pairs of coils, V, are wound. The diametrically opposite pairs of coils are connected in series and the free ends connected to four terminals, *w*, the rule to be followed in connecting being the same as hereinbefore explained. An armature, D, with two coils, E E′, at right angles to each other, is mounted to rotate in side of the field-magnet R. The ends of the armature-coils are connected to two pairs of contact-rings, *d d d′ d′*, Fig. 19. The generator for this motor may be of any suitable kind to produce currents of the desired character. In the present instance it consists of a field-magnet, N S, and an armature, A, with two coils at right angles, the ends of which are connected to four contact-rings, *b b b′ b′*, carried by its shaft. The circuit-connections are es-

tablished between the rings on the generator-shaft and those on the motor-shaft by collecting brushes and wires, as previously explained. In order to properly energize the field-magnet of the motor, however, the connections are so made with the armature coils or wires leading thereto that while the points of greatest attraction or greatest density of magnetic lines of force upon the armature are shifted in one direction those upon the field-magnet are made to progress in an opposite direction. In other respects the operation is identically the same as in the other cases cited. This arrangement results in an increased speed of rotation. In Figs. 17 and 19, for example, the terminals of each set of field-coils are connected with the wires to the two armature-coils in such way that the field-coils will maintain opposite poles in advance of the poles of the armature.

In the drawings the field-coils are in shunts to the armature, but they may be in series or in independent circuits.

It is obvious that the same principle may be applied to the various typical forms of motor hereinbefore described.

Having now described the nature of my invention and some of the various ways in which it is or may be carried into effect, I would call attention to certain characteristics which the applications of the invention possess and the advantages which the invention secures.

In my motor, considering for convenience that represented in Fig. 9, it will be observed that since the disk D has a tendency to follow continuously the points of greatest attraction, and since these points are shifted around the ring once for each revolution of the armature of the generator, it follows that the movement of the disk D will be synchronous with that of the armature A. This feature by practical demonstrations I have found to exist in all other forms in which one revolution of the armature of the generator produces a shifting of the poles of the motor through three hundred and sixty degrees.

In the particular construction shown in Fig. 15, or in others constructed on a similar plan, the number of alternating impulses resulting from one revolution of the generator armature is double as compared with the preceding cases, and the polarities in the motor are shifted around twice by one revolution of the generator-armature. The speed of the motor will, therefore, be twice that of the generator. The same result is evidently obtained by such a disposition as that shown in Fig. 17, where the poles of both elements are shifted in opposite directions.

Again, considering the apparatus illustrated by Fig. 9 as typical of the invention, it is obvious that since the attractive effect upon the disk D is greatest when the disk is in its proper relative position to the poles developed in the ring R—that is to say, when its ends or poles immediately follow those of the ring—the speed of the motor for all the loads within the normal working limits of the motor will be practically constant. It is clearly apparent that the speed can never exceed the arbitrary limit as determined by the generator, and also that within certain limits at least the speed of the motor will be independent of the strength of the current.

It will now be more readily seen from the above description how far the requirements of a practical system of electrical transmission of power are realized in my invention. I secure, first, a uniform speed under all loads within the normal working limits of the motor without the use of any auxiliary regulator; second, synchronism between the motor and generator; third, greater efficiency by the more direct application of the current, no commutating devices being required on either the motor or generator; fourth, cheapness and simplicity of mechanical construction and economy in maintenance; fifth, the capability of being very easily managed or controlled; and, sixth, diminution of danger from injury to persons and apparatus.

These motors may be run in series, multiple arc or multiple series, under conditions well understood by those skilled in the art.

The means or devices for carrying out the principle may be varied to a far greater extent than I have been able to indicate; but I regard as within my invention, and I desire to secure by Letters Patent in general, motors containing two or more independent circuits through which the operating-currents are led in the manner described. By "independent" I do not mean to imply that the circuits are necessarily isolated from one another, for in some instances there might be electrical connections between them to regulate or modify the action of the motor without necessarily producing a new or different action.

I am aware that the rotation of the armature of a motor wound with two energizing-coils at right angles to each other has been effected by an intermittent shifting of the energizing effect of both coils through which a direct current by means of mechanical devices has been transmitted in alternately-opposite directions; but this method or plan I regard as absolutely impracticable for the purposes for which my invention is designed—at least on any extended scale—for the reasons, mainly, that a great waste of energy is necessarily involved unless the number of energizing-circuits is very great, and that the interruption and reversal of a current of any considerable strength by means of any known mechanical devices is a matter of the greatest difficulty and expense.

In this application I do not claim the method of operating motors which is herein involved, having made separate application for such method.

I therefore claim the following:

1. The combination, with a motor containing separate or independent circuits on the armature or field-magnet, or both, of an alternating-current generator containing induced

circuits connected independently to corresponding circuits in the motor, whereby a rotation of the generator produces a progressive shifting of the poles of the motor, as herein described.

2. In a system for the electrical transmission of power, the combination of a motor provided with two or more independent magnetizing-coils and an alternating-current generator containing induced coils corresponding to the motor-coils, and circuits connecting directly the motor and generator coils in such order that the currents developed by the generator will be passed through the corresponding motor-coils, and thereby produce a progressive shifting of the poles of the motor, as herein set forth.

3. The combination, with a motor having an annular or ring-shaped field-magnet and a cylindrical or equivalent armature, and independent coils on the field-magnet or armature, or both, of an alternating-current generator having correspondingly independent coils, and circuits including the generator-coils and corresponding motor-coils in such manner that the rotation of the generator causes a progressive shifting of the poles of the motor in the manner set forth.

4. In a system for the electrical transmission of power, the combination of the following instrumentalities, to wit: a motor composed of a disk or its equivalent mounted within a ring or annular field-magnet, which is provided with magnetizing-coils connected in diametrically-opposite pairs or groups to independent terminals, a generator having induced coils or groups of coils equal in number to the pairs or groups of motor-coils, and circuits connecting the terminals of said coils to the terminals of the motor, respectively, and in such order that the rotation of the generator and the consequent production of alternating currents in the respective circuits produces a progressive shifting of the poles of the motor, as hereinbefore described.

NIKOLA TESLA.

Witnesses:
FRANK E. HARTLEY,
FRANK B. MURPHY.

(No Model.) 2 Sheets—Sheet 1.

N. TESLA.

ELECTRO MAGNETIC MOTOR.

No. 381,969. Patented May 1, 1888.

Fig: 1.

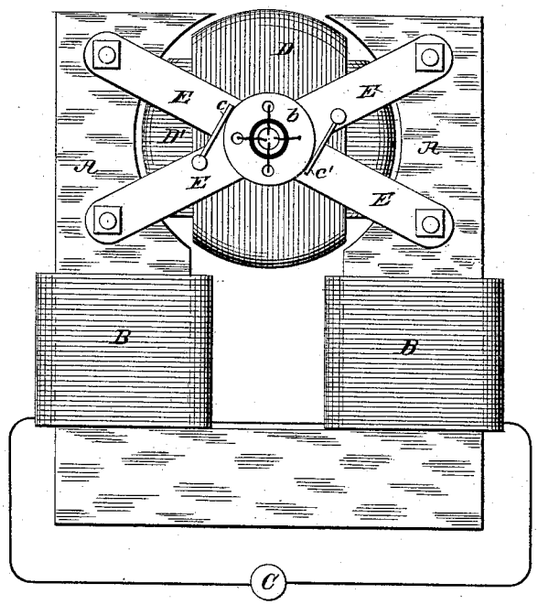

Fig: 2.

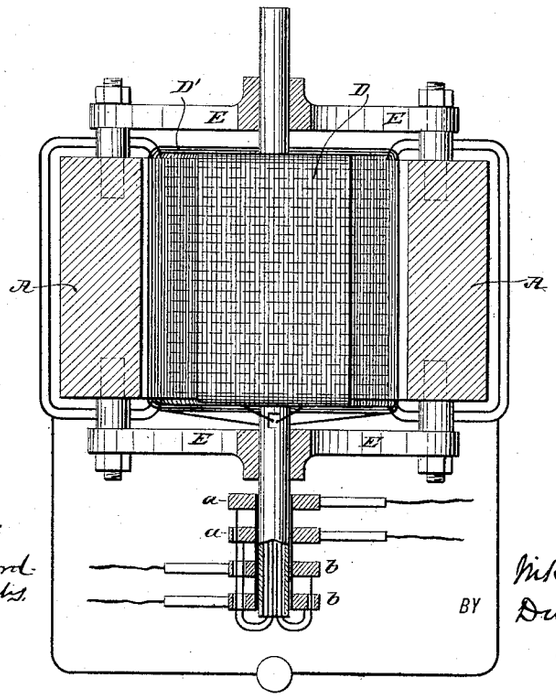

WITNESSES:

Robt. F. Gaylord.
Frank B. Mayfield.

INVENTOR.

Nikola Tesla.
Duncan, Curtis & Page
ATTORNEYS.

BY

N. PETERS, Photo-Lithographer, Washington, D. C.

(No Model.) 2 Sheets—Sheet 2.

N. TESLA.

ELECTRO MAGNETIC MOTOR.

No. 381,969. Patented May 1, 1888.

Fig. 3

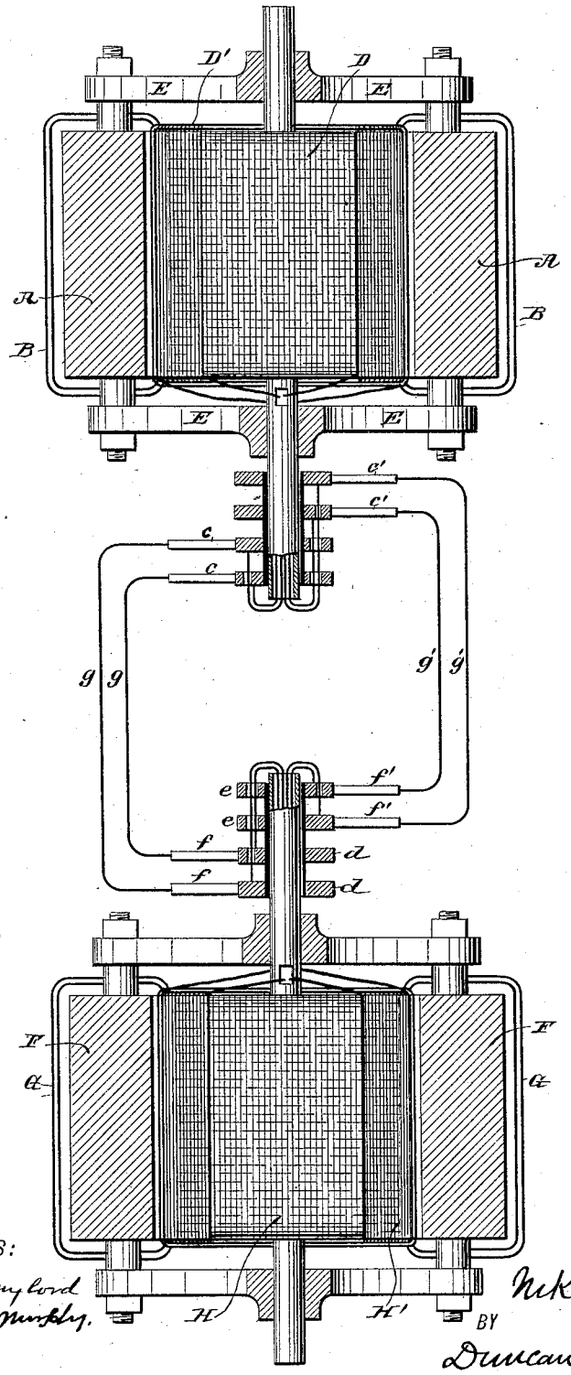

WITNESSES:
Robt. F. Gaylord
Frank B. Murphy.

INVENTOR.
Nikola Tesla
BY
Duncan, Curtis & Page
ATTORNEYS.

N. PETERS, Photo-Lithographer, Washington, D. C.

UNITED STATES PATENT OFFICE.

NIKOLA TESLA, OF NEW YORK, N. Y., ASSIGNOR OF ONE-HALF TO CHARLES F. PECK, OF ENGLEWOOD, NEW JERSEY.

ELECTRO-MAGNETIC MOTOR.

SPECIFICATION forming part of Letters Patent No. 381,969, dated May 1, 1888.

Application filed November 30, 1887. Serial No. 256,562. (No model.)

To all whom it may concern:

Be it known that I, NIKOLA TESLA, from Smiljan Lika, border country of Austria-Hungary, now residing in New York, in the county and State of New York, have invented certain new and useful Improvements in Electro-Magnetic Motors, of which the following is a specification, reference being had to the drawings accompanying and forming a part of the same.

In an application filed by me October 12, 1887, No. 252,132, I have shown and described a novel form of electro-magnetic motor and a mode of operating the same, which may be generally described as follows: The motor is wound with coils forming independent energizing-circuits on either the armature or field magnet, or both, (it is sufficient for present purposes to consider the case in which the coils are on the armature alone,) and these coils are connected up with corresponding circuits on an alternating-current generator. As the result of this, currents of alternately-opposite direction are sent through the energizing-coils of the motor in such manner as to produce a progressive shifting or rotation of the magnetic poles of the armature. This movement of the poles of the armature obviously tends to rotate the armature in the opposite direction to that in which the movement of the poles takes place, owing to the attractive force between said poles and the field-magnets, and the speed of rotation increases from the start until it equals that of the generator, supposing both motor and generator to be alike.

As the poles of the armature are shifted in a direction opposite to that in which the armature rotates, it will be apparent that when the normal speed is attained the poles of the armature will assume a fixed position relative to the field-magnet, and that in consequence the field-magnets will be energized by magnetic induction, exhibiting two distinct poles, one in each of the pole-pieces. In starting the motor, however, the speed of the armature being comparatively slow, the pole-pieces are subjected to rapid reversals of magnetic polarity; but as the speed increases these reversals become less and less frequent, and finally cease when the movement of the armature become synchronous with that of the generator. This being the case, the field-cores and the pole-pieces of the motor become a magnet, but by induction only.

I have found that advantageous results are secured by winding the field-magnets with a coil or coils and passing a continuous current through them, thus maintaining a permanent field, and in this feature my present invention consists.

I shall now describe the apparatus which I have devised for carrying out this invention and explain the mode of using or operating the same.

Figure 1 is an end view in elevation of my improved motor. Fig. 2 is a part horizontal central section, and Fig. 3 is a diagrammatic representation of the motor and generator combined and connected for operation.

Let A A in Fig. 1 represent the legs or pole-pieces of a field-magnet, around which are coils B B, included in the circuit of a continuous-current generator, C, which is adapted to impart magnetism to the said poles in the ordinary manner.

D D′ are two independent coils wound upon a suitable cylindrical or equivalent armature-core, which, like all others used in a similar manner, should be split or divided up into alternate magnetic and insulating parts in the usual way. This armature is mounted in non-magnetic cross-bars E E, secured to the poles of the field-magnet. The terminals of the armature-coils D D′ are connected to insulated sliding contact-rings *a a b b*, carried by the armature shaft, and brushes *c c′* bear upon these rings to convey to the coils the currents which operate the motor.

The generator for operating this motor is or may be of precisely identical construction; and for convenience of reference I have marked in Fig. 3 its parts, as follows: F F, the field-magnets, energized by a continuous current passing in its field-coils G G; H H′, the coils carried by the cylindrical armature; *d d e e*, the friction or collecting rings, carried by the armature-shaft and forming the terminals of the armature-coils; and *f f′*, the collecting-brushes which deliver the currents developed in the armature-coils to the two circuits *g g′*, which connect the generators with the motor.

The operation of this system will be understood from the foregoing. The action of the generator, by causing a progressive shifting of the poles in the motor-armature, sets up in the latter a rotation opposite in direction to that in which the poles move. If, now, the continuous current be directed through the field coils, so as to strongly energize the magnet A A, the speed of the motor, which depends upon that of the generator, will not be increased, but the power which produces its rotation will be increased in proportion to the energy supplied through the coils B B.

It is characteristic of this motor that its direction of rotation is not reversed by reversing the direction of the current through its field-coils, for the direction of rotation depends not upon the polarity of the field, but upon the direction in which the poles of the armature are shifted. To reverse the motor, the connections of either of the circuits *g g'* must be reversed.

I have found that if the field-magnet of the motor be strongly energized by its coils B B and the circuits through the armature-coils closed, assuming the generator to be running at a certain speed, the motor will not start; but if the field be but slightly energized or in general in such condition that the magnetic influence of the armature preponderates in determining its magnetic condition the motor will start and, with sufficient current, will reach its maximum or normal speed. For this reason it is desirable to keep at the start and until the motor has attained its normal speed, or nearly so, the field-circuit open or to permit but little current to pass through it. I have found, however, if the fields of both the generator and motor be strongly energized that starting the generator starts the motor, and that the speed of the motor is increased in synchronism with the generator. Motors constructed and operated on this principle maintain almost absolutely the same speed for all loads within their normal working-limits; and in practice I have observed that if the motor be overloaded to such an extent as to check its speed the speed of the generator, if its motive power be not too great, is diminished synchronously with that of the motor.

I have in other applications shown how the construction of these or similar motors may be varied in certain well-known ways—as, for instance, by rotating the field about a stationary armature or rotating conductors within the field; but I do not illustrate these features further herein, as with the illustration which I have given I regard the rest as within the power of a person skilled in the art to construct.

The present form of motor is cheap, simple, reliable, and easy to maintain. It requires the simplest type of generator for its operation, and when properly constructed shows a high efficiency.

I do not claim herein the method of transmitting power which this system involves, having made it the subject of another application for patent.

What I claim is—

The combination, with a motor having independent energizing or armature circuits, of an alternating-current generator with corresponding induced circuits connected with the motor for effecting a progressive shifting of the poles of the motor-armature, and a source of continuous current for energizing the field of said motor, as set forth.

NIKOLA TESLA.

Witnesses:
FRANK B. MURPHY,
FRANK E. HARTLEY.

(No Model.) 2 Sheets—Sheet 1.

N. TESLA.

SYSTEM OF ELECTRICAL DISTRIBUTION.

No. 381,970. Patented May 1, 1888.

Fig. 1.

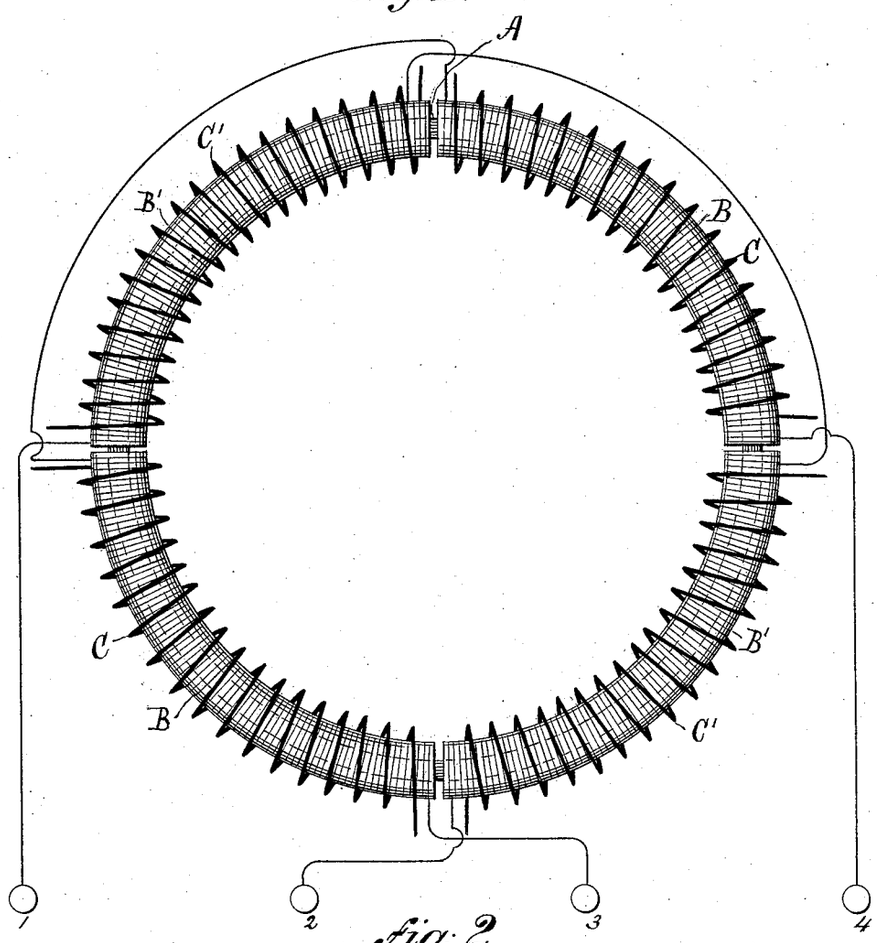

Fig. 2.

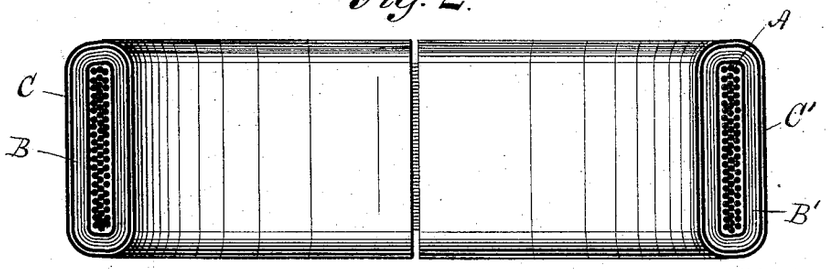

WITNESSES:

Robt. N. Duncan.

Robt. F. Gaylord

INVENTOR.

Nikola Tesla.

BY

Duncan, Curtis & Page

his ATTORNEYS.

N. PETERS, Photo-Lithographer, Washington, D. C.

(No Model.) 2 Sheets—Sheet 2.

N. TESLA.

SYSTEM OF ELECTRICAL DISTRIBUTION.

No. 381,970. Patented May 1, 1888.

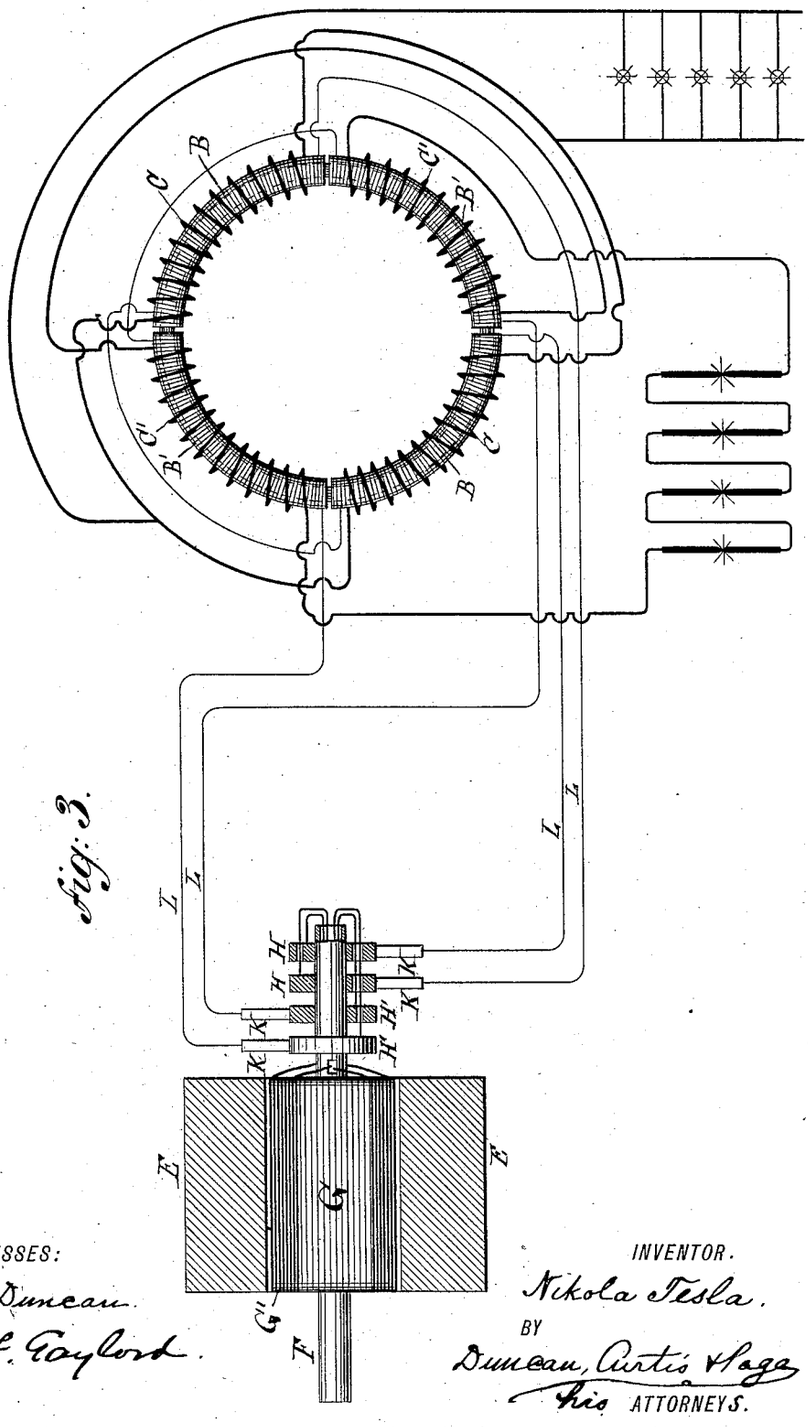

Fig. 3.

WITNESSES:

Robt. H. Duncan.

Robt. F. Gaylord.

INVENTOR.

Nikola Tesla.

BY

Duncan, Curtis & Page

His ATTORNEYS.

N. PETERS, Photo-Lithographer, Washington, D. C.

UNITED STATES PATENT OFFICE.

NIKOLA TESLA, OF NEW YORK, N. Y., ASSIGNOR OF ONE-HALF TO CHARLES F. PECK, OF ENGLEWOOD, NEW JERSEY.

SYSTEM OF ELECTRICAL DISTRIBUTION.

SPECIFICATION forming part of Letters Patent No. 381,970, dated May 1, 1888.

Application filed December 23, 1887. Serial No. 258,787. (No model.)

To all whom it may concern:

Be it known that I, NIKOLA TESLA, from Smiljan Lika, border country of Austria-Hungary, now residing at New York, in the county and State of New York, have invented certain new and useful Improvements in Systems of Electrical Distribution, of which the following is a specification, reference being had to the drawings accompanying and forming a part of the same.

This invention relates to those systems of electrical distribution in which a current from a single source of supply in a main or transmitting circuit is caused to induce by means of suitable induction apparatus a current or currents in an independent working circuit or circuits.

The main objects of the invention are the same as have been heretofore obtained by the use of these systems—viz., to divide the current from a single source, whereby a number of lamps, motors, or other translating devices may be independently controlled and operated by the same source of current, and in some cases to reduce a current of high potential in the main circuit to one of greater quantity and lower potential in the independent consumption or working circuit or circuits.

The general character of the devices employed in these systems is now well understood. An alternating-current magneto-machine is used as the source of supply. The current developed thereby is conducted through a transmission-circuit to one or more distant points at which the transformers are located. These consist of induction-machines of various kinds. In some cases ordinary forms of induction-coil have been used with one coil in the transmitting-circuit and the other in a local or consumption circuit, the coils being differently proportioned according to the work to be done in the consumption-circuit—that is to say, if the work requires a current of higher potential than that in the transmission-circuit the secondary or induced coil is of greater length and resistance than the primary, while, on the other hand, if a quantity current of lower potential is wanted the longer coil is made the primary. In lieu of these devices various forms of electro-dynamic induction-machines, including the combined motors and generators, have been devised. For instance, a motor is constructed in accordance with well-understood principles, and on the same armature are wound induced coils which constitute a generator. The motor-coils are generally of fine wire and the generator-coils of coarser wire, so as to produce a current of greater quantity and lower potential than the line-current, which is of relatively high potential, to avoid loss in long transmission. A similar arrangement is to wind coils corresponding to those described in a ring or similar core, and by means of a commutator of suitable kind to direct the current through the inducing-coils successively, so as to maintain a movement of the poles of the core and of the lines of force which set up the currents in the induced coils.

Without enumerating the objections to these systems in detail, it will suffice to say that the theory or the principle of the action or operation of these devices has apparently been so little understood that their proper construction and use have up to the present time been attended with various difficulties and great expense. The transformers are very liable to be injured and burned out, and the means resorted to for curing this and other defects have almost invariably been at the expense of efficiency.

The form of converter or transformer which I have devised appears to be largely free from the defects and objections to which I have alluded. While I do not herein advance any theory as to its mode of operation, I would state that, in so far as the principal of construction is concerned, it is analogous to those transformers which I have above described as electro-dynamic induction-machines, except that it involves no moving parts whatever, and is hence not liable to wear or other derangement, and requires no more attention than the other and more common induction-machines.

In carrying out my invention I provide a series of inducing-coils and corresponding induced coils, which, by preference, I wind upon a core closed upon itself—such as an annulus or ring subdivided in the usual manner. The

two sets of coils are wound side by side or superposed or otherwise placed in well-known ways to bring them into the most effective relations to one another and to the core. The inducing or primary coils wound on the core are divided into pairs or sets by the proper electrical connections, so that while the coils of one pair or set to co-operate in fixing the magnetic poles of the core at two given diametrically-opposite points, the coils of the other pair or set—assuming, for sake of illustration, that there are but two—tend to fix the poles ninety degrees from such points. With this induction device I use an alternating-current generator with coils or sets of coils to correspond with those of the converter, and by means of suitable conductors I connect up in independent circuits the corresponding coils of the generator and converter. It results from this that the different electrical phases in the generator are attended by corresponding magnetic changes in the converter; or, in other words, that as the generator-coils revolve the points of greatest magnetic intensity in the converter will be progressively shifted or whirled around. This principle I have applied under variously-modified conditions to the operation of electro-magnetic motors, and in previous applications, notably in those having Serial Nos. 252,132 and 256,561, I have described in detail the manner of constructing and using such motors. In the present application my object is to describe the best and most convenient manner of which I am at present aware of carrying out the invention as applied to a system of electrical distribution; but one skilled in the art will readily understand from the description by the modifications proposed in said applications, wherein the form of both the generator and converter in the present case may be modified.

In illustration therefore of the details of construction which my present invention involves, I now refer to the accompanying drawings.

Figure 1 is a diagrammatic illustration of the converter and the electrical connections of the same. Fig. 2 is a horizontal central cross-section of Fig. 1. Fig. 3 is a diagram of the circuits of the entire system, the generator being shown in section.

I use a core, A, which is closed upon itself—that is to say, of an annular cylindrical or equivalent form—and as the efficiency of the apparatus is largely increased by the subdivision of this core I make it of thin strips, plates, or wires of soft iron electrically insulated as far as practicable. Upon this core, by any well-known method, I wind, say, four coils, B B B′ B′, which I use as primary coils, and for which I use long lengths of comparatively fine wire. Over these coils I then wind shorter coils of coarser wire, C C C′ C′, to constitute the induced or secondary coils. The construction of this or any equivalent form of converter may be carried further, as above pointed out, by inclosing these coils with iron—as, for example, by winding over the coils a layer or layers of insulated iron wire.

The device is provided with suitable binding-posts, to which the ends of the coils are led. The diametrically-opposite coils B B and B′ B′ are connected, respectively, in series, and the four terminals are connected to the binding-posts 1 2 3 4. The induced coils are connected together in any desired manner. For example, as shown in Fig. 3, C C may be connected in multiple arc when a quantity current is desired—as for running a group of incandescent lamps, D—while C′ C′ may be independently connected in series in a circuit including arc lamps or the like. The generator in this system will be adapted to the converter in the manner illustrated. For example, in the present case I employ a pair of ordinary permanent or electro magnets, E E, between which is mounted a cylindrical armature on a shaft, F, and wound with two coils, G G′. The terminals of these coils are connected, respectively, to four insulated contact or collecting rings, H H H′ H′, and the four line circuit-wires L connect the brushes K, bearing on these rings, to the converter in the order shown. Noting the results of this combination, it will be observed that at a given point of time the coil G is in its neutral position and is generating little or no current, while the other coil, G′, is in a position where it exerts its maximum effect. Assuming coil G to be connected in circuit with coils B B of the converter, and coil G′ with coils B′ B′, it is evident that the poles of the ring A will be determined by coils B′ B′ alone; but as the armature of the generator revolves, coil G delops more current and coil G′ less, until G reaches its maximum and G′ its neutral position. The obvious result will be to shift the poles of the ring A through one-quarter of its periphery. The movement of the coils through the next quarter of a turn, during which coil G′ enters a field of opposite polarity and generates a current of opposite direction and increasing strength, while coil G, in passing from its maximum to its neutral position generates a current of decreasing strength and same direction as before, causes a further shifting of the poles through the second quarter of the ring. The second half-revolution will obviously be a repetition of the same action. By the shifting of the poles of the ring A a powerful dynamic inductive effect on the coils C C′ is produced. Besides the currents generated in the secondary coils by dynamo-magnetic induction other currents will be set up in the same coils in consequence of any variations in the intensity of the poles in the ring A. This should be avoided by maintaining the intensity of the poles constant, to accomplish which care should be taken in designing and proportioning the generator and in distributing the coils in the ring A and balancing their effect. When this is

done, the currents are produced by dynamo-magnetic induction only, the same result being obtained as though the poles were shifted by a commutator with an infinite number of segments.

The modifications which are applicable to other forms of converter are in many respects applicable to this. I refer more particularly to the form of the core, the relative lengths and resistances of the primary and secondary coils, and the arrangements for running or operating the same.

The new method of electrical conversion which this system involves I have made the subject of another application, and I do not claim it therefore herein.

Without limiting myself therefore to any specific form, what I claim is—

1. The combination, with a core closed upon itself, inducing or primary coils wound thereon and connected up in independent pairs or sets, and induced or secondary coils wound upon or near the primary coils, of a generator of alternating currents and independent connections to the primary coils, whereby by the operation of the generator a progressive shifting of the poles of the core is effected, as set forth.

2. The combination, with an annular or similar magnetic core and primary and secondary coils wound thereon, of an alternating-current generator having induced or armature coils corresponding to the primary coils, and independent circuits connecting the primary coils with the corresponding coils of the generator, as herein set forth.

3. The combination, with independent electric transmission-circuits, of transformers consisting of annular or similar cores wound with primary and secondary coils, the opposite primary coils of each transformer being connected to one of the transmission-circuits, an alternating-current generator with independent induced or armature coils connected with the transmission-circuits, whereby alternating currents may be directed through the primary coils of the transformers in the order and manner herein described.

NIKOLA TESLA.

Witnesses:
ROBT. H. DUNCAN,
ROBT. F. GAYLORD.

(No Model.) 2 Sheets—Sheet 1.

N. TESLA.

ELECTRO MAGNETIC MOTOR.

No. 382,279. Patented May 1, 1888.

Fig: 1.

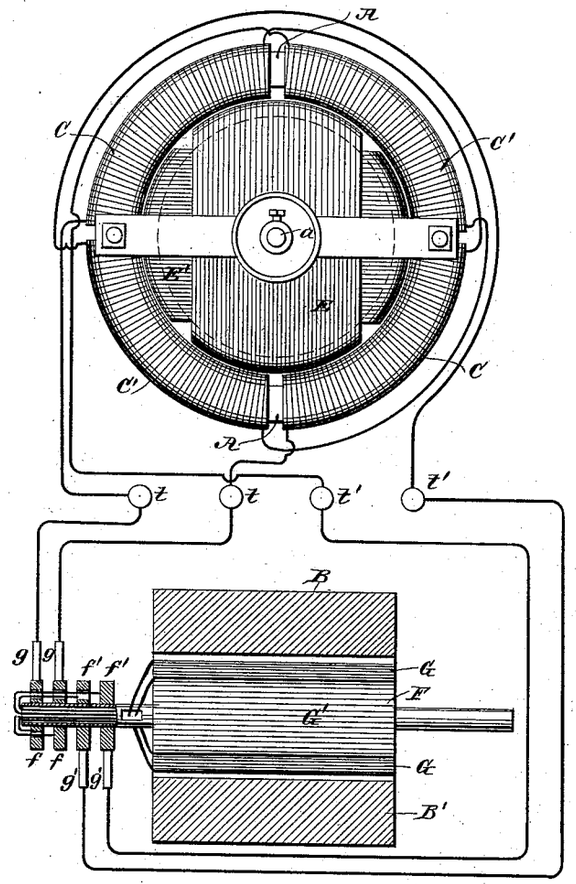

Fig: 2.

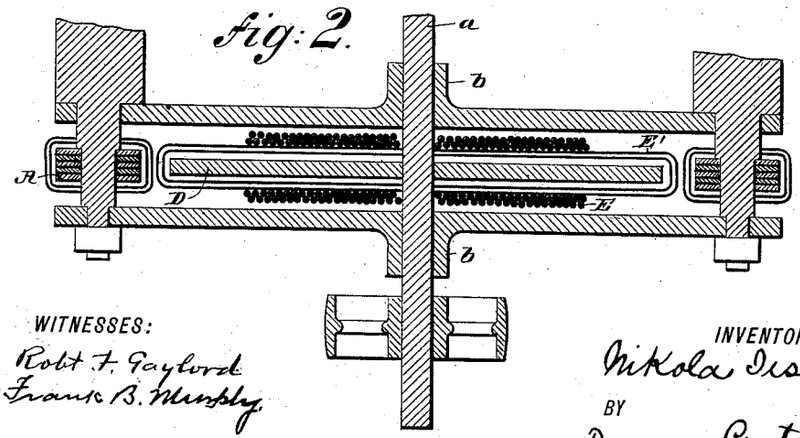

WITNESSES:
Robt F. Gaylord
Frank B. Mussby

INVENTOR.
Nikola Tesla.
BY
Duncan Curtis & Page.
ATTORNEYS.

N. PETERS. Photo-Lithographer, Washington, D. C.

(No Model.) 2 Sheets—Sheet 2.

N. TESLA.

ELECTRO MAGNETIC MOTOR.

No. 382,279. Patented May 1, 1888.

Fig. 3.

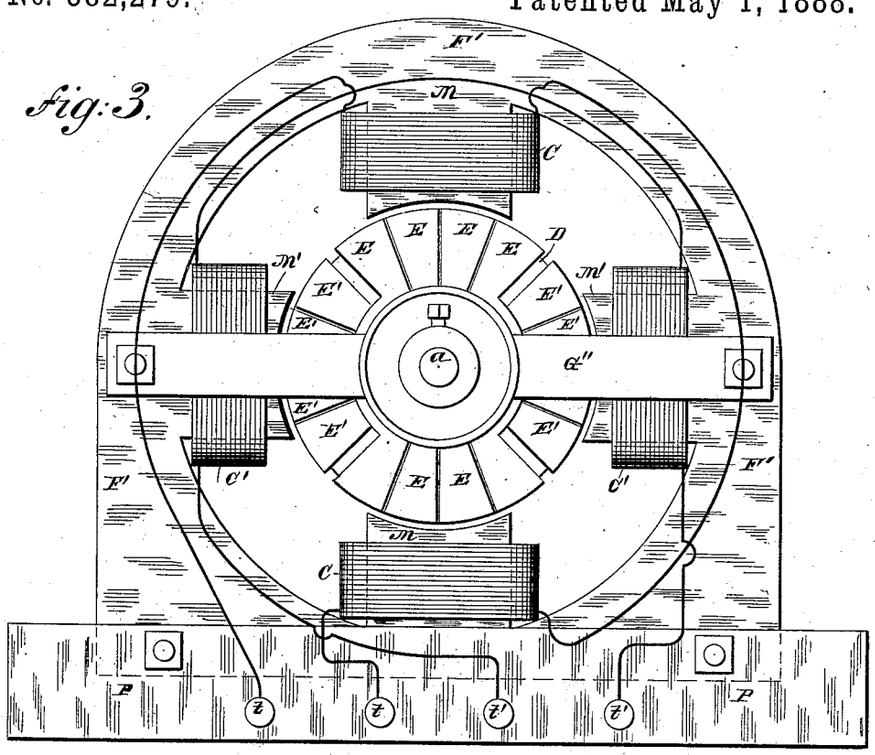

Fig. 4.

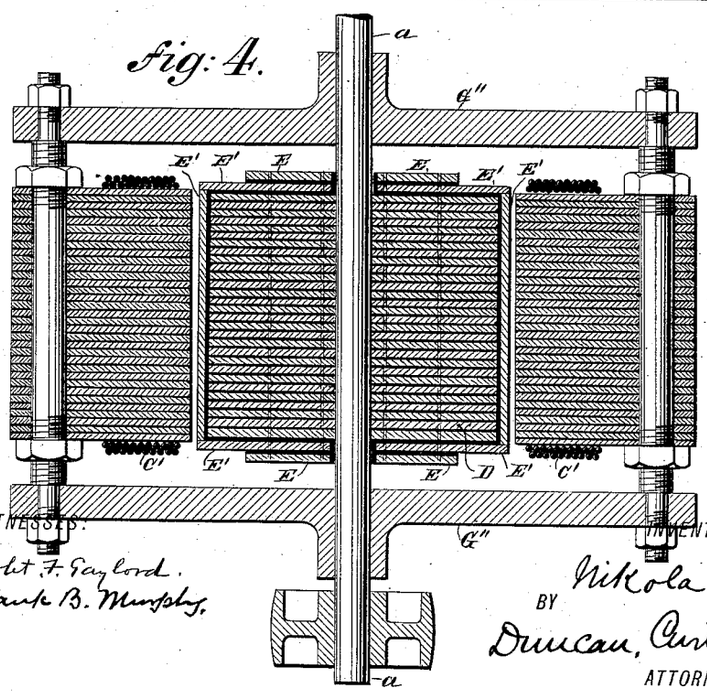

WITNESSES:
Robt. F. Gaylord.
Frank B. Murphy.

INVENTOR,
Nikola Tesla.
BY
Duncan, Curtis & Page
ATTORNEYS.

N. PETERS, Photo-Lithographer, Washington, D. C.

UNITED STATES PATENT OFFICE.

NIKOLA TESLA, OF NEW YORK, N. Y., ASSIGNOR OF ONE-HALF TO CHARLES F. PECK, OF ENGLEWOOD, NEW JERSEY.

ELECTRO-MAGNETIC MOTOR.

SPECIFICATION forming part of Letters Patent No. 382,279, dated May 1, 1888.

Application filed November 30, 1887. Serial No. 256,561. (No model.)

To all whom it may concern:

Be it known that I, NIKOLA TESLA, a subject of the Emperor of Austria, from Smiljan, Lika, border country of Austria-Hungary, now residing at New York, in the county and State of New York, have invented certain new and useful Improvements in Electro-Magnetic Motors, of which the following is a specification, reference being had to the drawings accompanying and forming a part of the same.

In a former application, filed October 12, 1887, No. 252,132, I have shown and described a mode or plan of operating electric motors by causing a progressive shifting of the poles of one or both of the parts or elements of a motor—that is to say, of either the field magnet or magnets or armature, or both. I accomplish this by constructing a motor with two or more independent energizing-circuits, on the field-magnets, for example, and I connect these up with corresponding induced or generating circuits in an alternating-current generator, so that alternating currents are caused to traverse the motor-circuits. By so doing the poles of the field-magnet of the motor are progressively shifted, and by their attraction upon a rotary armature set up a rotation in the latter in the direction of the movement of the poles. In this case, however, the rotation is produced and maintained by the direct attraction of the magnetic elements of the motor. I have discovered that advantageous results may be secured in this system by utilizing the shifting of the poles primarily to set up currents in a closed conductor located within the influence of the field of the motor, so that the rotation may result from the reaction of such currents upon the field.

To illustrate more fully the nature of the invention I refer to the accompanying drawings.

Figure 1 represents in side elevation the operative parts or elements of a motor embodying the principles of my invention, and in section the generator for operating the same. Fig. 2 is a horizontal central section of the motor in Fig. 1, the circuits being shown partly in diagram. Fig. 3 is a modified form of motor in side elevation. Fig. 4 is a central horizontal cross-section of Fig. 3.

In Figs. 1 and 2, A is an annular core of soft iron, preferably laminated or formed of insulated sections, so as to be susceptible to rapid variations of magnetism. This core is wound with four coils, C C C′ C′, the diametrically-opposite coils being connected in the same circuit, and the two free ends of each pair being brought to the terminals *t* and *t′*, respectively, as shown. Within this annular field-magnet A is mounted a soft-iron cylinder or disk, D, on an axis, *a*, in bearings *b b*, properly supported by the frame-work of the machine. The disk carries two coils, E E′, of insulated wire, wound at right angles to one another, and having their respective ends joined, so that each coil forms a separate closed circuit.

In illustration of the action or mode of operation of this apparatus, let it be assumed that the annular field-magnet A is permanently magnetized, so as to present two free poles diametrically opposite. If suitable mechanical provision be now made for rotating the field-magnet around the disk, the apparatus exemplifies the conditions of an ordinary magneto-generator, and currents would be set up in the coils or closed conductors E E′ on the disk D. Evidently these currents would be the most powerful at or near the points of the greatest density of the lines of force, and they would, as in all similar cases, tend, at least theoretically, to establish magnetic poles in the disk D at right angles to those in the annular field-magnet A. As a result of the well-known reaction of these polarities upon each other, a more or less powerful tendency in the disk to rotate in the same direction as that of the field-magnet would be established. If, on the other hand, the ring or annular field-magnet A be held stationary and its magnetic poles progressively shifted by passing through its coils C C′ properly-alternated currents, it is obvious that similar results will follow, for the passage of the currents causing the shifting or whirling of the poles of the field-magnet A induces currents in the closed circuits of the armature-coils E E′, with the result of setting up a rotation of the disk D in the same direction of such shifting. Inasmuch as the currents are always induced or generated in the coils E E′ in the same manner, the poles of the disk or cylinder follow continuously the poles of the annular field-magnet, maintaining, at least theoretically, the same rela-

tive positions. This results in an even and perfect action of the apparatus.

In order that the system as a whole may be better understood, I shall now describe the mode or plan devised by me for producing the currents that effect the progressive shifting of the poles of the motor.

In Fig. 1, B B′ are the poles or pole-pieces of an alternating-current generator. They are permanently magnetized and of opposite polarity. F is a cylindrical or other armature containing the independent coils G G′. These coils are wound at right angles, so that while one is crossing the strongest portion of the field of force the other is at the neutral point. The coils G G′ terminate in the two pairs of insulated collecting-rings *f* and *f′*, upon which bear the brushes *g g′*. Four wires connect the motor-terminals *t* and *t′* with the brushes *g* and *g′*, respectively. When the generator is rotated, the coil G will at the certain point shown in the drawings be generating its maximum current, while coil G′ is neutral. Let it be assumed that this current is conveyed from the rings *f f* to the terminals *t t* and through the coils C C. Its effect will be to establish poles in the ring midway between the two coils. By the further rotation of the generator the coil G′ is brought within the influence of the field and begins to produce a current, which grows stronger as the said coil approaches the maximum points of the field, while the current produced in the coil G diminishes as the said coil recedes from those points. The current from the coil G′, being conveyed to the terminals *t′ t′* and through coils C′ C′, has a tendency to establish poles at right angles to those set up by the coils C C; but owing to the greater effect of the current in coils C C the result is merely to advance the poles from the position in which they would remain if due to the magnetizing influence of coils C C alone. This progression continues for a quarter-revolution until coil G G becomes neutral and coil G′ G′ produces its maximum current. The action described is then repeated, the poles having been shifted through one-half of the field, or a half-revolution. The second half-revolution is accomplished in a similar way, the same polarity being maintained in the shifting poles by the movement of the generator-coils alternately through fields of opposite polarity.

The same principle of operation may be applied to motors of various forms, and I have shown one of such modified forms in Figs. 3 and 4 of the drawings. In these figures, M M′ are field-magnets secured to or forming part of a frame, F′, mounted on a base, P. These magnets should be laminated or composed of a number of electrically-insulated magnetic sections, to prevent the circulation of induced currents and to render them capable of rapid magnetic changes. These magnetic cores or poles are wound with insulated coils C C′, the diametrically-opposite coils being connected together in series and their free ends brought to terminals *t t′*, respectively. Between the poles there is mounted, in bearings in the cross-pieces G″, a cylindrical iron core, D, which, in order to prevent the formation of eddying currents, and the loss consequent thereon, is subdivided in the usual way. Insulated conductors or coils are applied to the cylinder D longitudinally, and for these I may employ copper plates E E′, which are secured to the sides and ends of the cylindrical core in well-known ways. These plates or conductors may form one or preferably several independent circuits around the core. In the drawings two of such circuits are shown, formed respectively by the conductors E and E′, which are insulated from each other. It is advantageous also to slot these plates longitudinally, to prevent the formation of eddy currents and waste of energy.

From what has now been given the operation of this apparatus will be readily understood. To the binding-posts *t t′* are connected the proper circuits from the generator to cause a progressive shifting of the resultant magnetic poles produced by the magnets M upon the armature. Thus currents are induced in the closed circuits on the core, which, energizing the core strongly, maintain a powerful attraction between the same and the field, which causes a rotation of the armature in the direction in which the resultant poles are shifted.

The particular advantage of the construction illustrated in Figs. 3 and 4 is that a concentrated and powerful field is obtained and a remarkably powerful tendency to rotation in the armature secured. The same results may be obtained in the form illustrated in Figs. 1 and 2, however, by forming polar projections on the field and armature cores.

When these motors are not loaded, but running free, the rotation of the armature is nearly synchronous with the rotation of the poles of the field, and under these circumstances very little current is perceptible in the coils E E′; but if a load is added the speed tends to diminish and the currents in coils E E′ are augmented, so that the rotary effort is increased proportionately.

Obviously the principle of this invention is capable of many modified applications, most of which follow as a matter of course from the constructions described. For instance, the armature-coils, or those in which the currents are set up by induction, may be held stationary and the alternating currents from the generator conducted through the rotating inducing or field coils by means of suitable sliding contacts. It is also apparent that the induced coils may be movable and the magnetic parts of the motor stationary; but I have illustrated these modifications fully in the application to which reference has herein been made.

In the case of motors wound with independent field and armature circuits and operated by shifting their poles, as described in my said

prior application, I may by short-circuiting the armature-coils apply the present invention in order to obtain greater power on starting.

An advantage and characteristic feature of motors constructed and operated in accordance with this invention is their capability of almost instantaneous reversal by a reversal of one of the energizing-currents from the generator. This will be understood from a consideration of the working conditions. Assuming the armature to be rotating in a certain direction following the movement of the shifting poles, then reverse the direction of the shifting, which may be done by reversing the connections of one of the two energizing-circuits. If it be borne in mind that in a dynamo-electric machine the energy developed is very nearly proportionate to the cube of the speed, it is evident that at such moment an extraordinary power is brought to play in reversing the motor. In addition to this the resistance of the motor is very greatly reduced at the moment of reversal, so that a much greater amount of current passes through the energizing-circuits.

The phenomenon alluded to—viz., the variation of the resistance of the motor apparently like that in ordinary motors—I attribute to the variation in the amount of self-induction in the primary or energizing circuits.

These motors present numerous advantages, chief among which are their simplicity, reliability, economy in construction and maintenance, and their easy and dangerless management. As no commutators are required on either the generators or the motors, the system is capable of a very perfect action and involves but little loss.

I do not claim herein the mode or plan of producing currents in closed conductors in a magnetic field which is herein disclosed, except in its application to this particular purpose; but

What I claim is—

1. The combination, with a motor containing independent inducing or energizing circuits and closed induced circuits, of an alternating-current generator having induced or generating circuits corresponding to and connected with the energizing-circuits of the motor, as set forth.

2. An electro-magnetic motor having its field-magnets wound with independent coils and its armature with independent closed coils, in combination with a source of alternating currents connected to the field-coils and capable of progressively shifting the poles of the field-magnet, as set forth.

3. A motor constructed with an annular field-magnet wound with independent coils and a cylindrical or disk armature wound with closed coils, in combination with a source of alternating currents connected with the field-magnet coils and acting to progressively shift or rotate the poles of the field, as herein set forth.

NIKOLA TESLA.

Witnesses:
FRANK B. MURPHY,
FRANK E. HARTLEY.

(Model.)

4 Sheets—Sheet 1.

N. TESLA.

ELECTRICAL TRANSMISSION OF POWER.

No. 382,280. Patented May 1, 1888.

Fig. 1

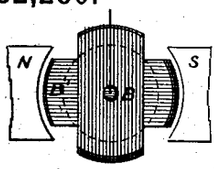

Fig. 2

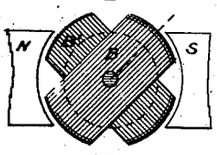

Fig. 3

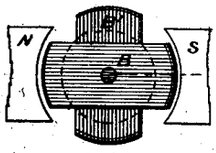

Fig. 4

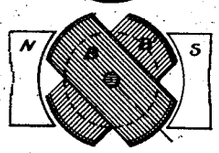

Fig. 5

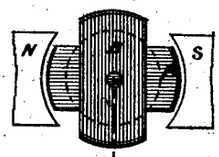

Fig. 6

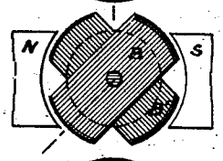

Fig. 7

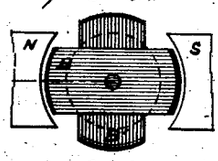

Fig. 8

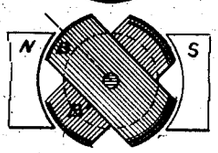

Fig. 1ª

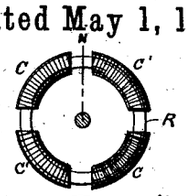

Fig. 2ª

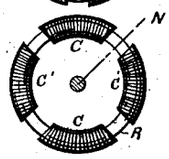

Fig. 3ª

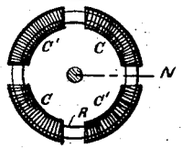

Fig. 4ª

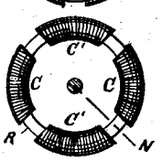

Fig. 5ª

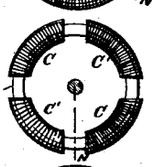

Fig. 6ª

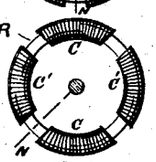

Fig. 7ª

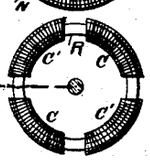

Fig. 8ª

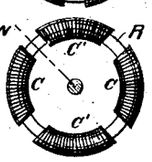

WITNESSES:

D. H. Sherman

Marvin A. Custis

INVENTOR.

Nikola Tesla.

BY

Duncan, Curtis & Page

ATTORNEYS.

(No Model.) 4 Sheets—Sheet 2.

N. TESLA.

ELECTRICAL TRANSMISSION OF POWER.

No. 382,280. Patented May 1, 1888.

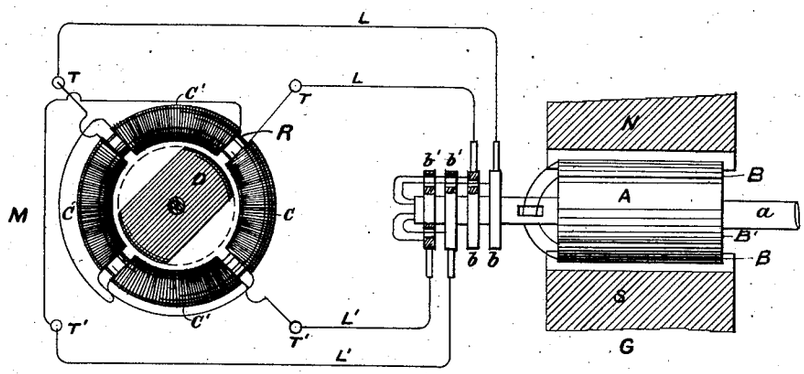

Fig. 9

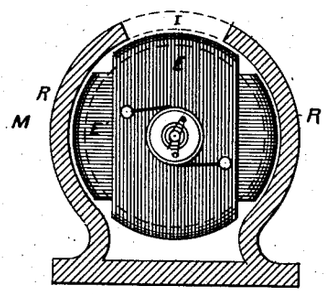

Fig. 10

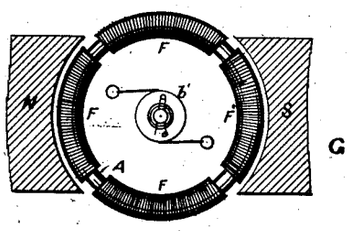

Fig. 11

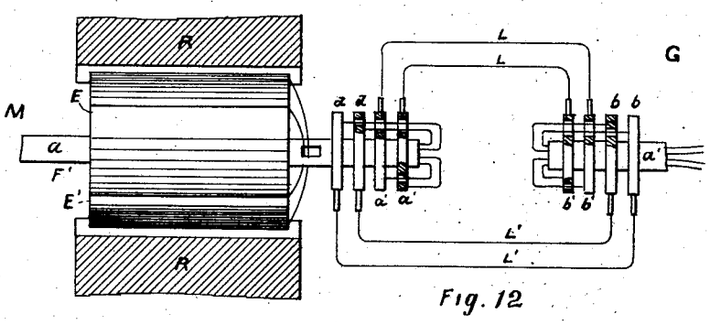

Fig. 12

WITNESSES:
D. H. Sherman.
Marvin A. Curtis.

INVENTOR.
Nikola Tesla.
BY
Duncan, Curtis & Page
ATTORNEYS.

(No Model.) 4 Sheets—Sheet 3.

N. TESLA.

ELECTRICAL TRANSMISSION OF POWER.

No. 382,280. Patented May 1, 1888.

Fig. 13

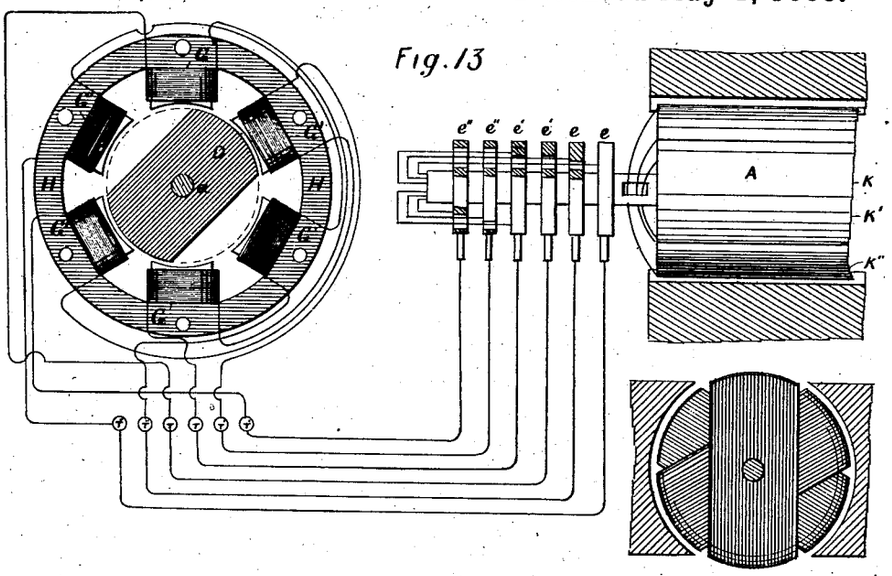

Fig. 14

Fig. 15

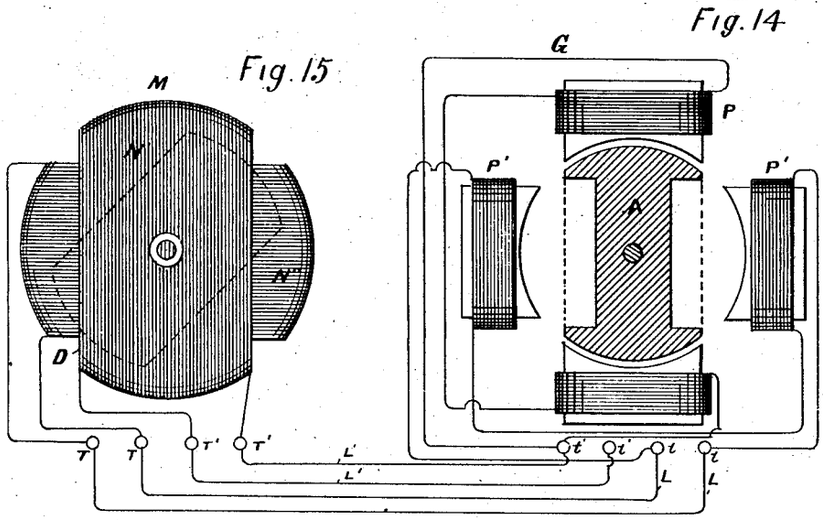

Fig. 16

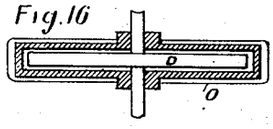

WITNESSES:
D. H. Sherman
Marvin A. Curtis

INVENTOR,
Nikola Tesla,
BY
Duncan, Curtis & Page
ATTORNEYS.

(No Model.) 4 Sheets—Sheet 4.

N. TESLA.

ELECTRICAL TRANSMISSION OF POWER.

No. 382,280. Patented May 1, 1888.

Fig. 17

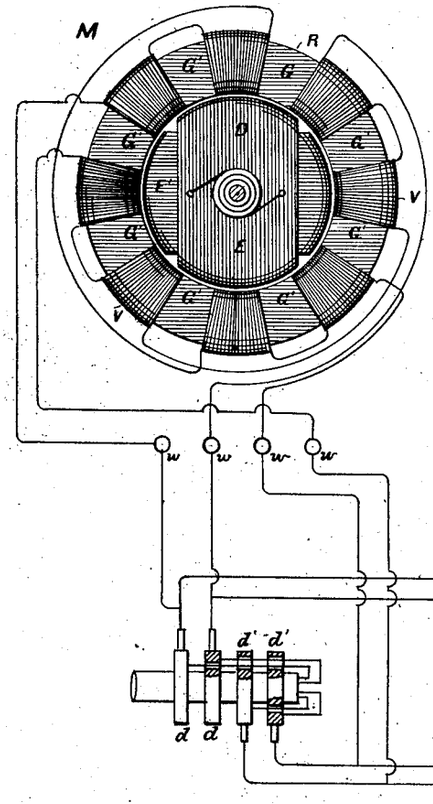

Fig. 18

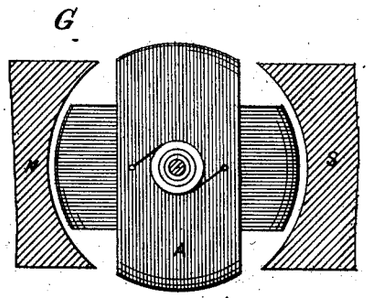

Fig. 19

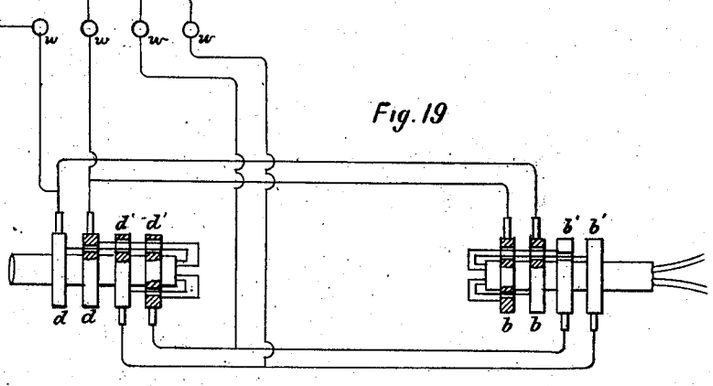

WITNESSES:
D. H. Sherman.
Marvin A. Curtis.

INVENTOR.
Nikola Tesla.
BY
Duncan, Curtis & Page.
ATTORNEYS.

UNITED STATES PATENT OFFICE.

NIKOLA TESLA, OF NEW YORK, N. Y.

ELECTRICAL TRANSMISSION OF POWER.

SPECIFICATION forming part of Letters Patent No. 382,280, dated May 1, 1888.

Original application filed October 12, 1887. Serial No. 252,132. Divided and this application filed March 9, 1888. Serial No. 266,755. (No model.)

To all whom it may concern:

Be it known that I, NIKOLA TESLA, from Smiljan, Lika, border country of Austria-Hungary, and residing in the city, county, and State of New York, have invented certain new and useful Improvements in the Transmission of Power, of which the following is a specification, reference being had to the drawings accompanying and forming a part of the same.

This application is a division of an application filed by me October 12, 1887, No. 252,132.

The practical solution of the problem of the electrical conversion and transmission of mechanical energy involves certain requirements which the apparatus and systems heretofore employed have not been capable of fulfilling. Such a solution primarily demands a uniformity of speed in the motor irrespective of its load within its normal working limits. On the other hand, it is necessary, to attain a greater economy of conversion than has heretofore existed, to construct cheaper and more reliable and simple apparatus, and such that all danger from the use of currents of high tension, which are necessary to an economical transmission, may be avoided.

My present invention is a new method or mode of effecting the transmission of power by electrical agency, whereby many of the present objections are overcome and great economy and efficiency secured.

In carrying out my invention I employ a motor in which there are two or more independent energizing-circuits, through which I pass, in the manner hereinafter described, alternating currents, effecting thereby a progressive shifting of the magnetism or of the "lines of force," which, in accordance with well-known theories, produces the action of the motor.

It is obvious that a proper progressive shifting of the lines of force may be utilized to set up a movement or rotation of either element of the motor, the armature, or the field-magnet, and that if the currents directed through the several circuits of the motor are in proper direction no commutator for the motor will be required; but to avoid all the usual commutating appliances in the system I connect the motor-circuits directly with those of a suitable alternating-current generator. The practical results of such a system, its economical advantages, and the mode of its construction and operation will be described more in detail by reference to the accompanying diagrams and drawings.

Figures 1 to 8 and 1^a to 8^a, inclusive, are diagrams illustrating the principle of the action of my invention. The remaining figures are views of the apparatus in various forms by means of which the invention may be carried into effect, and which will be described in their order.

Referring first to Fig. 9, which is a diagrammatic representation of a motor, a generator, and connecting-circuits in accordance with my invention, M is the motor, and G the generator for driving it. The motor comprises a ring or annulus, R, preferably built up of thin insulated iron rings or annular plates, so as to be as susceptible as possible to variations in its magnetic condition. This ring is surrounded by four coils of insulated wire symmetrically placed and designated by C C C′ C′. The diametrically-opposite coils are connected up so as to co-operate in pairs in producing free poles on diametrically-opposite parts of the ring. The four free ends thus left are connected to terminals T T T′ T′, as indicated. Near the ring, and preferably inside of it, there is mounted on an axis or shaft a magnetic disk, C, generally circular in shape, but having two segments, cut away as shown. This disk is mounted so as to turn freely within the ring R. The generator G is of any ordinary type, that shown in the present instance having field-magnets N S and a cylindrical armature-core, A, wound with the two coils B B′. The free ends of each coil are carried through the shaft a' and connected, respectively, to insulated contact-rings b b b' b'. Any convenient form of collector or brush bears on each ring and forms a terminal by which the current to and from a ring is conveyed. These terminals are connected to the terminals of the motor by the wires L and L′ in the manner indicated, whereby two complete circuits are formed, one including, say, the coils B of the generator and C C of the motor and the other the remaining coils B′ and C′ C′ of the generator and the motor.

It remains now to explain the mode of operation of this system, and for this purpose I

refer to the diagrams, Figs. 1 to 8 and 1ª to 8ª, for an illustration of the various phases through which the coils of the generator pass when in operation, and the corresponding and resultant magnetic changes produced in the motor. The revolution of the armature of the generator between the field-magnets N S obviously produces in the coils B B′ alternating currents the intensity and direction of which depend upon well-known laws. In the position of the coils indicated in Fig. 1 the current in the coil B is practically *nil*, whereas the coil B′ at the same time is developing its maximum current, and by the means indicated in the description of Fig. 9 the circuit including this coil may also include, say, the coils C C of the motor, Fig. 1ª. The result, with the proper connections, would be the magnetization of the ring R, the poles being on the line N S. The same order of connections being observed between the coil B and the coil C′, the latter when traversed by a current tend to fix the poles at right angles to the line N S of Fig. 1ª. It results, therefore, that when the generator-coils have made one-eighth of a revolution, reaching the position shown in Fig. 2, both pairs of coils, C and C′, will be traversed by current and act in opposition in so far as the location of the poles is concerned. The position of the poles will therefore be the resultant of the magnetizing forces of the coils—that is to say, it will advance along the ring to a position corresponding to one-eighth of the revolution of the armature of the generator.

In Fig. 3 the armature of the generator has progressed to one-fourth of a revolution. At the point indicated the current in the coil B is maximum, while in B′ it is *nil*, the latter coil being in its neutral position. The poles of the ring R in Fig. 3ª will in consequence be shifted to a position ninety degrees from that at the start, as shown. I have in like manner shown the conditions existing at each successive eighth of one revolution in the remaining figures. A short reference to these figures will suffice to an understanding of their significance.

Figs. 4 and 4ª illustrate the conditions which exist when the generator-armature has completed three-eighths of a revolution. Here both coils are generating currents; but the coil B′, having now entered the opposite field, is generating a current in the opposite direction having the opposite magnetizing effect; hence the resultant pole will be on the line N S, as shown.

In Fig. 5 one-half of one revolution of the armature of the generator has been completed, and the resulting magnetic condition of the ring is shown in Fig. 5ª. In this phase coil B is in the neutral position, while coil B′ is generating its maximum current, which is in the same direction as in Fig. 4. The poles will consequently be shifted through one half of the ring.

In Fig. 6 the armature has completed five-eighths of a revolution. In this position coil B′ develops a less powerful current, but in the same direction as before. The coil B, on the other hand, having entered a field of opposite polarity, generates a current of opposite direction. The resultant poles will therefore be in the line N S, Fig. 6ª; or, in other words, the poles of the ring will be shifted along five-eighths of its periphery.

Figs. 7 and 7ª in the same manner illustrate the phases of the generator and ring at three-quarters of a revolution, and Figs. 8 and 8ª the same at seven eighths of a revolution of the generator-armature. These figures will be readily understood from the foregoing.

When a complete revolution is accomplished, the conditions existing at the start are re-established, and the same action is repeated for the next and all subsequent revolutions, and in general it will now be seen that every revolution of the armature of the generator produces a corresponding shifting of the poles or lines of force around the ring. This effect I utilize in producing the rotation of a body or armature in a variety of ways—for example, applying the principle above described to the apparatus shown in Fig. 9. The disk D, owing to its tendency to assume that position in which it embraces the greatest possible number of the magnetic lines, is set in rotation, following the motion of the lines or the points of greatest attraction.

The disk D in Fig. 9 is shown as cut away on opposite sides; but this I have found is not essential to effecting its rotation, as a circular disk, as indicated by dotted lines, is also set in rotation. This phenomenon I attribute to a certain inertia or resistance inherent in the metal to the rapid shifting of the lines of force through the same, which results in a continuous tangential pull upon the disk, causing its rotation. This seems to be confirmed by the fact that a circular disk of steel is more effectively rotated than one of soft iron, for the reason that the former is assumed to possess a greater resistance to the shifting of the magnetic lines.

In illustration of other forms of apparatus by means of which I carry out my invention, I shall now describe the remaining figures of the drawings.

Fig. 10 is a view in elevation and part vertical section of a motor. Fig. 12 is a top view of the same with the field in section and a diagram of connections. Fig. 11 is an end or side view of a generator with the fields in section. This form of motor may be used in place of that shown.

D is a cylindrical or drum armature-core, which, for obvious reasons, should be split up as far as practicable to prevent the circulation within it of currents of induction. The core is wound longitudinally with two coils, E and E′, the ends of which are respectively connected to insulated contact-rings *d d d′ d′*, carried by the shaft *a*, upon which the armature is mounted.

The armature is set to revolve within an

iron shell, R, which constitutes the field-magnet or other element of the motor. This shell is preferably formed with a slot or opening, *r*; but it may be continuous, as shown by the dotted lines, and in this event it is preferably made of steel. It is also desirable that this shell should be divided up similarly to the armature, and for similar reasons. As a generator for driving this motor, I may use the device shown in Fig. 11. This represents an annular or ring armature, A, surrounded by four coils, F F F′ F′, of which those diametrically opposite are connected in series, so that four free ends are left, which are connected to the insulated contact-rings *b b b′ b′*. The ring is suitably mounted on a shaft, *a′*, between the poles N S. The contact-rings of each pair of generator coils are connected to those of the motor, respectively, by means of contact-brushes and the two pairs of conductors, L L and L′ L′, as indicated diagrammatically in Fig. 13.

Now, it is obvious from a consideration of the preceding figures that the rotation of the generator-ring produces currents in the coils F F′, which, being transmitted to the motor-coils, impart to the core of the latter magnetic poles constantly shifting or whirling around the core. This effect sets up a rotation of the armature, owing to the attractive force between the shell and the poles of the armature; but inasmuch as the coils in this case move relatively to the shell or field-magnet the movement of the coils is in the opposite direction to the progressive shifting of the poles.

Other arrangements of the coils of both generator and motor are possible, and a greater number of circuits may be used, as will be seen in the two succeeding figures.

Fig. 13 is a diagrammatic illustration of a motor and a generator connected and constructed in accordance with my invention. Fig. 14 is an end view of the generator with its field-magnets in section.

The field of the motor M is produced by six magnetic poles, G′ G′, secured to or projecting from a ring or frame, H. These magnets or poles are wound with insulated coils, those diametrically opposite to each other being connected in pairs, so as to produce opposite poles in each pair. This leaves six free ends, which are connected to the terminals T T T′ T′ T″ T″. The armature which is mounted to rotate between the poles is a cylinder or disk, D, of wrought-iron, mounted on the shaft *a*. Two segments of the same are cut away, as shown. The generator for this motor has in this instance an armature, A, wound with three coils, K K′ K″, at sixty degrees apart. The ends of these coils are connected, respectively, to insulated contact rings *e e e′ e′ e″ e″*. These rings are connected to those of the motor in proper order by means of collecting-brushes and six wires, forming three independent circuits. The variations in the strength and direction of the currents transmitted through these circuits and traversing the coils of the motor produce a steadily-progressive shifting of the resultant attractive force exerted by the poles G′ upon the armature D, and consequently keep the armature rapidly rotating. The peculiar advantage of this disposition is in obtaining a more concentrated and powerful field. The application of this principle to systems involving multiple circuits generally will be understood from this apparatus.

Referring now to Figs. 15 and 16, Fig. 15 is a diagrammatic representation of a modified disposition of my invention. Fig. 16 is a horizontal cross-section of the motor. In this case a disk, D, of magnetic metal, preferably cut away at opposite edges, as shown in dotted lines in the figure, is mounted so as to turn freely inside two stationary coils, N′ N″, placed at right angles to one another. The coils are preferably wound on a frame, O, of insulating material, and their ends are connected to the fixed terminals T T T′ T′. The generator G is a representative of that class of alternating-current machines in which a stationary induced element is employed. That shown consists of a revolving permanent or electro-magnet, A, and four independent stationary magnets, P P′, wound with coils, those diametrically opposite to each other being connected in series and having their ends secured to the terminals *t t t′ t′*. From these terminals the currents are led to the terminals of the motor, as shown in the drawings. The mode of operation is substantially the same as in the previous cases, the currents traversing the coils of the motor having the effect to turn the disk D. This mode of carrying out the invention has the advantage of dispensing with the sliding contacts in the system.

In the forms of motor above described only one of the elements—the armature or the field-magnet—is provided with energizing-coils. It remains, then, to show how both elements may be wound with coils. Reference is therefore had to Figs. 17, 18, and 19. Fig. 17 is an end view of such a motor. Fig. 18 is a similar view of the generator, with the field-magnets in section; and Fig. 19 is a diagram of the circuit-connections. In Fig. 17 the field-magnet of the motor consists of a ring, R, preferably of thin insulated iron sheets or bands, with eight pole-pieces, G, and corresponding recesses in which four pairs of coils, V, are wound. The diametrically-opposite pairs of coils are connected in series and the free ends connected to four terminals, *w*, the rule to be followed in connecting being the same as hereinbefore explained. An armature, D, with two coils, E E′, at right angles to each other, is mounted to rotate inside of the field-magnet R. The ends of the armature-coils are connected to two pairs of contact-rings, *d d d′ d′*. The generator for this motor may be of any suitable kind to produce currents of the desired character. In the present instance it consists of a field-magnet, N S, and an armature, A, with two coils at right angles, the ends of which are connected to four contact-

rings, *b b' b' b'*, carried by its shaft. The circuit-connections are established between the rings on the generator-shaft and those on the motor-shaft by collecting brushes and wires, as previously explained. In order to properly energize the field-magnet of the motor, however, the connections are so made with the armature-coils by wires leading thereto that while the points of greatest attraction or greatest density of magnetic lines of force upon the armature are shifted in one direction those upon the field-magnet are made to progress in an opposite direction. In other respects the operation is identically the same as in the other cases cited. This arrangement results in an increased speed of rotation.

In Figs. 17 and 19, for example, the terminals of each set of field-coils are connected with the wires to the two armature-coils in such a way that the field-coils will maintain opposite poles in advance of the poles of the armature.

In the drawings the field-coils are in shunts to the armature; but they may be in series or in independent circuits.

It is obvious that the same principle may be applied to the various typical forms of motor hereinbefore described.

Having now described the nature of my invention and some of the various ways in which it is or may be carried into effect, I would call attention to certain characteristics which the applications of the invention possess, and the advantages which it offers.

In my motor, considering, for convenience, that represented in Fig. 9, it will be observed that since the disk D has a tendency to follow continuously the points of greatest attraction, and since these points are shifted around the ring once for each revolution of the armature of the generator, it follows that the movement of the disk D will be synchronous with that of the armature A. This feature by practical demonstration I have found to exist in all other forms in which one revolution of the armature of the generator produces a shifting of the poles of the motor through three hundred and sixty degrees.

In the particular modification shown in Fig. 15, or in others constructed on a similar plan, the number of alternating impulses resulting from one revolution of the generator-armature is double as compared with the preceding cases, and the polarities in the motor are shifted around twice by one revolution of the generator-armature. The speed of the motor will therefore be twice that of the generator. The same result is evidently obtained by such a disposition as that shown in Fig. 17, where the poles of both elements are shifted in opposite directions.

Again, considering the apparatus illustrated by Fig. 9 as typical of the invention, it is obvious that since the attractive effect upon the disk D is greatest when the disk is in its proper relative position to the poles developed in the ring R—that is to say, when its ends or poles immediately follow those of the ring—the speed of the motor for all loads within the normal working limits of the motor will be practically constant.

It is clearly apparent that the speed can never exceed the arbitrary limit as determined by the generator, and also that within certain limits, at least, the speed of the motor will be independent of the strength of the current.

It will now be more readily seen from the above description how far the requirements of a practical system of electrical transmission of power are realized in my invention. I secure, first, a uniform speed under all loads within the normal working limits of the motor without the use of any auxiliary regulator; second, synchronism between the motor and the generator; third, greater efficiency by the more direct application of the current, no commutating devices being required on either the motor or the generator; fourth, cheapness and simplicity of mechanical construction; fifth, the capability of being very easily managed or controlled, and, sixth, diminution of danger from injury to persons and apparatus.

These motors may be run in series—multiple arc or multiple series—under conditions well understood by those skilled in the art.

I am aware that it is not new to produce the rotations of a motor by intermittently shifting the poles of one of its elements. This has been done by passing through independent energizing-coils on one of the elements the current from a battery or other source of direct or continuous currents, reversing such current by suitable mechanical appliances, so that it is directed through the coils in alternately opposite directions. In such cases, however, the potential of the energizing-currents remains the same, their direction only being changed. According to my invention, however, I employ true alternating currents; and my invention consists in the discovery of the mode or method of utilizing such currents.

The difference between the two plans and the advantages of mine are obvious. By producing an alternating current each impulse of which involves a rise and fall of potential I reproduce in the motor the exact conditions of the generator, and by such currents and the consequent production of resultant poles the progression of the poles will be continuous and not intermittent. In addition to this, the practical difficulty of interrupting or reversing a current of any considerable strength is such that none of the devices at present could be made to economically or practically effect the transmission of power by reversing in the manner described a continuous or direct current. In so far, then, as the plan of acting upon one element of the motor is concerned, my invention involves the use of an alternating as distinguished from a reversed current, or a current which, while continuous and direct, is shifted from coil to coil by any form of commutator, reverser, or interrupter. With regard to that part of the invention which consists in acting upon both elements of the motor

simultaneously, I regard the use of either alternating or reversed currents as within the scope of the invention, although I do not consider the use of reversed currents of any practical importance.

What I claim is—

The method herein described of electrically transmitting power, which consists in producing a continuously-progressive shifting of the polarities of either or both elements (the armature or field magnet or magnets) of a motor by developing alternating currents in independent circuits, including the magnetizing-coils of either or both elements, as herein set forth.

NIKOLA TESLA.

Witnesses:
FRANK B. MURPHY,
FRANK E. HARTLEY.

(No Model.) 2 Sheets—Sheet 1.

N. TESLA.

ELECTRICAL TRANSMISSION OF POWER.

No. 382,281. Patented May 1, 1888.

Fig. 1

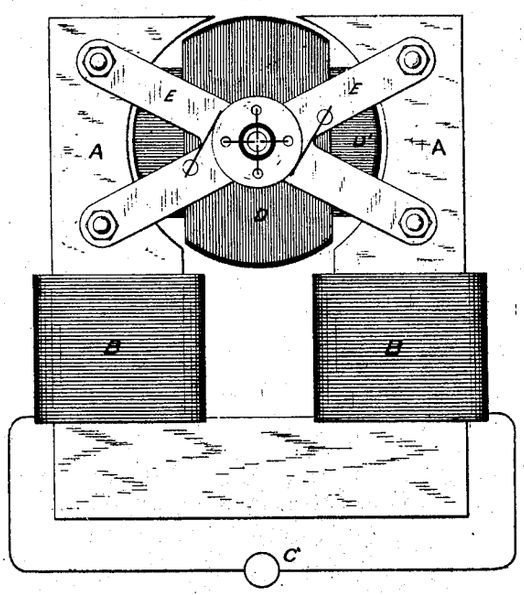

Fig. 2

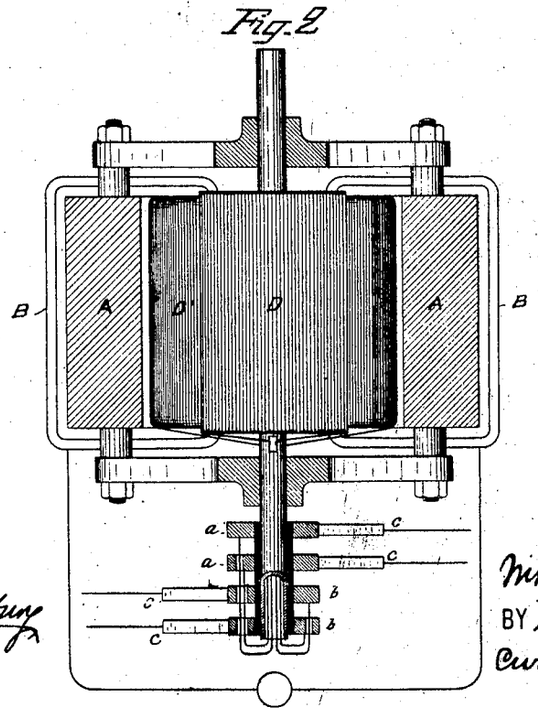

WITNESSES:
Raphael Netter.
Henry L. Newbury

INVENTOR.
Nikola Tesla.
BY Duncan, Curtis & Page.
ATTORNEYS.

(No Model.) 2 Sheets—Sheet 2.

N. TESLA.

ELECTRICAL TRANSMISSION OF POWER.

No. 382,281. Patented May 1, 1888.

Fig. 3

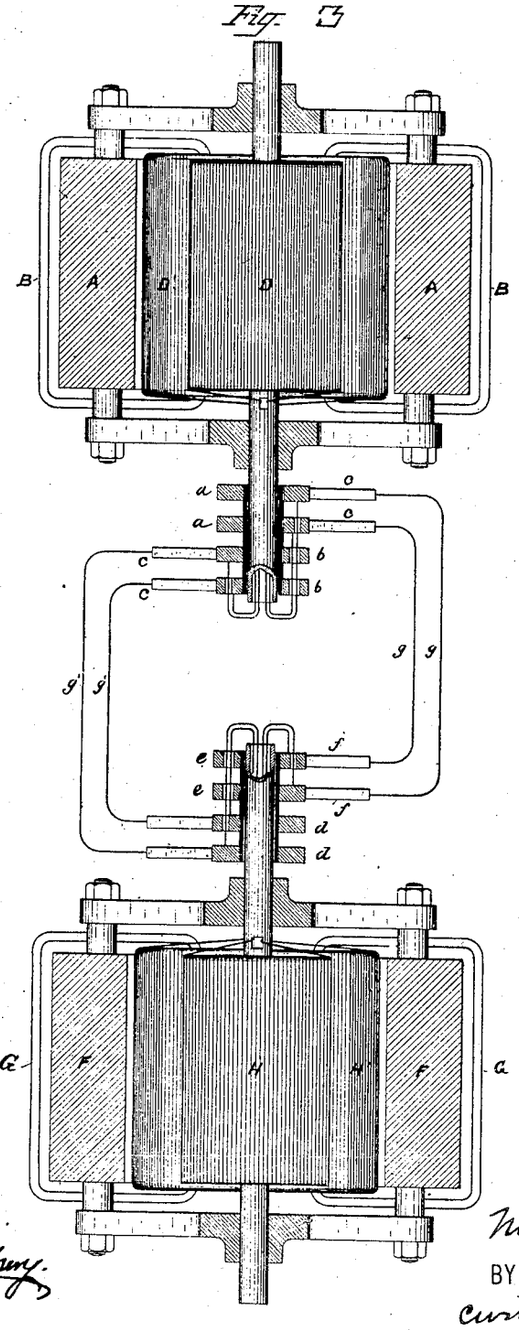

WITNESSES:
Raphael Netter.
Henry L. Newbury.

INVENTOR.
Nikola Tesla
BY Duncan, Curtis & Page
ATTORNEYS

UNITED STATES PATENT OFFICE.

NIKOLA TESLA, OF NEW YORK, N. Y.

ELECTRICAL TRANSMISSION OF POWER.

SPECIFICATION forming part of Letters Patent No. 382,281, dated May 1, 1888.

Original application filed November 30, 1887, Serial No. 256,562. Divided and this application filed March 9, 1888. Serial No. 266,756. (No model.)

To all whom it may concern:

Be it known that I, NIKOLA TESLA, from Smiljan, Lika, border country of Austria-Hungary, and residing in the city, county, and State of New York, have invented certain new and useful Improvements in the Electric Transmission of Power, of which the following is a specification, this application being a division of an application filed by me November 30, 1887, Serial No. 256,562.

In a previous application filed by me—viz., No. 252,132, filed October 12, 1887—I have set forth an improvement in motors and in the mode or method of operating the same, which, generally stated, consists in progressively and continuously shifting the poles or lines of maximum magnetic effect of either the field-magnets or armature, or both, of a motor, and thereby producing a movement of rotation in the motor. The means which I have shown for effecting this, while varying in detail, are exemplified in the following system, which, for present purposes, it will be sufficient to consider as a typical embodiment of the invention.

The motor is wound with coils forming independent energizing-circuits on the armature, which is a cylinder or disk mounted to rotate between two opposite magnetic poles. These coils are connected up with corresponding induced or current-producing circuits in an alternating-current generator. As a result of this, when the generator is set in motion, currents of alternately-opposite direction are directed through the energizing-coils of the motor in such manner as to produce a progressive shifting or rotation of the magnetic poles of the motor-armature. This movement of the poles of the armature obviously tends to rotate the armature in the opposite direction to that in which the movement of the poles takes place, owing to the attractive force between said poles and the field-magnets, and the speed of rotation increases from the start until it equals that of the generator, supposing both motor and generator to be alike.

As the magnetic poles of the armature are shifted in a direction opposite to that in which the armature rotates, it will be apparent that when the normal speed is attained the poles of the armature will assume a fixed position relatively to the field-magnets, and that in consequence the field-magnets will be energized by magnetic induction, exhibiting two distinct poles, one on each of the pole-pieces. In starting the motor, however, the speed of the armature being comparatively slow, the pole-pieces are subjected to rapid reversals of magnetic polarity; but as the speed increases these reversals become less and less frequent and finally cease, when the movement of the armature becomes synchronous with that of the generator. This being the case, the field-cores or the pole-pieces of the motor become a magnet, but by induction only.

I have found that advantageous results are secured by winding the field-magnets with a coil or coils and passing a continuous current through them, thus maintaining a permanent field, and in this feature my present invention consists.

I shall now describe the apparatus which I have devised for carrying out this invention and explain the mode of using or operating the same.

Figure 1 is an end view in elevation of my improved motor. Fig. 2 is a part horizontal central section, and Fig. 3 is a diagrammatic representation of the motor and generator combined and connected for operation.

Let A A in Fig. 1 represent the legs or pole-pieces of a field-magnet, around which are coils B B, included in the circuit of a continuous-current generator, C, which is adapted to impart magnetism to the said poles in the ordinary manner.

D D′ are two independent coils wound upon a suitable cylindrical or equivalent armature-core, which, like all others used in a similar manner, should be split or divided up into alternate magnetic and insulating parts in the usual way. This armature is mounted in non-magnetic cross-bars E E, secured to the poles of the field-magnet. The terminals of the armature-coils D D′ are connected to insulated sliding contact-rings *a a b b*, carried by the armature-shaft, and brushes *c c* bear upon these rings to convey to the coils the currents which operate the motor.

The generator for operating this motor is or

may be of precisely identical construction, and for convenience of reference I have marked in Fig. 3 its parts, as follows: F F, the field-magnets energized by a continuous current passing in its field-coils G G; H H', the coils carried by the cylindrical armature; *d d e e*, the friction or collecting rings carried by the armature-shaft and forming the terminals of the armature-coils; and *f f* the collecting-brushes which deliver the currents developed in the armature-coils to the two circuits *g g'*, which connect the generator with the motor.

The operation of this system will be understood from the foregoing. The action of the generator by causing a progressive shifting of the poles in the motor-armature sets up in the latter a rotation opposite in direction to that in which the poles move. If, now, the continuous current be directed through the field-coils so as to strongly energize the magnet A A, the speed of the motor, which depends upon that of the generator, will not be increased, but the power which produces its rotation will be increased in proportion to the energy supplied through the coils B B. It is characteristic of this motor that its direction of rotation is not reversed by reversing the direction of the current through its field-coils, for the direction of rotation depends not upon the polarity of the field, but upon the direction in which the poles of the armature are shifted. To reverse the motor the connections of either of the circuits *g g'* must be reversed.

I have found that if the field-magnet of the motor be strongly energized by its coils B B, and the circuits through the armature-coils closed, assuming the generator to be running at a certain speed, the motor will not start; but if the field be but slightly energized, or in general in such condition that the magnetic influence of the armature preponderates in determining its magnetic condition, the motor will start, and with sufficient current will reach its maximum or normal speed. For this reason it is desirable to keep at the start, and until the motor has attained its normal speed, or nearly so, the field-circuit open, or to permit but little current to pass through it. I have found, however, if the fields of both the generator and motor be strongly energized that starting the generator starts the motor, and that the speed of the motor is increased in synchronism with the generator.

Motors constructed and operated on this principle maintain almost absolutely the same speed for all loads within their normal working limits, and in practice I have observed that if the motor be overloaded to such an extent as to check its speed the speed of the generator, if its motive power be not too great, is diminished synchronously with that of the motor.

I have in other applications shown how the construction of these or similar motors may be varied in certain well-known ways—as, for instance, by rotating the field about a stationary armature or rotating conductors within the field—but I do not illustrate these features further herein, as with the illustration which I have given I regard the rest as within the power of a person skilled in the art to construct.

I am aware that a device embodying the characteristics of a motor and having a permanently-magnetized field-magnet has been operated by passing through independent coils on its armature a direct or continuous current in opposite directions. Such a system, however, I do not regard as capable of the practical applications for which my invention is designed, nor is it the same in principle or mode of operation, mainly in that the shifting of the poles is intermittent and not continuous, and that there is necessarily involved a waste of energy.

In my present application I do not limit myself to any special form of motor, nor of the means for producing the alternating currents as distinguished from what are called "reversed currents," and I may excite or energize the field of the motor and of the generator by any source of current which will produce the desired result.

What I claim is—

The method herein described of transmitting power by electro-magnetic motors, which consists in continuously and progressively shifting the poles of one element of the motor by alternating currents and magnetizing the other element by a direct or continuous current, as set forth.

NIKOLA TESLA.

Witnesses:
FRANK B. MURPHY,
FRANK E. HARTLEY.

(No Model.) 2 Sheets—Sheet 1.

N. TESLA.

METHOD OF CONVERTING AND DISTRIBUTING ELECTRIC CURRENTS.

No. 382,282. Patented May 1, 1888.

Fig. 1

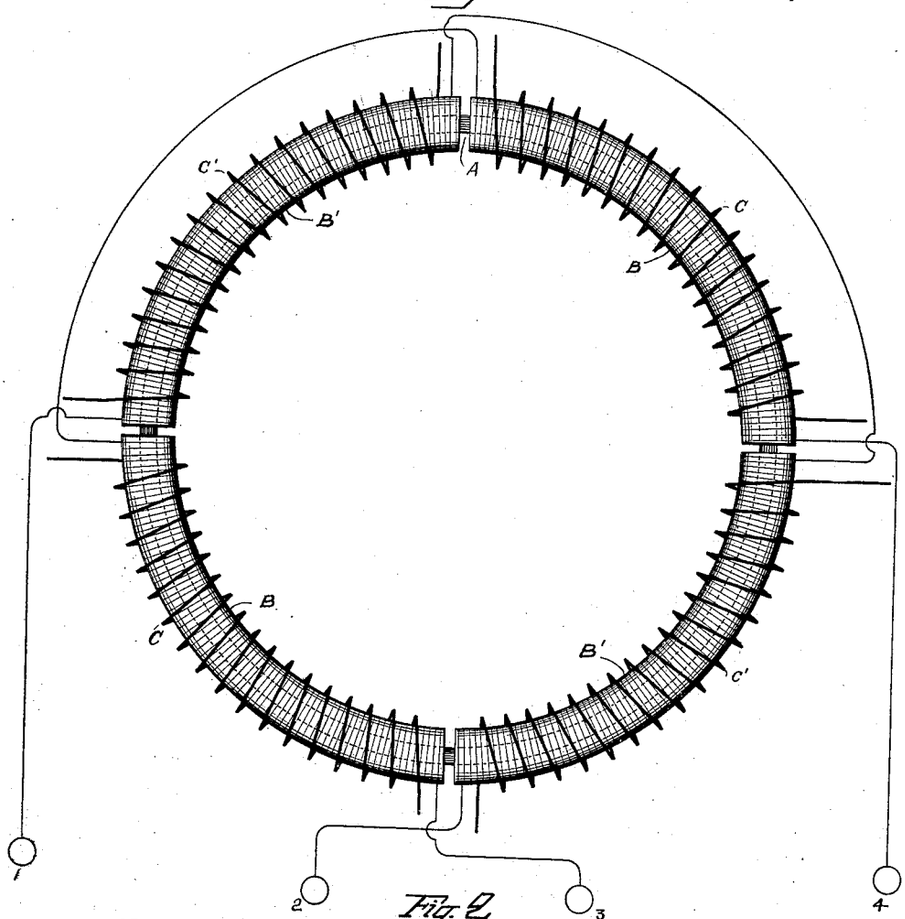

Fig. 2

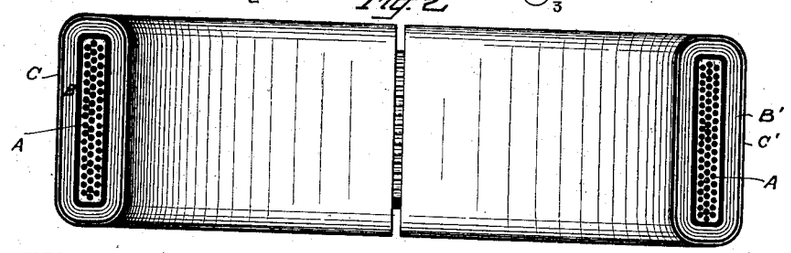

WITNESSES:
Raphael Netter
Francis B. Murphy.

INVENTOR:
Nikola Tesla.
BY
Duncan, Curtis & Page
ATTORNEYS.

N. PETERS, Photo-Lithographer, Washington, D. C.

(No Model.) 2 Sheets—Sheet 2.

N. TESLA.

METHOD OF CONVERTING AND DISTRIBUTING ELECTRIC CURRENTS.

No. 382,282. Patented May 1, 1888.

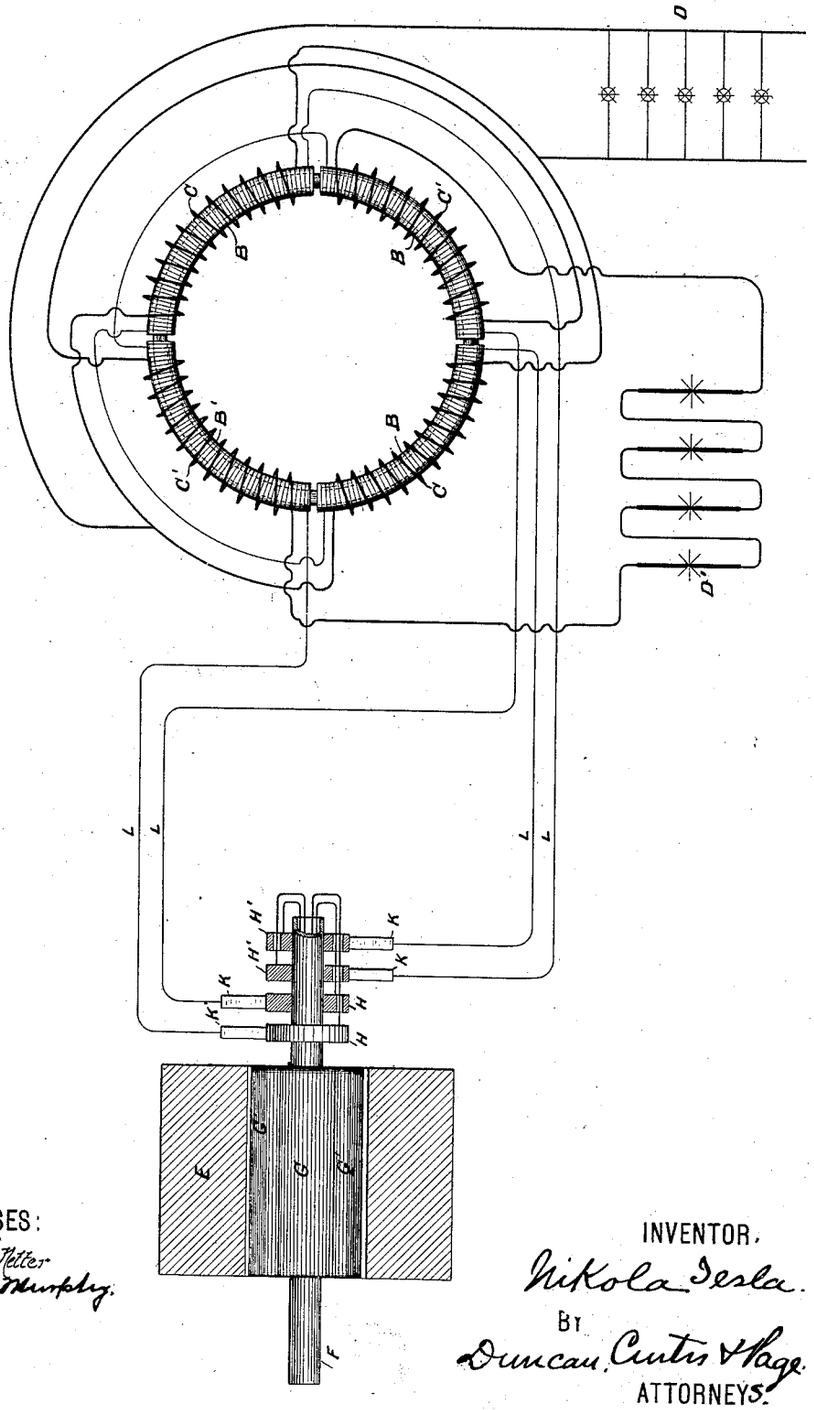

Fig. 3

WITNESSES:
Raphael Netter
Frank B. Murphy.

INVENTOR.
Nikola Tesla.
By
Duncan, Curtis & Page.
ATTORNEYS.

N. PETERS, Photo-Lithographer, Washington, D. C.

UNITED STATES PATENT OFFICE.

NIKOLA TESLA, OF NEW YORK, N. Y.

METHOD OF CONVERTING AND DISTRIBUTING ELECTRIC CURRENTS.

SPECIFICATION forming part of Letters Patent No. 382,282, dated May 1, 1888.

Original application filed December 23, 1887, Serial No. 258,787. Divided and this application filed March 9, 1888. Serial No. 266,757. (No model.)

To all whom it may concern:

Be it known that I, NIKOLA TESLA, from Smiljan, Lika, border country of Austria-Hungary, and now residing at New York, in the county and State of New York, have invented certain new and useful Improvements in Methods of Converting and Distributing Electric Currents, of which the following is a specification, this application being a division of an application filed by me December 23, 1887, Serial No. 258,787.

This invention relates to those systems of electrical distribution in which a current from a single source of supply in a main or transmitting circuit is caused to induce, by means of suitable induction apparatus, a current or currents in an independent working circuit or circuits.

The main objects of the invention are the same as have been heretofore obtained by the use of these systems—viz., to divide the current from a single source, whereby a number of lamps, motors, or other translating devices may be independently controlled and operated by the same source of current, and in some cases to reduce a current of high potential in the main circuit to one of greater quantity and lower potential in the independent consumption or working circuit or circuits.

The general character of the devices employed in these systems is now well understood. An alternating-current magneto-machine is used as a source of supply. The current developed thereby is conducted through a transmission-circuit to one or more distant points, at which the transformers are located. These consist of induction-machines of various kinds. In some cases ordinary forms of induction-coil have been used with one coil in the transmitting-circuit and the other in a local or consumption circuit, the coils being differently proportioned, according to the work to be done in the consumption-circuit—that is to say, if the work requires a current of higher potential than that in the transmission-circuit the secondary or induced coil is of greater length and resistance than the primary, while, on the other hand, if a quantity current of lower potential is wanted, the longer coil is made the primary. In lieu of these devices various forms of electro-dynamic induction-machines, including the combined motors and generators, have been devised. For instance, a motor is constructed in accordance with well-understood principles, and on the same armature are wound induced coils which constitute a generator. The motor-coils are generally of fine wire and the generator-coils of coarser wire, so as to produce a current of greater quantity and lower potential than the line-current, which is of relatively high potential to avoid loss in long transmission. A similar arrangement is to wind coils corresponding to those described on a ring or similar core, and by means of a commutator of suitable kind to direct the current through the inducing-coils successively, so as to maintain a movement of the poles of the core or of the lines of force which set up the currents in the induced coils.

Without enumerating the objections to these systems in detail, it will suffice to say that the theory or the principle of the action or operation of these devices has apparently been so little understood that their proper construction and use have, up to the present time, been attended with various difficulties and great expense. The transformers are very liable to be injured and burned out, and the means resorted to for curing this and other defects have invariably been at the expense of efficiency. I have discovered a method of conversion and distribution, however, which is not subject to the defects and objections to which I have alluded, and which is both efficient and safe. I secure by it a conversion by true dynamic induction under highly efficient conditions and without the use of expensive or complicated apparatus or moving devices, which in use wear out and require attention. This method consists in progressively and continuously shifting the line or points of maximum effect in an inductive field across the convolutions of a coil or conductor within the influence of said field and included in or forming part of a secondary or translating circuit.

In carrying out my invention I provide a series of inducing-coils and corresponding induced coils which, by preference, I wind upon a core closed upon itself—such as an annulus or ring—subdivided in the usual manner. The two sets of coils are wound side by side or superposed or otherwise placed in well-known

ways to bring them into the most effective relations to one another and to the core. The inducing or primary coils wound on the core are divided into pairs or sets by the proper electrical connections, so that while the coils of one pair or set co-operate in fixing the magnetic poles of the core at two given diametrically-opposite points the coils of the other pair or set—assuming, for the sake of illustration, that there are but two—tend to fix the poles at ninety degrees from such points. With this induction device I use an alternating-current generator with coils or sets of coils to correspond with those of the converter, and by means of suitable conductors I connect up in independent circuits the corresponding coils of the generator and converter. It results from this that the different electrical phases in the generator are attended by corresponding magnetic changes in the converter; or, in other words, that as the generator-coils revolve the points of greatest magnetic intensity in the converter will be progressively shifted or whirled around. This principle I have applied under variously modified conditions to the operation of electro-magnetic motors, and in previous applications—notably in those having serial numbers 252,132 and 256,561—I have described in detail the manner of constructing and using such motors.

In the present application my object is to describe the best and most convenient manner of which I am at present aware of carrying out the invention as applied to a system of electrical distribution; but one skilled in the art will readily understand, from the description of the modifications proposed in said applications, wherein the form of both the generator and converter in the present case may be modified. In illustration, therefore, of the details of construction which my present invention involves, I now refer to the accompanying drawings.

Figure 1 is a diagrammatic illustration of the converter and the electrical connections of the same. Fig. 2 is a horizontal central cross-section of Fig. 1. Fig. 3 is a diagram of the circuits of the entire system, the generator being shown in section.

I use a core, A, which is closed upon itself—that is to say, of an annular, cylindrical, or equivalent form—and as the efficiency of the apparatus is largely increased by the subdivision of this core I make it of thin strips, plates, or wires of soft iron electrically insulated as far as practicable. Upon this core, by any well-known method, I wind, say, four coils, B B B′ B′, which I use as primary coils, and for which I use long lengths of comparatively fine wire. Over these coils I then wind shorter coils of coarser wire, C C C′ C′, to constitute the induced or secondary coils. The construction of this or any equivalent form of converter may be carried farther, as above pointed out, by inclosing these coils with iron—as, for example, by winding over the coils a layer or layers of insulated iron wire.

The device is provided with suitable binding-posts, to which the ends of the coils are led. The diametrically-opposite coils B B and B′ B′ are connected, respectively, in series, and the four terminals are connected to the binding-posts 1 2 3 4. The induced coils are connected together in any desired manner. For example, as shown in Fig. 3, C C may be connected in multiple arc when a quantity current is desired—as for running a group of incandescent lamps, D—while C′ C′ may be independently connected in series in a circuit including arc lamps D′, or the like.

The generator in this system will be adapted to the converter in the manner illustrated. For example, in the present case I employ a pair of ordinary permanent or electromagnets, E E, between which is mounted a cylindrical armature on a shaft, F, and wound with two coils, G G′. The terminals of these coils are connected, respectively, to four insulated contact or collecting rings, H H H′ H′, and the four line-circuit wires L connect the brushes K bearing on these rings to the converter in the order shown. Noting the results of this combination, it will be observed that at a given point of time the coil G is in its neutral position and is generating little or no current, while the other coil, G′, is in a position where it exerts its maximum effect. Assuming coil G to be connected in circuit with coils B B of the converter and coil G′ with coils B′ B′, it is evident that the poles of the ring A will be determined by coils B′ B′ alone; but as the armature of the generator revolves, coil G develops more current and coil G′ less until G reaches its maximum and G′ its neutral position. The obvious result will be to shift the poles of the ring A through one quarter of its periphery. The movement of the coils through the next quarter of a turn, during which coil G′ enters a field of opposite polarity and generates a current of opposite direction and increasing strength, while coil G is passing from its maximum to its neutral position, generates a current of decreasing strength and same direction as before, and causes a further shifting of the poles through the second quarter of the ring. The second half-revolution will obviously be a repetition of the same action. By the shifting of the poles of the ring A a power-dynamic inductive effect on the coils C C′ is produced. Besides the currents generated in the secondary coils by dynamo-magnetic induction, other currents will be set up in the same coils in consequence of any variations in the intensity of the poles in the ring A. This should be avoided by maintaining the intensity of the poles constant, to accomplish which care should be taken in designing and proportioning the generator and in distributing the coils in the ring A and balancing their effect. When this is done, the currents are produced by dynamo-magnetic induction only, the same result being obtained as though the poles were shifted by a commutator with an infinite number of segments.

The apparatus by means of which this method of conversion is or may be carried out may be varied almost indefinitely. The specific form which I have herein shown I regard as the best and most efficient, and in another application I have claimed it; but I do not limit myself herein to the use of any particular form or combination of devices which is or may be capable of effecting the same result in a similar way.

What I claim is—

1. The method of electrical conversion and distribution herein described, which consists in continuously and progressively shifting the points or line of maximum effect in an inductive field, and inducing thereby currents in the coils or convolutions of a circuit located within the inductive influence of said field, as herein set forth.

2. The method of electrical conversion and distribution herein described, which consists in generating in independent circuits producing an inductive field alternating currents in such order or manner as to produce by their conjoint effect a progressive shifting of the points of maximum effect of the field, and inducing thereby currents in the coils or convolutions of a circuit located within the inductive influence of the field, as set forth.

NIKOLA TESLA.

Witnesses:
FRANK B. MURPHY,
FRANK E. HARTLEY.

(No Model.) 2 Sheets—Sheet 1.

N. TESLA.

COMMUTATOR FOR DYNAMO ELECTRIC MACHINES.

No. 382,845. Patented May 15, 1888.

Fig. 2.

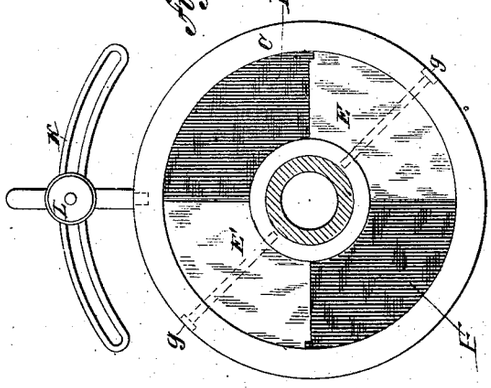

Fig. 3.

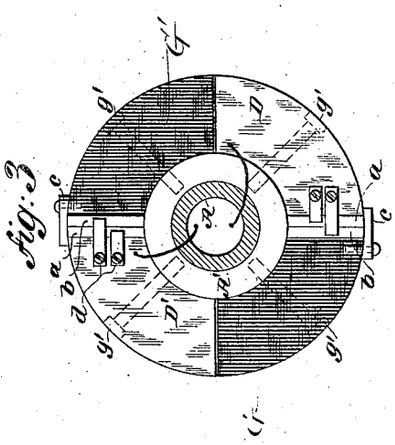

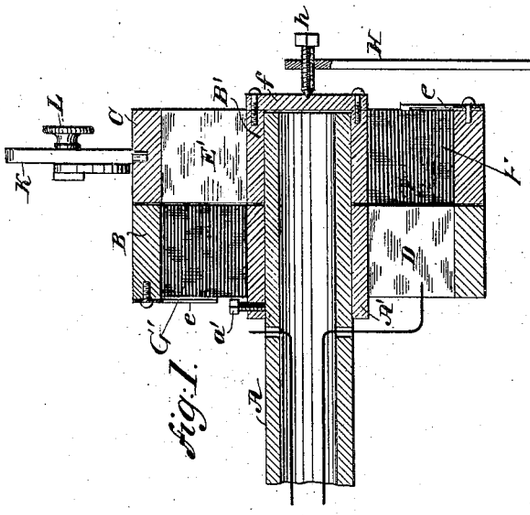

Fig. 1.

Fig. 5.

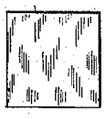

Fig. 4.

WITNESSES:

Robt. F. Gaylord.
Robt. P. Harlow.

INVENTOR.

Nikola Tesla.

BY

Duncan, Curtis & Page

ATTORNEYS.

(No Model.) 2 Sheets—Sheet 2.

N. TESLA.

COMMUTATOR FOR DYNAMO ELECTRIC MACHINES.

No. 382,845. Patented May 15, 1888.

Fig. 6.

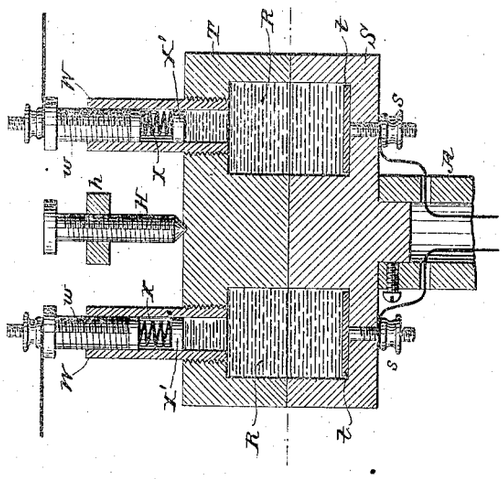

Fig. 4.

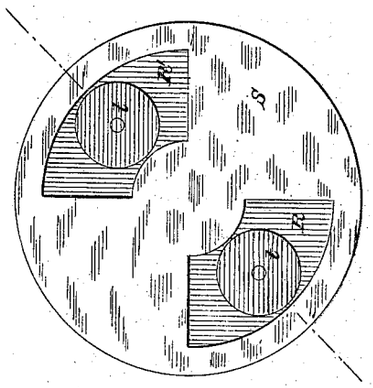

WITNESSES:
Robt. F. Gaylord.
Robt. P. Harlow.

INVENTOR,
Nikola Tesla.
BY
Duncan, Curtis & Page.
ATTORNEYS.

UNITED STATES PATENT OFFICE.

NIKOLA TESLA, OF NEW YORK, N. Y., ASSIGNOR OF ONE-HALF TO CHARLES F. PECK, OF ENGLEWOOD, NEW JERSEY.

COMMUTATOR FOR DYNAMO-ELECTRIC MACHINES.

SPECIFICATION forming part of Letters Patent No. 382,845, dated May 15, 1888.

Application filed April 30, 1887. Serial No. 236,711. (No model.)

To all whom it may concern:

Be it known that I, NIKOLA TESLA, from Smiljan, Lika, border country of Austria-Hungary, at present residing in the city, county, and State of New York, have invented certain new and useful Improvements in Commutators for Dynamo-Electric Machines and Motors, of which the following is a specification, reference being had to the drawings accompanying and forming a part of the same.

This invention relates to dynamo-electric machines or motors, and is an improvement in the devices for commutating and collecting the currents.

The objects of the invention are, first, to avoid the sparking and the gradual wearing away or destruction of the commutator-segments and brushes or collectors resulting therefrom; second, to obviate the necessity of readjustment of the commutator or the brushes or collectors and other consequences of the wear of the same; third, to render practicable the construction of very large dynamo-electric machines and motors with the minimum number of commutator-segments, and, fourth, to increase the efficiency and safety and reduce the cost of the machine.

In carrying out my invention in a manner to accomplish these results I construct a commutator and the collectors therefor in two parts mutually adapted to one another, and, so far as the essential features are concerned, alike in mechanical structure. Selecting as an illustration a commutator of two segments adapted for use with an armature the coils or coil of which have but two free ends, connected respectively to the said segments, the bearing-surface is the face of a disk, and is formed of two metallic quadrant-segments and two insulating-segments of the same dimensions, and the face of the disk should be smoothed off, so that the metal and insulating segments are flush. The part which takes the place of the usual brushes, or what I term the "collector," is a disk of the same character as the commutator and having a surface similarly formed with two insulating and two metallic segments. These two parts are mounted with their faces in contact and in such manner that the rotation of the armature causes the commutator to turn upon the collector, whereby the currents induced in the coils are taken off by the collector-segments and thence conveyed off by suitable conductors leading from the collector-segments. This is the general plan of the construction which I have invented. Aside from certain adjuncts, the nature and functions of which will be hereinafter set forth, this means of commutation will be seen to possess many important advantages. In the first place the short-circuiting and breaking of the armature-coil connected to the commutator-segments occur at the same instant, and from the nature of the construction this will be done with the greatest precision; secondly, the duration of both the break and that of the short circuit will be reduced to a minimum. The first results in a reduction which amounts practically to a suppression of the spark, since the break and the short circuit produce opposite effects in the armature-coil. The second has the effect of diminishing the destructive effect of a spark, since this would be in a measure proportioned to the duration of the spark, while lessening the duration of the short circuit obviously increases the efficiency of the machine.

The mechanical advantages will be better understood by referring to the accompanying drawings, in which—

Figure 1 is a central longitudinal section of the end of a shaft with my improved commutator carried thereon. Fig. 2 is a view of the inner or bearing face of the collector. Fig. 3 is an end view from the armature side of a modified form of commutator. Figs. 4 and 5 are views of details of Fig. 3. Fig. 6 is a longitudinal central section of another modification, and Fig. 7 is a sectional view of the same.

A is the end of the armature-shaft of a dynamo-electric machine or motor.

A′ is a sleeve of insulating material around the shaft, secured in place by a screw, *a*′, or by other suitable means.

The commutator proper is in the form of a disk which is made up of four segments, D D′ G G′, similar to those shown in Fig. 3. Two of these segments, as D D′, are of metal and are in electrical connection with the ends of the coils on the armature. The other two seg-

ments are of insulating material. The segments are held in place by a band, B, of insulating material. The disk is held in place by friction or by screws, such as *g' g'*, Fig. 3, which secure the disk firmly to the sleeve A'.

The collector is made in the same form as the commutator. It is composed of the two metallic segments E E' and the two insulating-segments F F', bound together by a band, C. The metallic segments E E' are of the same or practically the same width or extent as the insulating segments or spaces of the commutator. The collector is secured to a sleeve, B', by screws *g g*, and the sleeve is arranged to turn freely on the shaft A. The end of the sleeve B' is closed by a plate, as *f*, upon which presses a pivot-pointed screw, *h*, adjustable in a spring, H, which acts to maintain the collector in close contact with the commutator and to compensate for the play of the shaft. Any convenient means is employed to hold the collector so that it may not turn with the shaft. For example, I have shown a slotted plate, K, which is designed to be attached to a stationary support, and an arm extending from the collector and carrying a clamping-screw, L, by which the collector may be adjusted and set to the desired position.

I prefer in the form shown in Figs. 1 and 2 to fit the insulating-segments of both commutator and collector loosely and to provide some means—as, for example, light springs *e e*, secured to the bands A' B', respectively, and bearing against the segments—to exert a light pressure upon them and keep them in close contact and to compensate for wear. The metal segments of the commutator may be moved forward by loosening the screw *a'*.

The circuit or line wires are led from the metal segments of the collector, being secured thereto in any convenient manner, the plan of connections being shown as applied to a modified form of the commutator in Fig. 6. The commutator and the collector in thus presenting two flat and smooth bearing-surfaces prevent by mechanical action the occurrence of sparks, and this is more effectively accomplished as is here done—that is to say, by the interposition of an insulating body between the separating plates or segments of the commutator and collector—than by any other mechanical devices of which I am aware.

The insulating-segments are made of some hard material capable of being polished and formed with sharp edges. Such materials as glass, marble, or soapstone may be advantageously used. The metal segments are preferably of copper or brass; but they may have a facing or edge of durable material—such as platinum or the like—where the sparks are liable to occur.

In Fig. 3 a somewhat modified form of my invention is shown, a form designed to facilitate the construction and replacing of the parts. In this form the commutator and collector are made in substantially the same manner as previously described, except that the bands B C may be omitted. The four segments of each part, however, are secured to their respective sleeves by screws *g' g'*, and one edge of each segment is cut away, so that small plates *a b* may be slipped into the spaces thus formed. Of these plates *a a* are of metal, and are in contact with the metal segments D D', respectively. The other two, *b b*, are of glass or marble, and they are all preferably square, as shown in Figs. 4 and 5, so that they may be turned to present new edges should any edge become worn by use. Light springs *d* bear upon these plates and press those in the commutator toward those in the collector, and insulating-strips *c c* are secured to the periphery of the disks to prevent the blocks from being thrown out by centrifugal action. These plates are, of course, useful at those edges of the segments only where sparks are liable to occur, and, as they are easily replaced, they are of great advantage. I prefer to coat them with platinum or silver.

In Figs. 6 and 7 is shown the construction which I use when, instead of solid segments, a fluid is employed. In this case the commutator and collector are made of two insulating-disks, S T, and in lieu of the metal segments a space is cut out of each part, as at R R', corresponding in shape and size to a metal segment. The two parts are fitted smoothly and the collector T held by the screw *h* and spring H against the commutator S. As in the other cases, the commutator revolves while the collector remains stationary. The ends of the coils are connected to binding-posts *s s*, which are in electrical connection with metal plates *t t* within the recesses in the two parts S T. These chambers or recesses are filled with mercury, and in the collector part are tubes W W, with screws *w w*, carrying springs X and pistons X', which compensate for the expansion and contraction of the mercury under varying temperatures, but which are sufficiently strong not to yield to the pressure of the fluid due to centrifugal action, and which serve as binding-posts.

In all the above cases I have described commutators adapted for a single coil, and the device is particularly adapted to such purposes. The number of segments may be increased, however, or more than one commutator used with a single armature, as will be well understood.

Although I have shown the bearing-surfaces as planes at right angles to the shaft or axis, it is evident that in this particular the construction may be very greatly modified without departure from the invention.

Without confining myself, therefore, to the details of construction which I have shown in illustration of the invention, what I claim as new is—

1. In a dynamo-electric machine, the combination, with a commutator formed with conducting terminals or segments with intervening insulating-spaces, of a collector adapted to bear upon the surface of the commutator,

and formed with conducting terminals or segments equal in extent to the insulating-space between the commutator-segments, as set forth.

2. The combination, with a commutator built or formed of alternate blocks or segments of conducting and insulating material, of a collector adapted to bear upon the surface of the commutator and formed of conducting blocks or segments of a width or extent equal to that of the insulating-segments of the commutator and separated by interposed blocks or segments of insulating material, as described.

3. The combination, with a commutator formed as a disk with alternate terminals or segments of conducting and insulating material, of a collector similarly formed and mounted with its face in contact with that of the commutator, as set forth.

4. The combination, with a commutator having a bearing-surface formed of alternate sections of conducting and insulating material, of a collector with a similar and symmetrically-formed bearing-surface and means for applying spring-pressure to force the two bearing-surfaces together, as set forth.

5. The combination, with a commutator and a collector the bearing-surfaces of which are identical in respect to the disposition of the conducting and insulating parts, of means for applying spring-pressure to maintain the two bearing-surfaces in contact and means for holding the collector against rotary movement, as set forth.

Signed this 21st day of April, 1887.

NIKOLA TESLA.

Witnesses:
ROBT. F. GAYLORD,
FRANK E. HARTLEY.

(No Model.) 3 Sheets—Sheet 1.

N. TESLA.

SYSTEM OF ELECTRICAL DISTRIBUTION.

No. 390,413. Patented Oct. 2, 1888.

Fig. 1

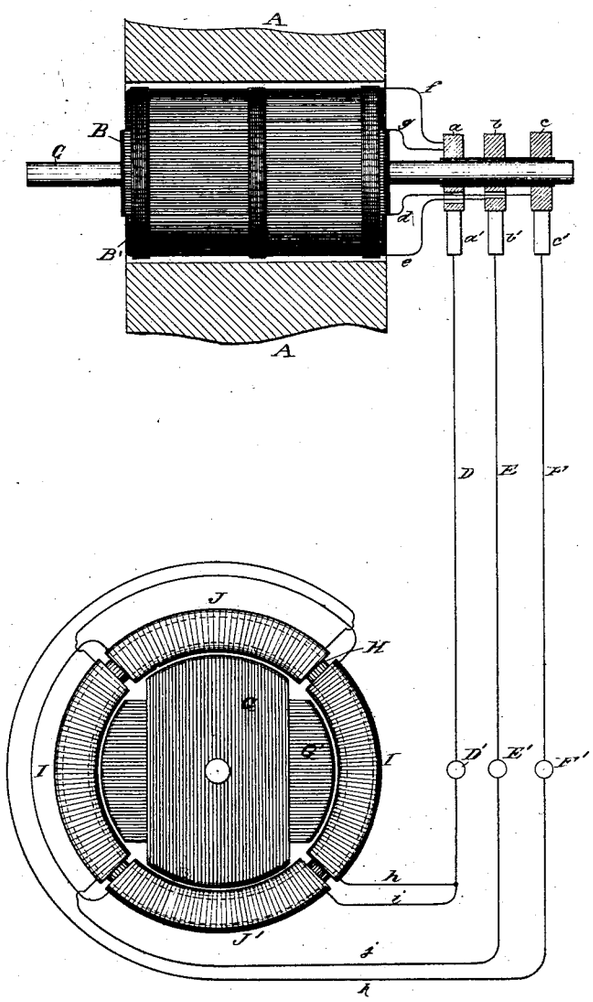

WITNESSES:

Raphael Netter

Francis B. Murdoch.

INVENTOR

Nikola Tesla

BY

Duncan, Curtis & Page.

ATTORNEY

(No Model.) 3 Sheets—Sheet 2.

N. TESLA.

SYSTEM OF ELECTRICAL DISTRIBUTION.

No. 390,413. Patented Oct. 2, 1888.

Fig. 2.

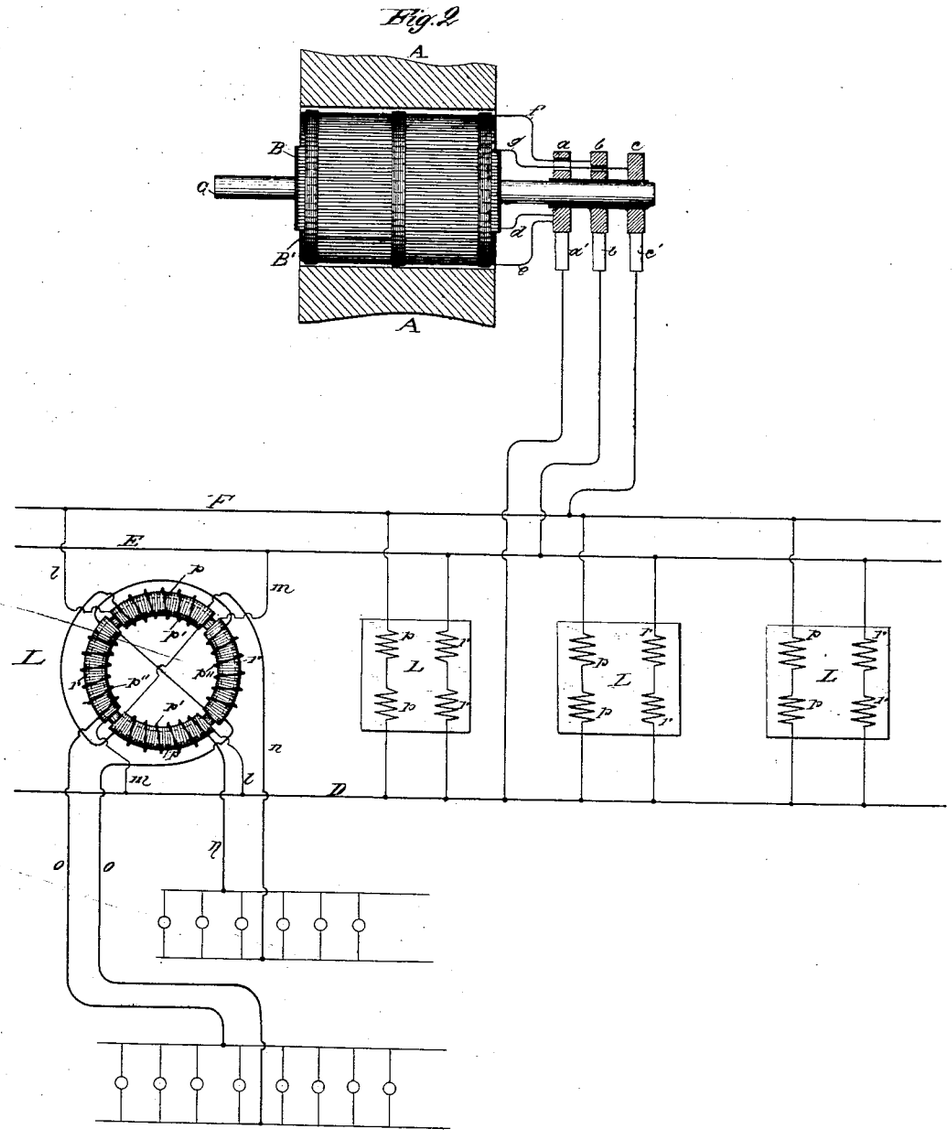

WITNESSES:
Raphael Netter
Frank B. Murray.

INVENTOR
Nikola Tesla.
BY
Duncan Curtis & Page
ATTORNEYS.

(No Model.) 3 Sheets—Sheet 3.

N. TESLA.

SYSTEM OF ELECTRICAL DISTRIBUTION.

No. 390,413. Patented Oct. 2, 1888.

Fig. 3

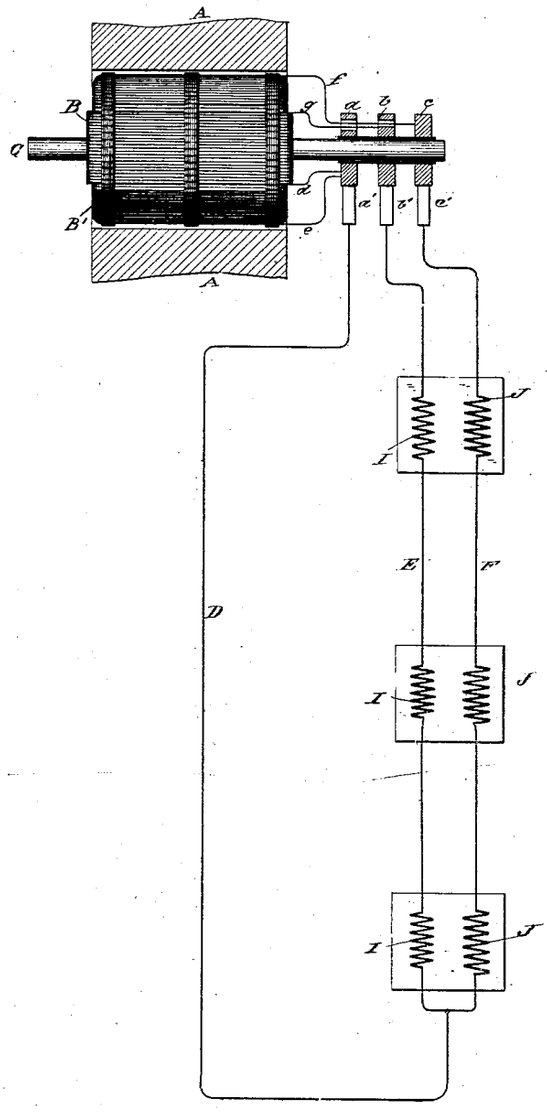

WITNESSES:

Raphael Netter

Frank B. Murray.

INVENTOR

Nikola Tesla

BY

Duncan, Curtis & Page.

ATTORNEYS.

UNITED STATES PATENT OFFICE.

NIKOLA TESLA, OF NEW YORK, N. Y., ASSIGNOR TO THE TESLA ELECTRIC COMPANY, OF SAME PLACE.

SYSTEM OF ELECTRICAL DISTRIBUTION.

SPECIFICATION forming part of Letters Patent No. 390,413, dated October 2, 1888.

Application filed April 10, 1888. Serial No. 270,187. (No model.)

To all whom it may concern:

Be it known that I, NIKOLA TESLA, a subject of the Emperor of Austria, from Smiljan, Lika, border country of Austria-Hungary, residing in the city, county, and State of New York, have invented certain new and useful Improvements in Systems of Electrical Distribution, of which the following is a specification, reference being had to the drawings accompanying and forming a part of the same.

In previous applications for patents made by me I have shown and described electrical systems for the transmission of power and the conversion and distribution of electrical energy, in which the motors and the transformers contain two or more coils or sets of coils, which were connected up in independent circuits with corresponding coils of an alternating-current generator, the operation of the system being brought about by the co-operation of the alternating currents in the independent circuits in progressively moving or shifting the poles or points of maximum magnetic effect of the motors or converters. In these systems, as I have described them, two independent conductors were employed for each of the independent circuits connecting the generator with the devices for converting the transmitted currents into mechanical energy or into electric currents of another character; but I have found that this is not always necessary, and that the two or more circuits may have a single return path or wire in common, with a loss, if any, which is so extremely slight that it may be disregarded entirely. For sake of illustration, if the generator have two independent coils and the motor two coils or two sets of coils in corresponding relations to its operative elements one terminal of each generator-coil is connected to the corresponding terminals of the motor coils through two independent conductors, while the opposite terminals of the respective coils are both connected to one return-wire.

This invention is applicable to my system in various ways, as will be seen by reference to the drawings, in which—

Figure 1 is a diagrammatic illustration of a generator and single motor constructed and electrically connected in accordance with the invention. Fig. 2 is a diagram of the system as it is used in operating motors or converters, or both, in parallel or multiple arc. Fig. 3 illustrates diagrammatically the manner of operating two or more motors or converters, or both, in series.

It is obvious that for purposes of this invention motors or transformers, which may be all designated as "converters," are the same, and that either or both may be operated by the same system or arrangement of circuits.

Referring to Fig. 1, A A designate the poles of the field-magnets of an alternating-current generator, the armature of which, being in this case cylindrical in form and mounted on a shaft, C, is wound longitudinally with coils B B'. The shaft C carries three insulated contact-rings, *a b c*, to two of which, as *b c*, one terminal of each coil, as *e d*, is connected. The remaining terminals, *f g*, are both connected to the third ring, *a*.

A motor in this case is shown as composed of a ring, H, wound with four coils, I I J J, electrically connected, so as to co-operate in pairs, with a tendency to fix the poles of the ring at four points ninety degrees apart. Within the magnetic ring H is a disk or cylindrical core wound with two coils, G G', which may be connected to form two closed circuits. The terminals *j k* of the two sets or pairs of coils are connected, respectively, to the binding-posts E' F', and the other terminals, *h i*, are connected to a single binding-post, D'. To operate the motor, three line-wires are used to connect the terminals of the generator with those of the motor.

So far as the apparent action or mode of operation of this arrangement is concerned, the single wire D, which is, so to speak, a common return-wire for both circuits, may be regarded as two independent wires. In illustration, with the order of connection shown, coil B' of the generator is producing its maximum current and coil B its minimum; hence the current which passes through wire *e*, ring *b*, brush *b'*, line-wire E, terminal E', wire *j*, coils I I, wire or terminal D', line-wire D, brush *a'*, ring *a*, and wire *f*, fixes the polar line of the motor midway between the two coils I I; but as the coil B' moves from the po-

sition indicated it generates less current, while coil B, moving into the field, generates more. The current from coil B passes through the devices and wires designated by the letters *d*, *c*, *c'*, F, F', *k*, J J, *i*, D', D, *a'*, *a*, and *g*, and the position of the poles of the motor will be due to the resultant effect of the currents in the two sets of coils—that is, it will be advanced in proportion to the advance or forward movement of the armature coils. The movement of the generator-armature through one-quarter of a revolution will obviously bring coil B' into its neutral position and coil B into its position of maximum effect, and this shifts the poles ninety degrees, as they are fixed solely by coils B. This action is repeated for each quarter of a complete revolution.

When more than one motor or other device is employed, they may be run either in parallel or series. In Fig. 2 the former arrangement is shown. The electrical device is shown as a converter, L, constructed as I have described in my application Serial No. 258,787, filed December 23, 1887. The two sets of primary coils *p r* are connected, respectively, to the mains F E, which are electrically connected with the two coils of the generator. The cross-circuit wires *l m*, making these connections, are then connected to the common return-wire D. The secondary coils *p' p''* are in circuits *n o*, including, for example, incandescent lamps. Only one converter is shown entire in this figure, the others being illustrated diagrammatically.

When motors or converters are to be run in series, the two wires E F are led from the generator to the coils of the first motor or converter, then continued on to the next, and so on through the whole series, and are then joined to the single wire D, which completes both circuits through the generator. This is shown in Fig. 3, in which J I represent the two coils or sets of coils of the motors.

Obviously it is immaterial to the operation of the motor or equivalent device in Fig. 1 what order of connections is observed between the respective terminals of the generator or motor.

I have described the invention in its best and most practicable form of which I am aware; but there are other conditions under which it may be carried out. For example, in case the motor and generator each has three independent circuits, one terminal of each circuit is connected to a line-wire and the other three terminals to a common return-conductor. This arrangement will secure similar results to those attained with a generator and motor having but two independent circuits, as above described.

When applied to such machines and motors as have three or more induced circuits with a common electrical joint, the three or more terminals of the generator would be simply connected to those of the motor. Such forms of machines, when adapted in this manner to my system, I have, however, found to be less efficient than the others.

The invention is applicable to machines and motors of various types, and according to circumstances and conditions readily understood, with more or less efficient results. I do not therefore limit myself to any of the details of construction of the apparatus herein shown.

What I claim is—

1. The combination, with a generator having independent current-generating circuits and a converter or converters having independent and corresponding circuits, of independent conductors connecting one terminal of each generator-circuit with a corresponding terminal of the motor and a single conductor connecting the remaining generator and converter terminals, as set forth.

2. The combination, with a generator having independent current-generating circuits and a converter or converters having independent and corresponding circuits, of independent line or connecting circuits formed in part through a conductor common to all, as set forth.

3. The system of electrical distribution herein set forth, consisting of the combination, with an alternating-current generator having independent generating-circuits and electro-magnetic motors or converters provided with corresponding energizing-circuits, of line wires or conductors connecting the coils of the motors or converters, respectively, in series with one terminal of each circuit of the generator, and a single return wire or conductor connecting the said conductors with the other terminals of the generator, as set forth.

NIKOLA TESLA.

Witnesses:
ROBT. F. GAYLORD,
FRANK E. HARTLEY.

BEST AVAILABLE COP

(No Model.) 2 Sheets—Sheet 1.

N. TESLA.

DYNAMO ELECTRIC MACHINE.

No. 390,414. Patented Oct. 2, 1888.

Fig. 1

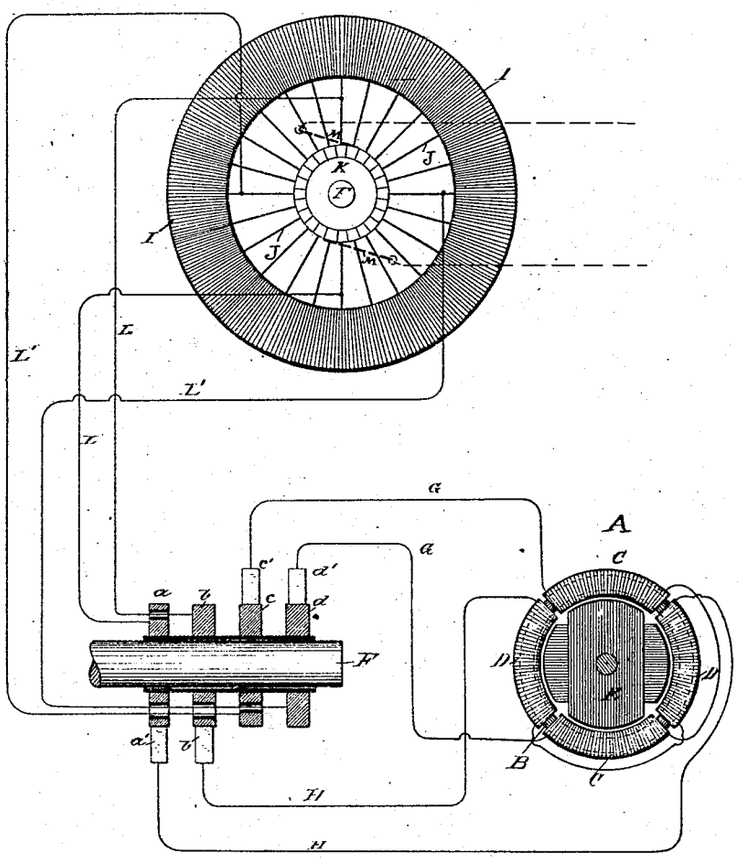

WITNESSES:
Raphael Netter
Francis G. Harvey

INVENTOR
Nikola Tesla
BY
Duncan, Curtis & Page
ATTORNEYS.

JOHNS PETERS, INC., LITHO., WASHINGTON, D. C.

BEST AVAILABLE COP

(No Model.) 2 Sheets—Sheet 2.

N. TESLA.

DYNAMO ELECTRIC MACHINE.

No. 390,414. Patented Oct. 2, 1888.

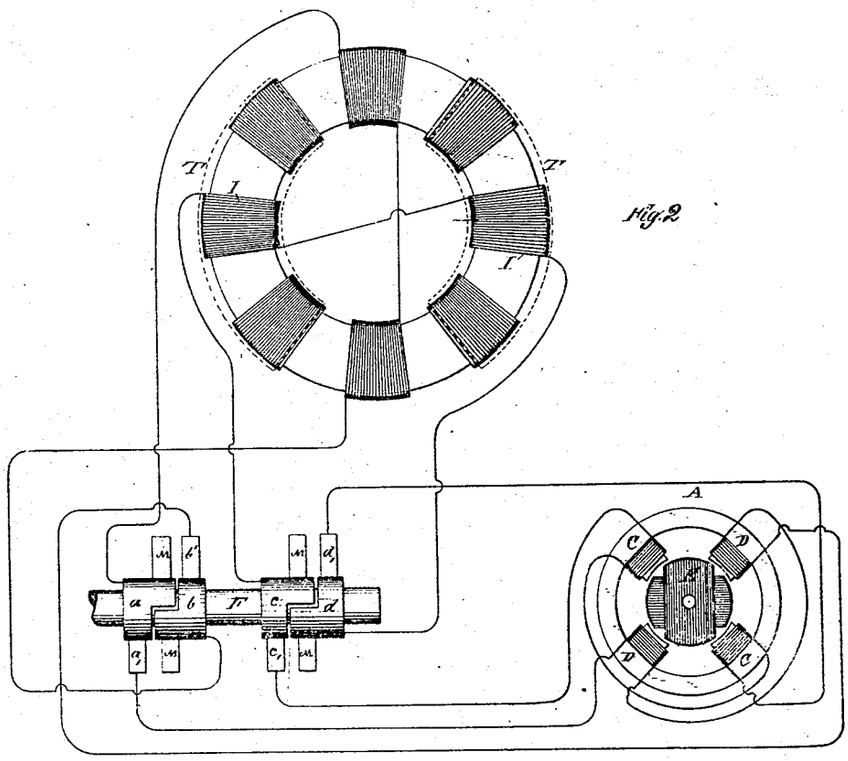

Fig. 2

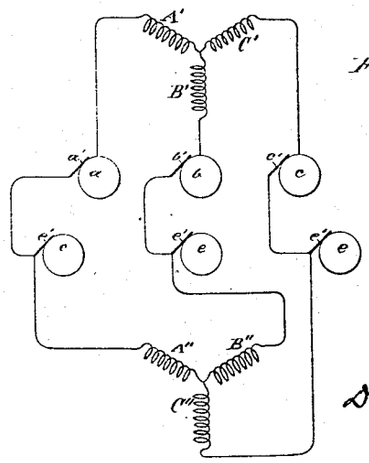

Fig. 3

WITNESSES:
Raphael Netter
Frank R. Hartley

INVENTOR
Nikola Tesla
BY
Duncan, Curtis & Hag
ATTORNEYS

NORRIS PETERS, INC., LITHO., WASHINGTON, D. C.

BEST AVAILABLE COP

UNITED STATES PATENT OFFICE.

NIKOLA TESLA, OF NEW YORK, N. Y., ASSIGNOR TO THE TESLA ELECTRIC COMPANY, OF SAME PLACE.

DYNAMO-ELECTRIC MACHINE.

SPECIFICATION forming part of Letters Patent No. 390,414, dated October 2, 1888.

Application filed April 23, 1888. Serial No. 271,626. (No model.)

To all whom it may concern:

Be it known that I, NIKOLA TESLA, a subject of the Emperor of Austria, from Smiljan, Lika, border country of Austria-Hungary, now residing at New York, in the county and State of New York, have invented certain new and useful Improvements in Dynamo-Electric Machines, of which the following is a specification, reference being had to the drawings accompanying and forming a part of the same.

In certain patents granted to Charles F. Peck and myself—notably in Patents No. 381,968 and No. 382,280, May 1, 1888—I have shown and described a plan of constructing and operating motors, transformers, and the like, by alternating currents conveyed through two or more independent circuits from a generator having such relation to the motors or transformers as to produce therein a progressive movement of the magnetic poles or lines of force. In the said applications the descriptions and illustrations of the generators were confined to those types of alternating current machine in which the current generating coils are independent or separate; but I have found that the ordinary forms of continuous current dynamos now in use may be readily and cheaply adapted to my system, or utilized both as continuous and alternating current generators with but slight changes in their construction. The mode of effecting this forms the substance of my present application.

Generally stated, the plan pursued by me in carrying out this invention is as follows: On the shaft of a given generator, either in place of or in addition to the regular commutator, I secure as many pairs of insulated collecting-rings as there are circuits to be formed. Now, it will be understood that in the operation of any dynamo electric generator the currents in the coils in their movement through the field of force undergo different phases—that is to say, at different positions of the coils the currents have certain directions and certain strengths—and that in my improved motors or transformers it is necessary that the currents in the energizing-coils should undergo a certain order of variations in strength and direction. Hence, the further step—viz, the connection between the induced or generating coils of the machine and the contact-rings from which the currents are to be taken off—will be determined solely by what order of variations of strength and direction in the currents is desired for producing a given result in the electrical translating device. This may be accomplished in various ways; but in the drawings I have given typical instances only of the best and most practicable ways of applying the invention to three of the best-known types of machines, in order to illustrate the principle and to enable any one skilled in the art to apply the invention in any other case or under any modified conditions which the circumstances of particular cases may require.

Figure 1 is a diagram illustrative of the mode of applying the invention to the well-known type of closed or continuous circuit machines. Fig. 2 is a similar diagram containing an armature with separate coils connected diametrically, or what is generally called an "open-circuit" machine. Fig. 3 is a diagram showing the application of the invention to a machine the armature-coils of which have a common joint.

Referring to Fig. 1, let A represent one of my improved motors or transformers, which, for convenience, I shall designate a "converter," which consists of an annular core, B, wound with four independent coils, C and D, those diametrically opposite being connected together so as to co-operate in pairs in establishing free poles in the ring, the tendency of each pair being to fix the poles at ninety degrees from the other. There may be an armature, E, within the ring, which is wound with coils closed upon themselves. The object is to pass through coils C D currents of such relative strength and direction as to produce a progressive shifting or movement of the points of maximum magnetic effect around the ring, and to thereby maintain a rotary movement of the armature. I therefore secure to the shaft F of the generator four insulated contact-rings, *a b c d*, upon which I cause to bear the collecting-brushes *a' b' c' d'*, connected by wires G G H H, respectively, with the terminals of coils C and D.

Assume, for sake of illustration, that the coils D D are to receive the maximum and coils C C at the same instant the minimum current, so that the polar line may be midway

BEST AVAILABLE COP

between the coils D D, the rings *a b* would therefore be connected to the continuous armature-coil at its neutral points with respect to the field or the point corresponding with that of the ordinary commutator-brushes, and between which exists the greatest difference of potential, while rings *c d* would be connected to two points in the coil, between which exists no difference of potential. The best results will be obtained by making these connections at points equidistant from one another, as shown. These connections are easiest made by using wires L between the rings and the loops or wires J, connecting the coil I to the segments of the commutator K. When the converters are made in this manner, it is evident that the phases of the currents in the sections of the generator-coil will be reproduced in the converter coils. For example, after turning through an arc of ninety degrees the conductors L L, which before conveyed the maximum current, will receive the minimum current by reason of the change in the position of their coils, and it is evident that for the same reason the current in said coils has gradually fallen from the maximum to the minimum in passing through the arc of ninety degrees. In this special plan of connections the rotation of the magnetic poles of the converter will be synchronous with that of the armature-coils of the generator, and the result will be the same, whether the energizing-circuits are derivations from a continuous armature-coil or from independent coils, as in my previous devices.

I have shown in Fig. 1, in dotted lines, the brushes M M in their proper normal position. In practice these brushes may be removed from the commutator and the field of the generator excited by an external source of current; or the brushes may be allowed to remain on the commutator and to take off a converted current to excite the field, or to be used for other purposes.

In a certain well-known class of machines the armature contains a number of coils the terminals of which connect to commutator-segments, the coils being connected across the armature in pairs. This type of machine is represented in Fig. 2. In this machine each pair of coils goes through the same phases as the coils in some of the generators I have shown, and it is obviously only necessary to utilize them in pairs or sets to operate one of my converters by extending the segments of the commutators belonging to each pair of coils and causing a collecting-brush to bear on the continuous portion of each segment. In this way two or more circuits may be taken off from the generator, each including one or more pairs or sets of coils, as may be desired.

In Fig. 2 I I represent the armature-coils, T T the poles of the field-magnet, and F the shaft carrying the commutators, which are extended to form continuous portions *a b c d*. The brushes bearing on the continuous portions for taking off the alternating currents are represented by *a' b' c' d'*. The collecting-brushes, or those which may be used to take off the direct current, are designated by M M. Two pairs of the armature-coils and their commutators are shown in the figure as being utilized; but all may be utilized in a similar manner.

There is another well-known type of machine in which three or more coils, A' B' C', on the armature have a common joint, the free ends being connected to the segments of a commutator. This form of generator is illustrated in Fig. 3. In this case each terminal of the generator is connected directly or in derivation to a continuous ring, *a b c*, and collecting-brushes *a' b' c'*, bearing thereon, take off the alternating currents that operate the motor. It is preferable in this case to employ a motor or transformer with three energizing-coils, A'' B'' C'', placed symmetrically with those of the generator, and the circuits from the latter are connected to the terminals of such coils either directly—as when they are stationary—or by means of brushes *e'* and contact-rings *e*. In this, as in the other cases, the ordinary commutator may be used on the generator, and the current taken from it utilized for exciting the generator field-magnets or for other purposes.

These examples serve to illustrate the principle of the invention. It will be observed that in any case it is necessary only to add the continuous contact or collecting rings and to establish the connections between them and the appropriate coils.

It will be understood that this invention is applicable to other types of machine—as, for example, those by which the induced coils are stationary and the brushes and magnet revolve; but the manner of its application is obvious to one skilled in the art.

Having now described my invention, what I claim is—

1. The combination, with a converter having independent energizing-coils, of a continuous or direct current dynamo or magneto machine, and intermediate circuits permanently connected at suitable points to the induced or generating coils of the generator, as herein set forth.

2. The combination, with a converter provided with independent energizing-circuits, of a continuous or direct current generator provided with continuous collecting-rings connected in derivation to the armature-coils to form the terminals of circuits corresponding to those of the converter, as herein set forth.

NIKOLA TESLA.

Witnesses:
ROBT. F. GAYLORD,
FRANK B. MURPHY.

(No Model.)

N. TESLA.

DYNAMO ELECTRIC MACHINE OR MOTOR.

No. 390,415. Patented Oct. 2, 1888.

Fig. 1

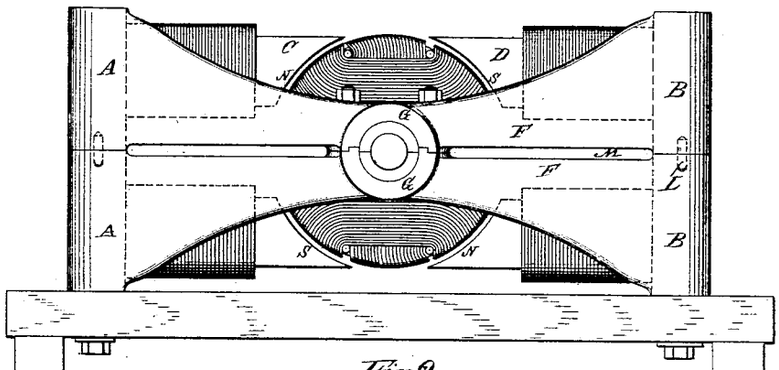

Fig. 2

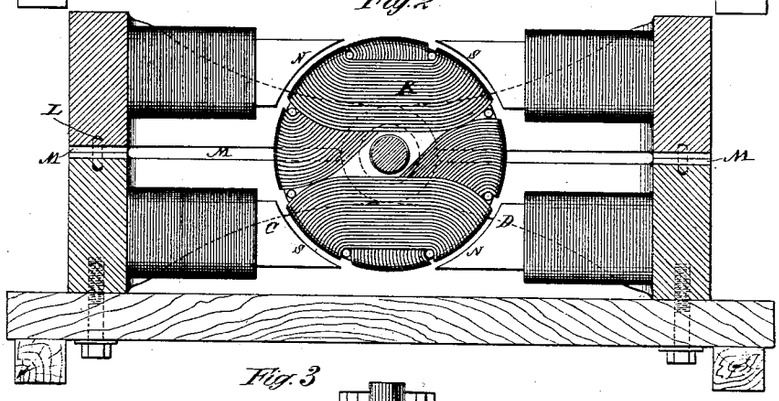

Fig. 3

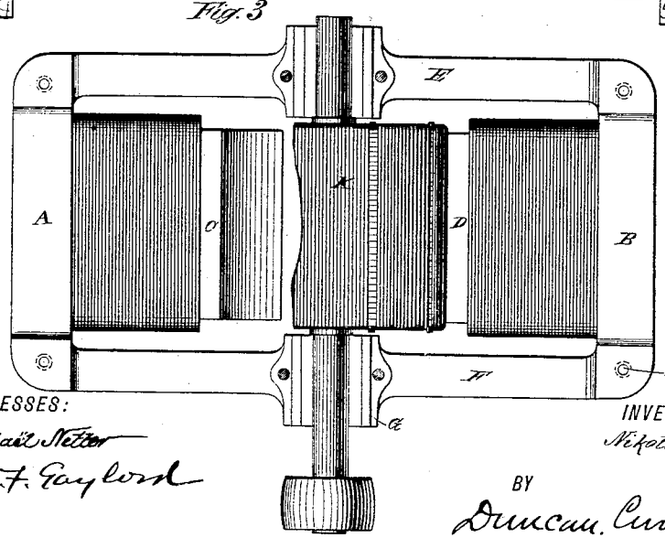

WITNESSES:

Raphael Netter

Robt F. Gaylord

INVENTOR

Nikola Tesla

BY

Duncan, Curtis & Page

ATTORNEYS

N. PETERS, Photo-Lithographer, Washington, D. C.

UNITED STATES PATENT OFFICE.

NIKOLA TESLA, OF NEW YORK, N. Y., ASSIGNOR TO THE TESLA ELECTRIC COMPANY, OF SAME PLACE.

DYNAMO-ELECTRIC MACHINE OR MOTOR.

SPECIFICATION forming part of Letters Patent No. 390,415, dated October 2, 1888.

Application filed May 15, 1888. Serial No. 273,994. (No model.)

To all whom it may concern:

Be it known that I, NIKOLA TESLA, a subject of the Emperor of Austria, from Smiljan, Lika, border country of Austria-Hungary, now residing at New York, in the county and State of New York, have invented certain new and useful Improvements in Dynamo-Electric Machines and Motors, of which the following is a specification, reference being had to the drawings accompanying and forming a part of the same.

This invention is an improvement in the construction of dynamo or magneto electric machines or motors, the improvement consisting in a novel form of frame and field-magnet which renders the machine more solid and compact as a structure, which requires fewer parts, and which involves less trouble and expense in its manufacture.

The invention is applicable to generators and motors generally, not only to those which I have described in former patents, and which have independent circuits adapted for use in my patented alternating current system, but to other continuous or alternating current machines, such as have heretofore been more generally used.

In the drawings hereto annexed, which illustrate my improvements, Figure 1 shows the machine in side elevation. Fig. 2 is a vertical sectional view of the field-magnets and frame and an end view of the armature; and Fig. 3 is a plan view of one of the parts of the frame and the armature, a portion of the latter being cut away.

I cast the field-magnets and frame in two parts. These parts are identical in size and shape, and each consists of the solid plates or ends A B, from which project inwardly the cores C D and the side bars or bridge-pieces, E F. The precise shape of these parts is largely a matter of choice—that is to say, each casting, as shown, forms an approximately-rectangular frame; but it may obviously be more or less oval, round, or square without departure from the invention. I also prefer to reduce the width of the side bars, E F, at the center and to so proportion the parts that when the frame is put together the spaces between the pole-pieces will be practically equal to the arcs which the surfaces of the poles occupy.

The bearings G for the armature-shaft are cast in the side bars, E F. The field-coils are either wound on the pole-pieces or, preferably, wound on a form and then slipped on over the ends of the pole-pieces. The lower part or casting is secured to a suitable base after being finished off. The armature K on its shaft is then mounted in the bearings of the lower casting and the other part of the frame placed in position, dowel-pins L or any other means being used to secure the two parts in proper position.

In order to secure an easier fit I cast the side bars, E F, and end pieces, A B, so that slots M are formed when the two parts are put together.

This machine possesses many advantages. For example, I magnetize the cores alternately, as indicated by the characters N S, and it will be seen that the magnetic circuit between the poles of each part of a casting is completed through the solid iron side bars. The bearings for the shaft are located at the neutral points of the field, so that the armature-core is not affected by the magnetic condition of the field.

My improvement is not restricted to the use of four pole-pieces, as it is evident that each pole-piece could be divided or more than four formed by the shape of the casting.

What I claim is—

1. A dynamo or magneto electric machine or motor the frame of which is built up of two castings, each consisting of end plates with pole-pieces extending inwardly therefrom and connecting side bars, as set forth.

2. A frame for generators or motors built up of two superposed castings, each consisting of a rectangular frame with pole-pieces extending inwardly from its ends, as set forth.

3. A frame and field-magnet for generators and motors built up of two rectangular castings having pole-pieces extending inwardly from their ends, the faces of said pole-pieces being curved to afford clearance for the armature and provided with energizing-coils, as set forth.

NIKOLA TESLA.

Witnesses:
ROBT. F. GAYLORD,
FRANK E. HARTLEY.

BEST AVAILABLE COP'

(No Model.)

N. TESLA.

DYNAMO ELECTRIC MACHINE.

No. 390,721. Patented Oct. 9, 1888.

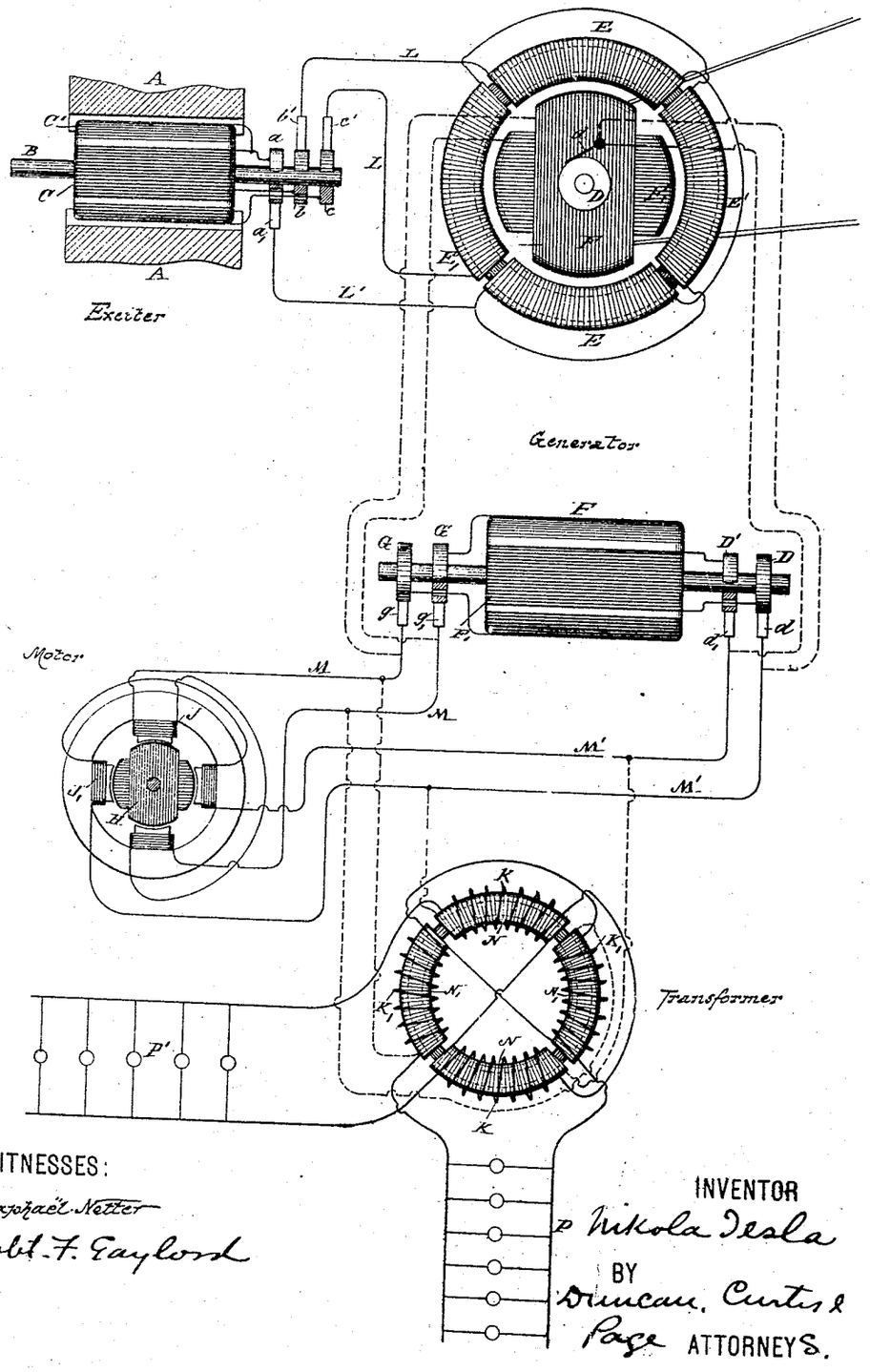

WITNESSES:

Raphael Netter

Robt. F. Gaylord

INVENTOR

Nikola Tesla

BY

Duncan, Curtis & Page ATTORNEYS.

BEST AVAILABLE COP

UNITED STATES PATENT OFFICE.

NIKOLA TESLA, OF NEW YORK, N. Y., ASSIGNOR TO THE TESLA ELECTRIC COMPANY, OF SAME PLACE.

DYNAMO-ELECTRIC MACHINE.

SPECIFICATION forming part of Letters Patent No. 390,721, dated October 9, 1888.

Application filed April 28, 1888. Serial No. 272,153. (No model.)

To all whom it may concern:

Be it known that I, NIKOLA TESLA, a subject of the Emperor of Austria, from Smiljan, Lika, border country of Austria-Hungary, now residing at New York, in the county and State of New York, have invented certain new and useful Improvements in Electric Generators, of which the following is a specification, reference being had to the drawing accompanying and forming a part of the same.

My present invention relates, chiefly, to the alternating-current system invented by me and described in prior patents, notably Nos. 381,968 and 382,280, of May 1, 1888, in which the motors or transformers, or generally the converters, are operated by a progressive shifting or movement of their magnetic poles produced by the co-operative action of independent magnetizing-coils through which pass alternating currents in proper order and direction. In my said system, as I have heretofore shown, I employed a generator of alternating currents in which there were independent induced or generating coils corresponding to the energizing-coils of the converter, and the relations of the generator and converters were generally such that the speed of rotation of the magnetic poles of the converter equaled that of the armature of the generator.

To secure the greatest efficiency, it is necessary to run the machines at a high speed, and this is true not only of those generators and motors which are particularly adapted for use in my system, but of others. The practicability of running at very high speeds, however, particularly in the case of large generators, is limited by mechanical conditions, in seeking to avoid which I have devised various plans for operating the system under efficient conditions, although running the generator at a comparatively low rate of speed.

My present invention consists of another way of accomplishing this result, which in certain respects presents many advantages. According to the invention, in lieu of driving the armature of the generator at a high rate of speed, I produce a rotation of the magnetic poles of one element of the generator and drive the other at a different speed, by which similar results are obtained to those secured by a rapid rotation of one of the elements.

I shall describe this invention by reference to the diagram drawing hereto annexed.

The generator which supplies the current for operating the motors or transformers consists in this instance of a subdivided ring or annular core wound with four diametrically-opposite coils, E E'. Within the ring is mounted a cylindrical armature-core wound longitudinally with two independent coils, F F', the ends of which lead, respectively, to two pairs of insulated contact or collecting rings, D D' G G', on the armature-shaft. Collecting-brushes *d d' g g'* bear upon these rings, respectively, and convey the currents through the two independent line-circuits M M'. In the main line there may be included one or more motors or transformers, or both. If motors be used, they are constructed in accordance with my invention with independent coils or sets of coils J J', included, respectively, in the circuits M M'. These energizing-coils are wound on a ring or annular field or on pole-pieces thereon, and produce by the action of the alternating currents passing through them a progressive shifting of the magnetism from pole to pole. The cylindrical armature H of the motor is wound with two coils at right angles, which form independent closed circuits.

If transformers be employed, I connect one set of the primary coils, as N N, wound on a ring or annular core, to one circuit, as M', and the other primary coils, N' N', to the circuit M. The secondary coils K K' may then be utilized for running groups of incandescent lamps P P'.

With the generator I employ an exciter. This consists of two poles, A A, of steel permanently magnetized, or of iron excited by a battery or other generator of continuous currents, and a cylindrical armature-core mounted on a shaft, B, and wound with two longitudinal coils, C C'. One end of each of these coils is connected to the collecting-rings *b c*, respectively, while the other ends are both connected to a ring, *a*. Collecting-brushes *b' c'* bear on the rings *b c*, respectively, and conductors L L' convey the currents therefrom through the coils E and E' of the generator. L' is a common return-wire to brush *a'*. Two independent circuits are thus formed, one including coils C of the exciter and E E of the generator,

BEST AVAILABLE COP

the other coils C' of the exciter and E' E' of the generator. It results from this that the operation of the exciter produces a progressive movement of the magnetic poles of the annular field-core of the generator, the shifting or rotary movement of said poles being synchronous with the rotation of the exciter-armature. Considering the operative conditions of a system thus established, it will be found that when the exciter is driven so as to energize the field of the generator the armature of the latter, if left free to turn, would rotate at a speed practically the same as that of the exciter. If under such conditions the coils F F' of the generator-armature be closed upon themselves or short-circuited, no currents, at least theoretically, will be generated in the said armature-coils. In practice I have observed the presence of slight currents, the existence of which is attributable to more or less pronounced fluctuations in the intensity of the magnetic poles of the generator-ring. So, if the armature-coils F F' be closed through the motor, the latter will not be turned as long as the movement of the generator-armature is synchronous with that of the exciter or of the magnetic poles of its field. If, on the contrary, the speed of the generator-armature be in any way checked, so that the shifting or rotation of the poles of the field becomes relatively more rapid, currents will be induced in the armature-coils. This obviously follows from the passing of the lines of force across the armature-conductors. The greater the speed of rotation of the magnetic poles relatively to that of the armature the more rapidly the currents developed in the coils of the latter will follow one another, and the more rapidly the motor will revolve in response thereto, and this continues until the armature-generator is stopped entirely, as by a brake, when the motor, if properly constructed, runs at the same speed with which the magnetic poles of the generator rotate.

The effective strength of the currents developed in the armature-coils of the generator is dependent upon the strength of the currents energizing the generator and upon the number of rotations per unit of time of the magnetic poles of the generator; hence the speed of the motor-armature will depend in all cases upon the relative speeds of the armature of the generator and of its magnetic poles. For example, if the poles are turned two thousand times per unit of time and the armature is turned eight hundred, the motor will turn twelve hundred times, or nearly so. Very slight differences of speed may be indicated by a delicately-balanced motor.

Let it now be assumed that power is applied to the generator-armature to turn it in a direction opposite to that in which its magnetic poles rotate. In such case the result would be similar to that produced by a generator the armature and field-magnets of which are rotated in opposite directions, and by reason of these conditions the motor-armature will turn at a rate of speed equal to the sum of the speeds of the armature and magnetic poles of the generator, so that a comparatively low speed of the generator-armature will produce a high speed in the motor.

It will be observed in connection with this system that on diminishing the resistance of the external circuit of the generator-armature by checking the speed of the motor or by adding translating devices in multiple arc in the secondary circuit or circuits of the transformer the strength of the current in the armature-circuit is greatly increased. This is due to two causes: first, to the great differences in the speeds of the motor and generator, and, secondly, to the fact that the apparatus follows the analogy of a transformer, for, in proportion as the resistance of the armature or secondary circuits is reduced, the strength of the currents in the field or primary circuits of the generator is increased and the currents in the armature augmented correspondingly. For similar reasons the currents in the armature-coils of the generator increase very rapidly when the speed of the armature is reduced when running in the same direction as the magnetic poles or conversely.

It will be understood from the above description that the generator-armature may be run in the direction of the shifting of the magnetic poles, but more rapidly, and that in such case the speed of the motor will be equal to the difference between the two rates.

In many applications to electrical conversion and distribution this system possesses great advantages both in economy, efficiency, and practicability.

What I claim is—

1. The combination, with an alternating-current generator having independent energizing or field and independent induced or armature coils, of an alternating-current exciter having generating or induced coils corresponding to and connected with the energizing-coils of the generator, as set forth.

2. In an alternating-current generator, the combination of the elements named and cooperatively associated in the following manner: a field-magnet wound with independent coils each connected with a source of alternating currents, whereby the magnetic poles produced by said coils will be progressively shifted or moved through the field, and an armature-core wound with independent coils, each having terminals from which currents are delivered to the independent external circuits.

3. The system of electrical distribution consisting of the combination, with an alternating-current generator having independent energizing-coils and an armature wound with independent induced coils, of an alternating-current exciter having induced coils corresponding to and connected with the energizing-coils of the generator, and one or more electrical converters having independent inducing or energizing coils connected with the corre-

BEST AVAILABLE COP

sponding armature coils of the generator, as herein set forth.

4. The combination, with an alternating-current generator having a field-magnet wound with independent energizing-coils and an armature adapted to be rotated within the field produced by said magnet, of an exciter having induced or generating coils corresponding to and connected with the energizing-coils of the generator, as set forth.

NIKOLA TESLA.

Witnesses:
ROBT. F. GAYLORD,
PARKER W. PAGE.

(No Model.) 2 Sheets—Sheet 1.

N. TESLA.

REGULATOR FOR ALTERNATE CURRENT MOTORS.

No. 390,820. Patented Oct. 9, 1888.

Fig. 2.

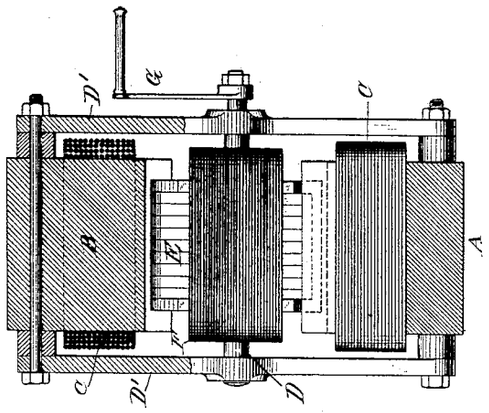

Fig. 1.

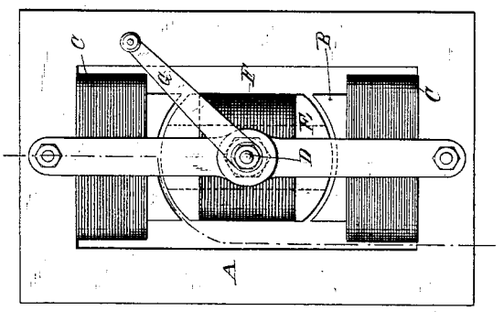

WITNESSES:
Raphael Netter.
Robt. F. Gaylord.

INVENTOR.
Nikola Tesla
BY
Duncan, Curtis & Page.
ATTORNEYS.

N. PETERS. Photo-Lithographer. Washington. D. C.

(No Model.) 2 Sheets—Sheet 2.

N. TESLA.

REGULATOR FOR ALTERNATE CURRENT MOTORS.

No. 390,820. Patented Oct. 9, 1888.

Fig. 3

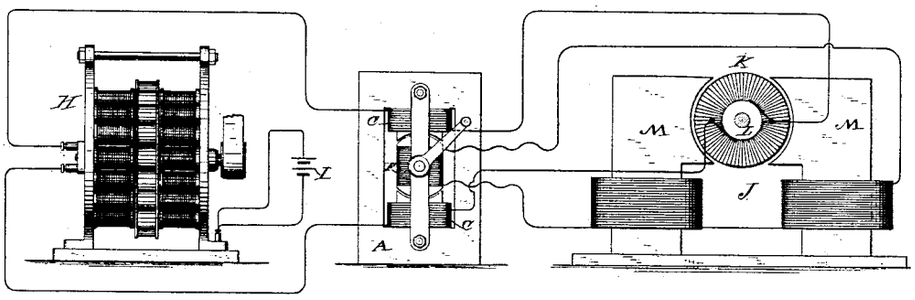

Fig. 4

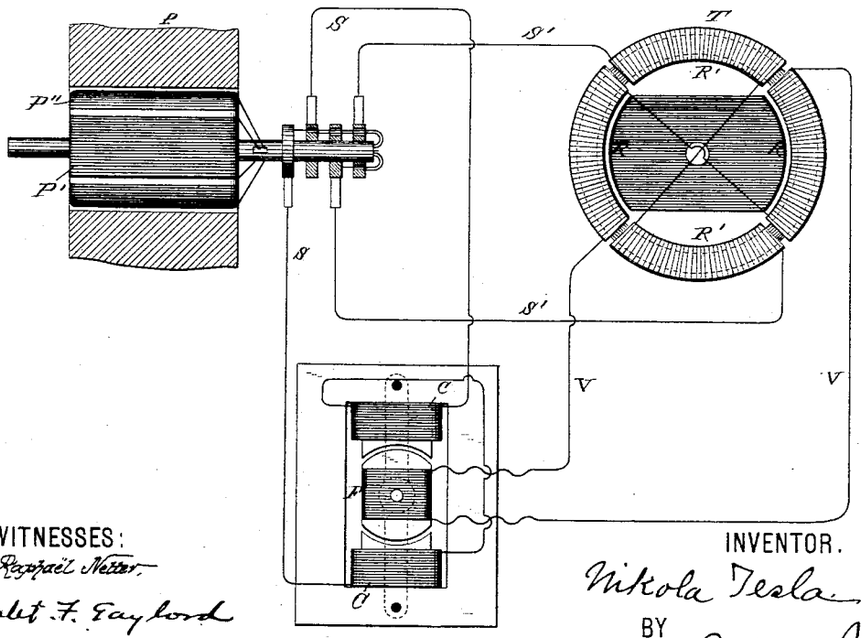

WITNESSES:
Raphael Netter.
Robt. F. Gaylord

INVENTOR.
Nikola Tesla
BY
Duncan, Curtis & Page.
ATTORNEYS.

N. PETERS, Photo-Lithographer, Washington, D. C.

UNITED STATES PATENT OFFICE.

NIKOLA TESLA, OF NEW YORK, N. Y., ASSIGNOR TO THE TESLA ELECTRIC COMPANY, OF SAME PLACE.

REGULATOR FOR ALTERNATE-CURRENT MOTORS.

SPECIFICATION forming part of Letters Patent No. 390,820, dated October 9, 1888.

Application filed April 24, 1888. Serial No. 271,682. (No model.)

To all whom it may concern:

Be it known that I, NIKOLA TESLA, a subject of the Emperor of Austria, from Smiljan, Lika, border country of Austria-Hungary, now residing in New York, in the county and State of New York, have invented certain new and useful Improvements in Regulators for Alternating-Current Motors, of which the following is a specification, reference being had to the drawings accompanying and forming part of the same.

My invention is an improvement in systems for the electric transmission of power; and it consists in a means of regulating the speed and power of the motor or motors. The system for use with which the invention is more particularly designed is one in which the motors, or what may be in certain cases their equivalents—the electrical transformers—have two or more independent energizing-circuits, which, receiving current from corresponding sources, act to set up a progressive movement or shifting of the magnetic poles of the motors; but the invention is also applicable to other purposes, as will hereinafter appear. I employ the regulator for the purpose of varying the speed of these motors.

The regulator proper consists of a form of converter or transformer with one element capable of movement with respect to the other, whereby the inductive relations may be altered, either manually or automatically, for the purpose of varying the strength of the induced current. I prefer to construct this device in such manner that the induced or secondary element may be movable with respect to the other; and the improvement, so far as relates merely to the construction of the device itself, consists, essentially, in the combination, with two opposite magnetic poles, of an armature wound with an insulated coil and mounted on a shaft, whereby it may be turned to the desired extent within the field produced by the poles. The normal position of the core of the secondary element is that in which it most completely closes the magnetic circuit between the poles of the primary element, and in this position its coil is in its most effective position for the inductive action upon it of the primary coils; but by turning the movable core to either side the induced currents delivered by its coil become weaker until, by a movement of the said core and coil through ninety degrees, there will be no current delivered.

The construction of this device, broadly, I do not claim as of my invention; but this, together with the manner of applying and using the same, which forms the subject of my invention, I will now explain by reference to the accompanying drawings.

Figure 1 is a view in side elevation of the regulator. Fig. 2 is a broken section on line *x x* of Fig. 1. Fig. 3 is a diagram illustrating the preferred manner of applying the regulator to ordinary forms of motors, and Fig. 4 is a similar diagram illustrating the application of the device to my improved alternating-current motors.

The regulator may be constructed in many ways to secure the desired result; but in the best form of which I am now aware it is shown in Figs. 1 and 2.

A represents a frame of iron, and I would here state that the plan which is now invariably followed of dividing up all iron cores which are subjected to the influence of alternating currents should be adopted in the construction of this device.

B B are the cores of the inducing or primary coils C C, said cores being integral with or bolted to the frame A in any well-known way.

D is a shaft mounted in the side bars, D′, and on which is secured a sectional iron core, E, wound with an induced or secondary coil, F, the convolutions of which are parallel with the axis of the shaft. The ends of the core are rounded off, so as to fit closely in the space between the two poles and permit the core E to be turned. A handle, G, secured to the projecting end of the shaft D, is provided for this purpose.

Any means may be employed for maintaining the core and secondary coil in any given position to which it is turned by the handle.

The operation or effect of the device will be understood by reference to the diagrams illustrating the manner of its application.

In Fig. 3, let H represent an ordinary alternating-current generator, the field-magnets of which are excited by a suitable source of current, I. Let J designate an ordinary form of

electro-magnetic motor provided with an armature, K, commutator L, and field-magnets M. It is well known that such a motor, if its field-magnets' cores be divided up into insulated sections, may be practically operated by an alternating current; but in using my regulator with such a motor I include one element of the motor only—say the armature-coils—in the main circuit of the generator, making the connections through the brushes and the commutator in the usual way. I also include one of the elements of the regulator—say the stationary coils—in the same circuit, and in the circuit with the secondary or movable coil of the regulator I connect up the field-coils of the motor. I prefer to use flexible conductors to make the connections from the secondary coil of the regulator, as I thereby avoid the use of sliding contacts or rings without interfering with the requisite movement of the core E.

If the regulator be in its normal position, or that in which its magnetic circuit is most nearly closed, it delivers its maximum induced current, the phases of which so correspond with those of the primary current that the motor will run as though both field and armature were excited by the main current.

To vary the speed of the motor to any rate between the minimum and maximum rates, the core E and coils F are turned in either direction to an extent which produces the desired result, for in its normal position the convolutions of coil F embrace the maximum number of lines of force, all of which act with the same effect upon said coil; hence it will deliver its maximum current; but by turning the coil F out of its position of maximum effect the number of lines of force embraced by it is diminished. The inductive effect is therefore impaired, and the current delivered by coil F will continue to diminish in proportion to the angle at which the coil F is turned until, after passing through an angle of ninety degrees, the convolutions of the coil will be at right angles to those of coils C C, and the inductive effect reduced to a minimum.

Incidentally to certain constructions, other causes may influence the variation in the strength of the induced currents. For example, in the present case it will be observed that by the first movement of coil F a certain portion of its convolutions are carried beyond the line of the direct influence of the lines of force, and that the magnetic path or circuit for said lines is impaired; hence the inductive effect would be reduced. Next, that after moving through a certain angle, which is obviously determined by the relative dimensions of the bobbin or coil F, diagonally-opposite portions of the coil will be simultaneously included in the field, but in such positions that the lines which produce a current-impulse in one portion of the coil in a certain direction will produce in the diagonally-opposite portion a corresponding impulse in the opposite direction; hence portions of the current will neutralize one another.

As before stated, the mechanical construction of the device may be greatly varied; but the essential conditions of the invention will be fulfilled in any apparatus in which the movement of the elements with respect to one another effects the same results by varying the inductive relations of the two elements in a manner similar to that described.

It may also be stated that the core E is not indispensable to the operation of the regulator; but its presence is obviously beneficial. This regulator, however, has another valuable property in its capability of reversing the motor, for if the coil F be turned through a half-revolution the position of its convolutions relatively to the two coils C C and the lines of force is reversed, and consequently the phases of the current will be reversed. This will produce a rotation of the motor in an opposite direction. This form of regulator is also applied with great advantage to my system of utilizing alternating currents, in which the magnetic poles of the field of a motor are progressively shifted by means of the combined effects upon the field of magnetizing-coils included in independent circuits, through which pass alternating currents in proper order and relations to each other.

In illustration, let P represent one of my generators having two independent coils, P′ and P″, on the armature, and T a diagram of a motor having two independent energizing-coils or sets of coils, R R′. One of the circuits from the generator, as S′ S′, includes one set, R′ R′, of the energizing-coils of the motor, while the other circuit, as S S, includes the primary coils of the regulator. The secondary coil of the regulator includes the other coils, R R, of the motor.

While the secondary coil of the regulator is in its normal position it produces its maximum current, and the maximum rotary effect is imparted to the motor; but this effect will be diminished in proportion to the angle at which the coil F of the regulator is turned. The motor will also be reversed by reversing the position of the coil with reference to the coils C C, and thereby reversing the phases of the current produced by the generator. This changes the direction of the movement of the shifting poles which the armature follows.

One of the main advantages of this plan of regulation is its economy of power. When the induced coil is generating its maximum current, the maximum amount of energy in the primary coils is absorbed; but as the induced coil is turned from its normal position the self-induction of the primary coils reduces the expenditure of energy and saves power.

It is obvious that in practice either coils C C or coil F may be used as primary or secondary, and it is well understood that their rela-

tive proportions may be varied to produce any desired difference or similarity in the inducing and induced currents.

I am aware that it is not new to vary the secondary current of an induction-coil by moving one coil with respect to the other, and thereby varying the inductive relations normally existing between the two. This I do not claim.

What I claim is—

1. The combination, with a motor having independent energizing-circuits, of an alternating-current regulator, consisting, essentially, of inducing and induced coils movable with respect to one another, whereby the strength of the induced currents may be varied, the induced coils being included in and adapted to supply the current for one of the motor-circuits, as set forth.

2. The combination, with a motor adapted to be run or operated by alternating currents and provided with independent energizing-coils, of a regulator consisting of stationary inducing-coils and an induced coil capable of being rotated, whereby it may be turned to a greater or less angle to the primary coils, or its position with respect thereto reversed, the induced coil or coils being included in and adapted to supply the current for one of the motor-circuits, as set forth.

NIKOLA TESLA.

Witnesses:
ROBT. F. GAYLORD,
FRANK B. MURPHY.

BEST AVAILABLE COP

(No Model.) 2 Sheets—Sheet 1.

N. TESLA.

THERMO MAGNETIC MOTOR.

No. 396,121. Patented Jan. 15, 1889.

Fig. 2.

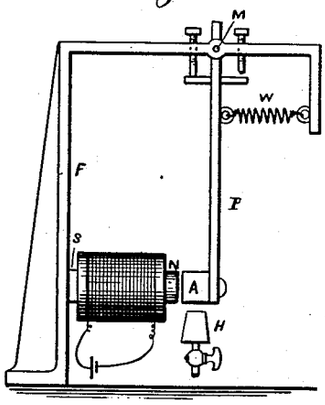

Fig. 1.

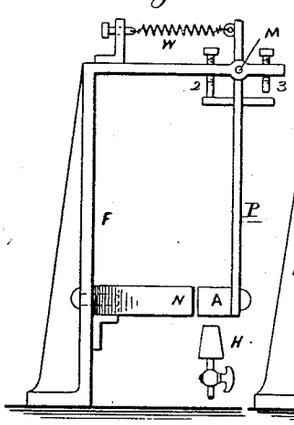

Fig. 3.

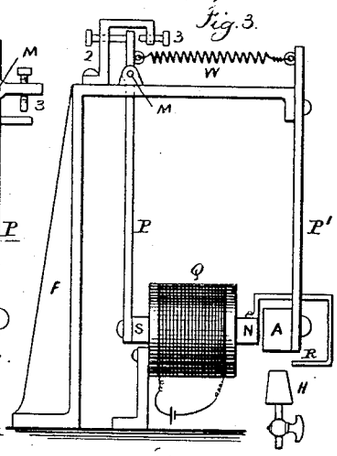

Fig. 4.

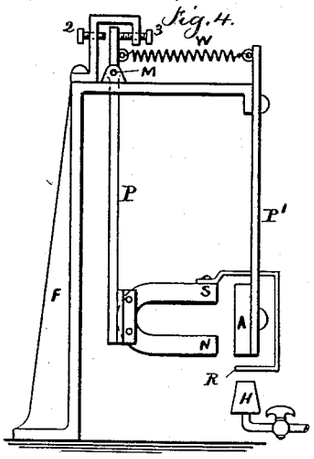

Fig. 6.

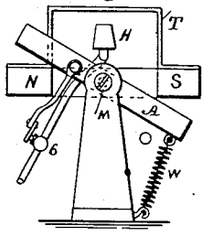

Fig. 5.

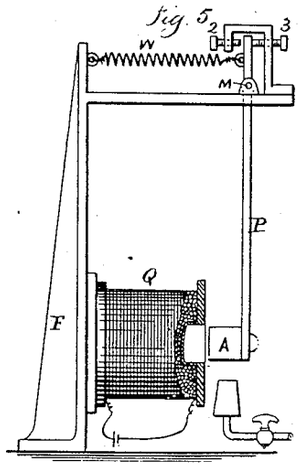

Fig. 7.

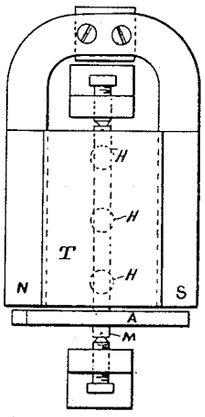

Fig. 8.

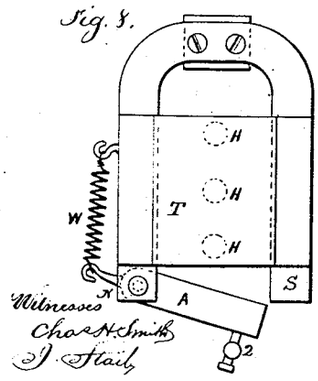

Witnesses
Chas. H. Smith
J. Stahl

Fig. 9.

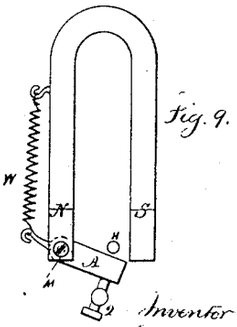

Inventor
Nikola Tesla
per Lemuel W. Serrell

BEST AVAILABLE COP

(No Model.) 2 Sheets—Sheet 2.

N. TESLA.

THERMO MAGNETIC MOTOR.

No. 396,121. Patented Jan. 15, 1889.

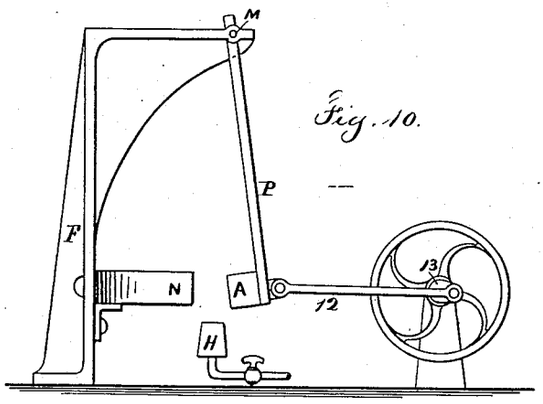

Fig. 10.

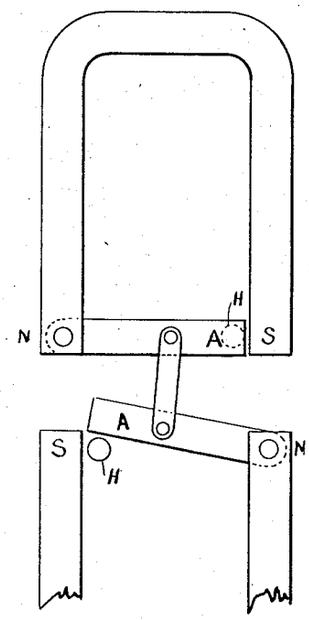

Fig. 11.

Witnesses
Chas. H. Smith
J. Stahl

Inventor
Nikola Tesla
for Lemuel W. Serrell atty

BEST AVAILABLE COP

UNITED STATES PATENT OFFICE.

NIKOLA TESLA, OF SMILJAN, LIKA, AUSTRIA-HUNGARY.

THERMO-MAGNETIC MOTOR.

SPECIFICATION forming part of Letters Patent No. 396,121, dated January 15, 1889.

Application filed March 30, 1886. Serial No. 197,115. (No model.)

To all whom it may concern:

Be it known that I, NIKOLA TESLA, of Smiljan, Lika, Border Country of Austria-Hungary, have invented an Improvement in Thermo-Magnetic Motors, of which the following is a specification.

It is well known that heat applied to a magnetized body will lessen the magnetism, and if the temperature is raised sufficiently the magnetism will be neutralized or destroyed.

In my present invention I obtain mechanical power by a reciprocating action resulting from the joint operations of heat, magnetism, and a spring or weight or other force—that is to say, I subject a body magnetized by induction or otherwise to the action of heat until the magnetism is sufficiently neutralized to allow a weight or spring to give motion to the body and lessen the action of the heat, so that the magnetism may be sufficiently restored to move the body in the opposite direction, and again subject the same to the demagnetizing of the heat.

In carrying out my invention I am able to make use of either an electro-magnet or a permanent magnet, and I preferably direct the heat against a body that is magnetized by induction, rather than directly against a permanent magnet, thereby avoiding the loss of magnetism that might result in the permanent magnet by the action of heat. I also provide for lessening the volume of the heat or for intercepting the same during that portion of the reciprocation in which the cooling action takes place.

In the drawings I have represented by diagrams some of the numerous arrangements that may be made use of in carrying out my invention. In all of these figures the magnet-poles are marked N S, the armature A, the Bunsen burner or other source of heat H, the axis of motion M, and the spring or the equivalent thereof—namely, a weight—is marked W.

In Figure 1 the permanent magnet N is connected with a frame, F, supporting the axis M, from which the arm P hangs, and at the lower end of which the armature A is supported. The stops 2 and 3 limit the extent of motion, and the spring W tends to draw the armature A away from the magnet N. It is now to be understood that the magnetism of N is sufficient to overcome the spring W and draw the armature A toward the magnet N. The heat acting upon the armature A neutralizes its induced magnetism sufficiently for the spring W to draw the armature A away from the magnet N and also from the heat at H. The armature now cools, and the attraction of the magnet N overcomes the spring W and draws the armature A back again above the burner H, so that the same is again heated and the operations are repeated. The reciprocating movements thus obtained are employed as a source of mechanical power in any desired manner. Usually a connecting-rod to a crank upon a fly-wheel shaft will be made use of, as indicated in Fig. 10; but I do not limit myself in this respect.

Fig. 2 represents the same parts as before described; but an electro-magnet is illustrated in place of a permanent magnet. The operations, however, are the same.

In Fig. 3 I have shown the same parts as in Figs. 1 and 2, only they are differently arranged. The armature A, instead of swinging, is stationary and held by an arm, P′, and the core N S of the electro-magnet is made to swing within the helix Q, the said core being suspended by the arm P from the pivot M. A shield, R, is connected with the magnet-core and swings therewith, so that after the heat has demagnetized the armature A to such an extent that the spring W draws the core N S away from the armature A the shield R comes between the flame H and armature A, thereby intercepting the action of the heat and allowing the armature to cool, so that the magnetism, again preponderating, causes the movement of the core N S toward the armature A and the removal of the shield R from above the flame, so that the heat again acts to lessen or neutralize the magnetism. A rotary or other movement may be obtained from this reciprocation.

Fig. 4 corresponds in every respect with Fig. 3, except that a permanent horseshoe-magnet, N S, is represented as taking the place of the electro-magnet in said Fig. 3.

In Fig. 5 I have shown a helix, Q, with an armature adapted to swing toward or from the helix. In this case there may be a soft-

 BEST AVAILABLE COP

iron core in the helix, or the armature may assume the form of a solenoid-core, there being no permanent core within the helix.

Fig. 6 is an end view, and Fig. 7 a plan view, illustrating my improvement as applied to a swinging armature, A, and a stationary permanent magnet, N S. In this instance I apply the heat to an auxiliary armature or keeper, T, which is adjacent to and preferably in direct contact with the magnet. This armature T, in the form of a plate of sheet-iron, extends across from one pole to the other and is of sufficient section to practically form a keeper for the magnet, so that when this armature T is cool nearly all the lines of force pass over the same and very little free magnetism is exhibited. Then the armature A, which swings freely on the pivots M in front of the poles N S, is very little attracted and the spring *s* pulls the same away from the poles into the position indicated in the drawings. The heat is directed upon the iron plate T at some distance from the magnet, so as to allow the magnet to be kept comparatively cool. This heat is applied beneath the plate by means of the burners H, and there is a connection from the armature A or its pivot to the gas-cock 6 or other device for regulating the heat. The heat acting upon the middle portion of the plate T, the magnetic conductivity of the heated portion is diminished or destroyed, and a great number of the lines of force are deflected over the armature A, which is now powerfully attracted and drawn into line, or nearly so, with the poles N S. In so doing the cock 6 is nearly closed and the plate T cools, the lines of force are again deflected over the same, the attraction exerted upon the armature A is diminished, and the spring W pulls the same away from the magnet into the position shown by full lines, and the operations are repeated. The arrangement shown in Fig. 6 has the advantages that the magnet and armature are kept cool and the strength of the permanent magnet is better preserved, as the magnetic circuit is constantly closed.

In the plan view, Fig. 8, I have shown a permanent magnet and keeper-plate, T, similar to those in Figs. 6 and 7, with the burners H for the gas beneath the same; but the armature is pivoted at one end to one pole of the magnet and the other end swings toward and from the other pole of the magnet. The spring W acts against a lever-arm that projects from the armature, and the supply of heat has to be partly cut off by a connection to the swinging armature, so as to lessen the heat acting upon the keeper-plate when the armature A has been attracted.

Fig. 9 is similar to Fig. 8, except that the keeper T is not made use of and the armature itself swings into and out of the range of the intense action of the heat from the burner H.

Fig. 10 is a diagram similar to Fig. 1, except that in place of using a spring and stops the armature is shown as connected by a link, 12, to the crank 13 of a fly-wheel, so that the fly-wheel will be revolved as rapidly as the armature can be heated and cooled to the necessary extent. A spring may be used in addition, as in Fig. 1.

In Fig. 11 the two armatures A A are connected by a link, so that one will be heating while the other is cooling, and the attraction exerted to move the cooled armature is availed of to draw away the heated armature instead of using a spring.

I have shown in the drawings several ways of carrying out my invention; but said invention is not limited by any particular form, arrangement, or construction of devices.

I claim as my invention—

1. The combination, with a swinging body under the influence of magnetism, of a burner or other source of heat acting to vary the magnetism, and a spring or other power to move the swinging body in the opposite direction to the action of the magnetism, substantially as set forth.

2. The combination, with two or more armatures connected to each other, of magnets to influence such armatures, and burners or other sources of heat to vary the magnetic action and cause the armatures to move, substantially as set forth.

Signed by me this 29th day of March, 1886.

NIKOLA TESLA.

Witnesses:

GEO. T. PINCKNEY,

WALLACE L. SERRELL.

(No Model.)

N. TESLA.

METHOD OF OPERATING ELECTRO MAGNETIC MOTORS.

No. 401,520. Patented Apr. 16, 1889.

Fig. 1

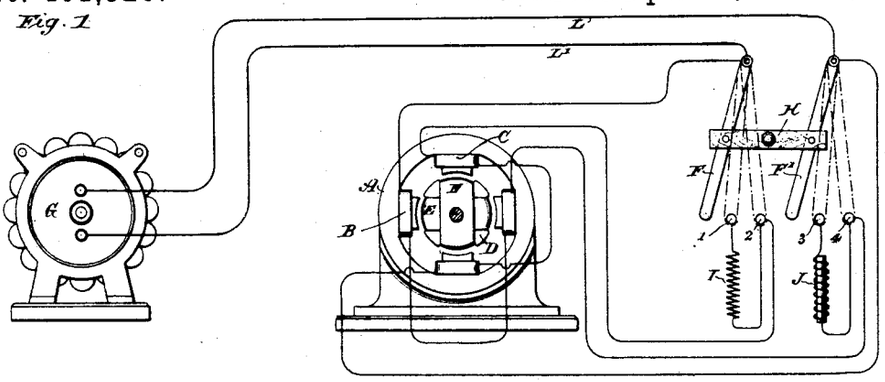

Fig. 2

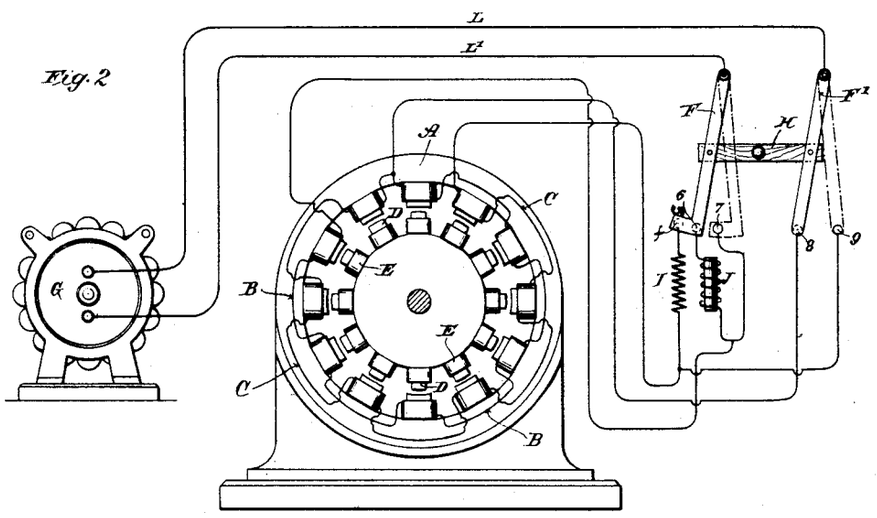

Fig. 3

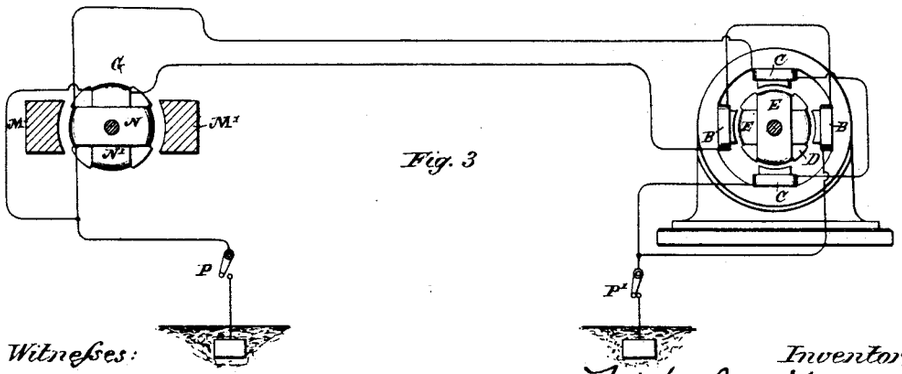

Witnesses:
Raphael Netter
Ernest Hopkinson

Inventor:
Nikola Tesla
by
Duncan, Curtis & Page.
Attorneys.

N. PETERS. Photo-Lithographer. Washington, D. C.

UNITED STATES PATENT OFFICE.

NIKOLA TESLA, OF NEW YORK, N. Y.

METHOD OF OPERATING ELECTRO-MAGNETIC MOTORS.

SPECIFICATION forming part of Letters Patent No. 401,520, dated April 16, 1889.

Application filed February 18, 1889. Serial No. 300,220. (No model.)

To all whom it may concern:

Be it known that I, NIKOLA TESLA, a subject of the Emperor of Austria, from Smiljan, Lika, border country of Austria-Hungary, and residing at New York, in the county and State of New York, have invented certain new and useful Improvements in Methods of Operating Electro-Magnetic Motors, of which the following is a specification, reference being had to the drawings accompanying and forming a part of the same.

As is well known, certain forms of alternating-current machines have the property, when connected in circuit with an alternating-current generator, of running as a motor in synchronism therewith; but, while the alternating current will run the motor after it has attained a rate of speed synchronous with that of the generator, it will not start it. Hence, in all instances heretofore where these "synchronizing-motors," as they are termed, have been run some means have been adopted to bring the motors up to synchronism with the generator, or approximately so, before the alternating current of the generator is applied to drive them. In some instances mechanical appliances have been utilized for this purpose. In others special and complicated forms of motor have been constructed. I have discovered a much more simple method or plan of operating synchronizing-motors, which requires practically no other apparatus than the motor itself. In other words, by a certain change in the circuit-connections of the motor I convert it at will from a double-circuit motor, or such as I have described in prior patents and applications, and which will start under the action of an alternating current into a synchronizing-motor, or one which will be run by the generator only when it has reached a certain speed of rotation synchronous with that of the generator. In this manner I am enabled to very greatly extend the applications of my system and to secure all the advantages of both forms of alternating-current motor.

The expression "synchronous with that of the generator," is used herein in its ordinary acceptation—that is to say, a motor is said to synchronize with the generator when it preserves a certain relative speed determined by its number of poles and the number of alternations produced per revolution of the generator. Its actual speed, therefore, may be faster or slower than that of the generator; but it is said to be synchronous so long as it preserves the same relative speed.

In carrying out my invention I construct a motor which has a strong tendency to synchronism with the generator. The construction which I prefer for this is that in which the armature is provided with polar projections. The field-magnets are wound with two sets of coils, the terminals of which are connected to a switch mechanism, by means of which the line-current may be carried directly through the said coils or indirectly through paths by which its phases are modified. To start such a motor, the switch is turned onto a set of contacts which includes in one motor-circuit a dead resistance, in the other an inductive resistance, and, the two circuits being in derivation, it is obvious that the difference in phase of the current in such circuits will set up a rotation of the motor. When the speed of the motor has thus been brought to the desired rate, the switch is shifted to throw the main current directly through the motor-circuits, and although the currents in both circuits will now be of the same phase the motor will continue to revolve, becoming a true synchronous motor. To secure greater efficiency, I wind the armature or its polar projections with coils closed on themselves. There are various modifications and important features of this method or plan; but the main principle of the invention will be understood from the foregoing.

In the drawings, to which I now refer, I have illustrated by the diagrams the general features of construction and operation which distinguish my invention, Figure 1 being drawn to illustrate the details of the plan above set forth, and Figs. 2 and 3 modifications of the same.

Referring to Fig. 1, let A designate the field-magnets of a motor, the polar projections of which are wound with coils B C included in independent circuits, and D the armature with polar projections wound with coils E closed upon themselves, the motor in these respects being similar in construction to those described in my patent, No. 382,279, dated May 1, 1888, but having, by reason of the

polar projections on the armature-core or other similar and well-known features, the properties of a synchronizing-motor.

L L′ represent the conductors of a line from an alternating-current generator G.

Near the motor is placed a switch the action of which is that of the one shown in the drawings, which is constructed as follows: F F′ are two conducting plates or arms, pivoted at their ends and connected by an insulating cross-bar, H, so as to be shifted in parallelism. In the path of the bars F F′ is the contact 2, which forms one terminal of the circuit through coils C, and the contact 4, which is one terminal of the circuit through coils B. The opposite end of the wire of coils C is connected to the wire L or bar F′, and the corresponding end of coils B is connected to wire L′ and bar F; hence if the bars be shifted so as to bear on contacts 2 and 4 both sets of coils B C will be included in the circuit L L′ in multiple arc or derivation. In the path of the levers F F′ are two other contact-terminals, 1 and 3. The contact 1 is connected to contact 2 through an artificial resistance, I, and contact 3 with contact 4 through a self-induction coil, J, so that when the switch-levers are shifted onto the points 1 and 3 the circuits of coils B and C will be connected in multiple arc or derivation to the circuit L L′, and will include the resistance and self-induction coil, respectively. A third position of the switch is that in which the levers F and F′ are shifted out of contact with both sets of points. In this case the motor is entirely out of circuit.

The purpose and manner of operating the motor by these devices are as follows: The normal position of the switch, the motor being out of circuit, is off the contact-points. Assuming the generator to be running, and that it is desired to start the motor, the switch is shifted until its levers rest upon points 1 and 3. The two motor-circuits are thus connected with the generator-circuit; but by reason of the presence of the resistance I in one and the self-induction coil J in the other the coincidence of the phases of the current is disturbed sufficiently to produce a progression of the poles, which starts the motor in rotation. When the speed of the motor has run up to synchronism with the generator, or approximately so, the switch is shifted over onto the points 2 and 4, thus cutting out the coils I and J, so that the currents in both circuits have the same phase; but the motor now runs as a synchronous motor, which is well known to be a very desirable and efficient means of converting and transmitting power.

It will be understood that when brought up to speed the motor will run with only one of the circuits B or C connected with the main or generator circuit, or the two circuits may be connected in series. This latter plan is preferable when a current having a high number of alternations per unit of time is employed to drive the motor. In such case the starting of the motor is more difficult and the dead and inductive resistances must take up a considerable proportion of the electro-motive force of the circuits. Generally I so adjust the conditions that the electro-motive force used in each of the motor-circuits is that which is required to operate the motor when its circuits are in series. The plan which I follow in this case is illustrated in Fig. 2. In this diagram the motor has twelve poles and the armature has polar projections D wound with closed coils E. The switch used is of substantially the same construction as that shown in the previous figure. There are, however, five contacts, which I have designated by the figures 5, 6, 7, 8, and 9. The motor-circuits B C, which include alternate field-coils, are connected to the terminals in the following order: One end of circuit C is connected to contact 9 and to contact 5 through a dead resistance, I. One terminal of circuit B is connected to contact 7 and to contact 6 through a self-induction coil, J. The opposite terminals of both circuits are connected to contact 8.

One of the levers, as F, of the switch is made with an extension, *f*, or otherwise, so as to cover both contacts 5 and 6 when shifted into the position to start the motor. It will be observed that when in this position and with lever F′ on contact 8 the current divides between the two circuits B C, which from their difference in electrical character produce a progression of the poles that starts the motor in rotation. When the motor has attained the proper speed, the switch is shifted so that the levers cover the contacts 7 and 9, thereby connecting circuits B and C in series. I have found that by this disposition the motor is maintained in rotation in synchronism with the generator. This principle of operation, which consists in converting by a change of connections or otherwise a double-circuit motor or one operating by a progressive shifting of the poles into an ordinary synchronizing-motor may be carried out in many other ways. For instance, instead of using the switch shown in the previous figures, I may use a temporary ground-circuit between the generator and motor, in order to start the motor, in substantially the manner indicated in Fig. 3. Let G in this figure represent an ordinary alternating-current generator with, say, two poles, M M′, and an armature wound with two coils, N N′, at right angles and connected in series. The motor has, for example, four poles wound with coils B C, which are connected in series and an armature with polar projections D wound with closed coils E E. From the common joint or union between the two circuits of both the generator and the motor an earth-connection is established, while the terminals or ends of the said circuits are connected to the line. Assuming that the motor is a synchronizing-motor or one that has the capability of running in synchronism with the generator, but not of start-

ing, it may be started by the above-described apparatus by closing the ground-connection from both generator and motor. The system thus becomes one with a two-circuit generator and motor, the ground forming a common return for the currents in the two circuits L and L′. When by this arrangement of circuits the motor is brought to speed, the ground-connection is broken between the motor or generator, or both, and ground, switches P P′ being employed for this purpose. The motor then runs as a synchronizing-motor.

In describing those features which constitute my invention I have omitted illustrations of the appliances used in conjunction with the electrical devices of similar systems—such, for instance, as driving-belts, fixed and loose pulleys for the motor, and the like; but these are matters well understood.

In describing my invention by reference to specific constructions I do not wish to be understood as limiting myself to the constructions shown; and in explanation of my intent in this respect I would say that I may in such forms of apparatus as I have shown in Figs. 1 and 2 include the dead resistance and self-induction coil in either circuit, or use only a dead resistance or a self-induction coil, as in the various ways shown in my application, No. 293,052, filed December 8, 1888. I may also use any form of switch, whether manual or automatic, that will by its manipulation or operation effect the required change of connections, and in order to secure the necessary difference of phase in the two motor-circuits on starting I may employ any of the known means for this purpose.

I believe that I am the first to operate electro-magnetic motors by alternating currents in any of the ways herein suggested or described—that is to say, by producing a progressive movement or rotation of their poles or points of greatest magnetic attraction by the alternating currents until they have reached a given speed, and then by the same currents producing a simple alternation of their poles, or, in other words, by a change in the order or character of the circuit-connections to convert a motor operating on one principle to one operating on another, for the purpose described.

I do not claim herein of itself the method of or apparatus for operating a motor which forms a part of this invention and which involves the principle of varying or modifying the currents passing through the energizing-circuits, so as to produce between such currents a difference of phase, as these matters are described and claimed by me in other applications, but with the object of securing, broadly, the method as a whole which I have herein set forth.

What I claim is—

1. The method of operating an alternating-current motor herein described by first progressively shifting or rotating its poles or points of greatest attraction and then, when the motor has attained a given speed, alternating the said poles, as described.

2. The method of operating an electro-magnetic motor herein described, which consists in passing through independent energizing-circuits of the motor alternating currents differing in phase and then, when the motor has attained a given speed, alternating currents coinciding in phase, as described.

3. The method of operating an electro-magnetic motor herein described, which consists in starting the motor by passing alternating currents differing in phase through independent energizing-circuits and then, when the motor has attained a given speed, joining the energizing-circuits in series and passing an alternating current through the same.

4. The method of operating a synchronizing-motor, which consists in passing an alternating current through independent energizing-circuits of the motor and introducing into such circuits a resistance and self-induction coil, whereby a difference of phase between the currents in the circuits will be obtained, and then, when the speed of the motor synchronizes with that of the generator, withdrawing the resistance and self-induction coil, as set forth.

NIKOLA TESLA.

Witnesses:
GEO. M. MONRO,
WM. H. LEMON.

(No Model.)

N. TESLA.

ELECTRO MAGNETIC MOTOR.

No. 405,858. Patented June 25, 1889.

Fig. 1

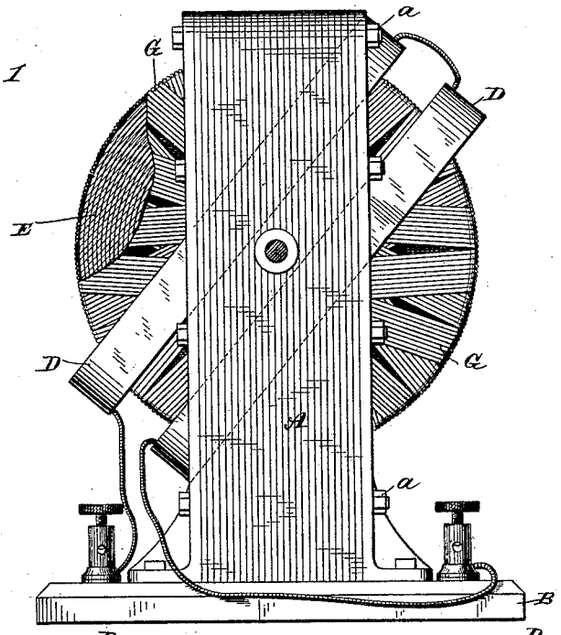

Fig. 2

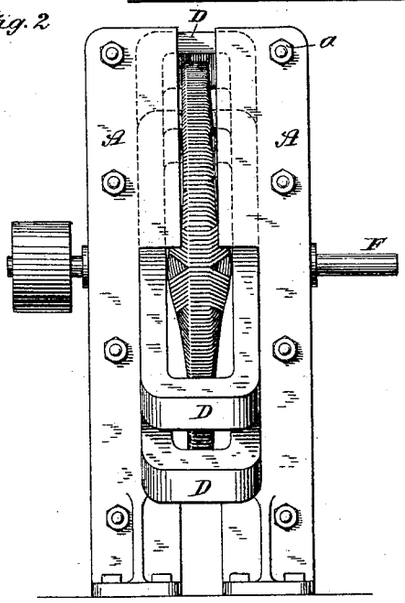

Fig. 3

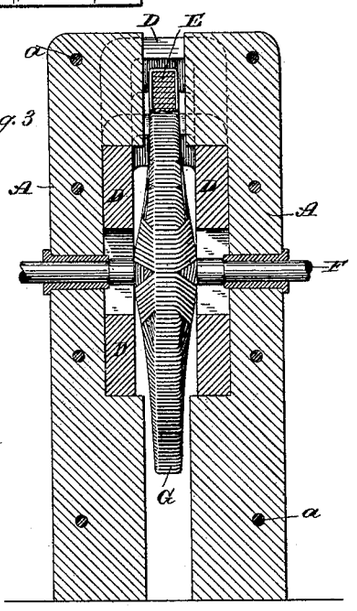

WITNESSES:

Raphael Netter

Robt. F. Gaylord

INVENTOR

Nikola Tesla

BY

Duncan, Curtis & Page

ATTORNEYS.

N. PETERS, Photo-Lithographer, Washington, D. C.

UNITED STATES PATENT OFFICE.

NIKOLA TESLA, OF NEW YORK, N. Y., ASSIGNOR TO THE TESLA ELECTRIC COMPANY, OF SAME PLACE.

ELECTRO-MAGNETIC MOTOR.

SPECIFICATION forming part of Letters Patent No. 405,858, dated June 25, 1889.

Application filed January 8, 1889. Serial No. 295,745. (No model.)

To all whom it may concern:

Be it known that I, NIKOLA TESLA, from Smiljan, Lika, border country of Austria-Hungary, a subject of the Emperor of Austria, residing at New York, in the county and State of New York, have invented certain new and useful Improvements in Electro-Magnetic Motors, of which the following is a specification, reference being had to the drawings accompanying and forming a part of the same.

In order to define more clearly the relations which the motor forming the subject of my present application bears to others of the class to which it pertains, I will recapitulate briefly the forms of alternating-current motors invented by me and described more in detail in my prior patents and applications. Of these there are two principal types or forms: first, those containing two or more energizing-circuits through which are caused to pass alternating currents differing from one another in phase to an extent sufficient to produce a continuous progression or shifting of the poles or points of greatest magnetic effect, in obedience to which the movable element of the motor is maintained in rotation; second, those containing poles or parts of different magnetic susceptibility, which under the energizing influence of the same current or two currents coinciding in phase will exhibit differences in their magnetic periods or phases. In the first class of motors the torque is due to the magnetism established in different portions of the motor by currents from the same or from independent sources, and exhibiting time differences in phase. In the second class the torque results from the energizing effects of a current upon parts of the motor which differ in magnetic susceptibility—in other words, parts which respond to the same relative degree to the action of a current, not simultaneously, but after different intervals of time. In my present invention, however, the torque, instead of being solely the result of a time difference in the magnetic periods or phases of the poles or attractive parts to whatever cause due, is produced by an angular displacement of the parts which, though movable with respect to one another, are magnetized simultaneously, or approximately so, by the same currents. This principle of operation I have embodied practically in a motor in which I obtain the necessary angular displacement between the points of greatest magnetic attraction in the two elements of the motor—the armature and field—by the direction of the lamination of the magnetic cores of said elements, and the best means of accomplishing this result of which I am at present aware I have shown in the accompanying drawings.

Figure 1 is a side view of the motor with a portion of its armature-core exposed. Fig. 2 is an end or edge view of the same. Fig. 3 is a central cross-section of the same, the armature being shown mainly in elevation.

Let A A designate two plates built up of thin sections or laminæ of soft iron insulated more or less from one another and held together by bolts *a* or any other suitable means and secured to a base B. The inner faces of these plates contain recesses or grooves in which a coil or coils D are secured obliquely to the direction of the laminations. Within the coils D is a disk E, preferably composed of a spirally-wound iron wire or ribbon or a series of concentric rings and mounted on a shaft F, having bearings in the plates A A. Such a device when acted upon by an alternating current is capable of rotation and constitutes a motor, the operation of which I explain in the following manner: A current or current-impulse traversing the coils D tends to magnetize the cores A A and E, all of which are within the influence of the magnetic field of the coils. The poles thus established would naturally lie in the same line at right angles to the coils D, but in the plates A they are deflected by reason of the direction of the laminations and appear at or near the extremities of said plates. In the disk, however, where these conditions are not present, the poles or points of greatest attraction are on a line at right angles to the plane of the coils; hence there will be a torque established by this angular displacement of the poles or magnetic lines, which starts the disk in rotation, the magnetic lines of the armature and field tending toward a position of paral-

lelism. This rotation is continued and maintained by the reversals of the current in coils D D, which change alternately the polarity of the field-cores A A. This rotary tendency or effect will be greatly increased by winding the disk with conductors G, closed upon themselves and having a radial direction, whereby the magnetic intensity of the poles of the disk will be greatly increased by the energizing effect of the currents induced in the coils G by the alternating currents in coils D. The plan of winding and the principle of operation have been fully explained in my patent, No. 382,279, of May 1, 1888.

The cores of the disk and field may or may not be of different magnetic susceptibility—that is to say, they may both be of the same kind of iron, so as to be magnetized at approximately the same instant by the coils D; or one may be of soft iron and the other of hard, in order that a certain time may elapse between the periods of their magnetization. In either case rotation will be produced; but unless the disk is provided with the closed energizing-coils it is desirable that the above-described difference of magnetic susceptibility be utilized to assist in its rotation.

The cores of the field and armature may be made in various ways, as will be well understood, it being only requisite that the laminations in each be in such direction as to secure the necessary angular displacement of the points of greatest attraction. Moreover, since the disk may be considered as made up of an infinite number of radial arms, it is obvious that what is true of a disk holds, under well-understood conditions, for many other forms of armature, and my invention in this respect is in no sense limited to the specific form of armature shown.

It will be understood that the specific ways of carrying out this invention are almost without number, and that, therefore, I do not limit myself to the precise form of motor which I have herein shown.

I believe that I am the first to produce rotation of an armature, at least such as could be utilized for any general or practicable purposes, by means of an alternating current passing through a single coil or several coils acting as one, and which have a direct magnetizing effect upon the cores of both armature and field, and this I claim in its broadest sense.

I further believe that I am the first to impart directly, by means of an alternating current, magnetism to the cores of the two elements of a motor, and by the direction of the lamination of one or both of the same to produce an angular displacement of the poles or lines of magnetic force of the cores, respectively.

What I therefore claim is—

1. An electro-magnetic motor consisting of a field-magnet, a rotary armature, and a single coil adapted to be connected to a source of alternating currents and to impart magnetism to both the armature and the field-magnet with angular displacement of the maximum points, as set forth.

2. In an electro-magnetic motor, the combination, with a coil adapted to be connected with a source of alternating currents, of a field-magnet and rotary armature the cores of which are in such relation to the coil as to be energized thereby and subdivided or laminated in such manner as to produce an angular displacement of their poles or the magnetic lines therein, as set forth.

3. In an electro-magnetic motor, the combination, with a coil adapted to be connected with a source of alternating currents, of field-magnets with laminations lying obliquely to the plane of said coil and a circular or disk armature mounted to rotate between the field-magnets, both field and armature being under the magnetizing influence of the coil, as set forth.

4. In an electro-magnetic motor, the combination, with a coil adapted to be connected with a source of alternating currents, of field-magnets with laminations lying obliquely to the plane of the coil and a circular or disk armature with spiral or concentric laminations mounted between the field-magnets, both field and armature being under the magnetizing influence of the coil, as set forth.

5. In an electro-magnetic motor, the combination, with a coil adapted to be connected to a source of alternating currents, of a field-magnet and a rotary armature with closed coils thereon, both the field and the armature being under the magnetizing influence of said coil and laminated to produce an angular displacement of the poles of the two cores.

NIKOLA TESLA.

Witnesses:
EDWARD T. EVANS,
GEORGE N. MONRO.

(No Model.)

N. TESLA.

METHOD OF ELECTRICAL POWER TRANSMISSION.

No. 405,859. Patented June 25, 1889.

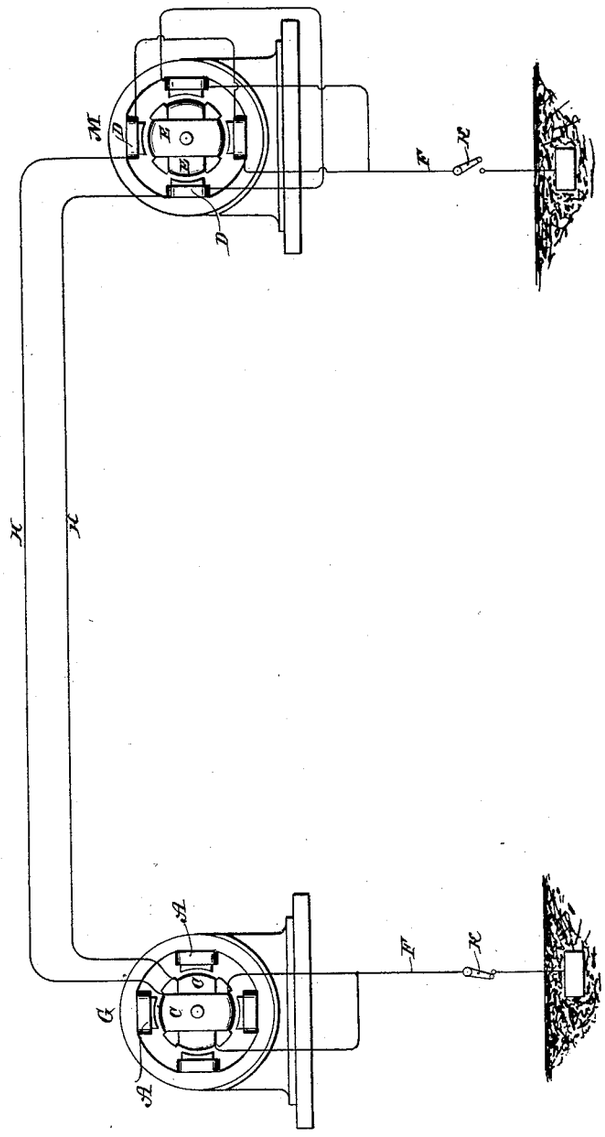

Witnesses:
Raphael Netter
Robt. F. Gaylord

Inventor
Nikola Tesla
By
Duncan, Curtis & Page.
Attorney.

N. PETERS, Photo-Lithographer, Washington, D. C.

UNITED STATES PATENT OFFICE.

NIKOLA TESLA, OF NEW YORK, N. Y., ASSIGNOR TO THE TESLA ELECTRIC COMPANY, OF SAME PLACE.

METHOD OF ELECTRICAL POWER TRANSMISSION.

SPECIFICATION forming part of Letters Patent No. 405,859, dated June 25, 1889.

Application filed March 14, 1889. Serial No. 303,251. (No model.)

To all whom it may concern:

Be it known that I, NIKOLA TESLA, a subject of the Emperor of Austria, from Smiljan, Lika, border country of Austria-Hungary, residing at New York, in the county and State of New York, have invented certain new and useful Improvements in Methods of Electrical Power Transmission, of which the following is a specification, reference being had to the drawing accompanying and forming a part of the same.

This application is for a specific method of transmitting power electrically, shown and described in, and covered broadly by the claims of, an application filed by me February 18, 1889, No. 300,220.

As is well known, certain forms of alternating-current machines have the property, when connected in circuit with an alternating-current generator, of running as a motor in synchronism therewith; but, while the alternating current will run the motor after it has attained a rate of speed synchronous with that of the generator, it will not start it; hence, in all instances heretofore where these "synchronizing motors," as they are termed, have been run, some means have been employed to bring the motors up to synchronism with the generator, or approximately so, before the alternating current of the generator is applied to drive them. In some instances mechanical appliances have been utilized for this purpose. In others special and complicated forms of motor have been constructed.

My present invention is an improvement in methods of operating these motors and involves a new and improved plan of bringing the motor up to the proper rate of speed, that it may be run in synchronism with the generator.

The expression "synchronism with the generator" is used herein in its ordinary acceptation—that is to say, a motor is said to synchronize with the generator when it preserves a certain relative speed determined by its number of poles and the number of alternations produced per revolution of the generator. Its actual speed, therefore, may be faster or slower than that of the generator, but it is said to be synchronous so long as it preserves the same relative speed.

In carrying out my present invention I construct a generator with two coils or sets of coils and a motor with corresponding energizing coils or sets of coils. By means of two line-wires one terminal of each generator-coil or set of coils is connected to one terminal of its corresponding motor-coil or set of coils, while the opposite terminals of the generator-coils are joined together and likewise those of the motor.

To start the motor I establish temporarily an electrical connection between the points of connection between the coils in the generator and those in the motor, so that the system becomes an ordinary double-circuit system identical with that described in my patent, No. 390,413, of October 2, 1888, except that the generator and motor are constructed in any well-known way with a strong tendency to synchronize. When by this plan of connection the motor has attained the desired speed, the earth-connection is severed, by which means the system becomes an ordinary single-circuit synchronizing system.

In the drawing I have illustrated this method by a diagram.

Let G represent an ordinary alternating-current generator having four field-poles A, permanently or artificially magnetized, and an armature wound with two coils C connected together in series.

Let M represent an alternating-current motor with, say, four poles D, the coils on which are connected in pairs and the pairs connected in series. The motor-armature should have polar projections and closed coils E.

From the common joint or union between the two coils or sets of coils of both the generator and motor an earth-connection F is established, while the terminals or ends of the said coils or circuits which they form are connected to the line-conductors H H.

Assuming that the motor is a synchronizing motor, or one that has the capability of running in synchronism with the generator, but not of starting, it may be started by the above-described plan by closing the ground-connection from both generator and motor. The system thus becomes one with a two-circuit generator and motor, the ground forming a common return for the currents in the two

wires H H. When by this arrangement of circuits the motor is brought to speed, the ground-connection is broken between the generator or motor or both and ground, switches K K being employed for this purpose. The motor then runs as a synchronizing motor.

This system is capable of various useful applications which it is not necessary to describe in detail; but it will be enough to say that the convertibility of the system from double circuit to single circuit is a feature in itself of great value and utility.

I do not wish to be understood as confining myself to the precise arrangement or order of connections herein set forth, as these may be obviously varied in many respects.

What I claim is—

1. The method of operating synchronizing motors herein described, which consists in electrically connecting intermediate points of the inducing-circuit of the generator and the energizing-circuit of the motor until the motor has reached a desired speed and then interrupting such connection, as set forth.

2. The method herein described of starting or operating synchronizing motors, which consists in electrically connecting intermediate points of the inducing-circuit of the generator and the energizing-circuit of the motor to earth until the motor has reached the desired speed and then interrupting either or both of the ground-connections, as set forth.

NIKOLA TESLA.

Witnesses:
EDWARD T. EVANS,
E. C. UPSTILL.

(No Model.)

N. TESLA.

DYNAMO ELECTRIC MACHINE.

No. 406,968. Patented July 16, 1889.

Fig. 1

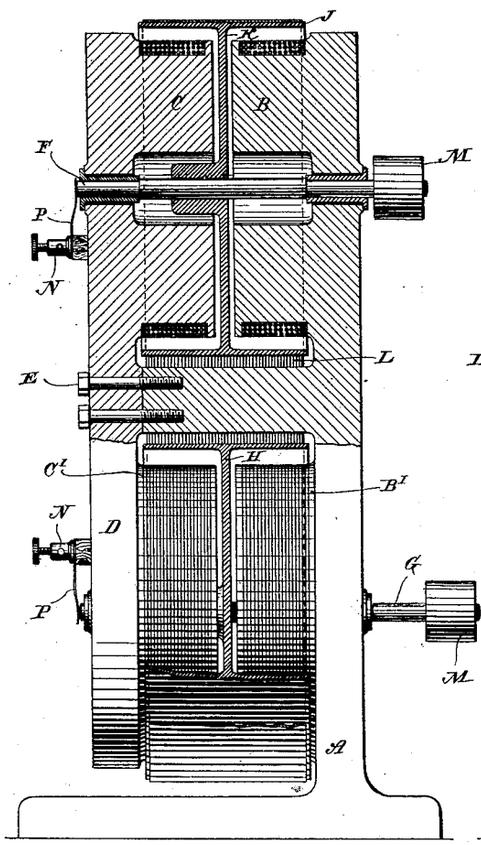

Fig. 2

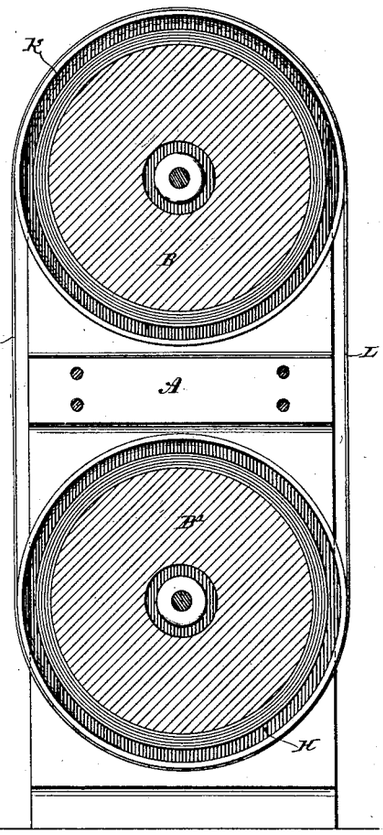

Witnesses:
Robt. F. Gaylord
Ernest Hopkinson

Inventor
Nikola Tesla
by
Duncan, Curtis & Page.
Attorneys.

N. PETERS, Photo-Lithographer, Washington, D. C.

UNITED STATES PATENT OFFICE.

NIKOLA TESLA, OF NEW YORK, N. Y., ASSIGNOR OF TWO-THIRDS TO CHARLES F. PECK, OF ENGLEWOOD, NEW JERSEY, AND ALFRED S. BROWN, OF NEW YORK, N. Y.

DYNAMO-ELECTRIC MACHINE.

SPECIFICATION forming part of Letters Patent No. 406,968, dated July 16, 1889.

Application filed March 23, 1889. Serial No. 304,498. (No model.)

To all whom it may concern:

Be it known that I, NIKOLA TESLA, from Smiljan, Lika, border country of Austria-Hungary, a subject of the Emperor of Austria, and a resident of New York, in the county and State of New York, have invented certain new and useful Improvements in Dynamo or Magneto Electric Machines, of which the following is a specification, reference being had to the accompanying drawings.

This invention relates to that class of electrical generators known as "unipolar," in which a disk or cylindrical conductor is mounted between magnetic poles adapted to produce an approximately-uniform field. In the first-named or disk armature machines the currents induced in the rotating conductor flow from the center to periphery, or conversely, according to the direction of rotation or the lines of force as determined by the signs of the magnetic poles, and these currents are taken off usually by connections or brushes applied to the disk at points on its periphery and near its center. In the case of the cylindrical armature-machine the currents developed in the cylinder are taken off by brushes applied to the sides of the cylinder at its ends.

In order to develop economically an electro-motive force available for practicable purposes, it is necessary either to rotate the conductor at a very high rate of speed or to use a disk of large diameter or cylinder of great length; but in either case it becomes difficult to secure and maintain a good electrical connection between the collecting-brushes and the conductor, owing to the high peripheral speed.

It has been proposed to couple two or more disks together in series with the object of obtaining a higher electro-motive force; but with the connections heretofore used and using other conditions of speed and dimension of disk necessary to securing good practicable results this difficulty is still felt to be a serious obstacle to the use of this kind of generator. These objections I have sought to avoid; and for this purpose I construct a machine with two fields, each having a rotary conductor mounted between its poles, but the same principle is involved in the case of both forms of machine above described, and as I prefer to use the disk form I shall confine the description herein to that machine. The disks are formed with flanges, after the manner of pulleys, and are connected together by flexible conducting bands or belts.

I prefer to construct the machine in such manner that the direction of magnetism or order of the poles in one field of force is opposite to that in the other, so that rotation of the disks in the same direction develops a current in one from center to circumference and in the other from circumference to center. Contacts applied therefore to the shafts upon which the disks are mounted form the terminals of a circuit the electro-motive force in which is the sum of the electro-motive forces of the two disks.

I would call attention to the obvious fact that if the direction of magnetism in both fields be the same the same result as above will be obtained by driving the disks in opposite directions and crossing the connecting-belts. In this way the difficulty of securing and maintaining good contact with the peripheries of the disks is avoided and a cheap and durable machine made which is useful for many purposes—such as for an exciter for alternating-current generators, for a motor, and for any other purpose for which dynamo-machines are used.

The specific construction of the machine which I have just generally described I have illustrated in the accompanying drawings, in which—

Figure 1 is a side view, partly in section, of my improved machine. Fig. 2 is a vertical section of the same at right angles to the shafts.

In order to form a frame with two fields of force, I cast a support A with two pole-pieces B B′ integral with it. To this I join by bolts E a casting D, with two similar and corresponding pole-pieces C C′. The pole-pieces B B′ are wound or connected to produce a field of force of given polarity, and the pole-pieces C C′ are wound or connected to produce a

field of opposite polarity. The driving-shafts F G pass through the poles and are journaled in insulating-bearings in the casting A D, as shown.

H K are the disks or generating-conductors. They are composed of copper, brass, or iron and are keyed or secured to their respective shafts. They are provided with broad peripheral flanges J. It is of course obvious that the disks may be insulated from their shafts, if so desired. A flexible metallic belt L is passed over the flanges of the two disks, and, if desired, may be used to drive one of the disks. I prefer, however, to use this belt merely as a conductor, and for this purpose may use sheet steel, copper, or other suitable metal. Each shaft is provided with a driving-pulley M, by which power is imparted from a counter-shaft.

N N are the terminals. For sake of clearness they are shown as provided with springs P, that bear upon the ends of the shafts. This machine, if self-exciting, would have copper bands around its poles, or conductors of any kind—such as the wires shown in the drawings—may be used.

I do not limit my invention to the special construction herein shown. For example, it is not necessary that the parts be constructed in one machine or that the materials and proportions herein given be strictly followed. Furthermore, it is evident that the conducting belt or band may be composed of several smaller bands and that the principle of connection herein described may be applied to more than two machines.

What I claim is—

1. An electrical generator consisting of the combination, with two rotary conductors mounted in unipolar fields, of a flexible conductor or belt passing around the peripheries of said conductors, as herein set forth.

2. The combination, with two rotary conducting-disks having peripheral flanges and mounted in unipolar fields, of a flexible conducting belt or band passing around the flanges of both disks, as set forth.

3. The combination of independent sets of field-magnets adapted to maintain unipolar fields, conducting-disks mounted to rotate in said fields, independent driving mechanism for each disk, and a flexible conducting belt or band passing around the peripheries of the disks, as set forth.

NIKOLA TESLA.

Witnesses:
PARKER W. PAGE,
ROBT. F. GAYLORD.

(No Model.) 3 Sheets—Sheet 1.

N. TESLA.

METHOD OF OBTAINING DIRECT FROM ALTERNATING CURRENTS.

No. 413,353. Patented Oct. 22, 1889.

Fig. 1

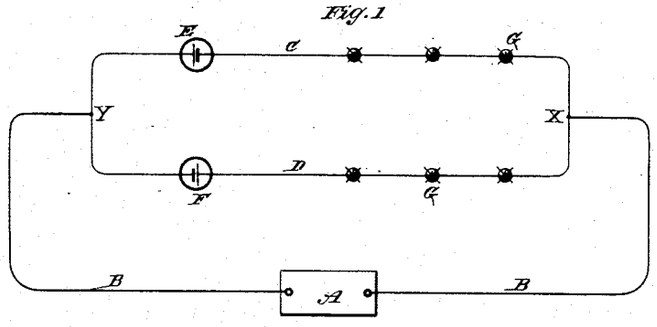

Fig. 2

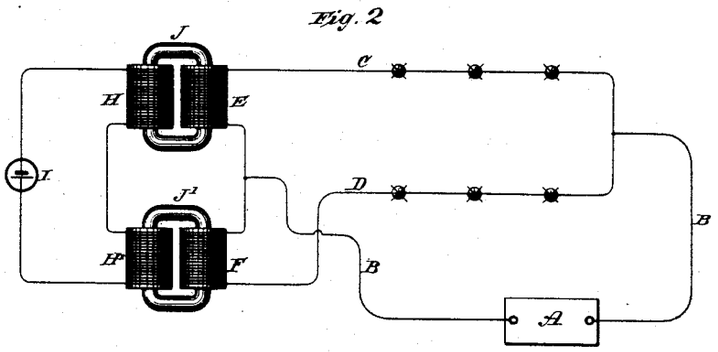

Fig. 3

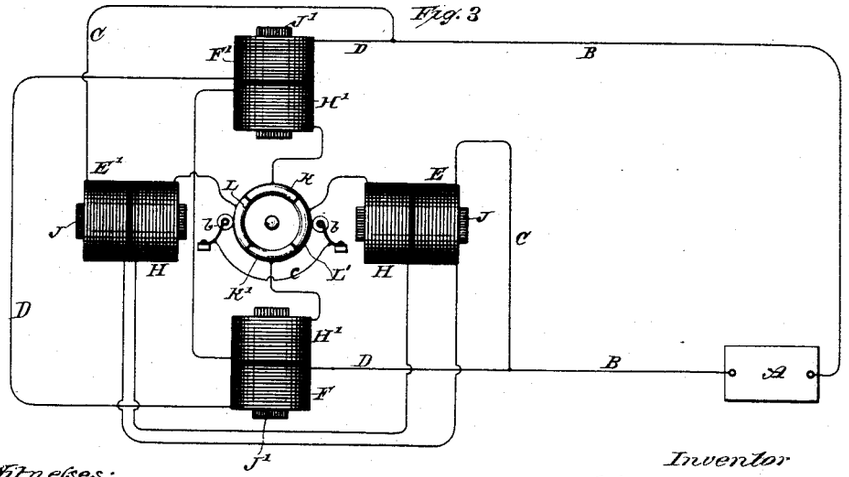

Witnesses:
Raphael Netter
Robt F. Gaylord

Inventor
Nikola Tesla
By
Duncan, Curtis & Page
Attorneys.

N. PETERS. Photo-Lithographer, Washington, D. C.

(No Model.) 3 Sheets—Sheet 2.

N. TESLA.

METHOD OF OBTAINING DIRECT FROM ALTERNATING CURRENTS.

No. 413,353. Patented Oct. 22, 1889.

Fig. 4

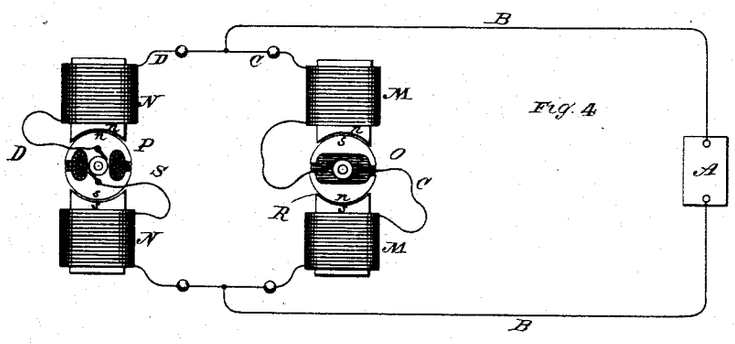

Fig. 5

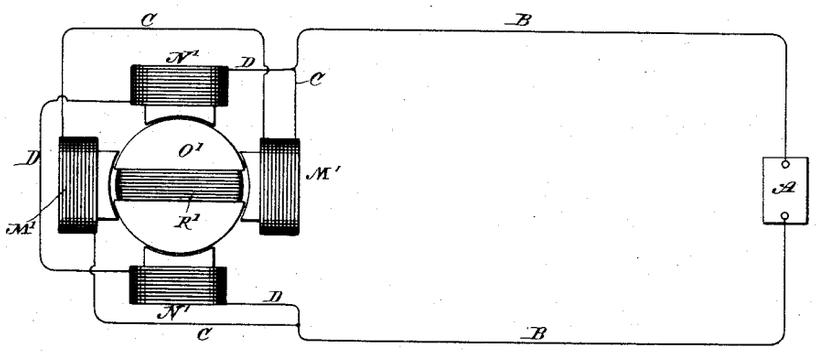

Fig. 6

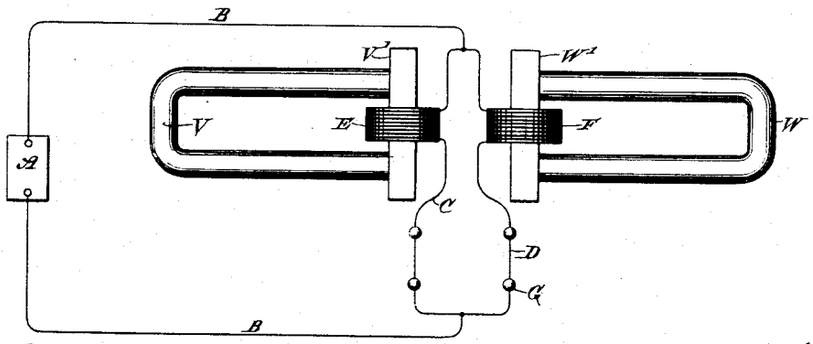

Witnesses:
Raphael Netter
Frank R Hartley

Inventor
Nikola Tesla
By
Duncan, Curtis & Page
Attorneys.

N. PETERS, Photo-Lithographer, Washington, D. C.

(No Model.) 3 Sheets—Sheet 3.

N. TESLA.

METHOD OF OBTAINING DIRECT FROM ALTERNATING CURRENTS.

No. 413,353. Patented Oct. 22, 1889.

Fig. 7

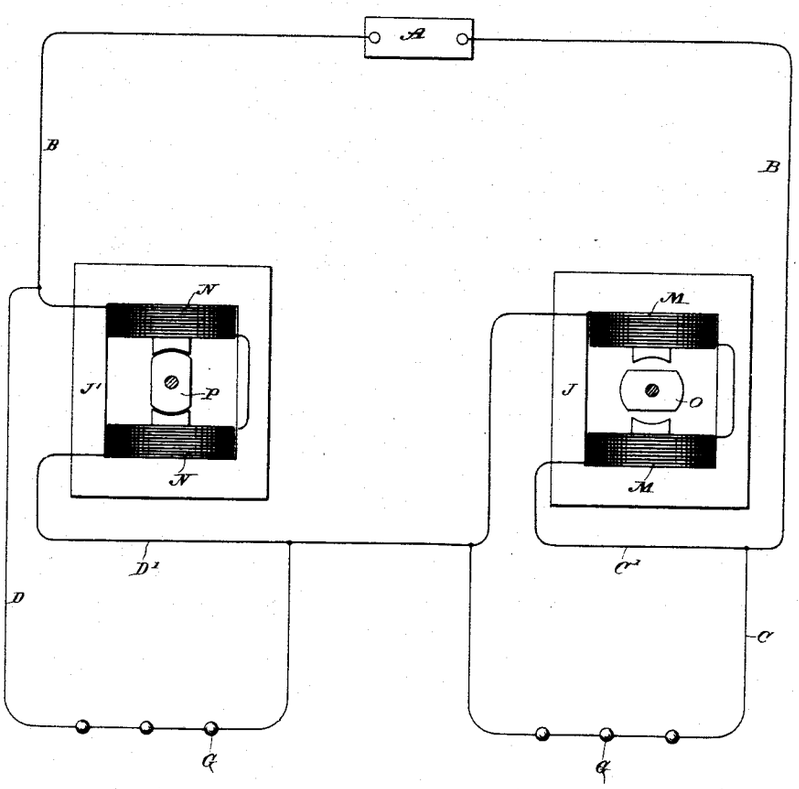

Witnesses:
Raphael Netter
Frank E. Hartley

Inventor
Nikola Tesla
By
Duncan, Curtis & Page
Attorneys.

N. PETERS, Photo-Lithographer, Washington, D. C.

UNITED STATES PATENT OFFICE.

NIKOLA TESLA, OF NEW YORK, N. Y., ASSIGNOR OF TWO-THIRDS TO ALFRED S. BROWN, OF SAME PLACE, AND CHARLES F. PECK, OF ENGLEWOOD, NEW JERSEY.

METHOD OF OBTAINING DIRECT FROM ALTERNATING CURRENTS.

SPECIFICATION forming part of Letters Patent No. 413,353, dated October 22, 1889.

Application filed June 12, 1889. Serial No. 314,069. (No model.)

To all whom it may concern:

Be it known that I, NIKOLA TESLA, a subject of the Emperor of Austria, from Smiljan, Lika, border country of Austria-Hungary, temporarily residing in New York city, in the State of New York, have invented a certain new and useful Improvement in Methods of Obtaining Direct from Alternating Currents, of which the following is a specification, reference being had to the drawings accompanying and forming a part of the same.

In nearly all the more important industrial applications of electricity the current is produced by dynamo-electric machines driven by power, in the coils of which the currents developed are primarily in reverse directions or alternating; but as very many electrical devices and systems require direct currents, it has been usual to correct the current alternations by means of a commutator, instead of taking them off directly from the generating-coils.

The superiority of alternating-current machines in all cases where their currents can be used to advantage renders their employment very desirable, as they may be much more economically constructed and operated; and the object of this my present invention is to provide means for directing or converting at will at one or more points in a circuit alternating into direct currents.

Stated as broadly as I am able to express it, my invention consists in obtaining direct from alternating currents, or in directing the waves of an alternating current so as to produce direct or substantially direct currents by developing or producing in the branches of a circuit including a source of alternating currents, either permanently or periodically, and by electric, electro-magnetic, or magnetic agencies, manifestations of energy, or what may be termed active resistances of opposite electrical character, whereby the currents or current-waves of opposite sign will be diverted through different circuits, those of one sign passing over one branch and those of opposite sign over another.

I may consider herein only the case of a circuit divided into two paths, inasmuch as any further subdivision involves merely an extension of the general principle. Selecting, then, any circuit through which is flowing an alternating current, I divide such circuit at any desired point into two branches or paths. In one of these paths I insert some device to create an electro-motive force counter to the waves or impulses of current of one sign and a similar device in the other branch which opposes the waves of opposite sign. Assume, for example, that these devices are batteries, primary or secondary, or continuous-current dynamo-machines. The waves or impulses of opposite direction composing the main current have a natural tendency to divide between the two branches; but by reason of the opposite electrical character or effect of the two branches one will offer an easy passage to a current of a certain direction, while the other will offer a relatively high resistance to the passage of the same current. The result of this disposition is, that the waves of current of one sign will, partly or wholly, pass over one of the paths or branches, while those of the opposite sign pass over the other. There may thus be obtained from an alternating current two or more direct currents without the employment of any commutator such as it has been heretofore regarded as necessary to use. The current in either branch may be used in the same way and for the same purposes as any other direct current—that is, it may be made to charge secondary batteries, energize electro-magnets, or for any other analogous purpose.

In the drawings I have illustrated some of the various ways in which I may carry out this invention.

The several figures are diagrammatic in character, and will be described in detail in their order.

Figure 1 represents a plan of directing the alternating currents by means of devices purely electrical in character. Figs. 2, 3, 4, 5, 6, and 7 are diagrams illustrative of other ways of carrying out the invention, which will be hereinafter more particularly described.

In Fig. 1, A designates a generator of alternating currents, and B B the main or line circuit therefrom. At any given point in

this circuit at or near which it is desired to obtain direct currents I divide the circuit B into two paths or branches C D. In each of these branches I place an electrical generator, which for the present we will assume produces direct or continuous currents. The direction of the current thus produced is opposite in one branch to that of the current in the other branch, or, considering the two branches as forming a closed circuit, the generators E F are connected up in series therein, one generator in each part or half of the circuit. The electro-motive force of the current sources E and F may be equal to or higher or lower than the electro-motive forces in the branches C D or between the points X and Y of the circuit B B. If equal, it is evident that current-waves of one sign will be opposed in one branch and assisted in the other to such an extent that all the waves of one sign will pass over one branch and those of opposite sign over the other. If, on the other hand, the electro-motive force of the sources E F be lower than that between X and Y, the currents in both branches will be alternating, but the waves of one sign will preponderate. One of the generators or sources of current E or F may be dispensed with; but it is preferable to employ both, if they offer an appreciable resistance, as the two branches will be thereby better balanced. The translating or other devices to be acted upon by the current are designated by the letters G, and they are inserted in the branches C D in any desired manner; but in order to better preserve an even balance between the branches due regard should be had to the number and character of the devices, as will be well understood.

Figs. 2, 3, 4, and 5 illustrate what may be termed "electro-magnetic" devices for accomplishing a similar result—that is to say, instead of producing directly by a generator an electro-motive force in each branch of the circuit, I may establish a field or fields of force and lead the branches through the same in such manner that an active opposition of opposite effect or direction will be developed therein by the passage or tendency to pass of the alternations of current. In Fig. 2, for example, A is the generator of alternating currents, B B the line-circuit, and C D the branches over which the alternating currents are directed. In each branch I include the secondary of a transformer or induction-coil, which, since they correspond in their functions to the batteries of the previous figure, I have designated by the letters E F. The primaries H H′ of the induction-coils or transformers are connected either in parallel or series with a source of direct or continuous currents I, and the number of convolutions is so calculated for the strength of the current from I that the cores J J′ will be saturated. The connections are such that the conditions in the two transformers are of opposite character—that is to say, the arrangement is such that a current wave or impulse corresponding in direction with that of the direct current in one primary, as H, is of opposite direction to that in the other primary H′; hence it results that while one secondary offers a resistance or opposition to the passage through it of a wave of one sign the other secondary similarly opposes a wave of opposite sign. In consequence the waves of one sign will, to a greater or less extent, pass by way of one branch, while those of opposite sign in like manner pass over the other branch.

In lieu of saturating the primaries by a source of continuous current, I may include the primaries in the branches C D, respectively, and periodically short-circuit by any suitable mechanical devices—such as an ordinary revolving commutator—their secondaries. It will be understood of course that the rotation and action of the commutator must be in synchronism or in proper accord with the periods of the alternations in order to secure the desired results. Such a disposition I have represented diagrammatically in Fig. 3. Corresponding to the previous figures, A is the generator of alternating currents, B B the line, and C D the two branches for the direct currents. In branch C are included two primary coils E E′, and in branch D are two similar primaries F F′. The corresponding secondaries for these coils and which are on the same subdivided cores J or J′ are in circuits the terminals of which connect to opposite segments K K′ and L L′, respectively, of a commutator. Brushes *b b* bear upon the commutator and alternately short-circuit the plates K and K′ and L and L′ through a connection *c*. It is obvious that either the magnets and commutator or the brushes may revolve.

The operation will be understood from a consideration of the effects of closing or short-circuiting the secondaries. For example, if at the instant when a given wave of current passes one set of secondaries be short-circuited, nearly all the current flows through the corresponding primaries; but the secondaries of the other branch being open-circuited the self-induction in the primaries is highest, and hence little or no current will pass through that branch. If, as the current alternates, the secondaries of the two branches are alternately short-circuited, the result will be that the currents of one sign pass over one branch and those of the opposite sign over the other. The disadvantages of this arrangement, which would seem to result from the employment of sliding contacts, are in reality very slight, inasmuch as the electro-motive force of the secondaries may be made exceedingly low, so that sparking at the brushes is avoided.

Fig. 4 is a diagram, partly in section, of another plan of carrying out the invention. The circuit B in this case is divided, as before, and each branch includes the coils of both the field and revolving armatures of two induction devices. The armatures O P are prefer-

ably mounted on the same shaft, and are adjusted relatively to one another in such manner that when the self-induction in one branch, as C, is maximum in the other branch D it is minimum. The armatures are rotated in synchronism with the alternations from the source A. The winding or position of the armature-coils is such that a current in a given direction passed through both armatures would establish in one poles similar to those in the adjacent poles of the field and in the other poles unlike the adjacent field-poles, as indicated by *n n s s* in the drawings. If the like poles are presented, as shown in circuit D, the condition is that of a closed secondary upon a primary, or the position of least inductive resistance; hence a given alternation of current will pass mainly through D. A half-revolution of the armatures produces an opposite effect, and the succeeding current impulse passes through C. Using this figure as an illustration, it is evident that the fields N M may be permanent magnets or independently excited and the armatures O P driven, as in the present case, so as to produce alternate currents, which will set up alternately impulses of opposite direction in the two branches D C, which in such case would include the armature-circuits and translating devices only.

In Fig. 5 a plan alternative with that shown in Fig. 3 is illustrated. In the previous case illustrated each branch C and D contained one or more primary coils, the secondaries of which were periodically short-circuited in synchronism with the alternations of current from the main source A, and for this purpose a commutator was employed. The latter may, however, be dispensed with and an armature with a closed coil substituted.

Referring to Fig. 5, in one of the branches, as C, are two coils M′, wound on laminated cores, and in the other branches D are similar coils N′. A subdivided or laminated armature O′, carrying a closed coil R′, is rotatably supported between the coils M′ N′, as shown. In the position shown—that is, with the coil R′ parallel with the convolutions of the primaries N′ M′—practically the whole current will pass through branch D, because the self-induction in coils M′ M′ is maximum. If, therefore, the armature and coil be rotated at a proper speed relatively to the periods or alternations of the source A, the same results are obtained as in the case of Fig. 3.

Fig. 6 is an instance of what may be called, in distinction to the others, a "magnetic" means of securing the results arrived at in this invention. V and W are two strong permanent magnets provided with armatures V′ W′, respectively. The armatures are made of thin laminæ of soft iron or steel, and the amount of magnetic metal which they contain is so calculated that they will be fully or nearly saturated by the magnets. Around the armatures are coils E F, contained, respectively, in the circuits C and D. The connections and electrical conditions in this case are similar to those in Fig. 2, except that the current source I of Fig. 2 is dispensed with and the saturation of the core of coils E F obtained from the permanent magnets.

In the illustrations heretofore given I have in each instance shown the two branches or paths containing the translating or induction devices as in derivation one to the other; but this is not always necessary. For example, in Fig. 7, A is an alternating-current generator; B B, the line wires or circuit. At any given point in the circuit I form two paths, as D D′, and at another point two paths, as C C′. Either pair or group of paths is similar to the previous dispositions with the electrical source or induction device in one branch only, while the two groups taken together form the obvious equivalent of the cases in which an induction device or generator is included in both branches. In one of the paths, as D, are included the devices to be operated by the current. In the other branch, as D′, is an induction device that opposes the current impulses of one direction and directs them through the branch D. So, also, in branch C are translating devices G, and in branch C′ an induction device or its equivalent that diverts through C impulses of opposite direction to those diverted by the device in branch D′. I have also shown a special form of induction device for this purpose. J J′ are the cores, formed with pole-pieces, upon which are wound the coils M N. Between these pole-pieces are mounted at right angles to one another the magnetic armatures O P, preferably mounted on the same shaft and designed to be rotated in synchronism with the alternations of current. When one of the armatures is in line with the poles or in the position occupied by armature P, the magnetic circuit of the induction device is practically closed; hence there will be the greatest opposition to the passage of a current through coils N N. The alternation will therefore pass by way of branch D. At the same time, the magnetic circuit of the other induction device being broken by the position of the armature O, there will be less opposition to the current in coils M, which will shunt the current from branch C. A reversal of the current being attended by a shifting of the armatures, the opposite effect is produced.

There are many other modifications of the means or methods of carrying out my invention; but I have not deemed it necessary herein to specifically refer to more than those described, as they involve the chief modifications of the plan. In all of these it will be observed that there is developed in one or all of the branches of a circuit from a source of alternating currents an active (as distinguished from a dead) resistance or opposition to the currents of one sign, for the purpose of diverting the currents of that sign through the other or another path, but per-

mitting the currents of opposite sign to pass without substantial opposition.

Whether the division of the currents or waves of current of opposite sign be effected with absolute precision or not is immaterial to my invention, since it will be sufficient if the waves are only partially diverted or directed, for in such case the preponderating influence in each branch of the circuit of the waves of one sign secures the same practical results in many if not all respects as though the current were direct and continuous.

An alternating and direct current have been combined so that the waves of one direction or sign were partially or wholly overcome by the direct current; but by this plan only one set of alternations are utilized, whereas by my system the entire current is rendered available. By obvious applications of this discovery I am enabled to produce a self-exciting alternating dynamo, or to operate direct-current meters on alternating-current circuit, or to run various devices—such as arc lamps—by direct currents in the same circuit with incandescent lamps or other devices run by alternating currents.

It will be observed that if an intermittent counter or opposing force be developed in the branches of the circuit and of higher electro-motive force than that of the generator an alternating current will result in each branch, with the waves of one sign preponderating, while a constantly or uniformly acting opposition in the branches of higher electro-motive force than the generator would produce a pulsating current, which conditions would be under some circumstances the equivalent to those I have previously described.

What I claim as my invention is—

1. The method herein set forth of obtaining direct from alternating currents, which consists in developing or producing in one branch of a circuit from an alternating-current source an active resistance to the current impulses of one direction, whereby the said currents or waves of current will be diverted or directed through another branch.

2. The method of obtaining direct from alternating currents, which consists in dividing the path of an alternating current into branches, and developing in one of said branches, either permanently or periodically, an electrical force or active resistance counter to or opposing the currents or current-waves of one sign, and in the other branch a force counter to or opposing the currents or current-waves of opposite sign, as set forth.

3. The method of obtaining direct from alternating currents, which consists in dividing the path of an alternating current into branches, establishing fields of force and leading the said branches through the said fields of force in such relation to the lines of force therein that the impulses of current of one direction will be opposed in one branch and those of opposite direction in the other, as set forth.

NIKOLA TESLA.

Witnesses:
ROBT. F. GAYLORD,
F. B. MURPHY.

(No Model.)

2 Sheets—Sheet 1.

N. TESLA.

ELECTRO MAGNETIC MOTOR.

No. 416,191. Patented Dec. 3, 1889.

Fig. 1

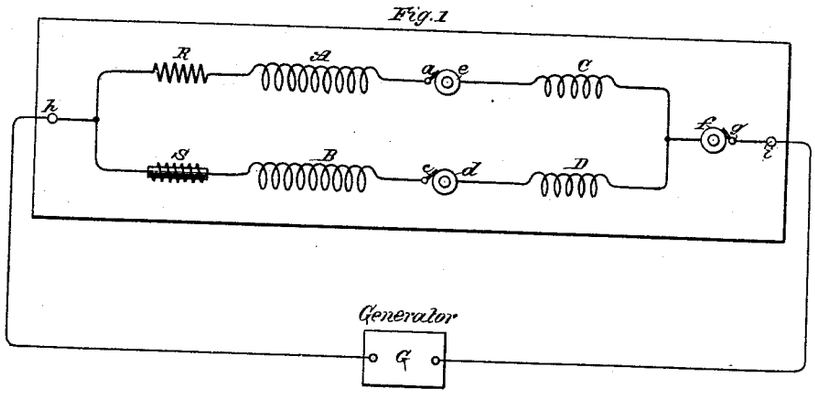

Fig. 2

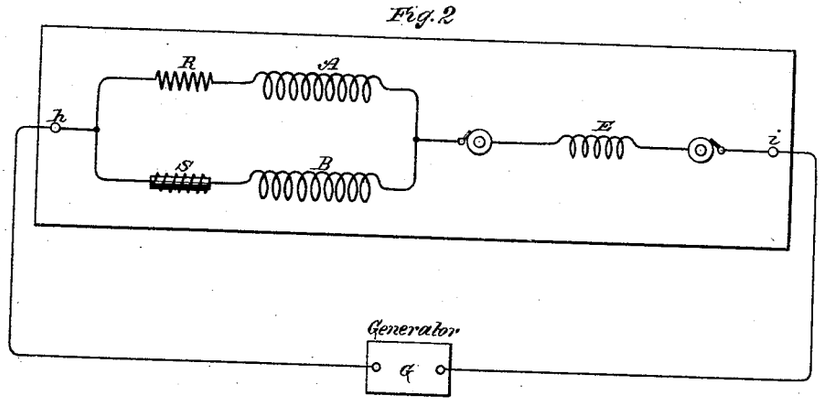

Fig. 3

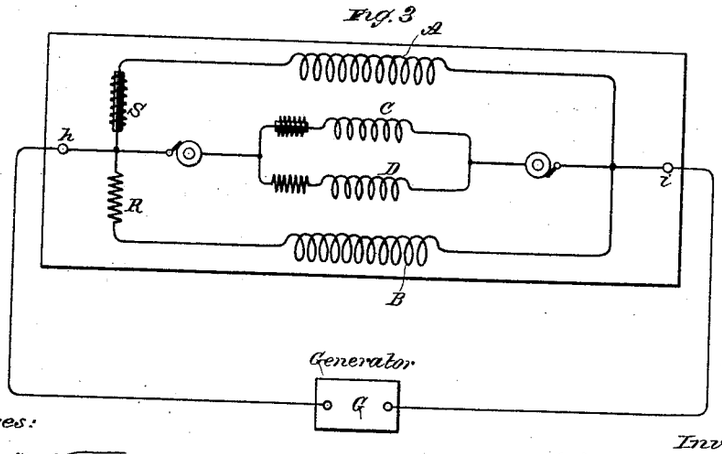

Witnesses:

Raphael Netter

Robt. F. Gaylord

Inventor.

Nikola Tesla

By

Duncan. Curtis & Page,

Attorneys.

N. PETERS, Photo-Lithographer, Washington, D. C.

(No Model.) 2 Sheets—Sheet 2.

N. TESLA.

ELECTRO MAGNETIC MOTOR.

No. 416,191. Patented Dec. 3, 1889.

Fig. 4.

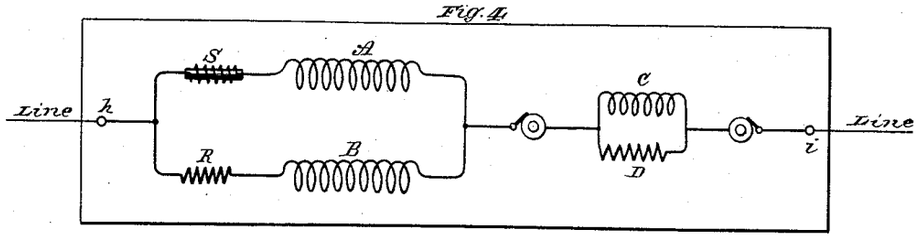

Fig. 5

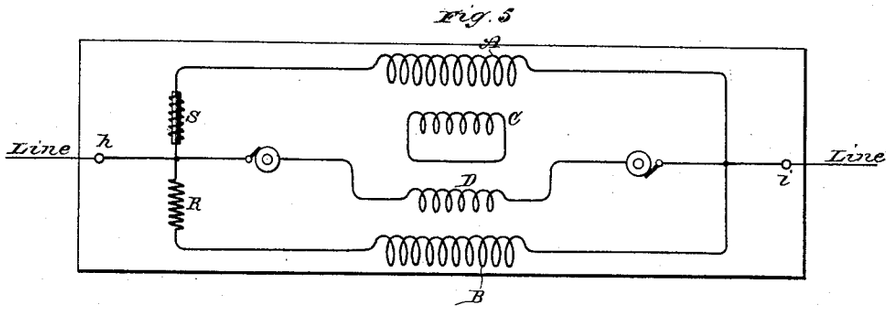

Fig. 6

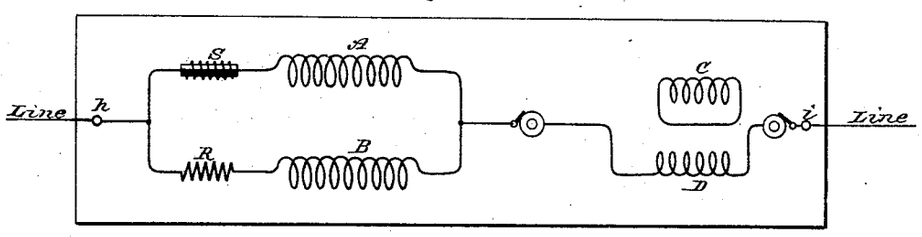

Fig. 7

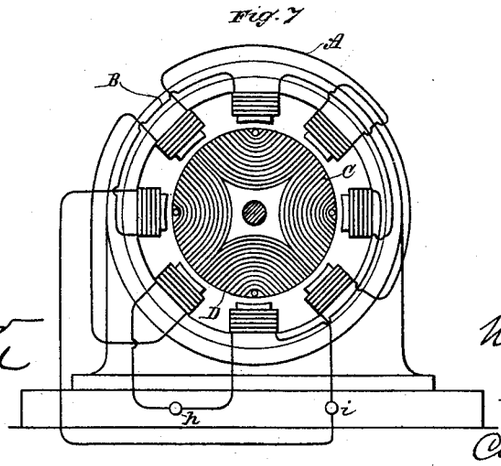

Witnesses:
Raphael Netter
Robt. F. Gaylord

Inventor
Nikola Tesla
By Duncan, Curtis & Page,
Attorneys.

N. PETERS, Photo-Lithographer, Washington, D. C.

UNITED STATES PATENT OFFICE.

NIKOLA TESLA, OF NEW YORK, N. Y., ASSIGNOR TO THE TESLA ELECTRIC COMPANY, OF SAME PLACE.

ELECTRO-MAGNETIC MOTOR.

SPECIFICATION forming part of Letters Patent No. 416,191, dated December 3, 1889.

Application filed May 20, 1889. Serial No. 311,413. (No model.)

To all whom it may concern:

Be it known that I, NIKOLA TESLA, a subject of the Emperor of Austria, from Smiljan, Lika, border country of Austria-Hungary, residing at New York, in the county and State of New York, have invented certain new and useful Improvements in Electro-Magnetic Motors, of which the following is a specification, reference being had to the drawings accompanying and forming a part of the same.

This invention pertains to that class of electro-magnetic motors invented by me in which two or more independent energizing-circuits are employed, and through which alternating currents differing in phase are passed to produce the operation or rotation of the motor.

One of the general ways which I have followed in carrying out this invention is to produce practically independent currents differing primarily in phase and pass these through the motor-circuits. Another way is to produce a single alternating current, to divide it between the motor-circuits, and to effect artificially a lag in one of the said circuits or branches, as by giving to the circuits different self-inductive capacity, and in other ways. In the former case, in which the necessary difference of phase is primarily effected in the generation of currents, I have, in some instances, passed the currents through the energizing-coils of both elements of the motor—the field and armature; but I have made the discovery that a new and useful result is or may be obtained by doing this under the conditions hereinafter specified in the case of motors in which the lag, as above stated, is artificially secured. In this my present invention resides.

In illustration of the nature of this invention I shall refer to the accompanying drawings, in which—

Figures 1 to 6, inclusive, are diagrams of different ways in which the invention is or may be carried out; and Fig. 7, a side view of a form of motor which I have used for this purpose.

The diagrams in detail will be described separately.

A B in Fig. 1 indicate the two energizing-circuits of a motor, and C D two circuits on the armature. Circuit or coil A is connected in series with circuit or coil C, and the two circuits B D are similarly connected. Between coils A and C is a contact-ring *e*, forming one terminal of the latter, and a brush *a*, forming one terminal of the former. A ring *d* and brush *c* similarly connect coils B and D. The opposite terminals of the field-coils connect to one binding-post *h* of the motor, and those of the armature-coils are similarly connected to the opposite binding-post *i* through a contact-ring *f* and brush *g*. Thus each motor-circuit while in derivation to the other includes one armature and one field-coil. These circuits are of different self-induction, and may be made so in various ways. For the sake of clearness I have shown in one of these circuits an artificial resistance R and in the other a self-induction coil S. When an alternating current is passed through this motor it divides between its two energizing-circuits. The higher self-induction of one circuit produces a greater retardation or lag in the current therein than in the other. The difference of phase between the two currents effects the rotation or shifting of the points of maximum magnetic effect that secures the rotation of the armature. In certain respects this plan of including both armature and field coils in circuit is a marked improvement. Such a motor has a good torque at starting; yet it has also considerable tendency to synchronism, owing to the fact that when properly constructed the maximum magnetic effects in both armature and field coincide—a condition which in the usual construction of these motors with closed armature-coils is not readily attained. The motor thus constructed exhibits, too, a better regulation of current from no load to load, and there is less difference between the apparent and real energy expended in running it. The true synchronous speed of this form of motor is that of the generator when both are alike—that is to say, if the number of the coils on the armature and on the field is x, the motor will run normally at the same speed as a generator driving it if the number of field-magnets or poles of the same be also x.

Fig. 2 shows a somewhat modified arrangement of circuits. There is in this case but one armature-coil E, the winding of which main-

tains effects corresponding to the resultant poles produced by the two field-circuits.

Fig. 3 represents a disposition in which both armature and field are wound with two sets of coils, all in multiple arc to the line or main circuit. The armature-coils are wound to correspond with the field-coils with respect to their self-induction. A modification of this plan is shown in Fig. 4—that is to say, the two field-coils and two armature-coils are in derivation to themselves and in series with one another. The armature-coils in this case, as in the previous figure, are wound for different self-induction to correspond with the field-coils.

Another modification is shown in Fig. 5. In this case only one armature-coil, as D, is included in the line-circuit, while the other, as C, is short-circuited.

In such a disposition as that shown in Fig. 2, or where only one armature-coil is employed, the torque on the start is somewhat reduced, while the tendency to synchronism is somewhat increased. In such a disposition, as shown in Fig. 5, the opposite conditions would exist. In both instances, however, there is the advantage of dispensing with one contact-ring.

In Fig. 5 the two field-coils and the armature-coil D are in multiple arc. In Fig. 6 this disposition is modified, coil D being shown in series with the two field-coils.

Fig. 7 is an outline of the general form of motor in which I have embodied this improvement. The circuit-connections between the armature and field coils are made, as indicated in the previous figures, through brushes and rings, which are not shown.

In the above description I have made use of the terms "armature" and "field;" but it will be understood that these are in this case convertible terms, for what is true of the field is equally so of the armature, except that one is stationary, the other capable of rotation.

I do not claim in this application the method or means of operating a double-circuit motor by making its circuits of different self-induction or in any way retarding the phases of current in one circuit more than in another, having made these features subject of other applications; but

What I claim is—

1. In an alternating-current motor, the combination, with field-circuits of different self-inductive capacity, of corresponding armature-circuits electrically connected therewith, as set forth.

2. In an alternating-current motor, the combination, with independent field-coils of different self-induction, of independent armature-coils, one or more in circuit with the field-coils and the others short-circuited, as set forth.

NIKOLA TESLA.

Witnesses:
ROBT. F. GAYLORD,
FRANK E. HARTLEY.

(No Model.) 2 Sheets—Sheet 1.

N. TESLA.

METHOD OF OPERATING ELECTRO MAGNETIC MOTORS.

No. 416,192. Patented Dec. 3, 1889.

Fig. 1

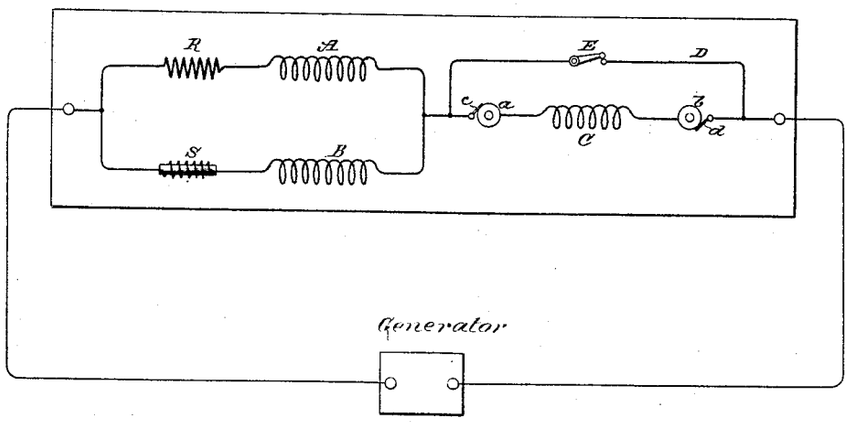

Fig. 2

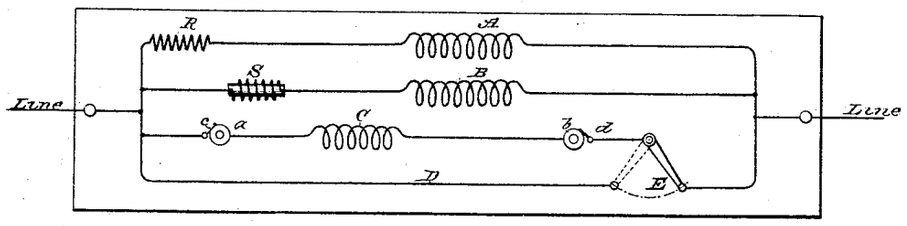

Fig. 3

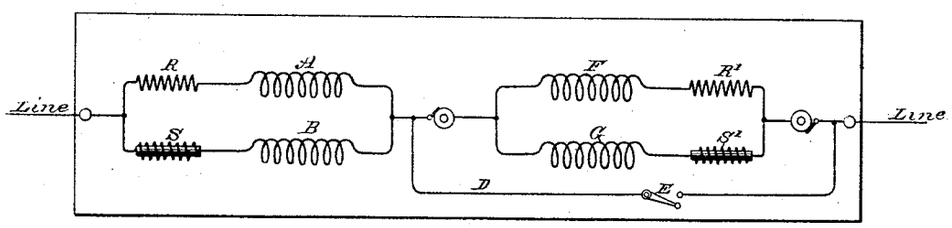

Witnesses:
Raphael Netter
Robt F. Gaylord

Inventor
Nikola Tesla
By Duncan, Curtis & Page
Attorneys.

N. PETERS. Photo-Lithographer, Washington, D. C.

(No Model.) 2 Sheets—Sheet 2.

N. TESLA.

METHOD OF OPERATING ELECTRO MAGNETIC MOTORS.

No. 416,192. Patented Dec. 3, 1889.

Fig. 4

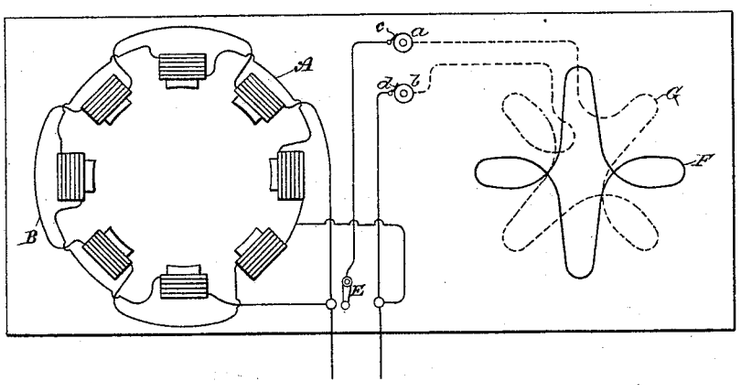

Fig. 5

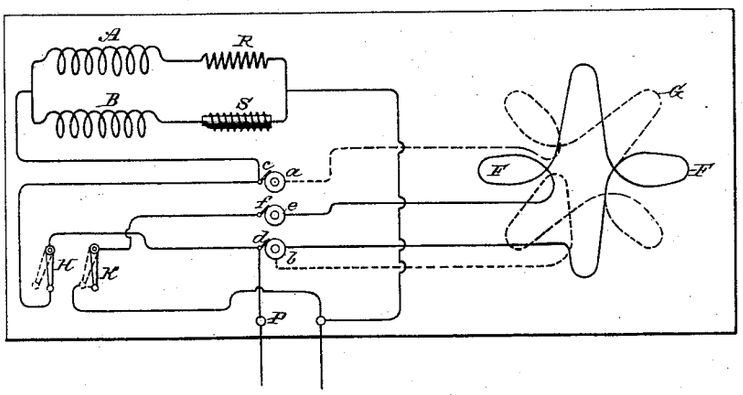

Witnesses:
Raphael Netter
Frank R. Hartley

Inventor
Nikola Tesla
By
Duncan, Curtis & Page
Attorneys.

N. PETERS, Photo-Lithographer, Washington, D. C.

UNITED STATES PATENT OFFICE.

NIKOLA TESLA, OF NEW YORK, N. Y., ASSIGNOR TO THE TESLA ELECTRIC COMPANY, OF SAME PLACE.

METHOD OF OPERATING ELECTRO-MAGNETIC MOTORS.

SPECIFICATION forming part of Letters Patent No. 416,192, dated December 3, 1889.

Application filed May 20, 1889. Serial No. 311,414. (No model.)

To all whom it may concern:

Be it known that I, NIKOLA TESLA, a subject of the Emperor of Austria, from Smiljan, Lika, border country of Austria-Hungary, and a resident of New York, in the county and State of New York, have invented certain new and useful Improvements in Methods of Operating Electro-Magnetic Motors, of which the following is a specification, reference being had to the drawings accompanying and forming a part of the same.

In a patent granted to me April 16, 1889, No. 401,520, I have shown and described a method of starting and operating synchronizing motors which involved the transformation of the motor from a torque to a synchronizing motor. This I have heretofore done by a change of the circuit-connections, whereby on the start the poles or resultant attraction of the field-magnets of the motor were shifted or rotated by the action of the current until the motor reached synchronous speed, after which the poles were merely alternated. The present application is based upon another way of accomplishing this result, the main features being as follows: If an alternating current be passed through the field-coils only of a motor having two energizing-circuits of different self-induction and the armature-coils be short-circuited, the motor will have a strong torque, but little or no tendency to synchronism with the generator; but if the same current which energizes the field be passed also through the armature-coils the tendency to remain in synchronism is very considerably increased. This is due to the fact that the maximum magnetic effects produced in the field and armature more nearly coincide. This principle discovered by me I have utilized in the operation of motors. In other words, I construct a motor having independent field-circuits of different self-induction, which are joined in derivation to a source of alternating currents. The armature I wind with one or more coils, which are connected with the field-coils through contact rings and brushes, and around the armature-coils I arrange a shunt with means for opening or closing the same. In starting this motor I close the shunt around the armature-coils, which will therefore be in closed circuit. When the current is directed through the motor, it divides between the two circuits, (it is not necessary to consider any case where there are more than two circuits used,) which, by reason of their different self-induction, secure a difference of phase between the two currents in the two branches that produces a shifting or rotation of the poles. By the alternations of current other currents are induced in the closed—or short-circuited—armature-coils and the motor has a strong torque. When the desired speed is reached, the shunt around the armature-coils is opened and the current directed through both armature and field coils. Under these conditions the motor has a strong tendency to synchronism.

In the drawings hereto annexed I have illustrated several modifications of the plan above set forth for operating motors. The figures are diagrams, and will be explained in their order.

Figure 1: A and B designate the field-coils of the motor. As the circuits including these coils are of different self-induction, I have represented this by a resistance-coil R in circuit with A, and a self-induction coil S in circuit with B. The same result may of course be secured by the winding of the coils. C is the armature-circuit, the terminals of which are rings *a b*. Brushes *c d* bear on these rings and connect with the line and field circuits. D is the shunt or short circuit around the armature. E is the switch therein. The operation of these devices I have stated above.

It will be observed that in such a disposition as is illustrated in Fig. 1, the field-circuits A and B being of different self-induction, there will always be a greater lag of the current in one than the other, and that, generally, the armature phases will not correspond with either, but with the resultant of both. It is therefore important to observe the proper rule in winding the armature. For instance, if the motor have eight poles—four in each circuit—there will be four resultant poles, and hence the armature-winding should be such as to produce four poles, in order to constitute a true synchronizing motor.

Fig 2: This diagram differs from the previous one only in respect to the order of connections. In the present case the armature-coil, instead of being in series with the field-

coils, is in multiple arc therewith. The armature-winding may be similar to that of the field—that is to say, the armature may have two or more coils wound or adapted for different self-induction and adapted, preferably, to produce the same difference of phase as the field-coils. On starting the motor the shunt is closed around both coils. This is shown in Fig. 3, in which the armature-coils are F G. To indicate their different electrical character, I have shown in circuit with them, respectively, the resistance R′ and the self-induction coil S′. The two armature coils are in series with the field-coils and the same disposition of the shunt or short circuit D is used. It is of advantage in the operation of motors of this kind to construct or wind the armature in such manner that when short-circuited on the start it will have a tendency to reach a higher speed than that which synchronizes with the generator. For example, a given motor having, say, eight poles should run, with the armature-coil short-circuited, at two thousand revolutions per minute to bring it up to synchronism. It will generally happen, however, that this speed is not reached, owing to the fact that the armature and field currents do not properly correspond, so that when the current is passed through the armature (the motor not being quite up to synchronism) there is a liability that it would not "hold on," as it is termed. I therefore prefer to so wind or construct the motor that on the start, when the armature-coils are short-circuited, the motor will tend to reach a speed higher than the synchronous—as, for instance, double the latter. In such case the difficulty above alluded to is not felt, for the motor will always hold up to synchronism if the synchronous speed—in the case supposed of two thousand revolutions—is reached or passed. This may be accomplished in various ways; but for all practical purposes the following will suffice: I wind on the armature two sets of coils. On the start I short-circuit one only, thereby producing a number of poles on the armature, which will tend to run the speed up above the synchronous limit. When such limit is reached or passed, the current is directed through the other coil, which, by increasing the number of armature-poles, tends to maintain synchronism. In Fig. 4 such a disposition is shown. The motor having, say, eight poles contains two field-circuits A and B, of different self-induction. The armature has two coils F and G. The former is closed upon itself, the latter connected with the field and line through contact-rings *a b*, brushes *c d*, and a switch E. On the start the coil F alone is active and the motor tends to run at a speed above the synchronous; but when the coil G is connected to the circuit the number of armature-poles is increased, while the motor is made a true synchronous motor. This disposition has the advantage that the closed armature-circuit imparts to the motor torque when the speed falls off, but at the same time the conditions are such that the motor comes out of synchronism more readily. To increase the tendency to synchronism, two circuits may be used on the armature, one of which is short-circuited on the start and both connected with the external circuit after the synchronous speed is reached or passed. This disposition is shown in Fig. 5. There are three contact-rings *a b e* and three brushes *c d f*, which connect the armature-circuits with the external circuit. On starting, the switch H is turned to complete the connection between one binding-post P and the field-coils. This short-circuits one of the armature-coils, as G. The other coil F is out of circuit and open. When the motor is up to speed, the switch H is turned back, so that the connection from binding-post P to the field-coils is through the coil G, and switch K is closed, thereby including coil F in multiple arc with the field-coils. Both armature-coils are thus active.

From the above-described instances it is evident that many other dispositions for carrying out the invention are possible.

I do not claim herein the method and means described and shown for operating a motor by producing artificially a difference of current phase in its independent energizing-circuits; nor do I claim, broadly, a motor having independent energizing-circuits of different self-induction and armature-circuits connected therewith, as these features are made subjects of other applications which I have filed.

What I claim is—

1. The method herein described of operating alternating-current motors having independent energizing-circuits, which consists in short-circuiting the armature circuit or circuits until the motor has reached or passed a synchronizing speed and then connecting said armature-circuits with the external circuit, as set forth.

2. The method of operating alternating-current motors having field-coils of different self-induction, which consists in directing alternating currents from an external source through the field-circuits only until the motor has reached a given speed and then directing said currents through both the field-circuits and one or more of the armature-circuits, as set forth.

3. The method of operating alternating-current motors having field-coils of different self-induction, which consists in directing alternating currents from an external source through the field-circuits and short-circuiting a part of the armature-circuits, and then when the motor has attained a given speed directing the alternating currents through both the field and one or more of the armature-circuits, as set forth.

NIKOLA TESLA.

Witnesses:
ROBT. F. GAYLORD,
FRANK E. HARTLEY.

(No Model.)

N. TESLA.

ELECTRO MAGNETIC MOTOR.

No. 416,193. Patented Dec. 3, 1889.

Fig. 1

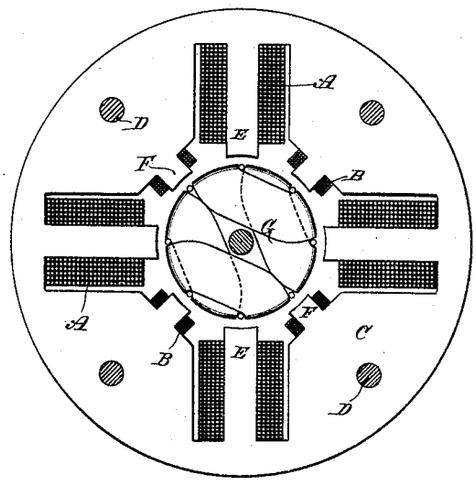

Fig. 2

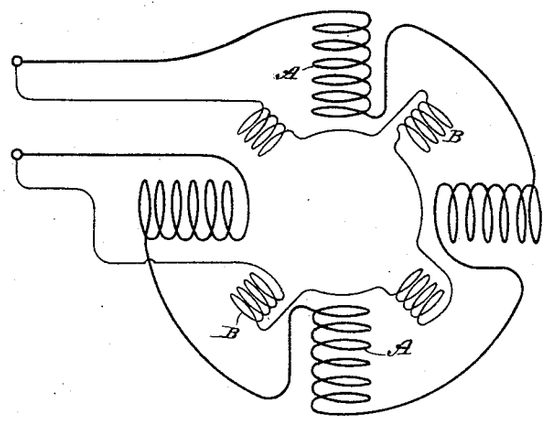

Witnesses:
Raphael Netter
Robt. F. Gaylord

Inventor
Nikola Tesla
By
Duncan, Curtis & Page
Attorneys.

N. PETERS. Photo-Lithographer. Washington, D. C.

UNITED STATES PATENT OFFICE.

NIKOLA TESLA, OF NEW YORK, N. Y., ASSIGNOR TO THE TESLA ELECTRIC COMPANY, OF SAME PLACE.

ELECTRO-MAGNETIC MOTOR.

SPECIFICATION forming part of Letters Patent No. 416,193, dated December 3, 1889.

Application filed May 20, 1889. Serial No. 311,415. (No model.)

To all whom it may concern:

Be it known that I, NIKOLA TESLA, a subject of the Emperor of Austria, from Smiljan, Lika, border country of Austria-Hungary, residing at New York, in the county and State of New York, have invented certain new and useful Improvements in Electro-Magnetic Motors, of which the following is a specification, reference being had to the accompanying drawings.

This invention relates to alternating-current motors of the general description invented by me, and in which two or more energizing-circuits are employed, through which alternating currents differing in phase are passed, with the result of producing a progressive shifting or rotation of the poles or points of maximum attractive effect.

In prior patents and applications I have shown and described various forms of motors of this kind. Among them are motors in which both energizing-circuits are electrically alike—that is to say, both have the same or approximately the same electrical resistance and self-induction—in the operation of which the alternating currents used are primarily of different phase. In others the difference of phase is artificially produced—as, for instance, in cases where the motor-circuits are of different resistance and self-induction, so that the same current divided between them will be retarded in one to a greater extent than in the other, and the requisite phase difference secured in this way. To this latter class generally my present invention relates.

The lag or rotation of the phases of an alternating current is directly proportional to the self-induction and inversely proportional to the resistance of the circuit through which the current flows. Hence, in order to secure the proper difference of phase between the two motor-circuits, it is desirable to make the self-induction in one much higher and the resistance much lower than the self-induction and resistance, respectively, in the other. At the same time the magnetic quantities of the two poles or sets of poles which the two circuits produce should be approximately equal. These requirements, which I have found to exist in motors of this kind, have led me to the invention of a motor having the following general characteristics: The coils which are included in that energizing-circuit which is to have the higher self-induction I make of coarse wire, or a conductor of relatively low resistance, and I use the greatest possible length or number of turns. In the other set of coils I use a comparatively few turns of finer wire or a wire of higher resistance. Furthermore, in order to approximate the magnetic quantities of the poles excited by these coils, I use in the self-induction circuit cores much longer than those in the other or resistance circuit. I have shown in the drawings a motor embodying these features.

Figure 1 is a part-sectional view of the motor at right angles to the shaft. Fig. 2 is a diagram of the field-circuits.

In Fig. 2, let A represent the coils in one motor-circuit, and B those in the other. The circuit A is to have the higher self-induction. I therefore use a long length or a large number of turns of coarse wire in forming the coils of this circuit. For the circuit B, I use a smaller conductor, or a conductor of a higher resistance than copper, such as German silver or iron, and wind the coils with fewer turns. In applying these coils to a motor I build up a field-magnet of plates C, of iron or steel, secured together in the usual manner by bolts D. Each plate is formed with four (more or less) long cores E, around which is a space to receive the coil and an equal number of short projections F to receive the coils of the resistance-circuit. The plates are generally annular in shape, having an open space in the center for receiving the armature G, which I prefer to wind with closed coils. An alternating current divided between the two circuits is retarded as to its phases in the circuit A to a much greater extent than in the circuit B. By reason of the relative sizes and disposition of the cores and coils the magnetic effect of the poles E and F upon the armature closely approximate. These conditions are well understood and readily secured by one skilled in the art.

An important result secured by the construction herein shown of the motor is, that these coils which are designed to have the

higher self-induction are almost completely surrounded by iron, by which the retardation is considerably increased.

I do not claim herein, broadly, the method and means of securing rotation by artificially producing a greater lag of the current in one motor-circuit than in the other, nor the use of poles or cores of different magnetic susceptibility, as these are features which I have specially claimed in other applications filed by me.

What I claim is—

1. An alternating-current motor having two or more energizing-circuits, the coils of one circuit being composed of conductors of large size or low resistance and those of the other of fewer turns of wire of smaller size or higher resistance, as set forth.

2. In an alternating-current motor, the combination, with long and short field-cores, of energizing-coils included in independent circuits, the coils on the longer cores containing an excess of copper or conductor over that in the others, as set forth.

3. The combination, with a field-magnet composed of magnetic plates having an open center and pole-pieces or cores of different length, of coils surrounding said cores and included in independent circuits, the coils on the longer cores containing an excess of copper over that in the others, as set forth.

4. The combination, with a field-magnet composed of magnetic plates having an open center and pole-pieces or cores of different length, of coils surrounding said cores and included in independent circuits, the coils on the longer cores containing an excess of copper over that in the others and being set in recesses in the iron core formed by the plates, as set forth.

NIKOLA TESLA.

Witnesses:
ROBT. F. GAYLORD,
FRANK E. HARTLEY.

(No Model.)

N. TESLA.

ELECTRIC MOTOR.

No. 416,194. Patented Dec. 3, 1889.

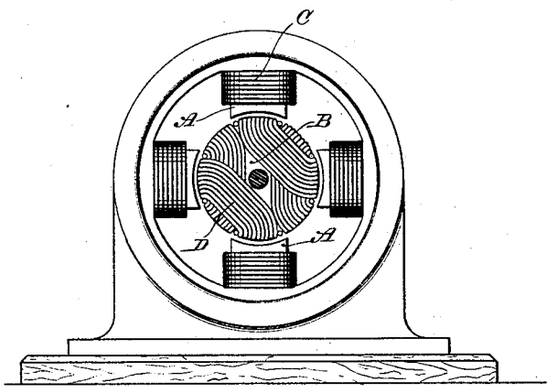

Witnesses:
Raphael Netter
Robt. F. Gaylord

Inventor
Nikola Tesla
By
Duncan, Curtis & Page
Attorneys.

N. PETERS. Photo-Lithographer, Washington, D. C.

UNITED STATES PATENT OFFICE.

NIKOLA TESLA, OF NEW YORK, N. Y., ASSIGNOR TO THE TESLA ELECTRIC COMPANY, OF SAME PLACE.

ELECTRIC MOTOR.

SPECIFICATION forming part of Letters Patent No. 416,194, dated December 3, 1889.

Application filed May 20, 1889. Serial No. 311,418. (No model.)

To all whom it may concern:

Be it known that I, NIKOLA TESLA, a subject of the Emperor of Austria, from Smiljan, Lika, border country of Austria-Hungary, residing at New York, in the county and State of New York, have invented certain new and useful Improvements in Electro-Magnetic Motors, of which the following is a specification.

This invention relates to the alternating-current electro-magnetic motors invented by me, in which a progressive shifting or rotation of the poles or points of maximum magnetic effect is produced by the action of the alternating currents. These motors I have constructed in a great variety of ways. As instances, I have built motors with two or more energizing-circuits, which I connected up with corresponding circuits of a generator so that the motor will be energized by alternating currents differing primarily in phase. I have also built motors with independent energizing-circuits of different electrical character or self-induction, through which I have passed an alternating current the phases of which were artificially distorted by the greater retarding effect of one circuit over another. I have also constructed other forms of motor operating by magnetic or electric lag, which it is not necessary to describe herein in detail. although my present invention is applicable thereto. In such motors I use an armature wound with a coil or coils, which is sometimes connected with the external circuit and sometimes closed upon itself, and to both forms the present invention applies. In these motors the total energy supplied to effect their operation is equal to the sum of the energies expended in the armature and the field. The power developed, however, is proportionate to the product of these quantities. This product will be greatest when these quantities are equal; hence in constructing a motor I determine the mass of the armature and field cores and the windings of both and adapt the two so as to equalize as nearly as possible the magnetic quantities of both. In motors which have closed armature-coils this is only approximately possible, as the energy manifested in the armature is the result of inductive action from the other element; but in motors in which the coils of both armature and field are connected with the external circuit the result can be much more perfectly obtained.

In further explanation of my object let it be assumed that the energy as represented in the magnetism in the field of a given motor is ninety and that of the armature ten. The sum of these quantities, which represents the total energy expended in driving the motor, is one hundred; but, assuming that the motor be so constructed that the energy in the field is represented by fifty and that in the armature by fifty, the sum is still one hundred; but while in the first instance the product is nine hundred, in the second it is two thousand five hundred, and as the energy developed is in proportion to these products it is clear that those motors are the most efficient—other things being equal—in which the magnetic energies developed in the armature and field are equal. These results I obtain by using the same amount of copper or ampère turns in both elements when the cores of both are equal, or approximately so, and the same current energizes both; or in cases where the currents in one element are induced to those of the other I use in the induced coils an excess of copper over that in the primary element or conductor.

While I know of no way of illustrating this invention by a drawing such as will meet the formal requirements of an application for patent, I have appended for convenience a conventional figure of a motor such as I employ. I would state, however, that I believe that with the problem before him which I have herein stated, and the solution which I have proposed, any one skilled in the art will be able to carry out and apply this invention without difficulty.

Generally speaking, if the mass of the cores of armature and field be equal, the amount of copper or ampère turns of the energizing-coils on both should also be equal; but these conditions will be modified in well-understood ways in different forms of machine. It will be understood that these results are most advantageous when existing under the conditions presented when the motor is running

with its normal load, and in carrying out the invention this fact should be taken into consideration.

Referring to the drawing, A is the field-magnet, B the armature, C the field-coils, and D the armature-coils, of the motor.

The motors described in this application, except as to the features specifically pointed out in the claims, are described and claimed in prior patents granted to and applications filed by me, and are not herein claimed.

What I claim is—

1. An electro-magnetic motor having field and armature magnets of equal strength or magnetic quantity when energized by a given current, as set forth.

2. In an alternating-current motor, the combination, with field and armature cores of equal mass, of energizing-coils containing equal amounts of copper, as herein set forth.

NIKOLA TESLA.

Witnesses:
ROBT. F. GAYLORD,
FRANK E. HARTLEY.

(No Model.) 3 Sheets—Sheet 1.

N. TESLA.

ELECTRO MAGNETIC MOTOR.

No. 416,195. Patented Dec. 3, 1889.

Fig. 1

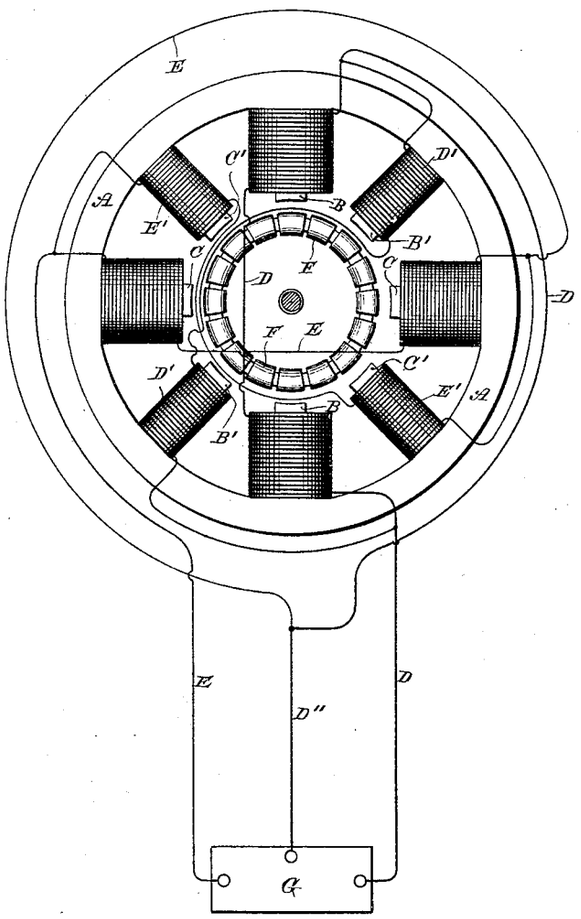

Witnesses:
Raphael Netter
Robt. F. Gaylord

Inventor.
Nikola Tesla
By
Duncan, Curtis & Page
Attorneys.

N. PETERS. Photo-Lithographer, Washington, D. C.

(No Model.) 3 Sheets—Sheet 2.

N. TESLA.

ELECTRO MAGNETIC MOTOR.

No. 416,195. Patented Dec. 3, 1889.

Fig. 2

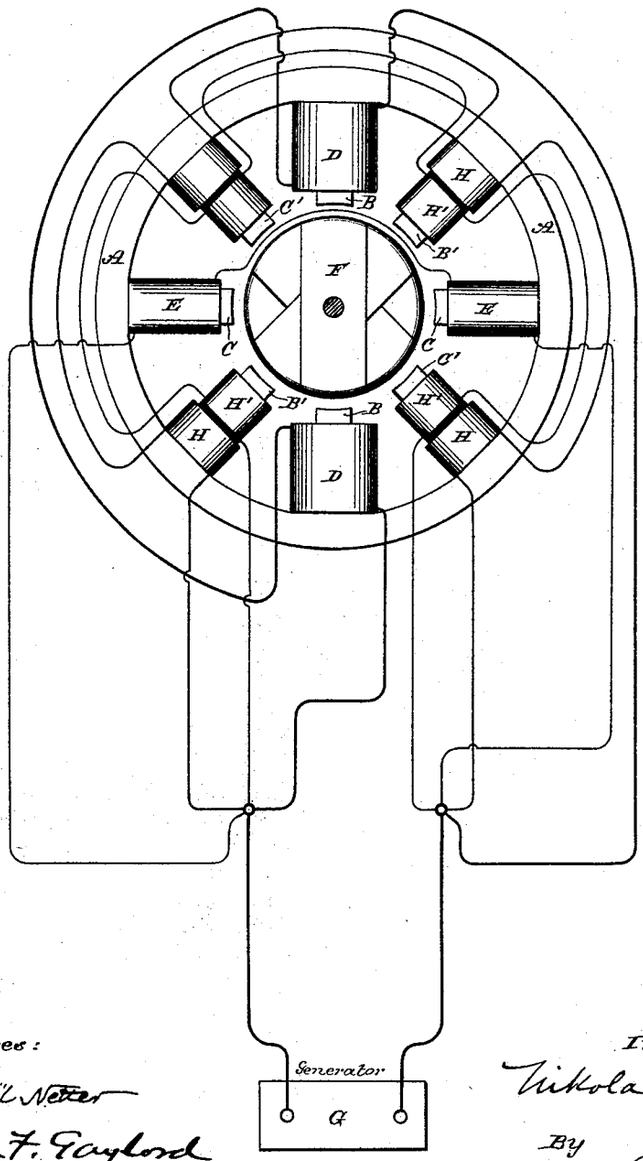

Witnesses:
Raphael Netter
Robt. F. Gaylord

Inventor
Nikola Tesla
By
Duncan, Curtis & Page
Attorneys.

N. PETERS, Photo-Lithographer, Washington, D. C.

(No Model.) 3 Sheets—Sheet 3.

N. TESLA.

ELECTRO MAGNETIC MOTOR.

No. 416,195. Patented Dec. 3, 1889.

Fig. 3

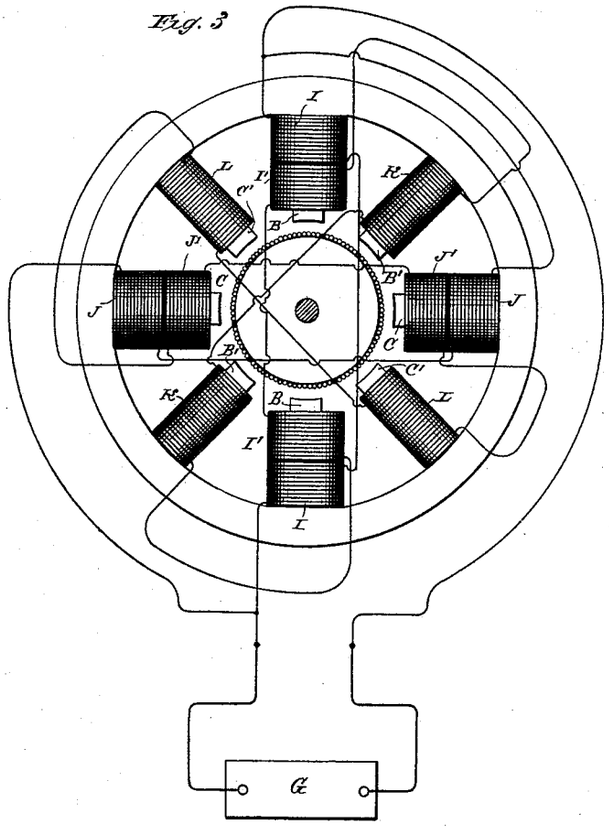

Fig. 4

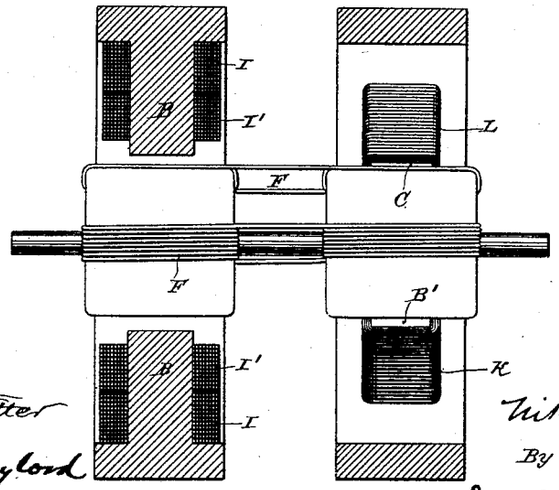

Witnesses:
Raphael Netter
Robt. F. Gaylord

Inventor
Nikola Tesla
By
Duncan, Curtis & Page
Attorneys.

N. PETERS. Photo-Lithographer, Washington, D. C.

UNITED STATES PATENT OFFICE.

NIKOLA TESLA, OF NEW YORK, N. Y., ASSIGNOR TO THE TESLA ELECTRIC COMPANY, OF SAME PLACE.

ELECTRO-MAGNETIC MOTOR.

SPECIFICATION forming part of Letters Patent No. 416,195, dated December 3, 1889.

Application filed May 20, 1889. Serial No. 311,419. (No model.)

To all whom it may concern:

Be it known that I, NIKOLA TESLA, a subject of the Emperor of Austria, from Smiljan, Lika, border country of Austria-Hungary, residing at New York, in the county and State of New York, have invented certain new and useful Improvements in Electro-Magnetic Motors, of which the following is a specification, reference being had to the drawings accompanying and forming a part of the same.

This invention relates to that form of alternating-current motor invented by me, in which there are two or more energizing-circuits through which alternating currents differing in phase are caused to pass. I have in prior patents and applications shown various forms or types of this motor—first, motors having two or more energizing-circuits of the same electrical character, and in the operation of which the currents used differ primarily in phase; second, motors with a plurality of energizing-circuits of different electrical character, in or by means of which the difference of phase is produced artificially, and, third, motors with a plurality of energizing-circuits, the currents in one being induced from currents in another. I shall hereinafter show the application of my present invention to these several types. Considering the structural and operative conditions of any one of them—as, for example, that first-named—the armature which is mounted to rotate in obedience to the co-operative influence or action of the energizing-circuits has coils wound upon it which are closed upon themselves and in which currents are induced by the energizing-currents with the object and result of energizing the armature-core; but under any such conditions as must exist in these motors it is obvious that a certain time must elapse between the manifestations of an energizing-current impulse in the field-coils, and the corresponding magnetic state or phase in the armature established by the current induced thereby; consequently a given magnetic influence or effect in the field which is the direct result of a primary-current impulse will have become more or less weakened or lost before the corresponding effect in the armature indirectly produced has reached its maximum. This is a condition unfavorable to efficient working in certain cases—as, for instance, when the progress of the resultant poles or points of maximum attraction is very great, or when a very high number of alternations is employed—for it is apparent that a stronger tendency to rotation will be maintained if the maximum magnetic attractions or conditions in both armature and field coincide, the energy developed by a motor being measured by the product of the magnetic quantities of the armature and field.

The object, therefore, in this invention is to so construct or organize these motors that the maxima of the magnetic effects of the two elements—the armature and field—shall more nearly coincide. This I accomplish in various ways, which I may best explain by reference to the drawings, in which various plans for accomplishing the desired results are illustrated.

Figure 1: This is a diagrammatic illustration of a motor system such as I have described in my prior patents, and in which the alternating currents proceed from independent sources and differ primarily in phase.

A designates the field-magnet or magnetic frame of the motor; B B, oppositely-located pole-pieces adapted to receive the coils of one energizing-circuit; and C C, similar pole-pieces for the coils of the other energizing-circuit. These circuits are designated, respectively, by D E, the conductor D'' forming a common return to the generator G. Between these poles is mounted an armature—for example, a ring or annular armature, wound with a series of coils F, forming a closed circuit or circuits. The action or operation of a motor thus constructed is now well understood. It will be observed, however, that the magnetism of poles B, for example, established by a current-impulse in the coils thereon, precedes the magnetic effect set up in the armature by the induced current in coils F. Consequently the mutual attraction between the armature and field-poles is considerably reduced. The same conditions will be found to exist if, instead of assuming the poles B or C as acting independently, we regard the ideal resultant of both acting together, which is the real condition. To remedy this, I construct the motor-

field with secondary poles B′ C′, which are situated between the others. These pole-pieces I wind with coils D′ E′, the former in derivation to the coils D, the latter to coils E. The main or primary coils D and E are wound for a different sef-induction from that of the coils D′ and E′, the relations being so fixed that if the currents in D and E differ, for example, by a quarter-phase, the currents in each secondary coil, as D′ E′, will differ from those in its appropriate primary D or E by, say, forty-five degrees, or one-eighth of a period.

I explain the action of this motor as follows: Assuming that an impulse or alternation in circuit or branch E is just beginning while in the branch D it is just falling from maximum, the conditions of a quarter-phase difference. The ideal resultant of the attractive forces of the two sets of poles B C therefore may be considered as progressing from poles B to poles C while the impulse in E is rising to maximum and that in D is falling to zero or minimum. The polarity set up in the armature, however, lags behind the manifestations of field magnetism, and hence the maximum points of attraction in armature and field, instead of coinciding, are angularly displaced. This effect is counteracted by the supplemental poles B′ C′. The magnetic phases of these poles succeed those of poles B C by the same, or nearly the same, period of time as elapses between the effect of the poles B C and the corresponding induced effect in the armature; hence the magnetic conditions of poles B′ C′ and of the armature more nearly coincide and a better result is obtained. As poles B′ C′ act in conjunction with the poles in the armature established by poles B C, so in turn poles C B act similarly with the poles set up by B′ C′, respectively. Under such conditions the retardation of the magnetic effect of the armature and that of the secondary poles will bring the maximum of the two more nearly into coincidence and a correspondingly-stronger torque or magnetic attraction secured.

In such a disposition as is shown in Fig. 1 it will be observed that as the adjacent pole-pieces of either circuit are of like polarity they will have a certain weakening effect upon one another. I therefore prefer to remove the secondary poles from the direct influence of the others. This I may do by constructing a motor with two independent sets of fields, and with either one or two armatures electrically connected, or by using two armatures and one field. These modifications will be illustrated hereinafter.

Fig. 2 is a diagrammatic illustration of a motor and system in which the difference of phase is artificially produced. There are two coils D D in one branch and two coils E E in the other branch of the main circuit from the generator G. These two circuits or branches are of different self-induction, one, as D, being higher than the other. For convenience I have indicated this by making coils D much larger than coils E. By reason of this difference in the electrical character of the two circuits the phases of current in one are retarded to a greater extent than the other. Let this difference be thirty degrees. A motor thus constructed will rotate under the action of an alternating current; but as happens in the case previously described the corresponding magnetic effects of the armature and field do not coincide owing to the time that elapses between a given magnetic effect in the armature and the condition of the field that produces it. I therefore employ the secondary or supplemental poles B′ C′. There being thirty degrees difference of phase between the currents in coils D E, the magnetic effects of poles B′ C′ should correspond to that produced by a current differing from the current in coils D or E by fifteen degrees. This I may accomplish by winding each supplemental pole B′ C′ with two coils H H′. The coils H are included in a derived circuit having the same self-induction as circuit D, and coils H′ in a circuit having the same self-induction as circuit E, so that if these circuits differ by thirty degrees the magnetism of poles B′ C′ will correspond to that produced by a current differing from that in either D or E by fifteen degrees. This is true in all other cases. For example, if in Fig. 1 the coils D′ E′ be replaced by the coils H H′ included in derived circuits, the magnetism of the poles B′ C′ will correspond in effect or phase, if it may be so termed, to that produced by a current differing from that in either circuit D or E by forty-five degrees, or one-eighth of a period.

This invention as applied to a derived-circuit motor is illustrated in Figs. 3 and 4. The former is an end view of the motor with the armature in section and a diagram of connections, and Fig. 4 a vertical section through the field. These figures are also drawn to show one of the dispositions of two fields that may be adopted in carrying out the invention. The poles B B C C are in one field, the remaining poles in the other. The former are wound with primary coils I J and secondary coils I′ J′, the latter with coils K L. The primary coils I J are in derived circuits, between which, by reason of their different self-induction, there is a difference of phase, say, of thirty degrees. The coils I′ K are in circuit with one another, as also are coils J′ L, and there should be a difference of phase between the currents in coils K and L and their corresponding primaries of, say, fifteen degrees. If the poles B C are at right angles, the armature-coils should be connected directly across, or a single armature-core wound from end to end may be used; but if the poles B C be in line there should be an angular displacement of the armature-coils, as will be well understood.

The operation will be understood from the foregoing. The maximum magnetic condition

of a pair of poles, as B′ B′, coincides closely with the maximum effect in the armature, which lags behind the corresponding condition in poles B B.

There are many other ways of carrying out this invention, but they all involve the same broad principle of construction and operation.

In using expressions herein to indicate a coincidence of the magnetic phases or effects in one set of field-magnets with those set up in the armature by the other I refer only to approximate results; but this of course will be understood.

What I claim is—

1. In an alternating-current motor, the combination, with an armature wound with closed coils, of main and supplemental field magnets or poles, one set of which is adapted to exhibit their maximum magnetic effect simultaneously with that set up in the armature by the action of the other, as set forth.

2. In an electro-magnetic motor, the combination, with an armature, of a plurality of field or energizing coils included, respectively, in main circuits adapted to produce a given difference of phase and supplemental or secondary circuits adapted to produce an intermediate difference of phase, as set forth.

NIKOLA TESLA.

Witnesses:
R. J. STONEY, Jr.,
JOHN GILLESPIE.

(No Model.) 2 Sheets—Sheet 1.

A. SCHMID & N. TESLA.

ARMATURE FOR ELECTRIC MACHINES.

No. 417,794. Patented Dec. 24, 1889.

Fig. 1.

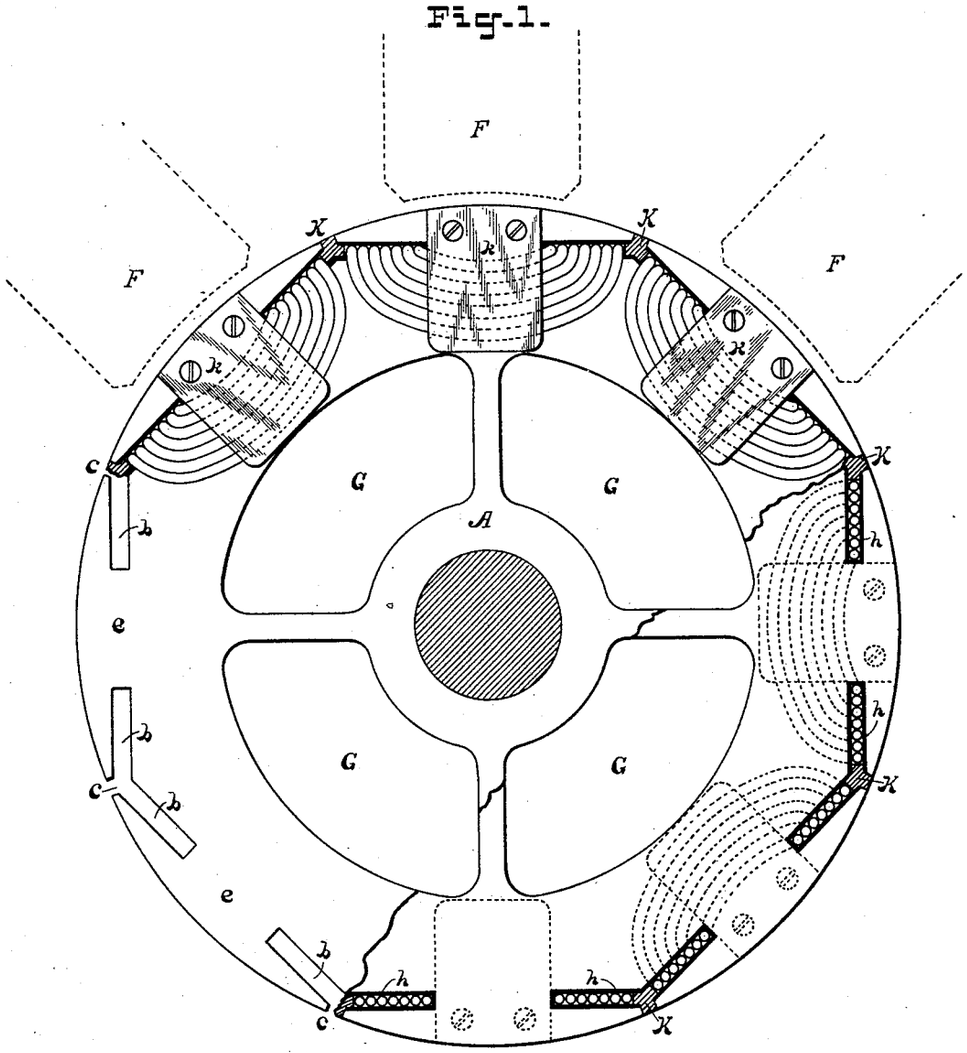

WITNESSES:

George Brown, Jr.

J. Wm. Smith.

INVENTORS

Albert Schmid,

Nikola Tesla.

Charles A. Terry

Att'y.

N. PETERS. Photo-Lithographer. Washington, D. C.

(No Model.) 2 Sheets—Sheet 2.

A. SCHMID & N. TESLA.

ARMATURE FOR ELECTRIC MACHINES.

No. 417,794. Patented Dec. 24, 1889.

Fig. 2.

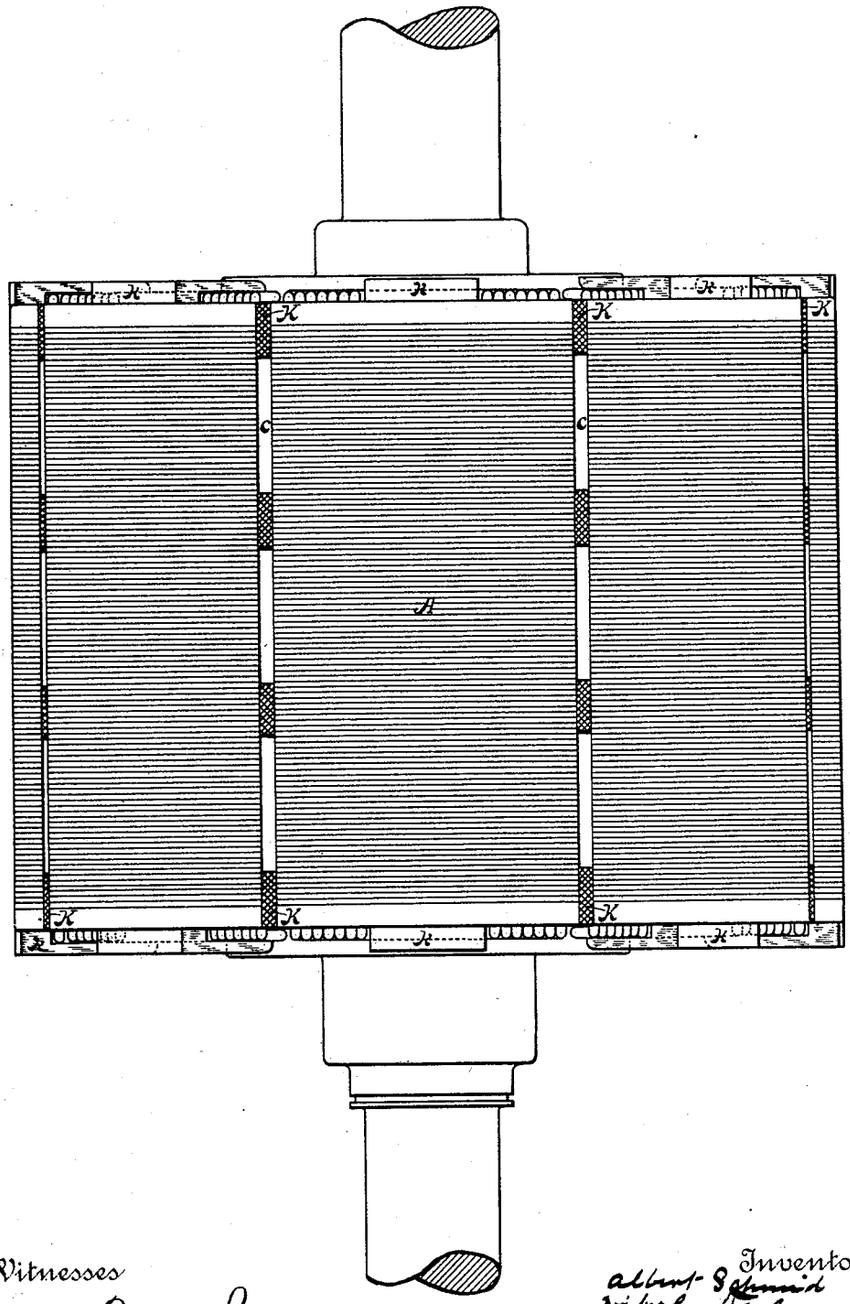

Witnesses
George Brown Jr.
J. Wm. Smith

Inventor
Albert Schmid
Nikola Tesla
By their Attorney
Chandler a. Terry

N. PETERS, Photo-Lithographer, Washington, D. C.

UNITED STATES PATENT OFFICE.

ALBERT SCHMID, OF ALLEGHENY, AND NIKOLA TESLA, OF PITTSBURG, ASSIGNORS TO THE WESTINGHOUSE ELECTRIC COMPANY, OF PITTSBURG, PENNSYLVANIA.

ARMATURE FOR ELECTRIC MACHINES.

SPECIFICATION forming part of Letters Patent No. 417,794, dated December 24, 1889.

Application filed June 28, 1889. Serial No. 315,937. (No model.)

To all whom it may concern:

Be it known that we, ALBERT SCHMID and NIKOLA TESLA, citizens, respectively, of the Republic of Switzerland and Smiljan, Lika, border country of Austria-Hungary, now residing in Allegheny and Pittsburg, both in the county of Allegheny and State of Pennsylvania, have invented a certain new and useful Improvement in Armatures for Electric Machines, (Case No. 310,) of which the following is a specification.

The invention relates to the construction of armatures for electric generators and motors, and the object is to provide an electrically-efficient armature, the construction of which is simple and economical, and in which the coils of insulated conducting wire or ribbon may be conveniently wound or formed into bobbins so located with reference to the body of the armature as to afford as good results as possible.

For certain purposes it is desirable to construct the armatures of electric generators and motors with their cores of magnetizable material projecting through the coils into close proximity to the field-magnet poles. When armatures are constructed in this manner, some means are necessary for holding the coils in position and preventing them from being thrown out by centrifugal force.

This invention aims to provide such means in an armature having polar projections, and also to form an armature in such manner as to expose a large area of core-surface to the field-magnet poles.

The invention consists, in general terms, in forming an armature-core which is preferably built up of laminæ of magnetizable material insulated from each other, with diverging slots or openings for receiving the armature wire or ribbon, which slots are connected with the exterior of the armature by openings through which the wire may be laid in the slots, and in placing the wire in such slots in the proper manner.

We are aware of the United States Patents No. 327,797, granted to Immisch, and No. 292,077, granted to Wenstrom, and the British patent of Coerper, No. 9,013 of 1887, and do not claim the constructions shown and described therein.

The invention will be described more particularly in connection with the accompanying drawings, in which—

Figure 1 is an end view, partly in section, of an armature embodying the features of the invention, and Fig. 2 is a plan of the armature.

Referring to the figures, F F indicate field-magnet poles, and A represents the body or core of an armature composed, in this instance, of laminæ of magnetizable material built up in any suitable manner, the laminæ being preferably separated by intervening strata of insulating material. The individual plates or laminæ are constructed with radial openings *c*, extending a short distance from the surface, and with slots or openings *b*, which extend in different directions from the openings *c*. The slots diverge from each other at such angles as to cause the two slots upon the opposite sides of each web *e* thus formed to lie in the same chord of the circle of the armature. The plates may also be stamped or formed with openings G to remove the unnecessary metal. After the plates are formed they are laid up in the proper manner to form the entire armatur-core, the slots *b* being placed opposite each other to form continuous openings through the entire length of the armature. These openings may be lined by pockets *h* of insulating material—such, for instance, as vulcanized fiber—and the wires are then wound into the slots from the openings *c* and around the respective webs *e*. Winding-clips *k* may be placed at the respective ends of the armature opposite each web *e* to hold the wires in the proper positions as they are wound in the slots and down upon the armature ends.

The wires having been wound into their proper positions, they may be held more securely in position by means of blocks K of non-magnetic material, placed at intervals or extending through the entire slots or openings *c* and projecting into the slots *b*.

An armature constructed in the manner

described is found to be very efficient in its operations and at the same time simple in its construction.

The connections between the armature-coils and the conductors or collecting-plates may be made in any usual well-known manner, according to the purposes desired to be served.

We claim as our invention—

1. A core for electrical machines, composed of plates of magnetizable material separated by insulation, said plates having diverging slots for receiving the armature-conductors and an opening to the exterior of the plate at the origin of the diverging slots.

2. A core-plate for electrical machines, stamped with diverging slots at intervals near its periphery and an opening to the periphery at the angle formed by each two diverging slots.

3. A core for electrical machines, composed of plates of magnetizable material separated by insulation, said plates having diverging slots for receiving the armature-conductors and an opening to the exterior of the plate at the origin of the diverging slots, the width of such openings being approximately equal to the width of the slot.

4. An armature-core for electric machines, consisting of plates of magnetizable material separated by insulation, having radial openings at intervals, slots diverging from said openings for receiving armature-coils, and winding blocks or clips at the ends of the core.

5. An armature-core for electrical apparatus, composed of plates of magnetizable material separated by insulation and having radial openings at intervals, slots extending in opposite directions from said openings for receiving wires, and insulating-linings for said slots.

6. An armature for electric machines, consisting of a laminated core formed with diverging slots for receiving the wires, said slots leaving intervening webs, and coils of wire wound in said slots.

7. An armature for electric machines, consisting of a laminated core formed with diverging slots for receiving the wires, said slots leaving intervening webs, coils of wire wound in said slots, and non-magnetizable material closing the openings of the adjacent slots outside the wires, substantially as described.

8. An armature for electric machines, consisting of a core having its outer surface continuous except for narrow longitudinal openings at intervals and having slots diverging from said openings, armature-coils wound in said slots, and blocks or strips of non-magnetizable material closing the openings and forming with the metal of the armature a practically continuous surface.

In testimony whereof we have hereunto subscribed our names this 25th day of June, A. D. 1889.

ALBERT SCHMID.
NIKOLA TESLA.

Witnesses:
W. D. UPTEGRAFF,
CHARLES A. TERRY.

BEST AVAILABLE COP

(No Model.)

N. TESLA.

ELECTRO MAGNETIC MOTOR.

No. 418,248. Patented Dec. 31, 1889.

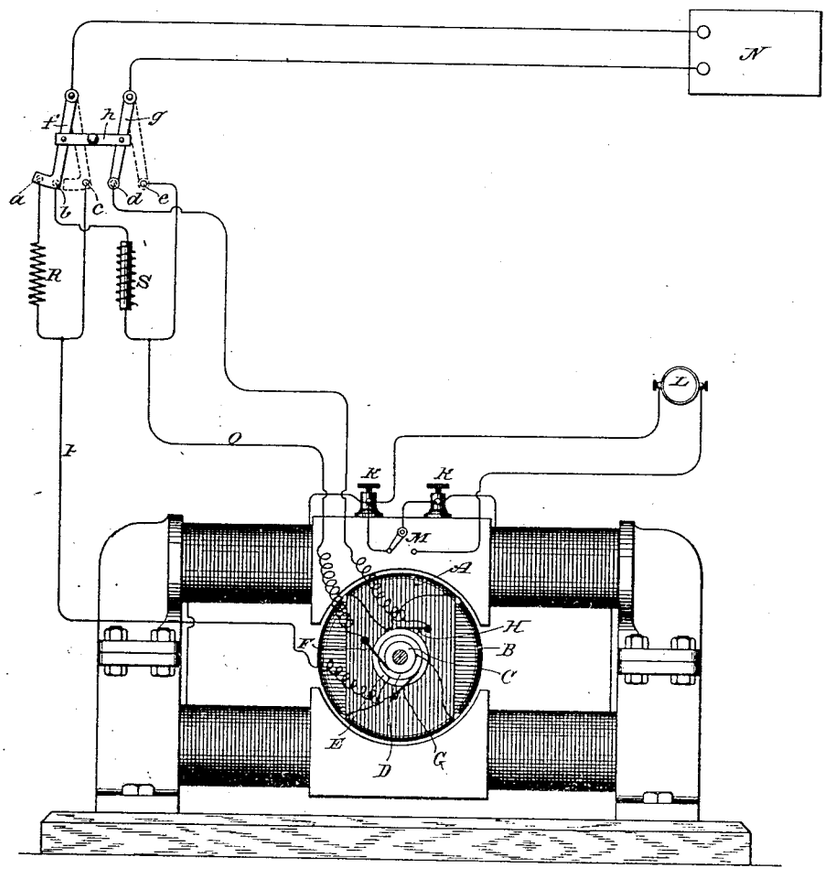

Witnesses:
Raphael Netter
Robt. F. Gaylord

Inventor
Nikola Tesla
By
Duncan, Curtis & Page
Attorneys.

BEST AVAILABLE COPY

UNITED STATES PATENT OFFICE.

NIKOLA TESLA, OF NEW YORK, N. Y., ASSIGNOR TO THE TESLA ELECTRIC COMPANY, OF SAME PLACE.

ELECTRO-MAGNETIC MOTOR.

SPECIFICATION forming part of Letters Patent No. 418,248, dated December 31, 1889.

Application filed May 20, 1889. Serial No. 311,420. (No model.)

To all whom it may concern:

Be it known that I, NIKOLA TESLA, a subject of the Emperor of Austria-Hungary, formerly of Smiljan, Lika, border country of Austria-Hungary, but now residing at New York, in the county and State of New York, have invented certain new and useful Improvements in Methods of Operating Electro-Magnetic Motors, of which the following is a specification, reference being had to the drawing accompanying and forming a part of the same.

In a patent granted to me April 16, 1889, No. 401,520, I have shown and described a method of operating alternating-current motors by first shifting or rotating their magnetic poles until they had reached or passed a synchronous speed and then alternating the poles, or, in other words, by transforming the motor by a change of circuit-connections from one operated by the action of two or more independent energizing-currents to a motor operated by a single current or several acting as one.

The present invention is a specific way of carrying out the same invention; and it consists in the following method: On the start I progressively shift the magnetic poles of one element or field of the motor by alternating currents differing in phase as passed through independent energizing-circuits and short-circuit the coils of the other element. When the motor thus started reaches or passes the limit of speed synchronous with the generator, I connect up the coils previously short-circuited with a source of direct current and by a change of the circuit-connections produce a simple alternation of the poles. The motor then continues to run in synchronism with the generator. There are many specifically-different ways in which this may be carried out, but I have selected one for illustrating the principle. This is illustrated in the annexed drawing, which is a side view of a motor with a diagram of the circuits and devices used in the system.

The motor shown is one of the ordinary forms, with field-cores either laminated or solid and with a cylindrical laminated armature wound, for example, with the coils A B at right angles. The shaft of the armature carries three collecting or contact rings C D E. (Shown, for better illustration, as of different diameters.)

One end of coil A connects to one ring, as C, and one end of coil B connects with ring D. The remaining ends are connected to ring E. Collecting springs or brushes F G H bear upon the rings and lead to the contacts of a switch, to be hereinafter described. The field-coils have their terminals in binding-posts K K, and may be either closed upon themselves or connected with a source of direct current L by means of a switch M. The main or controlling switch has five contacts *a b c d e* and two levers *f g*, pivoted and connected by an insulating cross-bar *h*, so as to move in parallelism. These levers are connected to the line-wires from a source of alternating currents N. Contact *a* is connected to brush G and coil B through a dead-resistance R and wire P. Contact *b* is connected with brush F and coil A through a self-induction-coil S and wire O. Contacts *c* and *e* are connected to brushes G F, respectively, through the wires P O, and contact *d* is directly connected with brush H. The lever *f* has a widened end which may span the contacts *a b*. When in such position and with lever *g* on contact *d*, the alternating currents divide between the two motor-coils, and by reason of their different self-induction a difference of current-phase is obtained that starts the motor in rotation. In starting, as I have above stated, the field-coils are short-circuited.

When the motor has attained the desired speed, the switch is shifted to the position shown in dotted lines—that is to say, with the levers *f g* resting on points *c e*. This connects up the two armature-coils in series, and the motor will then run as a synchronous motor. The field-coils are thrown into circuit with the direct-current source when the main switch is shifted.

What I claim herein as my invention is—

1. The method of operating electro-magnetic motors, which consists in first progressively shifting or rotating the magnetic poles of one element until it has reached a synchronous speed and then alternating said poles and passing a direct current through the coils of the other element, as herein set forth.

2. The method of operating electro-mag-

BEST AVAILABLE COPY

netic motors, which consists in short-circuiting the coils of one element, as the field-magnet, and passing through the energizing-coils of the other element, as the armature, alternating currents differing in phase, and then, when the motor has attained a given speed, passing through the field-coils a direct current and through the armature-coils alternating currents coinciding in phase.

NIKOLA TESLA.

Witnesses:
R. J. STONEY, Jr.,
E. P. COFFIN.

(No Model.) 2 Sheets—Sheet 1.

N. TESLA.

ELECTRO MAGNETIC MOTOR.

No. 424,036. Patented Mar. 25, 1890.

Fig. 1

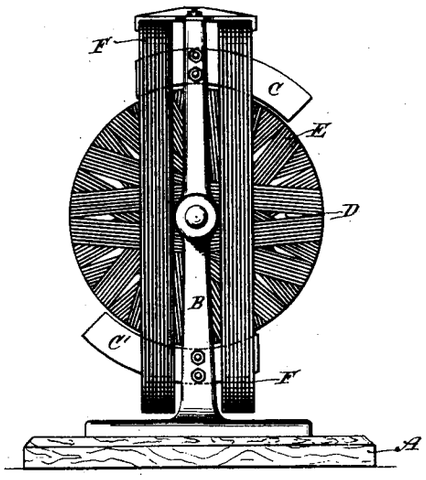

Fig. 2

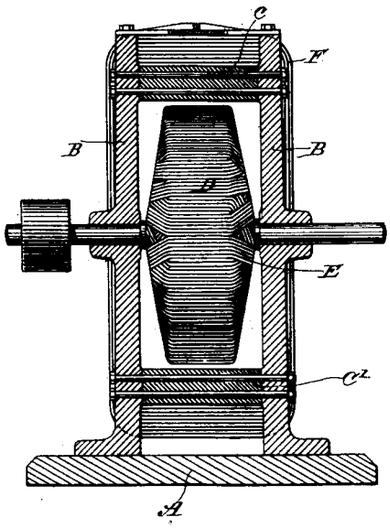

Witnesses:
Raphael Netter
Frank R. Hartley

Inventor
Nikola Tesla
By
Duncan, Curtis & Page
Attorneys.

N. PETERS, Photo-Lithographer, Washington, D. C.

(No Model.) 2 Sheets—Sheet 2.

N. TESLA.

ELECTRO MAGNETIC MOTOR.

No. 424,036. Patented Mar. 25, 1890.

Fig. 3

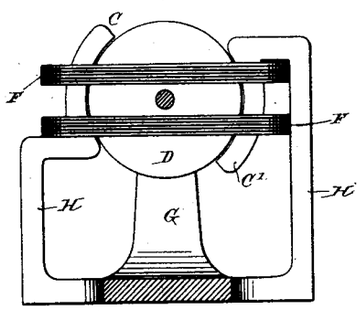

Fig. 4

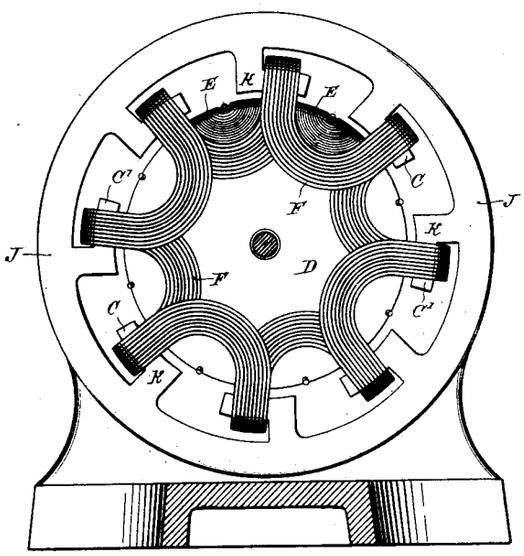

Witnesses:
Raphael Netter
Frank P. Hartley

Inventor
Nikola Tesla
By
Duncan, Curtis & Page
Attorneys.

N. PETERS, Photo-Lithographer, Washington, D. C.

UNITED STATES PATENT OFFICE.

NIKOLA TESLA, OF NEW YORK, N. Y., ASSIGNOR TO THE TESLA ELECTRIC COMPANY, OF SAME PLACE.

ELECTRO-MAGNETIC MOTOR.

SPECIFICATION forming part of Letters Patent No. 424,036, dated March 25, 1890.

Application filed May 20, 1889. Serial No. 311,416. (No model.)

To all whom it may concern:

Be it known that I, NIKOLA TESLA, a subject of the Emperor of Austria-Hungary, from Smiljan, Lika, border country of Austria-Hungary, residing at New York, in the county and State of New York, have invented certain new and useful Improvements in Electro-Magnetic Motors, of which the following is a specification, reference being had to the drawings accompanying and forming a part of the same.

I have invented and elsewhere described an electro-magnetic motor operated or adapted to be operated by an alternating electric current, and which is now commonly designated, whether correctly or not, a "magnetic-lag" motor. The main distinguishing features of this motor are the following: An armature is mounted within the magnetizing influence of a certain number of field magnets or poles of different magnetic susceptibility—that is to say, poles of unequal length, mass, or composition—and wound with coils adapted in the operation of the motor to be connected to a source of alternating currents. When an alternating current is passed through the coils of such a motor, the field magnets or poles do not appear to manifest their attractive effect upon the armature simultaneously, the magnetic attraction of some appearing to lag behind that of others, with the result of producing a torque and rotation of the motor. Generally I have made such motors with closed armature-coils.

I have invented another form of motor, which, for similar reasons, may be called a "magnetic-lag" motor; but in operation it differs from that which I have above described in that the attractive effects or phases of the poles, while lagging behind the phases of current which produce them, are manifested simultaneously and not successively.

To carry out this invention I employ a motor embodying the principle of construction of a motor described and claimed in an application filed by me January 8, 1889, No. 295,745, to the extent that both the armature and field receive their magnetism from a single energizing-coil or a plurality of coils acting as one.

A motor which embodies my invention, with certain modifications thereof, is illustrated in the accompanying drawings.

Figure 1 is a side view of the motor in elevation. Fig. 2 is a part-sectional view at right angles to Fig. 1. Fig. 3 is an end view in elevation and part section of a modification, and Fig. 4 is a similar view of another modification.

In Figs. 1 and 2, A designates a base or stand, and B B the supporting-frame of the motor. Bolted to the said supporting-frame are two magnetic cores or pole-pieces C C′, of iron or soft steel. These may be subdivided or laminated, in which case hard iron or steel plates or bars should be used, or they should be wound with closed coils. D is a circular disk-armature built up of sections or plates of iron and mounted in the frame between the pole-pieces C C′, which latter are preferably curved to conform to the circular shape thereof. I may wind this disk with a number of closed coils E. F F are the main energizing-coils, supported in any convenient manner by the supporting-frame, or otherwise, but so as to include within their magnetizing influence both the pole-pieces C C′ and the armature D. The pole-pieces C C′ project out beyond the coils F F on opposite sides, as indicated in the drawings. If an alternating current be passed through the coils F F, rotation of the armature will be produced, and this rotation I explain by the following apparent action or mode of operation: An impulse of current in the coils F F establishes two polarities in the motor. The protruding end of pole-piece C, for instance, will be of one sign, and the corresponding end of pole-piece C′ will be of the opposite sign. The armature also exhibits two poles at right angles to the coils F F, like poles to those in the pole-pieces being on the same side of the coils. While the current is flowing there is no appreciable tendency to rotation developed; but after each current impulse ceases or begins to fall the magnetism in the armature and in the ends of the pole-pieces C C′ lags or continues to manifest itself, which produces a rotation of the armature by the repellent force between the more closely approximating points of maximum magnetic effect. This effect is continued by the reversal of current, the polarities of field and armature being simply reversed. One or both of the elements—the armature or field—may be wound with closed

induced coils to intensify this effect, although in the drawings I have shown but one of the fields, each element of the motor really constitutes a field, wound with the closed coils, the currents being induced mainly in those convolutions or coils which are parallel to the coils F F. A modified form of this motor is shown in Fig. 3. In this form G is one of two standards that support the bearings for the armature-shaft. H H are uprights or sides of a frame, preferably magnetic, the ends C C′ of which are bent, substantially as shown, to conform to the shape of the armature D and form field-magnet poles. The construction of the armature may be the same as in the previous figure, or it may be simply a magnetic disk or cylinder, as shown, and a coil or coils F F are secured in position to surround both the armature and the poles C C′. The armature is detachable from its shaft, the latter being passed through the armature after it has been inserted in position. The operation of this form of motor is the same in principle as that previously described and needs no further explanation.

One of the most important features in alternating-current motors is that they should be adapted to and capable of running efficiently in the alternating systems in present use, in which almost without exception the generators yield a very high number of alternations. Such a motor I have designed by a development of the principle of the motor shown in Fig. 3, making a multipolar motor, which is illustrated in Fig. 4. In the construction of this motor I employ an annular magnetic frame J, with inwardly-extending ribs or projections K, the ends of which all bend or turn in one direction and are generally shaped to conform to the curved surface of the armature. Coils F F are wound from one part K to the one next adjacent, the ends or loops of each coil or group of wires being carried over toward the shaft, so as to form U-shaped groups of convolutions at each end of the armature. The pole-pieces C C′, being substantially concentric with the armature, form ledges, along which the coils are laid and should project to some extent beyond the coils, as shown. The cylindrical or drum armature D is of the same construction as in the other motors described, and is mounted to rotate within the annular frame J and between the U-shaped ends or bends of the coils F. The coils F are connected in multiple or in series with a source of alternating currents, and are so wound that with a current or current impulse of given direction they will make the alternate pole-pieces C of one polarity and the other pole-pieces C′ of the opposite polarity. The principle of the operation of this motor is the same as the other herein described, for, considering any two pole-pieces C C′, a current impulse passing in the coil which bridges them or is wound over both tends to establish polarities in their ends of opposite sign and to set up in the armature-core between them a polarity of the same sign as that of the nearest pole-piece C. Upon the fall or cessation of the current impulse that established these polarities the magnetism which lags behind the current phase, and which continues to manifest itself in the polar projections C C′ and the armature, produces by repulsion a rotation of the armature. The effect is continued by each reversal of the current. What occurs in the case of one pair of pole-pieces occurs simultaneously in all, so that the tendency to rotation of the armature is measured by the sum of all the forces exerted by the pole-pieces, as above described. In this motor also the magnetic lag or effect is intensified by winding one or both cores with closed induced coils. The armature-core is shown as thus wound. When closed coils are used, the cores should be laminated.

It is evident that a pulsatory as well as an alternating current might be used to drive or operate the motors herein described; but I prefer to use alternating currents.

It will be understood that the degree of subdivision, the mass of the iron in the cores, their size, and the number of alternations in the current employed to run the motor must be taken into consideration in order to properly construct this motor. In other words, in all such motors the proper relations between the number of alternations and the mass, size, or quality of the iron must be preserved in order to secure the best results. These are matters, however, that are well understood by those skilled in the art.

What I claim is—

1. In an alternating-current motor, the combination, with the armature and field-cores, of stationary energizing-coils enveloping the said cores and adapted to produce polarities or poles in both, the field-cores extending out from the coils and constructed so as to exhibit the magnetic effect imparted to them after the fall or cessation of current impulse producing such effect, as set forth.

2. In an alternating-current motor, the combination, with an armature-core circular in configuration, of a supporting-frame, field-cores extending therefrom over portions of the periphery of the armature, and energizing-coils surrounding said armature and parts of the field-cores, as set forth.

3. The combination, with the rotatably-mounted armature, of the circular frame J, the ribs K, with polar extensions extending over portions of the armature, and the energizing-coils F, wound over portions of the pole-pieces and carried in loops over the ends of the armature, as herein set forth.

NIKOLA TESLA.

Witnesses:
R. J. STONEY, Jr.,
E. P. COFFIN.

(No Model.)

N. TESLA.

PYROMAGNETO ELECTRIC GENERATOR.

No. 428,057. Patented May 13, 1890.

Fig. 1

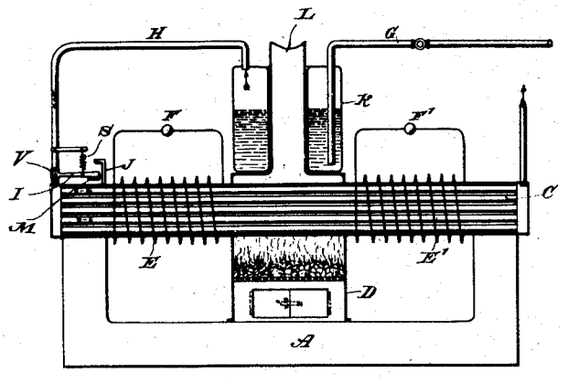

Fig. 2

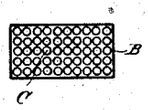

Witnesses
Raphael Netter
Millard H. Shipley

Inventor
Nikola Tesla
By
Duncan Curtis & Page
Attorneys

UNITED STATES PATENT OFFICE.

NIKOLA TESLA, OF NEW YORK, N. Y., ASSIGNOR OF ONE-HALF TO CHARLES F. PECK, OF ENGLEWOOD, NEW JERSEY.

PYROMAGNETO-ELECTRIC GENERATOR.

SPECIFICATION forming part of Letters Patent No. 428,057, dated May 13, 1890.

Original application filed May 26, 1887, Serial No. 239,481. Divided and this application filed May 25, 1889. Serial No. 312,069. (No model.)

To all whom it may concern:

Be it known that I, NIKOLA TESLA, a subject of the Emperor of Austria-Hungary, from Smiljan, Lika, border country of Austria-Hungary, residing at New York, in the county and State of New York, have invented certain new and useful Improvements in Electrical Generators, of which the following is a specification.

This application is a division of an application filed by me May 26, 1887, Serial No. 239,481.

This invention is an improved form of electrical generator based upon the following well-known laws: First, that electricity or electrical energy is developed in any conducting-body by subjecting such body to a varying magnetic influence, and, second, that the magnetic properties of iron or other magnetic substance may be partially or entirely destroyed or caused to disappear by raising it to a certain temperature, but restored and caused to reappear by again lowering its temperature to a certain degree. These laws may be applied in the production of electrical currents in many ways, the principle of which is in all cases the same—viz., to subject a conductor to a varying magnetic influence, producing such variations by the application of heat, or, more strictly speaking, by the application or action of a varying temperature upon the source of the magnetism. This principle of operation may be illustrated by a simple experiment: Place end to end, and preferably in actual contact, a permanently-magnetized steel bar and a strip or bar of soft iron. Around the end of the iron bar or plate wind a coil of insulated wire. Then apply to the iron between the coil and the steel bar a flame or other source of heat which will be capable of raising that portion of the iron to an orange-red, or a temperature of about 600° centigrade. When this condition is reached, the iron somewhat suddenly loses its magnetic properties, if it be very thin, and the same effects produced as though the iron had been moved away from the magnet or the heated section had been removed. This change of condition, however, is accompanied by a shifting of the magnetic lines, or, in other words, by a variation in the magnetic influence to which the coil is exposed, and a current in the coil is the result. Then remove the flame or in any other way reduce the temperature of the iron. The lowering of its temperature is accompanied by a return of its magnetic properties, and another change of magnetic conditions occurs, accompanied by a current in an opposite direction in the coil. The same operation may be repeated indefinitely, the effect upon the coil being similar to that which would follow from moving the magnetized bar to and from the end of the iron bar or plate.

The device forming the subject of my present invention is an improved means of obtaining this result, the features of novelty in which the invention resides being, first, the employment of an artificial cooling device, and, second, inclosing the source of heat and that portion of the magnetic circuit exposed to the heat and artificially cooling the said heated part. These improvements are applicable generally to the generators constructed on the plan above described—that is to say, I may use an artificial cooling device in conjunction with a variable or varied or uniform source of heat. I prefer, however, to employ a uniform heat.

In the drawings I have illustrated a device constructed in accordance with my invention.

Figure 1 is a central vertical longitudinal section of the complete apparatus. Fig. 2 is a cross-section of the magnetic armature-core of the generator.

Let A represent a magnetized core or permanent magnet the poles of which are bridged by an armature-core composed of a casing or shell B inclosing a number of hollow iron tubes C. Around this core are wound the conductors E E′, to form the coils in which the currents are developed. In the circuits of these coils are translating devices, as F F′.

D is a furnace or closed fire-box, through which the central portion of the core B extends. Above the fire is a boiler K, containing water. The flue L from the fire-box may extend up through the boiler.

G is a water-supply pipe, and H is the steam-exhaust pipe, which communicates with all

the tubes C in the armature B, so that steam escaping from the boiler will pass through said tubes.

In the steam-exhaust pipe H is a valve V, to which is connected the lever I, by the movement of which the said valve is opened or closed. In such a case as this the heat of the fire may be utilized for other purposes after as much of it as may be needed has been applied to heating the core B. There are special advantages in the employment of a cooling device, in that the metal of the core B is not so quickly oxidized. Moreover, the difference between the temperature of the applied heat and of the steam, air, or whatever gas or fluid be applied as the cooling medium, may be increased or decreased at will, whereby the rapidity of the magnetic changes or fluctuations may be regulated.

In so far as my present invention, broadly, is concerned, the specific construction of the apparatus is largely immaterial. I do not, however, claim in this application, broadly, the application of a variable heat to vary the magnetic conditions of a field of force in which an induced conductor is contained.

What I claim is—

1. In an electrical generator, the combination, with a magnetized core or body and a conductor within the field of force produced thereby, of an inclosed source of heat applied to a portion of said core, and an artificial cooling device for reducing the temperature of the heated portion thereof, as set forth.

2. The combination, with a magnetized core or body and a conductor under the influence thereof, of an inclosed source of heat applied to a portion of said core, means for bringing a cooling gas or fluid in contact with the heated portion of the core, and means for controlling the admission of the same.

3. The combination, with a magnetized core containing passages or channels, and coils wound thereon, of means for applying heat to a portion of the core, and a connection with a boiler for admitting steam into the channels, as set forth.

NIKOLA TESLA.

Witnesses:
R. J. STONEY, Jr.,
E. P. COFFIN.

(No Model.)

N. TESLA.

ALTERNATING CURRENT ELECTRO MAGNETIC MOTOR.

No. 433,700. Patented Aug. 5, 1890.

Fig. 1

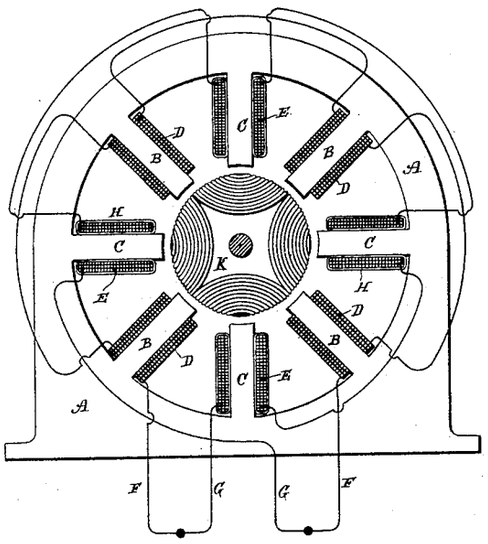

Fig. 2

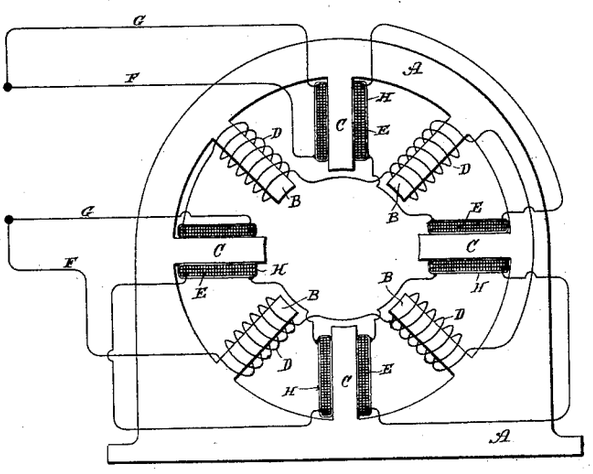

Witnesses:
Raphael Netter
Ernest Hopkinson

Inventor
Nikola Tesla
by Duncan, Curtis & Page
Attorneys.

THE NORRIS PETERS CO., PHOTO-LITHO., WASHINGTON, D. C.

UNITED STATES PATENT OFFICE.

NIKOLA TESLA, OF NEW YORK, N. Y., ASSIGNOR TO THE TESLA ELECTRIC COMPANY, OF SAME PLACE.

ALTERNATING-CURRENT ELECTRO-MAGNETIC MOTOR.

SPECIFICATION forming part of Letters Patent No. 433,700, dated August 5, 1890.

Application filed March 26, 1890. Serial No. 345,388. (No model.)

To all whom it may concern:

Be it known that I, NIKOLA TESLA, a subject of the Emperor of Austria-Hungary, from Smiljan, Lika, border country of Austria-Hungary, residing at New York, in the county and State of New York, have invented certain new and useful Improvements in Alternating-Current Electro-Magnetic Motors, of which the following is a specification, reference being had to the drawings accompanying and forming a part of the same.

This invention is an improvement in that class of electro-magnetic motors in which the rotation is produced by the progressive movement or effect of the maximum magnetic points or poles produced by the conjoint action or effect of two energizing-circuits through which are passed alternating currents, or currents of rapidly-varying strength of a kindred nature.

The improvements subject of this application are more particularly applicable to that class of motors in which two or more sets of energizing-magnets are employed, and in which by artificial means a certain interval of time is made to elapse between the respective maximum or minimum periods or phases of their magnetic attraction or effect. This interval or difference in phase between the two sets of magnets, when artificially produced, is limited in extent. It is desirable, however, for the economical working of such motors that the strength or attraction of one set of magnets should be maximum at the time when that of the other set is minimum and conversely; but these conditions have not heretofore been realized except in cases where the two currents have been obtained from independent sources in the same or different machines.

The object of the present invention is to establish conditions more nearly approaching the theoretical requirements of perfect working, or, in other words, to produce artificially a difference of magnetic phase by means of a current from a single primary source sufficient in extent to meet the requirements of practical and economical working.

In carrying out my invention I employ a motor with two sets of energizing or field magnets, each wound with coils connected with a source of alternating or rapidly-varying currents, but forming two separate paths or circuits. The magnets of one set I protect to a certain extent from the energizing action of the current by means of a magnetic shield or screen interposed between the magnet and its energizing-coil. This shield is properly adapted to the conditions of particular cases, so as to shield or protect the main core from magnetization until it has become itself saturated and no longer capable of containing all the lines of force produced by the current. By this means it will be seen that the energizing action begins in the protected set of magnets a certain arbitrarily-determined period of time later than in the other, and that by this means alone or in conjunction with other means or devices heretofore employed a practically-economical difference of magnetic phase may readily be secured.

The nature and operation of the invention will be more fully explained by reference to the accompanying drawings.

Figure 1 is a view of a motor, partly in section, with a diagram illustrating the invention. Fig. 2 is a similar view of a modification of the same.

In Fig. 1, which exhibits the simplest form of the invention, A A is the field-magnet of a motor, having, say, eight poles or inwardly-projecting cores B and C. The cores B form one set of magnets and are energized by coils D. The cores C, forming the other set, are energized by coils E, and the coils are connected, preferably, in series with one another, in two derived or branched circuits F G, respectively, from a suitable source of current. Each coil E is surrounded by a magnetic shield H, which is preferably composed of an annealed, insulated, or oxidized iron wire wrapped or wound on the coils in the manner indicated, so as to form a closed magnetic circuit around the coils and between the same and the magnetic cores C. Between the pole pieces or cores B C is mounted the armature K, which, as is usual in this type of machines, is wound with coils L closed upon themselves. The operation resulting from this disposition is as follows: If a current impulse be di-

rected through the two circuits of the motor, it will quickly energize the cores B, but not so the cores C, for the reason that in passing through the coils E there is encountered the influence of the closed magnetic circuits formed by the shields H. The first effect is to effectively retard the current impulse in circuit G, while at the same time the proportion of current which does pass does not magnetize the cores C, which are shielded or screened by the shields H. As the increasing electro-motive force then urges more current through the coils E, the iron wire H becomes magnetically saturated and incapable of carrying all the lines of force, and hence ceases to protect the cores C, which become magnetized, developing their maximum effect after an interval of time subsequent to the similar manifestation of strength in the other set of magnets, the extent of which is arbitrarily determined by the thickness of the shield H, and other well-understood conditions.

From the above it will be seen that the apparatus or device acts in two ways. First, by retarding the current, and, second, by retarding the magnetization of one set of the cores, from which its effectiveness will readily appear.

Many modifications of the principle of this invention are possible. One useful and efficient application of the invention is shown in Fig. 2. In said figure a motor is shown similar in all respects to that above described, except that the iron wire H, which is wrapped around the coils E, is in this case connected in series with the coils D. The iron-wire coils H, are connected and wound, so as to have little or no self-induction, and being added to the resistance of the circuit F the action of the current in that circuit will be accelerated, while in the other circuit G it will be retarded. The shield H may be made in many forms, as will be understood, and used in different ways, as appears from the foregoing description. I do not, however, limit myself to any specific form or arrangement; but

What I claim is—

1. In an alternating-current motor having two energizing-circuits, the combination, with the magnetic cores and coils of one of the circuits, of interposed magnetic shields or screens for retarding the magnetization of said cores, as set forth.

2. In an alternating-current motor having two energizing-circuits, the combination, with the magnetic cores and the coils of one of the circuits wound thereon, of magnetic shields or coils wound around said coils at right angles to their convolutions, as set forth.

3. In an alternating-current motor having two energizing-circuits, the combination, with the magnetic cores and the coils of one of the circuits which energize the said cores, of magnetic shields forming closed magnetic circuits around the coils and interposed between the coils and cores, as set forth.

4. In an alternating-current motor having two energizing-circuits derived from the same source, the combination, with the cores and the coils of one of the circuits that energizes the same, of insulated iron-wire coils wound on the said energizing-coils at right angles to their convolutions and connected up in series with the coils of the other energizing-circuit, as set forth.

NIKOLA TESLA.

Witnesses:
ROBT. F. GAYLORD,
PARKER W. PAGE.

(No Model.)

N. TESLA.

ALTERNATING CURRENT MOTOR.

No. 433,701. Patented Aug. 5, 1890.

Fig. 1

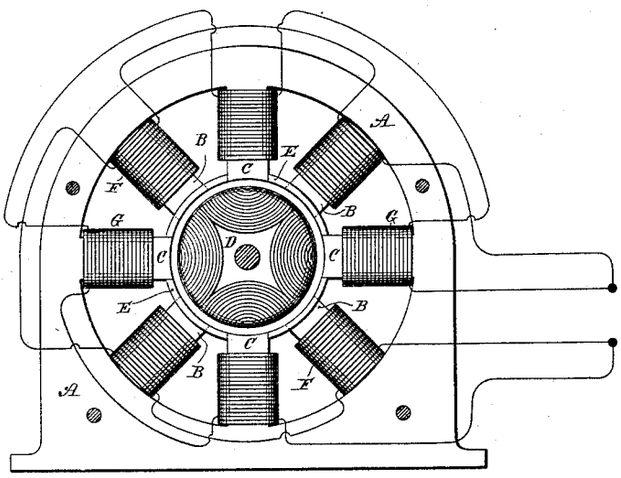

Fig. 2

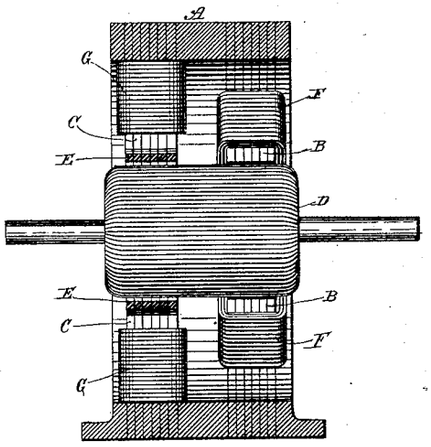

Witnesses:
Raphael Netter
Ernest Hopkinson

Inventor
Nikola Tesla
by
Duncan, Curtis & Page
Attorneys.

THE NORRIS PETERS CO., PHOTO-LITHO., WASHINGTON, D. C.

UNITED STATES PATENT OFFICE.

NIKOLA TESLA, OF NEW YORK, N. Y., ASSIGNOR TO THE TESLA ELECTRIC COMPANY, OF SAME PLACE.

ALTERNATING-CURRENT MOTOR.

SPECIFICATION forming part of Letters Patent No. 433,701, dated August 5, 1890.

Application filed March 26, 1890. Serial No. 345,389. (No model.)

To all whom it may concern:

Be it known that I, NIKOLA TESLA, a subject of the Emperor of Austria-Hungary, from Smiljan, Lika, border country of Austria-Hungary, residing at New York, in the county and State of New York, have invented certain new and useful Improvements in Alternating-Current Motors, of which the following is a specification, reference being had to the drawings accompanying and forming a part of the same.

This invention relates to that class of alternating-current motors in which the field-magnets are energized by coils connected up in two circuits derived from the same source and having different degrees of self-induction, whereby the currents in one circuit or branch are retarded more than in the other, with the result of producing a progressive advance or rotation of the points of maximum magnetic effect in the field that maintains the armature in rotation. In motors of this kind I have employed, among other means, a self-induction coil in one circuit and a dead-resistance in the other, or I have secured the same result by the special character of the winding of the two circuits, and in still another instance I have so constructed the motor that the retarded-current coils were nearly inclosed by iron, whereby the self-induction of such coils was very greatly increased.

The invention subject of this application is an improvement on this last-named plan.

In carrying out the invention I construct a field-magnet having two sets of poles or inwardly-projecting cores and placed side by side, so as practically to form two fields of force and alternately disposed—that is to say, with the poles of one set or field opposite the spaces between the other. I then connect the free ends of one set of poles by means of laminated-iron bands or bridge-pieces of considerably smaller cross-section than the cores themselves, whereby the cores will all form parts of complete magnetic circuits. When the coils on each set of magnets are connected in multiple circuits or branches from a source of alternating currents, electromotive forces are set up in or impressed upon each circuit simultaneously; but the coils on the magnetically bridged or shunted cores will have, by reason of the closed magnetic circuits, a high self-induction, which retards the current, permitting at the beginning of each impulse but little current to pass. On the other hand, no such opposition being encountered in the other set of coils, the current passes freely through them, magnetizing the poles on which they are wound. As soon, however, as the laminated bridges become saturated and incapable of carrying all the lines of force, which the rising electro-motive force, and consequently increased current, produce, free poles are developed at the ends of the cores, which, acting in conjunction with the others, produce rotation of the armature.

The construction in detail by which this invention is illustrated is shown in the accompanying drawings.

Figure 1 is a view in side elevation of a motor embodying the invention. Fig. 2 is a vertical cross-section of the same.

A is the frame of the motor, which is preferably built up of sheets of iron punched out to the desired shape and bolted together with insulation of a proper character between the sheets. When complete, the frame makes a field-magnet with inwardly-projecting pole-pieces B and C. To adapt them to the requirements of this particular case these pole-pieces are out of line with one another, those marked B surrounding one end of the armature and the others, as C, the opposite end, and they are disposed alternately—that is to say, the pole-pieces of one set occur in line with the spaces between those of the other sets.

The armature D is of cylindrical form, and is also laminated in the usual way and is wound longitudinally with coils closed upon themselves. The pole-pieces C are connected or shunted by bridge-pieces E. These may be made independently and attached to the pole-pieces, or they may be parts of the forms or blanks stamped or punched out of sheet-iron. Their size or mass is determined by various conditions, such as the strength of the current to be employed, the mass or size of the cores to which they are appplied, and other well-understood conditions.

Coils F surround the pole-pieces B, and other coils G are wound on the pole-pieces C.

These coils are connected in series in two circuits, which are braches of a circuit from a generator of alternating currents, and they may be so wound, or the respective circuits in which they are included may be so arranged, that the circuit of coils G will have independently of the particular construction herein described a higher self-induction than the other circuit or branch.

The function of the shunts or bridges E is that they shall form with the cores C a closed magnetic circuit for a current up to a predetermined strength, so that when saturated by such current and unable to carry more lines of force than such a current produces they will to no further appreciable extent interfere with the development by a stronger current of free magnetic poles at the ends of the cores C.

In such a motor the current is so retarded in the coils G and the manifestation of the free magnetism in the poles C is delayed beyond the period of maximum magnetic effect in poles B that a strong torque is produced and the motor operates with approximately the power developed in a motor of this kind energized by independently-generated currents differing by a full-quarter phase.

What I claim in this application is—

1. In an alternating-current motor having two sets or series of pole-pieces, the combination, with one of such sets or series, of magnetic shunts or bridges connecting their free ends, as herein set forth.

2. In an alternating-current motor having two sets or series of pole-pieces energized by coils in independent circuits from the same source, the combination, with one of the sets or series of pole-pieces, of magnetic shunts or bridges connecting their free ends, as described.

3. In an alternating-current motor having a laminated or subdivided field-magnet provided with two sets or series of cores or pole-pieces, the combination, with such pole-pieces, of energizing-coils connected, respectively, in two circuits derived from the same source of alternating currents and laminated or subdivided iron shunts or bridges of smaller cross-section than the pole-pieces and joining the free ends of all the cores or pole-pieces of one set to form closed magnetic circuits, as set forth.

4. In an alternating-current motor, the combination, with a set or series of field-poles and energizing-coils wound thereon, of an intermediate set of pole-pieces forming portions of closed magnetic circuits and coils thereon in a circuit derived from the same source of alternating currents as the other, as set forth.

NIKOLA TESLA.

Witnesses:
ROBT. F. GAYLORD,
PARKER W. PAGE.

(No Model.)

N. TESLA.

ELECTRICAL TRANSFORMER OR INDUCTION DEVICE.

No. 433,702. Patented Aug. 5, 1890.

Fig. 1

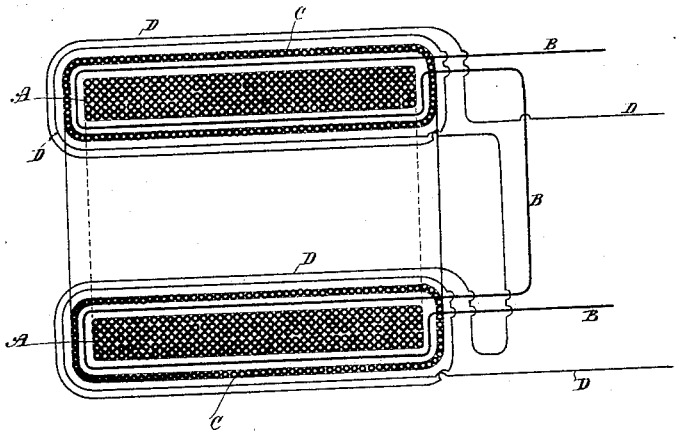

Fig. 2

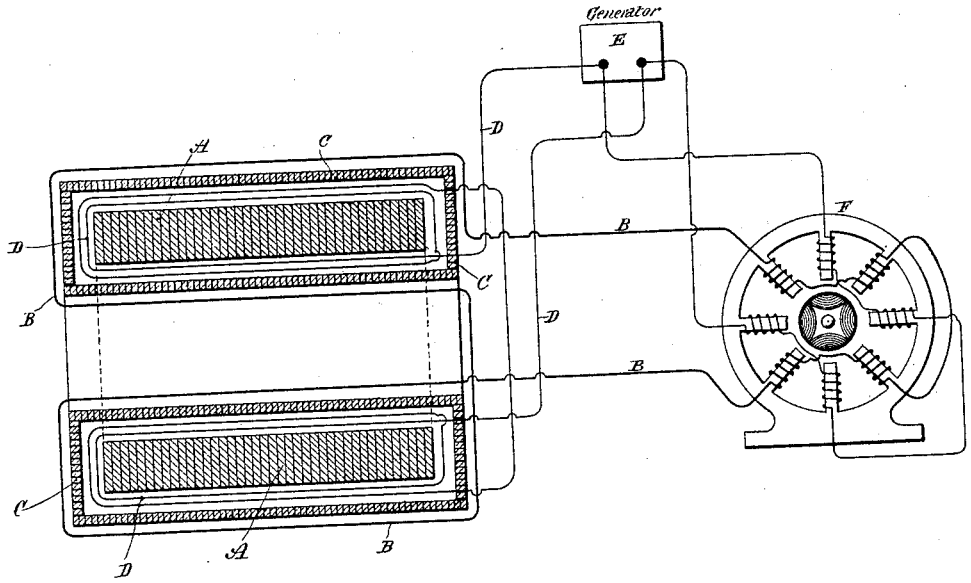

Witnesses:
Raphael Netter
Ernest Hopkinson

Inventor
Nikola Tesla
by
Duncan, Curtis & Page
Attorneys.

THE NORRIS PETERS CO., PHOTO-LITHO., WASHINGTON, D. C.

UNITED STATES PATENT OFFICE.

NIKOLA TESLA, OF NEW YORK, N. Y., ASSIGNOR TO THE TESLA ELECTRIC COMPANY, OF SAME PLACE.

ELECTRICAL TRANSFORMER OR INDUCTION DEVICE.

SPECIFICATION forming part of Letters Patent No. 433,702, dated August 5, 1890.

Application filed March 26, 1890. Serial No. 345,390. (No model.)

To all whom it may concern:

Be it known that I, NIKOLA TESLA, a subject of the Emperor of Austria-Hungary, from Smiljan, Lika, border country of Austria-Hungary, residing at New York, in the county and State of New York, have invented certain new and useful Improvements in Electrical Transformers or Induction Devices, of which the following is a specification, reference being had to the drawings accompanying and forming a part of the same.

This invention is an improvement in electrical transformers or converters, and has for its main objects the provision of means for securing, first, a phase difference between the primary and secondary currents adapted to the operation of my alternating-current motors and other like purposes, and, second, a constant current for all loads imposed upon the secondary.

In transformers as constructed now and heretofore it will be found that the electro-motive force of the secondary very nearly coincides with that of the primary, being, however, of opposite sign. At the same time the currents, both primary and secondary, lag behind their respective electro-motive forces; but as this lag is practically or nearly the same in the case of each it follows that the maximum and minimum of the primary and secondary currents will nearly coincide, but differ in sign or direction, provided the secondary be not loaded or if it contain devices having the property of self-induction. On the other hand, the lag of the primary behind the impressed electro-motive force may be diminished by loading the secondary with a non-inductive or dead resistance—such as incandescent lamps—whereby the time interval between the maximum or the minimum periods of the primary and secondary currents is increased. This time interval, however, is limited, and the results obtained by phase difference in the operation of such devices as my alternating-current motors can only be approximately realized by such means of producing or securing this difference, as above indicated, for it is desirable in such cases that there should exist between the primary and secondary currents, or those which, however produced, pass through the two circuits of the motor, a difference of phase of ninety degrees; or, in other words, the current in one circuit should be maximum when that in the other circuit is minimum. To more perfectly attain to this condition I obtain or secure an increased retardation of the secondary current in the following manner: Instead of bringing the primary and secondary coils or circuits of a transformer into the closest possible relations, as has hitherto been done, I protect in a measure the secondary from the inductive action or effect of the primary by surrounding either the primary or the secondary with a comparatively-thin magnetic shield or screen. Under these conditions or circumstances, as long as the primary current has a small value, the shield protects the secondary; but as soon as the primary current has reached a certain strength, which is arbitrarily determined, the protecting magnetic shield becomes saturated and the inductive action upon the secondary begins. It results, therefore, that the secondary current begins to flow at a certain fraction of a period later than it would without the interposed shield, and since this retardation may be obtained without necessarily retarding the primary current also, an additional lag is secured, and the time interval between the maximum or minimum periods of the primary and secondary currents is increased. I have further discovered that such a transformer may, by properly proportioning its several elements and determining in a manner well understood the proper relations between the primary and secondary windings, the thickness of the magnetic shield, and other conditions, be constructed to yield a constant current at all loads. No precise rules can be given for the specific construction and proportions for securing the best results, as this is a matter determined by experiment and calculation in particular cases; but the general plan of construction which I have described will be found under all conditions to conduce to the attainment of this result.

In the accompanying drawings I have illustrated the construction above set forth.

Figure 1 is a cross-section of a transformer embodying my improvement. Fig. 2 is a simi-

lar view of a modified form of transformer, showing diagrammatically the manner of using the same.

A A is the main core of the transformer, composed of a ring of soft annealed and insulated or oxidized iron wire. Upon this core is wound the secondary circuit or coil B B. This latter is then covered with a layer or layers of annealed and insulated iron wires C C, wound in a direction at right angles to said secondary coil. Over the whole is then wound the primary coil or wire D D. From the nature of this construction it will soon be obvious that as long as the shield formed by the wires C is below magnetic saturation the secondary coil or circuit is effectually protected or shielded from the inductive influence of the primary, although I would state that on open circuit it may exhibit some electro-motive force. When the strength of the primary reaches a certain value, the shield C, becoming saturated, ceases to protect the secondary from inductive action, and current is in consequence developed therein. For similar reasons, when the primary current weakens, the weakening of the secondary is retarded to the same or approximately the same extent.

The specific construction of the transformer is largely immaterial. In Fig. 2, for example, the core A is built up of thin insulated iron plates or disks. The primary circuit D is wound next the core A. Over this is applied the shield C, which in this case is made up of thin strips or plates of iron properly insulated and surrounding the primary, forming a closed magnetic circuit. The secondary B is wound over the shield C. In Fig. 2, also, E is a source of alternating or rapidly changing currents. The primary of the transformer is connected with the circuit of the generator.

F is a two-circuit alternating-current motor, one of the circuits being connected with the main circuit from the source E, and the other being supplied with currents from the secondary of the transformer.

Having now described my invention, what I claim is—

1. In an electrical transformer or induction device, the combination, with the main magnetic core and the primary and secondary coils or circuits, of a magnetic shield or screen interposed between said coils, as herein set forth.

2. In an electrical transformer or inductive device, the combination, with the magnetic core and the primary and secondary coils or circuits, of a magnetic shield or screen surrounding one of said coils only, as set forth.

3. In an electrical transformer or induction device, the combination, with the magnetic core and the primary and secondary coils wound thereon, of a magnetic shield or screen wound on or built up around one only of said coils, as described.

4. In an electrical transformer or induction device, the combination, with a main laminated magnetic core and primary and secondary coils thereon, of a subdivided or laminated magnetic shield or screen interposed between the coils, as set forth.

5. In an electrical transformer, the combination, with a magnetic core and primary and secondary coils wound thereon, of a magnetic shield or screen interposed between said coils and surrounding one of them and adapted to be or capable of being magnetically saturated by a predetermined current strength below the maximum in the primary, as set forth.

NIKOLA TESLA.

Witnesses:
ROBT. F. GAYLORD,
PARKER W. PAGE.

(No Model.)

N. TESLA.

ELECTRO MAGNETIC MOTOR.

No. 433,703. Patented Aug. 5, 1890.

Fig. 1

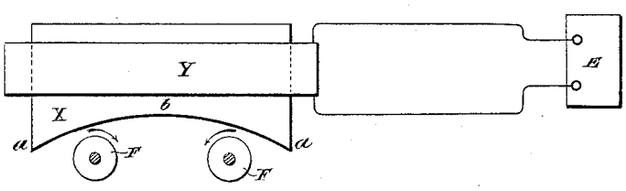

Fig. 2

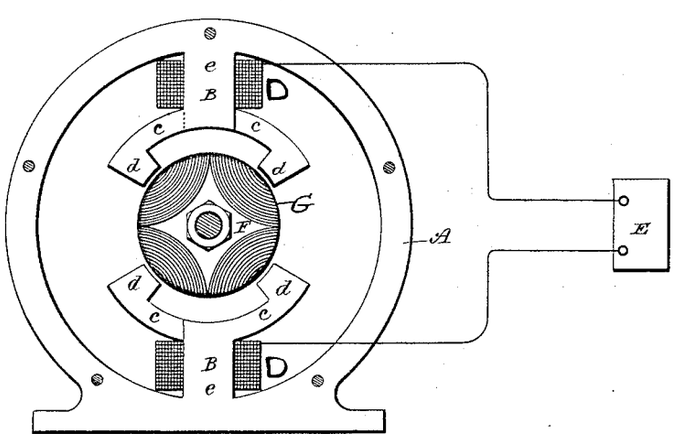

Fig. 3

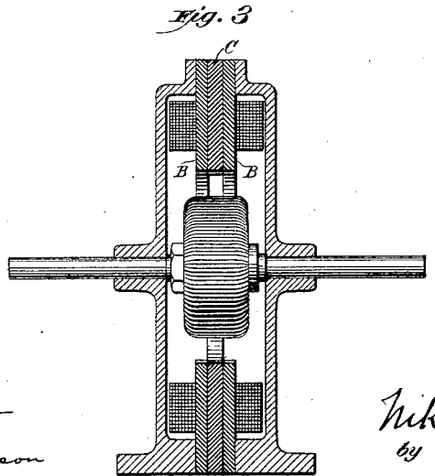

Witnesses:
Raphael Netter
Ernest Hopkinson

Inventor
Nikola Tesla
by
Duncan, Curtis & Page
Attorneys.

THE NORRIS PETERS CO., PHOTO-LITHO., WASHINGTON, D. C.

UNITED STATES PATENT OFFICE.

NIKOLA TESLA, OF NEW YORK, N. Y., ASSIGNOR TO THE TESLA ELECTRIC COMPANY, OF SAME PLACE.

ELECTRO-MAGNETIC MOTOR.

SPECIFICATION forming part of Letters Patent No. 433,703, dated August 5, 1890.

Application filed April 4, 1890. Serial No. 346,603. (No model.)

To all whom it may concern:

Be it known that I, NIKOLA TESLA, a subject of the Emperor of Austria-Hungary, from Smiljan, Lika, border country of Austria-Hungary, residing at New York, in the county and State of New York, have invented certain new and useful Improvements in Electro-Magnetic Motors, of which the following is a specification, reference being had to the drawings accompanying and forming a part of the same.

This invention is an improvement in alternating-current motors, and has for its general object to produce a single-circuit alternating-current torque-motor of economical and simple construction.

The nature of the invention will be understood from the following statement.

It is well known that if a magnetic core, even if laminated or subdivided, be wound with an insulated coil and a current of electricity directed through the coil the magnetization of the entire core does not immediately ensue, the magnetizing effect not being exhibited in all parts simultaneously. This I attribute to the fact that the action of the current is to energize first those laminæ or parts of the core nearest the surface and adjacent to the exciting-coil, and from thence the action progresses toward the interior. A certain interval of time therefore elapses between the manifestation of magnetism in the external and the internal sections or layers of the core. If the core be thin or of small mass, this effect may be inappreciable; but in the case of a thick core, or even of a comparatively thin one, if the number of alternation or rate of change of the current strength be very great the time interval occurring between the manifestations of magnetism in the interior of the core and in those parts adjacent to the coil is more marked, and in the construction of such apparatus as motors which are designed to be run by alternating or equivalent currents—such as pulsating or undulating currents generally—I have found it desirable and even necessary to give due consideration to this phenomenon and to make special provisions in order to obviate its consequences.

The specific object of my present invention is to take advantage of this action or effect, and by rendering it more pronounced to utilize it in the operation of motors in general. This object I attain by constructing a field-magnet in which the parts of the core or cores that exhibit at different intervals of time the magnetic effect imparted to them by alternating or equivalent currents in an energizing coil or coils are so placed with relation to a rotating armature as to exert thereon their attractive effect successively in the order of their magnetization. By this means I secure a similar result to that which I have heretofore attained in other forms or types of motor in which by means of one or more alternating currents I have produced a rotation or progression of the magnetic poles or points of maximum attraction of the field of force.

In the drawings I have shown a simple form of motor, which will serve to demonstrate the principle of the mode of operation, which I have above described in general terms.

Figure 1 is a side elevation of such motor. Fig. 2 is a side elevation of a more practicable and efficient embodiment of the invention. Fig. 3 is a central vertical section of the same in the plane of the axis of rotation.

Referring to Fig. 1, let X represent a large iron core, which may be composed of a number of sheets or laminæ of soft iron or steel. Surrounding this core is a coil Y, which is connected with a source E of rapidly-varying currents. Let us consider now the magnetic conditions existing in this core at any point, as *b*, at or near the center, and any other point, as *a*, nearer the surface. When a current-impulse is started in the magnetizing-coil Y, the section or part at *a*, being close to the coil, is immediately energized, while the section or part at *b*, which, to use a convenient expression, is "protected" by the intervening sections or layers between *a* and *b*, does not at once exhibit its magnetism. However, as the magnetization of *a* increases, *b* becomes also affected, reaching finally its maximum strength some time later than *a*. Upon the weakening of the current the magnetization of *a* first diminishes, while *b* still exhibits its maximum strength; but the continued weakening of *a* is attended by a subsequent weakening of *b*. Assuming the cur-

rent to be an alternating one, *a* will now be reversed, while *b* still continues of the first-imparted polarity. This action continues the magnetic condition of *b*, following that of *a* in the manner above described. If an armature—for instance, a simple disk F, mounted to rotate freely on an axis—be brought into proximity to the core, a movement of rotation will be imparted to the disk, the direction depending upon its position relatively to the core, the tendency being to turn the portion of the disk nearest to the core from *a* to *b*, as indicated in Fig. 1. This action or principle of operation I have embodied in a practicable form of motor, which is illustrated in Fig. 2. Let A in said figure represent a circular frame of iron, from diametrically-opposite points of the interior of which the cores project. Each core is composed of three main parts B, B, and C, and they are similarly formed with a straight portion or body *e*, around which the energizing-coil is wound, a curved arm or extension *c*, and an inwardly-projecting pole or end *d*. Each core is made up of two parts B B, with their polar extensions reaching in one direction and a part C between the other two and with its polar extension reaching in the opposite direction. In order to lessen in the cores the circulation of currents induced therein, the several sections are insulated from one another in the manner usually followed in such cases. These cores are wound with coils D, which are connected in the same circuit, either in parallel or series, and supplied with an alternating or a pulsating current, preferably the former, by a generator E, represented diagrammatically. Between the cores or their polar extensions is mounted a cylindrical or similar armature F, wound with magnetizing-coils G, that are closed upon themselves, as is usual in motors of this general class.

The operation of this motor is as follows: When a current impulse or alternation is directed through the coils D, the sections B B of the cores, being on the surface and in close proximity to the coils, are immediately energized. The sections C, on the other hand, are protected from the magnetizing influence of the coil by the interposed layers of iron B B. As the magnetism of B B increases, however, the sections C are also energized; but they do not attain their maximum strength until a certain time subsequent to the exhibition by the sections B B of their maximum. Upon the weakening of the current the magnetic strength of B B first diminishes, while the sections C have still their maximum strength; but as B B continue to weaken the interior sections are similarly weakened. B B may then begin to exhibit an opposite polarity, which is followed later by a similar change on C, and this action continues. B B and C may therefore be considered as separate field-magnets, being extended so as to act on the armature in the most efficient positions, and the effect is similar to that in my other forms of motor—viz., a rotation or progression of the maximum points of the field of force. Any armature—such, for instance, as a disk—mounted in this field would rotate from the pole first to exhibit its magnetism to that which exhibits it later.

It is evident that the principle herein described may be carried out in conjunction with other means, such as I have elsewhere set forth, for securing a more favorable or efficient action of the motor. For example, the polar extensions of the sections C may be wound or surrounded by closed coils L, as indicated by dotted lines in Fig. 2. The effect of these coils will be to still more effectively retard the magnetization of the polar extensions of C.

I do not wish to be understood as limiting myself to any particular construction of this form of motor, as the same principle of action or operation may be carried out in a great variety of forms.

What I claim is—

1. In an alternating-current motor, the combination, with an energizing-coil and a core composed of two parts, one protected from magnetization by the other interposed between it and the coil, of an armature mounted with the influence of the fields of force produced by said parts, as set forth.

2. The combination, in an alternating-current motor, of a rotating armature, a field-magnet composed of a coil and a core with two sections in proximity to the coil and an inner section between the same, the sections being formed or provided with polar projections extending in opposite directions over or around the armature, as set forth.

3. The combination, in an alternating-current motor, of a rotating armature, a frame and field-magnets thereon, each composed of an energizing-coil wound around a core made up of outer and inner or protected magnetic sections, each of which is formed or provided with independent laterally-extended pole pieces or projections, as herein described.

NIKOLA TESLA.

Witnesses:
ROBT. F. GAYLORD,
PARKER W. PAGE.

(No Model.)

N. TESLA.

ELECTRO MAGNETIC MOTOR.

No. 445,207. Patented Jan. 27, 1891.

Fig. 1

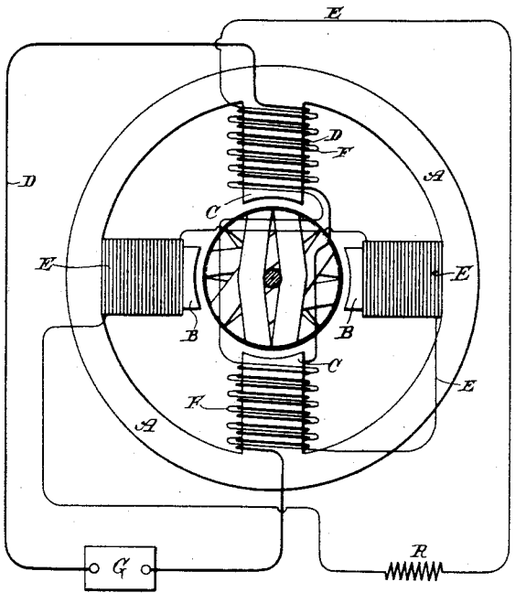

Fig. 2

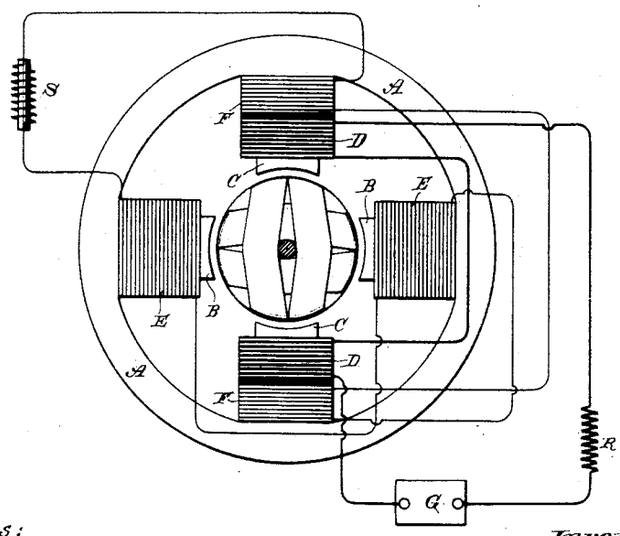

Witnesses:
Raphael Netter
Frank R. Hartley

Inventor.
Nikola Tesla
By
Duncan, Curtis & Page.
Attorneys.

THE NORRIS PETERS CO., PHOTO-LITHO., WASHINGTON, D. C.

UNITED STATES PATENT OFFICE.

NIKOLA TESLA, OF NEW YORK, N. Y., ASSIGNOR TO THE TESLA ELECTRIC COMPANY, OF SAME PLACE.

ELECTRO-MAGNETIC MOTOR.

SPECIFICATION forming part of Letters Patent No. 445,207, dated January 27, 1891.

Application filed May 20, 1889. Serial No. 311,417. (No model.)

To all whom it may concern:

Be it known that I, NIKOLA TESLA, a subject of the Emperor of Austria-Hungary, from Smiljan, Lika, border country of Austria-Hungary, residing at New York, in the county and State of New York, have invented certain new and useful Improvements in Electro-Magnetic Motors, of which the following is a specification, reference being had to the drawings accompanying and forming a part of the same.

Among the various forms of alternating-current motors invented by me is one which I have described in other applications, and which is constructed as follows: I build a field-core with, say, four poles, between which is mounted an armature that is generally wound with closed coils. On two of the opposite poles of the field I wind primary coils, which are connected up in the main circuit. On the same cores I also wind secondary coils, which are closed through coils on the other pair or set of poles. In this motor when an alternating current is caused to pass through the primary coils it energizes directly one set of poles and induces currents in the secondary coils, which act to energize the other poles; but the phases of the current in the secondary coils may differ in time from those of the primary current, and hence a rotation or shifting of the poles is effected that imparts rotation to the motor.

These motors may be constructed in many other ways; but for purposes of this case it is only necessary to consider the specific form which I have thus generally described, as my improvements relate mainly to such form.

The object of my present invention is to render this form of motor more efficient and to improve its action or mode of operation.

In the motors constructed in accordance with this principle I bring two energizing-circuits into inductive relation in the motor itself—that is to say, the secondary currents which energize one set of the field-cores are induced in the motor itself, and the employment of an external induction device is thus avoided. The operation of these motors, however, is dependent upon the existence of a certain difference of phase between the currents in the primary and secondary coils. To obtain a difference of phase or lag that is suited to working conditions is the specific object of my present invention.

The following explanations will serve to illustrate the principle upon which said invention is based. Let it be assumed that an ordinary alternating-current generator is connected up in a circuit of practically no self-induction, such, for example, as a circuit containing incandescent lamps only. On the operation of the machine alternating currents will be developed in the circuit, and the phases of these currents will theoretically coincide with the phases of the impressed electro-motive force. Such currents may be regarded and designated as the "unretarded currents."

It will be understood, of course, that in practice there is always more or less self-induction in the circuit, which modifies to a corresponding extent these conditions; but for convenience this may be disregarded in the consideration of the principle of operation, since the same laws apply. Assume next that a path of currents be formed across any two points of the above circuit, consisting, for example, of the primary of an induction device. The phases of the currents passing through the primary, owing to the self-induction of the same, will not coincide with the phases of the impressed electro-motive force, but will lag behind the same, such lag being directly proportional to the self-induction and inversely proportional to the resistance of the said coil. The insertion of this coil will also cause a lagging or retardation of the currents traversing and delivered by the generator behind the impressed electro-motive force, such lag being the mean or resultant of the lag of the current through the primary alone and that of what I have designated the "unretarded current" in the entire working-circuit. Next consider the conditions imposed by the association in inductive relation with the primary coil of a secondary coil. The current generated in the secondary coil will react upon the primary current, modifying the retardation of the same, according to the amount of self-induction and resistance in the secondary circuit. If the secondary circuit have but little self-induction—as, for instance, when it contains incandescent lamps only—it will increase the

actual difference of phase between its own and the primary current, first, by diminishing the lag between the primary current and the impressed electro-motive force, and, second, by its own lag or retardation behind the impressed electro-motive force. On the other hand, if the secondary circuit have a high self-induction its lag behind the current in the primary is directly increased, while it will be still further increased if the primary have a very low self-induction. The better results are obtained when the primary has a low self-induction. I apply these principles to the construction of a motor which I shall now describe.

The details of the improvements are illustrated in the drawings, in which—

Figure 1 is a diagram of a motor exhibiting my invention. Fig. 2 is a similar diagram of a modification of the same.

In Fig. 1 let A designate the field-magnet of a motor which, as in all these motors, is built up of sections or plates. B C are polar projections upon which the coils are wound. Upon one pair of these poles, as C, I wind primary coils D, which are directly connected to the circuit of an alternating-current generator G. On the same poles I also wind secondary coils F, either side by side or over or under the primary coils, and these I connect with other coils E, which surround the poles B B. The currents in both primary and secondary coils in such a motor will be retarded or will lag behind the impressed electro-motive force; but to secure a proper difference in phase between the primary and secondary currents themselves I increase the resistance of the circuit of the secondary and reduce as much as practicable its self-induction. I do this by using for the secondary circuit, particularly in the coils E, wire of comparatively small diameter and having but few turns around the cores; or I use some conductor of higher specific resistance, such as German silver; or I may introduce at some point in the secondary circuit an artificial resistance R. Thus the self-induction of the secondary is kept down and its resistance increased with the result of decreasing the lag between the impressed electro-motive force and the current in the primary coils and increasing the difference of phase between the primary and secondary currents.

In the disposition shown in Fig. 2 the lag in the secondary is increased by increasing the self-induction of that circuit, while the increased tendency of the primary to lag is counteracted by inserting therein a dead resistance. The primary coils D in this case have a low self-induction and high resistance, while the coils E F, included in the secondary circuit, have a high self-induction and low resistance. This may be done by the proper winding of the coils, or in the circuit including the secondary coils E F, I may introduce a self-induction coil S, while in the primary circuit from the generator G and including coils D, I may insert a dead resistance R. By this means the difference of phase between the primary and secondary is increased. It is evident that both means of increasing the difference of phase—namely, by the special winding as well as by the supplemental or external inductive and dead resistance—may be employed conjointly.

In the operation of this motor the current impulses in the primary coils induce currents in the secondary coils, and by the conjoint action of the two the points of greatest magnetic attraction are shifted or rotated.

In practice I have found it desirable to wind the armature with closed coils in which currents are induced by the action thereon of the primaries.

I do not claim, broadly, herein the method of operating motors by inducing in one circuit currents by means of those in another, nor the other features herein not specifically pointed out in the claims, having personally filed applications for such features.

What I claim is—

1. The combination, in a motor, of a primary energizing-circuit adapted to be connected with the circuit of a generator and a secondary energizing-circuit in inductive relation thereto, the two circuits being of different electrical character or resistance, as set forth.

2. The combination, in a motor, of a primary energizing-circuit adapted to be connected with the circuit of a generator and a secondary energizing-circuit in inductive relation thereto, the two circuits being of different self-induction, as herein set forth.

3. The combination, in a motor, of primary energizing-coils adapted to be connected to a source of current and secondary energizing-coils in a circuit in inductive relation thereto, one set of said coils being formed by conductors of small size and few turns, the other by conductors of larger size, as set forth.

NIKOLA TESLA.

Witnesses:
R. J. STONEY, Jr.,
E. P. COFFIN.

(No Model.)

N. TESLA.

METHOD OF OPERATING ARC LAMPS.

No. 447,920. Patented Mar. 10, 1891.

Fig. 1

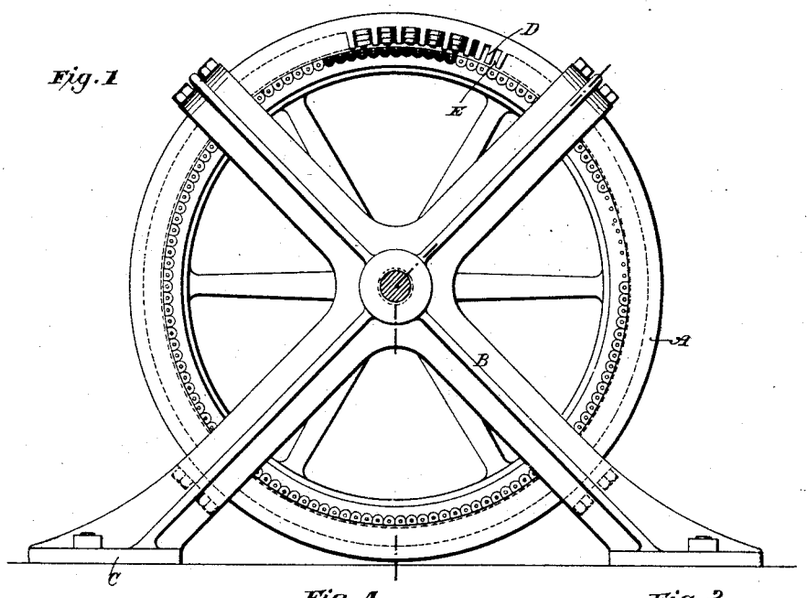

Fig. 4

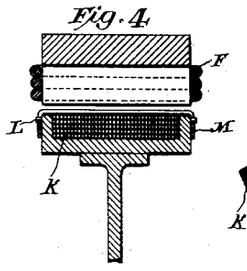

Fig. 3

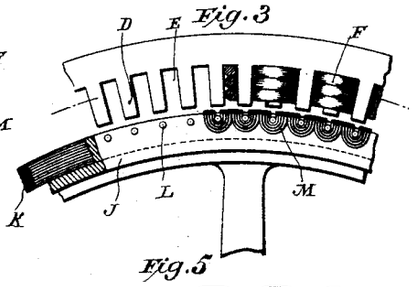

Fig. 5

Fig. 2

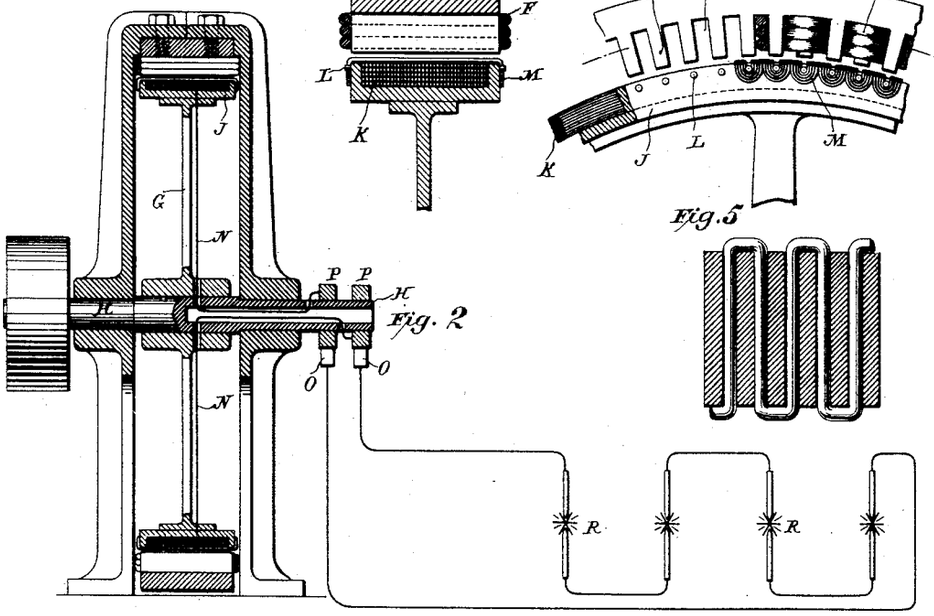

Witnesses:
Raphael Netter
M. G. Tracy

Inventor.
Nikola Tesla
by
Duncan & Page
Attorneys.

THE NORRIS PETERS CO., PHOTO-LITHO., WASHINGTON, D. C.

UNITED STATES PATENT OFFICE.

NIKOLA TESLA, OF NEW YORK, N. Y.

METHOD OF OPERATING ARC LAMPS.

SPECIFICATION forming part of Letters Patent No. 447,920, dated March 10, 1891.

Application filed October 1, 1890. Serial No. 366,734. (No model.)

To all whom it may concern:

Be it known that I, NIKOLA TESLA, a subject of the Emperor of Austria-Hungary, residing at New York, in the county and State of New York, have invented certain new and useful Improvements in Methods of Operating Arc Lamps, of which the following is a specification.

This invention consists in an improved method of operating electric-arc lamps which are supplied with alternating or pulsating currents.

It has now become a common practice to run arc lamps by alternating or pulsating as distinguished from continuous currents; but an objection to such systems exists in the fact that the arcs emit a pronounced sound, varying with the rate of the alternations or pulsations of current, but under any circumstances constituting an objectionable and disagreeable feature, for which heretofore no effective remedy has been found or proposed. This noise is probably due to the rapidly alternating heating and cooling and consequent expansion and contraction of the gaseous matter forming the arc which corresponds with the periods or impulses of the current, for I have succeeded in abating it and producing quiet and smoothly-acting lamps by increasing, per unit of time, the number of alternations or pulsations of the current producing the arc to such an extent that the rate of the vibrations or changes in the arc producing the noise approximately equals or exceeds that which is generally regarded as the limit of audition. For example, I may use a generator which produces ten thousand or more alternations of current per second. In such a case the periodical heating and cooling of the arc would occur with such rapidity as to produce little or no perceptible effect upon the ear.

There are a number of ways in which the current may be varied at a rate exceeding the limit of audition, but probably the most practicable known to me at present is by the use of an alternating-current generator with a large number of poles, and specially constructed for the purpose. Such a generator, for the purpose of the illustration of this case, I have shown in the accompanying drawings.

Figure 1 is a view of the generator in side elevation. Fig. 2 is a vertical cross-section of the same with a diagram of the circuit-connections. Fig. 3 is an enlarged view, in side elevation, of a part of the machine. Fig. 4 is an enlarged sectional detail of the armature and field. Fig. 5 is a detail section of the field-magnets exhibiting the plan of winding.

A is an annular magnetic frame supported by the cross-bars or brackets B, provided with feet C, upon which the machine rests. The interior of the annulus A is provided with a large number of projections or pole-pieces D. These may be formed or applied in a variety of ways—as, for example, by milling transverse grooves E.

Owing to the very large number and small size of the poles and the spaces between them, I apply the exciting or field coils by winding an insulated conductor F zigzag through the grooves, as shown in Fig. 5, carrying said wire around the annulus to form as many layers as is desired. In this way the pole-pieces D will be energized with alternately opposite polarity around the entire ring.

For the armature I employ a spider or circular frame G on a driving-shaft H, mounted in bearings in the brackets B. This spider carries a ring J, turned down, except at its edges, to form a trough-like receptacle for a mass of fine annealed iron wires K, which are wound in the groove to form the core proper for the armature-coils. Pins L are set in the sides of the ring J, and the coils M are wound over the periphery of the armature-structure and around the pins. The coils M are connected together in series, and these terminals N carried through the hollow shaft H to contact-rings P P, from whence the currents are taken off by brushes O. In this way a machine with a very large number of poles may be constructed. It is easy, for instance, to obtain in this manner three hundred and seventy-five to four hundred poles in a machine that may be safely driven at a speed of fifteen hundred or sixteen hundred revolutions per minute, which will produce ten thousand or eleven thousand alternations of current per second. Arc lamps R R are shown in diagram as connected up in series with the machine in Fig. 2. If such a current be applied to running arc lamps, the sound produced by or in the arc becomes practically inaudible, for by increasing the rate of change

in the current, and consequently the number of vibrations per unit of time of the gaseous material of the arc up to or beyond ten thousand or eleven thousand per second, or to what is regarded as the limit of audition, the sound due to such vibrations will not be audible. The exact number of changes or undulations necessary to produce this result will vary somewhat according to the size of the arc—that is to say, the smaller the arc the greater the number of changes that will be required to render it inaudible within certain limits. Of course, as the rate of alternations or undulations for a given size of arc becomes very high the sound produced is less perceptible, and hence for some purposes the actual limit of audition may only be approached, provided the sound be rendered practically inaudible.

Another advantage gained by increasing as above set forth the number of alternations is that the arc acts more like that produced by a continuous current, in that it is more persistent, owing to the fact that the time interval between undulations is so small that the gaseous matter cannot cool down so far as to increase very considerably in resistance.

I claim—

The method of abating or rendering inaudible the sound emitted by arc lamps supplied with or operated by an alternating or pulsating current by increasing the rate of such alternations or pulsations up to that of the limit of audition, as set forth.

NIKOLA TESLA.

Witnesses:
FRANK B. MURPHY,
RAPHAËL NETTER.

(No Model.) 2 Sheets—Sheet 1.

N. TESLA.

ALTERNATING ELECTRIC CURRENT GENERATOR.

No. 447,921. Patented Mar. 10, 1891.

Fig. 1

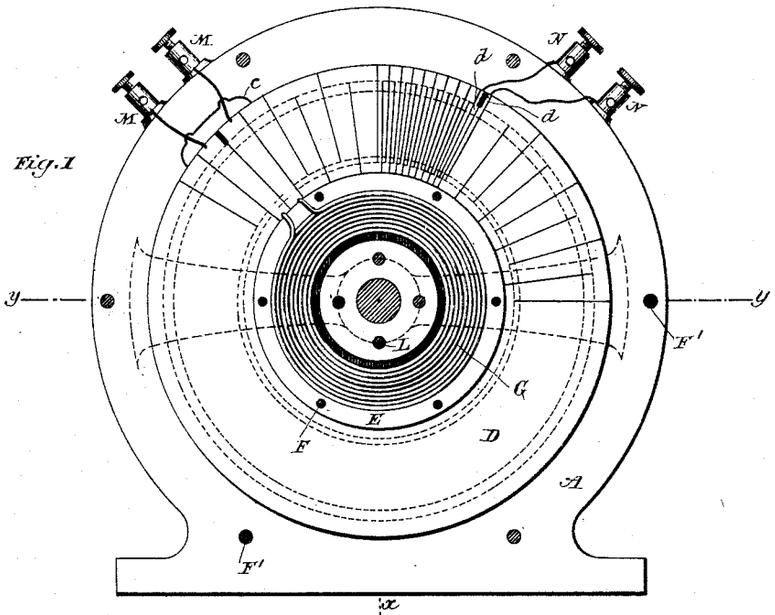

Fig. 2

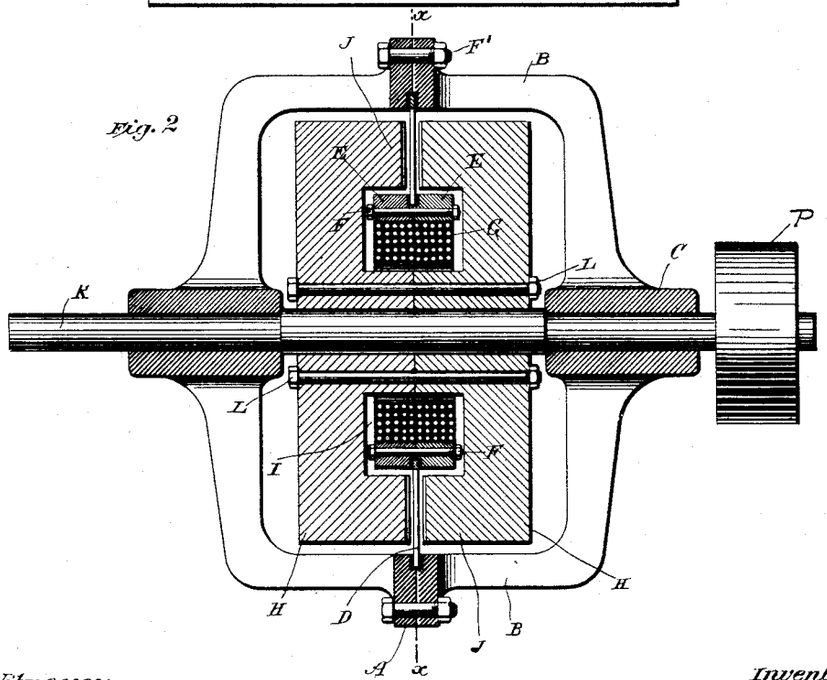

Witnesses:
Ernest Hopkinson
Frank B. Murphy.

Inventor
Nikola Tesla
by
Duncan & Page
Attorneys.

THE NORRIS PETERS CO., PHOTO-LITHO., WASHINGTON, D. C.

(No Model.) 2 Sheets—Sheet 2.

N. TESLA.

ALTERNATING ELECTRIC CURRENT GENERATOR.

No. 447,921. Patented Mar. 10, 1891.

Fig. 3

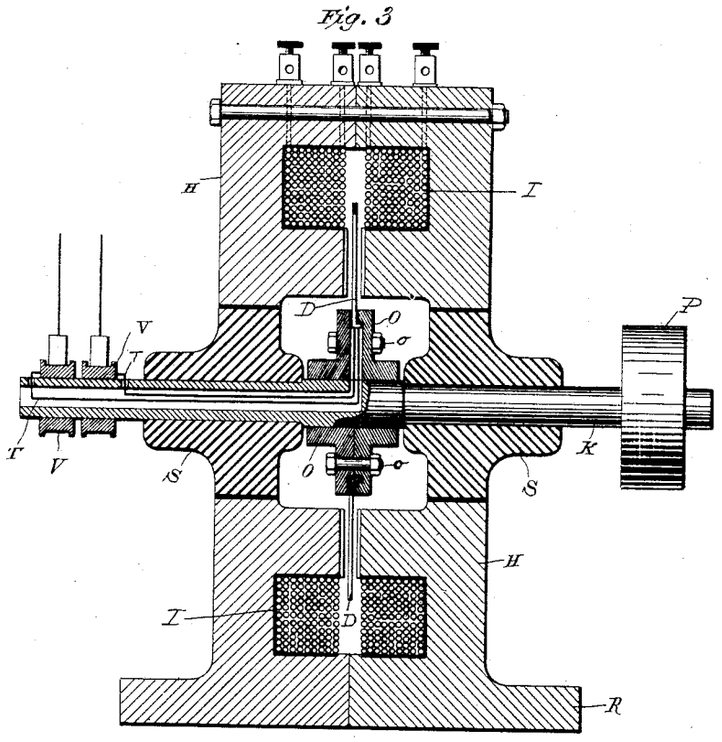

Fig. 4

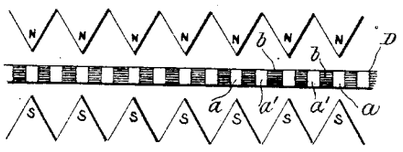

Witnesses:
Ernest Hopkinson
Frank B. Murphy.

Inventor
Nikola Tesla
by
Duncan & Page
Attorneys.

THE NORRIS PETERS CO., PHOTO-LITHO., WASHINGTON, D. C.

UNITED STATES PATENT OFFICE.

NIKOLA TESLA, OF NEW YORK, N. Y.

ALTERNATING-ELECTRIC-CURRENT GENERATOR.

SPECIFICATION forming part of Letters Patent No. 447,921, dated March 10, 1891.

Application filed November 15, 1890. Serial No. 371,554. (No model.)

To all whom it may concern:

Be it known that I, NIKOLA TESLA, a subject of the Emperor of Austria, from Smiljan, Lika, border country of Austria-Hungary, residing at New York, in the county and State of New York, have invented certain new and useful Improvements in Alternating-Current Machines, of which the following is a specification, reference being had to the accompanying drawings.

In the systems of distribution of electrical energy from alternating-current generators in present use the generators give ordinarily from one to three hundred alternations of current per second. I have recognized and demonstrated in practice that it is of great advantage, on many accounts, to employ in such systems generators capable of producing a very much greater number of alternations per second—say fifteen thousand per second or many more. To produce such a high rate of alternation, it is necessary to construct a machine with a great number of poles or polar projections; but such construction, on this account, in order to be efficient, is rendered difficult. If an armature without polar projections be used, it is not easy to obtain the necessary strength of field, mainly in consequence of the comparatively great leakage of the lines of force from pole to pole. If, on the contrary, an armature-core formed or provided with polar projections be employed, it is evident that a limit is soon reached at which the iron is not economically utilized, being incapable of following without considerable loss the rapid reversals of polarity. To obviate these and other difficulties, I have devised a form of machine embodying the following general features of construction.

I provide a field-magnet core made up of two independent parts formed with grooves for the reception of one or more energizing-coils. The energizing coil, or coils, is completely surrounded by the iron core, except on one side, where occurs the opening between the polar faces of the core, which opening is made as narrow as the conditions of the machine will permit. The polar faces of the core of the field are not smooth, but formed with a great many projections or serrations, the points of which in one side or polar face are preferably exactly opposite those in the other. Between the faces so formed I mount or support the armature coil or coils and provide either for rotating the field-magnet or the armature, or both, and I arrange the said armature-coil or conductor so that it will be symmetrically disposed with respect to the field—that is to say, so that when one portion of the conductor is passing through the strongest portion of the field the other portion, which forms the return for the former, is passing through the weakest points or parts of the field. The strongest points of the field, it will be understood, are those between the projections or points on the polar faces, while the weakest points lie midway between them.

A field-magnet, when constructed as above described, produces, when the energizing-coil is traversed by a continuous current, a field of great strength, and one which may be made to vary greatly in intensity at points not farther distant from one another than the eighth of an inch. In a machine thus constructed there is comparatively little of that effect which is known as "magnetic leakage," and there is also but a slight armature reaction. Either the armature-conductor or the field-magnet may be stationary while the other rotates, and as it is often desirable to maintain the conductors stationary and to rotate the field-magnet I have made a special modification of the construction of the machine for this purpose, and with a view in such case of still further simplifying the machine and rendering it more easy to maintain in operation I arrange the armature-conductors and the frame or supports therefor so as to support also a fixed coil or coils for energizing the rotating field-magnet, thus obviating the employment of all sliding contacts.

In the accompanying drawings I have illustrated the two typical forms of my machine above referred to.

Figure 1 is a vertical central section of the machine, taken on lines x x of Fig. 2; and Fig. 2 is a horizontal section on line y y of Fig. 1. The machine in these two figures is one in which the armature-conductor and the field-coil are stationary while the field-magnet core revolves. Fig. 3 is a vertical central section of a machine embodying the same plan of construction, but having a stationary field-

magnet and rotating armature. Fig. 4 is a diagram illustrating the peculiar configuration of the polar faces and the relation of the armature conductor or conductors thereto.

In Figs. 1 and 2, A A designate two cylindrical castings provided with bracket-arms B B, in which latter are bushings C for the rotating shaft. The conductor in which the currents are induced may be constructed or arranged in various ways; but I prefer to form it in the following manner: I take an annular plate of copper D and by means of a saw or other cutting-tool cut in it radial slots from one edge nearly through to the other, beginning alternately from opposite edges. In this way a continuous zigzag conductor is formed. To the inner edge of this plate are secured two rings of non-magnetic metal E, which are insulated from the copper conductor, but held firmly thereto, as by means of bolts F. Within the rings E is then placed an annular coil G, which is the energizing-coil for the field-magnet. The conductor D and the parts attached thereto are supported by means of the cylindrical shell or casting A A, the two parts of which are brought together and clamped by bolts F′ to the outer edge of the conductor D. The conductor D is also insulated from the shell A.

The core for the field-magnet is built up of two circular parts H H, formed with annular grooves I, which, when the two parts are brought together, form a space for the reception of the energizing-coil G. The central parts or hubs of the cores H H are trued off, so as to fit closely against one another, while the outer portions or flanges which form the polar faces J J are reduced somewhat in thickness to make room for the conductor D, and are serrated on their faces or provided in any other convenient way with polar projections. The two parts of the core H H are mounted on and fixed to the shaft K, and are bound together by bolts L. The number of serrations in the polar faces is arbitrary; but there must exist between them and the radial portions of the conductor D a certain relation, which will be understood by reference to Fig. 4, in which N N represent the projections or points on one face of the core of the field, and S S the points of the other face. The conductor D is shown in this figure in section, *a a′* designating the radial portions of the conductor, and *b* the insulating-divisions between the same. The relative width of the parts *a a′* and the space between any two adjacent points N N or S S is such that when the radial portions *a* of the conductor are passing between the opposite points N S, where the field is strongest, the intermediate radial portions *a′* are passing through the widest spaces midway between such points and where the field is weakest. Since the core on one side is of opposite polarity to the part facing it, all the points or projections of one polar face will be of opposite polarity to those of the other face. Hence, although the space between any two adjacent points on the same face may be extremely small, there will be no leakage of the magnetic lines between any two points of the same name; but the lines of force will pass across from one set of points to the other. The construction followed obviates to a great degree the distortion of the magnetic lines by the action of the current in the conductor D, in which it will be observed the current is flowing at any given time from the center toward the periphery in one set of radial parts *a* and in the opposite direction in the adjacent parts *a′*.

In order to connect the energizing-coil G with a source of continuous current, I have found it convenient to utilize two adjacent radial portions of the conductor D for connecting the terminals of the coil G with two binding-posts M. For this purpose the plate D is cut entirely through, as shown, and the break thus made is bridged over by a short conductor *c*.

At any convenient point the plate D is cut through to form two terminals *d*, which are connected to binding-posts N.

The core H H, when rotated by the driving-pulley P, generates in the conductors D an alternating current, which is taken off from the binding-posts N. It will be observed that from the nature of the construction described this machine is capable of producing an alternating current of an enormously high rate of alternations.

When it is desired to rotate the conductor between the faces of a stationary field-magnet, I adopt the construction shown in Fig. 3. The conductor D in this case is or may be made in substantially the same manner as above described by slotting an annular conducting-plate and supporting it between two heads O, held together by bolts *o* and fixed to the driving-shaft K. The inner edge of the plate or conductor D is preferably flanged to secure a firmer union between it and the heads O. It is insulated from said head. The field-magnet in this case consists of two annular parts H H, provided with annular grooves I for the reception of the coils. The flanges or faces surrounding the annular groove are brought together, while the inner flanges are serrated, as in the previous case, and form the polar faces. The two parts H H are formed with a base R, upon which the machine rests.

S S are non-magnetic bushings secured or set in the central opening of the cores.

The conductor D is cut entirely through at one point to form terminals, from which insulated conductors T are led through the shaft to collecting-rings V.

What I claim is—

1. The combination, in an annular field of force formed by opposing polar faces with radial grooves or serrations and with said poles, of a connected series of radial conductors so disposed with relation to the serrations that while one portion of the radial conduct-

ors is passing between the strongest parts of the field, or the points where the two poles most nearly approach, the adjacent or intermediate conductors will pass through the weakest parts of the field, or the points where the two poles are most remote, as set forth.

2. The combination, with a connected series of radial conductors forming an annular coil, of a stationary two-part supporting-frame clamped to and insulated from the outer ends of said conductors, a ring formed in two parts clamped to the inner ends of the same, an energizing-coil contained in said ring, and a field-core made in two parts and inclosing said energizing-coil and presenting annular polar faces to the series of radial conductors, as described.

3. The combination, with the annular conducting-plate slotted to form a connected series of radial conductors, a sectional supporting-frame secured to and insulated from the outer edge of the slotted plate, a sectional ring secured to and insulated from the inner edge of said plate, a hollow energizing-coil contained in said ring, and a field-core composed of two parts bolted together and recessed to inclose the energizing-coil, said cores being mounted in a rotating shaft, as set forth.

4. The combination, with two annular polar faces of opposite magnetic polarity and formed with opposite points, projections, or serrations, of a conductor turned back upon itself in substantially radial convolutions and mounted in the annular field, whereby a rotation of the field or said conductor will develop therein an alternating current, as set forth.

5. The combination, with a polar face of given polarity formed with grooves or serrations, of a polar face of opposite polarity with corresponding grooves or serrations, the two polar faces being placed with their grooves opposite to each other, and a conductor or coil mounted between said faces with the capability of movement across the lines of force in a direction at right angles to that of the grooves or serrations, as set forth.

6. In a magneto-electric machine, the combination of a sectional frame, a field-magnet core composed of two connected parts, a rotating shaft on which said core is mounted, a conductor in which currents are to be induced, the convolutions of which are radially disposed between the polar faces of the field-core and secured to and supported by the frame, and an energizing-coil for the field-core supported by the induced-current coil and contained in an annular recess formed by grooves in the faces of the two sections of the field-core.

7. The combination, with opposing field-magnet poles formed with projections or serrations in their faces, the highest parts or prominences of one face being opposite to those of the other, of a conductor the convolutions of which are adapted to pass at right angles through the magnetic lines between the opposing prominences, as set forth.

8. The combination, with a rotating field-magnet core having two opposing and annular polar faces with radial grooves or serrations therein systematically disposed, so that the highest parts or prominences of one face lie opposite to those of the other, of a stationary conductor with radial convolutions and mounted between the polar faces, as set forth.

NIKOLA TESLA.

Witnesses:
ROBT. F. GAYLORD,
PARKER N. PAGE.

(No Model.)

N. TESLA.

SYSTEM OF ELECTRIC LIGHTING.

No. 454,622. Patented June 23, 1891.

Fig. 1

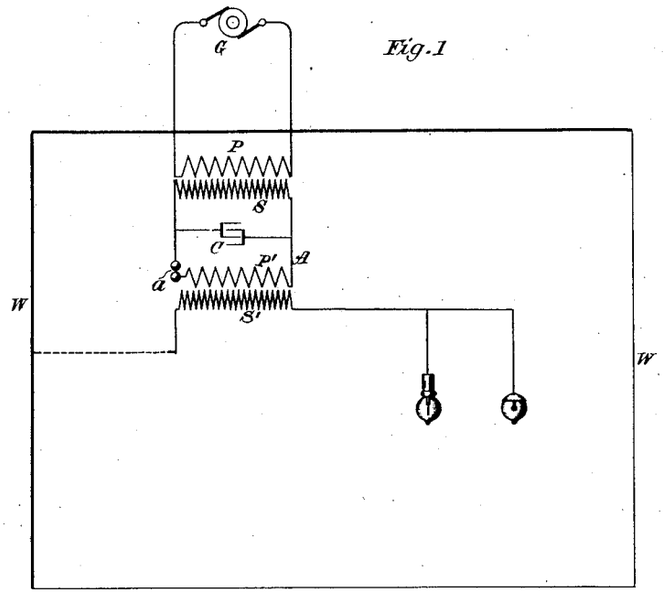

Fig. 2

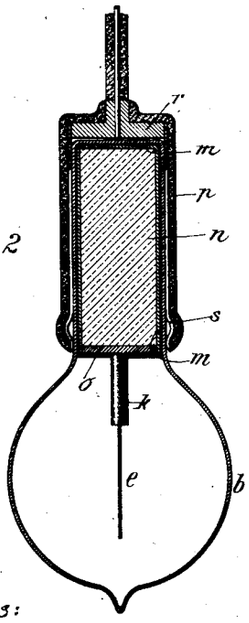

Fig. 3

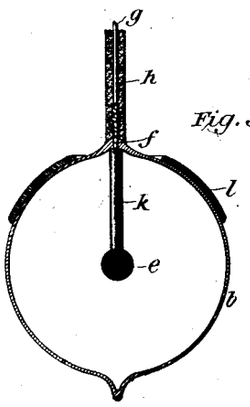

Witnesses:
Raphaël Netter
Ernest Hopkinson

Inventor
Nikola Tesla
by
Duncan & Page,
Attorneys.

UNITED STATES PATENT OFFICE.

NIKOLA TESLA, OF NEW YORK, N. Y.

SYSTEM OF ELECTRIC LIGHTING.

SPECIFICATION forming part of Letters Patent No. 454,622, dated June 23, 1891.

Application filed April 25, 1891. Serial No. 390,414. (No model.)

To all whom it may concern:

Be it known that I, NIKOLA TESLA, a subject of the Emperor of Austria-Hungary, from Smiljan, Lika, border country of Austria-Hungary, and a resident of New York, in the county and State of New York, have invented certain new and useful Improvements in Methods of and Apparatus for Electric Lighting, of which the following is a specification, reference being had to the drawings accompanying and forming a part of the same.

This invention consists in a novel method of and apparatus for producing light by means of electricity.

For a better understanding of the invention it may be stated, first, that heretofore I have produced and employed currents of very high frequency for operating translating devices, such as electric lamps, and, second, that currents of high potential have also been produced and employed for obtaining luminous effects, and this, in a broad sense, may be regarded for purposes of this case as the prior state of the art; but I have discovered that results of the most useful character may be secured under entirely practicable conditions by means of electric currents in which both the above-described conditions of high frequency and great difference of potential are present. In other words, I have made the discovery that an electrical current of an excessively small period and very high potential may be utilized economically and practicably to great advantage for the production of light.

It is difficult for me to define the exact limits of frequency and potential within which my discovery is comprised, for the results obtained are due to both conjointly; but I would make it clear that as to the inferior limits of both, the lowest frequency and potential that I contemplate using are far above what have heretofore been regarded as practicable. As an instance of what I regard as the lowest practicable limits I would state that I have obtained fairly good results by a frequency as low as fifteen thousand to twenty thousand per second and a potential of about twenty thousand volts. Both frequency and potential may be enormously increased above these figures, the practical limits being determined by the character of the apparatus and its capability of standing the strain. I do not mean by the term "excessively small period" and similar expressions herein to imply that I contemplate any number of pulsations or vibrations per second approximating to the number of light-waves, and this will more fully appear from the description of the nature of invention which is hereinafter contained.

The carrying out of this invention and the full realization of the conditions necessary to the attainment of the desired results involve, first, a novel method of and apparatus for producing the currents or electrical effects of the character described; second, a novel method of utilizing and applying the same for the production of light, and, third, a new form of translating device or light-giving appliance. These I shall now describe.

To produce a current of very high frequency and very high potential, certain well-known devices may be employed. For instance, as the primary source of current or electrical energy a continuous-current generator may be used, the circuit of which may be interrupted with extreme rapidity by mechanical devices, or a magneto-electric machine specially constructed to yield alternating currents of very small period may be used, and in either case, should the potential be too low, an induction-coil may be employed to raise it; or, finally, in order to overcome the mechanical difficulties, which in such cases become practically insuperable before the best results are reached, the principle of the disruptive discharge may be utilized. By means of this latter plan I produce a much greater rate of change in the current than by the other means suggested, and in illustration of my invention I shall confine the description of the means or apparatus for producing the current to this plan, although I would not be understood as limiting myself to its use. The current of high frequency, therefore, that is necessary to the successful working of my invention I produce by the disruptive discharge of the accumulated energy of a condenser maintained by charging said condenser from a suitable source and discharging it into or through a circuit under proper relations of self-induction, capacity, resistance, and period in well-understood ways. Such a discharge is

known to be, under proper conditions, intermittent or oscillating in character, and in this way a current varying in strength at an enormously rapid rate may be produced. Having produced in the above manner a current of excessive frequency, I obtain from it by means of an induction-coil enormously high potentials—that is to say, in the circuit through which or into which the disruptive discharge of the condenser takes place I include the primary of a suitable induction-coil, and by a secondary coil of much longer and finer wire I convert to currents of extremely high potential. The differences in the length of the primary and secondary coils in connection with the enormously rapid rate of change in the primary current yield a secondary of enormous frequency and excessively high potential. Such currents are not, so far as I am aware, available for use in the usual ways; but I have discovered that if I connect to either of the terminals of the secondary coil or source of current of high potential the leading-in wires of such a device, for example, as an ordinary incandescent lamp, the carbon may be brought to and maintained at incandescence, or, in general, that any body capable of conducting the high-tension current described and properly inclosed in a rarefied or exhausted receiver may be rendered luminous or incandescent, either when connected directly with one terminal of the secondary source of energy or placed in the vicinity of such terminals so as to be acted upon inductively.

Without attempting a detailed explanation of the causes to which this phenomenon may be ascribed, I deem it sufficient to state that, assuming the now generally accepted theories of scientists to be correct, the effects thus produced are attributable to molecular bombardment, condenser action, and electric or etheric disturbances. Whatever part each or any of these causes may play in producing the effects noted, it is, however, a fact that a strip of carbon or a mass of any other shape, either of carbon or any more or less conducting substance in a rarefied or exhausted receiver and connected directly or inductively to a source of electrical energy such as I have described, may be maintained at incandescence if the frequency and potential of the current be sufficiently high.

I would here state that by the terms "currents of high frequency and high potential" and similar expressions which I have used in this description I do not mean, necessarily, currents in the usual acceptance of the term, but, generally speaking, electrical disturbances or effects such as would be produced in the secondary source by the action of the primary disturbance or electrical effect.

It is necessary to observe in carrying out this invention that care must be taken to reduce to a minimum the opportunity for the dissipation of the energy from the conductors intermediate to the source of current and the light-giving body. For this purpose the conductors should be free from projections and points and well covered or coated with a good insulator.

The body to be rendered incandescent should be selected with a view to its capability of withstanding the action to which it is exposed without being rapidly destroyed, for some conductors will be much more speedily consumed than others.

I now refer to the accompanying drawings, in which—

Figure 1 is a diagram of one of the special arrangements that I have employed in carrying out my discovery, and Figs. 2 and 3 are vertical sectional views of modified forms of light-giving devices that I have devised for use with the system.

I would state that as all of the apparatus herein shown, with the exception of certain special forms of lamp invented by me, is or may be of well-known construction and in common use for other purposes, I have indicated such well-known parts therefor by conventional representations.

G is the primary source of current or electrical energy. I have explained above how various forms of generator might be used for this purpose; but in the present illustration I assume that G is an alternating-current generator of comparatively low electro-motive force. Under such circumstances I raise the potential of the current by means of an induction-coil having a primary P and a secondary S. Then by the current developed in this secondary I charge a condenser C, and this condenser I discharge through or into a circuit A, having an air-gap *a*, or, in general, means for maintaining a disruptive discharge. By the means above described a current of enormous frequency is produced. My object is next to convert this into a working-circuit of very high potential, for which purpose I connect up in the circuit A the primary P′ of an induction-coil having a long fine wire secondary S′. The current in the primary P′ develops in the secondary S′ a current or electrical effect of corresponding frequency, but of enormous difference of potential, and the secondary S′ thus becomes the source of the energy to be applied to the purpose of producing light.

The light-giving devices may be connected to either terminal of the secondary S′. If desired, one terminal may be connected to a conducting-wall W of a room or space to be lighted and the other arranged for connection of the lamps therewith. In such case the walls should be coated with some metallic or conducting substance in order that they may have sufficient conductivity.

The lamps or light-giving devices may be an ordinary incandescent lamp; but I prefer to use specially-designed lamps, examples of which I have shown in detail in the draw-

ings. This lamp consists of a rarefied or exhausted bulb or globe which incloses a refractory conducting body, as carbon, of comparatively small bulk and any desired shape. This body is to be connected to the secondary by one or more conductors sealed in the glass, as in ordinary lamps, or is arranged to be inductively connected thereto. For this last-named purpose the body is in electrical contact with a metallic sheet in the interior of the neck of the globe, and on the outside of said neck is a second sheet which is to be connected with the source of current. These two sheets form the armatures of a condenser, and by them the currents or potentials are developed in the light-giving body. As many lamps of this or other kinds may be connected to the terminal of S′ as the energy supplied is capable of maintaining at incandescence.

In Fig. 3, *b* is a rarefied or exhausted glass globe or receiver, in which is a body of carbon or other suitable conductor *e*. To this body is connected a metallic conductor *f*, which passes through and is sealed in the glass wall of the globe, outside of which it is united to a copper or other wire *g*, by means of which it is to be electrically connected to one pole or terminal of the source of current. Outside of the globe the conducting-wires are protected by a coating of insulation *h*, of any suitable kind, and inside the globe the supporting-wire is inclosed in and insulated by a tube or coating *k* of a refractory insulating substance, such as pipe-clay or the like. A reflecting-plate *l* is shown applied to the outside of the globe *b*. This form of lamp is a type of those designed for direct electrical connection with one terminal of the source of current; but, as above stated, there need not be a direct connection, for the carbon or other illuminating body may be rendered luminous by inductive action of the current thereon, and this may be brought about in several ways. The preferred form of lamp for this purpose, however, is shown in Fig. 2. In this figure the globe *b* is formed with a cylindrical neck, within which is a tube or sheet *m* of conducting material on the side and over the end of a cylinder or plug *n* of any suitable insulating material. The lower edges of this tube are in electrical contact with a metallic plate *o*, secured to the cylinder *n*, all the exposed surfaces of such plate and of the other conductors being carefully coated and protected by insulation. The light-giving body *e*, in this case a straight stem of carbon, is electrically connected with the said plate by a wire or conductor similar to the wire *f*, Fig. 3, which is coated in like manner with a refractory insulating material *k*. The neck of the globe fits into a socket composed of an insulating tube or cylinder *p*, with a more or less complete metallic lining *s*, electrically connected by a metallic head or plate *r* with a conductor *g*, that is to be attached to one pole of the source of current. The metallic lining *s* and the sheet *m* thus compose the plates or armatures of a condenser.

This invention is not limited to the special means described for producing the results hereinabove set forth, for it will be seen that various plans and means of producing currents of very high frequency are known, and also means for producing very high potentials; but I have only described herein certain ways in which I have practically carried out the invention.

What I claim is—

1. The improvement in the art of electric lighting herein described, which consists in generating or producing for the operation of the lighting devices currents of enormous frequency and excessively high potential, substantially as herein described.

2. The method of producing an electric current for practical application, such as for electric lighting, which consists in generating or producing a current of enormous frequency and inducing by such current in a working circuit, or that to which the lighting devices are connected, a current of corresponding frequency and excessively high potential, as set forth.

3. The method of producing an electric current for practical application, such as for electric lighting, which consists in charging a condenser by a given current, maintaining an intermittent or oscillatory discharge of said condenser through or into a primary circuit, and producing thereby in a secondary working-circuit in inductive relation to the primary very high potentials, as set forth.

4. The method of producing electric light by incandescence by electrically or inductively connecting a conductor inclosed in a rarefied or exhausted receiver to one of the poles or terminals of a source of electric energy or current of a frequency and potential sufficiently high to render said body incandescent, as set forth.

5. A system of electric lighting, consisting in the combination, with a source of electric energy or current of enormous frequency and excessively high potential, of an incandescent lamp or lamps consisting of a conducting body inclosed in a rarefied receiver and connected directly or inductively to one pole or terminal of the source of energy, as set forth.

6. In a system of electric lighting, the combination, with a source of currents of enormous frequency and excessively high potential, of incandescent lighting devices, each consisting of a conducting body inclosed in a rarefied or exhausted receiver, said conducting body being connected directly or inductively to one pole or terminal of the source of current, and a conducting body or bodies in the vicinity of said lighting devices connected to the other pole or terminal of said source, as set forth.

7. In a system of electric lighting, the combination, with a source of currents of enormous frequency of excessively high potential, of lighting devices, each consisting of a conducting body inclosed in a rarefied or exhausted receiver and connected by conductors directly or inductively with one of the terminals of said source, all parts of the conductors intermediate to the said source and the light-giving body being insulated and protected to prevent the dissipation of the electric energy, as herein set forth.

NIKOLA TESLA.

Witnesses:
PARKER W. PAGE,
M. G. TRACY.

(No Model.)

N. TESLA.

ELECTRO MAGNETIC MOTOR.

No. 455,067. Patented June 30, 1891.

Fig. 1

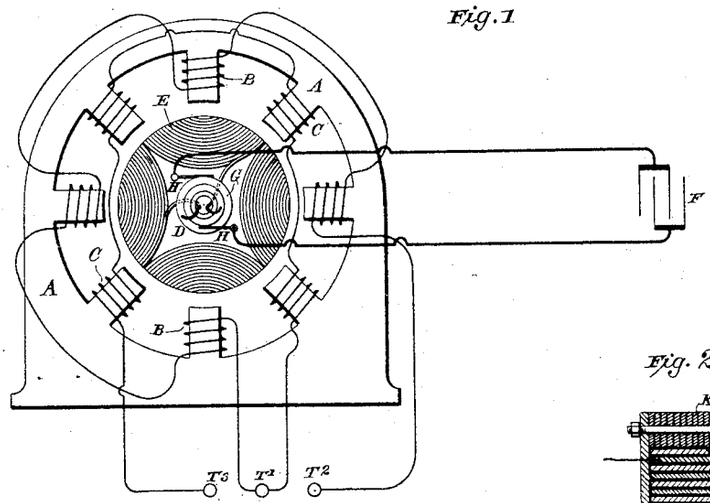

Fig. 2

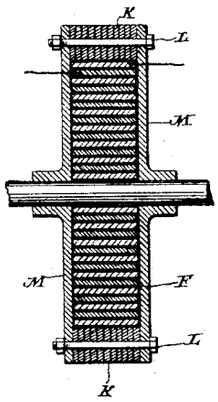

Fig. 4

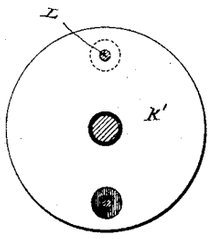

Fig. 3

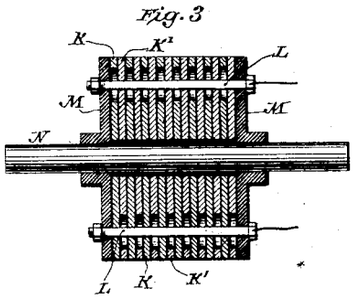

Fig. 5

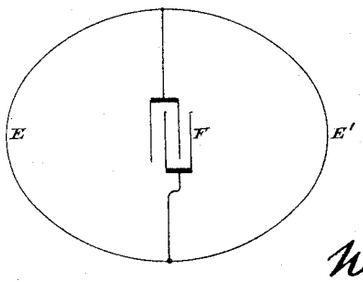

Witnesses
Raphael Netter
Frank B. Murphy.

Inventor
Nikola Tesla
by
Duncan & Page.
Attorneys.

THE NORRIS PETERS CO., PHOTO-LITHO., WASHINGTON, D. C.

UNITED STATES PATENT OFFICE.

NIKOLA TESLA, OF NEW YORK, N. Y.

ELECTRO-MAGNETIC MOTOR.

SPECIFICATION forming part of Letters Patent No. 455,067, dated June 30, 1891.

Application filed January 27, 1891. Serial No. 379,251. (No model.)

To all whom it may concern:

Be it known that I, NIKOLA TESLA, a subject of the Emperor of Austria, from Smiljan, Lika, border country of Austria-Hungary, and residing at New York, in the county and State of New York, have invented certain new and useful Improvements in Electro-Magnetic Motors, of which the following is a specification, reference being had to the accompanying drawings.

The subject of my present invention is an improvement primarily designed for application to alternating-current motors of the special type invented by me, and of which the operation is due to the action of alternating currents differing in phase and directed through or developed in independent energizing-circuits in the motor, and causing a shifting or rotation of the magnetic poles or their resultant attractive forces upon the rotating element or armature.

My improvements are based upon certain laws governing the action or effects produced by a condenser when connected to an electric circuit through which an alternating or in general an undulating current is made to pass. Some of these effects, and those most important in connection with my invention, are as follows: First, if the terminals or plates of a condenser be connected with two points of a circuit, the potentials of which are made to rise and fall in rapid succession, the condenser allows the passage or, more strictly speaking, the transferrence of a current, although its plates or armatures may be so carefully insulated as to prevent almost completely the passage of a current of unvarying strength or direction and of moderate electro-motive force; second, if a circuit the terminals of which are connected with the plates of the condenser possess a certain self-induction, the condenser will overcome or counteract to a greater or less degree, dependent upon well-understood conditions, the effects of such self-induction; third, if two points of a closed or complete circuit through which a rapidly rising and falling current flows be shunted or bridged by a condenser, a variation in the strength of the currents in the branches and also a difference of phase of the currents therein is produced. These effects I have utilized and applied in a variety of ways in the construction and operation of my motors, as by producing a difference in phase in the two energizing-circuits of an alternating-current motor by connecting the two circuits in derivation and connecting up a condenser in series in one of the circuits; but such applications seem to be obvious to one familiar with my motors and the facts above enumerated.

My present improvements, however, possess certain novel features of practical value and involve a knowledge of facts less generally known. These improvements comprise the use of a condenser or condensers in connection with the induced or armature circuit of a motor and certain details of the construction of such motors. In an alternating-current motor of the type to which I have particularly referred above, or in any other which has an armature coil or circuit closed upon itself, the latter represents not only an inductive resistance, but one which is periodically varying in value, both of which facts complicate and render difficult the attainment of the conditions best suited to the most efficient working of the motors. The most efficient working conditions, in other words, require, first, that for a given inductive effect upon the armature there should be the greatest possible current through the armature or induced coils, and, second, that there should always exist between the currents in the energizing and the induced circuits a given relation of phase. Hence whatever tends to decrease the self-induction and increase the current in the induced circuits will, other things being equal, increase the output and efficiency of the motor, and the same will be true of causes that operate to maintain the mutual attractive effect between the field-magnets and armature at its maximum. I secure these results by connecting with the induced circuit or circuits a condenser, in the manner hereinafter described, and I also, with this purpose in view, construct the motor in a special manner.

Referring to the drawings for a particular description of the invention, Figure 1 is a view, mainly diagrammatic, of an alternating-current motor to which my present invention is applied. Fig. 2 is a central section, in line with the shaft, of a special form of armature-core adapted to the invention. Fig. 3 is a

similar section of a modification of the same. Fig. 4 is one of the sections of the core detached. Fig. 5 is a diagram showing a modified disposition of armature or induced circuits.

The general plan of the invention is illustrated in Fig. 1. A A in this figure represent the frame and field-magnets of an alternating-current motor, the poles or projections of which are wound with coils B and C, forming independent energizing-circuits connected either to the same or to independent sources of alternating currents, as is now well understood, so that the currents flowing through the circuits, respectively, will have a difference of phase. Within the influence of this field is an armature-core D, wound with coils E. In my motors of this description heretofore these coils have been closed upon themselves, or connected in a closed series; but in the present case each coil or the connected series of coils terminates in the opposite plates of a condenser F. For this purpose the ends of the series of coils are brought out through the shaft to collecting-rings G, which are connected to the condenser by contact-brushes H and suitable conductors, the condenser being independent of the machine. The armature-coils are wound or connected in such manner that adjacent coils produce opposite poles.

The action of this motor and the effect of the plan followed in its construction are as follows: The motor being started in operation and the coils of the field-magnets being traversed by alternating currents, currents are induced in the armature-coils by one set of field-coils, as B, and the poles thus established are acted upon by the other set, as C. The armature-coils, however, have necessarily a high self-induction, which opposes the flow of the currents thus set up. The condenser F not only permits the passage or transferrence of these currents, but also counteracts the effects of self-induction, and by a proper adjustment of the capacity of the condenser, the self-induction of the coils, and the periods of the currents the condenser may be made to overcome entirely the effect of the self-induction.

It is preferable on account of the undesirability of using sliding contacts of all kinds to associate the condenser with the armature directly, or make it a part of the armature. In some cases I build up the armature of annular plates K K, held by bolts L between heads M, which are secured to the driving-shaft, and in the hollow space thus formed I place a condenser F, generally by winding the two insulated plates thereof spirally around the shaft. In other cases I utilize the plates of the core itself as the plates of the condenser. For example, in Figs. 3 and 4, N is the driving-shaft, M M are the heads of the armature-core, and K K′ the iron plates of which the core is built up. These plates are insulated from the shaft and from one another, and are held together by rods or bolts L. The bolts pass through a large hole in one plate and a small hole in the one next adjacent, and so on, connecting electrically all of plates K, as one armature of a condenser, and all of plates K′ as the other.

To either of the condensers above described the armature-coils may be connected, as explained by reference to Fig. 1.

In motors in which the armature-coils are closed upon themselves—as, for example, in any form of alternating-current motor in which one armature coil or set of coils is in the position of maximum induction with respect to the field coils or poles, while the other is in the position of minimum induction—the coils are preferably connected in one series, and two points of the circuit thus formed are bridged by a condenser. This is illustrated in Fig. 5, in which E represents one set of armature-coils and E′ the other. Their points of union are joined through a condenser F. It will be observed that in this disposition the self-induction of the two branches E and E′ varies with their position relatively to the field-magnet, and that each branch is alternately the predominating source of the induced current. Hence the effect of the condenser F is twofold. First, it increases the current in each of the branches alternately, and, secondly, it alters the phrase of the currents in the branches, this being the well-known effect which results from such a disposition of a condenser with a circuit, as above described. This effect is favorable to the proper working of the motor, because it increases the flow of current in the armature-circuits due to a given inductive effect, and also because it brings more nearly into coincidence the maximum magnetic effects of the coacting field and armature-poles.

It will be understood, of course, that the causes that contribute to the efficiency of condensers when applied to such uses as above must be given due consideration in determining the practicability and efficiency of the motors. Chief among these is, as is well known, the periodicity of the current, and hence the improvements which I have herein described are more particularly adapted to systems in which a very high rate of alternation or change is maintained.

Although this invention has been illustrated herein in connection with a special form of motor, it will be understood that it is equally applicable to any other alternating-current motor in which there is a closed armature-coil wherein the currents are induced by the action of the field, and, furthermore, I would state that the feature of utilizing the plates or sections of a magnetic core for forming the condenser, I regard as applicable, generally, to other kinds of alternating-current apparatus.

Having now described my invention, what I claim is—

1. In an alternating-current motor, the com-

bination, with the field-magnets and energizing-circuit, of an armature-circuit and a core adapted to be energized by currents induced in its circuit by the currents in the field-circuit, and a condenser connected with the armature-circuit only, as set forth.

2. In an alternating-current motor, the combination, with armature-coils in inductive relation to the field and connected in a closed circuit, of a condenser bridging said circuit, as set forth.

3. In an alternating-current motor, the combination, with an armature and two energizing-circuits formed by coils wound thereon in different inductive relations to the field and joined in a continuous or closed series, of a condenser the plates of which are connected, respectively, to the junctions of the circuits or coils, as set forth.

4. In an alternating-current motor, the combination, with the induced energizing coil or coils of the armature, of a condenser connected therewith and made a part of the armature or rotating element of the motor.

5. In an alternating-current motor, the combination, with an armature-core composed of insulated conducting-plates alternately connected to form a condenser, of an induced energizing coil or coils wound thereon and connected to the plates or armatures of the said condenser.

6. A magnetic core for alternating-current apparatus, composed of plates or sections insulated from each other and alternately connected to form the two parts or armatures of a condenser.

NIKOLA TESLA.

Witnesses:
PARKER W. PAGE,
FRANK B. MURPHY.

(No Model.)

N. TESLA.

ELECTRICAL METER.

No. 455,068. Patented June 30, 1891.

Fig. 1

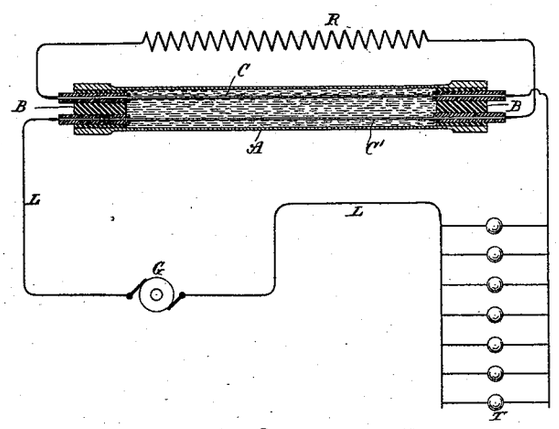

Fig. 2

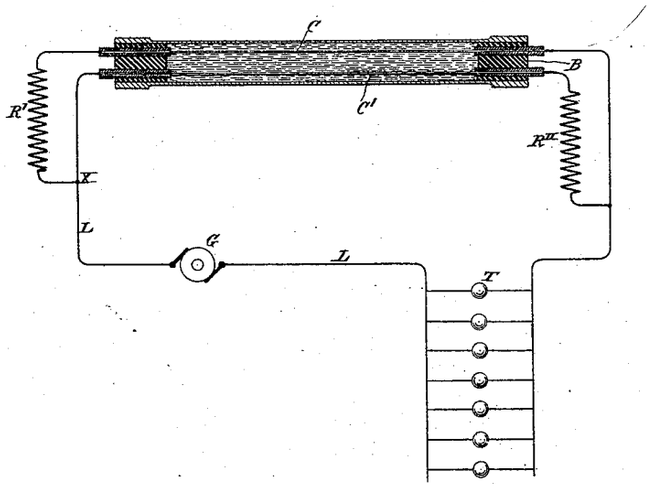

Witnesses:
Raphael Netter
Ernest Hopkinson

Inventor
Nikola Tesla
by Duncan & Page.
Attorneys.

THE NORRIS PETERS CO., PHOTO-LITHO., WASHINGTON, D. C.

UNITED STATES PATENT OFFICE.

NIKOLA TESLA, OF NEW YORK, N. Y.

ELECTRICAL METER.

SPECIFICATION forming part of Letters Patent No. 455,068, dated June 30, 1891.

Application filed March 27, 1891. Serial No. 386,666. (No model.)

To all whom it may concern:

Be it known that I, NIKOLA TESLA, a subject of the Emperor of Austria, from Smiljan, Lika, border country of Austria-Hungary, and a resident of New York, in the county and State of New York, have invented certain new and useful Improvements in Electrical Meters, of which the following is a specification, reference being had to the drawings accompanying and forming a part of the same.

My invention pertains to methods of and apparatus for estimating the electrical energy that has been expended in an electric circuit or any given portion of the same.

The principle of the invention is embodied in any form of apparatus in which a conductor immersed in an electrolytic solution is so arranged that metal may be deposited upon it or taken away from it in such manner that its electrical resistance is varied in a definite proportion to the strength of the current the energy of which is to be computed, whereby such variation in resistance may serve as a measure of the energy or may be utilized in various well-understood ways to bring into action suitable automatic registering mechanism when the resistance exceeds or falls below predetermined limits.

In carrying out my invention I prefer to employ an electrolytic cell, through which extend two conductors parallel and in close proximity to each other. I connect these conductors in series through a resistance, but in such manner that there is an equal difference of potential between them throughout their entire extent. The free ends or terminals of the conductors are connected either in series in the circuit supplying the current to the lamps or other devices or in parallel to a resistance in the said circuit and in series with the translating devices. Under such circumstances a current passing through the conductors establishes a difference of potential between them which is proportional to the strength of the current, in consequence of which there is a leakage of current from one conductor to the other across the solution. The strength of this leakage current is proportional to the difference of potential, and, therefore, in proportion to the strength of the current passing through the conductors. Moreover, as there is a constant difference of potential between the two conductors throughout the entire extent that is exposed to the solution, the current density through such solution is the same at all corresponding points, and hence the deposit is uniform along the whole of one of the conductors, while the metal is taken away uniformly from the other. The resistance of one conductor is by this means diminished, while that of the other is increased both in proportion to the strength of the current passing through the conductors. From such variation in the resistance of either or both of the conductors forming the positive and negative electrodes of the cell the current energy expended may be readily computed.

Other modified arrangements of the conductors are contemplated, as will be understood from the following description and reference to the drawings.

The figures are diagrams showing the meter in operative relations to a working-circuit and under slightly-modified arrangements.

In Fig. 1, G designates a suitable direct-current generator. L L are the conductors of the circuit extending therefrom and including and supplying lamps or other translating devices T. A is a tube, preferably of glass, the ends of which are sealed, as by means of insulating plugs or caps B B. C C′ are two conductors extending through the tube A, their ends passing out through the plugs B to terminals thereon. These conductors may be corrugated or formed in other proper ways to offer the desired electrical resistance. R is a resistance connected in series with the two conductors C C′, which by their free terminals are connected up in the circuit of one of the conductors L.

The method of using this device and computing by means thereof the energy of the current will be readily understood. First, the resistances of the two conductors C C′, respectively, are accurately measured and noted. Then a known current is passed through the instrument for a given time, and by a second measurement the increase and diminution of the resistances of the two conductors respectively taken. From these data the constant is obtained—that is to say, for example, the increase of resistance of one conductor or the diminution of the resistance of the other per lamp-hour. These two meas-

urements evidently serve as a check, since the gain of one conductor should equal the loss of the other. A further check is afforded by measuring both wires in series with the resistance, in which case the resistance of the whole should remain constant.

In Fig. 2 the conductors C C′ are connected in parallel, the current device at X passing in one branch first through a resistance R′ and then through conductor C, while in the other branch it passes first through conductor C′, and then through resistance R″. The resistances R′ R″ are equal, as also are the resistances of the conductors C C′. It is, moreover, preferable that the respective resistances of the conductors C C′ should be a known and convenient fraction of the coils or resistances R′ R″. It will be observed that in the arrangement shown in Fig. 2 there is a constant potential difference between the two conductors C C′ throughout their entire length.

It will be seen that in both cases illustrated the proportionality of the increase or decrease of resistance to the current strength will always be preserved, for what one conductor gains the other loses, and the resistances of the conductors C C′ being small as compared with the resistances in series with them. It will be understood that after each measurement or registration of a given variation of resistance in one or both conductors the direction of the current should be changed or the instrument reversed, so that the deposit will be taken from the conductor which has gained and added to that which has lost. This principle is capable of many modifications. For instance, since there is a section of the circuit—to wit, the conductor C or C′—that varies in resistance in proportion to the current strength, such variation may be utilized, as is done in many analogous cases, to effect the operation of various automatic devices, such as registers. I prefer, however, for the sake of simplicity to compute the energy by measurements of resistance.

The chief advantages of this invention are, first, that it is possible to read off directly the amount of the energy expended by means of a properly-constructed ohm-meter and without resorting to weighing the deposit; second, it is not necessary to employ shunts, for the whole of the current to be measured may be passed through the instrument; third, the accuracy of the instrument and correctness of the indications are but slightly affected by changes in temperature. In addition to these advantages the invention possesses the merit of economy in the waste of energy and simplicity, compactness, and cheapness in construction.

What I claim is—

1. The method of computing the amount of electrical energy expended in a given time in an electric circuit, which consists in maintaining by the current a potential difference between two conductors in an electrolytic solution uniform throughout the whole extent of such conductors exposed to the solution and measuring the variation of the resistance in one or both of said conductors due to the gain or loss of metal by electro-deposition, as set forth.

2. The combination, with an electric circuit, of a meter composed of an electrolytic cell and two conductors passing through the same, the said conductors being in or connected with the main circuit and so that a potential difference uniform throughout the whole extent exposed to the solution will be maintained between them, as set forth.

3. The combination, with an electric circuit containing translating devices, of a meter composed of an electrolytic cell and two conductors passing through the same and connected in series with the translating devices, and one or more resistances connected therewith for establishing a potential difference between the two conductors through the solution of the cell, as set forth.

4. An electrical meter consisting of an electrolytic cell, two parallel conductors extending through the same, the said conductors being connected together in series through a resistance and having terminals at their free ends for connection with a circuit, these parts being combined in the manner substantially as set forth.

5. An electric meter consisting of a tubular cell containing an electrolytic solution and closed at the ends, two parallel conductors extending through the cell, a resistance-connection between the end of one conductor and the opposite end of the other, and terminals for the remaining ends of the respective conductors, these parts being combined as set forth.

NIKOLA TESLA.

Witnesses:
ROBT. F. GAYLORD,
PARKER W. PAGE.

(No Model.)

N. TESLA.

ELECTRIC INCANDESCENT LAMP.

No. 455,069. Patented June 30, 1891.

Fig. 1

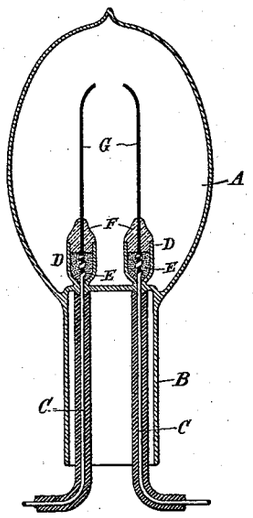

Fig. 2

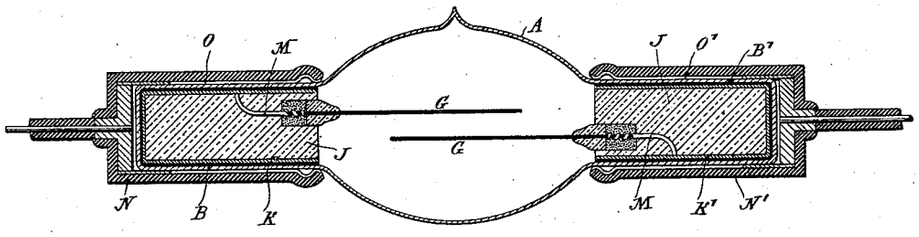

Witnesses:
Raphael Netter
Frank B. Murphy.

Inventor
Nikola Tesla
by
Duncan & Page
Attorneys.

THE NORRIS PETERS CO., PHOTO-LITHO., WASHINGTON, D. C.

UNITED STATES PATENT OFFICE.

NIKOLA TESLA, OF NEW YORK, N. Y.

ELECTRIC INCANDESCENT LAMP.

SPECIFICATION forming part of Letters Patent No. 455,069, dated June 30, 1891.

Application filed May 14, 1891. Serial No. 392,669. (No model.)

To all whom it may concern:

Be it known that I, NIKOLA TESLA, a subject of the Emperor of Austria, from Smiljan, Lika, border country of Austria-Hungary, residing at New York, in the county and State of New York, have invented certain new and useful Improvements in Electric Incandescent Lamps, of which the following is a specification, reference being had to the drawings accompanying and forming a part of the same.

My invention is a new form of lamp for giving light by the incandescence of carbon or other suitable refractory conductor produced by electrical energy.

In order to more distinctly point out those features which distinguish my invention, I would state that heretofore electric lamps have been made, first, by mounting a refractory conductor on metallic supporting-wires leading into a hermetically-sealed receiver from which the air has been exhausted or replaced by an inert gas, and, second, by placing two independent conductors in a receiver or globe and partially exhausting the air therefrom. In the first case the carbon or other conductor is rendered incandescent by the actual flow or passage of a current through it, while in the second the luminous effects, as heretofore produced, or, in fact, the only luminous effects that could be produced by any means heretofore known, were due to an actual discharge of current from one conductor to the other across the intermediate space of rarefied air or gas.

It may be further remarked that in various forms of Geissler or vacuum tubes the terminals or points within the tube become or have a tendency to become heated by the action of the high-tension secondary discharge. In such tubes, however, the degree of exhaustion is comparatively low, as a high vacuum prevents the well-known Geissler discharge or effect. Moreover, with such low degrees of exhaustion the points or wires, if heated and allowed to become incandescent, are speedily destroyed.

I have discovered that two conducting-bodies mounted in a very highly exhausted receiver may be rendered incandescent and practically utilized as a source of light if connected directly or inductively to the terminals of a source of current of very great frequency and very high potential.

The practical requirements of this invention are widely different from those employed in producing any of the phenomena heretofore observed, such differences being mainly in respect to the current, which must be one of enormous frequency and of excessively high potential, and also to the degree of exhaustion of the globe or receiver, which must be carried at least beyond the point at which a spark will pass, or to the condition known as a "non-striking vacuum," and it may be as much farther as possible.

This application is confined to a particular form of lamp which I employ in a new system invented by me, which system involves, as one of its essential characteristics, the employment of currents or electric effects of a novel kind. In an application filed by me April 25, 1891, No. 390,414, I have shown and described this system in detail, and I therefore deem it sufficient for the present case to say that the lamps herein described, while utterly inoperative on any of the circuits now, or, so far as I am aware, heretofore employed become highly efficient sources of light if the frequency of the current by which they are operated be sufficiently great and the potential sufficiently high. To produce such currents, any known means may be utilized or the plan described in my said application followed of disruptively discharging the accumulated energy in a condenser into or through a primary circuit to produce a current of very high frequency, and inducing from this current a secondary current of a very much higher potential.

I now refer to the drawings in illustration of the invention.

Figure 1 is a vertical sectional view of a lamp constructed with leading-in wires for direct connection with a circuit or source of current. Fig. 2 is a similar view of a form of lamp arranged for inductive connection with such source.

The common methods or steps followed in the manufacture of the ordinary incandescent lamps and Geissler tubes may be employed in the manufacture of these improved lamps as far as applicable.

A is a glass globe or receiver with a neck

or base B. Conducting-wires C C enter this globe and are sealed in the walls thereof. The entering wires C are surrounded by small tubes or cups D. The joints between the wires C and the incandescing conductors are made within these cups in any ordinary manner, and the lower parts of the cups are filled with bronze-powder E or other suitable material to effect a good electrical connection. The cups are then filled up with fire-clay or other refractory non-conductor F, which is molded around the carbons G. The carbons or other refractory conductors or semi-conductors G are completely isolated from one another. They are here shown as slender strips; but they may have any other desired shape. Lamps thus made are attached to a vacuum-pump in the usual way. After the process of exhaustion has been carried on for some time they are brought to incandescence by a suitable current, by which the fire-clay is thoroughly baked and the occluded gases are driven off. The exhaustion is carried to the highest possible point, and the globe finally sealed off at H. Inasmuch as there is a tendency to sparking when the current is turned on before the exhaustion has been carried very high, it is well, when the character of the carbon admits of it, to cause their ends to approach, in order that the sparks may leap across between such points, whereby the danger of injury to the carbons or the lamp is lessened. The conductors outside the globe, as well as all those which convey the current from the source, should be carefully insulated to prevent the dissipation of the current.

In lieu of connecting the two carbons directly to the circuit through leading-in wires, provision may be made for inductively connecting them, as by means of condensers. Fig. 2 shows a form of lamp of this description that I have employed. The globe A has two extended tubular portions B B′. Inside of these tubular extensions are condenser-coatings K K′.

J J are plugs of fire-clay or the like contained in the extensions B B′. The two conductors G G are supported by these plugs and connected by metallic strips M with the condenser-coatings K K′, respectively. Over the outside of the extensions B B′ are fitted insulating-caps N N′, having metallic linings O O′, with terminals adapted for connection with the circuit-wires. With such currents as are employed to operate these lamps condensers of small capacity, such as those thus made, transmit the energy from the outside circuit to the carbons within the globe with little loss. This lamp is exhausted and sealed off from the pump in the same manner as that first described. There is no electrical connection at any time between the two carbons of this lamp and no visible discharge or transfer of current from one to the other through the highly-rarefied medium between them. The fact, therefore, of their being rendered incandescent by the action of such a current as I have described seems to be mainly attributable to condenser action.

The carbons, or whatever substance may be used in their stead, may be of any desired form and may be placed in different relative positions.

The manner of making the lamp and the general form of the lamp as a whole may be varied in numberless ways. I have merely shown herein typical forms which embody the principle of the invention and which by experience I have demonstrated to be practical lamps.

As the lamps which I employ and which are made as above described are absolutely inoperative in any system from which the hereinbefore-described conditions of potential and frequency are absent, so the various lamps heretofore devised for use with high-potential currents, in which the exhaustion, of necessity, has not been carried to or beyond the non-striking point, are practically worthless in my new system, and this is the distinguishing feature of novelty in my lamps—viz., that they are exhausted to or beyond the non-striking point.

What I claim as my invention is—

1. An incandescent lamp consisting of two isolated refractory conductors contained in a non-striking vacuum and adapted to produce light by incandescence, each being provided with a terminal for connection with a source of electrical energy, as set forth.

2. The combination, with a globe or receiver exhausted to the non-striking point, of two isolated bodies of refractory conducting material adapted to emit light by incandescence and mounted within said globe, and means for connecting said bodies with the two poles or terminals, respectively, of a source of electrical energy.

3. In an incandescent electric lamp, the combination, with a globe or receiver exhausted to the non-striking point, of metallic wires sealed therein, a refractory body mounted on or electrically connected to each wire, the said wires within the globe and such parts of the refractory body as are not to be rendered incandescent being coated or covered with insulation, as set forth.

4. The combination, with a globe or receiver exhausted to the non-striking point, of metallic wires sealed therein, a refractory conductor united to each of said wires within the globe, an insulating-covering around the wires and joint, and a refractory insulating-body surrounding the refractory conductors near the joint, as set forth.

NIKOLA TESLA.

Witnesses:
ROBT. F. GAYLORD,
PARKER W. PAGE.

(No Model.) 2 Sheets—Sheet 1.

N. TESLA.

ELECTRO MAGNETIC MOTOR.

No. 459,772. Patented Sept. 22, 1891.

Fig. 1

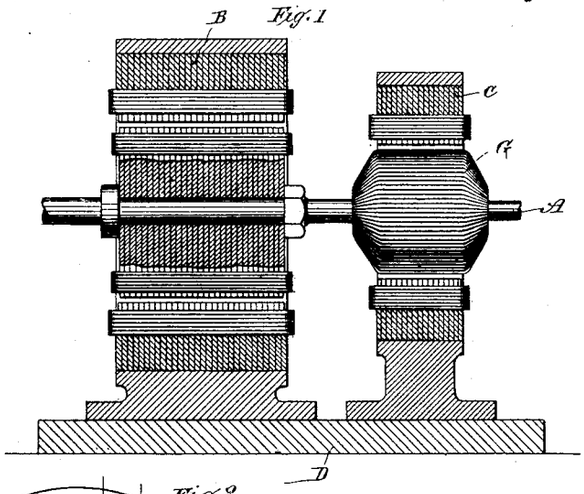

Fig. 2

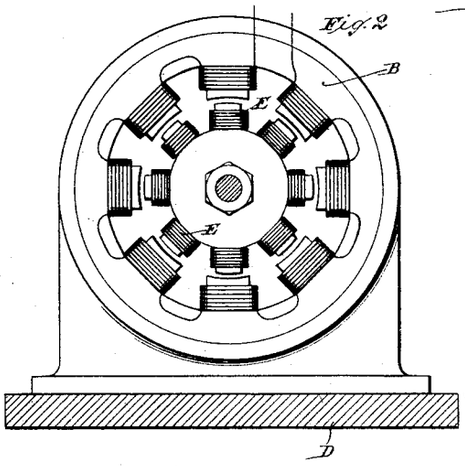

Fig. 3

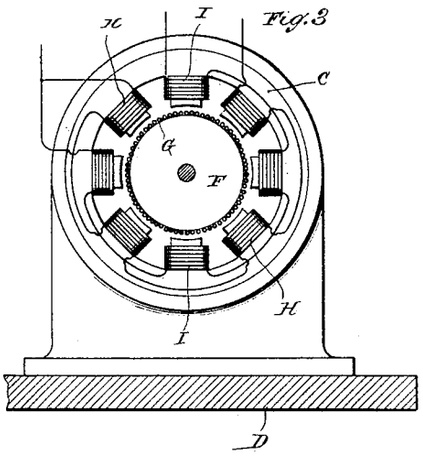

Fig. 4

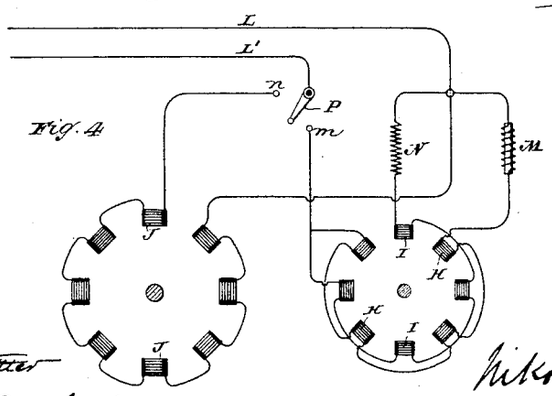

Witnesses:
Raphael Netter
Robt F. Gaylord

Inventor
Nikola Tesla
By
Duncan, Curtis & Page
Attorneys.

THE NORRIS PETERS CO., PHOTO-LITHO., WASHINGTON, D. C.

(No Model.) 2 Sheets—Sheet 2.

N. TESLA.

ELECTRO MAGNETIC MOTOR.

No. 459,772. Patented Sept. 22, 1891.

Fig. 5

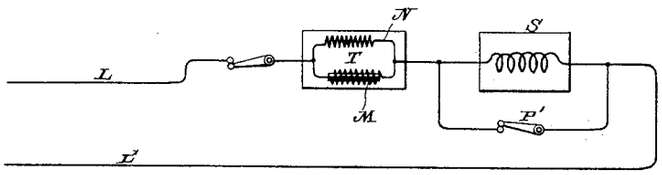

Fig. 6

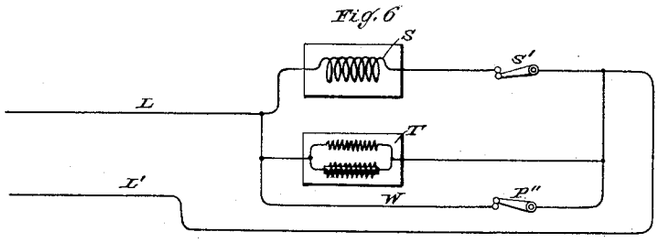

Fig. 7

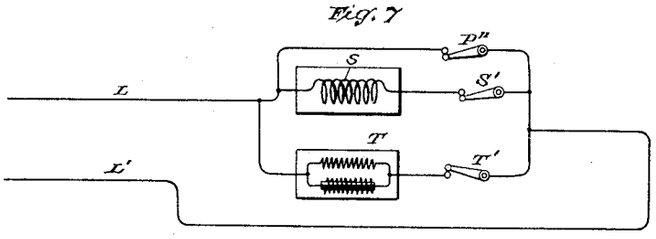

Fig. 8

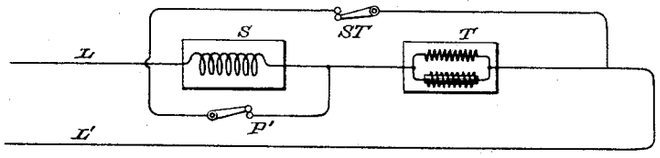

Fig. 9

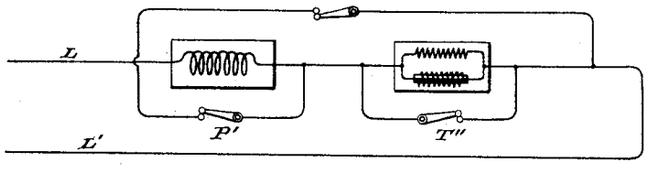

Witnesses:
Raphael Netter
Robt F. Gaylord

Inventor
Nikola Tesla
by
Duncan, Curtis & Page.
Attorneys.

THE NORRIS PETERS CO., PHOTO-LITHO., WASHINGTON, D. C.

UNITED STATES PATENT OFFICE.

NIKOLA TESLA, OF NEW YORK, N. Y., ASSIGNOR TO THE TESLA ELECTRIC COMPANY, OF SAME PLACE.

ELECTRO-MAGNETIC MOTOR.

SPECIFICATION forming part of Letters Patent No. 459,772, dated September 22, 1891.

Application filed April 6, 1889. Serial No. 306,165. (No model.)

To all whom it may concern:

Be it known that I, NIKOLA TESLA, a subject of the Emperor of Austria, from Smiljan, Lika, border country of Austria-Hungary, residing at New York, in the county and State of New York, have invented certain new and useful Improvements in Electro-Magnetic Motors, of which the following is a specification, reference being had to the drawings accompanying and forming a part of the same.

As is well known, certain forms of alternating-current machines have the property, when connected in circuit with an alternating-current generator, of running as a motor in synchronism therewith; but while the alternating current will run the motor after it has attained a rate of speed synchronous with that of the generator it will not start it. Hence in all instances heretofore when these "synchronizing motors," as they are termed, have been run, some means have been adopted to bring the motors up to synchronism with the generator, or approximately so, before the alternating current of the generator is applied to drive them.

In an application filed February 18, 1889, Serial No. 300,220, I have shown and described an improved system of operating this class of motors, which consists, broadly, in winding or arranging the motor in such manner that by means of suitable switches it could be started as a multiple-circuit motor, or one operating by a progression of its magnetic poles, and then, when up to speed, or nearly so, converted into an ordinary synchronizing motor, or one in which the magnetic poles were simply alternated. In some cases, as when a large motor is used and when the number of alternations is very high, there is more or less difficulty in bringing the motor to speed as a double or multiple-circuit motor, for the plan of construction which renders the motor best adapted to run as a synchronizing motor impairs its efficiency as a torque or double-circuit motor under the assumed conditions on the start. This will be readily understood, for in a large synchronizing motor the length of the magnetic circuit of the polar projections and their mass are so great that apparently considerable time is required for magnetization and demagnetization. Hence with a current of a very high number of alternations the motor may not respond properly. To avoid this objection and to start up a synchronizing motor in which these conditions obtain is the object of my present invention. I have therefore combined two motors, one a synchronizing motor, the other a multiple-circuit or torque motor, and by the latter I bring the first named up to speed, and then either throw the whole current into the synchronizing motor or operate jointly both of the motors.

This invention involves several novel and useful features. It will be observed, in the first place, that both motors are run without commutators of any kind, and, secondly, that the speed of the torque motor may be higher than that of the synchronizing motor, as will be the case when it contains a fewer number of poles or sets of poles, so that the motor will be more readily and easily brought up to speed. Thirdly, the synchronizing motor may be constructed so as to have a much more pronounced tendency to synchronism without lessening the facility with which it is started.

In the drawings I have illustrated the invention.

Figure 1 is a part sectional view of the two motors; Fig. 2, an end view of the synchronizing motor; Fig. 3, an end view and part section of the torque or double-circuit motor; Fig. 4, a diagram of the circuit connections employed; and Figs. 5, 6, 7, 8, and 9 are diagrams of modified dispositions of the two motors.

Inasmuch as neither motor is doing any work while the current is acting upon the other, I prefer to rigidly connect the two armatures. I therefore mount both upon the same shaft A, the field-magnets B of the synchronizing and C of the torque motor being secured to the same base D. The preferably larger synchronizing motor has polar projections on its armature, which rotate in very close proximity to the poles of the field, and in other respects it conforms to the conditions, now well understood, that are necessary to secure synchronous action. I prefer, however, to wind the pole-pieces of the armature with closed coils E, as this obviates the employment of sliding contacts. The smaller or

torque motor, on the other hand, has, preferably, a cylindrical armature F, without polar projections and wound with closed coils G, as I have described in my previous patents, notably No. 382,279, dated May 1, 1888. The field-coils of the torque motor are connected up in two series H and I, and the alternating current from the generator is directed through or divided between these two circuits in any manner to produce a progression of the poles or points of maximum magnetic effect. I secure this result in a convenient way by connecting the two motor-circuits in derivation with the circuit from the generator, inserting in one motor-circuit a dead resistance and in the other a self-induction coil, by which means a difference in phase between the two divisions of the current is secured. If both motors have the same number of field-poles, the torque motor for a given number of alternations will tend to run at double the speed of the other, for, assuming the connections to be such as to give the best results, its poles are divided into two series and the number of poles is virtually reduced one-half, which being acted upon by the same number of alternations tend to rotate the armature at twice the speed. By this means the main armature is more easily brought to or above the required speed. When the speed necessary for synchronism is imparted to the main motor, the current is shifted from the torque motor into the other.

A convenient arrangement for carrying out this invention is shown in Fig. 4. In said figure J J are the field-coils of the sychronizing, and H I the field-coils of the torque, motor. L L′ are the conductors of the main line. One end of, say, coils H is connected to wire L through a self-induction coil M. One end of the other set of coils I is connected to the same wire through a dead resistance N. The opposite ends of these two circuits are connected to the contact *m* of a switch the handle or lever of which is in connection with the line-wire L′. One end of the field-circuit of the synchronizing motor is connected to the wire L. The other terminates in the switch-contact *n*. From the diagram it will be readily seen that if the lever P be turned onto contact *m* the torque motor will start by reason of the difference of phase between the currents in its two energizing-circuits. Then when the desired speed is attained if the lever P be shifted onto contact *n* the entire current will pass through the field-coils of the synchronizing motor and the other will be doing no work.

The torque motor may be constructed and operated in various ways, many of which I have described in other applications; but I do not deem it necessary in illustration of the principle of construction and mode of operation of my present invention to describe these further herein. It is not necessary that one motor be cut out of circuit while the other is in, for both may be acted upon by the current at the same time, and I have devised various dispositions or arrangements of the two motors for accomplishing this. Some of these arrangements are illustrated in Figs. 5 to 9.

Referring to Fig. 5, let T designate the torque or multiple-circuit motor and S the synchronizing motor, L L′ being the line-wires from a source of alternating current. The two circuits of the torque motor of different degrees of self-induction, and designated by N M, are connected in derivation to the wire L. They are then joined and connected to the energizing-circuit of the synchronizing motor, the opposite terminal of which is connected to wire L′. The two motors are thus in series. To start them I short-circuit the synchronizing motor by a switch P′, throwing the whole current through the torque motor. Then when the desired speed is reached the switch P′ is opened, so that the current passes through both motors. In such an arrangement as this it is obviously desirable for economical and other reasons that a proper relation between the speeds of the two motors should be observed.

In Fig. 6 another disposition is illustrated. S is the synchronizing motor and T the torque motor, the circuits of both being in parallel. W is a circuit also in derivation to the motor-circuits and containing a switch P″. S′ is a switch in the synchronizing-motor circuit. On the start the switch S′ is opened, cutting out the motor S. Then P″ is opened, throwing the entire current through the motor T, giving it a very strong torque. When the desired speed is reached, switch S′ is closed and the current divides between both motors. By means of switch P″ both motors may be cut out.

In Fig. 7 the arrangement is substantially the same, except that a switch T′ is placed in the circuit which includes the two circuits of the torque motor.

Fig. 8 shows the two motors in series, with a shunt around both containing a switch S T. There is also a shunt around the synchronizing motor S, with a switch P′.

In Fig. 9 the same disposition is shown; but each motor is provided with a shunt, in which are switches P′ and T″, as shown.

The manner of operating the systems will be understood from the foregoing descriptions.

I do not claim herein the torque motor nor any part thereof, except in so far as they enter into the combination which forms the subject of this application, for I have made the distinguishing features of said motor the subject of other applications.

What I now claim is—

1. An alternating-current non-synchronizing electric motor coupled with a synchronizing alternating-current motor, substantially as set forth, whereby the former starts the latter and throws it into synchronism with

its actuating-current, and switch mechanism for directing the current through either or both of the motors, as set forth.

2. The combination of two motors the armatures of which are mounted upon the same shaft, one of said motors being an alternating-current torque motor, or one in which the magnetic points or poles are progressively shifted by the action of the energizing-current, the other motor being an alternating-current synchronizing motor, and switch mechanism for directing the current through either or both of said motors, as set forth.

3. The combination, with an alternating-current synchronizing motor having one energizing-field, of an alternating-current torque motor having a plurality of energizing-circuits and adapted to be operated by currents differing in phase, and a switch for directing the alternating current or currents through the several circuits of one motor or the single circuit of the other, as and for the purpose set forth.

4. The combination, with an alternating-current motor having field-cores wound with coils adapted to be connected to a source of alternating currents and an armature wound with induced coils closed upon themselves, of a starting device for bringing said motor into synchronism with the generator with which it is connected.

5. The combination, with an alternating-current motor composed of a multipolar alternating field-magnet, and an armature having poles wound with coils closed upon themselves, of a starting device, as set forth.

6. In an alternating-current motor, the combination of a field-magnet having poles wound with coils adapted when connected with a source of alternating current to produce simultaneously opposite magnetic polarities and an armature provided with poles or projections and wound with coils connected in a continuously-closed unconnected circuit, as set forth.

7. The herein-described method of operating alternating-current motors, which consists in actuating a motor by an alternating current to bring a second alternating-current motor up to synchronizing speed relative to the actuating-current and then switching the synchronizing motor into circuit.

NIKOLA TESLA.

Witnesses:
GEORGE N. MONRO,
EDWARD T. EVANS.

(No Model.)

N. TESLA.

METHOD OF AND APPARATUS FOR ELECTRICAL CONVERSION AND DISTRIBUTION.

No. 462,418. Patented Nov. 3, 1891.

Fig. 1

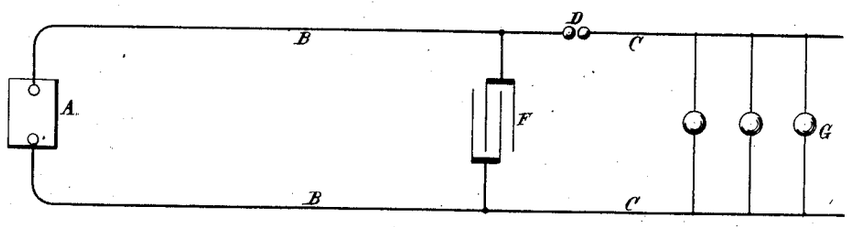

Fig. 2

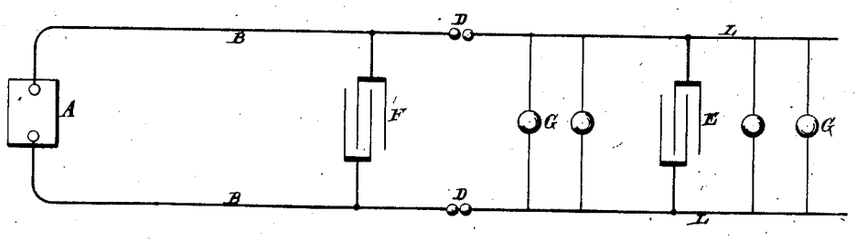

Witnesses:
Raphael Netter
Frank B. Murphy.

Inventor
Nikola Tesla
by Duncan & Page.
Attorneys.

UNITED STATES PATENT OFFICE.

NIKOLA TESLA, OF NEW YORK, N. Y.

METHOD OF AND APPARATUS FOR ELECTRICAL CONVERSION AND DISTRIBUTION.

SPECIFICATION forming part of Letters Patent No. 462,418, dated November 3, 1891.

Application filed February 4, 1891. Serial No. 380,182. (No model.)

To all whom it may concern:

Be it known that I, NIKOLA TESLA, a subject of the Emperor of Austria, from Smiljan, Lika, border country of Austria-Hungary, residing at New York, in the county and State of New York, have invented certain new and useful Improvements in Methods of and Apparatus for Electrical Conversion and Distribution, of which the following is a specification, reference being had to the drawings accompanying and forming a part of the same.

This invention is an improvement in methods of and apparatus for electrical conversion, designed for the better and more economical distribution and application of electrical energy for general useful purposes.

My invention is based on certain electrical phenomena which have been observed by eminent scientists and recognized as due to laws which have been in a measure demonstrated, but which, so far as I am aware, have not hitherto been utilized or applied with any practically useful results. Stated briefly, these phenomena are as follows: First, if a condenser or conductor possessing capacity be charged from a suitable generator and discharged through a circuit, the discharge under certain conditions will be of an intermittent or oscillatory character; second, if two points in an electric circuit through which a current rapidly rising and falling in strength is made to flow be connected with the plates or armatures of a condenser, a variation in the current's strength in the entire circuit or in a portion of the same only may be produced; third, the amount or character of such variation in the current's strength is dependent upon the condenser capacity, the self-induction and resistance of the circuit or its sections, and the period or time rate of change of the current. It may be observed, however, that these several factors—the capacity, the self-induction, resistance, and period—are all related in a manner well understood by electricians; but to render such conversion as may be effected by condensers practically available and useful it is desirable, chiefly on account of the increased output and efficiency and reduced cost of the apparatus, to produce current-impulses succeeding each other with very great rapidity, or, in other words, to render the duration of each impulse, alternation, or oscillation of the current extremely small. To the many difficulties in the way of effecting this mechanically, as by means of rotating switches or interrupters, is perhaps due the failure to realize practically, at least to any marked degree, the advantages of which such a system is capable. To obviate these difficulties, I have in my present invention taken advantage of the fact above referred to, and which has been long recognized, that if a condenser or a conductor possessing capacity be charged from a suitable source and be discharged through a circuit the discharge under certain conditions, dependent on the capacity of the condenser or conductor, the self-induction and resistance of the discharging circuit, and the rate of supply and decay of the electrical energy, may be effected intermittently or in the form of oscillations of extremely small period.

Briefly stated in general terms, the plan which I pursue in carrying out my invention is as follows:

I employ a generator, preferably, of very high tension and capable of yielding either direct or alternating currents. This generator I connect up with a condenser or conductor of some capacity and discharge the accumulated electrical energy disruptively through an air-space or otherwise into a working circuit containing translating devices and, when required, condensers. These discharges may be of the same direction or alternating and intermittent, succeeding each other more or less rapidly or oscillating to and fro with extreme rapidity. In the working circuit, by reason of the condenser action, the current impulses or discharges of high tension and small volume are converted into currents of lower tension and greater volume. The production and application of a current of such rapid oscillations or alternations (the number may be many millions per second) secures, among others, the following exceptional advantages: First, the capacity of the condensers for a given output is much diminished; second, the efficiency of the condensers is increased and the tendency to become heated reduced, and, third, the range of conversion is enlarged. I have thus succeeded in producing a system or method of conversion

radically different from what has been done heretofore—first, with respect to the number of impulses, alternations, or oscillations of current per unit of time, and, second, with respect to the manner in which the impulses are obtained. To express this result, I define the working current as one of an excessively small period or of an excessively large number of impulses or alternations or oscillations per unit of time, by which I mean not a thousand or even twenty or thirty thousand per second, but many times that number, and one which is made intermittent, alternating, or oscillating of itself without the employment of mechanical devices.

I now proceed to an explanation somewhat more in detail of the nature of my invention, referring to the accompanying drawings.

The two figures are diagrams, each representing a generating-circuit, a working circuit, means for producing an intermittent or oscillating discharge, and condensers arranged or combined as contemplated by my invention.

In Figure 1, A represents a generator of high tension; B B, the conductors which lead out from the same. To these conductors are connected the conductors C of a working circuit containing translating devices, such as incandescent lamps or motors G. In one or both conductors B is a break D, the two ends being separated by an air-space or a film of insulation, through which a disruptive discharge takes place. F is a condenser, the plates of which are connected to the generating-circuit. If this circuit possess itself sufficient capacity, the condenser F may be dispensed with.

In Fig. 2 the generating-circuit B B contains a condenser F and discharges through the air-gaps D into the working circuit C, to any two points of which is connected a condenser E. The condenser E is used to modify the current in any part of the working circuit, such as L.

It may conduce to a better understanding of the invention to consider more in detail the conditions existing in such a system as is illustrated in Fig. 1. Let it be assumed, therefore, that in the system there shown the rate of supply of the electrical energy, the capacity, self-induction, and the resistance of the circuits are so related that a disruptive, intermittent, or oscillating discharge occurs at D. Assume that the first-named takes place. This will evidently occur when the rate of supply from the generator is not adequate to the capacity of the generator, conductors B B, and condenser F. Each time the condenser F is charged to such an extent that the potential or accumulated charge overcomes the dielectric strength of the insulating-space at D the condenser is discharged. It is then recharged from the generator A, and this process is repeated in more or less rapid succession. The discharges will follow each other the more rapidly the more nearly the rate of supply from the generator equals the rate at which the circuit including the generator is capable of taking up and getting rid of the energy. Since the resistance and self-induction of the working circuit C and the rapidity of the successive discharges may be varied at will, the current strength in the working and generating circuit may bear to one another any desired relation.

To understand the action of the local condenser E in Fig. 2, let a single discharge be first considered. This discharge has two paths offered—one to the condenser E, the other through the part L of the working circuit C. The part L, however, by virtue of its self-induction, offers a strong opposition to such a sudden discharge, while the condenser, on the other hand, offers no such opposition. The result is that practically no current passes at first through the branch L, but presumably opposite electricities rush to the condenser-coatings, this storing for the moment electrical energy in the condenser. Time is gained by this means, and the condenser then discharges through the branch L, this process being repeated for each discharge occurring at D. The amount of electrical energy stored in the condenser at each charge is dependent upon the capacity of the condenser and the potential of its plates. It is evident, therefore, that the quicker the discharges succeed each other the smaller for a given output need be the capacity of the condenser and the greater is also the efficiency of the condenser. This is confirmed by practical results.

The discharges occurring at D, as stated, may be of the same direction or may be alternating, and in the former case the devices contained in the working circuit may be traversed by currents of the same or alternately-opposite direction. It may be observed, however, that each intermittent discharge occurring at D may consist of a number of oscillations in the working circuit or branch L.

A periodically-oscillating discharge will occur at D in Fig. 1 when the quantities concerned bear a certain relation expressed in well-known formulæ and ascertained by simple experiment. In this case it is demonstrated in theory and practice that the ratio of the strength of the current in the working to that in the generating circuits is the greater the greater the self-induction, and the smaller the resistance of the working circuit the smaller the period of oscillation.

I do not limit myself to the use of any specific forms of the apparatus described in connection with this invention nor to the precise arrangement of the system with respect to its details herein shown. In the drawings return-wires are shown in the circuit; but it will be understood that in any case the ground may be conveniently used in lieu of the return-wire.

What I claim is—

1. The method of electrical conversion herein described, which consists in charging a con-

denser or conductor possessing capacity and maintaining a succession of intermittent or oscillating disruptive discharges of said conductor into a working circuit containing translating devices.

2. In a system of electrical conversion, the combination of a generator or source of electricity and a line or generating circuit containing a condenser or possessing capacity, and a working circuit operatively connected with the generating-circuit through one or more air-gaps or breaks in the conducting medium, the electrical conditions being so adjusted that an intermittent or oscillating disruptive discharge from the generating into the working circuit will be maintained, as set forth.

NIKOLA TESLA.

Witnesses:
ROBT. F. GAYLORD,
PARKER W. PAGE.

(No Model.)

N. TESLA.

ELECTRO MAGNETIC MOTOR.

No. 464,666. Patented Dec. 8, 1891.

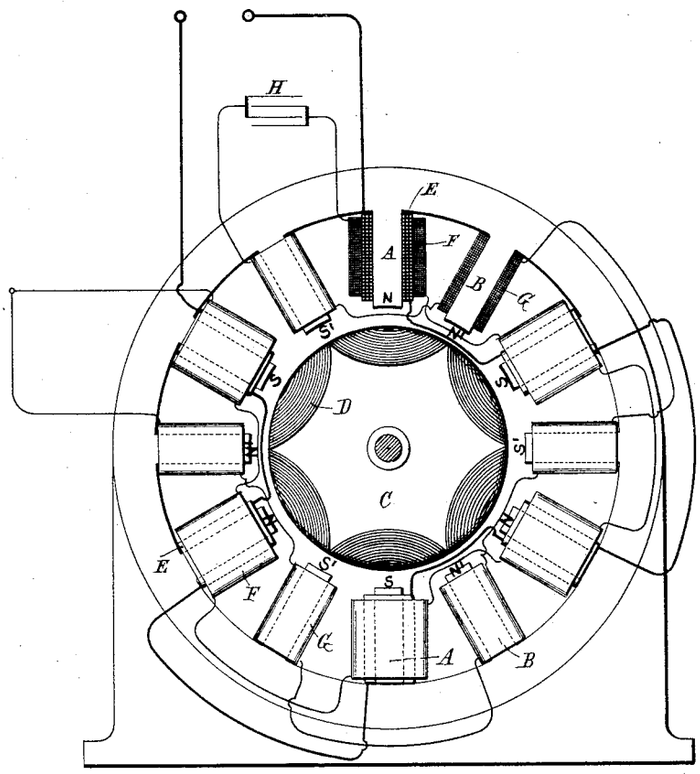

Witnesses:
Raphael Netter
Frank B. Murphy

Inventor
Nikola Tesla
by
Duncan & Page.
Attorneys

THE NORRIS PETERS CO., PHOTO-LITHO., WASHINGTON, D. C.

UNITED STATES PATENT OFFICE.

NIKOLA TESLA, OF NEW YORK, N. Y.

ELECTRO-MAGNETIC MOTOR.

SPECIFICATION forming part of Letters Patent No. 464,666, dated December 8, 1891.

Application filed July 13, 1891. Serial No. 399,312. (No model.)

To all whom it may concern:

Be it known that I, NIKOLA TESLA, a subject of the Emperor of Austria, from Smiljan, Lika, border country of Austria-Hungary, residing at New York, in the county and State of New York, have invented certain new and useful Improvements in Electro-Magnetic Motors, of which the following is a specification, reference being had to the drawing accompanying and forming a part of the same.

The general object of my present invention is to secure artificially a difference of a quarter of a phase between the currents in the two energizing-circuits of an alternating-current electro-magnetic motor of that general class invented by me, in which the action or operation is dependent upon the inductive influence upon a rotating armature of independent field magnets or coils exerted successively and not simultaniously.

It is a well-known fact that if the field or energizing circuits of such a motor be both derived from the same source of alternating currents and a condenser of proper capacity be included in one of the same, approximately the desired difference of phase may be obtained between the currents flowing directly from the source and those flowing through the condenser; but the great size and expense of condensers for this purpose that would meet the requirements of the ordinary systems of comparatively low potential are practically prohibitory to their employment.

Another now well-known method or plan of securing a difference of phase between the energizing-currents of motors of this kind is to induce by the currents in one circuit those in the other circuit or circuits; but no means have heretofore been proposed that would secure in this way between the phases of the primary or inducing and the secondary or induced currents that difference—theoretically ninety degrees—that is best adapted for practical and economical working.

I have devised a means which renders practicable both the above-described plans or methods, and by which I am enabled to obtain an economical and efficient alternating-current motor, my invention consisting in placing a condenser in the secondary or induced circuit of the motor above described and raising the potential of the secondary currents to such a degree that the capacity of the condenser, which is in part dependent on the potential, need be quite small. The value of this condenser will be determined in a well-understood manner with reference to the self-induction and other conditions of the circuit, so as to cause the currents which pass through it to differ from the primary currents by a quarter-phase.

The drawing is a partly-diagrammatic illustration of a motor embodying my invention.

I have illustrated the invention as embodied in a motor in which the inductive relation of the primary and secondary circuits is secured by winding them inside the motor partly upon the same cores; but it will be understood that the invention applies, generally, to other forms of motor in which one of the energizing-currents is induced in any way from the other.

Let A B represent the poles of an alternating-current motor, of which C is the armature wound with coils D, closed upon themselves, as is now the general practice in motors of this kind. The poles A, which alternate with poles B, are wound with coils of ordinary or coarse wire E in such direction as to make them of alternate north and south polarity, as indicated in the diagram by the characters N S. Over these coils or in other inductive relation to the same are wound long fine-wire coils F F and in the same direction throughout as the coils E. These coils are secondaries, in which currents of very high potential are induced. I prefer to connect all the coils E in one series and all the secondaries F in another.

On the intermediate poles B are wound fine-wire energizing-coils G, which are connected in series with one another and also with the series of secondary coils F, the direction of winding being such that a current-impulse induced from the primary coils E imparts the same magnetism to the poles B as that produced in poles A by the primary impulse. This condition is indicated by the characters N′ S′.

In the circuit formed by the two sets of coils F and G is introduced a condenser H; otherwise the said circuit is closed upon itself, while the free ends of the circuit of coils E are connected to a source of alternating cur-

rents. As the condenser capacity which is needed in any particular motor of this kind is dependent upon the rate of alternation or the potential, or both, its size or cost, as before explained, may be brought within economical limits for use with the ordinary circuits if the potential of the secondary circuit in the motor be sufficiently high. By giving to the condenser proper values any desired difference of phase between the primary and secondary energizing-circuits may be obtained.

What I claim is—

1. In an alternating-current motor provided with two or more energizing or field circuits, one of which is adapted for connection with a source of currents and the other or others in inductive relation thereto, the combination, with the secondary or induced circuit or circuits, of a condenser interposed in the same, as set forth.

2. In an alternating-current motor, the combination of two energizing-circuits, one connected or adapted for connection with a source of alternating currents, the other constituting a high-potential secondary circuit in inductive relation to the first, and a condenser interposed in said secondary circuit, as set forth.

NIKOLA TESLA.

Witnesses:
ROBT. F. GAYLORD,
ERNEST HOPKINSON.

(No Model.)

N. TESLA.

ELECTRICAL CONDENSER.

No. 464,667. Patented Dec. 8, 1891.

Fig. 1

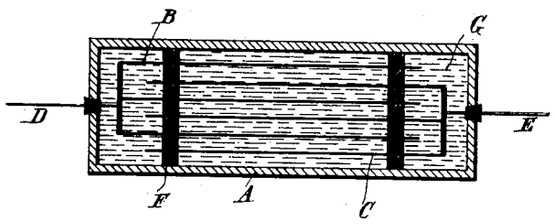

Fig. 2

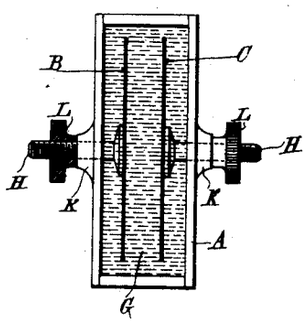

Witnesses:
Raphael Netter
Frank B. Murphy.

Inventor
Nikola Tesla
by
Duncan & Page
Attorneys.

THE NORRIS PETERS CO., PHOTO-LITHO., WASHINGTON, D. C.

UNITED STATES PATENT OFFICE.

NIKOLA TESLA, OF NEW YORK, N. Y.

ELECTRICAL CONDENSER.

SPECIFICATION forming part of Letters Patent No. 464,667, dated December 8, 1891.

Application filed August 1, 1891. Serial No. 401,356. (No model.)

To all whom it may concern:

Be it known that I, NIKOLA TESLA, a citizen of the United States, residing at New York, in the county and State of New York, have invented a certain new and useful Improvement in Electrical Condensers, of which the following is a specification, reference being had to the accompanying drawings.

The subject of my present application is a new and improved electrical condenser constructed with a view of obviating certain defects which I have observed to exist in the ordinary forms of such apparatus when employed in the system devised by me of producing light and other effects by means of currents of high frequency and high potential.

I have found that insulating material such as glass, mica, and, in general, those bodies which possess the highest specific inductive capacity are inferior as insulators in such devices when currents of the kind described are employed to those possessing high insulating power, together with a smaller specific inductive capacity, and I have also found that it is very desirable to exclude all gaseous matter from the apparatus, or any access to the same to the electrified surfaces, in order to prevent heating by molecular bombardment and the loss or injury consequent thereon. I have found that I may accomplish these results and produce highly efficient and reliable condensers by using oil as the dielectric, and in this my invention resides.

No special construction of the condenser is necessary to a demonstration of the invention; but the plan admits of a particular construction of condenser, in which the distance between the plates is adjustable, and of which I take advantage.

In the accompanying drawings, Figure 1 is a section of a condenser constructed in accordance with my invention and having stationary plates, and Fig. 2 is a similar view of a condenser with adjustable plates.

I use any suitable box or receptacle A to contain the plates or armatures. These latter are designated by B and C and are connected, respectively, to terminals D and E, which pass out through the sides of the case. The plates ordinarily are separated by strips of porous insulating material F, which are used merely for the purpose of maintaining them in position. The space within the can is filled with oil G. Such a condenser will prove highly efficient and will not become heated or permanently injured.

In many cases it is desirable to vary or adjust the capacity of a condenser, and this I provide for by securing the plates to adjustable supports—as, for example, to rods H—passing through stuffing-boxes K in the sides of the case A and furnished with nuts L, the ends of the rods being threaded for engagement with the nuts.

It is well known that oils possess insulating properties, and it has been a common practice to interpose a body of oil between two conductors for purposes of insulation; but I have discovered peculiar properties in oils which render them very valuable in this particular form of device, their employment in which has never heretofore and, so far as I am aware, been regarded as necessary or even desirable.

What I claim is—

1. An electric condenser composed of plates or armatures immersed in oil.

2. An electrical condenser composed of plates or armatures adjustable with respect to one another and immersed in oil.

NIKOLA TESLA.

Witnesses:
PARKER W. PAGE,
MARCELLA G. TRACY.

(No Model.) 3 Sheets—Sheet 1.

N. TESLA.

SYSTEM OF ELECTRICAL TRANSMISSION OF POWER.

No. 487,796. Patented Dec. 13, 1892.

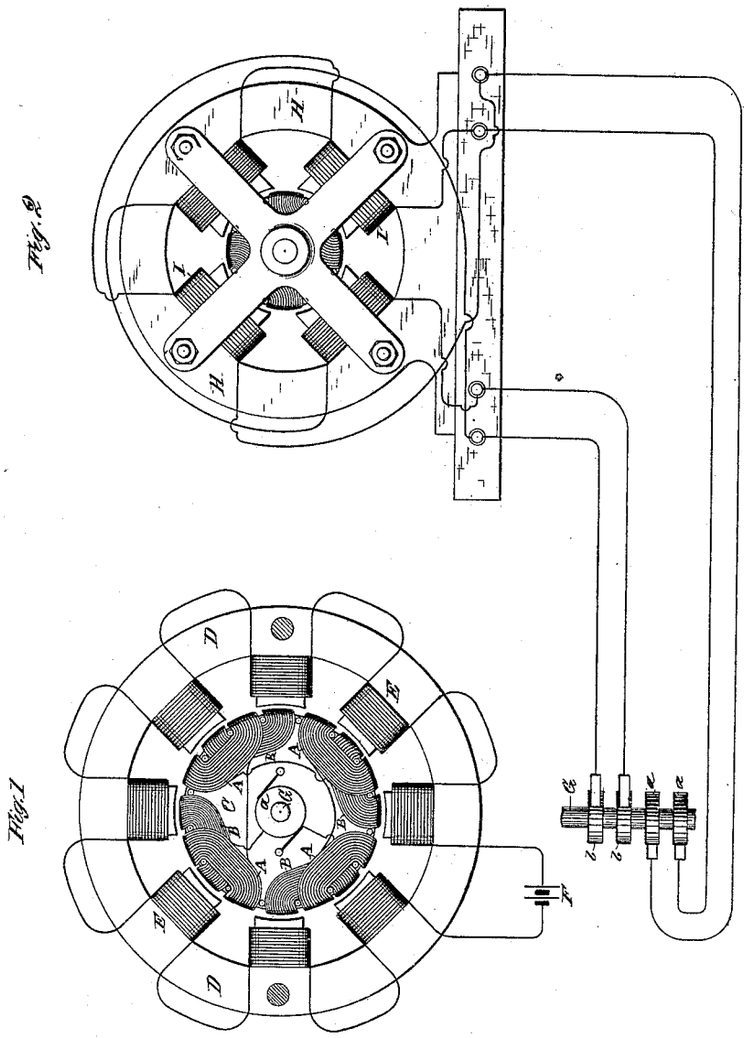

Fig. 2.

Fig. 1.

WITNESSES:

Raphael Netter

Robt. F. Gaylord.

INVENTOR

Nikola Tesla

BY

Duncan, Curtis & Page

ATTORNEYS.

THE NORRIS PETERS CO., PHOTO-LITHO., WASHINGTON, D. C.

(No Model.) 3 Sheets—Sheet 2.

N. TESLA.

SYSTEM OF ELECTRICAL TRANSMISSION OF POWER.

No. 487,796. Patented Dec. 13, 1892.

Fig. 2.

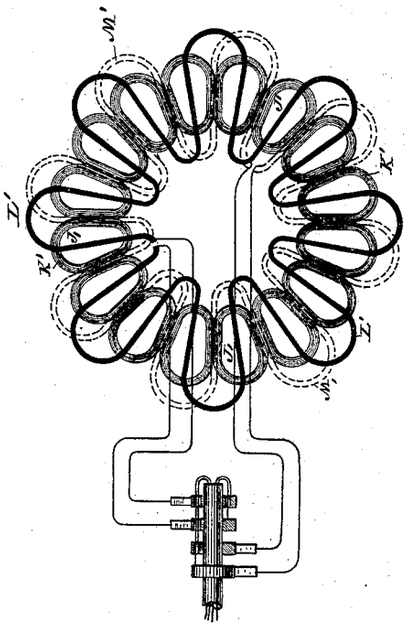

Fig. 3.

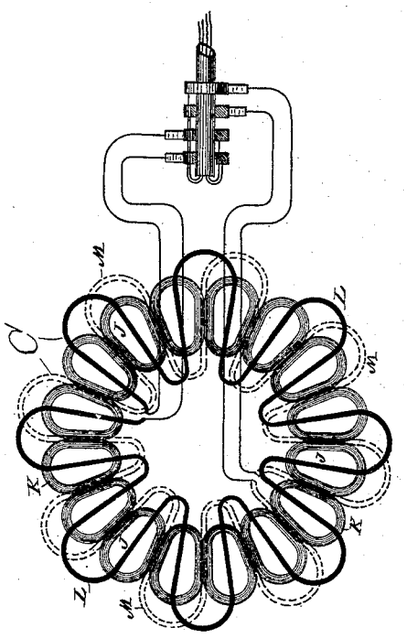

WITNESSES:

Raphael Netter

Allan M. Paige

INVENTOR

Nikola Tesla

BY

Duncan, Curtis & Page

ATTORNEYS.

THE NORRIS PETERS CO., PHOTO-LITHO., WASHINGTON, D. C.

(No Model.) 3 Sheets—Sheet 3.

N. TESLA.

SYSTEM OF ELECTRICAL TRANSMISSION OF POWER.

No. 487,796. Patented Dec. 13, 1892.

Fig. 5

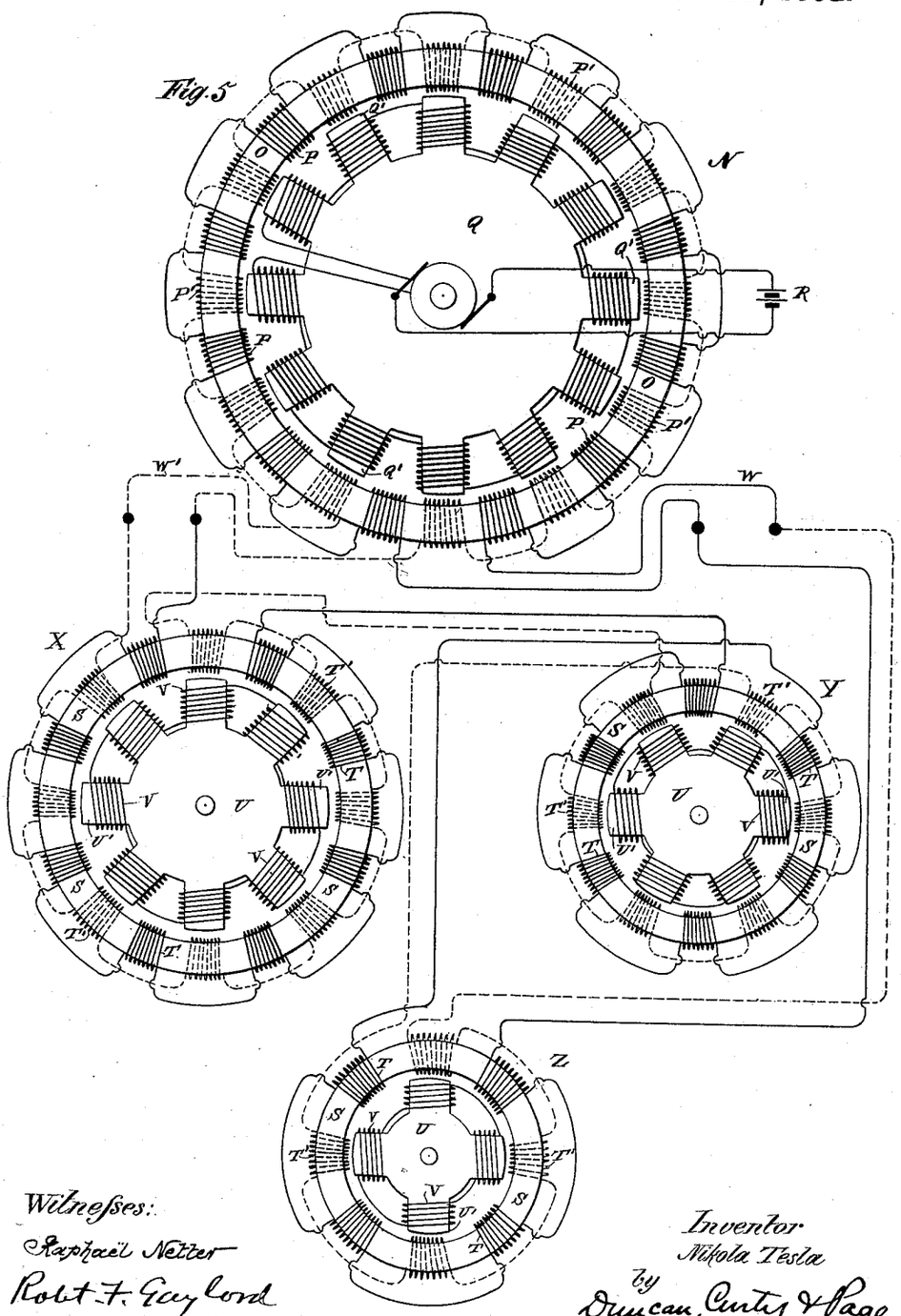

Witnesses:
Raphael Netter
Robt. F. Gaylord

Inventor
Nikola Tesla
by Duncan, Curtis & Page
Attorneys.

THE NORRIS PETERS CO., PHOTO-LITHO., WASHINGTON, D. C.

UNITED STATES PATENT OFFICE.

NIKOLA TESLA, OF NEW YORK, N. Y., ASSIGNOR TO THE TESLA ELECTRIC COMPANY, OF SAME PLACE.

SYSTEM OF ELECTRICAL TRANSMISSION OF POWER.

SPECIFICATION forming part of Letters Patent No. 487,796, dated December 13, 1892.

Application filed May 15, 1888. Serial No. 273,992. (No model.)

To all whom it may concern:

Be it known that I, NIKOLA TESLA, a subject of the Emperor of Austria-Hungary, formerly of Smiljan, Lika, border country of Austria-Hungary, but now residing at New York, in the county and State of New York, have invented certain new and useful Improvements in Systems for the Electrical Transmission of Power, of which the following is a specification, reference being had to the drawings accompanying and forming a part of the same.

This invention is an improvement in systems of electrical distribution of power wherein are employed motors having two or more independent energizing-circuits, through which are passed alternating currents differing in phase that are produced by a magneto-electric machine having independent induced circuits, or that are obtained from any other suitable source or by any other suitable means. In illustration of the various conditions which I regard as most important to an attainment of the best results from the use of motors of this character, I have heretofore used generally forms of generator in which the relations of the induced or current-generating coils and field-magnets were such that but two impulses or current are produced in each coil by a single revolution of the armature or field cores. The rate, therefore, at which the different phases or impulses of current in the line-circuits succeeded one another was so little greater than that at which the armature of the generator revolved that without special provision the generator required to be run at very high speed to obtain the best results. It is well known that the most efficient results are secured in the operation of such motors when they are run at high speeds; but as the practicable rate of speed is much limited by mechanical conditions, particularly in the case of large generators, which would be required when a number of motors are run from a single source, I have sought to produce a greater number of current impulses by a slow or slower speed than that at which the ordinary bipolar machines may be economically operated. I therefore adapt to my system any of the various types of multipolar alternating-current machines which yield a considerable number of current reversals or impulses for each revolution of the armature by observing the main condition essential to the operation of my system that the phases of the currents in the independent induced circuits of the generator should not coincide, but exhibit a sufficient difference in phase to produce the desired results. I may accomplish this in a variety of ways, which, however, vary only in detail, since they are based upon the same underlying principle. For example, to adapt a given type of alternating-current generator I may couple rigidly two complete machines, securing them so that the requisite difference in phase between the currents produced by each will be obtained, or I may secure two armatures to the same shaft within the influence of the same field and with an angular displacement that will produce the proper difference in phase between the two currents, or I may secure two armatures to the same shaft with their coils symmetrically disposed, and place two sets of field-magnets at such angle as to secure the same result, or, finally, I may wind on the same armature the two sets of coils alternately, or in such manner that they will develop currents, the phases of which differ in time sufficiently to produce rotation of the motor.

Another feature of my invention is in the plan which I have devised for utilizing generators and motors of this type, whereby a single generator may be caused to run a number of motors either at the same speed as its own or all at different speeds. This I accomplish by constructing the motors with fewer poles than the generator, in which case their speed will be greater than that of the generator, the rate of speed being higher as the number of their poles is relatively less. This will be understood from an example. Suppose the generator has two independent generating-coils which revolve between two pole-pieces oppositely magnetized and that the motor has energizing-coils that produce at any given time two magnetic poles in one element that tend to set up a rotation of the motor. A generator thus constructed yields four impulses or reversals of current by each revolution, two in each of its independent

circuits, and I have demonstrated that the effect upon a motor such as that mentioned is to shift the magnetic poles through three hundred and sixty degrees. It is obvious that if the four reversals in the same order could be produced by each half-revolution of the generator the motor would make two revolutions to the generator's one. This would be readily accomplished by adding two intermediate poles to the generator or altering it in any of the other equivalent ways above indicated. The same rule applies to generators and motors with multiple poles. For instance, if a generator be constructed with two circuits, each of which produces twelve reversals of current to a revolution, and these currents be directed through the independent energizing-coils of a motor, the coils of which are so applied as to produce twelve magnetic poles at all times, the rotation of the two will be synchronous; but if the motor-coils produce but six poles the movable element will be rotated twice while the generator rotates once, or if the motor have four poles its rotation will be three times as fast as that of the generator.

These features, so far as it is necessary to an understanding of the invention, are illustrated in the accompanying drawings.

Figure 1 is a diagrammatic illustration of a generator constructed in accordance with my invention. Fig. 2 is a similar view of a correspondingly-constructed motor. Fig. 3 is a diagram of a generator of modified construction. Fig. 4 is a diagram of a motor of corresponding character. Fig. 5 is a diagram of a system containing a generator and several motors adapted to run at various speeds.

In Fig. 1, let C represent a cylindrical armature-core wound longitudinally with insulated coils A A, which are connected up in series, the terminals of the series being connected to collecting-rings *a a* on the shaft G. By means of this shaft the armature is mounted to rotate between the poles of an annular field-magnet D, formed with polar projections wound with coils E, that magnetize the said projections. The coils E are included in the circuit of a generator F, by means of which the field-magnet is energized. If thus constructed, the machine is a well-known form of alternating-current generator. To adapt it to my system, however, I wind on armature C a second set of coils B B intermediate to the first, or, in other words, in such positions that while the coils of one set are in the relative positions to the poles of the field-magnet to produce the maximum current those of the other set will be in the position in which they produce the minimum current. The coils B are connected, also, in series and to two collecting-rings *b b*, secured generally to the shaft at the opposite end of the armature.

The motor shown in Fig. 2 has an annular field-magnet H, with four pole-pieces wound with coils I. The armature is constructed similarly to that of the generator, but with two sets of two coils in closed circuits to correspond with the reduced number of magnetic poles in the field.

From the foregoing it is evident that one revolution of the armature of the generator producing eight current impulses in each circuit will produce two revolutions of the motor-armature.

The application of the principle of this invention is not confined to any particular form of machine. In Figs. 3 and 4 a generator and motor of another well-known type are shown. In Fig. 3, J J are magnets disposed in a circle and wound with coils K, which are in circuit with a generator which supplies the current that maintains the field of force. In the usual construction of these machines the armature-conductor L is carried by a suitable frame, so as to be rotated in face of the magnets J J or between these magnets and another similar set in face of them. The magnets are energized so as to be of alternately-opposite polarity throughout the series, so that as the conductor C is rotated the current impulses combine or are added to one another, those produced by the conductor in any given position being all in the same direction. To adapt such a machine to my system, I add a second set of induced conductors M, in all respects similar to the first, but so placed with reference to it that the currents produced in each will differ by a quarter-phase. With such relations it is evident that as the current decreases in conductor L it increases in conductor M, and conversely, and that any of the forms of motor invented by me for use in this system may be operated by such generator.

Fig. 4 is intended to show a motor corresponding to the machine in Fig. 3. The construction of the motor is identical with that of the generator, and if coupled thereto it will run synchronously therewith. J′ J′ are the field-magnets, and K′ the coils thereon. L′ is one of the armature-conductors and M′ the other.

Fig. 5 shows in diagram other forms of machine. The generator N in this case is shown as consisting of a stationary ring O, wound with twenty-four coils P P′, alternate coils being connected in series in two circuits. Within this ring is a disk or drum Q, with projections Q′ wound with energizing-coils included in circuit with a generator R. By driving this disk or cylinder alternating currents are produced in the coils P and P′, which are carried off to run the several motors.

The motors are composed of a ring or annular field-magnet S, wound with two sets of energizing-coils T T′, and armatures U, having projections U′ wound with coils V, all connected in series in a closed circuit or each closed independently on itself.

Suppose the twelve generator-coils P are wound alternately in opposite directions, so that any two adjacent coils of the same set

tend to produce a free pole in the ring O between them and the twelve coils P′ to be similarly wound. A single revolution of the disk or cylinder Q, the twelve polar projections of which are of opposite polarity, will therefore produce twelve current impulses in each of the circuits W W′. Hence the motor X, which has sixteen coils or eight free poles, will make one and a half turns to the generator's one. The motor Y, with twelve coils or six poles, will rotate with twice the speed of the generator, and the motor Z, with eight coils or four poles, will revolve three times as fast as the generator. These multipolar motors have a peculiarity which may be often utilized to great advantage. For example, in the motor X, Fig. 5, the eight poles may be either alternately opposite or there may be at any given time alternately two like and two opposite poles. This is readily attained by making the proper electrical connections. The effect of such a change, however, would be the same as reducing the number of poles one-half, and thereby doubling the speed of any given motor. In these and other respects it will be seen that the invention involves many important and valuable features.

It is obvious that the electrical transformers described in prior patents to me and which have independent primary currents may be used with the generators herein described.

It may be stated with respect to the devices hereinafter set forth that the most perfect and harmonious action of the generators and motors is obtained when the numbers of the poles of each are even and not odd. If this is not the case, there will be a certain unevenness of action which is the less appreciable as the number of poles is greater; but even this may be in a measure corrected by special provisions which it is not here necessary to explain. It also follows, as a matter of course, and from the above it is obvious, that if the number of the poles of the motor be greater than that of the generator the motor will revolve at a slower speed than the generator.

What I claim as my invention is—

1. The combination, with an alternating-current generator comprising independent armature-circuits formed by conductors alternately disposed, so that the currents developed therein will differ in phase, and field-magnet poles in excess of the number of armature-circuits, of a motor having independent energizing-circuits connected to the armature-circuits of the generator, substantially as set forth.

2. The combination, with a source of alternating currents which differ in phase and comprising a rotating magneto-electric machine yielding a given number of current impulses or alternations for each turn or revolution, of a motor or motors having independent energizing-circuits through which the said currents are caused to flow, and poles which in number are less than the number of current impulses produced in each motor-circuit by one turn or revolution of the magneto-machine, as set forth.

3. The combination, with a multipolar alternating-current machine having independent induced or current-generating circuits, of motors having independent energizing-circuits and a smaller number of poles than the generator, as set forth.

4. The combination, with an alternating-current generator having independent induced circuits and constructed or adapted to produce a given number of current impulses or alternations for each turn or revolution, of motors having corresponding energizing-circuits and poles which in number are less than the number of current impulses produced in each circuit in a turn or revolution of the generator, as set forth.

NIKOLA TESLA.

Witnesses:
FRANK E. HARTLEY,
FRANK B. MURPHY.

(No Model.)

N. TESLA.

ELECTRICAL TRANSMISSION OF POWER.

No. 511,559. Patented Dec. 26, 1893.

Fig. 1

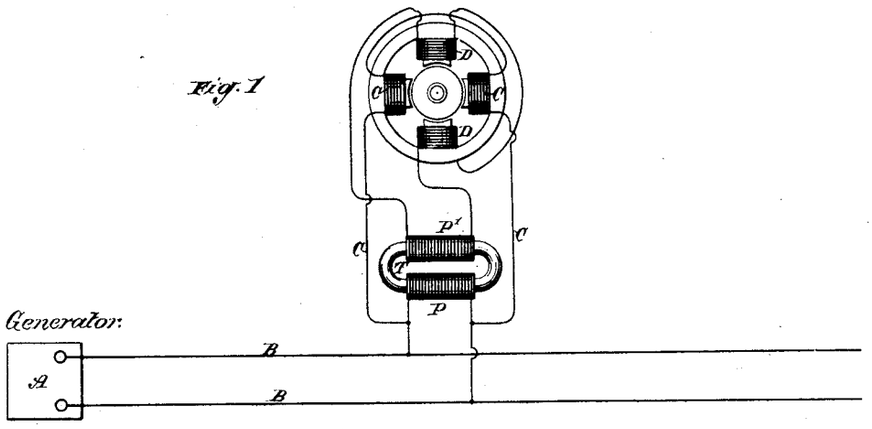

Fig. 2

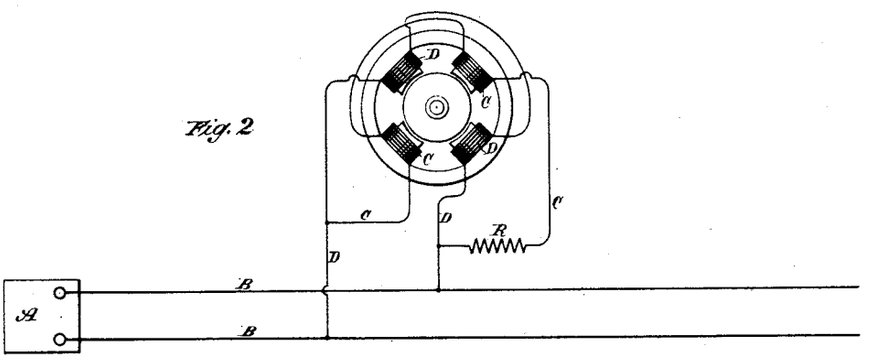

Fig. 3

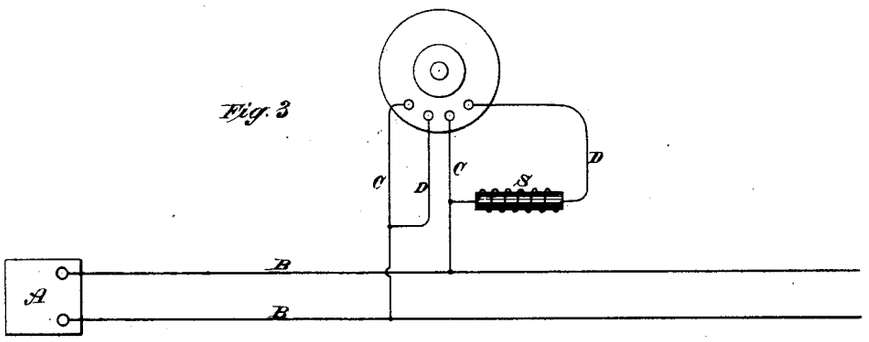

WITNESSES:
Raphael Netter
Ernest Hopkinson

INVENTOR
Nikola Tesla
BY
Duncan, Curtis & Page
ATTORNEYS.

THE NATIONAL LITHOGRAPHING COMPANY,
WASHINGTON, D. C.

UNITED STATES PATENT OFFICE.

NIKOLA TESLA, OF NEW YORK, N. Y., ASSIGNOR TO THE TESLA ELECTRIC COMPANY, OF SAME PLACE.

ELECTRICAL TRANSMISSION OF POWER.

SPECIFICATION forming part of Letters Patent No. 511,559, dated December 26, 1893.

Application filed December 8, 1888. Serial No. 293,051. (No model.)

To all whom it may concern:

Be it known that I, NIKOLA TESLA, a subject of the Emperor of Austria-Hungary, from Smiljan, Lika, border country of Austria-Hungary, residing at New York, in the county and State of New York, have invented certain new and useful Improvements in the Electrical Transmission of Power, of which the following is a specification, reference being had to the drawings accompanying and forming a part of the same.

In certain patents heretofore granted, I have shown and described a system of electrical power transmission, in which each motor contained two or more independent energizing circuits through which were caused to pass alternating currents, having in each circuit such a difference of phase that by their combined or resultant action they produced a rotary progression of the poles or points of maximum magnetic effect of the motor and thereby maintained the rotation of its movable element. In the system referred to and described in said patents, the production or generation of the alternating currents upon the combined or resulant action of which the operation of the system depends, is effected by the employment of an alternating current generator with independent induced circuits which, by reason of the winding or other construction of the generator produced currents differing in phase, and these currents were conveyed directly from the generator to the corresponding motor coils by independent lines or circuits. I have, however, discovered another method of operating these motors, which dispenses with one of the line circuits and enables me to run the motors by means of alternating currents from a single original source.

Broadly stated this invention consists in passing alternating currents, obtained from one original source, through both of the energizing circuits of the motor, and retarding the phases of the current in one circuit to a greater or less extent than in the other.

The distribution of current between the two motor circuits may be effected by induction or by derivation. In other words, I may pass the alternating current from the source through one energizing circuit and induce by such current a second current in the other energizing circuit. Or, on the other hand, I may connect up the two energizing circuits of the motor in derivation or multiple arc with the main circuit from the source. In either event I make due provision for maintaining a difference of phase between the currents in the two circuits or branches.

In carrying out my invention I have used various means for securing this result. For example, when I induce a current in one of the circuits from the current flowing in the other, I employ a form of converter or bring the two circuits into such inductive relations as will produce the necessary difference of phase. Or, when I obtain the two energizing currents by derivation, I make the two circuits of different degrees of self induction by inserting a resistance or a self induction coil in one of said circuits, or I combine these devices in different ways as I shall more specifically describe hereinafter.

The accompanying drawings to which I now refer in further illustration of my invention, are a series of diagrams illustrating, not the specific construction of the particular devices which I may or may not have used, but rather, the electrical connections and relations to be adopted in carrying out the present system by means of devices which are now well known.

Figure 1 is a diagram illustrating the method of operating the motors by inducing one of the energizing currents by the other. Fig. 2 is a similar diagram of the method of operating the motors where the two energizing currents are obtained by derivation from a single source. Fig. 3 is a modified application of this principle.

Referring to Fig. 1 let A represent the source of alternating currents which are to be utilized in operating the motor or motors. It will be understood that considered as a source of current it may be either a primary or secondary generator.

B B designate the conductors of the circuit which convey the alternating currents to one or more motors. The motor has two energizing circuits or sets of coils C D. One of these circuits as C is connected directly with the circuit B. The other set of coils as D, is con-

nected up in the secondary circuit of an electrical transformer or induction coil T. The primary coil P of this transformer, is included in the circuit B. The alternations of current in the circuit B tend to establish in their passage through the coils C, a polarity at right angles to that set up by the coils D, and if the currents in the two sets of coils accorded in their phases, no rotary effect would be produced. But the secondary current developed in the coil P′ of the transformer, will lag behind that in the primary which lag or retardation may be increased as I have shown in another application, to a sufficient extent to practically obtain the same result as though two independent alternating currents were used to energize the motor.

In Fig. 2 the two energizing circuits of the motor are shown connected in multiple arc to the circuit B B, and in one of these circuits is a resistance R. Assuming the two motor circuits to have the same self induction and resistance no rotary effect will be produced by the passage through them of an alternating current from the source A. But if one of the motor circuits, as C, be varied or modified by the introduction of a dead resistance R, the self-induction of that circuit or branch is reduced, and the phases of current therein retarded to a correspondingly less extent. The relative degrees of retardation of the phases of the current in the two motor circuits with respect to those of the unretarded current in the circuit B thus produced, will set up a rotation of the motor which may be practically utilized for many purposes.

In Fig. 3, the arrangement of the parts is similar to that shown in Fig. 2, except that a self-induction coil as S is introduced into one branch or energizing circuit of the motor. The effect of thus increasing the self-induction in one of the circuits is to retard the phases of the current passing therein to a greater extent than in the other circuit, and in this way to secure the necessary difference in phase between the two energizing currents to produce the rotation of the motor.

In an application filed, of even date herewith, I have shown and described other ways of accomplishing this result, among which may be noted the introduction of a resistance capable of variation in each motor circuit, or the use of a resistance in one circuit and a self-induction coil in the other.

In the above description I have referred mainly to motors with two energizing circuits, but it is evident that the invention applies equally to those in which there are more than two of such circuits, the adaptation of the same being a matter well understood by those skilled in the art.

I do not claim in this application the specific devices employed by me in carrying out the invention, having made these the subjects of other applications.

What I claim herein is—

1. The method of operating motors having independent energizing circuits, as herein set forth, which consists in passing alternating currents through both of the said circuits and retarding the phases of the current in one circuit to a greater or less extent than in the other.

2. The method of operating motors having independent energizing circuits, as herein set forth, which consists in directing an alternating current from a single source through both circuits of the motor and varying or modifying the relative resistance or self-induction of the motor circuits and thereby producing in the currents differences of phase, as set forth.

NIKOLA TESLA.

Witnesses:
FRANK E. HARTLEY,
FRANK B. MURPHY.

(No Model.) 3 Sheets—Sheet 1.

N. TESLA.

SYSTEM OF ELECTRICAL POWER TRANSMISSION.

No. 511,560. Patented Dec. 26, 1893.

Fig. 1

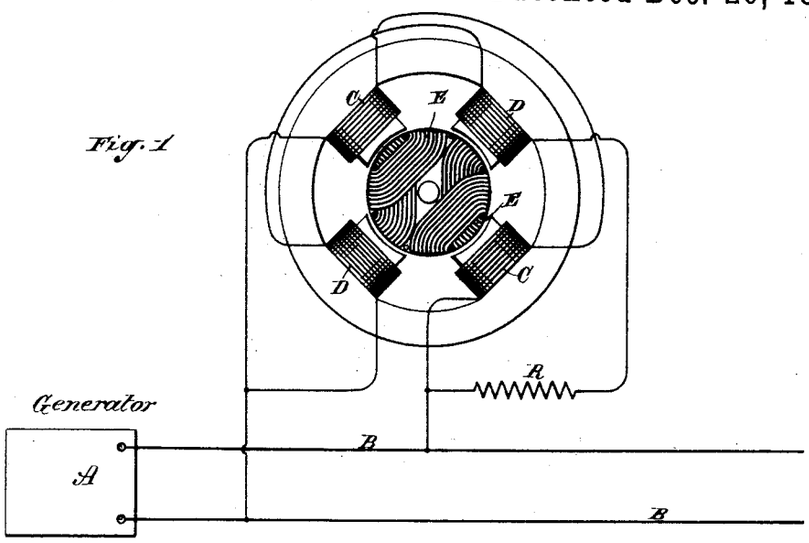

Fig. 2

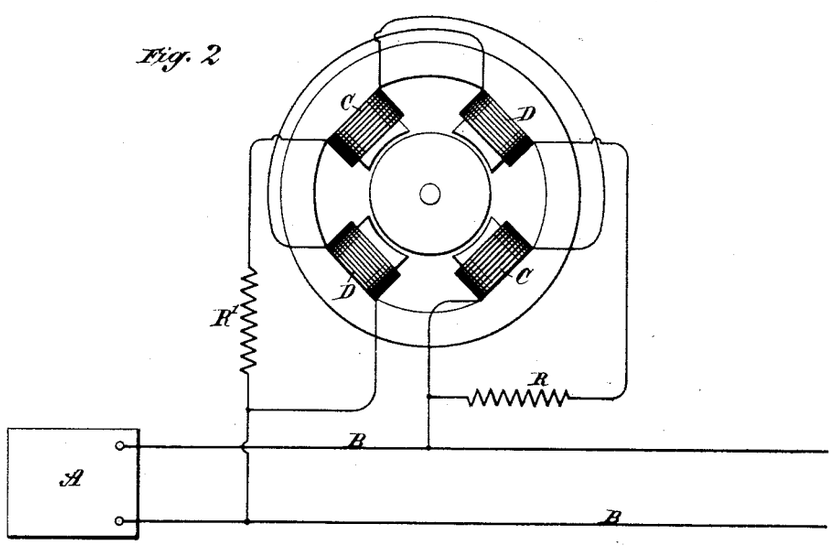

WITNESSES:
Raphael Netter
Ernest Hopkinson

INVENTOR
Nikola Tesla
BY
Duncan, Curtis & Page
ATTORNEYS.

THE NATIONAL LITHOGRAPHING COMPANY,
WASHINGTON, D. C.

(No Model.) 3 Sheets—Sheet 2.

N. TESLA.

SYSTEM OF ELECTRICAL POWER TRANSMISSION.

No. 511,560. Patented Dec. 26, 1893.

Fig. 3

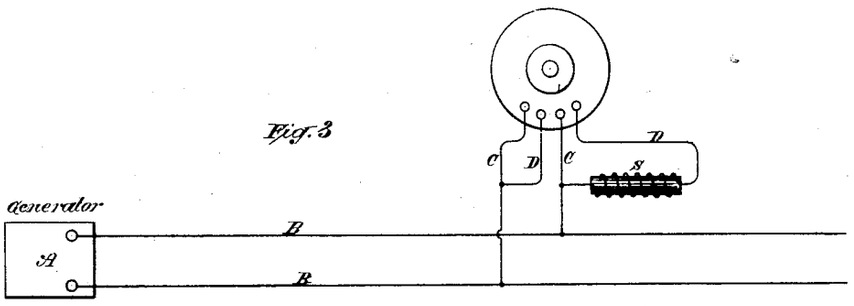

Fig. 4

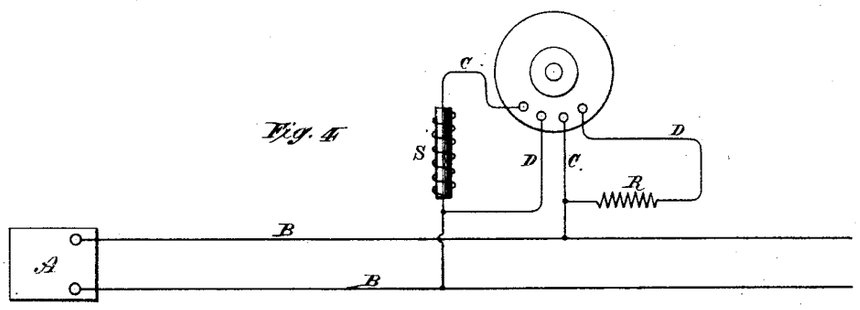

Fig. 5

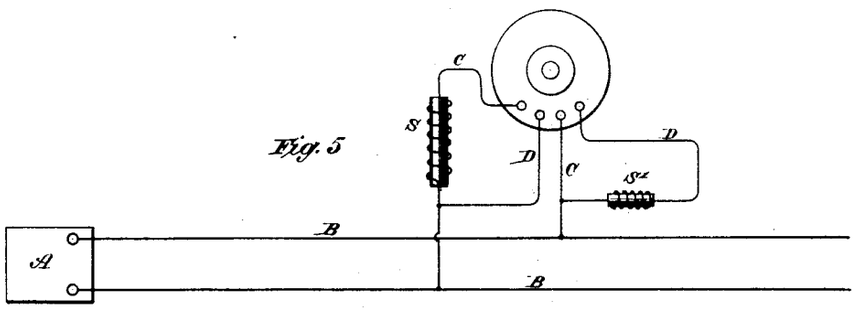

Fig. 6

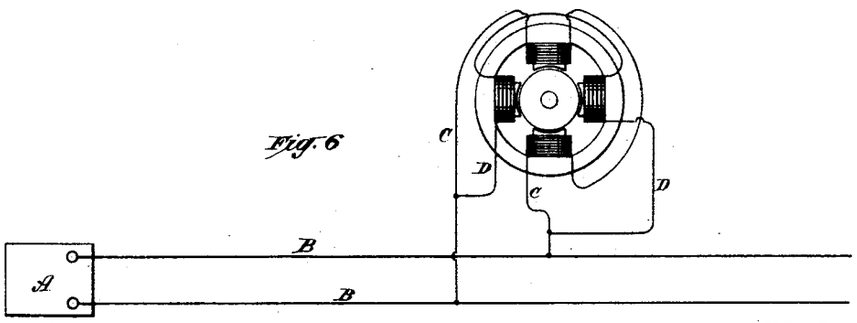

WITNESSES:
Raphael Netter
Ernest Hopkinson

INVENTOR
Nikola Tesla
BY
Duncan, Curtis & Page
ATTORNEYS.

THE NATIONAL LITHOGRAPHING COMPANY,
WASHINGTON, D. C.

(No Model.) 3 Sheets—Sheet 3.

N. TESLA.

SYSTEM OF ELECTRICAL POWER TRANSMISSION.

No. 511,560. Patented Dec. 26, 1893.

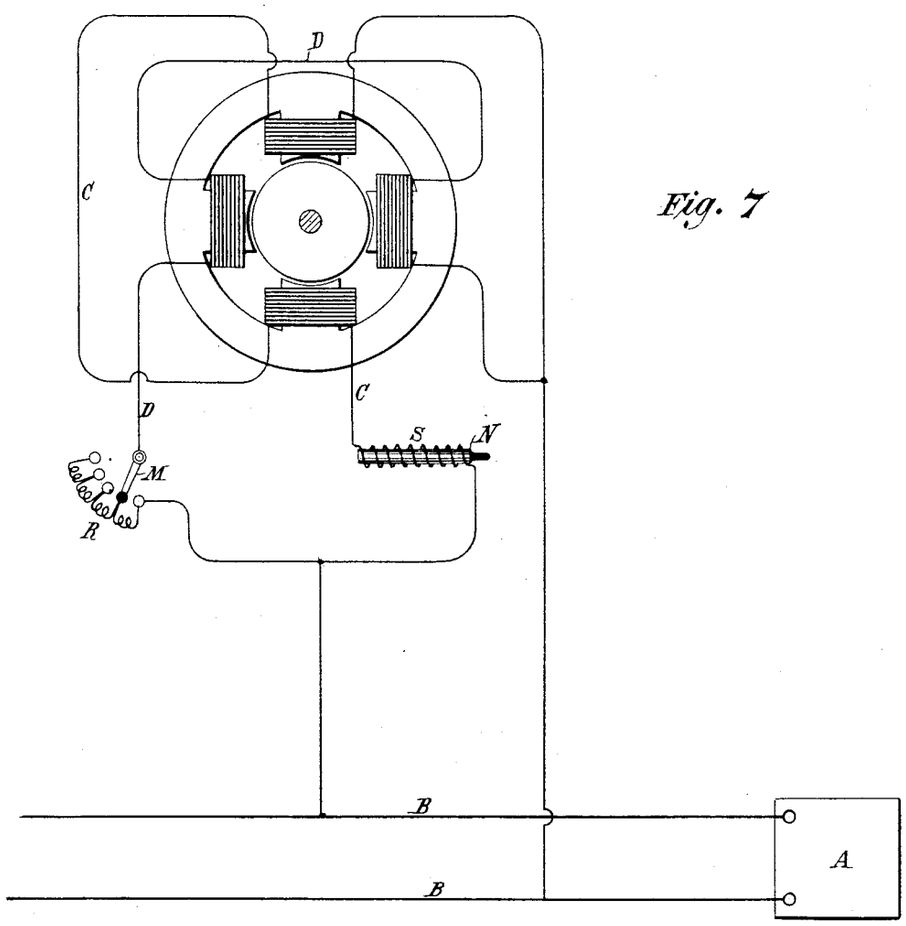

Fig. 7

WITNESSES

Raphael Netter

James H. Castlow

INVENTOR

Nikola Tesla

BY

Duncan & Page

ATTORNEYS.

THE NATIONAL LITHOGRAPHING COMPANY,
WASHINGTON, D. C.

UNITED STATES PATENT OFFICE.

NIKOLA TESLA, OF NEW YORK, N. Y., ASSIGNOR TO THE TESLA ELECTRIC COMPANY, OF SAME PLACE.

SYSTEM OF ELECTRICAL POWER TRANSMISSION.

SPECIFICATION forming part of Letters Patent No. 511,560, dated December 26, 1893.

Application filed December 8, 1888. Serial No. 293,052. (No model.)

To all whom it may concern:

Be it known that I, NIKOLA TESLA, a subject of the Emperor of Austria-Hungary, from Smiljan, Lika, border country of Austria-Hungary, residing at New York, in the county and State of New York, have invented certain new and useful Improvements in Systems of Electrical Power Transmission, of which the following is a specification, reference being had to the drawings accompanying and forming a part of the same.

In certain patents heretofore granted, I have shown and described a system of electrical power transmission in which each motor contained two or more independent energizing circuits through which were caused to pass alternating currents having in each circuit such difference of phase that by their combined or resultant action they produced a rotary progression of the poles or points of maximum magnetic effect of the motor and thereby maintained the rotation of its movable element. In the system referred to and described in the said patents the production or generation of the alternating currents, upon the combined or resultant effect of which the operation of the system depends, is effected by the employment of an alternating current generator with independent induced circuits which, by reason of the winding or other construction of the generator, produces currents differing in phase, and these currents are conveyed directly from the generator to the corresponding motor coils by independent lines or circuits. I have, however, discovered that I may produce the same or a similar result by an alternating current from a single original source using between the generator and motors but one line or transmission circuit. Broadly stated, this system or method involves a source of alternating or equivalent currents, a single transmission circuit, a motor having independent energizing circuits connected with or adapted for connection with the transmission circuit, means for rendering the magnetic effects due to the energizing circuits of different phase, and an armature within the influence of the energizing circuits; the means for accomplishing this result being of such a nature as to retard the current in one energizing circuit to a greater or less extent than in the other. The distribution of the main or original current through the two motor circuits may be effected by induction or by derivation. In other words, I may pass the alternating current from the source through one energizing circuit, and induce by such current a second current in the other energizing circuit. Or, on the other hand, I may connect up the two energizing circuits of the motor in derivation or multiple arc with the main circuit from the source. In either event I make due provision for maintaining a difference of phase between the currents in the two circuits or branches.

In an application filed by me May 15, 1888, Serial No. 273,993, I have shown and described the means which I have employed for securing this result by inducing one energizing current from the other.

My present application relates to the means employed when the two energizing currents are obtained from a single original source by derivation.

In explanation of what appears to be the principle of the operation of my invention and of the functions of the several instrumentalities comprised thereby, let it be assumed that the two energizing circuits of an alternating current motor, such, for example, as I have described in my Patent No. 382,280, dated May 1, 1888, are connected up in derivation or multiple arc with the conductors of a circuit including an alternating current generator. It is obvious that if both circuits are alike and offer the same resistance to the passage of the current no rotary effect will be produced, for although the periods of the currents in both circuits will lag or be retarded to a certain extent with respect to an unretarded current from the main circuit, their phases will coincide. If, however, the coils of one circuit have a greater number of convolutions around the cores, or a self induction coil be included in one of the circuits, the phases of the current in that circuit are retarded by the increased self induction. The degree of retardation may readily be secured by these means which will produce the difference in electrical phase between the two currents necessary for the practical operation of the motor. If in lieu of increasing the

self induction of one circuit a dead resistance be inserted, the self induction of such circuit exerts a correspondingly diminished effect, and the phases of the current flowing in that branch are brought more nearly in unison with those of an unretarded current from the main line and the necessary difference of phase between the currents in the two energizing circuits thus secured. I take advantage of these results in several ways. For example, I may insert variable resistances in both branches or energizing circuits and by varying one or the other so as to bring the phases of the two currents more or less in unison with those of the unretarded current, I may thus vary the direction of the rotation of the motor. In lieu of resistances I may employ variable self induction coils, in both circuits. Or I may use a resistance in one and a self induction coil in the other and vary either or both. This system or means of operating the motors is rendered of great practical value by employing an armature wound with energizing coils closed upon themselves, in which currents are induced by the alternating currents passing in the field coils that serve to greatly increase the mutual attractive effect between the armature and the field magnets. This use of the armature with closed coils I regard as an important feature of my invention. These several features of the invention I shall now describe more in detail by reference to the accompanying drawings.

Figure 1 is a diagram of the system in which the motor coils or energizing circuits are in derivation to the main line with a dead resistance inserted in one circuit. Fig. 2 is a diagram showing dead resistances in both motor circuits. Fig. 3 is a diagram showing a self induction coil in one motor circuit. Fig. 4 is a diagram showing a dead resistance in one circuit and a self induction coil in the other. Fig. 5 in like manner shows a self induction coil in each motor circuit. Fig. 6 is a diagram showing the two motor circuits of different electrical character. Fig. 7 is a diagram illustrating means for varying at will the electrical character of the motor circuits.

Referring to Fig. 1, A designates a suitable source of alternating currents and B B the line wires running therefrom. It will be understood that the generator A may be a primary or secondary generator, and the line B B may be the main transmission circuit or a local circuit from a transformer connected at any point in the line of a main or transmission circuit. For convenience in this case, it will be considered as a line from a given source of current to one or more motors. The motor contains a given number of pole pieces wound with two sets of coils C and D. The armature is wound with permanently closed energizing coils E in which currents are developed by inductive action when the motor is in operation which magnetize the armature core and greatly increase the efficiency of the motor. Assuming the two motor circuits to have the same degree of self induction and resistance no rotary effect will be produced by the passage through them of an alternating current from the source A. But if in one of the motor circuits, as D, a dead resistance represented by R be introduced, the self induction of that circuit or branch is reduced and the phases of current therein retarded to a correspondingly less extent. The relative degrees of retardation of the phases of the current in the two motor circuits with respect to those of an unretarded current from the circuit B thus produced will set up a rotation of the motor which may be practically utilized for many purposes.

If, as in Fig. 2, a dead resistance R, R′ be introduced into each motor circuit, no rotary effect will be produced as long as the resistances are equal, but by varying the resistance in one circuit the retardation of the current in that circuit will be varied, and corresponding effects produced. For example, a reduction of the resistance in one circuit imparts to the motor rotation in one direction while a reduction of the resistance in the other circuit will produce a rotation in the opposite direction. By means of the two resistances, therefore, capable of variation or of being bodily withdrawn from or inserted in the circuits by any well known means, a perfect regulation of the motors is secured.

In Fig. 3 the arrangement of all the parts is similar to that shown in Fig. 1 except that a self induction coil as S is introduced into one branch or energizing circuit of the motor. The effect of thus increasing the self induction in one of the circuits is to retard the phases of the current passing therein to a greater extent than in the other circuit and in this way to secure the necessary difference in phase between the two energizing currents to produce the rotation of the motor.

In Fig. 4 a self induction coil S is included in one of the motor circuits and a dead resistance R in the other. The increased self induction in one circuit thus produced acts to increase the difference of phase between the current in such motor circuit and the unretarded current in the main line B. On the other hand, the introduction of the dead resistance in the other motor circuit reduces the retardation and brings the phases of the current therein more closely in accord with those of the unretarded current, thus producing a correspondingly greater difference of phase between the two currents in the energizing circuits C and D.

In Fig. 5, two self induction coils S, S′ are shown, one in each motor or energizing circuit. One of these coils as S′ is much smaller than the other and has less self induction or counter electro motive force than the other, so that the phases of current will be retarded to a less extent than in the other. The two self induction coils may be of the same character or size if it is desired to use but one at

a time for the purpose of reversing the motor, or if they be constructed in well known ways so that they may be varied.

In Fig. 7 the usual means for varying the resistance or self-induction of the motor circuits at will are indicated by the lever M sliding over a series of resistance plates, and by a core N which is adapted to be moved in and out of the induction coil S.

Similar results may be secured by such a construction or organization of the motor as will yield the necessary differences of phase. For example, one set of energizing coils may be of finer wire than the other, or have a greater number of convolutions, or each circuit may contain the same number of convolutions, but composed of different conductors, as, for instance, one of copper, the other of German silver. I have represented this in Fig. 6, in which the coils C are indicated by closer lines than coils D.

There are other ways of varying the retardation due to the self induction in the two energizing circuits. For example, the motor coils may be all alike, but those of one energizing circuit connected in parallel while the others are connected in series, or the connection in each energizing circuit may be alike, but the currents directed through them may be of different strength, as when one of the currents is supplied from a source of higher electro-motive force.

In the above description I have referred mainly to motors with two energizing circuits, but it is evident that the invention applies equally to those in which there are more than two of such circuits, the adaptation of the same being a matter well understood by those skilled in the art.

In using in the claims the term active resistance as applied to the motor circuits in this case, it will be understood that the term refers to the opposing or retarding force existing in the circuits to the passage of the alternating currents. Thus, the two circuits may have the same dead resistance, but different degrees of self induction.

What I claim as my invention is—

1. The combination with a source of alternating currents, and a circuit from the same, of a motor having independent energizing circuits connected with the said circuit, and means for rendering the magnetic effects due to said energizing circuits of different phase and an armature within the influence of said energizing circuits.

2. The combination with a source of alternating currents and a circuit from the same, of a motor having independent energizing circuits connected in derivation or multiple arc with the said circuit, the motor or energizing circuits being of different electrical character whereby the alternating currents therein will have a difference of phase, as set forth.

3. The combination with a source of alternating currents and a circuit from the same, of a motor having independent energizing circuits connected in derivation or multiple arc with the said circuit and of different active resistance, as set forth.

4. In an alternating current motor, the combination with field magnets, of independent energizing circuits, adapted to be connected in multiple arc with the conductors of the line or transmission circuit and a resistance or self induction coil in one or both of the said motor circuits, as set forth.

5. In an alternating current motor, the combination with the field magnets or cores of independent energizing coils adapted to be connected in multiple arc with the line or transmission circuit, and a variable resistance or self induction coil included in one or both of the motor circuits as set forth.

6. In an alternating current motor, the combination with the field magnets or cores and independent energizing circuits of different active resistance and adapted to be connected with the line or transmission circuit, of an armature wound with closed energizing coils or conductors, as set forth.

7. The combination of a generator of alternating currents, a pair of mains connected thereto, a multiple circuit differential phase, and an electric motor having one circuit connected directly to said mains, and the other circuit connected to said mains through an interposed electro-motive phase-changing device adapted to change the time period of the currents passing through it.

NIKOLA TESLA.

Witnesses:
FRANK E. HARTLEY,
FRANK B. MURPHY.

Correction in Letters Patent No. 511,560.

It is hereby certified that in Letters Patent No. 511,560, granted December 26, 1893, upon the application of Nikola Tesla, of New York, N. Y., for an improvement in "Systems of Electrical Power Transmission," an error appears in the printed specification requiring correction, as follows: In line 95, page 3, the words "and an" should be stricken out; and that the said Letters Patent should be read with this correction therein that the same may conform to the record of the case in the Patent Office.

Signed and sealed this 9th day of June, A. D., 1903.

[SEAL.]

F. I. ALLEN,

Commissioner of Patents.

(No Model.)

N. TESLA.

ELECTRICAL TRANSMISSION OF POWER.

No. 511,915. Patented Jan. 2, 1894.

Fig. 1

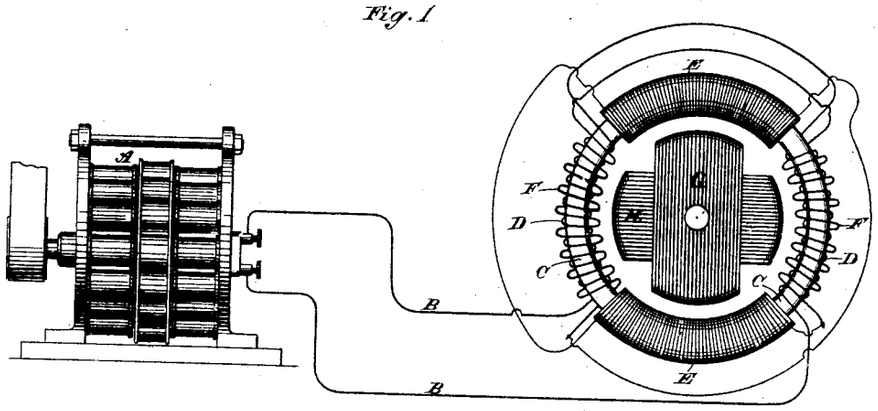

Fig. 2

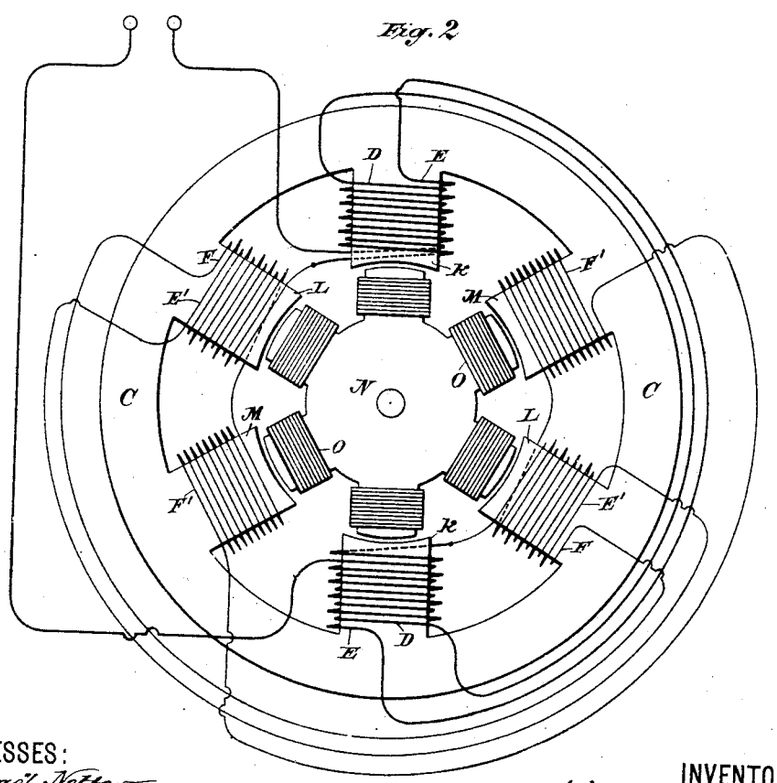

WITNESSES:
Raphael Netter
H. F. Newbury

INVENTOR
Nikola Tesla
BY
Duncan, Curtis & Page
ATTORNEYS.

THE NATIONAL LITHOGRAPHING COMPANY,
WASHINGTON, D. C.

UNITED STATES PATENT OFFICE.

NIKOLA TESLA, OF NEW YORK, N. Y., ASSIGNOR TO THE TESLA ELECTRIC COMPANY, OF SAME PLACE.

ELECTRICAL TRANSMISSION OF POWER.

SPECIFICATION forming part of Letters Patent No. 511,915, dated January 2, 1894.

Original application filed May 15, 1888, Serial No. 273,993. Divided and this application filed December 3, 1888. Serial No. 292,475. (No model.)

To all whom it may concern:

Be it known that I, NIKOLA TESLA, from Smiljan, Lika, border country of Austria-Hungary, a subject of the Emperor of Austria-Hungary, residing at New York, in the county and State of New York, have invented a new and useful Method of Electrical Transmission of Power, of which the following is a description, this application being a division of an application filed by me on May 15, 1888, Serial No. 273,993, and for the method of operating motors contained in such application.

In former patents granted to me I have shown and described a system for the electrical transmission of power characterized by the following particulars: The motor contains independent energizing circuits and the generator has corresponding induced or current generating circuits which are connected by independent line circuits with those of the motor. The disposition of the generator coils is such that the currents developed in the circuits including them will have a certain difference of phase, for example, that the maximum periods of the currents generated in one of its circuits coincide with the minimum periods of the currents produced in the other circuit, and the corresponding energizing circuits of the motor are so arranged that the two currents co-operate to effect a progressive shifting of the magnetic poles or the points of maximum magnetic effect in the motor in consequence of which a rotation of its movable element is maintained.

My present invention involves this system of electrical power transmission; its distinguishing characteristic being the mode or method of generating or producing the alternating currents which run or operate the motor.

This invention is carried out in the following way: Instead of generating directly the alternating currents in each of the circuits which include the energizing coils of the motor, as by means of the induced coils of a magneto electric machine, I generate or produce an alternating current in but one of such circuits directly and by means of such current induce the proper current in the other energizing motor circuit. When the independent currents are both produced in the magneto machine it will be observed that the two line or transmitting circuits will of necessity extend the entire distance from the generator to the motor, but that by the method herein provided, one line circuit may be dispensed with as one circuit or that from the generator may be brought into the proper inductive relation to the other at any desired point.

The following is illustrative of the manner in which I carry out this invention: I employ as a motor, for example, a subdivided annular field magnet within which is mounted a suitable armature, such as a cylinder or disk wound with two coils at right angles, each of which is closed upon itself. On opposite sides of the annular field magnet I wind two coils of insulated wire of a size adapted to carry the current from the generator. Over these coils or close to them in any of the well understood ways I wind secondary coils. I also wind on the annular field magnet midway between the first mentioned coils a pair of coils which I connect up in circuit with the secondary coils. The last pair of coils I make of finer wire than the main or line and secondary coils and with a greater number of convolutions that they may have a greater relative magnetizing and retarding effect than either of the others. By connecting up the main coils in circuit with a generator of alternating currents the armature of the motor will be rotated. It is probable that this action is explained by the following theory: A current impulse on the line passing through the main coils establishes the magnetic poles of the annular field magnets at points midway between said coils. But this impulse produces in the secondary coils a current which, circulating through the second pair of energizing coils tends to establish the poles at points ninety degrees removed from their first position with the result of producing a movement or shifting of the poles in obedience to the combined magnetizing effect of the two sets of coils. This shifting continued by each successive current impulse establishes what may be termed a rotary effort and operates to maintain the armature in rotation.

In the drawings annexed I have shown in Figure 1 an alternating current generator connected with a motor, shown diagrammatically and constructed in accordance with my invention, and in Fig. 2 a diagram of a modified form of motor.

A designates any ordinary form of alternating current generator and B B the line wires for connecting the same with the motor.

C is the annular field magnet of the motor.

D D are two main coils wound on opposite sides of the ring or annular field and connected up with the line, and having a tendency to magnetize the ring C with opposite poles midway between the two coils.

E E are two other magnetizing coils wound midway between coils D D, but having a stronger magnetizing influence for a current of given strength than coils D D.

F F are the secondary coils which are associated with the main coils D D. They are in circuits which include the coils E E respectively, the connections being made in such order that currents induced in coils F and circulating in coils E will act in opposition to those in coils D in so far only as the location of the magnetic poles in the ring C is concerned.

The armature may be of any of the forms used by me in my alternating current system and is shown as wound with two closed coils G H at right angles to each other.

In order to prolong the magnetizing effect of the induced currents in producing a shifting of the poles, I have carried the principle of the construction exhibited in Fig. 1 farther, thereby obtaining a stronger and better rotary effect.

Referring to Fig. 2, C is an annular field magnet having three pairs or oppositely located sets of polar projections K L M. Upon one pair of these projections, as K, the main energizing coils D are wound. Over these are wound the secondary coils E. On the next polar projections L L are wound the second energizing coils F which are in circuit with coils E. Tertiary induced coils E′ are then wound over the coils F and on the remaining polar projections M the third energizing coils F′ are wound and connected up in the circuit of the tertiary coils E′. The cylindrical or disk armature core N in this motor has polar projections wound with coils O forming closed circuits. My object in constructing the motor in this way is to effect more perfectly a shifting of the points of maximum magnetic effect. For assuming the operation of the motor to be due to the action above set forth—the first effect of a current impulse in this motor will be to magnetize the pole pieces K K, but the current thereby induced in coils E magnetizes the pole pieces L and the current induced in turn in coils E′ magnetizes the pole pieces M. The pole pieces are not magnetized, at least to their full extent, simultaneously by this means, but there is enough of a retardation or delay to produce a rotary effect or influence upon the armature. The application of this principle is not limited to the special forms of motor herein shown, as any of the double circuit alternating current motors invented by me and described in former Letters Patent to me may be adapted to the same purpose. This method or mode of producing the currents in the independent energizing circuits of the motor may be carried out in various ways, and it is not material to the invention broadly considered, what devices be employed in effecting the result, viz: the induction from or by the current from the generator or source, of the current or currents which co-operate therewith in producing the rotation of the motor.

I would state that in using the word generator, I mean either a primary generator, such as a magneto machine, or a secondary generator, such as an electrical converter, and in claiming protection for inducing the current in one set of energizing coils by the current which circulates in another, I would be understood as including the induction of the secondary current from the current from the same source as that which traverses the motor coils whether it be flowing in the same branch or part of the circuit or not.

What I claim is—

1. The method of operating electro-magnetic motors having independent energizing circuits, as herein described, which consists in passing an alternating current through one of the energizing circuits and inducing by such current the current in the other energizing circuit of the motor, as set forth.

2. The method of operating electro-magnetic motors having independent energizing circuits as herein described, which consists in developing an alternating current in one of said energizing circuits and inducing thereby currents in the other energizing circuit or circuits, as herein set forth.

NIKOLA TESLA.

Witnesses:
GEO. N. MONRO,
EDWARD T. EVANS.

(No Model.) 2 Sheets—Sheet 1.

N. TESLA.

ELECTRIC GENERATOR.

No. 511,916. Patented Jan. 2, 1894.

Fig. 1

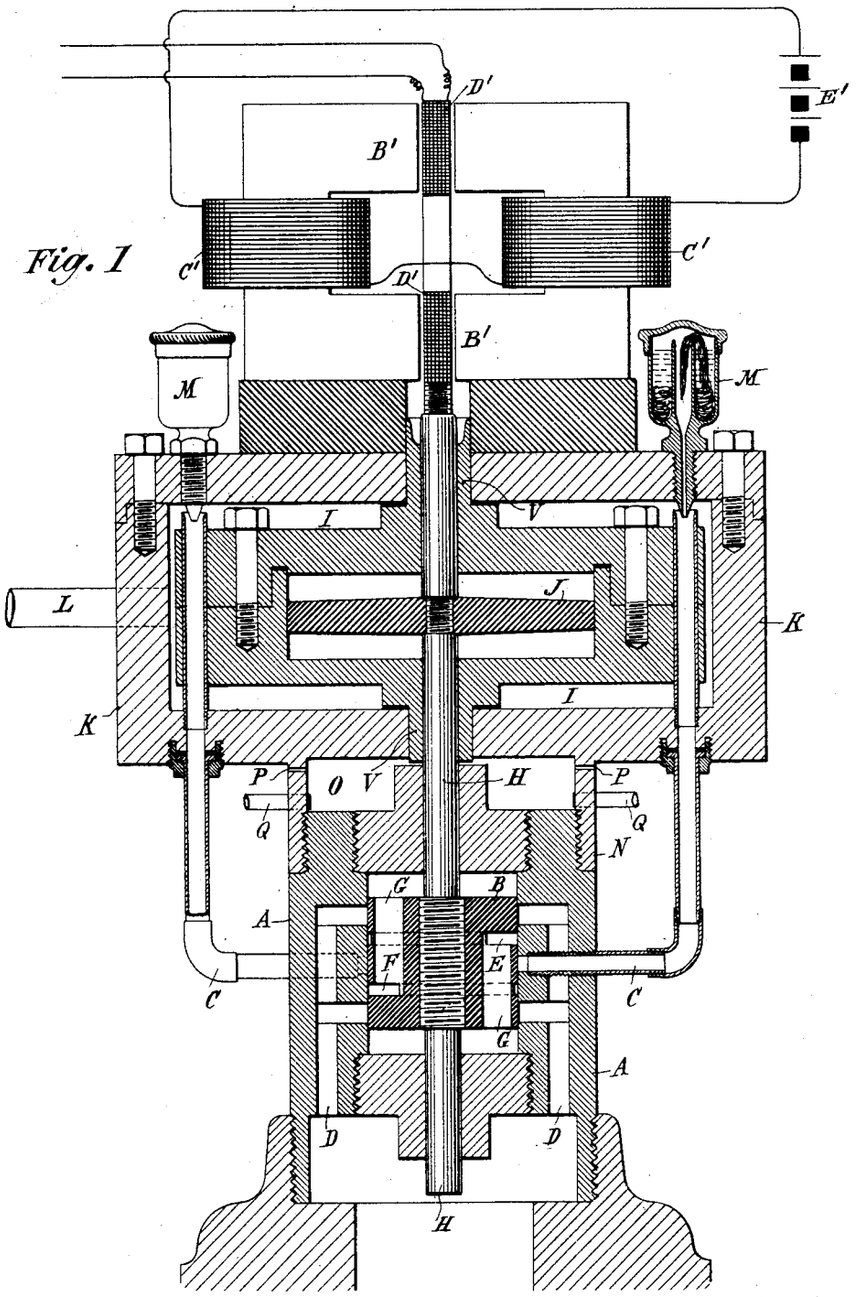

Witnesses
Raphael Netter
R. F. Gaylord

Inventor
Nikola Tesla
By his Attorneys
Duncan & Page.

THE NATIONAL LITHOGRAPHING COMPANY.
WASHINGTON, D. C.

(No Model.) 2 Sheets—Sheet 2.

N. TESLA.

ELECTRIC GENERATOR.

No. 511,916. Patented Jan. 2, 1894.

Fig. 2

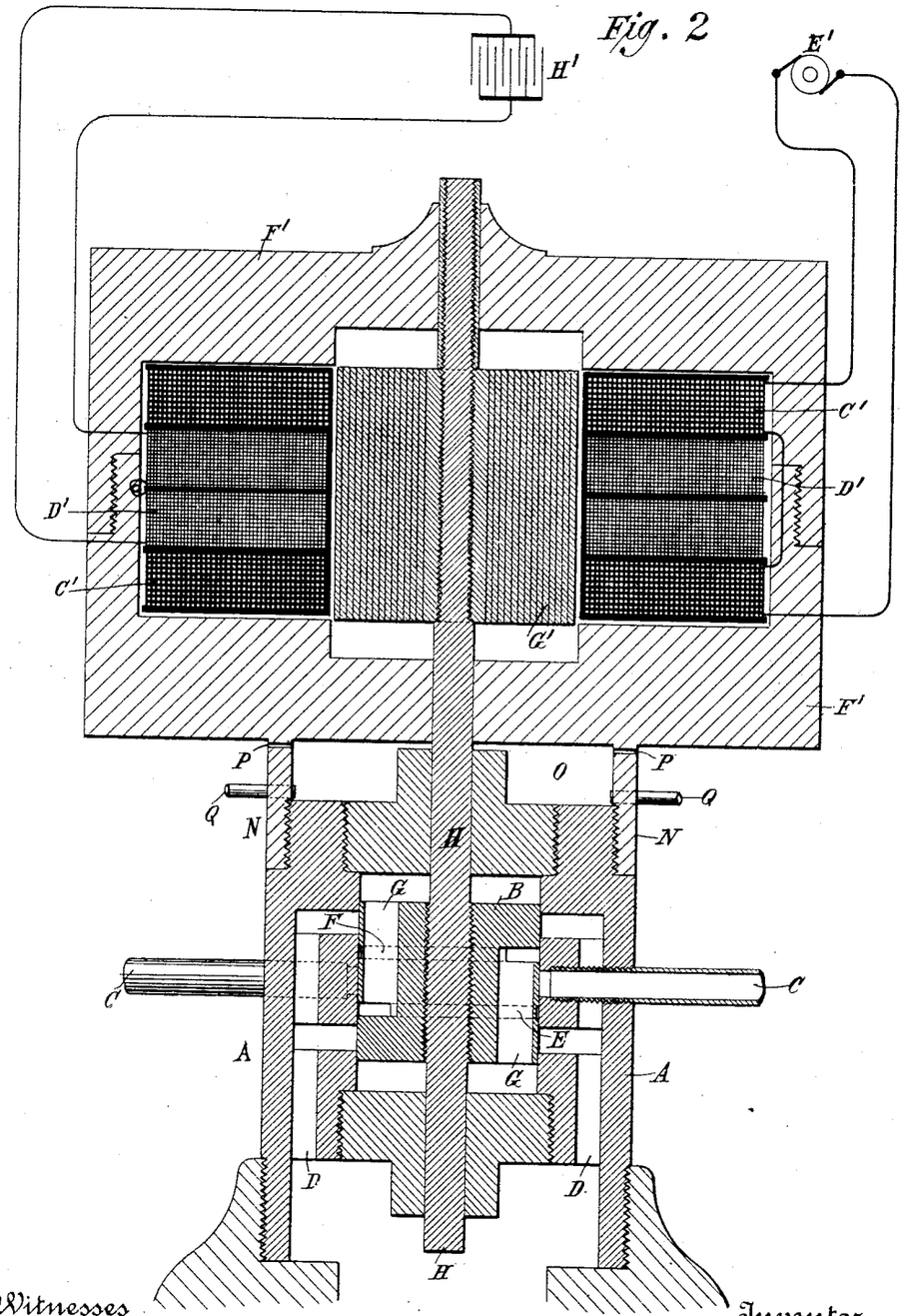

Witnesses
Raphael Netter
R. F. Gaylord

Inventor
Nikola Tesla
By his Attorneys
Duncan & Page.

THE NATIONAL LITHOGRAPHING COMPANY,
WASHINGTON, D. C.

UNITED STATES PATENT OFFICE.

NIKOLA TESLA, OF NEW YORK, N. Y.

ELECTRIC GENERATOR.

SPECIFICATION forming part of Letters Patent No. 511,916, dated January 2, 1894.

Application filed August 19, 1893. Serial No. 483,562. (No model.)

To all whom it may concern:

Be it known that I, NIKOLA TESLA, a citizen of the United States, residing at New York, in the county and State of New York, have invented certain new and useful Improvements in Electric Generators, of which the following is a specification, reference being had to the drawings accompanying and forming a part of the same.

In an application of even date herewith, Serial No. 483,563, I have shown and described a form of engine invented by me, which, under the influence of an applied force such as the elastic tension of steam or a gas under pressure, yields an oscillation of constant period.

In order that my present invention may be more readily understood I will explain the conditions which are to be observed in order to secure this result.

It is a well known mechanical principle that if a spring possessing a sensible inertia be brought under tension, as by being stretched, and then freed, it will perform vibrations which are isochronous, and as to period, in the main, dependent upon the rigidity of the spring, and its own inertia or that of the system of which it may form an immediate part. This is known to be true in all cases where the force which tends to bring the spring or movable system into a given position is proportionate to the displacement.

In the construction of my engine above referred to I have followed and applied this principle, that is to say, I employ a cylinder and a piston which in any suitable manner I maintain in reciprocation by steam or gas under pressure. To the moving piston or to the cylinder, in case the latter reciprocate and the piston remain stationary, a spring is connected so as to be maintained in vibration thereby, and whatever may be the inertia of the piston or of the moving system and the rigidity of the spring relatively to each other, provided, the practical limits within which the law holds true that the forces which tend to bring the moving system to a given position are proportionate to the displacement, are not exceeded, the impulses of the power impelled piston and the natural vibrations of the spring will always correspond in direction and coincide in time. In the case of the engine referred to, the ports are so arranged that the movement of the piston within the cylinder in either direction ceases when the force tending to impel it and the momentum which it has acquired are counterbalanced by the increasing pressure of the steam or compressed air in that end of the cylinder toward which it is moving, and as in its movement the piston has shut off at a given point, the pressure that impelled it and established the pressure that tends to return it, it is then impelled in the opposite direction, and this action is continued as long as the requisite pressure is applied. The length of the stroke will vary with the pressure, but the rate or period of reciprocation is no more dependent upon the pressure applied to drive the piston, than would be the period of oscillation of a pendulum permanently maintained in vibration, upon the force which periodically impels it, the effect of variations in such force being merely to produce corresponding variations in the length of stroke or amplitude of vibration respectively.

In practice I have found that the best results are secured by the employment of an air spring, that is, a body of confined air or gas which is compressed and rarefied by the movements of the piston, and in order to secure a spring of constant rigidity I prefer to employ a separate chamber or cylinder containing air at the normal atmospheric pressure, although it might be at any other pressure, and in which works a plunger connected with or carried by the piston rod. The main reason why no engine heretofore has been capable of producing results of this nature is that it has been customary to connect with the reciprocating parts a heavy fly-wheel or some equivalent rotary system of relatively very great inertia, or in other cases where no rotary system was employed, as in certain reciprocating engines or tools, no regard has been paid to the obtainment of the conditions essential to the end which I have in view, nor would the pressure of such conditions in said devices appear to result in any special advantage.

Such an engine as I have described affords a means for accomplishing a result heretofore unattained, the continued production of electric currents of constant period, by imparting the movements of the piston to a core or

coil in a magnetic field. It should be stated however, that in applying the engine for this purpose certain conditions are encountered which should be taken into consideration in order to satisfactorily secure the desired result. When a conductor is moved in a magnetic field and a current caused to circulate therein, the electro-magnetic reaction between it and the field, might disturb the mechanical oscillation to such an extent as to throw it out of isochronism. This, for instance, might occur when the electro-magnetic reaction is very great in comparison to the power of the engine, and there is a retardation of the current so that the electro-magnetic reaction might have an effect similar to that which would result from a variation of the tension of the spring, but if the circuit of the generator be so adjusted that the phases of the electromotive force and current coincide in time, that is to say, when the current is not retarded, then the generator driven by the engine acts merely as a frictional resistance and will not, as a rule, alter the period of the mechanical vibration, although it may vary its amplitude. This condition may be readily secured by properly proportioning the self induction and capacity of the circuit including the generator. I have, however, observed the further fact in connection with the use of such engines as a means for running a generator, that it is advantageous that the period of the engine and the natural period of electrical vibration of the generator should be the same, as in such case the best conditions for electrical resonance are established and the possibility of disturbing the period of mechanical vibrations is reduced to a minimum. I have found that even if the theoretical conditions necessary for maintaining a constant period in the engine itself are not exactly maintained, still the engine and generator combined will vibrate at a constant period. For example, if instead of using in the engine an independent cylinder and plunger, as an air spring of practically constant rigidity, I cause the piston to impinge upon air cushions at the ends of its own cylinder, although the rigidity of such cushions or springs might be considerably affected and varied by the variations of pressure within the cylinder, still by combining with such an engine a generator which has a period of its own approximately that of the engine, constant vibration may be maintained even through a considerable range of varying pressure, owing to the controlling action of the electro-magnetic system. I have even found that under certain conditions the influence of the electro-magnetic system may be made so great as to entirely control the period of the mechanical vibration within wide limits of varying pressure. This is likely to occur in those instances where the power of the engine while fully capable of maintaining a vibration once started, is not sufficient to change its rate. So, for the sake of illustration, if a pendulum is started in vibration, and a small force applied periodically in the proper direction to maintain it in motion, this force would have no substantial control over the period of the oscillation, unless the inertia of the pendulum be small in comparison to the impelling force, and this would be true no matter through what fraction of the period the force may be applied. In the case under consideration the engine is merely an agent for maintaining the vibration once started, although it will be understood that this does not preclude the performance of useful work which would simply result in a shortening of the stroke. My invention, therefore, involves the combination of a piston free to reciprocate under the influence of steam or a gas under pressure and the movable element of an electric generator which is in direct mechanical connection with the piston, and it is more especially the object of my invention to secure from such combination electric currents of a constant period. In the attainment of this object I have found it preferable to construct the engine so that it of itself controls the period, but as I have stated before, I may so modify the elements of the combination that the electro-magnetic system may exert a partial or even complete control of the period.

In illustration of the manner in which the invention is carried out I now refer to the accompanying drawings.

Figure 1 is a central sectional view of an engine and generator embodying the invention. Fig. 2 is a modification of the same.

Referring to Fig. 1 A is the main cylinder in which works a piston B. Inlet ports C C pass through the sides of the cylinder opening at the middle portion thereof and on opposite sides. Exhaust ports D D extend through the walls of the cylinder and are formed with branches that open into the interior of the cylinder on each side of the inlet ports and on opposite sides of the cylinder. The piston B is formed with two circumferential grooves E F which communicate through openings G in the piston with the cylinder on opposite sides of said piston respectively.

The particular construction of the cylinder, the piston and the ports controlling it may be very much varied, and is not in itself material, except that in the special case now under consideration it is desirable that all the ports, and more especially the exhaust ports should be made very much larger than is usually the case so that no force due to the action of the steam or compressed air will tend to retard or affect the return of the piston in either direction. The piston B is secured to a piston rod H which works in suitable stuffing boxes in the heads of the cylinder A. This rod is prolonged on one side and extends through bearings V in a cylinder I suitably mounted or supported in line with the first, and within which is a disk or plunger J carried by the rod H. The cylinder I is without ports of any kind and is air-tight except as a

small leakage may occur through the bearings V, which experience has shown need not be fitted with any very considerable accuracy. The cylinder I is surrounded by a jacket K which leaves an open space or chamber around it. The bearings V in the cylinder I, extend through the jacket K to the outside air and the chamber between the cylinder and jacket is made steam or air-tight as by a suitable packing. The main supply pipe L for steam or compressed air leads into this chamber, and the two pipes that lead to the cylinder A run from the said chamber, oil cups M being conveniently arranged to deliver oil into the said pipes for lubricating the piston. In the particular form of engine shown, the jacket K which contains the cylinder I is provided with a flange N by which it is screwed to the end of the cylinder A. A small chamber O is thus formed which has air vents P in its sides and drip pipes Q leading out from it through which the oil which collects in it is carried off.

To explain now the operation of the engine described, in the position of the parts shown, or when the piston is at the middle point of its stroke, the plunger J is at the center of the cylinder I and the air on both sides of the same is at the normal pressure of the outside atmosphere. If a source of steam or compressed air be then connected to the inlet ports C C of the cylinder A and a movement be imparted to the piston as by a sudden blow, the latter is caused to reciprocate in a manner well understood. The movements of the piston compress and rarefy the air in the cylinder I at opposite ends of the same alternately. A forward stroke compresses the air ahead of the plunger J which acts as a spring to return it. Similarly on the back stroke the air is compressed on the opposite side of the plunger J and tends to drive it forward. The compressions of the air in the cylinder I and the consequent loss of energy due mainly to the imperfect elasticity of the air, give rise to a very considerable amount of heat. This heat I utilize by conducting the steam or compressed air to the engine cylinder through the chamber formed by the jacket surrounding the air-spring cylinder. The heat thus taken up and used to raise the temperature of the steam or air acting upon the piston is availed of to increase the efficiency of the engine. In any given engine of this kind the normal pressure will produce a stroke of determined length, and this will be increased or diminished according to the increase of pressure above or the reduction of pressure below the normal.

In constructing the apparatus proper allowance is made for a variation in the length of stroke by giving to the confining cylinder I of the air spring properly determined dimensions. The greater the pressure upon the piston, the higher the degree of compression of the air-spring, and the consequent counteracting force upon the plunger. The rate or period of reciprocation of the piston, however, is mainly determined as described above by the rigidity of the air spring and the inertia of the moving system, and any period of oscillation within very wide limits may be secured by properly portioning these factors, as by varying the dimensions of the air chamber which is equivalent to varying the rigidity of the spring, or by adjusting the weight of the moving parts. These conditions are all readily determinable, and an engine constructed as herein described may be made to follow the principle of operation above stated and maintain a perfectly uniform period through very wide limits of pressure.

The pressure of the air confined in the cylinder when the plunger I is in its central position will always be practically that of the surrounding atmosphere, for while the cylinder is so constructed as not to permit such sudden escape of air as to sensibly impair or modify the action of the air spring there will still be a slow leakage of air into or out of it around the piston rod according to the pressure therein, so that the pressure of the air on opposite sides of the plunger will always tend to remain at that of the outside atmosphere.

To the piston rod H is secured a conductor or coil of wire D′ which by the movements of the piston is oscillated in the magnetic field produced by two magnets B′ B′ which may be permanent magnets or energized by coils C′ C′ connected with a source of continuous currents E′. The movement of the coil D′ across the lines of force established by the magnets gives rise to alternating currents in the coil. These currents, if the period of mechanical oscillation be constant will be of constant period, and may be utilized for any purpose desired.

In the case under consideration it is assumed as a necessary condition that the inertia of the movable element of the generator and the electro-magnetic reaction which it exerts will not be of such character as to materially disturb the action of the engine.

Fig. 2 is an example of a combination in which the engine is not of itself capable of determining entirely the period of oscillation, but in which the generator contributes to this end. In this figure the engine is the same as in Fig. 1. The exterior air spring is however omitted and the air spaces at the ends of the cylinder A relied on for accomplishing the same purpose. As the pressure in these spaces is liable to variations from variations in the steam or gas used in impelling the piston they might affect the period of oscillation, and the conditions are not as stable and certain as in the case of an engine constructed as in Fig. 1. But if the natural period of vibration of the elastic system be made to approximately accord with the average period of the engine such tendencies to variation are very largely overcome and the engine will preserve its period even through a considerable range of variations of pressure. The

generator in this case is composed of a magnetic casing F′ in which a laminated core G′ secured to the piston rod H is caused to vibrate. Surrounding the plunger are two exciting coils C′ C′, and one or more induced coils D′ D′. The coils C′ C′ are connected with a generator of continuous currents E′ and are wound to produce consequent poles in the core G′. Any movement of the latter will therefore shift the lines of force through coils D′ D′ and produce currents therein.

In the circuit of coils D′ is shown a condenser H′. It need only be said that by the use of a proper condenser the self induction of this circuit may be neutralized. Such a circuit will have a certain natural period of vibration, that is to say that when the electricity therein is disturbed in any way an electrical or electro-magnetic vibration of a certain period takes place, and as this depends upon the capacity and self induction, such period may be varied to approximately accord with the period of the engine.

In case the power of the engine be comparatively small, as when the pressure is applied through a very small fraction of the total stroke, the electrical vibration will tend to control the period, and it is clear that if the character of such vibration be not very widely different from the average period of vibration of the engine under ordinary working conditions such control may be entirely adequate to produce the desired results.

Having now described my invention, what I claim is—

1. The combination with the piston or equivalent element of an engine which is free to reciprocate under the action thereon of steam or a gas under pressure, of the moving conductor or element of an electric generator in direct mechanical connection therewith.

2. The combination with the piston or equivalent element of an engine which is free to reciprocate under the action of steam or a gas under pressure, of the moving conductor or element of an electric generator in direct mechanical connection therewith, the engine and generator being adapted by their relative adjustment with respect to period to produce currents of constant period, as set forth.

3. The combination with an engine comprising a piston which is free to reciprocate under the action of steam or a gas under pressure, and an electric generator having inducing and induced elements one of which is capable of oscillation in the field of force, the said movable element being carried by the piston rod of the engine, as set forth.

4. The combination with an engine operated by steam or a gas under pressure and having a constant period of reciprocation, of an electric generator, the moving element of which is carried by the reciprocating part of the engine, the generator and its circuit being so related to the engine with respect to the period of electrical vibration as not to disturb the period of the engine, as set forth.

5. The combination with a cylinder and a piston reciprocated by steam or a gas under pressure of a spring maintained in vibration by the movement of the piston, and an electric generator, the movable conductor or element of which is connected with the piston, these elements being constructed and adapted in the manner set forth for producing a current of constant period.

6. The method of producing electric currents of constant period herein described which consists in imparting the oscillations of an engine to the moving element of an electric generator and regulating the period of mechanical oscillation by an adjustment of the reaction of the electric generator, as herein set forth.

NIKOLA TESLA.

Witnesses:
PARKER W. PAGE,
R. F. GAYLORD.

(No Model.)

N. TESLA.

COIL FOR ELECTRO MAGNETS.

No. 512,340. Patented Jan. 9, 1894.

Fig. 1

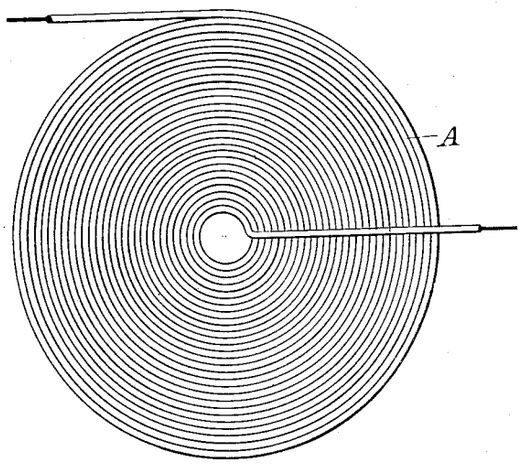

Fig. 2

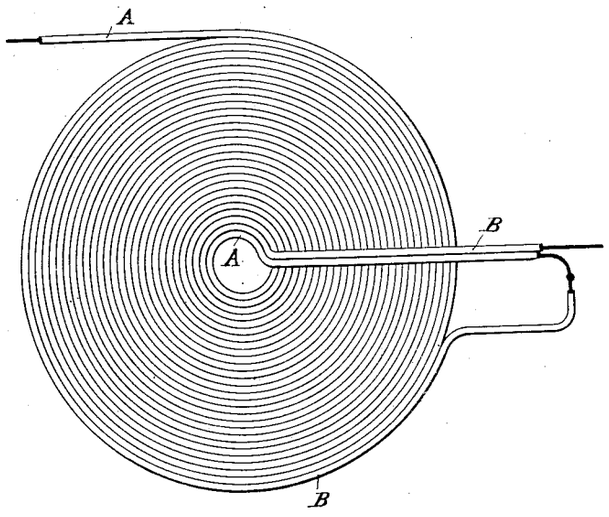

Witnesses
Raphaël Netter
James M. Catlin

Inventor
Nikola Tesla
By his Attorneys
Duncan & Page.

UNITED STATES PATENT OFFICE.

NIKOLA TESLA, OF NEW YORK, N. Y.

COIL FOR ELECTRO-MAGNETS.

SPECIFICATION forming part of Letters Patent No. 512,340, dated January 9, 1894.

Application filed July 7, 1893. Serial No. 479,804. (No model.)

To all whom it may concern:

Be it known that I, NIKOLA TESLA, a citizen of the United States, residing at New York, in the county and State of New York, have invented certain new and useful Improvements in Coils for Electro-Magnets and other Apparatus, of which the following is a specification, reference being had to the drawings accompanying and forming a part of the same.

In electric apparatus or systems in which alternating currents are employed the self-induction of the coils or conductors may, and, in fact, in many cases does operate disadvantageously by giving rise to false currents which often reduce what is known as the commercial efficiency of the apparatus composing the system or operate detrimentally in other respects. The effects of self-induction, above referred to, are known to be neutralized by proportioning to a proper degree the capacity of the circuit with relation to the self-induction and frequency of the currents. This has been accomplished heretofore by the use of condensers constructed and applied as separate instruments.

My present invention has for its object to avoid the employment of condensers which are expensive, cumbersome and difficult to maintain in perfect condition, and to so construct the coils themselves as to accomplish the same ultimate object.

I would here state that by the term coils I desire to include generally helices, solenoids, or, in fact, any conductor the different parts of which by the requirements of its application or use are brought into such relations with each other as to materially increase the self-induction.

I have found that in every coil there exists a certain relation between its self-induction and capacity that permits a current of given frequency and potential to pass through it with no other opposition than that of ohmic resistance, or, in other words, as though it possessed no self-induction. This is due to the mutual relations existing between the special character of the current and the self-induction and capacity of the coil, the latter quantity being just capable of neutralizing the self-induction for that frequency. It is well-known that the higher the frequency or potential difference of the current the smaller the capacity required to counteract the self-induction; hence, in any coil, however small the capacity, it may be sufficient for the purpose stated if the proper conditions in other respects be secured. In the ordinary coils the difference of potential between adjacent turns or spires is very small, so that while they are in a sense condensers, they possess but very small capacity and the relations between the two quantities, self-induction and capacity, are not such as under any ordinary conditions satisfy the requirements herein contemplated, because the capacity relatively to the self-induction is very small.

In order to attain my object and to properly increase the capacity of any given coil, I wind it in such way as to secure a greater difference of potential between its adjacent turns or convolutions, and since the energy stored in the coil—considering the latter as a condenser, is proportionate to the square of the potential difference between its adjacent convolutions, it is evident that I may in this way secure by a proper disposition of these convolutions a greatly increased capacity for a given increase in potential difference between the turns.

I have illustrated diagrammatically in the accompanying drawings the general nature of the plan which I adopt for carrying out this invention.

Figure 1 is a diagram of a coil wound in the ordinary manner. Fig. 2 is a diagram of a winding designed to secure the objects of my invention.

Let A, Fig. 1, designate any given coil the spires or convolutions of which are wound upon and insulated from each other. Let it be assumed that the terminals of this coil show a potential difference of one hundred volts, and that there are one thousand convolutions; then considering any two contiguous points on adjacent convolutions let it be assumed that there will exist between them a potential difference of one-tenth of a volt. If now, as shown in Fig. 2, a conductor B be wound parallel with the conductor A and insulated from it, and the end of A be connected with the starting point of B, the aggregate length of the two conductors being such that the assumed number of convolutions or turns is the same, viz., one thousand, then the po-

tential difference between any two adjacent points in A and B will be fifty volts, and as the capacity effect is proportionate to the square of this difference, the energy stored in the coil as a whole will now be two hundred and fifty thousand as great. Following out this principle, I may wind any given coil either in whole or in part, not only in the specific manner herein illustrated, but in a great variety of ways, well-known in the art, so as to secure between adjacent convolutions such potential difference as will give the proper capacity to neutralize the self-induction for any given current that may be employed. Capacity secured in this particular way possesses an additional advantage in that it is evenly distributed, a consideration of the greatest importance in many cases, and the results, both as to efficiency and economy, are the more readily and easily obtained as the size of the coils, the potential difference, or frequency of the currents are increased.

Coils composed of independent strands or conductors wound side by side and connected in series are not in themselves new, and I do not regard a more detailed description of the same as necessary. But heretofore, so far as I am aware, the objects in view have been essentially different from mine, and the results which I obtain even if an incident to such forms of winding have not been appreciated or taken advantage of.

In carrying out my invention it is to be observed that certain facts are well understood by those skilled in the art, viz: the relations of capacity, self-induction, and the frequency and potential difference of the current. What capacity, therefore, in any given case it is desirable to obtain and what special winding will secure it, are readily determinable from the other factors which are known.

What I claim as my invention is—

1. A coil for electric apparatus the adjacent convolutions of which form parts of the circuit between which there exists a potential difference sufficient to secure in the coil a capacity capable of neutralizing its self-induction, as hereinbefore described.

2. A coil composed of contiguous or adjacent insulated conductors electrically connected in series and having a potential difference of such value as to give to the coil as a whole, a capacity sufficient to neutralize its self-induction, as set forth.

NIKOLA TESLA.

Witnesses:
ROBT. F. GAYLORD,
PARKER W. PAGE.

(No Model.)

N. TESLA.

ELECTRICAL CONDUCTOR.

No. 514,167. Patented Feb. 6, 1894.

Fig. 1

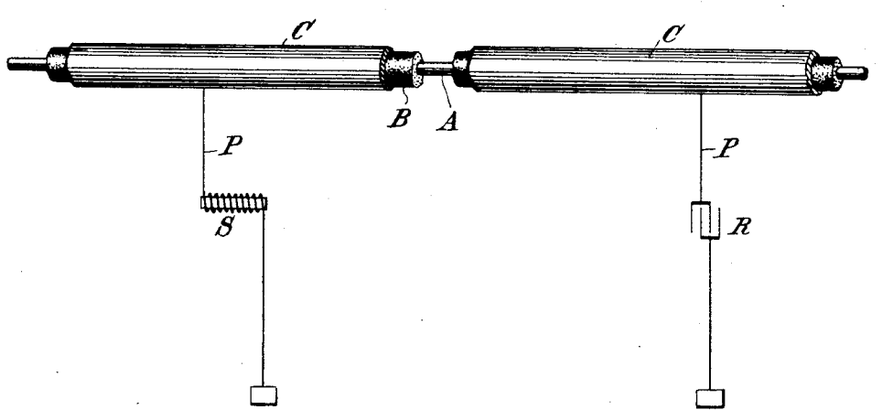

Fig. 2

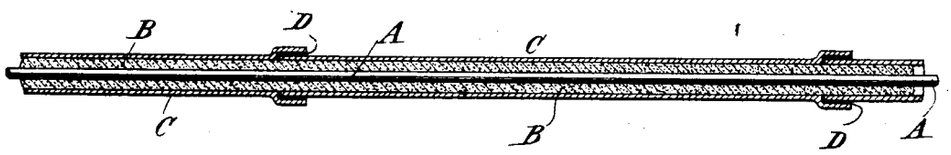

Witnesses:
Raphael Netter
Ernest Hopkinson

Inventor
Nikola Tesla
by Duncan & Page
Attorneys

THE NATIONAL LITHOGRAPHING COMPANY,
WASHINGTON, D. C.

UNITED STATES PATENT OFFICE.

NIKOLA TESLA, OF NEW YORK, N. Y.

ELECTRICAL CONDUCTOR.

SPECIFICATION forming part of Letters Patent No. 514,167, dated February 6, 1894.

Application filed January 2, 1892. Serial No. 416,773. (No model.)

To all whom it may concern:

Be it known that I, NIKOLA TESLA, a citizen of the United States, residing at New York, in the county and State of New York, have invented certain new and useful Improvements in Line Conductors for Systems of Electrical Distribution, of which the following is a specification, reference being had to the drawings accompanying and forming a part of the same.

In any system of electrical transmission or distribution in which currents of excessively high potential are employed, and more particularly, when the frequency is high, there is a dissipation of energy from the conductor or conductors of the line, due to the electrification of the atmosphere or other surrounding medium, or other causes.

Heretofore it has been usual, in order to prevent loss by dissipation or interference by induction on line conductors, to insulate the same and inclose them in a continuous conducting sheathing or cover which has been connected with the ground by a good conducting path.

The object of my invention is to prevent loss on line conductors in a system of electrical transmission and distribution, more particularly such as that described by me in patent of June 23, 1891, No. 454,622, but in any other system in which alternating or, generally speaking, varying currents of excessively high potential are employed.

I have found that in these systems the use of a conducting sheath or screen around the line conductors and well grounded, or even brought into proximity to external conductors or large bodies, is attended by an actual and generally a serious loss of energy. I therefore maintain the sheath either entirely isolated or connected directly or inductively to the ground, through a path which will practically prevent the passage of currents over it. I have also found that when a continuous insulated sheath or screen is employed, there is greater liability to loss of energy by inductive action, for unless the sheath or screen be considerably shorter than the current waves passing in the conductor, electromotive forces will be set up between different points in the sheath, which will result in the passage between such points of induced currents. I, therefore, divide up the sheath or screen into short lengths, very much shorter than the wave lengths of the current used, so that the grounding of any one of such lengths or the approach thereto of a large body will result in an inappreciable loss, or at most a small local draining of the energy, while the tendency of currents to flow between different points in the sheath is effectually overcome. The function of the sheath as a static screen for preventing the dissipation of the electric energy, however, requires for its complete effectiveness an uninterrupted conducting partition or screen around the conductor. I attain this respect in the case of a sectional screen, by causing the ends of the insulated divisions or sections of the same to overlap, interposing a suitable insulating material between the overlapping portions. By means of a conductor or conductors thus protected, I may transmit with slight loss and to great distances currents of very high potential and extremely high frequency.

The invention is illustrated in the accompanying drawings in which—

Figure 1 illustrates portions of the conductor with the earth connections above described. Fig. 2 is a sectional view of a portion of the conductor on an enlarged scale.

A is the central wire or conductor that carries the current.

B is an insulating coating.

C is a conducting sheathing or screen, which may be externally insulated, if so desired. This sheathing is divided up, as shown, into short lengths or sections, and the end of one section overlaps or telescopes with the end of the adjacent sections but is insulated therefrom by the material D.

It is well known that a static screen, to be entirely effective as such, should have a ground connection, but it has been usual in such cases to provide a good electrical connection from the screen to earth. When a current of excessively high potential, however, is used, or when the frequency of the current is very high, such a connection is impracticable on account of the loss which follows. In such cases, therefore, I obtain the

beneficial results of an earth connection while preventing the generally serious loss that would occur in the use of such currents, by providing between the sheath and the ground a path P of very high ohmic resistance or one containing a self-induction coil S properly determined with respect to the existing conditions so that it will effect the described result, or a condenser of very small capacity as shown at R. In such cases the sheathing or screen for practical purposes may be regarded as isolated from the ground, since by the character of the connection employed no appreciable loss results from the passage of current from the sheath to the ground.

No particular plan of construction need be followed in making up this conductor, and no special materials of the several kinds named need be used; the general construction and character of the conductor, apart from the particular features herein described, being entirely well understood by those skilled in the art.

What I claim is—

1. A conductor for electric circuits, composed of a wire for carrying the current, an insulated coating or covering and a surrounding conducting sheath or screen divided into insulated sections, as set forth.

2. A conductor for electric circuits, composed of a wire for carrying the current, a coating or covering of insulating material and a surrounding conducting sheath or screen divided into insulated sections, the ends of which overlap, as set forth.

3. The combination of a wire or conductor for conveying electric currents, an insulated coating or covering therefor, a conducting sheath or screen surrounding the insulating coating and a connection between said sheathing and the ground containing a condenser of very small capacity or its equivalent.

NIKOLA TESLA.

Witnesses:
ERNEST HOPKINSON,
PARKER W. PAGE.

(No Model.)

N. TESLA.

MEANS FOR GENERATING ELECTRIC CURRENTS.

No. 514,168. Patented Feb. 6, 1894.

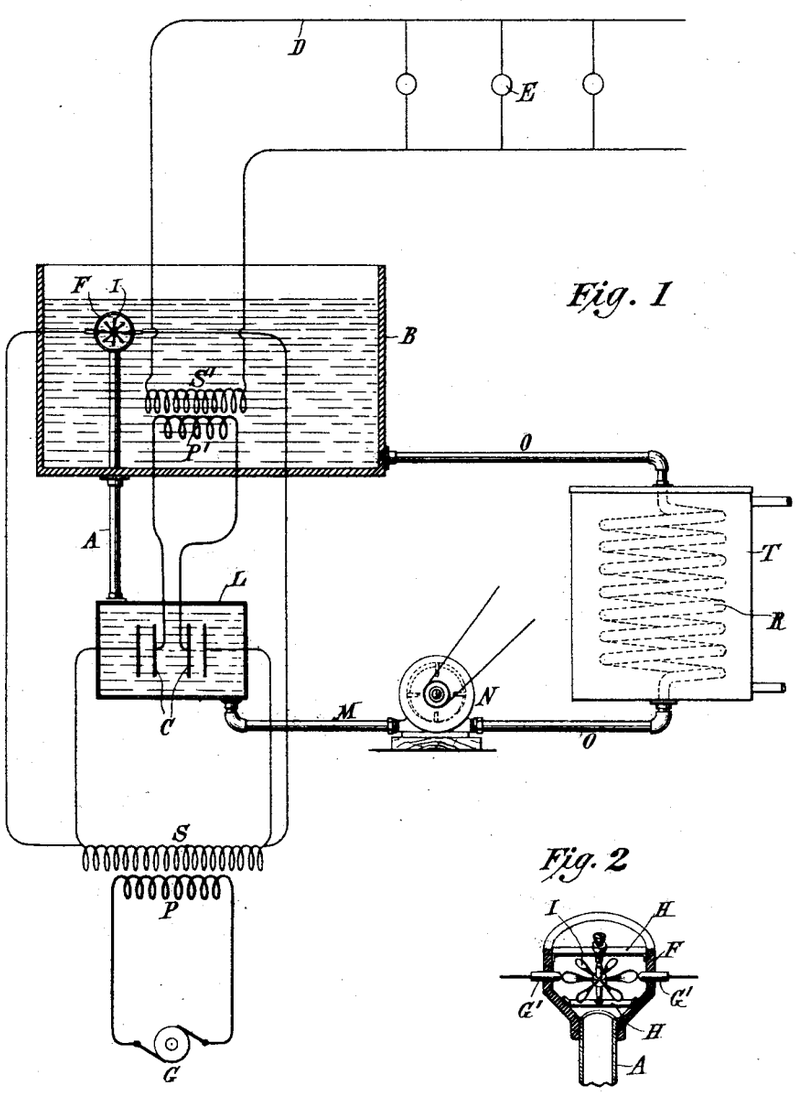

Fig. 1

Fig. 2

Witnesses
Raphael Netter
James N. Catlow

Inventor
Nikola Tesla
By his Attorneys
Duncan & Page

THE NATIONAL LITHOGRAPHING COMPANY.
WASHINGTON, D. C.

UNITED STATES PATENT OFFICE.

NIKOLA TESLA, OF NEW YORK, N. Y.

MEANS FOR GENERATING ELECTRIC CURRENTS.

SPECIFICATION forming part of Letters Patent No. 514,168, dated February 6, 1894.

Application filed August 2, 1893. Serial No. 482,194. (No model.)

To all whom it may concern:

Be it known that I, NIKOLA TESLA, a citizen of the United States, residing at New York, in the county and State of New York, have invented certain new and useful Improvements in Means for Generating Electric Currents, of which the following is a specification, reference being had to the drawings accompanying and forming a part of the same.

The invention, subject of my present application, is an improvement applicable more especially to the method or system of generating and utilizing electrical energy, heretofore discovered by me, and more fully set forth in Letters Patent No. 454,622, of June 23, 1891, and No. 462,418, of November 3, 1891, and which involves the maintenance of an intermittent or oscillatory discharge of a condenser or circuit of suitable capacity into a working circuit containing translating devices. In systems of this character when the high frequency of the currents employed is due to the action of a disruptive or intermittent discharge across an air gap or break at some point of the circuit, I have found it to be of advantage not only to break up or destroy the least tendency to continuity of the arc or discharge, but also to control the period of the re-establishment of the same, and from investigations made by me with this object in view I have found that greatly improved results are secured by causing the discharge to take place in and through an insulating liquid, such as oil, and instead of allowing the terminal points of the break to remain at a uniform distance from each other, to vary such distance by bringing them periodically in actual contact or sufficiently near to establish the discharge and then separating them, or what is the equivalent of this, throwing in and out of the gap or break a conducting bridge at predetermined intervals. To obtain the best results, moreover, I find it essential to maintain at the point of discharge a flow of the insulating medium, or, in general, such a circulation of the same as will constantly operate to cut off or break up the discharge as fast as it is established. The accomplishment of this latter result involves the employment of some mechanism for maintaining the flow or circulation of the insulating medium past the points of discharge, and I take advantage of the presence of such mechanism to accomplish a further and beneficial result which is the maintenance of a flow or circulation of the insulating liquid in which I immerse the converter coils used for raising the potential of the current, and also the condenser plates when such are required and used. By this means the insulating liquid surrounding the said coils and plates may be prevented from heating, either by its circulation alone or by the application to it while in motion of a cooling medium, and its requisite qualities preserved for an indefinite time.

Broadly considered the plan contemplated is entirely independent of the special means for carrying it into execution, but in illustration of the preferred manner in which the invention is or may be carried out, I now refer to the drawings which are hereto annexed.

Figure 1 is a diagram of the system and devices employed by me. Fig. 2 is a sectional view of a detail of mechanism.

G represents an electric generator, as for instance, an ordinary alternator, in the circuit of which is the primary P of a transformer, of which S represents the secondary, which is usually of much longer and finer wire than the primary. To the secondary circuit, if it have not of itself sufficient capacity for the purpose herein contemplated, are connected the plates of a condenser C, and at any point in said circuit is a break or gap at which occurs the disruptive discharge. In a portion of the secondary circuit, preferably in series with the condenser, as shown in the drawings, is a primary coil P′ with which is associated a secondary S′, which latter constitutes the ultimate source of currents for a working circuit D in which or with which are connected translating devices E. Under the conditions assumed it will be understood that by the oscillation or change caused by the action of the discharge, the condenser is charged and discharged setting up in the primary P′ an electrical disturbance of enormous frequency, as has been explained in my patent referred to, and as is now well understood. Instead of employing two terminals at a fixed distance, however, for the gap across which the discharge takes place, I vary the distance between them, or what is practically the same

thing, I interpose between said terminals a conductor or a series of conductors successively by means of which the effective distance or length of the path of discharge is or may be varied at will. This I accomplish in the following manner:

A is a pipe or tube that leads into a tank B. To the end of this tube is secured an extension F of insulating material and the two terminals G′ G′ are caused to project through the sides of the same, as indicated in Fig. 2. Within the extension I secure two cross-bars H which afford bearings for the spindle of a small metallic turbine I, the blades of which, as the turbine revolves, bridge the space between the two terminals, nearly or quite touching the terminals in their movement. If now the tank B be filled with oil and the latter is drawn off or permitted to flow off through the tube A, the turbine will be rotated by the flow, the rate of rotation being dependent upon the rate of flow. By this means the arc or discharge is periodically established through a flow of oil, which secures in the most satisfactory manner the conditions best adapted for practical results.

The further objects of the invention are secured by placing the transformer P′ S′ in the body of oil in the tank B, and the condenser in a closed receptacle L. Then in order to maintain a circulation of the oil and to provide for the requisite flow which rotates the turbine, I connect the tank B with the condenser box L by means of the pipe A. I also run a pipe M from the box L to a small rotary pump N, and another pipe O from the latter back to the tank B.

When necessary or desirable I may insert in the pipe O a coil R, which is contained in a jacket T through which a cooling medium is passed.

The flow of oil is regulated by the speed at which the pump N is driven, and by this means the period of re-establishment of the arc is controlled.

Having now described my invention and the best means of which I am aware in which the same is or may be carried into effect, what I claim is—

1. In an electric system of the kind described, the combination with the points or terminals between which occurs the intermittent or oscillating discharge of means for maintaining between said points and in the path of the discharge a flow of insulating liquid, as set forth.

2. In an electrical system of the kind described, the combination with a transformer, and the points or terminals between which occurs the intermittent or oscillating discharge, of a body of insulating liquid surrounding the same, and means for maintaining a flow or circulation of the same, as set forth.

3. In an electrical system of the kind described, the combination with a transformer and the points or terminals between which occurs the intermittent or oscillating discharge, of receptacles inclosing the same and containing oil and means for maintaining a flow of the oil through said receptacles and around the devices therein, as set forth.

4. In an electrical system of the kind described, the combination with the points or terminals between which occurs the intermittent or oscillating discharge, of a means for maintaining a flow of insulating liquid between the discharge points, and means for varying the length of the path of discharge through such fluid, dependent for operation upon the flow of the same, as set forth.

5. The combination with discharge points immersed in oil, of means for periodically varying the length of the path of discharge between them, as described.

6. The combination with discharge points immersed in oil, of a conductor adapted to periodically bridge the space between such points, as set forth.

7. The combination with discharge points immersed in oil, means for causing a flow of the oil between said points and a metallic turbine mounted between the points and adapted by the rotation produced by the flowing oil to bridge with its vanes or blades the space between the said points.

NIKOLA TESLA.

Witnesses:
ROBT. F. GAYLORD,
PARKER W. PAGE.

(No Model.)

N. TESLA.

RECIPROCATING ENGINE.

No. 514,169. Patented Feb. 6, 1894.

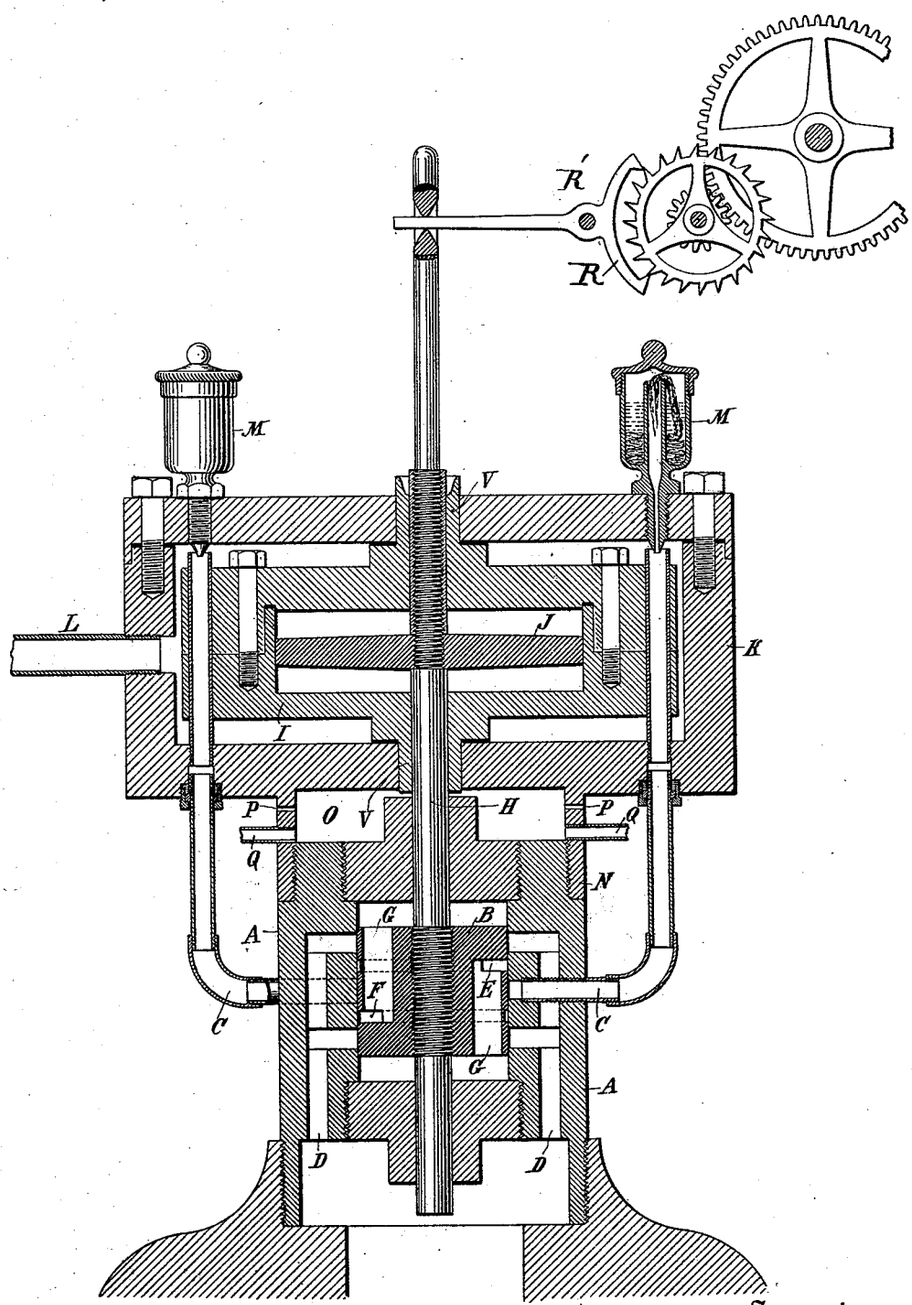

Witnesses
Raphael Netter
R. F. Gaylord

Inventor
Nikola Tesla
By his Attorneys
Duncan & Page.

THE NATIONAL LITHOGRAPHING COMPANY,
WASHINGTON, D. C.

UNITED STATES PATENT OFFICE.

NIKOLA TESLA, OF NEW YORK, N. Y.

RECIPROCATING ENGINE.

SPECIFICATION forming part of Letters Patent No. 514,169, dated February 6, 1894.

Application filed August 19, 1893. Serial No. 483,563. (No model.)

To all whom it may concern:

Be it known that I, NIKOLA TESLA, a citizen of the United States, residing at New York, in the county and State of New York, have invented certain new and useful Improvements in Reciprocating Engines, of which the following is a specification, reference being had to the drawing accompanying and forming a part of the same.

In the invention which forms the subject of my present application, my object has been, primarily to provide an engine, which under the influence of an applied force such as the elastic tension of steam or gas under pressure will yield an oscillatory movement which, within very wide limits, will be of constant period, irrespective of variations of load, frictional losses and other factors which in all ordinary engines produce change in the rate of reciprocation.

The further objects of the invention are to provide a mechanism, capable of converting the energy of steam or gas under pressure into mechanical power more economically than the forms of engine heretofore used, chiefly by overcoming the losses which result in these by the combination with rotating parts possessing great inertia of a reciprocating system; which also, is better adapted for use at higher temperatures and pressures, and which is capable of useful and practical application to general industrial purposes, particularly in small units.

The invention is based upon certain well known mechanical principles a statement of which will assist in a better understanding of the nature and purposes of the objects sought and results obtained. Heretofore, where the pressure of steam or any gas has been utilized and applied for the production of mechanical motion it has been customary to connect with the reciprocating or moving parts of the engine a fly-wheel or some rotary system equivalent in its effect and possessing relatively great mechanical inertia, upon which dependence was mainly placed for the maintenance of constant speed. This, while securing in a measure this object, renders impossible the attainment of the result at which I have arrived, and is attended by disadvantages which by my invention are entirely obviated. On the other hand, in certain cases, where reciprocating engines or tools have been used without a rotating system of great inertia, no attempt, so far as I know, has been made to secure conditions which would necessarily yield such results as I have reached.

It is a well known principle that if a spring possessing a sensible inertia be brought under tension, as by being stretched, and then freed it will perform vibrations which are isochronous and, as to period, in the main dependent upon the rigidity of the spring, and its own inertia or that of the system of which it may form an immediate part. This is known to be true in all cases where the force which tends to bring the spring or movable system into a given position is proportionate to the displacement.

In carrying out my invention and for securing the objects in general terms stated above, I employ the energy of steam or gas under pressure, acting through proper mechanism, to maintain in oscillation a piston, and, taking advantage of the law above stated, I connect with said piston, or cause to act upon it, a spring, under such conditions as to automatically regulate the period of the vibration, so that the alternate impulses of the power impelled piston, and the natural vibrations of the spring shall always correspond in direction and coincide in time.

While, in the practice of the invention I may employ any kind of spring or elastic body of which the law or principle of operation above defined holds true, I prefer to use an air spring, or generally speaking a confined body or cushion of an elastic fluid, as the mechanical difficulties in the use of ordinary or metallic springs are serious, owing mainly, to their tendency to break. Moreover, instead of permitting the piston to impinge directly upon such cushions within its own cylinder, I prefer, in order to avoid the influence of the varying pressure of the steam or gas that acts upon the piston and which might disturb the relations necessary for the maintenance of isochronous vibration, and also to better utilize the heat generated by the compression, to employ an independent plunger connected with the main piston, and a chamber or cylinder therefor, containing air which is normally, at the same pressure as the external atmosphere, for thus a spring of practically

constant rigidity is obtained, but the air or gas within the cylinder may be maintained at any pressure.

In order to describe the best manner of which I am aware in which the invention is or may be carried into effect, I refer now to the accompanying drawing which represents in central cross-section an engine embodying my improvements.

A is the main cylinder in which works a piston B. Inlet ports C C pass through the sides of the cylinder, opening at the middle portion thereof and on opposite sides. Exhaust ports D D extend through the walls of the cylinder and are formed with branches that open into the interior of the cylinder on each side of the inlet ports and on opposite sides of the cylinder.

The piston B is formed with two circumferential grooves E F, which communicate through openings G in the piston with the cylinder on opposite sides of said piston respectively.

I do not consider as of special importance the particular construction and arrangement of the cylinder, the piston and the ports for controlling it, except that it is desirable that all the ports, and more especially, the exhaust ports should be made very much larger than is usually the case, so that no force due to the action of the steam or compressed air will tend to retard or affect the return of the piston in either direction.

The piston B is secured to a piston rod H, which works in suitable stuffing boxes in the heads of the cylinder A. This rod is prolonged on one side and extends through bearings V in a cylinder I suitably mounted or supported in line with the first, and within which is a disk or plunger J carried by the rod H.

The cylinder I is without ports of any kind and is air-tight except as a small leakage may occur through the bearings V, which experience has shown need not be fitted with any very considerable accuracy. The cylinder I is surrounded by a jacket K which leaves an open space or chamber around it. The bearings V in the cylinder I, extend through the jacket K to the outside air and the chamber between the cylinder and jacket is made steam or air tight as by suitable packing. The main supply pipe L for steam or compressed air leads into this chamber, and the two pipes that lead to the cylinder A run from the said chamber, oil cups M being conveniently arranged to deliver oil into the said pipes for lubricating the piston.

In the particular form of engine shown, the jacket K which contains the cylinder I is provided with a flange N by which it is screwed to the end of the cylinder A. A small chamber O is thus formed which has air vents P in its sides and drip pipes Q leading out from it through which the oil which collects in it is carried off.

To explain now the operation of the device above described. In the position of the parts shown, or when the piston is at the middle point of its stroke, the plunger J is at the center of the cylinder I and the air on both sides of the same is at the normal pressure of the outside atmosphere. If a source of steam or compressed air be then connected to the inlet ports C C of the cylinder A and a movement be imparted to the piston as by a sudden blow, the latter is caused to reciprocate in a manner well understood. The movement of the piston in either direction ceases when the force tending to impel it and the momentum which it has acquired are counterbalanced by the increasing pressure of the steam or compressed air in that end of the cylinder toward which it is moving and as in its movement the piston has shut off at a given point, the pressure that impelled it and established the pressure that tends to return it, it is then impelled in the opposite direction, and this action is continued as long as the requisite pressure is applied. The movements of the piston compress and rarify the air in the cylinder I at opposite ends of the same alternately. A forward stroke compresses the air ahead of the plunger J which acts as a spring to return it. Similarly on the back stroke the air is compressed on the opposite side of the plunger J and tends to drive it forward. This action of the plunger upon the air contained in the opposite ends of the cylinder is exactly the same in principle as though the piston rod were connected to the middle point of a coiled spring, the ends of which are connected to fixed supports. Consequently the two chambers may be considered as a single spring. The compressions of the air in the cylinder I and the consequent loss of energy due mainly to the imperfect elasticity of the air, give rise to a very considerable amount of heat. This heat I utilize by conducting the steam or compressed air to the engine cylinder through the chamber formed by the jacket surrounding the air-spring cylinder. The heat thus taken up and used to raise the temperature of the steam or air acting upon the piston is availed of to increase the efficiency of the engine. In any given engine of this kind the normal pressure will produce a stroke of determined length, and this will be increased or diminished according to the increase of pressure above or the reduction of pressure below the normal.

In constructing the apparatus I allow for a variation in the length of stroke by giving to the confining cylinder I of the air spring properly determined dimensions. The greater the pressure upon the piston, the higher will be the degree of compression of the air-spring, and the consequent counteracting force upon the plunger. The rate or period of reciprocation of the piston however is no more dependent upon the pressure applied to drive

it, than would be the period of oscillation of a pendulum permanently maintained in vibration, upon the force which periodically impels it, the effect of variations in such force being merely to produce corresponding variations in the length of stroke or amplitude of vibration respectively. The period is mainly determined by the rigidity of the air spring and the inertia of the moving system, and I may therefore secure any period of oscillation within very wide limits by properly portioning these factors, as by varying the dimensions of the air chamber which is equivalent to varying the rigidity of the spring, or by adjusting the weight of the moving parts. These conditions are all readily determinable, and an engine constructed as herein described may be made to follow the principle of operation above stated and maintain a perfectly uniform period through very much wider limits of pressure than in ordinary use, it is ever likely to be subjected to and it may be successfully used as a prime mover wherever a constant rate of oscillation or speed is required, provided the limits within which the forces tending to bring the moving system to a given position are proportionate to the displacements, are not materially exceeded. The pressure of the air confined in the cylinder when the plunger J is in its central position will always be practically that of the surrounding atmosphere, for while the cylinder is so constructed as not to permit such sudden escape of air as to sensibly impair or modify the action of the air spring there will still be a slow leakage of air into or out of it around the piston rod according to the pressure therein, so that the pressure of the air on opposite sides of the plunger will always tend to remain at that of the outside atmosphere.

As an instance of the uses to which this engine may be applied I have shown its piston rod connected with a pawl R the oscillation of which drives a train of wheels. These may constitute the train of a clock or of any other mechanism. The pawl R is pivoted at R′ and its bifurcated end engages with the teeth of the ratchet wheel alternately on opposite sides of the same, one end of the pawl at each half oscillation acting to propel the wheel forward through the space of one tooth when it is engaged and locked by the other end on the last half of the oscillation which brings the first end into position to engage with another tooth.

Another application of the invention is to move a conductor in a magnetic field for generating electric currents, and in these and similar uses it is obvious that the characteristics of the engine render it especially adapted for use in small sizes or units.

Having now described my invention, what I claim is—

1. A reciprocating engine comprising in combination, a cylinder, a piston and a spring connected with or acting upon the reciprocating element, the said spring and reciprocating element being related in substantially the manner described so that the forces which tend to bring the reciprocating parts into a given position are proportionate to the displacements, whereby an isochronous vibration is obtained.

2. A reciprocating engine comprising in combination, a cylinder, a piston impelled by steam or gas under pressure, and an air spring maintained in vibration by the movements of the piston, the piston and spring being related in substantially the manner described so that the forces which tend to bring the reciprocating parts into a given position are proportionate to the displacements whereby an isochronous vibration is obtained.

3. The combination of a cylinder and a piston adapted to be reciprocated by steam or gas under pressure, a cylinder and a plunger therein reciprocated by the piston and constituting an air spring acting upon said piston, the piston and spring being related in the manner described so that the forces which tend to bring the piston into a given position are proportionate to the displacement whereby an isochronous oscillation of the piston is obtained.

4. The combination of a cylinder and a piston adapted to be reciprocated by steam or gas under pressure, a cylinder and piston constituting an air spring connected with the piston, a jacket forming a chamber around the air spring through which the steam or compressed gas is passed on its way to the cylinder, as and for the purpose set forth.

5. The method of producing isochronous movement herein described, which consists in reciprocating a piston by steam or gas under pressure and controlling the rate or period of reciprocation by the vibration of a spring, as set forth.

6. The method of operating a reciprocating engine which consists in reciprocating a piston, maintaining by the movements of the piston, the vibration of an air spring and applying the heat generated by the compression of the spring to the steam or gas driving the piston.

NIKOLA TESLA.

Witnesses:
PARKER W. PAGE,
R. F. GAYLORD.

(No Model.)

N. TESLA.

INCANDESCENT ELECTRIC LIGHT.

No. 514,170. Patented Feb. 6, 1894.

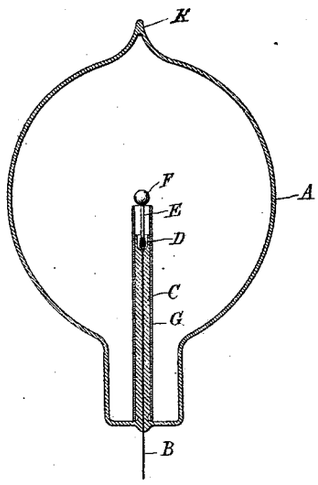

Witnesses:
Raphael Netter
S. L. Thomas

Inventor
Nikola Tesla
by Duncan & Page
Attorneys

THE NATIONAL LITHOGRAPHING COMPANY.
WASHINGTON, D. C.

UNITED STATES PATENT OFFICE.

NIKOLA TESLA, OF NEW YORK, N. Y.

INCANDESCENT ELECTRIC LIGHT.

SPECIFICATION forming part of Letters Patent No. 514,170, dated February 6, 1894.

Application filed January 2, 1892. Renewed December 15, 1893. Serial No. 493,776. (No model.)

To all whom it may concern:

Be it known that I, NIKOLA TESLA, a citizen of the United States, residing at New York, in the county and State of New York, have invented a certain new and useful Improvement in Incandescent Electric Lamps, of which the following is a specification, reference being had to the drawings accompanying and forming a part of the same.

This invention is an improvement in the particular class of electric lamps or lighting devices invented by me and for which I have heretofore obtained Letters Patent, notably No. 454,622, dated June 23, 1891.

The invention applies more particularly to that form of lamp in which a small body or button of refractory material is supported by a conductor entering a very highly exhausted globe or receiver, but is also applicable generally to other forms of lamp adapted for use with similar systems in which currents of very high potential and great frequency are employed. I have found in the practical applications of this system that a considerable dissipation of energy takes place from the conductors conveying the currents of great potential and frequency, even when such conductors are thoroughly insulated both within and without the lamp globes, and the subject of my present invention is a means for preventing such dissipation within the lamp, or rather for confining it to the particular parts or part of the conductor which is designed to give light. This object I find I may readily accomplish by surrounding the leading-in and supporting conductors with a conductor which acts as a static screen. By this means the light-giving body or button which lies beyond the influence of the screen is quickly and efficiently brought to and maintained at higher incandescence by a suitable electrical current or effect, by reason of the fact that the electrical action to which the incandescence is due is confined mainly to the button.

A description of the ordinary form of lamp which I employ will serve to illustrate the principle and nature of this improvement, and for such description I now refer to the drawings which show such lamp in central vertical section.

A is a glass globe of the usual form, in the base of which is sealed a very thin conducting wire B, passing up through a stem of glass or other refractory insulator C. To the upper or inner end of this wire is united, as by means of a mass of carbon paste D, a carbon or other refractory stem E, that supports or carries a small button of carbon or other suitable substance F. Over the stem C is passed, at any convenient stage in the manufacture of the lamp and in any well understood way, a metallic tube G. I prefer to use for this purpose a very thin cylinder or tube of aluminum and it should entirely surround all parts of the conductor within the globe except the button itself, extending to or nearly up to the point of union of the stem E with the button F. Such a device by reason of its electrostatic action reduces the loss of energy supplied to the bulb, preventing its radiation or dissipation into space except through the exposed or unprotected button. The tube or screen G is entirely insulated from the conductors within the globe and from all external conductors or bodies. The globe, by means of a suitable air pump, is exhausted to as high a degree as practicable, or until a non-striking vacuum is attained. It is connected with the pump by the usual tube which is sealed off at K.

The lamp may be made in different forms and in different ways, and the invention, as may be readily understood from its above described nature and purpose, is not confined to the specific form of lamp herein shown.

What I claim is—

1. In an incandescent electric lamp, the combination of an exhausted globe, a refractory light-giving body therein, a conductor leading into the globe and connected to or supporting the said body, and a conducting screen surrounding the said conductor, as set forth.

2. In an incandescent electric lamp, the combination of an exhausted globe, a refractory light-giving body or button therein, a conducting support for said button within the

globe, and a metallic tube surrounding or inclosing the said conductor up to the point of union with the button, as set forth.

3. In an incandescent electric lamp, the combination of an exhausted globe, a wire sealed therein, and coated with or embedded in a glass stem, a carbon stem united with the wire, a refractory conductor mounted on said stem, and a conducting tube or cylinder surrounding the wire and carbon stem, as and for the purpose set forth.

NIKOLA TESLA.

Witnesses:
ERNEST HOPKINSON,
PARKER W. PAGE.

(No Model.)

N. TESLA.

ELECTRIC RAILWAY SYSTEM.

No. 514,972. Patented Feb. 20, 1894.

Fig. 1

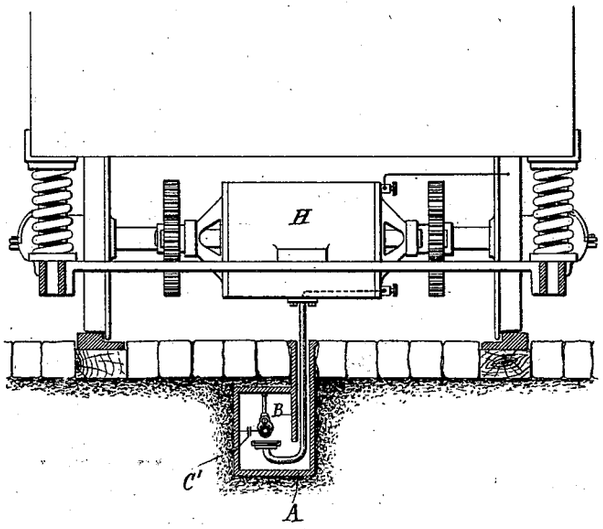

Fig. 2

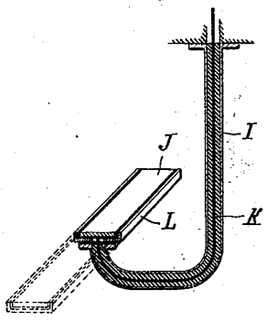

Fig. 3

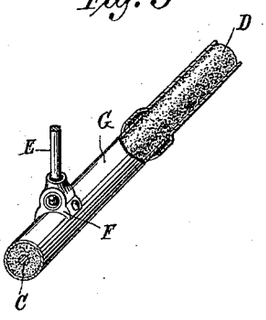

Witnesses:

M. K. Gowan

M. G. Tracy.

Inventor

Nikola Tesla

by Duncan & Page

Attorneys

THE NATIONAL LITHOGRAPHING COMPANY,
WASHINGTON, D. C.

UNITED STATES PATENT OFFICE.

NIKOLA TESLA, OF NEW YORK, N. Y.

ELECTRIC-RAILWAY SYSTEM.

SPECIFICATION forming part of Letters Patent No. 514,972, dated February 20, 1894.

Application filed January 2, 1892. Serial No. 416,774. (No model.)

To all whom it may concern:

Be it known that I, NIKOLA TESLA, a citizen of the United States, residing at New York, in the county and State of New York, have invented certain new and useful Improvements in Electric-Railway Systems, of which the following is a specification, reference being had to the drawings accompanying and forming a part of the same.

This invention is an improved system or plan of supplying electric current to the motors of street or other cars or vehicles from a central or stationary source of supply, without the use of sliding or rolling contacts between the line conductor and the car motors. I use in my system alternating or pulsating currents of very high potential, and, by reason mainly of the higher economy, high frequency. The conductor which conveys these currents is run from the stationary source of supply along the line of travel and preferably through a conduit constructed between, or alongside of the tracks or rails.

To prevent the dissipation of the electric energy that would otherwise occur on a circuit conveying currents of the character which I use, I insulate the line conductor and surround it with a conducting coating that serves as a screen, and I prefer, mainly with the object of localizing the action that would result from the establishment of an electrical connection between the screen and the ground or other conducting body, to divide up the outer conductor into insulated sections of comparatively short length. In the car, or to each of a number running on a given track, equipped in accordance with my invention, I attach an arm carrying a conducting plate or bar that is electrically connected with the motor coils and which by the movement of the car is carried in proximity to the line conductor, so as to take off, by condenser action, sufficient energy to run the car motor.

The details of the invention, and the best manner I am aware of in which it is or may be carried out, I shall explain by reference to the accompanying drawings.

Figure 1 is a view showing a portion of a car and the means for supplying the motor of the same with current from a line conductor supported within a conduit between the rails. Fig. 2 is an enlarged sectional view of the arm carrying the conductor through which the electric energy is transmitted from the line conductor to the motor. Fig. 3 is an enlarged view partly in section of the line conductor.

I propose to employ an iron conduit A, which is buried preferably between the rails of the track and provided with a longitudinal slot along its top close to one edge or side. A flange B is formed or applied along the slot, forming a protected chamber or compartment for containing the line conductor. This chamber should be of such form in cross-section that its walls will be symmetrically disposed with respect to the conductor running through it, and thus reduce to a minimum any disturbing inductive effects which would be produced by an unsymmetrical disposition of the walls with respect to the conducting screen or covering around the conductor.

For the line conductor I employ a suitable wire C, surrounded by an insulated coating D, which is inclosed in a metallic sheathing G. For the latter I prefer to use iron pipes provided with perforated lugs F, by means of which the conductor is suspended by insulated rods or other devices E. I also divide up the conducting screen or sheathing into sections insulated from one another, but overlapping so as to leave no breaks in the screen. The advantage in dividing up the screen in this manner is that the loss due to currents induced in the outer conductor is reduced, while at the same time the grounding of any one section would result in a very small loss compared with what would take place from a continuous sheath; moreover, by overlapping the ends of the sections but little opportunity is afforded for the dissipation of energy.

The car is represented as carrying a motor H, which may be of any suitable construction and capable of being operated by currents of the kind employed. Connected with the motor or car is an iron or conducting tube I, that extends down into the conduits through the slot therein. The lower end of this tube is bent in the form of a hook and supports within the conductor chamber a bar or plate J that presents to the line conductor a conducting surface. This bar or plate is electrically connected with the motor coils by an insulated wire K, that passes up through the

tube I, and all parts of the said plate except the surface exposed to the conductor C, or its metallic sheath, are insulated and protected by a metallic screen L. It is obvious that all portions of the arm as well as the plate itself may be insulated as by a water-proof covering, and it will be understood that the principal object of the invention would still be attained even though the plate were in actual contact with the screen while the car is in motion.

In operation, the line conductor C is connected with a source of current of very high potential and great frequency. This current may be conveyed to any desired distance without material loss, as the insulated metallic covering or sheath around the conductor serves as a static screen to prevent the dissipation of the energy. The presence, however, of a plate J of any car close to the sheath or screen disturbs the electrical equilibrium and sets up by condenser action a transfer of energy from the screen to the plate sufficient to operate the motor on the car.

In the above, I have described the screen, whether continuous or subdivided, as wholly insulated from the ground or surrounding conducting bodies, but the single continuous screen or each section of the same, may be connected to the ground through a condenser of relatively very small capacity, through a device of high self-induction or resistance, as shown in dotted lines at C′ in Fig. 1.

I do not claim in this application the particular line conductor described, nor the broad idea of inducing from a stationary conductor the current to operate the motor on a traveling car or other vehicle, but

What I claim is—

1. In an electric railroad system operated by electric currents of high potential and frequency, the combination of an insulated and electrically screened supply conductor extending along the line of travel, a motor car or cars carrying a conducting plate or bar in inductive relation to the screened conductor and an electrical connection between the said plate and the motor, as set forth.

2. In an electric railroad system operated by electric currents of high potential and frequency, the combination of a supply conductor running along the line of travel, a conducting sheath or screen divided into insulated sections and surrounding the said conductor, a motor car supporting a conducting body in proximity to the supply conductor and an electrical connection between said body and the motor as set forth.

3. In an electrical railway system, the combination with a slotted conduit of an insulated conductor supported therein, an insulated sheath or screen surrounding the conductor, a motor car adapted to run on tracks parallel with the conduit, a conducting plate or bar carried by an arm depending from the car into the conduit, and an electrical connection between the plate and the motor, as set forth.

NIKOLA TESLA.

Witnesses:
ERNEST HOPKINSON,
PARKER W. PAGE.

(No Model.)

N. TESLA.

ELECTRICAL METER.

No. 514,973. Patented Feb. 20, 1894.

Fig. 1

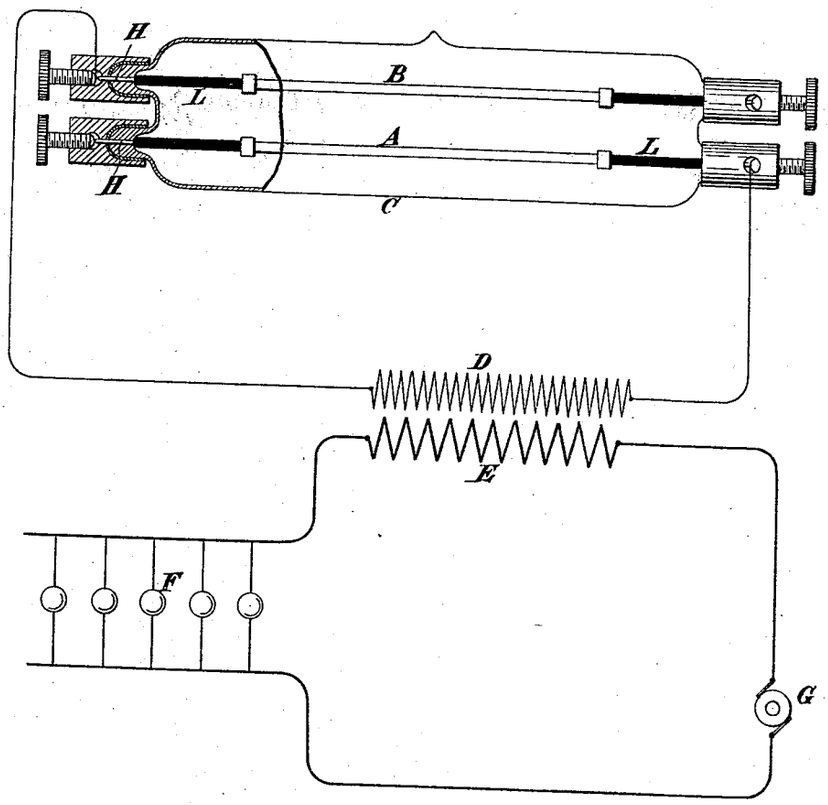

Fig. 2

Witnesses:
Raphael Netter
James H. Catlow.

Inventor
Nikola Tesla
by Duncan & Page
Attorneys

THE NATIONAL LITHOGRAPHING COMPANY,
WASHINGTON, D. C.

UNITED STATES PATENT OFFICE.

NIKOLA TESLA, OF NEW YORK, N. Y.

ELECTRICAL METER.

SPECIFICATION forming part of Letters Patent No. 514,973, dated February 20, 1894.

Application filed December 15, 1893. Serial No. 493,739. (No model.)

To all whom it may concern:

Be it known that I, NIKOLA TESLA, a citizen of the United States, residing at New York, in the county and State of New York, have invented certain new and useful Improvements in Electrical Meters, of which the following is a specification, reference being had to the drawings accompanying and forming a part of the same.

The subject of this invention is a novel method of and apparatus for computing the energy that has been expended in a given time in a circuit, and is more particularly designed for measuring the expended energy of alternating currents and those of varying strength.

The invention is based on the fact that when a high tension discharge is made to pass from a conductor through a rarefied gas, minute particles are thrown off from the conductor and are embodied in any apparatus in which the proper conditions for the above results are present, and in which the amount of the particles thrown off from the conductor or conductors as a result of such action is in proportion to the strength of the current, the energy of which is to be computed, and can be measured from time to time. As the most convenient means of utilizing this principle in carrying out my invention, I have devised an instrument of the following character: In a tube or other receiver, preferably of glass, are placed two conductors, parallel to each other. The most convenient conductors for this purpose are composed of thin sticks or filaments of homogeneous carbon, to the ends of which platinum wires are attached, which latter are sealed in the glass, and, inside the tube protected by a coating of some insulating material, while their ends outside of the tube are connected to or formed as suitable terminals. The glass tube is provided with a small tube through which it is exhausted to the proper degree and which is sealed off after exhaustion in the usual manner. If the two conductors or carbons be connected to the two parts of a circuit over which flows an alternating current of high tension, a discharge takes place from one carbon to the other alternately, that causes infinitesimal particles to be thrown off from each, which appreciably increases their electrical resistance. This variation may be used as a measure of the energy of a current in a working circuit, as I shall now explain more in detail and by referring to the drawings hereto annexed, and in which—

Figure 1 illustrates the instrument above described and, diagrammatically, the manner of using the same. Fig. 2 is a cross section on an enlarged scale of one of the carbon conductors.

One terminal of each of the carbon conductors A, B, sealed as above described in the tube or receiver C, is connected to a terminal of the secondary D of a high tension induction coil, preferably constructed without iron. The carbons are supported by the metallic conductors H, preferably of platinum in whole or in part, and having inside the receiver a coating of insulating material L. The primary E of the induction coil is connected in series with incandescent lamps or other non-inductive translating devices F, supplied with alternating currents from any suitable generator G. Under these conditions, since the difference of potential at the terminals of the secondary of the induction coil is proportionate to the primary current, it is, therefore, proportionate to the number of lamps or other devices F.

The action of the discharge in the tube C from one conductor to the other produces a uniform throwing off of the infinitesimal particles of carbon along the entire length of the conductors, as the difference of potential between the two is practically equal at all points, and the increase in resistance will, therefore, be uniform. The amount, however, of the particles thus thrown off in a given time is proportionate to the difference of potential between the two conductors, and hence the increase in the resistance of the conductors is in a definite proportion to the number of lamp hours. Thus, the energy may be computed from the variation in the resistance of the conductors in the following manner: The resistances of the conductors are accurately measured in any of the usual ways. Then a known current is caused to pass for a given time through the primary of the induction coil and a given number of lamps. The resistances of the conductors are then taken again and the increase gives the

constant which permits of the calculation of the energy consumed from the variation in the resistance of one conductor.

To simplify the calculation, the carbon conductors may be made rectangular in cross-section, see Fig. 2, which is an enlarged cross-section of one of the carbons, coated with an insulating substance M, so as to expose only one side from which the material is thrown off. In such case the variation of resistance may be simply multiplied by the constant to determine the energy. But it is an easy matter to determine by a simple calculation the amount of energy expended in any case, provided the dimensions of the conductors are known. The former plan is preferable, however, as by it the energy may be directly read off by using a properly graduated ohm meter.

If inductive resistances be used in place of the lamps F, it will be understood that the conditions for ascertaining the energy expended must be varied accordingly and in well understood ways, which require no special description herein.

I do not limit myself to the specific construction of the instrument herein shown, for the same may be varied in many well understood ways. For example, only one of the two conductors need be inside the tube, it being only necessary that they be placed in such relations that the high tension discharge shall take place between them through the rarefied gas.

The above described plan I regard as the most convenient for ascertaining the amount of the particles thrown off from the conductors, but other means for this purpose may be resorted to.

What I claim as my invention is—

1. The method, herein described, of measuring the amount of electrical energy expended in a given time in an electric circuit of alternating currents, which consists in maintaining by such currents a high tension discharge through a rarefied gas between two conductors, and computing from the amount of the particles thrown off from said conductors or one of the same by the action of the discharge of the energy expended.

2. The combination with a circuit of alternating currents, of a meter composed of two conductors connected respectively with the circuit and separated by a rarefied gas substantially as set forth.

3. The combination with a working circuit of alternating currents, translating devices substantially as described connected therewith, a primary coil in series with the translating device and a high tension secondary therefor, of a meter composed of an exhausted receiver having two conductors sealed therein, one terminal of each conductor being connected to a terminal of the secondary, as set forth.

4. A meter for electric currents, consisting in the combination with an exhausted receiver, of two conductors contained therein and connected with wires sealed into the walls of said receiver, the said meter having two line or circuit terminals, one connected with each conductor, therein, as set forth.

5. A meter for electric currents, consisting in the combination with an exhausted receiver of two rectangular carbon conductors mounted therein and coated with an insulating material on three sides, as and for the purposes set forth.

6. A meter for electric currents, consisting in the combination with an exhausted receiver, of two carbon conductors presenting surfaces between which a discharge is adapted to take place, and metallic conductors sealed in the walls of the receiver and supporting said carbons, the metallic conductors inside the receiver being coated with an insulating material, as set forth.

NIKOLA TESLA.

Witnesses:
JAMES N. CATLOW,
PARKER W. PAGE.

(No Model.) 2 Sheets—Sheet 1.

N. TESLA.

STEAM ENGINE.

No. 517,900. Patented Apr. 10, 1894.

Fig. 1

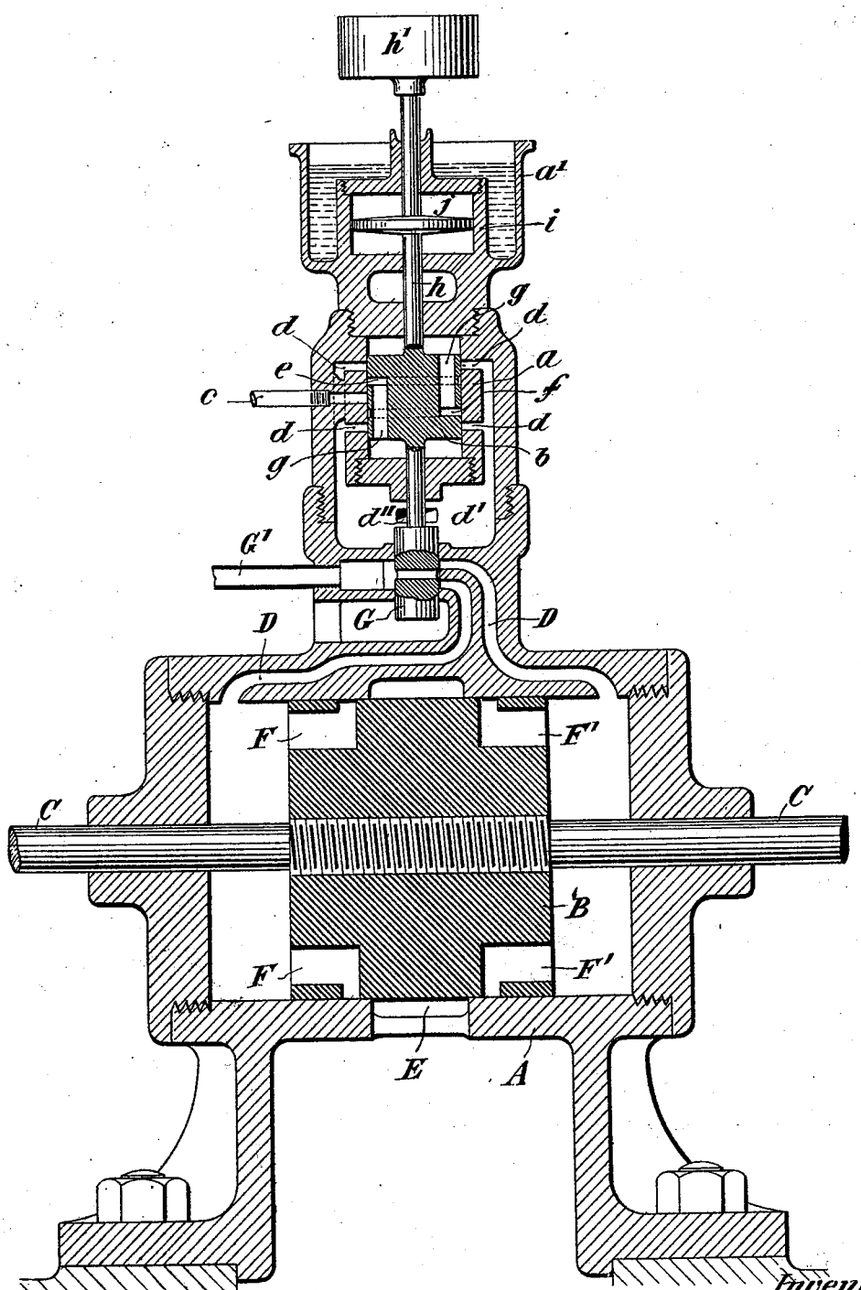

Witnesses:
Raphael Netter
Ernest Hopkinson

Inventor
Nikola Tesla
by Duncan & Page
Attorneys.

THE NATIONAL LITHOGRAPHING COMPANY,
WASHINGTON, D. C.

(No Model.) 2 Sheets—Sheet 2.

N. TESLA.

STEAM ENGINE.

No. 517,900. Patented Apr. 10, 1894.

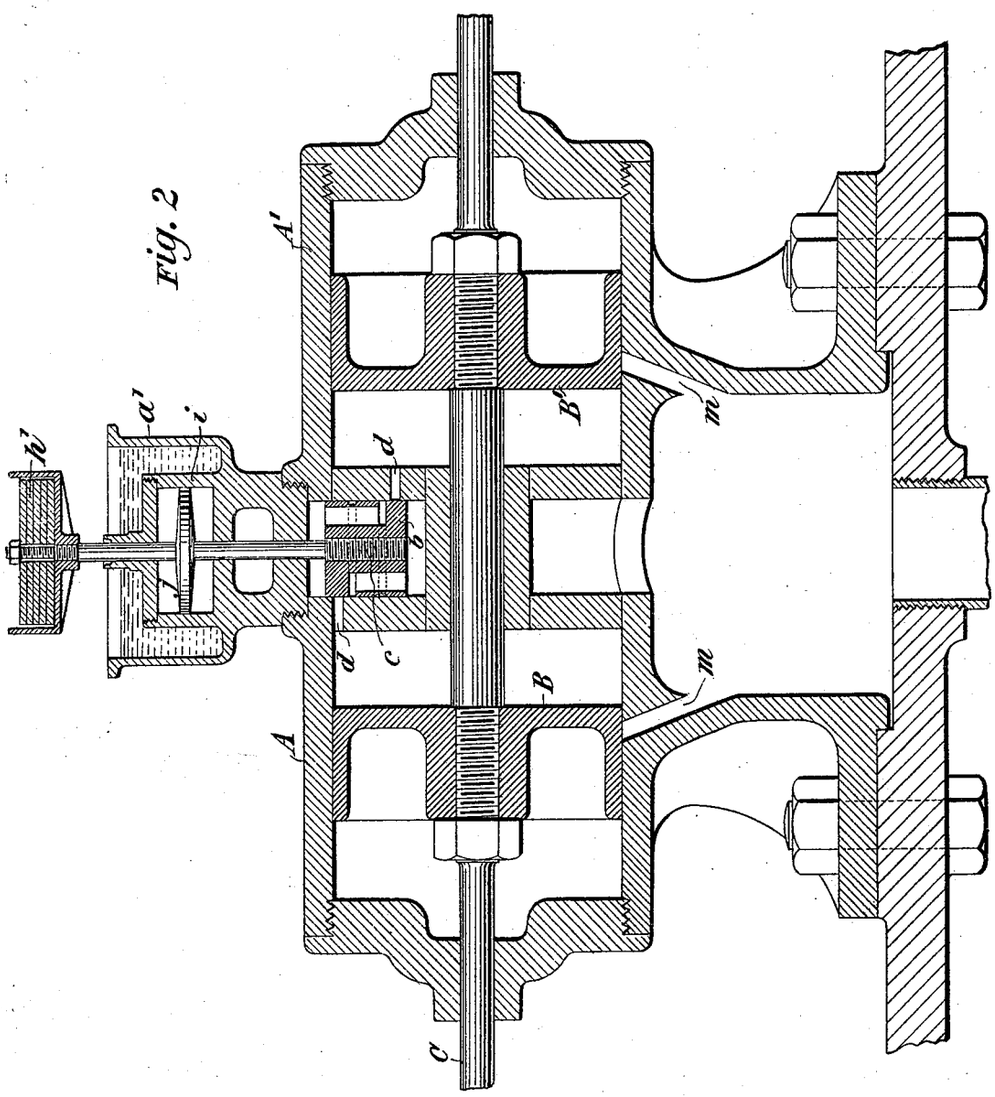

fig. 2

Witnesses:
Raphaël Netter
Benj. Hopkinson

Inventor
Nikola Tesla
by Duncan & Page
Attorneys.

THE NATIONAL LITHOGRAPHING COMPANY,
WASHINGTON, D. C.

UNITED STATES PATENT OFFICE.

NIKOLA TESLA, OF NEW YORK, N. Y.

STEAM-ENGINE.

SPECIFICATION forming part of Letters Patent No. 517,900, dated April 10, 1894.

Application filed December 29, 1893. Serial No. 495,079. (No model.)

To all whom it may concern:

Be it known that I, NIKOLA TESLA, a citizen of the United States, residing at New York, in the county and State of New York, have invented certain new and useful Improvements in Steam-Engines, of which the following is a specification, reference being had to the drawings accompanying and forming a part of the same.

Heretofore, engines, operated by the application of a force such as the elastic tension of steam or a gas under pressure, have been provided with a fly-wheel, or some rotary system equivalent in its effect and possessing relatively great mechanical inertia, which was relied upon for maintaining a uniform speed. I have produced however, an engine which without such appurtenances produces, under very wide variations of pressure, load, and other disturbing causes, an oscillating movement of constant period, and have shown and described the same in an application filed on August 19, 1893, Serial No. 483,563. A description of the principle of the construction and mode of operation of this device is necessary to an understanding of my present invention. When a spring which possesses a sensible inertia is brought under tension as by being stretched and then freed, it will perform vibrations which are isochronous and, as to period, mainly dependent upon the rigidity of the spring and its own inertia or that of the moving system of which it forms an immediate part. This is known to be true in all cases where the force which tends to bring the spring or movable system into a given position is proportionate to the displacement. In utilizing this principle for the purpose of producing reciprocating movement of a constant period, I employ the energy of steam or gas under pressure, acting through proper mechanism, to maintain in oscillation a piston, and connect with or cause to act upon such piston a spring, preferably, an air spring, under such conditions as to automatically regulate the period of the vibration, so that the alternate impulses of the power impelled piston and the natural vibrations of the spring shall always correspond in direction and coincide in time. In such an apparatus it being essential that the inertia of the moving system and the rigidity of the spring should bear certain definite relations, it is obvious that the practicable amount of work performed by the engine, when this involves the overcoming of inertia is a limitation to the applicability of the engine. I therefore propose, in order to secure all the advantages of such performances as this form of engine is capable of, to utilize it as the means of controlling the admission and exhaust of steam or gas under pressure in other engines generally, but more especially those forms of engine in which the piston is free to reciprocate, or in other words, is not connected with a fly wheel or other like device for regulating or controlling its speed.

The drawings hereto annexed illustrate devices by means of which the invention may be carried out, Figure 1 being a central vertical section of an engine embodying my invention, and Fig. 2 a similar view of a modification of the same.

Referring to Fig. 1, A designates a cylinder containing a reciprocating piston B secured to a rod C extending through one or both cylinder heads.

D D′ are steam ducts communicating with the cylinder at or near its ends and E is the exhaust chamber or passage located between the steam ports. The piston B is provided with the usual passages F F′ which by the movements of the piston are brought alternately into communication with the exhaust port.

G designates a slide valve which when reciprocated admits the steam or the gas by which the engine is driven, from the pipe G′ through the ducts D D′ to the ends of the cylinder.

The parts thus described may be considered as exemplifying any cylinder, piston and slide valve with the proper ports controlled thereby, but the slide valve instead of being dependent for its movement upon the piston B is connected in any manner so as to be reciprocated by the piston rod of a small engine of constant period, constructed substantially as follows:—*a* is the cylinder, in which works the piston *b*. An inlet pipe *c* passes through the side of the cylinder at the middle portion of the same. The cylinder exhausts through ports *d d* into a chamber *d′* provided with an opening *d″*. The piston *b* is provided with two circumferential grooves *e*, *f* which com-

municate through openings g in the same with the cylinder chambers on opposite sides of the piston. The special construction of this device may be varied considerably, but it is desirable that all the ports, and more particularly, the exhaust ports be made larger than is usually done, so that no force due to the action of the steam or compressed air in the chambers will tend to retard or accelerate the movement of the piston in either direction. The piston b is secured to a rod h which extends through the cylinder heads, the lower end carrying the slide valve above described and the upper end having secured to it a plunger j in a cylinder i fixed to the cylinder a and in line with it. The cylinder i is without ports of any kind and is air-tight except that leakage may occur around the piston rod which does not require to be very close fitting, and constitutes an ordinary form of air spring.

If steam or a gas under pressure be admitted through the port c to either side of the piston b, the latter, as will be understood, may be maintained in reciprocation, and it is free to move, in the sense that its movement in either direction ceases only when the force tending to impel it and the momentum which it has acquired are counterbalanced by the increasing pressure of the steam in that end of the cylinder toward which it is moving, and as in its movement the piston has shut off at a given point, the pressure that impelled it and established the pressure that tends to return it, it is then impelled in the opposite direction, and this action is continued as long as the requisite pressure is applied. The movements of the piston compress and rarefy the air in the cylinder i at opposite ends of the same alternately, and this results in the heating of the cylinder. But since a variation of the temperature of the air in the chamber would affect the rigidity of the air spring, I maintain the temperature uniform as by surrounding the cylinder i with a jacket a' which is open to the air and filled with water.

In such an engine as that just above described the normal pressure will produce a stroke of determined length, which may be increased or diminished according to the increase of pressure above or the reduction of pressure below the normal and due allowance is made in constructing the engine for a variation in the length of stroke. The rate or period of reciprocation of the piston, however, is no more dependent upon the pressure applied to drive it, than would be the period of oscillation of a pendulum permanently maintained in vibration, upon the force which periodically impels it, the effect of variations in such force being merely to produce corresponding variations in the length of stroke or amplitude of vibration respectively. The period is mainly determined by the rigidity of the air spring and the inertia of the moving system and I may therefore secure any period of oscillation within very wide limits by properly proportioning these factors, as by varying the dimensions of the air chamber which may be equivalent to varying the rigidity of the spring, or by adjusting the weight of the moving parts. This latter is readily accomplished by making provision for the attachment to the piston rod of one or more weights h'. Since the only work which the small engine has to perform is the reciprocation of the valve attached to the piston rod, its load is substantially uniform and its period by reason of its construction will be constant. Whatever may be the load on the main engine therefore the steam is admitted to the cylinder at defined intervals, and thus any tendency to a change of the period of vibration in the main engine is overcome.

The control of the main engine by the engine of constant period may be effected in other ways—of which Fig. 2 will serve as an illustration. In this case the piston of the controlling engine constitutes the slide valve of the main engine, so that the latter may be considered as operated by the exhaust of the former. In the figure I have shown two cylinders A A′ placed end to end with a piston B and B′ in each. The cylinder of the controlling engine is formed by or in the casing intermediate to the two main cylinders but in all other essential respects the construction and mode of operation of the controlling engine remains as described in connection with Fig. 1. The exhaust ports d d however, constitute the inlet ports of the cylinders A A′ and the exhaust of the latter is effected through the ports m, m which are controlled by the pistons B and B′ respectively. The inlet port for the admission of the steam to the controlling engine is similar to that in Fig. 1 and is indicated by the dotted circle at the center of the piston b.

An engine of the kind described possesses many and important advantages. A much more perfect regulation and uniformity of action is secured, while the engine is simple and its weight for a given capacity is very greatly reduced. The reciprocating movement of the piston may be converted, by the ordinary mechanisms into rotary motion or it may be utilized and applied in any other manner desired, either directly or indirectly.

In another application of even date herewith I have shown and described two reciprocating engines combined in such manner that the movement or operation of one is dependent upon and controlled by the other. In the present case, however, the controlling engine is not designed nor adapted to perform other work than the regulation of the period of the other, and it is moreover an engine of defined character which has the capability of an oscillating movement of constant period.

What I claim is—

1. The combination with the cylinder and reciprocating piston and controlling valve of an engine adapted to be operated by steam or a gas under pressure of an independently

controlled engine of constant period operating the said valve, as described.

2. The combination of an engine cylinder, a piston adapted to reciprocate therein, a slide valve for controlling the admission of steam to said cylinder, and an independently controlled engine of constant period operatively connected with said valve.

3. The combination with the cylinder, piston and valve mechanism of a main or working engine, of an independent controlling engine comprising a cylinder, a piston connected with the valve mechanism of the main engine, and a spring acting upon the said piston and controlling the period of its reciprocation, as set forth.

4. The combination with a cylinder and a piston adapted to be reciprocated by steam or a gas under pressure of a cylinder and a plunger therein reciprocated by the piston and constituting with its cylinder an air spring, and an open jacket or receptacle around the said cylinder and containing water to preserve the temperature of the air spring uniform, as set forth.

5. The combination with a cylinder, a reciprocating piston and valve mechanism for controlling the admission and exhaust of the steam or gas under pressure, of a cylinder, a piston connected with and operating said valve mechanism, and an air spring vibrated by the piston, the spring and piston being related in substantially the manner described to produce a reciprocating movement of constant period.

NIKOLA TESLA.

Witnesses:
ARTHUR H. SMITH,
ERNEST HOPKINSON.

(No Model.)

N. TESLA.

ELECTROMAGNETIC MOTOR.

No. 524,426. Patented Aug. 14, 1894.

Fig. 1

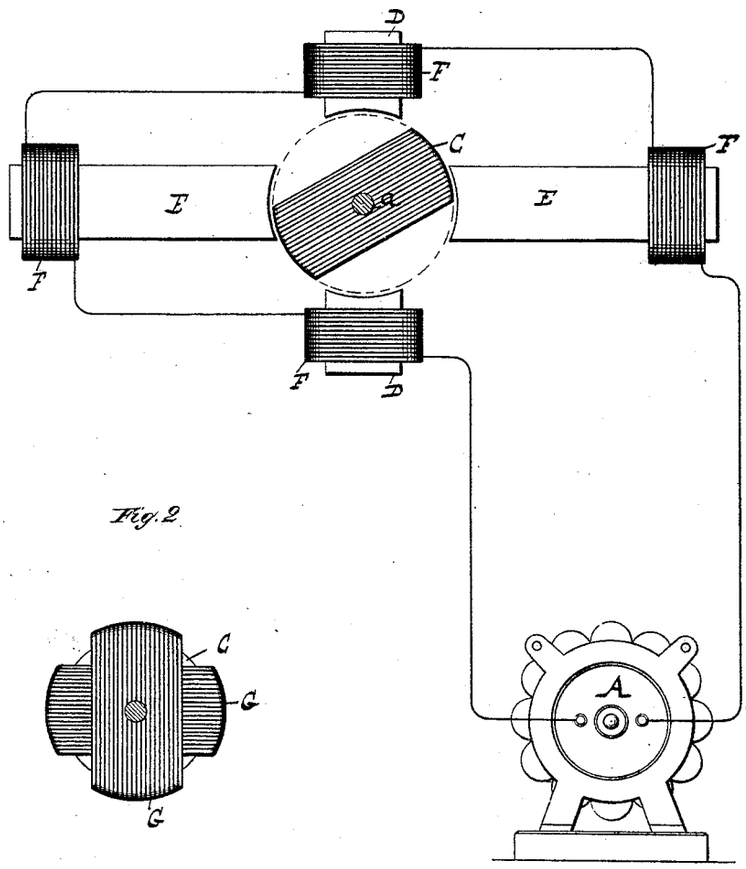

Fig. 2

WITNESSES:
Frank E. Hartley
Frank B. Mumsby.

Nikola Tesla INVENTOR
BY
Duncan, Curtis & Page
ATTORNEYS.

THE NORRIS PETERS CO., PHOTO-LITHO., WASHINGTON, D. C.

UNITED STATES PATENT OFFICE.

NIKOLA TESLA, OF NEW YORK, N. Y., ASSIGNOR TO THE TESLA ELECTRIC COMPANY, OF SAME PLACE.

ELECTROMAGNETIC MOTOR.

SPECIFICATION forming part of Letters Patent No. 524,426, dated August 14, 1894.

Application filed October 20, 1888. Serial No. 288,677. (No model.)

To all whom it may concern:

Be it known that I, NIKOLA TESLA, a subject of the Emperor of Austria-Hungary, from Smiljan, Lika, border country of Austria-Hungary, and a resident of New York, in the county and State of New York, have invented certain new and useful Improvements in Electromagnetic Motors, of which the following is a specification, reference being had to the drawings accompanying and forming a part of the same.

In previous patents of the United States notably in those numbered 381,968 and 382,280, dated May 1, 1888, I have shown and described a system of transmitting power by means of electro-magnetic generators and motors. The distinguishing feature of this system was shown to be the progressive movement or shifting of the magnetic poles or points of maximum attraction of a motor, due to the action or effect of alternating currents passed through independent energizing circuits in the motor. To secure this result the two currents must have different phases, the best results being obtained when the two currents differ by a quarter phase, or in other words when the periods of maximum potential of one current coincide with the minimum periods of the other, and conversely. I have also discovered that a single alternating current may be utilized to produce a progression or shifting of the magnetic poles of a motor if the field magnets of the same be of different magnetic susceptibility in different parts so that the magnetic phases of the same will differ. That is to say, if the field magnets are of such character that their different portions will be differently magnetized—in respect to time—by the same current impulse, and so disposed that the difference of magnetic phase will maintain a rotary or progressive shifting of the points of maximum magnetic effect. This may be accomplished in various ways, as may best be explained by reference to the accompanying drawings, in which—

Figure 1, is a diagrammatic view of a motor constructed in accordance with my invention and a generator connected therewith. Fig. 2, is an end view of a modified form of armature for said motor.

Let A designate an ordinary type of alternating current generator in the circuit of which is to be connected a motor or motors, according to my present invention. I construct such motor or motors in the following manner: On a shaft *a* I mount an armature C, which for convenience of illustration is presumed to be a soft iron plate or disk with two cut-away portions or a bar with rounded ends. Around this armature I place say four poles, D D E E, of soft iron, and, as is usual in all alternating current machines, built up of insulated plates or sections to prevent the heating that would otherwise occur. Each of these cores is surrounded by an energizing coil F and all of these coils are connected to the main circuit from the generator A in series or in any other manner to receive simultaneously the current impulses delivered by the generator. If the cores are all of the same shape or mass, or composition, and the coils are all wound in the same or alternately opposite directions, no rotation would be produced by the passage through the coils of a current, whether alternating or direct, since the attractive forces of the poles upon the soft iron armature would be developed simultaneously and would counterbalance or neutralize each other. But to secure rotation I make, for example, the cores D D short with their coils close to their inner ends and the cores E E long, with their coils removed from the inner ends. By this means I secure a difference in the magnetic phases which the poles exhibit, for while the short cores will respond to the magnetizing effect of an alternation or impulse of current in the coils in a certain time, a greater interval of time will elapse before the same magnetic intensity will be developed at the ends of the longer cores, and in practice I have found that this difference in phase may be utilized to produce the rotation of the armature. The effect being virtually to produce a shifting of the points of maximum magnetic effect similar to that which takes place when two alternating energizing currents, differing in phase are used, as explained in the patents above referred to. The essential difference being that in my patented system the rotation is ef-

fected by a time difference of electrical phase, while in the present case it is due to a difference in magnetic phases.

The same or similar results are obtainable by other means. For example, to secure the requisite difference of magnetic phase, I may make two of the cores as E E of greater mass than cores D D, whereby their period of saturation will be greater than of cores D D, or I may make the cores E E of hard iron or steel and the cores D D of soft iron, in which case the cores E E offering greater resistance to magnetic changes, will not exhibit their magnetism as soon after the passage of a current as the cores D D. Or if the cores of one set of poles, as D, D, be removed, the attractive force of the coils or solenoids would be exerted instantly while the magnetic cores E E would lag or have a different phase.

The special form of the motor is largely a matter of choice, nor is the invention limited to the number of poles nor to the special form of armature shown. For example, I may employ such an armature as that shown in Fig. 2, which is a cylinder or disk C wound with coils G closed upon themselves. This adds materially to the efficiency of the motor for the reason that currents are induced in the closed coils and magnetize the iron cylinder in a manner similar to that described in my Patent No. 383,279 of May 1, 1888.

Without limiting myself, therefore, in the particulars hereinbefore specified, what I claim as my invention is—

1. In an alternating current motor the combination with energizing coils adapted to be connected with an external circuit of cores of different magnetic susceptibility so as to exhibit differences of magnetic phase under the influence of an energizing current, as herein set forth.

2. The combination in an alternating current motor with a rotary armature of magnetic poles, and coils adapted to be connected with the external circuit surrounding the same, the said cores being constructed of different size or material whereby their magnetic phase will differ in time as set forth.

3. The combination in an electro magnetic motor with a rotary armature of magnetic cores of different length or mass and energizing coils surrounding the same and adapted to be connected with a single source of alternating currents, as set forth.

4. The combination in an electro magnetic motor with a rotary armature of short magnetic cores as D D and long magnetic cores as E E, and energizing coils surrounding the same, those on the cores E E being placed at a distance from the inner ends of the said cores, as herein set forth.

5. The combination in an electro-magnetic motor with energizing coils adapted to be connected with a source of alternating currents, and cores of different magnetic susceptibility, of an armature wound with coils closed upon themselves, as herein set forth.

6. The combination in an electro magnetic motor with a rotary armature of field cores of different magnetic susceptibility and energizing coils thereon connected in series and adapted to be connected with a source of alternating currents, as set forth.

NIKOLA TESLA.

Witnesses:
GEO. N. MONRO,
A. PATTERSON.

(No Model.)

N. TESLA.

ALTERNATING MOTOR.

No. 555,190. Patented Feb. 25, 1896.

Fig. 1

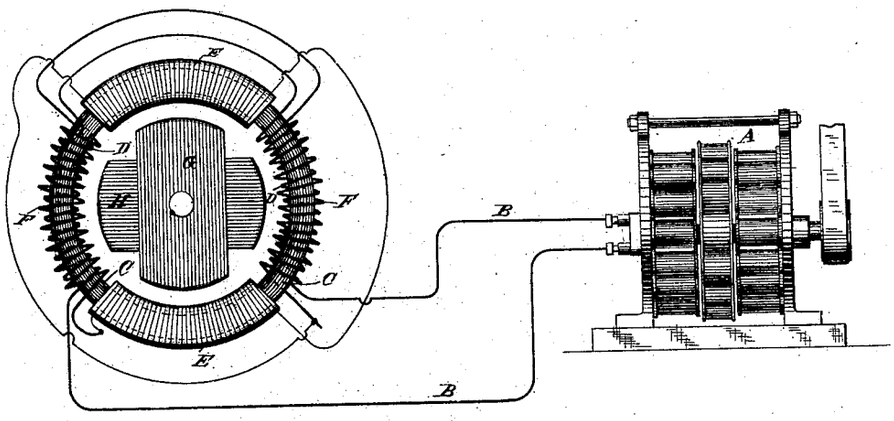

Fig. 2

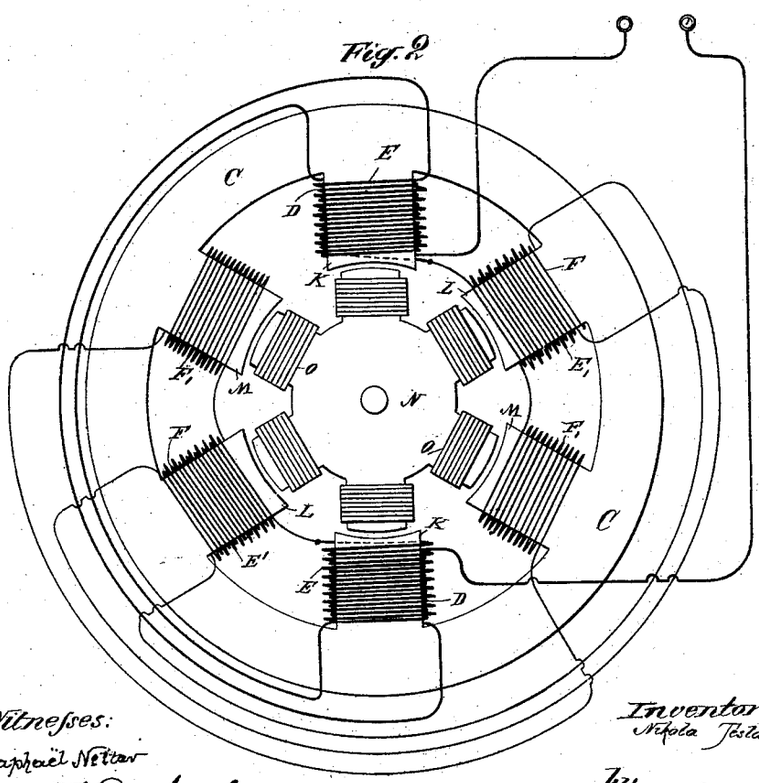

Witnesses:
Raphael Netter
Robt F. Gaylord

Inventor
Nikola Tesla
by Duncan, Curtis & Page
Attorneys.

UNITED STATES PATENT OFFICE.

NIKOLA TESLA, OF NEW YORK, N. Y., ASSIGNOR TO THE TESLA ELECTRIC COMPANY, OF SAME PLACE.

ALTERNATING MOTOR.

SPECIFICATION forming part of Letters Patent No. 555,190, dated February 25, 1896.

Application filed May 15, 1888. Serial No. 273,993. (No model.)

To all whom it may concern:

Be it known that I, NIKOLA TESLA, a citizen of the United States, residing at New York, in the county and State of New York, have invented certain new and useful Improvements in Electromagnetic Motors, of which the following is a specification, reference being had to the drawings accompanying and forming a part of the same.

In former patents granted to me—notably, Patents Nos. 381,968 and 382,280, of May 1, 1888—I have shown and described a system for the electrical transmission of power characterized by the following particulars: The motor contains independent energizing-circuits and the generator has corresponding induced or current-generating circuits which are connected by independent line-circuits with those of the motor, the said circuits being independent in the sense only that the distinctive relations of the currents produced, transmitted and utilized in each are preserved to produce their proper conjoint effect. The disposition of the generator coils or circuits is such that the currents developed therein and transmitted therefrom to the motor will have a certain difference of phase—for example, so that the maximum periods of the currents generated in one of such circuits coincide with the minimum periods of the currents produced in the other circuit, and the corresponding energizing-circuits of the motor are so arranged that the two currents cooperate to effect a progressive shifting of the magnetic poles or the points of maximum magnetic effect in the motor, in consequence of which a rotation of its movable element is maintained.

My present invention pertains to this system of electrical transmission of power, its novel and distinguishing feature, however, being a special means for generating or producing in the two motor-circuits the alternating current necessary for the operation of the motor, for while in the instances referred to I produce both currents directly by a magneto-electric machine in the present instance I generate or produce in but one of the circuits of the motor directly an alternating current, and by means of such current induce in the other energizing-motor circuit the other alternating current necessary for its operation.

When the two currents are both produced in the magneto-electric machine, it will be observed that the two line or transmitting circuits will of necessity extend the entire distance from the generator to the motor; but by the plan herein provided one line-circuit only is required, as the circuit from the generator and the other are brought into inductive relation to each other in the motor itself.

The following is illustrative of a means by which I secure this result in accordance with my present invention: I employ as a motor, for example, a subdivided annular field-magnet within which is mounted a suitable armature, as a cylinder or disk, wound with two coils at right angles, each of which forms a closed circuit. On opposite sides of the annular field-magnet I wind two coils of insulated wire of a size adapted to carry the current from the generator. Over these coils, or close to them, in any of the well-understood ways, I wind secondary coils. I also wind on the annular field-magnet midway between the first-mentioned coils a pair of coils which I connect up in circuit with the secondary coils.

The last pair of coils I make of finer wire than the main or line and secondary coils, and with a greater number of convolutions, that they may have a greater relative magnetizing effect than either of the others.

By connecting up the main coils in circuit with a generator of alternating currents, the armature of the motor will be rotated. I have assumed that this action is explained by the following theory: A current-impulse on the line passing through the main coils establishes the magnetic poles of the annular field-magnet at points midway between said coils; but this impulse produces in the secondary coils a current differing in phase from the first, which, circulating through the second pair of energizing-coils, tends to establish the pole at points ninety degrees removed from their first position, with the result of producing a movement or shifting of the poles in obedience to the combined magnetizing effect of the two sets of coils. This shifting, continued by each successive current-impulse, establishes what

may be termed a "rotary effort," and operates to maintain the armature in rotation.

In the drawings annexed I have shown, in Figure 1, an alternating-current generator connected with a motor shown diagrammatically and constructed in accordance with my invention, and in Fig. 2 a diagram of a modified form of motor.

A designates any ordinary form of alternating-current generator, and B B the line-wires for connecting the same with the motor.

C is the annular field-magnet of the motor.

D D are two main coils wound on opposite sides of the ring or annular field and connected up with the line and having a tendency to magnify the ring C with opposite poles midway between the two coils.

E E are two other magnetizing-coils wound midway between the coils D D, but having a stronger magnetizing influence for a current of given strength than coils D D.

F F are the secondary coils, which are associated with the main coils D D. They are in circuits which include the coils E E, respectively, the connections being made in such order that currents induced in coils F and circulating in coils E will act in opposition to those in coils E in so far only as the location of the magnetic poles in the ring C is concerned.

The armature may be of any of the forms used by me in my alternating-current system, and is shown as wound with two closed coils G H at right angles to each other.

In order to prolong the magnetizing effect of the induced currents in producing a shifting of the poles, I have carried the principle of the construction exhibited in Fig. 1 further, thereby obtaining a stronger and better rotary effect.

Referring to Fig. 2, C is an annular field-magnet having three pairs or oppositely-located sets of polar projections K L M. Upon one pair of these projections, as K, the main energizing-coils D are wound. Over these are wound the secondary coils E. On the next polar projections L L are wound the second energizing-coils F, which are in circuit with coils E. Tertiary-induced coils E′ are then wound over the coils F, and on the remaining polar projections M the third energizing-coils F′ are wound and connected up in the circuit of the tertiary coils E′.

The cylindrical or disk armature core N in this motor has polar projections wound with coils O, forming closed circuits. My object in constructing the motor in this way is to effect more perfectly the shifting of the points of maximum magnetic effect. For, assuming the operation of the motor to be due to the action above set forth, the first effect of a current-impulse in this motor will be to magnetize the pole-pieces K K; but the current thereby induced in coils E magnetizes the pole-pieces L, and the current induced in turn in coils E′ magnetizes the pole-pieces M. The pole-pieces are not magnetized, at least to their full extent, simultaneously by this means; but there is enough of a retardation or delay to produce a rotary effect or influence upon the armature. The application of this principle is not limited to the special forms of motor herein shown, as any of the double-circuit alternating-current motors invented by me and described in former Letters Patent to me may be adapted to the same purpose.

This invention, moreover, is not limited to the specific means herein shown for inducing in one energizing-circuit of the motor the currents necessary for co-operating with the primary current of the generator for producing the progressive shifting of the poles or points of maximum magnetic effect.

I believe that I am the first to produce any kind of a motor adapted to be operated by alternating currents and characterized by any arrangement of independent circuits brought into inductive relation so as to produce a rotary effort or effect due to the conjoint action of alternating currents from a source of supply in one of the motor-circuits and alternating currents induced by the first-named currents in the other circuit, and this without reference to the specific character or arrangement of the said two circuits in the motor.

What I therefore claim as my invention is—

1. In an electromagnetic motor, the combination of independent energizing-circuits, one adapted to be connected with a source of alternating current, the other arranged in inductive relation to the said first circuit whereby the motor will be operated by the resultant action of the two circuits, as set forth.

2. The combination in an electromagnetic motor, with an alternating coil or conductor and a closed-circuit conductor in inductive relation thereto, of an armature mounted so as to be within the field produced by the coil and closed conductor, as set forth.

3. The combination in an electromagnetic motor, with energizing-coils adapted to be connected with the generator of induced coils and independent energizing-coils in circuit therewith and arranged to produce a shifting movement of the points of maximum magnetic effect of the motor, as set forth.

4. The combination in an electromagnetic motor of a series of independent energizing-coils or sets of coils and induced coils wound on all the energizing-coils or sets of coils but the last of the series, the first energizing-coil or set of coils being included in circuit with a generator and each succeeding energizing-coil or set of coils being in circuit with the induced coils of the next preceding energizing-coils of the series.

5. In a system for the electrical transmission of power the combination of an alternating-current generator, a motor with an energizing coil or coils connected with the generator, secondary coils in inductive relation to said energizing-coils, and energizing-coils in circuit therewith arranged in substantially

the manner set forth to produce a movement or rotation of the points of maximum magnetic effect of the motor, as set forth.

6. In an electromagnetic motor the combination of independent energizing-circuits, one for connection with a source of alternating currents, the other in inductive relation to the first, whereby a rotary movement or projection of the field-poles will be produced by the conjoint action of the two and an armature mounted within the influence of the field produced by the energizing-circuits and containing closed coils or circuits, as set forth.

NIKOLA TESLA.

Witnesses:
ROBT. F. GAYLORD,
FRANK E. HARTLEY.

(No Model.)

N. TESLA.

ELECTRICAL CONDENSER.

No. 567,818. Patented Sept. 15, 1896.

Fig. 2

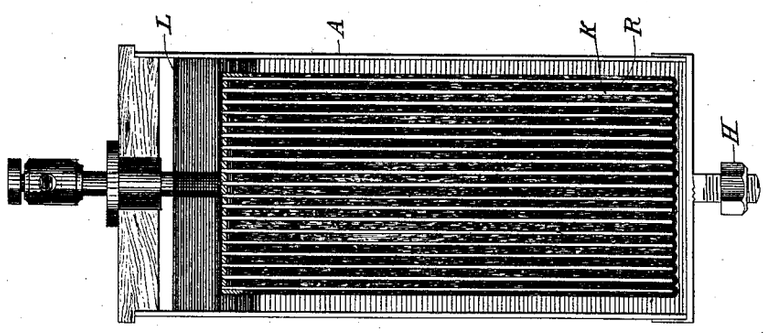

Fig. 1

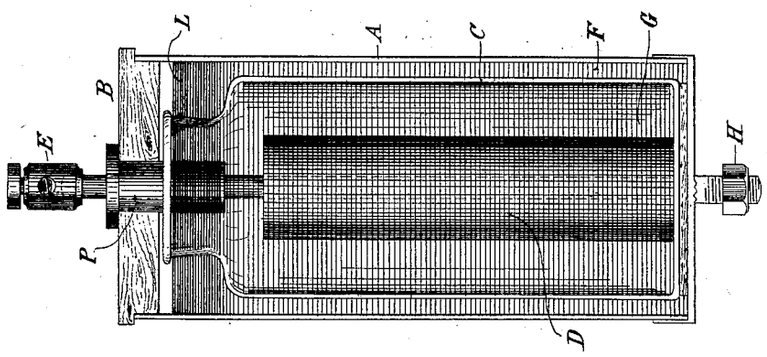

WITNESSES

Raphaël Netter

Drury W. Cooper

INVENTOR

Nikola Tesla

BY

Kerr, Curtis & Page

ATTORNEYS

THE NORRIS PETERS CO., PHOTO-LITHO., WASHINGTON, D. C.

UNITED STATES PATENT OFFICE.

NIKOLA TESLA, OF NEW YORK, N. Y.

ELECTRICAL CONDENSER.

SPECIFICATION forming part of Letters Patent No. 567,818, dated September 15, 1896.

Application filed June 17, 1896. Serial No. 595,928. (No model.)

To all whom it may concern:

Be it known that I, NIKOLA TESLA, a citizen of the United States, residing at New York, in the county and State of New York, have invented certain new and useful Improvements in Electrical Condensers, of which the following is a specification, reference being had to the drawings accompanying and forming a part of the same.

It has heretofore been announced and demonstrated by me that, under ordinary conditions, the efficiency of an electrical condenser is greatly increased by the exclusion of air or gaseous matter in general from the dielectric. In a patent granted to me December 8, 1891, No. 464,667, I have shown and described a convenient and practicable means of accomplishing this result by immersing the conducting-plates or armatures of the condenser in an insulating fluid, such as oil.

My present invention, while based upon this important feature of the practically complete exclusion of air or gas from the dielectric, is an improvement on the forms of condenser heretofore described and used by me.

According to my present invention I employ an electrolyte, or, in general, a conducting liquid in lieu of a solid, as the material for the armatures of the condenser, under conditions more fully hereinafter described, whereby air or gas will be practically prevented from exercising upon the condenser or the more active portions of the same the detrimental effects present in such devices as heretofore made. Such condensers are especially advantageous when used with circuits of great rates of electrical vibration because of the high conducting capacity of such fluids for currents of this character. There is, however, a general advantage derived from the fact that the conducting fluids have a high specific heat, so that the temperature remains constant, a condition in many cases highly advantageous and not met with in condensers of ordinary construction.

In the accompanying drawings, annexed in illustration of the manner in which my improvement is or may be carried into practice, Figure 1 is a view, partly in vertical section, of a condenser constructed in accordance with the invention. Fig. 2 is a part vertical section of a modified form of such condenser.

A designates a jar or receptacle partly or wholly of conducting material and provided with a closely-fitting cap or cover B, preferably of insulating material. Within this receptacle is a smaller jar or vessel C, of insulating material, containing a conducting-electrode D, supported by the cover B, through which passes a suitable terminal E, which may be incased in an insulating-plug P. The spaces within the jars or receptacles are nearly filled with a conducting liquid F G, such as a saline solution, the two bodies of such liquid in the inner and outer receptacles constituting the condenser-armatures. Above the conducting solution in each of the receptacles is poured a layer of oil L or other insulating liquid, which serves to prevent access of air to the highly-charged armatures. The terminals for the two armatures may be provided in various ways, but in such forms of condenser as that illustrated I prefer to utilize the conducting portion of the outer receptacle as one terminal, securing a binding-post to the same, as at H, and to employ an electrode D of suitably-extended surface immersed in the liquid of the inner receptacle and in electrical connection with the binding-post E. It is desirable in some cases to modify the construction of the condenser, as when a larger capacity is required. In such instances, in order to secure the substantial benefits of the improvement above described, I construct the instrument as shown in Fig. 2. In this case I employ a jar or receptacle A which is preferably used also as one terminal and filled with a conducting liquid, as before. Into the latter extends a series of connected conductors K, inclosed and fully insulated from the liquid by a coating of such material as gutta-percha R. These conductors are electrically joined to a terminal E, which extends up through the cover B, and constitute one of the armatures of the condenser. On the surface of the electrolyte or conducting liquid is poured a quantity of oil L, for the purpose above stated. While I have illustrated the invention in its preferred form for general practical purposes, it will be understood that without departure from the invention its construction may be greatly varied and modified.

What I claim is—

1. In an electric condenser constructed or provided with means for the exclusion of air and gas, and an armature composed of a conducting liquid as herein set forth.

2. A condenser comprising as armatures two bodies of conducting liquid electrically insulated and contained in a receptacle from which air and gas are excluded.

3. A condenser comprising two bodies of conducting liquid electrically insulated and contained in a receptacle, and a seal of insulating liquid on the surfaces of the liquid, as set forth.

In testimony whereof I have hereunto set my hand this 15th day of June, 1896.

NIKOLA TESLA.

Witnesses:
DRURY W. COOPER,
M. LAWSON DYER.

(No Model.) 2 Sheets—Sheet 1.

N. TESLA.

APPARATUS FOR PRODUCING ELECTRIC CURRENTS OF HIGH FREQUENCY AND POTENTIAL.

No. 568,176 Patented Sept. 22, 1896.

Fig. 1

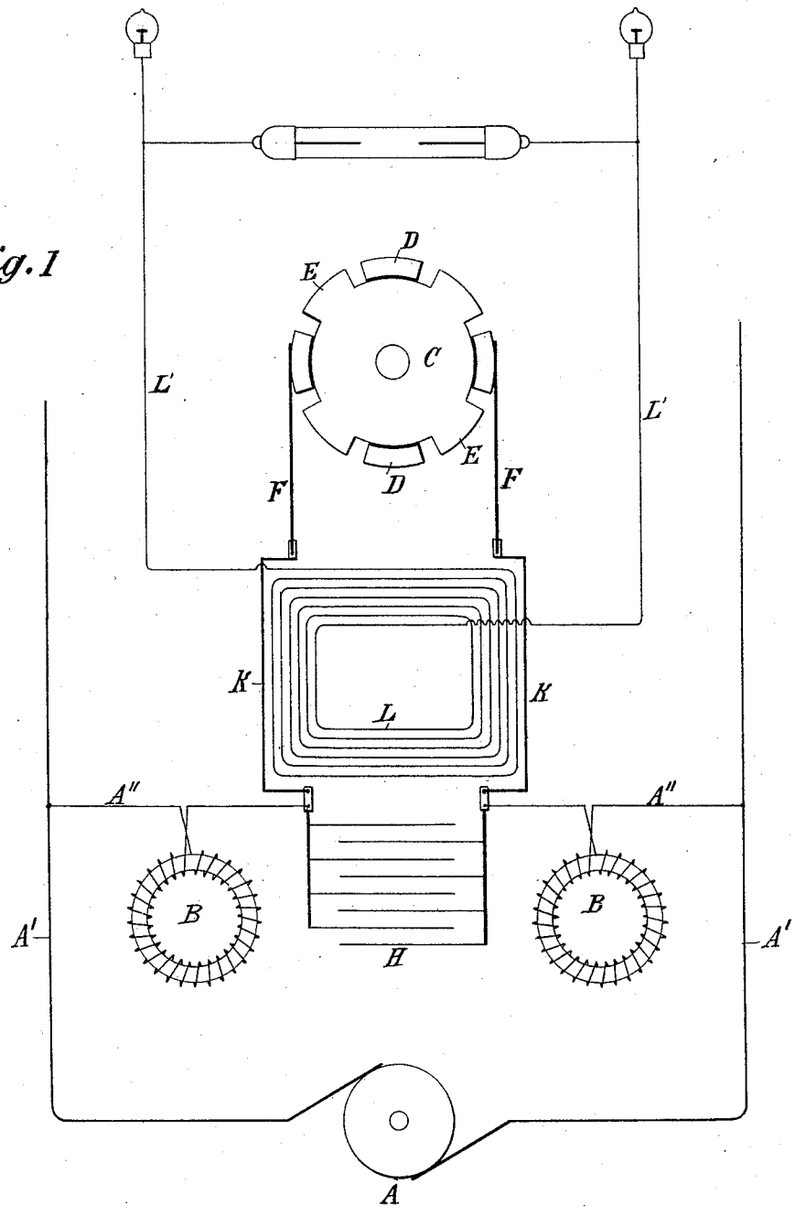

Witnesses:
Raphael Netter
Drury W. Cooper

Nikola Tesla, Inventor
by Kerr, Curtis & Page.
Attys.

THE NORRIS PETERS CO., PHOTO-LITHO., WASHINGTON, D. C.

(No Model.) 2 Sheets—Sheet 2.

N. TESLA.

APPARATUS FOR PRODUCING ELECTRIC CURRENTS OF HIGH FREQUENCY AND POTENTIAL.

No. 568,176. Patented Sept. 22, 1896.

Fig. 2

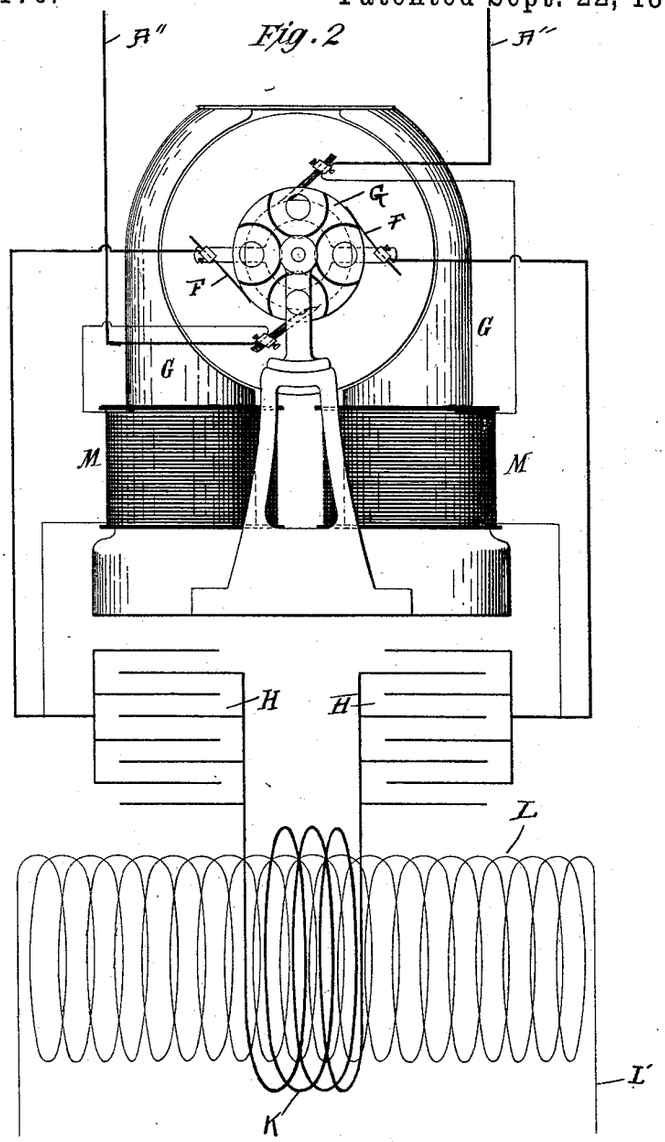

WITNESSES:
M. Lawson Dyer
Edwin B. Hopkinson.

Nikola Tesla INVENTOR

BY
Kerr, Curtis & Page
ATTORNEYS

THE NORRIS PETERS CO., PHOTO-LITHO., WASHINGTON, D. C.

UNITED STATES PATENT OFFICE.

NIKOLA TESLA, OF NEW YORK, N. Y.

APPARATUS FOR PRODUCING ELECTRIC CURRENTS OF HIGH FREQUENCY AND POTENTIAL.

SPECIFICATION forming part of Letters Patent No. 568,176, dated September 22, 1896.

Application filed April 22, 1896. Serial No. 588,534. (No model.)

To all whom it may concern:

Be it known that I, NIKOLA TESLA, a citizen of the United States, residing at New York, in the county and State of New York, have invented certain new and useful Improvements in Apparatus for the Production of Electric Currents of High Frequency and Potential, of which the following is a specification, reference being had to the drawings accompanying and forming a part of the same.

The invention which forms the subject of my present application is embodied in an improvement on an electrical apparatus invented by me and described in prior Letters Patent, notably in United States Patents No. 462,418, dated November 3, 1891, and No. 454,622, dated June 23, 1891. This apparatus was devised for the purpose of converting and supplying electrical energy in a form suited for the production of certain novel electrical phenomena which require currents of higher frequency and potential than can readily or even possibly be developed by generators of the ordinary types or by such mechanical appliances as were theretofore known. The apparatus, as a whole, involves means for utilizing the intermittent or oscillating discharge of the accumulated electrical energy of a condenser or a circuit possessing capacity in what may be designated the "working" circuit, or that which contains the translating devices or those which are operated by such currents.

The object of my present improvements is to provide a simple, compact, and effective apparatus for producing these effects, but adapted more particularly for direct application to and use with existing circuits carrying direct currents, such as the ordinary municipal incandescent-lighting circuits. The way in which I accomplish this, so as to meet the requirements of practical and economical operation under the conditions present, will be understood from a general description of the apparatus which I have devised. In any given circuit, which for present purposes may be considered as conveying direct currents or those of substantially the character of direct or continuous currents and which for general purposes of illustration may be assumed to be a branch or derived circuit across the mains from any ordinary source, I interpose a device or devices in the nature of a choking-coil in order to give to the circuit a high self-induction. I also provide a circuit-controller of any proper character that may be operated to make and break said circuit. Around the break or point of interruption I place a condenser or condensers to store the energy of the discharge-current, and in a local circuit and in series with such condenser I place the primary of a transformer, the secondary of which then becomes the source of the currents of high frequency. It will be apparent from a consideration of the conditions involved that were the condenser to be directly charged by the current from the source and then discharged into the working circuit a very large capacity would ordinarily be required, but by the above arrangement the current of high electromotive force which is induced at each break of the main circuit furnishes the proper current for charging the condenser, which may therefore be small and inexpensive. Moreover, it will be observed that since the self-induction of the circuit through which the condenser discharges, as well as the capacity of the condenser itself, may be given practically any desired value, the frequency of the discharge-current may be adjusted at will.

The object sought in this invention may be realized by specifically different arrangements of apparatus, but in the drawings hereto annexed I have illustrated forms which are typical of the best and most practicable means for carrying out the invention of which I am at present aware.

Figure 1 is a diagrammatic illustration of the apparatus, and Fig. 2 a modification of the same.

Referring to Fig. 1, A designates any source of direct current. In any branch of the circuit from said source, such, for example, as would be formed by the conductors A'' A'' from the mains A' and the conductors K K, are placed self-induction or choking coils B B and a circuit-controller C. This latter may be an ordinary metallic disk or cylinder with teeth or separated segments D D E E, of which one or more pairs, as E E, diametrically opposite, are integral or in electrical contact with the body of the cylinder, so that when the controller is in the position in which the

two brushes F F bear upon two of said segments E E the circuit through the choking-coils B will be closed. The segments D D are insulated, and while shown in the drawings as of substantially the same length of arc as the segments E E this latter relation may be varied at will to regulate the periods of charging and discharging.

The controller C is designed to be rotated by any proper device, such, for example, as an electromagnetic motor, as shown in Fig. 2, receiving current either from the main source or elsewhere. Around the controller C, or in general in parallel therewith, is a condenser H, and in series with the latter the primary K of a transformer, the secondary L of which constitutes the source of the currents of high frequency which may be applied to many useful purposes, as for electric illumination, the operation of Crooke's tubes, or the production of high vacua.

L′ indicates the circuit from the secondary, which may be regarded as the working circuit.

A more convenient and simplified arrangement of the apparatus is shown in Fig. 2. In this case the small motor G, which drives the controller, has its field-coils in derivation to the main circuit, and the controller C and condenser H are in parallel in the field-circuit between the two coils. In such case the field-coils M take the place of the choking-coils B. In this arrangement, and in fact generally, it is preferable to use two condensers or a condenser in two parts and to arrange the primary coil of the transformer between them. The interruptions of the field-circuit of the motor should be so rapid as to permit only a partial demagnetization of the cores. These latter, however, should in this specific arrangement be laminated.

The apparatus, as will now be seen, comprises, as essential elements, choking-coils, a circuit-controller, means for rotating the same, a condenser, and a transformer. These elements may be mechanically associated in any convenient and compact form, but so far as their general arrangement and relations are concerned I prefer the relative disposition illustrated, mainly because, by reason of their symmetrical arrangement in the circuit, the liability of injury to the insulation of any of the devices is reduced to a minimum.

I do not mean to imply by the terms employed in describing my improvements that I limit myself to the use of the precise devices commonly designated by such terms. For instance, the choking-coil as a distinctive device may be wholly dispensed with, provided the circuit in which it must otherwise be placed have a sufficiently high self-induction produced in other ways. So, too, the necessity of a condenser, strictly speaking, is avoided when the circuit itself possesses sufficient capacity to accomplish the desired result.

Having now described my invention and the manner in which the same is or may be carried into practical effect, what I claim is—

1. The apparatus herein described for converting direct currents into currents of high frequency, comprising in combination a circuit of high self-induction, a circuit-controller adapted to make and break such circuit, a condenser into which the said circuit discharges when interrupted, and a transformer through the primary of which the condenser discharges as set forth.

2. The combination of a source of direct current and a circuit therefrom, choking-coils in said circuit, means for making and breaking the circuit through said coils, a condenser around the point of interruption in the said circuit and a transformer having its primary in circuit with the condenser as set forth.

3. The combination with a circuit of high self-induction and means for making and breaking the same, of a condenser around the point of interruption in the said circuit, and a transformer the primary of which is in the condenser-circuit as described.

4. The combination with a circuit of direct current and having a high self-induction, of a circuit-controller for making and breaking said circuit, a motor for driving the controller, a condenser in a circuit connected with the first around the point of interruption therein, and a transformer the primary of which is in circuit with the condenser as set forth.

5. The combination with a circuit of direct current, a controller for making and breaking the same, a motor having its field-magnets in said circuit and driving the said controller, a condenser connected with the circuit around the point of interruption therein and a transformer the primary of which is in circuit with the condenser as set forth.

NIKOLA TESLA.

Witnesses:
EDWIN B. HOPKINSON,
M. LAWSON DYER.

(No Model.) 2 Sheets—Sheet 1.

N. TESLA.

APPARATUS FOR PRODUCING OZONE.

No. 568,177. Patented Sept. 22, 1896.

Fig. 1.

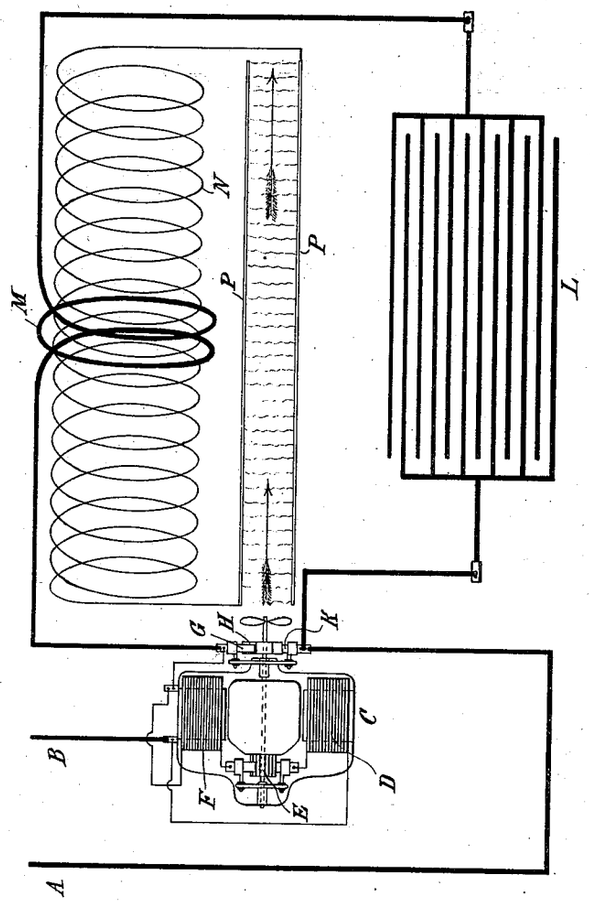

Witnesses:
Raphael Netter
Drury W. Cooper

Nikola Tesla, Inventor
by Kerr, Curtis & Page. Att'ys.

(No Model.) 2 Sheets—Sheet 2.

N. TESLA.

APPARATUS FOR PRODUCING OZONE.

No. 568,177. Patented Sept. 22, 1896.

Fig. 2

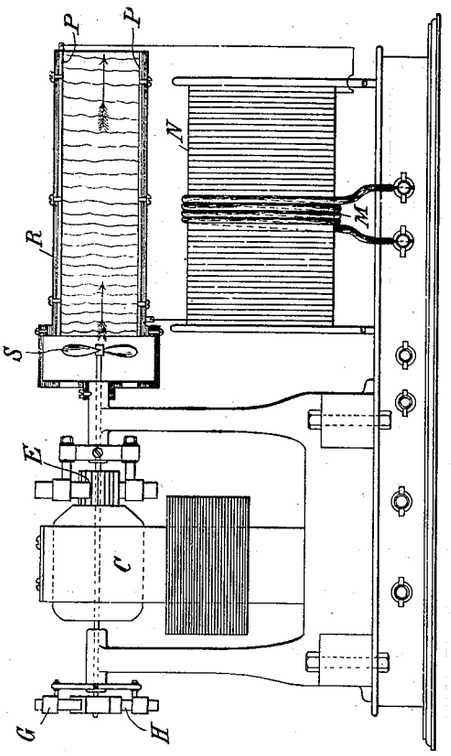

Witnesses:
Raphael Netter
Thurz W. Cooper

Nikola Tesla, Inventor
by Kerr, Curtis & Page
Att'ys.

UNITED STATES PATENT OFFICE.

NIKOLA TESLA, OF NEW YORK, N. Y.

APPARATUS FOR PRODUCING OZONE.

SPECIFICATION forming part of Letters Patent No. 568,177, dated September 22, 1896.

Application filed June 17, 1896. Serial No. 595,927. (No model.)

To all whom it may concern:

Be it known that I, NIKOLA TESLA, a citizen of the United States, residing at New York, in the county and State of New York, have invented certain new and useful Improvements in Apparatus for Producing Ozone, of which the following is a specification, reference being had to the drawings accompanying and forming a part of the same.

The invention subject of my present application has primarily as its object to provide a simple, cheap, and effective apparatus for the production of ozone or such gases as are obtained by the action of high-tension electrical discharges, although in the application to such purposes of the apparatus heretofore invented by me and designed for the production of electric currents of high frequency and potential I have made certain improvements in such apparatus itself which are novel and useful in other and more general applications of the same. I have heretofore shown and described, notably in Patents No. 462,418, dated November 3, 1891, and No. 454,622, dated June 23, 1891, an apparatus devised for the purpose of converting and supplying electrical energy in a form suited for the production of certain novel electrical phenomena which require currents of higher frequency and potential than can readily or even possibly be developed by generators of the ordinary types or by such mechanical appliances as were theretofore known. This apparatus involved means for utilizing the intermittent or oscillating discharge of the accumulated electrical energy of a condenser or a circuit possessing capacity in what may be designated the "working" circuit or that which contains the translating devices or means for utilizing such currents. In my present improvement I have utilized appliances of this general character under conditions and in combination with certain instrumentalities, hereinafter described, which enable me to produce, without difficulty and at very slight expense, ozone in any desired quantities. I would state the apparatus which I have devised for this purpose is capable of other and highly important uses of a similar nature, but for purposes of the present case I deem it sufficient to describe its operation and effects when used for the purpose of generating ozone.

In the accompanying drawings, illustrative of the principle of construction and mode of operation of my improvement, Figure 1 is a diagrammatic illustration of the invention; and Fig. 2, a view, partly in side elevation and partly in section, of the apparatus as I construct it for practical use.

The device hereinafter described is especially designed for direct application to and use with existing circuits carrying direct currents, such as the ordinary municipal incandescent-lighting circuits.

Let A B designate the terminals from any given circuit of this character. In such circuit I connect up an electromagnetic motor C in any of the usual ways. That is to say, the coils of the field and armature may be in series or derivation or wholly independent, and either or both are connected up in the circuit. In the present instance one terminal, as B, is connected to one of the binding-posts, from which the circuit is led through one field-coil, D, the brushes and commutator E, the other field-coil, F, and thence to a brush G, which rests upon a circuit-controller H, consisting in general of a conducting disk or cylinder with insulating-sections in its periphery. The other terminal, as A, connects with a second brush K, bearing on the controller, so that the current which passes through and operates the motor is periodically interrupted. For this reason the iron cores of the motor should be laminated. Around the controller is formed a circuit of low self-induction, which includes a condenser L and the primary M of a transformer. The circuit including the motor is of relatively high self-induction, and this property is imparted to it by the coils of the motor, or, when these are not sufficient, by the addition of suitable choking-coils, so that at each break of the motor-circuit a current of high electromotive force will be developed for charging the condenser, which may therefore be small and inexpensive. The condenser discharges through the circuit which is completed through the brushes G K and the controller H, and since the self-induction of this circuit, as well as the capacity of the con-

denser itself, may be given practically any desired value the frequency of the discharge-current may be adjusted at will. The potential of the high-frequency discharge-current is raised by a secondary coil N in inductive relation to the primary M. The conductors of such secondary circuit are connected to two insulated conducting-plates P P, and when the apparatus is in operation a discharge in the form of streams will be maintained between such plates, as indicated by the wavy lines in the figures. If air be forced between the plates P during this discharge, the effectiveness of the apparatus is increased and ozone is generated in large quantities. In order to secure this result, I inclose the said plates P P in a casing R of any proper description, through which a current of air is maintained by a fan S, mounted on the shaft of the motor.

This apparatus may be constructed and combined in very compact form and small compass. Its operation involves but a small expenditure of energy, while it requires practically no care or attention for the continued production of ozone in unlimited amount.

What I claim as my invention is—

1. The combination with a circuit of direct currents, of a controller for making and breaking the same, a motor included in or connected with said circuit so as to increase its self-induction, and driving the said controller, a condenser in a circuit around the controller, and a transformer through the primary of which the condenser discharges, as set forth.

2. The combination with a circuit of direct currents, of a controller for making and breaking the same, a series-wound motor having its coils included in said circuit and driving the said controller, a condenser connected with the circuit around the point of interruption therein, and a transformer, the primary of which is in the discharge-circuit of the condenser, as set forth.

3. A device for producing ozone comprising in combination, surfaces between which an electrical discharge takes place, a transformer for producing the potential necessary for such discharge, a condenser in the primary circuit of the transformer, a charging-circuit, means for charging the condenser by such circuit and discharging it through the primary of the transformer, and a device for maintaining a current of air between the discharge-surfaces, as set forth.

4. A device for producing ozone comprising in combination, surfaces between which an electrical discharge takes place, a transformer for producing the potential necessary for such discharge, a condenser in the primary circuit of the transformer, a charging-circuit, means for charging the condenser by such circuit and discharging it through the primary of the transformer, a motor operated by the charging-circuit, and a device operated thereby for maintaining a current of air between the discharge-surfaces, as set forth.

5. A device for producing ozone comprising in combination, surfaces between which an electrical discharge takes place, a transformer for producing the potential necessary for such discharge, a condenser in the primary circuit of the transformer, a charging-circuit, a circuit-controller effecting the charging and discharging of the condenser, and a fan-motor connected with the charging-circuit and operating the circuit-controller and adapted to maintain a current of air between the discharge-surfaces, as set forth.

6. A device for producing ozone comprising in combination, means for charging a condenser, a circuit of low self-induction and resistance into which the condenser discharges, a coil for raising the potential of such discharge, and means for passing a current of air through the high-potential discharge, as set forth.

NIKOLA TESLA.

Witnesses:
DRURY W. COOPER,
M. LAWSON DYER.

(No Model.) 2 Sheets—Sheet 1.

N. TESLA.

METHOD OF REGULATING APPARATUS FOR PRODUCING CURRENTS OF HIGH FREQUENCY.

No. 568,178. Patented Sept. 22, 1896.

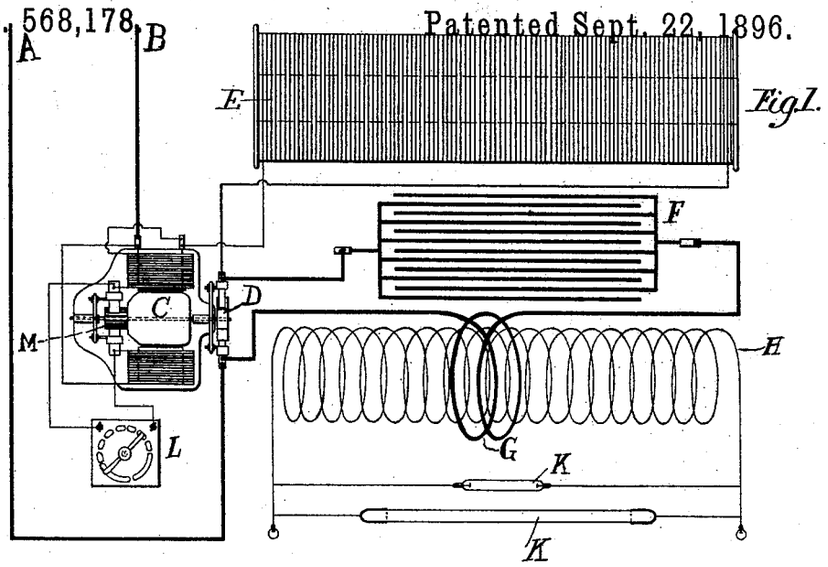

Fig. 1.

Fig. 2

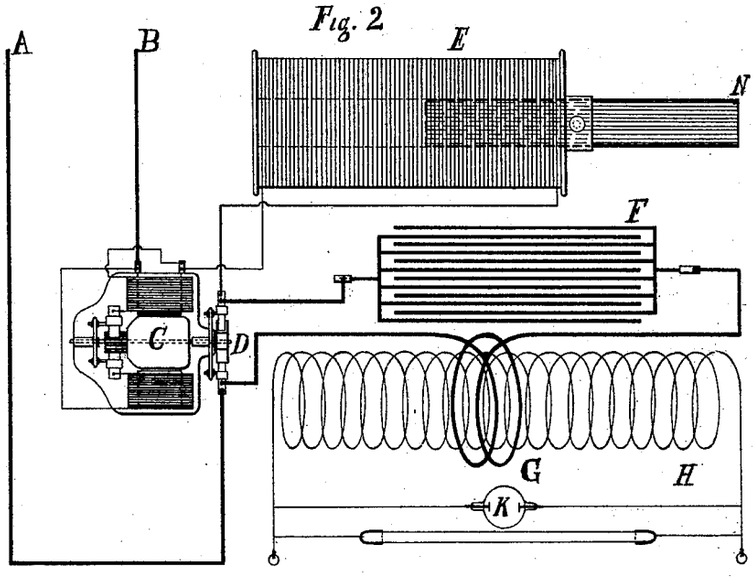

WITNESSES

Edwin B. Hopkinson
M. Lawson Dyer

INVENTOR

Nikola Tesla

BY

Kerr, Curtis & Page
ATTORNEYS

THE NORRIS PETERS CO., PHOTO-LITHO., WASHINGTON, D. C.

(No Model.) 2 Sheets—Sheet 2.

N. TESLA.

METHOD OF REGULATING APPARATUS FOR PRODUCING CURRENTS OF HIGH FREQUENCY.

No. 568,178. Patented Sept. 22, 1896.

Fig. 3.

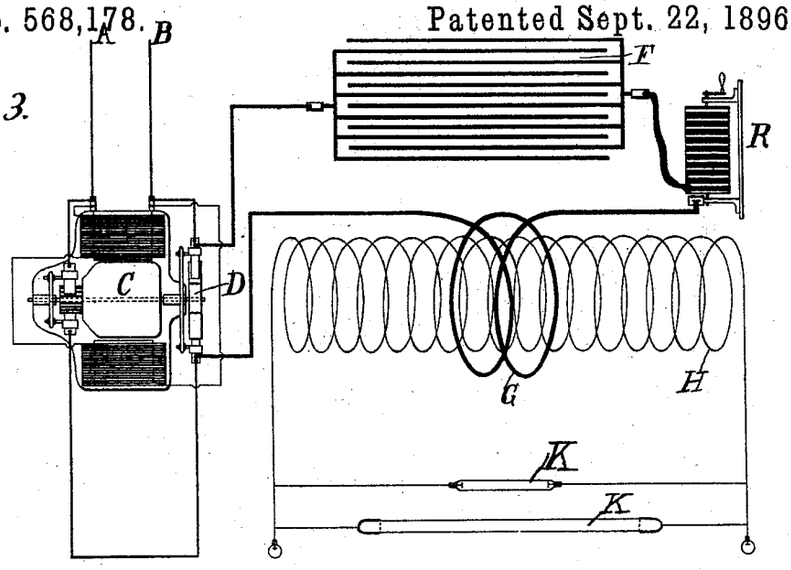

Fig. 4.

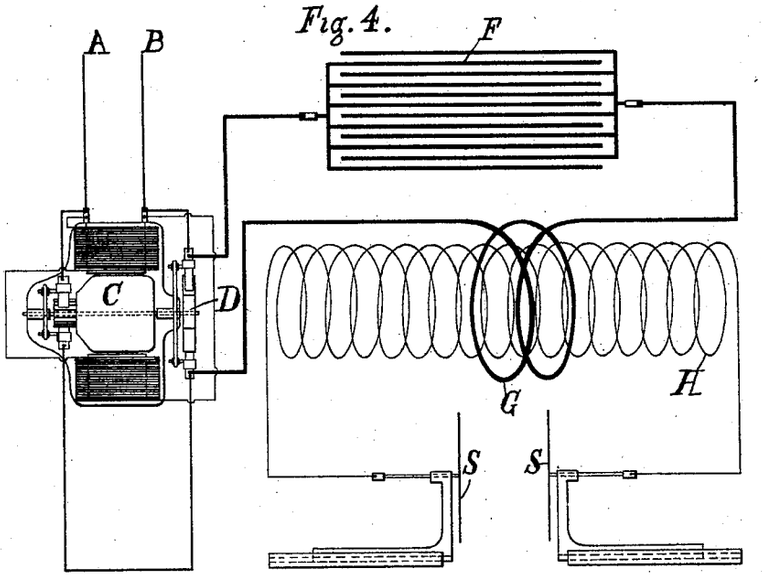

WITNESSES

Edwin B. Hopkinson,
M. Lawson Dyer.

INVENTOR

Nikola Tesla

BY

Kerr, Curtis & Page

ATTORNEYS

THE NORRIS PETERS CO., PHOTO-LITHO., WASHINGTON, D. C.

UNITED STATES PATENT OFFICE.

NIKOLA TESLA, OF NEW YORK, N. Y.

METHOD OF REGULATING APPARATUS FOR PRODUCING CURRENTS OF HIGH FREQUENCY.

SPECIFICATION forming part of Letters Patent No. 568,178, dated September 22, 1896.

Application filed June 20, 1896. Serial No. 596,262. (No model.)

To all whom it may concern:

Be it known that I, NIKOLA TESLA, a citizen of the United States, residing at New York, in the county and State of New York, have invented certain new and useful Improvements in Methods of Regulating Apparatus for Producing Currents of High Frequency, of which the following is a specification, reference being had to the drawings accompanying and forming a part of the same.

In previous patents and applications I have shown and described a method of and apparatus for generating electric currents of high frequency suitable for the production of various novel phenomena, such as illumination by means of vacuum-tubes, the production of ozone, Roentgen shadows, and other purposes. The special apparatus of this character which I have devised for use with circuits carrying currents in the nature of those classed as direct, or such as are generally obtainable from the ordinary circuits used in municipal systems of incandescent lighting, is based upon the following principles:

The energy of the direct-current supply is periodically directed into and stored in a circuit of relatively high self-induction, and in such form is employed to charge a condenser or circuit of capacity, which, in turn, is caused to discharge through a circuit of low self-induction containing means whereby the intermittent current of discharge is raised to the potential necessary for producing any desired effect.

Considering the conditions necessary for the attainment of these results, there will be found, as the essential elements of the system, the supply-circuit, from which the periodic impulses are obtained, and what may be regarded as the local circuits, comprising the circuit of high self-induction for charging the condenser and the circuit of low self-induction into which the condenser discharges and which itself may constitute the working circuit, or that containing the devices for utilizing the current, or may be inductively related to a secondary circuit which constitutes the working circuit proper. These several circuits, it will be understood, may be more or less interconnected; but for purposes of illustration they may be regarded as practically distinct, with a circuit-controller for alternately connecting the condenser with the circuit by which it is charged and with that into which it discharges, and with a primary of a transformer in the latter circuit having its secondary in that which contains the devices operated by the current.

To this system or combination the invention, subject of my present application, pertains, and has for its object to provide a proper and economical means of regulation therefor.

It is well known that every electric circuit, provided its ohmic resistance does not exceed certain definite limits, has a period of vibration of its own analogous to the period of vibration of a weighted spring. In order to alternately charge a given circuit of this character by periodic impulses impressed upon it and to discharge it most effectively, the frequency of the impressed impulses should bear a definite relation to the frequency of vibration possessed by the circuit itself. Moreover, for like reasons the period or vibration of the discharge-circuit should bear a similar relation to the impressed impulses or the period of the charging-circuit. When the conditions are such that the general law of harmonic vibrations is followed, the circuits are said to be in resonance or in electromagnetic synchronism, and this condition I have found in my system to be highly advantageous. Hence in practice I adjust the electrical constants of the circuits so that in normal operation this condition of resonance is approximately attained. To accomplish this, the number of impulses of current directed into the charging-circuit per unit time is made equal to the period of the charging-circuit itself, or, generally, to a harmonic thereof, and the same relations are maintained between the charging and discharge circuit. Any departure from this condition will result in a decreased output, and this fact I take advantage of in regulating such output by varying the frequencies of the impulses or vibrations in the several circuits.

Inasmuch as the period of any given circuit depends upon the relations of its resistance, self-induction, and capacity, a variation of any one or more of these may result in a variation in its period. There are therefore various ways in which the frequencies of

vibration of the several circuits in the system referred to may be varied, but the most practicable and efficient ways of accomplishing the desired result are the following: (*a*) varying the rate of the impressed impulses of current, or those which are directed from the source of supply into the charging-circuit, as by varying the speed of the commutator or other circuit-controller; (*b*) varying the self-induction of the charging-circuit; (*c*) varying the self-induction or capacity of the discharge-circuit.

To regulate the output of a single circuit which has no vibration of its own by merely varying its period would evidently require, for any extended range of regulation, a very wide range of variation of period; but in the system described a very wide range of regulation of the output may be obtained by a very slight change of the frequency of one of the circuits when the above-mentioned rules are observed.

In illustration of my invention I have shown by diagrams in the accompanying drawings some of the more practicable means for carrying out the same. The figures, as stated, are diagrammatic illustrations of the system in its typical form provided with regulating devices of different specific character. These diagrams will be described in detail in their order.

In each of the figures, A B designate the conductors of a supply-circuit of continuous current; C, a motor connected therewith in any of the usual ways and driving a current-controller D, which serves to alternately close the supply-circuit through the motor or through a self-induction coil E and to connect such motor-circuit with a condenser F, the circuit of which contains a primary coil G, in proximity to which is a secondary coil H, serving as the source of supply to the working circuit, or that in which are connected up the devices K K for utilizing the current.

The circuit-controller, it may be stated, is any device which will permit of a periodic charging of the condenser F by the energy of the supply-circuit and its discharging into a circuit of low self-induction supplying directly or indirectly the translating devices. Inasmuch as the source of supply is generally of low potential, it is undesirable to charge the condenser directly therefrom, as a condenser of large capacity will in such cases be required. I therefore employ a motor of high self-induction, or in place of or in addition to such motor a choking or self-induction coil E, to store up the energy of the supply-current directed into it and to deliver it in the form of a high-potential discharge when its circuit is interrupted and connected to the terminals of the condenser.

In order to secure the greatest efficiency in a system of this kind, it is essential, as I have before stated, that the circuits, which, mainly as a matter of convenience, I have designated as the "charging" and the "discharge" circuits, should be approximately in resonance or electromagnetic synchronism. Moreover, in order to obtain the greatest output from a given apparatus of this kind, it is desirable to maintain as high a frequency as possible.

The electrical conditions, which are now well understood, having been adjusted to secure, as far as practical considerations will permit, these results, I effect the regulation of the system by adjusting its elements so as to depart in a greater or less degree from the above conditions with a corresponding variation of output. For example, as in Figure 1, I may vary the speed of the motor, and consequently of the controller, in any suitable manner, as by means of a rheostat L in a shunt to such motor or by shifting the position of the brushes on the main commutator M of the motor or otherwise. A very slight variation in this respect, by disturbing the relations between the rate of impressed impulses and the vibration of the circuit of high self-induction into which they are directed, causes a marked departure from the condition of resonance and a corresponding reduction in the amount of energy delivered by the impressed impulses to the apparatus.

A similar result may be secured by modifying any of the constants of the local circuits, as above indicated. For example, in Fig. 2 the choking-coil E is shown as provided with an adjustable core N, by the movement of which into and out of the coil the self-induction, and consequently the period of the circuit containing such coil, may be varied.

As an example of the way in which the discharge-circuit, or that into which the condenser discharges, may be modified to produce the same result I have shown in Fig. 3 an adjustable self-induction coil R in the circuit with the condenser, by the adjustment of which the period of vibration of such circuit may be changed.

The same result would be secured by varying the capacity of the condenser; but if the condenser were of relatively large capacity this might be an objectionable plan, and a more practicable method is to employ a variable condenser in the secondary or working circuit, as shown in Fig. 4. As the potential in this circuit is raised to a high degree, a condenser of very small capacity may be employed, and if the two circuits, primary and secondary, are very intimately and closely connected the variation of capacity in the secondary is similar in its effects to the variation of the capacity of the condenser in the primary. I have illustrated as a means well adapted for this purpose two metallic plates S S, adjustable to and from each other and constituting the two armatures of the condenser.

I have confined the description herein to a source of supply of direct current, as to such the invention more particularly applies, but it will be understood that if the system be supplied by periodic impulses from any

source which will effect the same results the regulation of the system may be effected by the method herein described, and this my claims are intended to include.

What I claim is—

1. The method of regulating the energy delivered by a system for the production of high-frequency currents and comprising a supply-circuit, a condenser, a circuit through which the same discharges and means for controlling the charging of the condenser by the supply-circuit and the discharging of the same, the said method consisting in varying the relations of the frequencies of the impulses in the circuits comprising the system, as set forth.

2. The method of regulating the energy delivered by a system for the production of high-frequency currents comprising a supply-circuit of direct currents, a condenser adapted to be charged by the supply-circuit and to discharge through another circuit, the said method consisting in varying the frequency of the impulses of current from the supply-circuit, as set forth.

3. The method of producing and regulating electric currents of high frequency which consists in directing impulses from a supply-circuit into a charging-circuit of high self-induction, charging a condenser by the accumulated energy of such charging-circuit, discharging the condenser through a circuit of low self-induction, raising the potential of the condenser discharge and varying the relations of the frequencies of the electrical impulses in the said circuits, as herein set forth.

NIKOLA TESLA.

Witnesses:
M. LAWSON DYER,
DRURY W. COOPER.

(No Model.) 2 Sheets—Sheet 1.

N. TESLA.

METHOD OF AND APPARATUS FOR PRODUCING CURRENTS OF HIGH FREQUENCY.

No. 568,179. Patented Sept. 22, 1896.

Fig. 1

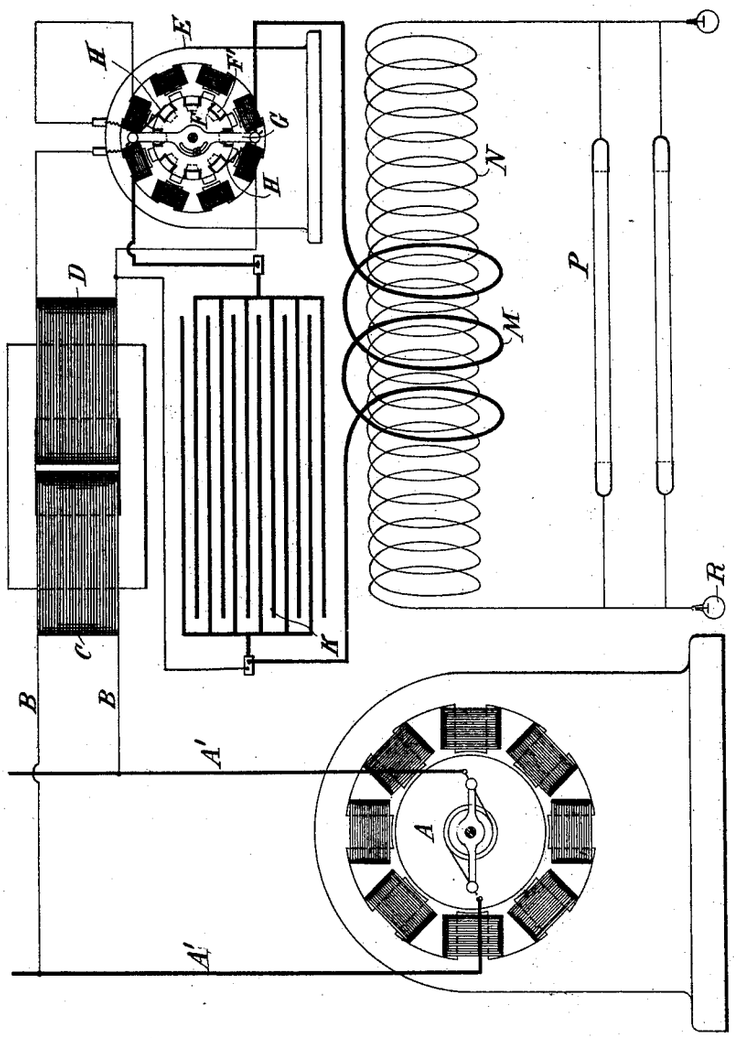

WITNESSES

Drury W. Cooper

Edwin B. Hopkinson.

INVENTOR

Nikola Tesla

BY

Kerr, Curtis & Page.

ATTORNEYS

THE NORRIS PETERS CO., PHOTO-LITHO., WASHINGTON, D. C.

(No Model.) 2 Sheets—Sheet 2.

N. TESLA.

METHOD OF AND APPARATUS FOR PRODUCING CURRENTS OF HIGH FREQUENCY.

No. 568,179. Patented Sept. 22, 1896.

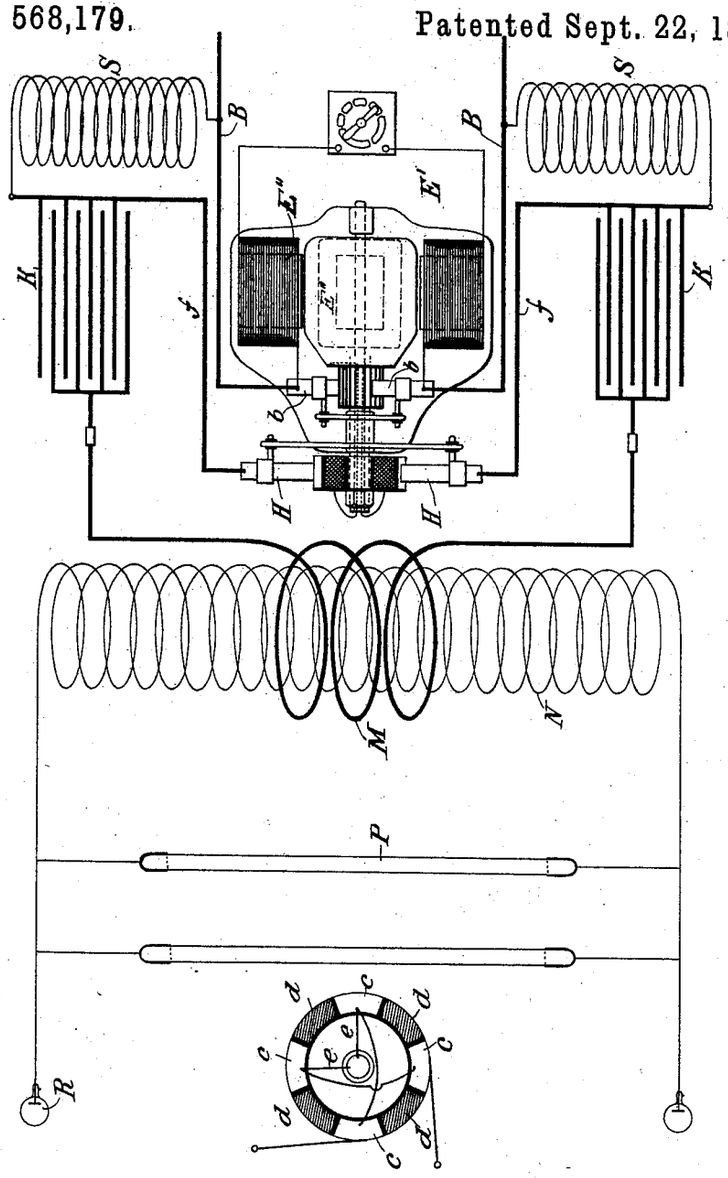

Fig. 2

WITNESSES

Drury W. Cooper

Edwin B. Hopkinson

INVENTOR

Nikola Tesla

BY

Kerr, Curtis & Page

ATTORNEYS

THE NORRIS PETERS CO., PHOTO-LITHO., WASHINGTON, D. C.

UNITED STATES PATENT OFFICE.

NIKOLA TESLA, OF NEW YORK, N. Y.

METHOD OF AND APPARATUS FOR PRODUCING CURRENTS OF HIGH FREQUENCY.

SPECIFICATION forming part of Letters Patent No. 568,179, dated September 22, 1896.

Application filed July 6, 1896. Serial No. 598,130. (No model.)

To all whom it may concern:

Be it known that I, NIKOLA TESLA, a citizen of the United States, residing at New York, in the county and State of New York, have invented certain new and useful Improvements in Methods of and Apparatus for Producing Currents of High Frequency, of which the following is a specification, reference being had to the drawings accompanying and forming a part of the same.

The apparatus for producing electrical currents of very high frequency in which is embodied the invention of my present application involves as its chief element means for the periodic charging of a condenser or circuit possessing capacity by the energy of a given source and the discharge of the same through a circuit of low self-induction, whereby the rapid succession of impulses characteristic of a condenser discharge under such circumstances is made available for many practical and useful purposes.

The general arrangement of circuits and apparatus which I prefer for ordinary applications of this invention I have shown and described in an application filed by me April 22, 1896, Serial No. 588,534, as comprising a local circuit of high self-induction connected with a source of supply, a condenser, a discharge-circuit of low self-induction, and a circuit-controller operating to alternately effect the charging of the condenser by the energy stored in the circuit of high self-induction and its discharge through that of low self-induction. I have shown, however, in the application referred to as the source of supply a continuous-current generator, or in general a source of direct currents, and while the principle of operation and the general character of the apparatus remain the same whether the current of the source be direct or alternating, yet the economical utilization of the latter involves certain special principles and appliances which it is my present object to illustrate as the basis for the claims of invention made herein.

When the potential of the source periodically rises and falls, whether with reversals or not is immaterial, it is essential to economical operation that the intervals of interruption of the charging-current should bear a definite time relation to the period of the current, in order that the effective potential of the impulses charging the condenser may be as high as possible. I therefore provide, in case an alternating or equivalent electromotive force be employed as the source of supply, a circuit-controller which will interrupt the charging-circuit at instants predetermined with reference to the variations of potential therein. The most practicable means for accomplishing this of which I am aware is to employ a synchronous motor connected with the source of supply and operating a circuit-controller which interrupts the charging-current at or about the instant of highest potential of each wave and permits the condenser to discharge the energy stored in it through its appropriate circuit. This apparatus, which may be considered as typical of the means employed for carrying out the invention, I have illustrated in the accompanying drawings.

The figures are diagrammatic illustrations of the system in slightly-modified forms, and will be described in detail in their order.

Referring to Figure 1, A designates any source of alternating or equivalent current, from which lead off mains A′ A′. At any point where it is desired to produce the high-frequency currents a branch circuit B is taken off from the mains, and in order to raise the potential of the current a transformer is employed, represented by the primary C and secondary D. The circuit of the secondary includes the energizing-coils of a synchronous motor E and a circuit-controller, which, in the present instance, in Fig. 1 is shown as composed of a metal disk F with insulated segments F′ in its periphery and fixed to the shaft of the motor. An insulating-arm G, stationary with respect to the motor-shaft and adjustable with reference to the poles of the fixed magnets, carries two brushes H H, which bear upon the periphery of the disk. With the parts thus arranged the secondary circuit is completed through the coils of the motor whenever the two brushes rest upon the uninsulated segments of the disk and interrupted through the motor at other times. Such a motor, if properly constructed, in well-understood ways, maintains very exact synchronism with the alterations of the source, and the arm G may therefore be adjusted to

interrupt the current at any determined point in its waves. It will be understood that by the proper relations of insulated and conducting segments and the motor-poles the current may be interrupted twice in each complete wave at or about the points of highest potential. The self-induction of the circuit containing the motor and controller should be high, and the motor itself will usually be constructed in such manner that no other self-induction device will be needed. The energy stored in this circuit is utilized at each break therein to charge a condenser K. With this object the terminals of the condenser are connected to the two brushes H H or to points of the circuit adjacent thereto, so that when the circuit through the motor is interrupted the terminals of the motor-circuit will be connected with the condenser, whereby the latter will receive the high-potential inductive discharge from the motor or secondary circuit.

The condenser discharges into a circuit of low self-induction, one terminal of which is connected directly to a condenser-terminal and the other to the brush H opposite to that connected with the other condenser-terminal, so that the discharge-circuit of the condenser will be completed simultaneously with the motor-circuit and interrupted while the motor-circuit is broken and the condenser being charged.

The discharge-circuit contains a primary M of a few turns, and this induces in a secondary N impulses of high potential, which by reason of their great frequency are available for the operation of vacuum-tubes P, single terminal-lamps R, and other novel and useful purposes.

It is obvious that the supply-current need not be alternating, provided it be converted or transformed into an alternating current before reaching the controller. For example, the present improvements are applicable to various forms of rotary transformers, as is illustrated in Figs. 2 and 3.

E′ designates a continuous-current motor, here represented as having four field-poles wound with coils E″ in shunt to the armature. The line-wires B B connect with the brushes *b b*, bearing on the usual commutator.

On an extension of the motor-shaft is a circuit-controller composed of a cylinder the surface of which is divided into four conducting-segments *c* and four insulating-segments *d*, the former being diametrically connected in pairs, as shown in Fig. 3.

Through the shaft run two insulated conductors *e e* from any two commutator-segments ninety degrees apart, and these connect with the two pairs of segments *c*, respectively. With such arrangement it is evident that any two adjacent segments *c c* become the terminals of an alternating-current source, so that if two brushes H H be applied to the periphery of the cylinder they will take off current during such portion of the wave as the width of segment and position of the brushes may determine. By adjusting the position of the brushes relatively to the cylinder, therefore, the alternating current delivered to the segments *c c* may be interrupted at any point in its waves.

While the brushes H H are on the conducting-segments the current which they collect stores energy in a circuit of high self-induction formed by the wires *f f*, self-induction coils S S, the conductors B B, the brushes, and commutator. When this circuit is interrupted by the brushes H H passing onto the insulating-segments of the controller, the high-potential discharge of this circuit charges the condensers K K, which then discharge through the circuit of low self-induction containing the primary M. The secondary circuit N contains any devices, as P R, for utilizing the current.

The mechanical construction of the circuit-controller may be greatly varied, and in other respects the details shown and described are merely given as typical illustrations of the nature and purpose of the invention.

What I claim is—

1. The method herein described of producing electric currents of high frequency, which consists in generating an alternating current, charging a condenser thereby during determinate intervals of each wave of said current, and discharging the condenser through a circuit of low self-induction, as herein set forth.

2. The combination with a source of alternating current, a condenser, a circuit-controller adapted to direct the current during determinate intervals of each wave into the condenser for charging the same, and a circuit of low self-induction into which the condenser discharges, as set forth.

3. The combination with a source of alternating current, a synchronous motor operated thereby, a circuit-controller operated by the motor and adapted to interrupt the circuit through the motor at determinate points in each wave, a condenser connected with the motor-circuit and adapted on the interruption of the same to receive the energy stored therein, and a circuit into which the condenser discharges, as set forth.

4. The combination with a source of alternating current, a charging-circuit in which the energy of said current is stored, a circuit-controller adapted to interrupt the charging-circuit at determinate points in each wave, a condenser for receiving, on the interruption of the charging-circuit, the energy accumulated therein, and a circuit into which the condenser discharges when connected therewith by the circuit-controller, as set forth.

NIKOLA TESLA.

Witnesses:
M. LAWSON DYER,
DRURY W. COOPER.

(No Model.) 2 Sheets—Sheet 1.

N. TESLA.

APPARATUS FOR PRODUCING ELECTRICAL CURRENTS OF HIGH FREQUENCY.

No. 568,180. Patented Sept. 22, 1896.

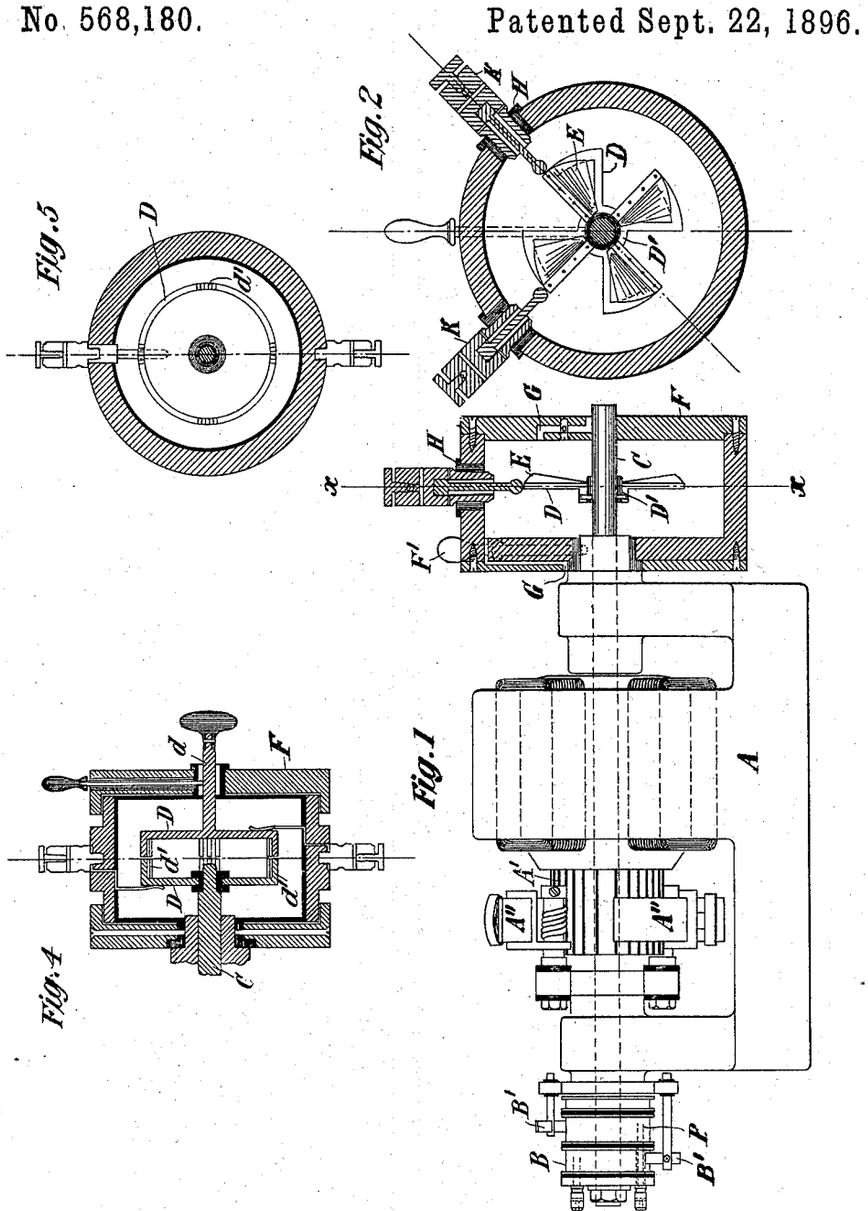

WITNESSES:

Edwin B. Hopkinson.

Benjamin Burleigh

Nikola Tesla, INVENTOR

BY

Kerr, Curtis & Page, ATTORNEYS

THE NORRIS PETERS CO., PHOTO-LITHO., WASHINGTON, D. C.

(No Model.) 2 Sheets—Sheet 2

N. TESLA.

APPARATUS FOR PRODUCING ELECTRICAL CURRENTS OF HIGH FREQUENCY.

No. 568,180. Patented Sept. 22, 1896.

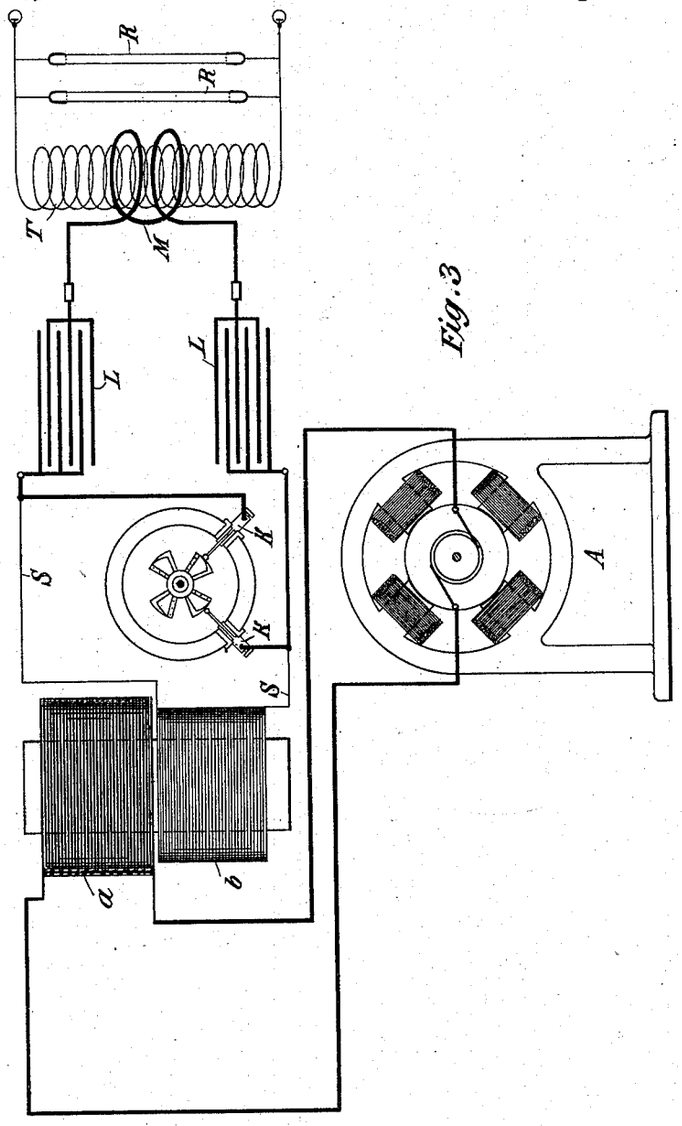

Fig. 3

WITNESSES:

Edwin B. Hopkinson.

Benjamin Barker Jr.

Nikola Tesla INVENTOR

BY

Kerr, Curtis Page, ATTORNEYS

THE NORRIS PETERS CO., PHOTO-LITHO., WASHINGTON, D. C.

UNITED STATES PATENT OFFICE.

NIKOLA TESLA, OF NEW YORK, N. Y.

APPARATUS FOR PRODUCING ELECTRICAL CURRENTS OF HIGH FREQUENCY.

SPECIFICATION forming part of Letters Patent No. 568,180, dated September 22, 1896.

Application filed July 9, 1896. Serial No. 598,552. (No model.)

To all whom it may concern:

Be it known that I, NIKOLA TESLA, a citizen of the United States, residing at New York, in the county and State of New York, have invented certain new and useful Improvements in Apparatus for Producing Electrical Currents of High Frequency, of which the following is a specification, reference being had to the drawings accompanying and forming a part of the same.

This invention is an improvement in apparatus for producing electrical currents of high frequency in accordance with the general plan heretofore invented and practiced by me and based upon the principle of charging a condenser or circuit possessing capacity and discharging the same through a circuit of low self-induction, so that rapid electrical oscillations are obtained. To secure this result, I employ some means for intermittently charging the condenser and for discharging it through the circuit of low self-induction; and among the means which I have heretofore employed for this purpose was a mechanical contact device which controlled both the charging and the discharge circuit in such manner that the condenser was alternately charged by the former and discharged into the latter.

My present improvement consists in an apparatus for effecting the same result by the use of a circuit-controller of special character in which the continuity of the paths for the current is established at intervals by the passage of sparks across a dielectric.

In carrying out my present improvement I employ a circuit-controller containing two terminals or sets of terminals movable with respect to each other into and out of proximity, and I provide means whereby the intervals between the periods of close approximation, during which the spark passes, may be adjusted so that when used in a system supplied by a source of alternating current the periods of make and break may be timed with reference to a phase of the current wave or impulse.

Referring to the drawings, which illustrate in its preferred form the improvement above referred to, Figure 1 is a view, partly in elevation and partly in section, of a generator arranged to give an alternating current with the circuit-controller mounted on its shaft. Fig. 2 is a section of the controller of Fig. 1 on line $x\,x$ of said figure. Fig. 3 is a diagram illustrating the system or apparatus as a whole. Figs. 4 and 5 are sectional views of a modified form of circuit-controller.

A designates in Fig. 1 a generator having a commutator A′ and brushes A″ bearing thereon, and also collecting-rings B B, from which an alternating current is taken by brushes B′ in the well-understood manner.

The circuit-controller is mounted in part on an extension of the shaft C of the generator, and in part on the frame of the same, or on a stationary sleeve surrounding the shaft. Its construction in detail is as follows: D is a metal plate with a central hub D′, which is keyed or clamped to the shaft C. The plate is formed with segmental extensions corresponding in number to the waves of current which the generator delivers. These segments are preferably cut away, leaving only rims or frames, to one of the radial sides of which are secured bent metal plates E, which serve as vanes to maintain a circulation of air when the device is in operation. The segmental disk and vanes are contained within a close insulated box or case F, mounted on the bearing of the generator, or in any other proper way, but so as to be capable of angular adjustment around the shaft. To facilitate such adjustment, a screw-rod F′, provided with a knob or handle, is shown as passing through the wall of the box. The latter may be adjusted by this rod, and when in proper position may be held therein by screwing the rod down into a depression in the sleeve or bearing, as shown in Fig. 1. Air-passages G G are provided at opposite ends of the box, through which air is maintained in circulation by the action of the vanes. Through the sides of the box F and through insulating-gaskets H, when the material of the box is not a sufficiently good insulator, extend metallic terminal plugs K K, with their ends in the plane of the conducting segmental disk D and adjustable radially toward and from the edges of the segments. This or similar devices are employed to carry out the invention above referred to in the manner illustrated in Fig. 3. A in this figure represents any source of alternating current

the potential of which is raised by a transformer, of which *a* is the primary and *b* the secondary. The ends of the secondary circuit S are connected to the terminal plugs K K of an apparatus similar to that of Figs. 1 and 2 and having segments rotating in synchronism with the alternations of the current source, preferably, as above described, by being mounted on the shaft of the generator when the conditions so permit. The plugs K K are then adjusted radially, so as to approach more or less the path of the outer edges of the segmental disk, and so that during the passage of each segment in front of a plug a spark will pass between them, which completes the secondary circuit S. The box or the support for the plugs K is adjusted angularly, so as to bring the plugs and segments into proximity at the desired instants with reference to any phase of the current-wave in the secondary circuit and fixed in position in any proper manner. To the plugs K K are also connected the terminals of a condenser or condensers L, so that at the instant of the rupture of the secondary circuit S by the cessation of the sparks the energy accumulated in such circuit will rush into and charge the condenser. A path of low self-induction and resistance, including a primary M of a few turns, is provided to receive the discharge of the condenser, when the circuit S is again completed by the passage of sparks, the discharge being manifested as a succession of extremely rapid impulses. The potential of these impulses may be raised by a secondary T, which constitutes the source of current for the working circuit or that containing the devices R for utilizing the current.

By means of this apparatus effects of a novel and useful character are obtainable, but to still further increase the efficiency of the discharge or working current I have in some instances provided a means for further breaking up the individual sparks themselves. A device for this purpose is shown in Figs. 4 and 5. The box or case F in these figures is fixedly secured to the frame or bearing of the generator or motor which rotates the circuit-controller in synchronism with the alternating source. Within said box is a disk D, fixed to the shaft C, with projections *d'* extending from its edge parallel with the axis of the shaft. A similar disk D'' on a spindle *d*, in face of the first, is mounted in a bearing in the end of the box F with a capability of rotary adjustment. The ends of the projections *d'* are deeply serrated or several pins or narrow projections placed side by side, as shown in Fig. 4, so that as those of the opposite disks pass each other a rapid succession of sparks will pass from the projections of one disk to those of the other.

What I claim as my invention is—

1. The combination with a source of current, of a condenser adapted to be charged thereby, a circuit into which the condenser discharges in a series of rapid impulses, and a circuit-controller for effecting the charging and discharge of said condenser, composed of conductors movable into and out of proximity with each other, whereby a spark may be maintained between them and the circuit closed thereby during determined intervals, as set forth.

2. The combination with a source of alternating current, of a condenser adapted to be charged thereby, a circuit into which the condenser discharges in a series of rapid impulses, and a circuit-controller for effecting the charging and discharge of said condenser, composed of conductors movable into and out of proximity with each other in synchronism with the alternations of the source, as set forth.

3. A circuit-controller for systems of the kind described, comprising in combination a pair of angularly-adjustable terminals and two or more rotating conductors mounted to pass in proximity to the said terminals, as set forth.

4. A circuit-controller for systems of the kind described, comprising in combination two sets of conductors, one capable of rotation and the other of angular adjustment whereby they may be brought into and out of proximity to each other, at determinate points, and one or both being subdivided so as to present a group of conducting-points, as set forth.

NIKOLA TESLA.

Witnesses:
M. LAWSON DYER,
DRURY W. COOPER.

(No Model.) 2 Sheets—Sheet 1.

N. TESLA.

APPARATUS FOR PRODUCING ELECTRIC CURRENTS OF HIGH FREQUENCY.

No. 577,670. Patented Feb. 23, 1897.

Fig. 1

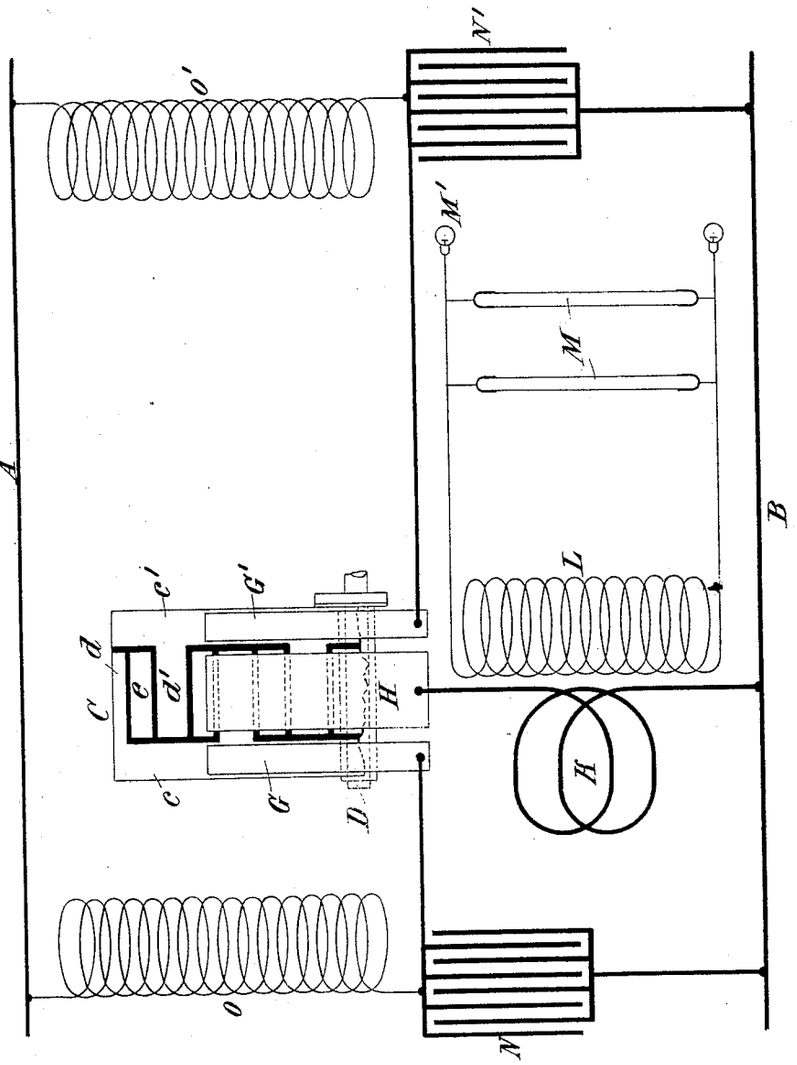

Fig. 2

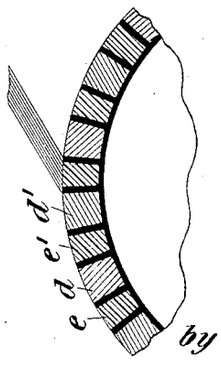

Witnesses:
Edwin B. Hopkinson,
M. Lawson Dyer.

Nikola Tesla
Inventor
by Kerr, Curtis & Page,
Attys

THE NORRIS PETERS CO., PHOTO-LITHO., WASHINGTON, D. C.

(No Model.) 2 Sheets—Sheet 2.

N. TESLA.

APPARATUS FOR PRODUCING ELECTRIC CURRENTS OF HIGH FREQUENCY.

No. 577,670. Patented Feb. 23, 1897.

Fig. 3.

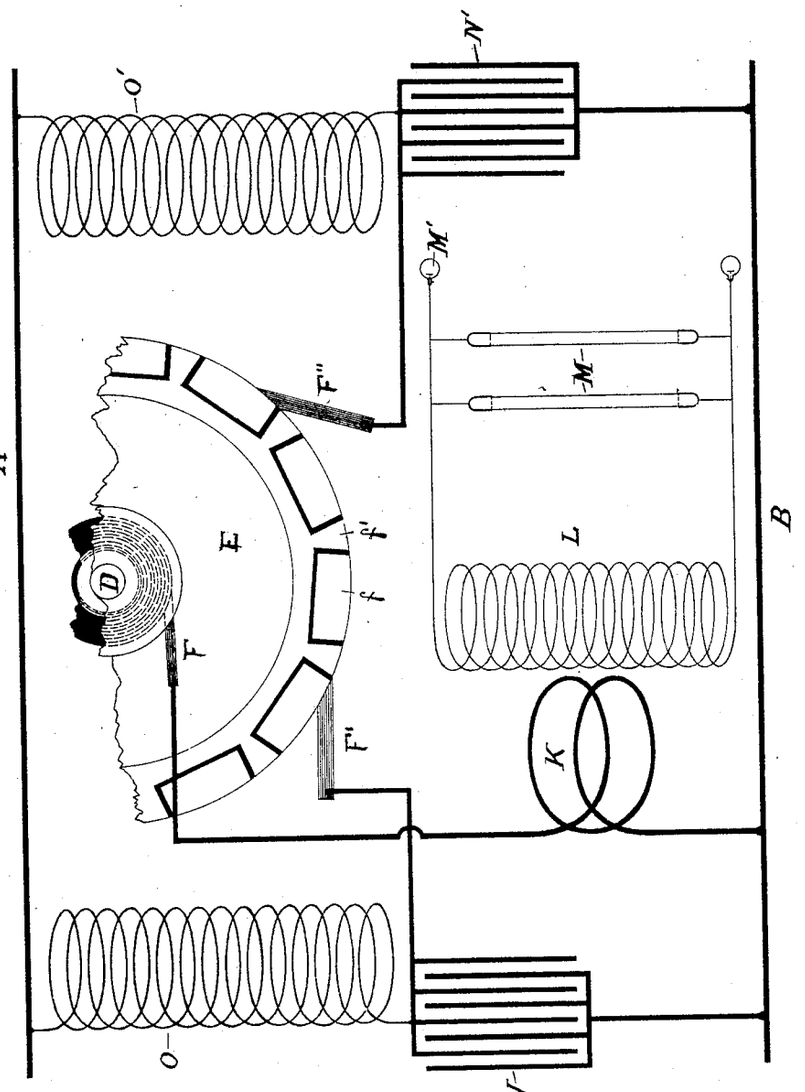

WITNESSES

M. Lawson Dyer.

Edwin B. Hopkinson.

Nikola Tesla INVENTOR

BY

Kerr, Curtis & Page ATTORNEYS

THE NORRIS PETERS CO., PHOTO-LITHO., WASHINGTON, D. C.

UNITED STATES PATENT OFFICE.

NIKOLA TESLA, OF NEW YORK, N. Y.

APPARATUS FOR PRODUCING ELECTRIC CURRENTS OF HIGH FREQUENCY.

SPECIFICATION forming part of Letters Patent No. 577,670, dated February 23, 1897.

Application filed September 3, 1896. Serial No. 604,723. (No model.)

To all whom it may concern:

Be it known that I, NIKOLA TESLA, a citizen of the United States, residing at New York, in the county and State of New York, have invented certain new and useful Improvements in Apparatus for Producing Electric Currents of High Frequency, of which the following is a specification, reference being had to the drawings accompanying and forming a part of the same.

The apparatus for converting electric currents of ordinary character into those of high frequency, which I have heretofore shown and described in applications for Letters Patent, has usually comprised a condenser and a circuit-controller operated by a suitable motive device and acting to alternately charge the condenser from a suitable source of supply and discharge it through a circuit of such character as to render the discharge one of very high frequency. For many purposes it has been found advantageous to construct the circuit-controller with insulating and conducting segments of equal length, so that the condenser is connected with its discharge-circuit during one-half of the time only. It follows from this that the working circuit, or that in which the high-frequency currents are developed in form for practical application, receives such currents during only one-half the time.

For certain purposes it is desirable for economical operation that there should be no cessation of the flow of such currents, and my present improvements have been devised with the object of increasing the output of a given apparatus by providing means by which, without material additions to or complication of such apparatus, high-frequency currents may be produced thereby continuously or without periods of rest.

Broadly stated, the improvement consists in the combination of two condensers with a circuit-controller of such character and so operated by a single motive device as to charge and discharge said condensers alternately, whereby one will be discharging while the other is being charged, and conversely.

In the drawings hereto annexed, Figure 1 is a diagrammatic illustration of the arrangement and circuit connections of the invention. Fig. 2 is a sectional view of a part of the commutator employed; and Fig. 3 is a diagram similar to that of Fig. 1, illustrative of a modified embodiment of the invention.

Let A B designate the two conductors of any circuit from which the energy is derived that is to be converted into a current of high frequency.

C is a circuit controller or commutator, a portion only for convenience being shown in the figures. It is designed to be rotated by any suitable motive device, of which, however, the shaft D only is shown, and its plan of construction is as follows:

The letters *c c'* designate two metal heads or castings with projecting portions *d d'*, which, when the two heads are brought together and secured to a hub or shaft, intermesh, as shown in the drawings.

The spaces between two adjacent projections or bars *d d'* are equal in arc to the width of one of said bars and are filled in with blocks *e*, preferably of metal, insulated from the other conducting portions of the device. By the interposition of mica or other suitable insulating material the two heads or castings *c c'* are insulated from each other. Upon the periphery of this commutator bear three brushes G G' H, the two former resting upon the continuous metallic portions of the two heads, respectively, the latter being in position to bear upon the projections *d d'* and blocks *e* alternately.

In order that the brushes may be capable of carrying any current which the operation of the apparatus may demand, they are made of large cross-section, the brush H being approximately equal in width to one of the projections or segments *d d'*, or to the space between adjacent segments, so that in passing from one it comes into contact with the next.

The brush H is connected to the main B through a primary coil K of low self-induction in inductive relation to a secondary L, which constitutes the ultimate source of the current of high frequency which the apparatus is designed to develop and which feeds a circuit containing vacuum-tubes M, single terminal lamps M', or other suitable devices. The brushes G G' are connected with the main B through condensers N N', respectively, and to the main A through self-induction or choking coils O O', these latter being used in order

that the inductive discharge of the accumulated energy therein may be taken advantage of in charging the condensers.

The operation of the apparatus thus described is as follows: By the rotation of the commutator C the brush H is caused to pass over the projections *d*, closing the circuits through the primary K and the two condensers alternately. These two circuits are so adjusted as to have the same capacity, self-induction, and resistance. When said brush is in electrical connection with any projection *d'* from the part *c'*, the circuit is closed between mains A and B through coil O', brush G', brush H, and coil K. Energy is therefore accumulated in the coil O'. At the same time the condenser N' is short-circuited through the brush G', brush H, and coil K, and discharges through this circuit the energy stored in it, the discharge being in the form of a series of impulses which induce in the secondary L corresponding impulses of high potential. When brush H breaks the circuit through coil O', the high-potential discharge or "kick" from the latter rushes into and recharges the condenser N', but as soon as the brush H has passed over the intervening block *e* and reached the next segment *d* it closes the circuit through coil O and short-circuits the condenser N, so that high-frequency currents from either one or the other of the two condensers are flowing through the primary K practically without interruption. Thus without increasing the size or power of the motive device or complicating in any material degree the commutator these devices are made to perform double duty and the output of the apparatus as a whole greatly increased. In Fig. 3 I have illustrated a modified form of commutator for this apparatus, which comprises a disk E, of metal, but insulated from its shaft. The periphery of this disk is divided into conducting and insulated segments by the insertion therein of insulated metal blocks *f*. The circumferential width of these blocks is three times that of the conducting-segments *f'*. A brush F bears upon a continuous metallic portion of the disk or upon a continuous ring in electrical connection with the segments *f''* and is connected with one terminal of the primary K. Brushes F' F'' bear upon the periphery of the disk E and are connected to the main B through the two condensers, respectively. These brushes are capable of angular adjustment, so that they may be set to bear upon the disk at any two desired points.

From the explanation of the operation already given it is evident that when the two brushes F' F'' are set so that one leaves a segment *f'* at the instant that the other comes in contact with a segment *f'* the effect in charging and discharging the condensers is the same as in the previous instance. The capability of varying the relations of the brushes, however, which this form possesses has the advantage of permitting not only an alternate charging and discharge of the condensers, but their simultaneous charging and discharge in multiple arc, whereby the frequency of the current of discharge is reduced.

It is also evident that all phase differences in the charging and discharging of the condensers may in like manner be secured and the frequency varied within wide limits. Of course the same motor and circuit-controller might be made to charge more than two condensers in succession and to discharge them in the same order.

What I claim is—

1. The combination with a source of electric energy, of a plurality of condensers and a discharge-circuit therefor, a motive device and a circuit-controller operated thereby and adapted to direct the energy of the source into the condensers and connect them with the discharge-circuit successively and in alternation, as set forth.

2. The combination with a source of electric energy, of a motive device, two condensers, a circuit-controller adapted to direct the energy of the source alternately into the said condensers, and a discharge-circuit through which, by the operation of said circuit-controller one condenser discharges while the other is being charged, as set forth.

NIKOLA TESLA.

Witnesses:
M. LAWSON DYER,
DRURY W. COOPER.

(No Model.)

N. TESLA.

MANUFACTURE OF ELECTRICAL CONDENSERS, COILS, &c.

No. 577,671. Patented Feb. 23, 1897.

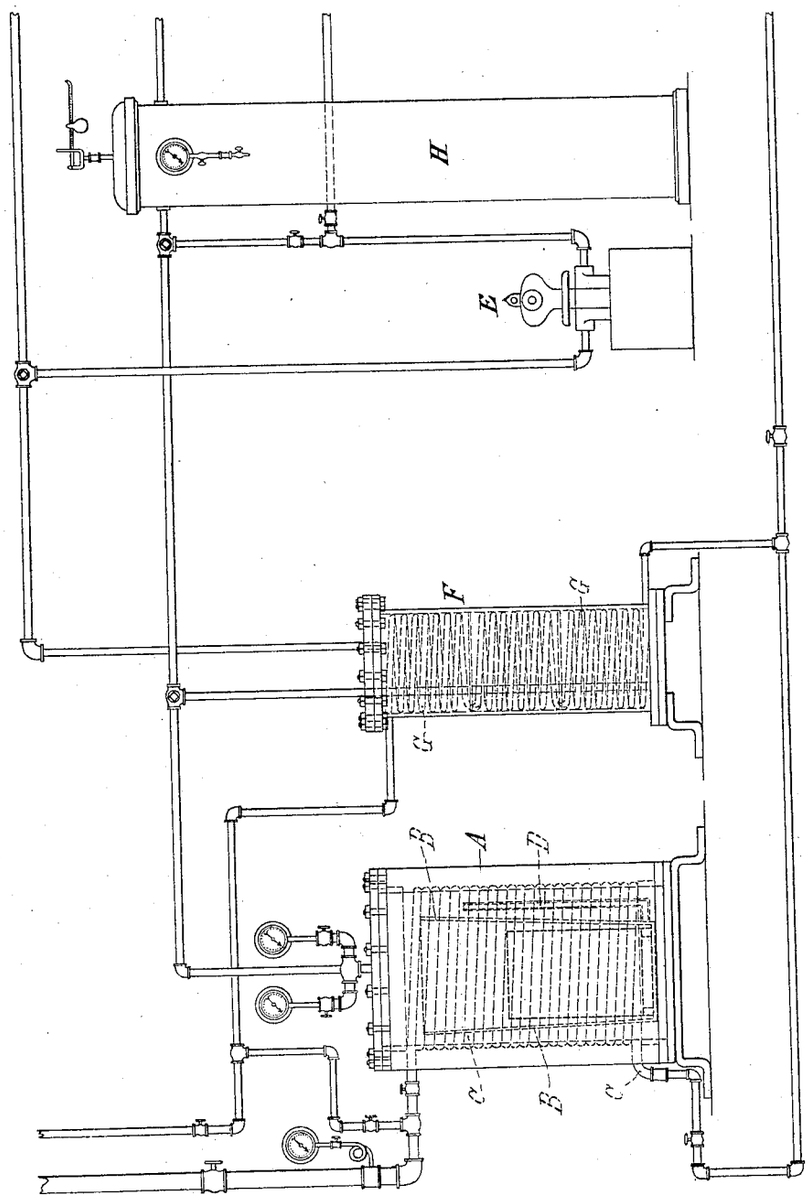

WITNESSES
Edwin B. Hopkinson,
Benjamin Miller,

INVENTOR
Nikola Tesla
BY
Kerr, Curtis & Page
ATTORNEYS.

THE NORRIS PETERS CO., PHOTO-LITHO., WASHINGTON, D. C.

UNITED STATES PATENT OFFICE.

NIKOLA TESLA, OF NEW YORK, N. Y.

MANUFACTURE OF ELECTRICAL CONDENSERS, COILS, &c.

SPECIFICATION forming part of Letters Patent No. 577,671, dated February 23, 1897.

Application filed November 5, 1896. Serial No. 611,126. (No model.)

To all whom it may concern:

Be it known that I, NIKOLA TESLA, a citizen of the United States, residing at New York, in the county and State of New York, have invented certain new and useful Improvements in the Manufacture of Electrical Condensers, Coils, and Similar Devices, of which the following is a specification, reference being had to the drawing which accompanies and forms a part of the same.

My invention is an improvement in the manufacture of electrical condensers, coils, and other devices of a similar character in which conductors designed to form paths for currents of high potential are brought into close proximity with each other. Among such devices are included many forms of condensers, transformers, self-induction coils, rheostats, and the like.

It has heretofore been shown by me that the efficiency and practicability of such devices are very greatly enhanced by the exclusion of air or gas from the dielectric separating the conductors or remote portions of the same conductor; and the object of my present improvement is to secure such exclusion of air in as perfect a manner as possible in a convenient and practicable way. To this end I place the condenser or other device to be treated in a receptacle from which the air may be more or less perfectly exhausted, and while in vacuum I introduce an insulating substance, which liquefies when subjected to heat, such as paraffin, which surrounds the said device and finds its way into its interstices.

When the device has become thoroughly saturated with the insulating material, it is allowed to cool off usually until the material begins to solidify. Air is then admitted under pressure to the receptacle containing the device and the pressure maintained until the whole mass of insulating material has solidified. By this treatment the presence of air or vacuous spaces in the dielectric, which are otherwise liable to form by the contraction of the insulating material when cooling, is prevented.

Any plan may be followed or apparatus used for securing the two conditions necessary to the attainment of the desired result; that is to say, applying the fluid insulating material in vacuum and subsequently subjecting it to or solidifying it under pressure. The degree of exhaustion or of pressure may vary, very good results being secured by a vacuum of about twenty-nine inches and a pressure of about one hundred pounds. It may be stated, however, that when hydraulic pressure is applied very much higher pressures are readily secured and are of advantage.

In order to facilitate the carrying out of the process, I have devised a simple and useful apparatus, which is illustrated partly in section in the accompanying drawing. As the parts of said apparatus are all of well-known construction, the apparatus as a whole will be fully understood without a full description of its details.

A is a tank or receptacle that may be closed air-tight. Within this tank is a steam-coil C, surrounding a vessel B, preferably with slightly-sloping sides and provided with a tube or pipe D, opening into it near its base.

The condenser or other device to be treated is placed in the vessel B, and around the receptacle is packed a suitable insulating material in quantity sufficient when liquefied by heat to flow through the pipe D into the vessel B and fill the space in the latter up to the top of the condenser or other device placed therein.

It is desirable to run into the pipe D enough melted material to fill it before using the apparatus and to make the pipe of a poor heat-conducting material, so that a little time will elapse after the heat is applied to melt the material in the tank A before the flow through the pipe begins.

When the apparatus has been thus prepared, the air from the interior of the tank A is withdrawn as completely as practicable by an air-pump E and steam is passed through the coil C. In order to prevent access of any of the volatile constituents of the insulating material to the pump, a condenser F, with a cooling-coil G, is interposed in the piping between the tank and pump. After a partial vacuum has been secured in the tank A and the liquefied insulating material has been run into the vessel B the pump may be stopped and the tank connected with a receiver H, from which the air has been exhausted, and the apparatus allowed to stand until all the interstices

of the condenser have been permeated with the insulating material. The steam is then shut off and cold water passed through the coil C. The connections with the pump are then reversed and air is forced into the tank and receiver H and the further cooling and solidification of the insulating material carried on under a pressure considerably greater than that of the atmosphere. After the insulating material has cooled and solidified the condenser or other device, with the adhering mass of insulating material, is removed from the receptacle and the superfluous insulating material taken off.

I have found that condensers, transformers, and similar apparatus treated by this process are of very superior quality and especially suited for circuits which convey currents of high frequency and potential.

I am aware that conductors covered with a more or less porous material have been treated by placing them in a closed receptacle, exhausting the air from the receptacle, then introducing a fluid insulating compound and subjecting the same to pressure, for the purpose of more perfectly incorporating the insulating compound with the surrounding coating or covering of the conductors and causing such compound to enter the interstices in said covering, and I apply this principle of exhausting the air and introducing the fluid insulating compound under pressure in carrying out my improvement. My process, however, differs from the foregoing mainly in this, that I seek not only to fill the pores of any porous material that may be interposed between the conductors of such a device as a condenser or coil, but to fill up all the spaces in the dielectric, whereby air or vacuous spaces, the presence of which in the dielectric is so deleterious to the device, may be effectually prevented. To this end I permit the insulating compound after its incorporation with the device, under exhaustion and pressure, to cool and solidify, so that not only is the air replaced by a solid insulating compound, but the formation of vacuous spaces by the contraction of the mass on cooling prevented.

What I claim is—

The improvement in the manufacture of electrical devices such as condensers, which consists in inclosing the device in an air-tight receptacle, exhausting the air from the receptacle, introducing into a vessel containing the device an insulating material rendered fluid by heat, and then when said material has permeated the interstices of the said device, subjecting the whole to pressure, and maintaining such pressure until the material has cooled and solidified, as set forth.

NIKOLA TESLA.

Witnesses:
M. LAMSON DYER,
PARKER W. PAGE.

BEST AVAILABLE COPY

(No Model.)

N. TESLA.

APPARATUS FOR PRODUCING CURRENTS OF HIGH FREQUENCY.

No. 583,953. Patented June 8, 1897.

Fig. 2

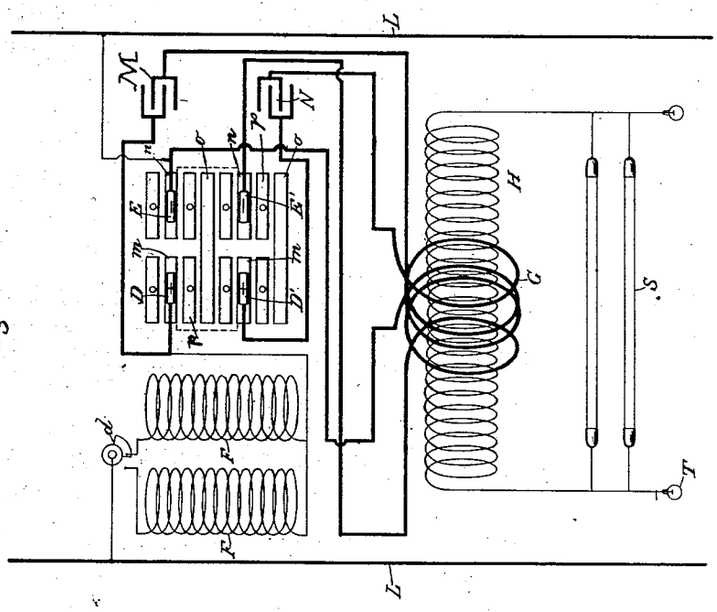

Fig. 1

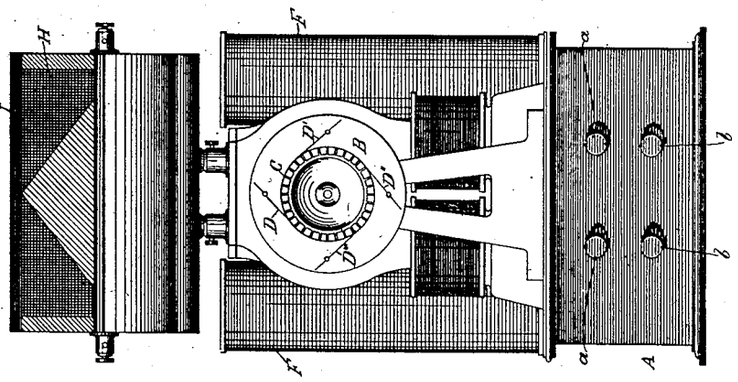

WITNESSES

G. B. Lewis.

Edwin B. Hopkinson.

INVENTOR

Nikola Tesla.

BY

Kerr, Curtis & Page

ATTORNEYS.

BEST AVAILABLE COPY

UNITED STATES PATENT OFFICE.

NIKOLA TESLA, OF NEW YORK, N. Y.

APPARATUS FOR PRODUCING CURRENTS OF HIGH FREQUENCY.

SPECIFICATION forming part of Letters Patent No. 583,953, dated June 8, 1897.

Application filed October 19, 1896. Serial No. 609,292. (No model.)

To all whom it may concern:

Be it known that I, NIKOLA TESLA, a citizen of the United States, residing at New York, in the county and State of New York, have invented certain new and useful Improvements in Apparatus for Producing Currents of High Frequency, of which the following is specification, reference being had to the drawings accompanying and forming a part of the same.

The invention upon which my present application is based is an improvement in apparatus for the conversion of electrical currents of ordinary character—such, for instance, as are obtainable from the mains of municipal electric light and power systems and either continuous or alternating—into currents of very high frequency and potential.

The improvement is applicable generally to apparatus of the kind heretofore invented by me and more particularly described in United States Letters Patent granted to me on September 22, 1896, No. 568,176; but in the description of the invention which follows the illustration is confined to a form of apparatus designed for converting a continuous or direct current into one of high frequency. In the several forms of apparatus for this purpose which I have devised and heretofore described I have employed a circuit of high self-induction connected with the mains from a suitable source of current and containing some form of circuit-controller for periodically interrupting it. Around the break or point of interruption I have arranged a condenser, into which the circuit discharges when interrupted, and this condenser is in turn made to discharge through a circuit containing the primary of a transformer, and of such character that the condenser-discharge will be in the form of an extremely rapid succession of impulses.

Now in order to secure in an apparatus of this kind as high frequency as possible and the advantages resulting therefrom I subdivide the condenser necessary for storing the energy required into integral parts or provide independent condensers, and employ means for charging said condensers in multiple and discharging them in series through the primary of the transformer. To secure this result without unduly complicating the apparatus is a matter of very considerable difficulty, but I have accomplished it by means of the apparatus which I shall now proceed to describe by reference to the drawings.

Figure 1 is a side elevation of the apparatus which I employ, and Fig. 2 is a diagram of the circuit connections.

Referring to Fig. 1, A is a box or case containing the condensers, of which the terminals are *a a b b*, respectively. On this case is mounted a small electromagnetic motor B, by the shaft of which is operated the circuit-controller C. Upon the said controller bear brushes, as shown at D D' D'' D'''.

F F are self-induction coils placed beside the motor. Above these is the transformer, composed, essentially, of a primary G and a secondary H. These devices are intended to be inclosed in a suitable box or case, and may be very greatly modified in construction and relative arrangement. The circuit-controller, however, should conform in general principle of construction to that hereinafter described in so far as may be necessary to secure the operation pointed out.

Referring now to Fig. 2, L L designate the mains from a suitable source of supply, between which a circuit is formed, including the self-induction coils F F and the circuit-controller C. A switch *d* may be employed to bring either or both of the coils F F into this circuit, as may be desired.

The circuit-controller is built up of insulated plates or segments, upon which the positive and negative brushes bear, and these plates may be considered as belonging to three sets or classes, first, the plates *m* for what may be considered as the positive brushes D D'' in one row, electrically connected together, and the corresponding plates *n* for what may similarly be considered as the negative brushes E E' in the other row; second, the plates *o*, which lie in both rows, and hence are conveniently made in single pieces extending across the controller, and, third, the idle or spacing plates *p*, which are interposed in each row between the other two sets. The angle between adjacent plates of the same set is equal to the angle of displacement between adjacent brushes of the same sign, and obviously there may be two or more of each. The brush D of one set is connected with one

BEST AVAILABLE COPY

main through the coils F, and each one of the brushes of the same set is connected to one of the terminals of the condensers M N, respectively. Similarly the brush E of the other set of brushes is connected to the opposite main and each of the brushes of said set to the opposite condenser terminals through the primary or strands of a primary G. In the diagram, Fig. 2, I have shown but two brushes in each set and two condensers, but more than this number may be used, the same plan of connections shown and described being followed out.

In the position of the parts shown in Fig. 2, in which two positive and two negative brushes are shown, the brushes are bearing on plates *m m* and *n n*. Consequently the circuit through the coils F F is through the condensers in multiple, and, assuming that energy has been stored in said coils, the condensers will thus be charged. If now by the movement of the controller plates or brushes the latter are shifted across the idle or spacing plates *p* onto the long or cross-connected plates *o* two results follow: The mains are short-circuited through the coils F F, which therefore store energy, while the condensers are connected in series through the primary coil or coils G. These actions are repeated by the further movement of the controller, the condensers being charged in parallel when the brushes are on plates *m n* and discharged in series when the brushes pass onto plates *o*. The motor may be run by an independent source or by current derived from the mains, and the apparatus may be employed to supply current for any suitable devices S T, connected with the secondary coil H.

As stated above, the specific construction of the circuit-controller may be very greatly varied without departure from the invention. In the drawings the plates are assumed to be associated in the form of a cylinder which revolves with respect to brushes bearing on its periphery; but it will be understood that this is merely a typical illustration of any form of terminals or contacts and conductors, whether rotary or reciprocating, which constitute a circuit-controller capable of effecting the same result.

The advantages resulting from the subdivision of the condenser or the employment of a plurality of condensers are mainly that a high frequency is obtainable in apparatus of any size; that the current of discharge through the sliding contacts is greatly reduced and injury to such contacts thereby avoided and a great saving in wire in the secondary effected.

What I claim is—

1. In an apparatus of the kind described, the combination with a set of contacts, one of which is adapted for connection with one of the mains from a source of current, and each of which is connected to one of the terminals of a series of condensers, and a second set of contacts similarly connected to the opposite main and condenser terminals, respectively, of electrically-connected plates or segments upon which the contacts of the first set bear, similarly-connected plates upon which the contacts of the second set bear, and isolated plates common to the two sets of contacts, the said plates being arranged in the manner described, whereby the condensers will be alternately charged in multiple and discharged in series, as set forth.

2. In an apparatus of the kind described, the combination with a set of positive brushes, one of which is adapted for connection with one of the mains from a source of current, and each of which is connected to one of the terminals of a series of condensers, and negative brushes similarly connected to the opposite main and condenser terminals, respectively, of a cylinder composed of electrically-connected segments upon which the positive brushes only bear, similarly-connected segments upon which the negative brushes only bear, and isolated plates upon which both sets of brushes simultaneously bear, the said plates being arranged in the manner described, whereby the condensers will be alternately charged in multiple and discharged in series, as set forth.

NIKOLA TESLA.

Witnesses:
M. LAWSON DYER,
DRURY W. COOPER.

(No Model.) 2 Sheets—Sheet 1.

N. TESLA.

ELECTRICAL TRANSFORMER.

No. 593,138. Patented Nov. 2, 1897.

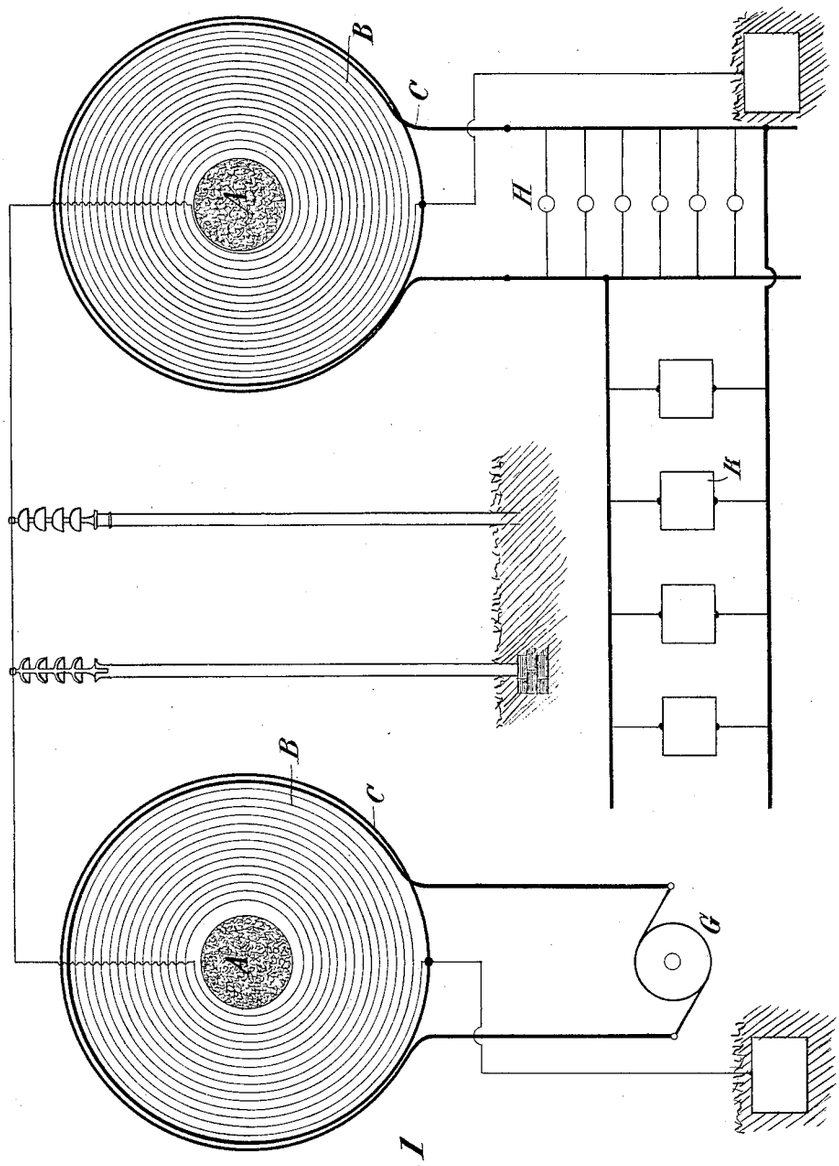

Fig. 1

WITNESSES

Y. B. Lewis.

Edwin B. Hopkinson.

INVENTOR

Nikola Tesla

BY

Ken. Curtis & Page.

ATTORNEY

THE NORRIS PETERS CO., PHOTO-LITHO., WASHINGTON, D. C.

(No Model.) 2 Sheets—Sheet 2.

N. TESLA.

ELECTRICAL TRANSFORMER.

No. 593,138. Patented Nov. 2, 1897.

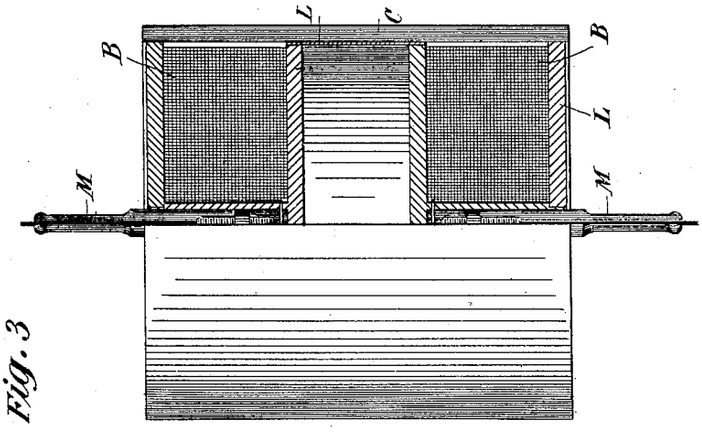

Fig. 3

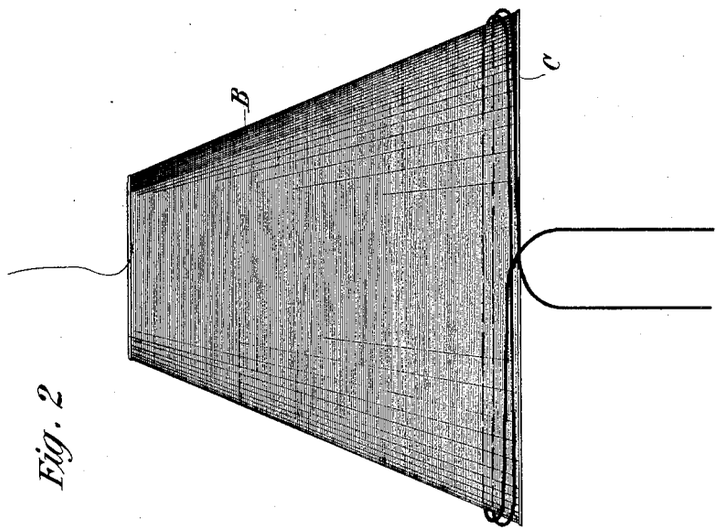

Fig. 2

WITNESSES

G. B. Lewis.

Edwin B. Hopkinson.

INVENTOR

Nikola Tesla

BY

Kerr, Curtis & Page

ATTORNEYS.

THE NORRIS PETERS CO., PHOTO-LITHO., WASHINGTON, D. C.

UNITED STATES PATENT OFFICE.

NIKOLA TESLA, OF NEW YORK, N. Y.

ELECTRICAL TRANSFORMER.

SPECIFICATION forming part of Letters Patent No. 593,138, dated November 2, 1897.

Application filed March 20, 1897. Serial No. 628,453. (No model.)

To all whom it may concern:

Be it known that I, NIKOLA TESLA, a citizen of the United States, residing at New York, in the county and State of New York, have invented certain new and useful Improvements in Electrical Transformers, of which the following is a specification, reference being had to the drawings accompanying and forming a part of the same.

The present application is based upon an apparatus which I have devised and employed for the purpose of developing electrical currents of high potential, which transformers or induction-coils constructed on the principles heretofore followed in the manufacture of such instruments are wholly incapable of producing or practically utilizing, at least without serious liability of the destruction of the apparatus itself and danger to persons approaching or handling it.

The improvement involves a novel form of transformer or induction-coil and a system for the transmission of electrical energy by means of the same in which the energy of the source is raised to a much higher potential for transmission over the line than has ever been practically employed heretofore, and the apparatus is constructed with reference to the production of such a potential and so as to be not only free from the danger of injury from the destruction of insulation, but safe to handle. To this end I construct an induction-coil or transformer in which the primary and secondary coils are wound or arranged in such manner that the convolutions of the conductor of the latter will be farther removed from the primary as the liability of injury from the effects of potential increases, the terminal or point of highest potential being the most remote, and so that between adjacent convolutions there shall be the least possible difference of potential.

The type of coil in which the last-named features are present is the flat spiral, and this form I generally employ, winding the primary on the outside of the secondary and taking off the current from the latter at the center or inner end of the spiral. I may depart from or vary this form, however, in the particulars hereinafter specified.

In constructing my improved transformers I employ a length of secondary which is approximately one-quarter of the wave length of the electrical disturbance in the circuit including the secondary coil, based on the velocity of propagation of electrical disturbances through such circuit, or, in general, of such length that the potential at the terminal of the secondary which is the more remote from the primary shall be at its maximum. In using these coils I connect one end of the secondary, or that in proximity to the primary, to earth, and in order to more effectually provide against injury to persons or to the apparatus I also connect it with the primary.

In the accompanying drawings, Figure 1 is a diagram illustrating the plan of winding and connection which I employ in constructing my improved coils and the manner of using them for the transmission of energy over long distances. Fig. 2 is a side elevation, and Fig. 3 a side elevation and part section, of modified forms of induction-coil made in accordance with my invention.

A designates a core, which may be magnetic when so desired.

B is the secondary coil, wound upon said core in generally spiral form.

C is the primary, which is wound around in proximity to the secondary. One terminal of the latter will be at the center of the spiral coil, and from this the current is taken to line or for other purposes. The other terminal of the secondary is connected to earth and preferably also to the primary.

When two coils are used in a transmission system in which the currents are raised to a high potential and then reconverted to a lower potential, the receiving-transformer will be constructed and connected in the same manner as the first—that is to say, the inner or center end of what corresponds to the secondary of the first will be connected to line and the other end to earth and to the local circuit or that which corresponds to the primary of the first. In such case also the line-wire should be supported in such manner as to avoid loss by the current jumping from line to objects in its vicinity and in contact with earth—as, for example, by means of long insulators, mounted, preferably, on metal poles, so that in case of leakage from the line it will pass harmlessly to earth. In Fig. 1, where such a system is illustrated, a dynamo G is con-

veniently represented as supplying the primary of the sending or "step-up" transformer, and lamps H and motors K are shown as connected with the corresponding circuit of the receiving or "step-down" transformer.

Instead of winding the coils in the form of a flat spiral the secondary may be wound on a support in the shape of a frustum of a cone and the primary wound around its base, as shown in Fig. 2.

In practice for apparatus designed for ordinary usage the coil is preferably constructed on the plan illustrated in Fig. 3. In this figure L L are spools of insulating material upon which the secondary is wound—in the present case, however, in two sections, so as to constitute really two secondaries. The primary C is a spirally-wound flat strip surrounding both secondaries B.

The inner terminals of the secondaries are led out through tubes of insulating material M, while the other or outside terminals are connected with the primary.

The length of the secondary coil B or of each secondary coil when two are used, as in Fig. 3, is, as before stated, approximately one-quarter of the wave length of the electrical disturbance in the secondary circuit, based on the velocity of propagation of the electrical disturbance through the coil itself and the circuit with which it is designed to be used—that is to say, if the rate at which a current traverses the circuit, including the coil, be one hundred and eighty-five thousand miles per second, then a frequency of nine hundred and twenty-five per second would maintain nine hundred and twenty-five stationary waves in a circuit one hundred and eighty-five thousand miles long, and each wave length would be two hundred miles in length. For such a frequency I should use a secondary fifty miles in length, so that at one terminal the potential would be zero and at the other maximum.

Coils of the character herein described have several important advantages. As the potential increases with the number of turns the difference of potential between adjacent turns is comparatively small, and hence a very high potential, impracticable with ordinary coils, may be successfully maintained.

As the secondary is electrically connected with the primary the latter will be at substantially the same potential as the adjacent portions of the secondary, so that there will be no tendency for sparks to jump from one to the other and destroy the insulation. Moreover, as both primary and secondary are grounded and the line-terminal of the coil carried and protected to a point remote from the apparatus the danger of a discharge through the body of a person handling or approaching the apparatus is reduced to a minimum.

I am aware that an induction-coil in the form of a flat spiral is not in itself new, and this I do not claim; but

What I claim as my invention is—

1. A transformer for developing or converting currents of high potential, comprising a primary and secondary coil, one terminal of the secondary being electrically connected with the primary, and with earth when the transformer is in use, as set forth.

2. A transformer for developing or converting currents of high potential, comprising a primary and secondary wound in the form of a flat spiral, the end of the secondary adjacent to the primary being electrically connected therewith and with earth when the transformer is in use, as set forth.

3. A transformer for developing or converting currents of high potential comprising a primary and secondary wound in the form of a spiral, the secondary being inside of, and surrounded by, the convolutions of the primary and having its adjacent terminal electrically connected therewith and with earth when the transformer is in use, as set forth.

4. In a system for the conversion and transmission of electrical energy, the combination of two transformers, one for raising, the other for lowering, the potential of the currents, the said transformers having one terminal of the longer or fine-wire coils connected to line, and the other terminals adjacent to the shorter coils electrically connected therewith and to the earth, as set forth.

NIKOLA TESLA.

Witnesses:
M. LAWSON DYER,
G. W. MARTLING.

No. 609,245. Patented Aug. 16, 1898.

N. TESLA.

ELECTRICAL CIRCUIT CONTROLLER.

(Application filed Dec. 2, 1897.)

(No Model.)

Fig. 1

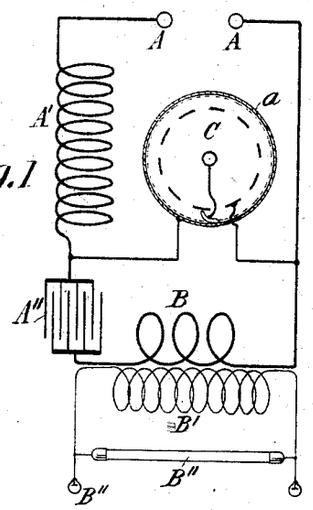

Fig. 2

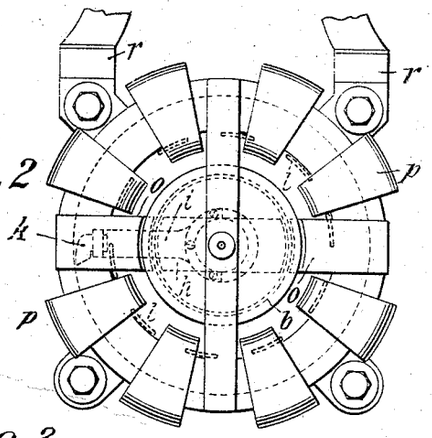

Fig. 3

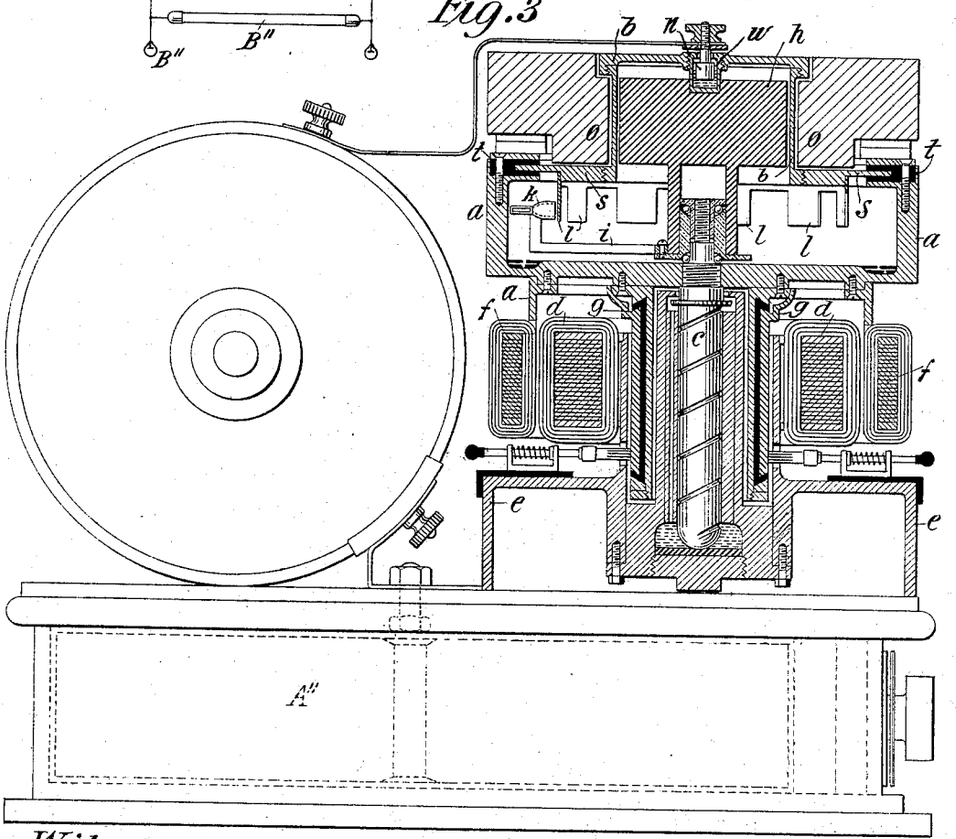

Witnesses:
Raphaël Netter
M. Lawson Dyer.

Nikola Tesla, Inventor
by Kerr, Curtis & Page Attys

THE NORRIS PETERS CO., PHOTO-LITHO., WASHINGTON, D. C.

UNITED STATES PATENT OFFICE.

NIKOLA TESLA, OF NEW YORK, N. Y.

ELECTRICAL-CIRCUIT CONTROLLER.

SPECIFICATION forming part of Letters Patent No. 609,245, dated August 16, 1898.

Application filed December 2, 1897. Serial No. 660,518. (No model.)

To all whom it may concern:

Be it known that I, NIKOLA TESLA, residing at New York, in the county and State of New York, have invented certain new and useful Improvements in Electrical-Circuit Controllers, of which the following is a specification, reference being had to the drawings accompanying and forming a part of the same.

In every form of electrical apparatus involving a means for making and breaking, more or less abruptly, a circuit a waste of energy occurs during the periods of make or break, or both, due to the passage of the current through an arc formed between the receding or approaching terminals or contacts, or, more generally, through a path of high resistance. The tendency of the current to persist after the actual disjunction or to precede the conjunction of the terminals exists in varying degrees in different forms of apparatus, according to the special conditions present. For example, in the case of an ordinary induction-coil the tendency to the formation of an arc at the break is, as a rule, the greater, while in certain forms of apparatus I have invented in which the discharge of a condenser is utilized this tendency is greatest at the instant immediately preceding the conjunction of the contacts of the circuit-controller which effects the discharge of the condenser.

The loss of energy occasioned by the causes mentioned may be very considerable and is generally such as to greatly restrict the use of the circuit-controller and render impossible a practical and economical conversion of considerable amounts of electrical energy by its means, particularly in cases in which a high frequency of the makes and breaks is required.

Extended experiment and investigation conducted with the aim of discovering a means for avoiding the loss incident to the use of ordinary forms of circuit-controllers have led me to recognize certain laws governing the waste of energy and making it dependent chiefly on the velocity with which the terminals approach and recede from one another and also more or less on the form of the current-wave. Briefly stated, from both theoretical considerations and practical experiment it appears that the loss of energy in any device for making and breaking a circuit, other conditions being the same, is inversely proportional rather to the square than to the first power of the speed or relative velocity of the terminals in approaching and receding from one another in an instance in which the current-curve is not so steep as to materially depart from one which may be represented by a sine function of the time; but such a case seldom obtains in practice. On the contrary, the current-curve resulting from a make and break is generally very steep and particularly so when, as in my system, the circuit-controller effects the charging and discharging of a condenser, and consequently the loss of energy is still more rapidly reduced by increased velocity of approach and separation. The demonstration of these facts and the recognition of the impossibility of attaining the desired results by using ordinary forms of circuit-controllers led me to invent new and essentially different means for making and breaking a circuit in which I have utilized a conducting fluid, such as mercury, as the material for one or both of the terminals and devised novel means for effecting a rapidly-intermittent contact between the fluid and a conductor or series of conductors forming the other terminal.

With a view, however, to securing a more practical and efficient circuit-controller in which not only the relative speed of the terminals but also the frequency of the makes and breaks should be very high I devised the the form of instrument described in an application filed by me June 3, 1897, Serial No. 639,227, in which a receptacle is rotated to impart a rapid movement to a body of conducting fluid contained therein, which is brought in rapidly-intermittent contact with a conductor having peripheral projections extending into the fluid, the movement of the latter being conveniently utilized to rotate the conductor. Such a device, though meeting fully many requirements in practice, is nevertheless subject to certain limitations in the matter of attaining a high relative speed of approach and separation of the terminals, since the path of movement of the conducting projections is not directly away from and toward the fluid, but more or less tangential to the surface of the latter, the velocity of

approach and separation being of course the smaller the greater the diameter of the rotated conductor or terminal.

With the object of securing a greater relative speed of the terminals and a consequently more efficient form of circuit-controller of this type I devised the modified form of apparatus which constitutes the subject of my present application.

In this apparatus one of the members or terminals is a conducting fluid which is caused to issue from an orifice against a series of spaced conductors in rapid succession. For this purpose the series of conductors, or it may be a single conductor, is moved transversely through the stream or jet of fluid, or the jet is moved so as to impinge upon the conductors, or both jet and conductors are moved. This is preferably accomplished by mounting the conductors and the tube or duct from which the fluid issues concentrically and revolving one or both.

The chief feature of novelty which distinguishes the apparatus and in which my improvement resides is the plan adopted for maintaining the stream or jet of conducting fluid. This consists in utilizing the same power that actuates or drives the circuit-controller in effecting the necessary relative movement of its terminals to maintain the proper circulation of the conducting fluid by combining the two mechanisms (the controller and the means for maintaining a circulation of the conducting fluid) in one. This feature is of great practical advantage and may be effected in many ways. A typical arrangement for this purpose is to provide a tube or duct having an orifice at one end directed toward the spaced conductors and its other end in a position to take up a portion of the rapidly-rotating body of conducting fluid, divert it through the duct, and discharge it against the conductors. With this object when a closed receptacle is used a holder for the tube is employed, mounted within the receptacle and concentrically therewith, and this holder, when the receptacle is revolved, is held or influenced by any suitable means, as by magnetic attraction exerted from the outside or otherwise, in such manner as to keep it either in a fixed position or impress upon it a velocity different from that of the rotated fluid.

Such other improvements in details as I have devised and applied to the construction and operation of my improved circuit-controller will be more fully hereinafter described; but from the above general statement of the nature of the device it will be observed that by means of the same the velocity of relative movement of the two parts or elements may be enormously increased and the duration of the arc or discharge between them at the periods of make and break thereby greatly reduced without material increase in the power required to effect it and without impairing the quality of contact or deteriorating the terminals.

In the drawings hereto annexed, Figure 1 is a diagram illustrating the system for which the improvement was more especially designed. Fig. 2 is a top plan view of the circuit-controller. Fig. 3 is a view showing the induction-coil of Fig. 1 with its condenser-case in side elevation and the circuit-controller in vertical central section.

The general scheme of the system for use with which my improved circuit-controller is more especially designed will be understood by a brief reference to Fig. 1. In said figure, A A represent the terminals of a source of current. A′ is a self-induction or choking coil included in one branch of the circuit and permanently connected to one side of a condenser A″. The opposite terminal of this condenser is connected to the other terminal of the source through the primary B of a transformer, the secondary B′ of which supplies the working circuit containing any suitable translating devices, as B″.

The circuit-controller C, which is represented conventionally, operates to make and break a bridge from one terminal of the source to a point between the choking-coil A′ and the condenser A″, from which it will result that when the circuit is completed through the controller the choking-coil A′ is short-circuited and stores energy which is discharged into the condenser when the controller-circuit is broken, to be in turn discharged from the condenser through the primary B when these two are short-circuited by the subsequent completion of the controller-circuit.

I refer now to Figs. 2 and 3 for an illustration of the more important and typical features of my improved circuit-controller. The parts marked *a* compose a closed receptacle of cylindrical form having a dome or extension of smaller diameter. The receptacle is secured to the end of a spindle *c*, which is mounted vertically in bearings of any character suitable for the purpose. As it is intended to impart a rapid rotation to the receptacle *a*, I have shown a convenient device for this purpose comprising a field-magnet *d*, secured to the base or frame *e*, and an annular armature *f*, secured to the receptacle *a*. The coils of the armature are connected with the plates *g* of a commutator secured to the receptacle *a* and made in cylindrical form, so as to surround the socket in which the spindle *c* is stepped. A body of magnetic material *h*, which serves as an armature, is mounted on antifriction-bearings on an extension of the spindle *c*, so that the receptacle and the body *h* may have freely independent movements of rotation. Surrounding the dome *b*, in which the armature *h* is contained, is a core with pole-pieces *o*, which are magnetized by coils *p*, wound on the core. The said core is stationary, being

supported by arms *r*, Fig. 2, independently of the receptacle, so that when the receptacle is rotated and the core energized the attractive force exerted by the poles *o* upon the armature *h* within the receptacle *a* holds the said armature against rotation. To prevent loss from currents set up in the shell of the dome *b*, the latter should be made of German silver or other similar precaution taken. An arm *i* is secured to the armature *h* within the receptacle *a* and carries at its end a short tube *k*, bent, as shown in Fig. 2, so that one open end is tangential to the receptacle-wall and the other directed toward the center of the same. Secured to the top plate of the receptacle *a* are a series of conducting-plates *l*. The part of the top plate *s* from which said conducting-plates *l* depend is insulated from the receptacle proper by insulating packing-rings *t*, but is electrically connected with the dome *b*, and in order to maintain electrical connection from an external circuit to the conductors *l* a mercury-cup *w* is set in the top of the dome, into which cup extends a stationary terminal plug *n*. A small quantity of a conducting fluid, such as mercury, is put into the receptacle *a*, and when the latter is rotated the mercury by centrifugal action is forced out toward its periphery and rises up along its inner wall. When it reaches the level of the open-mouthed tube *k*, a portion is taken up by the latter, which is stationary, and forced by its momentum through the tube and discharged against the conductors *l* as the latter pass in rapid succession by the orifice of said tube. In this way the circuit between the receptacle and the conductors *l* is completed during the periods in which the stream or jet of mercury impinges upon any of the conductors *l* and broken whenever the stream is discharged through the spaces between the conductors.

From the nature of the construction and mode of operation of the above-described apparatus it is evident that the relative speed of separation and approach of the two elements or terminals (the jet and the conductors *l*) may be extremely high, while such increased speed affects in no material respect the quality of contact.

A circuit-controller of the kind described is applicable and useful in many other systems and apparatus than that particularly described herein, and may be greatly modified in construction without departure from the invention.

I am aware that a jet or stream of conducting fluid has heretofore been employed as a means for completing an electric circuit, and I do not claim, broadly, the employment of a conducting fluid in such form as a contact or terminal; but so far as I am aware both the purpose for which I employ such form of contact or terminal and the manner in which I apply it are wholly of my invention, neither having been heretofore proposed.

What I claim is—

1. The combination with a receptacle of a conductor or series of spaced conductors, a nozzle or tube for directing a jet or stream of fluid against the same, the nozzle and conductor being capable of movement relatively to each other, and means for maintaining a circulation of conducting fluid, contained in the receptacle, through the said nozzle, and dependent for operation upon such relative movement, as set forth.

2. The combination with a closed receptacle of a conductor or series of spaced conductors, a nozzle or tube for directing a jet or stream of fluid against the same, and means for forcing a conducting fluid contained in the receptacle through the said nozzle, these parts being associated within the receptacle and adapted to be operated by the application of a single actuating power, as set forth.

3. The combination with a receptacle containing a series of spaced conductors, a duct within the receptacle having one of its ends directed toward the said conductors, means for maintaining a rapid movement of relative rotation between the said end and the conductors and means for maintaining a circulation of a conducting fluid contained in the receptacle through the duct against the conductors, the said conductors and jet constituting respectively the terminals or elements of an electric-circuit controller.

4. The combination with a receptacle capable of rotation and containing a series of spaced conductors, a duct within the receptacle having an orifice directed toward the said conductors, and an open end in position to take up a conducting fluid from a body of the same contained in the receptacle, when the latter is rotated, and direct it against the conductors, the said conductors and the fluid constituting the terminals or elements of an electric-circuit controller.

5. The combination with a receptacle for containing a conducting fluid and a series of spaced conductors thereon, of a duct having an orifice directed toward the said conductors and forming a conduit through which the fluid when the receptacle is rotated is forced and thrown upon the conductors.

6. The combination with a receptacle capable of rotation, and a series of conductors mounted therein, of a duct having an orifice directed toward the conductors, a holder for said duct mounted on bearings within the receptacle which permit of a free relative rotation of said receptacle and holder, and means for opposing the rotation of the said holder in the direction of the movement of the fluid while the receptacle is rotated, whereby the conducting fluid within the receptacle will be caused to flow through the duct against the conductors.

7. The combination with a receptacle and a motor for rotating the same, of a magnetic body mounted in the receptacle, a magnet exterior to the receptacle for maintaining the body stationary while the receptacle rotates,

a series of conductors in the receptacle and a duct carried by the said magnetic body and adapted to take up at one end a conducting fluid in the receptacle when the latter rotates and to direct such fluid from its opposite end against the series of conductors.

8. The combination with a receptacle for containing a conducting fluid, a series of spaced conductors within the same, and a motor, the armature of which is connected with the receptacle so as to impart rotation thereto, a magnetic body capable of turning freely within the receptacle about an axis concentric with that of the latter, a duct carried by the said body having one end in position to take up the conducting fluid and the other in position to discharge it against the spaced conductors, and a magnet exterior to the receptacle for holding the magnetic body stationary when the receptacle is rotated.

NIKOLA TESLA.

Witnesses:
M. LAWSON DYER,
G. W. MARTLING.

No 609.246. Patented Aug. 16, 1898.

N. TESLA.

ELECTRIC CIRCUIT CONTROLLER.

Application filed Feb. 28, 1898.

(No Model.)

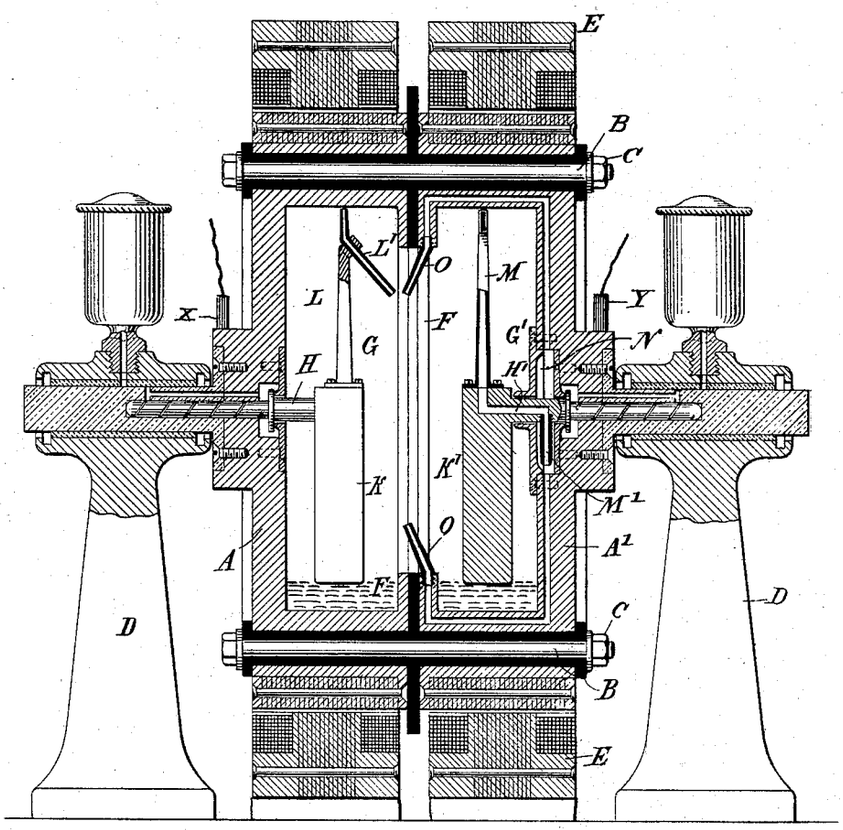

Witnesses:
Benjamin Mueller.
Augustine Fenton.

Inventor
Nikola Tesla
by Kerr, Curtis & Page
Att'ys.

THE NORRIS PETERS CO., PHOTO-LITHO., WASHINGTON, D. C.

UNITED STATES PATENT OFFICE.

NIKOLA TESLA, OF NEW YORK, N. Y.

ELECTRIC-CIRCUIT CONTROLLER.

SPECIFICATION forming part of Letters Patent No. 609,246, dated August 16, 1898.

Application filed February 28, 1898. Serial No. 671,897. (No model.)

To all whom it may concern:

Be it known that I, NIKOLA TESLA, a citizen of the United States, residing in the borough of Manhattan, in the city, county, and State of New York, have invented certain new and useful Improvements in Electric-Circuit Controllers, of which the following is a specification, reference being had to the drawing accompanying and forming a part of the same.

The invention which forms the subject of my present application is an improvement in a novel class of circuit-controlling appliances heretofore invented by me and more especially designed to be used with my now well-known apparatus for the production of electric currents of high frequency by means of condenser-discharges, but applicable generally as a means for making and breaking an electric circuit.

In the circuit-controllers of the particular class or type to which my present improvement pertains I have utilized a conducting liquid as one of the terminals and have employed as the other terminal a solid conductor and provided various means for bringing the two into rapidly-intermittent contact.

The distinguishing feature of my present improvement lies chiefly in the use of a conducting liquid for both the terminals under conditions which permit of a rapidly-intermittent contact between them, as will be herein set forth.

The accompanying drawing illustrates an apparatus embodying the principle of my said improvement.

The figure is a central vertical section of the circuit-controller.

In the drawing is shown a receptacle composed of two cylindrical metallic portions A A′, secured together by bolts B and nuts C, but insulated from each other. The receptacle is journaled, by means of trunnions formed on or secured to its ends, in standards D D, and any suitable means is employed to impart rotation to it. This is conveniently effected by constructing or organizing the receptacle in such manner that it may serve as the rotating element of an electromagnetic motor in conjunction with a surrounding stationary element E E. The abutting ends of the two parts of the receptacle are formed with inwardly-extending flanges F, which divide the peripheral portions of the receptacle into two compartments G G′. Into one of these compartments, as G, extends a spindle H, having its bearing in the end of the part A and the trunnion secured to or extending therefrom. Into the other compartment G′ extends a spindle H′, similarly journaled in the end of part A′ and its trunnion. Each spindle carries or is formed with a weighted arm K, which, remaining in a vertical position, holds its spindle stationary when the receptacle is revolved.

To the weighted arm of spindle H is secured a standard L, carrying a tube L′, with one open end in close proximity to the inner peripheral wall of the compartment G and the other directed toward the axis, but inclined toward the opposite compartment. To the weighted arm of spindle H′ is similarly secured a standard M, which is hollow and constitutes a portion of a duct or passage which extends through a part of the spindle and opens through a nozzle M′ into a circular chamber N in the wall of the part A′. From this chamber run passages N′ to nozzles O, in position to discharge jets or streams of liquid in such directions as to intersect, when the nozzles are rotated, a stream issuing from the end of tube L′.

In each portion or compartment of the receptacle is placed a quantity of a conducting liquid, such as mercury, and the ends of the tubes L′ and M are provided with openings which take up the mercury when on the rotation of the receptacle it is carried by centrifugal force against the peripheral wall. The mercury when taken up by the tube L′ issues in a stream or jet from the inner end of said tube and is projected into the compartment G′. The mercury taken up by the tube M runs into the circular chamber N, from which it is forced through the passages N′ to the nozzles O, from which it issues in jets or streams directed into the compartment G. As the nozzles O revolve with the receptacle the streams which issue from them will therefore be carried across the path of the stream which issues from the tube L′ and which is stationary, and the circuit between the two compartments will be completed by

the streams whenever they intersect and interrupted at all other times.

The continuity of the jets or streams is not preserved ordinarily to any great distance beyond the orifices from which they issue, and hence they do not serve as conductors to electrically connect the two sides of the receptacle beyond their point of intersection with each other.

It will be understood that so far as the broad feature of maintaining the terminal jets is concerned widely-different means may be employed for the purpose and that the spindles mounted in free bearings concentrically with the axis of rotation of the receptacle and held against rotation by the weighted arms constitute but one specific way of accomplishing this result. This particular plan, however, has certain advantages and may be applied to circuit-controllers of this class generally whenever it is necessary to maintain a stationary or nearly stationary body within a rotating receptacle. It is further evident from the nature of the case that it is not essential that the jet or jets in one compartment or portion of the instrument should be stationary and the others rotating, but only that there should be such relative movement between them as to cause the two sets to come into rapidly-intermittent contact in the operation of the device.

The number of jets, whether stationary or rotating, is purely arbitrary; but since the conducting fluid is directed from one compartment into the other the aggregate amount normally discharged from the compartments should be approximately equal. However, since there always exists a tendency to project a greater quantity of the fluid from that compartment which contains the greater into that which contains the lesser amount no difficulty will be found in this respect in maintaining the proper conditions for the satisfactory operation of the instrument.

A practical advantage, especially important when a great number of breaks per unit of time is desired, is secured by making the number of jets in one compartment even and in the other odd and placing each jet symmetrically with respect to the center of rotation. Preferably the difference between the number of jets should be one. By such means the distances between the jets of each set are made the greatest possible and hurtful short-circuits are avoided.

For the sake of illustration let the number of jets or nozzles L′ in one compartment be nine and the number of those marked O in the other compartment ten. Then by one revolution of the receptacle there will be ninety makes and breaks. To attain the same result with only one jet, as L′, it would be necessary to employ ninety jets O in the other compartment, and this would be objectionable, not only because of the close proximity of the jets, but also of the great quantity of fluid required to maintain them.

In the use of the instrument as a circuit-controller it is merely necessary to connect the two insulated parts of the receptacle to the two parts of the circuit, respectively, as by causing brushes X Y, connected with circuit-wires, to bear at any suitable points on the said two parts A A′.

In instruments of this character in which both terminals are formed by a liquid element there is no wear or deterioration of the terminals and the contact between them is more perfect. The durability and efficiency of the devices are thus very greatly increased.

Having now described my invention, what I claim is—

1. A circuit-controller comprising in combination means for producing streams or jets of conducting liquid forming the terminals, and means for bringing the jets or streams of the respective terminals into intermittent contact with each other, as set forth.

2. In a circuit-controller, the combination with two sets of orifices adapted to discharge jets in different directions, means for maintaining jets of conducting liquid through said orifices, and means for moving said orifices relatively to each other so that the jets from those of one set will intermittently intersect those from the other, as set forth.

3. The combination in a circuit-controller of ducts and means for discharging therefrom streams or jets of conducting fluid in electrical contact with the two parts of the circuit respectively, the orifices of said ducts being capable of movement relatively to each other, whereby the streams discharged therefrom will intersect at intervals during their relative movement, and make and break the electric circuit, as set forth.

4. In a circuit-controller the combination with one or more stationary nozzles and means for causing a conducting fluid forming one terminal to issue therefrom, of one or more rotating tubes or nozzles, means for causing a conducting liquid forming the other terminal to issue therefrom, the said rotating nozzles being movable through such a path as to cause the liquid issuing therefrom to intersect that from the stationary nozzles as set forth.

5. The combination with a rotating receptacle divided into two insulated compartments, a spindle in one compartment with its axis concentric with that of the receptacle, means for opposing the rotation of said spindle, and a tube or duct carried by the spindle and adapted to take up a conducting fluid at one end from the inner periphery of the compartment when the receptacle is rotated and direct it from the other end into the other compartment, of a similar spindle in the other compartment and means for opposing its rotation, a tube carried by the spindle and having an opening at one end near the inner periphery of the compartment and discharging into a chamber from which lead one or more passages to nozzles fixed to the rotating re-

ceptacle and adapted to discharge across the path of the jet from the stationary nozzle, as set forth.

6. In a circuit-controller the combination with a rotating receptacle of a body mounted therein and formed or provided with a weighted portion eccentric to its axis which opposes its rotation and a tube or duct carried by said body and adapted to take up a conducting fluid from the rotating receptacle as set forth.

7. In a circuit-controller the combination of two sets of nozzles and means for projecting from the same, jets of conducting fluid which constitute respectively the terminals of the controller, means for moving the nozzles relatively to each other so that the jets of the two sets are brought successively into contact, the nozzles of each set being arranged symmetrically about an axis of rotation, there being one more nozzle in one set than in the other.

NIKOLA TESLA.

Witnesses:
M. LAWSON DYER,
G. W. MARTLING.

No. 609,247. Patented Aug. 16, 1898.

N. TESLA.

ELECTRIC CIRCUIT CONTROLLER.

(Application filed Mar. 12, 1898.)

(No Model.)

Fig. 1

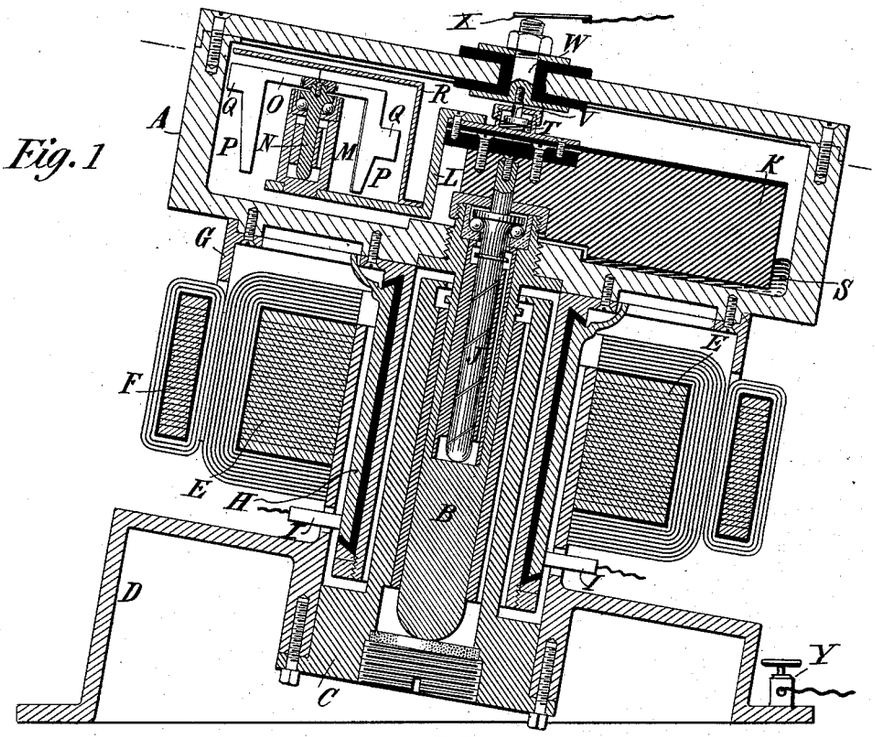

Fig. 2

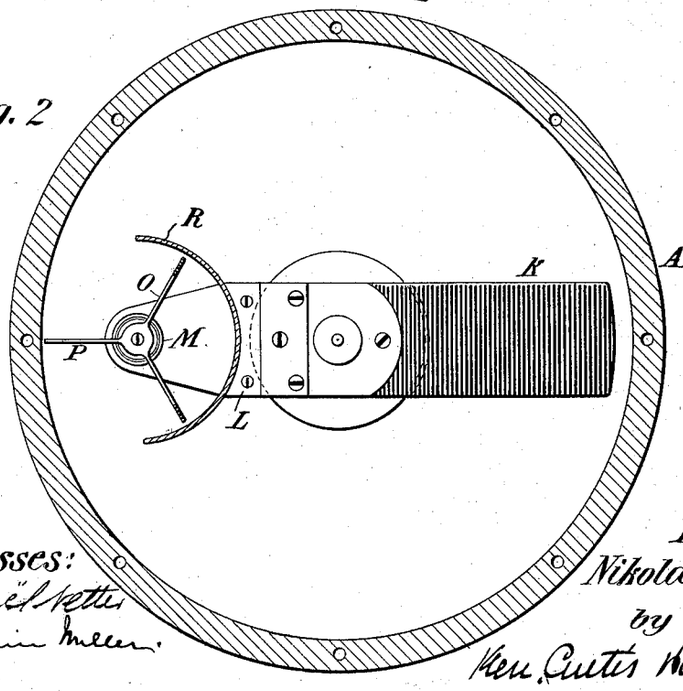

Witnesses:
Raphael Netter
Benjamin Miller.

Inventor
Nikola Tesla
by
Kerr, Curtis & Page Attys.

THE NORRIS PETERS CO., PHOTO-LITHO., WASHINGTON, D. C.

UNITED STATES PATENT OFFICE.

NIKOLA TESLA, OF NEW YORK, N. Y.

ELECTRIC-CIRCUIT CONTROLLER.

SPECIFICATION forming part of Letters Patent No. 609,247, dated August 16, 1898.

Application filed March 12, 1898. Serial No. 673,558. (No model.)

To all whom it may concern:

Be it known that I, NIKOLA TESLA, of the borough of Manhattan, in the city, county, and State of New York, have invented certain new and useful Improvements in Circuit-Controllers, of which the following is a specification, reference being had to the drawings accompanying and forming a part of the same.

In an application filed by me on June 3, 1897, Serial No. 639,227, I have shown and described a device for making and breaking an electric circuit comprising a rotary receptacle containing a conducting fluid and a terminal mounted within but independently of the receptacle and caused by the rotation of the latter to make and break electrical contact with the fluid.

The invention on which my present application is based is an improvement in devices of this particular class, and has primarily as its object the production of a circuit-controller in which an independently-mounted terminal operated in a similar manner by a rotating body of conducting fluid may be inclosed within a gas-tight receptacle.

The invention comprises features of construction by which this object is practically secured and certain improvements applicable to this and other analogous devices, as will be more fully hereinafter set forth.

In the accompanying drawings, Figure 1 is vertical central section of the improved circuit-controller, and Fig. 2 a top plan view of the same with the top or cover of the receptacle removed.

The operative portions of the circuit-controlling mechanism are contained in a closed cylindrical receptacle A, of iron or steel, mounted on a spindle B in a suitable socket or support C to permit it to be freely and rapidly rotated. The socket C is secured to or forms a part of a base or stand D.

As a means of producing the proper rotation of the receptacle A, I have shown a field-magnet E, mounted on or secured to the base D, and an armature F, supported by a bracket G from the under side of the receptacle A. The same bracket also carries a series of commutator-segments H, upon which bear brushes I, these parts being arranged to constitute an electromagnetic motor with stationary field and rotating armature. It may be stated that any other suitable means may be employed to rotate the receptacle and the fluid.

In the spindle B and concentric with its axis is a spindle J in bearings specially constructed to reduce friction in order that the spindle J may be as little as possible influenced by the rotation of the main spindle and receptacle carried thereby. A suitable provision is made to oppose or prevent the rotation of the spindle J during the rotation of the receptacle. I have devised for this purpose the following:

The spindle B is held by its bearings at an angle to the vertical, and a weight K is secured eccentrically to the spindle J and tends to hold the said spindle always in one position. The inclination of the axes of rotation necessary for this result may be substantially that shown and should not be materially greater, for the reason that it is especially advantageous to preserve the spindles and bearings as nearly as practicable vertical on account of lesser friction and easier lubrication.

Attached to the spindle J or weight K is an insulated bracket L, carrying a standard or socket M, in which is mounted on antifriction-bearings a spindle N. Secured to this latter is a plate with radial arms O, from which depend vanes or blades P, with projections Q extending radially therefrom. A shield or screen R incloses the vanes, except on the side adjacent to the inner periphery of the receptacle A.

A small quantity of a conducting fluid S is placed in the receptacle, and in order to secure a good electrical connection between the vanes P and a terminal on the outside of the receptacle a small mercury-cup T, in metallic contact with the vanes through the bracket L and socket M, is secured to the weight K. A metal stud V, set in an insulated bolt W, projects into the cup T through a packed opening in its cover. One terminal of the circuit-controlling mechanism will thus be any part of the metal receptacle and the other the insulated bolt W. The apparatus may be connected up in circuit by connecting the wires of the circuit to a brush X, bearing on the bolt W, and to a binding-post Y in contact with the base D.

To operate the apparatus, the receptacle is

set in rotation, and as its speed increases the mercury or other conducting fluid which it contains is carried by centrifugal force up the sides of the inner wall, over which it spreads in a layer. When this layer rises sufficiently to encounter the projections Q on the blades or vanes P, the latter are set in rapid rotation, and the electrical connection between the terminal of the apparatus is thereby made and broken, it may be, with very great rapidity.

The projections Q are preferably placed at different heights on the vanes P, so as to secure greater certainty of good contact with the mercury film when in rapid rotation.

As to the forms of the circuit-controller heretofore referred to and upon which my present invention is an improvement the blades or vanes P may be regarded in a broad sense as typical of any device—such, for example, as a stelliform disk—which will be set and maintained in rotation by that of the receptacle. So, also, having regard to the feature of my invention which provides for maintaining such a device in operation in a receptacle which may be hermetically sealed, so as to be capable of containing an inert medium under pressure in which the makes and breaks occur and which medium is practically essential to a long-continued and economical operation of the device, I may employ other and widely-different means for opposing or preventing the rotation of the part carrying such vanes in the direction of the rotation of the receptacle and fluid.

Having now described my invention, what I claim is—

1. A circuit-controller comprising, in combination, a closed receptacle containing a fluid, means for rotating the receptacle, a support mounted within the receptacle, means for opposing or preventing its movement in the direction of rotation of the receptacle, and a conductor carried by said support and adapted to make and break electric connection with the receptacle through the fluid, as set forth.

2. A circuit-controller comprising, in combination, a terminal capable of rotation and formed or provided with radiating contacts, a closed receptacle containing a fluid which constitutes the opposite terminal, means for rotating the receptacle, a support therein for the rotating terminal, and means for opposing or preventing the rotation of the support in the direction of the rotation of the receptacle, as set forth.

3. In a circuit-controller, the combination with a receptacle capable of rotation about an axis inclined to the vertical and containing a fluid which constitutes one terminal, a second terminal mounted within the receptacle, on a support capable of free rotation relatively to the receptacle, and a weight eccentric to the axis of rotation of the support for said terminal for opposing or preventing its movement in the direction of the rotation of the said receptacle, as set forth.

4. The combination with a receptacle mounted to revolve about an axis inclined to the vertical, of a spindle within the receptacle and concentric with its axis, a weight eccentric to the spindle, and a terminal carried by the said spindle, and adapted to be rotated by a body of conducting fluid contained in the receptacle when the latter is rotated, as set forth.

5. The combination with a receptacle mounted to rotate about an axis inclined to the vertical, a spindle within the receptacle and concentric with its axis, a weighted arm attached to said spindle, a bracket or arm also secured to said spindle, a rotary terminal with radiating contact arms or vanes mounted on said bracket in position to be rotated by a body of conducting fluid contained in said receptacle when said fluid is displaced by centrifugal action, as set forth.

NIKOLA TESLA.

Witnesses:
M. LAWSON DYER,
G. W. MARTLING.

No. 609,248. Patented Aug. 16, 1898.

N. TESLA.

ELECTRIC CIRCUIT CONTROLLER.

(Application filed Mar. 12, 1898.)

(No Model.)

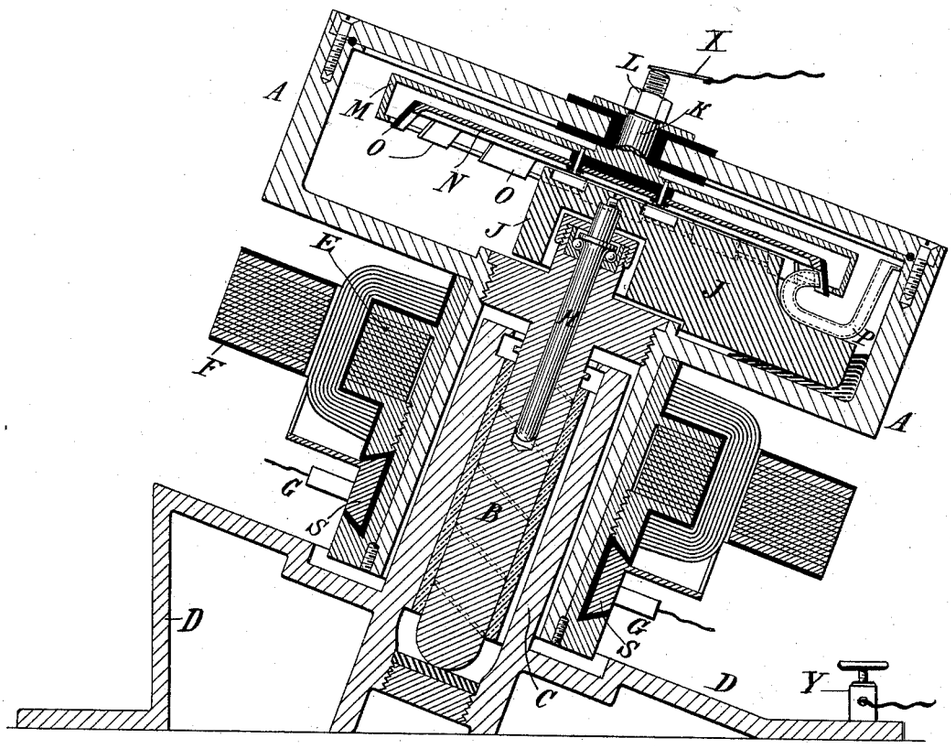

Witnesses:
Raphael Netter
Benjamin Mueller

Nikola Tesla, Inventor
by Kerr, Curtis & Page Attys.

THE NORRIS PETERS CO., PHOTO-LITHO., WASHINGTON, D. C.

UNITED STATES PATENT OFFICE.

NIKOLA TESLA, OF NEW YORK, N. Y.

ELECTRIC-CIRCUIT CONTROLLER.

SPECIFICATION forming part of Letters Patent No. 609,248, dated August 16, 1898.

Application filed March 12, 1898. Serial No. 673,559. (No model.)

To all whom it may concern:

Be it known that I, NIKOLA TESLA, of the borough of Manhattan, in the city, county, and State of New York, have invented certain new and useful Improvements in Circuit-Controllers, of which the following is a specification, reference being had to the drawing accompanying and forming a part of the same.

In previous applications filed by me, notably in Serial No. 660,518, filed December 2, 1897, and others, I have shown and described various forms of electric-circuit controllers in which a conducting fluid is used for one or both of the terminals. These contrivances, while applicable generally as a means of making and breaking an electric circuit with great rapidity, were devised by me more especially for use in my now well-known system of electrical conversion by means of condenser-discharges and for this reason have been designed with especial reference to the peculiar and exceptional conditions which obtain in such systems. My present invention is an improvement in circuit-controllers of this kind, and in order that the object and nature of the improvement may be more readily understood and appreciated I may refer briefly to the more essential characteristics of the devices described before upon which the present improvement is based. As it was primarily essential that these controllers be capable of making and breaking the circuit at a very rapid rate and as such a result could not be secured practically or economically by any of the ordinary devices employing rigid contacts or terminals I was led to invent apparatus in which the circuit connections were established and broken between a rigid terminal and a fluid conductor or between two fluid conductors in the form of jets or streams. In the forms of apparatus employing a rigid or solid conductor as one terminal and a fluid as the other the makes and breaks of course occur always between a solid and a fluid terminal, and although the operative parts of my improved circuit-controllers were usually contained in air or gas tight receptacles and in an inert medium, both for the purpose of improving their action and preventing deterioration of the terminals, there is still a liability to wear of the rigid or solid terminal.

Under certain conditions, as when the circuit-controller is operated from a source of direct current, the deterioration of the solid terminal may be materially reduced by connecting it to the negative pole of the generator. Nevertheless, there will be always a slow wearing away of the metal, which to overcome entirely in a novel manner is the object of my present improvement. To do this, I effect the closure of the circuit through two parts of conducting fluid; but instead of breaking the circuit by the movement of these two parts or terminals, as before, I separate them periodically by the interposition of an insulator which is preferably solid and refractory. For example, I provide a plate or disk with teeth or projections—preferably of glass, lava, or the like—which are caused by the rotation of the disk to pass through the fluid conductor, jet, or whatever it may be, and thus effect a make and break of the circuit.

By means of such a device the breaks always occur between fluid terminals, and hence deterioration and consequent impairment of the qualities of the apparatus are avoided.

A preferred form of my improved circuit-controller is illustrated in the accompanying drawing, which shows a central vertical section of the same.

The two terminals are contained in an air-tight receptacle A, of iron or steel, which is mounted on a spindle B in a suitable socket or support C, so as to rotate freely. The socket C is secured to or forms part of a base or stand D. Any suitable means may be employed for effecting the rotation of the receptacle, and in illustration of a convenient and practicable means for this purpose I have shown an armature E, secured to a cylindrical extension of the receptacle that surrounds the socket C, and a field-magnet F, which is supported independently and is stationary. The armature-coils are connected with the segments S of a commutator on which bear brushes G.

In the spindle B and concentric with its axis is a spindle H, supported on ball-bearings or otherwise arranged to have a free movement of rotation relatively to the spindle B, so as to be as little as possible influenced by the rotation of the latter.

Any convenient means is provided to oppose or prevent the rotation of the spindle H

during the rotation of the receptacle. In the particular arrangement here shown for this purpose a weight or weighted arm J is secured to the spindle H and eccentrically to the axis of the latter, and as the bearing for the spindle B holds the same at an angle to the vertical this weight acts by gravity to hold the spindle H stationary.

Secured to the top or cover of the receptacle A by a stud K, which passes through an insulating-bushing in said cover and is held by a nut L, is a circular disk M, of conducting material, preferably iron or steel, having its edge turned downwardly and then inwardly to provide a peripheral trough on the under side of the disk.

To the under side of the disk M is secured a second disk N, having downwardly-inclined peripheral projections O O, of insulating and preferably refractory material, in a circle concentric with the disk M.

A tube or duct P is mounted on the spindle H or the weight J and is so arranged that the orifice at one end is directed outwardly toward the trough of the disk M, while the other lies close to the inner peripheral wall of the receptacle, so that if a quantity of mercury or other conducting fluid be placed in the receptacle and the latter rotated the tube or duct P, being held stationary, will take up the fluid which is carried by centrifugal action up the side of the receptacle and deliver it in a stream or jet against the trough or flange of the disk M or against the inner surfaces of the projections O of disk N, as the case may be.

Obviously, since the two disks M and N rotate with respect to the jet or stream of fluid issuing from the duct P, the electrical connection between the receptacle and the disk M through the fluid will be completed by the jet when the latter passes to the disk M between the projections O and will be interrupted whenever the jet is intercepted by the said projections.

The rapidity and the relative duration of the makes and breaks is determined by the speed of rotation of the receptacle and the number and width of the intercepting projections O.

By forming that portion of the disk M with which the jet makes contact as a trough, which will retain when in rotation a portion of the fluid directed against it, a very useful feature is secured. The fluid under the action of centrifugal force accumulates in and is distributed along the trough and forms a layer over the surface upon which the jet impinges. By this means a very perfect contact is always secured and all deterioration of the terminal surfaces avoided.

The principle of interrupting the circuit by intermittently passing an insulator through a fluid conductor may be carried out by many specifically-different forms of apparatus, and in this respect I do not limit myself to the particular form herein shown.

What I claim is—

1. In an electrical-circuit controller, the combination with a conductor forming one of the terminals, of means for maintaining a jet or stream of conducting fluid forming the other terminal, and directing it against said conductor, and a body adapted to be intermittently moved through and to intercept the jet or stream, as set forth.

2. In an electrical-circuit controller, the combination with a rigid terminal, of means for directing against such terminal a jet or stream of conducting fluid in electrical connection with the other terminal, and a body adapted to be intermittently moved through and to intercept the jet or stream, as set forth.

3. In an electrical-circuit controller, the combination with a rigid terminal, of means for directing against such terminal a jet or stream of conducting fluid in electrical connection with the other terminal, a body having a series of radial projections and means for rotating the same so that the said projections will intermittently intercept the stream or jet, as set forth.

4. In a circuit-controller, the combination with a rotary conductor forming one terminal, means for directing against such terminal a jet or stream of conducting fluid in electrical connection with the other terminal, and a body with spaced projections mounted to rotate in a path that intercepts the jet or stream of fluid, as set forth.

5. In a circuit-controller, the combination with a rotary conductor forming one terminal, and means for directing intermittently against such terminal a jet or stream of fluid in electrical connection with the other terminal, the part of said rotary conductor upon which the jet or stream impinges being formed so as to retain, by centrifugal force, a portion of the fluid directed against it, as set forth.

6. The combination of the receptacle, the conducting-disk secured within it, the insulated disk with peripheral projections and the stationary tube or duct for directing a stream or jet of conducting fluid toward the conducting-disk and across the path of the projections O, as set forth.

7. The combination of the receptacle, the conducting-disk with a peripheral trough-shaped flange, the insulated disk with peripheral projections O, and the stationary tube or duct for directing a stream or jet of conducting fluid into the trough-shaped flange of the conducting-disk and across the path of the projections O, as set forth.

NIKOLA TESLA.

Witnesses:
M. LAWSON DYER,
G. W. MARTLING.

No. 609,249. Patented Aug. 16, 1898.

N. TESLA.

ELECTRIC CIRCUIT CONTROLLER.

(Application filed Mar. 12, 1898.)

(No Model.)

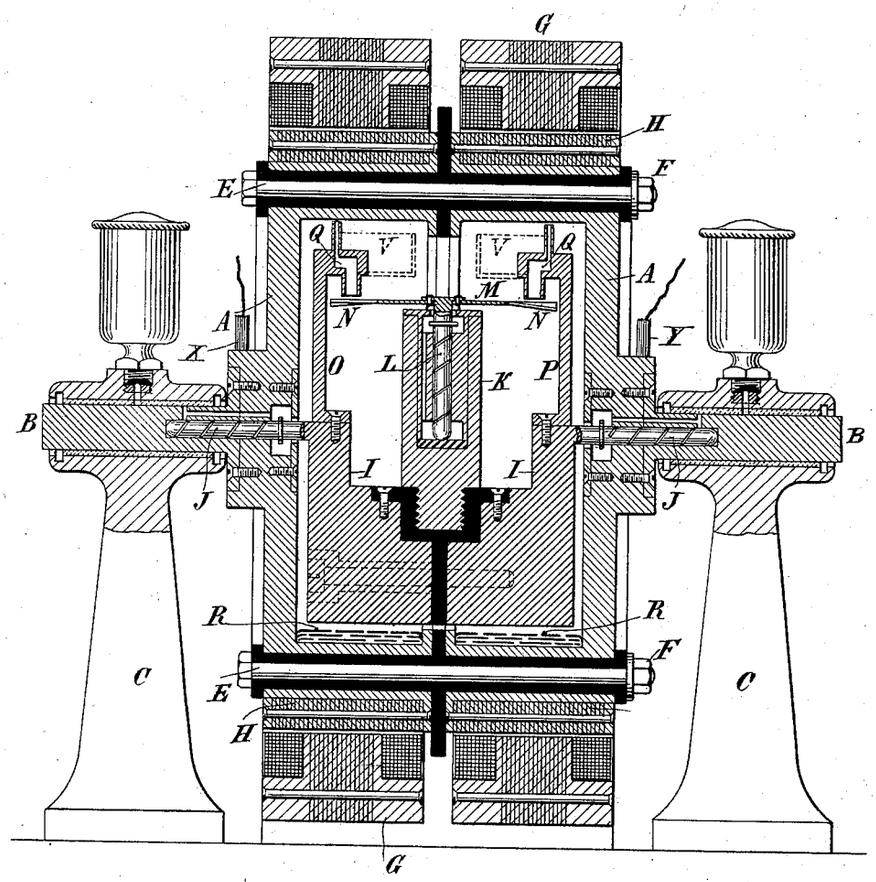

Witnesses:
Raphael Netter
Benjamin Miller.

Nikola Tesla, Inventor
by Kerr Curtis Page Attys.

THE NORRIS PETERS CO., PHOTO-LITHO., WASHINGTON, D. C.

UNITED STATES PATENT OFFICE.

NIKOLA TESLA, OF NEW YORK, N. Y.

ELECTRIC-CIRCUIT CONTROLLER.

SPECIFICATION forming part of Letters Patent No. 609,249, dated August 16, 1898.

Application filed March 12, 1898. Serial No. 673,560. (No model.)

To all whom it may concern:

Be it known that I, NIKOLA TESLA, of the borough of Manhattan, in the city, county, and State of New York, have invented certain new and useful Improvements in Electrical-Circuit Controllers, of which the following is a specification, reference being had to the drawing accompanying and forming part of the same.

The present application is based upon improvements in electrical-circuit controllers of the kind heretofore invented by me and described in previous applications, notably in an application filed December 2, 1897, Serial No. 660,518. The chief distinguishing features of these devices are the use of a conducting fluid for one or both of the terminals under conditions which permit of a very rapid succession of makes and breaks and a construction or arrangement which allows the inclosing of the terminals in an air-tight receptacle in which an inert medium may be maintained. My efforts to meet the practical requirements of apparatus of this kind have led me to adopt expedients and to invent mechanisms entirely novel in such devices. For example, in order to effect a rapidly-intermittent contact between two terminals by the use of a jet or jets in a closed receptacle it is obviously necessary to employ special means which will operate to hold one part of the apparatus stationary while the other rotates or to rotate both the essential parts or terminals in opposite directions or, as the case may be, in the same direction at different speeds.

The present invention is embodied in a device for securing the proper relative movement of the two parts or terminals of the circuit-controller and involves two salient features of novelty, one that it provides for maintaining in a rotating receptacle a stationary jet or jets which by impinging on a rigid conductor maintain the latter in rotation, thereby securing the requisite rapidly-intermittent contact between the two, and the other that it utilizes the rotation of such rigid conductor as a means for opposing or preventing the movement of its own supports in the direction of rotation of the receptacle, thereby securing, among other things, an approximately constant relative movement between the parts, a feature which in devices of this kind is often very desirable.

In the drawing hereto annexed I have illustrated the preferred form of apparatus which I have devised for carrying out these improvements. The figure is a central vertical cross-section of a circuit-controller.

A designates a receptacle, usually of iron or steel and mounted in any suitable manner, as by trunnions B B, having bearings in standards C C, so as to be capable of rapid rotation about a horizontal axis.

In the particular form of device under consideration the receptacle is divided into two parts insulated by a washer D and held together by insulated bolts E with nuts F. These two parts are electrically connected, respectively, with the two terminals of the apparatus, as hereinafter described, and by means of brushes X Y, bearing at any suitable points on the two parts of the receptacle, the circuit-controller is connected with the wires of a circuit.

Any convenient means may be employed to rotate the receptacle; but a simple way to effect this is to surround the same with a field-magnet G and to make the receptacle itself the armature of an electric motor or else to secure to it armature-cores, as H.

A body I is supported by trunnions J, having bearings in the ends of the receptacle and concentric with the axis of rotation of the same. The weight of the body I being eccentric to this axis tends to oppose its turning about the axis when the receptacle is rotated.

Upon the body or support I, but insulated therefrom, is secured a vertical standard K, in which there is a freely-rotatable spindle L, carrying a disk M, with radial arms inclined to the plane of the disk, so as to form vanes N. Arms O P are also secured to the body I and are formed with or carry at their ends ducts or tubes Q, with one end directed toward and opening upon the vanes N and the other end close to the inner wall of the receptacle and opening in the direction opposite to that of the rotation of the receptacle.

A suitable quantity of mercury R is placed in the receptacle before the latter is sealed or closed.

The operation of the device is as follows:

The receptacle is started in rotation, and as it acquires a high velocity the mercury or other conducting fluid R is caused by centrifugal action to distribute itself in a layer over the inner peripheral surface of the receptacle. As the tubes or ducts Q do not take part in the rotation of the fluid, being held at the start by the weighted body I, they take up the mercury as soon as it is carried to the points where the ducts open and discharge it upon the vanes of the disk M. By this means the disk is set in rapid rotation, establishing the contact between the two sides of the receptacle which constitute the two terminals of the circuit-controller whenever the two streams or jets of fluid are simultaneously in contact with the vanes, but breaking the contact whenever the jets discharge through the spaces between the vanes. The chief object of employing more than one insulated jet is to secure a higher velocity of approach and separation, and in respect to the number of jets thus employed the device may be obviously modified as desired without departure from the invention. The disk M, having acquired a very rapid rotation, operates to prevent by gyrostatic action any tendency of the body I to rotate or oscillate, as such movement would change the plane of rotation of the disk. The movement of the parts, therefore, and the operation of the device as a whole are very steady and uniform, and a material practical advantage is thereby secured. The speed of the disk will be chiefly dependent on the velocity of the streams and pitch of the blades, and it is of course necessary in order to produce a constant speed of rotation of the disk that the velocity of the streams be constant. This is accomplished by rotating the receptacle with a constant speed; but when this is impracticable and the uniformity of motion of the disk very desirable I resort to special means to secure this result, as by providing overflowing-reservoirs V V, as indicated by dotted lines, from which the fluid issues upon the vanes with constant velocity, though the speed of the receptacle may vary between wide limits.

It may be stated that the jets can be produced in any other known ways and that they may be utilized in any desired manner to produce rotation of the disk.

Having now described my invention, what I claim is—

1. The combination in a circuit-controller with a closed rotary receptacle, of a rigid conductor mounted within the same and through which the circuit is intermittently established, and means for directing a jet or stream of a fluid which is contained in the receptacle, against the said body so as to effect its rotation independently of the receptacle, as set forth.

2. In an electric-circuit controller, the combination of a closed rotary receptacle, a conducting body therein adapted to be rotated independently of the receptacle by the impingement thereon of a jet or stream of conducting fluid, and means for maintaining such a jet and directing it upon the said conductor, as set forth.

3. In a circuit-controller, the combination with a rotary receptacle of a body or part mounted within the receptacle and concentrically therewith, a conducting-terminal supported by said body and capable of rotation in a plane at an angle to the plane of rotation of the receptacle so as to oppose, by gyrostatic action, the rotation of the support, and means for directing a jet of conducting fluid against the said terminal, as set forth.

4. In a circuit-controller, the combination with a rotary receptacle of a support for a conductor mounted thereon concentrically with the receptacle and a gyrostatic disk carried by the support and adapted, when rotating, to oppose its movement in the direction of rotation of the receptacle, as set forth.

5. In a circuit-controller, the combination with a rotary receptacle containing a conducting fluid, a support mounted within the receptacle, means for opposing or preventing its movement in the direction of rotation of the receptacle, one or more tubes or ducts carried thereby and adapted to take up the fluid from the rotating receptacle and discharge the same in jets or streams, and a conductor mounted on the support and adapted to be rotated by the impingement thereon of said jet or jets, as set forth.

6. The combination in a circuit-controller of a rotary receptacle, one or more tubes or ducts and a support therefor capable of rotation independently of the receptacle, a conductor mounted on said support in a plane at an angle to that of rotation of the receptacle, and adapted to be maintained in rotation by a jet of fluid taken up from the receptacle by and discharged upon it from the said tube or duct, when the receptacle is rotated.

7. The combination with a rotary receptacle of one or more tubes or ducts, a holder or support therefor mounted on bearings within the receptacle, which permit of a free relative rotation of said receptacle and holder, a disk with a bearing on the said holder and having its plane of rotation at an angle to that of the receptacle, the disk being formed or provided with conducting-vanes, upon which a jet of conducting fluid, taken up by the tube or duct from the receptacle when in rotation, is directed.

NIKOLA TESLA.

Witnesses:
M. LAWSON DYER,
G. W. MARTLING.

No. 609,250. Patented Aug. 16, 1898.

N. TESLA.

ELECTRICAL IGNITER FOR GAS ENGINES.

(Application filed Feb. 17, 1897. Renewed June 15, 1898.)

(No Model.)

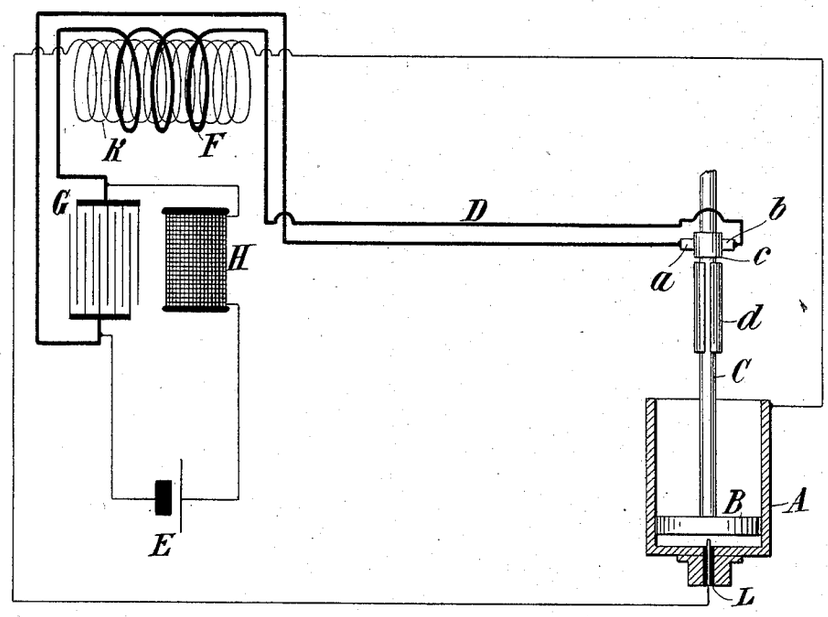

Witnesses:
M. Lawson Dyer.
Edwin B. Hopkinson.

Nikola Tesla, Inventor
by Kerr, Curtis & Page Attys

THE NORRIS PETERS CO., PHOTO-LITHO., WASHINGTON, D. C.

UNITED STATES PATENT OFFICE.

NIKOLA TESLA, OF NEW YORK, N. Y.

ELECTRICAL IGNITER FOR GAS-ENGINES.

SPECIFICATION forming part of Letters Patent No. 609,250, dated August 16, 1898.

Application filed February 17, 1897. Renewed June 15, 1898. Serial No. 683,524. (No model.)

To all whom it may concern:

Be it known that I, NIKOLA TESLA, a citizen of the United States, residing at New York, in the county and State of New York, have invented certain new and useful Improvements in Electrical Igniters for Gas-Engines and Analogous Purposes, of which the following is a specification, reference being had to the drawing accompanying and forming a part of the same.

In certain kinds of apparatus it is necessary for the operation of the machine itself or for effecting the object for which it is used to produce an electric spark or any other similar local effect at a given instant of time or at predetermined intervals. For example, in certain gas or explosive engines a flame or spark is necessary for the ignition of an explosive mixture of air and gas under the piston, and the most effective way of igniting the gaseous mixture has been found to be the production in the cylinder at the proper moments of an electric spark. The only practicable device by which this has been accomplished heretofore is an induction-coil comprising a primary and secondary circuit with a buzzer or rapidly-acting automatic circuit-breaker in the primary and a circuit-controller, such as a switch or commutator, located also in the primary or battery circuit and operated by some moving portion of the apparatus to temporarily close such circuit at the proper time, and thereby set in operation the automatic circuit-breaker, which causes between secondary terminals in the cylinder the discharge which is necessary for the proper ignition of the explosive mixture. Instead of thus temporarily closing the primary circuit the automatic circuit-breaker might be permitted to operate continuously, and the secondary, circuit normally broken, might be closed at the proper time to cause the spark to pass at any point. In either case the employment of a quick-acting circuit-breaker is necessary, for unless the induction-coil be of large size and the source of current of considerable power a slow or gradual make and break of the primary of a simple transformer, such as would ordinarily be effected by a switch or commutator, would not effect a discharge of the character necessary for the proper ignition of the gas.

There is, however, no form of vibrating or quick-acting circuit-breaker of which I am aware that can be depended upon to operate with certainty to produce such a spark or which will continue to operate for any length of time without deterioration, and hence not only in the case of engines of the kind described, but in other forms of apparatus which involve the use of a high-tension induction-coil with a quick-acting circuit-breaker, the operation of the machine is contingent upon the proper operation of a comparatively insignificant but essential part.

The object of my invention is to provide a more certain and satisfactory means for use with and control by such machines or apparatus as I have mentioned for producing sparks or discharges of the desired character, and to this end I employ the following arrangement: Any suitable moving portion of the apparatus is caused to mechanically control the charging of a condenser and its discharge through a circuit in inductive relation to a secondary circuit leading to the terminals between which the discharge is to occur, so that at the desired intervals the condenser may be discharged through its circuit and induce in the other circuit a current of high potential which produces the desired spark or discharge.

One practical means of accomplishing this is to employ any proper form of switch or commutator operated directly or through suitable intermediate devices by a moving part of the apparatus and which is caused to complete an electric circuit which has been previously broken or interrupted for an appreciable time when the occurrence of the spark or discharge is necessary. The circuit thus closed includes a condenser, which by this operation of the switch is permitted to discharge, through the primary of a transformer, energy which it had previously received during the interruption of said circuit from a battery or discharge of a self-induction coil in series with the battery in the charging-circuit.

The ends of the secondary circuit of the transformer above mentioned are connected with the points or terminals in the machine between which the spark is to pass, and following the short-circuiting of the condenser by the closing of the switch a strong secondary discharge induced by the discharge of the

condenser through the primary will occur. It is possible by this means not only to produce a strong discharge of high tension, as in the form of a spark well adapted for the ignition of gas or other purposes for which sparks are employed, but to secure such result by apparatus very much less complicated and expensive than that heretofore employed for the purpose and which will be capable of certain and effective operation for an indefinite period of time.

I have illustrated the principle of my improvement and the manner in which the same is or may be carried out in the drawing hereto annexed. The invention is shown as used for effecting the operation of the piston of a gas-engine, the figure being a diagram.

A designates the cylinder of a gas-engine, B the piston, and C the piston-rod. Other parts of the engine are omitted from the illustration as unnecessary to an understanding of the invention.

On the piston-rod C is a commutator or circuit-controller upon which bear the terminals *a b* of an electric circuit D. This commutator comprises a continuous ring *c* and a split ring *d* side by side, so that when the terminals are on the latter the circuit is interrupted, but when on the former it is closed. The to-and-fro movement of the piston, therefore, operates to alternately make and break the circuit, the position of the commutator being such that the make occurs at the moment desired for the ignition of the explosive charge under the piston.

In the circuit D is a battery or other source of current E and the primary F of a transformer. Across the two conductors of the circuit, between the battery and the primary F, is a condenser G, which is charged by the battery when circuit D is interrupted at the commutator and which discharges through the primary when such circuit is closed.

In order that the condenser may receive a charge of high tension, a self-induction coil H is introduced in the circuit between itself and the battery, which coil stores up the energy of the battery when the circuit D is closed at the commutator and discharges it into the condenser when the circuit is broken.

The primary F is combined with a secondary K, the conductors from which lead, respectively, to an insulated terminal L within the cylinder A and to any other conducting-body in the vicinity of such point as to the cylinder itself. In consequence of this arrangement, when the piston reaches the proper point the circuit D is closed, the energy of the condenser is discharged through the primary with a sudden rush, and a strong and effective spark or flash is produced between the point L and the cylinder or piston which ignites the charge of explosive gas.

It will be understood from the preceding description that I do not limit myself to the specific construction or arrangement of the devices employed in carrying out my improvement and that these may be varied within wide limits.

What I claim is—

1. In an apparatus which depends for its operation or effect upon the production of a sudden electric discharge at a given instant, or at predetermined intervals of time, the combination with a moving part of said apparatus of a switch or commutator, a condenser, a charging-circuit for the same, a primary circuit through which the condenser discharges, and a secondary circuit in inductive relation to the said primary circuit and connected with the terminals at the point in the apparatus where the discharge is required, the switch or commutator being operated by the said moving part to effect the discharge of the condenser at the proper intervals, as set forth.

2. In an apparatus which depends for its operation or effect upon the production of a sudden electric discharge at a given instant, or at predetermined intervals of time, the combination with a moving part of said apparatus of a circuit and a circuit-controller adapted to close said circuit at the time when the occurrence of said discharge is desired, a source of current in said circuit, a condenser adapted to be charged by said source while the circuit is interrupted, and a transformer through the primary of which the condenser discharges when the circuit is closed, the secondary of the transformer being connected with the terminals at the point in the apparatus where the discharge is required, as set forth.

3. In an apparatus which depends for its operation or effect upon the production of an electric discharge, at a given instant, or at predetermined intervals of time, the combination with a moving part of said apparatus of a circuit and a circuit-controller adapted to close said circuit at the time when the occurrence of the spark is desired, a source of current in said circuit, a self-induction coil which stores the energy of the source while the circuit is closed, a condenser into which said coil discharges when the circuit is broken, and a transformer through the primary of which the condenser discharges, the secondary of said transformer being connected with separated terminals at the point where the discharge is required.

4. In a gas or explosive engine of the kind described, the combination with a moving part of said engine of a circuit-closer or switch controlling the charging and discharging of a condenser, separated terminals in the cylinder or explosive-chamber, and a transformer through the primary of which the condenser discharges, the secondary being connected with the terminals in the cylinder, as set forth.

NIKOLA TESLA.

Witnesses:
M. LAWSON DYER,
EDWIN B. HOPKINSON.

No. 609,251. Patented Aug. 16, 1898.

N. TESLA.

ELECTRIC CIRCUIT CONTROLLER.

(Application filed June 3, 1897. Renewed June 15, 1898.)

(No Model.) 2 Sheets—Sheet 1.

Fig. 3

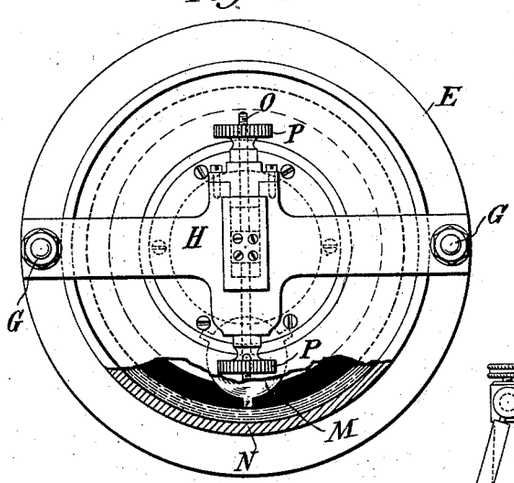

Fig. 2

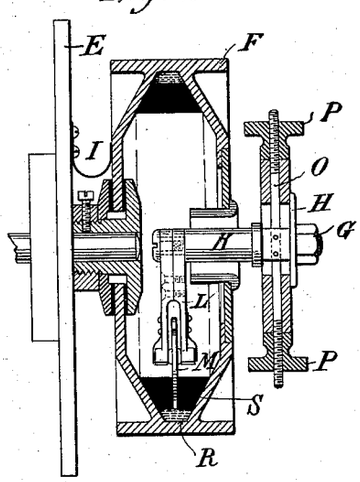

Fig. 1

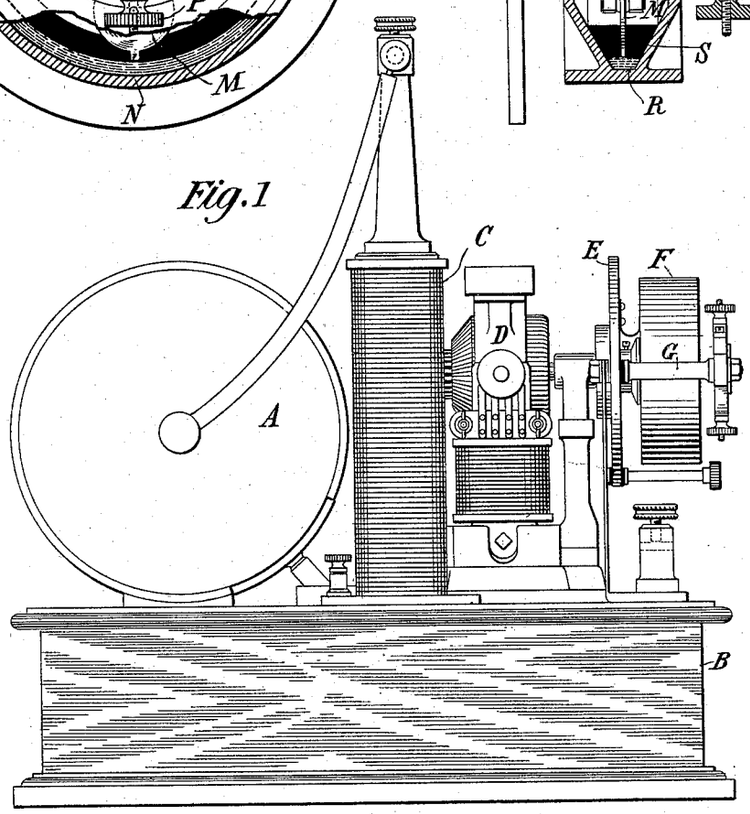

Witnesses:
Raphaël Netter
Edwin B. Hopkinson.

Inventor
Nikola Tesla
by Kerr, Curtis & Page Att'ys.

THE NORRIS PETERS CO., PHOTO-LITHO., WASHINGTON, D. C.

No. 609,251. Patented Aug. 16, 1898.

N. TESLA.

ELECTRIC CIRCUIT CONTROLLER.

(Application filed June 3, 1897. Renewed June 15, 1898.)

(No Model.) 2 Sheets—Sheet 2.

Fig. 4

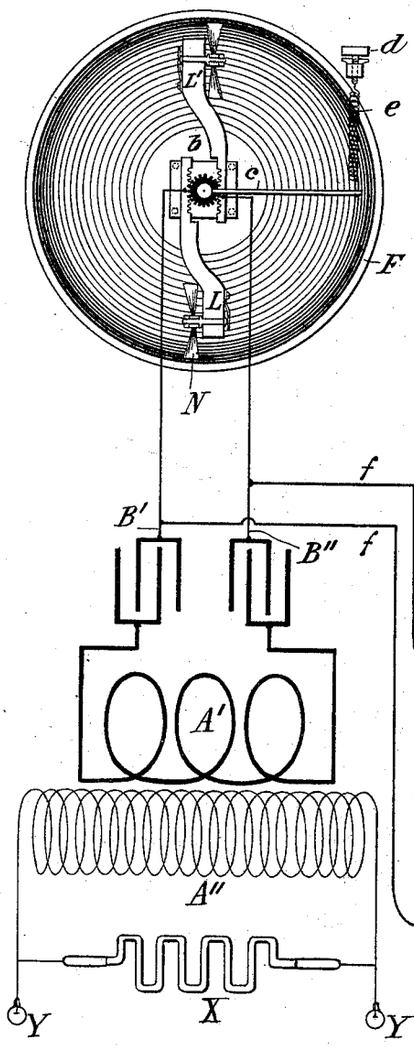

Fig. 5

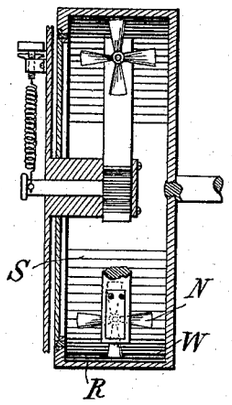

WITNESSES

Edwin B. Hopkinson.

G. B. Lorin.

INVENTOR

Nikola Tesla

BY

Kerr, Curtis & Page

ATTORNEYS.

THE NORRIS PETERS CO., PHOTO-LITHO., WASHINGTON, D. C.

UNITED STATES PATENT OFFICE.

NIKOLA TESLA, OF NEW YORK, N. Y.

ELECTRIC-CIRCUIT CONTROLLER.

SPECIFICATION forming part of Letters Patent No. 609,251, dated August 16, 1898.

Application filed June 3, 1897. Renewed June 15, 1898. Serial No. 683,525. (No model.)

To all whom it may concern:

Be it known that I, NIKOLA TESLA, a citizen of the United States, residing at New York, in the county and State of New York, have invented certain new and useful Improvements in Electric-Circuit Controllers, of which the following is a specification, reference being had to the drawings accompanying and forming a part of the same.

In previous patents granted to me I have shown and described methods and apparatus for the conversion and utilization of electrical currents of very high frequency based upon the principle of charging a condenser or a circuit possessing capacity and discharging the same generally through the primary of a transformer, the secondary of which constituted the source of working current and under such conditions as to yield a vibrating or rapidly-intermittent current.

In some of the forms of apparatus which I have heretofore devised for carrying out this invention I have employed a mechanism for making and breaking an electric circuit or branch thereof for the purpose of charging and discharging the condenser, and my present application is based upon a novel and improved form of device for this purpose, which may be generally styled a "circuit-controller."

In order that the full advantages of my system may be realized and the best practical results secured, the said circuit-controller should be capable of fulfilling certain requirements, the most important among which is the capability of effecting an extremely-rapid interruption and completion of the circuit. It is also of importance that such makes and breaks, and more especially the former, should be positive and abrupt, and from considerations of economy and practicability it is essential that the apparatus should be cheaply constructed, not liable to derangement, and capable of prolonged use without attention or adjustment. With the object of attaining these results, which have never heretofore been fully attained in any form of mechanical circuit-controller of which I am aware, I devised and developed the circuit-controller which forms the subject of my present application and which may in general terms be described as follows:

The device in its typical embodiment comprises as essential elements two terminals—one with peripheral contacts alternating with insulating-spaces, such as is exemplified in a stelliform disk and which is capable of rotation, and the other a rotatable receptacle containing a fluid in which more or less of the first-named terminal is immersed.

In the preferred construction of the apparatus the receptacle contains both a conducting and a non-conducting fluid, the former being the heavier, and I maintain the terminals in such relations that the electrical connection between them is made and broken by the successive immersion of the contact-points into and their withdrawal from the conducting through the non-conducting fluid. These relations are best maintained by such construction of the receptacle that the distribution of the two fluids necessary for the proper operation of the device may be preserved by centrifugal action and the rotation of the other terminal effected by the movement of the fluid or fluids relatively thereto.

To secure the conditions necessary for the accomplishment of the objects of the invention, various mechanical expedients may be resorted to; but the best and most practicable device for the purpose of which I am aware is a hollow wheel or drum mounted so as to be rotated at any desired speed and containing a conducting fluid, such as mercury or an electrolyte, which by the rotation of the drum is thrown by centrifugal force outward to the inner periphery of the same, and a sufficient quantity of a lighter non-conducting or poorly-conductive fluid, such as water or oil, which by the centrifugal action is maintained on the surface of the heavier conducting fluid and tends to prevent the occurrence of arcs between the contact-points and the conducting fluid.

A central opening is formed in one side of the drum, through which enters an arm carrying a disk with peripheral projections or vanes which when the drum is rotated project to a sufficient extent toward or into the conducting fluid to effect the makes and breaks of the circuit.

The motion of the fluid within the drum causes the disk to rotate and its projections or vanes to make and break the circuit with

a rapidity which may be very great. In fact, when the drum is rotated at a high rate of speed the fluid conductor may become in its effect similar to a solid body, upon which the conducting-disk rolls, so that the conducting fluid might be dispensed with, although I find it preferable to use it.

In order to insure the proper immersion of the projections into the fluid to compensate for wear and at the same time to secure a yielding pressure between the fluid and the disk, it is desirable to employ for the disk some form of spring connection or support which will exert a force tending to force it in contact with the fluid.

I have also devised certain details of construction which add to the efficiency and practicability of the apparatus which will be more conveniently described by reference to the accompanying drawings.

Figure 1 is a side elevation of a complete apparatus for producing currents of high frequency and to which my present invention is applied. Fig. 2 is a central vertical section of the improved circuit-controller of Fig. 1; Fig. 3, an end view of the same; Fig. 4, a modified form of the circuit-controller, showing it in connection with the remaining parts of the apparatus illustrated diagrammatically; and Fig. 5, a side view of the same with the receptacle in section.

As the apparatus as a whole is now well known, a brief description of the same will suffice for an understanding of its character.

The various parts or devices are preferably mounted on a base B, which contains the condenser, and comprise a transformer A with primary and secondary coils, one or more self-induction coils C, a small electromagnetic motor D, and the circuit-controller, which is driven by the motor. The circuit connections will be described in connection with Fig. 5.

In general plan of construction and arrangement the apparatus is essentially the same as that described and shown in a patent granted to me September 22, 1896, No. 568,176.

The shaft of the motor D extends through a stationary disk E, and to its end is keyed a hollow wheel or drum F, which rotates with it. Two standards G are secured to the disk E and connected by a cross-bar H, from which extends an arm K into the interior of the drum F through a central opening in its side.

To the end of the arm K is secured an arm L, carrying at its free end a disk M with peripheral teeth or projections N, as shown in Fig. 3. The disk is mounted on any suitable bearings in the arm L, so as to be capable of free rotation.

It is desirable that the disk should admit of adjustment with respect to the inner peripheral surface of the drum, and for this purpose I secure the arm K to a rod O, which passes through supports in the cross-bar H and is adjustable therein by means of threaded nuts P.

The interior of the drum F is formed by preference in substantially the manner shown in Fig. 2—that is to say, it is tapered or contracted toward the periphery so as to form a narrow trough in which the fluid is confined when the drum is rotated.

R designates the conducting fluid, and S the lighter non-conducting fluid, which are used in the drum. If the proper quantities and proportions of these fluids be introduced into the drum and the latter set in rapid rotation, the two fluids will distribute themselves under the action of centrifugal force around the drum in the manner indicated in Fig. 2. The arm K is adjusted so that the teeth or projections on the disk M will just enter the conducting fluid, and by the action of either or both the disk will be rapidly rotated. Its teeth are so arranged that no two are simultaneously in contact with the conducting fluid, but come into the same successively. If, therefore, one part of the circuit be connected to the drum, as by a contact strip or brush T, and the other part to the disk M, or to any part, as the standards G, which are insulated from the frame of the apparatus and in metallic connection with the disk M, the circuit will be made and broken with a rapidity which may obviously be made enormously high. The presence of the non-conducting fluid on the surface of the other operates to prevent the occurrence of sparks as the teeth N leave the latter and also to prevent the current from leaping across the space between the teeth and the conductor as the two approach.

In illustration of the modifications of which the improvement is susceptible I now refer to Figs. 4 and 5, in which also certain novel and useful details of construction applicable generally to the invention are shown.

In the modification shown in Figs. 4 and 5 two rigid arms L and L′, each carrying a disk M, are shown, and this number may be increased, if so desired. The rotating disks in this case are mounted on spindles at right angles to the axis of rotation of the drum F, and the contact points or projections are formed as vanes, with faces inclined to the plane of rotation, so as to be rotated by the movement of the fluid in the manner of turbine wheels.

In order to provide a means for automatically adjusting the disks to compensate for any wear and keep the ends of the vanes or points properly immersed in the fluids, each disk-carrying arm is impelled by a spring or weight in the direction of the periphery of the drum. A convenient way to accomplish this is to form racks on the arms L L′ and to provide a pinion *b* in engagement therewith. From the shaft of the pinion extends an arm *c*, the end of which is connected to an adjustable stop *d* by a spiral spring *e*, the tendency of which is to turn the pinion and force both arms L and L′ toward the periphery of the drum.

In some applications of the invention it is practicable to prevent the occurrence of arcs

still more effectively or even entirely by using in addition to the non-conducting fluid a somewhat heavier fluid W, which is a comparatively poor conductor and which takes up a position between the conducting and non-conducting fluids.

When two or more disks or equivalent devices are used, they may be connected either in series or multiple. In the present illustration they are shown as in series, and as the arms L and L′ are insulated from each other and each connected with a terminal of the source of current the circuit is completed only when a vane of each disk is immersed in the conducting fluid and interrupted at all other times.

The diagram of circuit connections will serve to illustrate the purpose and mode of operation of the device. Let *f f* be the conductors from a source of current, each including a self-induction coil C C′ and connected with the arms L and L′ and with two conductors B′ B″, respectively. Then during the periods when the circuit is completed between the two arms L L′ the coils C C′ store energy, which on the interruption of said circuit rushes into and charges the condensers. These latter during the periods when the circuit is closed between arms L and L′ discharge through the primary A′ and induce by such discharge currents in the secondary A″, which are utilized for any purpose for which they may be suited, as in operating vacuum-tubes X or suitable lamps Y.

It will be understood that the rotating drum may be mounted in a horizontal or other plane and from the nature and objects of the results which are attained by the particular apparatus described the construction of this apparatus may be very greatly varied without departure from my invention.

Without therefore limiting myself to the details of construction and arrangement shown herein in illustration of the manner in which my invention is or may be carried out, what I claim is—

1. A circuit-controller comprising, in combination, a receptacle containing a fluid, means for rotating the receptacle, and a terminal supported independently of the receptacle and adapted to make and break electric connection with the receptacle through the fluid, as set forth.

2. A circuit-controller comprising in combination a receptacle containing a conducting fluid and a non-conducting fluid, means for rotating the receptacle and a terminal adapted to make and break electrical connection with the conducting fluid within or under the non-conducting fluid, as set forth.

3. A circuit-controller comprising in combination a terminal capable of rotation and formed or provided with peripheral contacts, a receptacle comprising the opposite terminal and containing a fluid into which the said contacts extend, and means for rotating the receptacle, as set forth.

4. A circuit-controller, comprising, in combination, a terminal capable of rotation and formed or provided with peripheral projections, a receptacle containing a fluid conductor into which the points or projections of the said conductor extend, and means for rotating the said receptacle, as set forth.

5. A circuit-controller comprising, in combination, a terminal capable of rotation and formed or provided with peripheral projections, a centrifugal drum or wheel containing a fluid conductor into which the points or projections of the said conductor extend, and means for rotating the said drum, as set forth.

6. A circuit-controller comprising, in combination, a terminal capable of rotation and formed or provided with peripheral projections, a centrifugal drum or wheel containing a fluid conductor into which the points of the said terminal extend, and means for adjusting the latter with relation to the surface of the fluid, as set forth.

7. A circuit-controller comprising, in combination, a terminal having peripheral projections and capable of rotation, a centrifugal drum or receptacle containing a conducting and a lighter non-conducting fluid, the said terminal being arranged so that its points or projections extend through the non-conducting into the conducting fluid, when the fluids are distributed in the drum under the action of centrifugal force, as set forth.

8. The combination with a hollow centrifugal drum or wheel containing a conducting fluid, a motor for rotating the same, a support extending through an opening into the drum, and a rotatable terminal having peripheral projections, mounted on said support in position in which its projections extend into the fluid when displaced by centrifugal action, as set forth.

9. The combination with a receptacle containing a fluid and means for rotating the same, a terminal with peripheral projections capable of rotation, and a spring connection or support for said terminal tending to force it toward the periphery of the receptacle, as set forth.

10. The combination with a hollow centrifugal drum or wheel containing a conducting fluid and a lighter non-conducting fluid, means for rotating the said drum, a support extending through an opening into the drum, and a rotatable terminal having peripheral projections, mounted on said support in position in which the projections extend through the non-conducting into the conducting fluid when the fluids are displaced by centrifugal action, as set forth.

11. The combination with a centrifugal drum containing a conducting and a non-conducting fluid, means for rotating the drum, a terminal capable of rotation and having peripheral projections, mounted within the drum on a stationary support, and a spring or its equivalent acting on the said terminal

and tending to force its projections toward the inner periphery of said drum, as set forth.

12. The combination with a receptacle containing a conducting fluid, a lighter fluid of low conductivity and a non-conducting fluid lighter than the others, and means for rotating the receptacle, of a terminal adapted to make and break the circuit by movements between the conducting and non-conducting fluid through the intermediate fluid of low conductivity, as set forth.

NIKOLA TESLA.

Witnesses:
M. LAWSON DYER,
PARKER W. PAGE.

No. 611,719. Patented Oct. 4, 1898.

N. TESLA.

ELECTRICAL CIRCUIT CONTROLLER.

(Application filed Dec. 10, 1897.)

(No Model.)

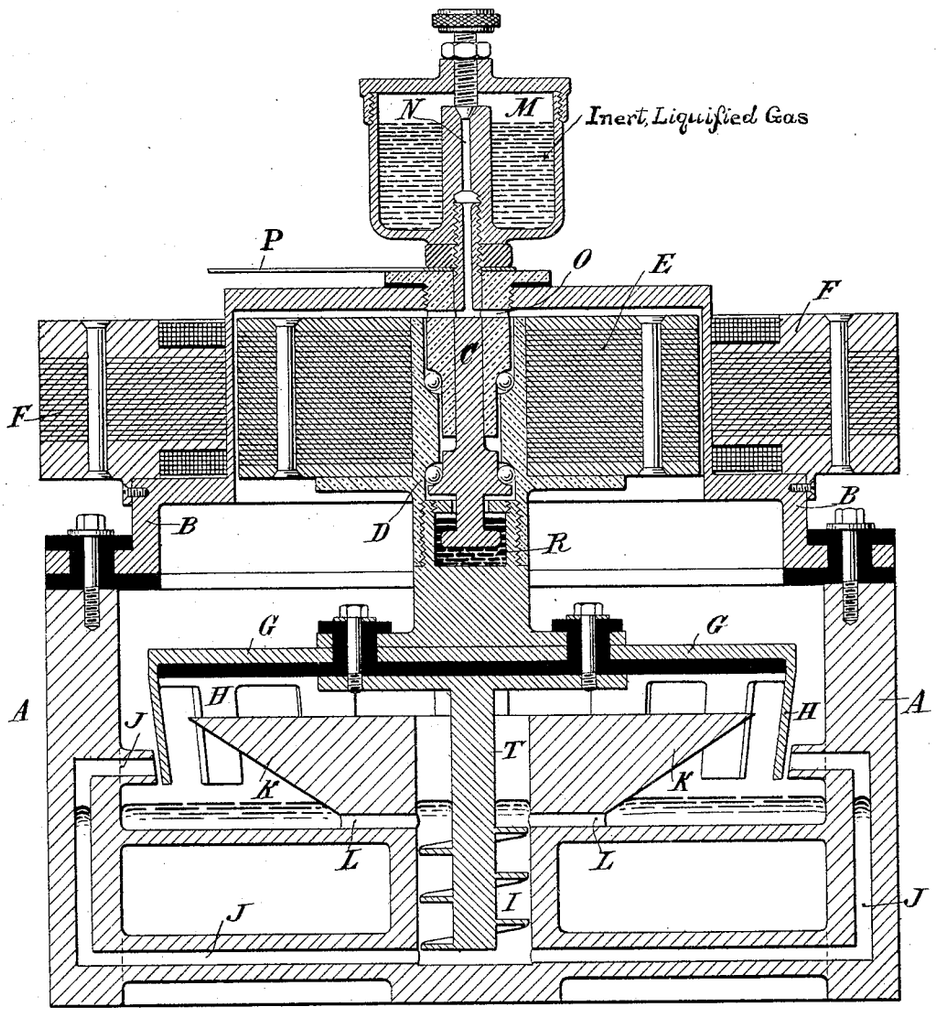

Witnesses:
Raphaël Netter
Edwin B. Hopkinson.

Nikola Tesla, Inventor
by Kerr, Curtis & Page Att'ys.

THE NORRIS PETERS CO., PHOTO-LITHO., WASHINGTON, D. C.

UNITED STATES PATENT OFFICE.

NIKOLA TESLA, OF NEW YORK, N. Y.

ELECTRICAL-CIRCUIT CONTROLLER.

SPECIFICATION forming part of Letters Patent No. 611,719, dated October 4, 1898.

Application filed December 10, 1897. Serial No. 661,403. (No model.)

To all whom it may concern:

Be it known that I, NIKOLA TESLA, residing at New York, in the county and State of New York, have invented certain new and useful Improvements in Electrical-Circuit Controllers, of which the following is a specification, reference being had to the drawings accompanying and forming part of the same.

In order to secure a more efficient working of circuit-controllers, particularly in their use in connection with my system of electrical-energy conversion by means of condenser discharges, I have devised certain novel forms of such appliances, comprising as essential elements a body of conducting fluid constituting one of the terminals, a conductor or series of conductors forming the other terminal, and means for bringing the two into rapidly-intermittent contact with each other. These devices possess many desirable qualities, particularly that of being eminently adapted for making and breaking at a very rapid rate an electric circuit and thus reducing to a minimum the time of passage of the current through an arc or path of high resistance and diminishing thereby the losses incident to the closure and interruption of the circuit. Continued experimentation with these appliances has led me to make further important improvements by causing the make-and-break to be effected in an inert medium of very high insulating power.

It is a fact, which was fully demonstrated by Poggendorff and utilized by him to improve the operation of induction-coils, that when the contact-points of a circuit-breaker are inclosed in a vessel and the latter exhausted to a high degree the interruption of the current is rendered more sudden, as if a condenser were connected around the break. Furthermore, my own investigations have shown that under such conditions the closure also is more sudden, and this to even a greater degree than the break, which result I attribute to the high insulating quality of the vacuous space, in consequence of which the electrodes may be brought in very close proximity before an arc can be formed between them. Obviously these facts may be utilized in connection with my novel circuit-controllers; but inasmuch as only a very moderate improvement is secured in this manner and as the high vacuum required is quickly destroyed and cannot be maintained, unless by a continuous process of rarefaction and other inconvenient measures, I have found it desirable to employ more effective and practical means to increase the efficiency of the devices in question. The measures I have adopted for this purpose have resulted from my recognition of certain ideal qualifications of the medium wherein to effect a make-and-break. These may be summed up as follows: First, the medium by which the contact-points are surrounded should have as high an insulating quality as possible, so that the terminals may be approached to an extremely short distance before the current leaps across the intervening space; second, the closing up or repair of the injured dielectric, or, in other words, the restoration of the insulating power, should be instantaneous in order to reduce to a minimum the time during which the waste principally occurs; third, the medium should be chemically inert, so as to diminish as much as possible the deterioration of the electrodes and to prevent chemical processes which might result in the development of heat or, in general, in loss of energy; fourth, the giving way of the medium under the application of electrical pressure should not be of a yielding nature, but should be very sudden and in the nature of a crack, similar to that of a solid, such as a piece of glass when squeezed in a vise, and, fifth, most important, the medium ought to be such that the arc when formed is restricted to the smallest possible linear dimensions and is not allowed to spread or expand. As a step in the direction of these theoretical requirements I have employed in some of my circuit-controlling devices a fluid of high insulating qualities, such as liquid hydrocarbon, and caused the same to be forced, preferably with great speed, between the approaching and receding contact-points of the circuit-controller. By the use of such liquid insulator a very marked advantage was secured; but while some of the above requirements are attained in this manner certain defects still exist, notably that due to the fact that the insulating liquid, in common with a vacuous space, though in a less degree, permits the arc to expand in length and

thickness, and thus pass through all degrees of resistance and causing a more or less considerable waste of energy. To overcome this defect and to still more nearly attain the theoretical conditions required for most efficient working of the circuit-controlling devices, I have been finally led to use a fluid insulating medium subjected to great pressure.

The application of great pressure to the medium in which the make-and-break is made secures a number of specific advantages. One of these may be obviously inferred from well-established experimental facts, which demonstrate that the striking distance of an arc is approximately inversely proportional to the pressure of gaseous medium in which it occurs; but in view of the fact that in most cases occurring in practice the striking distance is very small, since the difference of potential between the electrodes is usually not more than a few hundred volts, the economical advantages resulting from the reduction of the striking distance, particularly on approach of the terminals, are not of very great practical consequence. By far the more important gain I have found to result from an effect which I have observed to follow from the action of such a medium when under pressure upon the arc—namely, that the cross-section of the latter is reduced approximately in an inverse ratio to the pressure. As under conditions in other respects the same the waste of energy in an arc is proportional to its cross-section, a very important gain in economy generally results. A feature of great practical value lies also in the fact that the insulating power of the compressed medium is not materially impaired even by considerable increase in temperature, and, furthermore, that variations of pressure between wide limits do not interfere notably with the operation of the circuit-controller, whereas such conditions are fatal drawbacks when, for instance, Poggendorff's method of insulating the terminals is used. In many other respects, however, a gas under great compression nearly fulfils the ideal requirements above mentioned, as in the sudden breaking down and quick restoration of the insulating power, and also in chemical inertness, which by proper selection of the gas is easily secured.

In carrying out my invention the medium under pressure may be produced or maintained in any proper manner, the improvement not being limited in this particular to any special means for the purpose. I prefer, however, to secure the desired result by inclosing the circuit-controller, or at least so much of the same as shall include the terminals, in a chamber or receptacle with which communicates a small reservoir containing a liquefied gas. For purpose of illustration this particular manner of carrying out the invention is described herein.

While the improvement is applicable generally to circuit-controllers, the best results will be secured by the use of devices in which a high relative speed between the terminals is obtainable, and with this special object in view I have devised a novel circuit-controller which, though belonging to the class of which I have shown a typical form in my application for patent filed December 2, 1897, Serial No. 660,518, differs in certain particulars of construction, which will be understood from the following comparison: In the previously-described form of said circuit-controllers a rotary receptacle, carrying within it a series of spaced conductors, is driven at a high speed by a suitable motor. Mounted within and concentrically with the receptacle, but capable of free independent rotation with respect thereto, is a body which during the rotation of the receptacle is retarded or restrained against rotation by the application of a suitable force. This body carries a tube or duct which takes up at one end a fluid conductor contained in the receptacle and rotating with the same and discharges it from the other end against the rotating spaced conductors.

While an apparatus thus constructed is very efficient and performs the work required of it in a highly-satisfactory manner, it is nevertheless subject to certain limitations, arising mainly from the amount of work which the conducting fluid is required to perform and which increases with the speed. With the object of overcoming objections that might lie to this form of circuit-controller in the particular referred to, I devised the form of instrument shown herein. The features which more particularly distinguish this form are the following: I employ a closed stationary receptacle within which is mounted a body that is capable of being rotated in any way—as, for example, by the drag or pull upon it of an external field of force or a magnet rotated bodily. The rotary body imparts rotation to a series of spaced conductors within the receptacle and also operates as a pump to maintain a flow of conducting fluid through one or more stationary ducts and from the same against the rotating conductors.

The details of this apparatus will be described by reference to the accompanying drawing, which is a vertical central section of the circuit-controller complete.

A is a receptacle, of iron, steel, or other proper material, with a head B, secured by a gas-tight insulating-joint. Within this receptacle is contained the circuit-controller, which, in so far as the main feature of my present invention is concerned, may be of any desired construction, but which, for the reason stated above, is of the special character shown. A spindle C is screwed or otherwise secured centrally in the head B, and on this is mounted on antifriction-bearings a body to which rotary motion may be imparted. The construction of the device in this particular and the means for imparting rotation to the said body may be greatly varied; but a convenient means for accomplishing this is to secure to the rotary sleeve D a laminated

magnetic core E and place around the portion of the head B which contains it a core F, provided with coils and constituting the primary element of a motor capable of producing a rotary field of force which will produce a rapid rotation of the secondary element or core E. To the depending end of the sleeve D is secured a conductor G, usually in the form of a disk with downwardly-extending teeth or peripheral projections H. To the sleeve or the disk G is also attached, but insulated therefrom, a shaft T, having a spiral blade and extending down into a well or cylindrical recess in the bottom of the receptacle. One or more ducts or passages J lead from the bottom of this well to points near the path of the conducting-teeth H, so that by the rotation of the screw I a conducting fluid, which runs into the well from the receptacle, will be forced up through the duct or ducts, from which it issues in a jet or jets against the rotating conductor. To facilitate this operation, the well is surrounded by a flange K, containing passages L, which permit the conducting fluid to flow from the receptacle into the well, and having beveled sides which serve as a shield to deflect the fluid expelled from the ducts through the spaces in the conductor to the bottom of the receptacle.

M is any suitable reservoir communicating with the interior of the main receptacle and containing a liquefied gas, such as ammonia, which maintains a practically inert atmosphere under pressure in the receptacle.

Preferably, though mainly as a matter of convenience, the receptacle M is a metal cup with a hollow central stem N, the opening for the passage of gas being controlled by a screw-valve in the top of the cup. The said cup is screwed onto the end of the spindle C, through which is a passage O, leading into the interior of the receptacle A.

The receptacle A and the conducting fluid, which is generally mercury, being normally insulated from the head B and the parts attached and supported thereby, are connected to one part of the circuit to be controlled. The other circuit connection is made by a conductor P to any part of the head, so that when the core E and conductor G are rotated the circuit will be completed between the two insulated parts of the receptacle through the jet or jets of conducting fluid whenever they impinge upon the said conductor.

To insure a good electrical connection between the sleeve D and the spindle C, I provide in the former a small chamber R, which contains mercury, and into this the end of the spindle C extends.

The special advantages of this particular form of circuit-controller heretofore referred to will now more readily appear. The mass and weight of the rotating parts are greatly reduced and a very high speed of rotation obtained with small expenditure of energy. The power required to maintain the jets of conducting fluid is, moreover, very small.

Having now described my invention, what I claim is—

1. The combination with a closed receptacle, of a circuit-controller contained therein and surrounded by an inert insulating medium under pressure.

2. The combination with a closed receptacle, of a circuit-controller contained therein and means for maintaining within said receptacle an inert atmosphere under pressure.

3. The combination with a closed receptacle, of a circuit-controller contained therein, and a vessel containing a liquefied inert gas, and communicating with the interior of the receptacle.

4. The combination with a circuit-controlling mechanism, one part or terminal of which is a conducting fluid, such as mercury, of a receptacle inclosing the same and means for maintaining an inert gas under pressure in the receptacle.

5. The combination with a conductor or series of conductors constituting one terminal of a circuit-controller, means for maintaining a stream or jet of conducting fluid as the other terminal with which the conductor makes intermittent contact, a close receptacle containing the terminals, and means for maintaining an inert atmosphere under pressure in the receptacle.

6. A device for making and breaking an electric circuit comprising, in combination, means for maintaining a jet or stream of conducting fluid which constitutes one terminal, a conductor or conductors making intermittent contact with the jet and constituting the other terminal and a receptacle inclosing and excluding oxygen from the said terminals.

7. The combination with a receptacle, of a conductor or series of spaced conductors mounted therein, a motive device for rotating said conductors, one or more nozzles for directing a stream or jet of fluid against the conductor, and a force-pump in direct connection with the conductor for maintaining a circulation of conducting fluid contained in the receptacle through the nozzle or nozzles, the conductor and the fluid constituting respectively the terminals of a circuit-controller.

8. The combination of a casing, a conductor or series of spaced conductors mounted therein, a motor for rotating the same, one or more ducts or channels from a receptacle containing a conducting fluid and directed toward the conductors, and a screw operated by the motor for forcing the conducting fluid through the duct or ducts against the conductors, the conductors and the fluid constituting the terminals of an electric-circuit controller.

9. The combination with a receptacle containing a conducting fluid, of a conductor mounted within the receptacle, means for rotating the same, a screw rotating with the conductor and extending into a well in which

the fluid collects, and a duct or ducts leading from the well to points from which the fluid will be directed against the rotating conductor.

10. The combination with the receptacle, of a spindle secured to its head or cover, a magnetic core mounted on the spindle within the receptacle, means for rotating said core, a conductor rotated by the core, and a pumping device, such as a screw rotated by the core and operating to maintain a jet or jets of conducting fluid, against the conductor, when in rotation.

NIKOLA TESLA.

Witnesses:
M. LAWSON DYER,
G. W. MARTLING.

No. 613,735. Patented Nov. 8, 1898.

N. TESLA.

ELECTRIC CIRCUIT CONTROLLER.

(Application filed Apr. 19, 1898.)

(No Model.) 2 Sheets—Sheet 1.

Fig. 1

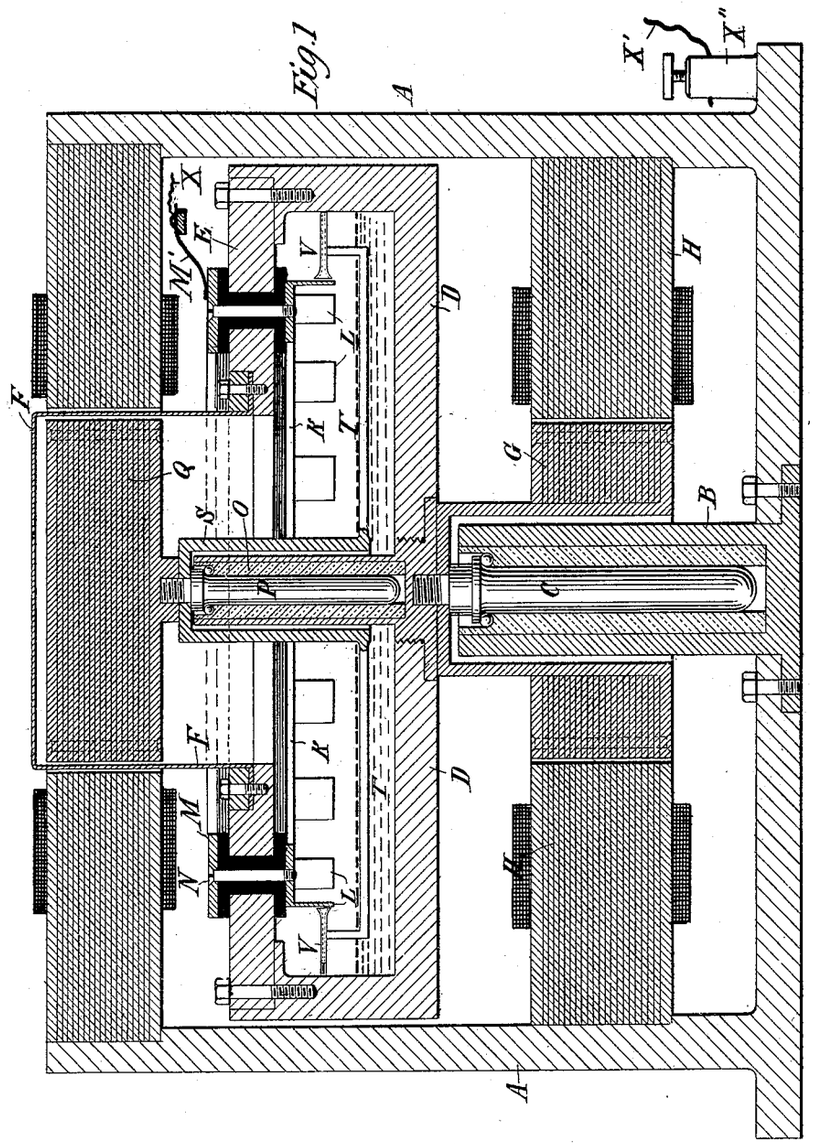

Witnesses:
Raphael Netter
Benjamin Miller.

Nikola Tesla, Inventor
by Kerr, Curtis & Page Attys.

THE NORRIS PETERS CO., PHOTO-LITHO., WASHINGTON, D. C.

No. 613,735. Patented Nov. 8, 1898.

N. TESLA.

ELECTRIC CIRCUIT CONTROLLER.

(No Model.) (Application filed Apr. 19, 1898.) 2 Sheets—Sheet 2.

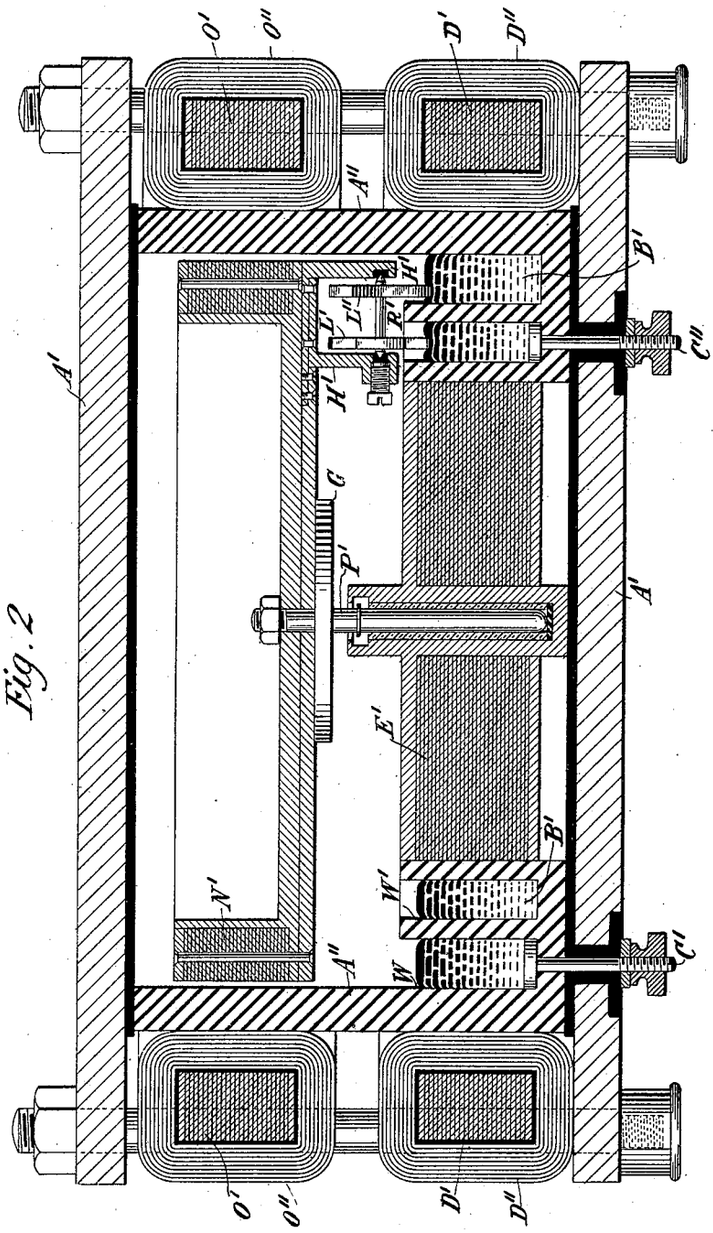

Fig. 2.

Witnesses;
Raphael Netter
Benjamin Miller.

Nikola Tesla, Inventor
by Kerr, Curtis & Page Attys

THE NORRIS PETERS CO., PHOTO-LITHO., WASHINGTON, D. C.

UNITED STATES PATENT OFFICE.

NIKOLA TESLA, OF NEW YORK, N. Y.

ELECTRIC-CIRCUIT CONTROLLER.

SPECIFICATION forming part of Letters Patent No. 613,735, dated November 8, 1898.

Application filed April 19, 1898. Serial No. 678,127. (No model.)

To all whom it may concern:

Be it known that I, NIKOLA TESLA, residing at New York, in the county and State of New York, have invented certain new and useful Improvements in Electrical-Circuit Controllers, of which the following is a specification, reference being had to the drawings accompanying and forming a part of the same.

In the electrical system or combination of apparatus for the conversion of electrical energy by means of the discharges of a condenser invented and heretofore described by me the means employed for making and breaking the electric circuit, though performing a subordinate function, may from the peculiar conditions which exist become a highly important consideration, not only as regards their practicability and durability, but also the economy in the operation of the system or apparatus. Of such importance is this consideration that for the most efficient and reliable operation of my said system I have found it necessary to devise special appliances for making and breaking the circuit which differ materially in construction and mode of operation from any previously-existing devices of this character of which I am aware. In the forms of such apparatus which I have produced at least one of the terminals is a conducting fluid, while the other is usually a solid conductor or series of conductors, both being preferably inclosed in a gas-tight receptacle and brought by rotary movement into rapidly intermittent contact. I have shown and described typical forms of such circuit-controllers in applications Serial No. 660,518, filed December 2, 1897; Serial No. 639,227, filed June 3, 1897, and Serial No. 671,897, filed February 28, 1898.

The invention, subject of my present application, pertains to apparatus of this class and involves certain improvements in the construction and mode of operation of the same which have primarily for their object to secure a greater relative speed between the two terminals, whereby the periods of make-and-break, during which occurs the chief loss of energy, may be materially shortened and also a higher frequency of current impulses secured. A brief consideration of the forms of circuit-controller of this general kind which I have heretofore shown and described will conduce to a better understanding of the principles followed in the construction of the apparatus upon which my present application is based and of the primary object which I have in view—to increase the relative speed of the two terminals in approaching and receding from each other.

In some forms of the circuit-controllers heretofore described by me I employ a closed receptacle capable of being maintained in rapid rotation. Within this receptacle is mounted a body the rotation of which is retarded or prevented and which carries a tube or duct which takes up a conducting fluid from the receptacle when the latter is rotated and directs the said fluid against a conductor or series of spaced conductors carried by the rotating receptacle. This apparatus, while effective to a high degree and possessing many advantages over previously-existing forms, is nevertheless subject to certain limitations as to efficiency, having regard to the speed at which the receptacle is rotated, for not only may an undue loss of energy result from rotating the receptacle, but also from the unnecessarily-rapid movement of the conducting fluid. With a view to improving the apparatus in these particulars I devised forms in which the receptacle was stationary and the interior terminal conductor rotated, and by this means I reduced the mass and weight of the moving parts. I also employed a device in the nature of a pump, which formed a part of the circuit-controller proper and was operated by the motor used for rotating the conductor, and thus maintained a flow of conducting fluid from ducts in the receptacle against the rotating conductor with no greater speed than required for efficient operation. By such an apparatus it is not only possible to secure a higher relative speed between the two terminals, but to do this with a smaller expenditure of mechanical energy. To still further increase the relative speed of the terminals, I now provide for rotating each of the terminals with respect to the other, so that the rate of mutual contact is very greatly increased.

Obviously various means may be employed for rotating the conductors, or, in general, the two essential parts which by their movement

produce a make and break; but in the annexed drawings I have only shown such forms of the apparatus as best illustrate the present improvement.

Figure 1 is a central vertical section of a circuit-controller comprising a conductor or series of conductors forming one terminal and means for maintaining a jet or jets of conducting fluid constituting the other terminal, which are arranged to be rotated in opposite directions. Fig. 2 is a similar view of a modified form of circuit-controller.

A designates a casting of cylindrical form within which is a standard or socket B, in which is mounted a vertical spindle C, carrying the circuit-controlling mechanism. The said mechanism is contained in a receptacle D, of iron or steel, the top or cover of which is composed of an annular plate E and a cap or dome F, the latter being of insulating material or of a metal of comparatively high specific resistance, such as German silver. The receptacle D as a whole is made air-tight and any suitable means may be employed to effect its rotation, the particular device shown for this purpose being an electromagnetic motor, one element, G, of which is secured to the spindle C or receptacle D and the other, H, to the box or case A. Within the receptacle D and secured to the top of the same, but insulated therefrom, is a circular conductor K, with downwardly-extending projections or teeth L. This conductor is maintained in electrical connection with a plate M outside of the receptacle by means of screws or bolts N, passing through insulated gaskets in the top of the receptacle D. Within the latter is a standard or socket O, in which is mounted a spindle P, concentric with the axis of the receptacle.

Any suitable means may be provided for rotating the spindle P independently of the receptacle D; but for this purpose I again employ an electromagnetic motor, one element, Q, of which is secured to the spindle P within the receptacle D and the other, R, is secured to the box A and surrounds the cap or dome F, within which is mounted the armature Q.

Depending from the spindle P or the armature Q is a cylinder S, to which are secured arms T T, extending radially therefrom and supporting short tubes or ducts V between the peripheral walls of the receptacle D and the series of teeth or projections L.

The tubes V have openings at one end in close proximity to the inner wall of the receptacle D and turned in a direction opposite to that in which the latter is designed to rotate and at the other end orifices which are adapted to direct a stream or jet of fluid against the projections L.

To operate the apparatus, the receptacle D, into which a suitable quantity of conducting fluid, such as mercury, is first poured, and the spindles P are both set in rotation by their respective motors and in opposite directions. By the rotation of receptacle D the conducting fluid is carried by centrifugal force up the sides or walls of the same and is taken up by the tubes or ducts V and discharged against the rotating conductors L. If, therefore, one terminal of the circuit be connected with any part of the receptacle D or the metal portions of the instrument in electrical connection therewith and the other terminal be connected to the plate M, the circuit between these terminals will be completed whenever a jet from one of the ducts V is discharged against one of the projections L and interrupted when the jets are discharged through the spaces between such projections. I have indicated the necessary circuit connections by wires X and X′, connected, respectively, with a brush M′, bearing upon the circular plate M, and a binding-post X″, set in the frame or casing A.

In Fig. 2 a modified form of apparatus is shown and by means of which similar results are obtained. In this device the top and bottom A′ of the receptacle are metal plates, while the cylindrical portion or sides A″ is of insulating material, such as porcelain. Within the receptacle and preferably integral with the side walls A″ are two annular troughs W W′, which contain a conducting fluid B′, such as mercury. Terminals C′ C″, passing through the bottom of the receptacle through insulating and packed sleeves, afford a means of connecting the mercury in the two troughs with the conductors of the circuit. Surrounding that portion of the device in which the troughs W W′ lie is a core D′, wound with coils D″, arranged in any suitable and well-known manner to produce, when energized by currents of different phase, a rotating magnetic field in the space occupied by the two bodies of mercury. To intensify the action, a circular laminated core E′ is placed within the receptacle. If by this or any other means the mercury is set in motion and caused to flow around in the troughs, and if a conductor be mounted in position to be rotated by the mercury, and when so rotated to make intermittent contact therewith, a circuit-controller may be obtained of novel and distinctive character and capable of many useful applications independently of the other features which are embodied in the complete device which is illustrated. For the present purpose I provide in the center of the receptacle a socket in which is mounted a spindle P′, carrying a disk G′. Depending from said disk are arms H′, which afford bearings for a shaft K′, supporting two star-shaped wheels L′ L″, arranged to make contact with the mercury in the two troughs, respectively. The shaft K′ is mounted in insulated bearings, so that when both wheels are in contact with mercury the circuit connecting the terminals C′ C″ will be closed. The disk G′ carries an annular core N′, which is adapted to be maintained in rotation by a core O′ and coils O″, supported outside of the receptacle and preferably of the same character as those used for

imparting rotation to the mercury; but the direction of rotation should be opposite to that of the mercury. The rate of rotation of the wheels L′ L″ depends upon the rate of relative movement of the mercury, and hence if the mercury be caused to flow in one direction and the wheels be carried bodily in the opposite direction the rate of rotation, and consequently the frequency of the makes and breaks, will be very greatly increased over that which would be obtained if the wheels L′ L″ were supported in a stationary bearing.

It is obvious that by means of devices of the character described a rapid interruption of the circuit may be effected, while all the practical advantages which may be derived from inclosing the terminals or contacts in a closed receptacle are readily realized to the fullest extent.

Having now described my invention, what I claim is—

1. In a circuit-controller, the combination with rigid and fluid conductors adapted to be brought intermittently into contact with each other, thereby making and breaking the electric circuit, of means for imparting rotary motion to both of said conductors, as set forth.

2. In a circuit-controller, the combination with a receptacle containing a conducting fluid, means for imparting a movement of rotation to the fluid, and a conductor adapted to be rotated by the movement of said fluid and to thereby make and break electric connection with the fluid, as set forth.

NIKOLA TESLA.

Witnesses:
M. LAWSON DYER,
G. W. MARTLING.

No. 613,809.

N. TESLA.

Patented Nov. 8, 1898.

METHOD OF AND APPARATUS FOR CONTROLLING MECHANISM OF MOVING VESSELS OR VEHICLES.

(No Model.)

5 Sheets—Sheet 1.

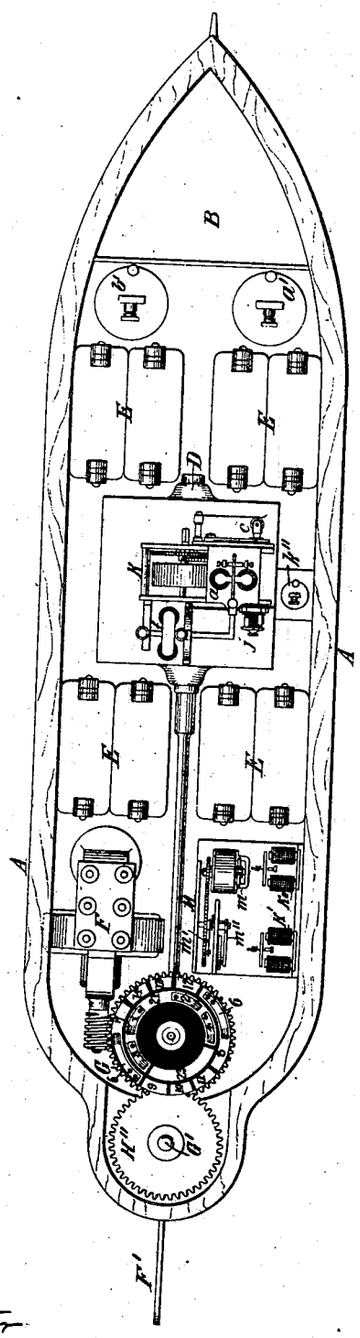

Fig. 1

Witnesses:
Raphael Netter
George Scherff.

Inventor:
Nikola Tesla

No. 613,809. Patented Nov. 8, 1898.

N. TESLA.

METHOD OF AND APPARATUS FOR CONTROLLING MECHANISM OF MOVING VESSELS OR VEHICLES.

(No Model.) 5 Sheets—Sheet 2.

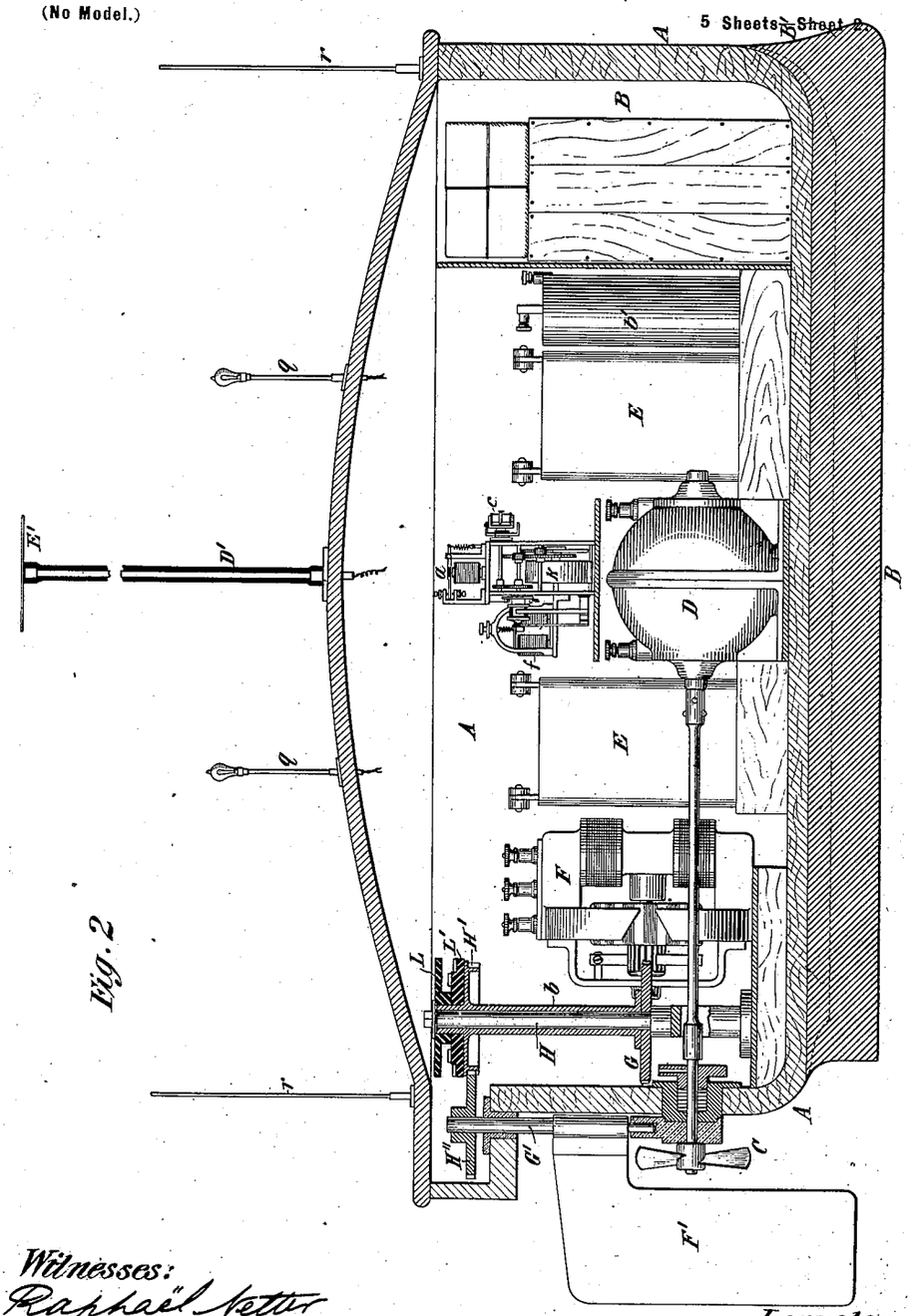

Fig. 2.

Witnesses:
Raphael Netter
George Scherff.

Inventor:
Nikola Tesla

No. 613,809. Patented Nov. 8, 1898.

N. TESLA.

METHOD OF AND APPARATUS FOR CONTROLLING MECHANISM OF MOVING VESSELS OR VEHICLES.

(No Model.) 5 Sheets—Sheet 3.

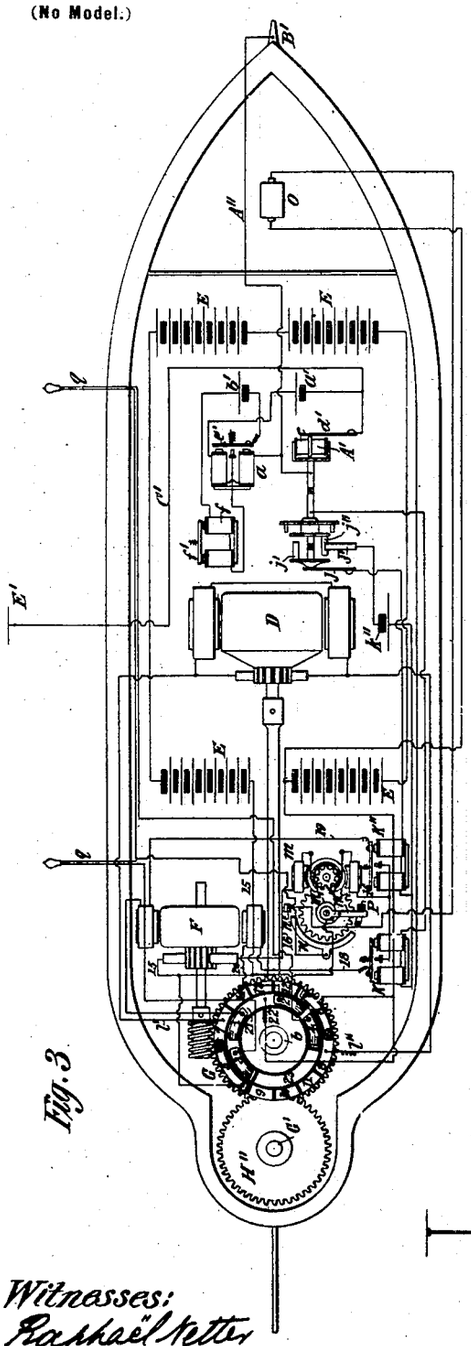

Fig. 3

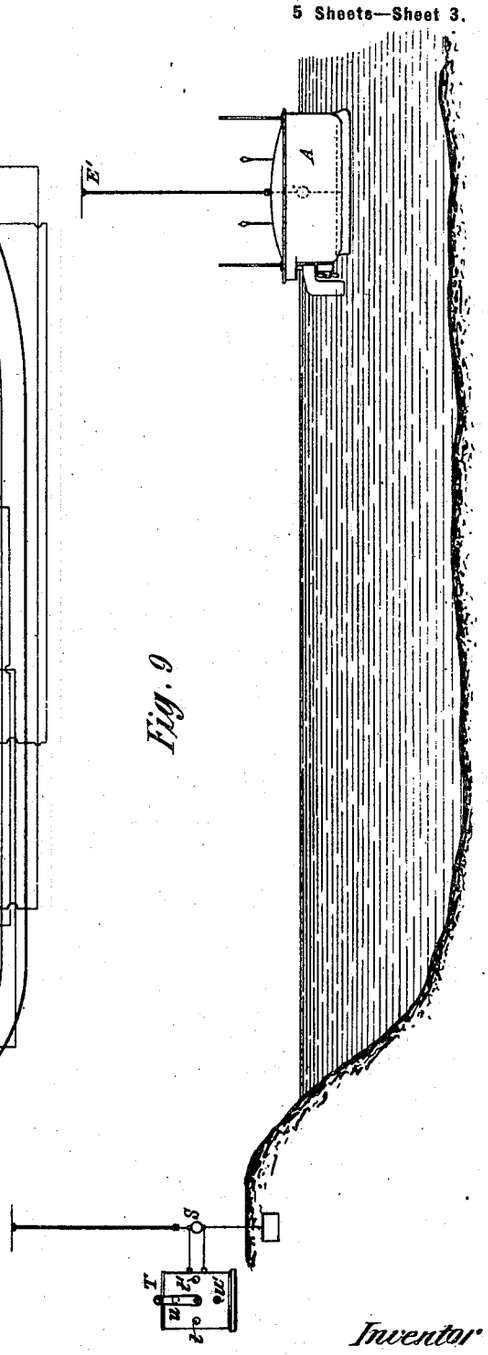

Fig. 9

Witnesses:
Raphael Netter
George Schuyff.

Inventor
Nikola Tesla

No. 613,809. Patented Nov. 8, 1898.

N. TESLA.

METHOD OF AND APPARATUS FOR CONTROLLING MECHANISM OF MOVING VESSELS OR VEHICLES.

(No Model.) 5 Sheets—Sheet 4.

Fig. 5

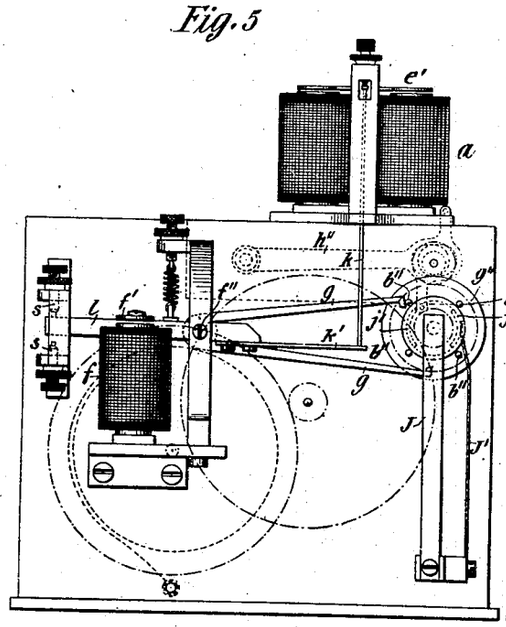

Fig. 6

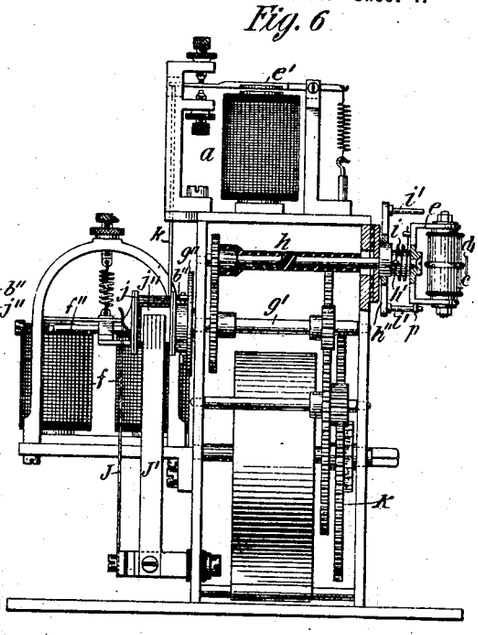

Fig. 4

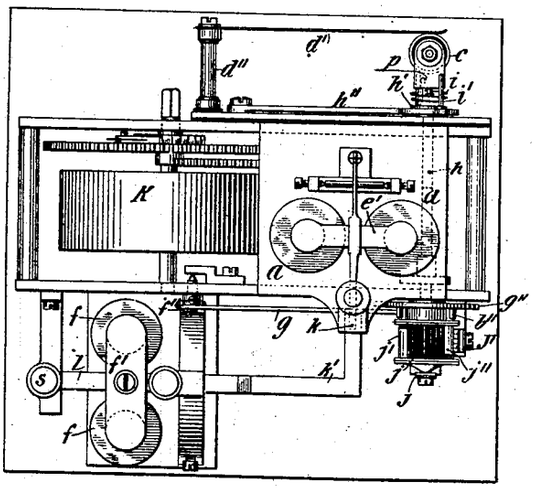

Fig. 8

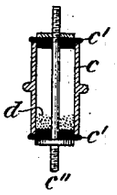

Fig. 7

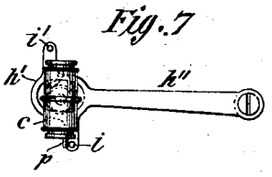

Witnesses:
Raphael Netter
George Scherff.

Inventor:
Nikola Tesla

No. 613,809. Patented Nov. 8, 1898.

N. TESLA.

METHOD OF AND APPARATUS FOR CONTROLLING MECHANISM OF MOVING VESSELS OR VEHICLES.

(No Model.) 5 Sheets—Sheet 5.

Fig. 10

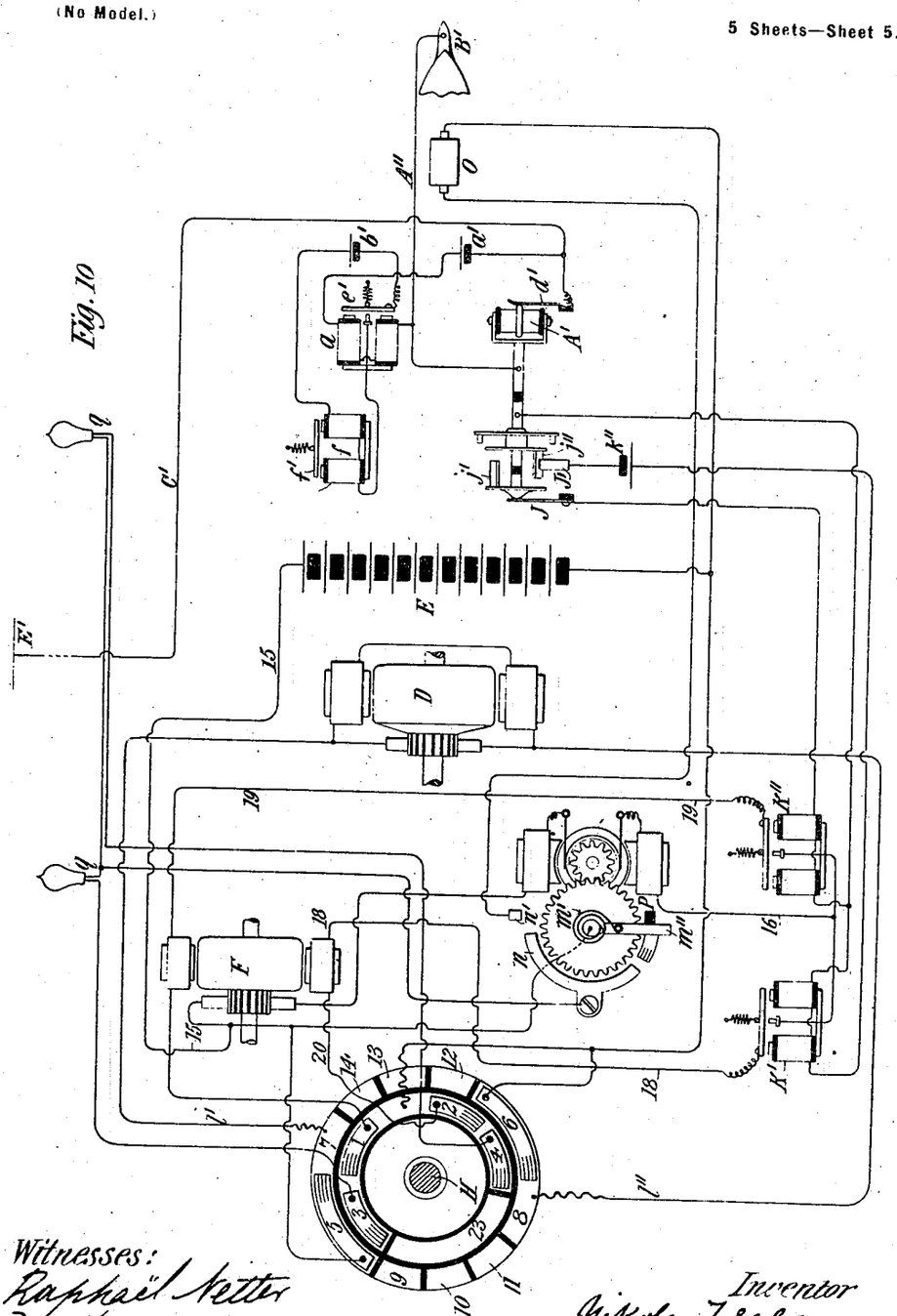

Witnesses:
Raphael Netter
M. Lawson Dyer.

Inventor
Nikola Tesla
By Kerr, Curtis & Page
attys.

UNITED STATES PATENT OFFICE.

NIKOLA TESLA, OF NEW YORK, N. Y.

METHOD OF AND APPARATUS FOR CONTROLLING MECHANISM OF MOVING VESSELS OR VEHICLES.

SPECIFICATION forming part of Letters Patent No. 613,809, dated November 8, 1898.

Application filed July 1, 1898. Serial No. 684,934. (No model.)

To all whom it may concern:

Be it known that I, NIKOLA TESLA, a citizen of the United States, residing at New York, in the county and State of New York, have invented certain new and useful improvements in methods of and apparatus for controlling from a distance the operation of the propelling-engines, the steering apparatus, and other mechanism carried by moving bodies or floating vessels, of which the following is a specification, reference being had to the drawings accompanying and forming part of the same.

The problem for which the invention forming the subject of my present application affords a complete and practicable solution is that of controlling from a given point the operation of the propelling-engines, the steering apparatus, and other mechanism carried by a moving object, such as a boat or any floating vessel, whereby the movements and course of such body or vessel may be directed and controlled from a distance and any device carried by the same brought into action at any desired time. So far as I am aware the only attempts to solve this problem which have heretofore met with any measure of success have been made in connection with a certain class of vessels the machinery of which was governed by electric currents conveyed to the controlling apparatus through a flexible conductor; but this system is subject to such obvious limitations as are imposed by the length, weight, and strength of the conductor which can be practically used, by the difficulty of maintaining with safety a high speed of the vessel or changing the direction of movement of the same with the desired rapidity, by the necessity for effecting the control from a point which is practically fixed, and by many well-understood drawbacks inseparably connected with such a system. The plan which I have perfected involves none of these objections, for I am enabled by the use of my invention to employ any means of propulsion, to impart to the moving body or vessel the highest possible speed, to control the operation of its machinery and to direct its movements from either a fixed point or from a body moving and changing its direction however rapidly, and to maintain this control over great distances without any artificial connections between the vessel and the apparatus governing its movements and without such restrictions as these must necessarily impose.

In a broad sense, then, my invention differs from all of those systems which provide for the control of the mechanism carried by a moving object and governing its motion in that I require no intermediate wires, cables, or other form of electrical or mechanical connection with the object save the natural media in space. I accomplish, nevertheless, similar results and in a much more practicable manner by producing waves, impulses, or radiations which are received through the earth, water, or atmosphere by suitable apparatus on the moving body and cause the desired actions so long as the body remains within the active region or effective range of such currents, waves, impulses, or radiations.

The many and difficult requirements of the object here contemplated, involving peculiar means for transmitting to a considerable distance an influence capable of causing in a positive and reliable manner these actions, necessitated the designing of devices and apparatus of a novel kind in order to utilize to the best advantage various facts or results, which, either through my own investigations or those of others, have been rendered practically available.

As to that part of my invention which involves the production of suitable waves or variations and the conveying of the same to a remote receiving apparatus capable of being operated or controlled by their influence, it may be carried out in various ways, which are at the present time more or less understood. For example, I may pass through a conducting-path, preferably inclosing a large area, a rapidly-varying current and by electromagnetic induction of the same affect a circuit carried by the moving body. In this case the action at a given distance will be the stronger the larger the area inclosed by the conductor and the greater the rate of change of the current. If the latter were generated in the ordinary ways, the rate of change, and consequently the distance at which the action would be practically available for the present purpose, would be very small; but by adopting such means as I have devised—that is,

either by passing through the conducting-path currents of a specially-designed high-frequency alternator or, better still, those of a strongly-charged condenser—a very high rate of change may be obtained and the effective range of the influence thus extended over a vast area, and by carefully adjusting the circuit on the moving body so as to be in exact electromagnetic synchronism with the primary disturbances this influence may be utilized at great distances.

Another way to carry out my invention is to direct the currents or discharges of a high-frequency machine or condenser through a circuit one terminal of which is connected directly or inductively with the ground and the other to a body, preferably of large surface and at an elevation. In this case if the circuit on the moving body be similarly arranged or connected differences of potential on the terminals of the circuit either by conduction or electrostatic induction are produced and the same object is attained. Again, to secure the best action the receiving-circuit should be adjusted so as to be in electromagnetic synchronism with the primary source, as before; but in this instance it will be understood by those skilled in the art that if the number of vibrations per unit of time be the same the circuit should now have a length of conductor only one-half of that used in the former case.

Still another way is to pass the currents simply through the ground by connecting both the terminals of the source of high-frequency currents to earth at different and remote points and to utilize the currents spreading through the ground for affecting a receiving-circuit properly placed and adjusted. Again, in this instance if only one of the terminals of the receiving-circuit be connected to the ground, the other terminal being insulated, the adjustment as to synchronism with the source will require that under otherwise equal conditions the length of wire be half of that which would be used if both the terminals be connected or, generally, if the circuit be in the form of a closed loop or coil. Obviously also in the latter case the relative position of the receiving and transmitting circuits is of importance, whereas if the circuit be of the former kind—that is, open—the relative position of the circuits is, as a rule, of little or no consequence.

Finally, I may avail myself, in carrying out my invention, of electrical oscillations which do not follow any particular conducting-path, but propagate in straight lines through space, of rays, waves, pulses, or disturbances of any kind capable of bringing the mechanism of the moving body into action from a distance and at the will of the operator by their effect upon suitable controlling devices.

In the following detailed description I shall confine myself to an explanation of that method and apparatus only which I have found to be the most practical and effectual; but obviously my invention in its broad features is not limited to the special mode and appliances which I have devised and shall here describe.

In any event—that is to say, whichever of the above or similar plans I may adopt—and particularly when the influence exerted from a distance upon the receiving-circuit be too small to directly and reliably affect and actuate the controlling apparatus I employ auxiliary sensitive relays or, generally speaking, means capable of being brought into action by the feeblest influences in order to effect the control of the movements of the distant body with the least possible expenditure of energy and at the greatest practicable distance, thus extending the range and usefulness of my invention.

A great variety of electrical and other devices more or less suitable for the purpose of detecting and utilizing feeble actions are now well known to scientific men and artisans and need not be all enumerated here. Confining myself merely to the electrical as the most practicable of such means and referring only to those which, while not the most sensitive, are perhaps more readily available from the more general knowledge which exists regarding them, I may state that a contrivance may be used which has long been known and used as a lightning-arrester in connection with telephone-switchboards for operating annunciators and like devices, comprising a battery the poles of which are connected to two conducting-terminals separated by a minute thickness of dielectric. The electromotive force of the battery should be such as to strain the thin dielectric layer very nearly to the point of breaking down in order to increase the sensitiveness. When an electrical disturbance reaches a circuit so arranged and adjusted, additional strain is put upon the insulating-film, which gives way and allows the passage of a current which can be utilized to operate any form of circuit-controlling apparatus.

Again, another contrivance capable of being utilized in detecting feeble electrical effects consists of two conducting plates or terminals which have, preferably, wires of some length attached to them and are bridged by a mass of minute particles of metal or other conducting material. Normally these particles lying loose do not connect the metal plates; but under the influence of an electrical disturbance produced at a distance, evidently owing to electrostatic attraction, they are pressed firmly against each other, thus establishing a good electrical connection between the two terminals. This change of state may be made use of in a number of ways for the above purpose.

Still another modified device, which may be said to embody the features of both the former, is obtained by connecting the two conducting plates or terminals above referred to permanently with the poles of a battery

which should be of very constant electromotive force. In this arrangement a distant electrical disturbance produces a twofold effect on the conducting particles and insulating-films between them. The former are brought nearer to each other in consequence of the sudden increase of electrostatic attraction, and the latter, owing to this, as well as by being reduced in thickness or in number, are subjected to a much greater strain, which they are unable to withstand.

It will be obviously noted from the preceding that whichever of these or similar contrivances be used the sensitiveness and, what is often still more important, the reliability of operation is very materially increased by a close adjustment of the periods of vibration of the transmitting and receiving circuits, and, although such adjustment is in many cases unnecessary for the successful carrying out of my invention, I nevertheless make it a rule to bestow upon this feature the greatest possible care, not only because of the above-mentioned advantages, which are secured by the observance of the most favorable conditions in this respect, but also and chiefly with the object of preventing the receiving-circuit from being affected by waves or disturbances emanating from sources not under the control of the operator. The narrower the range of vibrations which are still capable of perceptibly affecting the receiving-circuit the safer will the latter be against extraneous disturbances. To secure the best result, it is necessary, as is well known to experts, to construct the receiving-circuit or that part of the same in which the vibration chiefly occurs so that it will have the highest possible self-induction and at the same time the least possible resistance. In this manner I have demonstrated the practicability of providing a great number of such receiving-circuits—fifty or a hundred, or more—each of which may be called up or brought into action whenever desired without the others being interfered with. This result makes it possible for one operator to direct simultaneously the movements of a number of bodies as well as to control the action of a number of devices located on the same body, each of which may have a distinct duty to fulfil. In the following description, however, I shall show a still further development in this direction—namely, how, by making use of merely one receiving-circuit, a great variety of devices may be actuated and any number of different functions performed at the will and command of the distant operator.

It should be stated in advance in regard to the sensitive devices above mentioned, which may be broadly considered as belonging to one class, inasmuch as the operation of all of them involves the breaking down of a minute thickness of highly-strained dielectric, that it is necessary to make some provision for automatically restoring to the dielectric its original unimpaired insulating qualities in order to enable the device to be used in successive operations. This is usually accomplished by a gentle tapping or vibration of the electrodes or particles or continuous rotation of the same; but in long experience with many forms of these devices I have found that such procedures, while suitable in simple and comparatively unimportant operations, as ordinary signaling, when it is merely required that the succeeding effects produced in the receiving-circuit should differ in regard to their relative duration only, in which case it is of little or no consequence if some of the individual effects be altered or incomplete or even entirely missed, do not yield satisfactory results in many instances, when it may be very important that the effects produced should all be exactly such as desired and that none should fail. To illustrate, let it be supposed that an official directing the movements of a vessel in the manner described should find it necessary to bring into action a special device on the latter or to perform a particular operation, perhaps of vital moment, at an instant's notice and possibly when, by design or accident, the vessel itself or any mark indicating its presence is hidden from his view. In this instance a failure or defective action of any part of the apparatus might have disastrous consequences and such cases in which the sure and timely working of the machinery is of paramount importance may often present themselves in practice, and this consideration has impressed me with the necessity of doing away with the defects in the present devices and procedures and of producing an apparatus which while being sensitive will also be most reliable and positive in its action. In the arrangement hereinafter described these defects are overcome in a most satisfactory manner, enabling thousands of successive operations, in all respects alike, being performed by the controlling apparatus without a single irregularity or miss being recorded. For a better understanding of these and other details of the invention as I now carry them out I would refer to the accompanying drawings, in which—

Figure 1 is a plan view of a vessel and mechanism within the same. Fig. 2 is a longitudinal section of the same, showing the interior mechanism in side elevation. Fig. 3 is a plan view, partially diagrammatical, of the vessel, apparatus, and circuit connections of the same. Fig. 4 is a plan view, on an enlarged scale, of a portion of the controlling mechanism. Fig. 5 is an end view of the same. Fig. 6 shows the same mechanism in side elevation. Fig. 7 is a side view of a detail of the mechanism. Fig. 8 is a central sectional view, on a larger scale, of a sensitive device forming part of the receiving-circuit. Fig. 9 is a diagrammatic illustration of the system in its preferred form. Fig. 10 is a view of the various mechanisms employed, but on a larger scale, and leaving out or indi-

cating conventionally certain parts of well-understood character.

Referring to Figs. 1 and 2, A designates any type of vessel or vehicle which is capable of being propelled and directed, such as a boat, a balloon, or a carriage. It may be designed to carry in a suitable compartment B objects of any kind, according to the nature of the uses to which it is to be applied. The vessel—in this instance a boat—is provided with suitable propelling machinery, which is shown as comprising a screw-propeller C, secured to the shaft of an electromagnetic motor D, which derives its power from storage batteries E E E E. In addition to the propelling engine or motor the boat carries also a small steering-motor F, the shaft of which is extended beyond its bearings and provided with a worm which meshes with a toothed wheel G. This latter is fixed to a sleeve *b*, freely movable on a vertical rod H, and is rotated in one or the other direction, according to the direction of rotation of the motor F.

The sleeve *b* on rod H is in gear, through the cog-wheels H′ and H″, with a spindle G, mounted in vertical bearings at the stem of the boat and carrying the rudder F′.

The apparatus by means of which the operation of both the propelling and steering mechanisms is controlled involves, primarily, a receiving-circuit, which for reasons before stated is preferably both adjusted and rendered sensitive to the influence of waves or impulses emanating from a remote source, the adjustment being so that the period of oscillation of the circuit is either the same as that of the source or a harmonic thereof.

The receiving-circuit proper (diagrammatically shown in Figs. 3 and 10) comprises a terminal E′, conductor C′, a sensitive device A′, and a conductor A″, leading to the ground conveniently through a connection to the metal keel B′ of the vessel. The terminal E′ should present a large conducting-surface and should be supported as high as practicable on a standard D′, which is shown as broken in Fig. 2; but such provisions are not always necessary. It is important to insulate very well the conductor C′ in whatever manner it be supported.

The circuit or path just referred to forms also a part of a local circuit, which latter includes a relay-magnet *a* and a battery *a′*, the electromotive force of which is, as before explained, so determined that although the dielectric layers in the sensitive device A′ are subjected to a great strain, yet normally they withstand the strain and no appreciable current flows through the local circuit; but when an electrical disturbance reaches the circuit the dielectric films are broken down, the resistance of the device A′ is suddenly and greatly diminished, and a current traverses the relay-magnet A.

The particular sensitive device employed is shown in general views and in detail in Figs. 4, 6, 7, and 8. It consists of a metal cylinder *c*, with insulating-heads *c′*, through which passes a central metallic rod *c″*. A small quantity of grains *d* of conducting material, such as an oxidized metal, is placed in the cylinder. A metallic strip *d′*, secured to an insulated post *d″*, bears against the side of the cylinder *c*, connecting it with the conductor C′, forming one part of the circuit. The central rod *c″* is connected to the frame of the instrument and so to the other part of the circuit through the forked metal arm *e*, the ends of which are fastened with two nuts to the projecting ends of the rod, by which means the cylinder *c* is supported.

In order to interrupt the flow of battery-current which is started through the action of the sensitive device A′, special means are provided, which are as follows: The armature *e′* of the magnet *a*, when attracted by the latter, closes a circuit containing a battery *b′* and magnet *f*. The armature-lever *f′* of this magnet is fixed to a rock-shaft *f″*, to which is secured an anchor-escapement *g*, which controls the movements of a spindle *g′*, driven by a clock-train K. The spindle *g′* has fixed to it a disk *g″* with four pins *b″*, so that for each oscillation of the escapement *g* the spindle *g′* is turned through one-quarter of a revolution. One of the spindles in the clock-train, as *h*, is geared so as to make one-half of a revolution for each quarter-revolution of spindle *g′*. The end of the former spindle extends through the side of the frame and carries an eccentric cylinder *h′*, which passes through a slot in a lever *h″*, pivoted to the side of the frame. The forked arm *e*, which supports the cylinder *c*, is pivoted to the end of eccentric *h′*, and the eccentric and said arm are connected by a spiral spring *l*. Two pins *i′ i′* extend out from the lever *h″*, and one of these is always in the path of a projection on arm *e*. They operate to prevent the turning of cylinder *c* with the spindle *h* and the eccentric. It will be evident that a half-revolution of the spindle *h* will wind up the spring *i* and at the same time raise or lower the lever *h″*, and these parts are so arranged that just before the half-revolution of the spindle is completed the pin *i′*, in engagement with projection or stop-pin *p*, is withdrawn from its path, and the cylinder *c*, obeying the force of the spring *i*, is suddenly turned end for end, its motion being checked by the other pin *i′*. The adjustment relatively to armature *f′* of magnet *f* is furthermore so made that the pin *i′* is withdrawn at the moment when the armature has nearly reached its extreme position in its approach toward the magnet—that is, when the lever *l*, which carries the armature *f′*, almost touches the lower one of the two stops *s s*, Fig. 5—which limits its motion in both directions.

The arrangement just described has been the result of long experimenting with the object of overcoming certain defects in devices of this kind, to which reference has been made before. These defects I have found to

be due to many causes, as the unequal size, weight, and shape of the grains, the unequal pressure which results from this and from the manner in which the grains are usually agitated, the lack of uniformity in the conductivity of the surface of the particles owing to the varying thickness of the superficial oxidized layer, the varying condition of the gas or atmosphere in which the particles are immersed, and to certain deficiencies, well known to experts, of the transmitting apparatus as heretofore employed, which are in a large measure reduced by the use of my improved high-frequency coils. To do away with the defects in the sensitive device, I prepare the particles so that they will be in all respects as nearly alike as possible. They are manufactured by a special tool, insuring their equality in size, weight, and shape, and are then uniformly oxidized by placing them for a given time in an acid solution of predetermined strength. This secures equal conductivity of their surfaces and stops their further deterioration, thus preventing a change in the character of the gas in the space in which they are inclosed. I prefer not to rarefy the atmosphere within the sensitive device, as this has the effect of rendering the former less constant in regard to its dielectric properties, but merely secure an air-tight inclosure of the particles and rigorous absence of moisture, which is fatal to satisfactory working.

The normal position of the cylinder *c* is vertical, and when turned in the manner described the grains in it are simply shifted from one end to the other; but inasmuch as they always fall through the same space and are subjected to the same agitation they are brought after each operation of the relay to precisely the same electrical condition and offer the same resistance to the flow of the battery-current until another impulse from afar reaches the receiving-circuit.

The relay-magnet *a* should be of such character as to respond to a very weak current and yet be positive in its action. To insure the retraction of its armature *e'* after the current has been established through the magnet *f* and interrupted by the inversion of the sensitive device *c*, a light rod *k* is supported in guides on the frame in position to be lifted by an extension *k'* of the armature-lever *l* and to raise slightly the armature *e*. As a feeble current may normally flow through the sensitive device and the relay-magnet *a*, which would be sufficient to hold though not draw the armature down, it is well to observe this precaution.

The operation of the relay-magnet *a* and the consequent operation of the electromagnet *f*, as above described, are utilized to control the operation of the propelling-engine and the steering apparatus in the following manner: On the spindle *g'*, which carries the escapement-disk *g''*, Figs. 4 and 6, is a cylinder *j* of insulating material with a conducting plate or head at each end. From these two heads, respectively, contact plates or segments *j' j''* extend on diametrically opposite sides of the cylinder. The plate *j''* is in electrical connection with the frame of the instrument through the head from which it extends, while insulted strips or brushes J J' bear upon the free end or head of the cylinder and the periphery of the same, respectively. Three terminals are thus provided, one always in connection with plate *j'*, the other always in connection with the plate *j''*, and the third adapted to rest on the strips *j'* and *j''* in succession or upon the intermediate insulating-spaces, according to the position in which the commutator is brought by the clock-train and the anchor-escapement *g*.

K' K'', Figs. 1, 3, and 10, are two relay-magnets conveniently placed in the rear of the propelling-engine. One terminal of a battery *k''* is connected to one end of each of the relay-coils, the opposite terminal to the brush J', and the opposite ends of the relay-coils to the brush J and to the frame of the instrument, respectively. As a consequence of this arrangement either the relay K' or K'' will be energized as the brush J' bears upon the plate *j'* or *j''*, respectively, or both relays will be inactive while the brush J' bears upon an insulating-space between the plates *j'* and *j''*. While one relay, as K', is energized, its armature closes a circuit through the motor F, which is rotated in a direction to throw the rudder to port. On the other hand, when relay K'' is active another circuit through the motor F is closed, which reverses its direction of rotation and shifts the rudder to starboard. These circuits, however, are at the same time utilized for other purposes, and their course is, in part, through apparatus which I shall describe before tracing their course.

The fixed rod H carries an insulating disk or head L, Fig. 2, to the under side of which are secured six brushes, 1, 2, 3, 4, 5, and 6, Fig. 3. The sleeve *b*, which surrounds the rod and is turned by the steering-motor F, carries a disk L', upon the upper face of which are two concentric circles of conducting contact-plates. Brushes 1, 2, 3, and 4 bear upon the inner circle of contacts, while the brushes 5 and 6 bear upon the outer circle of contacts. The outer circle of contacts comprises two long plates 7 and 8 on opposite sides of the disk and a series of shorter plates 9, 10, 11, 12, 13, and 14 in the front and rear. Flexible conductors *l' l''* connect the plates 7 and 8 with the terminals of the propelling-motor D, and the poles of the main battery E are connected to the brushes 5 and 6, respectively, so that while the rudder is straight or turned up to a certain angle to either side the current is conveyed through the brushes 5 and 6 and segments 7 and 8 to the propelling-motor D. The steering-motor F is also driven by current taken from the main battery E in the following manner: A conductor 15 from one pole of the battery

leads to one of the commutator-brushes, and from the other brush runs a conductor 16 to one of the contacts of each relay K′ K″. When one of these relays, as K″, is active, it continues this circuit through a wire 19 through one field-coil or set of coils on the motor F and thence to the brush 1. In a similar manner when the other relay K′ is active the circuit is continued from wire 18 through a wire 20, the second or reversing set of field-coils, and to brush 2.

Both brushes 1 and 2 at all times when the rudder is not turned more than about forty-five degrees to one side are in contact with a long conducting-plate 21, and one brush in any position of the rudder is always in contact with said plate, and the latter is connected by a flexible conductor 22 with the opposite pole of the main battery. Hence the motor F may always be caused to rotate in one direction whatever may be the position of the rudder, and may be caused to rotate in either direction whenever the position of the rudder is less than a predetermined angle, conveniently forty-five degrees from the center position. In order, however, to prevent the rudder from being turned too far in either direction, the isolated plate 23 is used. Any movement of the rudder beyond a predetermined limit brings this plate under one or the other of the brushes 1 2 and breaks the circuit of motor F, so that the rudder can be driven no farther in that direction, but, as will be understood, the apparatus is in condition to turn the rudder over to the other side. In like manner the circuit of the propelling-motor D is controlled through brushes 5 and 6 and the segments on the outer circle of contacts of head L. If the short segments on either side of the circle are insulated, the motor D will be stopped whenever one of the brushes 5 or 6 passes onto one of them from the larger segments 7 8.

It is important to add that on all contact-points where a break occurs provision should be made to overcome the sparking and prevent the oscillation of electrical charges in the circuits, as such sparks and oscillations may affect the sensitive device. It is this consideration chiefly which makes it advisable to use the two relays K′ K″, which otherwise might be dispensed with. They should be also placed as far as practicable from the sensitive device in order to guard the latter against any action of strong varying currents.

In addition to the mechanism described the vessel may carry any other devices or apparatus as might be required for accomplishing any special object of more or less importance. By way of illustration a small motor m is shown, Figs. 1 and 3, which conveniently serves for a number of purposes. This motor is shown connected in series with the armature of the steering-motor F, so that whenever either one of the circuits of the latter is closed through relays K′ K″ the motor m is likewise rotated, but in all cases in the same direction. Its rotation is opposed by a spring m', so that in normal operation, owing to the fact that the circuits of motor F are closed but a short time, the lever m'', which is fastened to one of the wheels of clockwork M, with which the armature of the motor is geared, will move but a short distance and upon cessation of the current return to a stop P; but if the circuits of the motor F are closed and opened rapidly in succession, which operation leaves the rudder unaffected, then the lever m'' is moved to a greater angle, coming in contact with a metal plate n, and finally, if desired, with a post n'. Upon the lever m'' coming in contact with plate n the current of the main battery passes either through one or other or both of the lights supported on standards q q, according to the position of brushes 3 and 4 relatively to the insulating-segment 23; but since the head L, carrying the segments, is geared to the rudder the position of the latter is in a general way determined by observing the lights. Both of the lights may be colored, and by flashing them up whenever desired the operator may guide at night the vessel in its course. For such purposes also the standards r r are provided, which should be painted in lively colors, so as to be visible by day at great distances. By opening and closing the circuits of motor F a greater number of times, preferably determined beforehand, the lever m'' is brought in contact with post n', thus closing the circuit of the main battery through a device o and bringing the latter into action at the moment desired. By similar contrivances or such as will readily suggest themselves to mechanicians any number of different devices may be operated.

Referring now to Fig. 9, which illustrates diagrammatically the system as practiced when directing the movements of a boat, in this figure S designates any source of electrical disturbance or oscillations the generation of which is controlled by a suitable switch contained in box T. The handle of the switch is movable in one direction only and stops on four points t t' u u', so that as the handle passes from stop to stop oscillations are produced by the source during a very short time interval. There are thus produced four disturbances during one revolution and the receiving-circuit is affected four times; but it will be understood from the foregoing description of the controlling devices on the vessel that the rudder will be moved twice, once to right and once to left. Now I preferably place the handle of the switch so that when it is arrested on points t t'—that is, to the right or left of the operator—he is reminded that the vessel is being deflected to the right or left from its course, by which means the control is facilitated. The normal positions of the handle are therefore at u u' when the rudder is not acted upon, and it remains on the points u u' only so long as necessary. Since, as before stated, the working of the apparatus is

very sure, the operator is enabled to perform any such operations as provision is made for without even seeing the vessel.

The manner of using the apparatus and the operation of the several instrumentalities comprising the same is in detail as follows: Normally the plate L′ is turned so that brush 2 rests upon the insulated segment 23 and brush 6 upon one of the insulated short segments in the rear of the circle. Under these conditions the rudder will be turned to starboard and the circuit of motor D interrupted between brushes 5 and 6. At the same time only one of the circuits of motor F—that controlled by relay K′—is capable of being closed, since brush 2, which connects with the other, is out of contact with the long segment 21. Assuming now that it is desired to start the vessel and direct it to a given point, the handle T is turned from its normal position on point u' to the point t on the switch-box. This sends out an electrical disturbance, which, passing through the receiving-circuit on the vessel, affects the sensitive device A′ and starts the flow of current through the local circuit, including said device, the relay a, and the battery a'. This, as has been previously explained, turns the cylinder j and causes the brush J′ to pass from insulation onto the contact j'. The battery k'' is thus closed through relay K″, and the latter closes that circuit of the motor F which, starting from plate 22, which is permanently connected with one pole of the main battery, is completed through the brush 1, the field of motor F, wire 19, the armature of relay K″, wire 16, the motor m, the brushes and commutator of motor F, and wire 15 to the opposite terminal of the battery E. Motor F is thus set in operation to shift the rudder to port; but the movement of plate L′ which follows brings the brush 6 back onto segment 8 and closes the circuit of the propelling-motor which starts the vessel. The motor F is permitted to run until the rudder has been turned sufficiently to steer the vessel in the desired direction, when the handle T is turned to the point u. This produces another action of the relay a and brush J′ is shifted onto insulation and both relays K′ and K″ are inactive. The rudder remains in the position to which it has been shifted by the motor F. If it be then desired to shift it to starboard, or in the opposite direction to that in which it was last moved, the handle T is simply turned to point t' and allowed to remain there until the motor F, which is now operated by relay K′, the circuit of which is closed by strip J″ coming into contact with plate j'', has done its work. The movement of handle T to the next point throws out both relays K′ and K″, and the next movement causes a shifting of the rudder to port, and so on. Suppose, however, that after the rudder has been set at any angle to its middle position it be desired to shift it still farther in the same direction. In such case the handle is moved quickly over two points, so that the circuit which would move the rudder in the opposite direction is closed for too short a time interval to produce an appreciable effect and is allowed to rest on the third point until the rudder is shifted to the desired position, when the handle is moved to the next point, which again throws out both relays K′ and K″. It will be understood that if the handle be held for a sufficiently long time upon either point t or t' the motor F will simply turn the plate L′ in one direction or the other until the circuits of motors D and F are broken. It is furthermore evident that one relay K′ or K″ will always be operative to start the motor F.

As previously explained, the longest period of operation of which the motor F is capable under ordinary conditions of use does not permit the motor m to shift the arm m' into contact with the plate n; but if the handle T be turned with a certain rapidity a series of current impulses will be directed through motor m; but as these tend to rotate the motor F in opposite directions they do not sensibly affect the latter, but act to rotate the motor m against the force of the coiled spring.

The invention which I have described will prove useful in many ways. Vessels or vehicles of any suitable kind may be used, as life, despatch, or pilot boats or the like, or for carrying letters, packages, provisions, instruments, objects, or materials of any description, for establishing communication with inaccessible regions and exploring the conditions existing in the same, for killing or capturing whales or other animals of the sea, and for many other scientific, engineering, or commercial purposes; but the greatest value of my invention will result from its effect upon warfare and armaments, for by reason of its certain and unlimited destructiveness it will tend to bring about and maintain permanent peace among nations.

Having now described my invention, what I claim is—

1. The improvement in the art of controlling the movements and operation of a vessel or vehicle herein described, which consists in producing waves or disturbances which are conveyed to the vessel by the natural media, actuating thereby suitable apparatus on the vessel and effecting the control of the propelling-engine, the steering and other mechanism by the operation of the said apparatus, as set forth.

2. The improvement in the art of controlling the movements and operation of a vessel or vehicle, herein described, which consists in establishing a region of waves or disturbances, and actuating by their influence exerted at a distance the devices on such vessel or vehicle, which control the propelling, steering and other mechanism thereon, as set forth.

3. The improvement in the art of controlling the movements and operation of a vessel

or vehicle, herein described, which consists in establishing a region of electrical waves or disturbances, and actuating by their influence, exerted at a distance, the devices on said vessel or vehicle, which control the propelling, steering and other mechanism thereon, as set forth.

4. The improvement in the art of controlling the movements and operation of a vessel or vehicle, herein described, which consists in providing on the vessel a circuit controlling the propelling, steering and other mechanism, adjusting or rendering such circuit sensitive to waves or disturbances of a definite character, establishing a region of such waves or disturbances, and rendering by their means the controlling-circuit active or inactive, as set forth.

5. The combination with a source of electrical waves or disturbances of a moving vessel or vehicle, and mechanism thereon for propelling, steering or operating the same, and a controlling apparatus adapted to be actuated by the influence of the said waves or disturbances at a distance from the source, as set forth.

6. The combination with a source of electrical waves or disturbances of a moving vessel or vehicle, mechanism for propelling, steering or operating the same, a circuit and means therein for controlling said mechanism, and means for rendering said circuit active or inactive through the influence of the said waves or disturbances exerted at a distance from the source, as set forth.

7. The combination with a source of electrical waves or disturbances and means for starting and stopping the same, of a vessel or vehicle, propelling and steering mechanism carried thereby, a circuit containing or connected with means for controlling the operation of said mechanism and adjusted or rendered sensitive to the waves or disturbances of the source, as set forth.

8. The combination with a source of electrical waves or disturbances, and means for starting and stopping the operation of the same, of a vessel or vehicle, propelling and steering mechanism carried thereby, local circuits controlling said mechanisms, a circuit sensitive to the waves or disturbances of the source and means therein adapted to control the said local circuits, as and for the purpose set forth.

9. The sensitive device herein described comprising in construction a receptacle containing a material such as particles of oxidized metal forming a part of the circuit, and means for turning the same end for end when the material has been rendered active by the passage through it of an electric discharge, as set forth.

10. The sensitive device herein described, comprising in combination a receptacle containing a material such as particles of oxidized metal forming a part of an electric circuit, an electromagnet in said circuit, and devices controlled thereby for turning the receptacle end for end when said magnet is energized, as set forth.

11. The sensitive device herein described, comprising in combination a receptacle containing a material such as particles of oxidized metal forming part of an electric circuit, a motor for rotating the receptacle, an electromagnet in circuit with the material, and an escapement controlled by said magnet and adapted to permit a half-revolution of the receptacle when the said magnet is energized, as set forth.

12. The combination with a movable body or vehicle, of a propelling-motor, a steering-motor and electrical contacts carried by a moving portion of the steering mechanism, and adapted in certain positions of the latter to interrupt the circuit of the propelling-motor, a local circuit and means connected therewith for controlling the steering-motor, and a circuit controlling the local circuit and means for rendering said controlling-circuit sensitive to the influence of electric waves or disturbances exerted at a distance from their source, at set forth.

13. The combination with the steering-motor, a local circuit for directing current through the same in opposite directions, a controlling-circuit rendered sensitive to the influence of electric waves or disturbances exerted at a distance from their source, a motor in circuit with the steering-motor but adapted to run always in the same direction, and a local circuit or circuits controlled by said motor, as set forth.

NIKOLA TESLA.

Witnesses:
RAPHAËL NETTER,
GEORGE SCHERFF.

No. 645,576. Patented Mar. 20, 1900.

N. TESLA.

SYSTEM OF TRANSMISSION OF ELECTRICAL ENERGY.

(Application filed Sept. 2, 1897.)

(No Model.)

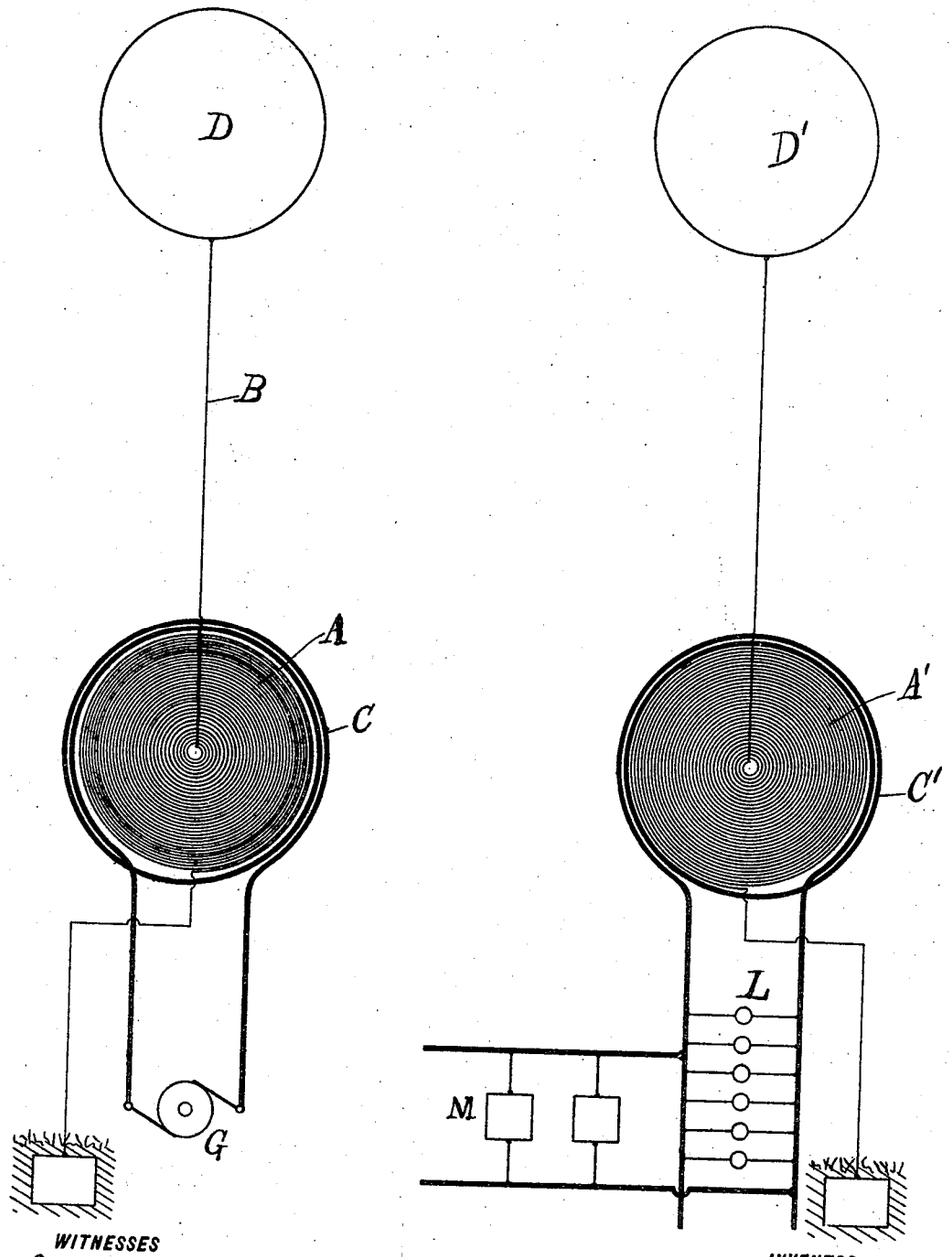

WITNESSES

Drury W. Cooper

M. Lawson Dyer

INVENTOR

Nikola Tesla

BY

Kerr, Curtis & Page

ATTORNEYS.

UNITED STATES PATENT OFFICE.

NIKOLA TESLA, OF NEW YORK, N. Y.

SYSTEM OF TRANSMISSION OF ELECTRICAL ENERGY.

SPECIFICATION forming part of Letters Patent No. 645,576, dated March 20, 1900.

Application filed September 2, 1897. Serial No. 650,343. (No model.)

To all whom it may concern:

Be it known that I, NIKOLA TESLA, a citizen of the United States, residing at New York, in the county and State of New York, have invented certain new and useful Improvements in Systems of Transmission of Electrical Energy, of which the following is a specification, reference being had to the drawing accompanying and forming a part of the same.

It has been well known heretofore that by rarefying the air inclosed in a vessel its insulating properties are impaired to such an extent that it becomes what may be considered as a true conductor, although one of admittedly very high resistance. The practical information in this regard has been derived from observations necessarily limited in their scope by the character of the apparatus or means heretofore known and the quality of the electrical effects producible thereby. Thus it has been shown by William Crookes in his classical researches, which have so far served as the chief source of knowledge of this subject, that all gases behave as excellent insulators until rarefied to a point corresponding to a barometric pressure of about seventy-five millimeters, and even at this very low pressure the discharge of a high-tension induction-coil passes through only a part of the attenuated gas in the form of a luminous thread or arc, a still further and considerable diminution of the pressure being required to render the entire mass of the gas inclosed in a vessel conducting. While this is true in every particular so long as electromotive or current impulses such as are obtainable with ordinary forms of apparatus are employed, I have found that neither the general behavior of the gases nor the known relations between electrical conductivity and barometric pressure are in conformity with these observations when impulses are used such as are producible by methods and apparatus devised by me and which have peculiar and hitherto unobserved properties and are of effective electromotive forces, measuring many hundred thousands or millions of volts. Through the continuous perfection of these methods and apparatus and the investigation of the actions of these current impulses I have been led to the discovery of certain highly-important and useful facts which have hitherto been unknown. Among these and bearing directly upon the subject of my present application are the following: First, that atmospheric or other gases, even under normal pressure, when they are known to behave as perfect insulators, are in a large measure deprived of their dielectric properties by being subjected to the influence of electromotive impulses of the character and magnitude I have referred to and assume conducting and other qualities which have been so far observed only in gases greatly attenuated or heated to a high temperature, and, second, that the conductivity imparted to the air or gases increases very rapidly both with the augmentation of the applied electrical pressure and with the degree of rarefaction, the law in this latter respect being, however, quite different from that heretofore established. In illustration of these facts a few observations, which I have made with apparatus devised for the purposes here contemplated, may be cited. For example, a conductor or terminal, to which impulses such as those here considered are supplied, but which is otherwise insulated in space and is remote from any conducting-bodies, is surrounded by a luminous flame-like brush or discharge often covering many hundreds or even as much as several thousands of square feet of surface, this striking phenomenon clearly attesting the high degree of conductivity which the atmosphere attains under the influence of the immence electrical stresses to which it is subjected. This influence is, however, not confined to that portion of the atmosphere which is discernible by the eye as luminous and which, as has been the case in some instances actually observed, may fill the space within a spherical or cylindrical envelop of a diameter of sixty feet or more, but reaches out to far remote regions, the insulating qualities of the air being, as I have ascertained, still sensibly impaired at a distance many hundred times that through which the luminous discharge projects from the terminal and in all probability much farther. The distance extends with the increase of the electromotive force of the impulses, with the diminution of the density of the atmosphere, with the elevation of the active terminal above the ground, and also, apparently, in a slight measure, with the degree of moisture contained in

the air. I have likewise observed that this region of decidedly-noticeable influence continuously enlarges as time goes on, and the discharge is allowed to pass not unlike a conflagration which slowly spreads, this being possibly due to the gradual electrification or ionization of the air or to the formation of less insulating gaseous compounds. It is, furthermore, a fact that such discharges of extreme tensions, approximating those of lightning, manifest a marked tendency to pass upward away from the ground, which may be due to electrostatic repulsion, or possibly to slight heating and consequent rising of the electrified or ionized air. These latter observations make it appear probable that a discharge of this character allowed to escape into the atmosphere from a terminal maintained at a great height will gradually leak through and establish a good conducting-path to more elevated and better conducting air strata, a process which possibly takes place in silent lightning discharges frequently witnessed on hot and sultry days. It will be apparent to what an extent the conductivity imparted to the air is enhanced by the increase of the electromotive force of the impulses when it is stated that in some instances the area covered by the flame discharge mentioned was enlarged more than sixfold by an augmentation of the electrical pressure, amounting scarcely to more than fifty per cent. As to the influence of rarefaction upon the electric conductivity imparted to the gases it is noteworthy that, whereas the atmospheric or other gases begin ordinarily to manifest this quality at something like seventy-five millimeters barometric pressure with the impulses of excessive electromotive force to which I have referred, the conductivity, as already pointed out, begins even at normal pressure and continuously increases with the degree of tenuity of the gas, so that at, say, one hundred and thirty millimeters pressure, when the gases are known to be still nearly perfect insulators for ordinary electromotive forces, they behave toward electromotive impulses of several millions of volts like excellent conductors, as though they were rarefied to a much higher degree. By the discovery of these facts and the perfection of means for producing in a safe, economical, and thoroughly-practicable manner current impulses of the character described it becomes possible to transmit through easily-accessible and only moderately-rarefied strata of the atmosphere electrical energy not merely in insignificant quantities, such as are suitable for the operation of delicate instruments and like purposes, but also in quantities suitable for industrial uses on a large scale up to practically any amount and, according to all the experimental evidence I have obtained, to any terrestrial distance. To conduce to a better understanding of this method of transmission of energy and to distinguish it clearly, both in its theoretical aspect and in its practical bearing, from other known modes of transmission, it is useful to state that all previous efforts made by myself and others for transmitting electrical energy to a distance without the use of metallic conductors, chiefly with the object of actuating sensitive receivers, have been based, in so far as the atmosphere is concerned, upon those qualities which it possesses by virtue of its being an excellent insulator, and all these attempts would have been obviously recognized as ineffective if not entirely futile in the presence of a conducting atmosphere or medium. The utilization of any conducting properties of the air for purposes of transmission of energy has been hitherto out of the question in the absence of apparatus suitable for meeting the many and difficult requirements, although it has long been known or surmised that atmospheric strata at great altitudes—say fifteen or more miles above sea-level—are, or should be, in a measure, conducting; but assuming even that the indispensable means should have been produced then still a difficulty, which in the present state of the mechanical arts must be considered as insuperable, would remain—namely, that of maintaining terminals at elevations of fifteen miles or more above the level of the sea. Through my discoveries before mentioned and the production of adequate means the necessity of maintaining terminals at such inaccessible altitudes is obviated and a practical method and system of transmission of energy through the natural media is afforded essentially different from all those available up to the present time and possessing, moreover, this important practical advantage, that whereas in all such methods or systems heretofore used or proposed but a minute fraction of the total energy expended by the generator or transmitter was recoverable in a distant receiving apparatus by my method and appliances it is possible to utilize by far the greater portion of the energy of the source and in any locality however remote from the same.

Expressed briefly, my present invention, based upon these discoveries, consists then in producing at one point an electrical pressure of such character and magnitude as to cause thereby a current to traverse elevated strata of the air between the point of generation and a distant point at which the energy is to be received and utilized.

In the accompanying drawing a general arrangement of apparatus is diagrammatically illustrated such as I contemplate employing in the carrying out of my invention on an industrial scale—as, for instance, for lighting distant cities or districts from places where cheap power is obtainable.

Referring to the drawing, A is a coil, generally of many turns and of a very large diameter, wound in spiral form either about a magnetic core or not, as may be found necessary. C is a second coil, formed of a conductor of much larger section and smaller

length, wound around and in proximity to the coil A. In the transmitting apparatus the coil A constitutes the high-tension secondary and the coil C the primary of much lower tension of a transformer. In the circuit of the primary C is included a suitable source of current G. One terminal of the secondary A is at the center of the spiral coil, and from this terminal the current is led by a conductor B to a terminal D, preferably of large surface, formed or maintained by such means as a balloon at an elevation suitable for the purposes of transmission, as before described. The other terminal of the secondary A is connected to earth and, if desired, also to the primary in order that the latter may be at substantially the same potential as the adjacent portions of the secondary, thus insuring safety. At the receiving-station a transformer of similar construction is employed; but in this case the coil A′, of relatively-thin wire, constitutes the primary and the coil C′, of thick wire or cable, the secondary of the transformer. In the circuit of the latter are included lamps L, motors M, or other devices for utilizing the current. The elevated terminal D′ is connected with the center of the coil A′, and the other terminal of said coil is connected to earth and preferably, also, to the coil C′ for the reasons above stated.

It will be observed that in coils of the character described the potential gradually increases with the number of turns toward the center, and the difference of potential between the adjacent turns being comparatively small a very high potential, impracticable with ordinary coils, may be successfully obtained. It will be, furthermore, noted that no matter to what an extent the coils may be modified in design and construction, owing to their general arrangement and manner of connection, as illustrated, those portions of the wire or apparatus which are highly charged will be out of reach, while those parts of the same which are liable to be approached, touched, or handled will be at or nearly the same potential as the adjacent portions of the ground, this insuring, both in the transmitting and receiving apparatus and regardless of the magnitude of the electrical pressure used, perfect personal safety, which is best evidenced by the fact that although such extreme pressures of many millions of volts have been for a number of years continuously experimented with no injury has been sustained neither by myself or any of my assistants.

The length of the thin-wire coil in each transformer should be approximately one-quarter of the wave length of the electric disturbance in the circuit, this estimate being based on the velocity of propagation of the disturbance through the coil itself and the circuit with which it is designed to be used. By way of illustration if the rate at which the current traverses the circuit, including the coil, be one hundred and eighty-five thousand miles per second then a frequency of nine hundred and twenty-five per second would maintain nine hundred and twenty-five stationary waves in a circuit one hundred and eighty-five thousand miles long and each wave would be two hundred miles in length. For such a low frequency, to which I shall resort only when it is indispensable to operate motors of the ordinary kind under the conditions above assumed, I would use a secondary of fifty miles in length. By such an adjustment or porportioning of the length of wire in the secondary coil or coils the points of highest potential are made to coincide with the elevated terminals D D′, and it should be understood that whatever length be given to the wires this condition should be complied with in order to attain the best results.

As the main requirement in carrying out my invention is to produce currents of an excessively-high potential, this object will be facilitated by using a primary current of very considerable frequency, since the electromotive force obtainable with a given length of conductor is proportionate to the frequency; but the frequency of the current is in a large measure arbitrary, for if the potential be sufficiently high and if the terminals of the coils be maintained at the proper altitudes the action described will take place, and a current will be transmitted through the elevated air strata, which will encounter little and possibly even less resistance than if conveyed through a copper wire of a practicable size. Accordingly the construction of the apparatus may be in many details greatly varied; but in order to enable any person skilled in the mechanical and electrical arts to utilize to advantage in the practical applications of my system the experience I have so far gained the following particulars of a model plant which has been long in use and which was constructed for the purpose of obtaining further data to be used in the carrying out of my invention on a large scale are given. The transmitting apparatus was in this case one of my electrical oscillators, which are transformers of a special type, now well known and characterized by the passage of oscillatory discharges of a condenser through the primary. The source G, forming one of the elements of the transmitter, was a condenser of a capacity of about four one-hundredths of a microfarad and was charged from a generator of alternating currents of fifty thousand volts pressure and discharged by means of a mechanically-operated break five thousand times per second through the primary C. The latter consisted of a single turn of stout stranded cable of inappreciable resistance and of an inductance of about eight thousand centimeters, the diameter of the loop being very nearly two hundred and forty-four centimeters. The total inductance of the primary circuit was approximately ten thousand centimeters, so that the primary circuit vibrated generally according to adjustment,

from two hundred and thirty thousand to two hundred and fifty thousand times per second. The high-tension coil A in the form of a flat spiral was composed of fifty turns of heavily-insulated cable No. 8 wound in one single layer, the turns beginning close to the primary loop and ending near its center. The outer end of the secondary or high-tension coil A was connected to the ground, as illustrated, while the free end was led to a terminal placed in the rarefied air stratum through which the energy was to be transmitted, which was contained in an insulating-tube of a length of fifty feet or more, within which a barometric pressure varying from about one hundred and twenty to one hundred and fifty millimeters was maintained by means of a mechanical suction-pump. The receiving-transformer was similarly proportioned, the ratio of conversion being the reciprocal of that of the transmitter, and the primary high-tension coil A′ was connected, as illustrated, with the end near the low-tension coil C′ to the ground and with the free end to a wire or plate likewise placed in the rarefied air stratum and at the distance named from the transmitting-terminal. The primary and secondary circuits in the transmitting apparatus being carefully synchronized, an electromotive force from two to four million volts and more was obtainable at the terminals of the secondary coil A, the discharge passing freely through the attenuated air stratum maintained at the above barometric pressures, and it was easy under these conditions to transmit with fair economy considerable amounts of energy, such as are of industrial moment, to the receiving apparatus for supplying from the secondary coil C′ lamps L or kindred devices. The results were particularly satisfactory when the primary coil or system A′, with its secondary C′, was carefully adjusted, so as to vibrate in synchronism with the transmitting coil or system A C. I have, however, found no difficulty in producing with apparatus of substantially the same design and construction electromotive forces exceeding three or four times those before mentioned and have ascertained that by their means current impulses can be transmitted through much-denser air strata. By the use of these I have also found it practicable to transmit notable amounts of energy through air strata not in direct contact with the transmitting and receiving terminals, but remote from them, the action of the impulses, in rendering conducting air of a density at which it normally behaves as an insulator, extending, as before remarked, to a considerable distance. The high electromotive force obtained at the terminals of coil or conductor A was, as will be seen, in the preceding instance, not so much due to a large ratio of transformation as to the joint effect of the capacities and inductances in the synchronized circuits, which effect is enhanced by a high frequency, and it will be obviously understood that if the latter be reduced a greater ratio of transformation should be resorted to, especially in cases in which it may be deemed of advantage to suppress as much as possible, and particularly in the transmitting-coil A, the rise of pressure due to the above effect and to obtain the necessary electromotive force solely by a large transformation ratio.

While electromotive forces such as are produced by the apparatus just described may be sufficient for many purposes to which my system will or may be applied, I wish to state that I contemplate using in an industrial undertaking of this kind forces greatly in excess of these, and with my present knowledge and experience in this novel field I would estimate them to range from twenty to fifty million volts and possibly more. By the use of these much greater forces larger amounts of energy may be conveyed through the atmosphere to remote places or regions, and the distance of transmission may be thus extended practically without limit.

As to the elevation of the terminals D D′ it is obvious that it will be determined by a number of things, as by the amount and quality of the work to be performed, by the local density and other conditions of the atmosphere, by the character of the surrounding country, and such considerations as may present themselves in individual instances. Thus if there be high mountains in the vicinity the terminals should be at a greater height, and generally they should always be, if practicable, at altitudes much greater than those of the highest objects near them in order to avoid as much as possible the loss by leakage. In some cases when small amounts of energy are required the high elevation of the terminals, and more particularly of the receiving-terminal D′, may not be necessary, since, especially when the frequency of the currents is very high, a sufficient amount of energy may be collected at that terminal by electrostatic induction from the upper air strata, which are rendered conducting by the active terminal of the transmitter or through which the currents from the same are conveyed.

With reference to the facts which have been pointed out above it will be seen that the altitudes required for the transmission of considerable amounts of electrical energy in accordance with this method are such as are easily accessible and at which terminals can be safely maintained, as by the aid of captive balloons supplied continuously with gas from reservoirs and held in position securely by steel wires or by any other means, devices, or expedients, such as may be contrived and perfected by ingenious and skilled engineers. From my experiments and observations I conclude that with electromotive impulses not greatly exceeding fifteen or twenty million volts the energy of many thousands of horse-power may be transmitted over vast distances, measured by many hundreds and

even thousands of miles, with terminals not more than thirty to thirty-five thousand feet above the level of the sea, and even this comparatively-small elevation will be required chiefly for reasons of economy, and, if desired, it may be considerably reduced, since by such means as have been described practically any potential that is desired may be obtained, the currents through the air strata may be rendered very small, whereby the loss in the transmission may be reduced.

It will be understood that the transmitting as well as the receiving coils, transformers, or other apparatus may be in some cases movable—as, for example, when they are carried by vessels floating in the air or by ships at sea. In such a case, or generally, the connection of one of the terminals of the high-tension coil or coils to the ground may not be permanent, but may be intermittently or inductively established, and any such or similar modifications I shall consider as within the scope of my invention.

While the description here given contemplates chiefly a method and system of energy transmission to a distance through the natural media for industrial purposes, the principles which I have herein disclosed and the apparatus which I have shown will obviously have many other valuable uses—as, for instance, when it is desired to transmit intelligible messages to great distances, or to illuminate upper strata of the air, or to produce, designedly, any useful changes in the condition of the atmosphere, or to manufacture from the gases of the same products, as nitric acid, fertilizing compounds, or the like, by the action of such current impulses, for all of which and for many other valuable purposes they are eminently suitable, and I do not wish to limit myself in this respect. Obviously, also, certain features of my invention here disclosed will be useful as disconnected from the method itself—as, for example, in other systems of energy transmission, for whatever purpose they may be intended, the transmitting and receiving transformers arranged and connected as illustrated, the feature of a transmitting and receiving coil or conductor, both connected to the ground and to an elevated terminal and adjusted so as to vibrate in synchronism, the proportioning of such conductors or coils, as above specified, the feature of a receiving-transformer with its primary connected to earth and to an elevated terminal and having the operative devices in its secondary, and other features or particulars, such as have been described in this specification or will readily suggest themselves by a perusal of the same.

I do not claim in this application a transformer for developing or converting currents of high potential in the form herewith shown and described and with the two coils connected together, as and for the purpose set forth, having made these improvements the subject of a patent granted to me November 2, 1897, No. 593,138, nor do I claim herein the apparatus employed in carrying out the method of this application when such apparatus is specially constructed and arranged for securing the particular object sought in the present invention, as these last-named features are made the subject of an application filed as a division of this application on February 19, 1900, Serial No. 5,780.

What I now claim is—

1. The method hereinbefore described of transmitting electrical energy through the natural media, which consists in producing at a generating-station a very high electrical pressure, causing thereby a propagation or flow of electrical energy, by conduction, through the earth and the air strata, and collecting or receiving at a distant point the electrical energy so propagated or caused to flow.

2. The method hereinbefore described of transmitting electrical energy, which consists in producing at a generating-station a very high electrical pressure, conducting the current caused thereby to earth and to a terminal at an elevation at which the atmosphere serves as a conductor therefor, and collecting the current by a second elevated terminal at a distance from the first.

3. The method hereinbefore described of transmitting electrical energy through the natural media, which consists in producing between the earth and a generator-terminal elevated above the same, at a generating-station, a sufficiently-high electromotive force to render elevated air strata conducting, causing thereby a propagation or flow of electrical energy, by conduction, through the air strata, and collecting or receiving at a point distant from the generating-station the electrical energy so propagated or caused to flow.

4. The method hereinbefore described of transmitting electrical energy through the natural media, which consists in producing between the earth and a generator-terminal elevated above the same, at a generating-station, a sufficiently-high electromotive force to render the air strata at or near the elevated terminal conducting, causing thereby a propagation or flow of electrical energy, by conduction, through the air strata, and collecting or receiving at a point distant from the generating-station the electrical energy so propagated or caused to flow.

5. The method hereinbefore described of transmitting electrical energy through the natural media, which consists in producing between the earth and a generator-terminal elevated above the same, at a generating-station, electrical impulses of a sufficiently-high electromotive force to render elevated air strata conducting, causing thereby current impulses to pass, by conduction, through the air strata, and collecting or receiving at a point distant from the generating-station, the energy of the current impulses by means of a circuit synchronized with the impulses.

6. The method hereinbefore described of

transmitting electrical energy through the natural media, which consists in producing between the earth and a generator-terminal elevated above the same, at a generating-station, electrical impulses of a sufficiently-high electromotive force to render the air strata at or near the elevated terminal conducting, causing thereby current impulses to pass through the air strata, and collecting or receiving at a point distant from the generating-station the energy of the current impulses by means of a circuit synchronized with the impulses.

7. The method hereinbefore described of transmitting electrical energy through the natural media, which consists in producing between the earth and a generator-terminal elevated above the same, at a generating-station, electrical impulses of a wave length so related to the length of the generating circuit or conductor as to produce the maximum potential at the elevated terminal, and of sufficiently-high electromotive force to render elevated air strata conducting, causing thereby a propagation of electrical impulses through the air strata, and collecting or receiving at a point distant from the generating-station the energy of such impulses by means of a receiving-circuit having a length of conductor similarly related to the wave length of the impulses.

8. The method hereinbefore described of transmitting electrical energy through the natural media, which consists in producing between the earth and a generator-terminal elevated above the same, at a generating-station, a sufficiently-high electromotive force to render elevated air strata conducting, causing thereby a propagation or flow of electrical energy through the air strata, by conduction, collecting or receiving the energy so transmitted by means of a receiving-circuit at a point distant from the generating-station, using the receiving-circuit to energize a secondary circuit, and operating translating devices by means of the energy so obtained in the secondary circuit.

9. The method hereinbefore described of transmitting electrical energy through the natural media, which consists in generating current impulses of relatively-low electromotive force at a generating-station, utilizing such impulses to energize the primary of a transformer, generating by means of such primary circuit impulses in a secondary surrounding by the primary and connected to the earth and to an elevated terminal, of sufficiently-high electromotive force to render elevated air strata conducting, causing thereby impulses to be propagated through the air strata, collecting or receiving the energy of such impulses, at a point distant from the generating-station, by means of a receiving-circuit connected to the earth and to an elevated terminal, and utilizing the energy so received to energize a secondary circuit of low potential surrounding the receiving-circuit.

NIKOLA TESLA.

Witnesses:
M. LAWSON DYER,
G. W. MARTLING.

No. 649,621. Patented May 15, 1900.

N. TESLA.

APPARATUS FOR TRANSMISSION OF ELECTRICAL ENERGY.

(Application filed Feb. 19, 1900.)

(No Model.)

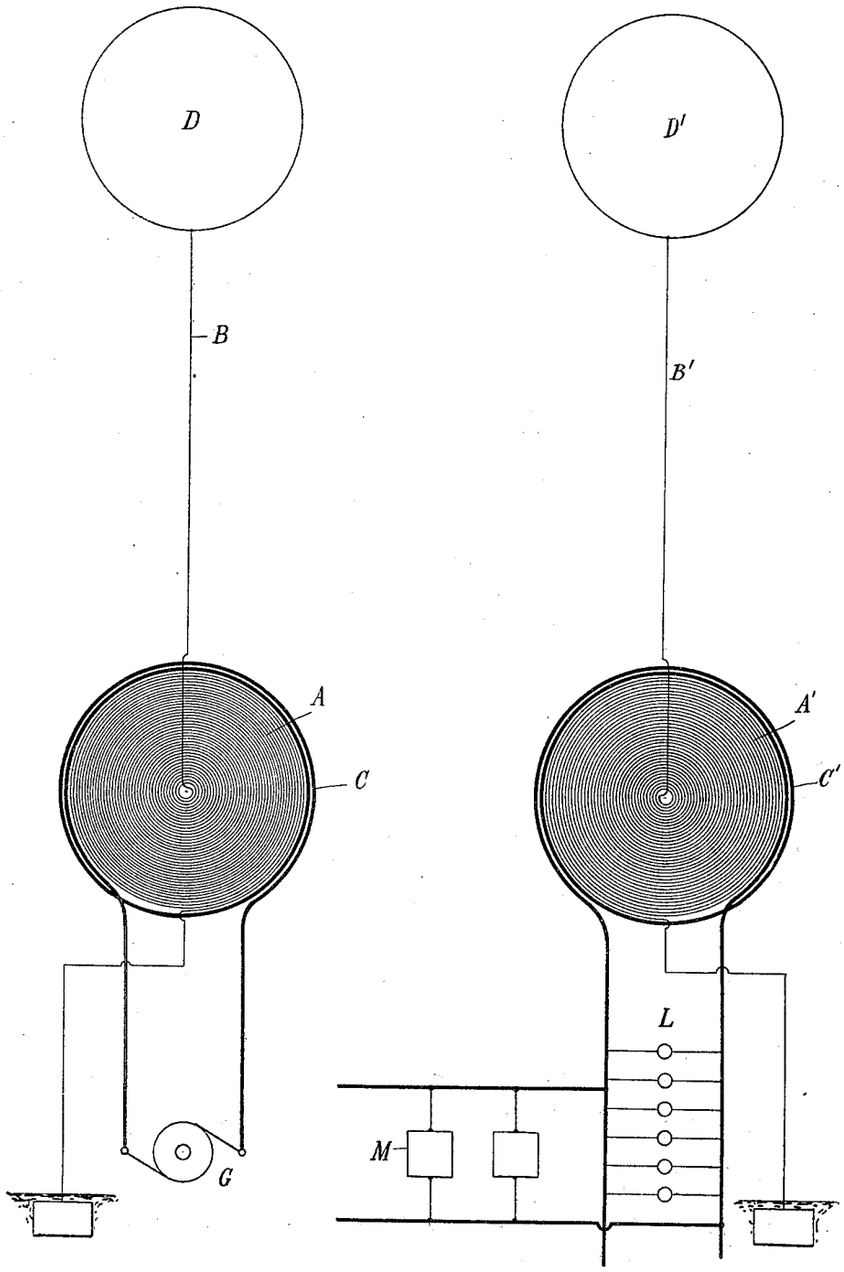

Witnesses:
Benjamin Miller.
G. W. Maulting.

Nikola Tesla, Inventor
by Kerr, Page & Cooper
Att'ys

THE NORRIS PETERS CO., PHOTO-LITHO., WASHINGTON, D. C.

UNITED STATES PATENT OFFICE.

NIKOLA TESLA, OF NEW YORK, N. Y.

APPARATUS FOR TRANSMISSION OF ELECTRICAL ENERGY.

SPECIFICATION forming part of Letters Patent No. 649,621, dated May 15, 1900.

Original application filed September 2, 1897, Serial No. 650,343. Divided and this application filed February 19, 1900. Serial No. 5,780. (No model.)

To all whom it may concern:

Be it known that I, NIKOLA TESLA, a citizen of the United States, residing at the borough of Manhattan, in the city of New York, county and State of New York, have invented certain new and useful Improvements in Apparatus for the Transmission of Electrical Energy, of which the following is a specification, reference being had to the drawing accompanying and forming a part of the same.

This application is a division of an application filed by me on September 2, 1897, Serial No. 650,343, entitled "Systems of transmissions of electrical energy," and is based upon new and useful features and combinations of apparatus shown and described in said application for carrying out the method therein disclosed and claimed.

The invention which forms the subject of my present application comprises a transmitting coil or conductor in which electrical currents or oscillations are produced and which is arranged to cause such currents or oscillations to be propagated by conduction through the natural medium from one point to another remote therefrom and a receiving coil or conductor at such distant point adapted to be excited by the oscillations or currents propagated from the transmitter.

This apparatus is shown in the accompanying drawing, which is a diagrammatic illustration of the same.

A is a coil, generally of many turns and of a very large diameter, wound in spiral form either about a magnetic core or not, as may be desired. C is a second coil formed by a conductor of much larger size and smaller length wound around and in proximity to the coil A.

The apparatus at one point is used as a transmitter, the coil A in this case constituting a high-tension, secondary, and the coil C the primary, of much lower tension, of a transformer. In the circuit of the primary C is included a suitable source of current G. One terminal of the secondary A is at the center of the spiral coil, and from this terminal the current is led by a conductor B to a terminal D, preferably of large surface, formed or maintained by such means as a balloon at an elevation suitable for the purposes of transmission. The other terminal of the secondary A is connected to earth, and, if desired, to the primary also, in order that the latter may be at substantially the same potential as the adjacent portions of the secondary, thus insuring safety. At the receiving-station a transformer of similar construction is employed; but in this case the longer coil A′ constitutes the primary, and the shorter coil C′ the secondary, of the transformer. In the circuit of the latter are connected lamps L, motors M, or other devices for utilizing the current. The elevated terminal D′ connects with the center of the coil A′, and the other terminal of said coil is connected to earth and preferably, also, to the coil C′ for the reasons above stated.

The length of the thin wire coil in each transformer should be approximately one-quarter of the wave length of the electric disturbance in the circuit, this estimate being based on the velocity of propagation of the disturbance through the coil itself and the circuit with which it is designed to be used. By way of illustration, if the rate at which the current traverses the circuit including the coil be one hundred and eighty-five thousand miles per second then a frequency of nine hundred and twenty-five per second would maintain nine hundred and twenty-five stationary moves in a circuit one hundred and eighty-five thousand miles long and each wave would be two hundred miles in length.

For such a low frequency, which would be resorted to only when it is indispensable for the operation of motors of the ordinary kind under the conditions above assumed, I would use a secondary of fifty miles in length. By such an adjustment or proportioning of the length of wire in the secondary coil or coils the points of highest potential are made to coincide with the elevated terminals D D′, and it should be understood that whatever length be given to the wires this requirement should be complied with in order to obtain the best results.

It will be readily understood that when the above-prescribed relations exist the best conditions for resonance between the transmit-

ting and receiving circuits are attained, and owing to the fact that the points of highest potential in the coils or conductors A A′ are coincident with the elevated terminals the maximum flow of current will take place in the two coils, and this, further, necessarily implies that the capacity and inductance in each of the circuits have such values as to secure the most perfect condition of synchronism with the impressed oscillations.

When the source of current G is in operation and produces rapidly pulsating or oscillating currents in the circuit of coil C, corresponding induced currents of very much higher potential are generated in the secondary coil A, and since the potential in the same gradually increases with the number of turns toward the center and the difference of potential between the adjacent turns is comparatively small a very high potential impracticable with ordinary coils may be successively obtained.

As the main object for which the apparatus is designed is to produce a current of excessively-high potential, this object is facilitated by using a primary current of very considerable frequency; but the frequency of the currents is in a large measure arbitrary, for if the potential be sufficiently high and the terminals of the coils be maintained at the proper elevation where the atmosphere is rarefied the stratum of air will serve as a conducting medium for the current produced and the latter will be transmitted through the air, with, it may be, even less resistance than through an ordinary conductor.

As to the elevation of the terminals D D′, it is obvious that this is a matter which will be determined by a number of things, as by the amount and quality of the work to be performed, by the condition of the atmosphere, and also by the character of the surrounding country. Thus if there be high mountains in the vicinity the terminals should be at a greater height, and generally they should always be at an altitude much greater than that of the highest objects near them. Since by the means described practically any potential that is desired may be produced, the currents through the air strata may be very small, thus reducing the loss in the air.

The apparatus at the receiving-station responds to the currents propagated from the transmitter in a manner which will be well understood from the foregoing description. The primary circuit of the receiver—that is, the thin wire coil A′—is excited by the currents propagated by conduction through the intervening natural medium from the transmitter, and these currents induce in the secondary coil C′ other currents which are utilized for operating the devices included in the circuit thereof.

Obviously the receiving-coils, transformers, or other apparatus may be movable—as, for instance, when they are carried by a vessel floating in the air or by a ship at sea. In the former case the connection of one terminal of the receiving apparatus to the ground might not be permanent, but might be intermittently or inductively established without departing from the spirit of my invention.

It is to be noted that the phenomenon here involved in the transmission of electrical energy is one of true conduction and is not to be confounded with the phenomena of electrical radiation which have heretofore been observed and which from the very nature and mode of propagation would render practically impossible the transmission of any appreciable amount of energy to such distances as are of practical importance.

What I now claim as my invention is—

1. The combination with a transmitting coil or conductor connected to ground and to an elevated terminal respectively, and means for producing therein electrical currents or oscillations, of a receiving coil or conductor similarly connected to ground and to an elevated terminal, at a distance from the transmitting-coil and adapted to be excited by currents caused to be propagated from the same by conduction through the intervening natural medium, a secondary conductor in inductive relation to the receiving-conductor and devices for utilizing the current in the circuit of said secondary conductor, as set forth.

2. The combination with a transmitting coil or conductor having its ends connected to ground and to an elevated terminal respectively, a primary coil in inductive relation thereto and a source of electrical oscillations in said primary circuit, of a receiving conductor or coil having its ends connected to ground and to an elevated terminal respectively and adapted to be excited by currents caused to be propagated from the transmitter through the natural medium and a secondary circuit in inductive relation to the receiving-circuit and receiving devices connected therewith, as set forth.

3. The combination with a transmitting instrument comprising a transformer having its secondary connected to ground and to an elevated terminal respectively, and means for impressing electrical oscillations upon its primary, of a receiving instrument comprising a transformer having its primary similarly connected to ground and to an elevated terminal, and a translating device connected with its secondary, the capacity and inductance of the two transformers having such values as to secure synchronism with the impressed oscillations, as set forth.

4. The combination with a transmitting instrument comprising an electrical transformer having its secondary connected to ground and to an elevated terminal respectively, and means for impressing electrical oscillations upon its primary, of a receiving instrument comprising a transformer having its primary similarly connected to ground and to an elevated terminal, and a translat-

ing device connected with its secondary, the capacity and inductance of the secondary of the transmitting and primary of the receiving instruments having such values as to secure synchronism with the impressed oscillations, as set forth.

5. The combination with a transmitting coil or conductor connected to ground and an elevated terminal respectively, and means for producing electrical currents or oscillations in the same, of a receiving coil or conductor similarly connected to ground and to an elevated terminal and synchronized with the transmitting coil or conductor, as set forth.

6. The combination with a transmitting instrument comprising an electrical transformer, having its secondary connected to ground and to an elevated terminal respectively, of a receiving instrument comprising a transformer, having its primary similarly connected to ground and to an elevated terminal, the receiving-coil being synchronized with that of the transmitter, as set forth.

7. The combination with a transmitting coil or conductor connected to ground and to an elevated terminal respectively, and means for producing electrical currents or oscillations in the same, of a receiving coil or conductor similarly connected to ground and to an elevated terminal, the said coil or coils having a length equal to one-quarter of the wave length of the disturbance propagated, as set forth.

8. The combination with a transmitting coil or conductor connected to ground and to an elevated terminal respectively, and adapted to cause the propagation of currents or oscillations by conduction through the natural medium, of a receiving-circuit similarly connected to ground and to an elevated terminal, and of a capacity and inductance such that its period of vibration is the same as that of the transmitter, as set forth.

9. The transmitting or receiving circuit herein described, connected to ground and an elevated terminal respectively, and arranged in such manner that the elevated terminal is charged to the maximum potential developed in the circuit, as set forth.

10. The combination with a transmitting coil or conductor connected to ground and to an elevated terminal respectively of a receiving-circuit having a period of vibration corresponding to that of the transmitting-circuit and similarly connected to ground and to an elevated terminal and so arranged that the elevated terminal is charged to the highest potential developed in the circuit, as set forth.

NIKOLA TESLA.

Witnesses:
PARKER W. PAGE,
MARCELLUS BAILEY.

No. 655,838. Patented Aug. 14, 1900.

N. TESLA.

METHOD OF INSULATING ELECTRIC CONDUCTORS.

(Application filed June 15, 1900.)

(No Model.)

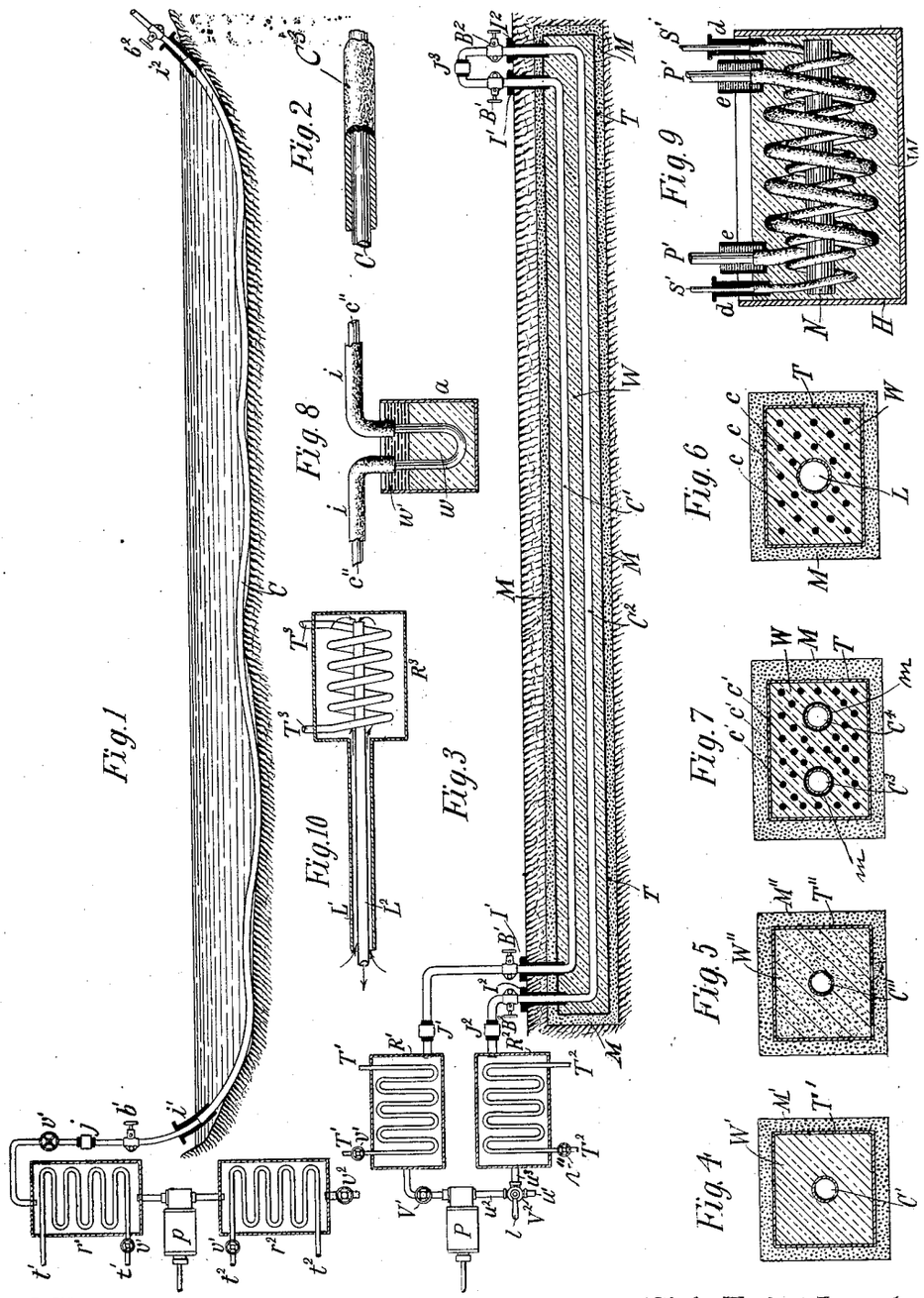

Witnesses:
Raphael Netter
C. D. Morrill

Nikola Tesla, Inventor
by Kerr, Page & Cooper,
Att'ys

THE NORRIS PETERS CO., PHOTO-LITHO., WASHINGTON, D. C.

UNITED STATES PATENT OFFICE.

NIKOLA TESLA, OF NEW YORK, N. Y.

METHOD OF INSULATING ELECTRIC CONDUCTORS.

SPECIFICATION forming part of Letters Patent No. 655,838, dated August 14, 1900.

Application filed June 15, 1900. Serial No. 20,405. (No specimens.)

To all whom it may concern:

Be it known that I, NIKOLA TESLA, a citizen of the United States, residing in the borough of Manhattan, in the city, county, and State of New York, have invented certain new and useful Improvements in Methods of Insulating Electric Conductors, of which the following is a specification, reference being had to the accompanying drawings.

It has long been known that many substances which are more or less conducting when in the fluid condition become insulators when solidified. Thus water, which is in a measure conducting, acquires insulating properties when converted into ice. The existing information on this subject, however, has been heretofore of a general nature only and chiefly derived from the original observations of Faraday, who estimated that the substances upon which he experimented, such as water and aqueous solutions, insulate an electrically-charged conductor about one hundred times better when rendered solid by freezing, and no attempt has been made to improve the quality of the insulation obtained by this means or to practically utilize it for such purposes as are contemplated in my present invention. In the course of my own investigations, more especially those of the electric properties of ice, I have discovered some novel and important facts, of which the more prominent are the following: first, that under certain conditions, when the leakage of the electric charge ordinarily taking place is rigorously prevented, ice proves itself to be a much better insulator than has heretofore appeared; second, that its insulating properties may be still further improved by the addition of other bodies to the water; third, that the dielectric strength of ice or other frozen aqueous substance increases with the reduction of temperature and corresponding increase of hardness, and, fourth, that these bodies afford a still more effective insulation for conductors carrying intermittent or alternating currents, particularly of high rates, surprisingly-thin layers of ice being capable of withstanding electromotive forces of many hundreds and even thousands of volts. These and other observations have led me to the invention of a novel method of insulating conductors, rendered practicable by reason of the above facts and advantageous in the utilization of electrical energy for industrial and commercial purposes. Broadly stated, the method consists in insulating an electric conductor by freezing or solidifying and maintaining in such state, by the circulation of a cooling agent, the material surrounding or contiguous to the conductor.

In the practical carrying out of my method I may employ a hollow conductor and pass the cooling agent through the same, thus freezing the water or other medium in contact with or close to such conductor, or I may use expressly for the circulation of the cooling agent an independent channel and freeze or solidify the adjacent substance, in which any number of conductors may be embedded. The conductors may be bare or covered with some material which is capable of keeping them insulated when it is frozen or solidified. The frozen mass may be in direct touch with the surrounding medium or it may be in a degree protected from contact with the same by an inclosure more or less impervious to heat. The cooling agent may be any kind of liquid, preferably of low freezing-point, as brine, or it may be a gas, as atmospheric air, oxygen, carbonic acid, ammonia, illuminating-gas, or hydrogen. It may be forced through the channel by gravity, pressure, or suction, produced mechanically or otherwise, or by any other kind of force. It may be continually renewed or indefinitely used by being alternately volatilized and condensed or evaporated and absorbed and mechanically driven back and forth or steadily circulated in a closed path under any suitable conditions as regards pressure, density, temperature, and velocity.

To conduce to a better understanding of the invention, reference is now made to the accompanying drawings, in which—

Figures 1, 3, 6, 7, 8, and 9 illustrate in longitudinal section typical ways of carrying out my invention; and Figs. 2, 4, 5, and 10, in section or partly so, constructive details to be described.

In Fig. 1, C is a hollow conductor, such as a steel tube, laid in a body of water and communicating with a reservoir r', but electrically insulated from the same at j. A pump or compressor p of any suitable construction

connects r' with another similar tank r^2, provided with an inlet-valve v^2. The air or other gas which is used as the cooling agent entering through the valve v^2 is drawn through the tank r^2 and pump p into the reservoir r', escaping thence through the conductor C under any desired pressure, which may be regulated by a valve v'. Both the reservoirs r' and r^2 are kept at a low temperature by suitable means, as by coils or tubes t' t' and t^2 t^2, through which any kind of refrigerating fluid may be circulated, some provision being preferably made for adjusting the flow of the same, as by valves v'. The gas continuously passing through the tube or conductor C being very cold will freeze and maintain in this state the water in contact with or adjacent to the conductor and so insulate it. Flanged bushings i' i^2 of non-conducting material may be used to prevent the leakage of the current which would otherwise occur, owing to the formation of a superficial film of moisture over the ice projecting out of the water. The tube, being kept insulated by this means, may then be employed in the manner of an ordinary telegraphic or other cable by connecting either or both of the terminals b' b^2 in a circuit including the earth.

In many cases it will be of advantage to cover the hollow conductor with a thick layer of some cheap material, as felt, this being indicated by C^3 in Fig. 2. Such a covering, penetrable by water, would be ordinarily of little or no use; but when embedded in the ice it improves the insulating qualities of the same. In this instance it furthermore serves to greatly reduce the quantity of ice required, its rate of melting, and the influx of heat from the outside, thus diminishing the expenditure of energy necessary for the maintenance of normal working conditions. As regards this energy and other particulars of importance they will vary according to the special demands in each case.

Generally considered, the cooling agent will have to carry away heat at a rate sufficient to keep the conductor at the desired temperature and to maintain a layer of the required thickness of the substance surrounding it in a frozen state, compensating continually for the heat flowing in through the layer and wall of the conductor and that generated by mechanical and electrical friction. To meet these conditions, its cooling capacity, which is dependent on the temperature, density, velocity, and specific heat, will be calculated by the help of data and formulæ familiar to engineers. Air will be, as a rule, suitable for the use contemplated; but in exceptional instances some other gas, as hydrogen, may be resorted to, which will permit a much-greater rate of cooling and a lower temperature to be reached. Obviously whichever gas be employed it should before entering the hollow conductor or channel be thoroughly dried and separated from all which by condensation and deposition or otherwise might cause an obstruction to its passage. For these purposes apparatus may be employed which is well known and which it is unnecessary to show in detail.

Instead of being wasted at the distant station the cooling agent may be turned to some profitable use. Evidently in the industrial and commercial exploitation of my invention any kind of fluid capable of meeting the requirements may be conveyed from one to another station and there utilized for refrigeration, power, heating, lighting, sanitation, chemical processes, or any other purpose to which it may lend itself, and thus the revenue of the plant may be increased.

As to the temperature of the conductor it will be determined by the nature of its use and considerations of economy. For instance, if it be employed for the transmission of telegraphic messages, when the loss in electrical friction may be of no consequence, a very low temperature may not be required; but if it be used for transmitting large amounts of electrical energy, when the frictional waste may be a serious drawback, it will be desirable to keep it extremely cold. The attainment of this object will be facilitated by any provision for reducing as much as possible the flowing in of the heat from the surrounding medium. Clearly the lower the temperature of the conductor the smaller will be the loss in electrical friction; but, on the other hand, the colder the conductor the greater will be the influx of heat from the outside and the cost of the cooling agent. From such and similar considerations the temperature securing the highest economy will be ascertained.

Most frequently in the distribution of electricity for industrial purposes, as in my system of power transmission by alternate currents, more than one conductor will be required, and in such cases it may be convenient to circulate the cooling agent in a closed path formed by the conductors. A plan of this kind is illustrated in Fig. 3, in which C' and C^2 represent two hollow conductors embedded in a frozen mass underground and communicating, respectively, with the reservoirs R' and R^2, which are connected by a reciprocating or other suitable pump P. Cooling coils or tubes T' T' and T^2 T^2 with regulating-valves v' v'' are employed, which are similar to and serve the same purpose as those shown in Fig. 1. Other features of similarity, though unnecessary, are illustrated to facilitate an understanding of the plan. A three-way valve V^2 is provided, which when placed with its lever l as indicated allows the cooling agent to enter through the tubes u' u^2 and pump P, thus filling the reservoirs R' R^2 and hollow conductors C' C^2; but when turned ninety degrees the valve shuts off the communication to the outside through the tube u' and establishes a connection between the reservoir R^2 and pump P through the tubes u^2 and u^3, thus permitting the fluid to be

circulated in the closed path C′ C^2 R^2 w^3 w^2 P R′ by the action of the pump. Another valve V′ of suitable construction may be used for regulating the flow of the cooling agent. The conductors C′ C^2 are insulated from the reservoirs R′ R^2 and from each other at the joints J′ J^2 J^3, and they are, furthermore, protected at the places where they enter and leave the ground by flanged bushings I′ I′ I^2 I^2, of insulating material, which extend into the frozen mass in order to prevent the current from leaking, as above explained. Binding-posts B′ B′ and B^2 B^2 are provided for connecting the conductors to the circuit at each station.

In laying the conductors, as C′ C^2, whatever be their number, a trench will generally be dug and a trough, round or square, as T, of smaller dimensions than the trench placed in the same, the intervening space being packed with some material (designated by M M M) more or less impervious to heat, as sawdust, ashes, or the like. Next, the conductors will be put in position and temporarily supported in any convenient manner, and finally the trough will be filled with water or other substance W, which will be gradually frozen by circulating the cooling agent in the closed path, as before described. Usually the trench will not be level, but will follow the undulations of the ground, and this will make it necessary to subdivide the trough in sections or to effect the freezing of the substance filling it successively in parts. This being done and the conductors thus insulated and fixed, a layer of the same or similar material M M M will be placed on the top and the whole covered with earth or pavement. The trough may be of metal, as sheet-iron, and in cases where the ground is used as return-circuit it may serve as a main or it may be of any kind of material more or less insulating. Figs. 4 and 5 illustrate in cross-section two such underground troughs T′ and T″, of metal sheet, with their adiathermanous inclosures, (designated M′ and M″, respectively,) each trough containing a single central hollow conductor, as C′ and C″. In the first case the insulation W′ is supposed to be ice, obtained by freezing water preferably freed of air in order to exclude the formation of dangerous bubbles or cavities, while in the second case the frozen mass W″ is some aqueous or other substance or mixture highly insulating when in this condition.

It should be stated that in many instances it may be practicable to dispense with a trough by resorting to simple expedients in the placing and insulating of the conductors. In fact, for some purposes it may be sufficient to simply cover the latter with a moist mass, as cement or other plastic material, which so long as it is kept at a very low temperature and frozen hard will afford adequate insulation.

Another typical way of carrying out my invention, to which reference has already been made, is shown in Fig. 6, which represents the cross-section of a trough, the same in other respects as those before shown, but containing instead of a hollow conductor any kind of pipe or conduit L. The cooling agent may be driven in any convenient manner through the pipe for the purpose of freezing the water or other substance filling the trough, thus insulating and fixing a number of conductors *c c c*. Such a plan may be particularly suitable in cities for insulating and fixing telegraph and telephone wires or the like. In such cases an exceedingly-low temperature of the cooling agent may not be required, and the insulation will be obtained at the expense of little power. The conduit L may, however, be used simultaneously for conveying and distributing any kind of fluid for which there is a demand through the district. Obviously two such conduits may be provided and used in a similar manner as the conductors C′ C^2.

It will often be desirable to place in the same trough a great number of wires or conductors serving for a variety of purposes. In such a case a plan may be adopted which is illustrated in Fig. 7, showing a trough similar to that in Fig. 6, with the conductors in cross-section. The cooling agent may be in this instance circulated, as in Fig. 3 or otherwise, through the two hollow conductors C^3 and C^4, which, if found advantageous, may be covered with a layer of cheap material *m m*, such as will improve their insulation, but not prevent the freezing or solidification of the surrounding substance W. The tubular conductors C′ C^2, preferably of iron, may then serve to convey heavy currents for supplying light and power, while the small ones *c′ c′ c′*, embedded in the ice or frozen mass, may be used for any other purposes.

While my invention contemplates, chiefly, the insulation of conductors employed in the transmission of electrical energy to a distance, it may be, obviously, otherwise usefully applied. In some instances, for example, it may be desirable to insulate and support a conductor in places as ordinarily done by means of glass or porcelain insulators. This may be effected in many ways by conveying a cooling agent either through the conductor or through an independent channel and freezing or solidifying any kind of substance, thus enabling it to serve the purpose. Such an artificial insulating-support is illustrated in Fig. 8, in which *a* represents a vessel filled with water or other substance *w*, frozen by the agent circulating through the hollow conductor C″, which is thus insulated and supported. To improve the insulation on the top, where it is most liable to give way, a layer of some substance *w′*, as oil, may be used, and the conductor may be covered near the support with insulation *i i*, as shown, the same extending into the oil for reasons well understood.

Another typical application of my inven-

tion is shown in Fig. 9, in which P′ and S′ represent, respectively, the primary and secondary conductors, bare or insulated, of a transformer, which are wound on a core N and immersed in water or other substance W, containing a jar H and, as before stated, preferably freed of air by boiling or otherwise. The cooling agent is circulated in any convenient manner, as through the hollow primary P′, for the purpose of freezing the substance W. Flanged bushings *d d* and oil-cups *e e*, extending into the frozen mass, illustrate suitable means for insulating the ends of the two conductors and preventing the leakage of the currents. A transformer, as described, is especially fitted for use with currents of high frequency, when a low temperature of the conductors is particularly desirable, and ice affords an exceptionally-effective insulation.

It will be understood that my invention may be applied in many other ways, that the special means here described will be greatly varied according to the necessities, and that in each case many expedients will be adopted which are well known to engineers and electricians and on which it is unnecessary to dwell. However, it may be useful to state that in some instances a special provision will have to be made for effecting a uniform cooling of the substance surrounding the conductor throughout its length. Assuming in Fig. 1 the cooling agent to escape at the distant end freely into the atmosphere or into a reservoir maintained at low pressure, it will in passing through the hollow conductor C move with a velocity steadily increasing toward the end, expanding isothermally, or nearly so, and hence it will cause an approximately-uniform formation of ice along the conductor. In the plan illustrated in Fig. 3 a similar result will be in a measure attained, owing to the compensating effect of the hollow conductors C′ and C^2, which may be still further enhanced by reversing periodically the direction of the flow in any convenient manner; but in many cases special arrangements will have to be employed to render the cooling more or less uniform. For instance, referring to Figs. 4, 5, and 6, instead of a single channel two concentric channels L′ and L^2 may be provided and the cooling agent passed through one and returned through the other, as indicated diagrammatically in Fig. 10. In this and any similar arrangement when the flow takes place in opposite directions the object aimed at will be more completely attained by reducing the temperature of the circulating cooling agent at the distant station, which may be done by simply expanding it into a large reservoir, as R^3, or cooling it by means of a tube or coil T^3, or otherwise. Evidently in the case illustrated the concentric tubes may be used as independent conductors, insulated from each other by the intervening fluid and from the ground by the frozen or solidified substance.

Generally in the transmission of electrical energy in large amounts, when the quantity of heat to be carried off may be considerable, refrigerating apparatus thoroughly protected against the inflow of heat from the outside, as usual, will be employed at both the stations and, when the distance between them is very great, also at intermediate points, the machinery being advantageously operated by the currents transmitted or fluids conveyed. In such cases a fairly-uniform freezing of the insulating substance will be attained without difficulty by the compensating effect of the oppositely-circulating cooling agents. In large plants of this kind, when the saving of electrical energy in the transmission is the most important consideration or when the chief object is to reduce the cost of the mains by the employment of cheap metal, as iron, or otherwise, every effort will be made to maintain the conductors at the lowest possible temperature, and well-known refrigerating processes, as those based on the regenerative principle, may be resorted to, and in this and any other case the hollow conductors or channels instead of merely serving the purpose of conveying the cooling agent may themselves form active parts of the refrigerating apparatus.

From the above description it will be readily seen that my invention forms a fundamental departure in principle from the established methods of insulating conductors employed in the industrial and commercial application of electricity. It aims, broadly, at obtaining insulation by the continuous expenditure of a moderate amount of energy instead of securing it only by virtue of an inherent physical property of the material used, as heretofore. More especially its object is to provide, when and wherever required, insulation of high quality, of any desired thickness and exceptionally cheap, and to enable the transmission of electrical energy under conditions of economy heretofore unattainable and at distances until now impracticable by dispensing with the necessity of using costly conductors and insulators.

What I claim as my invention is—

1. The method of insulating electric conductors herein described which consists in imparting insulating properties to a material surrounding or contiguous to the said conductor by the continued action thereon of a cooling agent, as set forth.

2. The method of insulating electric conductors herein described which consists in reducing to and maintaining in a frozen or solidified condition the material surrounding or contiguous to the said conductor by the action thereon of a cooling agent maintained in circulation through one or more channels as set forth.

3. The method of insulating electric conductors herein described which consists in surrounding or supporting the conductor by material which acquires insulating properties when in a frozen or solidified state, and main-

taining the material in such a state by the circulation through one or more channels extending through it of a cooling agent, as set forth.

4. The method of insulating an electric conductor which consists in surrounding or supporting said conductor by a material which acquires insulating properties when frozen or solidified, and maintaining the material in such state by passing a cooling agent continuously through a channel in said conductor, as set forth.

5. The method of insulating electric conductors, which consists in surrounding or supporting the said conductors by a material which acquires insulating properties when in a frozen or solidified state, and maintaining the material in such state by the continued application thereto of a cooling agent, as set forth.

6. The method of insulating conductors herein set forth which consists in surrounding or supporting the conductors by a material which acquires insulating properties when in a frozen or solidified state, and maintaining the material in such state by the circulation of a cooling agent through a circuit of pipes or tubes extending through the said material as set forth.

7. The method of insulating electric conductors which consists in laying or supporting the conductors in a trough or conduit filling the trough with a material which acquires insulating properties when frozen or solidified, and then causing a cooling agent to circulate through one or more channels extending through the material in the trough so as to freeze or solidify the material, as set forth.

NIKOLA TESLA.

Witnesses:
PARKER W. PAGE,
M. LAWSON DYER.

No. 685,012. Patented Oct. 22, 1901.

N. TESLA.

MEANS FOR INCREASING THE INTENSITY OF ELECTRICAL OSCILLATIONS.

(Application filed Mar. 21, 1900. Renewed July 3, 1901.)

(No Model.)

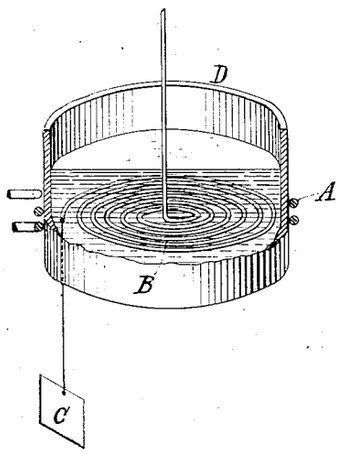

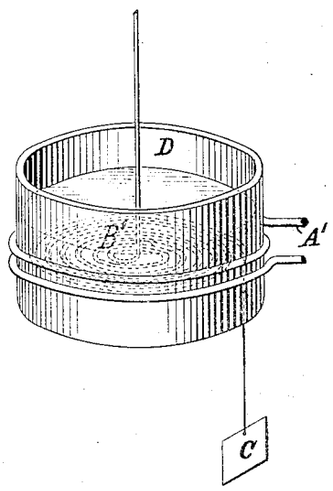

Witnesses:
Raphael Netter
Benjamin Miller.

Nikola Tesla, Inventor
by Kerr, Page & Cooper Attys.

UNITED STATES PATENT OFFICE.

NIKOLA TESLA, OF NEW YORK, N. Y.

MEANS FOR INCREASING THE INTENSITY OF ELECTRICAL OSCILLATIONS.

SPECIFICATION forming part of Letters Patent No. 685,012, dated October 22, 1901.

Application filed March 21, 1900. Renewed July 3, 1901. Serial No. 66,980. (No model.)

To all whom it may concern:

Be it known that I, NIKOLA TESLA, a citizen of the United States, residing at the borough of Manhattan, in the city, county, and State of New York, have invented certain new and useful Improvements in Means for Increasing the Intensity of Electrical Oscillations, of which the following is a specification, reference being had to the drawings accompanying and forming part of the same.

In many scientific and practical uses of electrical impulses or oscillations—as, for example, in systems of transmitting intelligence to distant points—it is of great importance to intensify as much as possible the current impulses or vibrations which are produced in the circuits of the transmitting and receiving instruments, particularly of the latter.

It is well known that when electrical impulses are impressed upon a circuit adapted to oscillate freely the intensity of the oscillations developed in the same is dependent on the magnitude of its physical constants and the relation of the periods of the impressed and of the free oscillations. For the attainment of the best result it is necessary that the periods of the impressed should be the same as that of the free oscillations, under which conditions the intensity of the latter is greatest and chiefly dependent on the inductance and resistance of the circuit, being directly proportionate to the former and inversely to the latter. In order, therefore, to intensify the impulses or oscillations excited in the circuit—in other words, to produce the greatest rise of current or electrical pressure in the same—it is desirable to make its inductance as large and its resistance as small as practicable. Having this end in view I have devised and used conductors of special forms and of relatively very large cross-section; but I have found that limitations exist in regard to the increase of the inductance as well as to the diminution of the resistance. This will be understood when it is borne in mind that the resonant rise of current or pressure in a freely-oscillating circuit is proportionate to the frequency of the impulses and that a large inductance in general involves a slow vibration. On the other hand, an increase of the section of the conductor with the object of reducing its resistance is, beyond a certain limit, of little or no value, principally because electrical oscillations, particularly those of high frequency, pass mainly through the superficial conducting layers, and while it is true that this drawback may be overcome in a measure by the employment of thin ribbons, tubes, or stranded cables, yet in practice other disadvantages arise, which often more than offset the gain.

It is a well-established fact that as the temperature of a metallic conductor rises its electrical resistance increases, and in recognition of this constructors of commercial electrical apparatus have heretofore resorted to many expedients for preventing the coils and other parts of the same from becoming heated when in use, but merely with a view to economizing energy and reducing the cost of construction and operation of the apparatus.

Now I have discovered that when a circuit adapted to vibrate freely is maintained at a low temperature the oscillations excited in the same are to an extraordinary degree magnified and prolonged, and I am thus enabled to produce many valuable results which have heretofore been wholly impracticable.

Briefly stated, then, my invention consists in producing a great increase in the intensity and duration of the oscillations excited in a freely-vibrating or resonating circuit by maintaining the same at a low temperature.

Ordinarily in commercial apparatus such provision is made only with the object of preventing wasteful heating, and in any event its influence upon the intensity of the oscillations is very slight and practically negligible, for as a rule impulses of arbitrary frequency are impressed upon a circuit, irrespective of its own free vibrations, and a resonant rise is expressly avoided.

My invention, it will be understood, does not primarily contemplate the saving of energy, but aims at the attainment of a distinctly novel and valuable result—that is, the increase to the greatest practicable degree of the intensity and duration of free oscillations. It may be usefully applied in all cases when this special object is sought, but offers exceptional advantages in those instances in which the freely-oscillating discharges of a condenser are utilized.

The best and most convenient manner of

carrying out the invention of which I am now aware is to surround the freely-vibrating circuit or conductor, which is to be maintained at a low temperature, with a suitable cooling medium, which may be any kind of freezing mixture or agent, such as liquid air, and in order to derive the fullest benefit from the improvement the circuit should be primarily constructed so as to have the greatest possible self-induction and the smallest practicable resistance, and other rules of construction which are now recognized should be observed. For example, when in a system of transmission of energy for any purpose through the natural media the transmitting and receiving conductors are connected to earth and to an insulated terminal, respectively, the lengths of these conductors should be one-quarter of the wave length of the disturbance propagated through them.

In the accompanying drawing I have shown graphically a disposition of apparatus which may be used in applying practically my invention.

The drawing illustrates in perspective two devices, either of which may be the transmitter, while the other is the receiver. In each there is a coil of few turns and low resistance, (designated in one by A and in the other by A'.) The former coil, supposed to be forming part of the transmitter, is to be connected with a suitable source of current, while the latter is to be included in circuit with a receiving device. In inductive relation to said coils in each instrument is a flat spirally-wound coil B or B', one terminal of which is shown as connected to a ground-plate C, while the other, leading from the center, is adapted to be connected to an insulated terminal, which is generally maintained at an elevation in the air. The coils B B' are placed in insulating-receptacles D, which contain the freezing agent and around which the coils A and A' are wound.

Coils in the form of a flat spiral, such as those described, are eminently suited for the production of free oscillations; but obviously conductors or circuits of any other form may be used, if desired.

From the foregoing the operation of the apparatus will now be readily understood. Assume, first, as the simplest case that upon the coil A of the transmitter impulses or oscillations of an arbitrary frequency and irrespective of its own free vibrations are impressed. Corresponding oscillations will then be induced in the circuit B, which, being constructed and adjusted, as before indicated, so as to vibrate at the same rate, will greatly magnify them, the increase being directly proportionate to the product of the frequency of the oscillations and the inductance of circuit B and inversely to the resistance of the latter. Other conditions remaining the same, the intensity of the oscillations in the resonating-circuit B will be increased in the same proportion as its resistance is reduced. Very often, however, the conditions may be such that the gain sought is not realized directly by diminishing the resistance of the circuit. In such cases the skilled expert who applies the invention will turn to advantage the reduction of resistance by using a correspondingly longer conductor, thus securing a much greater self-induction, and under all circumstances he will determine the dimensions of the circuit, so as to get the greatest value of the ratio of its inductance to its resistance, which determines the intensity of the free oscillations. The vibrations of coil B, greatly strengthened, spread to a distance and on reaching the tuned receiving-conductor B' excite corresponding oscillations in the same, which for similar reasons are intensified, with the result of inducing correspondingly stronger currents or oscillations in circuit A', including the receiving device. When, as may be the case in the transmission of intelligible signals, the circuit A is periodically closed and opened, the effect upon the receiver is heightened in the manner above described not only because the impulses in the coils B and B' are strengthened, but also on account of their persistence through a longer interval of time. The advantages offered by the invention are still more fully realized when the circuit A of the transmitter instead of having impulses of an arbitrary frequency impressed upon it is itself permitted to vibrate at its own rate, and more particularly so if it be energized by the freely-oscillating high-frequency discharges of a condenser. In such a case the cooling of the conductor A, which may be effected in any suitable manner, results in an extraordinary magnification of the oscillation in the resonating-circuit B, which I attribute to the increased intensity as well as greater number of the high-frequency oscillations obtained in the circuit A. The receiving-coil B' is energized stronger in proportion and induces currents of greater intensity in the circuit A'. It is evident from the above that the greater the number of the freely-vibrating circuits which alternately receive and transmit energy from one to another the greater, relatively, will be the gain secured by applying my invention.

I do not of course intend to limit myself to the specific manner and means described of artificial cooling, nor to the particular forms and arrangements of the circuits shown. By taking advantage of the facts above pointed out and of the means described I have found it possible to secure a rise of electrical pressure in an excited circuit very many times greater than has heretofore been obtainable, and this result makes it practicable, among other things, to greatly extend the distance of transmission of signals and to exclude much more effectively interference with the same than has been possible heretofore.

Having now described my invention, what I claim is—

1. The combination with a circuit adapted

to vibrate freely, of means for artificially cooling the same to a low temperature, as herein set forth.

2. In an apparatus for transmitting or receiving electrical impulses or oscillations, the combination with a primary and a secondary circuit, adapted to vibrate freely in response to the impressed oscillations, of means for artificially cooling the same to a low temperature, as herein set forth.

3. In a system for the transmission of electrical energy, a circuit upon which electrical oscillations are impressed, and which is adapted to vibrate freely, in combination with a receptacle containing an artificial refrigerant in which said circuit is immersed, as herein set forth.

4. The means of increasing the intensity of the electrical impulses or oscillations impressed upon a freely-vibrating circuit, consisting of an artificial refrigerant combined with and applied to such circuit and adapted to maintain the same at a low temperature.

5. The means of intensifying and prolonging the electrical oscillations produced in a freely-vibrating circuit, consisting of an artificial refrigerant applied to such circuit and adapted to maintain the same at a uniformly-low temperature.

6. In a system for the transmission of energy, a series of transmitting and receiving circuits adapted to vibrate freely, in combination with means for artificially maintaining the same at a low temperature, as set forth.

NIKOLA TESLA.

Witnesses:
JOHN C. KERR,
M. LAWSON DYER.

No. 685,953. Patented Nov. 5, 1901.

N. TESLA.

METHOD OF INTENSIFYING AND UTILIZING EFFECTS TRANSMITTED THROUGH NATURAL MEDIA.

(Application filed June 24, 1899. Renewed May 29, 1901.)

(No Model.)

Fig. 1.

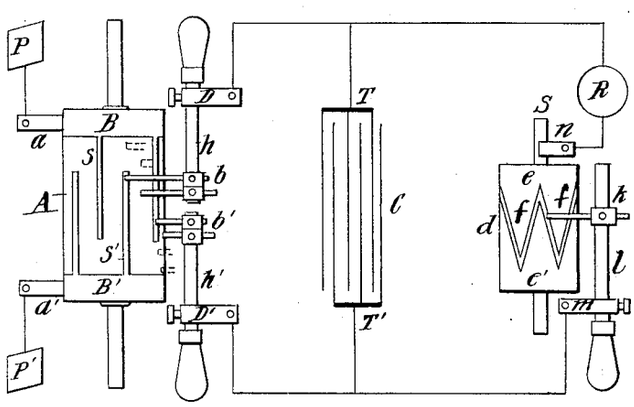

G

Fig. 2.

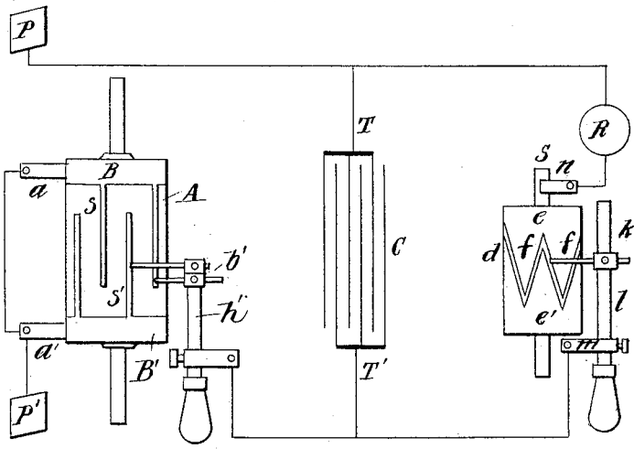

G

Witnesses;
G. B. Lewis.
Hellary C. Messimer.

Nikola Tesla, Inventor
by Kerr, Page & Cooper
Att'ys

THE NORRIS PETERS CO., PHOTO-LITHO., WASHINGTON, D. C.

UNITED STATES PATENT OFFICE.

NIKOLA TESLA, OF NEW YORK, N. Y.

METHOD OF INTENSIFYING AND UTILIZING EFFECTS TRANSMITTED THROUGH NATURAL MEDIA.

SPECIFICATION forming part of Letters Patent No. 685,953, dated November 5, 1901.

Application filed June 24, 1899. Renewed May 29, 1901. Serial No. 62,315. (No model.)

To all whom it may concern:

Be it known that I, NIKOLA TESLA, a citizen of the United States, residing at New York, in the county and State of New York, have invented a new and useful Improvement in Methods of Intensifying and Utilizing Effects Transmitted Through the Natural Media, of which the following is a specification, reference being had to the accompanying drawings, which form a part of the same.

The subject of my present invention is an improvement in the art of utilizing effects transmitted from a distance to a receiving device through the natural media; and it consists in a novel method by means of which results hitherto unattainable may be secured.

Several ways or methods of transmitting electrical disturbances through the natural media and utilizing them to operate distant receivers are now known and have been applied with more or less success for accomplishing a variety of useful results. One of these ways consists in producing by a suitable apparatus rays or radiations—that is, disturbances—which are propagated in straight lines through space, directing them upon a receiving or recording apparatus at a distance, and thereby bringing the latter into action. This method is the oldest and best known and has been brought particularly into prominence in recent years through the investigations of Heinrich Hertz. Another method consists in passing a current through a circuit, preferably one inclosing a very large area, inducing thereby in a similar circuit situated at a distance another current and affecting by the same in any convenient way a receiving device. Still another way, which has also been known for many years, is to pass in any suitable manner a current through a portion of the ground, as by connecting to two points of the same, preferably at a considerable distance from each other, the two terminals of a generator and to energize by a part of the current diffused through the earth a distant circuit which is similarly arranged and grounded at two points widely apart and which is made to act upon a sensitive receiver. These various methods have their limitations, one especially, which is common to all, being that the receiving circuit or instrument must be maintained in a definite position with respect to the transmitting apparatus, which often imposes great disadvantages upon the use of the apparatus.

In several applications filed by me and patents granted to me I have disclosed other methods of accomplishing results of this nature, which may be briefly described as follows: In one system the potential of a point or region of the earth is varied by imparting to it intermittent or alternating electrifications through one of the terminals of a suitable source of electrical disturbances which, to heighten the effect, has its other terminal connected to an insulated body, preferably of large surface and at an elevation. The electrifications communicated to the earth spread in all directions through the same, reaching a distant circuit which generally has its terminals arranged and connected similarly to those of the transmitting source and operates upon a highly-sensitive receiver. Another method is based upon the fact that the atmospheric air which behaves as an excellent insulator to currents generated by ordinary apparatus becomes a conductor under the influence of currents or impulses of enormously-high electromotive force which I have devised means for generating. By such means air strata, which are easily accessible, are rendered available for the production of many desired effects at distances, however great. This method, furthermore, allows advantage to be taken of many of those improvements which are practicable in the ordinary systems of transmission involving the use of a metallic conductor.

Obviously whatever method be employed it is desirable that the disturbances produced by the transmitting apparatus should be as powerful as possible, and by the use of certain forms of high-frequency apparatus which I have devised and which are now well known important practical advantages are in this respect secured. Furthermore, since in most cases the amount of energy conveyed to the distant circuit is but a minute fraction of the total energy emanating from the source it is necessary for the attainment of the best results that whatever the character of the receiver and the nature of the disturbances as much as possible of the energy conveyed should be made available for the operation

of the receiver, and with this object in view I have heretofore among other means employed a receiving-circuit of high self-induction and very small resistance and of a period such as to vibrate in synchronism with the disturbances, whereby a number of separate impulses from the source were made to coöperate, thus magnifying the effect exerted upon and insuring the action of the receiving device. By these means decided advantages have been secured in many instances; but very often the improvement is either not applicable at all or, if so, the gain is very slight. Evidently when the source is one producing a continuous pressure or delivering impulses of long duration it is impracticable to magnify the effects in this manner and when, on the other hand, it is one furnishing short impulses of extreme rapidity of succession the advantage obtained in this way is insignificant, owing to the radiation and the unavoidable frictional waste in the receiving-circuit. These losses reduce greatly both the intensity and the number of the coöperative impulses, and since the initial intensity of each of these is necessarily limited only an insignificant amount of energy is thus made available for a single operation of the receiver. As this amount is consequently dependent on the energy conveyed to the receiver by one single impulse it is evidently necessary to employ either a very large and costly, and therefore objectionable, transmitter or else to resort to the equally objectionable use of a receiving device too delicate and too easily deranged. Furthermore, the energy obtained through the coöperation of the impulses is in the form of extremely rapid vibrations and, because of this, unsuitable for the operation of ordinary receivers, the more so as this form of energy imposes narrow restrictions in regard to the mode and time of its application to such devices.

To overcome these and other limitations and disadvantages which have heretofore existed in such systems of transmission of signals or intelligence is the main object of my present invention, which comprises a novel method of accomplishing these ends.

The method, briefly stated, consists in producing arbitrarily-varied or intermittent disturbances or effects, transmitting such disturbances or effects through the natural media to a distant receiving-station, utilizing energy derived from such disturbances or effects at the receiving-station to charge a condenser, and using the accumulated potential energy so obtained to operate a receiving device.

An apparatus by means of which this method may be practiced is illustrated in the drawings hereto annexed, in which—

Figure 1 is a diagrammatic illustration of the apparatus, and Fig. 2 is a modified form or arrangement of the same.

In the practical application of my method I usually proceed as follows: At any two points in the transmitting medium between which there exists or may be obtained in any manner through the action of the disturbances or effects to be investigated or utilized a difference of electrical potential of any magnitude I arrange two plates or electrodes so that they may be oppositely charged through the agency of such effects or disturbances, and I connect these electrodes to the terminals of a highly-insulated condenser, generally of considerable capacity. To the condenser-terminals I also connect the receiver to be operated in series with a device of suitable construction, which performs the function of periodically discharging the condenser through the receiver at and during such intervals of time as may be best suitable for the purpose contemplated. This device may merely consist of two stationary electrodes separated by a feeble dielectric layer of minute thickness or it may comprise terminals one or more of which are movable and actuated by any suitable force and are adapted to be brought into and out of contact with each other in any convenient manner. It will now be readily seen that if the disturbances of whatever nature they may be cause definite amounts of electricity of the same sign to be conveyed to each of the plates or electrodes above mentioned, either continuously or at intervals of time which are sufficiently long, the condenser will be charged to a certain potential, and an adequate amount of energy being thus stored during the time determined by the device effecting the discharge of the condenser the receiver will be periodically operated by the electrical energy so accumulated; but very often the character of the impulses and the conditions of their use are such that without further provision not enough potential energy would be accumulated in the condenser to operate the receiving device. This is the case when, for example, each of the plates or terminals receives electricity of rapidly-changing sign or even when each receives electricity of the same sign, but only during periods which are short as compared with the intervals separating them. In such instances I resort to the use of a special device which I insert in the circuit between the plates and the condenser for the purpose of conveying to each of the terminals of the latter electrical charges of the proper quality and order of succession to enable the required amount of potential energy to be stored in the condenser.

There are a number of well-known devices, either without any moving parts or terminals or with elements reciprocated or rotated by the application of a suitable force, which offer a more ready passage to impulses of one sign or direction than to those of the other, or permit only impulses of one kind or order of succession to traverse a path, and any of these or similar devices capable of fulfilling the requirements may be used in carrying my invention into practice. One such device of

familiar construction which will serve to convey a clear understanding of this part of my invention and enable a person skilled in the art to apply the same is illustrated in the annexed drawings. It consists of a cylinder A of insulating material, which is moved at a uniform rate of speed by clockwork or other suitable motive power and is provided with two metal rings B B', upon which bear brushes *a* and *a'*, which are connected, respectively, in the manner shown to the terminal plates P and P', above referred to. From the rings B B' extend narrow metallic segments *s* and *s'*, which by the rotation of the cylinder A are brought alternately into contact with double brushes *b* and *b'*, carried by and in contact with conducting-holders *h* and *h'*, which are adjustable longitudinally in the metallic supports D and D', as shown. The latter are connected to the terminals T and T' of a condenser C, and it should be understood that they are capable of angular displacement, as ordinary brush-supports. The object of using two brushes, as *b* and *b'*, in each of the holders *h* and *h'* is to vary at will the duration of the electric contact of the plates P and P' with the terminals T and T', to which is connected a receiving-circuit including a receiver R and a device *d* of the kind above referred to, which performs the duty of closing the receiving-circuit at predetermined intervals of time and discharging the stored energy through the receiver. In the present case this device consists of a cylinder *d*, made partly of conducting and partly of insulating material *e* and *e'*, respectively, which is rotated at the desired rate of speed by any suitable means. The conducting part *e* is in good electrical connection with the shaft S and is provided with tapering segments *f f*, upon which slides a brush *k*, supported on a conducting-rod *l*, capable of longitudinal adjustment in a metallic support *m*. Another brush *n* is arranged to bear upon the shaft S, and it will be seen that whenever one of the segments *f* comes in contact with the brush *k* the circuit, including the receiver R, is completed and the condenser discharged through the same. By an adjustment of the speed of rotation of the cylinder *d* and a displacement of the brush *k* along the cylinder the circuit may be made to open and close in as rapid succession and remain open or closed during such intervals of time as may be desired. The plates P and P', through which the electrifications are conveyed to the brushes *a* and *a'*, may be at a considerable distance from each other and both in the ground or both in the air, or one in the ground and the other in the air, preferably at some height, or they may be connected to conductors extending to some distance or to the terminals of any kind of apparatus supplying electrical energy which is obtained from the energy of the impulses or disturbances transmitted from a distance through the natural media.

In illustration of the operation of the devices described let it be assumed that alternating electrical impulses from a distant generator, as G, are transmitted through the earth and that it is desired to utilize those impulses in accordance with my method. This may be the case, for example, when such a generator is used for purposes of signaling in one of the ways before enumerated, as by having its terminals connected to two points of the earth distant from each other. In this case the plates P and P' are first connected to two properly-selected points of the earth. The speed of rotation of the cylinder A is varied until it is made to turn in synchronism with the alternate impulses of the generator, and, finally, the position of the brushes *b* and *b'* is adjusted by angular displacement, as usual, or in other ways, so that they are in contact with the segments *s* and *s'* during the periods when the impulses are at or near the maximum of their intensity. Only ordinary electrical skill and knowledge are required to make these adjustments, and a number of devices for effecting synchronous movement being well known, and it being the chief object of my present application to set forth a novel method of utilizing or applying a principle, a detailed description of such devices is not considered necessary. I may state, however, that for practical purposes in the present case it is only necessary to shift the brushes forward or back until the maximum effect is secured. The above requirements being fulfilled, electrical charges of the same sign will be conveyed to each of the condenser-terminals as the cylinder A is rotated, and with each fresh impulse the condenser will be charged to a higher potential. The speed of rotation of the cylinder *d* being adjustable at will, the energy of any number of separate impulses may thus be accumulated in potential form and discharged through the receiver R upon the brush *k* coming in contact with one of the segments *f*. It will be of course understood that the capacity of the condenser should be such as to allow the storing of a much greater amount of energy than is required for the ordinary operation of the receiver. Since by this method a relatively great amount of energy and in a suitable form may be made available for the operation of a receiver, the latter need not be very sensitive; but of course when the impulses are very feeble, as when coming from a great distance or when it is desired to operate a receiver very rapidly, then any of the well-known devices capable of responding to very feeble influences may be used in this connection.

If instead of the alternating impulses short impulses of the same direction are conveyed to the plates P and P', the apparatus described may still readily be used, and for this purpose it is merely necessary to shift the brushes *b* and *b'* into the position indicated by the dotted lines while maintaining the

same conditions in regard to synchronism as before, so that the succeeding impulses will be permitted to pass into the condenser, but prevented from returning to the ground or transmitting medium during the intervals between them, owing to the interruption during such intervals of the connections leading from the condenser-terminals to the plates.

Another way of using the apparatus with impulses of the same direction is to take off one pair of brushes, as *b*, disconnect the plate P from brush *a* and join it directly to the terminal T of the condenser, and to connect brush *a* with brush *a'*. The apparatus thus modified would appear as shown in Fig. 2. Operated in this manner and assuming the speed of rotation of cylinder A to be the same, the apparatus will now be evidently adapted for a number of impulses per unit of time twice as great as in the preceding case. In all cases it is evidently important to adjust the duration of contact of segments *s* and *s'* with brushes *b b'* in the manner indicated.

When the method and apparatus I have described are used in connection with the transmission of signals or intelligence, it will of course be understood that the transmitter is operated in such a way as to produce disturbances or effects which are varied or intermitted in some arbitrary manner—for example, to produce longer and shorter successions of impulses corresponding to the dashes and dots of the Morse alphabet—and the receiving device will respond to and indicate these variations or intermittences, since the storage device will be charged and discharged a number of times corresponding to the duration of the successions of impulses received.

Obviously the special appliances used in carrying out my invention may be varied in many ways without departing from the spirit of the same.

It is to be observed that it is the function of the cylinder A, with its brushes and connections, to render the electrical impulses coming from the plates P and P' suitable for charging the condenser (assuming them to be unsuitable for this purpose in the form in which they are received) by rectifying them when they are originally alternating in direction or by selecting such parts of them as are suitable when all are not, and any other device performing this function will obviously answer the purpose. It is also evident that a device such as I have already referred to which offers a more ready passage to impulses of one sign or permits only impulses of the same sign to pass may also be used to perform this selective function in many cases when alternating impulses are received. When the impulses are long and all of the same direction, and even when they are alternating, but sufficiently long in duration and sustained in electromotive force, the brushes *b* and *b'* may be adjusted so as to bear on the parts B B' of the cylinder A, or the cylinder and its brushes may be omitted and the terminals of the condenser connected directly to the plates P and P'.

It will be seen that by the use of my invention results hitherto unattainable in utilizing disturbances or effects transmitted through natural media may be readily attained, since however great the distance of such transmission and however feeble or attenuated the impulses received enough energy may be accumulated from them by storing up the energy of succeeding impulses for a sufficient interval of time to render the sudden liberation of it highly effective in operating a receiver. In this way receivers of a variety of forms may be made to respond effectively to impulses too feeble to be detected or to be made to produce any sensible effect in any other way of which I am aware, a result of great value in various applications to practical use.

I do not claim herein an apparatus by means of which the above-described method is or may be practiced either in the special form herein shown or in other forms which are possible, having made claims to such apparatus in another application, Serial No. 729,812, filed September 8, 1899, as a division of the present case.

What I claim as my invention, and desire to secure by Letters Patent, is—

1. The method of transmitting and utilizing electrical energy herein described, which consists in producing arbitrarily varied or intermitted electrical disturbances or effects, transmitting the same to a distant receiving-station, charging, for succeeding and predetermined periods of time a condenser with energy derived from such effects or disturbances, and operating a receiving device by discharging at arbitrary intervals, the accumulated potential energy so obtained, as set forth.

2. The method of transmitting and utilizing electrical energy herein described, which consists in producing electrical disturbances or effects capable of being transmitted to a distance through the natural media, charging a condenser at a distant receiving-station with energy derived from such effects or disturbances, and using for periods of time, predetermined as to succession and duration, the potential energy so obtained to operate a receiving device.

3. The method of transmitting and utilizing electrical energy herein described, which consists in producing electrical disturbances or effects capable of being transmitted to a distance through the natural media, charging a condenser at a distant receiving-station for succeeding and predetermined periods of time, with energy derived from such effects or disturbances, and using for periods of time predetermined as to succession and duration, the accumulated energy so obtained to operate a receiving device.

4. The method hereinbefore described of producing arbitrarily varied or intermitted

electrical disturbances or effects, transmitting such disturbances or effects through the natural media to a distant receiving-station, storing in a condenser energy derived from a succession of such disturbances or effects for periods of time which correspond in succession to such effects or disturbances and are predetermined as to duration, and using the accumulated potential energy so obtained to operate a receiving device.

5. The method herein described of producing arbitrarily varied or intermitted electrical disturbances or effects, transmitting such disturbances or effects through the natural media to a distant receiving-station, establishing thereby a flow of electrical energy in a circuit at such station, charging a condenser with energy from such circuit, and using the accumulated potential energy so obtained to operate a receiving device.

6. The method herein described of producing arbitrarily varied or intermitted electrical disturbances or effects, transmitting such disturbances or effects through the natural media to a distant receiving-station, establishing thereby a flow of electrical energy in a circuit at such station, charging a condenser with electrical energy from such circuit, and discharging the accumulated potential energy so obtained into or through a receiving device at arbitrary intervals of time.

7. The method herein described of producing arbitrarily varied or intermitted electrical disturbances or effects, transmitting such disturbances or effects to a distant receiving-station, establishing thereby a flow of electrical energy in a circuit at such station, selecting or directing the impulses in said circuit so as to render them suitable for charging a condenser, charging a condenser with the impulses so selected or directed, and discharging the accumulated potential energy so obtained into, or through a receiving device.

8. The method herein described of producing arbitrarily varied or intermitted electrical disturbances or effects, transmitting such disturbances or effects through the natural media to a distant receiving-station, establishing thereby a flow of electrical energy in a circuit at such station, selecting or directing the impulses in said circuit so as to render them suitable for charging a condenser, charging a condenser with the impulses so selected or directed, and discharging the accumulated potential energy so obtained into, or through a receiving device at arbitrary intervals of time.

9. The method hereinbefore described of transmitting signals or intelligence, which consists in producing at the sending-station arbitrarily varied or intermitted disturbances or effects, transmitting such disturbances or effects through the natural media to a receiving-station, utilizing energy derived from such disturbances or effects at the receiving-station to charge a condenser and using the accumulated potential energy so obtained to operate a receiving device.

10. The method hereinbefore described of transmitting signals or intelligence through the natural media from a sending-station to a receiving-station, which consists in producing at the sending-station, arbitrarily varied or intermitted electrical effects or disturbances, transmitting the same through the natural media to the receiving-station, utilizing the energy derived from such disturbances or effects at the receiving-station to charge a condenser, and discharging the accumulated potential energy so obtained through a receiving device at arbitrary intervals of time.

11. The method hereinbefore described of transmitting signals or intelligence from a sending to a distant receiving station, which consists in producing at the former, arbitrarily varied or intermitted electrical disturbances or effects, transmitting the same to the receiving-station, charging by the energy derived from such disturbances or effects at the receiving-station a condenser, and using for periods of time predetermined as to succession and duration, the potential energy so obtained to operate a receiving device, as set forth.

NIKOLA TESLA.

Witnesses:
LEONARD E. CURTIS,
A. E. SKINNER.

No. 685,954. Patented Nov. 5, 1901.

N. TESLA.

METHOD OF UTILIZING EFFECTS TRANSMITTED THROUGH NATURAL MEDIA.

(Application filed Aug. 1, 1899. Renewed May 29, 1901.)

(No Model.) 2 Sheets—Sheet 1.

Fig 1.

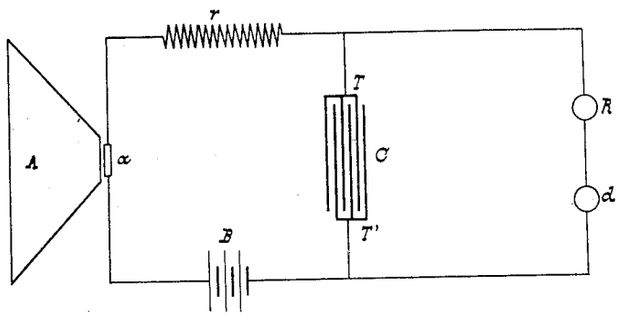

Fig 2.

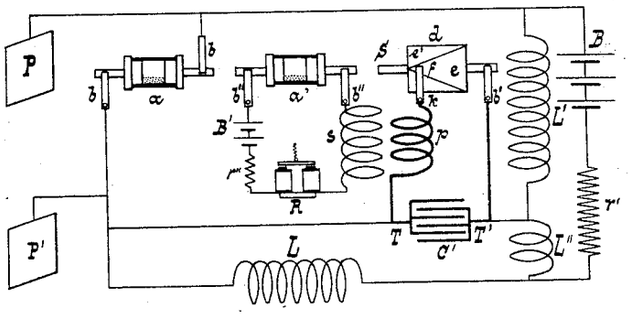

WITNESSES

Benjamin Miller.

M. Lawson Dyer.

INVENTOR

Nikola Tesla

BY

Kerr, Page & Cooper

ATTORNEYS.

THE NORRIS PETERS CO., PHOTO-LITHO., WASHINGTON, D. C.

No. 685,954. Patented Nov. 5, 1901.

N. TESLA.

METHOD OF UTILIZING EFFECTS TRANSMITTED THROUGH NATURAL MEDIA.

(Application filed Aug. 1, 1899. Renewed May 29, 1901.)

(No Model.) 2 Sheets—Sheet 2.

Fig. 3

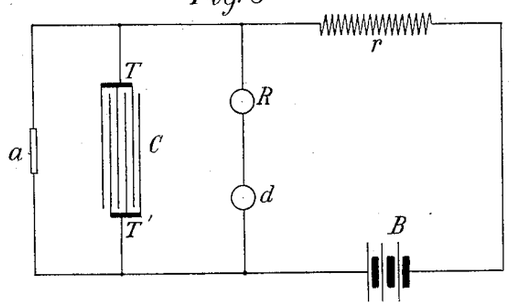

Fig. 4

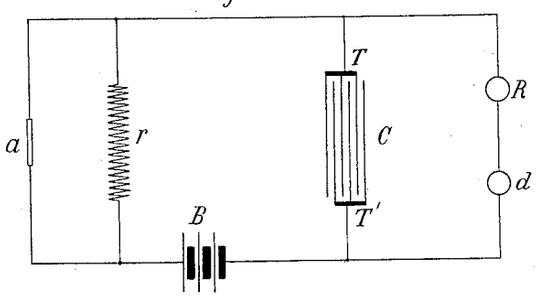

Fig. 5

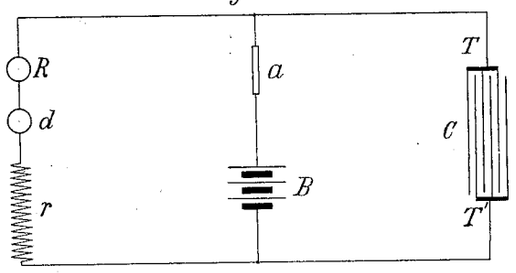

Witnesses:
Raphael Netter
Benjamin Miller.

Nikola Tesla *Inventor*
by Kerr, Page & Cooper *Att'ys*

THE NORRIS PETERS CO., PHOTO-LITHO., WASHINGTON, D. C.

UNITED STATES PATENT OFFICE.

NIKOLA TESLA, OF NEW YORK, N. Y.

METHOD OF UTILIZING EFFECTS TRANSMITTED THROUGH NATURAL MEDIA.

SPECIFICATION forming part of Letters Patent No. 685,954, dated November 5, 1901.

Application filed August 1, 1899. Renewed May 29, 1901. Serial No. 62,316. (No model.)

To all whom it may concern:

Be it known that I, NIKOLA TESLA, a citizen of the United States, residing at New York city, in the county and State of New York, have invented a new and useful Improvement in Methods of Utilizing Effects Transmitted from a Distance to a Receiving Device Through the Natural Media, of which the following is a specification, reference being had to the accompanying drawings, which form a part of the same.

The subject of my present invention is an improvement in the art of utilizing effects transmitted from a distance to a receiving device through the natural media; and it consists in a novel method hereinafter described.

My invention is particularly useful in connection with methods and apparatus for operating distant receiving devices by means of electrical disturbances produced by proper transmitters and conveyed to such receiving devices through the natural media; but it obviously has a wider range of applicability and may be employed, for example, in the investigation or utilization of terrestrial, solar, or other disturbances produced by natural causes.

Several ways or methods of transmitting electrical disturbances through the natural media and utilizing them to operate distant receivers are now known and have been applied with more or less success for accomplishing a variety of useful results. One of these ways consists in producing by a suitable apparatus rays or radiations—that is, disturbances—which are propagated in straight lines through space, directing them upon a receiving or recording apparatus at a distance, and thereby bringing the latter into action. This method is the oldest and best known and has been brought particularly into prominence in recent years through the investigations of Heinrich Hertz. Another method consists in passing a current through a circuit, preferably one inclosing a very large area, inducing thereby in a similar circuit situated at a distance another current and affecting by the same in any convenient way a receiving device. Still another way, which has also been known for many years, is to pass in any suitable manner a current through a portion of the ground, as by connecting to two points of the same, preferably at a considerable distance from each other, the two terminals of a generator and to energize by a part of the current diffused through the earth a distant circuit, which is similarly arranged and grounded at two points widely apart and which is made to act upon a sensitive receiver. These various methods have their limitations, one especially, which is common to all, being that the receiving circuit or instrument must be maintained in a definite position with respect to the transmitting apparatus, which often imposes great disadvantages upon the use of the apparatus.

In several applications filed by me and patents granted to me I have disclosed other methods of accomplishing results of this nature which may be briefly described as follows: In one system the potential of a point or region of the earth is varied by imparting to it intermittent or alternating electrifications through one of the terminals of a suitable source of electrical disturbances, which to heighten the effect has its other terminal connected to an insulated body, preferably of large surface and at an elevation. The electrifications communicated to the earth spread in all directions through the same, reaching a distant circuit, which generally has its terminals arranged and connected similarly to those of the transmitting source and operates upon a highly-sensitive receiver. Another method is based upon the fact that the atmospheric air, which behaves as an excellent insulator to currents generated by ordinary apparatus, becomes a conductor under the influence of currents or impulses of enormously high electromotive force which I have devised means for generating. By such means air strata, which are easily accessible, are rendered available for the production of many desired effects at distances however great. This method, furthermore, allowed advantage to be taken of many of those improvements which are practicable in the ordinary systems of transmission involving the use of a metallic conductor.

Obviously whatever method be employed it is desirable that the disturbances produced by the transmitting apparatus should be as powerful as possible, and by the use of certain forms of high-frequency apparatus which

I have devised and which are now well known important practical advantages are in this respect secured. Furthermore, since in most cases the amount of energy conveyed to the distant circuit is but a minute fraction of the total energy emanating from the source it is necessary for the attainment of the best results that whatever the character of the receiver and the nature of the disturbances as much as possible of the energy conveyed should be made available for the operation of the receiver, and with this object in view I have heretofore, among other means, employed a receiving-circuit of high self-induction and very small resistance and of a period such as to vibrate in synchronism with the disturbances, whereby a number of separate impulses from the source were made to cooperate, thus magnifying the effect exerted upon and insuring the action of the receiving device. By these means decided advantages have been secured in many instances; but very often the improvement is either not applicable at all, or if so the gain is very slight. Evidently when the source is one producing a continuous pressure or delivering impulses of long duration it is impracticable to magnify the effects in this manner, and when, on the other hand, it is one furnishing short impulses of extreme rapidity of succession the advantage obtained in this way is insignificant, owing to the radiation and the unavoidable frictional waste in the receiving-circuit. These losses reduce greatly both the intensity and the number of the coöperative impulses, and since the initial intensity of each of these is necessarily limited only an insignificant amount of energy is thus made available for a single operation of the receiver. As this amount is consequently dependent on the energy conveyed to the receiver by one single impulse, it is evidently necessary to employ either a very large and costly and therefore objectionable transmitter or else to resort to the equally objectionable use of a receiving device too delicate and too easily deranged. Furthermore, the energy obtained through the coöperation of the impulses is in the form of extremely-rapid vibrations and because of this unsuitable for the operation of ordinary receivers, the more so as this form of energy imposes narrow restrictions in regard to the mode and time of its application to such devices. To overcome these and other limitations and disadvantages that have heretofore existed in such systems of transmission of signals or intelligence and to render possible an investigation of impulses or disturbances propagated through the natural media from any kind of source and their practical utilization for any purpose to which they are applicable, I have devised a novel method, which I have described in a pending application filed June 24, 1899, Serial No. 721,790, and which, broadly stated, consists in effecting during any desired time interval a storage of energy derived from such impulses and utilizing the potential energy so obtained for operating a receiving device.

My present invention is intended for the same general purposes, and it comprises a modified method and apparatus by means of which similar results may be obtained.

The chief feature which distinguishes my present from my former invention just referred to is that the energy stored is not, as in the former instance, obtained from the energy of the disturbances or effects transmitted from a distance, but from an independent source.

Expressed generally, my present method consists in charging a storage device with energy from an independent source controlling the charging of said device by the action of the effects or disturbances transmitted through the natural media and coincidentally using the stored energy for operating a receiving device.

A great variety of disturbances produced either by suitably-constructed transmitters or by natural causes are at present known to be propagated through the natural media, and there are also a variety of means or devices enabling energy to be stored, and in view of this I wish to say that I consider the utilization of any such disturbances and the employment of any of these means as within the scope of my present invention so long as the use of the general method hereinbefore stated is involved.

The best way of carrying out my invention which I at present know is to store electrical energy obtained from a suitable electrical generator in a condenser and to control the storage or the application of this energy by means of a sensitive device acted upon by the effects or disturbances, and thereby cause the operation of the receiver.

In the practical application of this method I usually proceed as follows: At any point where I desire to investigate or to utilize for any purpose effects or disturbances propagated through the natural media from any kind of source I provide a suitable generator of electricity—as, for example, a battery and a condenser—which I connect to the poles of the generator in series with a sensitive device capable of being modified in its electrical resistance or other property by the action of the disturbances emitted from the source. To the terminals of the condenser I connect the receiver which is to be operated in series with another device of suitable construction which performs the function of periodically discharging the condenser through the receiver at and during such intervals of time as may be best suitable for the purpose contemplated. This latter device may merely consist of two stationary electrodes separated by a feeble dielectric layer of minute thickness, but sufficient to greatly reduce or practically interrupt the current in the circuit under normal conditions, or it may comprise terminals one or more of which are movable

and actuated by any suitable force and are adapted to be brought into and out of contact with each other in any convenient manner. The sensitive device may be any of the many devices of this kind which are known to be affected by the disturbances, impulses, or effects propagated through the media, and it may be of such a character that normally—that is, when not acted upon—it entirely prevents the passage of electricity from the generator to the condenser, or it may be such that it allows a gradual leaking through of the current and a charging of the condenser at a slow rate. In any case it will be seen that if the disturbances, of whatever nature they may be, cause an appreciable diminution in the electrical resistance of the sensitive device the current from the battery will pass more readily into the condenser, which will be charged at a more rapid rate, and consequently each of its discharges through the receiver, periodically effected by the special device before referred to which performs this function, will be stronger than normally—that is, when the sensitive device is not acted upon by the disturbances. Evidently, then, if the receiver be so adjusted that it does not respond to the comparatively feeble normal discharges of the condenser, if they should occur, but only to those stronger ones which take place upon the diminution of the resistance of the sensitive device, it will be operated only when this device is acted upon by the disturbances, thus making it possible to investigate and to utilize the latter for any desired purpose.

The general principle underlying my invention and the operation of the various devices used will be clearly understood by reference to the accompanying drawings, in which—

Figure 1 is a diagram illustrating a typical arrangement of apparatus which may be used in carrying my method into practice, and Figs. 2, 3, 4, and 5 similar diagrams of modified arrangements of apparatus for the same purpose.

In Fig. 1, C is a condenser, to the terminals T and T′ of which is connected a charging-circuit including a battery B, a sensitive device *a*, and a resistance *r*, all connected in series, as illustrated. The battery should be preferably of very constant electromotive force and of an intensity carefully determined to secure the best results. The resistance *r*, which may be a frictional or an inductive one, is not absolutely necessary; but it is of advantage to use it in order to facilitate adjustment, and for this purpose it may be made variable in any convenient and preferably continuous manner. Assuming that the disturbances which are to be investigated or utilized for some practical end are rays identical with or resembling those of ordinary light, the sensitive device *a* may be a selenium cell properly prepared, so as to be highly susceptible to the influence of the rays, the action of which should be intensified by the use of a reflector A, shown in the drawings. It is well known that when cells of this kind are exposed to such rays of greatly-varying intensity they undergo corresponding modifications of their electrical resistance; but in the ways they have been heretofore used they have been of very limited utility. In addition to the circuit including the sensitive device or cell *a* another circuit is provided, which is likewise connected to the terminals T T′ of the condenser. This circuit, which may be called the "receiving-circuit," includes the receiver R and in series with it a device *d*, before referred to, which performs the duty of periodically discharging the condenser through the receiver. It will be noted that, as shown in Fig. 1, the receiving-circuit is in permanent connection with the battery and condenser terminal T, and it should be stated that it is sometimes desirable to entirely insulate the receiving-circuit at all times except the moments when the device *d* operates to discharge the condenser, thus preventing any disturbing influence which might otherwise be caused in this circuit by the battery or the condenser during the period when the receiver should not be acted upon. In such a case two devices, as *d*, may be used—one in each connection from the condenser to the receiving-circuit—or else one single device of this kind, but of a suitably-modified construction, so that it will make and break simultaneously and at proper intervals of time both of the connections of this circuit with the condenser T and T′.

From the foregoing the operation of the apparatus as illustrated in Fig. 1 will be at once understood. Normally—that is, when it is not influenced by the rays at all or very slightly—the cell *a* being of a comparatively high resistance permits only a relatively feeble current to pass from the battery into the condenser, and hence the latter is charged at too slow a rate to accumulate during the time interval between two succeeding operations of the device *d* sufficient energy to operate the receiver or, generally speaking, to produce the required change in the receiving-circuit. This condition is readily secured by a proper selection and adjustment of the various devices described, so that the receiver will remain unresponsive to the feeble discharges of the condenser which may take place when the cell *a* is acted upon but slightly or not at all by the rays or disturbances; but if now new rays are permitted to fall upon the cell or if the intensity of those already acting upon it be increased by any cause then its resistance will be diminished and the condenser will be charged by the battery at a more rapid rate, enabling sufficient potential energy to be stored in the condenser during the period of inaction of the device *d* to operate the receiver or to bring about any desired change in the receiving-circuit when the device *d* acts. If the rays acting upon the

cell or sensitive device *a* are varied or intermitted in any arbitrary manner, as when transmitting intelligence in the usual way from a distant station by means of short and long signals, the apparatus may readily be made to record or to enable an operator to read the message, since the receiver, supposing it to be an ordinary magnetic relay, for example, will be operated by each signal from the sending-station a certain number of times having some relation to the duration of each signal. It will be readily seen, however, that if the rays are varied in any other way, as by impressing upon them changes in intensity, the succeeding condenser discharges will undergo corresponding changes in intensity, which may be indicated or recorded by a suitable receiver and distinguished irrespectively of duration.

With reference to Fig. 1, it may be useful to state that the electrical connections of the various devices illustrated may be made in many different ways. For instance, the sensitive device instead of being in series, as shown, may be in a shunt to the condenser, this modification being illustrated in Fig. 3, in which the devices already described are indicated by similar letters to correspond with those of Fig. 1. In this case it will be observed that the condenser which is being charged from the battery B through the resistance *r*, preferably inductive and properly related to the capacity of the condenser, will store less energy when the sensitive device *a* is energized by the rays and its resistance thereby diminished. The adjustment of the various instruments may then be such that the receiver will be operated only when the rays are diminished in intensity or interrupted and entirely prevented from falling upon the sensitive cell, or the sensitive device may be placed, as shown in Fig. 4, in a shunt to the resistance *r* or inserted in any suitable way in the circuit containing the receiver—for example, as illustrated in Fig. 5—in both of which figures the various devices are lettered to correspond with those in Fig. 1, so that the figures become self-explanatory. Again, the several instruments may be connected in the manner of a Wheatstone bridge, as will be hereinafter explained with reference to Fig. 2, or otherwise connected or related; but in each case the sensitive device will have the same duty to perform—that is, to control the energy stored and utilized in some suitable way for causing the operation of the receiver in correspondence with the intermittences or variations of the effects or disturbances, and in each instance by a judicious selection of the devices and careful adjustment the advantages of my method may be more or less completely secured. I find it preferable, however, to follow the plan which I have illustrated and described.

It will be observed that the condenser is an important element in the combination. I have shown that by reason of its unique properties it greatly adds to the efficacy of this method. It allows the energy accumulated in it to be discharged instantaneously, and therefore in a highly-effective manner. It magnifies in a large degree the current supplied from the battery, and owing to these features it permits energy to be stored and discharged at practically any rate desired, and thereby makes it possible to obtain in the receiving-circuit very great changes of the current strength by impressing upon the battery-current very small variations. Other means of storage possessing these characteristics to a useful degree may be employed without departing from the broad spirit of my invention; but I prefer to use a condenser, since in these respects it excels any other storage device of which I have knowledge.

In Fig. 2 a modified arrangement of apparatus is illustrated which is particularly adapted for the investigation and utilization of very feeble impulses or disturbances, such as may be used in conveying signals or producing other desired effects at very great distances. In this case the energy stored in the condenser is passed through the primary of a transformer the secondary circuit of which contains the receiver, and in order to render the apparatus still more suitable for use in detecting feeble impulses in addition to the sensitive device which is acted upon by the impulses another such device is included in the secondary circuit of the transformer. The scheme of connections is in the main that of a Wheatstone bridge the four branches of which are formed by the sensitive device *a* and resistances L, L′, and L″, all of which should be preferably inductive and also adjustable in a continuous manner or at least by very small steps. The condenser C′, which is generally made of considerable capacity, is connected to two opposite points of the bridge, while a battery B, in series with a continuously-adjustable non-inductive resistance *r*′, is connected to the other pair of opposite points, as usual. The four resistances included in the branches of the bridge—namely, *a*, L, L′, and L″—are of a suitable size and so proportioned that under normal conditions—that is, when the device *a* is not influenced at all or only slightly by the disturbances—there will be no difference of potential or in any case the minimum of the same at the terminals T and T′ of the condenser. It is assumed in the present instance that the disturbances to be investigated or utilized are such as will produce a difference of electric potential, however small, between two points or regions in the natural media—as the earth, the water, or the air—and in order to apply this potential difference effectively to the sensitive device *a* the terminals of the same are connected to two plates P and P′, which should be of as large a surface as practicable and so located in the media that the largest possible difference of potential will be produced by the disturbances between the terminals of

the sensitive device. This device is in the present case one of familiar construction, consisting of an insulating-tube, which is indicated by the heavy lines in the drawings and which has its ends closed tightly by two conducting-plugs with reduced extensions, upon which bear two brushes *b b*, through which the currents are conveyed to the device. The tubular space between the plugs is partially filled with a conducting sensitive powder, as indicated, the proper amount of the same and the size of its grains being determined and adjusted beforehand by experiment. This tube I rotate by clockwork or other means at a uniform and suitable rate of speed, and under these conditions I find that this device behaves toward disturbances of the kind before assumed in a manner similar to that of a stationary cell of celenium toward rays of light. Its electrical resistance is diminished when it is acted upon by the disturbances and is automatically restored upon the cessation of their influence. It is of advantage to employ round grains of powder in the tube, and in any event it is important that they should be of as uniform size and shape as possible and that provision should be made for maintaining an unchanging and very dry atmosphere in the tube. To the terminals T and T′ of the condenser C′ is connected a coil *p*, usually consisting of a few turns of a conductor of very small resistance, which is the primary of the transformer before referred to, in series with a device *d*, which effects the discharge of the condenser through the coil *p* at predetermined intervals of time. In the present case this device consists of a cylinder made partly of conducting and partly of insulating material *e* and *e′*, respectively, which is rotated at the desired rate of speed by any suitable means. The conducting part *e* is in good electrical connection with shaft S and is provided with tapering segments, as *f*, upon which slides a brush *k*, which should preferably be capable of longitudinal adjustment along the cylinder. Another brush *b′*, which is connected to the condenser-terminal T′, being arranged to bear upon the shaft S, it will be seen that whenever the brush *k* comes in contact with a conducting-segment *f* the circuit including the primary *p* will be completed and the condenser, if energized, discharged through the same. By an adjustment of the speed of rotation of the cylinder and a displacement of the brush *k* along the axis of the same the circuit may be made to open and close in as rapid succession and remain open or closed during such intervals of time as may be desired. In inductive relation to the primary *p* is a secondary coil *s*, usually of much thinner wire and of many more turns than the former, to which are connected in a series a receiver R, (illustrated as an ordinary magnetic relay,) a continuously-adjustable non-inductive resistance *r″*, a battery B′ of a properly determined and very constant electromotive force, and finally a sensitive device *a′* of the same or similar construction as *a*, which is likewise rotated at a uniform speed and which with its brushes *b″ b″* closes the secondary circuit. The electromotive force of the battery B′ is so graduated by means of the adjustable resistance *r″* that the dielectric layers in the sensitive device *a′* are strained very nearly to the point of breaking down and give way upon a slight increase of the electrical pressure on the terminals of the device. It will of course be understood that the resistance *r″* is used mainly because of convenience and that it may be dispensed with, in which case the adjustment may be effected in many other ways, as by determining the proper amount or coarseness of the sensitive powder or by varying the distance apart of the metallic plugs in the ends of the tube. The same may be said of the resistance *r′*, which is in series with the battery B and serves to graduate the force of the latter, so that the dielectric layers of the sensitive device *a* are subjected to a similar strain and maintained in a state of delicate poise. The various instruments being connected and adjusted in the manner described, it will now be readily seen from the foregoing that under normal conditions, the device *a* being unaffected by the disturbances, or practically so, and there being no or only a very insignificant amount of energy stored in the condenser, the periodical closure of the primary circuit of the transformer through the operation of the device *d* will have no appreciable effect upon the primary coil *p*, and hence no currents will be generated in the secondary coil *s*, at least not such as would disturb the state of delicate balance existing in the secondary circuit including the receiver, and therefore the latter will not be actuated by the battery B′; but when, owing to the disturbances or impulses propagated through the media from a distant source, an additional electromotive force, however small, is created between the terminals of the device *a* the dielectric layers in the same, unable to support the increased strain, give way and allow the current of the battery B to pass through, thus causing a difference of potential at the terminals T and T′ of the condenser. A sufficient amount of energy being now stored in this instrument during the time interval between each two succeeding operations of the device *d*, each closure of the primary circuit by the latter results in the passage of a sudden current impulse through the coil *p*, which induces a corresponding current of relatively high electromotive force in the secondary coil *s*. Owing to this the dielectric in the device *a′* gives way, and the current of the battery B′ being allowed to pass the receiver R is operated, but only for a moment, since by the rotation of the devices *a*, *a′*, and *d*, which may be all driven from the same shaft, the original conditions are restored, assuming, of course, that the electromotive force set up by the disturbances

at the terminals of the sensitive device *a* is only momentary or of a duration not longer than the time of closure of the primary circuit; otherwise the receiver will be actuated a number of times and so long as the influence of the disturbances upon the device *a* continues. In order to render the discharged energy of the condenser more effective in causing the operation of the receiver, the resistance of the primary circuit should be very small and the secondary coil *s* should have a number of turns many times greater than that of the primary coil *p*. It will be noted that since the condenser under the above assumptions is always charged in the same direction the strongest current impulse in the secondary coil, which is induced at the moment when the brush *k* comes in contact with segment *f*, is also of unchanging direction, and for the attainment of the best results it is necessary to connect the secondary coil so that the electromotive force of this impulse will be added to that of the battery and will momentarily strengthen the same. However, under certain conditions, which are well understood by those skilled in the art, the devices will operate whichever way the secondary be connected. It is preferable to make the inductive resistances L and L′ relatively large, as they are in a shunt to the device *a* and might if made too small impair its sensitiveness. On the other hand, the resistance L″ should not be too large and should be related to the capacity of the condenser and the number of makes and breaks effected by the device *d* in well-known ways. Similar considerations apply, of course, to the circuits including the primary *p* and secondary *s*, respectively.

By carefully observing well-known rules of scientific design and adjustment of the instruments the apparatus may be made extremely sensitive and capable of responding to the feeblest influences, thus making it possible to utilize impulses or disturbances transmitted from very great distances and too feeble to be detected or utilized in any of the ways heretofore known, and on this account the method here described lends itself to many scientific and practical uses of great value. Obviously the character of the devices and the manner in which they are connected or related may be greatly varied without departing from the spirit of my invention.

What I claim as new, and desire to secure by Letters Patent, is—

1. The method hereinbefore described of utilizing effects or disturbances transmitted through the natural media, which consists in charging a storage device with energy from an independent source, controlling the charging of said device by the action of the effects or disturbances, and coincidently using the stored energy for operating a receiving device.

2. The method hereinbefore described of utilizing effects or disturbances transmitted from a distant source, which consists in charging the storage device with electrical energy from an independent source, controlling the charging of said device by the action of the effects or disturbances, and coincidently using the stored electrical energy for operating the receiving device.

3. The method hereinbefore described of utilizing effects or disturbances transmitted through the natural media, which consists in controlling, by means of such effects or disturbances, the charging of an electrical storage device from an independent source and discharging the stored energy through a receiving-circuit.

4. The method hereinbefore described of utilizing effects or disturbances transmitted through the natural media, which consists in controlling, by means of such effects or disturbances, the charging of an electrical condenser from an independent source, and discharging the stored energy through a receiving-circuit.

5. The method hereinbefore described of utilizing effects or disturbances transmitted through the natural media, which consists in effecting a storage during any desired time interval and under control of such effects or disturbances, of energy derived from an independent source, and utilizing the potential energy so obtained for operating a receiving device.

6. The method hereinbefore described of utilizing effects or disturbances transmitted through the natural media, which consists in effecting a storage, during any desired time interval and under the control of such disturbances or effects of electrical energy derived from an independent source, and utilizing the potential energy so obtained for operating a receiving device.

7. The method hereinbefore described of utilizing effects or disturbances transmitted through the natural media, which consists in effecting a storage in a condenser during any desired time interval and under the control of such disturbances or effects, of electrical energy derived from an independent source, and utilizing the potential energy so obtained for operating a receiving device.

8. The method hereinbefore described of utilizing effects or disturbances transmitted through the natural media from a distant source, which consists in storing, during succeeding intervals of time determined by means of such effects or disturbances, electrical energy derived from an independent source, and utilizing the potential energy so accumulated to operate a receiving device.

9. The method hereinbefore described of utilizing effects or disturbances transmitted through the natural media from a distant source, which consists in storing in a condenser during succeeding intervals of time determined by means of such effects or disturbances, electrical energy derived from an independent source, and utilizing the poten-

tial energy so accumulated to operate a receiving device.

10. The method hereinbefore described of utilizing effects or disturbances transmitted through the natural media from a distant source, which consists in storing, during succeeding intervals of time determined by means of such effects or disturbances, electrical energy derived from an independent source, and using, for periods of time predetermined as to succession and duration, the accumulated energy so obtained to operate a receiving device.

11. The method hereinbefore described of utilizing effects or disturbances transmitted through the natural media from a distant source, which consists in storing in a condenser during succeeding intervals of time determined by means of such effects or disturbances, electrical energy derived from an independent source, and using, for periods of time predetermined as to succession and duration, the accumulated energy so obtained to operate a receiving device.

12. The method hereinbefore described of utilizing electrical effects or disturbances transmitted through the natural media from a distant source, which consists in effecting by means of such disturbances or effects a storage in a storage device of electrical energy derived from an independent source for periods of time corresponding in succession and duration to such disturbances or effects, and discharging the electrical energy so accumulated into or through a receiving device at predetermined intervals of time.

13. The method hereinbefore described of utilizing electrical effects or disturbances transmitted from a distant source, which consists in effecting by means of such disturbances or effects a storage in a condenser of electrical energy derived from an independent source for periods of time corresponding in succession and duration to such disturbances or effects, and discharging the electrical energy so accumulated into or through a receiving device at predetermined intervals of time.

14. The method hereinbefore described of utilizing electrical effects or disturbances transmitted from a distant source, which consists in producing, by means of such effects or disturbances, variations of resistance in a circuit including an independent electrical source and a device adapted to be charged with electrical energy therefrom, thereby causing the storage device to be charged with energy from such independent source, and using the potential electrical energy so accumulated to operate a receiving device.

15. The method hereinbefore described of utilizing effects or disturbances transmitted through the natural media from a distant source, which consists in producing, by means of such effects or disturbances, variations of resistance in a circuit including an independent electrical source and a condenser, thereby causing the condenser to be charged with energy from the independent source, and using the potential electrical energy so accumulated to operate a receiving device.

16. The method hereinbefore described of utilizing effects or disturbances transmitted through the natural media from a distant source, which consists in causing, by means of such effects or disturbances, electrical energy from an independent source to be stored in a storage device, using the electrical energy so accumulated to operate a transformer and employing the secondary currents from such transformer to operate a receiving device.

17. The method hereinbefore described of utilizing effects or disturbances transmitted through the natural media from a distant source, which consists in causing, by means of such effects or disturbances, electrical energy from an independent source to be stored in a condenser, using the electrical energy so accumulated to operate a transformer and employing the secondary currents from such transformer to operate a receiving device.

18. The method hereinbefore described of utilizing effects or disturbances transmitted through the natural media from a distant source, which consists in causing, by means of such disturbances, variations of resistance in a circuit including an independent source of electricity and a storage device and thereby causing the storage device to be charged from such independent source, discharging the energy so accumulated in the storage device through the primary of a transformer at predetermined intervals of time, and operating a receiver by the currents so developed in the secondary of the transformer.

19. The method hereinbefore described of utilizing effects or disturbances transmitted through the natural media from a distant source, which consists in causing, by means of such disturbances, variations of resistance in a circuit including an independent source of electricity and a condenser and thereby causing the condenser to be charged from such independent source, discharging the energy so accumulated in the condenser through the primary of a transformer at predetermined intervals of time and operating a receiver by the currents so developed in the secondary of the transformer.

NIKOLA TESLA.

Witnesses:
F. LÖWENSTEIN,
E. A. SUNDERLIN.

No. 685,955. Patented Nov. 5, 1901.

N. TESLA.

APPARATUS FOR UTILIZING EFFECTS TRANSMITTED FROM A DISTANCE TO A RECEIVING DEVICE THROUGH NATURAL MEDIA.

(Application filed Sept. 8, 1899. Renewed May 29, 1901.)

(No Model.)

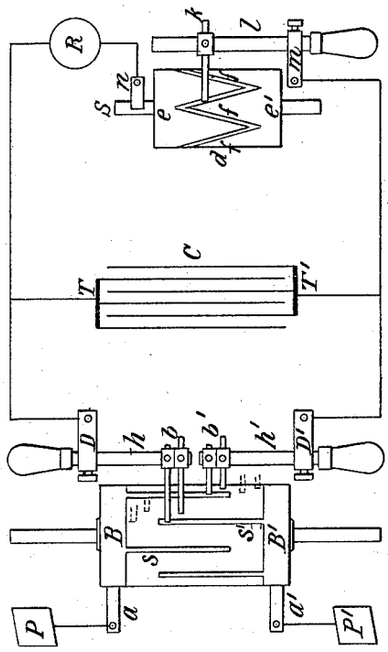

Fig. 1

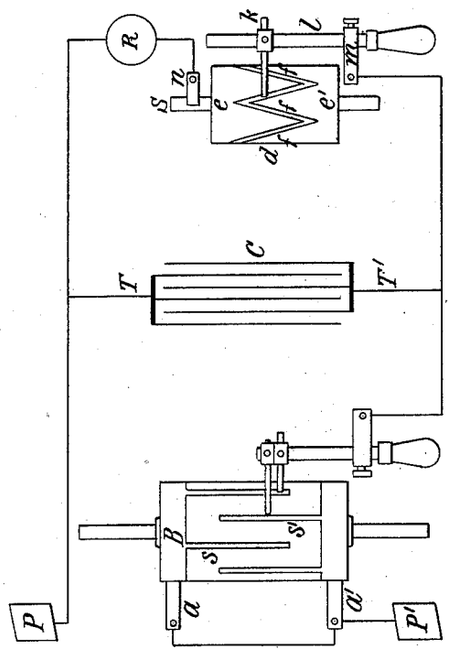

Fig. 2

Witnesses:
G. B. Lenno.
Hillary C. Messinger

Nikola Tesla, Inventor
by Kerr, Page & Cooper.
Att'ys

THE NORRIS PETERS CO., PHOTO-LITHO., WASHINGTON, D. C.

UNITED STATES PATENT OFFICE.

NIKOLA TESLA, OF NEW YORK, N. Y.

APPARATUS FOR UTILIZING EFFECTS TRANSMITTED FROM A DISTANCE TO A RECEIVING DEVICE THROUGH NATURAL MEDIA.

SPECIFICATION forming part of Letters Patent No. 685,955, dated November 5, 1901.

Original application filed June 24, 1899, Serial No. 721,790. Divided and this application filed September 8, 1899. Re ewed May 29, 1901. Serial No. 62,317. (No model.)

To all whom it may concern:

Be it known that I, NIKOLA TESLA, a citizen of the United States, residing at the borough of Manhattan, in the city, county, and State of New York, have invented certain new and useful Improvements in Apparatus for Utilizing Effects Transmitted from a Distance to a Receiving Device Through the Natural Media, of which the following is a specification, reference being had to the accompanying drawings, which form a part of the same.

This application is a division of an application filed by me June 24, 1899, Serial No. 721,790, in which a method of utilizing effects or disturbances transmitted through the natural media from a distant source is described and made the subject of the claims. The invention of my present application consists in the apparatus hereinafter described and claimed, by the use of which the method claimed in my said prior application may be practiced and by means of which results hitherto unattainable may be secured.

Several ways or methods of transmitting electrical disturbances through the natural media and utilizing them to operate distant receivers are now known and have been applied with more or less success for accomplishing a variety of useful results. One of these ways consists in producing by a suitable apparatus rays or radiations—that is, disturbances—which are propagated in straight lines through space, directing them upon a receiving or recording apparatus at a distance, and thereby bringing the latter into action. This method is the oldest and best known, and has been brought particularly into prominence in recent years through the investigations of Heinrich Hertz. Another method consists in passing a current through a circuit, preferably one inclosing a very large area, inducing thereby in a similar circuit, situated at a distance, another current and affecting by the same in any convenient way a receiving device. Still another way, which has also been known for many years, is to pass in any suitable manner a current through a portion of the ground, as by connecting to two points of the same, preferably at a considerable distance from each other, the two terminals of a generator and to energize by a part of the current diffused through the earth a distant circuit, which is similarly arranged and grounded at two points widely apart and which is made to act upon a sensitive receiver. These various methods have their limitations, one, especially, which is common to all, being that the receiving circuit or instrument must be maintained in a definite position with respect to the transmitting apparatus, which often imposes great disadvantages upon the use of the apparatus.

In several applications filed by me and patents granted to me I have disclosed other methods of accomplishing results of this nature, which may be briefly described as follows: In one system the potential of a point or region of the earth is varied by imparting to it intermittent or alternating electrifications through one of the terminals of a suitable source of electrical disturbances, which to heighten the effect has its other terminal connected to an insulated body, preferably of large surface and at an elevation. The electrifications communicated to the earth spread in all directions through the same, reaching a distant circuit, which generally has its terminals arranged and connected similarly to those of the transmitting source, and operates upon a highly-sensitive receiver. Another method is based upon the fact that the atmospheric air, which behaves as an excellent insulator to currents generated by ordinary apparatus, becomes a conductor under the influence of currents of impulses of enormously high electromotive force which I have devised means for generating. By such means air strata, which are easily accessible, are rendered available for the production of many desired effects at distances, however great. This method, furthermore, allows advantage to be taken of many of those improvements which are practicable in the ordinary systems of transmission involving the use of a metallic conductor.

Obviously whatever method be employed it is desirable that the disturbances produced by the transmitting apparatus should be as powerful as possible, and by the use of certain forms of high-frequency apparatus which

I have devised and which are now well known important practical advantages are in this respect secured. Furthermore, since in most cases the amount of energy conveyed to the distant circuit is but a minute fraction of the total energy emanating from the source, it is necessary for the attainment of the best results that whatever the character of the receiver and the nature of the disturbances as much as possible of the energy conveyed should be made available for the operation of the receiver, and with this object in view I have heretofore, among other means, employed a receiving-circuit of high self-induction and very small resistance and of a period such as to vibrate in synchronism with the disturbances, whereby a number of separate impulses from the source were made to coöperate, thus magnifying the effect exerted upon and insuring the action of the receiving device. By these means decided advantages have been secured in many instances; but very often the improvement is either not applicable at all or if so the gain is very slight. Evidently when the source is one producing a continuous pressure or delivering impulses of long duration it is impracticable to magnify the effects in this manner, and when, on the other hand, it is one furnishing short impulses of extreme rapidity of succession the advantage obtained in this way is insignificant, owing to the radiation and the unavoidable frictional waste in the receiving-circuit. These losses reduce greatly both the intensity and the number of the coöperative impulses, and since the initial intensity of each of these is necessarily limited only an insignificant amount of energy is thus made available for a single operation of the receiver. As this amount is consequently dependent on the energy conveyed to the receiver by one single impulse, it is evidently necessary to employ either a very large and costly, and therefore objectionable transmitter, or else resort to the equally objectionable use of a receiving device too delicate and too easily deranged. Furthermore, the energy obtained through the coöperation of the impulses is in the form of extremely-rapid vibrations and because of this unsuitable for the operation of ordinary receivers, the more so as this form of energy imposes narrow restrictions in regard to the mode and time of its application to such devices. To overcome these and other limitations and disadvantages which have heretofore existed in such systems of transmission of signals or intelligence is the object of my invention, which comprises a novel form of apparatus for accomplishing these results.

The apparatus which is employed at the receiving-station, described in general terms, consists in the combination of a storage device included in a circuit connecting points at a distance from the source of the disturbances and between which a difference of potential is created by such disturbances, a receiving-circuit connected with the storage device, a receiver included in such receiving-circuit, and means for closing the receiving-circuit at any desired moment, and thereby causing the receiver to be operated by the energy with which the storage device has been charged.

The best form of apparatus for carrying out my invention of which I am now aware and the manner of using the same will be understood from the following description and the accompanying drawings, in which—

Figure 1 is a diagrammatic illustration of such apparatus, and Fig. 2 a modified form or arrangement of the same.

At any two points in the transmitting medium between which there exists or may be obtained in any manner through the action of the disturbances or effects to be investigated or utilized a difference of electrical potential of any magnitude I arrange two plates or electrodes so that they may be oppositely charged through the agency of such effects or disturbances, and I connect these electrodes to the terminals of a highly-insulated condenser, generally of considerable capacity. To the condenser-terminals I also connect the receiver to be operated in series with a device of suitable construction which performs the function of periodically discharging the condenser through the receiver at and during such intervals of time as may be best suitable for the purpose contemplated. This device may merely consist of two stationary electrodes separated by a feeble dielectric layer of minute thickness, or it may comprise terminals one or more of which are movable and actuated by any suitable force and are adapted to be brought into and out of contact with each other in any convenient manner. It will now be readily seen that if the disturbances, of whatever nature they may be, cause definite amounts of electricity of the same sign to be conveyed to each of the plates or electrodes above mentioned either continuously or at intervals of time which are sufficiently long the condenser will be charged to a certain potential and an adequate amount of energy being thus stored during the time determined by the device effecting the discharge of the condenser the receiver will be periodically operated by the electrical energy so accumulated; but very often the character of the impulses and the conditions of their use are such that without further provision not enough potential energy would be accumulated in the condenser to operate the receiving device. This is the case when, for example, each of the plates or terminals receives electricity of rapidly-changing sign or even when each receives electricity of the same sign, but only during periods which are short as compared with the intervals separating them. In such instances I resort to the use of a special device which I insert in the circuit between the plates and the condenser for the purpose of conveying to each of the terminals of the latter electrical charges

of the proper quality and order of succession to enable the required amount of potential energy to be stored in the condenser.

There are a number of well-known devices, either without any moving parts or terminals or with elements reciprocated or rotated by the application of a suitable force, which offer a more ready passage to impulses of one sign or direction than to those of the other or permit only impulses of one kind or order of succession to traverse a path, and any of these or similar devices capable of fulfilling the requirements may be used in carrying my invention into practice. One such device of familiar construction which will serve to convey a clear understanding of this part of my invention and enable a person skilled in the art to apply the same is illustrated in the annexed drawings. It consists of a cylinder A, of insulating material, which is moved at a uniform rate of speed by clockwork or other suitable motive power and is provided with two metal rings B B′, upon which bear brushes *a* and *a′*, which are connected, respectively, in the manner shown to the terminal plates P and P′, above referred to. From the rings B B′ extend narrow metallic segments *s* and *s′*, which by the rotation of the cylinder A are brought alternately into contact with double brushes *b* and *b′*, carried by and in contact with conducting-holders *h* and *h′*, which are adjustable longitudinally in the metallic supports D and D′, as shown. The latter are connected to the terminals T and T′ of a condenser C, and it should be understood that they are capable of angular displacement as ordinary brush-supports. The object of using two brushes, as *b* and *b′*, in each of the holders *h* and *h′* is to vary at will the duration of the electric contact of the plates P and P′ with the terminals T and T′, to which is connected a receiving-circuit, including a receiver R and a device *d* of the kind above referred to, which performs the duty of closing the receiving-circuit at predetermined intervals of time and discharging the stored energy through the receiver. In the present case this device consists of a cylinder made partly of conducting and partly of insulating material *e* and *e′*, respectively, which is rotated at the desired rate of speed by any suitable means. The conducting part *e* is in good electrical connection with the shaft S and is provided with tapering segments *f f*, upon which slides a brush *k*, supported on a conducting-rod *l*, capable of longitudinal adjustment in a metallic support *m*. Another brush *n* is arranged to bear upon the shaft S, and it will be seen that whenever one of the segments *f* comes in contact with the brush *k* the circuit including the receiver R is completed and the condenser discharged through the same. By an adjustment of the speed of rotation of the cylinder *d* and a displacement of the brush *k* along the cylinder the circuit may be made to open and close in as rapid succession and remain open or closed during such intervals of time as may be desired. The plates P and P′ through which the electrifications are conveyed to the brushes *a* and *a′* may be at a considerable distance from each other and both in the ground or both in the air or one in the ground and the other in the air, preferably at some height, or they may be connected to conductors extending to some distance or to the terminals of any kind of apparatus supplying electrical energy which is obtained from the energy of the impulses or disturbances transmitted from a distance through the natural media.

In illustration of the operation of the devices described let it be assumed that alternating electrical impulses from a distant generator, as G, are transmitted through the earth and that it is desired to utilize these impulses in accordance with my method. This may be the case, for example, when such a generator is used for purposes of signaling in one of the ways before enumerated, as by having its terminals connected at two points of the earth distant from each other. In this case the plates P and P′ are first connected to two properly-selected points of the earth, the speed of rotation of the cylinder A is varied until it is made to turn in synchronism with the alternate impulses of the generator, and, finally, the position of the brushes *b* and *b′* is adjusted by angular displacement, as usual, or in other ways, so that they are in contact with the segments *s* and *s′* during the periods when the impulses are at or near the maximum of their intensity. Only ordinary electrical skill and knowledge are required to make these adjustments, and a number of devices for effecting synchronous movement being well known and it being the chief object of my present application to set forth a novel apparatus embodying a general principle a detailed description of such devices is not considered necessary. I may state, however, that for practical purposes in the present case it is only necessary to shift the brushes back and forth until the maximum effect is secured. The above requirements being fulfilled, electrical charges of the same sign will be conveyed to each of the condenser-terminals as the cylinder A is rotated, and with each fresh impulse the condenser will be charged to a higher potential. The speed of rotation of the cylinder *d* being adjustable at will, the energy of any number of separate impulses may thus be accumulated in potential form and discharged through the receiver R upon the brush *k* coming in contact with one of the segments *f*. It will be of course understood that the capacity of the condenser should be such as to allow the storing of a much greater amount of energy than is required for the ordinary operation of the receiver. Since by this method a relatively great amount of energy and in a suitable form may be made available for the operation of a receiver, the latter need not be very sensitive; but of course when the im-

pulses are very feeble, as when coming from a great distance or when it is desired to operate a receiver very rapidly, then any of the well-known devices capable of responding to very feeble influences may be used in this connection.

If instead of the alternating impulses short impulses of the same direction are conveyed to the plates P and P', the apparatus described may still readily be used, and for this purpose it is merely necessary to shift the brushes *b* and *b'* into the position indicated by the dotted lines, while maintaining the same conditions in regard to synchronism as before, so that the succeeding impulses will be permitted to pass into the condenser, but prevented from returning to the ground or transmitting medium during the intervals between them, owing to the interruption during such intervals of the connections leading from the condenser-terminals to the plates.

Another way of using the apparatus with impulses of the same direction is to take off one pair of brushes, as *b*, disconnect the plate P from brush *a* and join it directly to the terminal T of the condenser, and to connect brush *a* with brush *a'*. When thus modified, the apparatus appears as shown in Fig. 2. Operated in this manner and assuming the speed of rotation of cylinder A to be the same, the apparatus will now be evidently adapted for a number of impulses per unit of time twice as great as in the preceding case. In all cases it is evidently important to adjust the duration of contact of segments *s* and *s'* with brushes *b b'* in the manner indicated.

When the apparatus I have described is used in connection with the transmission of signals or intelligence, it will of course be understood that the transmitter is operated in such a way as to produce disturbances or effects which are varied or intermitted in some arbitrary manner—for example, to produce longer and shorter successions of impulses, corresponding to the dashes and dots of the Morse alphabet—and the receiving device will respond to and indicate these variations or intermittences, since the storage device will be charged and discharged a number of times corresponding to the duration of the successions of impulses received.

Obviously the special appliances used in carrying out my invention may be varied in many ways without departing from the spirit of the same.

It is to be observed that it is the function of the cylinder A, with its brushes and connections, to render the electrical impulses coming from the plates P and P' suitable for charging the condenser (assuming them to be unsuitable for this purpose in the form in which they are received) by rectifying them when they are originally alternating in direction or by selecting such parts of them as are suitable when all are not, and any other device performing this function will obviously answer the purpose. It is also evident that a device such as I have already referred to which offers a more ready passage to impulses of one sign or permits only impulses of the same sign to pass may also be used to perform this selective function in many cases when alternating impulses are received. When the impulses are long and all of the same direction, and even when they are alternating but sufficiently long in duration and sustained in electromotive force, the brushes *b* and *b'* may be adjusted so as to bear on the parts B B' of the cylinder A, or the cylinder and its brushes may be omitted and the terminals of the condenser connected directly to the plates P and P'.

It will be seen that by the use of my invention results hitherto unattainable in utilizing disturbances or effects transmitted through natural media may be readily attained, since however great the distance of such transmission and however feeble or attenuated the impulses received enough energy may be accumulated from them by storing up the energy of succeeding impulses for a sufficient interval of time to render the sudden liberation of it highly effective in operating a receiver. In this way receivers of a variety of forms may be made to respond effectively to impulses too feeble to be detected or to be made to produce any sensible effect in any other way of which I am aware—a result of great value in scientific research as well as in various applications to practical use.

What I claim as my invention, and desire to secure by Letters Patent, is—

1. In an apparatus for utilizing electrical effects or disturbances transmitted through the natural media, the combination with a source of such effects or disturbances of a charging-circuit adapted to be energized by the action of such effects or disturbances, a storage device included in the charging-circuit and adapted to be charged thereby, a receiver, and means for causing the receiver to be operated by the energy accumulated in the storage device at arbitrary intervals of time, substantially as described.

2. In an apparatus for utilizing electrical effects or disturbances transmitted through the natural media, the combination with a source of such effects or disturbances of a charging-circuit adapted to be energized by the action of such effects or disturbances, a storage device included in the charging-circuit and adapted to be charged thereby, means for commutating, directing or selecting the current impulses in the charging-circuit, a receiving-circuit, and means for discharging the storage device through the receiving-circuit, substantially as described.

3. In an apparatus for utilizing electrical effects or disturbances transmitted through the natural media, the combination with a source of such effects or disturbances of a charging-circuit adapted to be energized by the action of such effects or disturbances, a condenser included in the charging-circuit

and adapted to be charged thereby, means for commutating, directing or selecting the current impulses in the charging-circuit, a receiving-circuit, and means for discharging the condenser through the receiving-circuit, substantially as described.

4. In an apparatus for utilizing electrical effects or disturbances transmitted through the natural media, the combination with a source of such effects or disturbances of a charging-circuit adapted to be energized by the action of such effects or disturbances, a storage device included in the charging-circuit and adapted to be charged thereby, means for commutating, directing or selecting the current impulses in the charging-circuit so as to render them suitable for charging the storage device, a receiving-circuit, and means for discharging the storage device through the receiving-circuit, substantially as described.

5. In an apparatus for utilizing electrical effects or disturbances transmitted through the natural media, the combination with a source of such effects or disturbances of a charging-circuit adapted to be energized by the action of such effects or disturbances, a condenser included in the charging-circuit and adapted to be charged thereby, means for commutating, directing or selecting the current impulses in the charging-circuit so as to render them suitable for charging the condenser, a receiving-circuit, and means for discharging the condenser through the receiving-circuit, substantially as described.

6. In an apparatus for utilizing electrical effects or disturbances transmitted through the natural media, the combination with a source of such effects or disturbances of a charging-circuit adapted to be energized by the action of such effects or disturbances, a storage device included in the charging-circuit and adapted to be charged thereby, means for commutating, directing or selecting the current impulses in the charging-circuit so as to render them suitable for charging the storage device, a receiving-circuit, and means for discharging the storage device through the receiving-circuit at arbitrary intervals of time, substantially as described.

7. In an apparatus for utilizing electrical effects or disturbances transmitted to a distant receiving-station, the combination with a source of such effects or disturbances of a circuit distant from the source and adapted to have current impulses set up in it by the action of the effects or disturbances, a storage device, means for commutating, directing or selecting the impulses and connecting the circuit with the storage device at succeeding intervals of time synchronizing with the impulses, a receiving-circuit, and means for periodically discharging the storage device through the receiving-circuit, substantially as described.

8. In an apparatus for utilizing electrical effects or disturbances transmitted to a distant receiving-station, the combination with a source of such effects or disturbances of a circuit distant from the source and adapted to have current impulses set up in it by the action of the effects or disturbances, a condenser, means for commutating, directing or selecting the impulses and connecting the circuit with the condenser at succeeding intervals of time synchronizing with the impulses, a receiving-circuit, and means for periodically discharging the condenser through the receiving-circuit, substantially as described.

9. In an apparatus for utilizing electrical effects or disturbances transmitted through the natural media, the combination with a source of such effects or disturbances of a circuit connecting points at a distance from the source between which a difference of potential is created by such effects or disturbances, a storage device included in such circuit and adapted to be charged with the energy supplied by the same, a receiving-circuit connected with the storage device, a receiver included in such receiving-circuit, and means for closing the receiving-circuit and thereby causing the receiver to be operated by the energy accumulated in the storage device, substantially as described.

10. In an apparatus for utilizing electrical effects or disturbances transmitted through the natural media, the combination with a source of such effects or disturbances of a circuit at a distance from the source which is energized by such effects or disturbances, a storage device adapted to be charged with the energy supplied by such circuit, means for connecting the storage device with the said circuit for periods of time predetermined as to succession and duration, a receiving-circuit connected with the storage device, a receiver included in such receiving-circuit, and means for closing the receiving-circuit and thereby causing the receiver to be operated by the energy accumulated in the storage device, substantially as described.

11. In an apparatus for utilizing electrical effects or disturbances transmitted through the natural media, the combination of a circuit connecting points at a distance from the source between which a difference of potential is created by such effects or disturbances, a storage device included in such circuit and adapted to be charged with the energy supplied by the same, a receiving-circuit, a receiver included in such circuit, and means for connecting the receiving-circuit with the storage device for periods of time predetermined as to succession and duration and thereby causing the receiver to be operated by the energy accumulated in the storage device, substantially as described.

12. In an apparatus for utilizing electrical effects or disturbances transmitted through the natural media, the combination of a circuit connecting points at a distance from the source between which a difference of potential is created by such effects or disturbances, a

storage device adapted to be charged with the energy supplied by such circuit for succeeding and predetermined periods of time, a receiving-circuit, a receiver included in the receiving-circuit, and means for connecting the receiving-circuit with the storage device for periods of time predetermined as to succession and duration and thereby causing the receiver to be operated by the energy accumulated in the storage device, substantially as described.

13. In an apparatus for utilizing electrical effects or disturbances transmitted through the natural media, the combination of a circuit connecting points at a distance from the source, between which a difference of potential is created by such effects or disturbances, a condenser included in such circuit and adapted to be charged by the current in the same, a receiving-circuit connected with the condenser, a receiver included in such receiving-circuit, and a device adapted to close the receiving-circuit at arbitrary intervals of time and thereby cause the receiver to be operated by the electrical energy accumulated in the condenser, substantially as described.

14. In an apparatus for utilizing electrical effects or disturbances transmitted through the natural media, the combination of a charging-circuit distant from the source and energized by the effects or disturbances, a storage device included in the charging-circuit, means included in the charging-circuit and acting in synchronism with the impulses therein for commutating, directing or selecting the impulses, a receiving-circuit and means for periodically discharging the storage device through the receiving-circuit, substantially as described.

15. In an apparatus for utilizing electrical effects or disturbances transmitted through the natural media, the combination of a charging-circuit distant from the source and energized by the effects or disturbances, a condenser included in the charging-circuit, means included in the charging-circuit and acting in synchronism with the impulses therein for commutating, directing or selecting the impulses, a receiving-circuit and means for periodically discharging the condenser through the receiving-circuit, substantially as described.

16. In an apparatus for transmitting signals or intelligence through the natural media from a sending-station to a distant point, the combination of a generator or transmitter adapted to produce arbitrarily varied or intermitted electrical disturbances or effects in the natural media, a charging-circuit at the distant point adapted to receive corresponding electrical impulses or effects from the disturbances or effects so produced, a storage device included in the charging-circuit, means included in the charging-circuit and acting in synchronism with the impulses therein for commutating, directing or selecting the impulses so as to render them suitable for charging the storage device, a receiving-circuit and means for periodically discharging the storage device through the receiving-circuit, substantially as described.

17. In an apparatus for transmitting signals or intelligence through the natural media from a sending-station to a distant point, the combination of a generator or transmitter adapted to produce arbitrarily varied or intermitted electrical disturbances or effects in the natural media, a charging-circuit at the distant point adapted to receive corresponding electrical impulses or effects from the disturbances or effects so produced, a condenser included in the charging-circuit, means included in the charging-circuit and acting in synchronism with the impulses therein for commutating, directing or selecting the impulses so as to render them suitable for charging the condenser, a receiving-circuit and means for periodically discharging the condenser through the receiving-circuit, substantially as described.

18. In an apparatus for transmitting signals or intelligence through the natural media from a sending-station to a distant point, the combination of a generator or transmitter adapted to produce arbitrarily varied or intermitted electrical disturbances or effects in the natural media, a circuit at the distant point adapted to receive corresponding electrical impulses or disturbances from the disturbances or effects so transmitted, a storage device included in such circuit and adapted to be charged thereby, a receiving-circuit connected with the storage device, a receiver included in the receiving-circuit and a device for closing the receiving-circuit at arbitrary intervals of time and thereby causing the receiver to be operated by the energy accumulated in the storage device, substantially as described.

NIKOLA TESLA.

Witnesses:
C. E. TITUS,
LEONARD E. CURTIS.

No. 685,956. Patented Nov. 5, 1901.

N. TESLA.

APPARATUS FOR UTILIZING EFFECTS TRANSMITTED THROUGH NATURAL MEDIA.

(Application filed Nov. 2, 1899. Renewed May 29, 1901.)

(No Model.)

Fig. 1

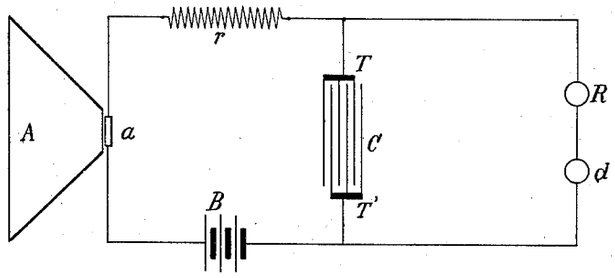

Fig. 2

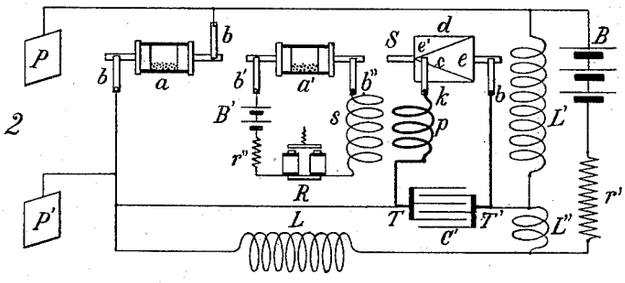

Fig. 3

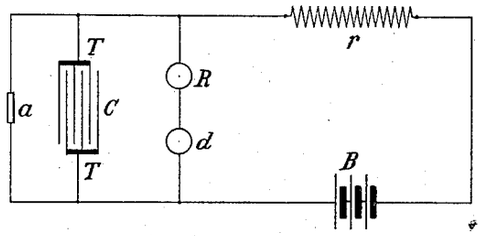

Fig. 4

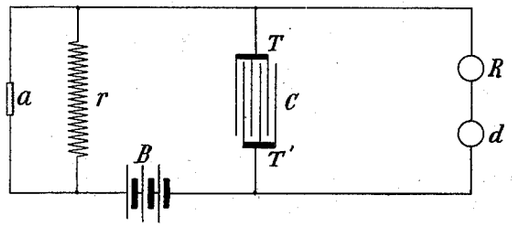

Fig. 5

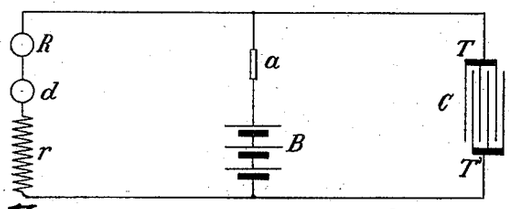

Witnesses:
Raphael Netter
M. Lawson Dyer.

Inventor
Nikola Tesla
by Kerr, Page & Cooper, Attorneys.

THE NORRIS PETERS CO., PHOTO-LITHO., WASHINGTON, D. C.

UNITED STATES PATENT OFFICE.

NIKOLA TESLA, OF NEW YORK, N. Y.

APPARATUS FOR UTILIZING EFFECTS TRANSMITTED THROUGH NATURAL MEDIA.

SPECIFICATION forming part of Letters Patent No. 685,956, dated November 5, 1901

Original application filed August 1, 1899, Serial No. 725,749. Divided and this application filed November 2, 1899. Renewed May 29, 1901. Serial No. 62,318. (No model.)

To all whom it may concern:

Be it known that I, NIKOLA TESLA, a citizen of the United States, residing at New York city, in the county and State of New York, have invented a new and useful Improvement in Apparatus for Utilizing Effects Transmitted from a Distance to a Receiving Device Through the Natural Media, of which the following is a specification, reference being had to the accompanying drawings, which form a part of the same.

The subject of my present invention is an improvement in the art of utilizing effects transmitted from a distance to a receiving device through the natural media; and it consists in the novel apparatus hereinafter described.

This application is a division of one filed by me August 1, 1899, Serial No. 725,749, and based upon and claiming the method herein described and which may be practiced by the use of the apparatus forming the subject of this application.

My invention is particularly useful in connection with methods and apparatus for operating distant receiving devices by means of electrical disturbances produced by proper transmitters and conveyed to such receiving devices through the natural media; but it obviously has a wider range of applicability and may be employed, for example, in the investigation or utilization of terrestrial, solar, or other disturbances produced by natural causes.

Several ways or methods of transmitting electrical disturbances through the natural media and utilizing them to operate distant receivers are now known and have been applied with more or less success for accomplishing a variety of useful results. One of these ways consists in producing by a suitable apparatus rays or radiations—that is, disturbances—which are propagated in straight lines through space, directing them upon a receiving or recording apparatus at a distance, and thereby bringing the latter into action. This method is the oldest and best known and has been brought particularly into prominence in recent years through the investigations of Heinrich Hertz. Another method consists in passing a current through a circuit, preferably one inclosing a very large area, inducing thereby in a similar circuit situated at a distance another current and affecting by the same in any convenient way a receiving device. Still another way, which has also been known for many years, is to pass in any suitable manner a current through a portion of the ground, as by connecting to two points of the same, preferably at a considerable distance from each other, the two terminals of a generator and to energize by a part of the current diffused through the earth a distant circuit, which is similarly arranged and grounded at two points widely apart and which is made to act upon a sensitive receiver. These various methods have their limitations, one especially, which is common to all, being that the receiving circuit or instrument must be maintained in a definite position with respect to the transmitting apparatus, which often imposes great disadvantages upon the use of the apparatus.

In several applications filed by me and patents granted to me I have disclosed other methods of accomplishing results of this nature, which may be briefly described as follows: In one system the potential of a point or region of the earth is varied by imparting to it intermittent or alternating electrifications through one of the terminals of a suitable source of electrical disturbances, which, to heighten the effect, has its other terminal connected to an insulated body, preferably of large surface and at an elevation. The electrifications communicated to the earth spread in all directions through the same, reaching a distant circuit, which generally has its terminals arranged and connected similarly to those of the transmitting source and operates upon a highly-sensitive receiver. Another method is based upon the fact that the atmospheric air, which behaves as an excellent insulator to currents generated by ordinary apparatus, becomes a conductor under the influence of currents or impulses of enormously high electromotive force, which I have devised means for generating. By such means air strata, which are easily accessible, are rendered available for the production of many desired effects at distances however great. This method, furthermore, allows ad-

vantage to be taken of many of those improvements which are practicable in the ordinary systems of transmission involving the use of a metallic conductor.

Obviously whatever method be employed it is desirable that the disturbances produced by the transmitting apparatus should be as powerful as possible, and by the use of certain forms of high-frequency apparatus, which I have devised and which are now well known, important practical advantages are in this respect secured. Furthermore, since in most cases the amount of energy conveyed to the distant circuit is but a minute fraction of the total energy emanating from the source it is necessary for the attainment of the best results that whatever the character of the receiver and the nature of the disturbances as much as possible of the energy conveyed should be made available for the operation of the receiver, and with this object in view I have heretofore, among other means, employed a receiving-circuit of high self-induction and very small resistance and of a period such as to vibrate in synchronism with the disturbances, whereby a number of separate impulses from the source were made to coöperate, thus magnifying the effect exerted upon and insuring the action of the receiving device. By these means decided advantages have been secured in many instances; but very often the improvement is either not applicable at all, or, if so, the gain is very slight. Evidently when the source is one producing a continuous pressure or delivering impulses of long duration it is impracticable to magnify the effects in this manner, and when, on the other hand, it is one furnishing short impulses of extreme rapidity of succession the advantage obtained in this way is insignificant, owing to the radiation and the unavoidable frictional waste in the receiving-circuit. These losses reduce greatly both the intensity and the number of the coöperative impulses, and since the initial intensity of each of these is necessarily limited only an insignificant amount of energy is thus made available for a single operation of the receiver. As this amount is consequently dependent on the energy conveyed to the receiver by one single impulse, it is evidently necessary to employ either a very large and costly, and therefore objectionable, transmitter, or else to resort to the equally objectionable use of a receiving device too delicate and too easily deranged. Furthermore, the energy obtained through the coöperation of the impulses is in the form of extremely rapid vibrations and because of this unsuitable for the operation of ordinary receivers, the more so as this form of energy imposes narrow restrictions in regard to the mode and time of its application to such devices. To overcome these and other limitations and disadvantages that have heretofore existed in such systems of transmission of signals or intelligence and to render possible an investigation of impulses or disturbances propagated through the natural media from any kind of source and their practical utilization for any purpose to which they are applicable, I have devised a novel method, which I have described in a pending application, filed June 24, 1899, Serial No. 721,790, and which, broadly stated, consists in effecting during any desired time interval a storage of energy derived from such impulses and utilizing the potential energy so obtained for operating a receiving device.

My present invention is intended for the same general purposes, and it comprises another apparatus by means of which similar results may be obtained.

The chief feature which distinguishes the method of my present from that of my former invention, just referred to, is that the energy stored is not, as in the former instance, obtained from the energy of the disturbances or effects transmitted from a distance, but from an independent source.

Expressed generally, the present method consists in charging a storage device with energy from an independent source, controlling the charging of said device by the action of the effects or disturbances transmitted through the natural media, and coincidently using the stored energy for operating a receiving device.

A great variety of disturbances, produced either by suitably-constructed transmitters or by natural causes, are at present known to be propagated through the natural media, and there are also a variety of means or devices enabling energy to be stored, and in view of this I wish to say that I consider the utilization of any such disturbances and the employment of any of these means as within the scope of my present invention so long as the use of the general method hereinbefore stated is involved.

The best way of carrying out my invention which I at present know is to store electrical energy obtained from a suitable electrical generator in a condenser and to control the storage or the application of this energy by means of a sensitive device acted upon by the effects or disturbances, and thereby cause the operation of the receiver.

In the practical application of this method I usually proceed as follows: At any point where I desire to investigate or to utilize for any purpose effects or disturbances propagated through the natural media from any kind of source I provide a suitable generator of electricity—as, for example, a battery and a condenser—which I connect to the poles of the generator in series with a sensitive device capable of being modified in its electrical resistance or other property by the action of the disturbances emitted from the source. To the terminals of the condenser I connect the receiver which is to be operated in series with another device of suitable construction, which performs the function of periodically discharging the condenser through

the receiver at and during such intervals of time as may be best suitable for the purpose contemplated. This latter device may merely consist of two stationary electrodes separated by a feeble dielectric layer of minute thickness, but sufficient to greatly reduce or practically interrupt the current in the circuit under normal conditions, or it may comprise terminals one or more of which are movable and actuated by any suitable force and are adapted to be brought into and out of contact with each other in any convenient manner. The sensitive device may be any of the many devices of this kind which are known to be affected by the disturbances, impulses, or effects propagated through the media, and it may be of such a character that normally—that is, when not acted upon—it entirely prevents the passage of electricity from the generator to the condenser, or it may be such that it allows a gradual leaking through of the current and a charging of the condenser at a slow rate. In any case it will be seen that if the disturbances, of whatever nature they may be, cause an appreciable diminution in the electrical resistance of the sensitive device the current from the battery will pass more readily into the condenser, which will be charged at a more rapid rate, and consequently each of its discharges through the receiver, periodically effected by the special device before referred to which performs this function, will be stronger than normally—that is, when the sensitive device is not acted upon by the disturbances. Evidently then if the receiver be so adjusted that it does not respond to the comparatively feeble normal discharges of the condenser, if they should occur, but only to those stronger ones which take place upon the diminution of the resistance of the sensitive device it will be operated only when this device is acted upon by the disturbances, thus making it possible to investigate and to utilize the latter for any desired purpose.

The general principle underlying my invention and the operation of the various devices used will be clearly understood by reference to the accompanying drawings, in which—

Figure 1 is a diagram illustrating a typical arrangement of apparatus which may be used in carrying my method into practice, and Figs. 2, 3, 4, and 5 similar diagrams of modified arrangements of apparatus for the same purpose.

In Fig. 1, C is a condenser, to the terminals T and T′ of which is connected a charging-circuit, including a battery B, a sensitive device *a*, and a resistance *r*, all connected in series, as illustrated. The battery should be preferably of very constant electromotive force and of an intensity carefully determined to secure the best results. The resistance *r*, which may be a frictional or an inductive one, is not absolutely necessary; but it is of advantage to use it in order to facilitate adjustment, and for this purpose it may be made variable in any convenient and preferably continuous manner. Assuming that the disturbances which are to be investigated or utilized for some practical end are rays identical with or resembling those of ordinary light, the sensitive device *a* may be a selenium cell properly prepared, so as to be highly susceptible to the influence of the rays, the action of which should be intensified by the use of a reflector A. (Shown in the drawings.) It is well known that when cells of this kind are exposed to such rays of greatly-varying intensity they undergo corresponding modifications of their electrical resistance; but in the ways they have been heretofore used they have been of very limited utility.

In addition to the circuit including the sensitive device or cell *a* another circuit is provided, which is likewise connected to the terminals T T′ of the condenser. This circuit, which may be called the "receiving-circuit," includes the receiver R and in series with it a device *d*, before referred to, which performs the duty of periodically discharging the condenser through the receiver. It will be noted that, as shown in Fig. 1, the receiving-circuit is in permanent connection with the battery and condenser-terminal T, and it should be stated that it is sometimes desirable to entirely insulate the receiving-circuit at all times, except the moments when the device *d* operates to discharge the condenser, thus preventing any disturbing influence which might otherwise be caused in this circuit by the battery or the condenser during the period when the receiver should not be acted upon. In such a case two devices, as *d*, may be used, one in each connection from the condenser to the receiving-circuit, or else one single device of this kind, but of a suitably-modified construction, so that it will make and break simultaneously and at proper intervals of time both of the connections of this circuit with the condenser T and T′.

From the foregoing the operation of the apparatus, as illustrated in Fig. 1, will be at once understood. Normally—that is, when it is not influenced by the rays at all or very slightly—the cell *a*, being of a comparatively high resistance, permits only a relatively feeble current to pass from the battery into the condenser, and hence the latter is charged at too slow a rate to accumulate during the time interval between two succeeding operations of the device *d* sufficient energy to operate the receiver or, generally speaking, to produce the required change in the receiving-circuit. This condition is readily secured by a proper selection and adjustment of the various devices described, so that the receiver will remain unresponsive to the feeble discharges of the condenser which may take place when the cell *a* is acted upon but slightly or not at all by the rays or disturbances; but if now new rays are permitted to fall upon the cell or if the intensity of those already acting upon it be increased by any cause then

its resistance will be diminished and the condenser will be charged by the battery at a more rapid rate, enabling sufficient potential energy to be stored in the condenser during the period of inaction of the device *d* to operate the receiver or to bring about any desired change in the receiving-circuit when the device *d* acts. If the rays acting upon the cell or sensitive device *a* are varied or intermitted in any arbitrary manner, as when transmitting intelligence in the usual way from a distant station by means of short and long signals, the apparatus may readily be made to record or to enable an operator to read the message, since the receiver—supposing it to be an ordinary magnetic relay, for example—will be operated by each signal from the sending-station a certain number of times, having some relation to the duration of each signal. It will be readily seen, however, that if the rays are varied in any other way, as by impressing upon them changes in intensity, the succeeding condenser discharges will undergo corresponding changes in intensity, which may be indicated or recorded by a suitable receiver and distinguished irrespectively of duration.

With reference to Fig. 1 it may be useful to state that the electrical connections of the various devices illustrated may be made in many different ways. For instance, the sensitive device instead of being in series, as shown, may be in a shunt to the condenser, this modification being illustrated in Fig. 3, in which the devices already described are indicated by similar letters to correspond with those of Fig. 1. In this case it will be observed that the condenser, which is being charged from the battery B through the resistance *r*, preferably inductive and properly related to the capacity of the condenser, will store less energy when the sensitive device *a* is energized by the rays, and its resistance thereby diminished. The adjustment of the various instruments may then be such that the receiver will be operated only when the rays are diminished in intensity or interrupted and entirely prevented from falling upon the sensitive cell, or the sensitive device may be placed, as shown in Fig. 4, in a shunt to the resistance *r* or inserted in any suitable way in the circuit containing the receiver—for example, as illustrated in Fig. 5—in both of which figures the various devices are lettered to correspond with those in Fig. 1, so that the figures become self-explanatory. Again, the several instruments may be connected in the manner of a Wheatstone bridge, as will be hereinafter explained with reference to Fig. 2, or otherwise connected or related; but in each case the sensitive device will have the same duty to perform—that is, to control the energy stored and utilized in some suitable way for causing the operation of the receiver in correspondence with the intermittances or variations of the effects or disturbances—and in each instance by a judicious selection of the devices and careful adjustment the advantages of my method may be more or less completely secured. I find it preferable, however, to follow the plan which I have illustrated and described.

It will be observed that the condenser is an important element in the combination. I have shown that by reason of its unique properties it greatly adds to the efficacy of this method. It allows the energy accumulated in it to be discharged instantaneously, and therefore in a highly effective manner. It magnifies in a large degree the current supplied from the battery, and owing to these features it permits energy to be stored and discharged at practically any rate desired, and thereby makes it possible to obtain in the receiving-circuit very great changes of the current strength by impressing upon the battery-current very small variations. Other means of storage possessing these characteristics to a useful degree may be employed without departing from the broad spirit of my invention; but I prefer to use a condenser, since in these respects it excels any other storage device of which I have knowledge.

In Fig. 2 a modified arrangement of apparatus is illustrated which is particularly adapted for the investigation and utilization of very feeble impulses or disturbances, such as may be used in conveying signals or producing other desired effects at very great distances. In this case the energy stored in the condenser is passed through the primary of a transformer, the secondary circuit of which contains the receiver, and in order to render the apparatus still more suitable for use in detecting feeble impulses, in addition to the sensitive device which is acted upon by the impulses, another such device is included in the secondary circuit of the transformer. The scheme of connections is in the main that of a Wheatstone bridge, the four branches of which are formed by the sensitive device *a* and resistances L, L′, and L″, all of which should be preferably inductive and also adjustable in a continuous manner, or at least by very small steps. The condenser C′, which is generally made of considerable capacity, is connected to two opposite points of the bridge, while a battery B, in series with a continuously-adjustable non-inductive resistance *r*′, is connected to the other pair of opposite points, as usual. The four resistances included in the branches of the bridge—namely, *a*, L, L′, and L″—are of a suitable size and so proportioned that under normal conditions—that is, when the device *a* is not influenced at all or only slightly by the disturbances—there will be no difference of potential, or, in any case, the minimum of the same at the terminals T and T′ of the condenser. It is assumed in the present instance that the disturbances to be investigated or utilized are such as will produce a difference of electric potential, however small, between two points or regions in the natural media, as the earth, the water,

or the air, and in order to apply this potential difference effectively to the sensitive device *a* the terminals of the same are connected to two plates P and P', which should be of as large a surface as practicable and so located in the media that the largest possible difference of potential will be produced by the disturbances between the terminals of the sensitive device. This device is in the present case one of familiar construction, consisting of an insulating-tube, which is indicated by the heavy lines in the drawings and which has its ends closed tightly by two conducting-plugs with reduced extensions, upon which bear two brushes *b b*, through which the currents are conveyed to the device. The tubular space between the plugs is partially filled with a conducting sensitive powder, as indicated, the proper amount of the same and the size of its grains being determined and adjusted beforehand by experiment. This tube I rotate by clockwork or other means at a uniform and suitable rate of speed, and under these conditions I find that this device behaves toward disturbances of the kind before assumed in a manner similar to that of a stationary cell of celenium toward rays of light. Its electrical resistance is diminished when it is acted upon by the disturbances and is automatically restored upon the cessation of their influence. It is of advantage to employ round grains of powder in the tube, and in any event it is important that they should be of as uniform size and shape as possible and that provision should be made for maintaining an unchanging and very dry atmosphere in the tube. To the terminals T and T' of the condenser C' is connected a coil *p*, usually consisting of a few turns of a conductor of very small resistance, which is the primary of the transformer before referred to, in series with a device *d*, which effects the discharge of the condenser through the coil *p* at predetermined intervals of time. In the present case this device consists of a cylinder made partly of conducting and partly of insulating material *e* and *e'*, respectively, which is rotated at the desired rate of speed by any suitable means. The conducting part *e* is in good electrical connection with shaft S and is provided with tapering segments, as *f*, upon which slides a brush *k*, which should preferably be capable of longitudinal adjustment along the cylinder. Another brush *b'*, which is connected to the condenser-terminal T', being arranged to bear upon the shaft S, it will be seen that whenever the brush *k* comes in contact with a conducting-segment *e* the circuit including the primary *p* will be completed and the condenser, if energized, discharged through the same. By an adjustment of the speed of rotation of the cylinder and a displacement of the brush *k* along the axis of the same the circuit may be made to open and close in as rapid succession and remain open or closed during such intervals of time as may be desired. In inductive relation to the primary *p* is a secondary coil *s*, usually of much thinner wire and of many more turns than the former, to which are connected in a series a receiver R, illustrated as an ordinary magnetic relay, a continuously-adjustable non-inductive resistance *r''*, a battery B' of a properly-determined and very constant electromotive force, and finally a sensitive device *a'* of the same or similar construction as *a*, which is likewise rotated at a uniform speed and which, with its brushes *b' b''*, closes the secondary circuit. The electromotive force of the battery B' is so graduated by means of the adjustable resistance *r''* that the dielectric layers in the sensitive device *a'* are strained very nearly to the point of breaking down and give way upon a slight increase of the electrical pressure on the terminals of the device. It will of course be understood that the resistance *r''* is used mainly because of convenience and that it may be dispensed with, in which case the adjustment may be effected in many other ways, as by determining the proper amount or coarseness of the sensitive powder or by varying the distance apart of the metallic plugs in the ends of the tube. The same may be said of the resistance *r'*, which is in series with the battery B and serves to graduate the force of the latter, so that the dielectric layers of the sensitive device *a* are subjected to a similar strain and maintained in a state of delicate poise.

The various instruments being connected and adjusted in the manner described, it will now be readily seen from the foregoing that under normal conditions, the device *a* being unaffected by the disturbances, or practically so, and there being no or only a very insignificant amount of energy stored in the condenser, the periodical closure of the primary circuit of the transformer through the operation of the device *d* will have no appreciable effect upon the primary coil *p*, and hence no currents will be generated in the secondary coil *s*, at least not such as would disturb the state of delicate balance existing in the secondary circuit including the receiver, and therefore the latter will not be actuated by the battery B'; but when, owing to the disturbances or impulses propagated through the media from a distant source, an additional electromotive force, however small, is created between the terminals of the device *a* the dielectric layers in the same, unable to support the increased strain, give way and allow the current of the battery B to pass through, thus causing a difference of potential at the terminals T and T' of the condenser. A sufficient amount of energy being now stored in this instrument during the time interval between each two succeeding operations of the device *d*, each closure of the primary circuit by the latter results in the passage of a sudden current impulse through the coil *p*, which induces a corresponding current of relatively high electromotive force in

the secondary coil *s*. Owing to this the dielectric in the device *a'* gives way, and the current of the battery B' being allowed to pass the receiver R is operated, but only for a moment, since by the rotation of the devices *a*, *a'*, and *d*, which may be all driven from the same shaft, the original conditions are restored, assuming, of course, that the electromotive force set up by the disturbances at the terminals of the sensitive device *a* is only momentary or of a duration not longer than the time of closure of the primary circuit; otherwise the receiver will be actuated a number of times and so long as the influence of the disturbances upon the device *a* continues. In order to render the discharged energy of the condenser more effective in causing the operation of the receiver, the resistance of the primary circuit should be very small and the secondary coil *s* should have a number of turns many times greater than that of the primary coil *p*. It will be noted that since the condenser under the above assumptions is always charged in the same direction the strongest current impulse in the secondary coil, which is induced at the moment when the brush *k* comes in contact with segment *e*, is also of unchanging direction, and for the attainment of the best results it is necessary to connect the secondary coil so that the electromotive force of this impulse will be added to that of the battery and will momentarily strengthen the same. However, under certain conditions, which are well understood by those skilled in the art, the devices will operate whichever way the secondary be connected. It is preferable to make the inductive resistances L and L' relatively large, as they are in a shunt to the device *a* and might, if made too small, impair its sensitiveness. On the other hand, the resistance L'' should not be too large and should be related to the capacity of the condenser and the number of makes and breaks effected by the device *d* in well-known ways. Similar considerations apply, of course, to the circuits including the primary *p* and secondary *s*, respectively.

By carefully observing well-known rules of scientific design and adjustment of the instruments the apparatus may be made extremely sensitive and capable of responding to the feeblest influences, thus making it possible to utilize impulses or disturbances transmitted from very great distances and too feeble to be detected or utilized in any of the ways heretofore known, and on this account the method here described lends itself to many scientific and practical uses of great value.

Obviously the character of the devices and the manner in which they are connected or related may be greatly varied without departing from the spirit of my invention.

What I claim as new, and desire to secure by Letters Patent, is—

1. In an apparatus for utilizing effects or disturbances transmitted through the natural media from a distant source, the combination of an electrical storage device, a charging-circuit connected therewith and including a device sensitive to the action of the effects or disturbances and determining under their control the flow of current in the charging-circuit, a receiving-circuit including a receiver, and means for periodically discharging the storage device through the receiving-circuit, substantially as described.

2. In an apparatus for utilizing effects or disturbances transmitted through the natural media from a distant source, the combination of a condenser, a charging-circuit connected therewith and including a source of electricity and a device sensitive to the action of the effects or disturbances and determining under their control the flow of current in the charging-circuit, a receiving-circuit including a receiver, and means for periodically discharging the condenser through the receiving-circuit, substantially as described.

3. In an apparatus for utilizing effects or disturbances transmitted through the natural media from a distant source, the combination of a circuit including a source of electricity, a storage device adapted to be charged thereby and a device normally of very high resistance but adapted to have its resistance reduced when acted upon by the effects or disturbances, with a receiving-circuit connected with the storage device and including a receiver and a device adapted to open and close the receiving-circuit at predetermined intervals of time, substantially as described.

4. In an apparatus for utilizing effects or disturbances transmitted through the natural media from a distant source, the combination of a circuit including a source of electricity, a condenser and a device normally of very high resistance but adapted to have its resistance reduced when acted upon by the effects or disturbances, with a receiving-circuit connected with the condenser and including a receiver and a device adapted to open and close the receiving-circuit at predetermined intervals of time, substantially as described.

5. In an apparatus for utilizing effects or disturbances transmitted from a distant source, the combination of a circuit including a source of electricity, a storage device adapted to be charged thereby and a device, normally of very high resistance but adapted to have its resistance reduced when acted upon by the effects or disturbances, with a receiving-circuit connected with the storage device and including the primary of a transformer and a device adapted to open and close such second circuit at predetermined intervals of time, and a receiver included in the secondary of the transformer, substantially as described.

6. In an apparatus for utilizing effects or disturbances transmitted from a distant source, the combination of an electrical storage device, a charging-circuit connected therewith and including a device sensitive to the

action of the effects or disturbances and determining under their control the flow of the current in the charging-circuit, and a receiving-circuit supplied with energy from the storage device and including a receiver and a device sensitive to electrical variations in the receiving-circuit, substantially as described.

7. In an apparatus for utilizing effects or disturbances transmitted through the natural media from a distant source, the combination of a condenser, a charging-circuit connected therewith and including a device sensitive to the action of the effects or disturbances and determining under their control the flow of the current in the charging-circuit, and a receiving-circuit supplied with energy from the condenser and including a receiver and a device sensitive to electrical variations in the receiving-circuit, substantially as described.

8. In an apparatus for utilizing effects or disturbances transmitted through the natural media from a distant source, the combination of a circuit, an independent local source of electricity included therein, a storage device connected with the said circuit and adapted to receive energy from the said source, a device normally of very high resistance, but adapted to have its resistance reduced when acted upon by the effects or disturbances, a receiving-circuit connected with the storage device, a transformer, the primary of which is included in said receiving-circuit, a device adapted to open and close the receiving-circuit at predetermined intervals of time, a receiver, and a device, normally of very high resistance, but adapted to have its resistance reduced when acted upon by the effects or disturbances, and included in the secondary circuit of the transformer, as set forth.

9. In an apparatus for utilizing effects or disturbances transmitted from a distant source, the combination with a storage device and an independent source of energy for charging the same, of a receiving-circuit connected with the storage device, a device sensitive to the effects or disturbances and determining under their control the flow of current in the receiving-circuit, substantially as set forth.

10. In an apparatus for utilizing effects or disturbances transmitted through the natural media from a distant source, the combination with a storage device and an independent source of energy for charging the same, of a receiving-circuit connected with the storage device, a device sensitive to the effects or disturbances and adapted to have its resistance varied by the action thereon of such effects or disturbances and determining under their control the flow of current in the receiving-circuit, substantially as set forth.

11. In an apparatus for utilizing effects or disturbances transmitted from a distant source, the combination of a storage device, a battery or similar independent source of energy for charging the same, a sensitive device adapted to have its resistance varied under the influence of the effects or disturbances, a receiver adapted to be operated by the discharge of the storage device, the sensitive device being in one branch of a Wheatstone bridge, the storage device in one of the cross connections between two opposite points of the bridge, and the battery in the other cross connection, and resistances L, L′ and L″ in the three remaining branches of the bridge, as set forth.

12. In an apparatus for utilizing effects or disturbances transmitted through the natural media from a distant source, the combination of a storage device, a battery or like independent source of energy for charging the same, a sensitive device adapted to have its resistance varied under the influence of the effects or disturbances, a circuit connected with the terminals of the storage device, a transformer having its primary in said circuit and a receiver in the secondary circuit of the transformer, the sensitive device being in one branch of a Wheatstone bridge, the storage device in one of the cross connections between opposite points of the bridge and the battery in the other cross connection, and resistances L, L′ and L″ in the three remaining branches of the bridge, as set forth.

NIKOLA TESLA.

Witnesses:
E. A. SUNDERLIN,
D. D. LORD.

No. 685,957. Patented Nov. 5, 1901.

N. TESLA.

APPARATUS FOR THE UTILIZATION OF RADIANT ENERGY.

(Application filed Mar. 21, 1901.)

(No Model.)

Fig.1

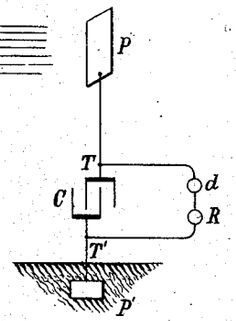

Fig.2

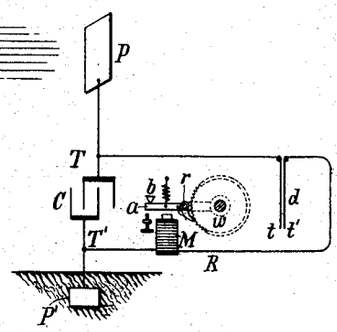

Fig.3

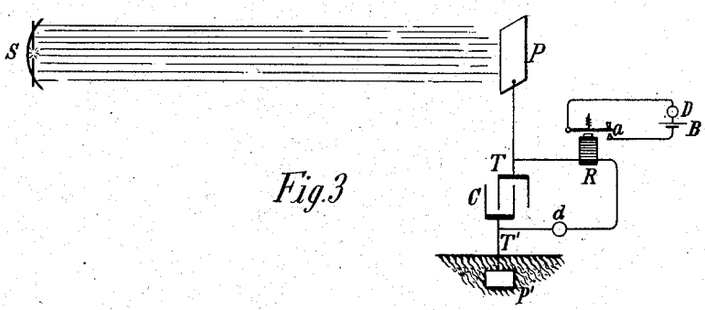

Fig.4

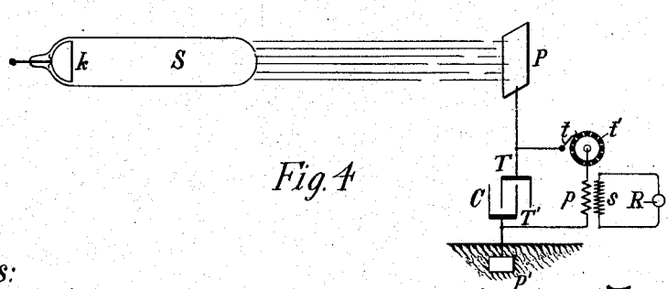

Witnesses:
Raphael Netter
M. Lawson Dyer.

Inventor
Nicola Tesla
by Kerr, Page & Cooper Attys.

THE NORRIS PETERS CO., PHOTO-LITHO., WASHINGTON, D. C.

UNITED STATES PATENT OFFICE.

NIKOLA TESLA, OF NEW YORK, N. Y.

APPARATUS FOR THE UTILIZATION OF RADIANT ENERGY.

SPECIFICATION forming part of Letters Patent No. 685,957, dated November 5, 1901.

Application filed March 21, 1901. Serial No. 52,153. (No model.)

To all whom it may concern:

Be it known that I, NIKOLA TESLA, a citizen of the United States, residing at the borough of Manhattan, in the city, county, and State of New York, have invented certain new and useful Improvements in Apparatus for the Utilization of Radiant Energy, of which the following is a specification, reference being had to the drawings accompanying and forming a part of the same.

It is well known that certain radiations—such as those of ultra-violet light, cathodic, Roentgen rays, or the like—possess the property of charging and discharging conductors of electricity, the discharge being particularly noticeable when the conductor upon which the rays impinge is negatively electrified. These radiations are generally considered to be ether vibrations of extremely small wave lengths, and in explanation of the phenomena noted it has been assumed by some authorities that they ionize or render conducting the atmosphere through which they are propagated. My own experiments and observations, however, lead me to conclusions more in accord with the theory heretofore advanced by me that sources of such radiant energy throw off with great velocity minute particles of matter which are strongly electrified, and therefore capable of charging an electrical conductor, or, even if not so, may at any rate discharge an electrified conductor either by carrying off bodily its charge or otherwise.

My present application is based upon a discovery which I have made that when rays or radiations of the above kind are permitted to fall upon an insulated conducting-body connected to one of the terminals of a condenser while the other terminal of the same is made by independent means to receive or to carry away electricity a current flows into the condenser so long as the insulated body is exposed to the rays, and under the conditions hereinafter specified an indefinite accumulation of electrical energy in the condenser takes place. This energy after a suitable time interval, during which the rays are allowed to act, may manifest itself in a powerful discharge, which may be utilized for the operation or control of mechanical or electrical devices or rendered useful in many other ways.

In applying my discovery I provide a condenser, preferably of considerable electrostatic capacity, and connect one of its terminals to an insulated metal plate or other conducting-body exposed to the rays or streams of radiant matter. It is very important, particularly in view of the fact that electrical energy is generally supplied at a very slow rate to the condenser, to construct the same with the greatest care. I use, by preference, the best quality of mica as dielectric, taking every possible precaution in insulating the armatures, so that the instrument may withstand great electrical pressures without leaking and may leave no perceptible electrification when discharging instantaneously. In practice I have found that the best results are obtained with condensers treated in the manner described in a patent granted to me February 23, 1897, No. 577,671. Obviously the above precautions should be the more rigorously observed the slower the rate of charging and the smaller the time interval during which the energy is allowed to accumulate in the condenser. The insulated plate or conducting-body should present as large a surface as practicable to the rays or streams of matter, I having ascertained that the amount of energy conveyed to it per unit of time is under otherwise identical conditions proportionate to the area exposed, or nearly so. Furthermore, the surface should be clean and preferably highly polished or amalgamated. The second terminal or armature of the condenser may be connected to one of the poles of a battery or other source of electricity or to any conducting body or object whatever of such properties or so conditioned that by its means electricity of the required sign will be supplied to the terminal. A simple way of supplying positive or negative electricity to the terminal is to connect the same either to an insulated conductor supported at some height in the atmosphere or to a grounded conductor, the former, as is well known, furnishing positive and the latter negative electricity. As the rays or supposed streams of mat-

ter generally convey a positive charge to the first condenser-terminal, which is connected to the plate or conductor above mentioned, I usually connect the second terminal of the condenser to the ground, this being the most convenient way of obtaining negative electricity, dispensing with the necessity of providing an artificial source. In order to utilize for any useful purpose the energy accumulated in the condenser, I furthermore connect to the terminals of the same a circuit including an instrument or apparatus which it is desired to operate and another instrument or device for alternately closing and opening the circuit. This latter may be any form of circuit-controller, with fixed or movable parts or electrodes, which may be actuated either by the stored energy or by independent means.

My discovery will be more fully understood from the following description and annexed drawings, to which reference is now made, and in which—

Figure 1 is a diagram showing the general arrangement of apparatus as usually employed. Fig. 2 is a similar diagram illustrating more in detail typical forms of the devices or elements used in practice, and Figs. 3 and 4 are diagrammatical representations of modified arrangements suitable for special purposes.

As illustrative of the manner in which the several parts or elements of the apparatus in one of its simplest forms are to be arranged and connected for useful operation, reference is made to Fig. 1, in which C is the condenser, P the insulated plate or conducting-body which is exposed to the rays, and P′ another plate or conductor which is grounded, all being joined in series, as shown. The terminals T T′ of the condenser are also connected to a circuit which includes a device R to be operated and a circuit-controlling device *d* of the character above referred to.

The apparatus being arranged as shown, it will be found that when the radiations of the sun or of any other source capable of producing the effects before described fall upon the plate P an accumulation of electrical energy in the condenser C will result. This phenomenon, I believe, is best explained as follows: The sun, as well as other sources of radiant energy, throws off minute particles of matter positively electrified, which, impinging upon the plate P, communicate continuously an electrical charge to the same. The opposite terminal of the condenser being connected to the ground, which may be considered as a vast reservoir of negative electricity, a feeble current flows continuously into the condenser, and inasmuch as these supposed particles are of an inconceivably small radius or curvature, and consequently charged to a relatively very high potential, this charging of the condenser may continue, as I have actually observed, almost indefinitely, even to the point of rupturing the dielectric. If the device *d* be of such character that it will operate to close the circuit in which it is included when the potential in the condenser has reached a certain magnitude, the accumulated charge will pass through the circuit, which also includes the receiver R, and operate the latter.

In illustration of a particular form of apparatus which may be used in carrying out my discovery I now refer to Fig. 2. In this figure, which in the general arrangement of the elements is identical to Fig. 1, the device *d* is shown as composed of two very thin conducting-plates *t t′*, placed in close proximity and very mobile, either by reason of extreme flexibility or owing to the character of their support. To improve their action, they should be inclosed in a receptacle, from which the air may be exhausted. The plates *t t′* are connected in series with a working circuit, including a suitable receiver, which in this case is shown as consisting of an electromagnet M, a movable armature *a*, a retractile spring *b*, and a ratchet-wheel *w*, provided with a spring-pawl *r*, which is pivoted to armature *a*, as illustrated. When the radiations of the sun or other radiant source fall upon plate P, a current flows into the condenser, as above explained, until the potential therein rises sufficiently to attract and bring into contact the two plates *t t′*, and thereby close the circuit connected to the two condenser-terminals. This permits a flow of current which energizes the magnet M, causing it to draw down the armature *a* and impart a partial rotation to the ratchet-wheel *w*. As the current ceases the armature is retracted by the spring *b*, without, however, moving the wheel *w*. With the stoppage of the current the plates *t t′* cease to be attracted and separate, thus restoring the circuit to its original condition.

Fig. 3 shows a modified form of apparatus used in connection with an artificial source of radiant energy, which in this instance may be an arc emitting copiously ultra-violet rays. A suitable reflector may be provided for concentrating and directing the radiations. A magnet R and circuit-controller *d* are arranged as in the previous figures; but in the present case the former instead of performing itself the whole work only serves the purpose of alternately opening and closing a local circuit, containing a source of current B and a receiving or translating device D. The controller *d*, if desired, may consist of two fixed electrodes separated by a minute air-gap or weak dielectric film, which breaks down more or less suddenly when a definite difference of potential is reached at the terminals of the condenser and returns to its original state upon the passage of the discharge.

Still another modification is shown in Fig. 4, in which the source S of radiant energy is a special form of Roentgen tube devised by

me, having but one terminal *k*, generally of aluminium, in the form of half a sphere, with a plain polished surface on the front side, from which the streams are thrown off. It may be excited by attaching it to one of the terminals of any generator of sufficiently high electromotive force; but whatever apparatus be used it is important that the tube be exhausted to a high degree, as otherwise it might prove entirely ineffective. The working or discharge circuit connected to the terminals T T′ of the condenser includes in this case the primary *p* of a transformer and a circuit-controller comprising a fixed terminal or brush *t* and a movable terminal *t′* in the shape of a wheel, with conducting and insulating segments, which may be rotated at an arbitrary speed by any suitable means. In inductive relation to the primary wire or coil *p* is a secondary *s*, usually of a much greater number of turns, to the ends of which is connected a receiver R. The terminals of the condenser being connected, as indicated, one to an insulated plate P and the other to a grounded plate P′, when the tube S is excited rays or streams of matter are emitted from the same, which convey a positive charge to the plate P and condenser-terminal T, while terminal T′ is continuously receiving negative electricity from the plate P′. This, as before explained, results in an accumulation of electrical energy in the condenser, which goes on as long as the circuit including the primary *p* is interrupted. Whenever the circuit is closed owing to the rotation of the terminal *t′*, the stored energy is discharged through the primary *p*, this giving rise in the secondary *s* to induced currents, which operate the receiver R.

It is clear from what has been stated above that if the terminal T′ is connected to a plate supplying positive instead of negative electricity the rays should convey negative electricity to plate P. The source S may be any form of Roentgen or Lenard tube; but it is obvious from the theory of action that in order to be very effective the electrical impulses exciting it should be wholly or at least preponderatingly of one sign. If ordinary symmetrical alternating currents are employed, provision should be made for allowing the rays to fall upon the plate P only during those periods when they are productive of the desired result. Evidently if the radiations of the source be stopped or intercepted or their intensity varied in any manner, as by periodically interrupting or rythmically varying the current exciting the source, there will be corresponding changes in the action upon the receiver R, and thus signals may be transmitted and many other useful effects produced. Furthermore, it will be understood that any form of circuit-closer which will respond to or be set in operation when a predetermined amount of energy is stored in the condenser may be used in lieu of the device specifically described with reference to Fig. 2 and also that the special details of construction and arrangement of the several parts of the apparatus may be very greatly varied without departure from the invention.

Having described my invention, what I claim is—

1. An apparatus for utilizing radiant energy, comprising in combination a condenser, one armature of which is subjected to the action of rays or radiations, independent means for charging the other armature, a circuit and apparatus therein adapted to be operated or controlled by the discharge of the condenser, as set forth.

2. An apparatus for utilizing radiant energy, comprising in combination, a condenser, one armature of which is subjected to the action of rays or radiations, independent means for charging the other armature, a local circuit connected with the condenser-terminals, a circuit-controller therein and means adapted to be operated or controlled by the discharge of the condenser when the local circuit is closed, as set forth.

3. An apparatus for utilizing radiant energy, comprising in combination, a condenser, one terminal of which is subjected to the action of rays or radiations, independent means for charging the other armature, a local circuit connected with the condenser-terminals, a circuit-controller therein dependent for operation on a given rise of potential in the condenser, and devices operated by the discharge of the condenser when the local circuit is closed, as set forth.

4. An apparatus for utilizing radiant energy, comprising in combination, a condenser, one terminal of which is subjected to the action of rays or radiations, and the other of which is connected with the ground, a circuit and apparatus therein adapted to be operated by the discharge of the accumulated energy in the condenser, as set forth.

5. An apparatus for utilizing radiant energy, comprising in combination, a condenser, one terminal of which is subjected to the action of rays or radiations and the other of which is connected with the ground, a local circuit connected with the condenser-terminals, a circuit-controller therein and means adapted to be operated by the discharge of the condenser when the local circuit is closed, as set forth.

6. An apparatus for utilizing radiant energy, comprising in combination, a condenser, one terminal of which is subjected to the action of rays or radiations and the other of which is connected with the ground, a local circuit connected with the condenser-terminals, a circuit-controller therein adapted to be operated by a given rise of potential in the condenser, and devices operated by the discharge of the condenser when the local circuit is closed, as set forth.

7. An apparatus for utilizing radiant en-

ergy, comprising a condenser, having one terminal connected to earth and the other to an elevated conducting-plate, which is adapted to receive the rays from a distant source of radiant energy, a local circuit connected with the condenser-terminals, a receiver therein, and a circuit-controller therefor which is adapted to be operated by a given rise of potential in the condenser, as set forth.

NIKOLA TESLA.

Witnesses:
M. LAWSON DYER,
RICHARD DONOVAN.

455-619 AU 233 EX
FIP8106 OR 685,958

No. 685,958. Patented Nov. 5, 1901.

N. TESLA.

METHOD OF UTILIZING RADIANT ENERGY.

(Application filed Mar. 21, 1901.)

(No Model.)

Electric stepping motor energized by corpuscular energy from sun

Fig.1

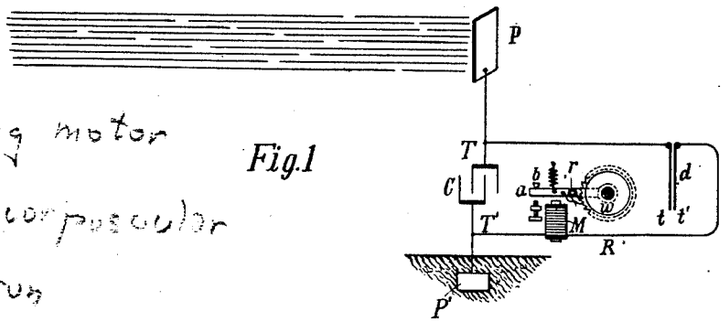

No rays.

Fig.2

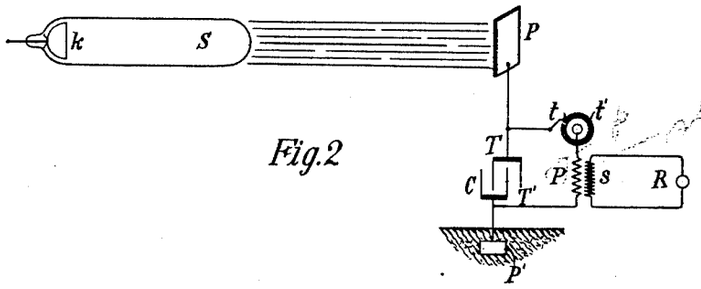

Witnesses:
Raphael Netter
M. Lawson Byrn

Nikola Tesla, Inventor
by Kerr, Page & Cooper Attys

THE NORRIS PETERS CO. PHOTO-LITHO., WASHINGTON, D. C.

UNITED STATES PATENT OFFICE.

NIKOLA TESLA, OF NEW YORK, N. Y.

METHOD OF UTILIZING RADIANT ENERGY.

SPECIFICATION forming part of Letters Patent No. 685,958, dated November 5, 1901.

Application filed March 21, 1901. Serial No. 52,154. (No model.)

To all whom it may concern:

Be it known that I, NIKOLA TESLA, a citizen of the United States, residing at the borough of Manhattan, in the city, county, and State of New York, have invented certain new and useful Improvements in Methods of Utilizing Radiant Energy, of which the following is a specification, reference being had to the drawings accompanying and forming a part of the same.

It is well known that certain radiations—such as those of ultra-violet light, cathodic, Roentgen rays, or the like—possess the property of charging and discharging conductors of electricity, the discharge being particularly noticeable when the conductor upon which the rays impinge is negatively electrified. These radiations are generally considered to be ether vibrations of extremely small wave lengths, and in explanation of the phenomena noted it has been assumed by some authorities that they ionize or render conducting the atmosphere through which they are propagated. My own experiments and observations, however, lead me to conclusions more in accord with the theory heretofore advanced by me that sources of such radiant energy throw off with great velocity minute particles of matter which are strongly electrified, and therefore capable of charging an electrical conductor, or even if not so may at any rate discharge an electrified conductor either by carrying off bodily its charge or otherwise.

My present application is based upon a discovery which I have made that when rays or radiations of the above kind are permitted to fall upon an insulated conducting body connected to one of the terminals of a condenser, while the other terminal of the same is made by independent means to receive or to carry away electricity, a current flows into the condenser so long as the insulated body is exposed to the rays, and under the conditions hereinafter specified an indefinite accumulation of electrical energy in the condenser takes place. This energy after a suitable time interval, during which the rays are allowed to act, may manifest itself in a powerful discharge, which may be utilized for the operation or control of mechanical or electrical devices or rendered useful in many other ways.

In applying my discovery I provide a condenser, preferably of considerable electrostatic capacity, and connect one of its terminals to an insulated metal plate or other conducting body exposed to the rays or streams of radiant matter. It is very important, particularly in view of the fact that electrical energy is generally supplied at a very slow rate to the condenser, to construct the same with the greatest care. I use by preference the best quality of mica as dielectric, taking every possible precaution in insulating the armatures, so that the instrument may withstand great electrical pressures without leaking and may leave no perceptible electrification when discharging instantaneously. In practice I have found that the best results are obtained with condensers treated in the manner described in a patent granted to me February 23, 1897, No. 577,671. Obviously the above precautions should be the more rigorously observed the slower the rate of charging and the smaller the time interval during which the energy is allowed to accumulate in the condenser. The insulated plate or conducting body should present as large a surface as practicable to the rays or streams of matter, I having ascertained that the amount of energy conveyed to it per unit of time is under otherwise identical conditions proportionate to the area exposed, or nearly so. Furthermore, the surface should be clean and preferably highly polished or amalgamated. The second terminal or armature of the condenser may be connected to one of the poles of a battery or other source of electricity or to any conducting body or object whatever of such properties or so conditioned that by its means electricity of the required sign will be supplied to the terminal. A simple way of supplying positive or negative electricity to the terminal is to connect the same either to an insulated conductor, supported at some height in the atmosphere, or to a grounded conductor, the former, as is well known, furnishing positive and the latter negative electricity. As the rays or supposed streams of matter generally convey a positive charge to the first condenser-terminal, which is connect-

ed to the plate or conductor above mentioned, I usually connect the second terminal of the condenser to the ground, this being the most convenient way of obtaining negative electricity, dispensing with the necessity of providing an artificial source. In order to utilize for any useful purpose the energy accumulated in the condenser, I furthermore connect to the terminals of the same a circuit including an instrument or apparatus which it is desired to operate and another instrument or device for alternately closing and opening the circuit. This latter may be any form of circuit-controller, with fixed or movable parts or electrodes, which may be actuated either by the stored energy or by independent means.

The rays or radiations which are to be utilized for the operation of the apparatus above described in general terms may be derived from a natural source, as the sun, or may be artificially produced by such means, for example, as an arc-lamp, a Roentgen tube, and the like, and they may be employed for a great variety of useful purposes.

My discovery will be more fully understood from the following detailed description and annexed drawings, to which reference is now made, and in which—

Figure 1 is a diagram showing typical forms of the devices or elements as arranged and connected in applying the method for the operation of a mechanical contrivance or instrument solely by the energy stored; and Fig. 2 is a diagrammatical representation of a modified arrangement suitable for special purposes, with a circuit-controller actuated by independent means.

Referring to Fig. 1, C is the condenser, P the insulated plate or conducting body, which is exposed to the rays, and P′ another plate or conductor, all being joined in series, as shown. The terminals T T′ of the condenser are also connected to a circuit including a receiver R, which is to be operated, and a circuit-controlling device *d*, which in this case is composed of two very thin conducting-plates *t t′*, placed in close proximity and very mobile, either by reason of extreme flexibility or owing to the charater of their support. To improve their action, they should be inclosed in a receptacle from which the air may be exhausted. The receiver R is shown as consisting of an electromagnet M, a movable armature *a*, a retractile spring *b*, and a ratchet-wheel *w*, provided with a spring-pawl *r*, which is pivoted to armature *a*, as illustrated. The apparatus being arranged as shown, it will be found that when the radiations of the sun or of any other source capable of producing the effects before described fall upon the plate P an accumulation of electrical energy in the condenser C will result. This phenomenon, I believe, is best explained as follows: The sun as well as other sources of radiant energy throw off minute particles of matter positively electrified, which, impinging upon the plate P, communicate an electrical charge to the same. The opposite terminal of the condenser being connected to the ground, which may be considered as a vast reservoir of negative electricity, a feeble current flows continuously into the condenser, and inasmuch as these supposed particles are of an inconceivably small radius or curvature, and consequently charged to a relatively very high potential, this charging of the condenser may continue, as I have found in practice, almost indefinitely, even to the point of rupturing the dielectric. Obviously whatever circuit-controller be employed it should operate to close the circuit in which it is included when the potential in the condenser has reached the desired magnitude. Thus in Fig. 2 when the electrical pressure at the terminals T T′ rises to a certain predetermined value the plates *t t′*, attracting each other, close the circuit connected to the terminals. This permits a flow of current which energizes the magnet M, causing it to draw down the armature *a* and impart a partial rotation to the ratchet-wheel *w*. As the current ceases the armature is retracted by the spring *b* without, however, moving the wheel *w*. With the stoppage of the current the plates *t t′* cease to be attracted and separate, thus restoring the circuit to its original condition.

Many useful applications of this method of utilizing the radiations emanating from the sun or other source and many ways of carrying out the same will at once suggest themselves from the above description. By way of illustration a modified arrangement is shown in Fig. 2, in which the source S of radiant energy is a special form of Roentgen tube devised by me having but one terminal *k*, generally of aluminium, in the form of half a sphere with a plain polished surface on the front side, from which the streams are thrown off. It may be excited by attaching it to one of the terminals of any generator of sufficiently-high electromotive force; but whatever apparatus be used it is important that the tube be exhausted to a high degree, as otherwise it might prove entirely ineffective. The working or discharge circuit connected to the terminals T T′ of the condenser includes in this case the primary *p* of a transformer and a circuit-controller comprising a fixed terminal or brush *t* and a movable terminal *t′* in the shape of a wheel with conducting and insulating segments which may be rotated at an arbitrary speed by any suitable means. In inductive relation to the primary wire or coil *p* is a secondary *s*, usually of a much greater number of turns, to the ends of which is connected a receiver R. The terminals of the condenser being connected as indicated, one to an insulated plate P and the other to a grounded plate P′, when the tube S is excited rays or streams of matter are emitted from the same, which convey a positive charge to the plate P and condenser-terminal T, while terminal T′ is continuously receiving negative electricity from the plate

P'. This, as before explained, results in an accumulation of electrical energy in the condenser, which goes on as long as the circuit including the primary *p* is interrupted. Whenever the circuit is closed, owing to the rotation of the terminal *t'*, the stored energy is discharged through the primary *p*, this giving rise in the secondary *s* to induced currents which operate the receiver R.

It is clear from what has been stated above that if the terminal T' is connected to a plate supplying positive instead of negative electricity the rays should convey negative electricity to plate P. The source S may be any form of Roentgen or Lenard tube; but it is obvious from the theory of action that in order to be very effective the electrical impulses exciting it should be wholly or at least preponderatingly of one sign. If ordinary symmetrical alternating currents are employed, provision should be made for allowing the rays to fall upon the plate P only during those periods when they are productive of the desired result. Evidently if the radiations of the source be stopped or intercepted or their intensity varied in any manner, as by periodically interrupting or rythmically varying the current exciting the source, there will be corresponding changes in the action upon the receiver R, and thus signals may be transmitted and many other useful effects produced. Furthermore, it will be understood that any form of circuit-closer which will respond to or be set in operation when a predetermined amount of energy is stored in the condenser may be used in lieu of the device specifically described with reference to Fig. 1, and also that the special details of construction and arrangement of the several parts of the apparatus may be very greatly varied without departure from the invention.

Having described my invention, what I claim is—

1. The method of utilizing radiant energy, which consists in charging one of the armatures of a condenser by rays or radiations, and the other armature by independent means, and discharging the condenser through a suitable receiver, as set forth.

2. The method of utilizing radiant energy, which consists in simultaneously charging a condenser by means of rays or radiations and an independent source of electrical energy, and discharging the condenser through a suitable receiver, as set forth.

3. The method of utilizing radiant energy, which consists in charging one of the armatures of a condenser by rays or radiations, and the other by independent means, controlling the action or effect of said rays or radiations and discharging the condenser through a suitable receiver, as set forth.

4. The method of utilizing radiant energy, which consists in charging one of the armatures of a condenser by rays or radiations and the other by independent means, varying the intensity of the said rays or radiations and periodically discharging the condenser through a suitable receiver, as set forth.

5. The method of utilizing radiant energy, which consists in directing upon an elevated conductor, connected to one of the armatures of a condenser, rays or radiations capable of positively electrifying the same, carrying off electricity from the other armature by connecting the same with the ground, and discharging the accumulated energy through a suitable receiver, as set forth.

6. The method of utilizing radiant energy, which consists in charging one of the armatures of a condenser by rays or radiations, and the other by independent means, and effecting by the automatic discharge of the accumulated energy the operation or control of a suitable receiver, as set forth.

NIKOLA TESLA.

Witnesses:
M. LAWSON DYER,
RICHARD DONOVAN.

No. 723,188. PATENTED MAR. 17, 1903.

N. TESLA.

METHOD OF SIGNALING.

APPLICATION FILED JUNE 14, 1901.

NO MODEL.

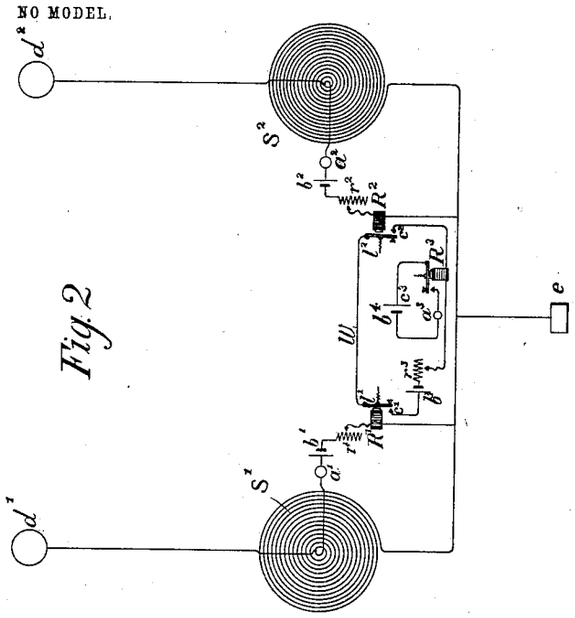

Fig. 2

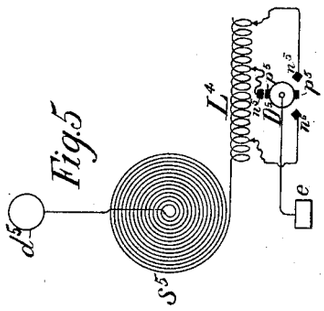

Fig. 5

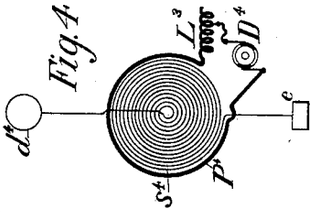

Fig. 4

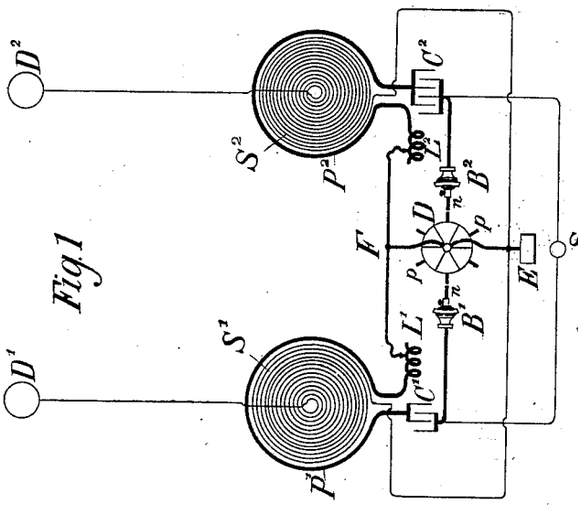

Fig. 1

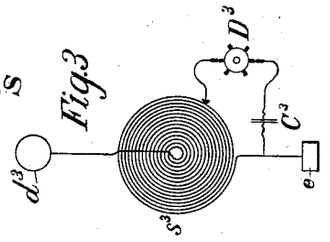

Fig. 3

WITNESSES:

Benjamin Miller.

Richard Lowman.

INVENTOR.

Nikola Tesla

BY

Kerr, Page & Cooper

ATTORNEYS.

THE NORRIS PETERS CO., PHOTO-LITHO., WASHINGTON, D. C.

UNITED STATES PATENT OFFICE.

NIKOLA TESLA, OF NEW YORK, N. Y.

METHOD OF SIGNALING.

SPECIFICATION forming part of Letters Patent No. 723,188, dated March 17, 1903.

Original application filed July 16, 1900, Serial No. 23,847. Divided and this application filed June 14, 1901. Serial No. 64,522. (No model.)

To all whom it may concern:

Be it known that I, NIKOLA TESLA, a citizen of the United States, residing in the borough of Manhattan, in the city, county, and State of New York, have invented certain new and useful Improvements in Methods of Signaling, of which the following is a specification, reference being had to the drawings accompanying and forming a part of the same.

In certain systems for transmitting intelligible messages or governing the movements and operations of distant automata electrical impulses or disturbances produced by suitable apparatus are conveyed through the natural media to a receiving-circuit capable of responding to the impulses, and thereby effecting the control of other appliances. Generally a special device, highly sensitive, is connected to the receiving-circuit, which in order to render it still more susceptible and to reduce the liability of its being affected by extraneous disturbances is carefully adjusted so as to be in tune with the transmitter. By a scientific design of the sending and receiving circuits and other apparatus and skilful adjustment of the same these objects may be in a measure attained; but in long experience I have found that notwithstanding all constructive advantages and experimental resources this method is in many cases inadequate. Thus while I have succeeded in so operating selectively under certain favorable conditions more than one hundred receivers in most cases it is practicable to work successfully but a few, the number rapidly diminishing as, either owing to great distance or other causes, the energy available in the tuned circuits becomes smaller and the receivers necessarily more delicate. Evidently a circuit however well constructed and adjusted to respond exclusively to vibrations of one period is apt to be affected by higher harmonics and still more so by lower ones. When the oscillations are of a very high frequency, the number of the effective harmonics may be large and the receiver consequently easily disturbed by extraneous influences to such an extent that when very short waves, such as those produced by Hertzian spark apparatus, are used little advantage in this respect is to be derived from tuning the circuits. It being an imperative requirement in most practical applications of such systems of signaling or intelligence transmission that the signals or messages should be exclusive or private, it is highly desirable to do away with the above limitations, especially in view of the fact which I have observed that the influence of powerful electrical disturbances upon sensitive receivers extends even on land to distances of many hundreds of miles, and consequently, in accordance with theory, still farther on sea. To overcome these drawbacks and to enable a great number of transmitting and receiving stations to be operated selectively and exclusively and without any danger of the signals or messages being disturbed, intercepted, or interfered with in any way is the object of my present invention.

Broadly stated, this invention consists in generating two or more kinds or classes of disturbances or impulses of distinctive character with respect to their effect upon a receiving-circuit and operating thereby a distant receiver which comprises two or more circuits, each of which is tuned to respond exclusively to the disturbances or impulses of one kind or class and so arranged that the operation of the receiver is dependent upon their conjoint or resultant action.

By employing only two kinds of disturbances or series of impulses instead of one, as has heretofore been done, to operate a receiver of this kind I have found that safety against the disturbing influences of other sources is increased to such an extent that I believe this number to be amply sufficient in most cases for rendering the exchange of signals or messages reliable and exclusive; but in exceptional instances a greater number may be used and a degree of safety against mutual and extraneous interference attained, such as is comparable to that afforded by a combination-lock. The liability of a receiver being affected by disturbances emanating from other sources, as well as that of the signals or messages being received by instruments for which they are not intended, may, however, be reduced not only by an increased number of the coöperative disturbances or

UNITED STATES PATENT OFFICE.

NIKOLA TESLA, OF NEW YORK, N. Y.

METHOD OF SIGNALING.

SPECIFICATION forming part of Letters Patent No. 723,188, dated March 17, 1903.

Original application filed July 16, 1900, Serial No. 23,847. Divided and this application filed June 14, 1901. Serial No. 64,522. (No model.)

To all whom it may concern:

Be it known that I, NIKOLA TESLA, a citizen of the United States, residing in the borough of Manhattan, in the city, county, and State of New York, have invented certain new and useful Improvements in Methods of Signaling, of which the following is a specification, reference being had to the drawings accompanying and forming a part of the same.

In certain systems for transmitting intelligible messages or governing the movements and operations of distant automata electrical impulses or disturbances produced by suitable apparatus are conveyed through the natural media to a receiving-circuit capable of responding to the impulses, and thereby effecting the control of other appliances. Generally a special device, highly sensitive, is connected to the receiving-circuit, which in order to render it still more susceptible and to reduce the liability of its being affected by extraneous disturbances is carefully adjusted so as to be in tune with the transmitter. By a scientific design of the sending and receiving circuits and other apparatus and skilful adjustment of the same these objects may be in a measure attained; but in long experience I have found that notwithstanding all constructive advantages and experimental resources this method is in many cases inadequate. Thus while I have succeeded in so operating selectively under certain favorable conditions more than one hundred receivers in most cases it is practicable to work successfully but a few, the number rapidly diminishing as, either owing to great distance or other causes, the energy available in the tuned circuits becomes smaller and the receivers necessarily more delicate. Evidently a circuit however well constructed and adjusted to respond exclusively to vibrations of one period is apt to be affected by higher harmonics and still more so by lower ones. When the oscillations are of a very high frequency, the number of the effective harmonics may be large and the receiver consequently easily disturbed by extraneous influences to such an extent that when very short waves, such as those produced by Hertzian spark apparatus, are used little advantage in this respect is to be derived from tuning the circuits. It being an imperative requirement in most practical applications of such systems of signaling or intelligence transmission that the signals or messages should be exclusive or private, it is highly desirable to do away with the above limitations, especially in view of the fact which I have observed that the influence of powerful electrical disturbances upon sensitive receivers extends even on land to distances of many hundreds of miles, and consequently, in accordance with theory, still farther on sea. To overcome these drawbacks and to enable a great number of transmitting and receiving stations to be operated selectively and exclusively and without any danger of the signals or messages being disturbed, intercepted, or interfered with in any way is the object of my present invention.

Broadly stated, this invention consists in generating two or more kinds or classes of disturbances or impulses of distinctive character with respect to their effect upon a receiving-circuit and operating thereby a distant receiver which comprises two or more circuits, each of which is tuned to respond exclusively to the disturbances or impulses of one kind or class and so arranged that the operation of the receiver is dependent upon their conjoint or resultant action.

By employing only two kinds of disturbances or series of impulses instead of one, as has heretofore been done, to operate a receiver of this kind I have found that safety against the disturbing influences of other sources is increased to such an extent that I believe this number to be amply sufficient in most cases for rendering the exchange of signals or messages reliable and exclusive; but in exceptional instances a greater number may be used and a degree of safety against mutual and extraneous interference attained, such as is comparable to that afforded by a combination-lock. The liability of a receiver being affected by disturbances emanating from other sources, as well as that of the signals or messages being received by instruments for which they are not intended, may, however, be reduced not only by an increased number of the coöperative disturbances or

No. 725,605. PATENTED APR. 14, 1903.

N. TESLA.

SYSTEM OF SIGNALING.

APPLICATION FILED JULY 16, 1900.

NO MODEL.

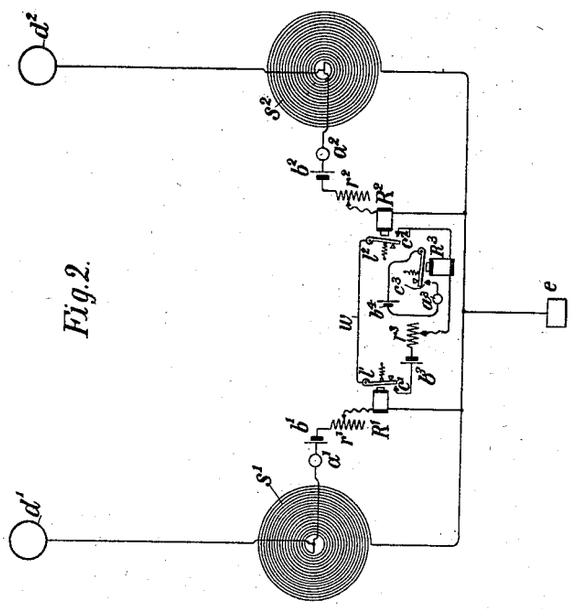

Fig. 2.

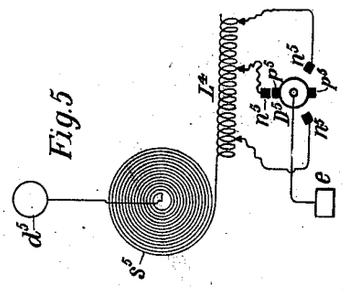

Fig. 5.

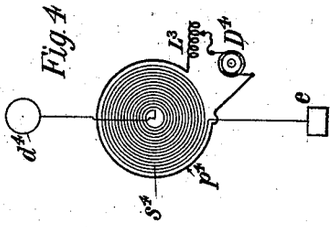

Fig. 4.

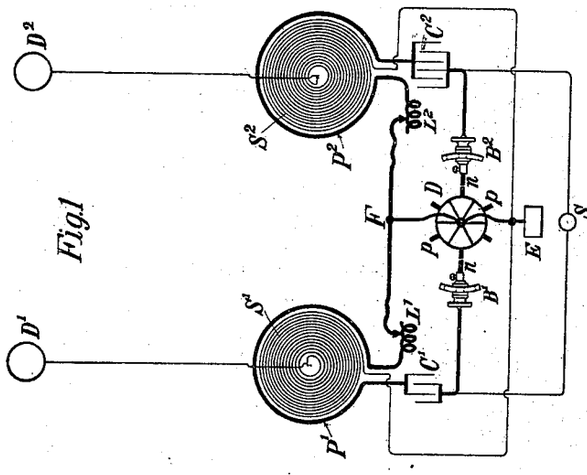

Fig. 1.

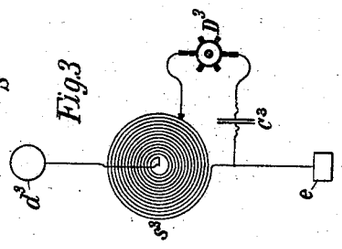

Fig. 3.

Witnesses:
Raphael Netter
C. D. Morrill

Nikola Tesla, Inventor
by Kerr, Page & Cooper
Attys

THE NORRIS PETERS CO., PHOTO-LITHO., WASHINGTON, D. C.

UNITED STATES PATENT OFFICE.

NIKOLA TESLA, OF NEW YORK, N. Y.

SYSTEM OF SIGNALING.

SPECIFICATION forming part of Letters Patent No. 725,605, dated April 14, 1903.

Application filed July 16, 1900. Serial No. 23,847. (No model.)

To all whom it may concern:

Be it known that I, NIKOLA TESLA, a citizen of the United States, residing in the borough of Manhattan, in the city, county, and State of New York, have invented certain new and useful Improvements in Systems of Signaling, of which the following is a specification, reference being had to the drawings accompanying and forming a part of the same.

In certain systems for transmitting intelligible messages or governing the movements and operations of distant automata electrical impulses or disturbances produced by suitable apparatus are conveyed through the natural media to a distant receiving-circuit capable of responding to the impulses, and thereby effecting the control of other appliances. Generally a special device highly sensitive is connected to the receiving-circuit, which in order to render it still more susceptible and to reduce the liability of its being affected by extraneous disturbances is carefully adjusted so as to be in tune with the transmitter. By a scientific design of the sending and receiving circuits and other apparatus and skilful adjustment of the same these objects may be in a measure attained; but in long experience I have found that notwithstanding all constructive advantages and experimental resources this method is in many cases inadequate. Thus while I have succeeded in so operating selectively under certain favorable conditions more than one hundred receivers in most cases it is practicable to work successfully but a few, the number rapidly diminishing as, either owing to great distance or other causes, the energy available in the tuned circuits becomes smaller and the receivers necessarily more delicate. Evidently a circuit however well constructed and adjusted to respond exclusively to vibrations of one period is apt to be affected by higher harmonics and still more so by lower ones. When the oscillations are of a very high frequency, the number of the effective harmonics may be large, and the receiver consequently easily disturbed by extraneous influences to such an extent that when very short waves, such as those produced by Hertzian spark apparatus, are used little advantage in this respect is derived from tuning the circuits. It being an imperative requirement in most practical applications of such systems of signaling or intelligence transmission that the signals or messages should be exclusive or private, it is highly desirable to do away with the above limitations, especially in view of the fact, which I have observed, that the influence of powerful electrical disturbances upon sensitive receivers extends, even on land, to distances of many hundreds of miles, and consequently in accordance with theory still farther on sea. To overcome these drawbacks and to enable a great number of transmitting and receiving stations to be operated selectively and exclusively and without any danger of the signals or messages being disturbed, intercepted, or interfered with in any way is the object of my present invention.

Broadly stated, this invention consists in the combination of means for generating and transmitting two or more kinds or classes of disturbances or impulses of distinctive character with respect to their effect upon a receiving-circuit and a distant receiver which comprises two or more circuits of different electrical character or severally tuned, so as to be responsive to the different kinds or classes of impulses and which is dependent for operation upon the conjoint or resultant action of the two or more circuits or the several instrumentalities controlled or operated thereby. By employing only two kinds of disturbances or series of impulses instead of one, as has heretofore been done to operate a receiver of this kind, I have found that safety against the disturbing influences of other sources is increased to such an extent that I believe this number to be amply sufficient in most cases for rendering the exchange of signals or messages reliable and exclusive; but in exceptional instances a greater number may be used and a degree of safety against mutual and extraneous interference attained, such as is comparable to that afforded by a combination-lock. The liability of a receiver being affected by disturbances emanating from other sources, as well as that of the signals or messages being received by instruments for which they are not intended, may, however, be reduced not

only by an increased number of the coöperative disturbances or series of impulses, but also by a judicious choice of the same and the order in which they are made to act upon the receiver.

Evidently there are a great many ways of generating impulses or disturbances of any wave length, wave form, number or order of succession, or of any special character such as will be capable of fulfilling the requirements above stated, and there are also many ways in which such impulses or disturbances may be made to coöperate and to cause the receiver to be actuated, and inasmuch as the skill and practical knowledge in these novel fields can only be acquired by long experience the degree of safety and perfection attained will necessarily depend upon the ability and resource of the expert who applies my invention; but in order to enable the same to be successfully practiced by any person possessed only of the more general knowledge and experience in these branches I shall describe the simplest plan of carrying it out which is at present known to me.

For a better understanding of the subject reference is now made to the accompanying drawings, in which—

Figures 1 and 2 represent diagrammatically the apparatus and circuit connections employed at the sending and receiving stations, respectively; and Figs. 3, 4, and 5 modified means which may be employed in the practical application of the invention.

In Fig. 1, S′ and S² are two spirally-wound coils or conductors connected with their inner ends to elevated terminals D′ and D², respectively, and with their outer ends to an earth-plate E. These two coils, conductors, or systems D′ S′ E and D² S² E have different and suitably-chosen periods of vibration, and, as pointed out in other patents relating to my system of energy and intelligence transmission, their lengths should be such that the points of maximum pressure developed therein coincide with the elevated terminals D′ D². The two systems may have electrical oscillations impressed upon them in any desired manner, conveniently by energizing them through primaries P′ and P², placed in proximity to them. Adjustable inductances L′ and L² are preferably included in the primary circuits chiefly for the purpose of regulating the rates of the primary oscillations. In the drawings these primaries P′ and P² surround the coils S′ S² and are joined in series through the inductances L′ L², conductor F, condensers C′ and C², brush-holders B′ and B², and a toothed disk D, which is connected to the conductor F and, if desired, also to the ground-plate E, as shown, two independent primary circuits being thus formed. The condensers C′ and C² are of such capacity and the inductances L′ and L² are so adjusted that each primary is in close resonance with its secondary system, as I have explained in other patents granted to me. The brush-holders B′ and B² are capable independently of angular and, if necessary, also of lateral adjustment, so that any desired order of succession or any difference of time interval between the discharges occurring in the two primary circuits may be obtained. The condensers being energized from a suitable source S, preferably of high potential, and the disk D being rotated, its projections or teeth $p\ p$, coming at periodically-recurring intervals in very close proximity to or, as the case may be, in contact with conducting rods or brushes $n\ n$, cause the condensers to be discharged in rapid succession through their respective circuits. In this matter the two secondary systems D′ S′ E and D² S² E are set in vibration and oscillate freely, each at its proper rate, for a certain period of time at every discharge. The two vibrations are impressed upon the ground through the plate E and spread to a distance reaching the receiving-station, which has two similar circuits or systems $e\ s'\ d'$ and $e\ s^2\ d^2$ arranged and connected in the same manner and tuned to the systems at the sending-station, so that each responds exclusively to one of the two vibrations produced by the transmitting apparatus. The same rules of adjustment are observed with respect to the receiving-circuits, care being, furthermore, taken that the tuning is effected when all the apparatus is connected to the circuits and placed in position, as any change may more or less modify the vibration. Each of the receiving-coils s' and s^2 is shunted by a local circuit containing, respectively, sensitive devices $a'\ a^2$, batteries $b'\ b^2$, adjustable resistances $r'\ r^2$, and sensitive relays R′ R², all joined in series, as shown. The precise connections and arrangements of the various receiving instruments are largely immaterial and may be varied in many ways. The sensitive devices $a'\ a^2$ may be any of the well-known devices of this kind—as, for example, two conducting-terminals separated by a minute air-gap or a thin film of dielectric which is strained or weakened by a battery or other means to the point of breaking down and gives way to the slightest disturbing influence. Its return to the normal sensitive state may be secured by momentarily interrupting the battery-circuit after each operation or otherwise. The relays R′ R² have armatures $l'\ l^2$, which are connected by a wire w and when attracted establish electrical contacts at c' and c^2, thus closing a circuit containing a battery b^3, an adjustable resistance r^3, and a relay R³.

From the above description it will be readily seen that the relay R³ will be operated only when both contacts c' and c^2 are closed.

The apparatus at the sending-station may be controlled in any suitable manner—as, for instance, by momentarily closing the circuit of the source S, two different electric vibrations being emitted simultaneously or in

rapid succession, as may be desired, at each closure of the circuit. The two receiving-circuits at the distant station, each tuned to respond to the vibrations produced by one of the elements of the transmitter, affect the sensitive devices a' and a^2 and cause the relays R′ and R^2 to be operated and contacts c' and c^2 to be closed, thus actuating the receiver or relay R^3, which in turn establishes a contact c^3 and brings into action a device a^3 by means of a battery d^4, included in a local circuit, as shown; but evidently if through any extraneous disturbance only one of the circuits at the receiving-station is affected the relay R^3 will fail to respond. In this way communication may be carried on with greatly-increased safety against interference and privacy of the messages may be secured. The receiving-station (shown in Fig. 2) is supposed to be one requiring no return message; but if the use of the system is such that this is necessary then the two stations will be similarly equipped and any well-known means, which it is not thought necessary to illustrate here, may be resorted to for enabling the apparatus at each station to be used in turn as transmitter and receiver. In like manner the operation of a receiver, as R^3, may be made dependent, instead of upon two, upon more than two such transmitting systems or circuits, and thus any desired degree of exclusiveness or privacy and safety against extraneous disturbances may be attained. The apparatus as illustrated in Figs. 1 and 2 permits, however, special results to be secured by the adjustment of the order of succession of the discharge of the primary circuits P′ and P^2 or of the time interval between such discharges. To illustrate, the action of the relays R′ R^2 may be regulated either by adjusting the weights of the levers l' l^2, or the strength of the batteries b' b^2, or the resistances r' r^2, or in other well-known ways, so that when a certain order of succession or time interval between the discharges of the primary circuits P′ and P^2 exists at the sending-station the levers l' and l^2 will close the contacts c' and c^2 at the same instant, and thus operate the relay R^3; but it will fail to produce this result when the order of succession of or the time interval between the discharges in the primary circuits is another one. By these or similar means additional safety against disturbances from other sources may be attained and, on the other hand, the possibility afforded of effecting the operation of signaling by varying the order of succession of the discharges of the two circuits. Instead of closing and opening the circuit of the source S, as before indicated, for the purpose of sending distinct signals it may be convenient to merely alter the period of either of the transmitting-circuits arbitrarily, as by varying the inductance of the primaries.

Obviously there is no necessity for using transmitters with two or more distinct elements or circuits, as S′ and S^2, since a succession of waves or impulses of different characteristics may be produced by an instrument having but one such circuit. A few of the many ways which will readily suggest themselves to the expert who applies my invention are illustrated in Figs. 3, 4, and 5. In Fig. 3 a transmitting system $e\,s^3\,d^3$ is partly shunted by a rotating wheel or disk D^3, which may be similar to that illustrated in Fig. 1 and which cuts out periodically a portion of the coil or conductor s^3 or, if desired, bridges it by an adjustable condenser C^3, thus altering the vibration of the system $e\,s^3\,d^3$ at suitable intervals and causing two distinct kinds or classes of impulses to be emitted in rapid succession by the sender. In Fig. 4 a similar result is produced in the system $e\,s^4\,d^4$ by periodically short-circuiting, through an induction-coil L^3 and a rotating disk D^4 with insulating and conducting segments, a circuit p^4 in inductive relation to said system. Again, in Fig. 5 three distinct vibrations are caused to be emitted by a system $e\,s^5\,d^5$, this result being produced by inserting periodically a suitable number of turns of an induction-coil L^4 in series with the oscillating system by means of a rotating disk B^5 with two projections p^5 p^5 and three rods or brushes n^5, placed at an angle of one hundred and twenty degrees relatively to each other. The three transmitting systems or circuits thus produced may be energized in the same manner as those of Fig. 1 or in any other convenient way. Corresponding to each of these cases the receiving-station may be provided with two or three circuits in an analogous manner to that illustrated in Fig. 2, it being understood, of course, that the different vibrations or disturbances emitted by the sender follow in such rapid succession upon each other that they are practically simultaneous, so far as the operation of such relays as R′ and R^2 is concerned. Evidently, however, it is not necessary to employ two or more receiving-circuits; but a single circuit may be used also at the receiving-station constructed and arranged like the transmitting circuits or systems illustrated in Figs. 3, 4, and 5, in which case the corresponding disks, as D^3 D^4 D^5, at the sending will be driven in synchronism with those at the receiving stations as far as may be necessary to secure the desired result; but whatever the nature of the specific devices employed it will be seen that the fundamental idea in my invention is the operation of a receiver by the conjoint or resultant effect of two or more circuits each tuned to respond exclusively to waves, impulses, or vibrations of a certain kind or class produced either simultaneously or successively by a suitable transmitter.

It will be seen from a consideration of the nature of the method hereinbefore described that the invention is applicable not only in the special manner described, in which the transmission of the impulses is effected through natural media, but for the transmis-

sion of energy for any purpose and whatever the medium through which the impulses are conveyed.

What I claim is—

1. In a system for the transmission of electrical energy, the combination with means for producing two or more distinctive kinds of disturbances or impulses, of receiving-circuits, each tuned to respond to the waves or impulses of one kind only, and a receiving device dependent for operation upon the conjoint action of the several receiving-circuits, as set forth.

2. In a system for the transmission of electrical impulses and the operation or control, of signaling or other apparatus thereby, the combination with a transmitter adapted to produce two or more distinctive kinds or classes of disturbances or impulses, of sensitive receiving-circuits, each tuned to respond to the impulses or disturbances of one kind or class only, and a receiving device dependent for operation upon the conjoint action of the sensitive circuits, as set forth.

3. In a system for the transmission of electrical impulses, and the operation or control of signaling, or other apparatus thereby, the combination with a transmitter adapted to produce two or more distinctive kinds or classes of disturbances or impulses, of sensitive circuits at the receiving point or station, each tuned to respond to the impulses or disturbances of one kind or class only, a local circuit arranged to be completed by the conjoint action of the sensitive circuits and a receiving device connected therewith, as set forth.

4. In a system for the transmission of electrical impulses, and the operation or control of signaling or other apparatus thereby, the combination with a transmitting apparatus adapted to produce two or more distinctive kinds of disturbances or impulses, of means for varying the time intervals of the emission of the impulses of the several kinds, sensitive circuits each tuned to respond to the impulses or disturbances of one kind only, and a receiving apparatus dependent for operation upon the conjoint action of the sensitive circuits, as set forth.

5. In a system, such as herein described, the combination with a transmitter adapted to produce a plurality of distinctive kinds of electrical disturbances or impulses, of a receiving apparatus comprising a plurality of circuits, a sensitive device and a relay included in each circuit, and each said circuit being tuned to respond to the impulses or disturbances of one kind only, and a receiving apparatus in a local circuit controlled by the relays and adapted to be completed by the conjoint action of all of said relays, as set forth.

6. In a system of the kind described, the combination with a transmitter adapted to produce two or more series of electrical oscillations or impulses of different frequencies, of a receiving apparatus comprising a plurality of sensitive circuits each tuned to respond to the impulses of one of the series produced by the transmitter, and a signaling device dependent for its operation upon the conjoint action of said circuits, as set forth.

7. The combination with a plurality of transmitter elements, each adapted to produce a series of impulses or disturbances of a distinctive character, and means for controlling and adjusting the same, of a receiver having a plurality of sensitive circuits each tuned so as to be affected by one of the series of impulses only, and dependent for operation upon the conjoint action of all of said circuits, as set forth.

8. The combination with a transmitter adapted to produce series of electrical impulses or disturbances of distinctive character and in a given order of succession, of a receiving apparatus comprising tuned circuits responding to such impulses in a corresponding order, and dependent for operation upon the conjoint action of said elements, as set forth.

9. In a receiving apparatus, the combination with a plurality of sensitive circuits, severally turned to respond to waves or impulses of a different kind or class, a receiving-circuit controlled by the sensitive circuits and a device connected with the receiving-circuits adapted to be operated when said circuit is completed by the conjoint action of two or more of the sensitive circuits, as set forth.

10. A system for the transmission of electrical energy, having in combination means for producing and transmitting two or more impulses of different periodicities to form a signal in a predetermined order of succession, as set forth.

11. In a system for the transmission of electrical energy, the combination with a transmitting apparatus comprising one or more circuits, means for impressing therein oscillations or impulses of different character and a receiving apparatus comprising a plurality of circuits each tuned to respond to the impulses of one kind produced by the transmitter and a receiver dependent for operation upon the conjoint action of the receiving-circuits, as set forth.

12. In a system for the transmission of electrical energy, the combination with a transmitting apparatus comprising a transformer and means for impressing upon the secondary element of the same oscillations or impulses of different character, of a receiving apparatus comprising a plurality of circuits each tuned to the impulses of one kind emitted by the secondary of the transmitting-transformer, and a receiver dependent for operation upon the conjoint action of the receiving-circuits, as set forth.

13. In a system for the transmission of electrical energy, the combination with a transmitting apparatus comprising a transformer and means for impressing upon the secondary

elements of the same oscillations or impulses of different periodicities and in a given order of succession, of a receiving apparatus comprising a plurality of circuits each tuned to respond to the transmitted impulses of one period, and a receiver dependent for operation upon the conjoint action of the receiving-circuits, as set forth.

14. In a signaling system, the combination of means for generating a series of electrical impulses of different periodicities, receiving-circuits of differing electrical periods of vibration, and an indicating mechanism operated to give an intelligible indication only when currents are induced in the receiving-circuits in a predetermined order, as set forth.

15. In a system for the transmission of energy, the combination of two or more circuits differing with respect of one of their electrical constants, means for energizing said circuits, and an indicating mechanism operative only by conjoint action of two or more currents generated by waves from the sending-station, as set forth.

16. In a system for the transmission of electrical energy, the combination with a transmitter adapted to produce electrical waves or oscillations varying in character in a predetermined order, of a receiving instrument responsive to said oscillations and dependent for operation upon the action thereof in a corresponding order, as set forth.

NIKOLA TESLA.

Witnesses:
JOHN C. KERR,
RICHARD S. DONOVAN.

No. 787,412. PATENTED APR. 18, 1905.

N. TESLA.

ART OF TRANSMITTING ELECTRICAL ENERGY THROUGH THE NATURAL MEDIUMS.

APPLICATION FILED MAY 16, 1900. RENEWED JUNE 17, 1902.

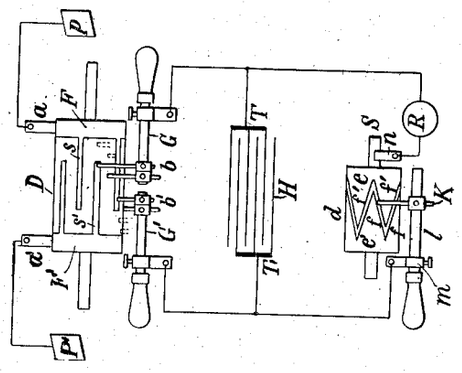

Fig. 2

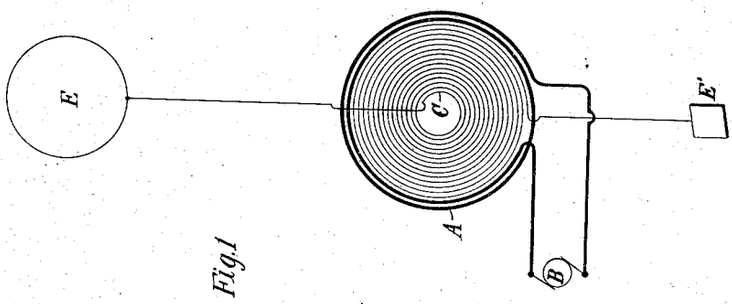

Fig. 1

Witnesses:
Raphael Netter
M. Lawrence Byer.

Nikola Tesla Inventor
by Kerr, Page & Cooper Attys

No. 787,412. Patented April 18, 1905.

UNITED STATES PATENT OFFICE.

NIKOLA TESLA, OF NEW YORK, N. Y.

ART OF TRANSMITTING ELECTRICAL ENERGY THROUGH THE NATURAL MEDIUMS.

SPECIFICATION forming part of Letters Patent No. 787,412, dated April 18, 1905.

Application filed May 16, 1900. Renewed June 17, 1902. Serial No. 112,034.

To all whom it may concern:

Be it known that I, NIKOLA TESLA, a citizen of the United States, residing in the borough of Manhattan, in the city, county, and State of New York, have discovered a new and useful Improvement in the Art of Transmitting Electrical Energy Through the Natural Media, of which the following is a specification, reference being had to the drawings accompanying and forming a part of the same.

It is known since a long time that electric currents may be propagated through the earth, and this knowledge has been utilized in many ways in the transmission of signals and the operation of a variety of receiving devices remote from the source of energy, mainly with the object of dispensing with a return conducting-wire. It is also known that electrical disturbances may be transmitted through portions of the earth by grounding only one of the poles of the source, and this fact I have made use of in systems which I have devised for the purposes of transmitting through the natural media intelligible signals or power and which are now familiar; but all experiments and observations heretofore made have tended to confirm the opinion held by the majority of scientific men that the earth, owing to its immense extent, although possessing conducting properties, does not behave in the manner of a conductor of limited dimensions with respect to the disturbances produced, but, on the contrary, much like a vast reservoir or ocean, which while it may be locally disturbed by a commotion of some kind remains unresponsive and quiescent in a large part or as a whole. Still another fact now of common knowledge is that when electrical waves or oscillations are impressed upon such a conducting-path as a metallic wire reflection takes place under certain conditions from the ends of the wire, and in consequence of the interference of the impressed and reflected oscillations the phenomenon of "stationary waves" with maxima and minima in definite fixed positions is produced. In any case the existence of these waves indicates that some of the outgoing waves have reached the boundaries of the conducting-path and have been reflected from the same. Now I have discovered that notwithstanding its vast dimensions and contrary to all observations heretofore made the terrestrial globe may in a large part or as a whole behave toward disturbances impressed upon it in the same manner as a conductor of limited size, this fact being demonstrated by novel phenomena, which I shall hereinafter describe.

In the course of certain investigations which I carried on for the purpose of studying the effects of lightning discharges upon the electrical condition of the earth I observed that sensitive receiving instruments arranged so as to be capable of responding to electrical disturbances created by the discharges at times failed to respond when they should have done so, and upon inquiring into the causes of this unexpected behavior I discovered it to be due to the character of the electrical waves which were produced in the earth by the lightning discharges and which had nodal regions following at definite distances the shifting source of the disturbances. From data obtained in a large number of observations of the maxima and minima of these waves I found their length to vary approximately from twenty-five to seventy kilometers, and these results and certain theoretical deductions led me to the conclusion that waves of this kind may be propagated in all directions over the globe and that they may be of still more widely differing lengths, the extreme limits being imposed by the physical dimensions and properties of the earth. Recognizing in the existence of these waves an unmistakable evidence that the disturbances created had been conducted from their origin to the most remote portions of the globe and had been thence reflected, I conceived the idea of producing such waves in the earth by artificial means with the object of utilizing them for many useful purposes for which they are or might be found applicable. This problem was rendered extremely difficult owing to the immense dimensions of the planet, and consequently enormous movement of electricity or rate at which electrical energy had to be delivered in order to approximate, even in a remote degree, movements or rates which are manifestly attained in the displays of elec-

trical forces in nature and which seemed at first unrealizable by any human agencies; but by gradual and continuous improvements of a generator of electrical oscillations, which I have described in my Patents Nos. 645,576 and 649,621, I finally succeeded in reaching electrical movements or rates of delivery of electrical energy not only approximating, but, as shown in many comparative tests and measurements, actually surpassing those of lightning discharges, and by means of this apparatus I have found it possible to reproduce whenever desired phenomena in the earth the same as or similar to those due to such discharges. With the knowledge of the phenomena discovered by me and the means at command for accomplishing these results I am enabled not only to carry out many operations by the use of known instruments, but also to offer a solution for many important problems involving the operation or control of remote devices which for want of this knowledge and the absence of these means have heretofore been entirely impossible. For example, by the use of such a generator of stationary waves and receiving apparatus properly placed and adjusted in any other locality, however remote, it is practicable to transmit intelligible signals or to control or actuate at will any one or all of such apparatus for many other important and valuable purposes, as for indicating wherever desired the correct time of an observatory or for ascertaining the relative position of a body or distance of the same with reference to a given point or for determining the course of a moving object, such as a vessel at sea, the distance traversed by the same or its speed, or for producing many other useful effects at a distance dependent on the intensity, wave length, direction or velocity of movement, or other feature or property of disturbances of this character.

I shall typically illustrate the manner of applying my discovery by describing one of the specific uses of the same—namely, the transmission of intelligible signals or messages between distant points—and with this object reference is now made to the accompanying drawings, in which—

Figure 1 represents diagrammatically the generator which produces stationary waves in the earth, and Fig. 2 an apparatus situated in a remote locality for recording the effects of these waves.

In Fig. 1, A designates a primary coil forming part of a transformer and consisting generally of a few turns of a stout cable of inappreciable resistance, the ends of which are connected to the terminals of a source of powerful electrical oscillations, diagrammatically represented by B. This source is usually a condenser charged to a high potential and discharged in rapid succession through the primary, as in a type of transformer invented by me and not well known; but when it is desired to produce stationary waves of great lengths an alternating dynamo of suitable construction may be used to energize the primary A. C is a spirally-wound secondary coil within the primary having the end nearer to the latter connected to the ground E′ and the other end to an elevated terminal E. The physical constants of coil C, determining its period of vibration, are so chosen and adjusted that the secondary system E′ C E is in the closest possible resonance with the oscillations impressed upon it by the primary A. It is, moreover, of the greatest importance in order to still further enhance the rise of pressure and to increase the electrical movement in the secondary system that its resistance be as small as practicable and its self-induction as large as possible under the conditions imposed. The ground should be made with great care, with the object of reducing its resistance. Instead of being directly grounded, as indicated, the coil C may be joined in series or otherwise to the primary A, in which case the latter will be connected to the plate E′; but be it that none or a part or all of the primary or exciting turns are included in the coil C the total length of the conductor from the ground-plate E′ to the elevated terminal E should be equal to one-quarter of the wave length of the electrical disturbance in the system E′ C E or else equal to that length multiplied by an odd number. This relation being observed, the terminal E will be made to coincide with the points of maximum pressure in the secondary or excited circuit, and the greatest flow of electricity will take place in the same. In order to magnify the electrical movement in the secondary as much as possible, it is essential that its inductive connection with the primary A should not be very intimate, as in ordinary transformers, but loose, so as to permit free oscillation—that is to say, their mutual induction should be small. The spiral form of coil C secures this advantage, while the turns near the primary A are subjected to a strong inductive action and develop a high initial electromotive force. These adjustments and relations being carefully completed and other constructive features indicated rigorously observed, the electrical movement produced in the secondary system by the inductive action of the primary A will be enormously magnified, the increase being directly proportionate to the inductance and frequency and inversely to the resistance of the secondary system. I have found it practicable to produce in this manner an electrical movement thousands of times greater than the initial—that is, the one impressed upon the secondary by the primary A—and I have thus reached activities or rates of flow of electrical energy in the system E′ C E measured by many tens of thousands of horsepower. Such immense movements of elec-

BEST AVAILABLE COPY

tricity give rise to a variety of novel and striking phenomena, among which are those already described. The powerful electrical oscillations in the system E' C E being communicated to the ground cause corresponding vibrations to be propagated to distant parts of the globe, whence they are reflected and by interference with the outgoing vibrations produce stationary waves the crests and hollows of which lie in parallel circles relatively to which the ground-plate E' may be considered to be the pole. Stated otherwise, the terrestrial conductor is thrown into resonance with the oscillations impressed upon it just like a wire. More than this, a number of facts ascertained by me clearly show that the movement of electricity through it follows certain laws with nearly mathematical rigor. For the present it will be sufficient to state that the planet behaves like a perfectly smooth or polished conductor of inappreciable resistance with capacity and self induction uniformly distributed along the axis of symmetry of wave propagation and transmitting slow electrical oscillations without sensible distortion and attenuation.

Besides the above three requirements seem to be essential to the establishment of the resonating condition.

First. The earth's diameter passing through the pole should be an odd multiple of the quarter wave length—that is, of the ratio between the velocity of light—and four times the frequency of the currents.

Second. It is necessary to employ oscillations in which the rate of radiation of energy into space in the form of hertzian or electromagnetic waves is very small. To give an idea, I would say that the frequency should be smaller than twenty thousand per second, though shorter waves might be practicable. The lowest frequency would appear to be six per second, in which case there will be but one node, at or near the ground-plate, and, paradoxical as it may seem, the effect will increase with the distance and will be greatest in a region diametrically opposite the transmitter. With oscillations still slower the earth, strictly speaking, will not resonate, but simply act as a capacity, and the variation of potential will be more or less uniform over its entire surface.

Third. The most essential requirement is, however, that irrespective of frequency the wave or wave-train should continue for a certain interval of time, which I have estimated to be not less than one-twelfth or probably 0.08484 of a second and which is taken in passing to and returning from the region diametrically opposite the pole over the earth's surface with a mean velocity of about four hundred and seventy-one thousand two hundred and forty kilometers per second.

The presence of the stationary waves may be detected in many ways. For instance, a circuit may be connected directly or inductively to the ground and to an elevated terminal and tuned to respond more effectively to the oscillations. Another way is to connect a tuned circuit to the ground at two points lying more or less in a meridian passing through the pole E' or, generally stated, to any two points of a different potential.

In Fig. 2 I have shown a device for detecting the presence of the waves such as I have used in a novel method of magnifying feeble effects which I have described in my Patents Nos. 685,953 and 685,955. It consists of a cylinder D, of insulating material, which is moved at a uniform rate of speed by clockwork or other suitable motive power and is provided with two metal rings F F', upon which bear brushes a and a', connected, respectively, to the terminal plates P and P'. From the rings F F' extend narrow metallic segments s and s', which by the rotation of the cylinder D are brought alternately into contact with double brushes b and b', carried by and in contact with conducting-holders h and h', supported in metallic bearings G and G', as shown. The latter are connected to the terminals T and T' of a condenser H, and it should be understood that they are capable of angular displacement as ordinary brush-supports. The object of using two brushes, as b and b', in each of the holders h and h' is to vary at will the duration of the electric contact of the plates P and P' with the terminals T and T', to which is connected a receiving-circuit including a receiver R and a device d, performing the duty of closing the receiving-circuit at predetermined intervals of time and discharging the stored energy through the receiver. In the present case this device consists of a cylinder made partly of conducting and partly of insulating material c and c', respectively, which is rotated at the desired rate of speed by any suitable means. The conducting part c is in good electrical connection with the shaft S and is provided with tapering segments f f'', upon which slides a brush k, supported on a conducting-rod l, capable of longitudinal adjustment in a metallic support m. Another brush, n, is arranged to bear upon the shaft S, and it will be seen that whenever one of the segments f'' comes in contact with the brush k the circuit including the receiver R is completed and the condenser discharged through the same. By an adjustment of the speed or rotation of the cylinder d and a displacement of the brush k along the cylinder the circuit may be made to open and close in as rapid succession and remain open or closed during such intervals of time as may be desired. The plates P and P', through which the electrical energy is conveyed to the brushes a and a', may be at a considerable distance from each other in the ground or one in the ground and the other in the air, preferably at some height. If but one plate is connected to earth and the other maintained at an

elevation, the location of the apparatus must be determined with reference to the position of the stationary waves established by the generator, the effect evidently being greatest in a maximum and zero in a nodal region. On the other hand, if both plates be connected to earth the points of connection must be selected with reference to the difference of potential which it is desired to secure, the strongest effect being of course obtained when the plates are at a distance equal to half the wave length.

In illustration of the operation of the system let it be assumed that alternating electrical impulses from the generator are caused to produce stationary waves in the earth, as above described, and that the receiving apparatus is properly located with reference to the position of the nodal and ventral regions of the waves. The speed of rotation of the cylinder D is varied until it is made to turn in synchronism with the alternate impulses of the generator, and the position of the brushes b and b' is adjusted by angular displacement or otherwise, so that they are in contact with the segments S and S′ during the periods when the impulses are at or near the maximum of their intensity. These requirements being fulfilled, electrical charges of the same sign will be conveyed to each of the terminals of the condenser, and with each fresh impulse it will be charged to a higher potential. The speed of rotation of the cylinder d being adjustable at will, the energy of any number of separate impulses may thus be accumulated in potential form and discharged through the receiver R upon the brush k coming in contact with one of the segments f''. It will be understood that the capacity of the condenser should be such as to allow the storing of a much greater amount of energy than is required for the ordinary operation of the receiver. Since by this method a relatively great amount of energy and in a suitable form may be made available for the operation of a receiver, the latter need not be very sensitive; but when the impulses are very weak or when it is desired to operate a receiver very rapidly any of the well-known sensitive devices capable of responding to very feeble influences may be used in the manner indicated or in other ways. Under the conditions described it is evident that during the continuance of the stationary waves the receiver will be acted upon by current impulses more or less intense, according to its location with reference to the maxima and minima of said waves; but upon interrupting or reducing the flow of the current the stationary waves will disappear or diminish in intensity. Hence a great variety of effects may be produced in a receiver, according to the mode in which the waves are controlled. It is practicable, however, to shift the nodal and ventral regions of the waves at will from the sending-station, as by varying the length of the waves under observance of the above requirements. In this manner the regions of maximum and minimum effect may be made to coincide with any receiving station or stations. By impressing upon the earth two or more oscillations of different wave length a resultant stationary wave may be made to travel slowly over the globe, and thus a great variety of useful effects may be produced. Evidently the course of a vessel may be easily determined without the use of a compass, as by a circuit connected to the earth at two points, for the effect exerted upon the circuit will be greatest when the plates P P′ are lying on a meridian passing through ground-plate E′ and will be *nil* when the plates are located at a parallel circle. If the nodal and ventral regions are maintained in fixed positions, the speed of a vessel carrying a receiving apparatus may be exactly computed from observations of the maxima and minima regions successively traversed. This will be understood when it is stated that the projections of all the nodes and loops on the earth's diameter passing through the pole or axis of symmetry of the wave movement are all equal. Hence in any region at the surface the wave length can be ascertained from simple rules of geometry. Conversely, knowing the wave length, the distance from the source can be readily calculated. In like ways the distance of one point from another, the latitude and longitude, the hour, &c., may be determined from the observation of such stationary waves. If several such generators of stationary waves, preferably of different length, were installed in judiciously-selected localities, the entire globe could be subdivided in definite zones of electric activity, and such and other important data could be at once obtained by simple calculation or readings from suitably-graduated instruments. Many other useful applications of my discovery will suggest themselves, and in this respect I do not wish to limit myself. Thus the specific plan herein described of producing the stationary waves might be departed from. For example, the circuit which impresses the powerful oscillations upon the earth might be connected to the latter at two points. In this application I have advanced various improvements in means and methods of producing and utilizing electrical effects which either in connection with my present discovery or independently of the same may be usefully applied.

I desire it to be understood that such novel features as are not herein specifically claimed will form the subjects of subsequent applications.

What I now claim is—

1. The improvement in the art of transmitting electrical energy to a distance which consists in establishing stationary electrical waves in the earth, as set forth.

2. The improvement in the art of transmit-

ting electrical energy to a distance which consists in impressing upon the earth electrical oscillations of such character as to produce stationary electrical waves therein, as set forth.

3. The improvement in the art of transmitting and utilizing electrical energy which consists in establishing stationary electrical waves in the natural conducting media, and operating thereby one or more receiving devices remote from the source of energy, as set forth.

4. The improvement in the art of transmitting and utilizing electrical energy which consists in establishing in the natural conducting media, stationary electrical waves of predetermined length and operating thereby one or more receiving devices remote from the source of energy and properly located with respect to the position of such waves, as herein set forth.

5. The improvement in the art of transmitting and utilizing electrical energy, which consists in establishing in the natural conducting media, stationary electrical waves, and varying the length of such waves, as herein set forth.

6. The improvement in the art of transmitting and utilizing electrical energy, which consists in establishing in the natural conducting media stationary electrical waves and shifting the nodal and ventral regions of these waves, as described.

NIKOLA TESLA.

Witnesses:
M. LAWSON DYER,
BENJAMIN MILLER.

N. TESLA.

FLUID PROPULSION.

APPLICATION FILED OCT. 21, 1909.

1,061,142. **Patented May 6, 1913.**

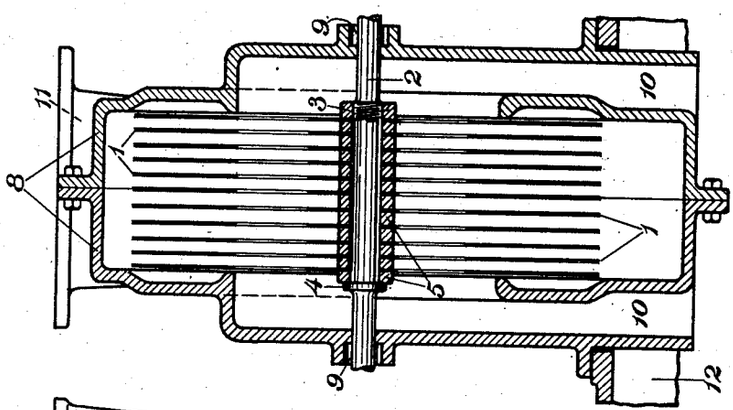

Fig 2

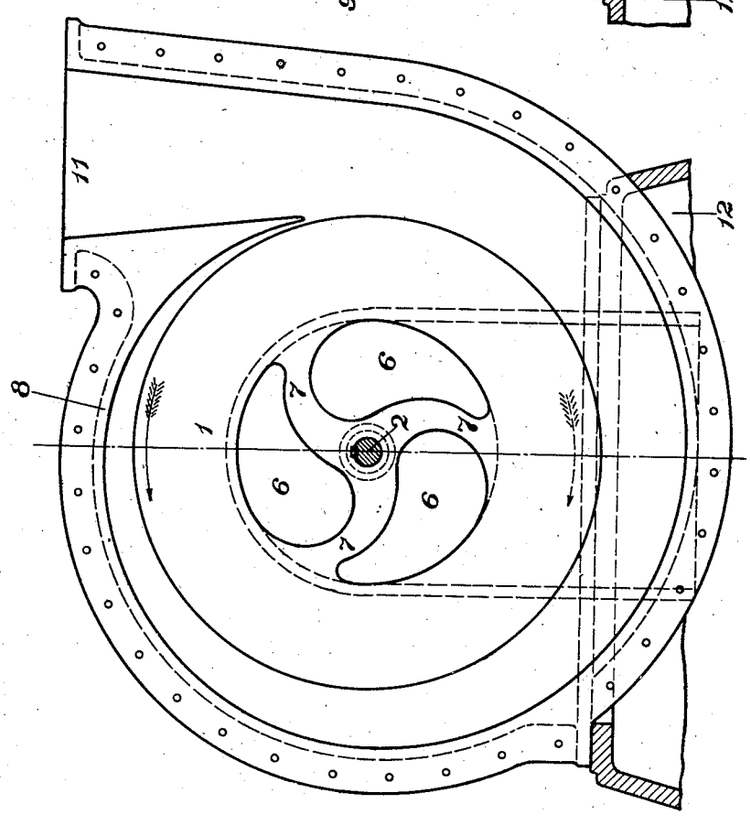

Fig 1

Witnesses:
R. Diaz Buitrago
S. S. Dunham

Nikola Tesla,
Inventor

By his Attorneys
Kerr, Page Cooper & Hayward

UNITED STATES PATENT OFFICE.

NIKOLA TESLA, OF NEW YORK, N. Y.

FLUID PROPULSION.

1,061,142. Specification of Letters Patent. Patented May 6, 1913.

Application filed October 21, 1909. Serial No. 523,832.

To all whom it may concern:

Be it known that I, NIKOLA TESLA, a citizen of the United States, residing at New York, in the county and State of New York, have invented certain new and useful Improvements in Fluid Propulsion, of which the following is a full, clear, and exact description.

In the practical application of mechanical power based on the use of a fluid as the vehicle of energy, it has been demonstrated that, in order to attain the highest economy, the changes in velocity and direction of movement of the fluid should be as gradual as possible. In the present forms of such apparatus more or less sudden changes, shocks and vibrations are unavoidable. Besides, the employment of the usual devices for imparting energy to a fluid, as pistons, paddles, vanes and blades, necessarily introduces numerous defects and limitations and adds to the complication, cost of production and maintenance of the machine.

The object of my present invention is to overcome these deficiencies in apparatus designed for the propulsion of fluids and to effect thereby the transmission and transformation of mechanical energy through the agency of fluids in a more perfect manner, and by means simpler and more economical than those heretofore employed. I accomplish this by causing the propelled fluid to move in natural paths or stream lines of least resistance, free from constraint and disturbance such as occasioned by vanes or kindred devices, and to change its velocity and direction of movement by imperceptible degrees, thus avoiding the losses due to sudden variations while the fluid is receiving energy.

It is well known that a fluid possesses, among others, two salient properties: adhesion and viscosity. Owing to these a body propelled through such a medium encounters a peculiar impediment known as "lateral" or "skin resistance", which is twofold; one arising from the shock of the fluid against the asperities of the solid substance, the other from internal forces opposing molecular separation. As an inevitable consequence, a certain amount of the fluid is dragged along by the moving body. Conversely, if the body be placed in a fluid in motion, for the same reasons, it is impelled in the direction of movement. These effects, in themselves, are of daily observation, but I believe that I am the first to apply them in a practical and economical manner for imparting energy to or deriving it from a fluid.

The subject of this application is an invention pertaining to the art of imparting energy to fluids, and I shall now proceed to describe its nature and the principles of construction of the apparatus which I have devised for carrying it out by reference to the accompanying drawings which illustrate an operative and efficient embodiment of the same.

Figure 1 is a partial end view, and Fig. 2 is a vertical cross section of a pump or compressor constructed and adapted to be operated in accordance with my invention.

In these drawings the device illustrated contains a runner composed of a plurality of flat rigid disks 1 of a suitable diameter, keyed to a shaft 2, and held in position by a threaded nut 3, a shoulder 4 and washers 5, of the requisite thickness. Each disk has a number of central openings 6, the solid portions between which form spokes 7, preferably curved, as shown, for the purpose of reducing the loss of energy due to the impact of the fluid. The runner is mounted in a two part volute casing 8, having stuffing boxes 9, and inlets 10 leading to its central portion. In addition a gradually widening and rounding outlet 11 is provided, formed with a flange for connection to a pipe as usual. The casing 8 rests upon a base 12, shown only in part, and supporting the bearings for the shaft 2, which, being of ordinary construction, are omitted from the drawings.

An understanding of the principle embodied in this device will be gained from the following description of its mode of operation. Power being applied to the shaft and the runner set in rotation in the direction of the solid arrow the fluid by reason of its properties of adherence and viscosity, upon entering through the inlets 10 and coming in contact with the disks 1 is taken hold of by the same and subjected to two forces, one acting tangentially in the direction of rotation, and the other radially outward. The combined effect of these tangential and centrifugal forces is to propel the fluid with continuously increasing velocity in a spiral path until it reaches the

outlet 11 from which it is ejected. This spiral movement, free and undisturbed and essentially dependent on the properties of the fluid, permitting it to adjust itself to natural paths or stream lines and to change its velocity and direction by insensible degrees, is characteristic of this method of propulsion and advantageous in its application. While traversing the chamber inclosing the runner, the particles of the fluid may complete one or more turns, or but a part of one turn. In any given case their path can be closely calculated and graphically represented, but fairly accurate estimate of turns can be obtained simply by determining the number of revolutions required to renew the fluid passing through the chamber and multiplying it by the ratio between the mean speed of the fluid and that of the disks. I have found that the quantity of fluid propelled in this manner is, other conditions being equal, approximately proportionate to the active surface of the runner and to its effective speed. For this reason, the performance of such machines augments at an exceedingly high rate with the increase of their size and speed of revolution.

The dimensions of the device as a whole, and the spacing of the disks in any given machine will be determined by the conditions and requirements of special cases. It may be stated that the intervening distance should be the greater, the larger the diameter of the disks, the longer the spiral path of the fluid and the greater its viscosity. In general, the spacing should be such that the entire mass of the fluid, before leaving the runner, is accelerated to a nearly uniform velocity, not much below that of the periphery of the disks under normal working conditions and almost equal to it when the outlet is closed and the particles move in concentric circles. It may also be pointed out that such a pump can be made without openings and spokes in the runner, as by using one or more solid disks, each in its own casing, in which form the machine will be eminently adapted for sewage, dredging and the like, when the water is charged with foreign bodies and spokes or vanes especially objectionable.

Another application of this principle which I have discovered to be not only feasible, but thoroughly practicable and efficient, is the utilization of machines such as above described for the compression or rarefaction of air, or gases in general. In such cases it will be found that most of the general considerations obtaining in the case of liquids, properly interpreted, hold true. When, irrespective of the character of the fluid, considerable pressures are desired, staging or compounding may be resorted to in the usual way the individual runners being, preferably, mounted on the same shaft. It should be added that the same end may be attained with one single runner by suitable deflection of the fluid through rotative or stationary passages.

The principles underlying the invention are capable of embodiment also in that field of mechanical engineering which is concerned in the use of fluids as motive agents, for while in some respects the actions in the latter case are directly opposite to those met with in the propulsion of fluids, the fundamental laws applicable in the two cases are the same. In other words, the operation above described is reversible, for if water or air under pressure be admitted to the opening 11 the runner is set in rotation in the direction of the dotted arrow by reason of the peculiar properties of the fluid which traveling in a spiral path and with continuously diminishing velocity, reaches the orifices 6 and 10 through which it is discharged.

When apparatus of the general character above described is employed for the transmission of power, however, certain departures from structural similarity between transmitter and receiver may be necessary for securing the best result. I have, therefore, included that part of my invention which is directly applicable to the use of fluids as motive agents in a separate application filed January 17, 1911, Serial No. 603,049. It may be here pointed out, however, as is evident from the above considerations, that when transmitting power from one shaft to another by such machines, any desired ratio between the speeds of rotation may be obtained by proper selection of the diameters of the disks, or by suitably staging the transmitter, the receiver, or both. But it may be stated that in one respect, at least, the two machines are essentially different. In the pump, the radial or static pressure, due to centrifugal force, is added to the tangential or dynamic, thus increasing the effective head and assisting in the expulsion of the fluid. In the motor, on the contrary, the first named pressure, being opposed to that of supply, reduces the effective head and velocity of radial flow toward the center. Again, in the propelled machine a great torque is always desirable, this calling for an increased number of disks and smaller distance of separation, while in the propelling machine, for numerous economic reasons, the rotary effort should be the smallest and the speed the greatest practicable. Many other considerations, which will naturally suggest themselves, may affect the design and construction, but the preceding is thought to contain all necessary information in this regard.

It will be understood that the principles

of construction and operation above set forth, are capable of embodiment in machines of the most widely different forms, and adapted for the greatest variety of purposes. In the above, I have sought to describe and explain only the general and typical applications of the principle which I believe I am the first to realize and turn to useful account.

I do not claim in this application the method herein described of imparting energy to a fluid, having made that discovery the subject of a copending application Serial No. 735,914.

What I claim is:

1. A machine for propelling or imparting energy to fluids comprising in combination a plurality of spaced disks rotatably mounted and having plane surfaces, an inclosing casing, ports of inlet at the central portion of said casing and through which the fluid is adapted to be introduced to the axial portions of the disks, and ports of outlet at the peripheral portion of the casing through which the fluid, when the machine is driven by power, is adapted to be expelled, as set forth.

2. A machine for propelling or imparting energy to fluids, comprising in combination a volute casing provided with ports of inlet and outlet at its central and peripheral portions, respectively, and a runner mounted within the casing and composed of spaced disks with plane surfaces having openings adjacent to the axis of rotation.

3. A rotary pump, comprising in combination a plurality of spaced disks with plane surfaces mounted on a rotatable shaft and provided with openings adjacent thereto, a volute casing inclosing the said disks, means for admitting a fluid into that portion of the casing which contains the shaft and an outlet extending tangentially from the peripheral portion of said casing.

In testimony whereof I affix my signature in the presence of two subscribing witnesses.

NIKOLA TESLA.

Witnesses:
M. LAWSON DYER,
DRURY W. COOPER.

N. TESLA.

TURBINE.

APPLICATION FILED JAN. 17, 1911.

1,061,206. **Patented May 6, 1913.**

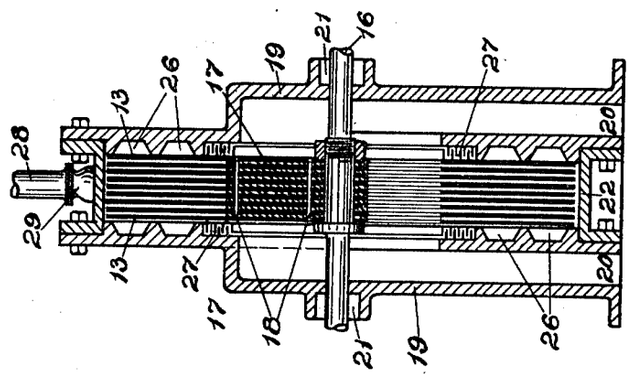

Fig. 2.

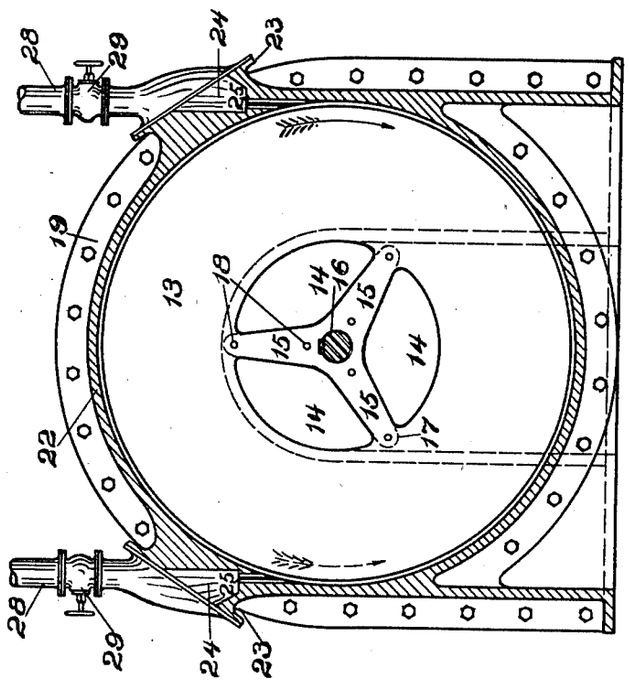

Fig. 1.

Witnesses:
R. Diaz Britmayo
Wm. Bohleber

Nikola Tesla, Inventor

By his Attorneys
Kerr Page Cooper & Hayward

UNITED STATES PATENT OFFICE.

NIKOLA TESLA, OF NEW YORK, N. Y.

TURBINE.

1,061,206. Specification of Letters Patent. Patented May 6, 1913.

Original application filed October 21, 1909, Serial No. 523,832. Divided and this application filed January 17, 1911. Serial No. 603,049.

To all whom it may concern:

Be it known that I, NIKOLA TESLA, a citizen of the United States, residing at New York, in the county and State of New York, have invented certain new and useful Improvements in Rotary Engines and Turbines, of which the following is a full, clear, and exact description.

In the practical application of mechanical power, based on the use of fluid as the vehicle of energy, it has been demonstrated that, in order to attain the highest economy, the changes in the velocity and direction of movement of the fluid should be as gradual as possible. In the forms of apparatus heretofore devised or proposed, more or less sudden changes, shocks and vibrations are unavoidable. Besides, the employment of the usual devices for imparting to, or deriving energy from a fluid, such as pistons, paddles, vanes and blades, necessarily introduces numerous defects and limitations and adds to the complication, cost of production and maintenance of the machines.

The object of my invention is to overcome these deficiencies and to effect the transmission and transformation of mechanical energy through the agency of fluids in a more perfect manner and by means simpler and more economical than those heretofore employed. I accomplish this by causing the propelling fluid to move in natural paths or stream lines of least resistance, free from constraint and disturbance such as occasioned by vanes or kindred devices, and to change its velocity and direction of movement by imperceptible degrees, thus avoiding the losses due to sudden variations while the fluid is imparting energy.

It is well known that a fluid possesses, among others, two salient properties, adhesion and viscosity. Owing to these a solid body propelled through such a medium encounters a peculiar impediment known as "lateral" or "skin resistance," which is twofold, one arising from the shock of the fluid against the asperities of the solid substance, the other from internal forces opposing molecular separation. As an inevitable consequence a certain amount of the fluid is dragged along by the moving body. Conversely, if the body be placed in a fluid in motion, for the same reasons, it is impelled in the direction of movement. These effects, in themselves, are of daily observation, but I believe that I am the first to apply them in a practical and economical manner in the propulsion of fluids or in their use as motive agents.

In an application filed by me October 21st, 1909, Serial Number 523,832 of which this case is a division, I have illustrated the principles underlying my discovery as embodied in apparatus designed for the propulsion of fluids. The same principles, however, are capable of embodiment also in that field of mechanical engineering which is concerned in the use of fluids as motive agents, for while in certain respects the operations in the latter case are directly opposite to those met with in the propulsion of fluids, and the means employed may differ in some features, the fundamental laws applicable in the two cases are the same. In other words, the operation is reversible, for if water or air under pressure be admitted to the opening constituting the outlet of a pump or blower as described, the runner is set in rotation by reason of the peculiar properties of the fluid which, in its movement through the device, imparts its energy thereto.

The present application, which is a division of that referred to, is specially intended to describe and claim my discovery above set forth, so far as it bears on the use of fluids as motive agents, as distinguished from the applications of the same to the propulsion or compression of fluids.

In the drawings, therefore, I have illustrated only the form of apparatus designed for the thermo-dynamic conversion of energy, a field in which the applications of the principle have the greatest practical value.

Figure 1 is a partial end view, and Fig. 2 a vertical cross-section of a rotary engine or turbine, constructed and adapted to be operated in accordance with the principles of my invention.

The apparatus comprises a runner composed of a plurality of flat rigid disks 13 of suitable diameter, keyed to a shaft 16, and held in position thereon by a threaded nut 11, a shoulder 12, and intermediate washers 17. The disks have openings 14 adjacent to the shaft and spokes 15, which

may be substantially straight. For the sake of clearness, but a few disks, with comparatively wide intervening spaces, are illustrated.

The runner is mounted in a casing comprising two end castings 19, which contain the bearings for the shaft 16, indicated but not shown in detail; stuffing boxes 21 and outlets 20. The end castings are united by a central ring 22, which is bored out to a circle of a slightly larger diameter than that of the disks, and has flanged extensions 23, and inlets 24, into which finished ports or nozzles 25 are inserted. Circular grooves 26 and labyrinth packing 27 are provided on the sides of the runner. Supply pipes 28, with valves 29, are connected to the flanged extensions of the central ring, one of the valves being normally closed.

For a more ready and complete understanding of the principle of operation it is of advantage to consider first the actions that take place when the device is used for the propulsion of fluids for which purpose let it be assumed that power is applied to the shaft and the runner set in rotation say in a clockwise direction. Neglecting, for the moment, those features of construction that make for or against the efficiency of the device as a pump, as distinguished from a motor, a fluid, by reason of its properties of adherence and viscosity, upon entering through the inlets 20, and coming in contact with the disks 13, is taken hold of by the latter and subjected to two forces, one acting tangentially in the direction of rotation, and the other radially outward. The combined effect of these tangential and centrifugal forces is to propel the fluid with continuously increasing velocity in a spiral path until it reaches a suitable peripheral outlet from which it is ejected. This spiral movement, free and undisturbed and essentially dependent on the properties of the fluid, permitting it to adjust itself to natural paths or stream lines and to change its velocity and direction by insensible degrees, is a characteristic and essential feature of this principle of operation.

While traversing the chamber inclosing the runner, the particles of the fluid may complete one or more turns, or but a part of one turn, the path followed being capable of close calculation and graphic representation, but fairly accurate estimates of turns can be obtained simply by determining the number of revolutions required to renew the fluid passing through the chamber and multiplying it by the ratio between the mean speed of the fluid and that of the disks. I have found that the quantity of fluid propelled in this manner, is, other conditions being equal, approximately proportionate to the active surface of the runner and to its effective speed. For this reason, the performance of such machines augments at an exceedingly high rate with the increase of their size and speed of revolution.

The dimensions of the device as a whole, and the spacing of the disks in any given machine will be determined by the conditions and requirements of special cases. It may be stated that the intervening distance should should be the greater, the larger the diameter of the disks, the longer the spiral path of the fluid and the greater its viscosity. In general, the spacing should be such that the entire mass of the fluid, before leaving the runner, is accelerated to a nearly uniform velocity, not much below that of the periphery of the disks under normal working conditions, and almost equal to it when the outlet is closed and the particles move in concentric circles.

Considering now the converse of the above described operation and assuming that fluid under pressure be allowed to pass through the valve at the side of the solid arrow, the runner will be set in rotation in a clockwise direction, the fluid traveling in a spiral path and with continuously diminishing velocity until it reaches the orifices 14 and 20, through which it is discharged. If the runner be allowed to turn freely, in nearly frictionless bearings, its rim will attain a speed closely approximating the maximum of that of the adjacent fluid and the spiral path of the particles will be comparatively long, consisting of many almost circular turns. If load is put on and the runner slowed down, the motion of the fluid is retarded, the turns are reduced, and the path is shortened.

Owing to a number of causes affecting the performance, it is difficult to frame a precise rule which would be generally applicable, but it may be stated that within certain limits, and other conditions being the same, the torque is directly proportionate to the square of the velocity of the fluid relatively to the runner and to the effective area of the disks and, inversely, to the distance separating them. The machine will, generally, perform its maximum work when the effective speed of the runner is one-half of that of the fluid; but to attain the highest economy, the relative speed or slip, for any given performance, should be as small as possible. This condition may be to any desired degree approximated by increasing the active area of and reducing the space between the disks.

When apparatus of the kind described is employed for the transmission of power certain departures from similarity between transmitter and receiver are necessary for securing the best results. It is evident that, when transmitting power from one shaft to another by such machines, any desired ratio between the speeds of rotation may be obtained by a proper selection of the diameters of the disks, or by suitably staging the

transmitter, the receiver or both. But it may be pointed out that in one respect, at least, the two machines are essentially different. In the pump, the radial or static pressure, due to centrifugal force, is added to the tangential or dynamic, thus increasing the effective head and assisting in the expulsion of the fluid. In the motor, on the contrary, the first named pressure, being opposed to that of supply, reduces the effective head and the velocity of radial flow toward the center. Again, in the propelled machine a great torque is always desirable, this calling for an increased number of disks and smaller distance of separation, while in the propelling machine, for numerous economic reasons, the rotary effort should be the smallest and the speed the greatest practicable. Many other considerations, which will naturally suggest themselves, may affect the design and construction, but the preceding is thought to contain all necessary information in this regard.

In order to bring out a distinctive feature, assume, in the first place, that the motive medium is admitted to the disk chamber through a port, that is a channel which it traverses with nearly uniform velocity. In this case, the machine will operate as a rotary engine, the fluid continuously expanding on its tortuous path to the central outlet. The expansion takes place chiefly along the spiral path, for the spread inward is opposed by the centrifugal force due to the velocity of whirl and by the great resistance to radial exhaust. It is to be observed that the resistance to the passage of the fluid between the plates is, approximately, proportionate to the square of the relative speed, which is maximum in the direction toward the center and equal to the full tangential velocity of the fluid. The path of least resistance, necessarily taken in obedience to a universal law of motion is, virtually, also that of least relative velocity. Next, assume that the fluid is admitted to the disk chamber not through a port, but a diverging nozzle, a device converting wholly or in part, the expansive into velocity-energy. The machine will then work rather like a turbine, absorbing the energy of kinetic momentum of the particles as they whirl, with continuously decreasing speed, to the exhaust.

The above description of the operation, I may add, is suggested by experience and observation, and is advanced merely for the purpose of explanation. The undeniable fact is that the machine does operate, both expansively and impulsively. When the expansion in the nozzles is complete, or nearly so, the fluid pressure in the peripheral clearance space is small; as the nozzle is made less divergent and its section enlarged, the pressure rises, finally approximating that of the supply. But the transition from purely impulsive to expansive action may not be continuous throughout, on account of critical states and conditions and comparatively great variations of pressure may be caused by small changes of nozzle velocity.

In the preceding it has been assumed that the pressure of supply is constant or continuous, but it will be understood that the operation will be, essentially the same if the pressure be fluctuating or intermittent, as that due to explosions occurring in more or less rapid succession.

A very desirable feature, characteristic of machines constructed and operated in accordance with this invention, is their capability of reversal of rotation. Fig. 1, while illustrative of a special case, may be regarded as typical in this respect. If the right hand valve be shut off and the fluid supplied through the second pipe, the runner is rotated in the direction of the dotted arrow, the operation, and also the performance remaining the same as before, the central ring being bored to a circle with this purpose in view. The same result may be obtained in many other ways by specially designed valves, ports or nozzles for reversing the flow, the description of which is omitted here in the interest of simplicity and clearness. For the same reasons but one operative port or nozzle is illustrated which might be adapted to a volute but does not fit best a circular bore. It will be understood that a number of suitable inlets may be provided around the periphery of the runner to improve the action and that the construction of the machine may be modified in many ways.

Still another valuable and probably unique quality of such motors or prime movers may be described. By proper construction and observance of working conditions the centrifugal pressure, opposing the passage of the fluid, may, as already indicated, be made nearly equal to the pressure of supply when the machine is running idle. If the inlet section be large, small changes in the speed of revolution will produce great differences in flow which are further enhanced by the concomitant variations in the length of the spiral path. A self-regulating machine is thus obtained bearing a striking resemblance to a direct-current electric motor in this respect that, with great differences of impressed pressure in a wide open channel the flow of the fluid through the same is prevented by virture of rotation. Since the centrifugal head increases as the square of the revolutions, or even more rapidly, and with modern high grade steel great peripheral velocities are practicable, it is possible to attain that condition in a single stage machine, more readily if the runner be of large diameter. Obviously this problem is

facilitated by compounding, as will be understood by those skilled in the art. Irrespective of its bearing on economy, this tendency which is, to a degree, common to motors of the above description, is of special advantage in the operation of large units, as it affords a safeguard against running away and destruction. Besides these, such a prime mover possesses many other advantages, both constructive and operative. It is simple, light and compact, subject to but little wear, cheap and exceptionally easy to manufacture as small clearances and accurate milling work are not essential to good performance. In operation it is reliable, there being no valves, sliding contacts or troublesome vanes. It is almost free of windage, largely independent of nozzle efficiency and suitable for high as well as for low fluid velocities and speeds of revolution.

It will be understood that the principles of construction and operation above generally set forth, are capable of embodiment in machines of the most widely different forms, and adapted for the greatest variety of purposes. In my present specification I have sought to describe and explain only the general and typical applications of the principle which I believe I am the first to realize and turn to useful account.

What I claim is:

1. A machine adapted to be propelled by a fluid consisting in the combination with a casing having inlet and outlet ports at the peripheral and central portions, respectively, of a rotor having plane spaced surfaces between which the fluid may flow in natural spirals and by adhesive and viscous action impart its energy of movement to the rotor, as described.

2. A machine adapted to be propelled by a fluid, comprising a rotor composed of a plurality of plane spaced disks mounted on a shaft and open at or near the same, an inclosing casing with a peripheral inlet or inlets, in the plane of the disks, and an outlet or outlets in its central portion, as described.

3. A rotary engine adapted to be propelled by adhesive and viscous action of a continuously expanding fluid comprising in combination a casing forming a chamber, an inlet or inlets tangential to the periphery of the same, and an outlet or outlets in its central portion, with a rotor composed of spaced disks mounted on a shaft, and open at or near the same, as described.

4. A machine adapted to be propelled by fluid, consisting in the combination of a plurality of disks mounted on a shaft and open at or near the same, and an inclosing casing with ports or passages of inlet and outlet at the peripheral and central portions, respectively, the disks being spaced to form passages through which the fluid may flow, under the combined influence of radial and tangential forces, in a natural spiral path from the periphery toward the axis of the disks, and impart its energy of movement to the same by its adhesive and viscous action thereon, as set forth.

5. A machine adapted to be propelled by a fluid comprising in combination a plurality of spaced disks rotatably mounted and having plane surfaces, an inclosing casing and ports or passages of inlet and outlet adjacent to the periphery and center of the disks, respectively, as set forth.

6. A machine adapted to be propelled by a fluid comprising in combination a runner composed of a plurality of disks having plane surfaces and mounted at intervals on a central shaft, and formed with openings near their centers, and means for admitting the propelling fluid into the spaces between the disks at the periphery and discharging it at the center of the same, as set forth.

7. A thermo-dynamic converter, comprising in combination a series of rotatably mounted spaced disks with plane surfaces, an inclosing casing, inlet ports at the peripheral portion and outlet ports leading from the central portion of the same, as set forth.

8. A thermo-dynamic converter, comprising in combination a series of rotatably mounted spaced disks with plane surfaces and having openings adjacent to their central portions, an inclosing casing, inlet ports in the peripheral portion, and outlet ports leading from the central portion of the same, as set forth.

In testimony whereof I affix my signature in the presence of two subscribing witnesses.

NIKOLA TESLA.

Witnesses:
M. LAWSON DYER,
WM. BOHLEBER.

N. TESLA.

FOUNTAIN.

APPLICATION FILED OCT. 28, 1913.

1,113,716.

Patented Oct. 13, 1914.

2 SHEETS-SHEET 1.

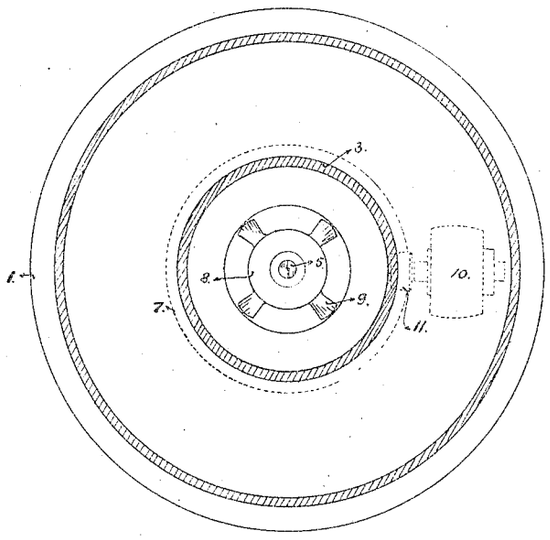

Fig 1

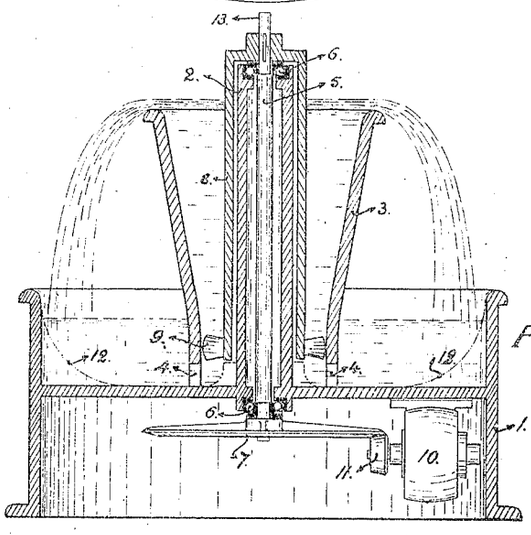

Fig 2

WITNESSES:

H. H. Teetsow.

Wm. Bohleber

INVENTOR.

Nikola Tesla

BY

Kerr Page Cooper & Hayward

ATTORNEYS

N. TESLA.

FOUNTAIN.

APPLICATION FILED OCT. 28, 1913.

1,113,716.

Patented Oct. 13, 1914.

2 SHEETS—SHEET 2.

Fig. 3.

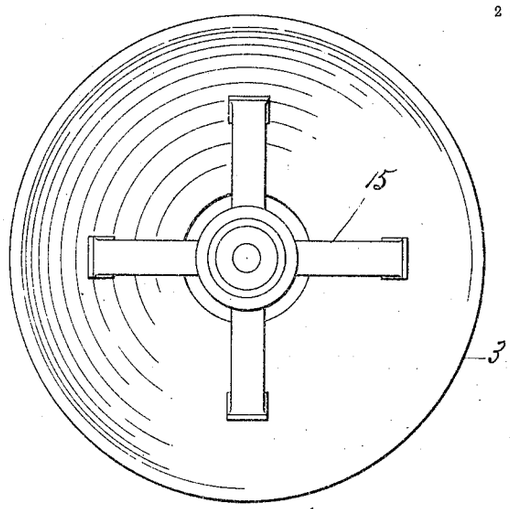

Fig. 4.

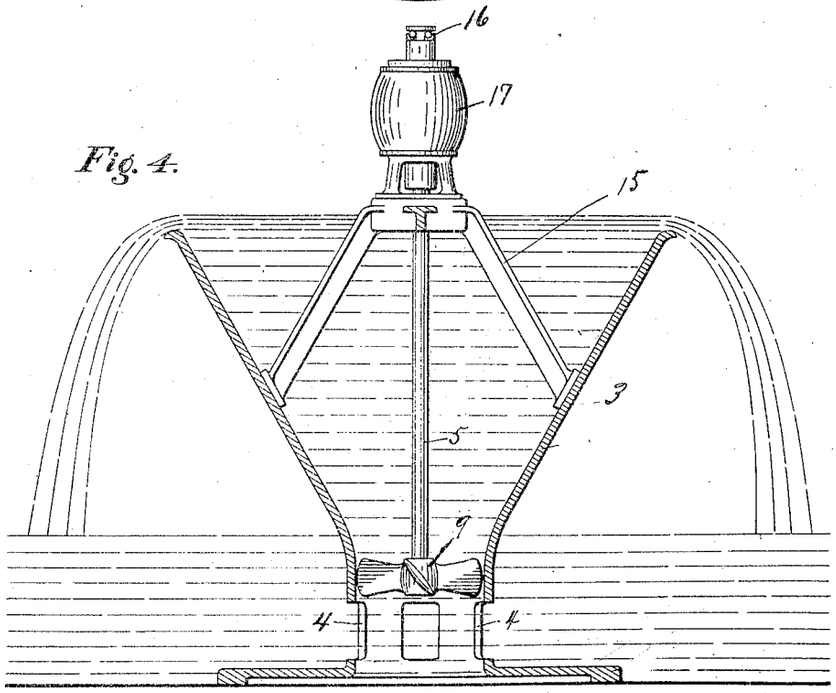

WITNESSES:

R. Diaz Arribas

Wm Bohleber

INVENTOR.

Nikola Tesla

BY

Kerr Page Cooper & Hayward

ATTORNEYS

UNITED STATES PATENT OFFICE.

NIKOLA TESLA, OF NEW YORK, N. Y.

FOUNTAIN.

1,113,716. Specification of Letters Patent. Patented Oct. 13, 1914.

Application filed October 28, 1913. Serial No. 797,718.

To all whom it may concern:

Be it known that I, NIKOLA TESLA, a citizen of the United States, residing at New York, borough of Manhattan, county and State of New York, have invented certain new and useful Improvements in Fountains, of which the following is a full, clear, and exact description.

It has been customary heretofore in fountains and aquarian displays, to project spouts, jets, or sprays of water from suitable fixtures, chiefly for decorative and beautifying purposes. Invariably, the quantity of the issuing fluid was small and the pleasing impression on the eye was solely the result of the more or less artistic arrangement of the streamlets and ornaments employed. The present invention is a departure from such practice in that it relies principally on the fascinating spectacle of a large mass of fluid in motion and the display of seemingly great power. Incidentally, it permits the realization of beautiful and striking views through illumination and the disposition of voluminous cascades which, moreover, may be applied to useful purposes in ways not practicable with the old and familiar devices. These objects are accomplished by the displacement of a great volume of fluid with a relatively small expenditure of energy in the production and maintenance of a veritable waterfall as distinguished from a mere spout, jet or spray.

The underlying idea of the invention can be carried out by apparatus of widely varied design, but in the present instance the simplest forms, of which I am aware, are shown as embodiments of the principle involved.

In the accompanying drawing, Figure 1 is a top plan and Fig. 2 a vertical central sectional view of an appliance which I have devised for the purpose. Fig. 3 and Fig. 4 illustrate corresponding views of a similar device of much simpler construction.

Referring to the first, 1 represents a receptacle of any suitable material, as metal, glass, porcelain, marble, cement or other compound, with a central hub 2 and a conical conduit 3, flared out at the top and provided with openings 4 at the bottom. In the hub 2 is inserted a shaft 5 rotatably supported on ball bearings 6 and carrying at its lower end a friction pulley or gear wheel 7. To the upper end of the shaft is fastened a casting 8, preferably of some non-corrosive alloy, with blades 9 constituting a screw which is shown in this instance as the best known propelling device; but it will be understood that other means may be employed. A motor 10 is suitably mounted so as to transmit through wheel 11, by friction or otherwise, power to the pulley or wheel 7. Openings 4 may be covered with removable strainers and receptacles 1 may be provided with convenient connections, respectively, for cleaning and renewing the liquid. It is thought unnecessary to show these attachments in the drawing.

The operation will be readily understood. Receptacle 1 being filled to the proper level with water or other fluid, and the power turned on, the propeller blades 9 are set in rotation and the fluid, drawn through the openings 4, is lifted to the horizontal flared out top of conduit 3 until it overflows in the form of a circular cascade.

In order to prevent the wetting of the bearings of shaft 5, the central hub 2 of receptacle 1 is made to project above conduit 3. The latter is funnel shaped for reasons of economy, and also for the purpose of reducing the speed and securing a smooth and even overflow. As the lift is inconsiderable, little power is needed to keep in motion a great volume of water and the impression produced on the observer is very striking. With the view of still further economizing energy, the bottom of receptacle 1 may be shaped as indicated by the dotted lines 12, in Fig. 2 so as to increase the velocity at the intake of the propeller.

To convey an idea of the results obtainable with a small apparatus, properly designed, it may be stated that by applying only 1/25 of a horse-power to the shaft and assuming a lift of eighteen inches, more than one hundred gallons per minute may be propelled, the depth of the fluid passing over the flared top of conduit 3, one foot in diameter, being nearly one-half inch. As the circulation is extremely rapid the total quantity of liquid required is comparatively small. About one tenth of that delivered per minute will be, generally, sufficient. Such a cascade presents a singularly attractive appearance and this feature may be still further enhanced by artistic grouping of plants or other objects around it, in which case the whole contrivance may be hidden from view. Particularly beautiful displays, however, are obtainable by illumination which may be carried out in many ways. To

heighten the effect, a colored, opalescent or phosphorescent fluid may be employed. Sterilizing, aromatic or radio-active liquids may also be used, when so desired. The usual fountains are objectionable in many places on account of the facility they afford for the breeding of insects. The apparatus described not only makes this impossible but is a very efficient trap. Unlike the old devices in which only a very small volume of water is set in motion, such a waterfall is is highly effective in cooling the surrounding atmosphere. To still improve this action the free end 13 of the rotating shaft may be utilized to carry any kind of fan. The water may, of course, be artificially cooled.

The device described may be modified in many ways and also considerably simplified. For example, the propeller may be fixed directly to the shaft of the motor and the latter supported conveniently from above when many of the parts illustrated in Fig. 1 and Fig. 2 may be dispensed with. In fact, receptacle 1 itself may be replaced by an independent tank or basin so that the entire apparatus will only consist of a funnel shaped conduit, motor and propeller as a unit. Such a construction is shown in Fig. 3 and Fig. 4 in which 3 is a conical vessel provided with intake openings 4 and resting on a substantial base. A motor 14, carrying on a strong shaft 5 a propeller 9, is fixed to supports 15 which extend from the inner side of conduit 3 and may be integral with the same. Obviously, to insure perfect working the weight of the moving parts and axial reaction of the propeller should be taken up or balanced as by a thrust bearing 16, or other means.

Apparatus of this description is especially intended for use in open basins or reservoirs in which it may be placed and put in action at short notice. When it is desired to produce large and permanent waterfalls the conduit 3 may be formed by masonry of appropriate archit tural design.

The invention has an unlimited field of use in private dwellings, hotels, theaters, concert halls, hospitals, aquaria and, particularly, in squares, gardens and parks in which it may be carried out on a large scale so as to afford a magnificent spectacle far more captivating and stimulating to the public than the insignificant displays now in use.

I am well aware that artificial water falls have heretofore been exhibited and that fountains in which the same water is circulated are old and well known. But in all such cases independent pumps of small volumetric capacity were used to raise the water to an appreciable height which involved the expenditure of considerable energy, while the spectacle offered to the eye was uninteresting. In no instance, to my knowledge, has a great mass of fluid been propelled by the use of only such power as is required to lift it from its normal level through a relatively short space to that from which it overflows and descends as a cascade, nor have devices especially adapted for the purpose been employed.

What I claim is:

1. An artificial fountain consisting of an unobstructed conduit having an elevated overflow and adapted to be set in a body of water, and a propelling device for maintaining a rapid circulation of the water through the conduit.

2. An artificial fountain comprising in combination an unobstructed conduit having an elevated overflow and adapted to be set in a body of fluid, a propeller within the conduit for maintaining a rapid circulation of the fluid through the same, and a motor for driving the propeller.

3. The artificial fountain herein described, comprising in combination a receptacle, a central hollow conduit with an elevated overflow placed therein, a propeller within the conduit, and a motor for driving the propeller, so as to maintain a rapid circulation of fluid through the conduit.

4. The artificial fountain herein described, comprising in combination, a receptacle, a conduit with elevated overflow set therein, a central hub extending up through the conduit, a rotary shaft extending therethrough, and a propeller carried by the shaft for maintaining a rapid circulation of fluid through the conduit.

5. An artificial fountain comprising in combination with an unobstructed passage from the normal to the elevated fluid levels, of a propeller for maintaining a rapid circulation of the fluid through such passage and producing thereby a cascade with the expenditure of little energy.

6. An artificial fountain comprising a funnel shaped conduit adapted to be set in a body of fluid, and having openings near the lower end, and a propeller supported within the conduit and adapted when in operation to maintain a rapid circulation of water through the same.

In testimony whereof I affix my signature in the presence of two subscribing witnesses.

NIKOLA TESLA.

Witnesses:

M. LAWSON DYAR,

WM. BOHLEBER.

N. TESLA.

APPARATUS FOR TRANSMITTING ELECTRICAL ENERGY.

APPLICATION FILED JAN. 18, 1902. RENEWED MAY 4, 1907.

1,119,732. Patented Dec. 1, 1914.

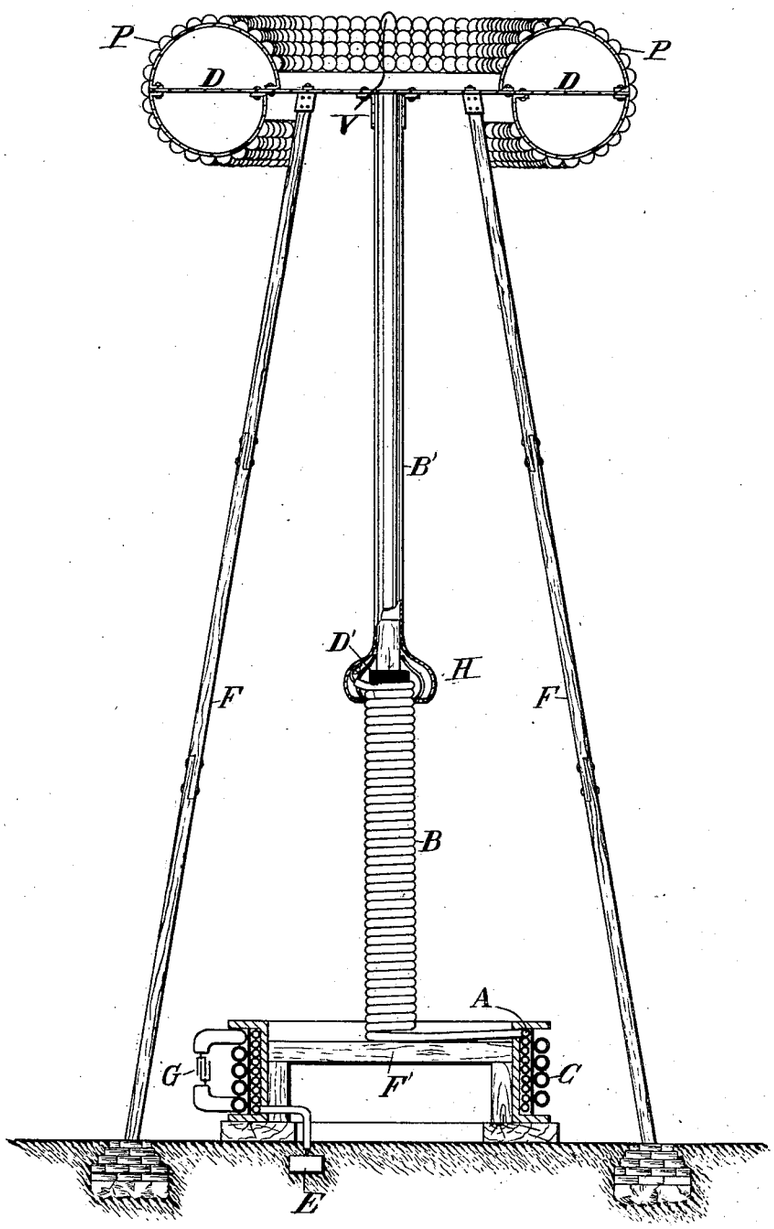

WITNESSES:

M. Lawson Dyer

Benjamin Miller.

INVENTOR,

Nikola Tesla,

BY Kerr, Page & Cooper,

his ATTORNEYS.

UNITED STATES PATENT OFFICE.

NIKOLA TESLA, OF NEW YORK, N. Y.

APPARATUS FOR TRANSMITTING ELECTRICAL ENERGY.

1,119,732. Specification of Letters Patent. Patented Dec. 1, 1914.

Application filed January 18, 1902, Serial No. 90,245. Renewed May 4, 1907. Serial No. 371,817.

To all whom it may concern:

Be it known that I, NIKOLA TESLA, a citizen of the United States, residing in the borough of Manhattan, in the city, county, and State of New York, have invented certain new and useful Improvements in Apparatus for Transmitting Electrical Energy, of which the following is a specification, reference being had to the drawing accompanying and forming a part of the same.

In endeavoring to adapt currents or discharges of very high tension to various valuable uses, as the distribution of energy through wires from central plants to distant places of consumption, or the transmission of powerful disturbances to great distances, through the natural or non-artificial media, I have encountered difficulties in confining considerable amounts of electricity to the conductors and preventing its leakage over their supports, or its escape into the ambient air, which always takes place when the electric surface density reaches a certain value.

The intensity of the effect of a transmitting circuit with a free or elevated terminal is proportionate to the quantity of electricity displaced, which is determined by the product of the capacity of the circuit, the pressure, and the frequency of the currents employed. To produce an electrical movement of the required magnitude it is desirable to charge the terminal as highly as possible, for while a great quantity of electricity may also be displaced by a large capacity charged to low pressure, there are disadvantages met with in many cases when the former is made too large. The chief of these are due to the fact that an increase of the capacity entails a lowering of the frequency of the impulses or discharges and a diminution of the energy of vibration. This will be understood when it is borne in mind, that a circuit with a large capacity behaves as a slackspring, whereas one with a small capacity acts like a stiff spring, vibrating more vigorously. Therefore, in order to attain the highest possible frequency, which for certain purposes is advantageous and, apart from that, to develop the greatest energy in such a transmitting circuit, I employ a terminal of relatively small capacity, which I charge to as high a pressure as practicable. To accomplish this result I have found it imperative to so construct the elevated conductor, that its outer surface, on which the electrical charge chiefly accumulates, has itself a large radius of curvature, or is composed of separate elements which, irrespective of their own radius of curvature, are arranged in close proximity to each other and so, that the outside ideal surface enveloping them is of a large radius. Evidently, the smaller the radius of curvature the greater, for a given electric displacement, will be the surface-density and, consequently, the lower the limiting pressure to which the terminal may be charged without electricity escaping into the air. Such a terminal I secure to an insulating support entering more or less into its interior, and I likewise connect the circuit to it inside or, generally, at points where the electric density is small. This plan of constructing and supporting a highly charged conductor I have found to be of great practical importance, and it may be usefully applied in many ways.

Referring to the accompanying drawing, the figure is a view in elevation and part section of an improved free terminal and circuit of large surface with supporting structure and generating apparatus.

The terminal D consists of a suitably shaped metallic frame, in this case a ring of nearly circular cross section, which is covered with half spherical metal plates P P, thus constituting a very large conducting surface, smooth on all places where the electric charge principally accumulates. The frame is carried by a strong platform expressly provided for safety appliances, instruments of observation, etc., which in turn rests on insulating supports F F. These should penetrate far into the hollow space formed by the terminal, and if the electric density at the points where they are bolted to the frame is still considerable, they may be specially protected by conducting hoods as H.

A part of the improvements which form the subject of this specification, the transmitting circuit, in its general features, is identical with that described and claimed in my original Patents Nos. 645,576 and 649,621. The circuit comprises a coil A which is in close inductive relation with a primary C, and one end of which is connected to a ground-plate E, while its other end is led through a separate self-induction coil B and a metallic cylinder B′ to the terminal D.

The connection to the latter should always be made at, or near the center, in order to secure a symmetrical distribution of the current, as otherwise, when the frequency is very high and the flow of large volume, the performance of the apparatus might be impaired. The primary C may be excited in any desired manner, from a suitable source of currents G, which may be an alternator or condenser, the important requirement being that the resonant condition is established, that is to say, that the terminal D is charged to the maximum pressure developed in the circuit, as I have specified in my original patents before referred to. The adjustments should be made with particular care when the transmitter is one of great power, not only on account of economy, but also in order to avoid danger. I have shown that it is practicable to produce in a resonating circuit as E A B B′ D immense electrical activities, measured by tens and even hundreds of thousands of horse-power, and in such a case, if the points of maximum pressure should be shifted below the terminal D, along coil B, a ball of fire might break out and destroy the support F or anything else in the way. For the better appreciation of the nature of this danger it should be stated, that the destructive action may take place with inconceivable violence. This will cease to be surprising when it is borne in mind, that the entire energy accumulated in the excited circuit, instead of requiring, as under normal working conditions, one quarter of the period or more for its transformation from static to kinetic form, may spend itself in an incomparably smaller interval of time, at a rate of many millions of horse power. The accident is apt to occur when, the transmitting circuit being strongly excited, the impressed oscillations upon it are caused, in any manner more or less sudden, to be more rapid than the free oscillations. It is therefore advisable to begin the adjustments with feeble and somewhat slower impressed oscillations, strengthening and quickening them gradually, until the apparatus has been brought under perfect control. To increase the safety, I provide on a convenient place, preferably on terminal D, one or more elements or plates either of somewhat smaller radius of curvature or protruding more or less beyond the others (in which case they may be of larger radius of curvature) so that, should the pressure rise to a value, beyond which it is not desired to go, the powerful discharge may dart out there and lose itself harmlessly in the air. Such a plate, performing a function similar to that of a safety valve on a high pressure reservoir, is indicated at V.

Still further extending the principles underlying my invention, special reference is made to coil B and conductor B′. The latter is in the form of a cylinder with smooth or polished surface of a radius much larger than that of the half spherical elements P P, and widens out at the bottom into a hood H, which should be slotted to avoid loss by eddy currents and the purpose of which will be clear from the foregoing. The coil B is wound on a frame or drum D^1 of insulating material, with its turns close together. I have discovered that when so wound the effect of the small radius of curvature of the wire itself is overcome and the coil behaves as a conductor of large radius of curvature, corresponding to that of the drum. This feature is of considerable practical importance and is applicable not only in this special instance, but generally. For example, such plates at P P of terminal D, though preferably of large radius of curvature, need not be necessarily so, for provided only that the individual plates or elements of a high potential conductor or terminal are arranged in proximity to each other and with their outer boundaries along an ideal symmetrical enveloping surface of a large radius of curvature, the advantages of the invention will be more or less fully realized. The lower end of the coil B—which, if desired, may be extended up to the terminal D—should be somewhat below the uppermost turn of coil A. This, I find, lessens the tendency of the charge to break out from the wire connecting both and to pass along the support F′.

Having described my invention, I claim:

1. As a means for producing great electrical activities a resonant circuit having its outer conducting boundaries, which are charged to a high potential, arranged in surfaces of large radii of curvature so as to prevent leakage of the oscillating charge, substantially as set forth.

2. In apparatus for the transmission of electrical energy a circuit connected to ground and to an elevated terminal and having its outer conducting boundaries, which are subject to high tension, arranged in surfaces of large radii of curvature substantially as, and for the purpose described.

3. In a plant for the transmission of electrical energy without wires, in combination with a primary or exciting circuit a secondary connected to ground and to an elevated terminal and having its outer conducting boundaries, which are charged to a high potential, arranged in surfaces of large radii of curvature for the purpose of preventing leakage and loss of energy, substantially as set forth.

4. As a means for transmitting electrical energy to a distance through the natural media a grounded resonant circuit, comprising a part upon which oscillations are impressed and another for raising the ten-

sion, having its outer conducting boundaries on which a high tension charge accumulates arranged in surfaces of large radii of curvature, substantially as described.

5. The means for producing excessive electric potentials consisting of a primary exciting circuit and a resonant secondary having its outer conducting elements which are subject to high tension arranged in proximity to each other and in surfaces of large radii of curvature so as to prevent leakage of the charge and attendant lowering of potential, substantially as described.

6. A circuit comprising a part upon which oscillations are impressed and another part for raising the tension by resonance, the latter part being supported on places of low electric density and having its outermost conducting boundaries arranged in surfaces of large radii of curvature, as set forth.

7. In apparatus for the transmission of electrical energy without wires a grounded circuit the outer conducting elements of which have a great aggregate area and are arranged in surfaces of large radii of curvature so as to permit the storing of a high charge at a small electric density and prevent loss through leakage, substantially as described.

8. A wireless transmitter comprising in combination a source of oscillations as a condenser, a primary exciting circuit and a secondary grounded and elevated conductor the outer conducting boundaries of which are in proximity to each other and arranged in surfaces of large radii of curvature, substantially as described.

9. In apparatus for the transmission of electrical energy without wires an elevated conductor or antenna having its outer high potential conducting or capacity elements arranged in proximity to each other and in surfaces of large radii of curvature so as to overcome the effect of the small radius of curvature of the individual elements and leakage of the charge, as set forth.

10. A grounded resonant transmitting circuit having its outer conducting boundaries arranged in surfaces of large radii of curvature in combination with an elevated terminal of great surface supported at points of low electric density, substantially as described.

NIKOLA TESLA.

Witnesses:
M. LAMSON DYER,
RICHARD DONOVAN.

N. TESLA.

SPEED INDICATOR.

APPLICATION FILED MAY 29, 1914.

1,209,359. Patented Dec. 19, 1916.

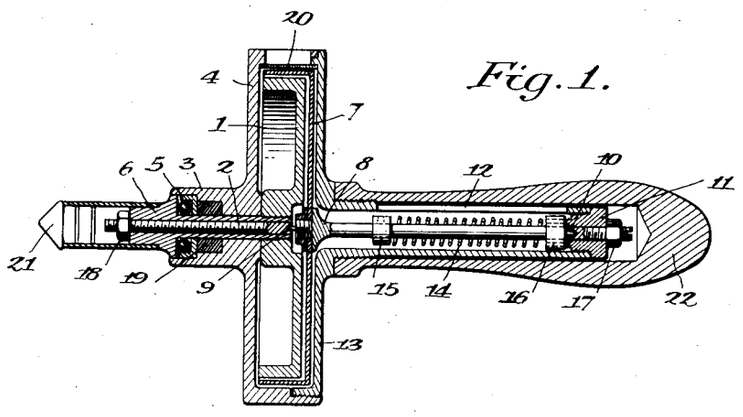

Fig. 1.

Fig. 3.

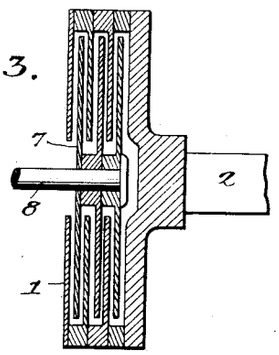

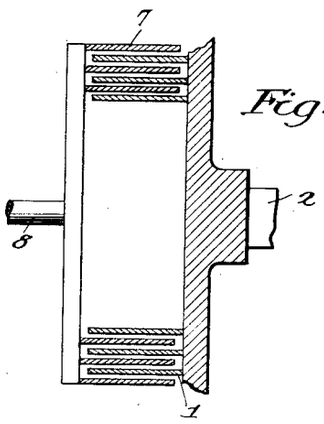

Fig. 4.

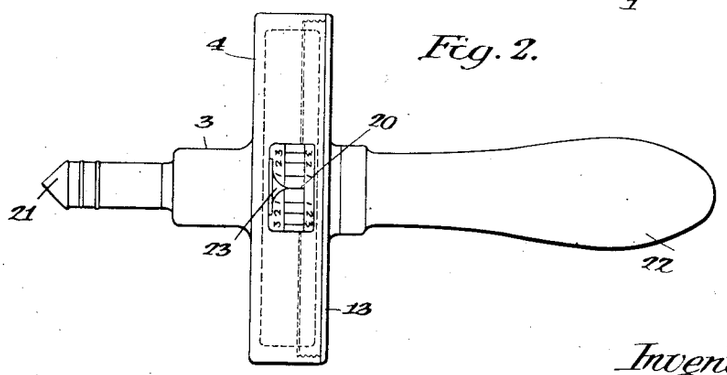

Fig. 2.

Inventor:
Nikola Tesla
Forée Bain & Mary,
Attorneys

UNITED STATES PATENT OFFICE.

NIKOLA TESLA, OF NEW YORK, N. Y., ASSIGNOR TO WALTHAM WATCH COMPANY, OF WALTHAM, MASSACHUSETTS, A CORPORATION OF MASSACHUSETTS.

SPEED-INDICATOR.

1,209,359. Specification of Letters Patent. Patented Dec. 19, 1916.

Application filed May 29, 1914. Serial No. 841,726.

To all whom it may concern:

Be it known that I, NIKOLA TESLA, a citizen of the United States, residing at New York, in the county and State of New York, have invented certain new and useful Improvements in Speed-Indicators, of which the following is a full, clear, and exact description.

In the provision of speed indicators, that give direct readings of rate of motion,—for example shaft speeds in terms of revolutions per minute or vehicle speeds in miles per hour—it is obviously important that the instrument be simple, inexpensive and durable, and that its indications be correct throughout a wide range of speed. Likewise it is very desirable that its operation shall be subject to little or no appreciable deviation from accuracy under normal or expected extraneous changes, such as those of atmospheric density, temperature, or magnetic influence, in order that the structure may be free from any complications incident to the employment of specific means compensating for such varying conditions.

My present invention supplies a speed measuring appliance amply satisfying commercial demands as above stated, in a structure wherein the adhesion and viscosity of a gaseous medium, preferably air, is utilized for torque-transmission between the driving and driven members.

More particularly, my invention provides a rotatable primary and a mechanically resistant or biased pivoted secondary element, coöperating through an intervening fluid medium to produce, inherently, without the use of compensating instrumentalities, angular displacements of the secondary element in linear proportion to the rate of rotation of the primary, so that the reading scale may be uniformly graduated. This latter advantage is secured through the application of novel principles, discovered by me, which will be presently elucidated.

In investigating the effects of fluids in motion upon rotative systems I have observed that under certain conditions to be hereafter defined, the drag or turning effort exerted by the fluid is exactly proportionate to its velocity relative to the system. This I have found to be true of gaseous and liquid media, with the distinction however, that the limits within which the law holds good are narrower for the latter, especially so when the specific gravity or the viscosity of the liquid is great.

Having determined the conditions under which the law of proportionality of torque to speed (rather than to the square of the speed or to some higher exponential function of the same) holds good, I have applied my discoveries in the production of new devices—essentially indicators of speed but having wider fields of use—which are, in many aspects, superior to other forms of speedometers.

Specifically I have devised rate-of-motion indicators which comprise driving and driven members with confronting, closely-adjacent, noncontacting, smooth, annular surfaces of large area, coacting in the transmission of torque through the viscosity and adhesion of interposed thin films of air,—mechanical structures offering numerous constructive and operative advantages. Furthermore, by properly designing and coordinating the essential elements of such instruments I have secured substantial linear proportionality between the deflections of the indicating or secondary element and the rate of rotation of the driving or primary member.

The conditions more or less indispensable for this most perfect embodiment of my invention—that is to say, embodiment in a speed indicator approximating rigorous linear proportionality of deflection to speed—are:

1. The arrangement should be such that the exchange of fluid acting on the system is effectively prevented or minimized. If new fluid were permitted to pass freely between the elements there would be, as in a pump, with the rise and fall of velocity, corresponding changes of quantity and the torque would not vary directly as the speed, but as an exponential function of the same. Broadly speaking, such provision as is commonly made in hydraulic brakes for free circulation of fluid with respect to the rotative system, with the attendant acceleration and retardation of the flow, will generally produce a torque varying as the square of the speed, subject however, in practice, to influences which may cause it to change according to still higher powers. For this reason confinement of the fluid intervening between the primary and secondary elements of the system so that such active, torque-

transmitting medium may remain resident, and not be constantly renewed, is vital to complete attainment of the desired linear proportionality.

2. The spaces or channels inclosing the active medium should be as narrow as practicable, although within limits this is relative, the range of effective separation increasing with the diameter of the juxtaposed rotative surfaces. My observations have established that when the spacing is so wide as to accommodate local spiral circulation in the resident fluid between the confronting areas, marked departures from rigorous proportionality of torque to speed occur. Therefore in small instruments with primary members of but few inches diameter, it is desirable that the channels should be as narrow as is mechanically feasible with due regard to the importance of maintaining the noncontacting relation of the rotative parts.

3. The velocity of the fluid relative to the system should be as small as the circumstances of the case will permit. When a gas such as air is the active medium, it may be 100 feet per second or even more, but with liquids speeds of that order cannot be used without detriment.

4. The bodies exposed to the action of the fluid should be symmetrically shaped and with smooth surfaces, devoid of corners or projections which give rise to destructive eddies that are particularly hurtful.

5. The system should be so shaped and disposed that no part of the moving fluid except that contained in the spaces or channels can effect materially the torque. If this rule is not observed the accuracy of the instrument may be impaired to an appreciable degree, for even though torque transmission between the confronting surfaces is proportional, there may yet be a component of the rotary effort (through the fluid coacting with the external surfaces) proportional to an exponential function of the speed. Hence it is desirable that by a closely investing casing, or other means, the torque-transmitting effect of fluid outside of the channels between the rotative parts be minimized.

6. In general the flow of the medium should be calm and entirely free from all turbulent action. As soon as there is a break of continuity the law above stated is violated and the indications of the device cease to be rigorously precise.

These requirements can be readily fulfilled and the above discoveries applied to a great many valuable uses, as for indicating the speed of rotation or translation, respectively, of a shaft, or a vehicle, such as an automobile, locomotive, boat or aerial vessel; for determining the velocity of a fluid in motion; for measuring the quantity of flow in steam, air, gas, water or oil supply; for ascertaining the frequency of mechanical and electrical impulses or oscillations; for determining physical constants; and for numerous other purposes of scientific and practical importance.

The nature and object of the invention will be clearly understood from the succeeding description with reference to the accompanying drawings in which:

Figure 1 represents a vertical cross section of a speed indicator or hand tachometer embodying the above principles; Fig. 2 is a horizontal view of the instrument disclosing part of the scale, and Figs. 3 and 4 are diagrammatic illustrations showing modified constructions of the main parts in a similar device.

Referring to Fig. 1, 1 is a pulley-shaped metal disk from three to four inches in diameter constituting the freely-rotatable primary element. It is fastened to a driveshaft 2 which is turned to fit a hole in the central hub 3 of the casting 4. A ball bearing 5 set in a recess of the former, serves to take up the thrust against the shoulder 6 of the shaft and insures free running of the same. In close proximity to the disk 1 is the thin shell 7 in the form of a cup, this being the secondary element of the system. It is made of stiff and light material, as hard aluminum, and is fixed to a spindle 8, supported in nearly frictionless bearings or pivots 9 and 10. As before remarked the spacing between the two elements, (1 and 7), should best be as small as manufacturing conditions may make feasible. By way of example, a separation,—in an instrument of the diameter suggested,—of say .015″ to .025″ will be found effective for working purposes and also within a reasonable range of inexpensive mechanical attainment. Still smaller spacing is, however, theoretically desirable. One of the bearings aforesaid is screwed into the end of the shaft 2 and the other into a plug 11 in a slotted tubular extension 12 of a casting 13. The running bearing in the shaft, though not of perceptible influence on the indications, may be replaced by a stationary support behind and close to shell 7, as at 8. A torsional spring 14 is provided, for biasing the pivoted element 7, having its ends held in collars 15 and 16, which can be clamped, as by the set screws shown, the one to the spindle 8 and the other to the plug 11. The bearings 9 and 10 are capable of longitudinal adjustment and can be locked in any position by check nuts 17, and 18, but this refinement is generally unnecessary. The castings 4 and 13, in the construction specifically shown, when screwed together form a casing that closely invests the rotative system. This casing forms one available means for preventing communication of torque from the primary element 1 to the

secondary member 7 through the medium contacting with the external surfaces of both, to any extent sufficient for materially modifying the torque due to the films between the elements, but other means to this end may be substituted. The chamber inclosed within the casting should be airtight for highest accuracy in order that the density of the contained medium may remain constant, although in the vast majority of cases where air is used as the active agent, the slight effects of ordinary changes of temperature and density of the external atmosphere can be ignored, as they are in a measure neutralized by the concommitant variations in the resilience of the torsional spring and as they do not seriously affect the proportionality of deflections observed. However, when great precision is essential, a seal 19 of suitable packing, paste or amalgam may be employed. Obviously the working parts may be contained in a separate, perfectly tight reservoir filled with fluid of any desired character, the rotating member or disk 1 being driven by a magnet outside. This expedient has been adopted in numerous instances and is quite familiar. The casting 4 has a window or opening 20, closed by a piece of transparent substance, such as celluloid, for enabling the readings to be made on the scale which is engraved upon or glued to the rim of the indication-controlling element or shell 7. The shaft 2 is armed with a steel or rubber tip 21, and a handle 22 of fiber or other material is fastened to the central hub of casting 13, completing the hand tachometer.

Fig. 2 in which like numbers designate corresponding parts is self-explanatory.

Attention may be called to the pointed index 23 placed in the opening 20 and marking, when the instrument is not in use, zero on the scale. The latter can be readily put in proper position by turning the collar 16 to the desired angle.

As described the device is adapted for use in the manner of an ordinary hand tachometer. In taking the revolutions of a shaft, the tip 21 is placed firmly into the central cavity of the former, as usual, with the result of entraining the disk 1 and bringing it to full speed by friction. The active medium, preferably air, in the narrow channels between the rotating and pivoted members, by virture of its adhesion and viscosity, is set in circular motion by the primary element, and, giving up the momentum imparted to it on the light secondary shell 7, causes the latter to turn until the torque exerted is balanced by the retractile force of spring 14. Care should be taken to employ a spring the resistance of which increases linearly with displacement, so that the deflections are exactly proportionate to the torsional effect, as otherwise the indications will not be true to scale, even though the instrument be prefect in other respects. In order that the torque should vary rigorously as the speed, the fluid particles in the minute channels between the rotating and pivoted members should move in circles and not in spirals, as necessarily would be the case in a device in which pumping action could take place, and either by making both the primary and secondary elements effectively-imperforate to prevent central admission of air, or otherwise so constructed and conditioned that air may not freely pass from center to periphery between the elements of the moving system unchanging residence of a definite body of the active medium within the system is insured. Where pumping action,—that is to say, acceleration or retardation of fluid movement other than circularly with the primary element,—takes place the deflections increase more rapidly than the speed. It follows that centrifugal force, which is the essential active principle in pumping, must be negligible to avoid compression of the air at the periphery which might result in a sensibly increased torque. To appreciate this, it should be borne in mind that the resistance of a circular strip of the active area would, under such conditions, be proportionate to the fourth power of the diameter so that a slight compression and attendant increase of density of the medium in the peripheral portion would cause a noticeable departure from rigorous proportionality. Experience has demonstrated that when the space is very narrow, as is indispensable for the fullest attainment of the desired proportionality, the centrifugal effect of the active fluid, be it gaseous or liquid, is so small as to be unobservable. The inference is that the actions in the narrow space between the rotative members are capillary or molecular and wholly different in principle from those taking place in a pumping device in which the fluid masses are alternately retarded and accelerated. The scale, which, as will be apparent from the preceding, is uniform in an instrument best embodying my invention, may be so graduated that each degree corresponds to a certain number of revolutions per unit of time, and for convenience, (in shaft-speed indicators as herein shown), the constant is made a round number, as 100. The establishment of this relation through the adjustment of the torsional spring is facilitated by varying the distance between the parts 1 and 7, thus modifying the torque and consequently the deflection, (the torque varying inversely as the distance) while always keeping within the range throughout which linear proportionality is attainable. In calibrating it is necessary to make but one observation comparative with some posi-

tive standard and to plot the balance of the scale accordingly. The conditions above set forth being realized, the reading will be accurately proportionate to the speed and the constant will be correct through the whole range contemplated in the design. Therein lies a very important advantage bearing on manufacture and introduction of devices of this character over those now in use which are based on an empirical scale, tedious to prepare, and unreliable. When desired, the instrument may be rendered dead beat through magnetic or mechanical damping, but by making the torque very great, and the inertia of the secondary element very small, such objectionable complication may be avoided. With a given separation the turning effort is proportionate to the product of the velocity of rotation, the density of the fluid and the aggregate area of the active surfaces, hence by increasing either of these factors the torsion can be augmented at will. It obviously follows that the pull exerted on a circular disk will be as the third power of the diameter and one way of attaining the object is to use a large plate. Other and better ways are illustrated in Figs. 3 and 4 in which the rotating and pivoted elements are composed of interleaved disks or cylinders. The first arrangement permits an indefinite increase of the torque, the second commends itself through the facility of adjustment of the force by varying the active area.

For many reasons it is decidedly advantageous to employ air as the agent in an instrument intended for popular purposes, especially those involving rough use and inexpert handling, since thereby the cost of manufacture may be kept low, the need for ensealing minimized and susceptibility of the parts to easy disassembling and replacement attained. It is, therefore, desirable that the annular confronting surface of the elements,—whether of disk or cylindrical form,—be sufficiently extensive for securing ample torque to make the instrument approximately dead beat and to minimize the percentage of error due to mechanical imperfections.

The foregoing description contains, I believe, all the information necessary for enabling an expert to carry my invention into successful practice. When using the indicator in the manner of an ordinary vehicle speedometer, as in an automobile, the shaft 2 is rigidly or flexibly geared to the driving axle or other suitable part and readings are made in miles per hour, as is customary. As will be apparent many other valuable uses may be served, since the primary element may be connected in suitable electrical or mechanical manner with any rotating part, the speed of which may be translated through a linearly proportionate constant into the desired terms of time and quantity, and the reading scale may be calibrated in such terms. It will also be evident that by accurate workmanship, following the teachings of my invention, instruments at once simple, rugged, and scientifically accurate may be constructed for a very wide range of uses in either huge or tiny sizes; and, since the commercial requirements of accuracy in many fields gives a reasonable range of permissive error, manufacturing considerations may lead to deviations from strict observance of some of the conditions that I have indicated as best attaining a rigorous proportionality of reading. The provision of simple mechanical elements, coöperating primarily only through the viscosity and adhesiveness of the air films intervening therebetween and substantially free from need for ensealing and from error caused by changes of extraneous conditions, especially temperature, affords striking commercial advantages unattainable in any form of speedometer of which I am aware. Therefore while I have described in detail for the purpose of full disclosure a specific and highly advantageous embodiment of my invention, it will be understood that wide variations in the mechanical development thereof may be made without departure from its spirit within the scope of the appended claims.

What I claim is:

1. In combination, fixed supporting means, disconnected alined driving and driven shafts rotatably mounted in said supporting means, relatively thin spaced rigid pieces of material rigidly connected to and arranged coaxially about said driven shaft with broad surfaces opposite each other, and other relatively thin spaced rigid pieces of material rigidly connected to and arranged coaxially with the driving shaft, and being alternated with the first-mentioned pieces between them and having their broad surfaces adjacent to and spaced from the broad surfaces of said other pieces, said pieces all arranged in air, through which torque is frictionally transmitted from the second-mentioned pieces to those first-mentioned.

2. In combination, in a speedometer, disconnected alined driving and driven shafts, a fixed support, said shafts being mounted in said support, a coiled spring having one end secured to said fixed support and the other end secured to said driven shaft, relatively thin spaced rigid pieces of material rigidly connected to and arranged coaxially about said driven shaft with their broad surfaces opposite each other, other relatively thin spaced rigid pieces of material rigidly connected to and arranged coaxially with the driving shaft, and being alternated between said first-mentioned pieces and spaced therefrom, and an air body filling

the spaces between said pieces and constituting the torque-transmitting friction medium therebetween.

3. In combination, in a speedometer, disconnected alined driving and driven shafts, a frame having bearings for said shafts, a coiled spring whose inner end is secured to said driven shaft and having its outer end secured to said frame, spaced rigid pieces of material rigidly connected to and arranged about said driven shaft, and other spaced rigid pieces of material rigidly connected to and arranged about said driving shaft, the former pieces being alternated between the latter pieces in spaced relation with their broad surfaces in close juxtaposition, and with the interspaces between said spaced pieces forming a convoluted air-containing channel therebetween open to the surrounding air.

4. In combination, disconnected alined driving and driven shafts, a fixed support, bearings therefor in said support, a coiled spring having one end secured to the driven shaft and its other end secured to said fixed support, a cup-shaped body secured to one end of said driving shaft coaxially, spaced rigid relatively thin plates secured to said body in parallel relation to each other, another cup-shaped body secured coaxially to said driven shaft and inclosing said plates at their outer edges in spaced relation thereto, other spaced rigid relatively thin plates secured to the second-mentioned body and extending between the first-mentioned plates in spaced relation thereto, and an air body filling the spaces between said pieces frictionally to transmit torque from the driving structure to the driven structure.

5. The combination with means for support and driving and driven shafts rotatably supported thereby, of means to transmit torque from the driving shaft to the driven shaft comprising opposed material-pieces respectively connected with the driving shaft and the driven shaft and arranged to present toward each other relatively-extensive, non-contacting, closely-adjacent surfaces, and a gaseous medium in which said pieces work, said gaseous medium serving frictionally to connect the said opposed material-pieces for transmission of torque from the driving shaft to the driven shaft.

6. In combination, driving and driven elements suitably supported and having confronted annuli always presenting to each other relatively-extensive, non-contacting, closely-adjacent surfaces, said surfaces disposed in a gaseous friction medium, whereby the driving member, by its rotation, induces rotary motion of the driven member through the drag of the gaseous medium intervening between said annuli.

7. In combination, driving and driven elements having in opposed, closely adjacent, non-contacting relation, relatively extensive friction surfaces, and an interposed gaseous body, through which the driving member frictionally drags the driven element.

8. In a speedometer, the combination with supporting means, separately-rotatable driving and driven shafts mounted therein, biasing means for the driven shaft, and means to indicate rotary displacement of the biased shaft in terms of speed, of pieces rotatively carried by said respective shafts, having relatively-extensive, non-contacting, closely-adjacent surfaces arranged to confront each other, and a gaseous medium intervening between said confronting surfaces to coact therewith frictionally to transmit torque from the driving shaft to the biased driven shaft.

9. In a speedometer, the combination of a primary element rotatable at varying speeds, having a plurality of spaced annuli, a biased secondary element, arranged for separate rotary movement and adapted and arranged to indicate speed variations by the extent of its displacement, said secondary element having a plurality of spaced, thin, light annuli, the annuli of said two elements interleaved in non-contacting, closely-adjacent relation always to present toward each other extensive friction surfaces, and an air body, through the films of which, intervening between said annuli, rotation of the primary element may induce speed-indicating displacement of the secondary element.

10. A speedometer wherein a primary, variable-speed element, and a biased, speed-indication-controlling secondary element, that are suitably supported for separate movement, have opposed extensive friction surfaces in non-contacting juxtaposition for frictional communication of power from the primary element to the secondary element through a gaseous medium that intervenes between said friction surfaces.

11. An air drag speedometer, wherein a primary, variable-speed element and a biased speed-indication-controlling secondary element, that are suitably mounted for separate rotary movement in an air-containing casing, have opposed, extensive friction-surfaces in non-contacting juxtaposition, for frictional communication of torque from the primary element to the secondary element through the medium of the casing-contained air.

12. In a speedometer, the combination of an air containing casing, a primary element and a secondary element mounted in said casing for separate movement, said elements having extensive surfaces exposed toward each other in closely contiguous but non-contacting relation for frictional communication of power to one from the other through the intervening air, means resiliently to resist displacement of the second-

ary element, and means to indicate displacement of the secondary element in terms of speed.

13. In combination, in a speedometer, disconnected shafts respectively carrying driving and driven elements that have annuli affording continuous extensive friction surfaces in always confronting non-contacting closely-spaced relation, the driven element being light and biased by a light spring, for ready response to torque transmitted frictionally by air, and the air film-spaces between the elements constituting an open tortuous channel; and an air containing casing inclosing the driving and driven elements, its contained air body forming the sole effective means of torque transmission between the elements.

14. In a speedometer, the combination of rotatable driving and driven elements having in opposed, closely-adjacent non-contacting relation, relatively extensive friction surfaces, means to bias the driven element, means to indicate rotary displacement of said driven element in terms of speed, a casing inclosing said elements and containing air, said contained air body extending in films between the friction surfaces, and forming the sole effective means of torque transmission between the driving and driven elements.

15. In combination, driving and driven elements having in opposed non-contacting relation relatively extensive friction surfaces so closely adjacent that through an interposed gaseous body the driving member frictionally drags the driven member with a torque linearly proportionate to the speed of the former.

16. A rate indicator wherein a freely-rotatable primary and a biased, indication-controlling secondary member, suitably supported for separate movement, have opposed, non-contacting surfaces in such close proximity that through an intervening viscous fluid medium torque is transmitted to the secondary member in linear proportion to the speed of the primary.

17. A rate indicator wherein a freely rotatable primary and a biased, indication-controlling secondary element, suitably supported for separate movement are operatively linked through an intervening viscous and adhesive air body, said elements having opposed, extensive non-contacting surfaces so closely adjacent that the torque transmitted to the secondary element through said air body is substantially in linear proportion to the speed of the primary element.

18. In a speed indicator the combination of two rotatively movable driving and driven members having opposed non-contacting extensive surfaces confining between them a practically constant body of torque-transmitting fluid medium, said surfaces being so closely proximate that the torque transmitted from the driving to the driven member is substantially proportional to the rate of rotation of the former.

19. A speed indicator comprising, in combination, a rotatable body, a second angularly movable body, means to resist displacement of the latter proportionately to the torque applied thereto, and a fluid medium interposed between them, said bodies having opposed annular surfaces in such close proximity that pumping of the medium therebetween is prevented and the deflections of the second body are made proportionate to the speed of the other.

20. A speed indicator, comprising, in combination, a rotatable, variable speed primary element, and a light, pivoted, torsionally-resisted, indication-controlling secondary element, suitably mounted for separate movement and operatively linked with the former through an interposed gaseous medium, said elements having opposed, annular, non-contacting surfaces so extensive and closely proximate that the whirling medium exerts a strong and steady turning effort upon the secondary element, substantially in linear proportion to the speed of the primary.

21. The combination, in a rate indicator, of a freely rotatable primary and a torsionally-resisted indication controlling secondary member mounted for separate movement, with their opposed non-contacting symmetrical surfaces confining therebetween a resident fluid body and arranged in such close proximity that the fluid, entrained in circles by the rotating primary exerts a torque on the secondary member in substantially linear proportion to the speed of the former.

22. In combination, in a speed-indicator, a rotatable primary element, a biased secondary element, a fluid body between and around them, said elements having opposed non-contacting extensive surfaces in such close proximity that the resident fluid body therebetween transmits torque to the secondary in substantially linear proportion to the speed of the primary element, and means for minimizing the rotary effort transmitted through the fluid around the elements.

23. A rate indicator comprising a structure confining a substantially unchanging body of fluid and including an extensive annular surface of a freely rotatable member, arranged to impart circular motion to the fluid, and a confronting annular surface of an indication-controlling angularly-displaceable member, arranged to take up momentum of the fluid, said surfaces being so closely proximate that the torque transmitted through the fluid is proportional to the speed of the rotatable member.

24. A speed indicator comprising two elements mounted for separate movement in a fluid medium, one of the elements being freely rotatable at varying speeds, and the other pivoted and biased against angular displacement, said elements having opposed non-contacting extensive symmetrical surfaces in such close proximity that torque is transmitted through the intervening fluid body in substantially linear proportion to the speed of the primary element, and a member surrounding said elements and minimizing the flow of the fluid along the exterior surfaces of said secondary element.

25. In a device of the character described, the combination of a rotatable primary element, a spring-biased secondary element, a casing surrounding the same and a fluid body filling the casing, said elements having opposed non-contacting annular surfaces in such close proximity that the rotary effort exerted through the fluid body on the secondary element is proportionate to the speed of the primary element, some parts of said casing being so closely proximate to said elements as to minimize torque-transmitting flow of the fluid along the exterior surfaces of the secondary element.

26. An air drag speedometer wherein a rotatable primary variable-speed element and a biased pivoted secondary element, mounted for separate movement in an air-containing casing, have opposed extensive smooth annular surfaces in such close juxtaposition that torque is transmitted through the air intervening between said surfaces in substantially linear proportion to the speed of the rotatable primary element.

27. A speed indicator comprising a closed fluid-filled casing, primary and secondary elements mounted therein, the one for rotation and the other for torsionally resisted angular displacement, said elements having opposed non-contacting extensive annular surfaces forming therebetween a smooth intervening channel wherein confined fluid may move in circles under the influence of the primary member, and between them and the interior surfaces of the casing surrounding channels wherein fluid contiguous to the secondary element may receive circular movement from the primary element, said surfaces being so closely proximate that torque transmission through the fluid is linearly proportionate to the speed of the primary element.

28. The combination, in a speed indicator, of a closed casing, a fluid body and two rotatively-movable members therein, means for rotating one of the members, means for resisting displacement of the other, and means controlled by the last named member for reading its displacement in terms of speed, said two members having opposed, non-contacting imperforate annular surfaces in such close proximity as to confine therebetween a film of fluid through which torque is transmitted to the resistant member in linear proportionality to the speed of the rotatable member.

29. The combination with a closed fluid containing casing, of a plurality of symmetrical bodies with smooth surfaces rotatably mounted therein, means for torsionally restraining some of said bodies, and means for rotating the others, said bodies being placed with their surfaces in such close proximity to each other and to the walls of the casing that the rotating bodies will cause an even and undisturbed circular motion of the fluid and transmit torque to the torsionally restrained bodies in proportion to the speed of the others.

30. In a speed measuring instrument, the combination of driving and driven members having in opposed closely adjacent non-contacting relation relatively extensive smooth friction surfaces, and an interposed gaseous body through which the driving member frictionally drags the driven member.

31. A tachometer comprising, in combination, a rotatably mounted shaft, a smooth annular body fixed thereto, a similar pivoted body, a torsion spring for the latter, indicating means movable with said pivoted body, and an air-containing casing, said bodies having their annular surfaces in such close, non-contacting proximity that the intervening air transmits torque to the pivoted body in substantially linear proportion to the speed of the rotatable body.

32. A tachometer comprising, in combination, a rotatably mounted shaft, a primary element carried thereby, a pivoted secondary element, a torsion spring therefor permitting its angular displacement substantially in proportion to the torque, indicating means operated by the pivoted element and graduated with substantial uniformity, and a fluid-containing casing closely investing part of said rotative system, the opposed surfaces of the elements being so closely proximate to each other and to part of the casing that the fluid-transmitted torque causing deflections of the pivoted body is substantially proportionate to the speed of the primary element.

In testimony whereof I affix my signature in the presence of two subscribing witnesses.

NIKOLA TESLA.

Witnesses:
M. LAWSON DYER,
THOMAS J. BYRNE.

N. TESLA.

LIGHTNING PROTECTOR.

APPLICATION FILED MAY 6, 1916.

1,266,175. Patented May 14, 1918.

Fig. 1.

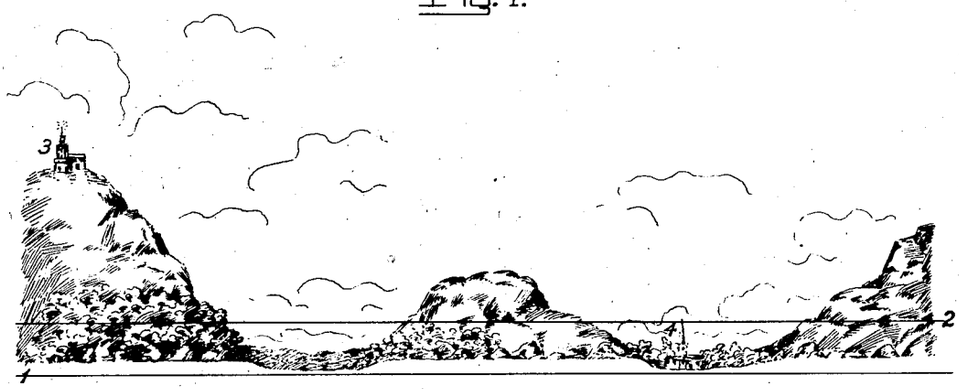

Fig. 3.

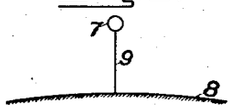

Fig. 2.

Fig. 4.

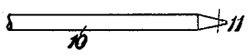

Fig. 5.

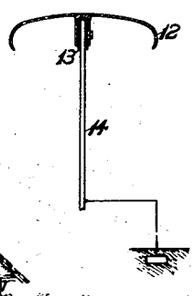

Fig. 6.

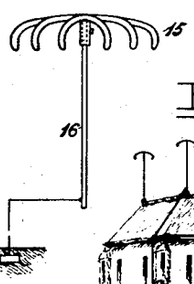

Fig. 7.

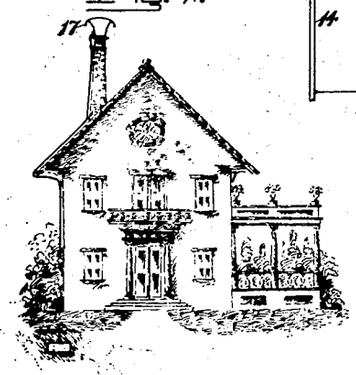

Fig. 8.

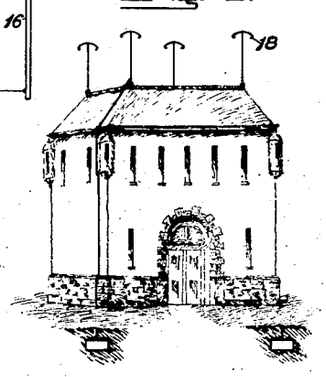

WITNESSES:

John B. McIlvaine

William P. Johnson

INVENTOR.

Nikola Tesla

BY Kerr, Page, Cooper & Hayward

His ATTORNEYS

UNITED STATES PATENT OFFICE.

NIKOLA TESLA, OF NEW YORK, N. Y.

LIGHTNING-PROTECTOR.

1,266,175. Specification of Letters Patent. Patented May 14, 1918.

Application filed May 6, 1916. Serial No. 95,830.

To all whom it may concern:

Be it known that I, NIKOLA TESLA, a citizen of the United States, residing at New York, in the county and State of New York, have invented certain new and useful Improvements in Lightning-Protectors, of which the following is a full, clear, and exact description.

The object of the present invention is to provide lightning protectors of a novel and improved design strictly in conformity with the true character of the phenomena, more efficient in action, and far more dependable in safe-guarding life and property, than those heretofore employed.

To an understanding of the nature of my invention and its basic distinction from the lightning rods of common use, it is necessary briefly to explain the principles upon which my protector is designed as contrasted with those underlying the now-prevailing type of lightning rod.

Since the introduction of the lightning rod by Benjamin Franklin in the latter part of the eighteenth century, its adoption as a means of protection against destructive atmospheric discharges has been practically universal. Its efficacy, to a certain degree, has been unquestionably established through statistical records but there is generally prevalent, nevertheless, a singular theoretical fallacy as to its operation, and its construction is radically defective in one feature, namely its typical pointed terminal. In my lightning protector I avoid points, and use an entirely different type of terminal.

According to the prevailing opinion, the virtue of the Franklin type of lightning rod is largely based on the property of points or sharp edges to give off electricity into the air. As shown by Coulomb, the quantity of electricity per unit area, designated by him "electrical density" increases as the radius of curvature of the surface is reduced. Subsequently it was proved, by mathematical analysis, that the accumulated charge created an outward normal force equal to 2π times the square of the density, and experiment has demonstrated that when the latter exceeds approximately 20 C. G. S. units, a streamer or corona is formed. From these observations and deductions it is obvious that such may happen at a comparatively low pressure if the conductor is of extremely small radius, or pointed, and it is pursuant to a misapplication of these, and other, truths that the commercial lightning rod of today is made very slender and pointed. My invention, on the contrary, while taking cognizance of these truths, correctly applies them in the provision of a lightning protector that distinctively affords an elevated terminal having its outer conducting boundaries arranged on surfaces of large radii of curvature on two dimensions. The principles which underlie my invention and correct application of which dictate the form and manner of installation of my protector, I will now explain in contrast with the conventional pointed lightning rod.

In permitting leakage into the air, the needle-shaped lightning-rod is popularly believed to perform two functions: one to drain the ground of its negative electricity, the other to neutralize the positive of the clouds. To some degree it does both. But a systematic study of electrical disturbances in the earth has made it palpably evident that the action of Franklin's conductor, as commonly interpreted, is chiefly illusionary. Actual measurement proves the quantity of electricity escaping even from many points, to be entirely insignificant when compared with that induced within a considerable terrestrial area, and of no moment whatever in the process of dissipation. But it is true that the negatively charged air in the vicinity of the rod, rendered conductive through the influence of the same, facilitates the passage of the bolt. Therefore it increases the probability of a lighting discharge in its vicinity. The fundamental facts underlying this type of lightning-rod are: First, it attracts lightning, so that it will be struck oftener than would be the building if it were not present; second, it renders harmless most, but not all, of the discharges which it receives; third, by rendering the air conductive, and for other reasons, it is sometimes the cause of damage to neighboring objects; and fourth, on the whole, its power of preventing injury predominates, more or less, over the hazards it invites.

My protector, by contrast, is founded on principles diametrically opposite. Its terminal has a large surface. It secures a very low density and preserves the insulating qualities of the ambient medium, thereby

minimizing leakage, and in thus acting as a quasi-repellant to increase enormously the safety factor.

For the best and most economical installation of protective devices according to my invention, those factors and phenomena that dictate size, number of protectors and physical qualities of the apparatus must be grasped by the installing engineer, and preliminarily, for full understanding of the principles of my invention, these should be briefly explained.

Economical installation, of course, demands that the protective capability of any given equipment be not needlessly greater than is required to meet the maximum expectancies under the conditions surrounding the particular building to be protected, and these depend, partially, as I shall show, upon the character of the landscape proximate to the building site.

In the drawings, Figures 1 to 4 inclusive, are diagrams requisite to illustration of the facts and conditions relevant to the determination of specific installations of my invention, and Figs. 5 to 8 illustrate construction and application of the protectors. Specifically:

Fig. 1 is a landscape suited for purpose of explanation; Figs. 2, 3 and 4 are theoretical diagrams; Figs. 5 and 6 illustrate forms of improved protectors; and Figs. 7 and 8 show buildings equipped with the same.

In Fig. 1, 1 represents Lord Kelvin's "reduced" area of the region, which is virtually part of the extended unruffled ocean-surface. (See "*Papers on Electrostatics and Magnetism*" by Sir William Thomson). Under ordinary weather conditions, when the sky is clear, the total amount of electricity distributed over the land is nearly the same as that which would be contained within its horizontal projection. But in times of storm, owing to the inductive action of the clouds, an immense charge may be accumulated in the locality, the density being greatest at the most elevated portions of the ground. Assuming this, under the conditions existing at any moment, let another spherical surface 2, concentric with the earth, be drawn—which may be called "electrical niveau"—such that the quantities stored over and under it are equal. In other words, their algebraic sum, taken relatively to the imaginary surface, in the positive and negative sense, is *nil*. Objects above the "niveau" are exposed to ever so much more risk than those below. Thus, a building at 3, on a site of excessive density, is apt to be hit sooner or later, while one in a depression 4, where the charge per unit area is very small, is almost entirely safe. It follows that the one building 3 requires more extensive equipment than does the other. In both instances, however, the probability of being struck is decreased by the presence of my protector, whereas it would be increased by the presence of the Franklin rod, for reasons that I will now explain.

An understanding of but part of the truths relative to electrical discharges, and their misapplication due to the want of fuller appreciation has doubtless been responsible for the Franklin lightning rod taking its conventional pointed form, but theoretical considerations, and the important discoveries that have been made in the course of investigations with a wireless transmitter of great activity by which arcs of a volume and tension comparable to those occurring in nature were obtained ("Problems of Increasing Human Energy" *Century Magazine* June 1900 and Patents 645,576, 649,621, 787,412 and 1,119,732) at once establish the fallacy of the hitherto prevailing notion on which the Franklin type of rod is based, show the distinctive novelty of my lightning protector, and guide the constructor in the use of my invention.

In Fig. 2, 5 is a small sphere in contact with a large one, 6, partly shown. It can be proved by the theory of electric images that when the two bodies are charged the mean density on the small one will be only

$$\frac{\pi^2}{6}=1.64493$$

times greater than that on the other. (See "*Electricity and Magnetism*" by Clerk Maxwell). In Fig. 3, the two spheres 7 and 8 are placed some distance apart and connected through a thin wire 9. This system having been excited as before, the density on the small sphere is likely to be many times that on the large one. Since both are at the same potential it follows directly that the densities on them will be inversely as their radii of curvature. If the density of 7 be designated as d and the radius r, then the charge $q=4\pi r^2 d$, the potential $p=4\pi r d$ and the outward force, normal to the surface, $f=2\pi d^2$. As before stated, when d surpasses 20 C. G. S. units, the force f becomes sufficiently intense to break down the dielectric and a streamer or corona appears. In this case $p=80\pi r$. Hence, with a sphere of one centimeter radius disruption would take place at a potential $p=80\pi=251.328$ E. S. units, or 75,398.4 volts. In reality, the discharge occurs at a lower pressure as a consequence of uneven distribution on the small sphere, the density being greatest on the side turned away from the large one. In this respect the behavior of a pointed conductor is just the reverse. Theoretically, it might erroneously be inferred from the preceding, that sharp projections would permit electricity to escape at the lowest potentials, but this does not follow. The reason will be clear from an inspection of Fig.

4, in which such a needle-shaped conductor 10, is illustrated, a minute portion of its tapering end being marked 11. Were this portion removed from the large part 10 and electrically connected with the same through an infinitely thin wire, the charge would be given off readily. But the presence of 10 has the effect of reducing the capacity of 11, so that a much higher pressure is required to raise the density to the critical value. The larger the body, the more pronounced is this influence, which is also dependent on configuration, and is maximum for a sphere. When the same is of considerable size it takes a much greater electromotive force than under ordinary circumstances to produce streamers from the point. To explain this apparent anomaly attention is called to Fig. 3. If the radii of the two spheres, 7 and 8, be designated r and R respectively, their charges q and Q and the distance between their centers D, the potential at 7, due to Q is $\frac{Q}{D}$. But 7, owing to the metallic connection 9, is at the potential

$$\frac{Q}{R}=\frac{q}{r}.$$

When D is comparable to R, the medium surrounding the small sphere will ordinarily be at a potential not much different from that of the latter and millions of volts may have to be applied before streamers issue, even from sharp protruding edges. It is important to bear this in mind, for the earth is but a vast conducting globe. It follows that a pointed lightning-rod must be run far above ground in order to operate at all, and from the foregoing it will be apparent that the pointing of the end, for supposed emissive effect, is in part neutralized by the increasing size below the extreme end, and the larger the rod, for reduction of electrode resistance, the more pronounced is this counter-influence. For these reasons it is important to bear in mind that sufficient thickness of the rod for very low electrode-resistance is rather incompatible with the high emissive capability sought in the needle-like Franklin-rod, but, as hereinafter set forth, it is wholly desirable in the use of my invention, wherein the terminal construction is intended for suppression of charge-emission rather than to foster it.

The notion that Franklin's device would be effective in dissipating terrestrial charges may be traced to early experiments with static frictional machines, when a needle was found capable of quickly draining an insulated electrified body. But the inapplicability of this fact to the conditions of lightning protection will be evident from examination of the simple theoretical principles involved, which at the same time substantiate the desirability of establishing protection by avoiding such drainage. The density at the pointed end f should be inversely as the radius of curvature of the surface, but such a condition is unrealizable. Suppose Fig. 4 to represent a conductor of radius 100 times that of the needle; then, although its surface per unit length is greater in the same radio, the capacity is only double. Thus, while twice the quantity of electricity is stored, the density on the rod is but one-fiftieth of that on the needle, from which it follows that the latter is far more efficient. But the emissive power of any such conductor is circumscribed. Imagine that the "pointed" (in reality blunt or rounded) end be continuously reduced in size so as to approximate the ideal more and more. During the process of reduction, the density will be increasing as the radius of curvature gets smaller, but in a proportion distinctly less than linear; on the other hand, the area of the extreme end, that is, the section through which the charge passes out into the air, will be diminishing as the square of the radius. This relation alone imposes a definite limit to the performance of a pointed conductor, and it should be noticed that the electrode resistance would be augmented at the same time. Furthermore, the efficacy of the rod is much impaired through potential due to the charge of the ground, as has been indicated with reference to Fig. 3. Practical estimates of the electrical quantities concerned in natural disturbances show, moreover, how absolutely impossible are the functions attributed to the pointed lightning conductor. A single cloud may contain 2×10^{12} C. G. S. units, or more, inducing in the earth an equivalent amount, which a number of lightning rods could not neutralize in many years. Particularly to instance conditions that may have to be met, reference is made to the *Electrical World* of March 5, 1904, wherein it appears that upon one occasion approximately 12,000 strokes occurred within two hours within a radius of less than 50 kilometers from the place of observation.

But although the pointed lightning-rod is quite ineffective in the one respect noted, it has the property of attracting lightning to a high degree, firstly on account of its shape and secondly because it ionizes and renders conductive the surrounding air. This has been unquestionably established in long continued tests with the wireless transmitter above-mentioned, and in this feature lies the chief disadvantage of the Franklin type of apparatus.

All of the foregoing serves to show that since it is utterly impracticable to effect an equalization of charges emissively through pointed lightning-rods under the conditions presented by the vast forces of nature great

improvement lies in the attainment of a minimized probability of lightning stroke to the area to be protected coupled with adequate conductivity to render harmless those strokes that may, notwithstanding, occur.

Furthermore, a correct application of the truths that have thus been explained with reference to the familiar pointed type of lightning-rod not only substantiates the theoretical propriety of the form in which I develop my improved lightning protector, but will lead the installing engineer properly to take cognizance of those conditions due to location of the building, with respect to surrounding earth formations and other buildings, probabilities of maximum potential-differences and charge-densities to be expected under the prevailing atmospheric conditions of the site, and desirable electrode resistance and capacities of the protectors installed.

The improved protector, as above stated, behaves in a manner just opposite to the Franklin type and is incomparably safer for this reason. The result is secured by the use of a terminal or conducting surface of large radius of curvature and sufficient area to make the density very small and thereby prevent the leakage of the charge and the ionization of the air. The device may be greatly varied in size and shape but it is essential that all its outer conducting elements should be disposed along an ideal enveloping surface of large radius and that they should have a considerable total area.

In Fig. 5, Fig. 6, Fig. 7 and Fig. 8, different kinds of such terminals and arrangements of same are illustrated. In Fig. 5, 12 is a cast or spun metal shell of ellipsoidal outlines, having on its under side a sleeve with a bushing 13 of porcelain or other insulating material, adapted to be slipped tightly on a rod 14, which may be an ordinary lightning conductor. Fig. 6 shows a terminal 15 made up of rounded or flat metal bars radiating from a central hub, which is supported directly on a similar rod and in electrical contact with the same. The special object of this type is to reduce the wind resistance, but it is essential that the bars have a sufficient area to insure small density, and also that they are close enough to make the aggregate capacity nearly equal to that of a continuous shell of the same outside dimensions. In Fig. 7 a cupola-shaped and earthed roof is carried by a chimney, serving in this way the twofold practical purpose of hood and protector. Any kind of metal may be used in its construction but it is indispensable that its outer surface should be free of sharp edges and projections from which streamers might emanate. In like manner mufflers, funnels and vents may be transformed into effective lightning protectors if equipped with suitable devices or designed in conformity with this invention. Still another modification is illustrated in Fig. 8 in which, instead of one, four grounded bars are provided with as many spun shells or attachments 18, with the obvious object of reducing the risk.

From the foregoing it will be clear that in all cases the terminal prevents leakage of electricity and attendant ionization of the air. It is immaterial to this end whether it is insulated or not. Should it be struck the current will pass readily to the ground either directly or, as in Fig. 5, through a small air-gap between 12 and 14. But such an accident is rendered extremely improbable owing to the fact that there are everywhere points and projections on which the terrestrial charge attains a high density and where the air is ionized. Thus the action of the improved protector is equivalent to a repellant force. This being so, it is not necessary to support it at a great height, but the ground connection should be made with the usual care and the conductor leading to it must be of as small a self-induction and resistance as practicable.

I claim as my invention:

1. A lightning protector consisting of an elevated terminal, having its outer conducting boundaries arranged on surfaces of large radii of curvature in both dimensions, and a grounded conductor of small self-induction, as set forth.

2. A lightning protector composed of a metallic shell of large radius of curvature, and a grounded conductor of small self-induction, as described.

3. Apparatus for protection against atmospheric discharges comprising an earth connection of small resistance, a conductor of small self-induction and a terminal carried by the same and having a large radius of curvature in two dimensions as, and for the purpose set forth.

4. In apparatus for protection against atmospheric discharges an insulated metallic shell of large radius of curvature supported by a grounded conductor and separated from the same through a small air-gap as, and for the purpose described.

5. A lightning protector comprising, in combination, an elevated terminal of large area and radius of curvature in two dimensions, and a grounded conductor of small self-induction, as set forth.

6. In apparatus for protection against lightning discharges, the combination of an elevated metallic roof of large area and radius of curvature in two dimensions, and a grounded conductor of small self-induction and resistance, as described.

7. As an article of manufacture a metallic shell of large radius of curvature provided with a sleeve adapted for attachment

to a lightning rod as, and for the purpose set forth.

8. A lightning protector comprising an ellipsoidal metallic shell and a grounded conductor of small self-induction, as set forth.

9. In apparatus for protection against atmospheric discharges a cupola-shaped metallic terminal of smooth outer surface, in combination with a grounded conductor of small self-induction and resistance, as described.

In testimony whereof I affix my signature.

NIKOLA TESLA.

N. TESLA.

SPEED INDICATOR.

APPLICATION FILED DEC. 18, 1916.

1,274,816.

Patented Aug. 6, 1918.

Fig. 1.

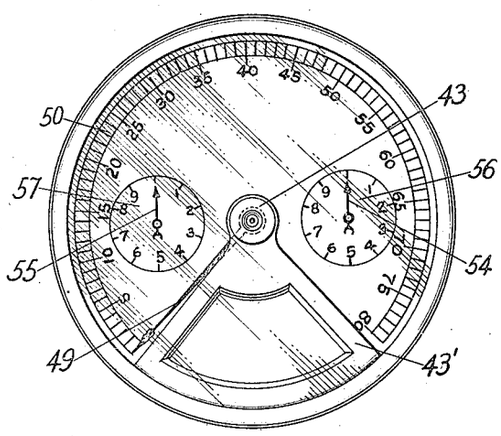

Fig. 3.

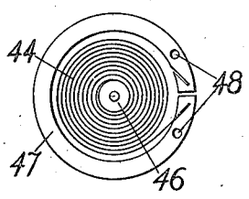

Fig. 2.

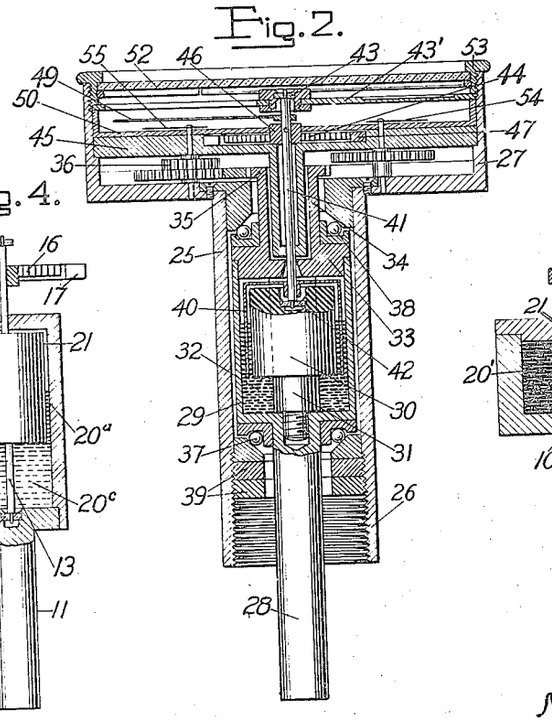

Fig. 4.

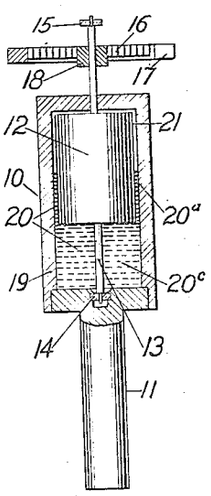

Fig. 5.

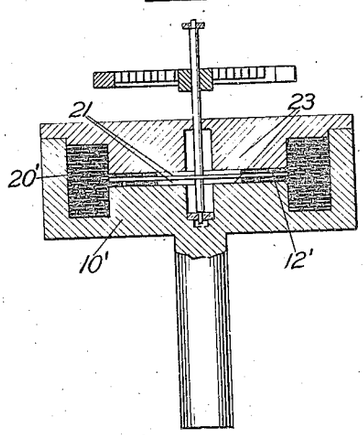

Inventor

Nikola Tesla

By his Attorneys-

Foree Bain & May.

UNITED STATES PATENT OFFICE.

NIKOLA TESLA, OF NEW YORK, N. Y., ASSIGNOR TO WALTHAM WATCH COMPANY, OF WALTHAM, MASSACHUSETTS, A CORPORATION OF MASSACHUSETTS.

SPEED-INDICATOR.

1,274,816. Specification of Letters Patent. Patented Aug. 6, 1918.

Application filed December 18, 1916. Serial No. 137,691.

To all whom it may concern:

Be it known that I, NIKOLA TESLA, a citizen of the United States, residing at New York, in the county and State of New York, have invented certain new and useful Improvements in Speed-Indicators, of which the following is a full, clear, and exact description.

Among the desiderata of speedometer construction are these: that the torque exerted upon the secondary, or indication-giving, element shall be linearly proportional to the speed of the primary member rather than to the square of the speed (as instanced in centrifugal speedometers); that the torsional effect at low speeds shall be strong and steady so that particular delicacy of construction may not be necessary and that minute causes of theoretical errors (such as bearing-friction, spring-inequalities and the like) may be negligible in effect; that the torque may be substantially unaffected by changes of extraneous conditions, as of temperature, atmospheric density and magnetic influence; that the instrument be inherently dead-beat and relatively insensible to mechanical vibration; and that ruggedness, simplicity and economy, for attendant durability, manufacturing facility and low cost, be attained. My present speedometer realizes these advantages and provides, also, an appliance that is suitable for great, as well as very small, velocities, exact in its readings, uniformly graduated as to scale, and unaffected by changes of temperature or pressure within as well as without.

In my Patent No. 1,209,359, dated December 19, 1916, I have described a new type of speed measuring instrument wherein the adhesion and viscosity of a gaseous medium, preferably air, is utilized for torque-transmission from a primary driving to a secondary pivoted and torsionally restrained member under conditions such that the rotary effort exerted upon the latter is linearly proportional to the rate of rotation of the former. The principles of that invention find place in my present construction. Such "air drag" speedometers have been found capable of meeting satisfactorily the commercial requirements for both large and small instruments respectively adapted to measure relatively high and low speeds, but nevertheless it is true that although such instruments, when built for high-speed indication, may be of sturdy construction, they must, when designed for low-speed measurement, be built with great precision and delicacy. This because the inertia of the secondary element must be kept extremely small for desirable promptness of response to very slow starting speeds and consequent feebleness of the turning effort. In some instances, therefore, it is highly desirable to employ a transmitting medium giving a much greater torque than air with concomitant extension of the low-range of accurate speed reading, quickness of response, practicable decrease of size of parts and lessening of sensitiveness to disturbances such as vibration of the instrument as a whole.

All of the stated objects I accomplish by employing as the torque-transmitting medium between the driving and driven elements a body of suitable liquid, (*e. g.*, mercury) under conditions (as set forth in my prior application referred to) proper to secure linear proportionality of deflections, and, further, by making provision automatically to compensate for the changes in the viscosity of the liquid that accompany variations of temperature. The latter equipment is unnecessary in my air-drag speedometer, but mercury and other liquids of relatively great density that might be employed for my present purposes have not the quality of approximate self-compensation for temperature changes that inheres in air, owing to the fact that the viscosity of such a liquid decreases rapidly as its temperature rises, and so to a successful "mercury-drag" instrument temperature compensation is requisite.

The underlying ideas of this invention can be carried out in various ways and are capable of many valuable uses, but for purposes of disclosure, specific reference to a form of speed indicator designed for use on an automobile is adequate.

As in the structure described in my stated prior application, I provide driving and driven members with confronting, closely-

adjacent, non-contacting, smooth, annular friction surfaces, co-acting for transmission of torque through the viscosity and adhesion of interposed thin films of a suitable medium—in this case mercury—under conditions to prevent free exchange of fluid acting on the system, to prevent its local circulation and eddying, to maintain its flow calm and non-turbulent, and to secure as low velocity of the medium with respect to the system as the circumstances of the case may make desirable. These conditions all aid in the attainment of rigorous linear proportionality of deflection of the secondary to the speed of rotation of the primary element under given temperature conditions. Additionally, by suitable construction I make it possible to obtain a nearly perfect compensation for temperature changes so that the deflections may be rigorously proportionate to speed within limits of temperature variation wider than I believe likely to occur in the practical use of the instrument. I attain this compensatory result by providing thermo-responsive means to vary the effective area of the secondary element upon which the medium acts in approximately inverse proportion to temperature-effected changes of viscosity of the medium, and as a preferred specific means to this end, I dispose a body of the liquid beyond, but communicating with, the active portion of the liquid medium and of such quantity that, in effectively the same measure as viscosity and, consequently, the torque is diminished or increased with temperature changes, the active liquid-contacting area of the secondary member is enlarged or reduced owing to the expansion or contraction of the fluid.

In the drawing Figure 1 is a top view of a speedometer;

Fig. 2 is a central vertical section therethrough;

Fig. 3 shows a spring adjusting arrangement; and

Fig. 4 and Fig. 5 are diagrams explanatory of the compensating principle.

In Fig. 4 the primary or driving member is a cup 10 carried by a freely rotatable vertical shaft 11. Within it the cylinder-formed secondary member 12 is mounted on a spindle 13, journaled in jewels 14 and 15 of negligible friction, for pivotal displacement against the restraint of a spiral spring 16, connected at its ends respectively to fixed support 17 and spindle-collar 18, so that by pivotal displacement of the secondary cylinder against the resisting spring tension, the torsional effort exerted on the secondary member may be measured. The spring is such that its displacements are linearly proportionate to the force applied. The lower portion 19, of the cup-chamber is a reservoir filled with the liquid, 20, as mercury, and the liquid normally extends part way up the very narrow interspace 21 between the two elements to contact with less than the whole of their confronting friction surfaces. With mercury as the medium, in an instrument with a secondary cup of one inch diameter I find an interspace-width of 0.05 inch to be satisfactory.

It will now be seen that when shaft 11 is rotated the mercury in the cup is entrained and in turn produces a drag upon the pivoted member 12, the torsional effort being directly proportionate to the active area, viscosity of the fluid and the speed of rotation and, inversely, to the width of the interspace 21 or distance between the rotated and pivoted surfaces. If v be coefficient of viscosity, A the active area, s the speed and d the distance between the juxtaposed rotating and pivoted surfaces, all of the quantities being expressed in proper units, then the twisting force

$$F = \frac{vAs}{d} \text{ dynes.}$$

When, through changes in the external conditions or work performed on the fluid, the temperature of the same is raised, two effects, separate and distinct, are produced. In the first place, the viscosity is diminished according to a certain law, reducing correspondingly the torque, on the other hand, the fluid expands thereby enlarging the areas of the active, or liquid-contacting, surfaces of the elements with an attendant increase of rotary effort. Obviously, then, if it is possible so to relate these actions that they mutually annul each other upon any change of temperature, a complete compensation may be obtained. This result, I have ascertained, can be almost perfectly realized with a liquid, as mercury, by properly proportioning the volume of the chamber-contained, or compensating, component 20^c of the liquid and the component 20^a of the liquid in the interspace 21. With a view to simplifying this explanation, be it supposed that the force F is wholly due to the liquid component 20^a (the drag exerted on the bottom face of cylinder 12 being assumed to be negligible and the bearings to be frictionless). It will be evident that under these conditions the active area will increase as the volume of the fluid. Perfect compensation would require that upon a rise of temperature, the active area, and therefore the torsional effort, be augmented in the same ratio as viscosity is diminished. In other words, the percentage of decrease of viscosity divided by that of increase of area should be the same for all temperatures. Attention is called to the table below showing that, with mercury as the medium, the

value of this fraction at ordinary temperatures is about, or not far from, 20.

Temperature C.	Volume of fluid.	Viscosity of fluid.	Percentage of increase of V.	Percentage of decrease of v.	Value of ratio.
T	V	v	a	b	$\frac{b}{a}$
−20	0.996364	0.018406	−0.3636	−8.2718	22.75
−15	0.997273	0.018038	−0.2727	−6.1029	22.38
−10	0.998182	0.017681	−0.1818	−4.0074	22.04
− 5	0.999091	0.017335	−0.0909	−1.9722	21.70
0	1.000000	0.017000	0	0	21.35
5	1.000909	0.016663	0.0909	1.9107	21.02
10	1.001818	0.016361	0.1818	3.7603	20.68
15	1.002727	0.016057	0.2727	5.5505	20.35
20	1.003636	0.015762	0.3636	7.2706	20.00
25	1.004546	0.015477	0.4546	8.9564	19.70
30	1.005455	0.015202	0.5455	10.5750	19.38
35	1.006365	0.014937	0.6365	12.1410	19.07
40	1.007275	0.014680	0.7275	13.6470	18.75
45	1.008185	0.014433	0.8185	15.1031	18.45
50	1.009095	0.014194	0.9095	16.5073	18.15

This means to say that if the total volume of the liquid is twenty times that contained in the interspace between the elements, the two opposite effects, one increasing and the other reducing, the torque, will approximately balance. This fact is borne out by practical tests and measurements, which have demonstrated that by constructing for this volumetric ratio deflections very closely proportionate to the speed are obtained through a range of temperature variations far greater than ordinarily occurring. For commercial purposes it is quite sufficient to employ a ratio of approximately the stated value as the error involved in a small departure therefrom is inconsiderable. When necessary or desirable, greater precision can be obtained by taking into account four secondary effects, due to expansion or contraction of the walls, which slightly modify the torque; first, changes in the volume of the reservoir; second, in the distance between the opposed surfaces; third, in active area and, fourth, in velocity. Increase in the former two tend to diminish, the latter to augment, the viscous drag. A satisfactory ratio in a cylindrical type of instrument has been found to be about 24.

Fig. 5 illustrates a different arrangement, exemplifying the same principle of employing a reservoir-contained liquid body as the thermo-responsive means to compensate for viscosity changes of the active liquid. In this case a spindle-carried disk 12′ serves as a secondary element, while the primary member consists of a hollow shell 10′ with annular surfaces 23 confronting the disk surfaces and encompassed by an annular chamber 20′, so that under rotation the mercury body fills the chamber and occupies peripheral portions of the interspaces 21 between the flat confronting surfaces. It is hardly necessary to remark that since there are two such interspaces 21, the calculation of capacity of the reservoir or chamber 20′, beside considering the form of the device, must take account of the active mercury body in both interspaces.

In Figs. 1 to 3 a complete commercial instrument embodying my invention is shown. Specifically, 25 is a tube threaded at 26 and carrying at the top a casing head 27 the whole forming a housing for inclosure of the moving parts. The driving shaft 28 carries a cylindrical cup 29 in the bottom of which is screwed a plug 30, turned down as 31 for the purpose of providing the reservoir 32. The cup 29 is closed at its upper end by a tight fitting cover 33, having an upwardly extending shank 34, carrying a pinion 35 to drive suitable wheelwork 36 of the odometer contained in the lower part of the head 27. This structure, providing the primary element, is rotatable in ball-bearings 37 and 38 fixed in tube 25 and adjustable by means of nuts 39.

The secondary element is made of a very thin metal cup 40, inverted and secured to slender spindle 41 mounted in jeweled bearings 42 and 43, respectively carried in a cavity of plug 30 and by a frame arm 43′. A running bearing 42 can usually be employed without detriment, but a fixed bearing may be used if desired. The weight of the secondary member with its movable attachments should be so determined that the upward thrust against jewel 43 is very slight. The torsional twist of secondary cup 40 is resisted by a spiral spring 44 lodged in a turned recess of a frame plate 45, having one of its ends connected to collar 46 fast on the spindle 41 and the other to a split ring 47 spring-gripping the wall of the recess in plate 45. By inserting pincers in holes 48 (Fig. 5) and contracting the ring it is freed sufficiently for adjustment to bring the spindle-carried indicator 49 to point to zero of the graduated scale 50 that, if all of the principles of my invention are best embodied, may be made uniformly graduated. The scale is carried on plate 45 and, together with the support 43′, is held in place by a rim 53 that suitably carries the glass cover 52. The odometer may have any suitable number of indicating elements of different orders suitably geared, the two hands 54 and 55 sweeping over graduated dials 56 and 57, typifying any suitable construction.

It will be apparent that the high torque at low speed developed through the mercurial transmitting medium makes the instrument very effective as one for use on automobiles, and while it is true that with a heavy fluid, as mercury, the range of velocity of the medium throughout which proportionality of torque to speed, under the described conditions, is rigorously linear

falls below the range available where air is the medium, a construction presenting the friction surfaces of the elements in a cylinder-form as suggested in Figs. 2 and 4 permits of the use of a suitably constructed device with a small-diameter secondary to measure very high speeds without imparting to the medium a linear velocity beyond its stated range. For the successful use of mercury in the present described instrument (or other rotary devices) it is important that the mercury be pure, the surfaces contacting therewith smooth, clean and non-granular (preferably nickel-plated or made of non-corrosive, high grade steel) to minimize abrasion and keep the mercury clean, and that the linear velocity of the mercury be kept low, preferably below six feet per second, in order that it may not break up into minute droplets or apparently-powdered form.

What I claim is:

1. In combination, driving and driven elements, having opposed, closely-adjacent, non-contacting friction surfaces; a liquid body interposed between active areas thereof through which the driving element frictionally drags the driven one and thermo-responsive means for varying the active area of the secondary in approximately inverse proportion to the thermo-effected variations in viscosity of the liquid.

2. In a temperature-compensating speed indicator, the combination of variable speed primary and movement-restrained secondary elements that are suitably supported for separate movement and have opposed friction surfaces in close but non-contacting juxtaposition; an interposed liquid body contacting normally with active areas of said surfaces less than the whole thereof, and thermo-responsive means for varying the liquid-contacting areas of said elements approximately inversely to the thermo-effected variations of liquid viscosity.

3. In a temperature-compensating speed indicator, the combination of variable speed primary and movement-restrained secondary elements that are suitably supported for separate movement and have opposed closely-adjacent non-contacting friction surfaces; an interposed liquid body and thermo-responsive means for varying the active areas of said surfaces in predetermined proportion to thermally-effected changes of liquid viscosity.

4. In a temperature-compensating speed indicator, the combination of variable speed primary and movement-restrained secondary elements that are suitably supported for separate movement and have opposed closely-adjacent non-contacting friction surfaces; a liquid body partially filling the interspace between said surfaces, and thermo-responsive means for varying the liquid quantity within in said interspace in predetermined inverse ratio to thermo-effected changes of liquid viscosity.

5. The combination with driving and driven elements having opposed, closely-adjacent, non-contacting friction surfaces and an interposed liquid body contacting with active portions thereof, of a compensating liquid body communication with the said interposed or active one, and proportioned to vary the effective contact area of the active liquid approximately inversely to its temperature-effected viscosity changes.

6. The combination with freely movable driving and movement-resisted driven elements, having friction surfaces in opposed, closely-adjacent non-contacting relation, of means providing a reservoir, communicating with the interspace between said elements, and a liquid body having a reservoir-filling component and an active torque-transmitting component that normally, partly occupies said interspace, these components proportioned volumetrically for temperature-effected change of the contact area of the active component in approximately inverse ratio to the attendant changes of liquid viscosity.

7. In a temperature-compensating speed indicator, the combination of a freely rotatable cylindrical cup; a cylinder-formed member in the upper portion thereof, pivoted and spring-restrained; and a body of mercury filling the reservoir-portion of the cup below the pivoted member and extending partially in the narrow interspace between the cup and cylinder.

In testimony whereof I affix my signature.

NIKOLA TESLA.

N. TESLA.

SHIP'S LOG.

APPLICATION FILED DEC. 18, 1916.

1,314,718.

Patented Sept. 2, 1919.

Fig. 6.

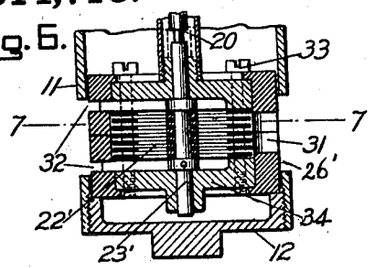

Fig. 1.

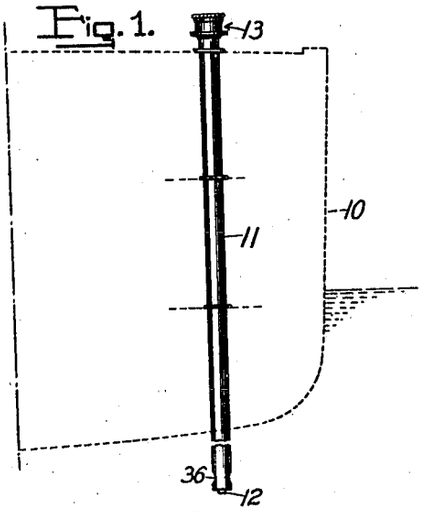

Fig. 7.

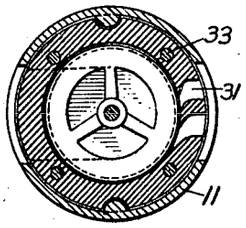

Fig. 3.

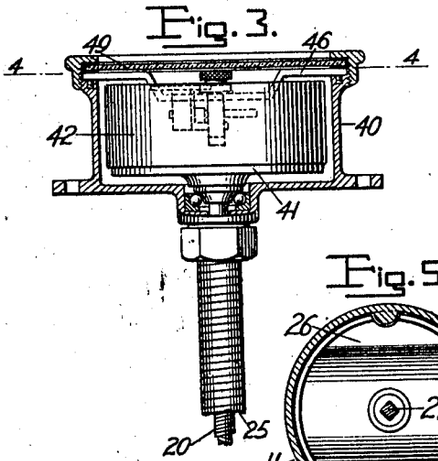

Fig. 2.

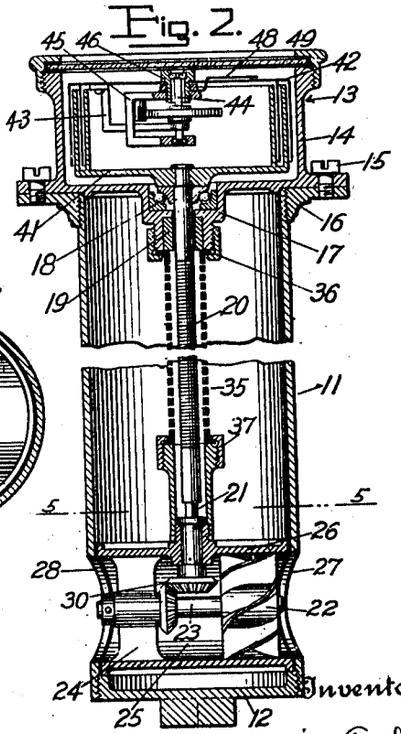

Fig. 5.

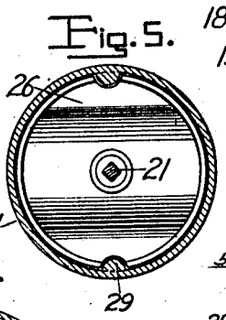

Fig. 4.

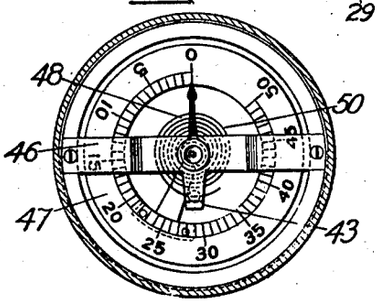

Inventor

Nikola Tesla

By his Attorneys

Foree Bainbridge

UNITED STATES PATENT OFFICE.

NIKOLA TESLA, OF NEW YORK, N. Y., ASSIGNOR TO WALTHAM WATCH COMPANY, OF WALTHAM, MASSACHUSETTS, A CORPORATION OF MASSACHUSETTS.

SHIP'S LOG.

1,314,718. Specification of Letters Patent. Patented Sept. 2, 1919.

Application filed December 18, 1916. Serial No. 137,690.

To all whom it may concern:

Be it known that I, NIKOLA TESLA, a citizen of the United States, residing at New York, in the county and State of New York, have invented certain new and useful Improvements in Ships' Logs, of which the following is a full, clear, and exact description.

My invention provides a ship's log of novel and advantageous construction and operation, designed to give instantaneous rate-readings, as in knots, or miles per hour. The customary log is trailed astern, twisting the flexible connector that drives a revolution-counter on the vessel, and many disadvantages of such arrangement are obvious.

In my instrument I combine very advantageously a propeller rotatable proportionately to vessel-speed and a speed indicator driven by it and reading directly in the desired terms, preferably upon a substantially uniformly-graduated scale.

In the drawings, Figure 1 diagrams the log in use;

Fig. 2 shows it in vertical section;

Fig. 3 illustrates speed-indicator parts with the casing broken away;

Fig. 4 is a section on line 4—4 of Fig. 3;

Fig. 5 is a section on line 5—5 of Fig. 2.

Fig. 6 shows in section a turbine form of propeller, and

Fig. 7 is a section on line 7—7 of Fig. 6.

To the vessel 10, preferably near its bow, is suitably affixed a tube or barrel, 11, with a threaded plug 12 closing its lower end, where the tube preferably dips below the level of the boat's keel. At the top—near the deck or other point of observation—the speed-indicator 13 is mounted, its casing 14, that carries all of the moving parts being detachably secured, as by screws 15, to the top-flange 16 of the barrel. A boss 17 on the underside of casing 14 supports the ball bearing 18 for the primary element of the indicator and a seal 19 for its flexible drive-shaft 20 that connects preferably through a slip-joint squared union, 21, to a propeller-driven part. The propeller may be of common form as shown in Fig. 2, at 22, with its shaft 23 horizontally mounted in the bracket 24 spanning the tubular passage 25 of a housing 26 that fits neatly in the barrel and is held in register with ports 27 and 28 by guide-ribs 29. Such a propeller drives the shaft 20 through bevel gears 30.

More advantageously in some respects, however, a turbine propeller of simple construction may be employed, as shown in Figs. 6 and 7. The rotor in this instance has a vertical shaft 23′ and the wheel 22′ is formed of thin, parallel, closely-spaced disks each having a central opening. The wheel is arranged in a cylindrical housing 26′ that has inlet nozzles 31 and outlet ports 32 so disposed that the water enters the interspaces between the disks tangentially to rotate the wheel and finds escape through the ports 32 that communicate with the central orifices of the disks. This type of construction has many advantages due to its reliability and efficiency, but preferably it should be constructed to permit the disks and casing to be readily cleaned, casing 26′ being made in two horizontal sections bolted together as at 33, each section having a detachable head 34.

A flexible and longitudinally elastic sleeve, 35, of coiled strip metal is fastened at opposite ends by threaded caps 36 and 37 to the boss 17 and to a threaded part on the propeller casing, so that the propeller mechanism is supported from the indicator casing for removal therewith.

By suitably constructing the submerged parts of bronze, enameling them, or otherwise making them substantially immune to corrosion, adequate durability is attained, and the facility of removal for cleaning, oiling, repairs, etc., makes the under-water parts easy to maintain in good order. The pliant shaft, slip-connected at one end and its stout protective sleeve, strong yet flexible and extensible frees the bearings from strain and makes the connection uniformly efficient under changes of conditions as to temperature, etc.

The speed indicator 13 preferably provides as its primary element 41 a multiple-walled cup, fast on shaft 20, and as a secondary, or indication-giving, member a lightly-constructed pivoted, multiple-walled inverted cup structure 42, with the annular walls interleaved in closely adjacent non-contacting relation for transmission of turning effort from the one to the other through intervening films of the casing-contained fluid medium, as air, in approximately linear proportion to the speed of the primary. Specifically the secondary cups are dependent from an arm 43 projecting from

spindle 44, having jewel bearings in yoke 45 carried by bridge-piece, 46, that spans the casing 14, and the dial 47, calibrated according to a suitable constant to read in knots, or miles per hour or other units of rate, is borne by the cup-structure below a fixed hand 48 visible through the sealed cover-glass 49. A coiled spring 50, connected at its ends respectively to the pivoted secondary element and to a fixed support, resists the pivotal displacement of the indication-giving member. The light secondary element, quickly and accurately responsive approximately directly proportionately to the speed of the propeller-driven primary member, and little affected by tremors, temperature changes and other extraneous influences, gives adequately accurate readings in the desired terms, showing instantaneously changes of the vessel's speed.

What I claim is:

1. In ship's log, a barrel having water flow openings near its bottom, a speed-indicator detachably secured to one end of the barrel, a flexible shaft for the speed-indicator, a propeller connected to the shaft-end, a housing for the propeller, registering with the water-flow openings, and a sleeve surrounding the shaft uniting the housing and casing, for extraction of the propeller-parts when the speed-indicator is removed from the barrel.

2. In a ship's log, a barrel, a speed indicator having a casing secured detachably to the upper or observation end of the barrel, a propeller having a housing and adapted to pass through the barrel, a flexible shaft slip-fitted to connect the propeller and speed indicator, and a flexible sleeve connecting the propeller-housing and indicator-casing.

3. In a ship's log, the combination of a barrel having waterflow openings near its bottom, a speed indicator having a casing detachably secured to one end of the barrel, a shaft for said speed indicator extending centrally through the barrel, a propeller for the shaft end, a housing for the propeller, said housing being smaller than the barrel, and a sleeve surrounding the shaft uniting said housing and said indicator casing for effecting extraction of the propeller parts when the speed indicator is removed from the barrel.

4. In a ship's log, a barrel, a speed indicator having a casing secured detachably to the upper end of the barrel, a propeller having a housing and adapted to pass through the barrel, there being registering openings near the bottom of the barrel and in said housing for water-flow to the propeller, a flexible shaft connecting said propeller and speed indicator and making axially slidable connection with one thereof, and a flexible and axially expansible sleeve connecting the propeller housing and the indicator casing for extraction of the propeller parts when the speed indicator is removed from the barrel.

In testimony whereof I affix my signature.

NIKOLA TESLA.

N. TESLA.

VALVULAR CONDUIT.

APPLICATION FILED FEB. 21, 1916. RENEWED JULY 8, 1919.

1,329,559. Patented Feb. 3, 1920.

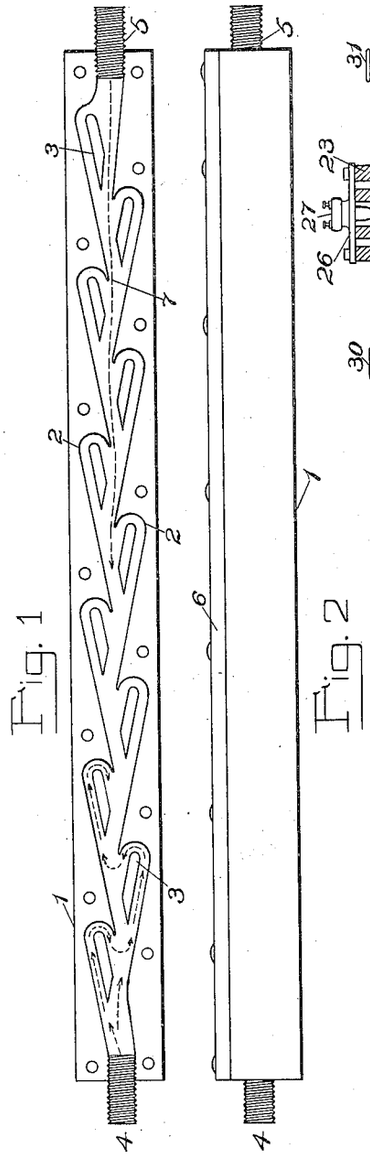

Fig. 1

Fig. 2

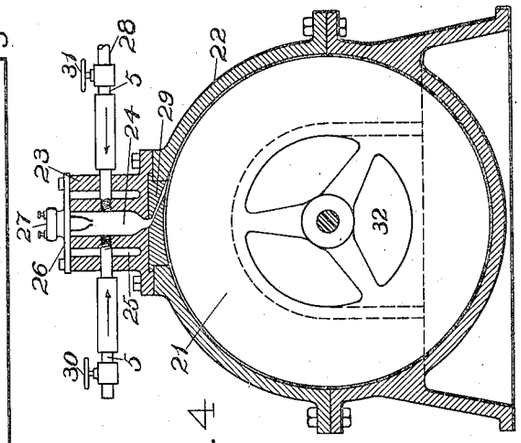

Fig. 4

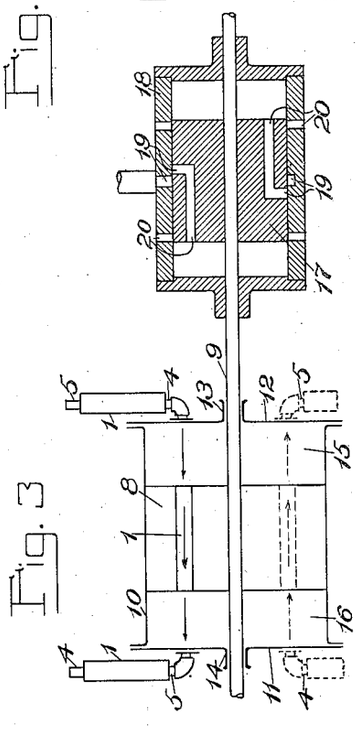

Fig. 3

INVENTOR

Nikola Tesla

BY

Pierce, Page, Cooper & Maynard

ATTORNEY.

UNITED STATES PATENT OFFICE.

NIKOLA TESLA, OF NEW YORK, N. Y.

VALVULAR CONDUIT.

1,329,559. Specification of Letters Patent. Patented Feb. 3, 1920.

Application filed February 21, 1916, Serial No. 79,703. Renewed July 8, 1919. Serial No. 309,482.

To all whom it may concern:

Be it known that I, NIKOLA TESLA, a citizen of the United States, residing at New York, in the county and State of New York, have invented certain new and useful Improvements in Valvular Conduits, of which the following is a full, clear, and exact description.

In most of the machinery universally employed for the development, transmission and transformation of mechanical energy, fluid impulses are made to pass, more or less freely, through suitable channels or conduits in one direction while their return is effectively checked or entirely prevented. This function is generally performed by devices designated as valves, comprising carefully fitted members the precise relative movements of which are essential to the efficient and reliable operation of the apparatus. The necessity of, and absolute dependence on these, limits the machine in many respects, detracting from its practical value and adding greatly to its cost of manufacture and maintenance. As a rule the valve is a delicate contrivance, very liable to wear and get out of order and thereby imperil ponderous, complex and costly mechanism and, moreover, it fails to meet the requirements when the impulses are extremely sudden or rapid in succession and the fluid is highly heated or corrosive.

Though these and other correlated facts were known to the very earliest pioneers in the science and art of mechanics, no remedy has as yet been found or proposed to date so far as I am aware, and I believe that I am the first to discover or invent any means, which permit the performance of the above function without the use of moving parts, and which it is the object of this application to describe.

Briefly expressed, the advance I have achieved consists in the employment of a peculiar channel or conduit charactized by valvular action.

The invention can be embodied in many constructions greatly varied in detail, but for the explanation of the underlying principle it may be broadly stated that the interior of the conduit is provided with enlargements, recesses, projections, baffles or buckets which, while offering virtually no resistance to the passage of the fluid in one direction, other than surface friction, constitute an almost impassable barrier to its flow in the opposite sense by reason of the more or less sudden expansions, contractions, deflections, reversals of direction, stops and starts and attendant rapidly succeeding transformations of the pressure and velocity energies.

For the full and complete disclosure of the device and of its mode of action reference is made to the accompanying drawings in which—

Figure 1 is a horizontal projection of such a valvular conduit with the top plate removed.

Fig. 2 is side view of the same in elevation.

Fig. 3 is a diagram illustrative of the application of the device to a fluid propelling machine such as, a reciprocating pump or compressor, and

Fig. 4 is a plan showing the manner in which the invention is, or may be used, to operate a fluid propelled rotary engine or turbine.

Referring to Fig. 1, 1 is a casing of metal or other suitable material which may be cast, milled or pressed from sheet in the desired form. From its side-walls extend alternatively projections terminating in buckets 2 which, to facilitate manufacture are congruent and spaced at equal distances, but need not be. In addition to these there are independent partitions 3 which are deemed of advantage and the purpose of which will be made clear. Nipples 4 and 5, one at each end, are provided for pipe connection. The bottom is solid and the upper or open side is closed by a fitting plate 6 as shown in Fig. 2. When desired any number of such pieces may be joined in series, thus making up a valvular conduit of such length as the circumstances may require.

In elucidation of the mode of operation let it be assumed that the medium under pressure be admitted at 5. Evidently, its approximate path will be as indicated by the dotted line 7, which is nearly straight, that is to say, if the channel be of adequate cross-section, the fluid will encounter a very small resistance and pass through freely and undisturbed, at least to a degree. Not so if the entrance be at the opposite end 4. In this case the flow will not be smooth

and continuous, but intermittent, the fluid being quickly deflected and reversed in direction, set in whirling motion, brought to rest and again accelerated, these processes following one another in rapid succession. The partitions 3 serve to direct the stream upon the buckets and to intensify the actions causing violent surges and eddies which interfere very materially with the flow through the conduit. It will be readily observed that the resistance offered to the passage of the medium will be considerable even if it be under constant pressure, but the impediments will be of full effect only when it is supplied in pulses and, more especially, when the same are extremely sudden and of high frequency. In order to bring the fluid masses to rest and to high velocity in short intervals of time energy must be furnished at a rate which is unattainable, the result being that the impulse cannot penetrate very far before it subsides and gives rise to movement in the opposite direction. The device not only acts as a hinderment to the bodily return of particles but also, in a measure, as a check to the propagation of a disturbance through the medium. Its efficacy is chiefly determined; first, by the magnitude of the ratio of the two resistances offered to disturbed and to undisturbed flow, respectively, in the directions from 4 to 5 and from 5 to 4, in each individual element of the conduit; second, by the number of complete cycles of action taking place in a given length of the valvular channel and, third, by the character of the impulses themselves. A fair idea may be gained from simple theoretical considerations.

Examining more closely the mode of operation it will be seen that, in passing from one to the next bucket in the direction of disturbed flow, the fluid undergoes two complete reversals or deflections through 180 degrees while it suffers only two small deviations from about 10 to 20 degrees when moving in the opposite sense. In each case the loss of head will be proportionate to a hydraulic coefficient dependent on the angle of deflection from which it follows that, for the same velocity, the ratio of the two resistances will be as that of the two coefficients. The theoretical value of this ratio may be 200 or more, but must be taken as appreciably less although the surface friction too is greater in the direction of disturbed flow. In order to keep it as large as possible, sharp bonds should be avoided, for these will add to both resistances and reduce the efficiency. Whenever practicable, the piece should be straight; the next best is the circular form.

That the peculiar function of such a conduit is enhanced by increasing the number of buckets or elements and, consequently, cyclic processes in a given length is an obvious conclusion, but there is no direct proportionality because the successive actions diminish in intensity. Definite limits, however, are set constructively and otherwise to the number of elements per unit length of the channel, and the most economical design can only be evolved through long experience.

Quite apart from any mechanical features of the device the character of the impulses has a decided influence on its performance and the best results will be secured, when there are produced at 4, sudden variations of pressure in relatively long intervals, while a constant pressure is maintained at 5. Such is the case in one of its most valuable industrial applications which will be specifically described.

In order to conduce to a better understanding, reference may first be made to Fig. 3 which illustrates another special use and in which 8 is a piston fixed to a shaft 9 and fitting freely in a cylinder 10. The latter is closed at both ends by flanged heads 11 and 12 having sleeves or stuffing boxes 13 and 14 for the shaft. Connection between the two compartments, 15 and 16, of the cylinder is established through a valvular conduit and each of the heads is similarly equipped. For the sake of simplicity these devices are diagrammatically shown, the solid arrows indicating the direction of undisturbed flow. An extension of the shaft 9 carries a second piston 17 accurately ground to and sliding easily in a cylinder 18 closed at the ends by plates and sleeves as usual. Both piston and cylinder are provided with inlet and outlet ports marked, respectively, 19 and 20. This arrangement is familiar, being representative of a prime mover of my invention, termed "mechanical oscillator", with which it is practicable to vibrate a system of considerable weight many thousand times per minute.

Suppose now that such rapid oscillations are imparted by this or other means to the piston 8. Bearing in mind the proceeding, the operation of the apparatus will be understood at a glance. While moving in the direction of the solid arrow, from 12 to 11, the piston 8 will compress the air or other medium in the compartment 16 and expel it from the same, the devices in the piston and head 11 acting, respectively, as closed and open valves. During the movement of the piston in the opposite direction, from 11 to 12, the medium which has meanwhile filled the chamber 15 will be transferred to compartment 16, egress being prevented by the device in head 12 and that in the piston allowing free passage. These processes will be repeated in very quick succession. If the nipples 4 and 5 are put in communication with independent reservoirs, the oscilla-

tions of the piston 8 will result in a compression of the air at 4 and rarefaction of the same at 5. Obviously, the valvular channels being turned the other way, as indicated by dotted lines in the lower part of the figure, the opposite will take place. The devices in the piston have been shown merely by way of suggestion and can be dispensed with. Each of the chambers 15 and 16 being connected to two conduits as illustrated, the vibrations of a solid piston as 8 will have the same effect and the machine will then be a double acting pump or compressor. It is likewise unessential that the medium should be admitted to the cylinder through such devices for in certain instances ports, alternately closed and opened by the piston, may serve the purpose. As a matter of course, this novel method of propelling fluids can be extended to multistage working in which case a number of pistons will be employed, preferably on the same shaft and of different diameters in conformity with well established principles of mechanical design. In this way any desired ratio of compression or degree of rarefaction may be attained.

Fig. 4 exemplifies a particularly valuable application of the invention to which reference has been made above. The drawing shows in vertical cross section a turbine which may be of any type but is in this instance one invented and described by me and supposed to be familiar to engineers. Suffice it to state that the rotor 21 of the same is composed of flat plates which are set in motion through the adhesive and viscous action of the working fluid, entering the system tangentially at the periphery and leaving it at the center. Such a machine is a thermodynamic transformer of an activity surpassing by far that of any other prime mover, it being demonstrated in practice that each single disk of the rotor is capable of performing as much work as a whole bucket-wheel. Besides, a number of other advantages, equally important, make it especially adapted for operation as an internal combustion motor. This may be done in many ways, but the simplest and most direct plan of which I am aware is the one illustrated here. Referring again to the drawing, the upper part of the turbine casing 22 has bolted to it a separate casting 23, the central cavity 24 of which forms the combustion chamber. To prevent injury through excessive heating a jacket 25 may be used, or else water injected, and when these means are objectionable recourse may be had to air cooling, this all the more readily as very high temperatures are practicable. The top of casting 23 is closed by a plate 26 with a sparking or hot wire plug 27 and in its sides are screwed two valvular conduits communicating with the central chamber 24. One of these is, normally, open to the atmosphere while the other connects to a source of fuel supply as a gas main 28. The bottom of the combustion chamber terminates in a suitable nozzle 29 which consists of separate piece of heat resisting material. To regulate the influx of the explosion constituents and secure the proper mixture the air and gas conduits are equipped, respectively, with valves 30 and 31. The exhaust openings 32 of the rotor should be in communication with a ventilator, preferably carried on the same shaft and of any suitable construction. Its use, however, while advantageous, is not indispensable the suction produced by the turbine rotor itself being, in some cases at least, sufficient to insure proper working. This detail is omitted from the drawing as unessential to the understanding.

But a few words will be needed to make clear the mode of operation. The air valve 30 being open and sparking established across terminals 27, the gas is turned on slowly until the mixture in the chamber 24 reaches the critical state and is ignited. Both the conduits behaving, with respect to efflux, as closed valves, the products of combustion rush out through the nozzle 29 acquiring still greater velocity by expansion and, imparting their momentum to the rotor 21, start it from rest. Upon the subsidence of the explosion the pressure in the chamber sinks below the atmospheric owing to the pumping action of the rotor or ventilator and new air and gas is permitted to enter, cleaning the cavity and channels and making up a fresh mixture which is detonated as before, and so on, the successive impulses of the working fluid producing an almost continuous rotary effort. After a short lapse of time the chamber becomes heated to such a degree that the ignition device may be shut off without disturbing the established régime. This manner of starting the turbine involves the employment of an unduly large combustion chamber which is not commendable from the economic point of view, for not only does it entail increased heat losses but the explosions cannot be made to follow one another with such rapidity as would be desirable to insure the best valvular action. When the chamber is small an auxiliary means for starting, as compressed air, may be resorted to and a very quick succession of explosions can then be obtained. The frequency will be the greater the stronger the suction, and may, under certain conditions, reach hundreds and even thousands per second. It scarcely need be stated that instead of one several explosion chambers may be used for cooling purposes and also to increase the number of active pulses and the output of the machine.

Apparatus as illustrated in Fig. 4 presents the advantages of extreme simplicity,

cheapness and reliability, there being no compressor, buckets or troublesome valve mechanism. It also permits, with the addition of certain well-known accessories, the use of any kind of fuel and thus meets the pressing necessity of a self-contained, powerful, light and compact internal combustion motor for general work. When the attainment of the highest efficiency is the chief object, as in machines of large size, the explosive constituents will be supplied under high pressure and provision made for maintaining a vacuum at the exhaust. Such arrangements are quite familiar and lend themselves so easily to this improvement that an enlargement on this subject is deemed unnecessary.

The foregoing description will readily suggest to experts modifications both as regards construction and application of the device and I do not wish to limit myself in these respects. The broad underlying idea of the invention is to permit the free passage of a fluid through a channel in the direction of the flow and to prevent its return through friction and mass resistance, thus enabling the performance of valve functions without any moving parts and thereby extending the scope and usefulness of an immense variety of mechanical appliances.

I do not claim the methods of and apparatus for the propulsion of fluids and thermodynamic transformation of energy herein disclosed, as these will be made subjects of separate applications.

I am aware that asymmetrical conduits have been constructed and their use proposed in connection with engines, but these have no similarity either in their construction or manner of employment with my valvular conduit. They were incapable of acting as valves proper, for the fluid was merely arrested in pockets and deflected through 90°, this result having at best only 25% of the efficiency attained in the construction herein described. In the conduit I have designed the fluid, as stated above, is deflected in each cycle through 360°, and a co-efficient approximating 200 can be obtained so that the device acts as a slightly leaking valve, and for that reason the term "valvular" has been given to it in contrast to asymmetrical conduits, as heretofore proposed, which were not valvular in action, but merely asymmetrical as to resistance.

Furthermore, the conduits heretofore constructed were intended to be used in connection with slowly reciprocating machines, in which case enormous conduit-length would be necessary, all this rendering them devoid of practical value. By the use of an effective valvular conduit, as herein described, and the employment of pulses of very high frequency, I am able to condense my apparatus and secure such perfect action as to dispense successfully with valves in numerous forms of reciprocating and rotary engines.

The high efficiency of the device, irrespective of the character of the pulses, is due to two causes: first, rapid reversal of direction of flow and, second, great relative velocity of the colliding fluid columns. As will be readily seen each bucket causes a deviation through an angle of 180°, and another change of 180° occurs in each of the spaces between two adjacent buckets. That is to say, from the time the fluid enters or leaves one of the recesses to its passage into, or exit from, the one following a complete cycle, or deflection through 360°, is effected. Observe now that the velocity is but slightly reduced in the reversal so that the incoming and deflected fluid columns meet with a relative speed, twice that of the flow, and the energy of their impact is four times greater than with a deflection of only 90°, as might be obtained with pockets such as have been employed in asymmetrical conduits for various purposes. The fact is, however, that in these such deflection is not secured, the pockets remaining filled with comparatively quiescent fluid and the latter following a winding path of least resistance between the obstacles interposed. In such conduits the action cannot be characterized as "valvular" because some of the fluid can pass almost unimpeded in a direction opposite to the normal flow. In my construction, as above indicated, the resistance in the reverse may be 200 times that in the normal direction. Owing to this a comparatively very small number of buckets or elements is required for checking the fluid. To give a concrete idea, suppose that the leak from the first element is represented by the fraction $\frac{1}{X}$, then after the nth bucket is traversed, only a quantity $\left(\frac{1}{X}\right)^n$ will escape and it is evident that X need not be a large number to secure a nearly perfect valvular action.

What I claim is:

1. A valvular conduit having interior walls of such conformation as to permit the free passage of fluid through it in the direction of flow but to subject it to rapid reversals of direction when impelled in the opposite sense and thereby to prevent its return by friction and mass resistance.

2. A valvular conduit composed of a closed passageway having recesses in its walls so formed as to permit a fluid to pass freely through it in the direction of flow, but to subject it to rapid reversals of direction when impelled in an opposite sense and thereby interpose friction and mass resistance to the return passage of the same.

3. A valvular conduit composed of a tube

or passageway with rigid interior walls formed with a series of recesses or pockets with surfaces that reverse a fluid tending to flow in one direction therein and thereby check or prevent flow of the fluid in that direction.

4. A valvular conduit with rigid interior walls of such character as to offer substantially no obstacle to the passage through it of fluid impulses in one direction, but to subject the fluid to rapid reversals of direction and thereby oppose and check impulses in the opposite sense.

5. A valvular conduit with rigid interior walls formed to permit fluid impulses under pressure to pass freely through it in one direction, but to subject them to rapid reversals of direction through 360° and thereby check their progress when impelled in the opposite sense.

6. A valvular conduit with rigid interior walls which permit fluid impulses to flow through it freely in one direction, formed at a plurality of points to reverse such fluid impulses when impelled in the opposite direction and check their flow.

7. A valvular conduit with rigid interior walls having pockets or recesses, and transversely inclined intermediate baffles to permit the free passage of fluid impulses in one direction but to deflect and check them when impelled in the opposite direction.

In testimony whereof I affix my signature.

NIKOLA TESLA.

N. TESLA.

FLOW METER.

APPLICATION FILED DEC. 18, 1916.

1,365,547. Patented Jan. 11, 1921.

Fig. 2.

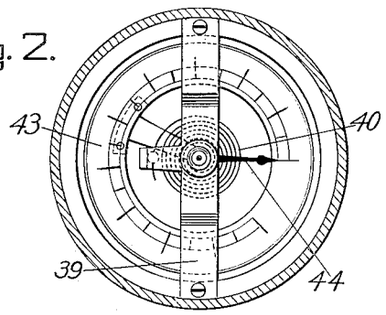

Fig. 3.

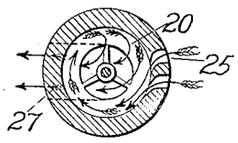

Fig. 4.

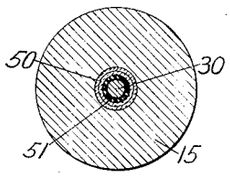

Fig. 1.

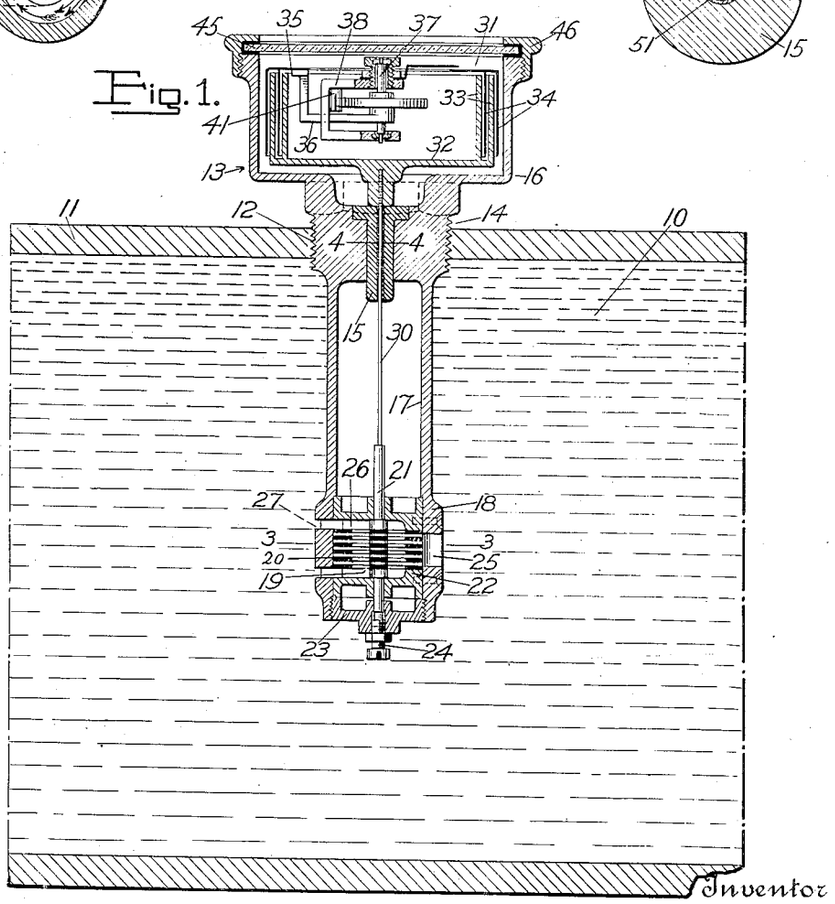

Inventor

Nikola Tesla

By his Attorneys

Forée Bain & May

UNITED STATES PATENT OFFICE.

NIKOLA TESLA, OF NEW YORK, N. Y., ASSIGNOR TO WALTHAM WATCH COMPANY, OF WALTHAM, MASSACHUSETTS, A CORPORATION OF MASSACHUSETTS.

FLOW-METER.

1,365,547. Specification of Letters Patent. Patented Jan. 11, 1921.

Application filed December 18, 1916. Serial No. 137,688.

To all whom it may concern:

Be it known that I, NIKOLA TESLA, a citizen of the United States, residing at New York, in the county and State of New York, have invented certain new and useful Improvements in Flow-Meters, of which the following is a full, clear, and exact description.

My invention relates to meters for measurement of velocity or quantity of fluid flow. Its chief object is to provide a novel structure, simple, inexpensive and efficient, directly applicable to a conduit through which the fluid flows, and arranged to give instantaneous readings in terms of velocity, or quantity.

In the drawings I have shown a single embodiment of my invention in desirable form, and therein—

Figure 1 is a central, vertical section showing the device in use;

Fig. 2 is a plan detail of the indicating instrument with parts in section;

Fig. 3 is a horizontal section on line 3—3 of Fig. 1, and

Fig. 4 is an enlarged section on line 4—4 of Fig. 1.

Assuming that the flow of liquid 10 through a main 11 is to be measured as in gallons per hour, or feet per second, the main is tapped as at 12 and into the threaded orifice is screwed the body-casting of the flow-meter 13. This casting has a threaded waist 14, centrally apertured to receive the bearing bushing 15, the upper portion of the casting being formed as a shell 16 for incasing the indicating mechanism, and its lower portion prolonged as a tube 17, terminating in a head 18 to receive the flow-driven element. The latter, I prefer, shall be a turbine of the type commonly identified by my name. Illustrating simply its essential elements, the rotor, 19, is made up of centrally apertured parallel disks 20, closely spaced and mounted on a shaft, 21, extending through a shell 22 confined within the head 18 above the plug 23 that closes the bottom of the head and carries an adjustable step-bearing screw 24. Inlet nozzles 25, in the wall of head 18, direct the liquid to the disks tangentially to set the latter in rotation and the water finds escape through the outlet passages 26 of the shell 22 and ports 27 of the head 18. Preferably the length of tube 17 should be such as to dispose the turbine rotor approximately at the center of the main, and of course the turbine will rotate at a rate linearly proportional to the velocity of the fluid at that point, according to a practically-determined constant.

Turbine shaft 21 connects with shaft 30 of the indicator, that preferably is of minimal diameter for the work to be done and that passes through the long bushing 15 for direct connection with the indicator 31. The primary element, 32, of this indicator, directly mounted on said shaft 30, preferably comprises a cup having multiple vertical walls 33 in concentric arrangement, these being interleaved with inverted cup walls 34 of a secondary element 35, that is pivoted and torsionally restrained and that bears a movable element of the reading scale. Specifically, the secondary element may have its inverted cup walls made of very thin aluminum mounted on arm 36, affixed to the spindle 37 that runs in jewel bearings carried by a yoke 38, supported on a bridge piece 39 spanning the casing 16. A coiled spring 40, at one end fast to the spindle 37 and its other end adjustably secured in split stud 41, on bracket 38, resists displacement of the secondary element which carries on its top a reading scale 43, graduated in terms of gallons per hour, feet per minute, or other units of measurement. This dial moves below the stationary pointer 44 that is visible through the sight-glass 45, carried by the cover cap 46 and tightly sealed. By constructing the indicator in accordance with principles fully explained in my Patent No. 1,209,359 the primary element, acting through the viscous or adhesive properties of air or other fluid medium filling the casing, is caused to displace the scale-bearing member against the tension of its spring substantially in linear proportion to the speed of rotation of the primary element, and by observing the conditions requisite to make the torque bear a rigorously linear proportion to the speed, and making the spring to permit deflections proportionate directly to the turning effort, the scale may be graduated uniformly without the employment of any compensating mechanism to this end.

The pressure or density of the gaseous fluid medium in the casing 60 should not be subject to change under varying conditions

of pressure within the main, or the readings might be seriously inaccurate; nor, obviously, should escape of the liquid from the main into the indicator casing be permitted. To seal the running bearing of shaft 30 adequately to withstand very considerable pressures, I make what I term a "mercury-lock" by the following provision: the shaft 30 is made of fine steel of great and uniform density and the bushing 15 is preferably of hard copper, these having diameters leaving a clearance of only a few thousandths of an inch,—much too small for the capillary admission of mercury. These surfaces are treated for amalgamation with mercury. The bearing-portion of the shaft 30 is thinly copper plated, and then both bearing surfaces are coated, in a quickening solution, with mercury, after which the mercury-filmed parts are assembled. In this way, as sought graphically and exaggeratedly to be represented in Fig. 4, the mercury body 50 is introduced into the very narrow clearance, and although it is a unitary seal in its resistance to the passage of air or water, it may practically be regarded as forming two mirror-surfaced films between the bushing 15 and the copper plating 51 on shaft 30. I have found such a mercury lock makes a very effective and enduring seal while permitting adequately free rotation of the shaft.

The combination of turbine rotor and air drag indicating mechanism as above described is especially advantageous in that the small turbine, developing a high shaft speed under even rather slow fluid flow, insures that the speeds of the primary element will be ample to result in high torque, so that the indicator may be of relatively rugged construction. Furthermore, the practical insensibility of the air drag instrument to temperature changes, without special compensating mechanism, makes a very simple construction available for many and variant uses. And since linear relationships exist between the rate of liquid flow, turbine-rotation and indicator-displacement, accurate marking of the scale in uniform graduations depends only upon the establishment of certain easily-ascertainable constants for any given conditions.

What I claim is:

1. A flow-meter comprising a body having a pipe engaging portion, a lower head of smaller diameter and an upper casing, a vertical shaft extending through said body, a disk-turbine in said head directly connected with said shaft, said head having inlet and outlet openings to the turbine disks, and indicating means comprising a rotatable primary element directly connected with said vertical shaft and a torsionally-restrained secondary element displaceable by the first and equipped to show its displacement in desired terms.

2. In a device of the character described, the combination of a body fitting having an intermediate part for pipe engagement, a lower head, and an upper shell, a shaft passing vertically from said shell to said head, a pressure-resisting seal for said shaft adjacent said pipe engaging portion of the body, an indicator in said shell comprising a rotatable primary member having a vertical axis and directly connected with the upper end of said shaft, a torsionally-restrained secondary element displaceable by the first, said secondary element associated with a scale for showing its deflections in desired terms, and a horizontal disk-turbine rotor in said head, said rotor directly connected with the bottom of said shaft, said head having inlet and outlet openings to the rotor disk.

In testimony whereof I affix my signature.

NIKOLA TESLA.

N. TESLA.

FREQUENCY METER.

APPLICATION FILED DEC. 18, 1916.

1,402,025. Patented Jan. 3, 1922.

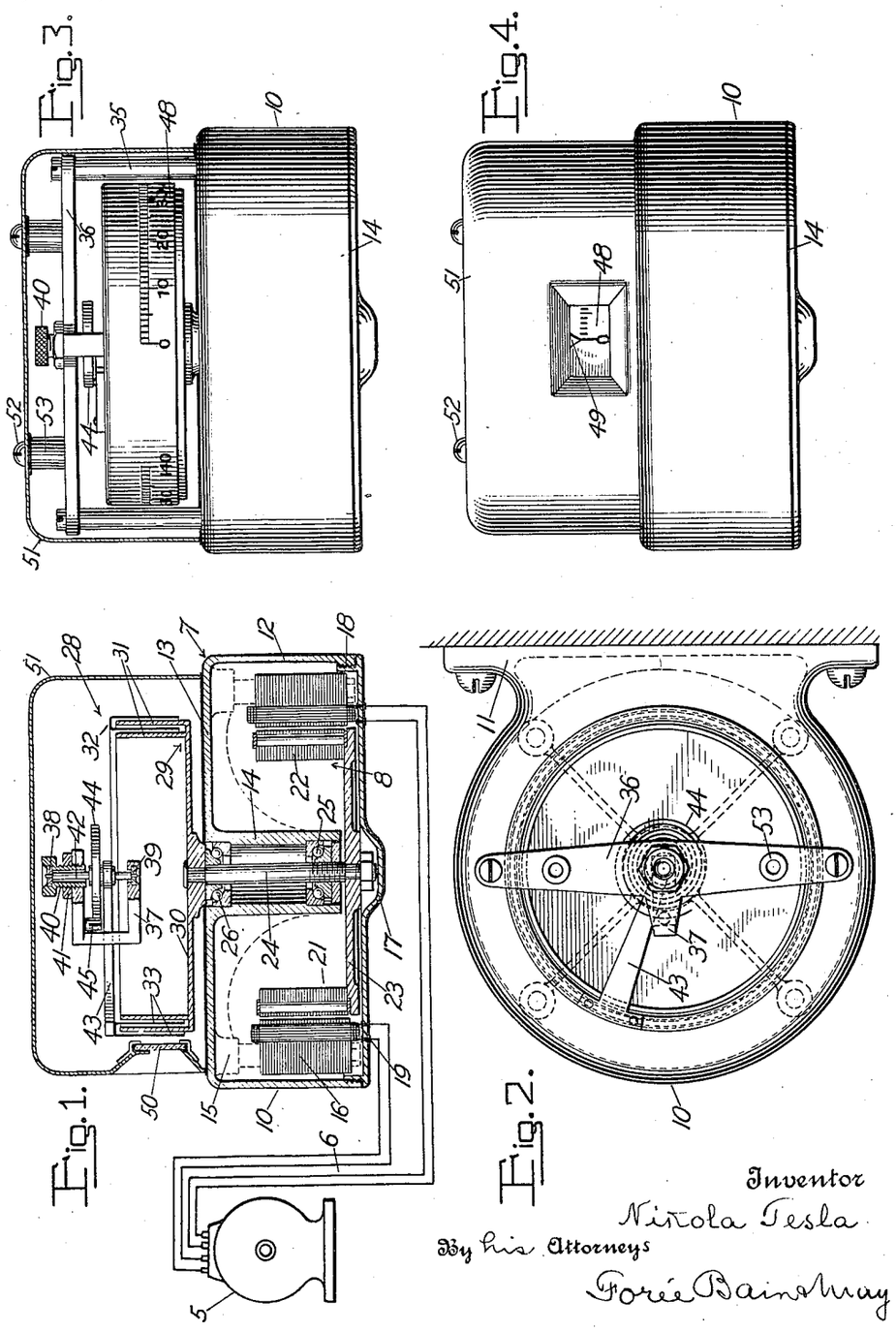

Inventor

Nikola Tesla

By his Attorneys

Forée Bain & May

UNITED STATES PATENT OFFICE.

NIKOLA TESLA, OF NEW YORK, N. Y., ASSIGNOR TO WALTHAM WATCH COMPANY, OF WALTHAM, MASSACHUSETTS, A CORPORATION OF MASSACHUSETTS.

FREQUENCY METER.

1,402,025. Specification of Letters Patent. Patented Jan. 3, 1922.

Application filed December 18, 1916. Serial No. 137,689.

To all whom it may concern:

Be it known that I, NIKOLA TESLA, a citizen of the United States, residing at New York, in the county and State of New York, have invented certain new and useful Improvements in Frequency Meters, of which the following is a full, clear, and exact description.

In many instances in practice it is very desirable and important to ascertain the frequency of periodic currents or electric oscillations and therefrom the speed of rotation or reciprocation of the generating or controlling apparatus.

The devices commonly used at present for this purpose and designated "frequency meters" generally consist of reeds or bars tuned to respond to impulses of definite periods, or a direct current dynamo coupled to the alternating generator or frequency controller and connected with an instrument, of voltmeter construction, graduated to indicate the instantaneous frequency of the current. Both of these forms are objectionable from many points of view, being subject to various limitations of practical availability and to disturbing influences, all so well known to experts as to dispense with the necessity of enlarging upon them on this occasion.

My invention has for its object to provide a frequency meter of great accuracy, structural simplicity, wide range of use, and low cost, all adequate to meet the pressing demand for a commercial and scientifically satisfactory instrument of improved form.

In the drawings, wherein I have illustrated a single embodiment of my invention for purposes of disclosure,—

Fig. 1 is a central vertical section through the frequency meter, with diagrammatic extension to indicate an available manner of connecting it to a two-phase generator;

Fig. 2 is an end view;

Fig. 3 is a side elevation with the cover in section, and Fig. 4 is a side elevation of the instrument from its reading side.

It will be understood that the specific construction of instruments embodying my invention may be modified in many ways according to the demands of the electrical or mechanical environment in which it is to be used, and while I shall describe in detail a specific construction, illustrated in the drawing, it is without intent to limit my invention in its broader aspects to matters of detail.

5 represents diagrammatically a two-phase generator, typifying the machine controlling the frequency to be measured, and having suitable connection by wires 6 with the synchronous-motor element of the frequency meter, indicated as a whole by 7. The motor, 8, will of course have field poles and armature bars appropriate to the character of the current supplied from the generator 5, the motor being of the split-phase, two-phase, or other type, as needed. A frame 10, having lugs 11, or other means of support, provides a cup-formed shell 12 with a top wall 13 furnished with a central bearing tube 14 and with suitable supporting means, as 15, for the stationary field structure 16. A cap 17, screw threaded at 18, and suitably packed, hermetically seals one side of the motor casing into which the connecting wires are led through any suitable sealing and insulating bushings 19.

For accuracy and promptness of response to frequency-variations, the armature structure 21, as a whole, with its attachments should be of very light weight and so equipped that its work is minimized. Hence it is important both that the construction of the armature element be designed with reference to smallness and consequent lightness of parts, and that its frequency-indicating equipment be of a character imposing the lightest load on the armature. Specifically, the armature laminæ 22 are carried on a light disk 23, fixed to the vertical shaft 24, that is supported by ball bearings 25 and 26, in tube 14, and, above the wall 13, carries the driving member of the indicator device 28. This appliance comprises, as its primary element, 29, a non-magnetic disk 30, of brass, say, having annular spaced, concentric walls 31, and as its secondary element, 32, a pivoted part including very light, annular walls 33 interleaved with the walls 31 and affording extensive smooth friction surfaces, very closely adjacent to, but not contacting with, the kindred surfaces of the primary member so that through the thin films of fluid, preferably air, intervening between them, torque may be transmitted from the primary to the secondary element in substantially linear proportion to the speed of the primary. Posts 35, mounted

in the top wall of the frame, support a bridge piece 36 that carries a bearing yoke 37, affording upper and lower jewel bearings 38 and 39, the former contained in a bushing 40 threaded for adjustment in the yoke and set by a nut 41, such bearings receiving the spindle 42 from which extends, rigidly, the arm 43 carrying the annular walls of the secondary element. A spiral spring 44, fixed at one end to the shaft 42 and at its other end clamped adjustably in the split stud 45 on bracket 37, permits rotary displacement of the secondary element, substantially in linear proportion to the force applied. A scale 48, printed on or otherwise affixed to the outermost wall of the secondary element, is graduated in units of frequency and its indication point is determined by a fixed pointer 49 that is fixed at the edge of a transparent sealed window 50 of the casing shell 51 of cup formation, that is secured in sealed relation to the wall 13 as by packed screws 52 engaging bosses 53 on the bridge piece 36 so to complete the hermetic enclosure of the chamber containing the indicating elements. Such herrhetic closure is not necessary in many instances but may be desirable.

In my copending application Serial No. 841,726 filed May 29th, 1914, Patent No. 1,209,359 I have set forth in detail certain laws the observance of which results in attainment of rigorous proportionality of deflections to speed in an "air drag" instrument, and all of such conditions may be observed to advantage in constructing the indication-giving element of the frequency meter.

It will be noted that an instrument as herein described has many structural and operative advantages. The translating instrument, giving the frequency-reading, when constructed for use of air as the transmitting medium, may be of size to give ample torque, but if desired the ensealed mechanism may be operated in air or other, preferably inert, gases of more than atmospheric density for increase of the torque. The air drag instrument is substantially unaffected in accuracy by temperature changes, without special compensating mechanism, and is therefore practically insensible to the heating effect of the subjacent motor, and the double-chamber construction segregating the motor and translating device prevents the latter from being affected by air-currents engendered by the motor-operation. Furthermore, the indicator structure may be made immune to magnetic influence and eddy currents, however intense, by making its secondary element of appropriate non-shrinkable, insulating material, as compressed fiber, although in many instances the partition 13, acting as a shield for the indicator obviates the necessity for such provision. The small size, low cost and ease of maintenance, due to the simplicity of the construction are especially desirable.

What I claim is:

1. In a frequency meter, the combination of a synchronous motor, and a speed-responsive device, having a primary element connected to the armature shaft, and a pivoted torsionally-restrained secondary element, deflectable in substantially linear proportion to the speed of the primary and calibrated in terms of electrical frequency.

2. In a frequency meter, the combination of a synchronous motor and a speed-responsive device, said motor having an armature of light construction and said speed-responsive device comprising a primary element carried in rotation by said armature, and a torsionally-restrained secondary element, these elements having extensive confronting, closely adjacent friction surfaces, co-operating through interposed films of a fluid medium for displacement of said secondary element in substantially linear proportion to the speed of rotation of the primary element.

3. In a frequency meter, the combination of a synchronous motor and a speed-responsive device, the former having an armature of light construction and the latter comprising a primary element, carried in rotation by said armature, and a torsionally-restrained secondary element, these elements having extensive confronting, closely adjacent friction surfaces, cooperating through interposed films of air for displacement of said secondary element in substantially linear proportion to the speed of rotation of the primary element, said secondary bearing a scale calibrated in terms of frequency.

4. A frequency meter comprising, in combination, a synchronous induction motor, having a shell carrying the field, and a rotatable armature within the chamber of said shell having its shaft extended through said shell; and a speed-responsive device, comprising a closed casing, a non-magnetic primary element mounted upon said armature shaft, a separately mounted secondary element pivoted and torsionally restrained, said elements having opposed, closely adjacent non-contacting surfaces, co-operating through interposed films of a fluid medium through which torque is transmitted to the secondary in approximately linear proportion to the speed of the primary member, and a visible scale uniformly graduated in terms of frequency carried by the secondary member.

5. A frequency meter comprising a sealed, air-containing casing divided into two compartments, a shaft extending into both compartments, a synchronous motor in one compartment adapted to drive said shaft and an indicating device in the other, said device having a primary rotatable element con-

nected with the shaft, a separately mounted, indication-controlling element and a spring restraining the latter, said elements having extensive, confronting, closely adjacent, non-contacting surfaces cooperating through the interposed air films for displacement of the secondary, at all ordinary temperatures, approximately in linear proportion to the speed of the primary element.

6. In a frequency meter, the combination of a synchronous motor having an armature of light construction, a speed-responsive device comprising a primary element carried in rotation by the said armature and a torsionally-restrained secondary element, said elements having extensive confronting closely adjacent friction surfaces cooperating through interposed films of air for displacement of said secondary element in substantially linear proportion to the speed of rotation of the primary element, and a wall interposed between the armature of the motor and the speed-responsive device for shielding the latter from air disturbance caused by rotation of the former.

7. A frequency meter comprising a casing divided into two compartments, a shaft extending into both thereof, a synchronous motor in one compartment adapted to drive said shaft and a speed-responsive device in the other having a primary element connected for rotation with said shaft, a separately mounted, torsionally-restrained indicating element, said elements having extensive confronting, closely adjacent, non-contacting surfaces cooperating through interposed gaseous films for displacement of the secondary, approximately in linear proportion to the speed of the primary element.

8. In a frequency meter, the combination of a synchronous motor and a speed-responsive device, said motor having a light armature and a shaft, and said speed responsive device comprising a primary element of non-magnetic material carried by the armature shaft and a torsionally-restrained secondary element, these elements having extensive, confronting, closely adjacent, non-contacting surfaces cooperating through interposed films of a fluid medium for displacement of the secondary element in approximately linear proportion to the speed of the primary element, and a containing structure ensealing the speed responsive device.

9. In a frequency meter, the combination of a synchronous motor having an armature of light construction, a speed-responsive device comprising a primary element carried in rotation by the said armature and a torsionally-restrained secondary element, said elements having extensive confronting, closely adjacent friction surfaces cooperating through interposed films of air for displacement of said secondary element in substantially linear proportion to the speed of rotation of the primary element, and means interposed between the armature of the motor and the speed-responsive device for shielding the latter from air disturbance caused by rotation of the former.

In testimony whereof I affix my signature.

NIKOLA TESLA.

Jan. 3, 1928. 1,655,113

N. TESLA

METHOD OF AERIAL TRANSPORTATION

Filed Sept. 9, 1921

Fig. 1.

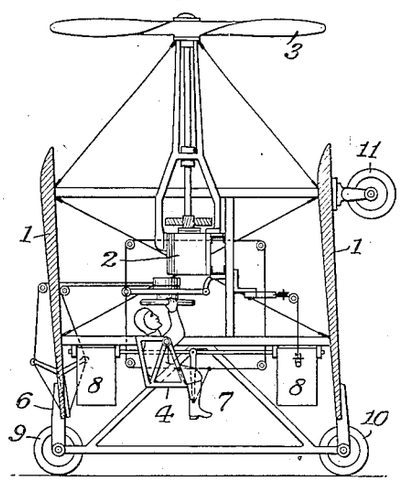

Fig. 2.

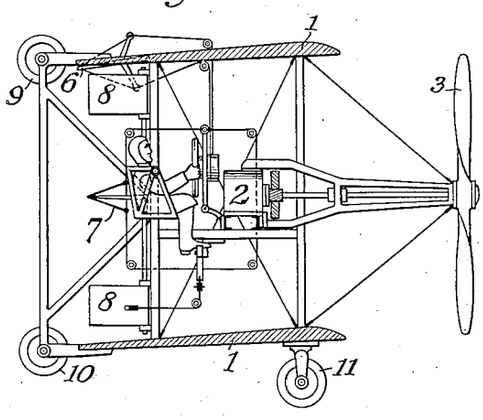

Fig. 3.

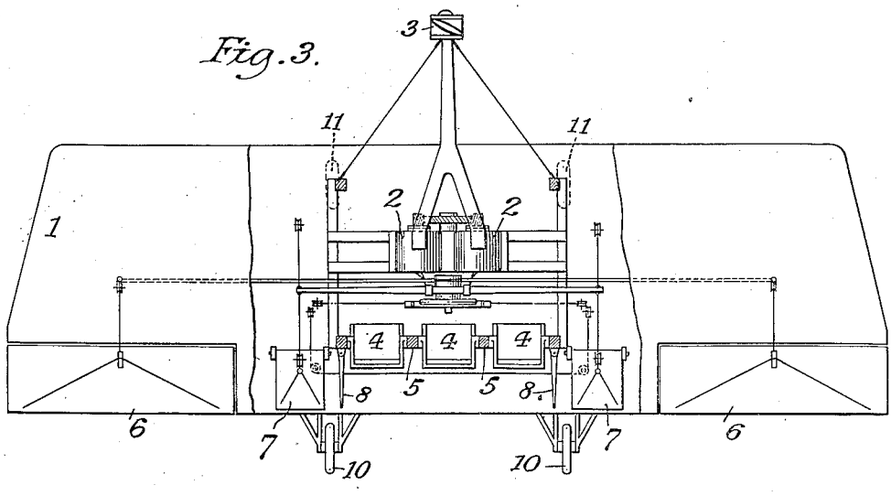

Nikola Tesla INVENTOR

BY

Kerr, Page, Cooper & Hayward

ATTORNEYS.

Patented Jan. 3, 1928. 1,655,113

UNITED STATES PATENT OFFICE.

NIKOLA TESLA, OF NEW YORK, N. Y.

METHOD OF AERIAL TRANSPORTATION.

Application filed September 9, 1921, Serial No. 499,519, and in Great Britain April 1, 1921.

The utility of the aeroplane as a means of transport is materially lessened and its commercial introduction greatly hampered owing to the inherent inability of the mechanism to readily rise and alight, which is an unavoidable consequence of the fact that the required lifting force can only be produced by a more or less rapid translatory movement of the planes or foils. In actual experience the minimum speed for ascension and landing is a considerable fraction of that in full flight, and the principles of design do not admit of a very great advance in this respect without sacrifice of some desirable feature. For this reason planes of very large area, high lift wing-sections, deflectors of the slip-stream of the propeller, or analogous means, which might be helpful in these operations, do not afford the remedy sought. This indispensable high velocity, imperilling life and property, makes it necessary to equip the machine with special appliances and provide suitable facilities at the terminals of the route, all of which entail numerous drawbacks and difficulties of a serious nature. So imperative has it become to devise some plan of doing away with these limitations of the aeroplane that the consensus of expert opinion characterizes the problem as one of the most pressing and important and its practical solution is eagerly awaited by those engaged in the development of the art, as well as the general public.

Many attempts have been made to this end, mostly based on the use of independent devices for the express purpose of facilitating and insuring the start and finish of the aerial journey, but the operativeness of the arrangements proposed is not conclusively demonstrated and, besides, they are objectionable, constructively or otherwise, to such an extent that builders of commercial apparatus have so far not considered them of sufficient value to depart from present practice.

More recently, professional attention has been turned to the helicopter which is devoid of planes as distinct organs of support and, presumably, enables both vertical and horizontal propulsion to be satisfactorily accomplished through the instrumentality of the propeller alone. However, although this idea is quite old and not a few experts have endeavored to carry it out in various ways, no success has as yet been achieved. Evidently, this is due to the inadequacy of the engines employed and, perhaps, also to certain heretofore unsuspected characteristics of the device and fallacies in the accepted theory of its operation, an elucidation of which is deemed necessary for the clear understanding of the subject.

The prospects of a flying machine of this kind appear at first attractive, primarily because it makes possible the carrying of great loads with a relatively small expenditure of energy. This follows directly from the fundamental laws of fluid propulsion, laid down by W. T. M. Rankine more than fifty years ago, in conformity with which the thrust is equal to the integral sum of the products of the masses and velocities of the projected air particles; symbolically expressed,

$$T=\Sigma(mv).$$

On the other hand, the kinetic energy of the air set in motion is

$$E=\Sigma\left(\frac{1}{2}mv^2\right).$$

From these equations it is evident that a great thrust can be obtained with a comparatively small amount of power simply by increasing the aggregate mass of the particles and reducing their velocities. Taking a special case for illustration, if the thrust under given conditions be ten pounds per horse-power, then a hundredfold increase of the mass of air, accompanied by a reduction of its effective velocity to one-tenth, would produce a force of one hundred pounds per horsepower. But the seemingly great gain thus secured is of little significance in aviation, for the reason that a high speed of travel is generally an essential requirement which can not be fulfilled except by propelling the air at high velocity, and that obviously implies a relatively small thrust.

Another quality commonly attributed to the helicopter is great stability, this being, apparently, a logical inference judging from the location of the centers of gravity and pressure. It will be found, though, that contrary to this prevailing opinion the device, while moving in any direction other than up or down, is in an equilibrium easily disturbed and has, moreover, a pronounced

tendency to oscillate. It is true, of course, that when the axis of the propeller is vertical and the ambient air quiescent the machine is stable to a degree, but if it is tilted even slightly, or if the medium becomes agitated, such is no longer the case.

In explanation of this and other peculiarities, assume the helicopter poised in still air at a certain height, the axial thrust T just equalling the weight, and let the axis of the propeller be inclined to form an angle α with the horizontal. The change to the new position will have a twofold effect: The vertical thrust will be diminished to

$$T_v = T \sin \alpha,$$

and at the same time there will be produced a horizontal thrust

$$T_h = T \cos \alpha.$$

Under the action of the unbalanced force of gravity the machine will now fall along a curve to a level below and if the inclination of the propeller as well as its speed of rotation remain unaltered during the descent, the forces T, T_v and T_h will continuously increase in proportion to the density of the air until the vertical component T_v of the axial thrust T becomes equal to the gravitational attraction. The extent of the drop will be governed by the inclination of the propeller axis and for a given angle it will be, theoretically, the same no matter at what altitude the events take place. To get an idea of its magnitude suppose the elevations of the upper and lower strata measured from sea level be h_1 and h_2, respectively, d_1 and d_2 the corresponding air densities and H= 26700 feet the height of the "uniform atmosphere," then as a consequence of Boyle's law the relation will exist

$$h_1 - h_2 = H \log_e \frac{d_2}{d_1}.$$

It is evident that

$$\frac{T}{T_v} = \frac{T}{T \sin \alpha} = \frac{1}{\sin \alpha} \text{ must be equal to } \frac{d_2}{d_1}$$

in order that the vertical component of the axial thrust in the lower stratum should just support the weight. Hence

$$h_1 - h_2 = H \log_e \frac{1}{\sin \alpha}.$$

Taking, in a special case. the angle $\alpha = 60°$, then

$$\frac{1}{\sin \alpha} = \frac{1}{0{\cdot}866} = 1{\cdot}1547$$

and

$$h_1 - h_2 = 26700 \times \log_e 1{\cdot}1547 = 3840 \text{ feet.}$$

In reality the drop will be much greater for the machine, upon reaching the lower layer with a high velocity relative to the medium, will be urged further down along the curved path and the kinetic energy, in the vertical sense, possessed by the moving mass must be annihilated before the fall is arrested in a still denser air stratum. At this point the upward thrust will be far in excess of the opposed pull of the weight and the apparatus will rise with first increasing and then diminishing speed to a height which may approximate the original. From there it will again fall and so on, these operations being repeated during the forward flight, the up and down excursions from the main horizontal line gradually diminishing in magnitude. After a lapse of time, determined by numerous influences, the excursions should cease altogether and the path described become rectilinear. But this is next to impossible as can be readily shown by pointing out another curious feature of the helicopter.

In the foregoing the axis of the propeller was supposed to move always parallel to itself, which result might be accomplished by the use of an adjustable aileron. In this connection it may be pointed out, however, that such a device will not act in the manner of a rudder, coming into full play at intervals only and performing its functions economically, but will steadily absorb energy, thus occasioning a considerable waste of motive power and adding another to the many disadvantages of the helicopter.

Let now the machine be possessed of a certain degree of freedom, as will be the case normally, and observe in the first place that the blades of the propeller themselves constitute planes developing a reaction thrust, the pressure on the lower leading blade being greater than that exerted on the higher one owing to the compression of the air by the body of the machine and increased density in that region. This thrust, tending to diminish the angle α, will obviously vary during one revolution, being maximum in a position when the line of symmetry of the two propeller blades and that of flight are in a vertical plane and minimum at right angles to it. Nevertheless, when the horizontal speed is great it may be considerable and sufficient to quickly overcome the inertia and gyroscopic resistances all the more readily as the upper blade, which is situated in a region where the conditions are more nearly normal, operates to the same effect. Moreover, this disturbing effect partakes of the regenerative quality, the force increasing as the angle diminishes up to a maximum for $\alpha = 45°$. As the axis is tilted more and more, the vertical sustaining effort of the propeller will correspondingly diminish and the machine will fall with a rapidly increasing velocity, finally exceeding the horizontal when the reaction of the blades will be directed upward so as to increase the angle

α and thereby cause the machine to soar higher. Thus periodic oscillations, accompanied by ascents and descents, will be set up which may well be magnified to an extent such as to bring about a complete overturn and plunge to earth.

It is held by some experts that the helicopter, because of its smaller body resistance, would be capable of a higher speed than the aerophane. But this is an erroneous conclusion, contrary to the laws of propulsion. It must be borne in mind that in the former type, the motive power being the same, a greater mass of air must be set in motion with a velocity smaller than in the latter, consequently it must be inferior in speed. But even if the air were propelled in the direction of the axis of the screw with the same speed V in both of them, while the aeroplane can approximate the same, the helicopter could never exceed the horizontal component V cos α. To be explicit, imagine that the air current flowing with the velocity V along the propeller axis inclined to form an angle α with the horizontal, be replaced by two streams one vertical and the other horizontal of velocities respectively equal to V sin α and V cos α, it will be evident that a helicopter in its forward flight could only approximate and never equal the speed V cos α of the horizontal air current no matter how much the resistance be reduced for, according to a fundamental law of propulsion, the thrust would be nil at that velocity. The highest efficiency should be obtained with the machine proceeding at the rate $\frac{1}{2}$ V cos α but the most economical utilization of power would be effected when $\alpha=45°$ in which case the speeds of both the horizontal and vertical streams will be 0.7 V. From this it may be inferred that, theoretically, the best performance might be secured in propelling the helicopter forward with a speed more or less approximating 0.35 V but the results attained in practice will be necessarily much inferior because without special provisions such as are herein set forth the device, as pointed out above, would plunge down and shoot up in succession, at the same time executing smaller oscillations, which motions will retard its flight and consume a considerable portion of the motive energy all the more so as the losses incident to the controlling means will be correspondingly increased.

Another very serious defect of this kind of flying machine, from the practical point of view, is found in its inability of supporting itself in the air in case of failure of the motor, the projected area of the propeller blades being inadequate for reducing the speed of the fall sufficiently to avoid disaster, and this is an almost fatal impediment to its commercial use.

From the preceding facts, which are ignored in the technical publications on the subject, it will be clear that the successful solution of the problem is in a different direction.

My invention meets the present necessity in a simple manner without radical departure in construction and sacrifice of valuable features, incidentally securing advantages which should prove very beneficial in the further development of the art. Broadly expressed, it consists in a novel method of transporting bodies through the air according to which the machine is raised and lowered solely by the propeller and sustained in lateral flight by planes. To accomplish this a light and powerful prime-mover is necessary and as particularly suited for the purpose I employ, preferably, a turbine of the kind described in my U. S. Patent No. 1,061,206, of May 6, 1913, which not only fulfills these requirements, but is especially adapted to operation at high temperature. I also make arrangements whereby the flying machine may be, automatically or at will of the operator, caused to function either as a helicopter or an aeroplane.

Full knowledge of these improvements will be readily gained by reference to the accompanying drawings in which Fig. 1 illustrates the machine in the starting or landing position and Fig. 2, in horizontal flight. Fig. 3 is a plan view of the same with the upper plane partly broken away.

The structure is composed of two planes or foils 1, 1 rigidly joined. Their length and distance apart may be such as to form a near-square for the sake of smallness and compactness. With the same object the tail is omitted or, if used, it is retractable. The motors 2, 2 in this case turbines of the kind described in my patent before referred to, and other parts of the motive apparatus are placed with due regard to the centers of gravity and pressure and the usual controlling means are provided. In addition to these any of the known stabilizing devices may be embodied in the machine. At rest the planes are vertical, or nearly so, and likewise the shaft driving the propeller 3, which is constructed of a strength, size and pitch that will enable it to raise the entire weight with the motors running at an even greater rate than when propelling the machine horizontally. Power is transmitted to the shaft from the turbines through suitable gears. The seats 4, 4, 4 for the operator and passengers are suspended on trunnions 5, 5 on which they can turn through an angle of about 90°, springs and cushions (not shown) being employed to insure and limit their motion through this angle. The usual devices for lateral and directional control, 6, 6 7, 7 and 8, 8 are pro-

vided with mechanical connections enabling the operator to actuate the devices by hand or foot from his seat in any position. At the start, sufficient power being turned on by suitable means, also within his reach, the machine rises vertically in the air to the desired height when it is gradually tilted by manipulating the elevator devices and proceeds like an aeroplane, the load being transferred from the propeller to the foils as the angle of inclination diminishes and the speed in horizontal direction increases. From the foregoing it will be understood that, simultaneously with the tilting of the machine, the operator will increase the thrust of the propeller in order to compense for the reduction of sustaining force which follows inevitably from the diminution of angle α and before the reaction of the planes can come into full effect. He will thus prevent a downward plunge and the production of dangerous oscillations which have been dwelt upon above, and by suitable manipulation of the apparatus and gradual cutting down of the power developed by the prime mover, as forward velocity is gained and the planes take up the load, he may cause the machine to advance horizontally along a sensibly straight line, a condition essential to the attainment of the best practical results. In descending, the forward speed is reduced and the machine righted again, acting as a helicopter with the propeller supporting all the load. Obviously, as the device is slowed down and righted causing the planes to lose part or all of their sustaining efforts, the operator will apply more power to the propeller increasing thereby the thrust to the required magnitude and in all such operations of starting and loading as well as tilting for regulating the height, meeting the air conditions or for other purposes it will be his object to modify the propeller thrust in about the same measure as the varying reaction of the planes may demand in order that the lifting force be sensibly constant. Evidently also, whenever necessary or desirable, power far in excess of that normally required may be applied during the flight and the machine propelled at a greatly increased speed. The type of turbine used is a motor of great lightness and activity and lends itself exceptionally to this kind of work for which ordinary aviation motors are unsuited. It is capable of carrying a great overload and running without danger at excessive speed so that during the starting and landing operations the necessary power can be developed by the motors even though less efficiently than under their normal working conditions. Special means of control may be provided, if necessary, for increasing the power supply in these operations. Owing to its extreme simplicity the motive apparatus is very reliable in operation, but should the power give out accidentally, landing can still be easily effected by volplaning. For this purpose, in addition to wheels 9, 9 and 10, 10 wheels 11, 11 are employed, the latter being mounted on the forward end under the lower plane and so that when the machine rests on level ground the propeller shaft will have the desired inclination which is deemed best for rising in the manner of an aeroplane. Such an aeroplane constructed and operated as described, unites the advantages of both types and seems to meet best the requirements of a small, compact, exceedingly speedy and yet very safe machine for commercial use. Especially good practical results are obtainable by the use of my turbine which can be depended upon to develop the necessary energy for lifting, even if it should be considerably greater than that consumed in flight under normal conditions. This end can be conveniently attained by temporarily supplying more of the working fluid to the rotor and driving it faster, or running it at about the same speed and increasing the effort by adjustment of the pitch of the propeller, or other means known in the art. The latter should be designed to work most economically during the flight, as its efficiency in the starting and landing operations is of relatively small importance. Instead of a single large screw as described a number of smaller ones may be used, in which case gearing can be dispensed with. The biplane seems to be best suited for the chief purpose contemplated but the invention is applicable to monoplanes and other types.

To sum up, the helicopter type of flying machine, especially with large inclination angle of the propeller axis to the horizontal, at which it is generally expected to operate, is quite unsuitable for speedy aerial transport; it is incapable of proceeding horizontally along a straight line under the prevailing air conditions; it is subject to dangerous plunges and oscillations and, what is most important from the commercial and practical point of view, it is almost certainly doomed to destruction in case the motive power gives out. These drawbacks and defects are overcome by the methods and apparatus I have described through which a novel type of flying machine may be realized possessing all the advantages of the helicopter being at the same time safe and capable of a speed equal to or even greatly exceeding that of the present aeroplane.

To my knowledge various forms of aeroplanes have been proposed with the object of attaining similar results but a careful study shows that none of them is capable of the actions as those here contemplated for want of proper methods of operation as well as suitable apparatus.

I do not claim herein the apparatus by

means of which this method is or may be carried out either in the special form illustrated or in modifications of the same, as this is the subject of a separate application.

What I desire to secure by Letters Patent is:

1. The hereinbefore described method of aeroplane transportation which consists in developing by the propelling device a vertical thrust in excess of the normal, causing thereby the machine to rise in an approximately vertical direction, tilting it and simultaneously increasing the power of the motor and thereby the propeller thrust, then gradually reducing the power and thrust as forward speed is gained and the planes take up the load, thus maintaining the lifting force sensibly constant during flight, tilting the machine back to its original position and at the same time increasing the power of the motor and thrust of the propeller and effecting a landing under the restraining action of the same.

2. The method of operating a helicopter which consists in varying the power of the motor and thereby the thrust of the propeller according to the changes of inclination of its axis, so as to maintain the lifting force sensibly constant during the forward flight.

3. The above described method of transporting from place to place a heavier than air flying machine, which consists in applying power to the propeller while its axis is in a vertical position sufficient to cause the machine to rise, tilting it and at the same time applying more power to increase the thrust, then gradually diminishing the power as the load is transferred from the propeller to the planes, tilting back the machine and so controlling the applied power as to effect a slow descent upon the landing place under the restraining action of the propeller.

4. In the transport of bodies by aeroplane, the method of controlling the propeller thrust and reaction of the planes by varying the power of the motor correspondingly with the inclination of the machine so as to maintain the lifting force sensibly constant during the forward flight.

In testimony whereof I hereto affix my signature.

NIKOLA TESLA.

Jan. 3, 1928. 1,655,114

N. TESLA

APPARATUS FOR AERIAL TRANSPORTATION

Filed Oct. 4, 1927 2 Sheets-Sheet 1

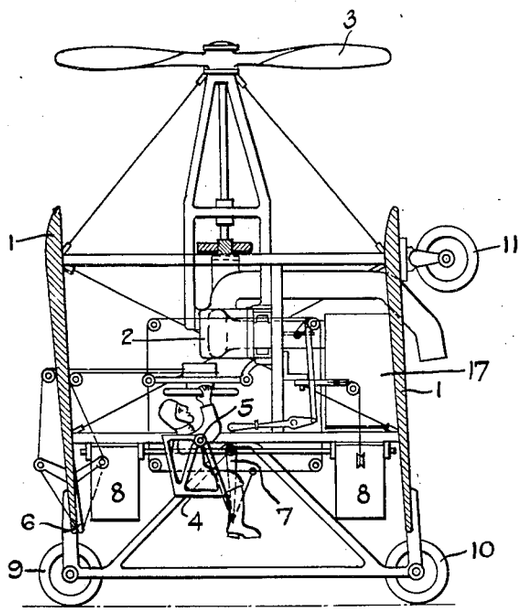

FIG. 1.

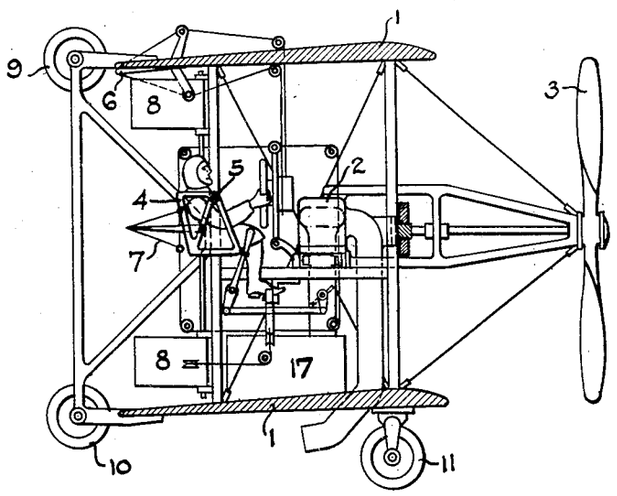

FIG. 2.

INVENTOR.
NIKOLA TESLA.
BY
ATTORNEY.

Jan. 3, 1928. 1,655,114

N. TESLA

APPARATUS FOR AERIAL TRANSPORTATION

Filed Oct. 4, 1927 2 Sheets-Sheet 2

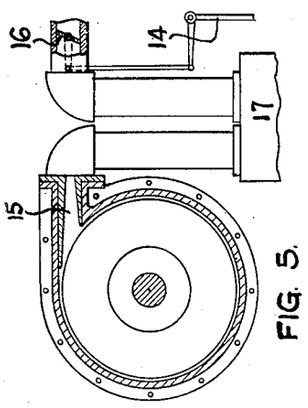

FIG. 5.

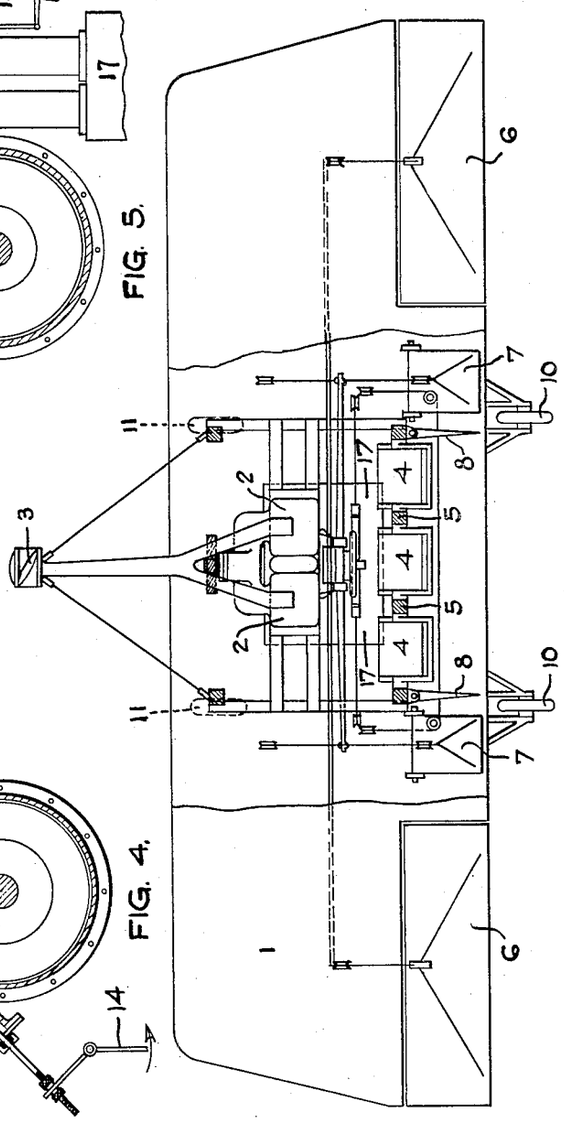

FIG. 3.

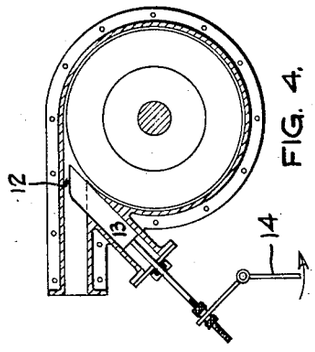

FIG. 4.

INVENTOR.
NIKOLA TESLA.
BY John P. Barbour
ATTORNEY.

Patented Jan. 3, 1928. 1,655,114

UNITED STATES PATENT OFFICE.

NIKOLA TESLA, OF NEW YORK, N. Y.

APPARATUS FOR AERIAL TRANSPORTATION.

Application filed October 4, 1927. Serial No. 223,915.

This application is a continuation in part of my application Serial No. 499,518, filed September 9, 1921, and is made pursuant to the rules of the Patent Office, its purpose being to describe and claim apparatus which I have invented for carrying into practice the method therein disclosed.

The invention consists of a new type of flying machine, designated "helicopter-plane", which may be raised and lowered vertically and driven horizontally by the same propelling devices and comprises: a prime mover of improved design and an airscrew, both especially adapted for the purpose, means for tilting the machine in the air, arrangements for controlling its operation in any position, a novel landing gear and other constructive details, all of which will be hereinafter fully described.

The utility of the aeroplane as a means of transport is materially lessened and its commercial introduction greatly hampered owing to the inherent inability of the mechanism to readily rise and alight, which is an unavoidable consequence of the fact that the required lifting force can only be produced by a more or less rapid translatory movement of the planes or foils. This indispensable high velocity, imperilling life and property, makes it necessary to equip the machine with special appliances and provide suitable facilities at the terminals of the route, all of which entail numerous drawbacks and difficulties of a serious nature.

More recently, professional attention has been turned to the helicopter which is devoid of planes as distinct organs of support and, presumably, enables both vertical and horizontal propulsion to be satisfactorily accomplished through the instrumentality of the propeller alone.

The prospects of such a flying machine appear at first attractive, primarily because it makes possible the carrying of great weight with a relatively small expenditure of energy. This follows directly from the fundamental laws of fluid propulsion, laid down by W. T. M. Rankine more than fifty years ago, in conformity with which the thrust is equal to the integral sum of the products of the masses and velocities of the projected air particles; symbolically expressed,

$$T=\Sigma(mv).$$

On the other hand, the kinetic energy of the air set in motion is

$$E=\Sigma\left(\frac{lmv^2}{2}\right).$$

From these equations it is evident that a great thrust can be obtained with a comparatively small amount of power simply by increasing the aggregate mass of the particles and reducing their velocities. But the seemingly great gain thus secured is of small value in aviation for the reason that a high speed of travel is generally an essential requirement which cannot be fulfilled except by propelling the air at high velocity, and that obviously implies a relatively small thrust.

Another quality commonly attributed to the helicopter is great stability, this being apparently a logical inference judging from the location of the centers of gravity and pressure. It will be found, though, that contrary to this prevailing opinion the device, while moving in any direction other than up or down, has an equilibrium easily disturbed and has, moreover, a pronounced tendency to oscillate.

In explanation of these and other peculiarities, assume the helicopter poised in still air at a certain height, the axial thrust T just equalling the weight, and let the axis of the propeller be inclined to form an angle α with the horizontal. The change to the new position will have a two-fold effect: the vertical thrust will be diminished to

$$T_v=T\sin\alpha$$

and at the same time there will be produced a horizontal thrust

$$T_h=T\cos\alpha$$

Under the action of the unbalanced force of gravity, the machine will now fall along a curve to a level below and if the inclination of the propeller as well as its speed of rotation remain unaltered during the descent, the forces T, T_v and T_h will continuously increase in proportion to the density of the

air until the vertical component T_v of the axial thrust T becomes equal to the gravitational attraction. The extent of the drop will be governed by the inclination of the propeller axis and for a given angle it will be, theoretically, the same no matter at what altitude the events take place. To get an idea of its magnitude suppose the elevations of the upper and lower strata measured from sea level be h_1 and h_2, respectively, d_1 and d_2 the corresponding air densities and H=26,700 feet the height of the "uniform atmosphere," then as a consequence of Boyle's Law the relation will exist

$$h_1 - h_2 = H \log_e \frac{d_2}{d_1}$$

It is obvious that

$$\frac{T}{T_v} = \frac{T}{T \sin \alpha} = \frac{1}{\sin \alpha}$$ must be equal to $\frac{d_2}{d_1}$

in order that the vertical component of the axial thrust in the lower stratum should just support the weight. Hence

$$H_1 - h_2 = H \log_e \frac{1}{\sin \alpha}$$

Taking, in a special case, the angle $\alpha = 60$ degrees, then

$$\frac{1}{\sin \alpha} = \frac{1}{0.866} = 1.1547, \text{ and}$$

$$h_1 - h_2 = 26{,}700 \times \log_e 1.1547 = 3{,}840 \text{ feet.}$$

In reality the drop will be much greater for the machine, upon reaching the lower layer with a high velocity relative to the medium, will be urged further down along the curved path and the kinetic energy, in the vertical sense, possessed by the moving mass must be annihilated before the fall is arrested in a still denser air stratum. At this point the upward thrust will be far in excess of the opposed pull of the weight and the apparatus will rise with first increasing and then diminishing speed to a height which may approximate the original. From there it will again fall and so on, these operations being repeated during the forward flight, the up and down excursions from the main horizontal line gradually diminishing in magnitude. After a lapse of time, determined by numerous influences, these deviations should become insignificant and the path described nearly rectilinear. But this is next to impossible as can be readily shown by pointing out another curious feature of the helicopter.

In the foregoing the axis of the propeller was supposed to move always parallel to itself, which result might be accomplished by the use of an adjustable aileron. In this connection it may be pointed out, however, that such a device will not act in the manner of a rudder, coming into full play at intervals only and performing its functions economically, but will steadily absorb energy, this occasioning a considerable waste of motive power and adding another to the many disadvantages of the helicopter.

Let now the machine be possessed of a certain degree of freedom, as will be the case normally, and observe in the first place that the blades of the propeller themselves constitute planes developing a reaction thrust, the pressure on the lower leading blade being greater than that exerted on the higher one owing to the compression of the air by the body of the machine and increased density in that region. This thrust tending to diminish the angle α, will vary during one revolution, being maximum in a position when the line of symmetry of the two propeller blades and that of flight are in the same vertical plane and minimum when the former is at right angles to it. Nevertheless, if the horizontal speed is great, it may be considerable and sufficient to quickly overcome the inertia and gyroscopic resistances all the more readily as the upper blade operates to the same effect. Moreover, this intermittent action partakes of the regenerative quality, the force increasing as the angle diminishes up to a maximum for $\alpha = 45$ degrees, and may also give rise to disturbing resonant vibrations in the structure. As its axis is tilted more and more, the vertical sustaining effort of the propeller correspondingly diminishes and the machine will fall with a rapidly increasing velocity, which may finally exceed the horizontal, when the reaction of the blades is directed upward so as to increase the angle α and thereby cause the machine to soar higher. Thus periodic oscillations, accompanied by ascents and descents, will be set up which may well be magnified to an extent such as to bring about a complete overturn and plunge to earth.

It is held by some experts that the helicopter, because of its smaller body resistance, would be capable of a higher speed than the aeroplane. This is an erroneous conclusion, contrary to the laws of propulsion. It must be borne in mind that in the former type, the motive power being the same, a greater mass of air must be set in motion with a velocity smaller than in the latter, consequently it must be inferior in speed. But even if the air were propelled in the direction of the axis of the screw with the same speed V in both of them, while the aeroplane approximates the same, the helicopter can never exceed the horizontal component V cos α which, under the theoretically most economical conditions of operation, would only be 0.7V, and this would be true no matter how much its resistance is reduced.

Another very serious defect of this kind of flying machine, from the practical point

of view, is found in its inability of supporting itself in the air in case of failure of the motor, the projected area of the propeller blades being inadequate for reducing the speed of the fall sufficiently to avoid disaster, and this is an almost fatal impediment to its commercial use.

From the preceding facts, which are ignored in the technical publications on the subject, it will be clear that the successful solution of the problem is in a different direction.

In an application of even date, referred to above, I have disclosed an invention which meets the present necessity in a simple manner and, briefly stated, consists in a novel method of transporting bodies through the air according to which the machine is raised and lowered solely by the propeller and sustained in lateral flight by planes.

My present application is based on new and useful features and combinations of apparatus which I have devised for carrying this method into practice.

Full knowledge of these improvements will be readily gained by reference to the accompanying drawings in which

Fig. 1 illustrates the machine in the starting or landing position and

Fig. 2 in horizontal flight;

Fig. 3 is a plan view of the same with the upper plane partly broken away and

Fig. 4 and Fig. 5 sectional views of constructive details.

The structure is composed of two planes or foils 1, 1 rigidly joined. Their length and distance apart may be such as to form a near-square for the sake of smallness and compactness. With the same object the tail is omitted or, if used, it is retractable. In order to raise the machine vertically a very light and powerful prime mover is necessary and as particularly suited for the purpose, I employ, preferably, a turbine described in my U. S. Patent 1,061,206 of May 6, 1913, which not only fulfills these requirements but lends itself especially to operation at very high temperatures. Two such turbines, designated 2, 2 together with other parts and accessories of the power plant, are bolted to the frame, being pl ed with due regard to the centers of gravity and pressure. The usual controlling means are provided and, in addition to these, any of the known stabilizing devices may be embodied in the machine. At rest the planes are vertical, or nearly so, and likewise the shaft driving the propeller 3, which is of a strength, size and pitch such as will enable it to lift the entire weight vertically and withstand safely the stresses. Power is transmitted to the shaft from the turbines through gearing which may be of the single reduction type as illustrated, the turbines rotating in the same direction ar l neutralizing the gyroscopic moment of the screw. If, instead of one, two propellers are used, either coaxially or otherwise disposed, the motors should revolve in opposite directions. The seats 4, 4, 4 for the operator and passengers are suspended on trunnions 5, 5 on which they can turn through an angle of about 90 degrees, springs and cushions (not shown) being employed to insure and limit their motion through this angle. The ordinary devices for lateral and directional control 6, 6, 7, 7 and 8, 8 are provided with mechanical connections enabling the aviator to actuate them by hand or foot from his seat in any position.

Stated in a few words, the operation is as follows: At the start, sufficient power is turned on by suitable means, also within reach, and the machine rises vertically in the air to the desired height when it is gradually tilted through manipulation of the elevator devices and then proceeds more and more like an aeroplane, the sustaining force of the propeller being replaced by vertical reaction of the foils as the angle of inclination diminishes and horizontal velocity increases. In descending, the forward speed is reduced and the machine righted again, acting as a helicopter with the propeller supporting all the load. The turbine used is of great lightness and activity exceptionally qualified to perform such work for which the present aviation motors are unsuited. It is capable of carrying an extraordinarily great overload and running at excessive speed, and during the starting, landing and other relatively short operations, not only can the necessary power be easily developed, but this can be accomplished without incurring a serious loss of efficiency. Owing to its extreme simplicity the motive apparatus is very reliable, but should the power give out accidentally, landing can still be effected by volplaning. For this purpose, in addition to wheels 9, 9 and 10, 10, wheels 11, 11 are employed, the latter being mounted on the forward end under the lower plane and so that when the machine rests on level ground, the propeller shaft will have the desired inclination which is deemed best for rising in the manner of an aeroplane. Such a "helicopter-plane," constructed and operated as described, unites the advantages of both types and seems to meet well the requirements of a small, compact, very speedy and safe craft for commercial use.

The abnormal power requirements are met by supplying more of the working fluid to the motors and driving them faster, or running them at about the same speed and increasing the thrust by adjustment of the pitch of the propeller. On account of simplicity and much greater range it is preferable to resort to the first method, in which

case the screw should be designed to work most economically in horizontal flight, as its efficiency in the starting and landing operations is of comparatively small importance. Instead of a single large propeller, as described, a number of small ones can be used, when the turbine units may be connected advantageously in stages and the gearing dispensed with. The biplane seems to be particularly well suited for the chief purpose contemplated, but the invention is equally well applicable to monoplanes and other types.

In order to secure the best results I have found it indispensable to depart, in some respects, from the usual design of my turbines and embody in them certain constructive features and means for varying the power developed from the minimum necessary in horizontal flight to an amount exceeding by far their rated performance, as may be required in the operations of ascent and descent, or spurts of speed, or in combatting the fury of the elements. Furthermore, I so proportion and coordinate the fluid pressure generator supplying the primary energy, the propelling and the controlling means, that for any attitude or working condition of the machine the requisite thrust may be almost instantly produced and accurately adjusted.

The understanding of these improvements will be facilitated by reference to Fig. 4 and Fig. 5. In the first named the turbines are intended to operate as rotary engines, expanding the gases in the rotor as well as the inlet nozzle or port 12, the depth of which can be varied by shifting a block 13, fitting freely in a milled channel of the casing, through the medium of lever 14 controlled by the aviator. The orifice for the passage of the elastic fluid is straight or slightly converging, so that a much smaller velocity is obtained than with an expanding nozzle, this enabling the best relation between the peripheral speed of the rotor and that of the fluid to be readily attained. The performance of such an engine at constant pressure of supply is, within wide limits, proportionate to the quantity of the working medium passed through the inlet port and it is practicable to carry, for indefinite intervals of time, an exceedingly great overload, by which I mean up to three or even four times the normal. Exceptional strength and ruggedness of the motors being imperative in view of centrifugal stresses and critical speed, their weight need not be appreciably increased as would be the case in other forms of prime movers in which, as a rule, the weight is in nearly direct proportion to the power developed. To accomplish my purpose I further provide commensurately larger inlet and outlet openings. No serious disadvantage is thereby incurred because windage and other losses are virtually absent and most of the rotary effort is due to the peripheral parts of the discs. As shown in the figure, block 13 is in the position corresponding to minimum effort, the section of the inlet channel being about one-fifth of the whole which is obtained when the block is pulled in its extreme position indicated by the dotted line. Owing to the increase of the coefficient of contraction and counterpressure attendant the enlargement of the inlet, the same should be made of ample section.

Figure 5 shows a different means for attaining the same purpose. In this case the motors operate like true turbines, the working fluid being fully expanded, or nearly so, through divergent exchangeable nozzles as 15, having a throat of sufficient section for the passage of fluid required during maximum performance. The exhaust opening is also correspondingly enlarged, though not necessarily to the extent indicated in Figure 4. The power is varied by means of a throttle valve 16, as used in automobiles, located in the conduit supplying the air and carbureted fuel to the fluid pressure generator and mechanically connected to the controlling lever 14. This apparatus is of a capacity adequate to the maximum demand by which I do not mean that it is necessarily much larger than required for normal performances, but is merely designed to supply the working fluid or, broadly stated, energy—whenever desired, at a rate greatly exceeding the normal. In Figure 3 this apparatus is diagrammatically indicated by 17, and may be any one of a number of well-known types, producing pressure by internal combustion of a suitable fuel or by external firing of a steam boiler. In the latter case, with constant pressure, the arrangement shown in Figure 4 is best to employ, while the plan illustrated in Figure 5 can be used to advantage when both pressure and quantity of fluid are varied.

In operation for vertical ascent, the machine being in the attitude of Figure 1, the aviator will push forward lever 14 and supply sufficient primary energy to the motors for lifting the machine with the desired velocity. When the objective elevation is reached rudders 7, 7 are manipulated to incline the machine at a certain angle, the aviator simultaneously applying more pressure to the lever and augmenting the fluid supply to the motors, thereby increasing the propeller thrust in the vertical direction so as to prevent the machine from descending. He continues these operations always coordinating the thrust developed with the changes in attitude of the machine until a certain angle of inclination is attained and the machine is supported chiefly by reaction of the planes. At this stage he begins to re-

duce the pressure on the lever and supply of working fluid simultaneously decreasing the angle of inclination thus finally effecting, by insensible steps, horizontal flight.

It should be understood that descent and alighting, as well as rising in the manner of a true aeroplane may be accomplished as usual. In such case the motors will be operated at their normal rated capacity. However, when excessive speed becomes necessary, the effort of the motors may be instantly and greatly augmented by merely manipulating block 13 or valve 16 as described.

Whenever it is desired to descend vertically, the aviator will reverse the operations as applying to substantial vertical ascent, which is to say, bring the machine gradually into starting attitude, at the same time increasing the supply of fluid to the motors and the vertical component of the propeller thrust, while reducing the horizontal. Finally, he will steadily reduce the fluid supply and the vertical thrust so as to descend to the landing place at a very low, safe velocity.

In the preceding I have described a flying machine characterized by a number of novel constructive and operative features and well suited for meeting a pressing necessity in the present state of the art. The chief improvements consist in first, adapting my turbine motor for excessive overload without appreciable increase of its weight, second, providing large variable inlet ports and corresponding exhaust openings, with the object of meeting the abnormal power requirements in the starting, landing and other short operations, and still preserving a high efficiency in horizontal flight; third, combining with the turbine a fluid pressure generator of adequate capacity with means for control and, fourth, embodying these and other features in a suitable structure improved in various details. These may be greatly varied and I wish it to be understood that I do not limit myself to the precise arrangements illustrated and described.

I claim as my invention:

1. In an aeroplane adapted for vertical and horizontal propulsion and change from one to the other attitude, the combination of means for tilting the machine in the air, a fluid pressure generator of a capacity several times greater than normally required in horizontal flight, a motor capable of carrying overloads adequate for support in all attitudes, and means for controlling the supply of the fluid to the motor in accordance with the inclination of the machine.

2. In an aeroplane adapted for vertical and horizontal propulsion and change from one to the other attitude, the combination with means for tilting the machine in the air and a system producing thrust approximately parallel to the principal axis of the same and including a fluid pressure generator having a capacity several times greater than normally required in horizontal flight, a motor capable of carrying over-loads adequate for support in all attitudes, and means for controlling the supply of the fluid to the motor in accordance with the inclination of the machine.

3. In an aeroplane adapted for vertical and horizontal propulsion and change from one to the other attitude, the combination of means for tilting the machine in the air, a fluid pressure generator capable of supplying fluid at a rate several times greater than required for horizontal flight, a prime mover consisting of a rotor of plane spaced discs with central openings and an enclosing casing with inlet and outlet orifices of a section much greater than required for normal performances respectively at the periphery and center of the same, and means for controlling the supply of the fluid to the motor in accordance with the inclination of the machine.

4. In an aeroplane adapted for vertical and horizontal propulsion and change from one to the other attitude, the combination of means for tilting the machine in the air, a thrust producing system having its principal energy producing elements designed for normal load in horizontal flight but capable of carrying over-loads adequate for support of the aeroplane in all attitudes, and means for controlling the energy produced in said system in accordance with the inclination of the machine.

5. In a flying machine of the kind described in combination with means for vertical and lateral control of two wheel bases at right angles to one another as set forth.

6. In a flying machine of the kind described in combination with means for vertical and lateral control of two wheel bases at right angles to one another and having one or more wheels common to both.

In testimony whereof I hereunto affix my signature.

NIKOLA TESLA.

Certificate of Correction.

Patent No. 1,655,114. Granted January 3, 1928, to

NIKOLA TESLA.

It is hereby certified that error appears in the printed specification of the above-numbered patent requiring correction as follows: Page 1, after line 57, strike out the formula and insert instead

$$E = \Sigma\left(\frac{1}{2}mv^2\right);$$

and that the said Letters Patent should be read with this correction therein that the same may conform to the record of the case in the Patent Office.

Signed and sealed this 20th day of March, A. D. 1928.

[SEAL.]

M. J. MOORE,
Acting Commissioner of Patents.

No. 11,865. Reissued Oct. 23, 1900.

N. TESLA.

METHOD OF INSULATING ELECTRIC CONDUCTORS.

(Application filed Sept. 21, 1900.)

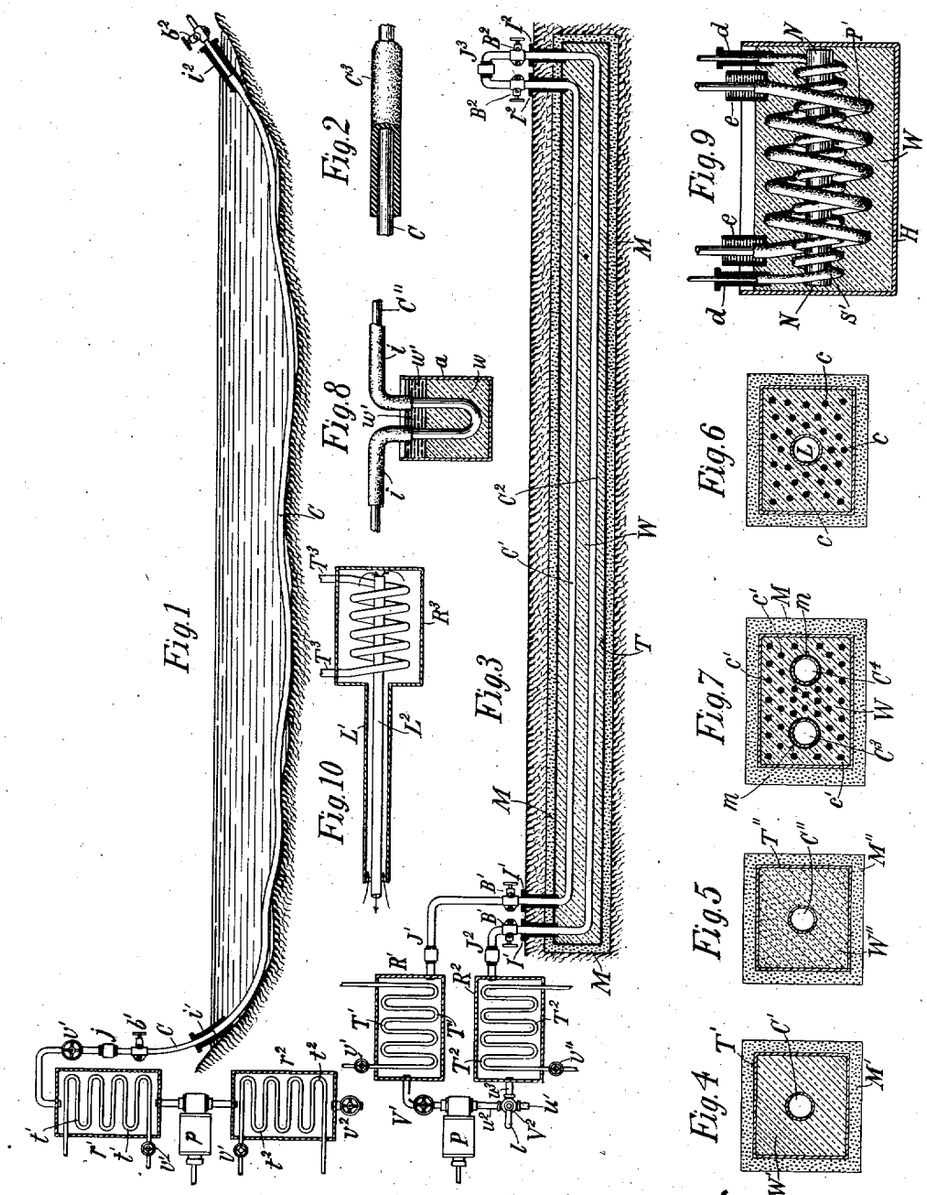

Witnesses:
Raphael Netter
Benjamin Miller

Nikola Tesla Inventor

by Kerr Page & Cooper Attys.

UNITED STATES PATENT OFFICE.

NIKOLA TESLA, OF NEW YORK, N. Y.

METHOD OF INSULATING ELECTRIC CONDUCTORS.

SPECIFICATION forming part of Reissued Letters Patent No. 11,865 dated October 23, 1900.

Original No. 655,838, dated August 14, 1900. Application for reissue filed September 21, 1900. Serial No. 30,722.

To all whom it may concern:

Be it known that I, NIKOLA TESLA, a citizen of the United States, residing in the borough of Manhattan, in the city, county, and State of New York, have invented certain new and useful Improvements in Methods of Insulating Electric Conductors, of which the following is a specification, reference being had to the accompanying drawings.

It has long been known that many substances which are more or less conducting when in the fluid condition become insulators when solidified. Thus water, which is in a measure conducting, acquires insulating properties when converted into ice. The existing information on this subject, however, has been heretofore of a general nature only and chiefly derived from the original observations of Faraday, who estimated that the substances upon which he experimented, such as water and aqueous solutions, insulate an electrically-charged conductor about one hundred times better when rendered solid by freezing, and no attempt has been made to improve the quality of the insulation obtained by this means or to practically utilize it for such purposes as are contemplated in my present invention. In the course of my own investigations, more especially those of the electric properties of ice, I have discovered some novel and important facts, of which the more prominent are the following: first, that under certain conditions, when the leakage of the electric charge ordinarily taking place is rigorously prevented, ice proves itself to be a much better insulator than has heretofore appeared; second, that its insulating properties may be still further improved by the addition of other bodies to the water; third, that the dielectric strength of ice or other frozen aqueous substance increases with the reduction of temperature and corresponding increase of hardness, and, fourth, that these bodies afford a still more effective insulation for conductors carrying intermittent or alternating currents, particularly of high rates, surprisingly-thin layers of ice being capable of withstanding electromotive forces of many hundreds and even thousands of volts. These and other observations have led me to the invention of a novel method of insulating conductors, rendered practicable by reason of the above facts and advantageous in the utilization of electrical energy for industrial and commercial purposes.

This method consists in insulating an electric conductor by freezing or solidifying and maintaining in such state the material surrounding or contiguous to the conductor, using for the purpose a gaseous cooling agent circulating through one or more suitable channels extending through or in proximity to the said material.

In the practical carrying out of my method I may employ a hollow conductor and pass the cooling agent through the same, thus freezing the water or other medium in contact with or close to such conductor, or I may use expressly for the circulation of the cooling agent an independent channel and freeze or solidify the adjacent substance in which any number of conductors may be embedded. The conductors may be bare or covered with some material which is capable of keeping them insulated when it is frozen or solidified. The frozen mass may be in direct touch with the surrounding medium, or it may be in a degree protected from contact with the same by an inclosure more or less impervious to heat. The cooling agent may be any kind of gas, as atmospheric air, oxygen, carbonic acid, ammonia, illuminating-gas, or hydrogen. It may be forced through the channel by pressure or suction produced mechanically or otherwise. It may be continually renewed or indefinitely used, being driven back and forth or steadily circulated in closed paths under any suitable conditions as regards pressure, density, temperature, and velocity.

To conduce to a better understanding of the invention, reference is now made to the accompanying drawings, in which—

Figures 1, 3, 6, 7, 8, and 9 illustrate in longitudinal section typical ways of carrying out my invention; and Figs. 2, 4, 5, and 10, in section, or partly so, constructive details to be described.

In Fig. 1, C is a hollow conductor, such as a steel tube, laid in a body of water and communicating with a reservoir r', but electrically insulated from the same at j. A pump or compressor p, of any suitable construction, connects r' with another similar tank r^2, provided with an inlet-valve v^3. The air or other

gas which is used as the cooling agent entering through the valve v^2 is drawn through the tank r^2 and pump p into the reservoir r', escaping thence through the conductor C under any desired pressure which may be regulated by a valve v'. Both the reservoirs r' and r^2 are kept at a low temperature by suitable means, as by coils or tubes t' t' and t^2 t^2, through which any kind of refrigerating fluid may be circulated, some provision being preferably made for adjusting the flow of the same, as by valves v'. The gas continuously passing through the tube or conductor C being very cold will freeze and maintain in this state the water in contact with or adjacent to the conductor and so insulate it. Flanged bushings i' i^2, of non-conducting material, may be used to prevent the leakage of the current which would otherwise occur, owing to the formation of a superficial film of moisture over the ice projecting out of the water. The tube being kept insulated by this means may then be employed in the manner of an ordinary telegraphic or other cable by connecting either or both of the terminals b' b^2 in a circuit including the earth.

In many cases it will be of advantage to cover the hollow conductor with a thick layer of some cheap material, as felt, this being indicated by C^3 in Fig. 2. Such a covering, penetrable by water, would be ordinarily of little or no use; but when embedded in the ice it improves the insulating qualities of the same. In this instance it furthermore serves to greatly reduce the quantity of ice required, its rate of melting, and the influx of heat from the outside, thus diminishing the expenditure of energy necessary for the maintenance of normal working conditions. As regards this energy and other particulars of importance they will vary according to the special demands in each case.

Generally considered, the cooling agent will have to carry away heat at a rate sufficient to keep the conductor at the desired temperature and to maintain a layer of the required thickness of the substance surrounding it in a frozen state, compensating continually for the heat flowing in through the layer and wall of the conductor and that generated by mechanical and electrical friction. To meet these conditions, its cooling capacity, which is dependent on the temperature, density, velocity, and specific heat, will be calculated by the help of data and formulæ familiar to engineers. Air will be, as a rule, suitable for the use contemplated; but in exceptional instances some other gas, as hydrogen, may be resorted to, which will permit a much greater rate of cooling and a lower temperature to be reached. Obviously whichever gas be employed it should before entering the hollow conductor or channel be thoroughly dried and separated from all which by condensation and deposition or otherwise might cause an obstruction to its passage. For these purposes apparatus may be employed which is well known and which it is unnecessary to show in detail.

Instead of being wasted at the distant station the cooling agent may be turned to some profitable use. Evidently in the industrial and commercial exploitation of my invention any kind of cooling agent capable of meeting the requirements may be conveyed from one to another station and there utilized for refrigeration, power, heating, lighting, sanitation, chemical processes, or any other purpose to which it may lend itself, and thus the revenue of the plant may be increased.

As to the temperature of the conductor, it will be determined by the nature of its use and considerations of economy. For instance, if it be employed for the transmission of telegraphic messages, when the loss in electrical friction may be of no consequence, a very low temperature may not be required; but if it be used for transmitting large amounts of electrical energy, when the frictional waste may be a serious drawback, it will be desirable to keep it extremely cold. The attainment of this object will be facilitated by any provision for reducing as much as possible the flowing in of the heat from the surrounding medium. Clearly the lower the temperature of the conductor the smaller will be the loss in electrical friction; but, on the other hand, the colder the conductor the greater will be the influx of heat from the outside and the cost of cooling agent. From such and similar considerations the temperature securing the highest economy will be ascertained.

Most frequently in the distribution of electricity for industrial purposes, as in my system of power transmission by alternate currents, more than one conductor will be required, and in such cases it may be convenient to circulate the cooling agent in a closed path formed by the conductors. A plan of this kind is illustrated in Fig. 3, in which C' and C^2 represent two hollow conductors embedded in a frozen mass underground and communicating, respectively, with the reservoirs R' and R^2, which are connected by a reciprocating or other suitable pump P. Cooling coils or tubes T' T' and T^2 T^2, with regulating-valves v' v^2 are employed, which are similar to and serve the same purpose as those shown in Fig. 1. Other features of similarity, though unnecessary, are illustrated to facilitate an understanding of the plan. A three-way valve V^2 is provided, which when placed with its lever 1 as indicated allows the cooling agent to enter through the tubes u' u^2 and pump P, thus filling the reservoirs R' R^2 and hollow conductors C' C^2; but when turned ninety degrees the valve shuts off the communication to the outside through the tube u' and establishes a connection between the reservoir R^2 and pump P through the tubes u^2 and u^3, thus permitting the cooling agent to be circulated in the closed path C' C^2 R^2 u^3 u^2 P R' by the

action of the pump. Another valve V', of suitable construction, may be used for regulating the flow of the cooling agent. The conductors C' C^2 are insulated from the reservoirs R' R^2 and from each other at the joints J' J^2 J^3, and they are furthermore protected at the places where they enter and leave the ground by flanged bushings I' I' I^2 I^2, of insulating material, which extend into the frozen mass in order to prevent the current from leaking, as above explained. Binding-posts B' B' and B^2 B^2 are provided for connecting the conductors to the circuit at each station.

In laying the conductors, as C' C^2, whatever be their number, a trench will generally be dug and a trough, round or square, as T, of smaller dimensions than the trench, placed in the same, the intervening space being packed with some material (designated by M M M) more or less impervious to heat, as sawdust, ashes, or the like. Next the conductors will be put in position and temporarily supported in any convenient manner, and, finally, the trough will be filled with water or other substance W, which will be gradually frozen by circulating the cooling agent in the closed path, as before described. Usually the trench will not be level, but will follow the undulations of the ground, and this will make it necessary to subdivide the trough in sections or to effect the freezing of the substance filling it successively in parts. This being done and the conductors thus insulated and fixed, a layer of the same or similar material M M M will be placed on the top and the whole covered with earth or pavement. The trough may be of metal, as sheet-iron, and in cases where the ground is used as the return-circuit it may serve as a main, or it may be of any kind of material more or less insulating. Figs. 4 and 5 illustrate in cross-section two such underground troughs T'' and T''', of sheet metal, with their adiathermanous inclosures, (designated M' and M'', respectively,) each trough containing a single central hollow conductor, as C' C''. In the first case the insulation W' is supposed to be ice obtained by freezing water preferably freed of air in order to exclude the formation of dangerous bubbles or cavities, while in the second case the frozen mass W'' is some aqueous or other substance or mixture highly insulating when in this condition.

It should be stated that in many instances it may be practicable to dispense with a trough by resorting to simple expedients in the placing and insulating of the conductors. In fact, for some purposes it may be sufficient to simply cover the latter with a moist mass, as cement or other plastic material, which so long as it is kept at a very low temperature and frozen hard will afford adequate insulation.

Another typical way of carrying out my invention, to which reference has already been made, is shown in Fig. 6, which represents the cross-section of a trough, the same in other respects as those before shown, but containing instead of a hollow conductor any kind of pipe or conduit L. The cooling agent may be driven in any convenient manner through the pipe for the purpose of freezing the water or other substance filling the trough, thus insulating and fixing a number of conductors *c c c*. Such a plan may be particularly suitable in cities for insulating and fixing telegraph and telephone wires or the like. In such cases an exceedingly-low temperature of the cooling agent may not be required, and the insulation will be obtained at the expense of little power. The conduit L may, however, be used simultaneously for conveying and distributing any kind of gaseous cooling agent for which there is a demand through the district. Obviously two such conduits may be provided and used in a similar manner as the conductors C' C^2.

It will often be desirable to place in the same trough a great number of wires or conductors serving for a variety of purposes. In such a case a plan may be adopted which is illustrated in Fig. 7, showing a trough similar to that in Fig. 6 with the conductors in cross-section. The cooling agent may be in this instance circulated, as in Fig. 3 or otherwise, through the two hollow conductors C^3 and C^4, which if found advantageous may be covered with a layer of cheap material *m m*, such as will improve their insulation, but not prevent the freezing or solidification of the surrounding substance W. The tubular conductors C' C^2, preferably of iron, may then serve to convey heavy currents for supplying light and power, while the small ones *c' c' c'*, embedded in the ice or frozen mass, may be used for any other purposes.

While my invention contemplates, chiefly, the insulation of conductors employed in the transmission of electrical energy to a distance, it may be, obviously, otherwise usefully applied. In some instances, for example, it may be desirable to insulate and support a conductor in places as is ordinarily done by means of glass or porcelain insulators. This may be effected in many ways by conveying a cooling agent either through the conductor or through an independent channel and freezing or solidifying any kind of substance, thus enabling it to serve the purpose. Such an artificial insulating-support is illustrated in Fig. 8, in which *a* represents a vessel filled with water or other substance *w*, frozen by the agent circulating through the hollow conductor C'', which is thus insulated and supported. To improve the insulation on the top, where it is most liable to give way, a layer of some substance *w'*, as oil, may be used, and the conductor may be covered near the support with insulation *i i*, as shown, the same extending into the oil, for reasons well understood.

Another typical application of my inven-

tion is shown in Fig. 9, in which P' and S' represent, respectively, the primary and secondary conductors, bare or insulated, of a transformer, which are wound on a core N and immersed in water or other substance W, contained in a jar H, and, as before stated, preferably freed of air by boiling or otherwise. The cooling agent is circulated in any convenient manner, as through the hollow primary P', for the purpose of freezing the substance W. Flanged bushings *d d* and oil-cups *e e*, extending into the frozen mass, illustrate suitable means for insulating the ends of the two conductors and preventing the leakage of the currents. A transformer as described is especially fitted for use with currents of high frequency when a low temperature of the conductors is particularly desirable, and ice affords an exceptionally-effective insulation.

It will be understood that my invention may be applied in many other ways, that the special means here described will be greatly varied according to the necessities, and that in each case many expedients will be adopted which are well known to engineers and electricians and on which it is unnecessary to dwell. However, it may be useful to state that in some instances a special provision will have to be made for effecting a uniform cooling of the substance surrounding the conductor throughout its length. Assuming in Fig. 1 the cooling agent to escape at the distant end freely into the atmosphere or into a reservoir maintained at low pressure, it will in passing through the hollow conductor C move with a velocity steadily increasing toward the end, expanding isothermally, or nearly so, and hence it will cause an approximately-uniform formation of ice along the conductor. In the plan illustrated in Fig. 3 a similar result will be in a measure attained, owing to the compensating effect of the hollow conductor C' and C^2, which may be still further enhanced by reversing periodically the direction of the flow in any convenient manner; but in many cases special arrangements will have to be employed to render the cooling more or less uniform. For instance, referring to Figs. 4, 5, and 6, instead of a single channel two concentric channels L' and L^2 may be provided and the cooling agent passed through one and returned through the other, as indicated, diagrammatically, in Fig. 10. In this and any similar arrangement when the flow takes place in opposite directions the object aimed at will be more completely attained by reducing the temperature of the circulating cooling agent at the distant station, which may be done by simply expanding it into a large reservoir, as R^3, or cooling it by means of a tube or coil T^3 or otherwise. Evidently in the case illustrated the concentric tubes may be used as independent conductors if insulated from each other and from the ground by the frozen or solidified substance.

Generally in the transmission of electrical energy in large amounts, when the quantity of heat to be carried off may be considerable, refrigerating apparatus thoroughly protected against the inflow of heat from the outside, as usual, will be employed at both the stations and when the distance between them is very great also at intermediate points, the machinery being advantageously operated by the currents transmitted or cooling agent conveyed. In such cases a fairly-uniform freezing of the insulating substance will be attained without difficulty by the compensating effect of the oppositely-circulating cooling agents. In large plants of this kind when the saving of electrical energy in the transmission is the most important consideration or when the chief object is to reduce the cost of the mains by the employment of cheap metal, as iron or otherwise, every effort will be made to maintain the conductors at the lowest possible temperature, and well-known refrigerating processes, as those based on the regenerative principle, may be resorted to, and in this and any other case the hollow conductors or channels instead of merely serving the purpose of conveying the cooling agent may themselves form active parts of the refrigerating apparatus.

From the above description it will be readily seen that my invention forms a fundamental departure in the principle from the established methods of insulating conductors employed in the industrial and commercial application of electricity. It aims, broadly, at obtaining insulation by the continuous expenditure of a moderate amount of energy instead of securing it only by virtue of an inherent physical property of the material used as heretofore. More especially, its object is to provide, when and wherever required, insulation of high quality, of any desired thickness, and exceptionally cheap, and to enable the transmission of electrical energy under conditions of economy heretofore unattainable and at distances until now impracticable by dispensing with the necessity of using costly conductors and insulators.

What I claim as my invention is—

1. The method of insulating electric conductors herein described which consists in imparting insulating properties to material surrounding or contiguous to the said conductor by the continued action thereon of a gaseous cooling agent, as set forth.

2. The method of insulating electric conductors herein described which consists in reducing to and maintaining in a frozen or solidified condition the material surrounding or contiguous to the said conductor by the action thereon of a gaseous cooling agent maintained in circulation through one or more channels as set forth.

3. The method of insulating electric conductors herein described which consists in surrounding or supporting the conductor by material which acquires insulating properties when in a frozen or solidified state, and main-

taining the material in such a state by the circulation through one or more channels extending through it of a gaseous cooling agent, as set forth.

4. The method of insulating an electric conductor which consists in surrounding or supporting said conductor by a material which acquires insulating properties when frozen or solidified, and maintaining the material in such state by passing a gaseous cooling agent continuously through a channel in said conductor, as set forth.

5. The method of insulating electric conductors, which consists in surrounding or supporting the said conductors by a material which acquires insulating properties when in a frozen or solidified state, and maintaining the material in such state by the continued application thereto of a gaseous cooling agent, as set forth.

6. The method of insulating conductors herein set forth which consists in surrounding or supporting the conductors by a material which acquires insulating properties when in a frozen or solidified state, and maintaining the material in such state by the circulation of a gaseous cooling agent through a circuit of pipes or tubes extending through the said material as set forth.

7. The method of insulating electric conductors which consists in laying or supporting the conductors in a trough or conduit filling the trough with a material which acquires insulating properties when frozen or solidified, and then causing a gaseous cooling agent to circulate through one or more channels extending through the material in the trough so as to freeze or solidify the material, as set forth.

8. The method of insulating electric conductors which consists in embedding the same in a moist or plastic compound which acquires insulating properties when in a frozen or solidified state, and maintaining the compound in such state by circulating a gaseous cooling agent through one or more channels extending through the compound, as set forth.

9. The method of insulating electric conductors which consists in laying or supporting the conductors in a trough or conduit, filling the trough with a material which acquires insulating properties when frozen or solidified, protecting the trough from the surrounding medium in which it is laid by an adiathermanous inclosure, and then freezing or solidifying the material surrounding the conductors and maintaining the same in such state by circulating a gaseous cooling agent through one or more channels extending through the same, as set forth.

NIKOLA TESLA.

Witnesses:
DRURY W. COOPER,
JOHN C. KERR.

Homemade Solar Cells

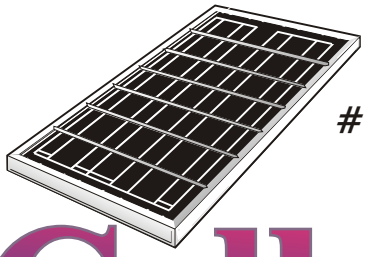

401P

© Copyright 2003

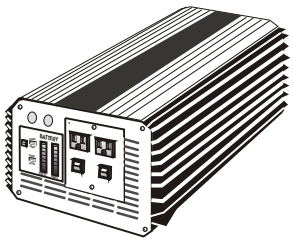

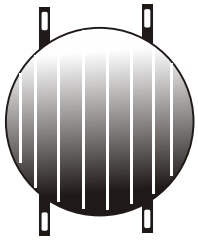

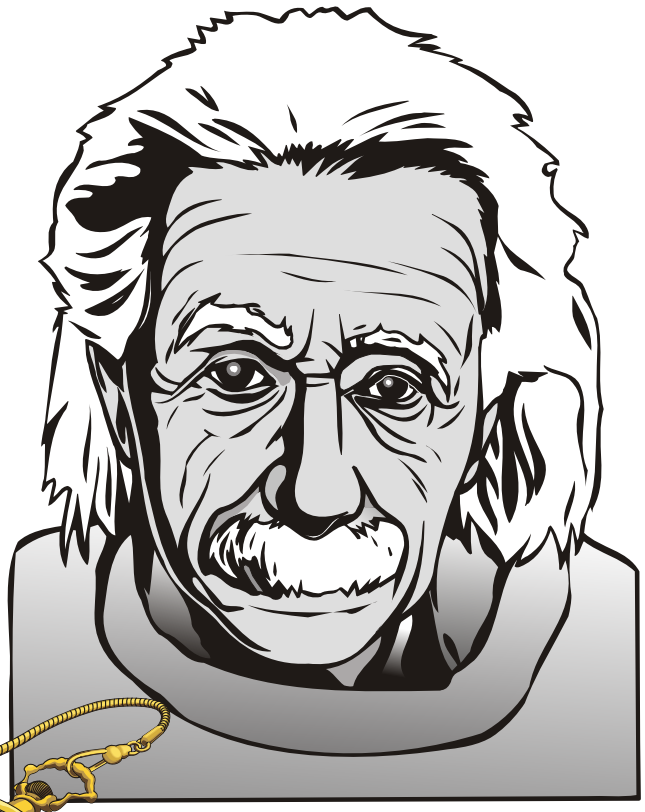

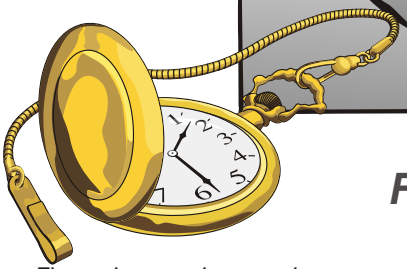

2003

FREE ENERGY

for

Time is running out

CREATIVE SCIENCE *P.O. BOX 557 NEW ALBANY, IN. 47151*

www.fuelless.com www.fuellesspower.com

Thank you for buying these plans. It will help us in our research efforts and to tell the world about this suppressed technology.

Included is 3 different ways to make a home made solar cell:

The 1996 japan Patent is by far the best and the most powerful. The japan patent uses a simple process that has been used for centuries, You simply screen print the negative and positive layers and the contact layers on to a piece of glass plate, it does not matter how thick the glass is. The layers can be sprayed on with a spray gun and a air compressor, but it is best to Screen print it. Screen printing each layer will make your solar cells last longer and they will be more efficient
If you do not know what screen printing is, you can learn about this very simple process from the Library. Also lots of info and supplies can be purchased at your local hobby store or art supply store. You can also buy supply's such as screens and such at a local Screen printing shop. or they can screen print it for you. Screen printing is very simple and cheap to do for you self right in your own home. It may take a little studying but it will be worth it. you can print up as many Solar Cells as you want for just pennies. (Cover your entire roof with them. You will have more energy than you will ever need. You can then make money selling electricity back to the electric company which should pay for it self in one to two years. The most expensive part is the deep cycle marine batteries and your inverters. Many are making a nice income every year from this, just by selling electricity back to the electric company, ask to see if your electric company has that type of program in your area. most states I heard do.

The Japan method is new and it is not limited to just a glass surface, you can also apply it right onto aluminum or copper sheeting. Look at the 1 st page, see the N type layer #2 this is what the Patent says to Print first. But if you want to print onto a metal surface the metal surface would be #5 then the 1 st print would be #4 then let it air dry and then bake at 600 degrees for 3 to 5 minutes.
(Each printed layer can be done this way.) Then your 2nd print would be #3, then you let air dry, then bake, then Print #2 Air dry/bake. Then you must print a Metal grid over #2 then let air dry, (you don't have to bake the metal print.) This will be your negative contact, #5 will be your Positive Contact, so what your doing is just simply reversing the printing layer steps. If you have never seen a solar cell the metal grid is like a metal door screen but with bigger spacing. You can buy a special metal printing ink or mix it your self as the patent says. The ink is simply made up of nickel or silver. Nickel is the cheapest and will work just fine.

Please Notice: You can not manufacture and sell the Japan Solar Cells with out there permission If you want to leam about Screen Printing we sell a VHS Video for only $29.95
Please send $4 for shipping.

The chemicals that are mentioned in the patent are very easy to get. You can buy them in any QTY from any Chemical supply company look one up in your yellow page phone book. Or check online, search for Chemical Supply Shops or companies.

About Photovoltaics

Photovoltaic (or PV, Solar Cells) systems convert light energy into electricity. The term "photo" is from the Greek "phos" which means light. "Volt" is named from Alessandro Volta (1745-1827, He was a pioneer in the study of electricity. So you could say that" Photo-voltaics is basically light electricity! And is most commonly known as Solar Cells. Solar cell systems are already a very important part of our lives. The simplest systems power many of the small calculators and wrist watches we use everyday. PV power is the cheapest form of electricity for powering these small devices. There are many ways to make solar cells, and one of the cheapest ways is to screen print them. There are many companies in the USA that are doing this. Many US Patents have been issued for screen printing solar cells and there are many different chemical inks that can be used. The Japanese Patent is one of many.

Turning Sunlight Into Electricity!

Solar Cells convert light energy into electricity at the atomic level. It was first discovered in 1839, the process of producing electric current in a solid material with the aid of sunlight wasn't truly understood for more than a hundred years.

Throughout the second half of the 20th century, the science has been refined and process has been more fully explained. As a result the cost of these devices has put them into the mainstream of modem energy producers. This was caused in part by advances in technology, where PV conversion efficiencies have been improved.

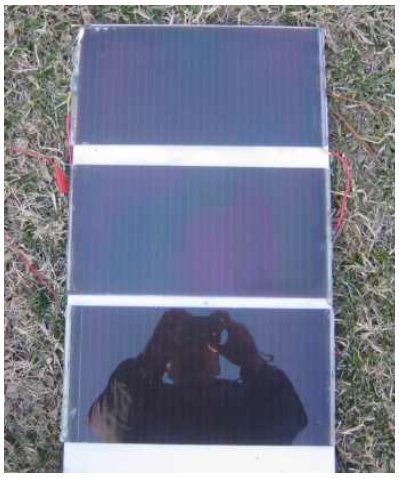

12″ x 18″ 12 vdc
Screen Printed Solar Cells

Solar Cell Materials

The most important parts of a solar cell are the semiconductor layers, this is where the electron current is created. There are a number of different materials available for making these semiconducting layers, and each has benefits and drawbacks. Unfortunately, there is no one ideal material for all types of cells and applications.

In addition to the semiconducting materials, solar cells consist of a top metallic grid or other electrical contact to collect electrons from the semiconductor and transfer them to the external load, and a back contact layer to complete the electrical circuit. Then, on top of the complete cell is typically a glass cover or other type of transparent encapsulant to seal the cell and keep weather out, and a anti-reflective coating to keep the cell from reflecting the light back away from the cell. A typical solar cell consists of a cover glass, a anti-reflective layer, a front contact to allow the electrons to enter a circuit and a back contact to allow them to complete the circuit, and the semiconductor layers where the electrons begin to complete there voyages!

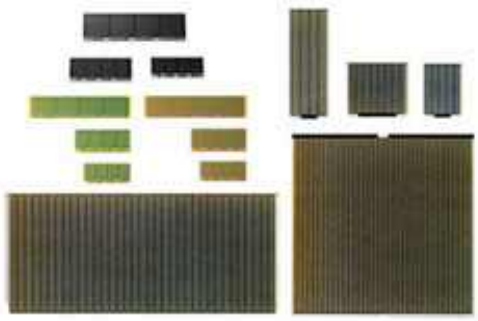

Scientists in Arizona are using screen-printing, a technique developed for printing fabrics, paper and to produce plastic, glass and metal solar cells.

The basic materials of a photovoltaic cell (solar cell) are inexpensive. The organic manufactured by Ghassan Jabbour and colleagues at the University of Arizona in Tucson have about 11/4 of the efficiency of commercial silicon solar cells, which turn 10-20 per cent of light energy into electricity. But, being cheap to produce, they can make up the loss in quantity what they lack in quality. Now the Japan screen printed solar cells are even better than that!

For more info contact: Matsushita Electric Industrial co. LTD, Osaka. Japan

A Screen printing press, the wood frame is the screen

In conventional Screen - printing, a taut piece of screen mesh fabric is stretched over a wood frame, you can buy the screens already made and the materials from any screen printing shop or screen printing supply company in your area or on the internet. Also you might want to check with your local art store, sometimes they have full kits etc...

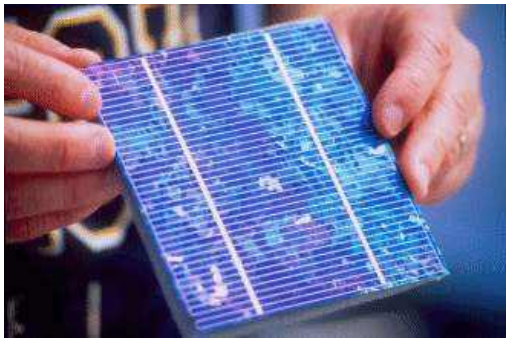

An example of a Silicon cell

The screen is then masked off using masking tape, For example: a 5" x 5" square area. the screen outside of the masking tape is then coated with a block out liquid or paint, this is so when you apply your semiconducting ink that you mixe, it will go through just the area that you masked off when you apply a rubber squeegee to it. The screen can then be placed on any table top and hinges attached to the back of the wood frame and the table, this will insure the screen can move up and down. Then get a small wood paint stick and using a small nail, hammer one end to the front side of wood frame. This will be your kick leg and will help keep your screen in an upward position when needed. Take a 5" x 5" piece of glass and place it right under the open 5" x 5" area of the open screen mesh. When the leg is flipped back the screen comes down and you grab your rubber and wood handled squeegee and with the ink in front of your rubber squeegee pull toward you applying pressure so ink will go through screen, once you have passed by the 5" x 5" area then flip the screen back up and reverse squeegee to flood the screen for the next print.

The Research group mentioned earlier, Jabbour's group, print very flat, thin cells, onto glass in a similar way. First they coat the glass with a transparent electrically conducting material (metal ink) that acts as one of the solar cell's electrodes. On top of this, they lay down a thin film of a polymer, which helps to gather current from the photovoltaic material.

Finally they deposit a blend of two organic compounds that convert light into electricity. One is a carbon-based molecule called a fullerene, it produces charged particles that carry an electrical current when light shines onto the molecules. The other is a polymer, it ferries the current to the electrodes on the top and the bottom of the solar cell.

Under blue light, these screen-printed solar cells have an efficiency of 4.3 per cent. And the Japanese cells are much greater than that! Many of the flexible solar cell panels that you see today are screen printed.

Now lets take a look at what The Dupont Company is doing with there solar cells. Dupont is involved in the development of solar cell metallisation since the 1970's. Although all PV cell manufacturers use different processes to make there solar cells, the metallisation of the rear and front sides is in many cases **DONE BY SCREEN PRINTING!** Which has shown itself to be one of the most economic way to produce solar cells.

Recently, Dupont achieved a real breakthrough in the formulation of front-side contacts for silicon solar cells that has resulted in customers, such as photowatt, to realize the screen printing efficiency by changing their anti-reflection technology from **titanium dioxide to silicon nitride.** This came at just the right time for the Photowatt solar cell company, Because they have been using there own past material for the front side metallisation since it first started manufacturing solar cells. The development of the metallisation from Dupont for the back side, (p-side). These pasty inks are either silver pastes containing Al, or pure Al pastes to secure a good ohmic contact with the p-side of the solar cell. We have told you all this to help you better understand and leam the screen printing solar cell process and what others are doing.

The Japan Solar Cell Patent

Note: You can Use an outside Grill to bake the Screen Printed layers. It is a good idea to make small cells, 8" x 10" or what ever. It is easier to fit into the Grill, We suggest Baking in side a large roasting pan and then put the roasting pan inside the preheated grill and shut the lid. It is suggested that you try and make 3 prototype cells first, Work out all the details, Test them, and then start on a large production of Solar Cells. It will all get much easier once you have done it. It is also suggested that you bake them out side. You don't want any fumes in the house, an outside grill is the best and most readily available oven there is and propane is cheap. I hear you may be able to make them without a Nitrogen atmosphere if not try special gas companies or make some yourself, it is supposed to be nonflammable.

Screen Printing: You start with a small 14" x 14" wood frame 2x2". Then a plastic or clothe screen is stretched over the frame tightly one side at a time, and then stapled down on all 4 sides, we suggest buying a yellow 200 mesh screen from a screen printing supplier, Then you put an image of what ever you want to print into the screen by photo emulsion or by cutting a lacquer or water film with an exacto knife. (see our Screen Printing Video) Once you have your image you place the finished screen onto a flat smooth table top, attach it to a 14" long 2" x 4" with 2 door hinges. using wood screws, then you attach the 2" x 4" on to the table so it and the screen will not move. the screen should only go up or down.
you then put your 8" x 10" glass under the screen, register it, then lay the screen down over the glass and apply your ink and then with a small 12" rubber Squeegee, You pull the ink over the image and it is pushed thru the screen mesh and thru the image that you cut and smoothly is printed onto the glass.

SUPPLIERS;

Screen Printing Books and supplies; NDS 1-800-783-3883 Indianapolis, IN.
(See also Art Store's, Hobby Shop's, Arts and Crafts, Screen printing company's.)
They also sell copper sheeting.

Solar Cell Screen Print Chemicals: Search the web, simply type in the chemical you are looking for and many suppliers will pop up. Example: Cadmium Sulphide Supplier..... We have checked and you can find all the chemicals and info on them free on the web.

Also see: www.stanfordmaterials.com/semi.html

The Stanford Materials Company

1. Cadmium Sulphide in powder form = Cds (or if already thick liquid or ink OK.)
2. Cadmium Chloride + Cdcl 2 (Powder or liquid form)
3. Propylene glycol + pg in liquid form
4. Carbon Powder, if you can not find none make your own wood carbon powder?
5. Cadmium = Cd
6. Tellurium = Te

Copyright 2003 /all pages

THE COPPER CHLORINE SOLAR CELL: Buy a roll of Thin Copper sheeting, cut a 1.5" diameter piece out with a pair of cutters, then sand polish the copper on both sides with some fine grade steel wool. then by using a propane torch heat the copper while griping it with rubber handled pliers, and let the copper get red hot, until it glows, move the copper over the flame evenly for about 3 minutes then allow to cool slowly. Then once it is cooled dip it down in an acid solution of 1/2 water and 1/2 acid, **WARNING!** Never pour water into acid always pour acid into water. The acid that you can use is MURIATIC ACID (Hydrochloric Acid) you can buy it at any hardware store, or you can use a solution of nitric acid. REMEMBER TO WEAR PROTECTIVE GOGGLES OR OTHER SUITABLE EYE PROTECTION, AND WORK IN A WELL VENTILATED AREA. DO NOT SMELL THE FUMES OR MAKE CONTACT WITH YOUR SKIN, WEAR RUBBER GLOVES. THESE ACIDS CAUSE SEVERE BURNS. KEEP OUT OF THE REACH OF CHILDREN. NOTICE: WE ARE NOT RESPONSIBLE FOR ANYTHING IN THESE PLANS , YOU BUILD AND EXPERIMENT AT YOUR OWN RISK.

Keep it in the acid for only a half a minute or longer, the idea is to keep it dipped in the acid long enough for the black oxide to come off of the top layer, under that is the photo sensitive red cuprous oxide. Remember you should only have a dark bright red layer left. Note: do not leave it in to long it will eat away the red. once you have done that then it's O.K. to wash off the acid with water, do all of this outside or in your garage, make sure all of the acid is off. wash no less than 3 minutes, now look at the copper disk on one side you will have bright copper, this is the positive side, and on the other side you will have red this the negative side the side you face toward the sun. now mix a small solution of 95 water and 5 Clorox bleach, now take the red side and look for scratches if there are any you must paint them with enamel oil base paint, apply paint to any where on that side where copper is showing through, now glue a plastic lid on to red side, let it dry them drill a small hole in the top pour in Clorox bleach and water solution and then place a copper or steel wire through the hole and onto the bottom, wire must be submerged in the solution, now tape or glue the hole up with the wire in it. now tape Solar cell out into the sun and using a DC volt meter attach + to the copper back, and - to the steel wire coming out of hole. you will see the meter move showing a voltage, now block the sun with your hand and watch the voltage drop.
make many of these for just pennies and put them in series or parallel to increase your voltage or amperage. These type of cells are only 5 of the japan cells.

I have heard that the Japanese cells are about 95 of the American made silicon cell that is a very expensive process. Screen printing them is the cheapest way to go and is easy, once you get the hang of it.
Chemicals: needed: 1. **Cadmium Sulphide = cds** 2. **Cadmium Chloride == cdcl 2** (These can be in powder form) 3. **Propylene Glycol = pg** this is used to mix the powders into a pasty but screen printable liquid ink type. 4. **Carbon powder,** if you can not find it make some yourself out of burnt wood etc... 5. **Cadmium = cd**
6. **Tellurium = Te**

Copper Chorline Solar Cell

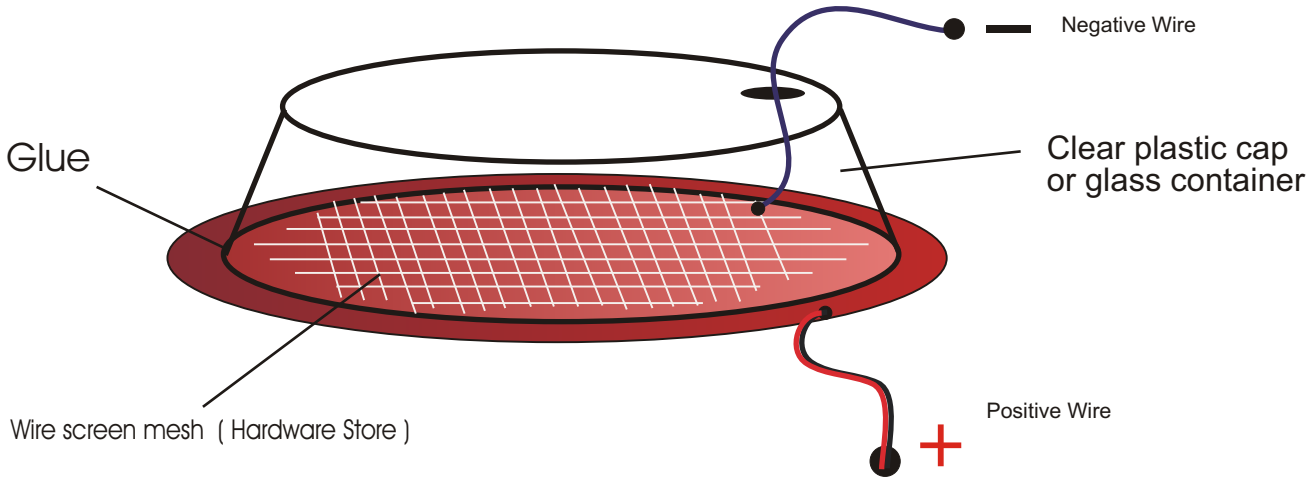

There are many different ways to construct these home made cells, the above drawing shows a wire screen mesh that you can buy at any hardware store. Using wire mesh makes a much more powerful cell, than just using one strand of wire. before assembly, attach the wire mesh to the red copper side. use a small weight in the center of the wire mesh and using clear silicon, glue down the edges, (make sure you don't get any glue in the area where the plastic cap is going to sit.) now let that sit over night, then glue on your clear plastic cap on to the red copper side of cell.

these also make a great science fair project as well as providing free electricity to your home. It's going to take some practice if you do any of these projects.

Knowledge is Power! Study this Patent well and read all you can from the free info on the internet as well about screen printing solar cells and the many different chemicals that can be used! The Japan Solar Cells are better to make and will last a long time!

Creative Science & Research: PO BOX 557 New Albany IN, 47151
www.fuelless.com www.fuellesspower.com

A More Simplified Copper

Solar Cell

Similar to the Copper Chlorine Cells. We have found that if you use Conductive Nickle Paint you will get far better results. But start out using the screen mesh or the aluminum wire. You can buy Nickle Paint on the internet. Simply search for " Nickle Paint suppliers " on your search engine. You can do the same for finding thin copper sheeting. There is also a company in Louisville KY, that sells copper sheeting, see Conner Manufacturing 18th st. Louisville, KY. (502)-587-1387 Or Vendome Copper & Brass 729 Franklin St. Louisville, KY. 40202 (502) -587-1930

Warning: You build at your own risk!

Creative Science & Research PO BOX 557 New Albany, IN. 47150

Copyright 2003

The fabrication of a Modern solar cell is very complicated and a delicate process. In most cases, a large silicon ingot is grown from a small crystal in an extremely clean and sterile environment. Any dust or particle contamination even down to the atomic level during the growing process can completely ruin the ingot. Impurities must typically be kept to one part per billion.

The growing process itself is slow, and the very pure materials required are extremely costly. Because of this, a single ingot which is later sliced into thin cells approximately 0.05 centimeters thick often costs thousands of dollars to produce.

This fact coupled with the general inefficiency (7-14 typically) of even these modem cells has kept the price of photoelectric cells too high to be competitive with other sources of power.

Someday, lower cost production techniques together with higher efficiency will make widespread use of clean, renewable solar energy possible. Someday solar cells will be a very common Source of energy, the idea of deriving electricity directly from sunlight will continue to excite the inventor and experimenter.

It is well known that if even 1 of the Sahara desert were covered with the solar cells just described, it would more than supply our worlds current energy needs. We will briefly outline some of the processes and materials that are now being researched for converting the use of solar energy into electricity.

You should have no trouble building the cells that will be described in the following pages. Be cautious. Use good judgement and common sense in handling the chemicals and heating processes described. You'll find that a simple solar cell can be constructed by a persistent student, Solar cells that can make outstanding science fair projects.

The electrical output from the homemade copper cells in this article will be well below that of modern commercial cells, but the materials cost is also very low. Often a cell can be literally produced for pennies! The loss in efficiency is probably more than made up in the reduction of their price.

But again the Screen printed solar cells are far more powerfull than the copper type solar cells.

COPPER SOLAR CELLS

A small, carefully made solar cell of approximately 2 1/2" diameter will produce around 5 milliamperes of current in direct sunlight. This is enough to drive a sensitive light meter or extremely sensitive relay. Banks of these cells have even been used to run small electric motors.

Experiment with the procedures described. You may stumble onto a method of producing even more efficient cells than we have. Just be sure to be very careful. The chemicals described can be dangerous if abused or mishandled. You build at your own risk! There are an estimated 80 trillion kilowatts of solar electrical energy available in the northern hemisphere.

Many Different types of Chemicals Have Photoelectric Properties!

There are a number of elements and chemical compounds that can be used to produce photoelectric power. They include titanium, selenium, thorium, cuprous oxide, and metals of the alkali group including sodium, potassium, rubidium, lithium, cesium and francium.

The two best substances for a homemade cells are, **selenium and cuprous oxide.**

An example of a complete Free Energy System, Using Solar cells in series and parallel to charge 12 volt deep cycle batteries, which in turn runs our 5,000 watt inverter to run your home on 120 vac x 60 Hz. We recommend replacing the solar panels with our Fuel less Engine connected to a 12 volt car alternator to keep up batteries. The lawn mower motor we use as a back up.

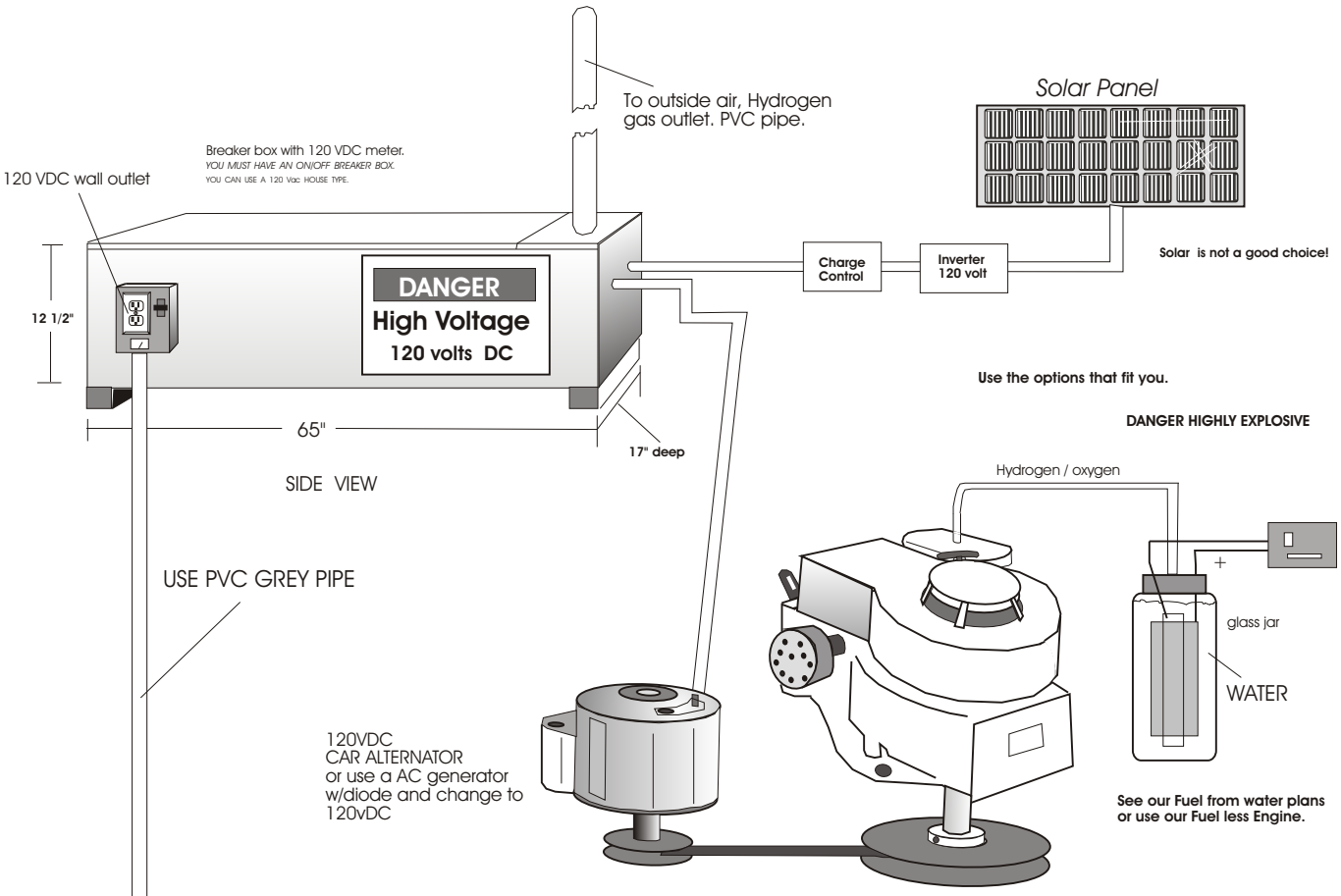

Charging system: charge for 2 to 3 hrs per day!

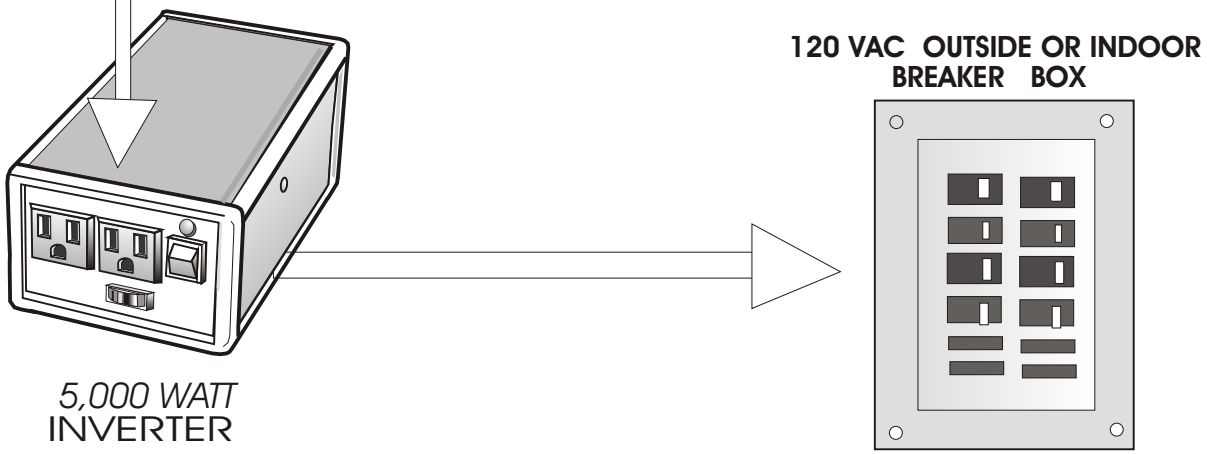

5,000 WATT
INVERTER

120 vac x 60 hz
modified or pure sine wave.

Selenium was extensively used in the production of commercial solar cells before silicon. Although it can be a somewhat difficult to find a supplier and it is a toxic heavy metal, it is relatively inexpensive and can often be found in old model radio sets, where it was used in the rectifier of the power supply.
A selenium photocell is made from a metal plate (usually iron) with one side being covered with a layer of selenium. A very thin layer of silver or gold is spattered over the selenium layer forming a layer of current-carrying material that allows light to pass through it. This layer is called a transparent electrode. A metal electrode called a collector, rests on the gold or silver near the edge of it.

Wires are attached to the collector and the iron plate to deliver the electric current to the load. Although not as great an output as more modern cells, a selenium photocell can produce as much as eight milliamperes for each square inch of surface area exposed to bright sunlight.

Cadmium sulfide is probably the most promising low-cost solar cell second only to silicon.

If you have an interest in electronics, you will undoubtedly recognize cadmium sulfide (the common "CDS" cell) as the material used in light detecting circuits. Although inventors have realized for some time that a number of materials such as cadmium sulfide change their electrical resistance in the presence of light, it has only been in fairly recent times that it was realized they could also be used to generate power also.

The most important attribute of cadmium sulfide is that it could be mass-produced efficiently using a thin-film procedure wherein very thin layers of its photosensitive components are evaporated onto a base metal or screen printed.

Cadmium cells are fairly efficient (3-5 typical) making them a good rival for amorphous silicon cells.

An Experimental Cell With Cuprous Oxide

The best cell by far for the you to start with, is a cell made with cuprous oxide (Cu^O). Copper actually has two oxides, a red

oxide called cuprous oxide, and a black oxide called cupric oxide (CuO).

The dark red cuprous oxide has photoelectric properties but black cupric oxide does not. The black oxide that forms on the outside of your cell must be removed because it is opaque and will not allow light to reach the cell's active surface.

Building your solar Cell

Step 1. Cut a piece sheet copper into the size and shape you wish for your cell. Although .025 inch thick copper was used for the cells described here, just about any thickness will do.

Copper is a soft metal and can be cut with tin snips or even with an old pair of scissors.

Cut your cell with a diameter of 1 1/2 inches, we strart with a smaller cell because it is much easier to work with. The larger the heat source the bigger the size copper you can use to create your solar cell. After you get the hang of it you can then build larger cells..

As you cut the copper, be sure to leave a "handle" so that you may grip the cell with pliers without marring the cell's active surface.

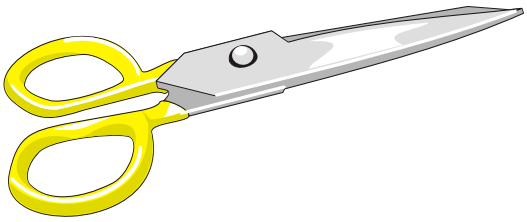

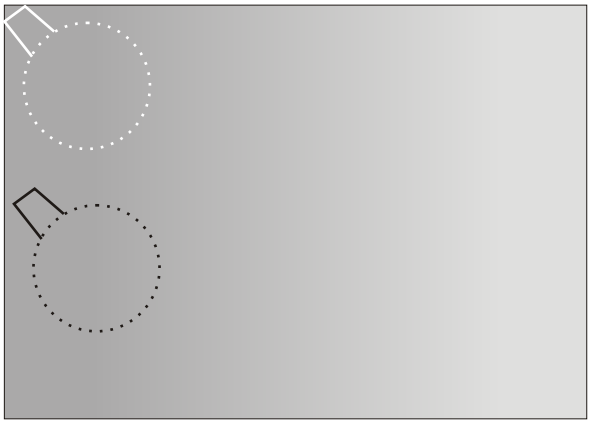

Thin Copper sheet

Step 2.
the surface of the cell must be made extremely clean. Prepare a solution of nitric acid by carefully mixing 20 parts nitric acid and 80 parts distilled water. Remember towear protective goggles or other suitable eye protection and to work in a well ventilated area whenever you work with chemicals.

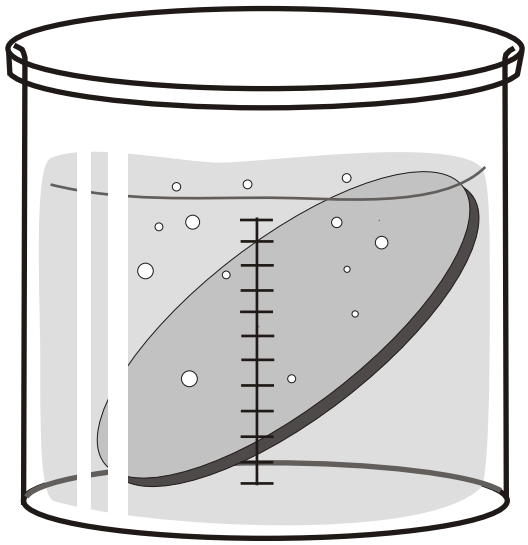

Copper disk, scoured & polished and dipped in acid.

IMPORTANT! ALWAYS ADD ACID TO WATER!
NEVER ADD WATER TO ACID!

Begin by carefully polishing the face of the cell with a fine grade of steel wool until it shines brightly. Then place the cell with the shiny side up, in the solution of nitric acid.

Soon, tiny bubbles will form on the copper disk. Stir the solution occasionally. When the disk seems shiny and well cleaned, remove and rinse it under cool running water.

WARNING! Never to allow your skin to touch the acid, and that no acid remains on the cell.

The cell will sometimes work without the acid cleaning if it is simply well polished by the steel wool. However, we strongly recommend the acid cleaning.

Nitric acid and the other chemicals mentioned in the text can be easily ordered from a number of mail-order chemical houses such as found in the classified section of magazines such as Popular Science.

Step 3. Cuprous oxide is now formed on the disk by heating it over a Bunsen burner, or propane torch. A gas stove can be used, but results may be unpredictable.

The time me disk must be heated varies greatly depending on the heat of the torch, and the thickness and size of the copper piece. Using a standard propane torch from the hardware store and a disk of the described size, I found 2 minutes and 40 seconds to be ideal. If you heat it too long, you run the risk of burning off the oxides. Heating for too short a time may prevent the oxides from forming fully.

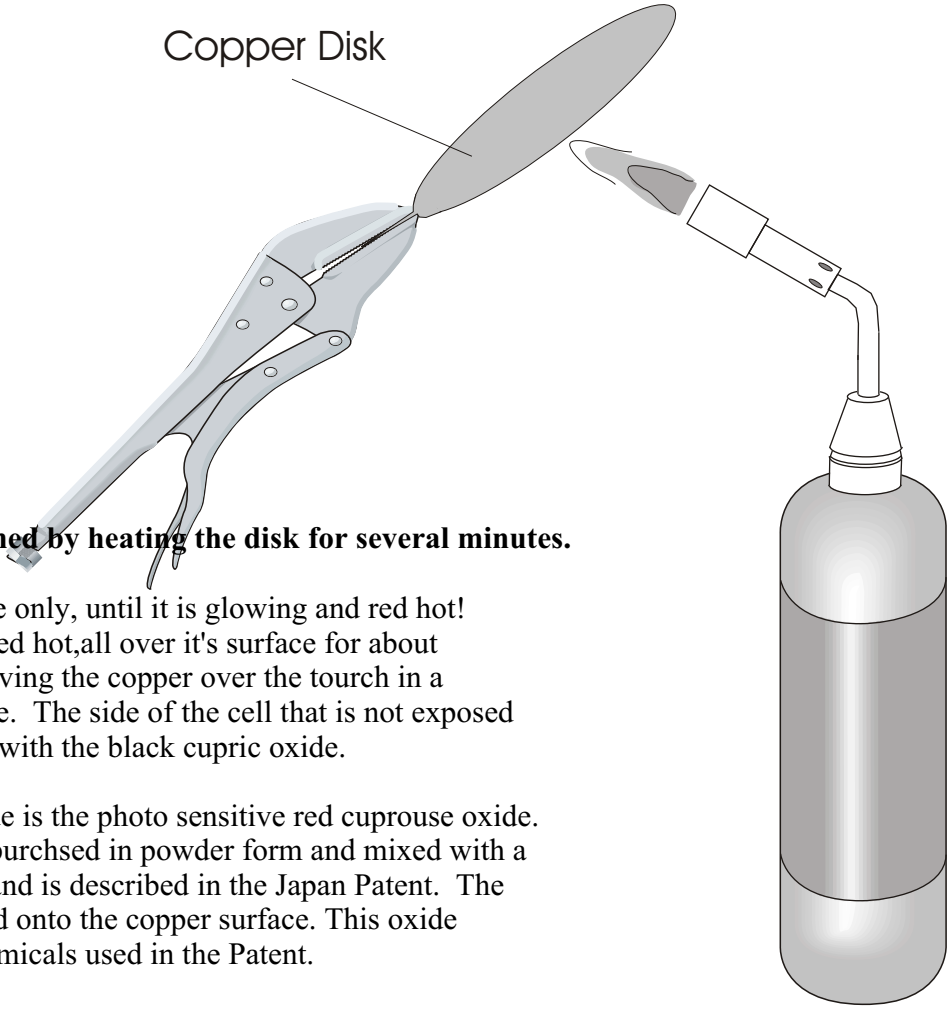

Photo sensitive oxides are formed by heating the disk for several minutes.

The Copper is heated on one side only, until it is glowing and red hot! copper must be kept at an even red hot,all over it's surface for about 2 minutes and 45 seconds by moving the copper over the tourch in a round motion. counter clock wise. The side of the cell that is not exposed to the flame will become coated with the black cupric oxide.

Now just beneath this black oxide is the photo sensitive red cuprouse oxide. This red cuprouse oxide can be purchsed in powder form and mixed with a special solvent, which is clear, and is described in the Japan Patent. The Oxide can then be screen printed onto the copper surface. This oxide material is different than the chemicals used in the Patent.

After heating your cell for the prescribed time, it must be carefully cooled. There are two ways to go about this. You can cool the copper quickly by either placing it face down on a flat metal surface, or by waiting a few moments and then quenching it in cool water. The advantage to cooling the cell quickly is that the unwanted black cupric oxide will often flake off the cell due to the difference in contraction rates of the oxides. Unfortunately, I have had bad luck with this method despite extensive experimentation with different temperatures and procedures.

What has worked very well for me is to bring the cell's temperature down as slowly as possible making sure the black oxide does not crack at all. Once completely cool, the cell is immersed in the nitric acid bath. You must wait while the acid begins to dissolve the black oxide. Then you remove and rinse the cell.

A very weak solution of sodium cyanide can also be used with good results. However, you should be extremely careful when using it. Cyanide is an extremely poisonous chemical, and if accidentally mixed with an acid can create deadly fumes. At this point the black oxide covering the cell can be rubbed away with steel wool and a little elbow grease. After all of the Black oxide has been removed, your cell should have a uniform caoting of deep red on one side.

black oxide has been removed, your cell should have a uniform coating of deep red on one side. Don't worry if the very outside edges of your cell don't have the coating, this is due to uneven cooling and is normal. Keep in mind that the red coating must not be scratched or scraped away to reveal the bare copper plate beneath. If this happens the cell might short in the final step and not work at all.

Testing: There are now several ways that you can test you solar cell even though it is not finished, it can generate power. If you are building the cell for a science fair or other demonstration, you may want to stop and use the cell at this point while the cuprous oxide is still visible. If you hold the cell near a source of bright light, a current will be generated between the cuprous oxide coating and the copper plate. The copper will form the positive terminal and the cuprous oxide the negative.

Making contact with the copper portion of the disk is very easy. Simply sand a small bare spot on the back of the solar cell and attach a wire. Attaching the wire and making a good contact with the cuprous oxide is more difficult, it is hard to solder and attach anything. but it can be done by pressure gluing or other.

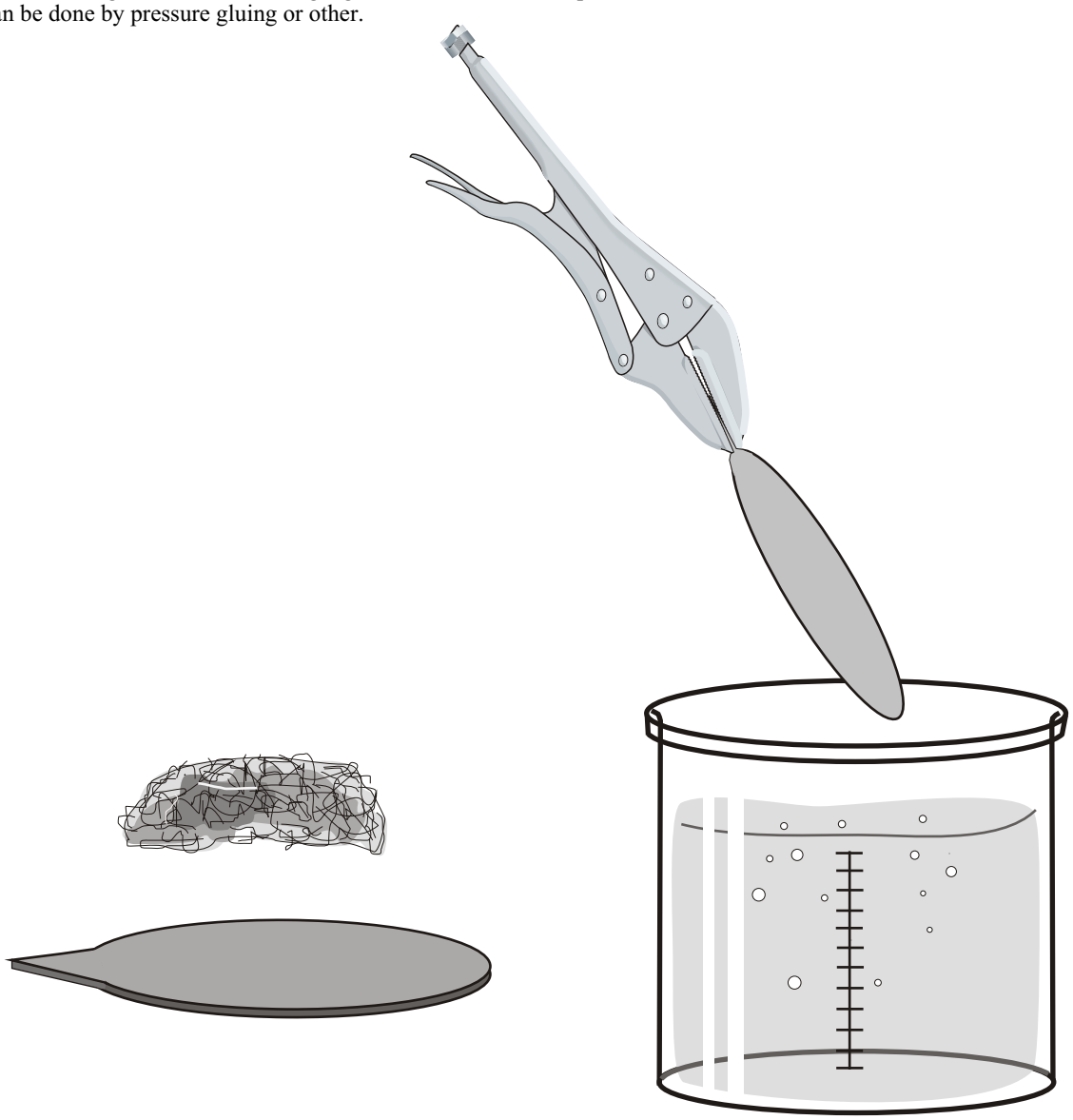

method of making a good contact with this large of a surface area, is by attaching a wire grid to it. A better way is to apply a very thin layer of silver or gold called a transparent An easily fabricated but temporary transparent electrode can be made from salt water. Or as seen in our Chlorine cells and a container glued to the cell and the liquid applied. A soloution of salt or acid will conduct electricity and also pass light to the cell. Drip a small amount of salt water or your spit, on to the center of the cell. Make sure that the water rests only on the cuprous oxide and does not touch any of the solar cell's copper surface or it will short out and will not produce any free electrical energy at all.

Now, attach one wire from a galvanometer, digital voltmeter using the milliamp or low voltage setting to some exposed portion of the cell's copper surface. Usually the back or the edges have some exposed copper. Touch the other meter lead to the surface of the water. The meter will spring to life. Next, bring a bright source of light such as a 100 watt bulb near the cell. The meter should show a slightly smaller voltage as the light approaches. Your cell will produce best in sunlight! The cell is changing some of the light into electricity but is having to counteract the current generated by the saltwater, hence the drop in voltage. The salt water actually acts as an electrolyte and with the oxide generates its own current just as a small battery would. Another way that you can test your cell is by making a wire electrode for the surface. This is done simply by coiling some 30 gauge silver-plated wire or aluminum wire and by holding it against the (cells) cuprous oxide surface with a sheet of glass. A good way is to coil the wire around is to use a cone shaped dowel or other object first in order to make good even spirals. Make sure that the wire touches the cuprous oxide only, and none of the bare copper. You will always have some bare copper around the edges of the cell, so it is best to paint with enamel paint, let dry and then work with the cell.

By simply attaching one wire of your meter to the silver wire, and one to the cell's exposed copper, you will be able to register a small current when a light is brought near. In this form, the cell can be operated indefinitely and makes an excellent Science Fair Display.

Making The Silvering Solution: The final step in making your own solar cell will be to make a permanent transparent electrode. When properly applied, this will give your cell a beautiful semi-mirrored finish and allow you to make electrical contact with the whole cuprous oxide face of the cell. This step is probably the trickiest in the production of the cell.

But, just as with the last steps, it becomes somewhat easier with practice. Using distilled water, make ten percent solutions each of ammonia water, potassium hydroxide and potassium sodium tartrate in seperate test tubes. A ten percent solution can be created by mixing 10 parts by weight of solute in 90 parts of water. Please remember that the test tubes can become warm or even hot when the water is first added, so be sure to use Pyrex glass test tubes. Also, make certain you have ample ventilation when mixing the ammonia solution. Dissolve in 1 oz. water a single crystal of silver nitrate. The crystal should be somewhat larger than the head of a match. Begin adding drops of the ammonia solution to the dissolved silver nitrate until the water first becomes brown, and then just begins to clear. Add a drop of potassium hydroxide to this solution. Then again begin adding drops of ammonia water until the solution just begins to clear. The solution will remain somewhat cloudy. Too much ammonia in the solution can dissolve the cuprous oxide coating and can damage or ruin the cell. Stir the mixture while adding a single drop of the potassium sodium tartrate solution. The mixture is now ready and should be used immediately.

Applying The Solution

Temperature and variations in the chemical mixture can dramatically change the time required to complete the silvering process. The best way to complete this step is by simple visual examination of the process as it proceeds.

With the cell on a flat surface, begin by carefully pouring the silvering mixture on to the center of the cell. Remember to avoid letting this mixture contact any exposed copper. A good trick is

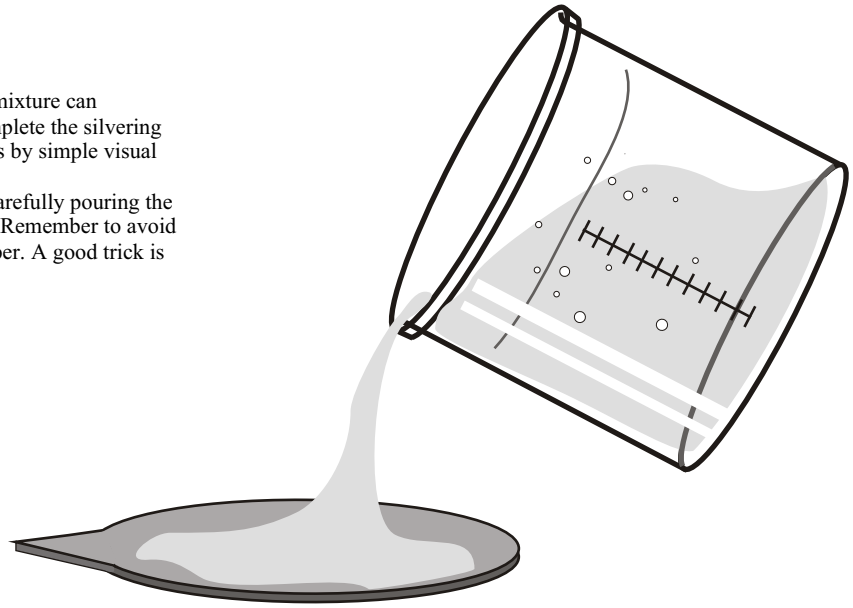

to cover with paint or lacquer any exposed copper surfaces on the face of the cell. Continue pouring until the liquid has covered as much of the surface as you can . If all the exposed copper on the surface has been properly protected with the lacquer, you can actually pour the solution until it comes right to the edge. Since water has an affinity for itself called "cohesion", it won't spill over the edge. Very soon, a thin film of silver will begin to form over the cell's surface. The liquid should be poured off when the red oxide is still slightly visible beneath the silver. allow the silvering process to go a little too long rather than not long enough since some of the silver coating can be polished away.You should now have a smooth silver coating through which the red oxide is barely visible.

Completing the Cell contact can now be made to the cuprous oxide face of the ell by means of a ring of lead or silver-coated wire which is slightly smaller in diameter than the disk itself. With the ring held firmly against the disk, a protective coating of thin lacquer can be applied. Make certain the lacquer does not come between the wire and the disk. With wires attached to the disk's copper back and the lead or silver ring, the cell is complete. The disk can now be housed behind glass, mounted to a sheet of plastic, cast in a clear resin or housed in any other enclosure you desire!

Screen Printing Supplies and Devices

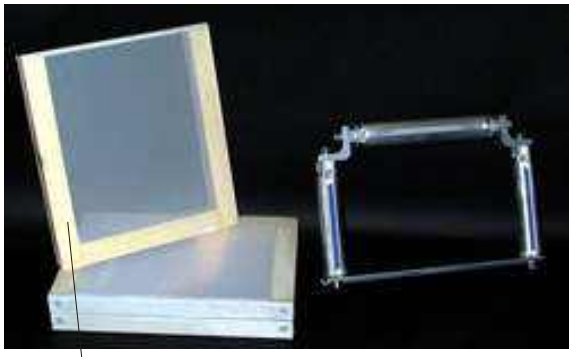

Wood Screen printing Frame(s)

Photo Emulsion / premixed
for applying to back side of
screen, (see our Screen Booklet.)

Wood and special rubber Squeegee

Photo emulsion aluminum screen coater

Wood and special rubber Squeegee
for pulling the ink over the inside of the
wood framed screen to print image.

Photo emulsion aluminum screen coater's
for different size wood framed screens.

6 - color t-shirt & cap printing press.
You do not need this to print solar cells,
all you need is a flat and sturdy table top.

Cadmium Sulphide (CdS)

Crystal properties

Crystal growth method:	Seeded vapor phase growth
Crystal growth orientation	(0001)
Maximum size	Up to 50mm diameter
Variations:	Doped crystals (on request)

Crystallographic properties

Crystallographic structure:	Hexagonal a= 0.4135nm, c= 0.6749nm
Defects structure	Inclusions with < lOu. in size
Color:	Red

Physical properties

Density:	4.82 g/cm3
Melting point:	1748 °C
Hardness:	4 Mohs
Thermal conductivity:	15.9 W m -1 K-1
Dielectric constant:	8.28 C, 8.64 | I C
Band gap (@ 300 K):	2.53 eV
Specific resistivity:	~108 (Ohms cm)
Emmission wavelength:	600 nm @ 300 °K

Optical properties

Transmission range:	0.5 um -15 urn (2mm thick)
Refraction index:	No = 2.517, Ne = 2.548

US005538903A

United States Patent [19]

Aramoto et al.

[11] **Patent Number: 5,538,903**

[45] **Date of Patent: Jul. 23, 1996**

CREATIVE SCIENCE
P.O. BOX 8001
NEWARK, NJ 07150

[54] **METHOD OF MANUFACTURING SOLAR CELL**

[75] Inventors: **Tetsuya Aramoto**, Osaka; **Nobuo Nakayama**, Hirakata; **Kuniyoshi Omura**, Higashiosaka; **Mikio Murozono**, Hirakata, all of Japan

[73] Assignee: **Matsushita Electric Industrial Co., Ltd.**, Osaka, Japan

[21] Appl. No.: **342,445**

[22] Filed: **Nov. 18, 1994**

[30] **Foreign Application Priority Data**

Nov. 18, 1993 [JP] Japan 5-314478

[51] **Int. Cl.**[6] **H01L 31/18**

[52] **U.S. Cl.** 437/5; 136/260; 136/264; 136/265; 427/74; 427/76; 427/346; 437/9; 437/234

[58] **Field of Search** 437/5, 9, 234; 427/74–76, 346; 136/260, 264, 265

[56] **References Cited**

FOREIGN PATENT DOCUMENTS

47-5880	3/1972	Japan .	
48-26976	8/1973	Japan	437/9
60-33278	2/1985	Japan	
62-30318	2/1987	Japan	437/9
1-235116	9/1989	Japan	437/9
4-188623	7/1992	Japan .	
5-154441	6/1993	Japan .	

OTHER PUBLICATIONS

"Matsushita News", Feb. 1, 1983, pp. 1–5.

T. Arita et al, *Solar Energy Materials*, vol. 23, pp. 371–379 (Dec. 1991).

Primary Examiner—Aaron Weisstuch

Attorney, Agent, or Firm—Ratner & Prestia

[57] **ABSTRACT**

A method of manufacturing a solar cell, comprising the steps of forming a layer of n-type compound semiconductor, a layer of p-type compound semiconductor, and an electrode layer on a glass substrate, wherein at least one of said steps of forming a layer of compound semiconductor layer comprises preparing a paste by mixing a semiconductor raw material and a viscous agent, applying said paste to said substrate, drying said paste to harden it, and firing the dried paste, and vibrating said substrate during or after the application of the paste, to remove the bubbles in the paste, resulting in a semiconductor layer which is smooth, dense, and having good adhesion, thus realizing a solar cell with improved and uniform characteristics.

24 Claims, 3 Drawing Sheets

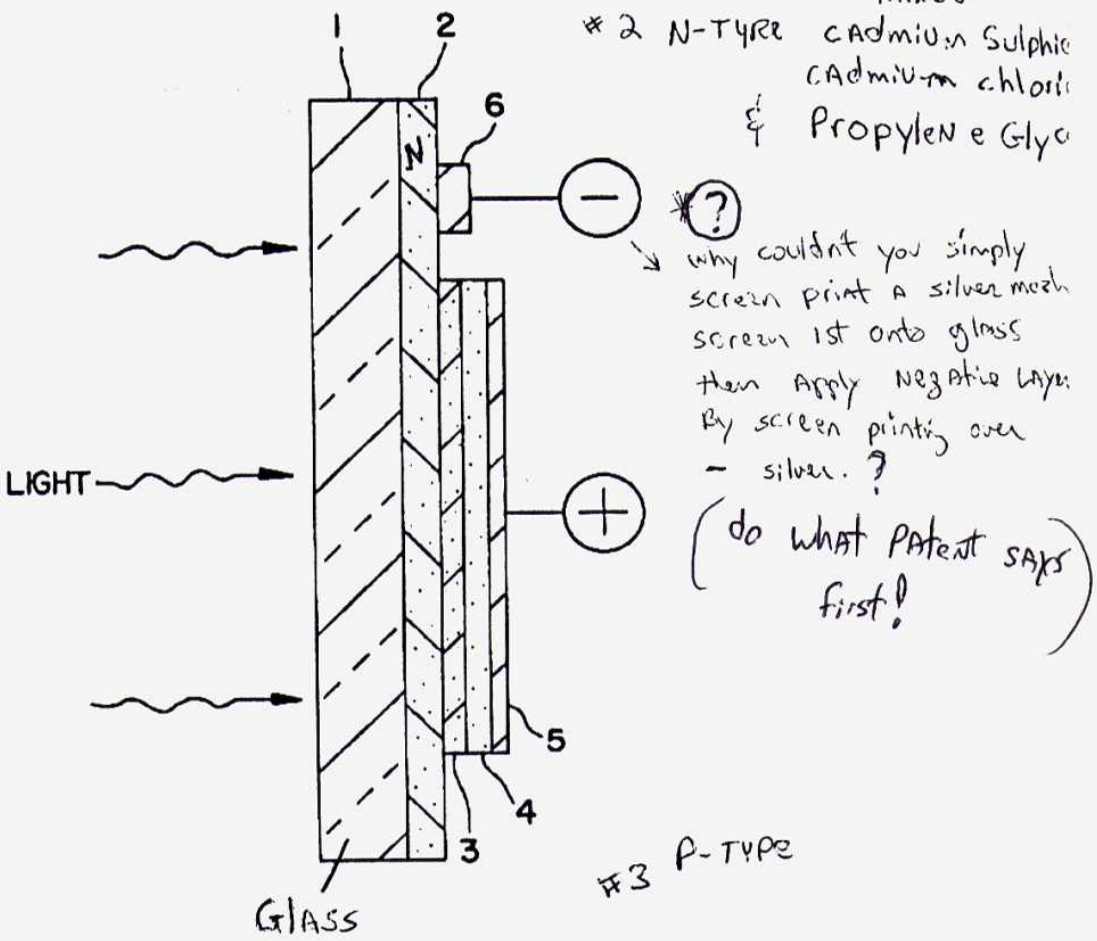

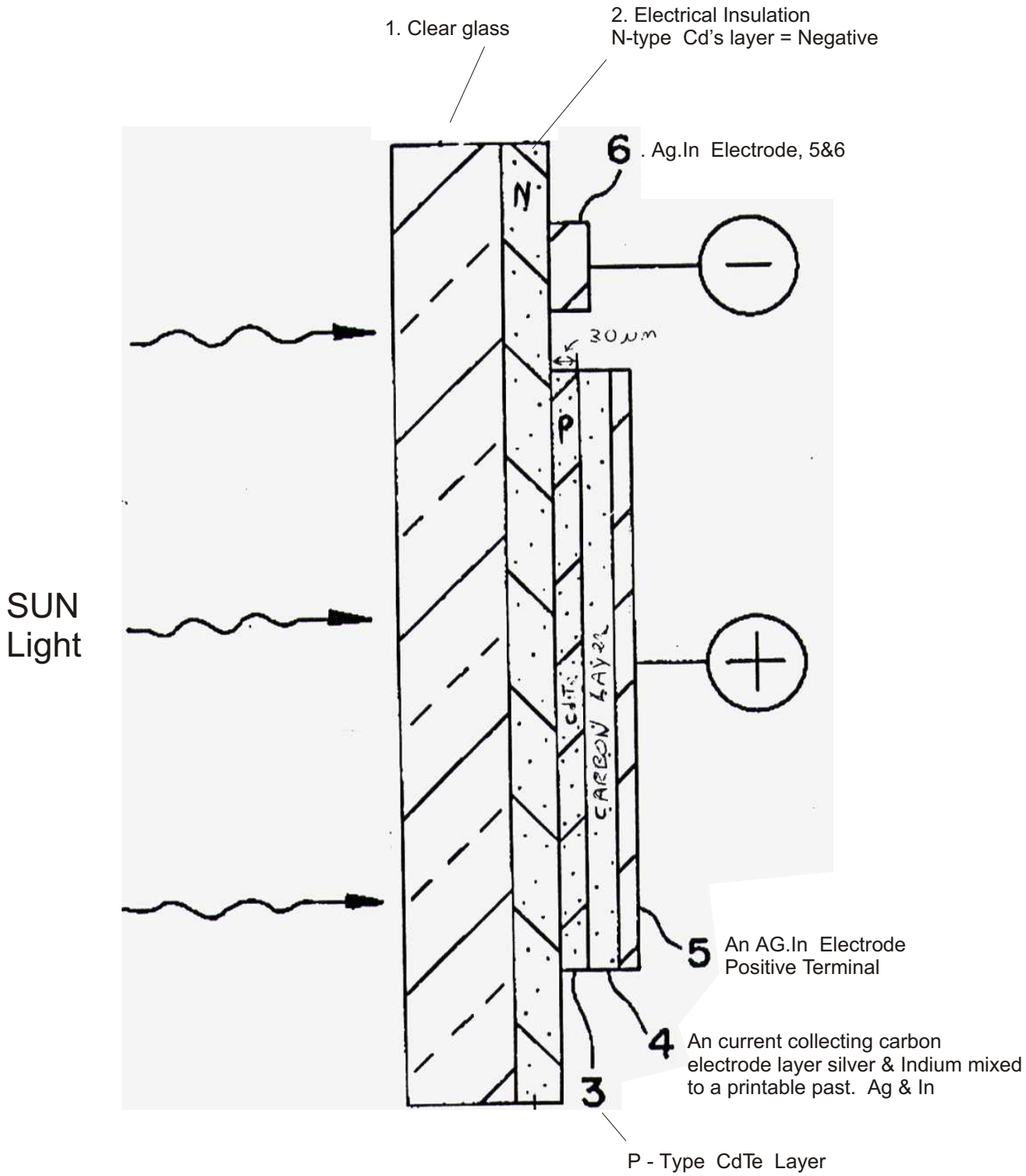

Double or triple print #2, to do this you print the first layer, let dry and then print the 2nd layer = 60 um thickness. #3 layer print only one layer using the same screen printing screen.

METHOD OF MANUFACTURING SOLAR CELL

BACKGROUND OF THE INVENTION

1. Field of the Invention

This invention relates to a method of manufacturing a solar cell of compound semiconductors by way of coating | and firing.

2. Description of the Prior Art

In recent years, expectations for solar cells as a clean energy source have been raised, in view of the global warming, acid rain. ozone layer destruction, and other such environmental destruction. For the wide usage of solar cells to occur, improvement of the photo-electric conversion efficiency and reduction of the cost are most important, that purpose, solar cells made of compound semiconductors of Group III-V materials such as GaAs, InP. Group II-VI materials such as CdS/Cu2S, CdS/CdTe, and Group I-II-I-VIa materials such as CuInS2. CuInSe2, as well as crystalline and amorphous silicon solar cells, have been investigated in many countries of the world. Among these, solar cells made of compound semiconductor helerojunctions of n-CdS/p-CdTe have been produced commercially, with relatively low material cost, conversion efficiency as high as 10%, less deterioration over long time peniods, and a relatively simple manufacturing process suitable for mass protuction consisting of printing, drying, firing (sintering or baking), resulting in a high density arrangment on a glass plate and realization of high voltage without outer wire connectionon, as well as large area cells.'

A typical solar cell of Group II-VI semiconductor, of which a sectional view is shown in FIG. 1, comprises a glass substrate 1 of high light transmittancc and electrical insulation provided on one surface thereof with an n-type CdS layer 2, a p-typc CdTe layer 3, a current collecting carbon electrode layer 4. an Ag.In electrode which is the positive terminal 5, and an Ag.In electrode which is the negative 40 terminal 6 formed by laminating with printing and baking of each layer. Usually, although not shown in the figure, the thus prepared solar cell element is provided, on both the Ag-In electrodes, with a copper paste layer deposited, dried, and baked for easy soldering of lead wires. The cell is then covered all over with a passivation layer of a thermosetting resin such as epoxy and baked.

Light, including that of the sun, falls on the surface of the glass substrate 1 opposite to the surface having the above solar cell element layers, to generate electrical power by photo-electric conversion.

As the substrate, a heat-resistant barium borosilicate glass is employed which has a very low alkali metal content and a high softening point. 55

In the manufacturing of the compound semiconductor solar cell by the coating and firing method, it is important that each of the n-type compound semiconductor layer p-type compound semiconductor layer, and electrode layer have uniform thickness, a smooth surface. and no pin holes! Especially if the n-type CdS semiconductor layer formed directly on the substrate is uniform, smooth and non-porus, the adherence of the Ito the substrate is improved, resulting in an increase of the light transmittance. decrease of the sheet resistance, and, further, an increase of the photo-current and improvement of the characteristics of. the cell.

Conventionally, to obtain such a layer, a paste made of the powdered compound semiconducterr or elements "therefor, an eletroconducting agent, and a viscouse agnent mixed |together was kept under reduced pressure to remove bubbles therein and after the deposition, the substrate was held horizontally at about 50°C., which was lower than the drying temperature of the viscous agent, to reduce the viscosity of the ~ viscous agent and uniformly precipitate the raw material powders in order to obtain a high density layer. However, if the bubbles were removed from the paste before coating, it sometimes happened in the coating process by screen printing that bubbles were introduced from the surrounding 'atmosphere, resulting in uneven deposition-or pin-holes. Also, with the heat treatment only after coating, the raw material powders did not always uniformly precipitate- and the bubbles were not sufficiently removed, resulting in the layer not being fat, or of uniform thickness. The pin-holes left after coating and firing of the layers caused an Increase of the sheet resistance. Especially, if pin-holes were formed in the p-type CdTe layer, the carbon particles of the carbon electrode layer formed thereon penetrated into the pin-holes up to the CdS layer under the CdTe layer, causing internal short circuiting or current leakage, fatally damaging the solar cell performance.

SUMMARY OF THE INVENTION

It is an object of the present invention to provide a new method of manufacturing compound semiconductor solar cells comprising ntlypc and p-type compound semiconductors and electrode layers having improved performance, uniform characteristics, and low production cost. brought about by formation of the layers without pin-holes and with uniform thicknesses and smooth surfaces.

To obtain the above object, a method of manufacturing a solar cell according to the present invention comprises th-steps of forming a layer of an n-type compound semiconductor, a layer of a p-type compound semiconductor, and an electrode layer on a glass substrate, wherein at least one of said steps of forming a layer of compound semiconductor comprises preparing a paste by mixing a semiconductor raw material and a viscous agent, applying said paste to said substrate, drying said paste to harden it and firing said dried paste, and vibrating said substrate during or after the application of the paste.

BRIEF DESCRIPTION OF THE DRAWINGS

FIG. 1 is a schematic sectional view of a Group II-VI compound semiconductor solar cell of n-CdS/p-CdTe type.

FIGS. 2(A)-2(B) are microphotographs of sections of sintered CdS layers on a glass substrate.

FIGS. 3A-3D are graphs of the open circuit voltages. short circuit currents, fill factors, and intrinsic photoelectric conversion efficiencies of solar cells fabricated according to the present invention, as well as by the conventional method.

DETAILED DESCRIPTION OF THE INVENTION

An example of the method of manufacturing a Group II-VI compound semiconductor solar cell according to the present invention is now explained by referring to FIG. 1. A paste was prepared by mixing a fine powder of cadmium sulphide (CdS), cadmium chloride (CdCI2). and propylene glycol (PG). the CdC12 being a flux. and the PG being a viscous agent.

The paste was applied to a substrate of barium borosilicate glass by screen printing to form a coating layer of 60 μm thickness.

The glass substrate was subjected to vibration of 20 μm amplitude and 28 kHz ultrasonic frequency by contacting the output end of a piezoelectric vibrator on the outer end of the substrate for 5 seconds, whereby the roughness of the deposited layer due to the screen net disappeared and the bubbles in the layer were removed. The substrate with the vibrated layer was then dried in the atmosphere at 120° C. (PG was removed by vaporization), and sintered at 690° C.

A comparison substrate coated with a CdS layer was fabricated by a similar method but without the application of vibration.

The light transmittance and sheet resistance of the two kinds of samples were then measured and microphotographs of sections thereof (×500) were taken. The results are shown in Table 1 and FIGS. 2(A)–2(B).

TABLE 1

	CdS layer formed according to the present invention	CdS layer formed without vibration
Light transmittance (%) (λ = 0.7 um)	63 %	60 %
Sheet resistance (Ω/cm^2)	28	33

As is observed in FIG. 2(B), the CdS layer on the substrate prepared without vibration has projections and depressions on the surface, void spaces and/or pin-holes, and the thickness is not uniform. Moreover, it is not sufficiently adherent to the substrate. On the contrary, the CdS layer of the sample shown in FIG. 2(A) fabricated with vibration has few voids and/or pin-holes, uniform thickness, and a smooth surface, fully adherent to the substrate. Numerically, Table 1 indicates improvements of the light transmittance by 5% and reduction of the sheet resistance by 15%. Thus it is expected the CdS layer formed with the vibration would have superior characteristics as the window layer of a solar cell.

Next, Cd.Te paste was prepared by kneading well an equi-mol mixture of cadmium (Cd) and tellurium (Te) powders with addition of $CdCl_2$ and PG, and the paste was applied in a 30 μm thickness on the above CdS sintered layer by screen printing, dried in the atmosphere, and sintered at 620° C., to form a CdTe layer.

Then, a carbon paste, prepared by kneading carbon powder and a viscous agent made of a solution of a resin in an organic solvent was applied on the CdTe layer, to form an electricity collecting electrode 4 on the n-CdS/p-CdTe heterojunction.

Further, the carbon electrode layer 4 and the CdS layer 2 were provided with a positive terminal 5 and a negative terminal 6 of Ag.In by depositing Ag.In paste by screen printing and drying and baking, the Ag.In paste being prepared by kneading of silver (Ag) and indium (In) powders with a viscous agent made of a solution of a resin in an organic solvent.

On the positive and negative electrodes 6 and 5 of Ag.In, copper paste was applied by screen printing, and dried and baked. Further, on the other parts of the cell a passivation layer was likewise applied by printing, and dried and baked, to complete the cell. The sinterings or bakings in the above processes were made in a nitrogen atmosphere.

The following describes the effect of vibration given to the glass substrate when, in the above described manufacturing process of a compound semiconductor solar cell, the pastes made of the mixtures of the respective powdered n-type and p-type compound semiconductor materials, flux agent, and viscous agent were applied to form the n-type and p-type layers and electrode layers on the substrate.

A: A sample cell fabricated with the semiconductor and electrode layers dried and fired after the application of the paste on the substrate without vibration, i.e. according to the prior art.

B: A sample cell fabricated with vibration given to the substrate only after the application of CdS paste, i.e. no vibration during the other processes.

C: A sample cell fabricated with vibration given only after the application of CdTe, i.e. no vibration during the other processes.

D: A sample cell fabricated with vibration given only after the application of the carbon paste, i.e. no vibration during the other processes.

E: A sample cell prepared with vibration given to the substrate after application of the CdS paste, CdTe paste, and carbon paste, with further drying and firing.

The vibration was given at 20 μm amplitude and 22 kHz frequency for 10 seconds by contacting the output end of the ultrasonic oscillator to the reverse side of the glass substrate; the reverse side being the surface on which the semiconductor layers were not applied. The other conditions were the same.

For the solar cells of these samples, the open circuit voltage (Voc), short circuit current (Isc), fill factor (FF), and intrinsic photo-electric conversion efficiency (EFF) were measured, with the results shown in FIGS. 3A–3D as values relative to the values for sample cell A taken as 1.00.

From the measurements of the sample cell B as shown in FIGS. 3A–3D, it is seen that the vibration after the CdS application has caused, by removing the paste bubbles, smoothing the film surface, and by improvement of the adhesion between the CdS layer and the substrate, resulting in an increase in light transmittance, and a reduction in surface resistance, an improvement of Isc, and, through the reduction of the number of pin-holes at the junction, improvements of Voc and FF.

From the data for the sample cell C, it is seen that the vibration after the Cd. Te paste application has led to the improvement of Voc, Isc, and FF as a result of CdTe grain size or orientation or other improvement in the film quality.

The measurements of the sample cell D show the contribution of the vibration after the carbon paste application to the improvement of Isc, FF, and EFF. It is thought that the contact resistance between the carbon electrode layer and the CdTe layer is reduced by the vibration.

Lastly, from the data of the sample cell E, it is clear that an about 10% increase of EFF compared to sample cell A has been obtained by the combined effect of the vibrations after each of the applications of CdS, Cd.Te, and carbon pastes.

Thus, it is understood that the characteristics of the solar cells are improved by the simple measure of vibrating the glass substrate after the applications of the pastes, without requiring any significant change of the process or manufacturing installation.

The method of application of the various pastes is not confined to the screen printing as referred to in the above examples. Various other methods can be employed; nozzle printing of paste from a nozzle, including printing of a figure in a desired pattern on a glass substrate by adjusting the distance between the tip of the nozzle and the surface of the substrate to change the paint thickness; relief and intaglio

printing; and spray printing of paste with a spray gun while shielding the non-printed areas by a mask.

Table 2 shows how the spread of unevenness of the surface (the difference between the maximum thickness and the minimum thickness) and the yields in production change depending upon whether or not the ultrasonic treatment is employed on every layer of the cells. As is observed, by the vibration after the paste application similar effects can be obtained as with the screen printing.

TABLE 2

	Without ultrasonic treatment		With ultrasonic treatment	
Printing	Spread of unevenness (μm)	Yield (%)	Spread of unevenness (μm)	Yield (%)
Screen	35	92	8	95
Nozzle	15	85	9	89
Relief	21	72	4	82
Intaglio	26	82	9	90
Spray	18	74	12	91

Instead of vibrating the outer circumference or the outer surface after the application of the pastes as explained above, vibration during printing of the paste may have the same effects.

For the application of such ultrasonic vibration, 5 to 10 seconds are sufficient, so that the application of paste with the vibration and further vibration thereafter of a short time less than 5 seconds is sufficient; therefore substantial elongation of manufacturing time does not occur.

Although ultrasonic vibration given to the glass substrate during or after the pastes of the n-type and p-type compound semiconductor layers and electrode layer were applied was effective, vibration given during or after application of the pastes for the formation of the terminal or passivation layer did not bring about remarkable effects on the cell characteristics.

It is added that the method of the present invention, thus far explained with reference to CdS/CdTe compound semiconductor solar cells, can be applied to the formation of other compound semiconductor layers of solar cells including Group I–III–VI_2 compounds, for example $CuInSe_2$, in the place of CdTe, provided the layer is formed by coating and firing.

As explained above in detail, when a solar cell is fabricated by forming a laminate of n-type and p-type compound semiconductor layers and electrode layers on a glass substrate, the layers become free of bubbles, and the surfaces flat, if vibration is given to the glass substrate during or after the paste of the raw material and viscous agent for the layer are applied; and drying and firing thereafter provide dense layers of uniform thickness and in good contact with the next layer, and a solar cell with improved, uniform characteristics.

What is claimed:

1. A method of manufacturing a solar cell, comprising the steps of forming a layer of n-type compound semiconductor, a layer of p-type compound semiconductor, and an electrode layer on a glass substrate, wherein at least one of said steps of forming a layer of compound semiconductor comprises:

preparing a paste by mixing a powder

3. A method of manufacturing a solar cell according to claim 2, wherein the application of the paste is performed by a method selected from the group consisting of screen printing, nozzle printing, relief printing, intaglio printing, and spray printing.

4. A method of manufacturing a solar cell according to claim 3, wherein the powdered raw materials for the layers of n-type and p-type semiconductors comprise elements of groups II and VI or a compound thereof.

5. A method of manufacturing a solar cell according to claim 4, further comprising a step of forming a passivation layer of resin over said cell except for the positive and negative output terminals thereof.

6. A method of manufacturing a solar cell according to claim 3, wherein said n-type compound semiconductor layer comprises CdS, and said p-type compound semiconductor layer comprises one of CdTe and $CuInSe_2$.

7. A method of manufacturing a solar cell according to claim 6, further comprising a step of forming a passivation layer of resin over said cell except for the positive and negative output terminals thereof.

8. A method of manufacturing a solar cell according to claim 3, further comprising a step of forming a passivation layer of resin over said cell except for the positive and negative output terminals thereof.

9. A method of manufacturing a solar cell according to claim 2; wherein the powdered raw materials for the layers of n-type and p-type semiconductors comprise elements of groups II and VI or a compound thereof.

10. A method of manufacturing a solar cell according to claim 9, further comprising a step of forming a passivation layer of resin over said cell except for the positive and negative output terminals thereof.

11. A method of manufacturing a solar cell according to claim 2, wherein said n-type compound semiconductor layer comprises CdS, and said p-type compound semiconductor layer comprises one of CdTe and $CuInSe_2$.

12. A method of manufacturing a solar cell according to claim 11, further comprising a step of forming a passivation layer of resin over said cell except for the positive and negative output terminals thereof.

13. A method of manufacturing a solar cell according to claim 2, further comprising a step of forming a passivation layer of resin over said cell except for the positive and negative output terminals thereof.

14. A method of manufacturing a solar cell according to claim 1, wherein the application of the paste is performed by a method selected from the group consisting of screen printing, nozzle printing, relief printing, intaglio printing, and spray printing.

15. A method of manufacturing a solar cell according to claim 14, wherein the powdered raw materials for the layers of n-type and p-type semiconductors comprise elements of groups II and VI or a compound thereof.

16. A method of manufacturing a solar cell according to claim 15, further comprising a step of forming a passivation layer of resin over said cell except for the positive and negative output terminals thereof.

17. A method of manufacturing a solar cell according to claim 14, wherein said n-type compound semiconductor

ion

, wherein said vibration is of an ultrasonic pulse form.

19. A method of manufacturing a solar cell according to claim 14, further comprising a step of forming a passiv

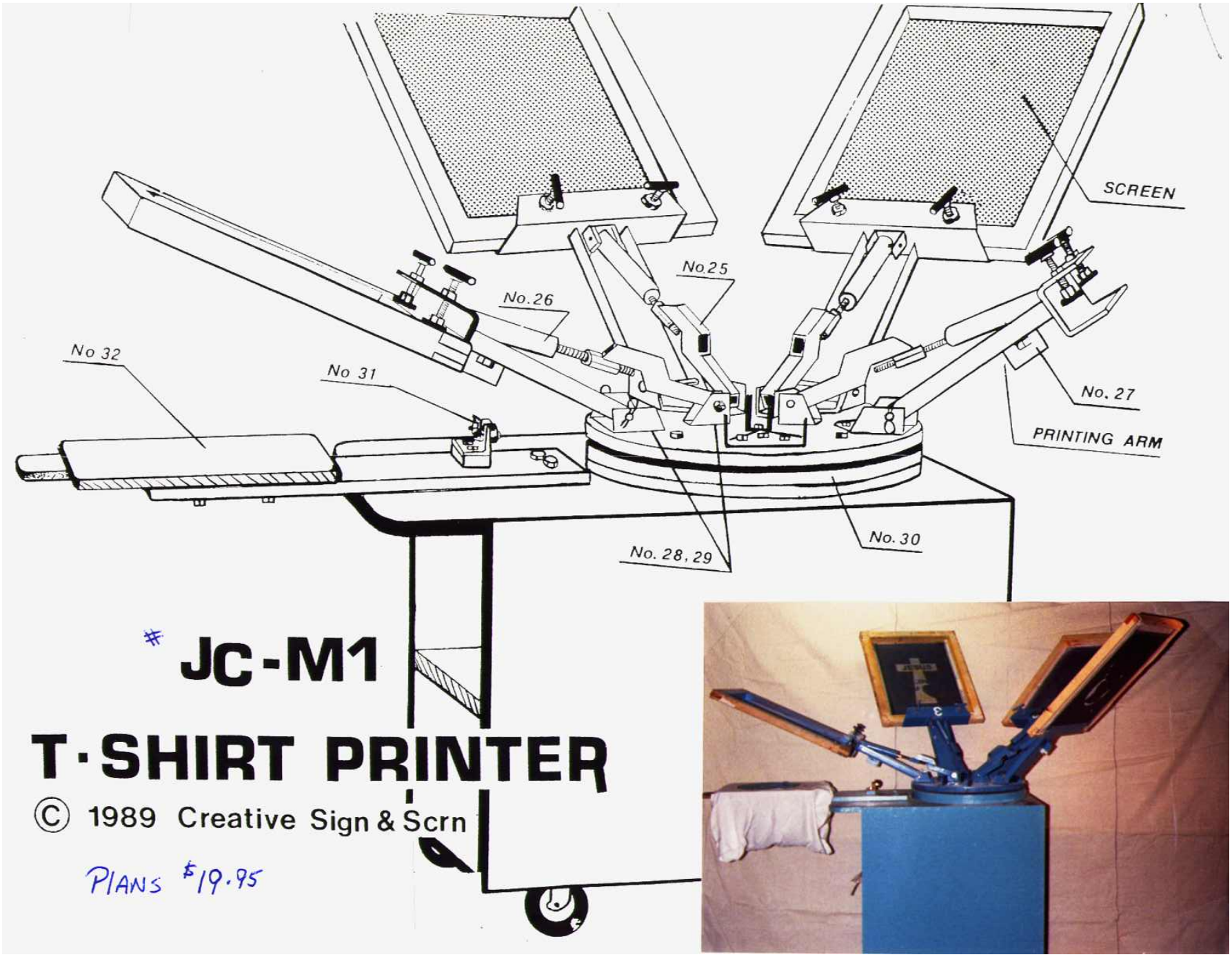

JC-M1

T·SHIRT PRINTER

© 1989 Creative Sign & Scrn

PLANS $19.95

Screen Printing

Learn how to Screen Print. Screen printing is done all over the world by very large printing companies right down to the guy who does it at home in his basement. Screen printing was first discovered by the Chinese hundreds of years ago. It is a very simple process that anyone can do. The Chinese first used silk to use in there wood frames to print with, then as time went on better material was made to print with

See our Screen printing video or Screen printing booklet
Video only $29.95 #402video, Booklet only $9.95

Photowatt chooses Dupont's Solamet™ materials for its PV solar cells

For many years, Photowatt has been a European leader in the manufacture of photovoltaic (PV) solar cells. Since 1997, the company, based at Bourgoin-Jallieu, near Lyon, France, has been a part of ATS (Automation Tooling Systems), a large multinational concern with its headquarters in Toronto, Canada. ATS specializes in the fabrication of automated production lines for the automotive and electronics industries.

In 2001, the PV market grew by 39 per cent, based on power in megawatts (MWp), and Photowatt is well positioned to take advantage of this buoyant market. Like most large PV manufacturers, the company has increased capacity every year to cope with demand and, between 1995 and 2002, its production capacity has increased 10-fold, from 2 to 20 MW.

Photowatt has an advantage in the industry by being a vertically-integrated PV cell manufacturer with the capability to produce solar panels from silicon feedstock. It can therefore control all of the intermediate processing and manufacturing steps, including ingot casting, silicon wire sawing, solar cell metallisation, lamination and assembly.

Printing of Photowatt's front-side PV cells.

ATS's fully-automated solar cell lines

The company's parent, ATS, has a strong background in the automation of manufacturing processes. This has enabled Photowatt to install two new fully-automated high volume PV cell and module manufacturing lines which are shown in the photo on the right. These lines started operating in 2000 and can undertake the screen printing of the rear and front metallisation pastes, drying and firing of the pastes, deposition of the anti-reflective coating (ARC), sorting, ribbon soldering, lamination of the protective insulation layer and module assembly.

Today, the standard size of a multi-crystalline Si cell is 125 x 125 mm (5 inches square) with a thickness of 300 Mm. Using a titanium dioxide anti-reflective coating, Photowatt's solar cell efficiency was about 13 per cent. More recently, using new silicon nitride anti-reflective coating technology, this efficiency has been improved to over 15 per cent on the company's own multi-crystalline silicon. DuPont Microclrcuit Materials has been

END

Homemade Solar Cells # 401

Learn How to Screen Print Start your own Business It's Easy!

Start Your Own Screen Printing Business Right in your Own Home!
Screen print T-Shirts, Caps, Jackets, Signs, Bumper Stickers, etc...

Start your Own Business, Be your own BOSS!
Make up to $100,000 per year

Save money by building all homemade screens and special table top printer! Get started as low as $70
Included is where to buy T-Shirts, Caps, Supplies etc... Wholesale!
Also great for Screen printing solar cells! Screen print as many Solar cells as you want for you and your friends, Screen printing Booklet teaches anyone to screen print in there own backyard it's easy to do! Print as many solar cells as you want for just pennies! Stop paying high electric bills. You may even want to start your own screen printing and sign business, printing t-shirts, caps, jackets, decals, and signs of all types, make big money, our video and booklet will show you how!

Screen Printing plans / booklet .....only **$9.95** # 402Book

Screen Printing Video (vhs) .....only **$29.95** # 402Video

This video is packed full of information and shows you how to get started in screen printing and shows an actual 5-color t-shirt printing press being used, how to make and prepare a screen, what type of ink to buy, and where to buy your screen printing supplies, where to buy your t-shirts, jackets and caps at a low wholesale price.. Some companies sell small screen printing kit's for only $28.

Build a 5/color T-Shirt Printing Press!.

Start your Own Business, Be your own BOSS!
Make up to $100,000 per year

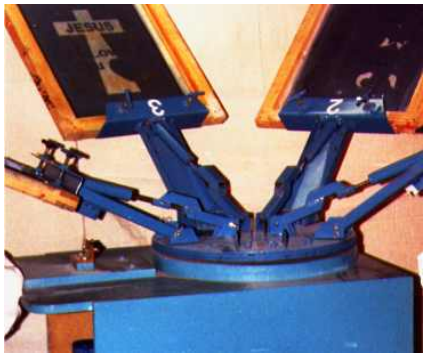

Plans only..... **$19.95** # JC-M1..

NIKOLA TESLA

MASTER OF IMAGINATION

Submitted to
Ray Russell, Course Instructor
EE 155

Prepared by
Thomas Penick, Student

October 14, 1998

TABLE OF CONTENTS

EARLY EXPERIENCES 1

THE ALTERNATING CURRENT SYSTEM 2

TESLA'S GIFTS TO ENGINEERING 4

REFERENCES 5

NIKOLA TESLA

Nikola Tesla was born on July 9/10 (midnight), 1856 in Smiljam, Croatia, to a Serbian family. His father was an orthodox priest. His mother was unschooled but quite intelligent. Nikola was a dreamer who loved poetry. He was self-disciplined and compulsive. His principle contribution to the field of electromagnetic engineering is the discovery of the rotating magnetic field and the development of the polyphase electrical system [1 p. 161]. Historians credit Tesla with being a genius because he not only made unique discoveries in electromagnetic engineering but developed these discoveries into working systems in an area of science that had almost no existing body of knowledge other than what he himself had uncovered. Pioneering experiments were also conducted in fluorescent lighting, vacuum tube, radio, robotics, and X-ray technologies [3 pp. 9-13].

EARLY EXPERIENCES

Circumstances in Nikola's early life resulted in his imagination being exercised to the extreme. In his mind, Nikola would see flashes of light and vivid images. These images were not of imagined subjects, but were familiar scenes. The effect was so intense that it affected his ability to see. Interestingly, his brother exhibited similar difficulties. To gain relief, Nikola would take control of his hallucinations by conjuring up his own images—creating his own imaginary world. He would take imaginary journeys to strange places. These experiences were intense and made as strong an impression on young Nikola as his real life experiences. He played this game constantly from early childhood until the age of 17 when he began channeling his thoughts toward invention [2 p. 11-12].

As an inventor, he was able to eliminate a lot of models, drawings, and experiments by using the imagination he had developed in childhood to work through the development and trials of a new idea. He would conduct his first experiments in his imaginary world, noting problems and making adjustments, thus completing much of the preliminary work before conducting physical experiments [2 p. 12].

The first commercially generated power was direct current. Although alternating current could be more efficiently transmitted, it was not used because no satisfactory alternating current motor had been developed. Tesla pondered this problem for many years. Finally, while walking through a park in Budapest, the idea came to him in a flash. He conceived of a rotating magnetic field, created by multiple phases of AC power. This concept would eventually permit him to develop the first successful AC motor [2 p. 22, 23].

In 1882, Tesla worked at a telegraph office. He invented a telephone amplifier, which he didn't bother to patent. In the fall of 1882, he went to Paris to work for an Edison subsidiary. He worked as a troubleshooter at power plants in France and Germany. He wanted to sell Mr. Edison on his AC power ideas, but was told that Edison was solidly in favor of DC current over AC. On his own time, he built his first AC motor [2 p. 24, 25].

In 1884, Tesla immigrated to America, bringing a letter of recommendation addressed to Thomas Edison. He happened to catch Edison at a time when the inventor desperately needed help maintaining his many DC electrical systems. Edison sent Tesla immediately to repair dynamos aboard the SS Oregon. Tesla worked through the night to complete the repairs [2 p. 30-31].

Tesla informed Edison that he could make major improvements in Edison's DC dynamos. Edison said if he did, there would be $50,000 in it for him. Tesla worked long hours for almost a year to complete the redesign. He visited Edison and asked about his $50,000. Edison replied, "Tesla, you don't understand our American humor." Tesla resigned [2 p. 33-34]. America was entering an economic depression and Nikola Tesla found himself working on a New York street gang from 1886 to 1887 [2 p. 36].

THE ALTERNATING CURRENT SYSTEM

Finally, Tesla's foreman took him to meet A. K. Brown, manager of Western Union Telegraph Co. With Brown's help, Tesla Electric Co. was formed in April 1887. Tesla patented single-phase, two-phase, and three-phase AC systems, and two AC motors. In the first four years of

operation, he was granted 40 patents. The patents were processed quickly since there was nothing like them at the patent office. Both scientific and business interests took note of the patent office activity and Tesla was soon receiving invitations to lecture. He turned out to be a natural speaker [2 p. 36-39].

George Westinghouse had more than 30 AC power systems in operation at the time (under a different patent) and was interested in Tesla's motor. Westinghouse paid Tesla a visit at his lab. Tesla went to work for Westinghouse and moved to Pittsburgh. Tesla's motors ran at 60 Hz AC and could not be adapted to the 133 Hz Westinghouse system. Westinghouse was forced to switch to 60 Hz and this has become the standard electrical power frequency in the U.S. After several months in Pittsburgh, Tesla returned to New York [2 p.40]. He became a U.S. citizen on July 30, 1891, a status which he valued above all scientific honors. In September 1891 he went to Paris to lecture at the International Exposition and also visited his family in Croatia [2 p. 41].

Edison was outraged when he learned of Tesla's alliance with Westinghouse. He issued propaganda about the dangers of AC current. Edison conducted weekly demonstrations in which dogs and cats were electrocuted. Through a third party, he bought rights to Tesla's AC patents and worked a deal with New York prison authorities to carry out the first execution by electrocution on 8/6/1890. The convict failed to die after the first shock and the ordeal had to be repeated. It was reported as "an awful spectacle, far worse than hanging [2 p, 41-45]."

George Westinghouse became worn down financially by Edison's anti-alternating current initiatives. A major obstacle to the ability of Westinghouse to get new funding was his contract with Tesla to pay him $2.50 for each horsepower manufactured. George Westinghouse appealed to Tesla to relinquish his claim to the patents. Tesla, interested in seeing his inventions put to use, agreed and settled for a cash sum [2 p. 48-49].

Tesla proved to be quite a showman on the lecture circuit. He had glass tubes that glowed without electrical connections. This was the forerunner of the florescent bulb, another invention he didn't bother to patent. He wore insulated shoes and allowed high-voltage, high-frequency electric current to flow across his body. His purpose in doing this was, in part, to counter

Edison's propaganda about the danger of AC current. At high frequencies and voltages, electricity would run across the surface of the skin without penetrating. He demonstrated a motor run on one wire, with the return path through air. He spoke of the possibility of transmitting power long distances through the upper atmosphere. One dazzling display was his "carbon-button lamp," a partially evacuated glass globe with a piece of carborundum in one end connected to a single wire terminal. When high-frequency current was applied, "The central 'button' of material electrostatically propelled the surrounding gas molecules toward the glass globe. They were then repelled back toward the button, striking it and heating it to incandescence [2 p. 54]." The bulb was 20 times as efficient as the Edison bulb. Since a technical language had not yet evolved to describe these phenomena, Tesla described them poetically. For example, a static discharge he called a *brush* or a *luminous stream* [2 p. 54-55].

George Westinghouse won the contract for electrifying the Chicago World's Fair of 1893—the first electrical fair. He invited Tesla to speak. 25 million Americans visited the fair, which was one-third of the population at the time. Tesla had blown tubes to spell "Welcome Electricians," as well as the names of many famous scientists. He dazzled audiences with numerous demonstrations of high frequency, high-voltage current.

TESLA'S GIFTS TO ENGINEERING

Tesla's discovery of the rotating magnetic field and his inventions of the transformer and induction motor were valuable advancements that are still the means for the production, transmission and use of electrical power today. Less tangible but important contributions were his inspiring lectures and the ideas he left unpatented. In his dazzling demonstrations, he not only amazed his audiences but also sparked the interest of many contemporary and future inventors. It has taken decades for scientists to reproduce some of the experiments he demonstrated publicly. How Tesla was able to electrically produce a ball of flame and hold it in his hands remains a mystery. He energized a wave of invention during the late 19th and early 20th centuries and continues to inspire engineers today.

REFERENCES

[1] "Tesla, Nikola," *Encyclopaedia Britannica,* 1976 ed.

[2] Cheney, Margaret, *Tesla, Man Out of Time*, New York: Barnes & Noble Books, 1993.

[3] O'Neill, John J., *Prodigal Genius, The Life of Nikola Tesla*, Albuquerque: Brotherhood of Life, Inc., 1996.

Support Free Energy and purchase the bumper sticker

The New Tesla Electromagnetics and the Secrets of Electrical Free Energy

By T.E. Bearden
© 1984

Table of Contents

Foreword

Comments on the New Tesla Electromagnetics:
Part I: Discrepancies in the Present EM Theory
by T. E. Bearden

Comments on the New Tesla Electromagnetics:
Part II: The Secret of Electrical Free Energy
by T. E. Bearden

Overture to a New Age Technology
by Dr. Rolf Schaffranke

REVIEW AND OUTLOOK - The Development of Post-Relativistic Concepts in Physics and Advanced Technology Abroad
by Dr. Rolf Schaffrancke

The Tom Bearden Website

COMMENTS ON THE NEW TESLA ELECTROMAGNETICS

Part I: Discrepancies in Present EM Theory

© T. E. Bearden 1982

There are at least twenty-two major discrepancies presently existing in conventional electromagnetics theory. This paper presents a summary of those flaws, and is a further commentary on my discussion of scalar longitudinal Tesla waves in a previous paper, "Solutions to Tesla's Secrets and the Soviet Tesla Weapons," Tesla Book Company, 1981 and 1982.

I particularly wish to express my deep appreciation to two of my friends and colleagues who at this time, I believe, wish to remain anonymous. One of the two is an experimental genius who can produce items on the bench that do not work by orthodox theory. The second is a master of materials science and electromagnetics theory. I thank them both for their exceptional contributions and stimuli regarding potential shortcomings in present electromagnetics theory, and their forbearance with the many discussions we have held on this and related subjects.

It goes without saying that any errors in this paper are strictly my own, and not the fault of either of my distinguished colleagues.

(1) In present electromagnetics theory, charge and charged mass are falsely made identical. Actually, on a charged particle, the "charge" is the flux of virtual particles on the "bare particle" of observable mass. The charged particle is thus a "system" of true massless charge coupled to a bare chargeless mass. The observable "mass" is static, three-dimensional, and totally spatial. "Charge" is dynamic, four-dimensional or more, virtual and spatiotemporal. Further, the charge and observable mass can be decoupled, contrary to present theory. Decoupled charge -- that is, the absence of mass -- is simply what we presently refer to as "vacuum." Vacuum, spacetime, and massless charge are all identical. Rigorously, we should utilize any of these three as an "ether," as suggested for vacuum by Einstein himself (see

Max Born, Einstein's Theory of Relativity, Revised Edition, Dover Publications, New York, 1965, p. 224). And all three of them are identically anenergy -- not energy, but more fundamental components of energy.

(2) Electrostatic potential is regarded as a purely 3-dimensional spatial stress. Instead, it is the intensity of a many-dimensional (at least four-dimensional) virtual flux and a stress on all four dimensions of spacetime. This is easily seen, once one recognizes that spacetime is identically massless charge. (It is not "filled" with charge; rather, it is charge!) Just as, in a gas under pressure, the accumulation of additional gas further stresses the gas, the accumulation of charge (spacetime) stresses charge (spacetime). Further, if freed from its attachment to mass , charge can flow exclusively in time, exclusively in space, or in any combination of the two. Tesla waves -- which are scalar waves in pure massless charge flux itself -- thus can exhibit extraordinary characteristics that ordinary vector waves do not possess. And Tesla waves have extra dimensional degrees of freedom in which to move, as compared to vector waves. Indeed, one way to visualize a Tesla scalar wave is to regard it as a pure oscillation of time itself.

(3) Voltage and potential are often confused in the electrostatic case, or at least thought of as "composed of the same thing." For that reason, voltage is regarded as "potential drop". This also is not true. Rigorously, the potential is the intensity of the virtual particle flux at a single point -- whether or not there is any mass at the point -- and both the pressure and the point itself are spatiotemporal (4-dimensional), not spatial (3-dimensional) as presently assumed. Voltage represents the spatial intersection of the difference in the potential between two separated spatial points, and always implies at least a miniscule flow of mass current (that is what makes it spatial!). "Voltage" is spatial and depends upon the presence of observable mass flow, while scalar electrostatic potential is spatiotemporal and depends upon the absence of observable mass flow. The two are not even of the same dimensionality.

(4) The charge of vacuum spacetime is assumed to be zero, when in fact it is a very high value. Vacuum has no mass, but it has great massless charge and virtual particle charge flux. For proof that a charged vacuum is the seat of something in motion, see G.M. Graham and D.G. Lahoz, "Observation of static electromagnetic angular momentum in vacuo," Nature, Vol. 285, 15 .May 1980, pp. 154-155. In fact, vacuum IS charge, identically, and it is also "spacetime" and at least four-dimensional.

(5) Contrary to its present usage, zero is dimensional and relative in its context. A three-dimensional spatial hole, for example, exists in time. If we model time as a dimension, then the spatial hole has one dimension in 4-space. So a spatial absence is a spatiotemporal presence. In the vacuum 4-space, a spatial nothing is still a something. The "virtual" concept and the mathematical concept of a derivative are simply two present ways of unconsciously addressing this fundamental problem of the dimensional relativity of zero.

(6) The concepts of "space" and "time" imply that spacetime (vacuum) has been separated into two parts. We can only think of a space as "continuing to exist in time " To separate vacuum spacetime into two pieces, an operation is continually required. The operator that accomplishes this splitting operation is the photon interaction, the interaction of vector electromagnetic energy or waves with mass. I have already strongly pointed out this effect and presented a "raindrop model" of first-order physical change itself in my book, The Excalibur Briefing, Strawberry Hill Press, San Francisco, 1980, pp. 128-130.

(7) "Vector magnetic potential" is assumed to be always an aspect of (and connected to) the magnetic field. In fact it is a separate, fundamental field of nature and it can be entirely disconnected from the magnetic field. See Richard P. Feynman et al, The Feynman Lectures on Physics, Addison-Wesley Publishing Co., New York, 1964, Vol. II, pp. 15-8 to 15-14. Curiously, this fact has been proven for years' yet it has been almost completely ignored in the West. The "Vx" operator, when applied to the A-field, makes B-field. If the Vx operator is not applied, the "freed" A-field possesses much-expanded characteristics from those presently allowed in the "bound" theory. Specifically, it becomes a scalar or "shadow vector" field; it is not a normal vector field. (note: for V read inverted capital Delta)

(8) The speed of light in vacuum is assumed to be a fundamental constant of nature. Instead it is a function of the intensity of the massless charge flux (that is, of the magnitude of the electrostatic potential) of the vacuum in which it moves. (Indeed, since vacuum and massless charge are one and the same, one may say that the speed of light is a function of the intensity of the spatiotemporal vacuum!). The higher the flux intensity (charge) of the vacuum, the faster the speed of light in it. This is an observed fact and already shown by hardcore measurements. For example, distinct differences actually exist in the speed of light in vacuo, when measured on the surface of the earth as compared to measurements in space away from planetary masses. In a vacuum on the surface of the earth, light moves significantly faster. For a discussion and the statistics, see B. N. Belyaev, "On Random Fluctuations of the Velocity of Light in Vacuum," Soviet Physics

Journal, No. 11, Nov. 1980, pp. 37-42 (original in Russian; translation by Plenum Publishing Corporation.) The Russians have used this knowledge for over two decades in their strategic psychotronics (energetics) program; yet hardly a single U.S. scientist is aware of the measured variation of c in vacuo. In fact, most Western scientists simply cannot believe it when it is pointed out to them!

(9) Energy is considered fundamental and equivalent to work. In fact, energy arises from vector processes, and it can be disassembled into more fundamental (anenergy) scalar components, since the vectors can. These scalar components individually can be moved to a distant location without expending work, since one is not moving force vectors. There the scalar components can be joined and reassembled into vectors to provide "free energy" appearing at a distance, with no loss in between the initial and distant points. For proof that a vector field can be replaced by (and considered to be composed of) two scalar fields, see E. T. Whittaker, Proceedings of the London Mathematical Society, Volume 1, 1903, p. 367. By extension, any vector wave can be replaced by two coupled scalar waves.

(10) The classical Poynting vector predicts no longitudinal wave of energy from a time-varying, electrically charged source, In fact, an exact solution of the problem does allow this longitudinal wave. See T. D. Keech and J. F. Corum, "A New Derivation for the Field of a Time-Varying Charge in Einstein's Theory," International Journal of Theoretical Physics, Vol. 20, No, 1, 1981, pp. 63-68 for the proof.

(11) The present concepts of vector and scalar are severely limited, and do not permit the explicit consideration of the internal, finer-grained structures of a vector or a scalar. That is, a fundamental problem exists with the basic assumptions in the vector mathematics itself. The "space" of a vector field, for example, does not have inter-nested sublevels (subspaces) containing finer "shadow vectors" or "virtual vectors," Yet particle physics has already discovered that electrical reality is built that way. Thus one should actually use a "hypernumber" theory after the manner of Charles Musés. A scalar is filled with (and composed of) nested levels of other "spaces" containing vectors, where these sum to "zero" in the ordinary observable frame without an observable vector resultant. In Musés' mathematics, for example, zero has real roots. Real physical devices can be -- and have been -constructed in accordance with Muses' theory. For an introduction to Musés' profound hypernumbers approach, see Charles Musés' foreword to Jerome Rothstein, Communication Organization and Science, The Falcon's Wing Press, Indian Hills, Colorado, 1958. See also Charles Musés, "Applied Hypernumbers: Computational Concepts," Applied Mathematics and

Computation, Vol. 3, 1976. See also Charles Musés, "Hypernumbers II," Applied Mathematics and Computation, January 1978.

(12) With the expanded Tesla electromagnetics, a new conservation of energy law is required. Let us recapitulate for a moment. The oldest law called for the conservation of mass. The present law calls for the conservation of "mass and energy", but not each separately. If mass is regarded as simply another aspect of energy, then the present law calls for the conservation of energy. However, this assumes that energy is a basic, fundamental concept. Since the energy concept is tied to work and the movement of vector forces, it implicitly assumes "vector movement" to be a "most fundamental" and irreducible concept. But as we pointed out, Whittaker showed that vectors can always be further broken down into more fundamental coupled scalar components. Further, Tesla discovered that these "coupled components" of "energy" can be individually separated, transmitted, processed, rejoined, etc. This directly implies that energy per se need not be conserved. The new law therefore calls for the conservation of anenergy, the components of energy. These components may be coupled into energy, and the energy may be further compacted into mass. It is the sum total of the (anenergy) components -- coupled and uncoupled -- that is conserved, not the matter or the energy per se. Further, this conservation of anenergy is not spatial; rather, it is spatiotemporal in a spacetime of at least four or more dimensions.

(13) Relativity is presently regarded as a theory or statement about fundamental physical reality. In fact, it is only a statement about FIRST ORDER reality -- the reality that emerges from the vector interaction of electromagnetic energy with matter. When we break down the vectors into scalars (shadow vectors or hypervectors), we immediately enter a vastly different, far more fundamental reality. In this reality superluminal velocity, multiple universes, travel back and forth in time, higher dimensions, variation of all "fundamental constants" of nature, materialization and dematerialization, and violation of the "conservation of energy" are all involved. Even our present Aristotlean logic -- fitted to the photon interaction by vector light as the fundamental observation mechanism -- is incapable of describing or modeling this more fundamental reality. Using scalar waves and scalar interactions as much subtler, far less limited observation/detection mechanisms, we must have a new "superrelativity" to describe the expanded electromagnetic reality uncovered by Nikola Tesla.

(14) "Charge" is assumed to be quantized, in addition to always occurring with -- and locked to -- mass. Indeed, charge is not necessarily quantized just as it is not necessarily locked to mass.

Ehrenhaft discovered and reported fractional charges for years, in the 30's and 40's, and was ignored. See P.A.11. Dirac, "Development of the Physicist's Conception of Nature," Symposium on the Development of the Physicist's Conception of Nature, ed. Jagdish Merha, D. Reidel, Boston, 1973, pp. 12-14 for a presentation of some of Ehrenhaft's results. Within the last few years Stanford University· researchers also have positively demonstrated the existence of "fractional charge." For a layman's description of their work, see "A Spector Haunting Physics," Science News, Vol. 119, January 31, 1981, pp. 68-69. Indeed, Dirac in his referenced article points out that Millikan himself -- in his original oildrop experiments -- reported one measurement of fractional charge, but discounted it as probably due to error.

(15) Presently, things are always regarded as traveling through normal space. Thus we use or model only the most elementary type of motion -- that performed by vector electromagnetic energy. We do not allow for things to "travel inside the vector flow itself." Yet, actually, there is a second, more subtle flow inside the first, and a third, even more subtle flow inside the second, and so on. We may operate inside, onto, into, and out of energy itself -- and any anenergy component of energy. There are hypervectors and hyperscalars unlimited, within the ordinary vectors and scalars we already know. Further, these "internal flows" can be engineered and utilized, allowing physical reality itself to be directly engineered, almost without limits.

(16) We always assume everything exists in time. Actually, nothing presently measured exists in time, because the physical detection/ measurement process of our present instruments destroys time, ripping it off and tossing it away -- and thereby "collapsing the wave function." Present scientific methodology thus is seriously flawed. It does not yield fundamental (spacetime) truth, but only a partial (spatial) truth. This in turn leads to great scientific oversights. For example, mass does not exist in time, but mass x time (masstime) does. A fundamental constant does not exist in time, but the "constant x time" does. Energy does not exist in time, but energy x time (action) does. Even space itself does not exist in time -- spacetime does. We are almost always one dimension short in every observable we model. Yet we persist in thinking spatially, and we have developed 1nstruments that detect and measure spatially only. Such instruments can never measure and detect the phenomenology of the nested substrata of time. By using scalar technology, however, less limited instruments can indeed be constructed -and they have been. With such new instruments, the phenomenology of the new electromagnetics can be explored and an engineering technology developed.

(17) We do not recognize the connection between nested levels of virtual state (particle physics) and orthogonally rotated frames (hyperspaces). Actually the two are identical, as I showed in the appendix to my book, The Excalibur Briefing, Strawberry Hill Press, San Francisco, 1980, pp. 233-235. A virtual particle in the laboratory frame is an observable particle in a hyperspatial frame rotated more than one orthogonal turn away. This of course implies that the hyperspatial velocity of all virtual particles is greater than the speed of light. The particle physicist is already deeply involved in hyperspaces and hyperspatial charge fluxes without realizing it. In other words, he is using tachyons (particles that move faster than light) without realizing it.

(18) Presently quantum mechanics rigorously states that time is not an observable, and therefore it cannot be measured or detected. According to this assumption, one must always infer time from spatial measurements, because all detections and measurements are spatial. With this assumption, our scientists prejudice themselves against even looking for finer, subquantal measurement methodologies and instrumentation. Actually this present limitation is a result of the type of electromagnetics we presently know, where all instruments (the "measurers") have been interacted with by vector electromagnetic energy (light). Every mass that has temperature (and all masses do!) is continually absorbing and emitting photons, and in the process they are continually connecting to time and disconnecting from time. If time is continually being carried away from the detector itself by its emitted photons, then the detector cannot hold and "detect" that which it has just lost. With Tesla electromagnetics, however, the fundamental limitation of our present instruments need not apply. With finer instruments, we can show there are an infinite number of levels to "time", and it is only the "quantum level time" which is continually being lost by vector light (photon) interaction. By using subquantal scalar waves, instruments can move to deeper levels of time -- in which case the upper levels of time ARE measureable and detectable, in contradistinction to the present assumptions.

(19) In the present physics, time is modeled as, and considered to be, a continuous dimension such as length. This is only a gross approximation. Indeed, time is not like continuous "dimension," but more like a series of "stitches," each of which is individually made and then ripped out before the next stitch appears. "Vector light" photons interact one at a time, and it is this interaction with mass that creates quantum change itself. The absorption of a photon -- which is energy x time -- by a spatial mass converts it to masstime: the time was added by the photon. The emission of a photon tears away the time, leaving behind again a spatial mass. It is not accidental, then, that time flows at

the speed of light, for it is light which contains and carries time. It is also not accidental that the photon IS the individual quantum. Since all our instruments presently are continually absorbing and emitting photons, they are all "quantized," and they accordingly "quantize" their detections. This is true because all detection is totally internal to the detector, and the instruments detect only their own internal changes. Since these detections are on a totally granular quantized background, the detections themselves are quantized. The Minkowski model is fundamentally erroneous in its modeling of time, and for that reason relativity and quantum mechanics continue to resist all attempts to successfully combine them, quantum field theory notwithstanding.

(20) Presently, gravitational field and electrical field are considered mutually exclusive. Actually this is also untrue. In 1974, for example, Santilly proved that electrical field and gravitational field indeed are not mutually exclusive In that case, one is left with two possibilities: (a) they are totally the same thing, or (b) they are partially the same thing. For the proof, see R. M. Santilli, "Partons and Gravitation: Some Puzzling Questions," Annals of Physics, Vol. 83, No. 1, March 1974. With the new Tesla electromagnetics, pure scalar waves in time itself can be produced electrically, and electrostatics (when the charge has been separated from the mass) becomes a "magic" tool capable of directly affecting and altering anything that exists in time--including gravitational field. Antigravity and the inertial drive are immediate and direct consequences of the new electromagnetics.

(21) Presently, mind is considered metaphysical, not a part of physics, an not affected by physical means. Literally, the prevailing belief of Western scientists is that man is a mechanical robot -- even though relativity depends entirely upon the idea of the "observer." Western science today thus has essentially become dogmatic, and in this respect borders on a religion. Since this "religion," so to speak, is now fairly well entrenched in its power in the state, Western science is turning itself into an oligarchy. But mind occupies time, and when we measure and affect time we can directly measure and affect mind itself. In the new electromagnetics, then, man regains his dignity and his humanity by restoring the reality of mind and thought to science. In my book, The Excalibur Briefing, I have already pointed out the reality of mind and a simplified way in which it can be modeled to the first order. With scalar wave instruments, the reality of mind and thought can be measured in the laboratory, and parapsychology becomes a working, engineering, scientific discipline.

(22) Multiple-valued basic dimensional functions are either not permitted or severely discouraged in the present theory For one thing, integrals of multiple valued derivative functions have the annoying

habit of "blowing up" and yielding erroneous answers, or none at all. And we certainly do not allow multiple types of time! This leads to the absurdity of the present interpretation of relativity which permits only a single observer (and a single observation) at a time. So if one believes as "absurd" a thing as the fact that more than one person can observe an apple at the same time, the present physics fails. However, the acceptance of such a simple proposition as multiple simultaneous observation leads to a physics so bizarre and incredible that most Western physicists have been unable to tolerate it, much less examine its consequences. In the physics that emerges from multiple simultaneous observation, all possibilities are real and physical. There are an infinite number of worlds, orthogonal to one another, and each world is continually splitting into additional such "worlds" at a stupendous rate. Nonetheless, this physics was worked out by Everett for his doctoral thesis in 1956, and the thesis was published in 1957. (See Hugh Everett, III, The Many-Worlds Interpretation of Quantum Mechanics: A Fundamental Exposition, with papers by J. A. Wheeler, B.S. DeWitt, L. N. Cooper and D. Van Vechten, and N. Graham; eds. Bryce S. Dewitt and Neill Graham, Princeton Series in Physics, Princeton University Press, 1973.) Even though it is bizarre, Everett's physics is entirely consistent with all the present experimental basis of physics. The present electromagnetic theory is constructed for only a single "world" or universe -- or "level." The expanded theory, on the other hand, contains multiply nested levels of virtual state charge -- and these levels are identically the same as orthogonal universes, or "hyperframes." Multiple kinds -- and values -- of time also exist. The new concept differs from Everett's, however, in that the orthogonal universes intercommunicate in the virtual state. That is, an observable in one universe is always a virtual quantity in each of the other universes. Thus one can have multi-level "continuities" and "discontinuities" simultaneously, without logical conflict. It is precisely these levels of charge -- these levels of scalar vacuum -- that lace together the discontinuous quanta generated by the interaction of vector light with mass.

However, to understand the new electromagnetic reality, one requires a new, expanded logic which contains the old Aristotlean logic as a subset. I have already pointed out the new logic in my paper, "A Conditional Criterion for Identity, Leading to a Fourth Law of Logic," 1979, available from the National Technical Information Center, AD-A071032.

Even as logic is extended, quantum mechanics, quantum electrodynamics, and relativity are drastically changed by the Tesla electromagnetics, as I pointed out in my paper, "Solutions to Tesla's Secrets and the Soviet Tesla Weapons," Tesla Book Company, 1580

Magnolia, Millbrae, California, 94030, 1980.

The present electromagnetics is just a special case of a much more fundamental electromagnetics discovered by Nikola Tesla, just as Newtonian physics is a special case of relativistic physics. But in the electromagnetics case, the differences between the old and the new are far more drastic and profound.

ADDITIONAL REFERENCES

1, Boren, Dr. Lawrence Milton, "Discovery of the Fundamental Magnetic Charge (Arising from the new Conservation of Magnetic Energy)," 1981/82 (private communication). Dr. Boren has a cogent argument that the positron is the fundamental unit of magnetic charge. His theory thus assigns fundamentally different natures to positive charge and negative charge. In support of Dr. Boren, one should point out that the "positive" end of circuits can simply be "less negative" than the "negative" end. In other words, the circuit works simply from higher accumulation of negative charges (the "negative" end) to a lesser accumulation of negative charges (the "positive" end). Nowhere need there be positive charges (protons, positrons, etc.) to make the circuit work. Dr. Boren's theory, though dramatic at first encounter, nonetheless bears close and meticulous examination -- particularly since he has been able to gather experimental data which support his theory and disagree with present theory.

2. Eagle, Albert, "An Alternative Explanation of Relativity Phenomena," Philosophical Magazine and Journal of Science, No. 191, December 1939, pp. 694-701.

3. Ehrenhaft, Felix and Wasser, Emanuel, "Determination of the Size and Weight of Single Submicroscopic Spheres of the Order of Magnitude r = 4 x 10(-5) cm. to 5 x 10(-6) cm., as well as the Production of Real Images of Submicroscopic Particles by means of Ultraviolet Light," Phil. Mag. and Jour. of Sci., Vol. II (Seventh Series), No. 7, July 1926, pp. 30-51.

4. Ehrenhaft, Felix and Wasser, Emanuel, "New Evidence of the Existence of Charges smaller than the Electron - (a) The Micromagnet; (b) The Law of Resistance; (c) The Computation of Errors of the Method," Phil. Mag. and Jour. of Sci., Vol. V (Seventh Series), No. 28, February 1928, pp. 225-241.

5. See also Ehrenhaft's last paper dealing with the electronic charge, in Philosophy of Science, Vol. 8, 1941, p. 403.

6. McGregor, Donald Rait, The Inertia of the Vacuum: A New Foundation for Theoretical Physics, Exposition Press, Smithtown, NY, First Edition, 1981, pp. 15-20.

7. Ignat'ev, Yu. G. and Balakin, A. B., "Nonlinear Gravitational Waves in Plasma," Soviet Physics Journal, Vol. 24, No. 7, July 1981, (U.S. Translation, Consultants Bureau, NY, January 1982), pp. 593-597.

8. Yater, Joseph C., "Relation of the second law of thermodynamics to the power conversion of energy fluctuations," Phys. Review A, Vol. 20, no. 4, October 1979, pp. 1614-1618.

9. DeSantis, Romano M. et al, "On the Analysis of Feedback Systems With a Multipower Open Loop Chain," October 1973, available through the Defense Technical Information Center (AD 773188),

10. Graneau, Peter, "Electromagnetic jet-propulsion in the direction of current flow," Nature, Vol. 295, 28 January 1982, pp, 311-312.

11. "Gravity and acceleration aren't always equivalent," New Scientist, 17 September 1981, p. 723.

12. Gonyaev, V. V , "Experimental Determination of the Free-Fall Acceleration of a Relativistic Charged Particle. II. A Cylindrical Solenoid in a Time-Independent Field of Inertial Forces," Izvestiya VUZ, Fizika, No. 7, 1979, pp. 28-32. English Translation: Soviet Physics Journal, No. 7, 1979, pp. 829-833. If one understands the new, expanded electromagnetics, this Soviet paper indicates a means of generating antigravity and pure inertial fields.

13. R. Schaffranke, "The Development of Post-Relativistic Concepts in Physics and Advanced Technology Abroad," Energy Unlimited, No. 12, Winter 1981, pp. 15-20.

14. F. K. Preikschat, A Critical Look at the Theory of Relativity, Library of Congress Catalogue No. 77-670044. Extensive compilation of measurements of the speed of light. Clearly shows the speed of light is not constant but changes, sometimes even daily.

Return to Table of Contents **Next Page**

COMMENTS ON THE NEW TESLA ELECTROMAGNETICS

Part II: The Secret of Electrical Free Energy

© 1982 T. E. Bearden

Again I wish to express my deep appreciation to two of my friends and colleagues who at this time, I believe, wish to remain anonymous. I thank them both for their exceptional contributions and stimuli, and their forbearance with the many discussions we have held on this and related subjects.

Also, it goes without saying that any errors in this paper are strictly my own, and not the fault of either of my distinguished colleagues.

Present electromagnetic theory is only a special case of the much more fundamental electromagnetism discovered by Nikola Tesla at the turn of the century.

Pure vacuum is pure charge flux, without mass. The vacuum has a very high electrical potential -- something on the order of 200 million volts, with respect to a hypothetical zero charge.

Thus in an ordinary electrical circuit, each point of the "ground" -- which has the same potential as the vacuum -- actually has a non-zero absolute potential. This circuit ground has a value of zero only with respect to something else which has the same absolute electrical potential.

Voltage, which is always associated with a flow of electrical "mass" current (even if only a miniscule flow), is, by definition, a difference dropped in potential when a charge mass moves between two spatially separated points. What we have termed "electrical current" only flows where there is a suitable conducting medium between things which have a difference in absolute potential. Furthermore, between any two points in any material, there is considered to exist a finite resistance -- if we apply a voltage and have a mass current flowing between the two points! The simple statement that V = IR irrevocably ties together voltage drop, mass current, and resistance between two points. Rigorously, to have one of the three is to have them all. To lose one is to lose all three. Immediately we see a major error in present theory: One can have a "difference in scalar potential" between two points without having a "voltage drop" between them. Specifically, if no mass current flows between them, no resistance exists between them, and no voltage drop exists between them.

In the same fashion, one can have a "scalar wave" through the

In the same fashion, one can have a "scalar wave" through the vacuum without a voltage wave. In that case, the wave has no E-field and no H-field. The only reason one has an E-field

Return to Table of Contents **Next Page**

around a statically charged object is because the charged electrons accumulated on the object are actually in violent motion. It is this motion of the charged masses that produces E-field -- as well as H-field whenever that entire E-field ensemble moves through laboratory space.

Now let us reason together in the "approximate" manner utilized in present electromagnetic theory. For example, let us examine a bird sitting on a high tension line.

The bird sits on the high tension line without a flow of mass electricity, because there is no significant difference in potential drop between the bird and the line. Specifically, between the bird's two feet -- each in contact with a different portion of the line -- there exists no potential difference. This is true even though, with respect to the vacuum, each foot is at a potential that would be "100,000 volts higher," were a mass current flowing. And it is true even though the absolute potential of each foot may be some 200.1 million "volts," were a mass current flowing.

Now an interesting thing happens to the bird when he flies through the air to light upon the high tension wire. As he flies toward the wire, he is flying through the massless electrostatic potential field of the wire, for that field extends an infinite distance away from the wire. The electrostatic potential field -- pure ϕ-field -- is actually the spatio-temporal intensity of the massless charge at a point. In other words, as the bird flies to the wire, he flies into an increasing "massless charge" potential, building up to 100,000 "volts" higher than the earth. However, very little (if any) "mass flow" potential difference is experienced upon his body in approaching the wire, and so essentially no "charged mass currents" are induced in his body. Thus the little flier safely navigates into the teeth of a very high electrostatic potential, lights upon the wire, and is not "fried" in the process. When he lights on the wire, his body has reached the electrostatic potential that each foot's contact point has. Again, there is no mass current flow. But his body is immersed in an increased flux of massless charge -- which is what the electrostatic potential represents. And each "virtual particle" flow in that charge potential represents a "massless (scalar)" electrical current.

The point is, one can have any amount of massless charge flow -- "scalar" current -- without any mechanical work being done in the system. All electrical work in a circuit is done against the physical mass of the charged masses that flow. Rigorously, force is defined as the time rate of charge of momentum. Even in the relativistic case where $F = ma + v(dm/dt)$, change of momentum requires mass movement. No mechanical work, and hence no energy, is expended by massless charge flow.

That is why the vacuum massless charge -- which is composed of a very high flux of massless "particles" -- normally does no work

That is why the vacuum massless charge -- which is composed of a very high flux of massless "particles" -- normally does no work on our systems, and expends none of its very high "potential energy." It is exactly the same as the bird which flew into an

Return to Table of Contents Next Page

increasing scalar field as it approached the high tension wire -- no work was done upon the bird by the increasing scalar flux currents encountered by its body.

By existing "in the vacuum," so to speak, we (the whole earth) are as birds sitting on a high tension line! Until we create significant difference in potential, via our present electromagnetic circuits, no current can flow -- anywhere. Even if we produce potential differences, we must have a conductor and charged masses to flow, if we wish to produce mechanical work. Presently our electromagnetic theory allows us to create a difference in potential within different parts of a circuit, but only by moving and shifting charged mass. We therefore have to do work on this electrical mass in moving it around, and we only get back the work we have put into the circuit. In other words, presently all we do is "pump" electrical mass.

Now notice what would happen to the bird on the line if we substantially "pulsed" the potential on the line. Suppose we "pulsed" it such that the bird's physical system -- considered as a circuit containing a capacitance, a resistance, an inductance, and many free electrons -- became resonant to the pulsing frequency. In that case the "bird system" would resonate, and a great deal of electrical mass would surge back and forth in the body of the bird. In the bird's body, voltage would exist, charged mass current would flow, work would be done, and the bird would be electrocuted.

Also, note that, without mass movement, electromagnetic vector fields are not produced (and a portion of the difficulty lies with the actual vector mathematics itself). Scalar (nonvector) waves continually penetrate "space" where there is no mass movement. This means there can exist a "delta-ϕ" without a voltage or an E-field. The present theory does not allow this, because it always uses "q" (charge) to be charged mass. Briefly, without belaboring the point, let us just say that it is the mechanical spin of the individual charged particle -- such as the electron -- which "entangles" or "knits together" or "couples" independent scalar waves into vector waves. A vector wave is simply two coupled scalar waves. The entire force field concept -- such as the E-field and the B-field -- is operationally defined in terms of the force exhibited on a test particle, or test mass. Rigorously, an E-field does not exist as a force field in vacuum, but as two coupled scalar ϕ-fields "tumbling about each other." When these two coupled, tumbling fields meet a spinning electron, e.g., the force emerges on the electron mass. In short, movement of a rotating mass changes delta-ϕ to "voltage", creating the V/I/R triad.

By "accumulating charged mass particles" -- such as electrons -- one certainly can increase the value of ϕ, which represents the charge intensity or "scalar electrostatic potential." However, that is not the only way to increase it. Resonance and rotation of charged masses can also be appropriately employed to vary the vacuum charge potential ϕ, under the proper circumstances.

or charged masses can also be appropriately employed to vary the vacuum charge potential ϕ, under the proper circumstances.

Return to Table of Contents **Next Page**

By the correct application of rotary principles and Tesla electromagnetic theory, it is possible to oscillate -- and change -- the vacuum potential itself, in one part of an electrical system. Thus by correct procedures a part of a system can be electrically altered so that the absolute value of its "ground" (vacuum) potential differs significantly from the normal vacuum-ground potential of the remainder of the circuit. In other words, we shift the vacuum-ground potential of part of the circuit by oscillating the massless vacuum charge itself, and in so doing we gain a substantial, oscillatory electrical potential difference between that part of the circuit and the normal ground potential of the rest of the system. Then we connect the two parts of the system by means of a conductor containing a load in the middle.

In every conductor, a large number of "free electrons" are available. If we oscillate the actual vacuum charge itself, unlimited additional free electrons also become available from the Dirac sea, since partial "unstripping" of the negative energy wells (each containing an electron) occurs. This "unstripping" of the potential of the well is due to vacuum potential oscillation, which oscillates time as well as space. To a negative energy well (positive time), the oscillation of its "time stream" increases the well's negative potential during one half-cycle and decreases its potential for the other half-cycle. Thus during half the oscillatory cycle, negative energy electrons may be lifted from the Dirac sea if the oscillation is sufficiently intense.

Therefore we obtain an attendant voltage and flow of mass current through the load. This voltage and current, by the way, are essentially limitless, and are free for the asking, assuming the proper "vacuum oscillation" is initiated and maintained so that electrons are continually being lifted from the Dirac sea by the time oscillations, and fed into the circuit.

Standard electromagnetic theory assumes that the vacuum potential is zero. It does not recognize the existence of massless charge, separated from charged mass. Therefore, orthodox scientists have never looked for a way to engineer the vacuum, because they have not realized it is composed of pure massless charge. Electrical physics has almost hopelessly confused charge and charged mass, thereby eliminating scalar longitudinal electrostatic waves. Expressed in the bird/high tension line analogy, the present electromagnetic theory restricts us to walking along the high tension line, laboriously carrying small batteries and power units, unaware of the limitless, surging power beneath our very feet.

Electromagnetically, we have been rather like one of the five blind men who touched an elephant. We have only touched one small portion of the electromagnetism "elephant," yet we thought we had grasped the entire beast.

OVERTURE TO A NEW AGE TECHNOLOGY

From an Update by Dr. Rolf Schaffranke

> " ... as there has been a steady erosion in U. S. activity in the basic sciences, there has been an increase in the level of such activity in Western Europe and Japan. If that continues, we are in danger of losing our position of scientific leadership."
>
> Val. L. Fitch, Prof. of Physics at Princeton University, in an interview with *U.S. News & World Report*, June 21, 1982.

West Germany:

The prototype of the first motorcycle equipped with a "flux-motor" (the inventor's designation for a tachion field converter or gravity-field generator) of 2 KW output has completed a test run of approximately 20,000 km without repairs. Principle of operation: The T-converter is constantly recharging the electrical power battery of the vehicle, resulting in an operation which is noiseless, fuelless and polution-free. After completion of all scheduled tests, a public demonstration to the press is planned within a few weeks from the time of this writing. (June 17, 1982) See photo, Pg. 19. A new factory for the production of gravity-energy-field converters in the town of Oldenburg is scheduled to produce individual home heating units. The design of automobile power plants based on the same principle is also in preparation. Reported efficiency factors of several hundred percent are anticipated.

Japan:

Mazda continues research on the "magnetic Wankel engine" (45 HP) for electric automobiles, based on the principle of Kure Tekko. The gravity research of Prof. S. Seike is now sponsored by Hitachi, after millions of Japanese received updated information via popular science magazines. It is interesting to note that Saudi Arabia has decided to invest $100 million in Hitachi stocks.

France:

The "Kromrey" converter has completed tests at the Institute for Magnetostatics, University of Strasbourg. One prototype delivered 700 Watts at 600-1200 RPM, at a fairly uniform rate. However, France, as the No. 1 developer of nuclear energy in Europe, is still reluctant to concentrate her energies on a revolutionary new technology which could result in drastic curtailments of her well-developed nuclear industry and associated exports. See photos, Pg. 22.

Denmark:

Dr. Jensen, physicist at the University of Kopenhagen, reported test results of 300% efficiency with a specially designed, 5-coil transformer in connection

Return to Table of Contents **Next Page**

with a tachion field converter based on the principle of the "N" machine. First reports were presented at the International Conference on Energy Technology in Hannover, Nov., 1980.

England / USA:

A "bullet train" based on the magnetic levitation system of British Prof. Eric Laithwaite is now under consideration for construction between Los Angeles and San Diego. Japan and West Germany are already operating high speed experimental trains, suspended magnetically to reduce friction, that may soon attain speeds of more than 200 miles per hour. The Laithwaite-Eastham method would use electromagnetic forcefields induced over an aluminum-topped concrete track. The project will probably be headed by a Japanese company as the prime contractor.

Return to Table of Contents Next Page

West German gravity-field unit in operation

Return to Index **Next Page**

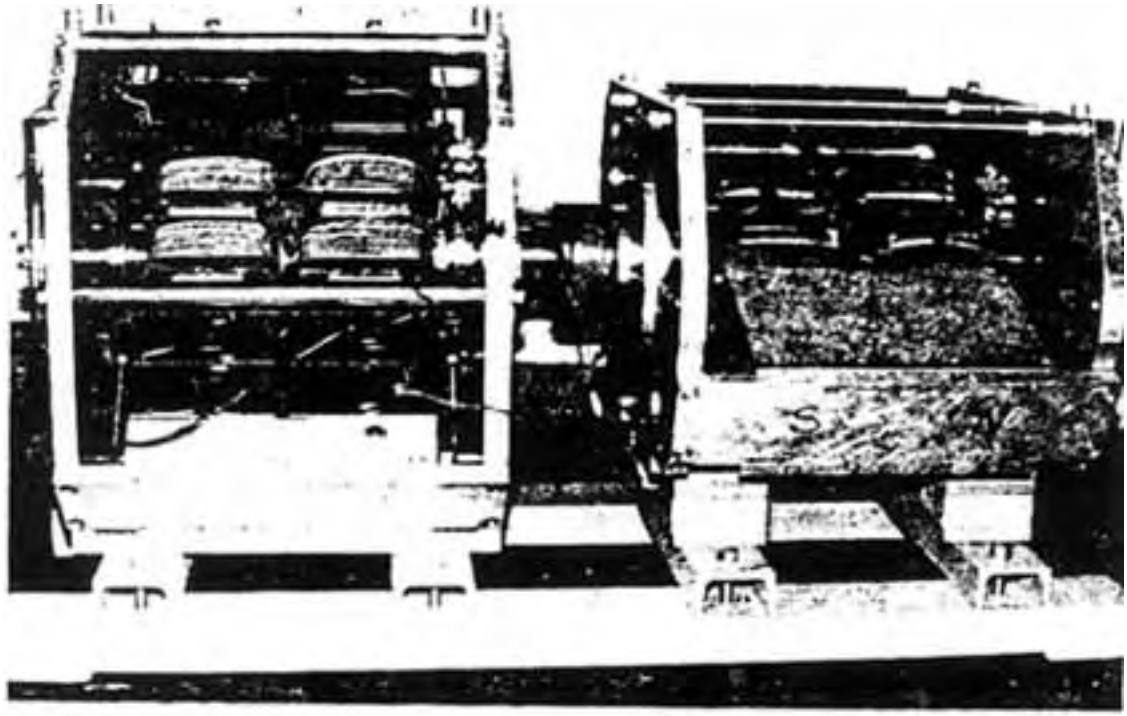

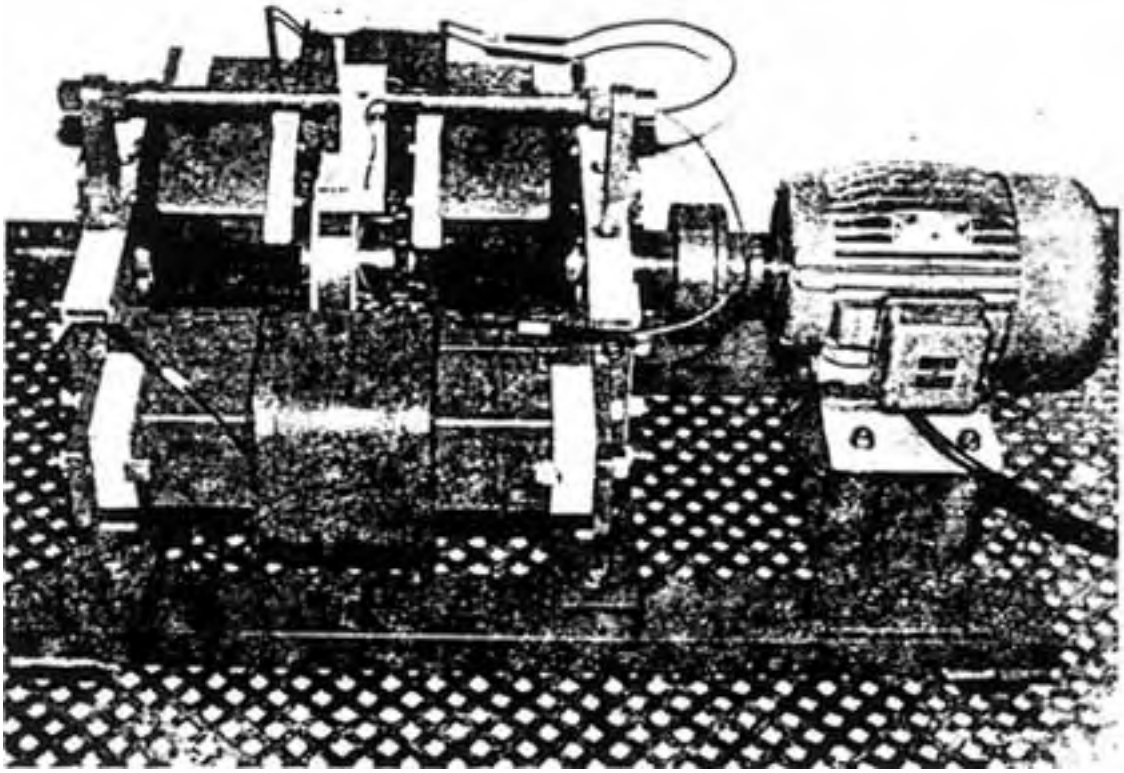

Swiss-French gravity field converter system "Kromrey"

Return to Index **Next Page**

REVIEW AND OUTLOOK

THE DEVELOPMENT OF POST-RELATIVISTIC CONCEPTS IN PHYSICS AND ADVANCED TECHNOLOGY ABROAD

Rolf Schaffranke, Dr. h. c.
Member A.I.A.A.

This paper was presented at The First International Symposium on Non-Conventional Energy Technology, Toronto, Ontario, Canada, Oct. 23-24, 1981. (Reprinted by permission of the author.)

"Far more harm is done to the progress of science by skepticism than by gullibility". (Dr. Robert Wood, Director R & D, McDonnel-Douglas Astronautics Div., Cal.) NASA - Langley Research Center in Hampton, VA is named after Samuel Pierpont Langley (1834-1906), an American astronomer, engineer and architect.

Langley worked out the aerodynamic principles for manned flight. In principal, his calculations were correct; but the structural materials he used for wings and engines were ,insufficient. In December of 1903, the *New York Times* published an editorial complaining about his foolish dream and the associated waste of government money. The editorial predicted that: "man would not fly for a thousand years".

Only 9 days after the editorial was published, the Wright brothers made their first successful powered flight at Kitty Hawk. (Dec. 17, 1903). But, again, as late as 1905, the *Scientific American* suggested the happening was a hoax - two years after the event which changed history. Let's reflect for a moment on the fact that only in a single lifetime, man has journeyed from Kitty Hawk to the surface of the moon!

The analogy to the problem of alternative energies and their development is, of course, obvious. We try to educate the preaching orthodoxies. But orthodox solutions are no longer enough. Our system of education can only give from

the past. The present must operate on inspiration and intuition, or the future will be lost. The past no longer has enough of the answers for arising crises for which there are no precedents. To keep pace with the requirements of the future, we must begin to teach not only what to learn, but how to learn, how to analyze, how to search for the truth. Only then will be able to recognize discrepancies between experiment and dogma and to cope with problems which appear to be just beyond the corner. History has shown again and again that no single individual can rise above the species without being persecuted. The reasons for that are:

Some of the most powerful forces in homo sapiens have always been

Greed, Pride, Ego, Fear and, above all, the Desire to Control Others,

.

A brand new German book titled *Energy in Abundance*, which is evidently creating a considerable impact in the European community, challenges the contemporary high

Return to Table of Contents **Next Page**

priests of science, the "Guardians of the Status Quo" and uncovers an almost incredible narrowmindedness and ignorance in science, politics and economics, "approaching the criminal" as the author puts it. The contemporary waste of genuine intellectual creativity is castigated as a cultural scandal approaching barbarism. The book stresses that a truly promising approach to the so-called energy crisis requires a fundamental and thorough re-evaluation of the theories, dogmas and axioms which form the basis of present day science and the foundation of our technology. As in the past, the formidable inertia of the establishment is not only based on inaccurate, incomplete and outdated information, but also on its reluctance to accept new ideas. The honest search for the truth first requires that we first demythologize generally accepted claims of so-called experts of the past. An excellent introduction to this problem is the article "Resistance by Scientists to Scientific Discovery" by Bernard Barber in *Science*, Vol. 134, pp. 596-602, of Sept. 1961, or the paper by Stephen C. Brush in *Science* of March, 1974, titled "Should the History of Science be Rated 'X'"?, culminating with a statement of Huxley:

> "Authorities", "disciples", and "schools" are the curse of science and do more to interfere with the work of the scientific spirit than all its enemies".

The former astronaut, Capt. Edgar D. Mitchell, one of our famous contemporaries, also stressed the need for an open mind!

> "History has shown time and again that important scientific discoveries generally happen only when someone steps outside the limits of his traditional discipline and looks at something from a fresh point of view. Then what should have been obvious all along comes into focus".

Those of us who are familiar with the pioneering efforts of Dr. Hans Nieper of Hanover will appreciate this statement by an ex-astronaut.

One of the most important cornerstones of today's scientific dogmas dates back to 1905, more than 3/4 of a century ago. Lest we forget, television and radar, jet-planes and cyclotrons, moonrockets and close-up photos of the planets of our solar system were nothing but wild fantasies of science fiction then.

The speed of light was assumed to be constant and the maximum possible speed in the universe; vacuum was to be a total void. In reality, the speed of light as measured in the Michelson-Morley experiments was not at all the same in all directions. The "ether-drift" still amounted to the respectable velocity of about five miles per second, and similar results were obtained by D. C. Miller in a series of experiments extending over twenty-five years, from 1902 to 1926.

Return to Table of Contents **Next Page**

> "Even worse, the measurements showed such marked discrepancies with previous results as to occasion a distress call to the U. S. Coast & Geodetic Survey, whose surveyors repeatedly remeasured the length of the tube and found no error there," reported the *Popular Science Monthly* March 1934 issue. And it continued: "More recently, speed of light observations only emphasized the apparent erratic behavior of the light beam that the scientists were attempting to plot. On some days it seems to travel faster than others by as much as 12 miles a second. Its speed seems to vary with the season, and also in a mysterious shorter cycle lasting about 2 weeks. Finally, the scientists ended by taking an average of all the readings which has just been announced as 186,271 miles per second".

In his paper "A Critical Look At the Theory of Relativity", Library of Congress Cat. No. 77-670044, F. K. Preikschat compiled all known light velocity measurements during the past 300 years or so, from Olaf Roemer in 1676 to the Laser measurements conducted by the National Bureau of Standards (USA) in 1972.

Of the 27 experiments undertaken in this field, 18 of them after the turn of this century, it must be concluded that the velocity of light as measured within the reference system of our earth has changed as much as plus/minus 50 km/sec, during the past century. Preikschat plotted a curve of these deviations and suggests a possible relationship between sunspot activities and changes of the earth magnetic field during the time period in question.

The "universal constancy of light" appears, therefore, as somewhat shaky "empirical evidence" for our cornerstone in physics, especially since Einstein himself has gone on record as saying:

> "If a single one of the conclusions drawn from it (relativity theory) proves to be wrong, it must be given up; to modify it without destroying the whole structure seems to be impossible".

Another modification concerns the definition for the term "vacuum" in physics, as documented by a paper in the *American Scientist*, March-April 1980, titled "Is The Vacuum Really Empty?" by Prof. Walter Greiner, University of Frankfurt, BRD, and Prof. Joseph H. Hamilton, Vanderbilt University, Nashville, Tenn.

The authors conclude that a neutral vacuum is by no means as "empty" as previously claimed in our textbooks, and suggests a new definition as follows:

> "The vacuum is the lowest stable state that a region of space can have while being penetrated by certain fields".

Because of the tremendous time lag in our educational system, many research

Return to Table of Contents **Next Page**

projects and their ensuing experimental data have been withheld from public scrutiny. The scientific community tends to have a vested interest in preserving the system it created and of which it is a part. It responds to new situations through the coloration of this attachment. A case in point are the carefully conducted experiments of T. T. Brown with charged bodies in a high vacuum, as described in my booklet *Ether Technology* (1977). These experiments suggest the actual presence of certain fields in vacuum, whether we call them gravitational field, tachion-field, ether-field, neutrino or Fermi-sea, etc. is of secondary importance at this moment. Although Brown spent, reportedly, more than $200,000 of his own funds over several decades on such experiments, he was nevertheless unable to have the results published in the scientific media of America.

Things are even worse when it comes to experiments conducted abroad, which often tend to confirm disregarded experimental results on this continent, as we shall see shortly. To highlight the wide discrepancies between orthodox (and obsolete) dogmas and actual, physical realities pertaining to the true subatomic structures as we know them to be today, let us briefly review the structure of the matter:

A molecule is the smallest division of a substance. Further division would cause it to cease being a substance. The smallest of true molecules can be illustrated when we use the globe of the earth for our standard. If a single drop of water were magnified until it was as big as the earth, each molecule would be about the size of a TENNIS BALL.

On the next step down, an atom is the unit which makes up the nature of the molecule, consisting of the nucleus and the surrounding electrons to render the atom "stable". An atom of hydrogen contains one proton and one electron to balance or neutralize the proton. Matter then is divisible into electrons and protons. But - and here comes the rub: Between electrons and protons are spaces so vast, in comparison with the masses of each, that, if the proton in the carbon atom were the size of a golf ball hanging from the ceiling of the great hall at Pennsylvania Station in New York, its electrons would be represented by six small wasps winging in a little knot against the four walls of the gigantic structure of the building! In effect, one could claim there is little final solidity of substance to anything: The universe consists of "emptiness", charged with electrical energy! If we translate the above to the measurements and terminology of the physicist and "magnify" the atom mathematically, with all its distances and dimensions kept in proportion so that the orbit of the electron would have a diameter equal to that of the earth about the sun, approximately 184 million miles, the diameter of the electron itself would only be 2,000 miles, and the diameter of the nucleus, where

electron itself would only be 2,000 miles, and the diameter of the nucleus, where

Return to Table of Contents Next Page

mass and weight of the atom are truly concentrated, can be taken as 2 miles only. We thus obtain a picture of a central mass with a diameter of 2 miles (nucleus), another object with a diameter of 2,000 miles (the electron, in the case of the hydrogen atom) at a distance of 92 million miles away from it, orbiting the nucleus. Evidently, there is plenty of room inside this system. And "room" is not a vacuum, it is not nothingness, but space itself, spatial energy, a field which can be identified with the ether of the past - and of the future. Nobel prize winner, Max Planck, during a lecture in Florence, Italy, once made a truly remarkable statement which describes the problem facing the physicist today:

> "As a man who has devoted his whole life to the most clear-headed science, to the study of matter, I can tell you as the result of my research about the atoms this much:
> 'THERE IS NO MATTER AS SUCH!'
> All matter originates and exists only by virtue of a force which brings the particles of an atom to vibration and holds this most minute solar system of the atom together. ... We must assume behind this force the existence of a conscious and intelligent MIND. This mind is the matrix of all matter".

This cosmic matrix is needed if we want to explain "action at a distance", lines of force, stresses, a magnetic field and so on. When the concept of the ether was abandoned, it had to be replaced by the concept of "space" instead. In reality, we merely switched terminology. We used to say that "ether fills all Space". But "filling" is not exactly the descriptive word to use. Perhaps we should rather define it: "Ether is a condition of space in which electrical manifestations for the atomic construction of materials is possible". This primordial energy is "free" or in an uncondensed state. It exists in interstellar space but remains unrecognizable until it begins to coagulate or gets into a vortex pattern. It constitutes the formative field force of nature, an immense reservoir of latent energy.

The claim of our textbooks that the Michelson-Morley experiment "disproved" the existence of the ether is incorrect. It merely disproved the existence of a noticeable ether drift or drag. As an analogy, if somebody would postulate that the absence of wind disproves the existence of the atmosphere around our planet, the fallacy of this postulate would be immediately apparent to all.

"Michelson and Morley centered their attention on the Earth's orbital velocity (30 km per second). They had no knowledge of the existence of galaxies; of motions of galaxies in relation to each other; of the motion of our solar system in our galaxy..... Their negative results are explainable on the basis of pre-1900 classical mechanics, so provide no proof of the absence of ether or Louis de Broglie's

Return to Table of Contents **Next Page**

'subquantic medium'. Thus, the limited information available to Michelson and Einstein is emphasized by recent findings, particularly in astrophysics", writes Dr. H. C. Dudley in the *Bulletin of the Atomic Scientists*, January, 1975, under the title "Michelson's Hunch Was Right". And Dr. Dudley continues: "In fact, 1929 saw Michelson still attempting to experimentally demonstrate the ether, which his intuition and reasoning told him ought to be present".

"Today most persons are largely unaware that the ether concept began to be seriously reexamined by two of physics most notable theoreticians, Paul Dirac in 1951 and de Broglie in 1959, both Nobel laureates. The ether is now being called the "neutrino sea" by astrophysicists, and has been characterized as an energy-rich particulate, subquantic medium. A rather voluminous literature on the subject is accumulating as indicated by a recent review, *The Cosmic Neutrino*, with 665 references covering only the period 1965-1972.....It appears that an open-minded reexamination of this area of physics is long overdue in order to open up new avenues of approach to this pressing problem".

Michelson, Dirac, de Broglie were not the only Nobel prize winners in favor of a reexamination of the ether question. Others were Stark, Arrhenius, A. H. Compton, Lenard, H. Yukawa, and Frederick Soddy, the British scientist who, during the convention of Nobel laureates in Lindau, 1954, described the current dogmas in physics as "an orgy of amateur physics" and "arrogant swindle" - with particular emphasis on the theory of relativity. ("The Wider Aspects of the Discovery of Atomic Disintegration", New World Publications, St. Stephens House, Westminster S.W.I.)

It remained largely unknown, even among physicists, that Einstein himself had serious doubts. In 1949, he wrote to his old friend, Maurice Solovine, who congratulated him on his 70th birthday:

> "Now you think that I am looking back at my life's work with calm satisfaction. But, on closer look, it is quite different. There is not a single concept of which I am convinced that it will stand firm and I am not sure if I was on the right track after all".

And one of my Canadian friends who I believe is present here today stated quite correctly in a letter to me:

> "The myths around Einstein are really not of his making as he himself often questioned his own conclusions and I felt he was quite aware of his own limitations which others were covering up. The physicists protect their members much the same way that the medical profession protects its own."

The purpose of these remarks is not to spark another controversy about the merits of the theories of relativity. Rather, they want to show that so-called

merits of the theories of relativity. Rather, they want to show that so-called

Return to Table of Contents Next Page

"scientific evidence" is a rather elastic term and that "verification" is always a relative affair. Or, as K. R. Popper so aptly put it:

> "Only in our subjective experience of conviction, in our subjective faith, can we be 'absolutely certain'".

This symposium presents an excellent overview of research and experiments reported from English speaking countries, or experiments published in the English language, as for instance from Japan. However, as Dr. Tenhaeff from Holland has formulated the problem,

> "It is important to pay attention to publications of colleagues in other countries. In the Netherlands and Germany, every academically educated man or woman knows at least three foreign languages. English and American authors only pay attention to material in English. In my opinion, this leads to an 'impoverishment' which puts a drag in science. Some seem very chauvinistic and seem to believe that only the researches done in their country are important. I regret this. Science is international, and international cooperation is of the greatest importance in science".

In presenting some brief reports from abroad, I shall attempt to bring corroborative evidence in support of alternative technology developments discussed during our meeting here in Toronto. Let me start with the most sensitive and secretive society, with Russia.

In his German original of the paper "Some Remarks on the Shielding Theory of Gravity", which was published in the Hanover Proceedings in more detail than the English abstract, Dr. Hans Nieper mentioned the Berlin engineer Levetzow, who was one of the first to postulate a combination pressure and shielding theory for the phenomena of gravity. Levetzow was soon overshadowed by the rising star of Albert Einstein, but one of his followers, Horst Pinkell, went to Russia in 1928 as an exchange student - and never returned. Together with Russian scientists, he was asked to prove the actual existence of the cosmic radiations postulated by Levetzow, now designated as neutrino sea or "tachion field". The work was done in Sterlitamak, South of the Ural mountains, and in 1938, sporadic reports reached the West about the discovery of extremely short corpuscular waves by Pinkell and Gorjew. These were the long sought "Hemmstrahlen" or drag waves associated with gravity. Rumors have it that a metal alloy was soon developed which acted as a drag wave polarisor and, in 1947, agents reported experimental Russian aircraft using this discovery. In 1951, a former German Junkers aircraft engineer reported about his activity pertaining to a super-secret project code named COW-7 in Siberia, a disk-shaped craft which could rise vertically and which belonged to the

Siberia, a disk-shaped craft which could rise vertically and which belonged to the

Return to Table of Contents Next Page

secret weapons then developed by the Soviets. Whether it was related to the Canadian AVRO project or something entirely different remained unknown, only the Levetzow gravity theory was assumed in connection with the activity in question.

Japan: My esteemed friend, Prof. Seike, who kept me informed about the research conducted by him and his co-workers, surprised me once with a significant statement, which I feel is important to repeat for the benefit of frustrated researchers on this side of the Pacific: "In the early stage of my studies, physicists could not understand what I was doing, while actors and actresses did so by intuition". It was the private support of about 800 individual artists, etc., in Japan which allowed Seike to work, experiment and publish his findings, and not the support of the Japanese equivalent of a National Science Foundation or a similar bureaucratic institution in that country. Again and again, I was surprised how quickly and eagerly American experiments, as for instance the almost forgotten "Ionocraft" of the late Major de Seversky, were duplicated and explored even in Japanese secondary schools. Admiral Rickover has more than once complained about our intellectual complacency: "As a nation, we seem addicted to 'spectatoritis'. We sit in the bleachers and let the game of life unfold before us".

The results are known: The Japanese have achieved top position in science and technology, and not only with tachion beams melting stones, producing "biased" water with a freezing point of minus 4 degrees Celsius, and a G-power generator obtaining 400 V DC output from a 10 V input driving source. I wish to take this opportunity to thank Prof. Seike for sharing his work with us in this country, and wish him the best of success for the future.

France: The work of SEPED was explained by M. René Louis Valée and some French publications in the area of gravity-research have been translated by the NASA translation service, as for instance the theory of the electromagnetic Magnus-Effect (of Marcel Pagés).

Specific mention must be made of the Raymond Kromrey G-field generator, a French-German-Swiss development which appears very closely related to the American "N" machine principle, the "Sunburst" machine and the "Permanent Magnet-Motor" Patent of Howard Johnson. Utilizing either permanent or electromagnetic modules, the generator output exceeds the input by far. One prototype delivers approximately 700 watts at speeds varying between 600 and 1200 RPM. Models with an output of 100 to 160 kw are presently in the planning stage. Several European patents have been granted against heavy opposition, especially from French industrial circles. The development was about 40 years in the making and the inventor stresses the need for a reinvestigation of electromagnetic and gravitic forces, as well as a reexamination of many cemented dogmas in present-day physics.

...rection of many cemented dogmas in present-day physics.

Return to Table of Contents **Next Page**

Germany: A system of rotating electromagnets and magnetic "stator rings" of the German "Kunel" Generator complement the general trend of the American and French generators mentioned before. The first prototype was reported to have been tested in April, 1980. Here, again, very heavy opposition from the German orthodox science establishment. Of special interest is a comment by Nobel laureate Werner Heisenberg, reported to have been made vis-a-vis the inventor:

> "I think it is possible to utilize magnetism as an energy-source. But we science idiots cannot do that; this has to come from the outside".

More details about French and German developments have been published in the new book already mentioned, *Energy in Abundance* by Hilscher and, hopefully, an English version of this important work will be available by next year. Generators which do interact with surrounding energy fields have been designated as "open systems", in contrast to our present "closed system" technology of gasoline and diesel engines, steam turbines, nuclear power plants and so forth. The theoretical basis for all "open systems" is the realization that there simply is no such thing as "empty space". In reality, space is filled with an extremely energy rich, subatomic and subquantic continuum. In short, a "pre-physical state of matter", which can be tapped, as for instance by the spinning of magnetic systems which extract momentum via a vortex-formation of the universal "tachion field".

Austria: This small heartland of Central Europe is proud of her native pioneers in science, among them Dr. Wilhelm Reich, Viktor Schauberger and Karl Schappeller. But after Dr. Reich died in an American prison in 1957 and Victor Schauberger died only five days after his return from the USA (in 1958), where he received an incredibly unfair treatment from certain industrialists, there is little enthusiasm among Austrians to touch base with correspondents on this continent. Viktor Schauberger's son, Walter, refuses, as a matter of principle, to communicate with Americans, no matter in what language. To illustrate the type of "contract" Viktor Schauberger was forced to sign, it stated:

> that all of his patents would become the property of the "consortium",
> that any future inventions or developments would also become the property of the "consortium",
> that he would refrain from discussing any of it with third parties,
> that he would refrain from publishing,
> that all plans and models would remain with the "consortium" after his departure from America.

There is a favorite saying in that small country which is much to the point:

> "After the Greek philosopher Pythagoras had discovered his famous

Return to Table of Contents Next Page

> theorem, he sacrificed a whole hecatomb of oxen as a thanksgiving to the Gods. Ever since, all the oxen in the world are running scared whenever a new truth has been discovered".

Knowledge of the ideas of Schauberger and Schappeller appears to be essential for an understanding of our changing picture of the physical world. As an example, the former forest ranger Viktor Schauberger had watched numerous times some trout standing, apparently motionless, in the strong currents of Alpine mountain streams. This and many similar observations of nature brought him to the gradual development of his "implosion-theory" and associated hardware (see Jensen paper elsewhere). His son is continuing the work in the "Pythagoras-Kepler" School in Bad Ischl. Another prolific researcher is the Viennese engineer Franz Seidl, known for his studies of the use of magnetic field effects as "trigger energy" for voltage and power multipliers.

Holland: A small country with strongly developed intellectual independence appears to be Holland, where Prof. J.M.J. Kooy developed his "Space Dynamics". His hypothesis of gravitational action is based on the realization that all celestial bodies can be conceived as practically transparent in relation to the size of the elementary particles and their mutual distances in the structure of matter. Gravitons or tachions, coming from all directions of deep space, can pass through a celestial body like water passes through a fishnet, and only a minute fraction of the cosmic gravitons or tachions will be intercepted. Study of the effects of the tachion field or space continuum of the fabric of material substances, magnets and crystal lattices can lead to development of converters and novel production facilities for readily usable, conventional E/M energy. When the American inventor Edwin V. Gray was blocked in his efforts to develop his "Pulsed Capacitor Discharge Electric Engine" for which he had received U. S. Patent #3,890,548, he found open ears and open minds in Holland.

The fact that Gray was named "Inventor of the Year" from the Department of Patent Rights in Los Angeles, California, where Dr. Chalfin of Cal Tech confirmed that:

> There does not exist an even distantly similar engine to this one in the world. Conventional electric engines use up power. In this system energy is used up for only a minute part of a millisecond. It operates without heat loss and there is no energy loss whatsoever with this system",

had more meaning to the people of PHILIPS and others in Holland than to the energy establishment in his native America.

England: There is perhaps no more controversial inventor at this time than

there is perhaps no more controversial inventor at this time than

Return to Table of Contents Next Page

John R. R. Searl and his Levity Disc, powered by the Searl Effect generator. It is claimed that model craft have been demonstrated with flight characteristics showing anti-gravitational and inertia-free properties. Demonstrations have been photographed and videotaped. Searl calls his generator a "Gyro-Flywheel High Energy Density Mechanical Magnetic Device" and claims that the magnets used are not the common type, ordinary magnets. The Australian engineer Athol Park of Melbourne, Australia, who visited Searl a few years ago described it this way:

> "From a briefcase, Mr. Searl takes a bar magnet and two steel rollers. He places the rollers at either end of the magnet. They appear to be attracted to the poles - but, when they are pushed gently around the corners of the magnet, they chase each other round and round.... "

The engineer quotes Searl:

> "The crystals in the magnet are changed by putting it in a magnetic flux oven and by frequency control. The result is motion of a magnetic field - a completely new source of power. Units (modules) based on this principle are what power my levity unit - the motor and generator built as one, fuelless unit".

In one of his numerous newsletters he states further:

> "The power plant is a self-contained, onboard closed system of conversion elements with energy input from a latent storage source".

Because Searl has never divulged all details and his explanations are generally of a non-technical, "unscientific" nature, many investigators have chosen to dismiss him as a swindler and imposter. In sharp contrast to this is the opinion of a well-experienced American engineer who reported after a visit with Searl:

> "I found it refreshing to note the keen sense of moral responsibility which he feels for the use to which his discovery is put... The Searls live in modest circumstances. Luxuries are few. They do not own a car. Mr. Searl bicycles several miles daily to his place of work in Maidenhead. There he is an electrical technician and training supervisor in a bearing factory".

But perhaps most significant was the following observation of the American visitor about Searl:

> "We were also interested to hear him say that many of his ideas came to him while he slept. He would go to sleep with questions, and awake with answers... and refreshed. He seemed to have the

and awake with answers... and refreshed. He seemed to have the

Return to Table of Contents **Next Page**

ability to restore vital powers more quickly than most people".

And the American concluded his report with the statement:

"The impression we gained of Mr. Searl was one of a very sincere and generous person, a dedicated and tireless worker with perfect confidence in the outcome of his efforts, a man of high principle with a keen sense of loyalty to those who are helping him, and of responsibility for the future welfare of our planet and its people".

In view of the very contradictory nature of comments and impressions by those who have met Searl, it might be wise to reserve final judgment on the Searl-Levity-Disc and its inventor at this time.

New Zealand: Some of Searl's keenest supporters and observers of his work are in New Zealand and Australia. And one of the sharpest young physicists in that country (new Zealand), unhampered by calcified ideology, developed the mathematical foundation for a theoretical anti-gravity effect, using the hydrodynamic analogy of the ether. He uses the equivalent of the hydrodynamic Reynolds number, above a certain value of which the laminar flow past a solid surface breaks down and becomes turbulent due to shear rupture of the viscous cohesion of a fluid, together with his deduction that anti-gravity could be obtained by creating a "vacuum: in the ether in such a way as to correspond to the production of turbulence in a magnetic field. Turbulence in a fluid occurs when Reynolds number RE = 1, when the inertial shearing force equals the viscous cohesion force in the fluid in the vicinity of an approximately spherical body immersed in the fluid, resulting in separation of the boundary layer and formation of a wake, i. e. vacuum or free surface around the body. He calculated the threshhold for turbulence in the ether, = a vacuum = an anti-gravity effect, using the refined value of ether kinematic viscosity which he obtained.

His theory would confirm the observations of very high voltage produced in the case of the Searl Levity Disc, and the very high voltage needed in the vacuum experiments with flying disc-shaped bodies of T. T. Brown, the "ionocraft" observations of Major de Seversky, the "Electro-Field Rockets of Prof. Dudley, the observations of Northrop Corp. with "Electro-Aerodynamics in Supersonic Flow" and similar American documentation and patents.

Since the New Zealander is now in the process of attempting to publish his theory in a reputable British magazine, I am not at liberty to divulge his address prematurely. Interest in New Zealand and Australia is running high, and possible breakthroughs in energy technology should not come totally unexpected in these two countries with strong intellectual ties to England.

Return to Table of Contents **Next Page**

Conclusion

There is now overwhelming evidence for the actual existence of a very high density, energy rich space continuum formerly called "ether". This space energy can be concentrated, gathered, focused, magnified and compacted by magnets or magnetic materials, which appear as the new core materials for converters of all kinds, utilizing the cosmic energy for new technology applications.

Crystals are energy-sensing and channeling devices; they can serve as transducers, as for instance in the Moray-Device, or the "rock electricity" of T. T. Brown.

Combinations of crystals and magnetic materials appear to be the mainstay for the development of "hyper-space" - converters and generators of power - utilizing free, cosmic energy in our future.

Unbiased, totally honest and impartial reexamination and reevaluation of all scientific theorems and dogmas, as well as unhampered opportunities for the pioneers of the new technology on the American and European continent appear to be the prerequisite of success.

Those who accept that anything of the nature of ideas or ideology is permanent, use all their strength to hold on to it, and to condemn all who do not agree. The next stage of this spiritual illness of the mind is to build a monument to what they perceive is Truth, and then to build a monument to their own permanence in the world. This, they do by seeking fame or fortune, and authority over others. This is the contemporary, planetary psychology situation, and thus are we losing the gift of perspective and horizon and are no longer able to discern what is important. Skeptics are on record as saying:

> "We are not running out of natural resources or intellectual talent, we are running out of the freedom of innovation that made the countries on the North American continent the most advanced nations on earth".

The future will show whether this freedom, which includes the freedom and the duty of taking risks, can be restored to the degree our Founding Fathers have been striving for. Only then will we know whether the late Wernher von Braun was not too overly optimistic when he stated:

> "The cosmic age will bring a dawn of knowledge not yet envisioned. It will dwarf all our present knowledge and ideas and, through its vastness, may even bring men closer together on their own planet".

Return to Table of Contents

AN ELECTROMAGNETIC BASIS FOR INERTIA AND GRAVITATION: WHAT ARE THE IMPLICATIONS FOR 21st CENTURY PHYSICS AND TECHNOLOGY?

Bernhard Haisch
Solar & Astrophysics Laboratory
Lockheed Martin, H1-12, B252
3251 Hanover St., Palo Alto, CA 94304
Voice (650) 424-3268, Fax (650) 424-3994
E-mail: haisch@starspot.com

Alfonso Rueda
Dept. Elec. Eng. and Dept. Phys. & Astron.
California State University
Long Beach, CA 90840
Voice (562) 985-1514, Fax (562) 985-5899
E-mail: arueda@csulb.edu

Abstract

The basis of most modern technology is the manipulation of electromagnetic phenomena. Haisch, Rueda and Puthoff (1994a) published a controversial but substantive formulation of a concept proposing an explanation of inertia of matter as an electromagnetic phenomenon originating in the zero-point field (ZPF) of the quantum vacuum. This suggests that Newton's equation of motion can be derived from Maxwell's equations of electrodynamics, in that inertial mass is postulated to be not an intrinsic property of matter but rather a kind of electromagnetic drag force (which temporarily is a place holder for a more general quantum vacuum reaction effect) that proves to be acceleration dependent by virtue of the spectral characteristics of the ZPF. Moreover the principle of equivalence implies that in this view gravitation would also be electromagnetic in origin along the lines proposed by Sakharov (1968). A NASA-funded research effort has been underway at the Lockheed Martin Advanced Technology Center in Palo Alto and at California State University in Long Beach to develop and test these ideas. An effort to generalize the 1994 ZPF-inertia concept into a proper relativistic formulation has been successful. With regard to the goals of the NASA Breakthrough Propulsion Physics Program we can, on the basis of the ZPF-inertia concept, definitively rule out one speculatively hypothesized propulsion mechanism: matter possessing negative inertial mass, a concept originated by Bondi (1957). The existence of this is shown to be logically impossible. On the other hand, the linked ZPF-inertia and ZPF-gravity concepts open the conceptual possibility of manipulation of inertia and gravitation, since both are postulated to be electromagnetic phenomena. Whether this will translate into actual technological potential, especially with respect to spacecraft propulsion and future interstellar travel capability, is an open question. The (possibly comparable) time scale for translation of Einstein's $E = mc^2$ mass-energy relation into nuclear technology was approximately four decades. A key question is whether the proposed ZPF-matter interactions generating the phenomenon of mass might involve one or more resonances. This is presently under investigation.

INTRODUCTION

In spite of the success of special and general relativity, which embody our best understanding of the relationship between mass and energy, the fundamental nature of mass has remained a complete mystery. There are four characteristics of matter that involve some aspect of the property of mass. (1) *Inertial mass:* the resistance to acceleration known as inertia, defined in Newton's equation of motion, $\mathbf{F} = m\mathbf{a}$, and its relativistic generalization. (2) *Active gravitational mass:* the ability of matter to attract other matter via Newtonian gravitation, or, from the perspective of general relativity, the ability to curve spacetime. (3) *Passive gravitational mass:* the propensity of matter to respond to gravitational forces. (4) *Relativistic or rest mass:* the relationship of mass and energy expressed in the $E = mc^2$ relation of special relativity. These are very different properties of matter, yet for some reason they are quantitatively represented by the same parameter. One can imagine a universe, for example, in which inertial mass, m_i, and passive gravitational mass, m_g, were different... but then objects would not all fall with the same acceleration in a gravitational field and there would be no principle of equivalence to serve as the foundation of general relativity. One can imagine a universe in which active and passive gravitational mass were different... but then Newton's third law of equal and opposite forces would be violated, and mechanics as we know it would be impossible. Another fundamental characteristic of mass is that objects that possess mass (i.e. matter) are limited to speeds less than the speed-of-light, c, whereas massless entities such as photons cannot move at any speed other than c.

CP420, *Space Technology and Applications International Forum-1998*, edited by Mohammed S. El-Genk
DOE CONF-980103 © 1998 The American Institute of Physics

It is also instructive to consider the concept of *negative mass*, hypothetically proposed by Bondi (1957). This would not be the same as antimatter. A positron is the anti-matter version of an electron, but while it has the opposite charge, the mass of the positron and the electron are identical: all four types of mass (inertial, active and passive gravitational, and rest) are "positive". Real anti-matter has positive mass, whereas the hypothetical negative matter would be stuff whose mass is the negative of conventional matter.

> If an object made of negative matter could be obtained and coupled by elastic, gravitational, or electromagnetic forces to an object containing an equal amount of positive matter, the interactions between the two objects would result in an unlimited amount of unidirectional acceleration of the combination without the requirement for an energy source or reaction mass. In this paper, it is shown in exhaustive detail that, despite their unbelieveable propulsive capabilities, negative matter propulsion systems do not violate the Newtonian laws of conservation of linear momentum and energy. Thus, logical objections to the existence of negative matter must be found elsewhere than in Newtonian mechanics. (Forward 1990)

We propose that we have indeed found a new insight into the nature of mass, and while this immediately rules out the possibility of negative matter discussed above and its consequent hypothetical propulsion capabilities, it opens an equally revolutionary opportunity: the chance that inertia and gravitation, as electromagnetically-based phenomena, may be subject to modification.

WHY DOES F=ma?

Newton's second law, his equation of motion $\mathbf{F}$=m$\mathbf{a}$, is arguably regarded as the origin of physics. Forces and accelerations are perceptible phenomena, and from the equation of motion one infers that matter possesses a property called inertial mass. Note that it is impossible to directly perceive this mass, m. The only thing one ever perceives with the senses or measures with instruments is either $\mathbf{F}$ or $\mathbf{a}$ or both. That matter must possess mass, m, is an inference: one could say it is a matter of bookkeeping.

While it is difficult to imagine what such a universe would be like, it is possible to imagine a universe in which $\mathbf{F} \neq$ m$\mathbf{a}$, e.g. $\mathbf{F} = m\mathbf{a}^2$. However it appears that Newton's third law is somehow deeper and in a sense more fundamental than the second. Newton's third law states that for every force there must be an equal and opposite reaction force, i.e. $\mathbf{F} = -\mathbf{F}_r$. For stationary or static phenomena it is impossible to even conceive of an alternative: If the right hand is pressing against the left hand with force $\mathbf{F}$, then the left hand must press back against the right hand with the equal and oppositely-directed reaction force, $\mathbf{F}_r$. How could one hand press against the other without the other pressing back? It would violate a fundamental symmetry, since who or what is to say which hand is pressing and which is not. Thus for static or stationary situations the balance of forces is the only imaginable circumstance.

If an agent exerts a force on a non-fixed object, experience tells us that a reaction force also manifests against the agent. But why is this so? The traditional explanation is that matter possesses inertial mass which by its nature resists acceleration. The discovery that appears to have been made is that, on the contrary, there is a very specific origin for a reaction force, $\mathbf{F}_r$. Accelerated motion through the electromagnetic zero-point field (ZPF) of the quantum vacuum results in a reaction force. If one analyses the ZPF using Maxwell's equations of electrodynamics, one finds that $\mathbf{F}_r = -m\mathbf{a}$. An electromagnetic reaction force (somewhat like a drag force) arises that happens to be proportional to acceleration. In other words, if one begins with Newton's third law of equal and opposite force and carries through an analysis using Maxwell's equations, one winds up *deriving* $\mathbf{F} = m\mathbf{a}$. That being the case, one can, in principle, dispense with the concept of inertial mass. Matter, consisting of charged particles (quarks and electrons) interacts with the electromagnetic ZPF and this yields a reaction force whenever acceleration takes place.

WHAT IS THE ELECTROMAGNETIC ZERO-POINT FIELD?

Statistical mechanics was developed by Boltzmann, Maxwell, Gibbs and others towards the end of the 19th century to yield a deeper understanding of the physics underlying the empirical laws of thermodynamics. Matter is treated as consisting of ensembles of oscillating particles. This approach was used to analyze the

heat flows of thermodynamics and the blackbody radiation of heated objects (cf. Milonni 1994). The simplest representation of an atom in a solid is to regard it as an idealized point harmonic oscillator. This tells us nothing about the structure or intrinsic nature of an atom, but does allow one to analyze the energetics of a macroscopic object (e.g. a perfectly radiating solid at temperature T) on the basis of energy exchange between microscopic oscillators comprising the object. The laws of quantum mechanics tell us that there is a non-zero minimum energy for any oscillator. Calculating the minimum energy of such a quantum oscillator is one of the obligatory fundamental problems solved in most any textbook on Quantum Mechanics. Couching this in quantum language, one states that the lowest eigenvalue, E, of the oscillator Hamiltonian is not zero, but rather $E = h\nu/2$. The oscillators comprising matter have a minimum quantum energy.

The electromagnetic field inside a cavity can be represented as an expansion, i.e. a linear superposition of the characteristic modes of the cavity, each one oscillating at its characteristic frequency. It can also be shown after second quantization that the individual cavity modes behave in mathematically exactly the same way as ordinary mechanical harmonic oscillators. The volumetric density of modes between frequencies ν and $\nu + d\nu$ can be represented by means of the density of states function $\rho_\nu d\nu = (8\pi\nu^2/c^3)d\nu$. The ground state energy of each one of these harmonically oscillating modes is then $h\nu/2$.

It is instructive to write the expression for blackbody radiation including this additional zero-point energy:

$$\rho(\nu, T)d\nu = \frac{8\pi\nu^2}{c^3}\left(\frac{h\nu}{e^{h\nu/kT} - 1} + \frac{h\nu}{2}\right)d\nu. \tag{1}$$

The first term (outside the parentheses) represents the mode density, and the terms inside the parentheses are the average energy per mode of thermal radiation at temperature T plus the zero-point energy, $h\nu/2$, which has no temperature dependence. Take away all thermal energy by formally letting T go to zero, and one is still left with the zero-point term. The laws of quantum mechanics as applied to electromagnetic radiation force the existence of a background sea of zero-point-field (ZPF) radiation.

There is a discipline within physics known as stochastic electrodynamics (SED) which assumes that the ZPF may be treated as a real field no different from any other radiation field (de la Peña and Cetto 1996). The extent to which this is an accurate representation of reality is the subject of lively debate (see Michel 1996 and the reply of Haisch and Rueda 1997a). We have — so far — relied upon the techniques of SED to calculate the electromagnetic reaction force that we propose accounts for inertia.

TWO DERIVATIONS OF INERTIA

The key to understanding the relationship between the ZPF and inertia is to recognize that while the ZPF, as represented above, is perfectly uniform and isotropic in stationary or uniform-motion frames, certain asymmetries appear in the ZPF when viewed from an accelerating frame. (There is an important distinction between accelerating and constant-motion frames: If the ZPF were detectable in a constant-motion frame the laws of special relativity would be violated.) The original analysis of Haisch, Rueda and Puthoff (1994a) concerned itself with interactions between an idealized charged particle forced to undergo a uniform acceleration and the ZPF. A new analysis (Rueda and Haisch 1997) arrives at the same result — in fact it extends the result to a relativistically correct form of the equation of motion, $\mathcal{F} = d\mathcal{P}/d\tau$ — by examining only the ZPF radiation pattern as viewed from an accelerated frame. The new analysis is thus both more general and at the same time not dependent on simplified particle-field interaction models.

In the 1994 analysis, HRP assumed that matter, consisting of quarks and electrons, could be represented as an ensemble of oscillating point charges. Following a terminology of Feynmann, such an idealized quark or electron was called a parton. Protons are believed to consist of three quarks (uud) whose charges sum to +1. Neutrons are believed to consist of three quarks (udd) whose charges sum to zero. Electrons are — to the best of our current knowledge based on scattering experiment — point-like. It was simply assumed that the interactions between matter and the ZPF take place at the quark or electron level, so that the parton analysis would apply equally to protons and neutrons. (If the interactions take place at sufficiently high

frequencies, the gluon-mediated binding between quarks can justifiably be ignored.) Following a technique first developed by Einstein and Hopf the partons were driven to oscillate ($\mathbf{v}_{osc}$) by the electric component of the ZPF, $\mathbf{E}^{ZP}$. The oscillating parton was forced to accelerate in a direction perpendicular to the oscillations. The average Lorentz force between the oscillating charge and the magnetic component of the ZPF, $\mathbf{B}^{ZP}$, was calculated. It was found that

$$\mathbf{F}_L =< (q/c)(\mathbf{v}_{osc} \times \mathbf{B}^{ZP} >= -\frac{\Gamma\hbar\omega_c^2}{2\pi c^2}\mathbf{a}. \tag{2}$$

The Lorentz force, $\mathbf{F}_L$, is seen to provide a reaction force, $\mathbf{F}_r$, having the appropriate dependence on acceleration to account for inertia. The interpretation is that the electromagnetic and ZPF parameters constitute inertial mass (see HRP for definitions of the quantities):

$$m_i = \frac{\Gamma\hbar\omega_c^2}{2\pi c^2}. \tag{3}$$

The recently completed relativistic analysis (Rueda and Haisch 1997) is no longer dependent on matter behaving as oscillating partons. Instead we have investigated the Poynting vector (energy flow) of the ZPF in an accelerating frame using standard relativistic transformation formulae. The Poynting vector is found to be non-zero, whereas it is precisely zero in constant-motion frames. From the Poynting vector one may calculate the electromagnetic momentum flux transiting a given object, which is also non-zero for an accelerating object. All an object need do is scatter a tiny amount of the ZPF radiation flux to generate a reaction force that turns out to be proportional to acceleration. An accelerating object "sees" a flux of electromagnetic radiation coming toward it; scattering some fraction of that radiation (by dipole scattering, say) will generate a drag force that is necessarily directed against the accelerated motion. From this picture it is immediately obvious why the hypothesized Bondi negative inertial mass conjecture becomes impossible: the resistance comes from the object moving into a flux of radiation, and there is no way to "turn this around" into a negative inertial mass, i.e. no way to turn a resistance into an attraction.

GRAVITATION

One of the first objections typically raised against the existence of a real ZPF is that the mass equivalent of the energy embodied in eq. (1) would generate an enormous spacetime curvature that would shrink the universe to microscopic size. The resolution of this dilemma lies in the principle of equivalence. If inertia is an electromagnetic phenomenon involving interactions between charge and the ZPF, then gravitation must be a similar phenomenon. The mere existence of a ZPF would not necessarily generate gravitation or spacetime curvature. Indeed, preliminary development of a conjecture of Sakharov (1968) by Puthoff (1989) indicates that the ZPF in and of itself *cannot* be a source of gravitation.

Expressed in the simplest possible way, all matter at the level of quarks and electrons is driven to oscillate (*zitterbewegung* in the terminology of Schrödinger) by the ZPF. But every oscillating charge will generate its own minute electromagnetic fields. Thus any particle will experience the ZPF as modified ever so slightly by the fields of adjacent particles... and that is gravitation! It is a kind of long-range van der Waals force.

A ZPF-based theory of gravitation is only in the exploratory stage at this point. The Puthoff (1989) analysis that resulted in the calculation of a proper Newtonian inverse-square law of attraction has since been shown to be problematic. Moreover at this time there is no accounting for the gravitational deflection of light other than to invoke a variable permittivity and permeability of the vacuum due to the presence of charged matter. However if it can be shown that the dielectric properties of the vacuum can be suitably modified by matter so as to bring about light deflection, this may be a viable alternative interpretation to spacetime curvature. There is no way even in principle to distinguish between true spacetime curvature and deflection of light beams in Euclidean (flat) spacetime, since light propagation serves to define the metric.

SUMMARY AND CONCLUSIONS

A mathematically rigorous but still to be verified concept has been proposed that attempts to account for the inertia of matter as an electromagnetic reaction force. A preliminary version of a parallel gravitation concept along lines proposed by Sakharov also exists, and is consistent with the proposed origin of inertia as demanded by the principle of equivalence. On the basis of this ZPF-inertia concept, we can definitively rule out one speculatively hypothesized propulsion mechanism: matter possessing negative inertial mass, a concept originated by Bondi (1957) is shown to be logically impossible.

We speculate that the charged particle-zero point field interactions giving rise to inertia may take place at one or more resonance frequencies rather than at the Planck frequency used in the analysis of Haisch, Rueda and Puthoff (1994). De Broglie was the first to propose that there exists a specific mass-dependent internal frequency for an elementary particle. If the inertia resonance frequency for the electron should prove to be the annihilation frequency (512 keV in energy units), it may be possible to devise some method for modifying inertia and gravitation.

Is it proper to regard the ZPF as a real electromagnetic field? The measurements by Lamoreaux (1997) of the Casimir force show excellent agreement — at the five percent level (much better than previous experiments) — with theoretical predictions. One interpretation of the Casimir force is that it represents the radiation pressure resulting from the exclusion of certain ZPF modes in the cavity between the (uncharged) conducting plates. There are alternate ways of looking at this (cf. Milonni 1994). We suggest that it is fruitful at this stage to continue exploring the ramifications of a real-ZPF paradigm and that just as a real, measureable Casimir force results upon construction of an uncharged parallel-plate condenser, so too does a real, measureable reaction force result upon acceleration thereby creating the inertial properties of matter.

The Propulsion Directorate of the USAF Phillips Laboratory commissioned a study in 1995 to investigate the possibility of defining and carrying out tests of the ZPF-inertia concept (Forward 1996). This resulted in a ranked list of possible experiments. The highest priority was given to measuring the Casimir Force more precisely, which has now been done (independently) by Lamoreaux (1996). Inside a Casimir cavity the ZPF-inertia theory would seemingly predict — though more calculations need to be done — a slight anisotropy in inertial mass, i.e. inertial mass would become slightly tensorial. Unfortunately attainable Casimir cavity experiments would yield changes of mass as a function of direction of only on the order of 10^{-24}; still, this is conceivably measureable using a Hughes-Drever technique (see Forward 1996).

On the basis of an astrophysical model by Rueda, Haisch and Cole (1995) one would expect to be able to measure the stochastic acceleration of particles in extreme vacua. While not directly testing the inertia concept, such an experiment would demonstrate the reality of ZPF-matter interactions. In fact, in principle such an experiment would demonstrate extraction of energy from the quantum vacuum, which is, perhaps surprisingly, not a thermodynamic impossibility (Cole and Puthoff 1993). Forward also discusses the possibility of directly probing for the reality of the ZPF "by focussing laser light on a vacuum containing a magnetic field." Unfortunately this experiment appears to be impossible given current technology.

Additional theoretical investigations would also serve to test the ZPF-inertia and ZPF-gravitation concepts. NASA-funded studies are underway at Lockheed Martin Advanced Technology Center in Palo Alto and at California State University in Long Beach. Recently Ibison and Haisch (1996) proposed a modification of the SED representation of the quantum vacuum in a way that makes the classical and quantum statistics of the field identical. The more one can show that SED and QED (quantum electrodynamics) yield identical results, the more credible are analyses based on SED techniques. Naturally a QED analysis yielding the inertia and gravitation results needs to be carried out. For overview articles see Haisch, Rueda and Puthoff (1994b, 1997) and Haisch and Rueda (1996, 1997b, 1997c).

Acknowledgements

We acknowledge support of NASA contract NASW-5050 for zero-point field research. BH also acknowledges the hospitality of Prof. J. Trümper and the Max-Planck-Institut für extraterrestrische Physik where some of these ideas originated during several extended stays as a Visiting Fellow. AR acknowledges stimulating discussions on relevant concepts and analyses with Drs. D. C. Cole and J. G. Vargas.

References

Bondi, H. (1957) "Negative Mass Within General Relativity," *Rev. Modern Phys.*, 29(3):423–428.

Cole, D.C. and Puthoff, H.E. (1993) "Extracting Energy and Heat from the Vacuum," *Phys. Rev. E*, 48:1562–1565.

de la Peña, L. and Cetto, A. M. (1996) *The Quantum Dice: An Introduction to Stochastic Electrodynamics*, Kluwer.

Forward, R.L. (1990) "Negative Matter Propulsion," *J. Propulsion*, 6:28–37.

Forward, R.L. (1996) "Mass Modification Experiment Definition Study," USAF Report PL-TR-96-3004.

Haisch, B. and Rueda, A. (1996) "A Quantum Broom Sweeps Clean" *Mercury*, March/April, 25(2):12–15.

Haisch, B. and Rueda, A. (1997a) "Reply to Michel's 'Comment on Zero-Point Fluctuations and the Cosmological Constant'," *Astrophysical J.*, 488, in press.

Haisch, B. and Rueda, A. (1997b) "The Zero-Point Field and the NASA Challenge to Create the Space Drive," in *Proc. NASA Breakthrough Propulsion Physics Workshop*, in press.

Haisch, B. and Rueda, A. (1997c) "The Zero-Point Field and Inertia," in *Causality and Locality in Modern Physics & Astronomy: Open Questions and Possible Solutions*, (S. Jeffers & G. Hunter, eds.), in press.

Haisch, B., Rueda, A. and Puthoff, H.E. (1994a) "Inertia as a zero-point field Lorentz Force," *Phys. Rev. A*, 49:678–694.

Haisch, B., Rueda, A., and Puthoff, H.E. (1994b) "Beyond $E = mc^2$: A First Glimpse of a Post-modern Physics in Which Mass, Inertia and Gravity Arise from Underlying Electromagnetic Processes," *The Sciences*, November/December, 34(6):26–31.

Haisch, B., Rueda, A., and Puthoff, H.E. (1997) "Physics of the Zero-Point Field: Implications for Inertia, Gravitation and Mass," *Speculations in Science & Technology*, 20:99–114.

Ibison, M. and Haisch, B. (1996) "Quantum and Classical Statistics of the Electromagnetic Zero-Point Field," *Phys. Rev. A*, 54: 2737–2744.

Lamoreaux, S.K. (1997) "Demonstration of the Casimir Force in the 0.6 to 6 μm Range," *Phys. Rev. Letters*, 78:5–9.

Michel, F.C. (1996) "Comment on Zero-Point Fluctuations and the Cosmological Constant," *Astrophysical J.*, 466:660–665.

Milonni, P.W. (1994) *The Quantum Vacuum: an Introduction to Quantum Electrodynamics*, Academic Press.

Puthoff, H.E. (1989) "Gravity as a Zero-Point Fluctuation Force", *Phys. Rev. A*, 39:2333–2342.

Rueda, A. and Haisch, B. (1997) in draft form.

Rueda, A., Haisch, B. and Cole, D. C. "Vacuum Zero-Point Field Pressure Instability in Astrophysical Plasmas and the Formation of Cosmic Voids," *Astrophysical J.*, 445:7–16.

Sakharov, A.D (1968) "Vacuum Quantum Fluctuations in Curved Space and the Theory of Gravitation," *Sov. Phys. - Doklady*, 12(11):1040–1041.

 By Ron Schmitt, Sensor Research and Development Corp

LIKE MOST EEs, YOU PROBABLY WISH YOU HAD A BETTER UNDERSTANDING OF ELECTROMAGNETIC FIELDS AND WAVES. MAYBE THE COMPLEX MATH KEEPS YOU FROM DELVING MORE DEEPLY INTO THE SUBJECT. THIS INTUITIVE TREATMENT GOES LIGHT ON MATH. IN SO DOING, IT BRINGS LIFE TO A TOPIC THAT MANY FIND DRY AND CONFUSING.

Understanding electromagnetic fields and antenna radiation takes (almost) no math

UNDERSTANDING ANTENNAS and electromagnetic fields is obviously important in RF engineering, in which capturing and propagating waves are primary objectives. An understanding of RF fields is also important for dealing with the electromagnetic-compatibility (EMC) aspects of every electronic product, including digital systems. EMC design is concerned with preventing circuits from producing inadvertent electromagnetic radiation and stray electromagnetic fields. EMC also involves preventing circuits from misbehaving as a result of ambient radio waves and fields. With digital systems' ever-increasing frequencies and edge rates, EMC is becoming harder to achieve and is no longer a topic just for experts. The seemingly mystical processes by which circuits radiate energy are actually quite simple. To understand them, you don't even need to know Maxwell's equations.

Consider the following fictitious disagreement. An electrical engineer is telling a lawyer friend about a new home-electronics project. The engineer lives near some high-voltage power lines and is working on a device for harnessing the power of the 60-Hz electromagnetic field that permeates his property. The lawyer immediately states that what the engineer plans to do would, in effect, be stealing from the utility company.

This statement angers the engineer, who replies, "That's the trouble with you lawyers. You defend laws without regard to the truth. Even without my device, the stray electromagnetic energy from the power lines is radiated away and lost, so I might as well use it." The lawyer stands his ground and says that the engineer will still be stealing.

Who is right? The lawyer is correct, even though he probably doesn't know the difference between reactive and radiating electromagnetic fields. The field surrounding the power lines is a reactive field, meaning that it stores energy as opposed to radiating energy, so the engineer's device would in fact be "stealing" energy from the power lines. But why? Why do some circuits produce fields that only store energy, whereas others produce fields that radiate it?

THE ENERGY GOES BACK AND FORTH

To further examine this situation, consider the circuit of **Figure 1a**. It is a simple circuit consisting of an ac power source driving an inductor. If the inductor is ideal, no energy is lost from the power sup-

Figure 1

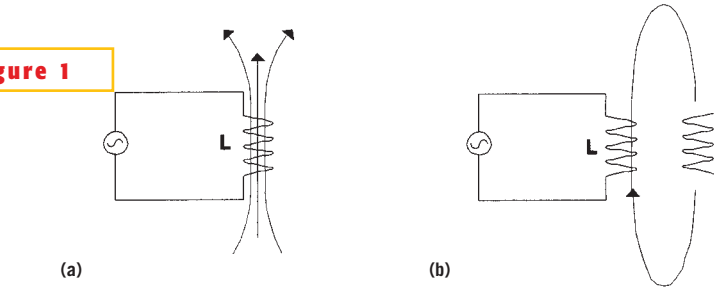

An inductor creates a reactive field that stores energy (a). Adding a second inductor harnesses the reactive field to transfer energy to a load without metallic contact (b).

ply. The inductor does, however, produce an electromagnetic field. Because no energy is lost, this field is purely a storage field. The circuit pumps power into the field, which then returns energy to the circuit. Because of this energy cycling, the current and voltage of the inductor are out of phase by 90°, thus producing a reactive impedance, $Z_L = j\omega L$. The reactive nature of the impedance explains why such storage fields are called reactive fields.

Figure 2

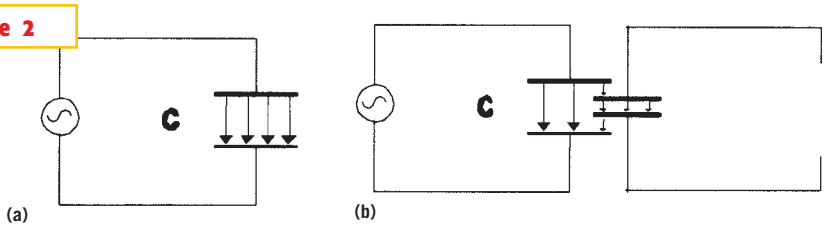

A capacitor creates a reactive field that stores energy (a). Adding a second capacitor harnesses some of the reactive field to transfer energy to a load without metallic contact (b).

Referring to **Figure 1b**, when you place a second circuit consisting of an inductor and a resistor near the first circuit, the field from L_1 couples to L_2 and causes current to flow in the resistor. (The coupled fields create a transformer.) The reactive field transfers energy from the source to the resistor even though the original circuit has not changed. This action suggests that a reactive field can store or transfer energy, depending upon what other electrical or magnetic devices are in the field. So the reactive field "reacts" with devices that are within it. Similarly, a capacitor creates a reactive field that can store energy, transfer energy, or do both (**Figure 2**).

Figure 3

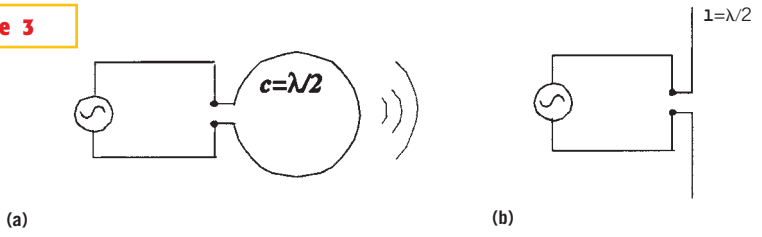

The two most basic antennas are a loop antenna whose circumference is equal to the source wavelength divided by 2 (a) and a dipole antenna whose length is equal to the source wavelength divided by 2 (b).

Now consider the circuits of **Figure 3**. An ac voltage source drives two types of ideal antennas, a half-wavelength loop and a half-wavelength dipole. Unlike the previous circuits, the antennas launch propagating fields that continuously carry energy away from the source. The energy is not stored but propagates from the source regardless of whether there is a receiving antenna. This energy loss appears as resistance to the source in a similar manner to how loss in a resistor corresponds to heat loss.

Now back to the engineer and the lawyer. The engineer thought that the power-transmission line near his house was radiating energy the way an antenna does and that he was just collecting the radiating energy with a receiving antenna. However, when the engineer measured the field on his property, he measured the reactive field surrounding the power lines. When he activates his invention, he is coupling to the reactive field and removing energy that is stored in the field surrounding the power lines—energy that would otherwise be cycled to the loads. The circuit is analogous to the transformer circuit in **Figure 1b**, so the engineer is, in fact, stealing the power.

These examples illuminate the characteristics of reactive and radiating electromagnetic fields, but they still do not answer the question of why or how radiation occurs. To understand radiation, it is best to start with the analysis of the field of a point charge.

For a single charged particle, such as an electron, the electric field forms a simple radial pattern (**Figure 4**). By convention, the field lines point outward for a positive (+) charge and inward for a negative (−) charge. The field remains the same over time; hence, it is called a static field. The field stores the particle's electromagnetic energy. When another charge is present, the field imparts a force on the other object, and energy is transferred. When no other charged particles are present, the field has no effect but to store energy. The fact that energy is transferred from the field only when another charged particle is present is a defining characteristic of the static field. As you will soon learn, this fact does not hold true for a radiating field.

Now consider the same charged par-

TABLE 1–SUMMARY OF FIELD CHARACTERISTICS

	Near (reactive) field	Far (radiated) field
Carrier of force	Virtual photon	Photon
Energy	Stores energy; can transfer energy via inductive or capacitive coupling	Propagates (radiates) energy
Longevity	Extinguishes when source power is turned off.	Propagates until absorbed
Interaction	Act of measuring field or receiving power from field causes changes in voltages/currents in source circuit	Act of measuring field or receiving power from field has no effect on source
Shape of field	Depends completely on source circuit	Spherical waves; at far distances, field takes shape of plane waves
Wave impedance	Depends on source circuit and medium	Depends solely on propagation medium

Figure 4

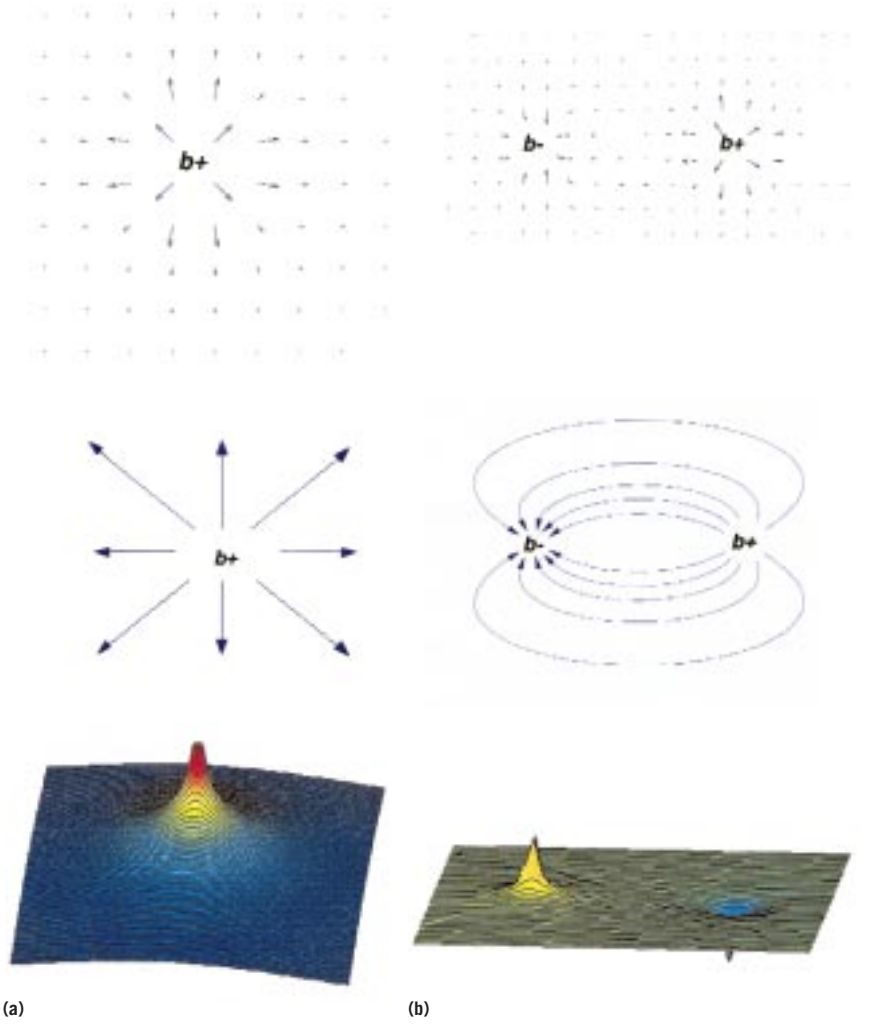

You can show the electric field of a static charge (a) or a dipole (b) as a vector plot, a streamline plot, and a log-magnitude contour plot.

ticle moving at a constant velocity, much lower than the speed of light. The particle carries the field wherever it goes, and, at any instant, the field appears the same as in the static case (**Figure 5a**). In addition, because the charge is now moving, a magnetic field also surrounds the charge in a cylindrical manner, as governed by Lorentz's law. This magnetic field is a consequence of the fact that a moving electric field produces a magnetic field and vice versa. As with a static charge, both the electric and magnetic fields of a constant-velocity charge store energy and transmit electric and magnetic forces only when other charges are present. To make the description easier, the rest of this article ignores the magnetic field.

When a charged particle accelerates, the lines of the electric field start to bend (**Figure 5b**). A review of Einstein's theory of relativity helps to explain why the bending occurs: No particle, energy, or information can travel faster than the speed of light, c. This speed limit holds for fields as well as particles. For that matter, a field is just a group of virtual particles (see **sidebar** "Quantum physics and virtual photons"). For instance, if a charged particle were suddenly created, its field would not instantly appear everywhere. The field would first appear immediately around the particle and then extend outward at the speed of light. For example, light takes about eight minutes to travel from the sun to earth. If the sun were to suddenly extinguish, people on earth would not know until eight minutes later. Similarly, as a particle moves, the surrounding field continually updates to its new position, but this information can propagate only at the speed of light. Points in the space surrounding the particle actually experience the field corresponding to where the particle used to be. This delay is known as *time retardation*. It seems reasonable to assume that even a charge moving at constant velocity should cause the field lines to bend because of time retardation. However, nature (that is, the electromagnetic field) gets around the delay by predicting where the particle will be based on its past velocity. Therefore, field lines of particles moving at constant velocities do not bend. This behavior stems from Einstein's theory of special relativity, which states that velocity is a relative—not an absolute—measurement. Furthermore, the bent field lines of the charge correspond to radiating energy. Therefore, if the field lines are straight in one observer's reference frame, conservation of energy requires that all other observers perceive them as straight.

A CURIOUS KINK

To understand why the bent field lines of a charge correspond to radiated energy, consider a charged particle that starts at rest and is "kicked" into motion by an impulsive force. When the particle accelerates, a kink appears in the field immediately surrounding the particle. This kink propagates away from the charge, updating the rest of the field that has lagged behind (**Figure 5c**). Part of the energy exerted by the driving force is expended to propagate the kink in the field. Therefore, the kink carries with it energy that is electromagnetic radiation. Fourier analysis shows that because the kink is a transient, it consists of a superposition of many frequencies. Therefore, a charge accelerating in this manner si-

Figure 5

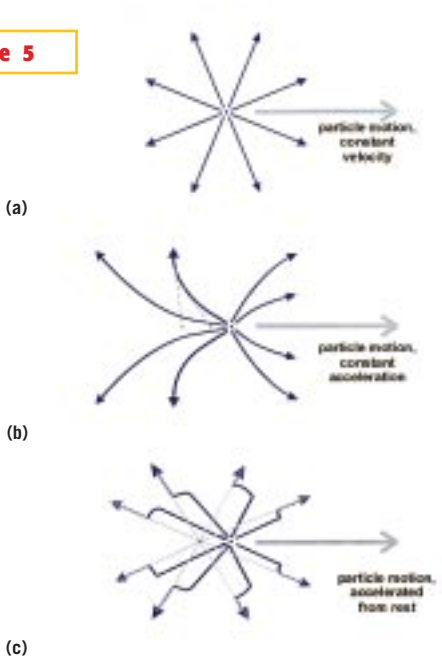

The electric field follows a particle moving to the right with constant velocity (a); the electric field follows a particle moving to the right with constant acceleration (b); the electric field follows a particle coming into motion from a resting condition (c). Particle locations and field lines at earlier times appear in gray.

multaneously radiates energy at many frequencies.

You can also analyze this phenomenon from a kinetic-energy perspective. In freshman physics, you learned that it takes a force to accelerate a particle and that the force transfers energy to the particle, thus increasing its kinetic energy. The same analysis holds true for the particle's field. Energy is required to accelerate the field. This energy propagates outward as a wave, increasing the field's kinetic energy (**Figure 6a**).

All electromagnetic radiation—be it RF, thermal, or optical—is created by changing the energy of electrons or other charged particles. This general statement applies not only to free-electron-energy changes that result from acceleration and deceleration, but also to quantum-energy-state (orbital) changes of electrons bound into atoms.

THE FIELD OF AN OSCILLATING CHARGE

A charge moving in a circle experiences a sinusoidal acceleration. In fact, sinusoidal acceleration occurs for a charge moving in any oscillatory manner. In this case, the "kinks" in the field are continuously varying and sinusoidal, and the electromagnetic radiation occurs only at the frequency of oscillation. An oscillating charge produces rippling waves that propagate outward, in some ways similar to the waves produced when you toss a pebble into a pond (**Figure 6b**).

If you connect a constant voltage across a length of wire, the voltage causes a proportional current governed by Ohm's law (I=V/R). The dc current traveling in a wire consists of migrating electrons. Although the path of each individual electron is random and complex, the average movement of the electrons, considered as a group, causes a constant drift of charge. Therefore, at a macroscopic level, you can ignore the specifics of each electron and model the current as a fictitious charge traveling at a constant velocity. Radiation does not occur because the effective charge travels at a constant velocity and experiences no acceleration. (Collisions at the atomic level cause randomness in the electron movement. This random component of motion produces thermal radiation and electrical noise, which are not germane to this discussion.)

If the voltage across a wire slowly oscillates in time at frequency f_o, the accompanying electric field takes the same form as that of the dc

Figure 6

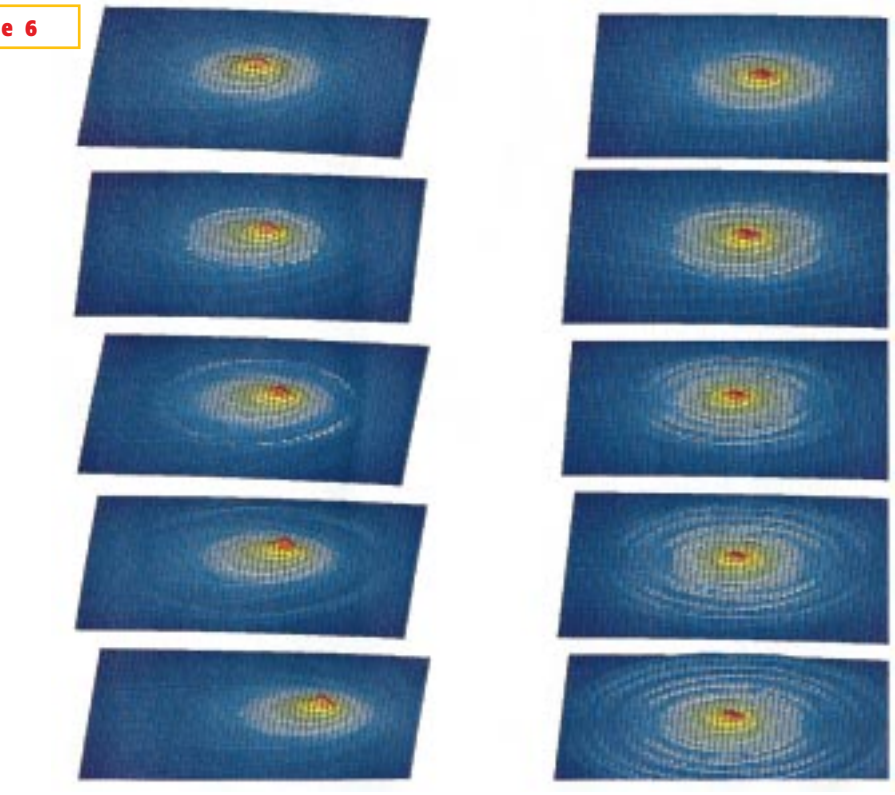

These log-magnitude plots show the electric field of accelerated charges. A charge starts at rest and is accelerated by a short impulsive force (a). A charge starts at rest and is sinusoidally accelerated along the horizontal axis (b).

charge, except that the magnitude varies between positive and negative values (**Figure 8**).

Figure 7

In this depiction of the electric field surrounding a wire carrying a dc current, shades of gray denote the relative voltage levels inside the wire. Magenta arrows denote the current.

RADIATION FROM OSCILLATING CHARGES

Relating frequency to wavelength by $\lambda=c/f$, you can define a slow oscillation as any frequency whose corresponding wavelength is much greater than the length of the wire. This condition is often called *quasistatic*. In this case, the current in the wire varies sinusoidally, and the effective charge experiences a sinusoidal acceleration. Consequently, the oscillating charge radiates electromagnetic energy at frequency f_o. The power (energy per time) radiated is proportional to the magnitude of current and the length of the wire because both parameters increase the amount of moving charge. The radiation power is also proportional to the frequency because the charge experiences a greater acceleration at higher frequencies. (Imagine yourself on a spinning ride at an amusement park. The faster it spins, the greater the acceleration you and your lunch feel.)

Expressed algebraically, Radiated power~current×length×frequency.

This expression clearly shows why RF signals radiate more readily than do lower frequency signals, such as those in the audio range. In other words, a given circuit radiates more at higher frequencies. Because wavelength is inversely proportional to frequency (?=c/f), an equiva-

QUANTUM PHYSICS AND VIRTUAL PHOTONS

Quantum physics was born just 100 years ago. In 1900, Max Planck presented his theory on the quantization of energy levels of thermal radiation. Five years later, Albert Einstein further expanded quantum physics when he postulated that all energy is quantized. At the core of his theory was the notion that light and electromagnetic radiation in general are quantized into particles called photons. This concept points out the bizarre wave-particle duality of light. In some ways, electromagnetic radiation acts as a distributed wave of energy. In other respects, radiation acts as a localized particle.

Now what about the energy in static or reactive electromagnetic fields? Quantum physics states that any energy must consist of individual packets, or *quanta*, but this statement implies that even the static field must consist of particles. In fact, the static field does consist of particles–virtual photons. To explain virtual photons, step further into the strange world of quantum physics.

At the crux of quantum physics is the idea that all electromagnetic energy is transferred in integer quantities of a fundamental unit, Planck's constant. Mathematically, you can state this concept as $E=h\nu$, where E is energy, h is Planck's constant, and ν is the frequency of the photon. Another principle of quantum physics is the Heisenberg uncertainty principle. To Einstein's dismay, it was his quantum theory that led directly to the uncertainty principle, which states that all measurements have inherent uncertainty.

Einstein expressed his dislike of this uncertainty when he said, "God does not play dice," but he could never disprove the existence of uncertainty. Specifically, the uncertainty principle states that you can never know both the exact position and momentum of any particle. Mathematically, the bounds on the errors in determining position (Δx) and momentum (Δp) are related as follows: $\Delta p\Delta x \geq h/(4\pi)$.

The uncertainty principle is not a limit set by the accuracy of measuring equipment. It is a fundamental property of nature. This concept is straightforward: To measure a particle, you must interact with it. Think about looking at small objects through a microscope. To see what you're looking at, you shine a light source (or electron beam) on the object. Although the light beam may not have much consequence when you measure large objects, such as a baseball, it drastically changes the position, momentum, or both of tiny objects, such as electrons. The only way to get around this problem would be to reduce the power of the light source to an infinitesimal level. But Einstein's quantum theory limits how small the energy can be. To observe any object, you must transfer an amount of energy, $E>=h\nu$, which alters the state of the object you are observing. Hence, the very act of measuring or interacting with a particle changes its position and or momentum. Thus, you are left with bizarre consequences that even Einstein didn't foresee.

From another point of view, the uncertainty principle states that particles of small enough energy and short enough life spans can exist, but you can never measure them. This idea is stated as: $\Delta E\Delta t \leq h/(4\pi)$.

This expression allows for "virtual particles" to spontaneously appear and disappear as long as they obey both the uncertainty principle and the law of conservation of energy. You can never directly observe or measure these ephemeral particles, hence the term "virtual particles."

Now back to electromagnetic fields. The stored energy in an electromagnetic field allows the creation of these virtual particles. These particles carry the electromagnetic force in reactive or nonradiating fields. The particles have all of the properties of the real photons that make up radiating fields except that they are fleeting in time and can never exist unless their source is present.

An electron in free space is a good example. It is surrounded by a static electric field that stores energy. When no other charged particles are present, the virtual photons that constitute the field appear and disappear unnoticed without transferring energy. Now, if you place a second charge near the electron, the electron's virtual photons transmit a force to the charge. In a reciprocal manner, the virtual photons from the field of the charged particle transmit a force to the electron. This strange behavior is how electromagnetic force operates at the quantum level.

lent expression is: Radiated power~current×length/wavelength.

Hence, at a given source voltage and frequency, the radiated power is proportional to the length of the wire. In other words, the longer you make an antenna, the more it radiates.

Until now, the discussion has dealt only with slowly oscillating fields. When you increase the frequency of the voltage source so that the wavelength is approximately equal to or less than the length of the wire, the quasistatic picture no longer holds true. The current is no longer equal throughout the length of wire (**Figure 9**). In fact, the current points in different directions at different locations. These opposing currents cause destructive interference just as water waves colliding from opposite directions tend to cancel each other out. The result is that the radiation is no longer directly proportional to the wire or antenna length.

Figure 10 shows a plot of radiated power as a function of antenna length. When the antenna is smaller than a wavelength, the radiated power is roughly proportional to the length. However, for wire lengths near or above a wavelength, the radiated power relates as a slowly increasing and oscillating function. So, why is a length of λ/2 usually chosen for dipole antennas (λ/4 for a monopole)? The "diminishing returns" of the radiated power versus wire length partially explain why dipole antennas' length is usually chosen to be less than a wavelength). The length of λ/2 is chosen because at this wavelength, the antenna is electrically resonant, which makes its electrical impedance purely real, and the radiation pattern is simple (single-lobed) and broad.

NEAR AND FAR FIELD

As mentioned earlier, an ac circuit has a reactive field and a radiating field. The reactive field of an ac source circuit or system is often called the near field because it is concentrated near the source. Similarly, the radiating field is referred to as the far field because its effects extend far from the source. Here's why.

You can represent the power density of an electromagnetic field at a distance, r, from the source by a series in 1/r:

Field power density=$P_D=C_1/r^2+C_2/r^3+C_3/r^4+....$

Now, imagine a sphere with radius, r, centered at the source. You can calculate the total power passing through the surface of the sphere by multiplying the power density by the sphere's surface area:

Total power leaving sphere=$P=(4\alpha\pi r^2)P_D=4\pi(C_1+C_2/r+C_3/r^2+...)$.

When you examine this formula, you can see that the first term is purely a constant. For this term, no matter what size you make the sphere, the same amount of power flows through it. This result is just a mathematical way of showing that power flows away from the source. Therefore, the first term is due solely to the radiated field. Also, as r gets large, all the other terms become negligible, leaving only the radiated term. Conversely, at close distances (small values of r), the nonconstant terms become much larger, and the constant radiating term becomes negligible. These nonconstant terms taken together represent the power in the reactive field.

The boundary between the near and far fields is generally considered to fall at about $\lambda/(2\pi)$. Furthermore, the reactive field typically becomes negligible at distances of 3 to 10λ. It is interesting to compute the boundary at different frequencies. At 60 Hz, the boundary is 833 km. Therefore, almost all cases of 60-Hz interference occur in the near (reactive) field. At 100 MHz, the boundary is 0.5m, making this frequency useful for radio communication. At $5x10^{14}$ Hz (optical waves), the boundary is 0.1 μm, explaining why optical sources such as light bulbs always appear as radiating sources and never as reactive sources.

The near and far fields have other characteristics. The shape of the near field is closely related to the structure of the source, whereas the far field becomes independent of the source, taking the form of spherical waves. At large distances, the far field takes the form of traveling plane waves. The requirement for the plane-wave approximation is $r>2(d_s+d_r)^2/\lambda$, where d_s is the size of the source antenna, d_r is the size of the receiving antenna, and r is the distance between the antennas. The wave impedance (ratio of electric- to magnetic-field magnitude) of the near field is also a function of the source circuit, whereas in the far field, the wave impedance, η, depends only on the medium ($\eta=377\Omega$ in free space). **Figure 11** graphs the wave impedance as a function of distance. **Table 1** summarizes the field characteristics.

Figure 8

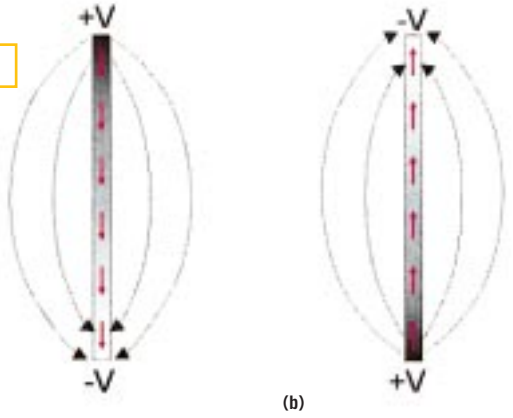

The electric fields surrounding a wire carry a slowly varying ac current. Magenta arrows denote the current, and shades of gray denote the relative voltage levels inside the wire at time t50 (a) and at time t=T/2, a half-cycle later (b).

Figure 9

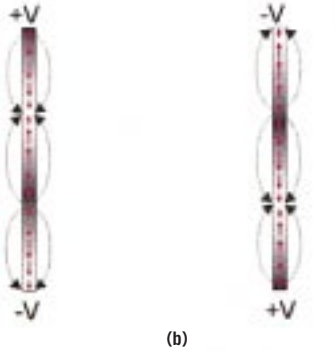

The electric field surrounding a wire carries a rapidly varying ac current. Magenta arrows denote the current, and shades of gray denote the relative voltage levels inside the wire at time t=0 (a) and at time t=T/2, a half-cycle later (b).

Stationary charges and charges moving with constant velocity produce reactive fields; accelerating charges produce radiating fields in addition to the reactive field. DC sources cause a constant drift of charges and hence produce reactive fields. AC sources cause the acceleration of charges and produce both reactive and radiating fields. Radiating fields carry energy away from the source regardless of whether there is a receiving circuit or antenna. In the absence of another circuit, reactive fields store energy capacitively, inductively, or both ways. In the presence of another circuit, reactive fields can transfer energy through inductive or capacitive coupling. In general, radiation increases with frequency and antenna length. Similarly, radiation and transmission-line effects are usually negligible when wires are much shorter than a wavelength. The reactive field's characteristics depend greatly on the source circuit. The radiating field's characteristics, such as wave impedance, are independent of the source.□

Figure 10

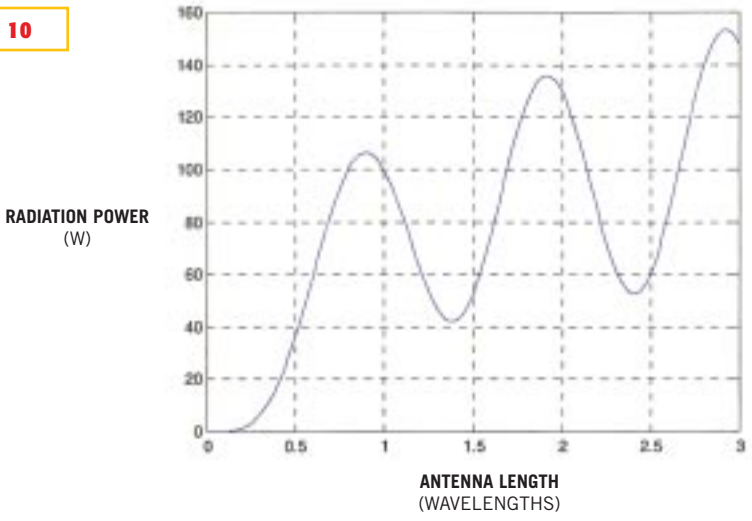

Radiated power emitted from a dipole antenna is a function of the antenna length. The source current is 1A.

Figure 11

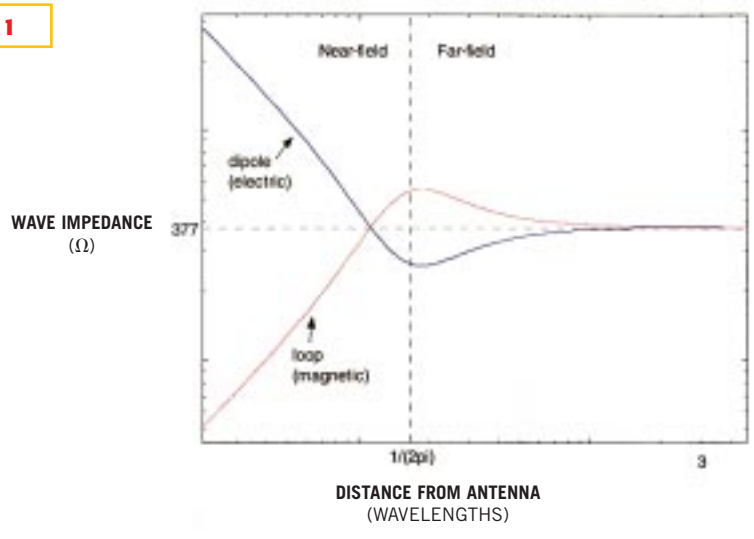

Compare the wave impedance as a function of distance from a loop antenna (as in Figure 3a) with that of a dipole (as in Figure 3b). In the near field, the loop antenna's radiated energy is mostly magnetic. At close range, the dipole antenna's radiated energy is mostly electric. In the far field, the division between electric and magnetic energy is the same for both antenna types.

References

1. Feynman, R, R Leighton, and M Sands, *The Feynman Lectures on Physics*, Addison-Wesley, 1963.
2. Epstein, L, *Thinking Physics—Is Gedanken Physics; Practical Lessons in Critical Thinking, Second Edition*, Insight Press, 1989.
3. Marion, J and M Heald, *Classical Electromagnetic Radiation, Second Edition*, Academic Press, 1980.
4. Eisberg, R and R Resnick, *Quantum Physics of Atoms, Molecules, Solids, Nuclei, and Particles, Second Edition*, John Wiley & Sons, 1985.
5. Baylis, W, *Electrodynamics, A Modern Geometric Approach*. Birkhaeuser, 1999.
6. Jackson, J, *Classical Electrodynamics, Second Edition*. John Wiley & Sons, 1975.
7. Ramo, S, J Whinnery, T VanDuzer, *Fields and Waves in Communication Electronics, Second Edition*, John Wiley & Sons, 1984.
8. Georgi, H, "A unified theory of elementary particles and forces", *Scientific American*, April 1981.
9. Paul, C, *Introduction to Electromagnetic Compatibility*, John Wiley & Sons, 1992.
10. Lo, Y and S Lee, *Antenna Handbook—Theory, Applications, and Design*, Van Nostrand Reinhold Co, 1988.
11. Bansal, Rajeev, "The far-field: How far is far enough?" *Applied Microwave & Wireless*, November 1999.

Author's biography

Ron Schmitt is the director of electrical engineering support for Sensor Research and Development Corp (Orono, ME), where he manages the group responsible for electronics design for chemical-sensor research and products. Recently, he has worked on 315- and 915-MHz surface-acoustic-wave (SAW) oscillators for polymer-coated SAW chemical sensors. He has a BSEE from Cornell University (Ithaca, NY) and an MSEE from the University of Pennsylvania (Philadelphia). He is currently a PhD candidate at the University of Maine (Orono, ME). He enjoys sports and traveling with his wife, Kim. You can reach Ron Schmitt at rschmitt@srdcorp.com.

'Energy-sucking' Radio Antennas,

N. Tesla's Power Receiver

Here's something that has always bugged me: light waves are about 5000 Angstroms in wavelength, while atoms are more like 1 Angstrom across. How can such tiny "antennas" absorb and emit such long waves? Usually it takes a half-wave antenna to do this. I never encountered a good explanation for this during my physics education. It turns out that the explanation is both little-known and fascinating.

Classical EM theory implies that atoms cannot emit or absorb much light. They are thousands of times smaller than light waves, yet atoms obviously interact very strongly with light. How can they do this? Perhaps they imploy Quantum Mechanics in order to get around this problem? There must be some explanation. After all, when a metal dipole antenna is only one foot across, it certainly cannot absorb much 5000ft-wave radiation. Do atoms employ "photon-impact" rather than the EM wave mechanics of dipole antennas? The answer turns out to be NO. The truth is quite strange.

MORE: Jump down to full article
MORE: Clearer diagrams & description
MORE: Further thoughts on this...
MORE: some email discussions

PERPETUAL MOTION?!! Strangely, several people have made the mistaken assumption that this article is about a perpetual motion machine. Why? Who knows! Perhaps I need to point out that in Fig. 2 and Fig. 3, the "10 megavolt supply" is a distant radio transmitter (an EM *energy source*, powered by the utility grid.)

This article is about the ability of an LC resonator to "funnel" incoming electromagnetic waves towards tiny antennas. These antennas behave as if they were much larger than their physical diameter, as if there was an "invisible lens" focusing more of the incoming EM energy upon the antenna. In conventional terms, it's about enhancing the EA (effective aperture) of small antennas.

- 1-dimensional model
- 1-dimensional model w/resonance
- Some Implications
- An Update
- References
- comments from email
- Bill b article: Light without photons (NEW 9/99)

HOW DO ATOMS DO IT?

I stumbled across the answer to my questions in a paper about VLF/ELF loop antennas. Apparently Quantum Mechanics does **not** supply the answer. Instead the question of small antenna behavior is resolved by a little-known section of classical electromagnetism. It involves resonance, but more importantly, it involves the magnetic and electric fields which surround any antenna.

An "electrically small" antenna is one where the physical antenna size is far smaller than the EM wavelength being received. At first glance, electrically small antennas aren't all that strange. If we use them them for radio transmissions, they can work just fine. To force a tiny antenna to emit significant energy, we can simply give it a huge driving signal (high voltage on a tiny dipole, or high current on a tiny loop.) If the EM fields 1-wavelength away from the small antenna are significant, then the EM radiation will be significant. It's almosts as if the EM FIELDS are acting as the antenna. Weak fields act "small," while intense fields behave as a "large" antenna. This explains how a tiny antenna can transmit lots of EM. But what about reception?

It turns out that we can do something similar for reception; for "input" as opposed to "output." By manipulating the EM fields, we can force an electrically-small receiving antenna to behave as if it was very,*VERY* large. The secret is to intentionally impress an artificial AC field upon the receiving antenna. We'll transmit in order to receive, as it were. Normal half-wave antennas already do exactly this. For example, the wire of a half-wave antenna is far too thin to block incoming radio waves and absorb them. However, the current in such an antenna, as well as the voltage between the two wires, these create space-filling EM fields which have a constant phase relative to the incoming waves. Because of the constant phase, these fields interact very strongly with those incoming waves. They create the lobes of an interference pattern, and this pattern has an odd characteristic: some of the incoming energy has apparently vanished.

TRANSMIT IN ORDER TO RECEIVE?!!!

Rather than relying upon the antenna itself to generate fields via the current or voltage of the antenna wires, we could use a power supply. If an antenna is 1/10,000 wavelength across, we can make it behave as if it's 1/3 wavelength across by driving it hard with an RF source. We must drive it at the same frequency as the incoming waves, then adjust the phase of the power supply to a special value. Take a loop antenna as an example. If you want your little loop-antenna to receive far more radio energy than it normally would, then put a big AC current through the antenna so that the phase of this current is locked in synch with the waves you wish to receive, and is lagging by 90 degrees. The voltage across the antenna terminals stays about the same as when an undriven antenna receives those waves. However, since the current is much higher in the driven antenna, the energy received per second is much higher as well. This seems like engineering blasphemy, no? How can adding a larger current increase the RECEIVED power? Yet this actually does work. Power equals volts times amps. To increase the RF power coming in from distant sources, increase the amps intentionally.

This sounds really silly. How can we improve the reception of an electrically small antenna by using it to *transmit*? The secret involves the cancellation of magnetic or electric fields in the near-field region of the antenna. The physics of the nearfield region of antennas has a kind of nonlinearity because conductors are present. In the electromagnetic nearfield region, it's possible to change the "E" of a wave without changing the "M" (change the antenna's voltage without changing the current), and vice versa. Superposition of EM traveling waves does not quite apply here because the ruling equations for energy propagation near conductors depends upon V^2 or I^2 separately. In addition, V is almost independent of I in the near-field region. If a very small loop antenna (a coil) should happen to receive a radio wave as a very small signal, we can increase the received *energy* by artificially increasing the current. Or if we're using a tiny dipole antenna (a capacitor,) we can increase the short dipole's received energy by applying a large AC voltage across the antenna terminals.

NOT CRACKPOTTY AFTER ALL

Note that this does not violate any rules of conventional physics. If we add stronger EM fields, they sum with the incoming EM plane waves and

cause these radio waves to bend towards the tiny antenna. This increases the antenna's EA (effective area or effective aperture.) We can alter the coupling between the antenna and the surrounding space, but the total energy still follows the conservation law. The altered fields only change the "virtual size" (EA) of the antenna.

More importantly, this phenomenon only arises in electrically "small" antennas. If you already have a large 1/2-wave dipole, then artificially adding an AC voltage to it cannot make it seem any bigger. However, if you have a 10KHz loop antenna the size of a pie plate, you can make that antenna seem very, very large indeed. Think like this: how large is the diameter of the antenna's nearfield region at 10KHz? Around 10 kilometers? What if we could extract half of the incoming energy from that entire volume?!! In theory we can: half can be absorbed, and the other half scattered. In theory a tiny loop antenna can work as well as a longwire 1/2-wave antenna which is 10KM long.

Here's a way to look at the process. If I can create a field which CANCELS OUT some of the energy in an extended region surrounding a tiny antenna, this violates the law of Conservation of Energy. Field energy cannot just vanish! That's correct: if we cancel out the energy in the nearfield of an antenna, this is actually an absorption process, and the energy winds up inside the antenna circuitry. If we ACTIVELY DRIVE an antenna with an "anti-wave", we will force the antenna to produce fields which cancel the incoming waves, and simultaneously the antenna absorbs more energy from the EM fields in the surrounding region of space than it ordinarily would.

BUT HOW DO ATOMS DO IT?

OK, if this supposedly explains how tiny atoms can receive long light waves, how can we increase the voltage signal to a SINGLE ATOM?! Actually it's not difficult. No angstrom-sized radio transmitter is needed. The key is to use EM energy stored as oscillating fields; i.e. resonance. If an atom resonates electromagnetically at the same frequency as the incident light waves, then from a Classical standpoint that atom's internal resonator will store EM energy accumulated from the incoming waves. It will then behave as an oscillator, and it will become surrounded by an increasingly strong AC electromagnetic field as time goes by. If this alternating field is locked into the correct phase with the incoming light wave, then the atom's fields can interact with the light waves' and cancel out quite a bit of the light energy present in the nearfield region around the atom. The energy doesn't vanish, instead it ends up INSIDE the atom. By resonantly creating an "anti-wave", the tiny atom has "sucked energy" out of the enormous light waves as they go by.

Impossible? Please track down the C. Bohren paper in the references below. He analyzes the behavior of small metal particles and dielectric particles exposed to long-wave EM radiation, and rigorously shows that the presance of a resonator can cause the tiny particles to "act large."

How can this stuff be true?! After all, electric and magnetic fields cannot affect each other directly. They work by superpostion. For the same reason, a light wave cannot deflect another light wave. Ah, but as I said before, the mathematics of the fields around a coil or a capacitor are not the same as the mathematics of freely-propagating EM waves. If we add the field of a bar magnet to the field of a radio wave, and if the bar magnet is in the right place (at a spot where the b-field of the radio wave is reversing polarity,) then the radio wave becomes distorted in such a way that it bends towards the bar magnet. As the EM wave progresses, we must flip the magnet over and over in order to keep the field pattern from bending away again during the following half-cycle. Now replace the bar magnet with an AC coil, and vary its current so the fields stay locked to the traveling radio wave. In that case the wave energy will ALWAYS bend towards the coil and be absorbed. The coil will also emit its own EM ripple. This emission is well known: atoms scatter half the light they absorb, and dipole antennas behave as scatterers for incoming EM waves. When all is said and done, our oscillating coil has absorbed half of the incoming EM energy and re-emitted (or "scattered") the rest.

A "HOLE" IN PHYSICS

When viewed as a halfwave receiving antenna, a resonant atom acts as if it has expanded in size to fill its entire nearfield region. In terms of Quantum Mechanics, it does so by locally creating a large virtual-photon AC field which normally would not exist. In a sense, this new field BECOMES THE ANTENNA. This new field extends to 2/(Pi*wavelength) distance around the atom, and this distance can be thousands of times larger than the atom's radius. A 1-angstrom atom with a large AC field can behave as a 1/3-wave antenna at optical frequencies. Though tiny, the atom can absorb "longwave" radiation such as light. Our 1-angstrom atom becomes a 2000 angstrom atom, and efficiently absorbs 6000A light waves. Very strange, no? I've certainly never encountered such a thing during my physics training. Apparently the missing details of the absorption of light wave by atoms is a "hole" in physics education, and it has only been treated in a couple ofcontemporary physics papers in the 1980s.

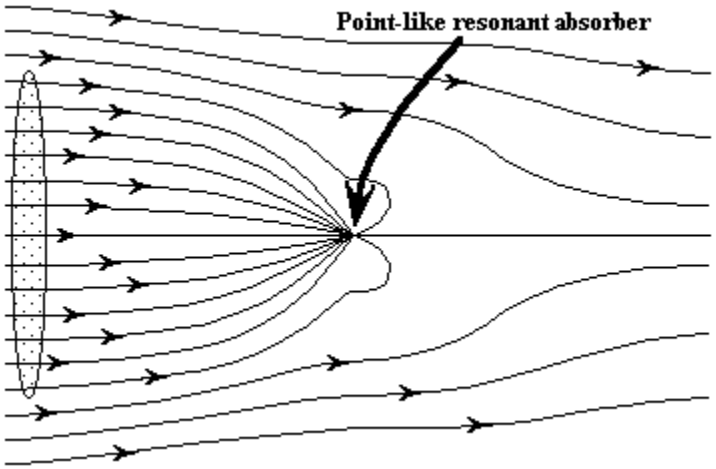

Fig 1. Energy flux lines for the nearfield region of a resonant absorber. The tiny absorber acts like a large disk.
[from ref#4]

This "energy suction" effect is not limited to atoms. We can easily build a device to demonstrate the phenomenon. Below is a simple physics analogy to show how tiny atoms can "suck energy" from long light waves. Suppose we transmit a VLF radio signal at 1KHZ frequency. Let's arbitrarily set the signal strength so it's about the same strength as the Earth's weak vertical e-field: 100 Volt/meter. If the transmitter's e-field is contained entirely below the ionosphere, and if the bottom of the ionosphere is about 100Km high, then the Earth's entire vertical field is about 10 megavolts top to bottom. Our transmitter must produce such a field. These values aren't totally ridiculous. Large, well-designed Tesla coils commonly produce 10 megavolts. If such a coil was erected outdoors and connected to an insulated metal tower, it would fill the Earth's entire atmosphere with 10KHz radiation. Such an AC voltage field would produce a feeble 100V/M field everywhere on the Earth's surface. This field would be detectable by instruments, but otherwise it would be too small for humans to notice, and we certainly would not expect to be able to get significant power out of it.

CAPACITIVE-PLATE ANTENNA

OK, we've got a feeble AC e-field in the outdoor environment. How will a simple antenna-plate perform as an energy receiver? See fig.2 below. If it's a large horizontal metal plate about one meter off the ground, it will give out a 100 volt signal at 1KHz, but this one hundred volt "power source" has an extremely large capacitive series impedance. Let's say that the plate/ground capacitance is 10pF. To draw energy with the maximum possible voltage, the load resistor should be approximately equal to the series impedance. This impedance is dominated by the 10pF capacitor value, so this gives 1/(2*PI*F*C) = 16 megohm load resistor, and it drags the antenna's voltage down from 100V to 70.7V. The received energy in the resistor is 300 microwatts, and the current in the resistor is in the microamp range. Just as we might expect, everything here is similar to a conventional radio antenna. The weak e-field from the incoming EM waves behaves only as a "signal", and it is not a source of significant power. It can't drive a motor or light an LED.

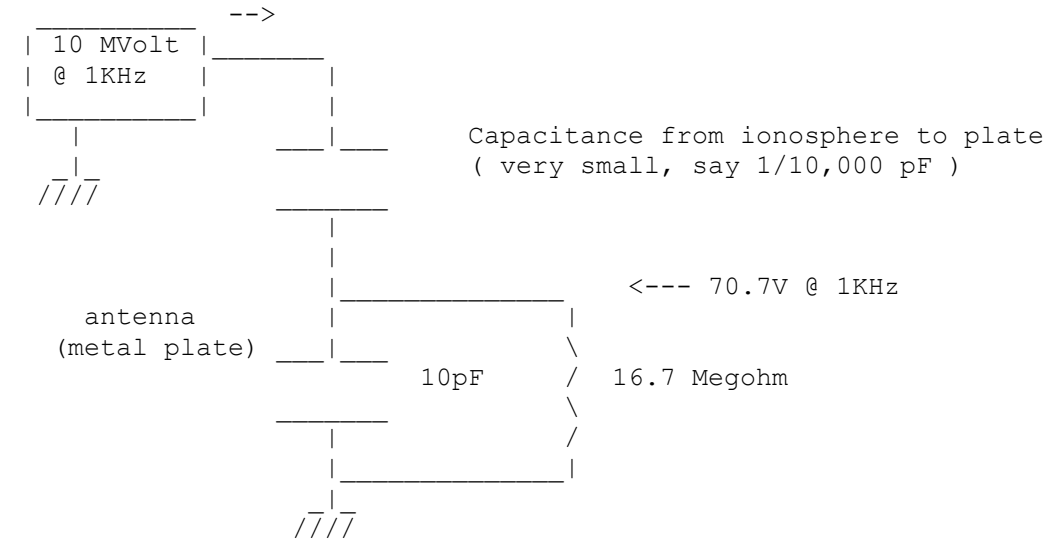

FIGURE 2

The fundamental problem with the above system is that the empty space around our metal plate is acting like a voltage divider. If the sky has 10 Megavolts compared to ground, and if the metal plate is a few feet above the surface of the ground, then the plate only has a relatively tiny voltage. Current is tiny, so wattage is also tiny. Maybe we could power an LED flasher with this antenna... but only if we set it to flash every few minutes. Maybe if we erected an enormous antenna tower we could do better by lifting the plate higher from the ground (but with such a huge antenna we could easily steal more than 300 microwatts from conventional AM radio stations, BBC shortwave, Voice of America, etc.)

RESONANT ANTENNA

Now lets add a tuned circuit to the above schematic and see what happens:

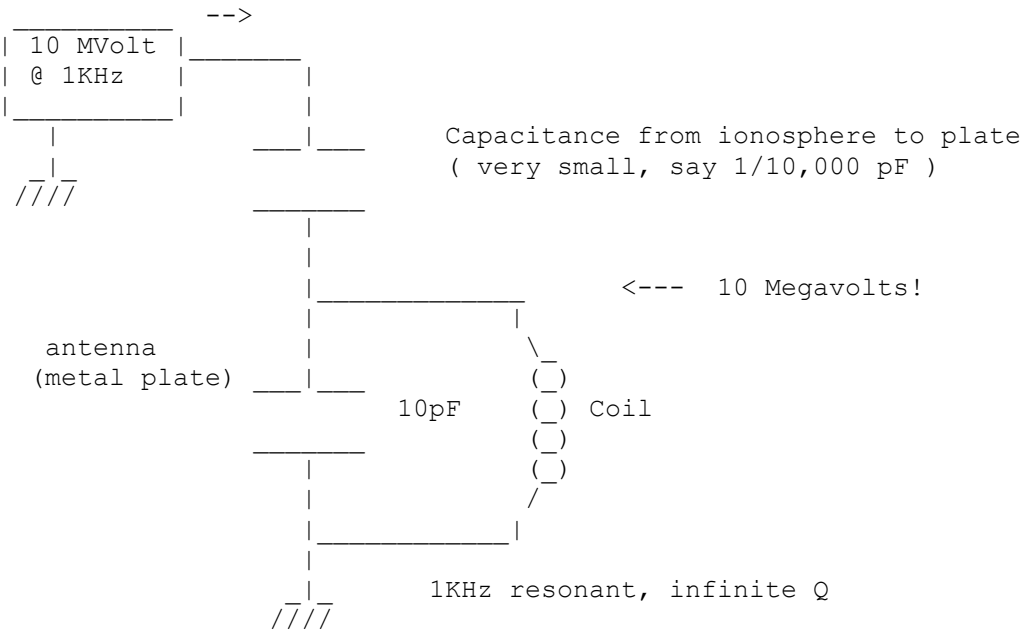

FIGURE 3

At resonance, the 10pF capacitance of our metal plate effectively vanishes. At resonance, an ideal parallel-resonant circuit behaves like an infinite resistor. If the LC circuit is exactly at resonance, how high will the voltage on the metal plate rise? It rises to ten megavolts!!!! The resonant circuit will continuously accumulate EM energy until the voltage at the antenna-plate rises to the same value of voltage as the transmitter. Weird!

Keep in mind that this device is a relatively small affair sitting in your backyard. It's not a 1KHz quarter-wave dipole tower 25 miles tall. There's no huge antenna, so we would not expect to find any huge level of electric power appearing in the circuit. If we weren't aware of the mechanism behind this, all we'd see is a passive LC resonator which seems to burst into oscillation of its own accord, and the voltage grows higher and higher until the darned thing suffers a corona outbreak or something. The EM fields near the metal plate grow FAR STRONGER than the weak fields in the environment. It resembles an impossible "perpetual motion" machine, which might make a physicist recoil in horror. However, the real explanation is completely conventional, and the source of the energy is that feeble electrostatic field produced by the distant 10-megavolt transmitter tower. Note: the above phenomenon can only occur for an *ideal* LC circuit, where the resistance of the coil is zero and where the Q of the circuit is infinite. If our antenna plate is connected to the resonant "secondary" of a superconductive Tesla coil, we might in fact see the output voltage grow to the megavolt range. However, in most real-world tuned circuits it wouldn't reach such heights.

But remember, voltage is not energy. Maybe the incoming power is still small (maybe like 300 microwatts we saw earlier), or perhaps it takes months to build up so much voltage across a resonator, even if it's superconductive. Just what is the actual received energy flow? Let's put a resistor across the tuned circuit so we create a flow of real energy and drag the voltage down to, say, .707 of the unloaded voltage. The resistance should equal the impedance of the series capacitor: 10 ^ -16 Farads, giving 1600 giga-ohms. (A huge resistor. Clearly it makes sense to try instead to extract energy using a low-value resistor in series with the inductor coil, rather than using a huge parallel resistor across the tuned circuit. A 1.6 tera-ohm power-resistor might be hard to find in the surplus parts catalogs! That is, if you don't have the parts catalog featured in THIS ISLAND EARTH, that old SF movie where the two engineers build an "Interociter." Obviously the Interociter is Alien Tesla coil technology, ah ha!)

Ahem. :)

HUGE RECEIVED POWER

With our 1.6 giga-megohm resistor in place, the RF power intercepted by the small metal plate is now 30 watts. That's ONE HUNDRED THOUSAND TIMES HIGHER than the power from the simple non-resonant antenna plate. Our tiny antenna has essentially reached out and made a kind of "direct contact" with the distant transmitter. By changing its own impedance, it has converted the "sky capacitor" into an efficient coupling device. It has sent out a cancelling wave and pulled in energy from an enormous volume encompassing the surrounding fields. It has become a "matching transformer" which steps down the 10MV sky voltage and steps up the "sky current." If we either increase the receiver plate's size, or lift it high up on an antenna tower, then the received power rises proportionally.

So, put a high-Q resonator on a small antenna, and you'll drag in far more wave energy. Simple?

[The engineers on SCI.ELECTRONICS.DESIGN forum have pointed out that the 10MV voltage limit on the above resonator is wrong. In reality, it can grow much higher than the voltage on the transmitter. The system is series resonant, so the output voltage is limited only by the Q of the system (by the resistance of the wires in the resonator coil) and is not limited by the 10MV drive voltage.]

In our earlier (resistor-only) antenna circuit, a small amount of "real power" did flow through the capacitance of the sky while on its way to the metal plate and to the load resistor. If the voltage across that resistor could be made to oscillate hugely, and if it had the right phase compared to the tiny displacement current coming from the transmitter, then we'd obtain a major increase in energy flow. The tiny sky-current would remain about the same, but with the much larger voltage on the antenna, the value for V*I is increased and wattage is increased. Remember the unwanted capacitive-voltage-divider effect in the nonresonant resistive receiver? With a resonant system, that effect would no longer apply, and the output voltage would no longer be so low. Things would behave differently. The series displacement-current going through the "sky capacitor" might still be microamps, but if the tuned circuit can play around with the high voltage at our end of the transmission system, then it can drastically change the energy throughput. As with any power-transmission system, we can put more power through it by raising the line voltage while keeping the current the same.

CONCLUSION

To sum up: we see that by putting a big AC voltage on the tuned circuit and by adjusting its phase in relation to the tiny incoming current, we can "suck" the E x M wattage from the enormously broad wavefronts of the incoming waves. It also works this way inside a simple circuit using conventional voltage dividers: add a resonant circuit, and the series impedance of the power source behaves smaller. See this example circuit. It should still work this way even when a part of the antenna circuit contains a series capacitor whose dielectric is made up of many feet (or even tens of km) of empty space. It's very much like building a high-voltage power line: to transmit high wattage on a thin wire, we use high voltage at low current, and then we put a step-down transformer at the far end of the power line. However, in the "power line" shown in the above diagram, we then put a tiny capacitor in series with the high-voltage line. Then we increase the thickness of the capacitor's air-dielectric until dielectric is miles thick and the current in the system is mostly composed of displacement current in the empty space between the pair of widely-separated capacitor plates. To transmit significant power, step the voltage up to astronomical levels at one end, then step it back down at the other end. Rather than using only a step-down transformer in the receiver, instead we use a hi-Q resonator, and we allow the resonant voltage to rise to a huge value. As a result, EM energy will be "sucked" into the receiver.

THE TESLA CONNECTION

Note that all of this stuff comes directly from Nikola Tesla's "Wireless power" transmission scheme. If we can flood the atmosphere with VLF standing waves, and if the ionosphere keeps most of this EM energy from escaping, then a small, high-Q resonator can grab significant wattage right out of the air. A small resonator can produce an extensive and intense AC field of its own, and can act as an "EM funnel" which grabs significant wattage right out of the ambient radiation field. It can do so even when the ambient field is quite feeble, and even when the transmitter is thousands of KM away. This is not "radio" where wavelength is the same size as the components. This is "circuitry", where wavelength is huge, and circuits are small, and it more resembles "AC wiring" rather than "EM radiation." This is probably the concept that put that "Mona Lisa grin" on photographs of old Nikola. And that twinkle in his eye...

If we use a metal loop-antenna instead of a metal capacitor plate, then the current in the loop can perform a similar task as the voltage on the plate: the oscillating current should grow huge and cause an intense, volume-filling AC magnetic field to appear. If the phase is correct, this b-field should "suck energy" from the transmitter (or from the local b-fields of the incoming electromagnetic waves.) Keep in mind that all this applies to SMALL ANTENNAS. If your wavelength is 150MHz and your antenna is 1 meter across, then "energy sucking antennas" cannot be used to improve reception. The idea applies to longwave bands, longwire antennas, and VLF power transmission using the Earth-ionosphere resonant cavity.

These sorts of antennas obey circuit-physics, not the physics of EM waves in space. The regeion of space adjacent to ANY antenna obeys a combination of circuit-physics and wave-physics, (the near-field and far-field EM equations,) and I've never quite visualized exactly how this works. Now it looks like there are several interesting things hidden between the near-field and the far-field mathematics. Crystal radios which have "suckers" instead of "tuners." Invisible antennas a thousand meters across... stuffed inside an AM radio! Cool.

The "energy grabbing" effect is very limited. It's a nearfield effect. It could only operate within about a 1/6- or 1/4-wavelength radius around a coil or capacitor antenna, or in the region between the peaks of a propagating EM wave. In other words, when we add a tuned circuit, we can increase the "effective size" of a tiny antenna until it resembles a half-wave dipole antenna. It usually would be easier to simply build a half-wave dipole in the first place. Normally we would do so. At VHF or UHF frequencies, a hi-Q "energy sucking" resonator antenna would not gather any more energy than a normal antenna, since the hi-Q antenna would be electrically large. But whenever the conventional dipole antenna might end up being too large to contemplate (like at 1KHz frequency or even 550KHz), then a high-voltage capacitor plate antenna, or perhaps a tuned-coil antenna, both with a very high Q-factor (with inductors wound from thick copper pipe?) ...would behave like a far larger antenna than anyone could possibly imagine.

NOT IN YOUR PHYSICS BOOKS?

In hindsight the above stuff seems somewhat obvious, but why have I never heard of it before? RESONATING ANTENNAS BECOME ABNORMALLY EFFICIENT RECEIVERS?! The reverse must also be true: high-field resonant antennas will leak radio waves, even if their size is very small compared to the wavelength. If resistive losses don't halt them, their AC fields will grow in intensity until the signal finally does get out. Do radio designers realize that all small resonant antennas with huge EM fields act like long-wire antennas having fields of the usual strength? Do Ham radio operators currently use 80-meter transmission antennas having high-Q resonators and enormous magnetic or electrostatic fields? Do AM radio companies know that their antenna towers are really not necessary? Do science teachers realize that even the simplest "crystal radio" can only operate a pair of headphones if a tuned circuit present? Do physicists really grasp, at a gut level, just how those tiny atoms can absorb and radiate

the huge wavelengths associated with light waves?

Portable AM radios use resonant-loop antennas, and they've always been this way. We've been carrying around Nikola Tesla's power-receiver in our back pockets since the 1960s. Also, in bygone decades those old "regenerative" receivers were harnessing this "energy sucking" process. Do the designers of 90 years ago know something that modern scientists do not?

UPDATE 9/6/99

In thinking more on this (and while talking to people on the email lists) a couple of new thoughts have occurred to me. One: try to give your receiver's tank circuit as high a Q as possible, and then connect it to a load through a zener diode or other nonlinear device. This will allow the voltage/current of the tuned circuit to rise to a huge level and produce an intense AC field, but without the load interfering. Only after the AC field has reached the appropriate level will we extract any energy and deliver it to the load. [NO, NOT A ZENER! A zener would just act as a series RESISTANCE, dissipate heat, and throw away energy uselessly. Instead, just use a detector diode, and charge up a DC capacitor. 11/1/99]

Two: try using an FM detector circuit to force the receiver to "lock on" to the transmit frequency. If we do this, we could still use immensely high q-factors, but without making our frequency-match adjustments be so sensitive.

Three: once the receiver is oscillating and energy is being transferred, try suddenly changing the voltage of the transmitter. Since the entire system acts like a well-coupled transformer, I suspect that fast changes in transmitter voltage will appear as fast changes at the receiver. Maybe it only takes a single AC cycle for the change to appear. Weird thought: if the transmitter is modulated *faster* than the transmission frequency, would the fast signal appear at the receiver?!!! That would be impossible, since it would violate the rules of AM transmission theory. However, the coupled-resonator system more resembles a pair of atoms transferring photons, rather than resembling an RF transmit/receive system. If the device behaves like a quantum-mechanical coherent system, then perhaps we can modulate the transmitter at a faster rate than the carrier frequency! If it worked, that would REALLY be weird, no? Imagine transmitting at the 76Hz earth resonant overtone frequency, then amplitude-modulating the 76Hz carrier at 1 KHz, and having the signal appear at the receiver's resonator! We wouldn't really be transmitting radio energy. The signal would more resemble QM "wavefunction collapses" which propagate throughout the Earth's ionospheric resonant cavity.

Four: 11/1/99 This circuit mimics atomic absorption, and it also should mimic stimulated emission. Once the circuit is oscillating, it's absorbing the incoming waves because of its phase. The phase relationship causes it to couple to the transmitter. If the transmitter was suddenly turned off, then maybe the circuit would not be able to radiate, since without the waves from the transmitter it could not perform the "poynting-flux emission" process. The phenomenon is definitely not linear! So... what happens when the waves from a transmitter should suddenly encounter the fields of a short antenna? If the phase is right, the short antenna should change from an oscillator to an emitter, and begin emitting energy! This is the reverse of the "energy sucking effect," because while "energy suction" can only occur when the short antenna is surrounded by a powerful field, "energy emission" can only occur when the powerful fields around a short antenna are given a traveling-wave field to provide the "stimulation" for stimulated emission to occur. Absorption/emission requires both the trapped fields at the antenna, as well as the traveling fields from a distant transmitter. If my reasoning isn't faulty, this means that it should be possible to build a sort of radio-freq laser, where a distant transmitter causes a small loop-antenna resonator to add its energy to the transmitted wave.

Also, my crackpot side is starting to yammer at me. It's saying that this particular "hole in physics" might seriously damage contemporary Quantum Electrodynamics, and might even show that Einstein's original photoelectric experiment might be interpreted incorrectly. Hey, if Einstein was wrong, does that mean that the Nobel is withdrawn retroactively and awarded to whoever can show rigorously that "energy sucking antennas" are a better explanation for QM phenomena of all kinds? Or does it just mean that my "crackpot half" is just trying to make certain that no conventional scientist will dare to experiment with this stuff! :)

BEWARE: ODDBALL IMPLICATIONS

If EM resonance is extremely important, and if mainstream science doesn't recognize the effects, then god only knows how many unusual phenomena are awaiting exploration by amateurs. The professional explorers with their well-funded troops haven't yet arrived on this particular "new continent." There are still mysteries to be experienced, and it could be many years before the whole thing is paved over with well-traveled highways built through NSF funding.

Ears as antisound-emitters

Whenever any type of "small" receiver seems to be generating an AC field around itself spontaneously, perhaps we should suspect that the receiver is employing the above concepts; that it is actively generating an "anti-signal," and as a result is receiving more wave energy than it's physical size would suggest. THIS MIGHT APPLY TO ACOUSTIC SYSTEMS! If we illuminate a tiny resonant chamber with long-wave sound of the right frequency, standing waves will build up within the chamber, and it will become an emitter. If there is an acoustic analogy for the above antenna physics, the resonant chamber should "bend" the incoming sound towards itself. When the emitted sound superposes with the 3D incoming waves, the wavefronts of incoming sound will be distorted so they they impact on the resonator and thereby increase the area of its "virtual intake orifice". In EM physics this is well known, it's just the Effective Aperture concept.

Might biological evolution have "discovered" this energy-sucking resonator effect in regards to ears? A collection of *programmable resonators* might work far better than a broadband receiver, even an amplified one.

It turns out that human ears are known to generate their own signals. Much about this is still a mystery, and proposed theories do not match experimental findings. I note that at frequencies below a few KHz, the wavelength of sound is physically larger than the external ear. Perhaps our human hearing system increases its gain by emitting signals which are phase-locked with the incoming sound? This could be easily missed, since the emitted sound would greatly resemble the incoming sound, and could be mistaken as a reflection.

I've heard that human ears have an unexplained property: they can detect signals which are far below any logical noise level. Their detection capability supposedly even exceeds the QUANTUM MECHANICAL noise level. Perhaps ears increase their net received acoustic energy via an "anti-sound" feedback process resembling resonance? Might there be other situations where small acoustic resonators can receive abnormally large amounts of energy? Shades of Ernst Worrel Keely! Hey, maybe I finally have a clear explanation for that "Acoustic Black Hole" phenomenon with the soda straws. And... and... once again the infamous Dr. Thomas Gold is vindicated, and his detractors are shown to be a bit, shall we say, "deaf" to his words.

Side note: How might the inner ear generate sound? Maybe it does not. Maybe it rapidly modulates the stiffness of its parts and therefore uses nonlinear physics to take energy from other frequency bands and use it to power an oscillation at the frequency it wishes to emit. Sort of like using one crystal radio as a "battery" to power the audio amplifier of another crystal radio tuned to a different station. Or like striking a bell with slow blows, while the bell emits a fast oscillation.

Oooo, Very Weird Idea! If ears generate sound only when sound is being received, then perhaps we can detect this. Perhaps it's even under conscious control. When we listen intently to a particular frequency, obviously we're tuning the brain's internal signal processing algorithms. But what if our conscious action actually changes our inner ear, so that it "sucks energy" at that frequency? If so, then just flood the room with white noise, stick a tiny microphone near your ear, display a realtime spectrogram of the detected noise from the microphone, then try to concentrate on listening to the "high" tones in the noise, and then the "low" tones. Will the spectrogram of the microphone's signal change? When you try to pick up a constant tone in the noise, will a small absorption band appear in the spectrum of energy near your ear? Easier test: subtract (null out) the noise-generator's signal from the microphone's signal and observe this difference signal. (an electronic delay line would probably be needed.) Now concentrate on listening to the highs or the lows. Will the observed difference-signal change? If so, build a circuit which detects this change and turns on a light bulb. Stick a microphone in your ear, decode the alterations in the sound spectrum, and run your appliances by "thinking" about a tone-sequence!!

If THAT works, then try this next one.

Set up the above system. Listen to the white noise and imagine that you hear the word "yes". Do it many times. Now play back the recording of the difference signal (or even the raw signal from the microphone.) Can you hear the word "yes" being transmitted by your *EARS*? If so, then you now know how to speak through your ears. This only works when you are listening to white-noise. Imagine that you hear music in the noise, then see if it appears in the recording from the tiny microphone. Perhaps composers can "think music" right onto the tape recorder. "Think aloud" to yourself, and see if your "verbal thoughts" can be heard issuing from your ears as they... leak out of your head? Perhaps one form of telepathy is... acoustic? Can a blind person navigate via a sort of whitenoise-correlation "acoustic radar?"

OK, now hire a schitzophrenic who hears voices, and see if you can record the voices via whitenoise environment and ear-canal microphones. Ask them questions, see if they answer. Now go interview the "Voices" on the Tonight Show, with or without the cooperation of the victim.

Who'll be the first to explore this silly idea and find out if I'm full of balony?

BALL LIGHTNING

Ball lightning is not yet explained. One of the orthodox explanations is the Storm Maser theory: if thunderstorms emit microwave energy, and if something can somehow focus this energy, then a nitrogen electrical-plasma could feed off the intense microwave flux. The "Energy sucking" theory gives us a second option. Suppose thunderstorms emit weak ELF/VLF e-fields instead of supposedly emitting microwaves? If a plasma happened to be resonant with the coherent AC e-field being created by the storm, and if the Q of the resonant plasma system was high, then that plasma would develop an enormous high-frequency e-field around itself. It would suck energy from the fields of the storm and remain "alight." Do nitrogen/oxygen (or carbon?) plasmas have any high-Q resonances in the ELF/VLF spectrum? What about carbon-fiber networks composed of condensing soot? [CORUM & CORUM] Or rather than pure resonances, do they have self-organization which can communicate with the self-organized lightning plasmas within the thunderstorm and "agree" between themselves to create a "Tesla Power System"? The storm becomes the transmitter and the ball-lightning plasma-glob acts as the hi-Q receiver.

Do storms create any coherent VLF e-fields? VLF radios certainly don't detect such things, so we normally would assume that such signals don't exist. But hold on! There could be a nearfield effect, where there is no RF radiation, and where e-fields and b-fields aren't directly connected together via the impedance of free space. A loop-antenna in a radio receiver is used with the assumption that incoming EM waves have an E and an M component, and we should just as easily receive the M component as receiving the E. (And so a loop antenna would work just as well as a dipole antenna.) Maybe this is not true of environmental VLF e-fields. Suppose that a storm (or even the entire Earth) has a very strong vertical AC

electrostatic field. The loop antennas on VLF radios would not detect it. Horizontal dipoles would not detect it. However, a resonant circuit connected to a suspended wire (and to ground) certainly would. With a high-Q resonant circuit, the antenna might even receive significant power. Call it the "artificial ball-lightning" analogy.

RF TRANSFORMERS: TIGHT COUPLING BETWEEN TWO DISTANT COILS

Iron-core transformers are examples of tight magnetic coupling, and significant power can be transferred between the coils of a 60Hz transformer. Capacitors are similar: they are examples of tight electrostatic coupling. Resonant circuits give us two new options for tightly-coupled power systems: pairs of high-amperage resonant loop-antennas, and pairs of high-voltage resonant dipole antennas. The spacing of each of these must be below 1/4 wavelength for the phenomenon to appear, and the e- or b-field strength must be very high. Now that I'm speaking of this, I know I've seen such things in common use. Air-core transformers in high-power VHF radio transmitters employ this effect. If both sides of an air-core transformer are tuned to the same frequency, then the b-field surrounding the transformer will build up to a very high level, and the throughput of energy will be very high, even though there's no closed iron-ring magnetic circuit, and coupling between the coils is *apparently* very loose.

MECHANICAL "ENERGY SUCTION"

Rick M. points out that mechanical forces might become significant in resonant EM systems. Normal transformers and capacitors certainly do display significant mechanical forces. If a transformer can be made into an induction motor, and if a capacitor can be made into an electrostatic motor, what kind of motor can be built from a loose/tight coupled high-frequency resonant EM device? I have no idea. Perhaps something strange and interesting is lurking in these particular "undergrowths." Imagine a radio-frequency induction motor built without iron, whose (resonant) stator is at a great distance from the (resonant) rotor, yet the torque between them is still immense. Imagine a high-Q capacitor-based high voltage motor with huge torque, and with all of its parts embedded within plastic (to eliminate the corona problems associated with DC electrostatic motors.)

ELECTROMAGNETIC PRANKSTERS

An evil though: if we built a resonant antenna within a 1/4-wave distance of an AM radio tower, we might be able to "suck energy" at such a high rate that we could run motors and light lightbulbs! The resonant antenna might be very small, but it would have an intense e-field (or magnetic field if it was a loop antenna), and would reach out and touch the AM tower electrically. I've heard of people using "inductive coupling" to steal 60Hz AC electrical energy. The addition of a resonant circuit would vastly increase the ability of a pickup coil to suck in energy from any distant conductors as long as the frequency was fairly low. In physicist-speak, "If the world is already full of Sodium light, build some artificial Sodium atoms as absorbers."

Now I guess I need to go make a high-Q tuned circuit and set it to the same frequency as an AM radio station. Maybe I can light up an LED! I know that longwire antennas can do this. I also know that an AM radio, if tuned to a weak station, can be affected when an adjacent unpowered AM radio is tuned to the same station. Untuned inductive pickup coils can receive "inductively coupled" energy if the b-field in the area is strong. Instead, with a small coil which resonates at 60Hz, maybe I can magnetically grab some AC power out of the wiring in my walls? It would be cool to have a wireless lightbulb connected to nothing but a high-value 60Hz inductor and capacitor. Maybe it would work a bit better if I wrap a couple of turns of "transmit loop" around my house and drive it with 10KHZ. With thick wire and hi-Q resonance, it wouldn't take much to put many amperes into

such a coil. Rats, now I wish I still lived next to a big AM transmitting tower like I did when I was a kid.

L.O.S., THE CREATIVITY DRUG

In conclusion, I must answer the obvious question: is Bill Beaty on drugs or WHAT?!!! No, instead I'm on deadline. I'm staying up all night for many nights in a row while beating my head on this interwoven interrupt-driven cludgy embedded set of C-code background tasks. Lack of sleep is itself a drug. Not LSD, use LOS! College students at exam time are well aware of this phenomenon. Stay up all night for a few too many nights, and you find that philosophy gains entirely new meaning, your wife starts looking at you funny, you are in danger of following Heinlein/Hubbard/Wilson and attempting to start your own religion... and the shades of Tesla and Feynman start subspace-idly coupling some 'Special Ideas' into your throbbing demented neuronal subprocessor networks.

So what do *YOU* do for fun?

;)

Bill b article: Light without photons (NEW 9/99)

REFERENCES:

1. W. Beaty web-article, "Acoustic Black Hole" phenomenon.

2. J. F. Sutton and C. C. Spaniol, "The Black Hole Antenna", PROCEEDINGS OF THE INTERNATIONAL TESLA SYMPOSIUM, 1992, International Tesla Society

3. J. F. Sutton and C. C. Spaniol, "An Active Antenna for ELF Magnetic Fields", PROCEEDINGS OF THE INTERNATIONAL TESLA SYMPOSIUM, 1990, International Tesla Society, 1990

4. C. F. Bohren, "How can a particle absorb more than the light incident

on it?", Am J Phys, 51 #4, pp323 Apr 1983

5. H. Paul and R. Fischer "Light Absorption by a dipole", SOV. PHYS. USP., 26(10) Oct. 1983 pp 923-926

6. K. Corum and J. Corum, "Fire Balls, Fractals, and Colorado Springs: A Rediscovery of Tesla's RF Techniques," PROCEEDINGS OF THE INTERNATIONAL TESLA SYMPOSIUM, 1990

Suggested by A. Boswell, regarding small-antenna physics:

Chu, J.Appl.Phys. Dec. 1948

Hansen, Proc.IEEE Feb. 1981.

LINKS

- Zenneck's EM surface wave
- Tesla & surface waves
- Sutton's active antenna and "regeneration"
- For sale: resonant antennas from Terk and Select-a-tenna
- Resonate coil project
- Crossed-field Antenna
- Gieskieng Antenna (E-to-M 90deg phase shift output)
- BOOK: Causality, EM Induction and Gravitation (Dr. Oleg Jefimenko)
- JCE: creation/absorption of photons
- MIT E&M: dipole radiation anim
- PHYSLETS: accelerated charge
- Dipole radiation movie
- H. G. Schantz papers (and antenna animations!)

PMG construction manual

Hugh Piggott - Scoraig Wind Electric - February 2001 comments welcome at hugh.piggott@enterprise.net

Contents page

1. Introduction 2
2. List of materials and tools 6
3. Jigs and Moulds 8
4. Stator construction 23
5. Rotor construction 29
6. Assembly 34
7. Testing and connecting 39
8. Additional information 47

This manual was commissioned by
Dr Smail Khennas
Senior Energy Specialist
Intermediate Technology
The Schumacher Centre
for Technology and Development
Bourton Hall
Bourton on Dunsmore
Warwickshire
Tel +44-1788-661 100
Fax: +44 -1788 44-(0)1788-661 101
Email: smailk@itdg.org.uk
Url: http://www.oneworld.org/itdg
Url:http://www.itdg.org.pe
Company Reg No 871954, England
Charity No 247257

with funding from the UK government DFID

On site assembly in Peru

1. Introduction

This manual describes how to build a 'permanent magnet generator' (PMG). We can also call it an 'alternator', because it generates alternating current (AC). It will not generate 'mains voltage' or 'utility power' AC. It generates low voltage, 'three phase' AC, and then changes it into 'direct current' (DC) for charging a 12 volt battery.

What this PMG is made of

1. EXPLODED PMG

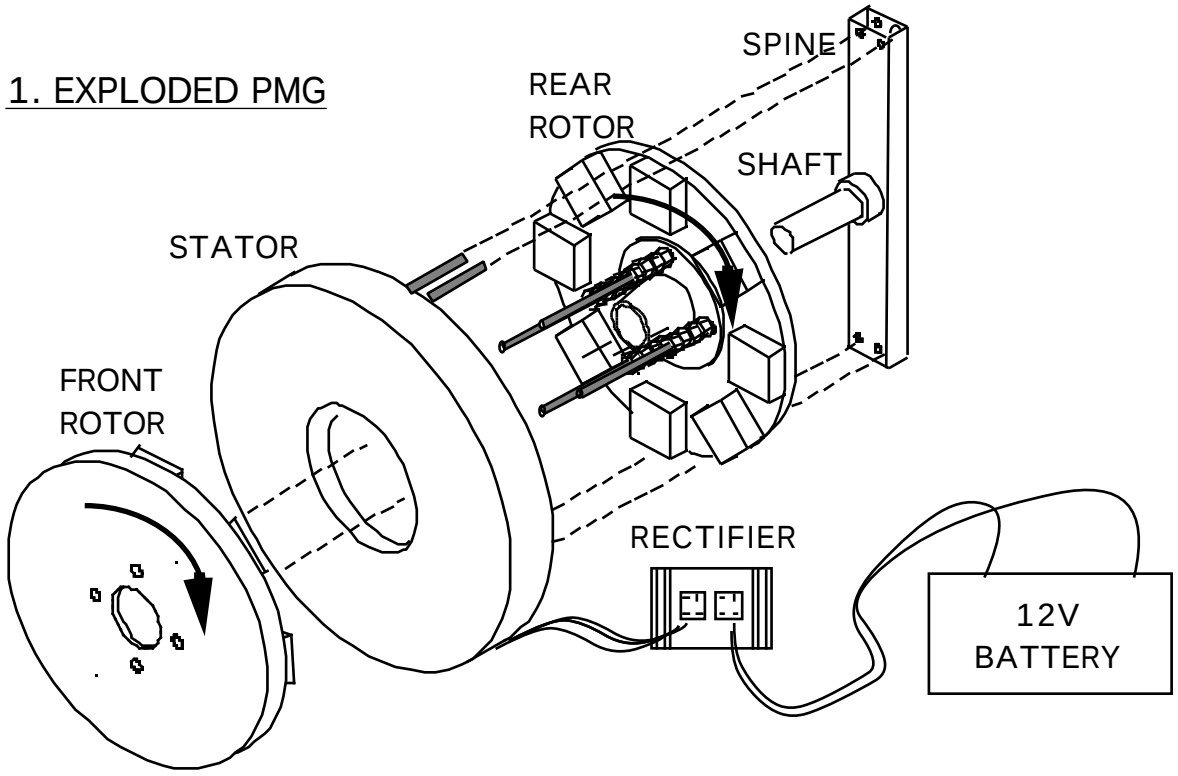

The PMG (see diagram 1) consists of:-

- A steel spine and shaft.
- A stator containing coils of wire
- Two magnet rotors
- A rectifier

The stator contains six coils of copper wire, cast in fibreglass resin. This stator casting is mounted onto the spine; it does not move. Wires from the coils take electricity to the rectifier, which changes the AC to DC for charging the battery. The rectifier is mounted on an aluminium 'heatsink' to keep it cool.

The magnet rotors are mounted on bearings, which turn on the shaft. The rear rotor is behind the stator, and enclosed within it. The front one is on the outside, fixed to the rear one by long studs which pass through a hole in the stator. The wind turbine rotor blades will be mounted on the same studs. They will turn the magnet rotors, and move the magnets past the coils. Magnetic flux passes from one rotor to the other through the stator. This moving magnetic flux is what produces the electric power.

Building the PMG

This manual describes how to build the PMG. Read right through it before starting.

Section 2. is a list of materials and tools for the job.

Section 3 explains how to build the special tools (called jigs) and the moulds which are needed. You can build more than one PMG with them. There are many possible ways to make these jigs and moulds, but there is only room in this manual to describe one way to do it.

Section 4 is about the stator. It describes how to wind the coils of enamelled copper wire, and cast them in resin, using the jigs and moulds.

Section 5 shows how to build the magnet rotors, using magnet blocks and steel disks, set in another resin casting.

Section 6 shows how to assemble the parts into a whole PMG. It explains how to build the mechanical parts, how to balance the rotors, and what is required to connect the wiring from the stator.

Section 7 is about testing the PMG. It contains procedures for checking that it is correctly balanced and ready to use. It describes the options for connecting up the electrical output. It also explains how to connect the PMG to the battery.

Section 8 contains additional information about the use of polyester resins, and about using the PMG for hydro power.

What this PMG can do

This PMG is made for small wind generators (see diagram 2). To build a complete wind generator, you also need

- a tower : perhaps a steel pipe, supported with guy ropes,
- a 'yaw head' swivelling on the tower top,
- a tail, to keep it facing towards the wind,
- a set of blades, to turn it.

The spine of the PMG bolts on to the yaw head. The blade assembly fits on to the front of the PMG. The yaw head and tail need to be so constructed that the wind generator will turn from strong winds, to protect itself. (This manual does not describe the blades, tower, or yaw head.)

On test at Scoraig

2. WIND TURBINE

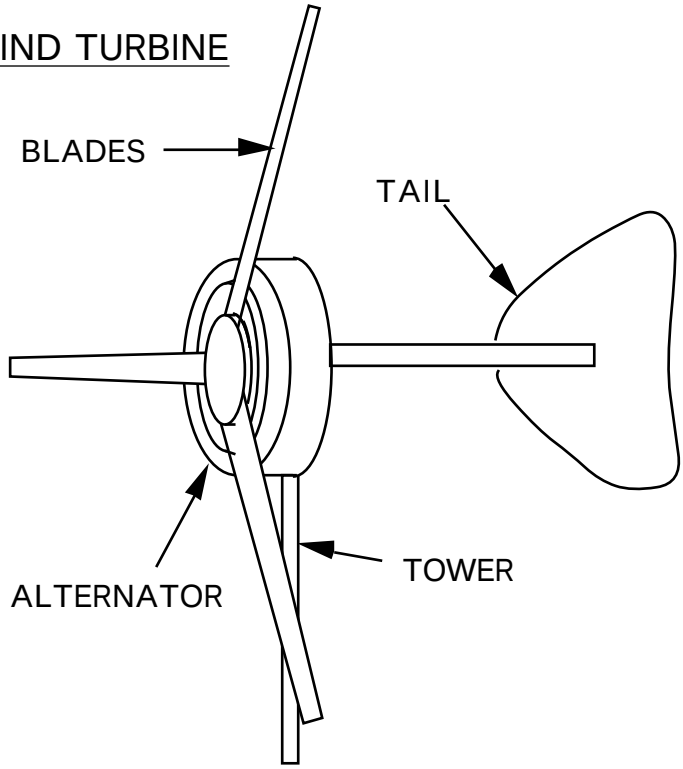

The PMG works at low rotational speed. The chart shows the power output of the PMG, charging a 12 volt battery. At 420 rpm it generates 180 watts, which is 15 amps at 12 volts (15A x 12V = 180W).

At higher speed, the PMG can generate more power. But high currents cause the coils to heat up, and so the efficiency gets worse as the output current gets higher. For higher speed it is better to change the stator coils, either by using different size wire, or by changing the way they are connected.

If the PMG is always used at higher speeds, it is better to use thicker wire, which can carry more current without getting so hot. Using thicker wire means there are fewer turns on the coils, which means that the PMG would not work at low speed.

To use the same PMG for both low and high speeds, it is possible to change the connections. There are two ways to connect the stator wires to the rectifier. They can be connected 'star' or 'delta'. See Section 7 for a detailed description of the star and delta connections.

See diagram 3 for the graph of power vs. speed. Star begins to work at low speed (170 rpm). Delta gives more power, but only at higher speed. Star is good in very low windspeeds, and delta is better in higher winds.

A bigger version of this PMG would be able to give higher power at lower speed.

3.GRAPH OF POWER VS. SPEED

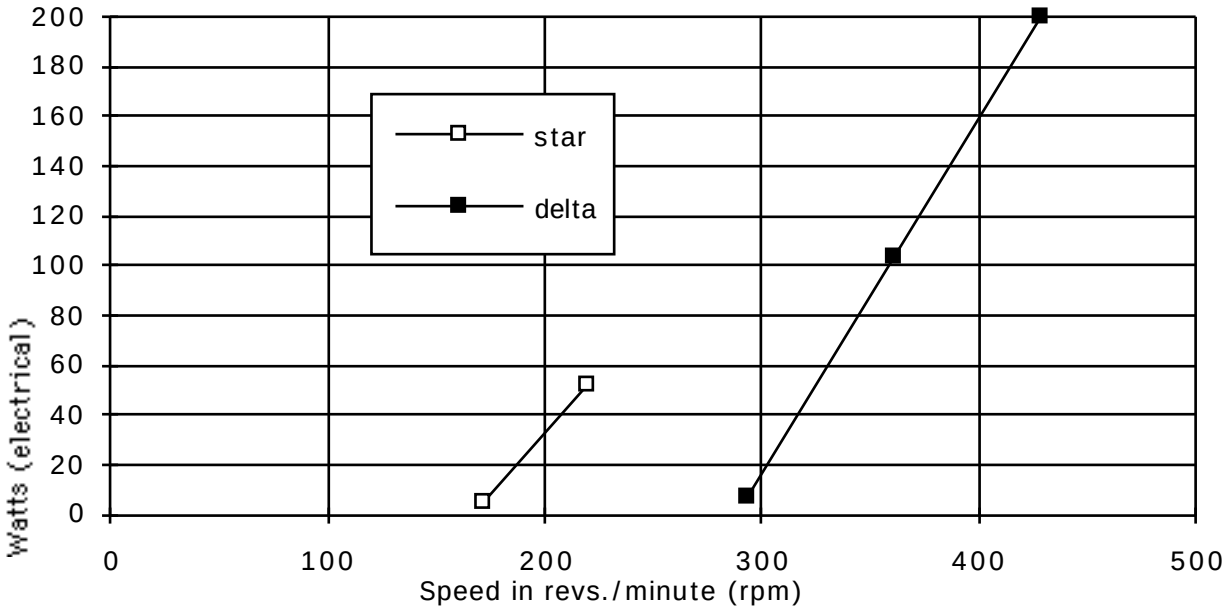

Caution

Take care when building and assembling the PMG so that the magnets cannot come loose. This can happen under extreme circumstances. Loose magnets rubbing on the stator can then destroy the PMG.

- Follow all the instructions for casting the magnet rotors - do not simply glue the magnets to the steel disks.
- Do not hit the magnet rotors with hammers during assembly.
- Take care that there is at least 1mm gap clearance between the magnets and the stator, on both sides. (For heavy duty, or high speed, use a larger gap.)
- Do not run the PMG at speeds faster than 800 rpm on a wind turbine. (When the wind turbine yaws, large gyroscopic forces will flex the shaft, and the magnets may touch.)
- Do not mount the rotor blade assembly directly onto the front magnet rotor disk, at any point away from the studs. Mount it only onto the studs and nuts themselves, which come through the disk.
- When mounting the PMG on the wind turbine yaw mount, keep the box section 'spine' of the PMG vertically upright, and not horizontally cross-wise.

2. List of Materials and tools

Materials for PMGs	No. per PMG	size	Total wt. grams
FIBREGLASS SUPPLIES			
Polyester resin (premixed with accelerator)			2700
Catalyst (peroxide)			50
Talcum filler powder			1200
Fibreglass mat (1oz/sqfoot)		1 sq metre	300
Colouring pigment resin (if required)			50
plasticene or putty			
STAINLESS STEEL			
stainless steel wire		2mm x10metres	200
MAGNETS			
Grade 3 ferrite magnet blocks (premagnetised)	16	20 x 50 x 50mm	4000
ELECTRICAL			
Enamelled winding wire		14AWG or 1.7mm (or 17AWG - see p.44)	3000
flexible wire (about 14AWG size)		same size x 6 metres	
solder and sleeving for connections			
1/2 inch masking tape			
Bridge rectifiers	2	25A 200V single phase	
Heatsink for rectifiers			250
STEEL			
Box section tube ('RHS') for spine	1	380 x 50 x25 x 4mm	1100
Magnet disk (or octagonal) plates	2	6mm x 305mm Outer Diameter	6000
10mm threaded rod ('studding')		1000mm	500
10mm nuts	32		300
10mm washers	16		
8mm threaded rod		400mm	125
8mm nuts	8		50
5mm nuts and bolts for rectifiers	2	5mm x 20mm	
Shaft		25mm x 150mm	500
MECHANICAL			
Bearing hub to fit shaft, as described in Section 6	1		1250

Spine, shaft, hub and magnet rotor

Materials for moulds and jigs

Composite floorboards (other ideas are possible) and wood glue
Sand paper, wax polish
(Polyurethane varnish, and PVA release agent, if available.)
Paint brushes, and thinners to clean them
13mm Plywood for jigs and formers and stator mould centre
Steel rod, or pipe, for coil winding machine
Small pieces of steel plate or thick sheet metal

Bolts (with nuts and washers)	diameter	length	For
2 with butterfly nuts	6mm	60mm	coil winder
4	10mm	25mm	balancing with jig
1	12mm	150mm	stator mould

Tools

Safety goggles, face mask, gloves, etc. as required

Workbench with vice
Welder
Angle grinder
Hacksaw, hammer, punch, chisel
Compasses, tape measure, angle gauge.
Spanners: 8, 10, 13, 17, 19mm : two of each.
Tap wrench and M10 taps for outer holes in magnet rotors.
Brass wire to gauge the heights of magnets

Pillar Drill Press
Drill bits 6,8,10,12mm
Holesaws 25mm, 65mm

Wood lathe, or a substitute as in Section 3
Chisel for wood lathe
Jigsaw to cut wood

Scales to weigh resin. Dispenser for catalyst, plastic buckets, scissors.

Soldering iron, resin-cored solder, wire cutters, sharp knife.

3. Jigs and Moulds

This section describes how to make the jigs and moulds for building a PMG. Once you have made them, they can be used again, to build more PMGs.

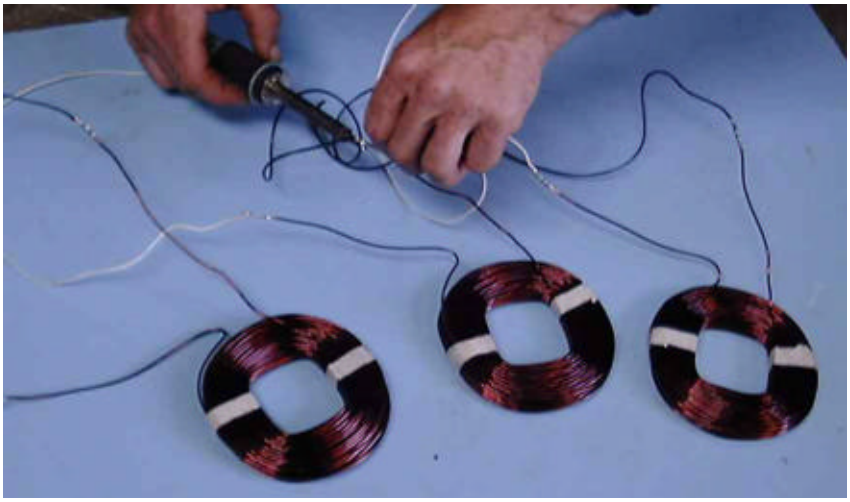

Some coils for the stator

Coil winding machine

The PMG stator contains six coils of copper wire (see diagram 4).

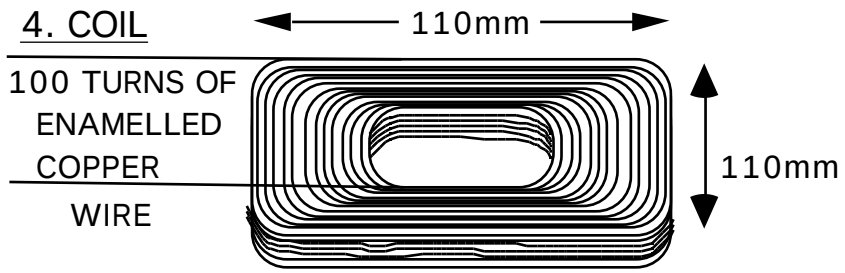

The coils will be wound on a plywood coil-former.
The former is mounted on the end of a crankshaft, between cheek pieces.

- Make a crankshaft, turned by a handle (see diagram 5).

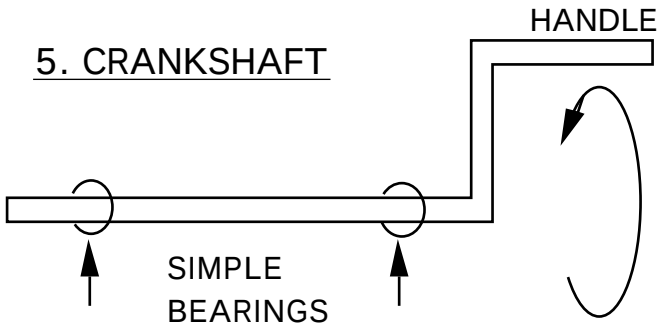

- Cut a small flat steel plate 60 x 30 x 6 mm (suggested sizes) and fix it securely or weld it to the end of the crankshaft as shown in diagram 6.
- Drill 2 holes, 6mm diameter and 40mm apart, centred on the shaft.

6. STEEL PLATE

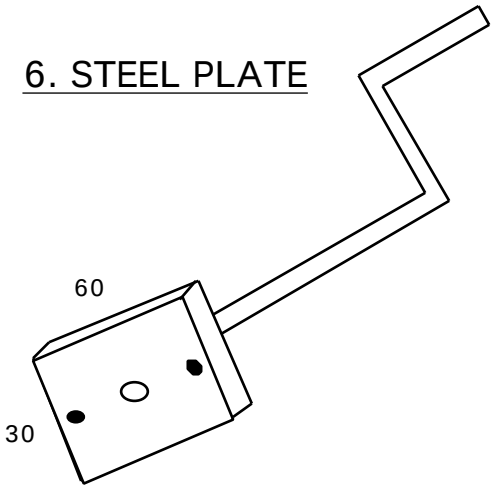

- Cut out 3 pieces of 13mm plywood as in diagram 7.

7. COIL-FORMER AND CHEEK PIECES

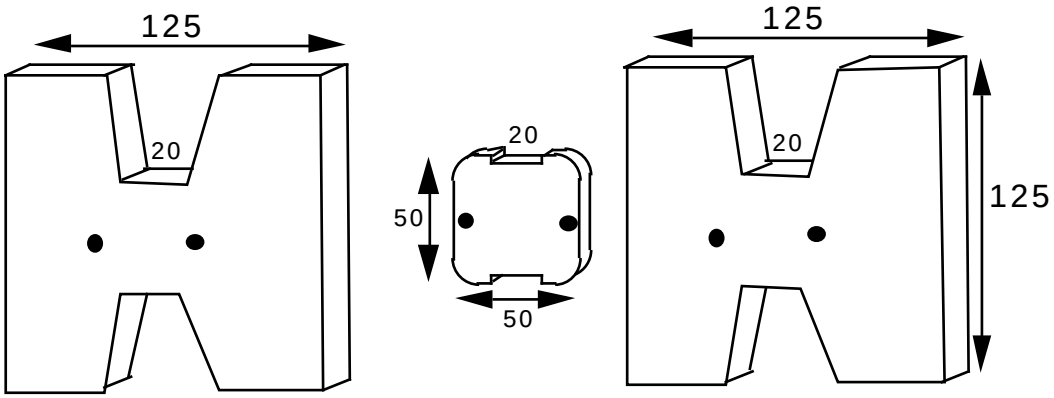

The coil former is 50mm by 50mm by 13 thick. It has rounded corners. The two 'cheek pieces' are 125mm by 125mm. There are 20mm wide notches top and bottom in each. The notches are for putting masking tape under the coil, so that it can be taped up before removing it from the former.

- Stack the pieces with the notches in line (diagram 8), and drill holes for the mounting bolts.

The holes are 6mm diameter and 40mm apart.
Use a drill press to drill the holes exactly square to the plywood.

8. DRILLING THE 2 HOLES

STACK THE THREE PIECES LIKE THIS:-

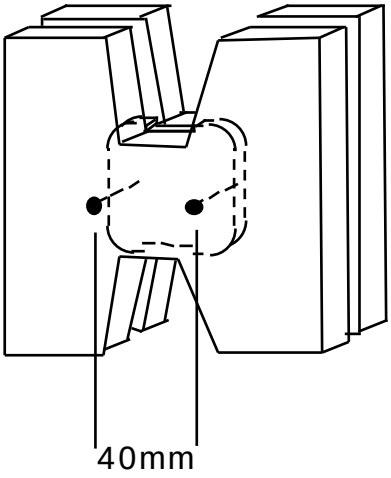

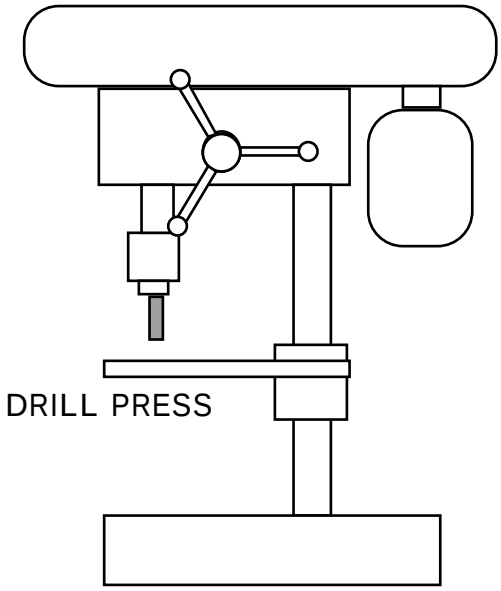

- Pass two bolts through the holes in the flat plate, and bolt on the cheekpieces , with the coil-former between them. Use butterfly nuts if possible. (diagram 9.)

9. FITTING THE COIL FORMER AND CHEEK PIECES

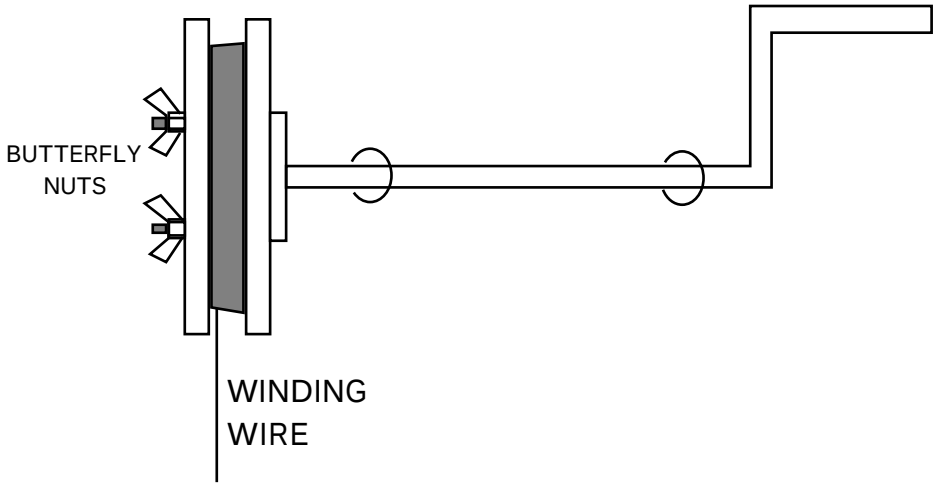

Jigs for the rotors

PCD jig for drilling holes

The magnet rotors are mounted on a bearing hub (see diagram 10). The hub has a flange with holes in it. For example there may be four holes on a 102mm (4 inch) 'pitch circle diameter' (PCD). Or you may have some other arrangement. This will depend on what kind of hub it is. Here we shall say 102mm PCD.

10. THE BEARING HUB PCD

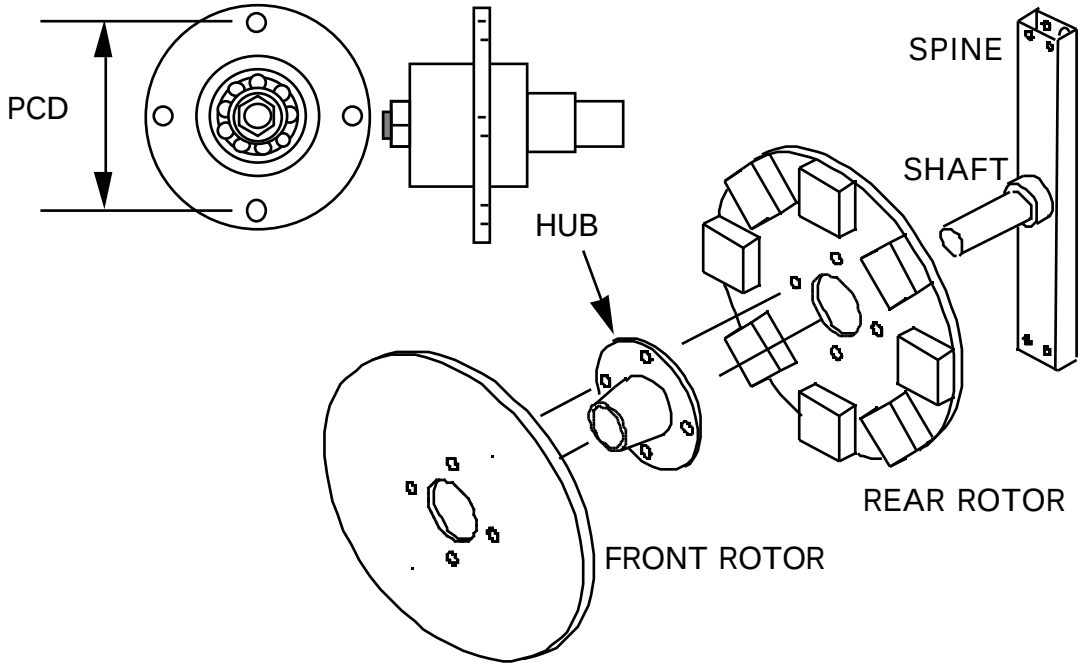

The PCD jig will be used to drill holes in the rotors etc.
It will also be used to balance the rotors.
The holes must be marked and drilled very precisely. (See diagram 11.)

- Cut a square piece of steel plate 125mm by 125mm.
- Draw diagonal lines between the corners and mark the exact centre with a punch.
- Set your compasses at 51mm radius (or to suit whatever PCD). Draw a circle.
- The diameter of the circle is the PCD of the holes in the hub.
- Punch both places where one line meets the circle.
- Set your compasses at 72mm. Mark two points exactly this distance from the first two, on the circle. (If you have a different PCD, this size would not be 72mm. Find the size by trial and error.)
- Drill four holes exactly 72 mm apart on the circle. Use a small drill first and then a larger one.

11. MARKING AND DRILLING THE PCD JIG

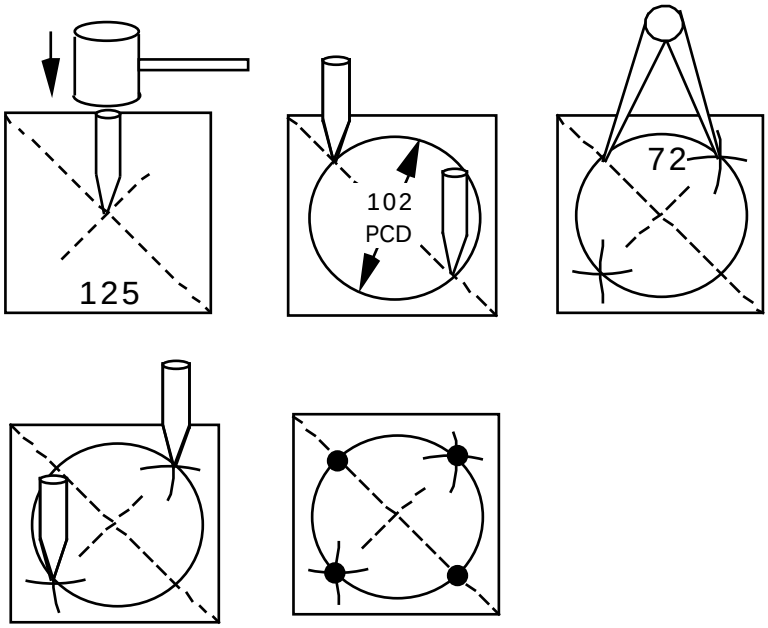

Magnet positioning jig (See diagram 12)

This jig is for putting the magnet blocks into the correct places on the steel disks. Only one jig is needed. Make the jig from 250x250 mm plywood or aluminium sheet (not steel).

12. THE MAGNET POSITIONING JIG

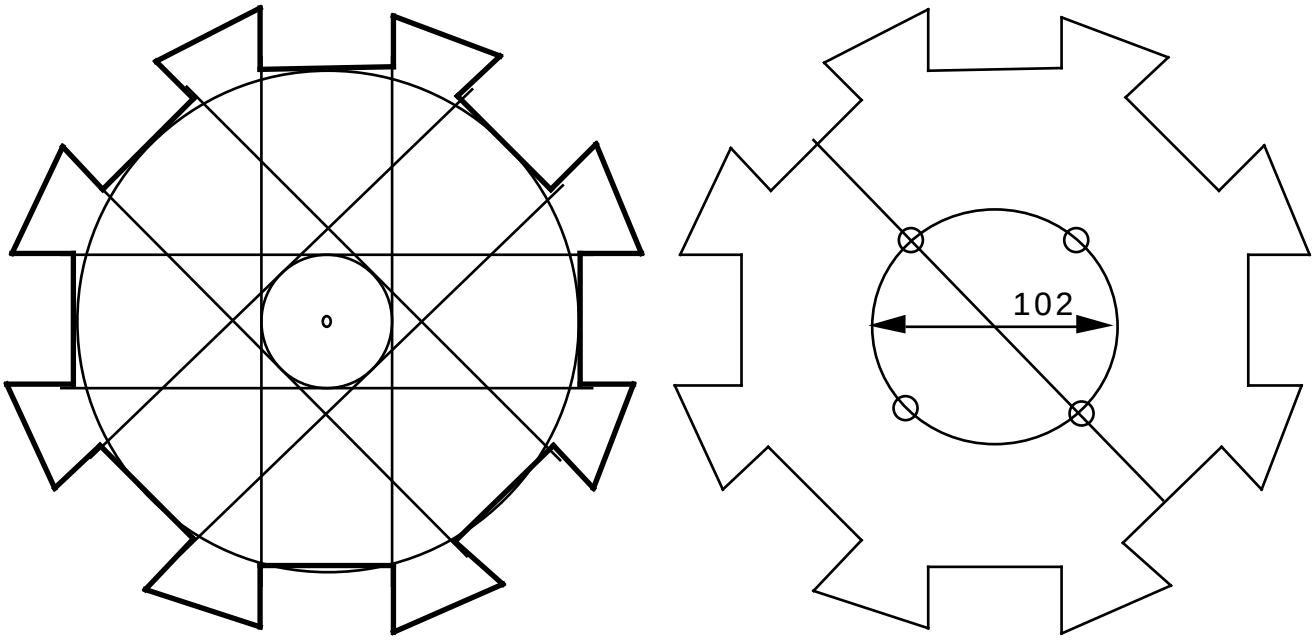

- Mark the centre of the workpiece.
- Draw three circles, with diameters 50mm, 102mm and 200mm, on this centre.
- Draw a pair of parallel straight lines, as tangents to the 50mm circle as shown.

- Draw 3 more pairs of straight lines at 45 and 90 degree angles to the first pair.
- Using these lines, mark the magnet positions, and cut out the jig along the bold lines as shown in the diagram.
- Draw a line connecting two opposite magnet centres.
- Place the PCD jig on top of the 102mm circle, aligned with the magnet centres, and drill four holes to match the four holes in the steel disks.

Making the moulds

Make moulds for the stator and rotor castings. They can be turned from wood or aluminium. Another method is to make plaster or clay plugs on a wheel, like a pot. The shape of the plug would be the shape of the outside of the stator. Then make a fibreglass mould on the plug. The surface of each mould must be perfectly flat.

The moulds need to be strong and smooth. It is not easy to separate the stator casting from the moulds. Hammer blows are usually needed.

It is a good idea to wind one coil (see section 4) before making the stator mould. This coil should fit neatly in the mould.

Here is one way to make the moulds, from composite wooden floorboard sheets, using wood-turning.

Stator Outer mould

- Cut out several disks of flooring sheet (see diagram 13), approximately 500mm diameter.

13. DISKS

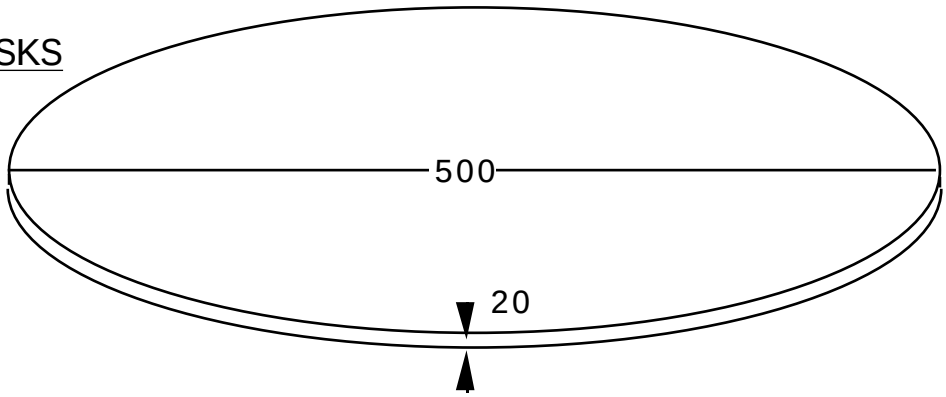

- Take all but one of the disks, and cut circular hole in each, 360mm diameter to form rings (see diagram 14).

14. RINGS

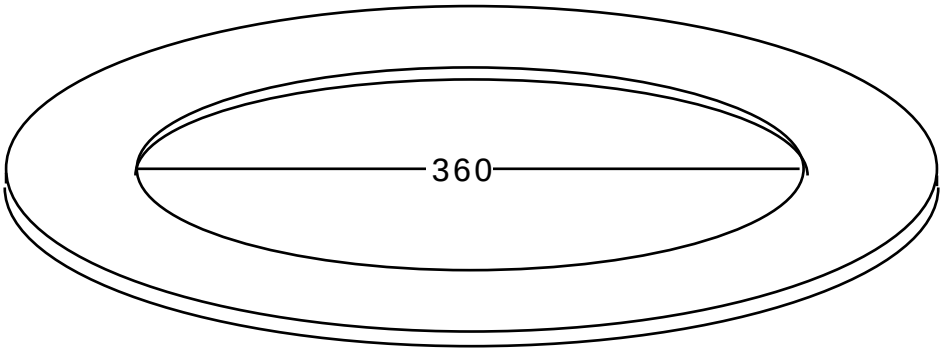

- Draw a circle 360 mm diameter on the remaining disk
- Drill a 12 mm hole at the centre of this disk, to help with centring.
- Glue the rings on top of the remaining disk, to form a stack, with a hole 60mm deep (diagram 15). Use plenty of glue at the insides of the rings.
- Cut out a small disk of 15 mm plywood, 140 mm in diameter, and drill a 12 mm hole at its centre.
- Placing a 12 mm bolt through both holes, glue the small disk into the exact centre of the hollow. Use plenty of glue at the edge of the disk.

15. STACK

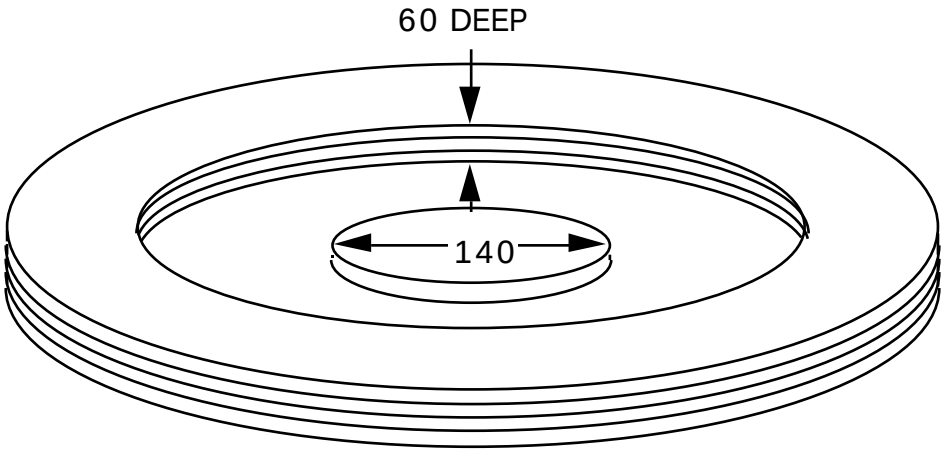

- Mount another piece of wood or board onto a lathe, a motor or the wheel hub of a small vehicle (for example a 3-wheel taxi). This is a the faceplate (see diagram 16).
- Spin the faceplate and use a pencil to make a very small circle at the centre.
- Drill a 12mm hole precisely at this centre. Hold the drill parallel to the shaft.
- Screw the glued stack onto the faceplate, using a 12mm bolt to centre it. Use four woodscrews through the disk and into the faceplate.
- Check that the face of the mould runs true. You can do this by holding a pencil close to it while it spins. Where the pencil makes marks, the face is 'high'. Loosen the screws and insert pieces of paper between the faceplate and the stack, on the opposite side from the pencil marks. Tighten the screws and check again.

16. TURNING A MOULD

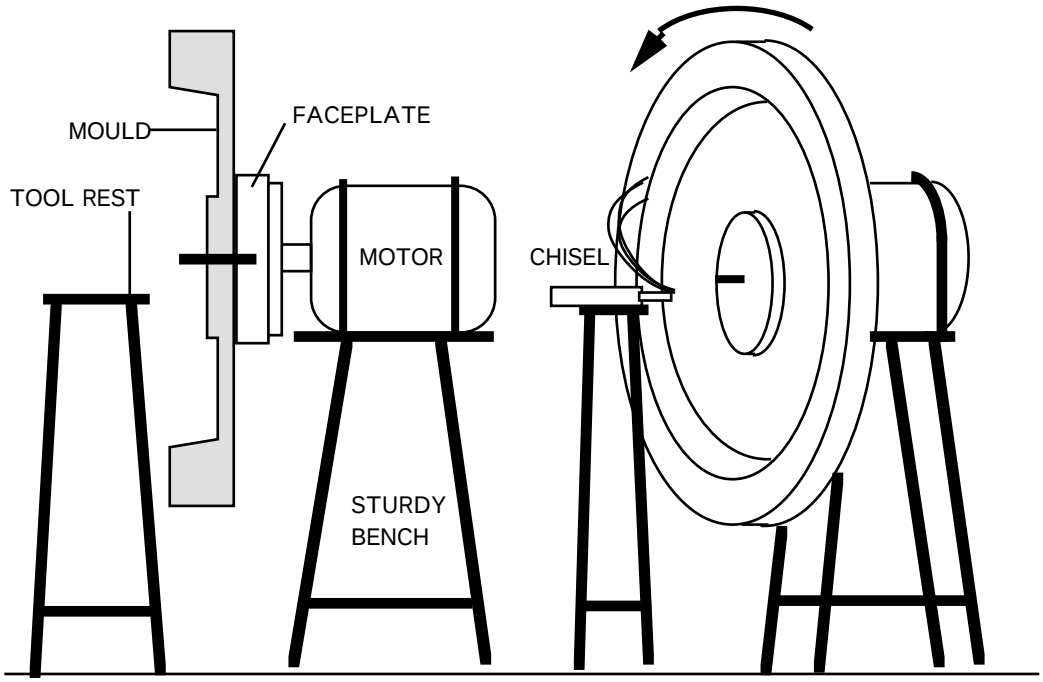

Now it is possible to shape the mould with a chisel. Wear a mask over your mouth to avoid inhaling the dust. Beware of loose clothing, which may become caught in the rotating mould.

Turning a stator mould on an electric motor

- Cut a smooth surface on the inner edges of the stack (diagram 17).
- The surface tapers at about seven degrees.
- The overall diameter at the outer edge is 380mm
- The diameter of the flat face is 360 mm.
- The corner inside is smooth (slight radius) not sharp.

17. THE SHAPE OF THE STATOR MOULD

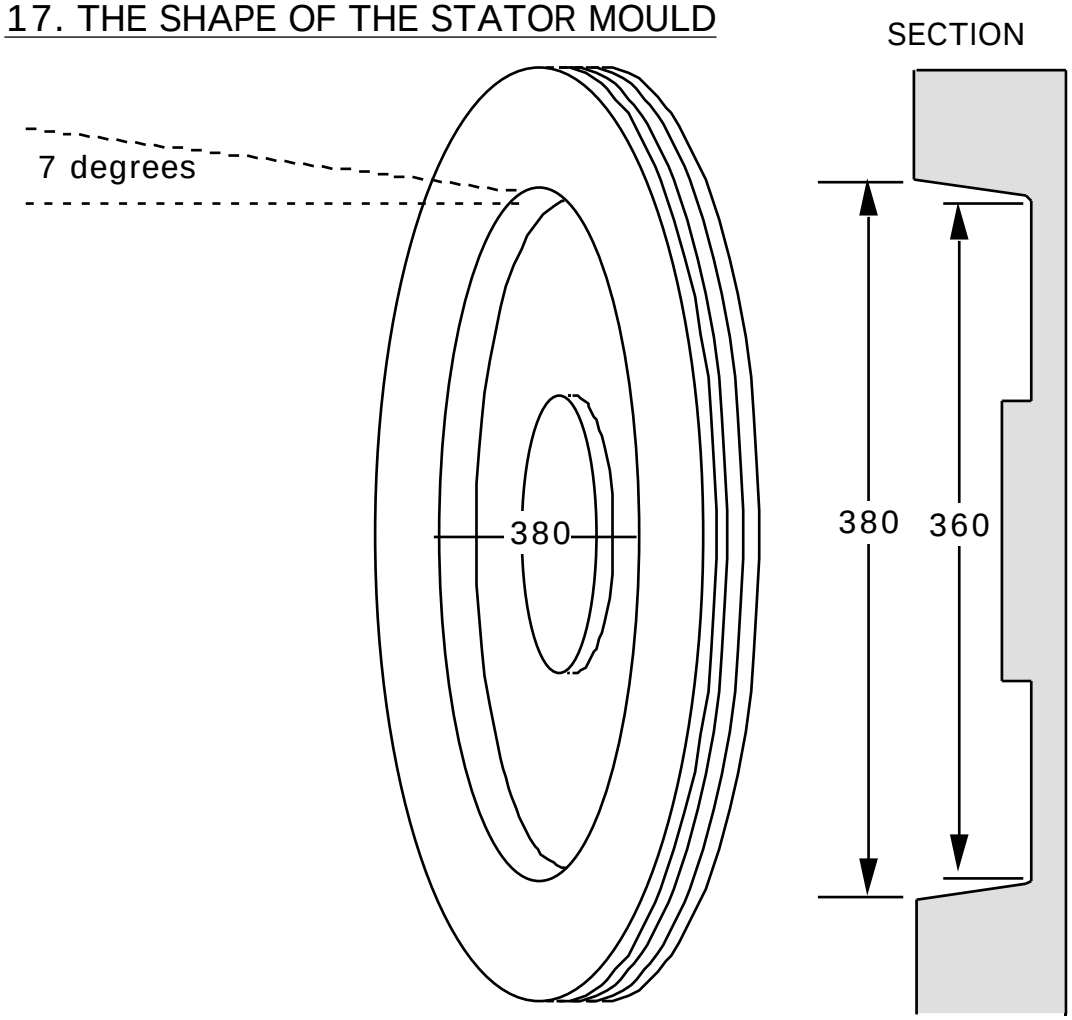

- Turn the inner disk down to 130 mm diameter on the face (see diagram 18), with a taper. The corners are rounded as before.

18. CENTRE DISK

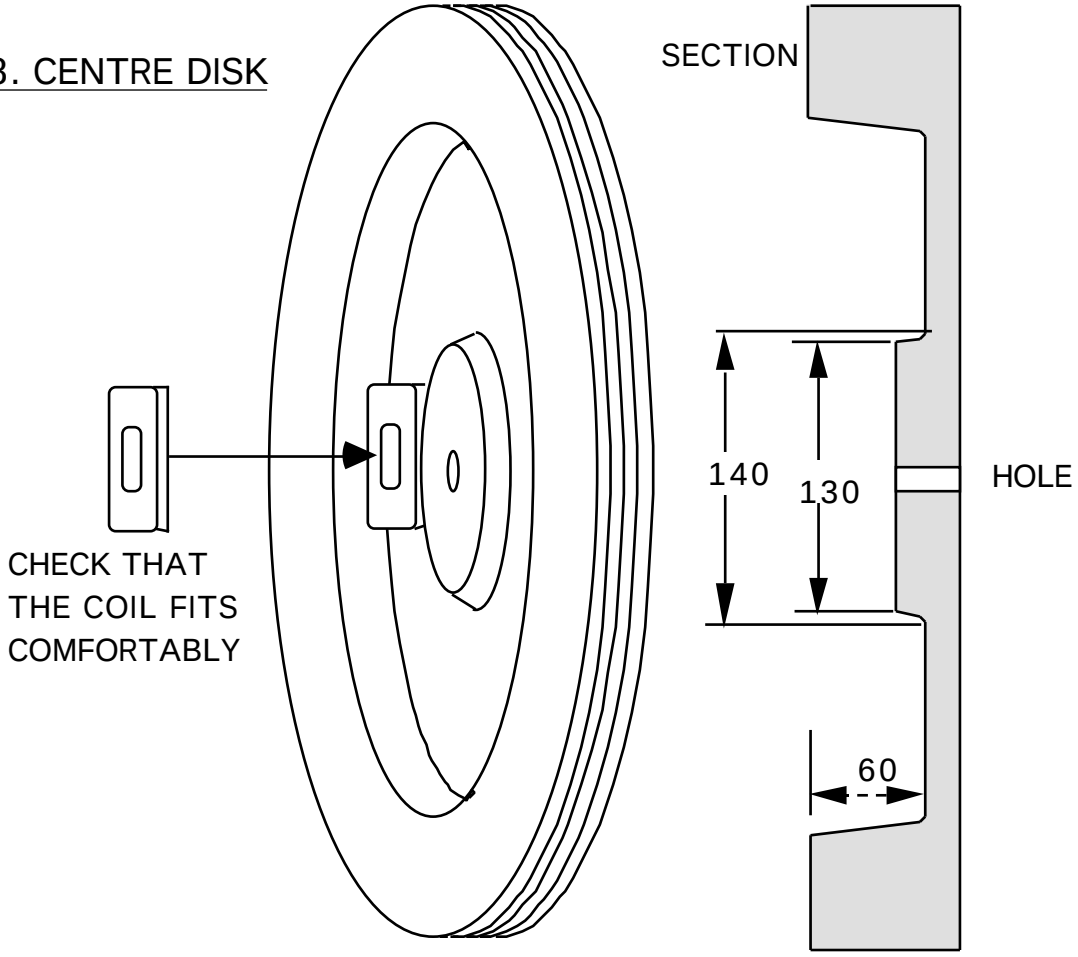

- Place a coil against the face of the mould and check that it fits comfortably - if not, then the hollow must be made a little larger, or the centre disk a little smaller. In the end, the coil's centre must be at 250 mm from the mould centre.
- Remove the mould from the lathe or motor.

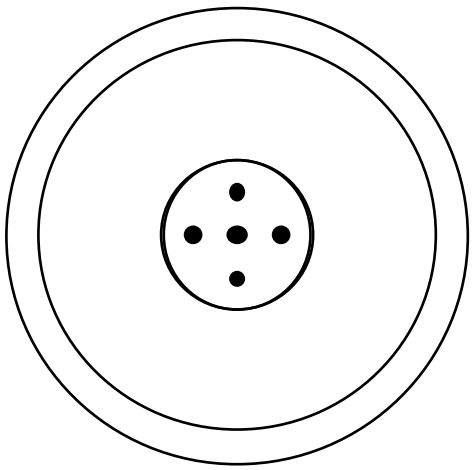

19.HOLES IN THE MOULD

Drill four holes in the central part which are used to separate the two moulds (diagram 19). Screw some small pieces of plywood onto the underside of the mould to make 'feet'.

Stator Inner mould

- Cut disks with diameter 370mm

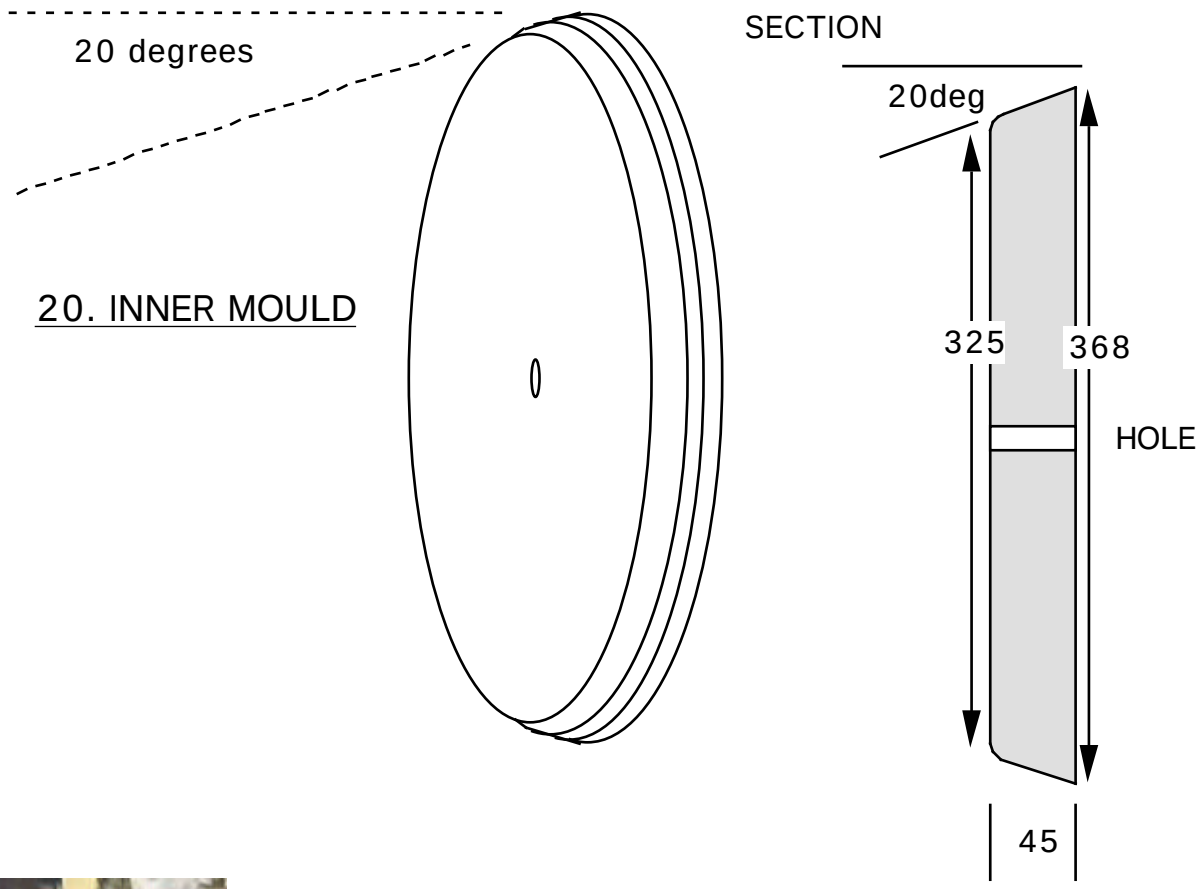

Sawing flat faces
on the inner mould

- Drill a 12mm hole at the centre of each
- Glue them into a stack (diagram 20), using a 12mm bolt to centre them.
- The stack is at least 45 mm thick, better 50 mm.
- Turn a 20 degree taper on the rim, and round off the corner, so that the diameter reduces from 368mm to 325mm.

- Check that the outer mod fits over the inner mould, with a 6mm gap all around the edge. Then remove the inner mould from the faceplate.
- Draw 2 lines on the larger face of the mould, 340mm apart (diagram 21)

- Cut two flat faces, as shown in diagram 21

21. CUTTING FACES ON THE INNER MOULD

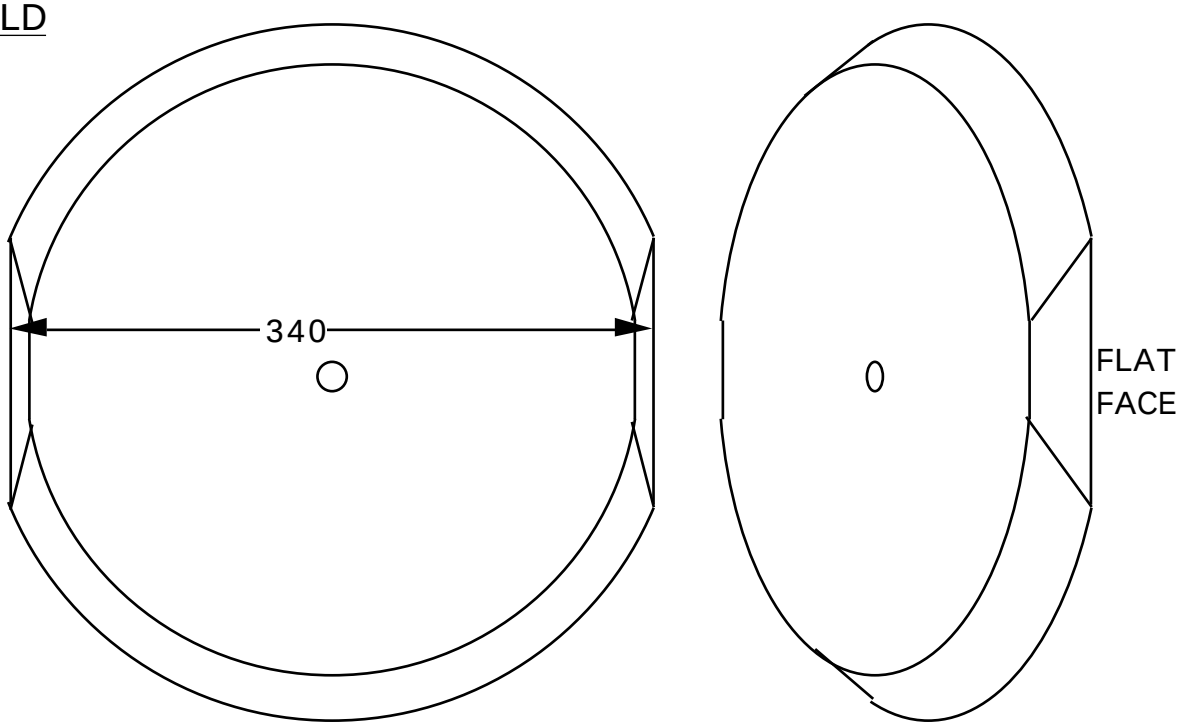

These two faces will create a thicker casting around the mounting studs.

Magnet rotor moulds

The PMG needs two magnet rotors. Only one mould is needed, but production is easier if there are two moulds, so that two rotors can be produced at one time.

The outer mould (diagram 22) is similar to the stator outer mould, but simpler

22. ROTOR MOULD

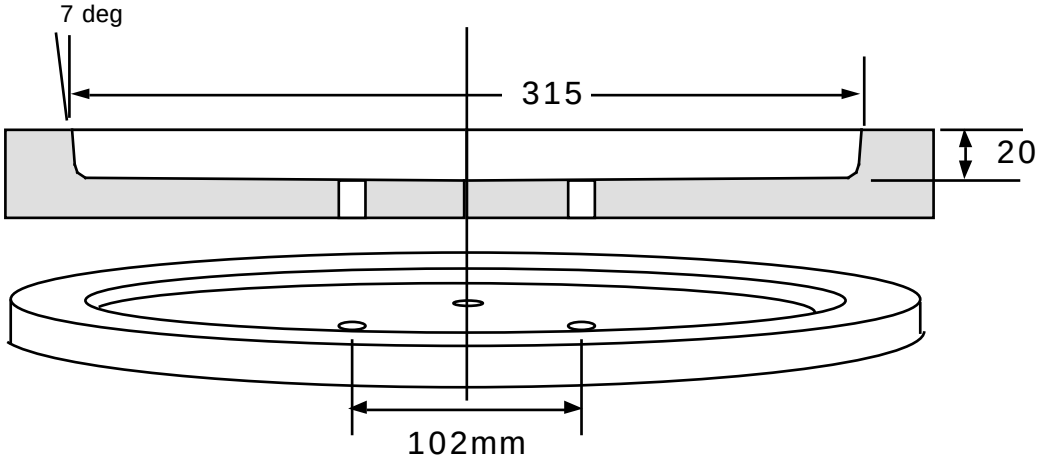

Use the PCD jig to drill four holes to match the holes in the magnet disks.

Each magnet rotor also needs an inner disk mould (diagram 23), with the same pattern of four holes.

23 MAGNET ROTOR INNER DISK

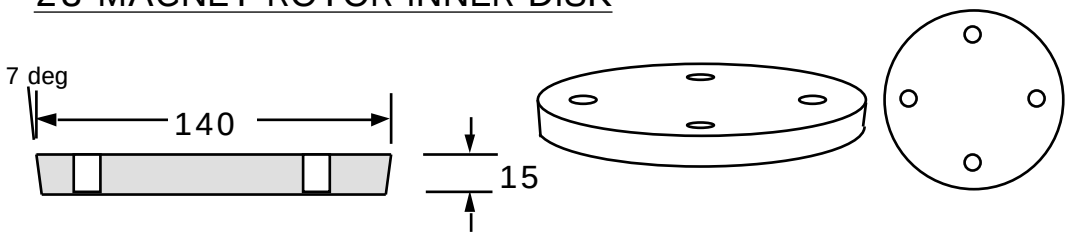

All moulds are sanded down to a very smooth surface, and finished with polyurethane varnish and wax polish. Do not use ordinary paint on the moulds. The heat of the resin process will cause the paint to wrinkle and spoil the appearance of the casting.

Rotor mould being made and used

Jigs for the stator

Stator studs jig (see diagram 24)

The stator needs four 8 mm supporting studs cast into it. These studs need a jig to hold them in place, until the resin is set. This jig is made from wood 380 x 50 x 25mm. It must be made precisely, or the studs will not fit the spine later.

- Make a punch mark at the exact centre of the largest face (see diagram 24).
- Use dividers or compasses to mark arcs at a radius of 178 mm from this mark.
- Punch four marks on these arcs, 30 mm apart and 10mm from the edge.
- Drill through with an 8mm drill (using a smaller size first to be accurate). Use a drill press, to drill the holes truly square.
- Remove some of the underside of the ends of the piece of wood, so as to prevent contact with the fibreglass resin.

24. STATOR STUDS JIG

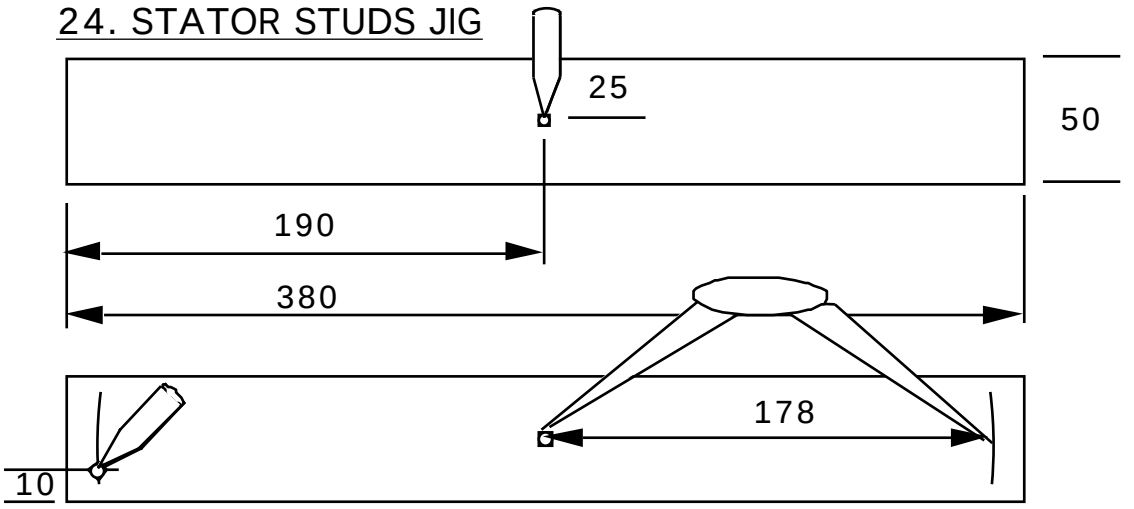

DRILL HOLES WITH A PILLAR DRILL FOR ACCURATE ALIGNMENT

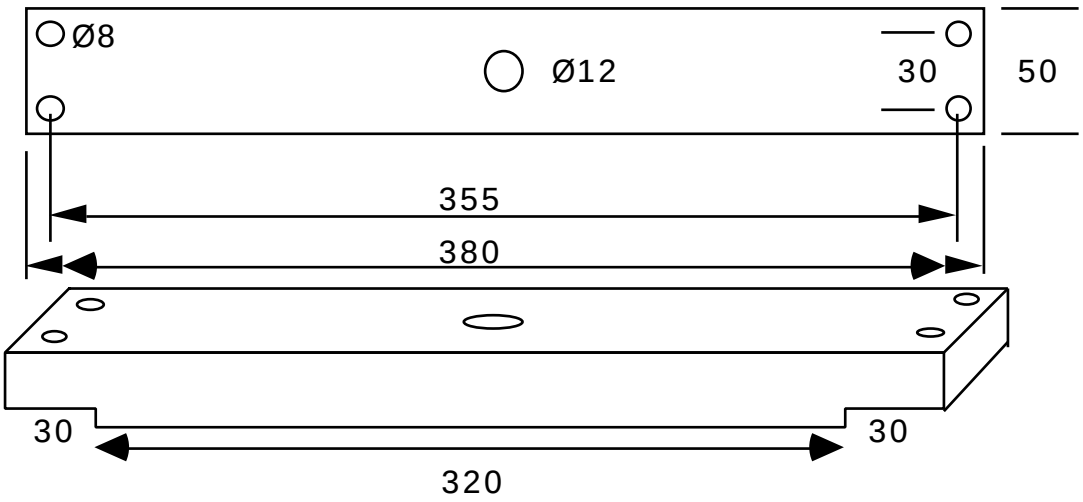

Paper templates (see diagram 25)

Fibreglass 'chopped strand mat' (CSM) is to be used in the stator. Make some paper templates for cutting out the pieces of CSM. Later you can lay the templates on the sheet of CSM, draw around them with a felt pen and then cut the pieces out.

25. PAPER TEMPLATES FOR GLASSFIBRE CSM

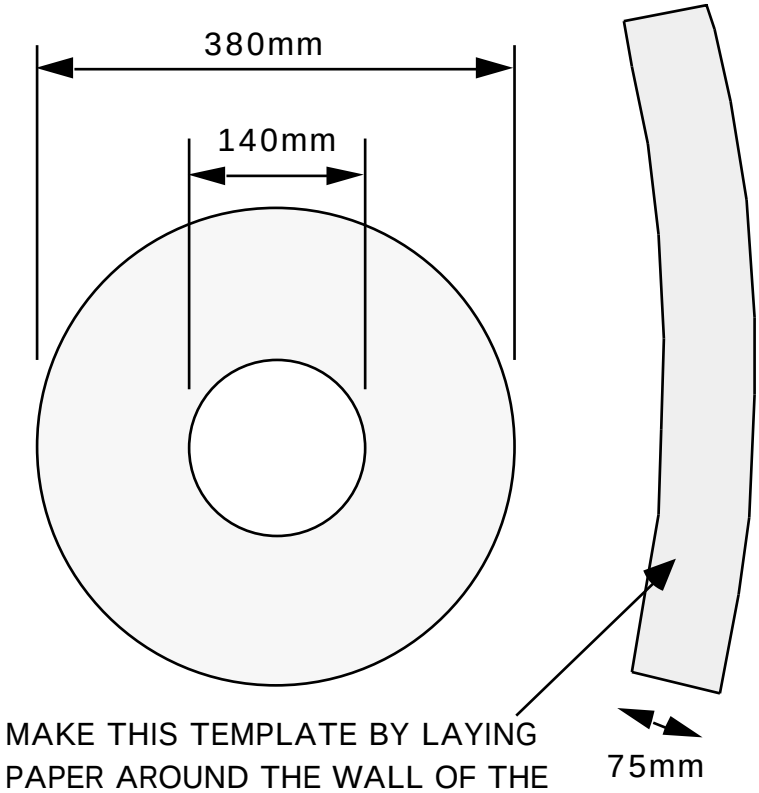

4. Stator construction

This section tells how to make a stator, using the jigs and moulds from section 3. It is a good idea to wind a coil before making the stator moulds, so that the mould can be checked for correct fit.

Winding the coils

- Mount the reel of winding wire on an axle behind you, in line with the coil former. The wire should form an 'S' bend as it winds onto the coil (diagram 26).

26. CORRECT WIRE FEED

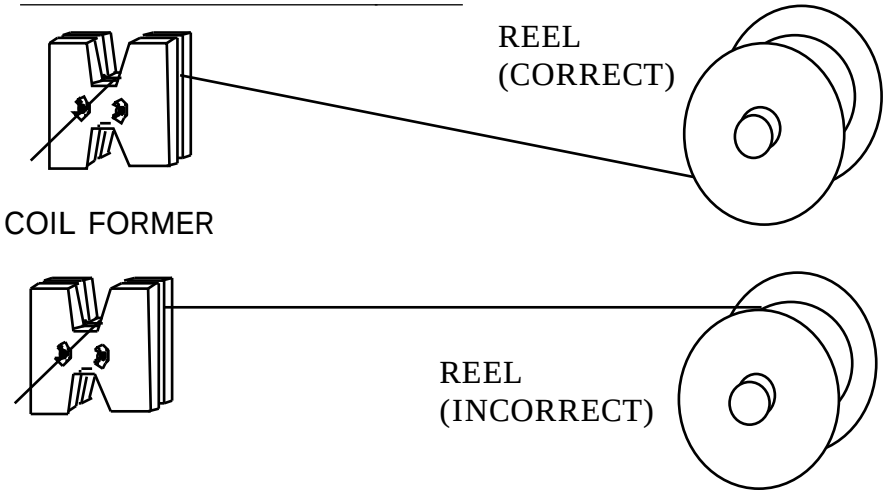

- Bend the tail of the wire 90 degrees, at a point 100mm from the end. Do not handle the bend any other part of the wire; leave it straight. Bent wire does not make a compact coil.
- Place this bend in the notch, so that the tail hangs out.
- Twist the tail loosely around one of the butterfly bolts.
- Grip the wire between the reel and the winder in a piece of rag to keep it tight.
- Wind the handle of the crankshaft.

The first turn lies against the cheek piece on the side where the tail comes out. The other turns lie against each other neatly, without crossing over. Build the coil up in even layers. Count the number of turns carefully. Normally there will be 100 turns.

- When the coil is complete, pass a piece of sticky tape under the coil on both sides and bind it tightly. Do not cut off the winding wire until this is done, or the coil will spring out, and loosen. Cut the tail of wire 100mm away from the coil.
- Remove the coil from the former, and wind five more coils in exactly the same way.
- Place the coils on a table (so that they are all exactly the same way up (diagram 27) Check that the starting tail is on the upper surface, and not hidden under the coil.
- Number the coils 1-6, writing on the masking tape.

27. THE COILS MUST ALL BE THE SAME WAY UP

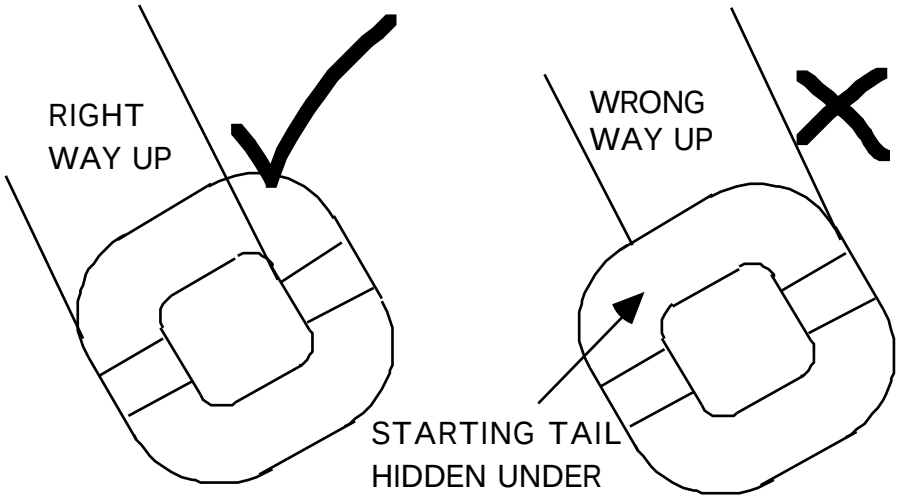

- Scrape the enamel off the last 20mm of each tail of enamelled wire, until it is all bright copper. (A hacksaw blade makes a very good scraper, when the edge has been sharpened with a grinder.)
- Solder on tails of flexible wire (diagram 28).

28. SOLDERING ON TAILS OF FLEX

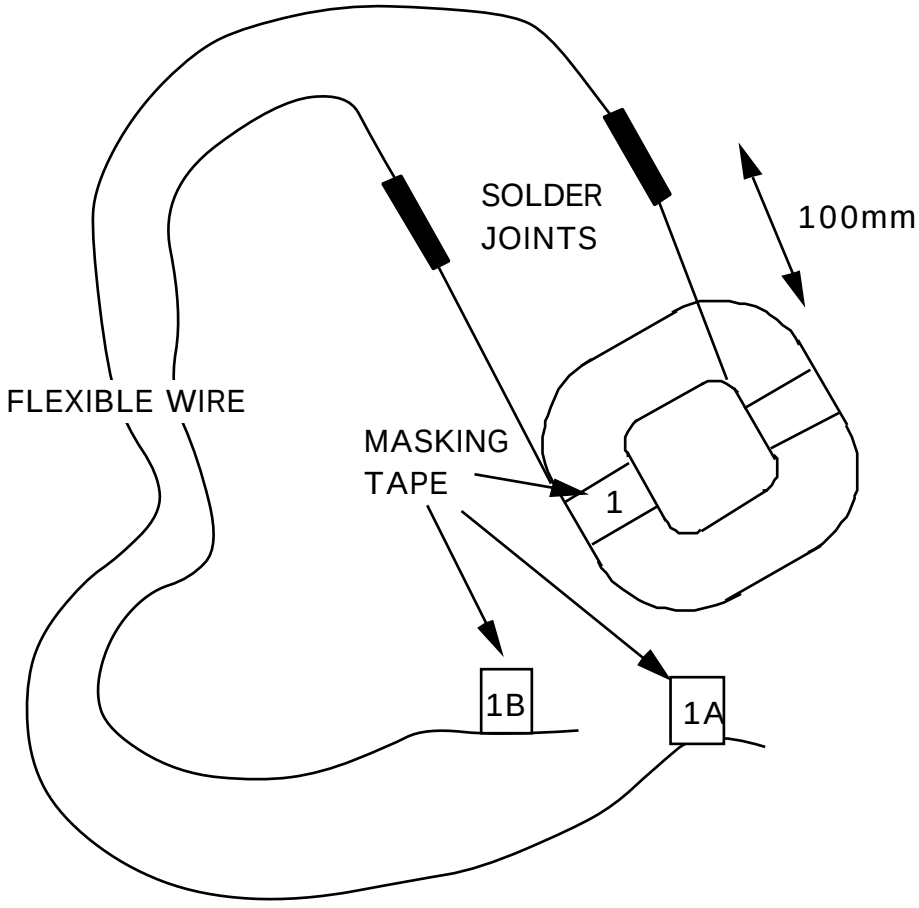

Suggested lengths of flexible tails:

coils 1 and 6 - 800 mm flex
coils 2 and 5 - 600 mm flex
coils 3 and 4 - 400 mm flex

- Cover the soldered joints with sleeving. Leave no bare copper showing.
- Label the tails with the coil number and the letter A or B.

A is for the start of the coil, B is for the finish. Do not mix them up.
Or use two colours: black flex for the starts and white for the finishes.

- Lay the coils out in the outer mould.
- Check that they will fit comfortably, and that the tails are long enough to remain within the mould until the exit point between coils 3 and 4.

It is important to lay all the coils the same way up.

29. THE COILS IN THE MOULD

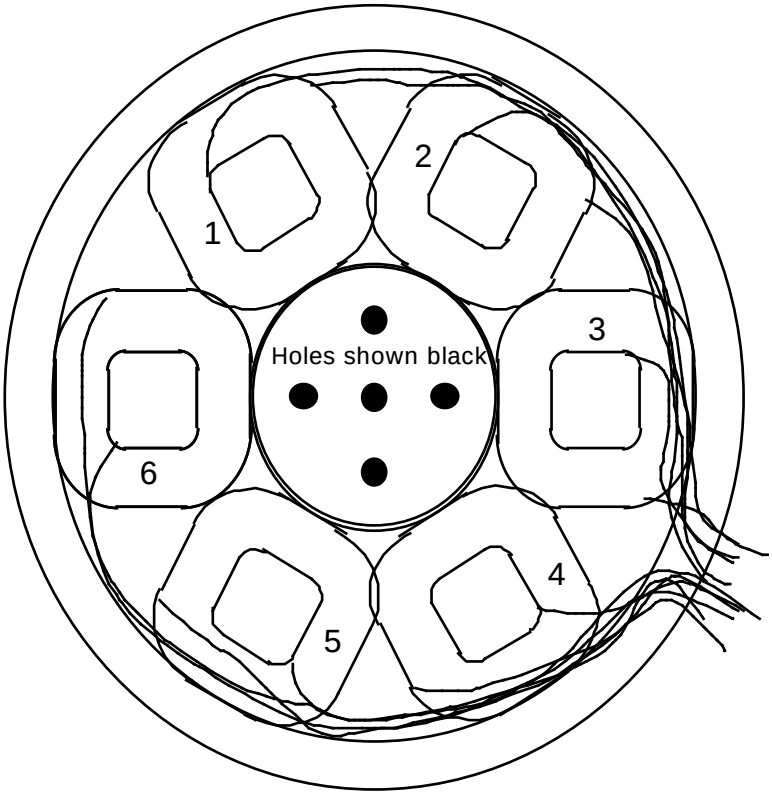

Preparations for stator casting

The stator casting will contain:-

- six coils
- polyester resin and talcum powder (and perhaps pigment)
- fibreglass mat (CSM)
- four studs of 8mm x 100mm threaded rod

Also, be sure to have the moulds prepared properly. Sand them, seal them, polish them. If PVA release agent can be got, then use it.

Cut out pieces of fibreglass CSM, using the templates. There will be 2 circular disks for laying flat in the outer mould. You also need enough curved strip pieces to cover the inside wall of the outer mould in a double thickness of CSM. Overlap 25mm between pieces.

When you are sure that you have everything to hand, start the resin casting process. It is a good idea to read through the procedure first, and check that you understand it all before you start. There are notes on polyester resins in section 8.

The stator casting procedure

Diagram 30 shows the procedure for weighing out the resin and the talcum powder. The talcum powder is only used for bulk mixes (not thin layers with CSM), to prevent overheating, and to thicken the mix. Different mixes use different weights - follow the step by step instructions below. Diagram 31 shows all the parts coming together.

30. MIXING POLYESTER RESIN

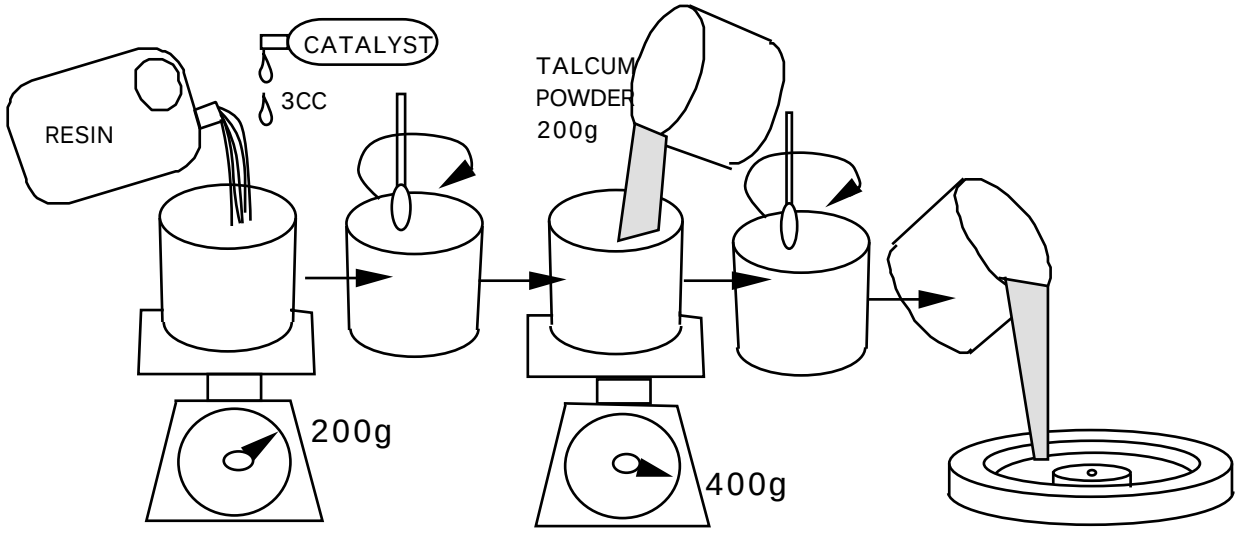

Mix resin with catalyst thoroughly but slowly to avoid churning in air bubbles. Add any talcum powder only after the catalyst is mixed. When the resin is mixed, use it at once. After a few minutes in the mixing bucket, it will heat up, and begin to set.

Use exactly the right amount of catalyst. Resin casting needs less catalyst than normal fibreglass work (about half the time). When the workshop is hot, put in less catalyst. Casting thick layers of resin, put in less catalyst. If in doubt, make some trial mixes of resin, to find out the correct amount of catalyst.

If there is no PVA 'release agent', then take care not to wipe the polish off the mould with brush strokes. Apply the resin with a 'prodding' action.

- Place the outer mould on some newspaper on a workbench.
- Mix 200g of resin, with 3cc of catalyst (and 15-30cc of pigment for colour, if required). Use no talcum powder in the first two mixes.
- Paint this resin all over the inside of the outer mould. Do not paint it on top of the island in the centre.
- Apply one layer of fibreglass mat (CSM), and paint more resin over it again, with a poking motion to remove bubbles. Work the resin into the CSM.
- Apply a second layer of CSM to the wall, but keep one disk for later.
- Put the coils into the mould. The wire tails all come out in one place, between coils 3 and 4.
- Mix another 100 g of resin with 2cc catalyst. Pour this over the wires of the coils so that it soaks in. Avoid making 'pools' of resin.
- Mix another 600g of resin with 9cc catalyst and 600g of talcum powder. Pour this mix into the spaces between the coils. The resin should fill the outer mould until it is level with the island at the centre.
- Shake the mould vigorously, to remove air bubbles. Rotary motion and vibration will help the resin to settle, and help any air bubbles to rise .
- Mix another 200g resin with 3cc catalyst and only 100g of talc. Put the second CSM disk over the coils and paint it with this mix. Thoroughly wash out the paint brush with thinners.
- Put the inner mould down inside the outer mould, and fit the 12 mm bolt though the centre of both. Tuck the wiring neatly into the space between the moulds. One flat spot on the inner mould sits over the part where the wires come out of the stator. The resin will rise up the sides. Some resin may spill out.
- If necessary, pour resin gently into the gap between the moulds until it rises to near the top of the female mould. You may need to mix another 100g of resin with 1.5cc of catalyst to do this. Keep notes of the amounts of resin used, for next time.
- Place the jig (for the studs - diagram 24) over the inner mould, with one end over the wire tails. Tighten the 12mm bolt with a nut. Insert the four 8mm studs into the holes, with nuts on top. The studs should be immersed in resin for about half of their length.

Six stages of the rotor casting procedure

31. STATOR CASTING ELEMENTS

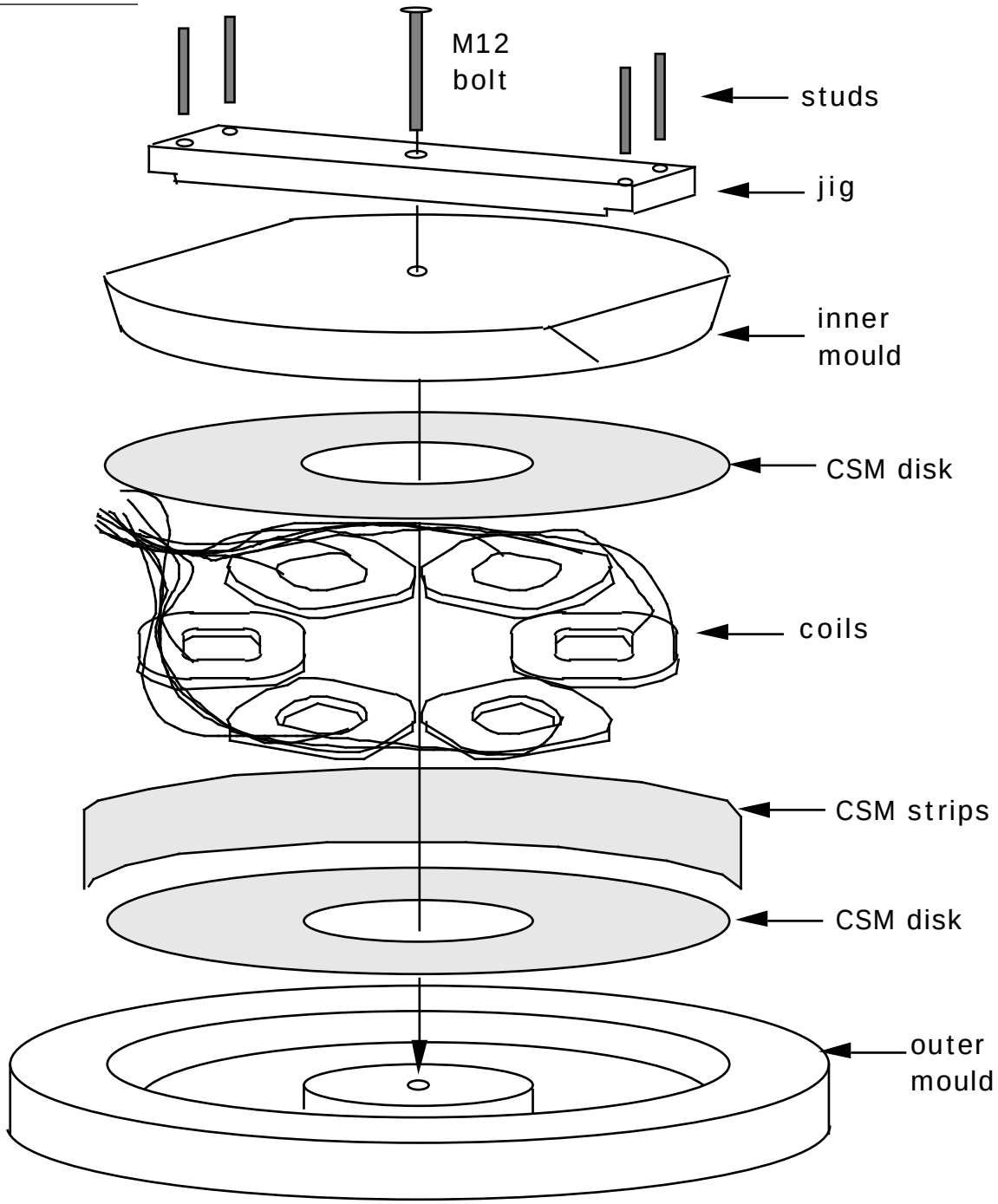

The casting is now complete. It should become slightly warm, and harden within hours. If it does not begin to set within a few hours, then put it in a warm place to speed up the process.

When the resin is fully hard, remove the casting from the mould. Be patient and gentle if possible. Remove the jig from the studs. Tap the two moulds apart, using a bolt in each of the holes around the central hole. Knock the casting out of the outer mould by turning it over and knocking the edge of the mould gently against the floor.

5. Rotor construction

The magnet rotor is also a casting. There is also a procedure later for assembling the parts. First collect together the magnet plates, magnet blocks, stainless wire rope, etc. as described next.

Magnet plates

Each magnet rotor is built on a steel disk, 6mm thick. See diagram 32. Do not use aluminium or stainless steel for this disk! The disks have to be made of magnetic material. The disk has holes to mount it to the hub - in this manual the hub has four holes, each 10mm diameter, on a circle at 4 inches (102mm) PCD. If a different hub is chosen, then all the jigs and moulds must match this hub.

At the centre of the disk is a 65mm diameter hole. There should also be four holes drilled and tapped (threaded) for M10 rod between the magnet positions, at 220mm PCD. Screw four pieces of M10 rod, 20mm long, into these holes. These will bond to the resin and help to secure the casting onto the disk.

32. MAGNET ROTOR DISK

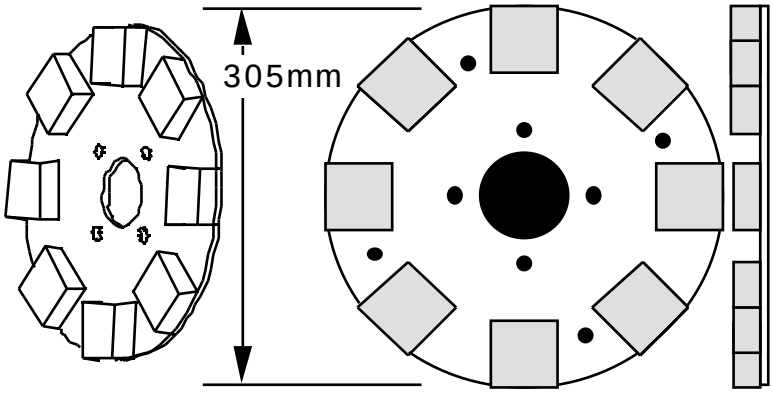

The magnet plates must be flat, not warped. It is not easy to cut the outer circle without warping the plate. A guillotine can cut steel plate into an octagon (see diagram 33), without warping the plate. This is an alternative way to make the rotor disk. First cut a square, draw a circle on it, and then cut off the corners at 45 degrees. The length of each edge is 116 mm.

The magnets will be placed on the corners of the octagon.

33. ALTERNATIVE SHAPE : AN OCTAGON

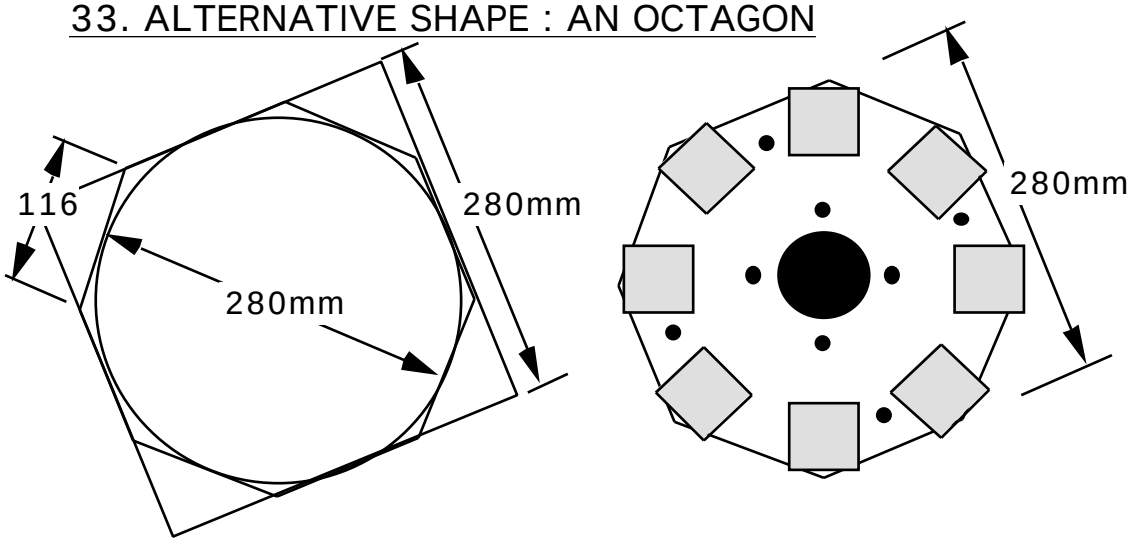

The central hole is made with a hole-saw or it can be cut out on a lathe.

Grind the steel disks until they are bright and clean, just before putting them in the mould for resin casting. Remove any grease with spirits.

Magnet blocks

There are 8 magnet blocks on each rotor. Each block has a north pole and a south pole (see diagram 34).

34. POLES ON THE MAGNET BLOCKS

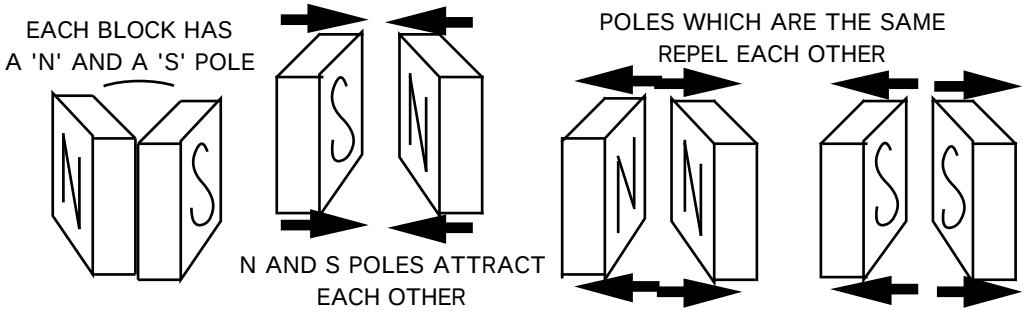

Take care when handling the magnets. Magnets can damage floppy discs, music tapes, credit cards and other magnetic media. Separate them from each other by sliding them sideways. They attract each other with strong forces. Take care not to let them fly together - they may break. Never use a hammer to assemble the PMG. You may break a magnet or break the resin holding it.

The top faces of the magnet blocks on the disk must alternate N-S-N-S-... There is a method to check that you are doing this correctly, as follows. Each time a magnet block is placed, hold it so that it repels the one before (see diagram 35). Then place it without turning it over. When they are all in, check with another magnet: it will be attracted, repelled, attracted, repelled, by each magnet in the circle.

35. PLACING THE MAGNET BLOCKS

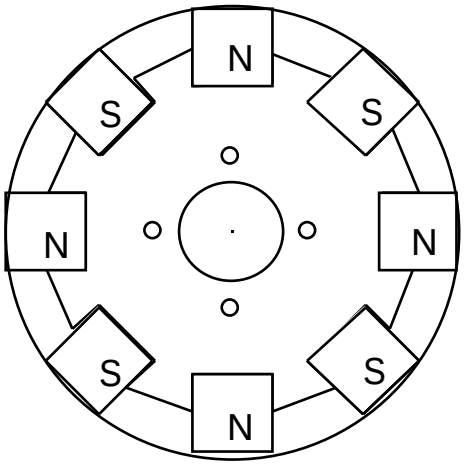

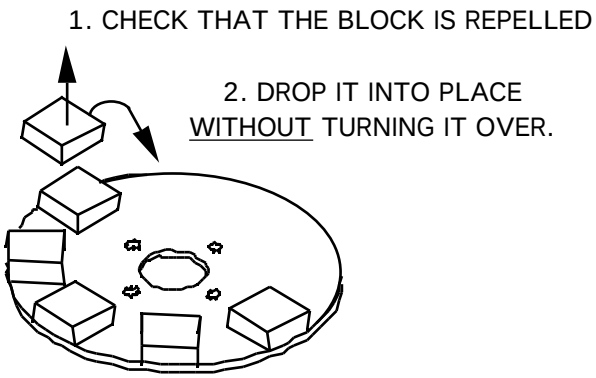

The two magnet rotors must attract each other when the mounting holes are aligned. Check that the magnets next to the holes on one rotor are different from the ones next to the holes on the other rotor (see diagram 36).

36. THE TWO ROTORS ARE NOT THE SAME

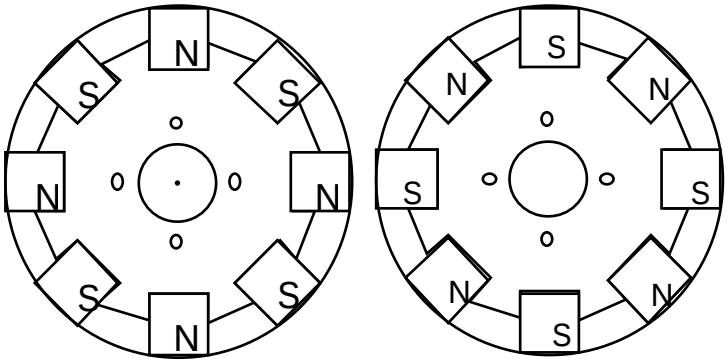

Stainless Steel wire

When the PMG is turning, the magnets will try to fly off the rotors. There is a large centrifugal force pulling the magnet blocks to fly away. When we started building these PMGs, the magnet blocks were simply glued to the steel disks. When the PMGs turned fast, the magnets flew off, and the wind generators were destroyed.

Now we embed the magnets in a resin casting. Resin alone is not strong enough to hold the magnets. It should be reinforced. Wrap wire around the outside of the magnet rotors to hold the magnets in. Steel wire is strong enough, but steel would take the magnetism from the magnet blocks. We use stainless steel because it is not magnetic and it does not spoil the effect of the magnets. Stainless steel wire cable is used on fishing boats.

Before using any resin assemble the parts dry. Put the stainless steel rope around outside the magnets five times, and cut it off with a grinder or chisel. Tape it in several places so that it is in a coil, ready to drop into place later.

Rotor casting procedure

Before starting, check that everything is ready:

- the moulds are prepared with polish or release agent,
- the magnets and the magnet disks are clean and bright (no grease),
- 16 strips of CSM are ready to fit between the magnets
- the stainless steel wire is cut to length and taped
- the magnet positioning jig is ready

The amounts of resin mentioned in this procedure are enough for two magnet rotors.

37. MAGNET ROTOR MOULD ASSEMBLY

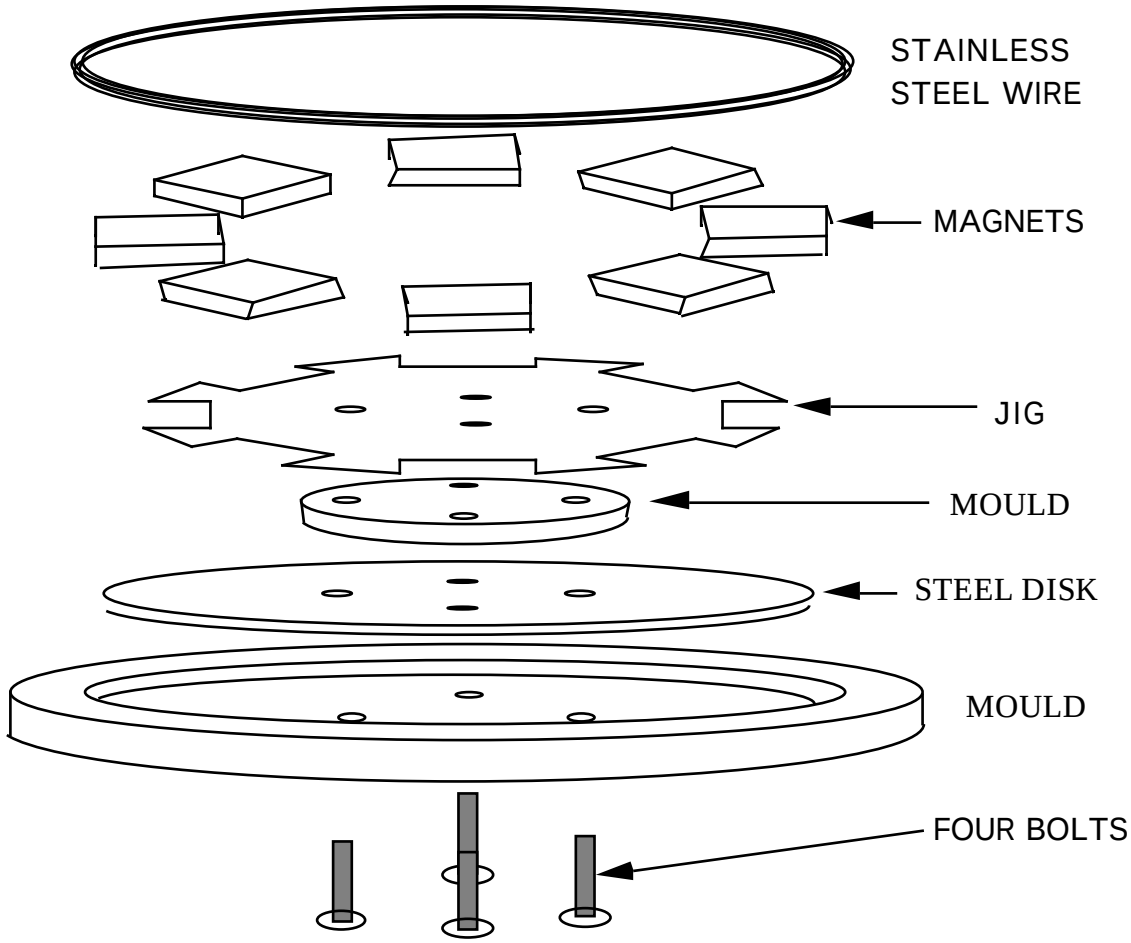

- Place four bolts through the holes in the outer mould, from below (see diagram 37). Lay a steel disk in the outer mould. Place the inner mould on top. Check the taper, and place the smaller face down, so that it can be easily removed after casting.

- Mix 200g of resin with 3cc catalyst. Paint it all over the steel disk. Add 20g of pigment for colour if required. Mix 100g talcum powder with the remains of the

resin. Pour this mix around the edge of the disk until it fills the gap, level with the top of the steel disk.

- Place the magnet positioning jig onto the bolts. Place the magnet blocks on the steel disk, within the positioning jig. Take care that the poles of the magnets alternate - north, south, north, south.. Before you place a magnet on the disk, check that the underside of the magnet is repelled by the one next to it (diagram 35). When all the magnets are in, remove the positioning jig, and use it for the next magnet rotor. Remember : position the magnet blocks differently, so that the two rotors attract each other.
  Take care not to knock the magnets out of place, or they will slide together under the magnetic attraction.

- Fit nuts to the four bolts and tighten the central disk down onto the steel disk.

- Mix 500g of resin with 7cc of catalyst. Add 300g talcum powder. Lay small strips of CSM between the magnets and into the gap at the edge. Add resin until the CSM is soaked. Poke it, or vibrate it, to remove bubbles.

- Lay the coil of stainless steel wire loosely around the outside of the magnets, below the top of the mould. Do not let the wire fall below the magnets. Let it sit on the CSM. Take care not to move the magnets around.

- Mix 500g of resin with 7cc of catalyst. Add 300g talcum powder. Fill the spaces between the magnets until the resin mix reaches the top of the mould.

Leave the rotor castings to set hard (several hours) before you remove them from the moulds. Be patient when removing the rotors from the moulds. Do not use violent hammer blows which may damage them. Hit the mould, and not the rotor.

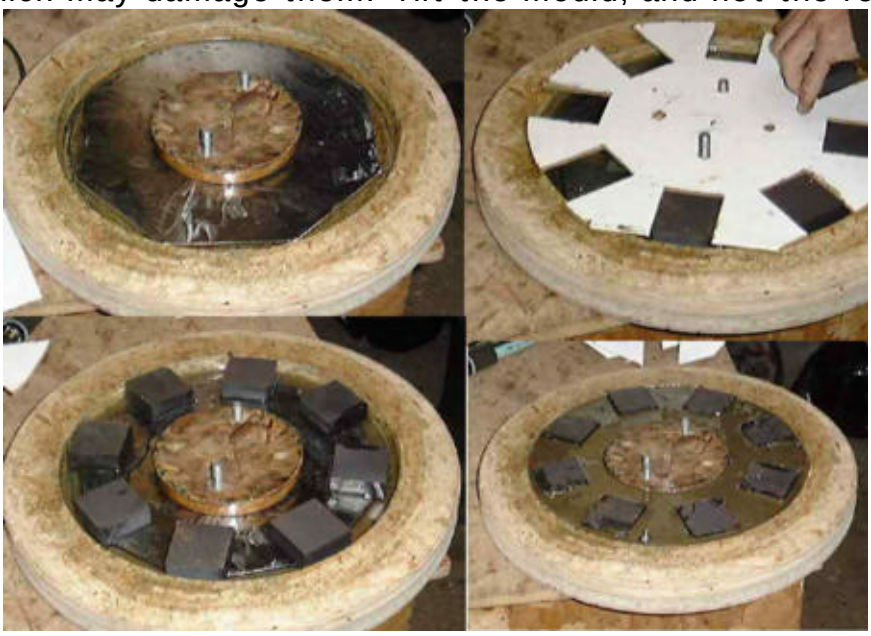

Four stages of the rotor casting procedure

6. Assembly

Rotor balancing

Each rotor should be balanced, or the PMG will shake when it is turning. The whole PMG needs to be balanced again at the end, because the rotors may not be mounted exactly centrally. A different procedure is used for the final balancing in Section 6.

To balance a magnet rotor (see diagram 38), first attach the PCD jig (from diagram 11), using four bolts. Then balance the rotor on a spike as shown:

38. ASSEMBLY OF THE BALANCING JIG AND SPIKE

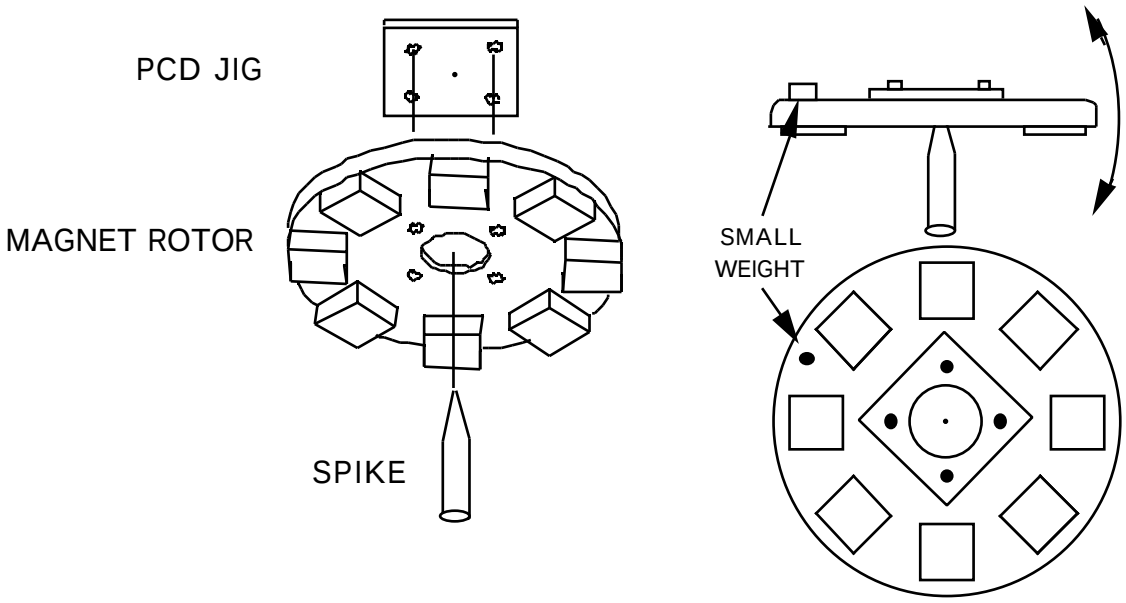

If the rotor will sit level, then it is balanced. If it will not sit level, then add small weights to it, or drill out some of the resin between magnets, until it will sit level. Turn the PCD jig around on the rotor, and check it again. Replace any weights with pieces of M10 threaded rod, screwed into holes in the resin between the magnets.

PMG spine and bearing hub (see diagram 39)

Make the spine of the PMG from a 380mm length of 'box section' steel tube 50x25x4mm (sometimes called RHS). Mark the exact centre of one large face, and then mark four 8mm holes, in the same way as for the 'stator studs jig'. It could also be possible to use the stator studs jig to help drill the holes.

The hole at the centre is 25mm (or to suit the shaft used). Drill this with a hole-saw, or bore it on a lathe.

39. THE BOX SECTION SPINE

DRILL HOLES WITH A PILLAR DRILL FOR ACCURATE ALIGNMENT

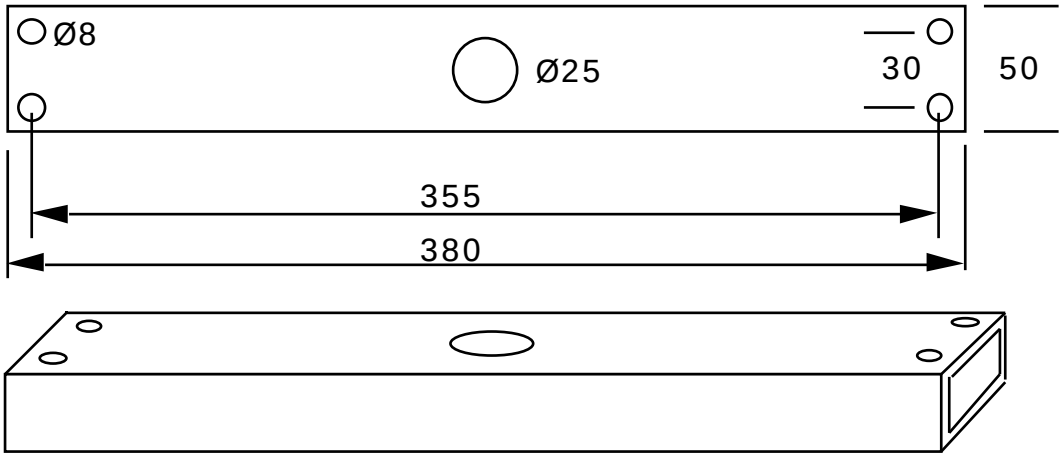

Weld the shaft in the 25mm hole. Take care to hold the shaft as square as possible (90 degrees) to the spine, when welding it.

The bearing hub (diagram 40) fits on the shaft. It has two 50x25 mm deep-groove ballraces in it, with a spacer between them. It needs a plastic cap over the end to keep dirt out of the bearings.

Do not forget to grease the bearings. Pack them with grease around half of their circumference only. Do not fill them entirely or they will become stiff to turn.

40. THE BEARING HUB

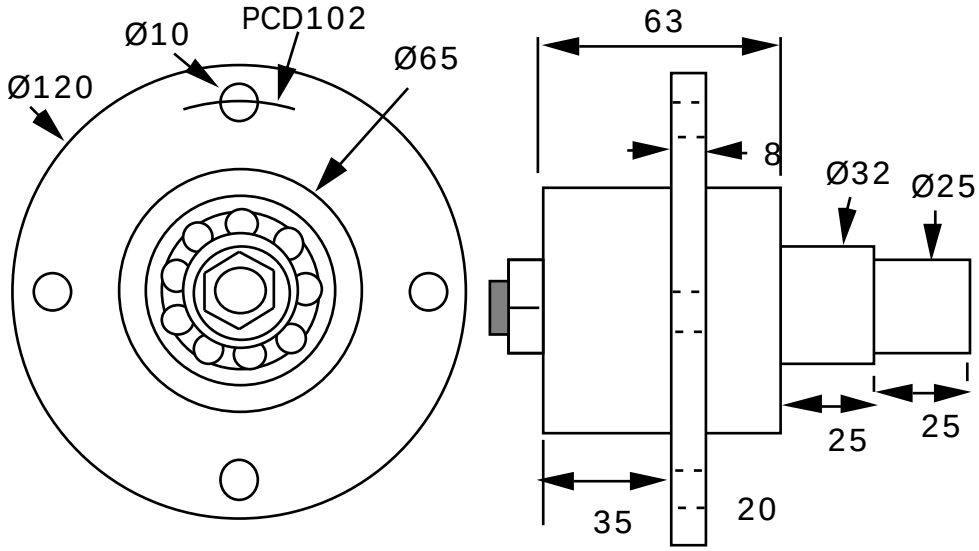

Photos show the rear magnet rotor being fitted

PMG assembly

- Cut 4 pieces of M10 threaded rod, each 200 long. They are used as studs to hold the magnet rotors to the hub. The wind turbine blades will also mount onto these studs.
- Put 6 nuts onto each stud) see diagram 41).
- Fit the studs through the holes in the bearing hub, from the front
- Put the rear magnet rotor onto the ends of the studs.
- Put a nut on the end of each stud, and tighten the other nuts down, so that the rear magnet rotor is attached to the back of the hub flange. The outer end nut should be sealed with paint or thread-sealant.
- Place the spine in a vice with the shaft upward. Place the hub onto the shaft. Do not hammer the magnet rotor while fitting. Fasten the hub to the shaft with a nut and split pin. Do not over tighten the nut. Fit a dust cover over the end of the bearing hub.

41. STUDS

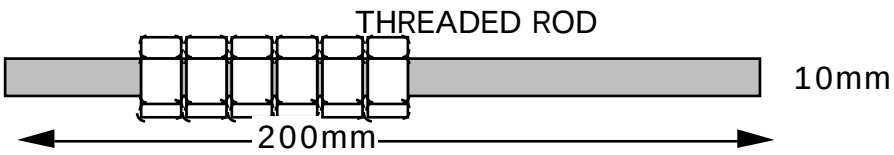

- Rotate the magnet rotor past a piece of brass wire. Do not use steel wire, because it is attracted to the magnets. The magnet faces should all be at the same height +/- 0.5mm. If not, use very thin shims between hub-flange and rotor-disk, to adjust the rotor.
- Using a spirit level, adjust the spine in the vice until the magnet rotor is level. Check both ways: north-south and east-west.
- Take the stator. Fit one 8 mm nut onto each support stud. Screw them right down.
- Place the stator over the rear magnet rotor

and fit its support studs into the holes in the spine. Fit more 8 mm nuts to the ends of the studs.

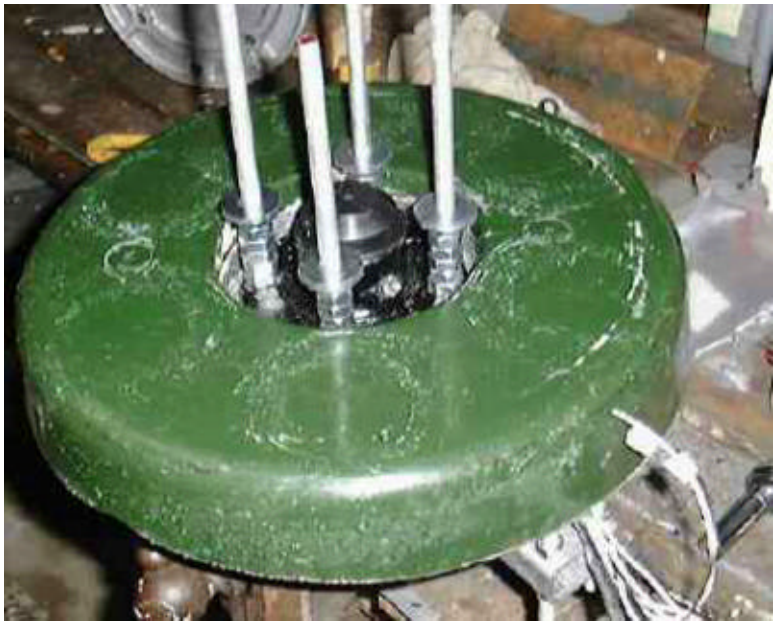
Fitting the stator

- Slowly lower the stator, and rotate the rear magnet rotor. Keep the stator level in both directions. You will hear a sound when the highest magnet touches the stator.
- Use the nuts to raise the stator <u>equally</u> 1mm on all four studs.
- Fit some washers to the 10 mm studs which hold the rotors. Always the same number of nuts and washers on each stud. A total of six nuts and two washers may be enough. Then fit the front magnet rotor.

- If the front magnet rotor is less than 1mm from the stator at any point, then add more washers under it. If it is much more than 1mm from the stator then remove washers. To find the correct number it is necessary to remove washers until it begins to rub the stator. Then add 1mm.
- When the front rotor is 1mm from the stator, then fit more nuts on top, and tighten them securely.

Fitting the front magnet rotor

<u>Electrical Parts</u>

The next section (Section 7) will describe how to connect the rectifier to the stator. I recommend using two 'single phase bridge rectifiers' (see diagram 42). They come in blocks 30 x 30 mm. The positive terminals are both connected to the battery positive terminal. (They are often at right angles to the other three.) Both negative terminals are connect to the battery negative. The remaining four terminals are for AC connection to the stator. You will probably only need to use three of these, connected as desired to suit the speed (see Section 7).

42. RECTIFIERS ETC.

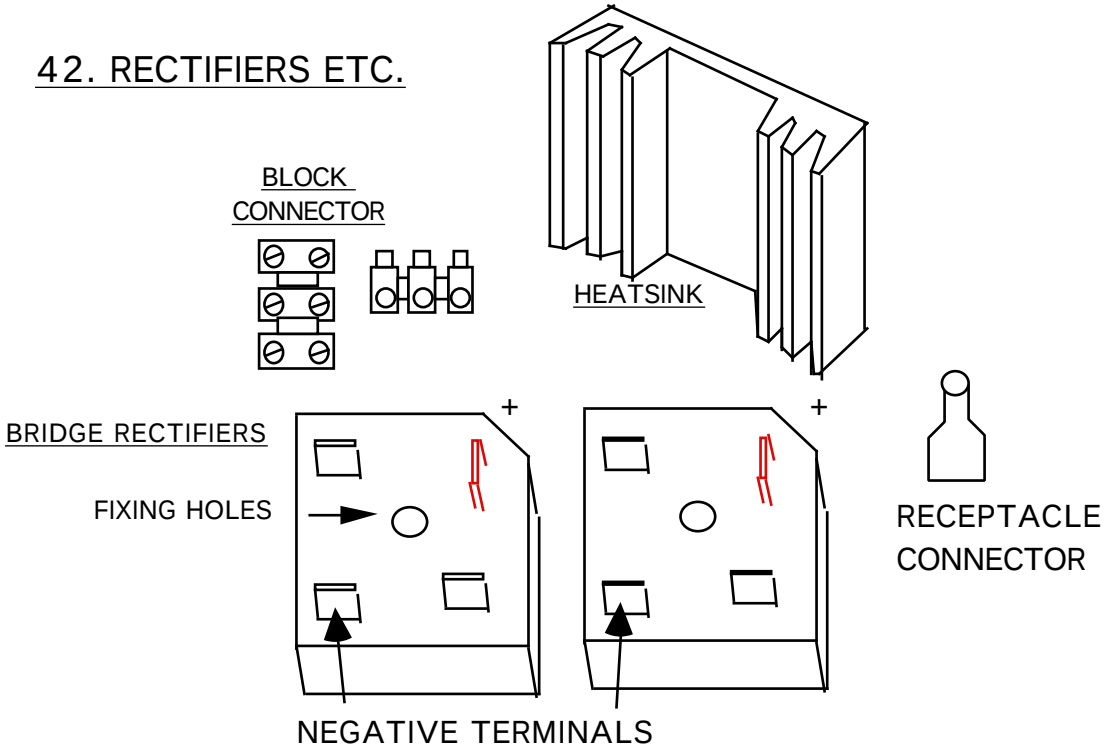

'Block connectors' are useful for connecting the wires from the stator. Alternatively soldering or crimping would be fine.

Use solder, or crimped 'receptacle' connectors, to connect wires to the rectifiers. Take care not to overheat the rectifiers while soldering. Bolt the rectifiers onto the heatsink, which will probably look like the one in the diagram, but can be any piece of aluminium approximately 250 grams or more in weight.

Keep all the connections under a weatherproof cover.

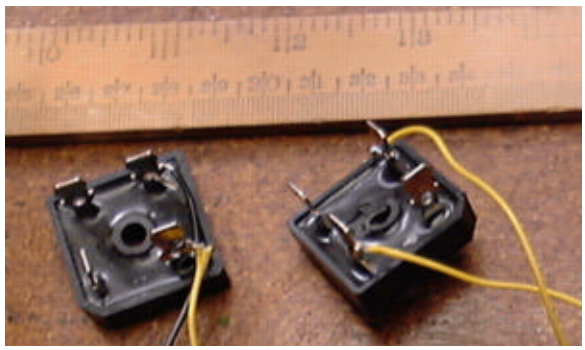

Two bridge rectifiers

7. Testing and connecting

Check that the PMG has no faults before it is put into use. It will be much easier to correct the faults now, than to return the unit to the workshop later.

Mechanical testing

Mount the spine vertically in a vice. The magnet rotors are free to move. The shaft is horizontal, as it will be in a wind generator. Check that the wires are not touching each other, creating a short circuit which makes the PMG harder to turn.

Check that the rotor will spin freely.

Spin the rotor and listen for sounds. There should not be any scuffing or brushing of the rotor, as it turns. It should spin freely for several seconds and gradually come to a halt. If it slows down rapidly then there may be an electrical fault, or the bearings may be over-tightened.

Grasp the stator with both hands. Push one side backward while pulling the other side forward, while the rotor is spinning. It must not touch the rotor. If there is a rubbing sound, then it may be necessary to disassemble the PMG and assemble it more carefully, with more space between the rotor and the stator. Or it may be possible to correct the problem by making minor adjustments to the stator mounting studs.

Stop the rotor with one of the studs in the 3 o'clock position (diagram 43). Hang an object weighing 100 grams on this stud. The rotor should begin to turn clockwise. If it will not turn, then the bearings may be over-greased or too tight.

43. HANG A WEIGHT ON ONE OF THE STUDS

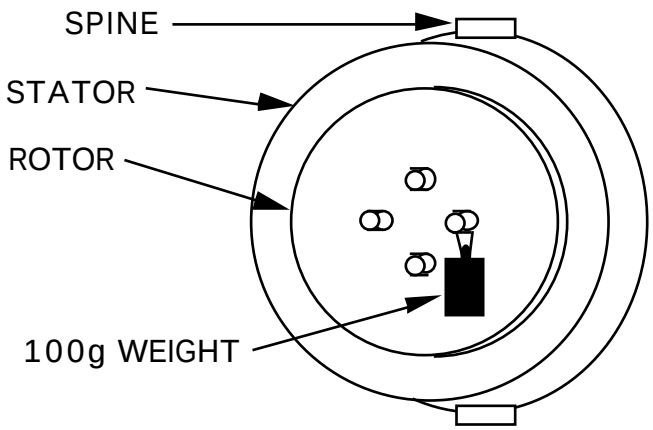

Checking the balance

The rotors have already been balanced in section 6. The wind turbine blades must also be balanced in the same way. When the unit is assembled, you should check the balance again using the new procedure below. This is necessary because the rotor disk may not be perfectly central on the PMG shaft.

Repeat the starting test (diagram 43) with each of the four rotor studs in the 3 o'clock position. Try different weights, and find the lightest weight which will start the rotor turning. If one stud needs much more weight than another, then the rotor is not balanced. Fix small weights to the rotor until the balance is correct.

Electrical testing

Coil connection test

It would be helpful to have a multimeter when testing the PMG, but it is possible to do some basic tests with a 3 volt torch bulb. See diagram 44.

- Connect the wires 1B to 4A, 2B to 5A, and 3B to 6A. (Series connections of pairs of coils which are in the same phase.)
- Set the multimeter to '10VAC' or similar (if you have one).
- Connect the meter, or a bulb, between the wires marked 1A and 4B.

44. TESTING THE COILS

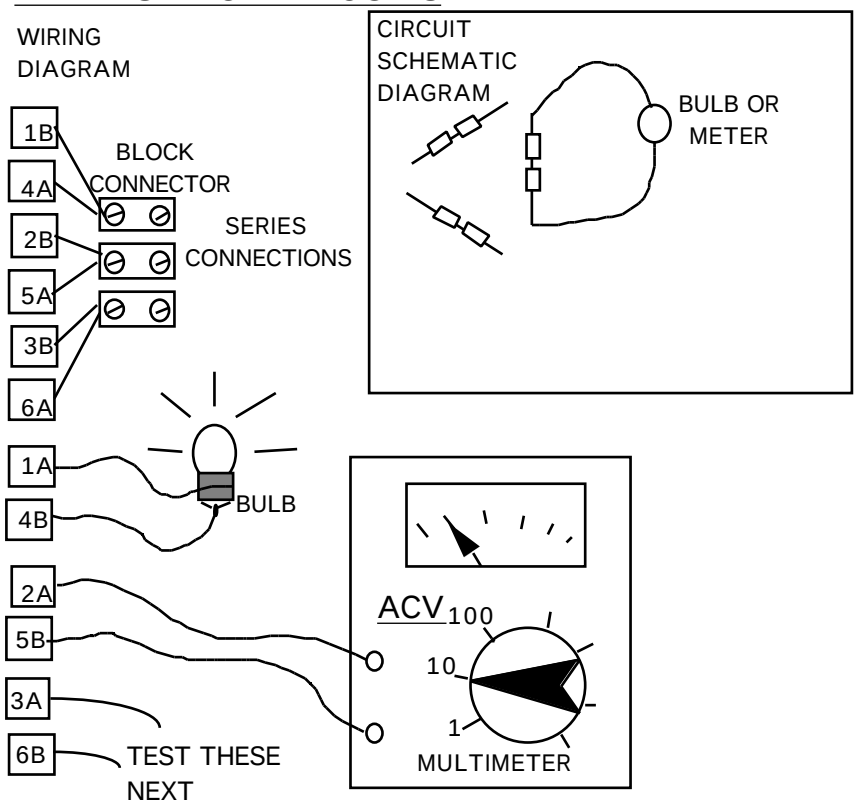

- Rotate the PMG slowly by hand, about one revolution per second.
- The meter should give a reading of about two volts, or the bulb should flicker.
- Repeat the test with two more pairs of wires: 2A and 5B, 3A and 6B.
  In each case the result should be the same.

If there is no reading, or a very low reading, then check that the series connections (1B-4A, 2B-5A, 3B-6A) are correct. If all these connections are good, then it is possible that one coil has been reversed (placed upside-down).

If any coils have been reversed, then it is necessary to do another test (see diagram 45), to find out which one is at fault. Connect 4B-2A and 5B-3A as shown in the diagram. Now test between 1A and 6B. There should NOT be more than a very small voltage. If there is a voltage, or the bulb lights up, then reverse the connections (swap A for B) on the coils until the voltage drops to a very low level.

When the faulty coil has been found, label the tails again, with A and B at the correct ends.

45. CHECKING FOR A REVERSED COIL

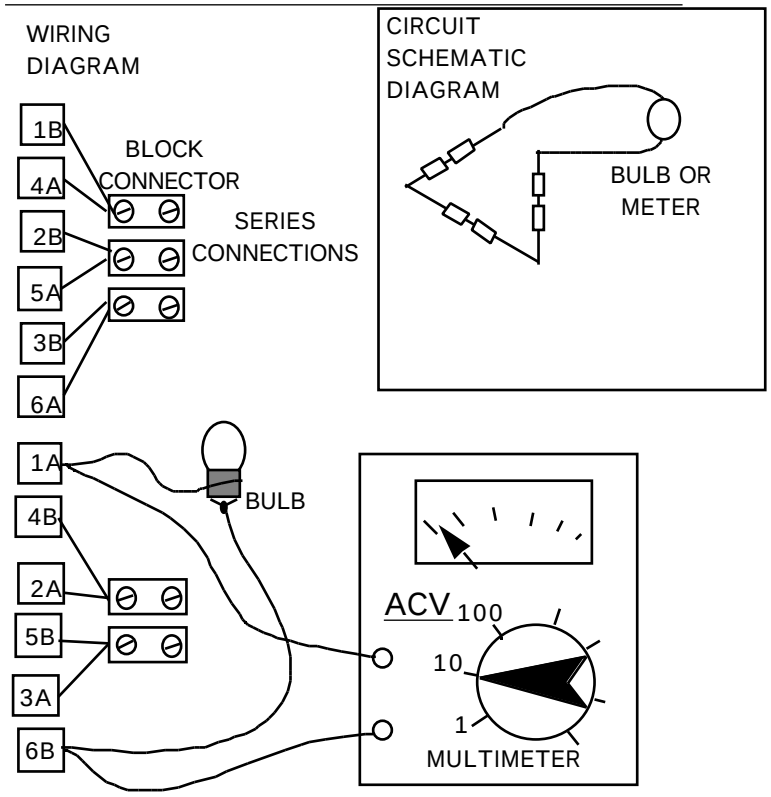

There will always be a small voltage in this test, because the coils are not perfectly positioned in the mould. If the test gives more than one volt, then it should be possible in future to make a better stator by placing the coils at exactly equal distances apart in the mould.

DC output test

When these tests have been completed and the results are correct, then connect the rectifier, as shown in diagram 46. Connect the tails 1A, 2A and 3A together. Connect each of 4B, 5B and 6B to any three of the rectifier AC terminals (marked with 'S' symbol). This is the 'star' connection. Connect a bulb to the output. If possible, also a multimeter on 10 VDC (or similar).

46. DC TEST

COILS CONNECTED STAR

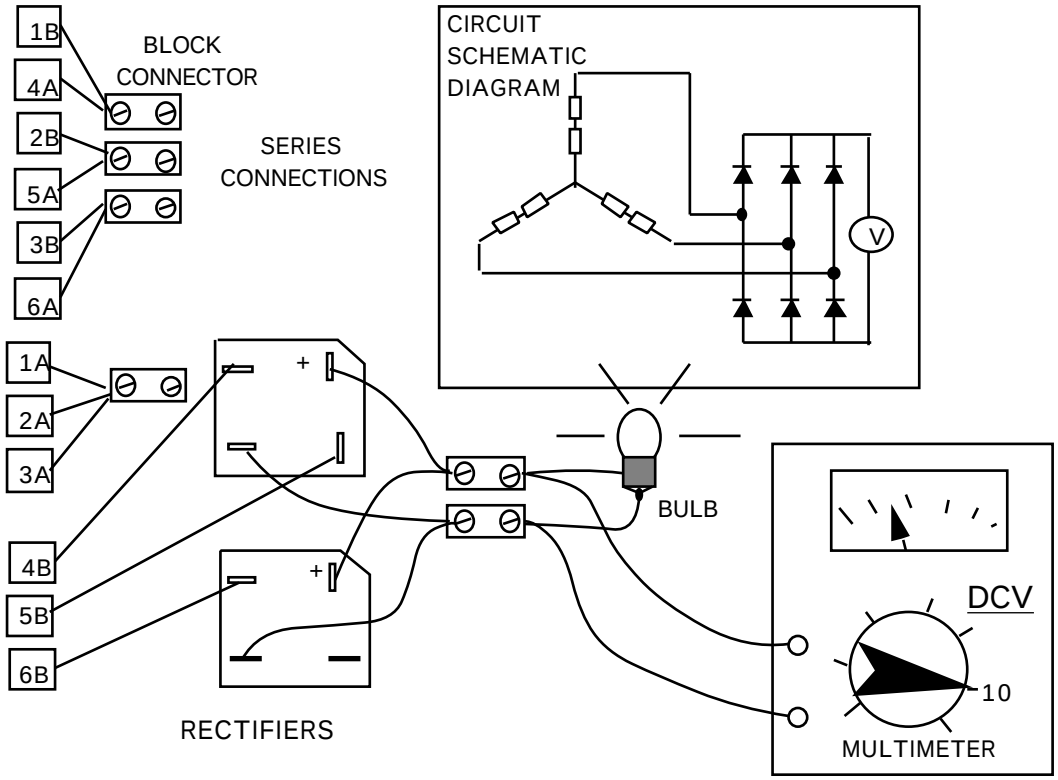

Rotate the rotor by hand as before, approximately one revolution per second (60 rpm). The meter should show a steady reading around 4 volts DC (or 3 volts with the bulb present). The bulb should glow with a steady light, not flickering as before.

If there is no reading, or the bulb flickers, then there is a faulty connection or a faulty rectifier. Check the connections carefully. Try another rectifier.

You can also test the PMG without a bulb or a meter. Simply connect the positive and negative wires from the rectifiers together (all four) in a 'short circuit'. Now try to turn the PMG. It should be stiff but smooth to turn. If it trembles as you turn it then there is a fault.

Connecting the PMG to the 12 volt battery

Star and Delta connections

For low windspeeds, connect the coils 'star' as above. For high winds, and higher current output, connect the coils 'delta', as in diagram 47.

47. DELTA CONNECTION

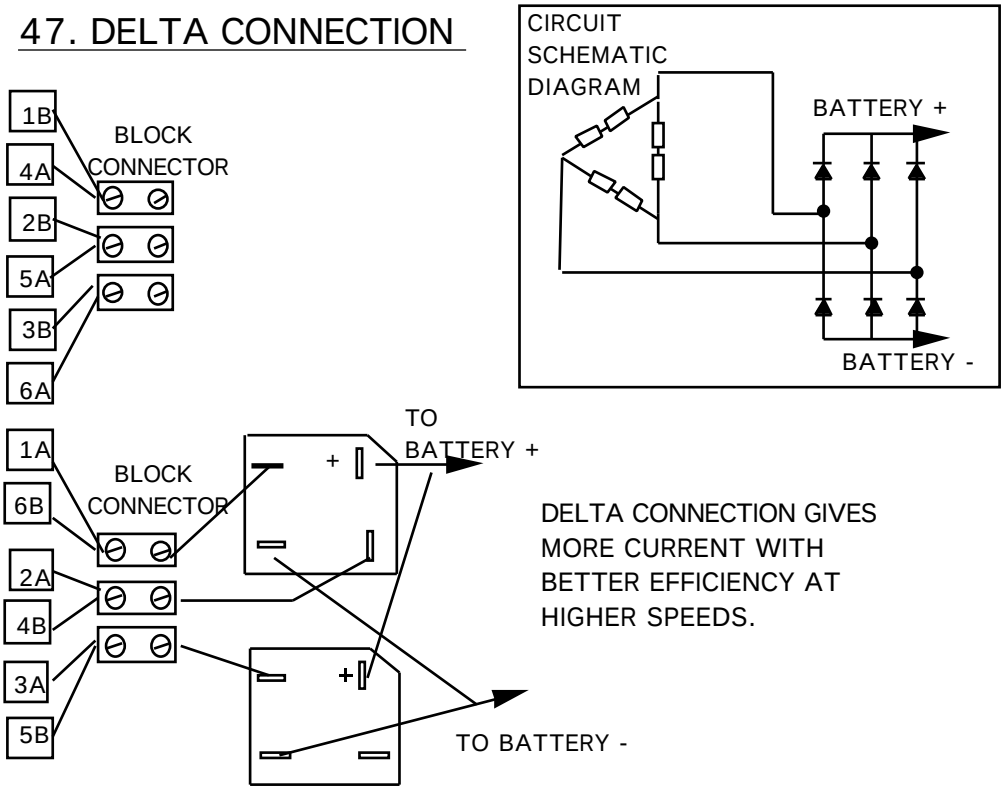

It is also possible to wire a relay (see diagram 48) which will switch the connections from star to delta and back as desired.

48. USING A RELAY TO CHANGE BETWEEN STAR AND DELTA

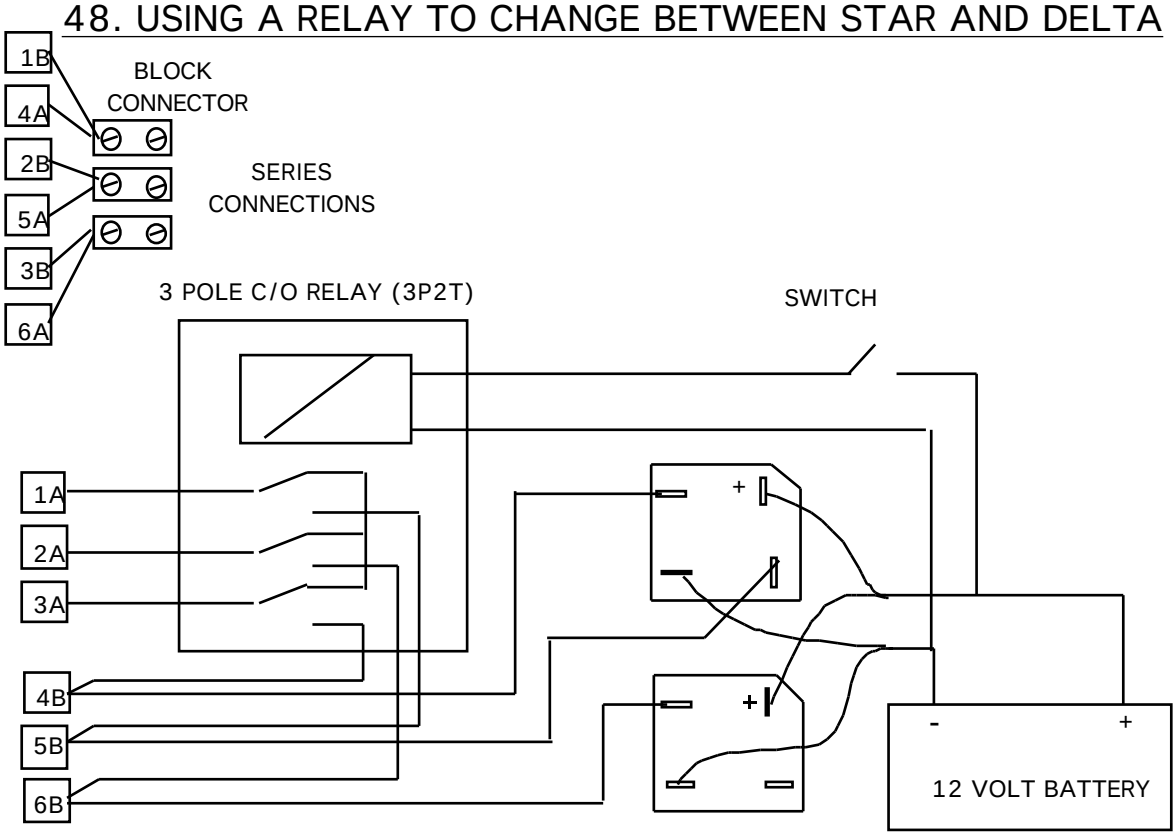

Yet another option for connecting the stator

At the time of writing this document, the above arrangement (using a relay to change the connections) is still under development. Later, an electronic control circuit will be available to automate the changeover. This is all very complex, and it so it can go wrong.

If you do not wish to have to change the connections between low and high windspeeds, then the PMG will still work. However, the efficiency will be slightly less. Three are two options:-

- If you expect mainly low windspeeds, then you can simply use the star connection shown in diagram 46.

- If you also need higher power in higher winds, you can use a 17AWG wire (1.2 mm diameter) to wind coils with 200 turns each. Then you can connect one group in delta and one group in star as shown in diagram 49. Note that you need six AC terminals on the rectifiers so you will need three rectifier blocks.

49. STAR/DELTA CONNECTION

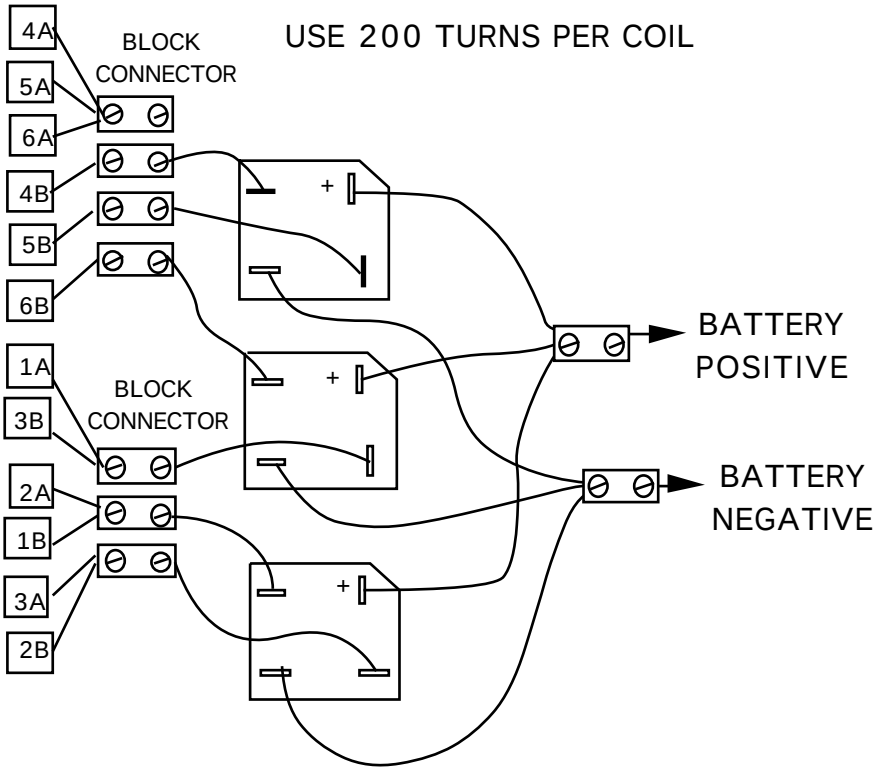

PMG-to-Battery Cable size

The cable from the PMG to the battery can be either three-phase-AC or DC. If the rectifier is mounted at the wind generator, then it will be DC. This is only slightly more efficient than three phase AC.

At 12 volts, the size of the cable must be large. Even if the current is only 15 amps, it is advisable to use a heavy cable. For a distance of 20 metres, the recommended size is 6 mm^2 (10AWG). The diameter (thickness) of each copper wire is about 3mm. A 15 amps current flowing in this cable will lose 15% of the power from the wind generator as heat in the cable. If the cable is longer, it should be heavier, in direct proportion.

Electrical Safety

There is no danger of electric shock from a 12 volt battery. But if the wind generator is disconnected from the battery, and running fast, then the voltage will be higher than 12 volts, maybe as high as 50 volts. Do not run the PMG at high speed without a battery connected.

The battery contains stored electrical energy. When there is a short-circuit fault in the wiring from the battery, for example the positive and negative wires touching each other, this energy is released in a very high current. The cable will heat up and burn. Therefore it is necessary to use a fuse or a circuit breaker on every wire which attaches to the battery positive terminal. Use one fuse for the wind generator and a separate one for the cable to the load (the lights, or whatever uses the power). See diagram 50.

50. CONNECTING THE BATTERY

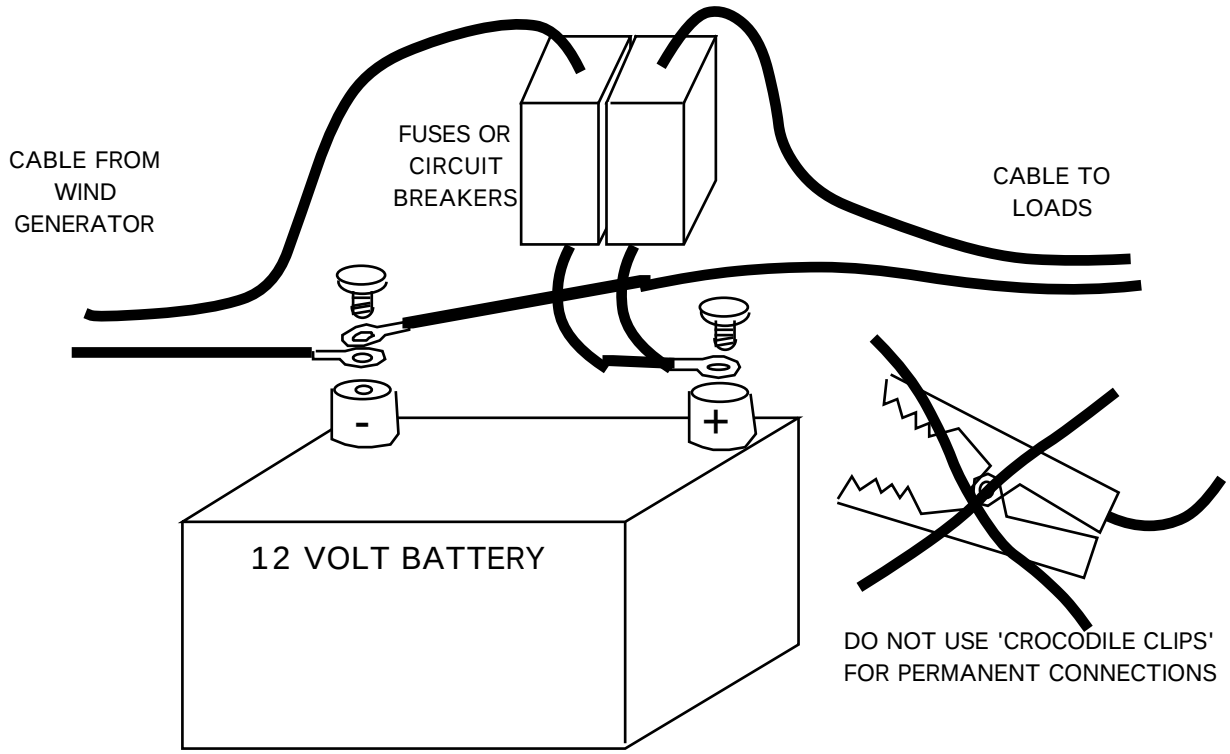

Battery acid is bad for the clothes and the skin. Do not splash it. Be especially careful of the eyes. If there is an accident, the best cure is to flush with plenty of water.

Batteries produce hydrogen gas, which is very explosive. Do not make sparks near a battery or it may explode, and throw acid in the eyes!

Battery Charging

Lead acid batteries should be kept in a charged condition. In the case of a wind powered system, you may have to wait for a wind to charge the battery. But be careful not to discharge the battery too deeply, or to keep it too long in a discharged state, or it will be damaged (sulphated) and become useless. Stop using a battery before it is fully discharged. If there is a problem with the wind generator, then charge the battery from another source within two weeks.

Charging the battery too hard will also damage it. At first, when the battery is discharged, it is safe to use a high current, but later the current must be reduced or the battery will overheat and the plates will be damaged. The best way to fully charge a battery is to use a small current for a long time.

Watch the battery voltage. If the battery voltage is below 11.5 volts, then it is being discharged too much. If the voltage is high (over 14 volts) then the battery charging current is too high. Use less current or more current in the loads to correct these problems. If there is no voltmeter available, then the user should watch the brightness of the lights and follow these rules:-

- Dim lights, mean low battery. Use less electricity!
- Very bright lights mean too much windpower. Use more electricity!

A good way to use more electricity is too charge more batteries in windy weather, perhaps charging batteries from neighbours' houses.

There are simple electronic circuits which can regulate the battery voltage automatically. They are called 'low voltage disconnects' and 'shunt regulators'. If the user is not willing to watch the battery voltage, then it is necessary to fit a disconnect and a regulator.

8. Additional information

Using polyester resin

Polyester is the plastic substance used in fibreglass work for building boats, car body parts, etc. Various things are added to it to make it work better for various jobs. Talk to your supplier and explain what the resin is to be used for. Your supplier should be able to help you.

Hardeners

There are two systems used to harden polyester resin, and each system uses two chemicals. For resin casting and most fibreglass work we use peroxide and cobalt. ('Body filler pastes' use the other system.)

Cobalt is a purple fluid. Ask the supplier to mix the right amount of cobalt into the resin. After it is mixed, the resin must be stored in the dark, or it will harden.

Peroxide is a hazardous chemical. Avoid contact with skin. Store in a PVC container, in the dark, below 25 degrees C. Never mix it with cobalt (except for the cobalt already in the resin), or it will explode. Mix very small quantities (about 1-2%) of peroxide with resin or it will overheat.

Wax-free 'Air inhibited' resin 'B'

This type of resin is used for 'gel-coats' on boat moulds, where the resin is going to be built up in stages. We do not recommend using this resin for the PMG. Any exposed surface will remain tacky indefinitely. Ask for resin 'A', or better still 'casting resin'.

Thixotropic additive

A special powder of very light silica is often added to resin to make it thicker, so that it is easier to spread it with a paint brush. This powder is not needed for casting resin . If it is already added, it does no harm.

Styrene monomer

Approximately 35% of the resin as supplied is styrene monomer. This is used for thinning the resin. It causes the smell. It is possible to add a little more styrene monomer (10%) to make it more liquid.

Pigment

Pigment is used to colour the casting, if a coloured finish is desired. Add pigment to the first mix, which will be on the outside of the casting. Add no more than 10% pigment to the mix. It is not necessary to add pigment to the resin. Without pigment, the casting is transparent and the coils are visible.

Fibreglass

The resin has almost no strength without fibreglass. It is available in sheets of 'chopped strand mat' (CSM). It is also possible to buy just chopped strands, and to mix them with the resin. This is useful for the magnet rotor castings. Add a little resin to the fibreglass, and press out all the air bubbles, before adding more resin.

Talcum powder

Talcum powder is a cheap filler which can be mixed with the resin after the peroxide has been added. It makes the resin mixture much cheaper, and a little thicker. Resin can be mixed with up to twice its own weight of talcum powder. The powder also helps to reduce the heat build-up in large resin castings.

Using painted moulds in Peru

Mould preparation

Polyurethane varnish

Ordinary paint should not be used on moulds. Better to use nothing. If possible, use polyurethane varnish. This will prevent moisture coming out of a mould made from wood, plaster or clay. Smooth the varnish off with sandpaper before polishing it.

Polish

Polish the mould several times before using it first time. Rub all the polish off with a rag and then leave it some hours and do it again. Silicone polish is not compatible with PVA release agent. Use wax polish.

PVA Release agent

Paint this over the mould and let it dry. It forms a sheet of PVA, which greatly helps to separate the casting from the mould.

Using the PMG for hydro power

The PMG can also be used for charging batteries from small hydro turbines. It will be ideal for low head, low power sites, because it is efficient even when producing only a few watts. It can also be used for higher head higher power sites, because it is capable of high power outputs at high rpm.

There is a danger of rust damage to the magnet rotors in a very humid or wet environment such as in a hydro application. It is advisable to galvanise or plate the steel components with zinc.

Low head sites

Here are some examples of conditions where the PMG could work without modification (connected delta). It would need a simple 'impulse' runner mounted on the front magnet rotor.

Head (metres)	10	10	5
Flow (litres/second)	1	5	5
Net Power(watts)	40	200	100
pcd runner (cm)	37	27	23
speed (rpm)	325	440	360

High head, high power

At higher rpm, higher power is available from the PMG. Doubling the speed can also double the output voltage and the current, offering four times as much power with the same efficiency as before. The PMG may overheat under these conditions, so it may be better to keep the current the same, and have better efficiency. Much will depend on whether the water is used for cooling.

In any case, increasing the speed improves the PMG's power handling abilities considerably. It would be risky to run a wind turbine at high speeds, because of the problem of gyroscopic forces on the rotors, but this problem does not arise with hydro power, because the shaft axis is fixed.

If higher voltage is not required, then the stator winding can be changed to give 12 volts (as before) at the higher speed, but deliver higher current without overheating. This is done by connecting the coils of each phase in parallel instead of in series. Or the coils can be wound with fewer turns of thicker wire. This is better still, because parallel and delta connections can suffer from parasitic internal currents.

Do not use the star/delta connection (diagram 49) for hydro power where the speed is constant. There is no advantage.

Excerpt from Secrets of Cold War Technology
by Gerry Vassilatos
pages 86-93

The following recital concerns Tesla's early developmental work on Radiant Energy:

The "fountain effects" which surrounded his station are not responsible for the ever-growing power observed by Tesla. This was the result of an incoming aetheric supply for which his Transmitter gave low-resistance passage. The incoming aetheric flow preferred the transmitter terminal to adjacent, more resistant rock. This gradual flow process soon evidenced itself in magnification effects, ever increasing volumes of flowing aether being measured in his system. Some have argued that Tesla merely stored energy in the earth, extracting it for use later. This is a basic error, the result of imagining the Colorado Springs experiment to be one consisting entirely of electrical effects (Grotz). It is in this light alone that we may comprehend the evident anomalous magnification of aetheric phenomena in his Colorado Springs photographs.

Once aetheric energy had been obtained from space, it had to be conveyed to consumers. Tesla had arranged for the automatic activation of aether rebroadcast circuits in the station. The downpouring Aether were automatically shunted to side circuits through capacitors. In these side branches, aether pulsed through dielectrics and expanded over the surfaces of his smaller coils. Thus stimulated to more rapid pulsation rates, they were ready for "rebroadcast" . Being rebroadcast away from the station through large vacuum globes, poised on elevated platforms, these were the aetheric pulsations which would be utilized in home and industry. Simple and compact receivers would be established in every home and factory, set to receive aetheric current through the ground. Tests were thrilling. Distant appliances, lamps and motors, responded to the powerful pulsations as if physically connected to the station by wire. A small house-like structure was established some 26 miles away from the station. In it, an aetheric power receiver was tuned to one of the rebroadcast rates. The 200 lamps housed within this structure, each of 50 watts rating, all remained brilliantly illuminated throughout the test runs. This apparently stimulated enough excitement and concern for word of this development to get back east.

Engineers were enraged. Those who had missed his most early shift from alternations to impulses, failed to comprehend the vast distinction between "stationary waves" and "standing waves". The quizzical use of specific terms such as these was a Tesla trademark, one designed to puzzle the minds of those who criticized him the most. With the exception of a very few colleagues who continually made related discoveries in aether physics, most academes had chosen to remain totally ignorant of the new study area. This for example was the case with the Teslian use of the term "frequency" and of "resonance" words which had completely different meanings for Tesla. Teslian "frequency" refers to the repetition of pulses per second. Teslian "resonance" refers to conditions in which aether flows with little or no resistance through systems, whether proximal or widely separated.

Photographs, which Tesla sent to his "financiers" , were analyzed and reexamined repeatedly for their encrypted meaning. None could decipher the cunning puzzle which Tesla had set before them. Tesla stated that photographs of the aetheric whitefire streamers required several minutes' exposure time before registering the faintest sort of impression. Most of the plates were therefore the results of more than 20 minutes' exposure time. There are a very few plates which, though stated to be the result of "one brief switch closure", are covered with dense, thick white streamers. One fraction of a second closure on the system switch resulted in a twenty minute or more Aether avalanche. Magnifying Transformers continued discharging long after the initial impulse had been withdrawn.

AETHER POWER RECEIVERS

Tesla returned to New York exultant. He was about to establish a new world precedent. Venture capitalists were everywhere, looking for their opportunity to enter the "new energy" market. Unknown to Tesla, his station, its tower, the large coils, the capacitors, and all the other marvelous apparatus, which demonstrated free aetheric power

to the world, had been acquired for demolition. Tesla simply went forward, securing new funds from Morgan and others toward the development of a fully functional industry sized station in Long Island. Wardenclyffe Station. Wardenclyffe would be his greatest achievement. Here he would broadcast power to the world, along with a communications network which could span the globe with innumerable available channels. Aether wave communications. Several stations would augment the power of this first station, from which he proposed to rebroadcast 10,000 horsepower. The Station, a wonderful visionary structure which dominated the view of Shoreham, Long Island was not quite complete before it too was seized by court injunctions and torn down.

Tesla was summoned to appear in court. The amazing transcript of this proceeding has been secured by Mr. Leland Anderson who has since published a wonderful treatise with this transcript as the centerpiece. Tesla said he wept when he saw the ruined tower at Wardenclyffe. The train ride back from Shoreham was filled with tears and the recounting of every tragedy which marked his life. But the dreams did not die there. In the absence of financial means to construct his gigantic stations, Tesla found ways to build small systems which accomplished the very same objectives. Replacing the large overhead capacity terminal with material substitutes, radioactive metals in combination with other dense elements, Tesla was able to accrete and focus aether pulsations of super short duration.

Tesla was then plunged into a hellish time, where all but one would neither help or hear him. Dr. John Hammond requested Tesla to be the permanent guest on his family estate. There, amid the family life of Hammond Castle, Tesla shared his dreams and technology. Together, he and Dr. Hammond developed the science of robots and remote guidance. Tesla, impoverished by the inhuman treatment wrought on him by the financial establishment, was nonetheless quite alive and valuable to those having singular ambition to dominate the world radio trade. For a very long time, Nikola Tesla was considered "out of circulation. "

But later years turned a kindlier edge toward him. Long after his principle foe had died, other sought him out. Employed by the Rockefellers in their RCA venture, Tesla was given the task of restructuring the now failing Marconi System. David Sarnoff did not permit Tesla the dignity of working under his own name! Nevertheless it was Tesla, not Sarnoff, who redesigned the insufficient RCA radio systems to sufficiently turn a profit for the owners. It is significant that Tesla was not allowed to change the basic design from wave radio to radiant communications. What he achieved required certain strange conversions within the wave radio circuitry, intensifying radiant signals until the operation was much improved, and then converting the amplified signals back to waves once again. All of this was achieved within the chassis, certain of which are now being studied. These Tesla experimental models are typical of the Tesla style, containing no resistors or other such components. These models use simple transmitter tubes and employ a great number of symmetrically disposed conical air coils.

While working for RCA under the name "Terbo", his mother's maiden name, Tesla maintained his two penthouse suites atop the Hotel New Yorker. One penthouse was his living quarters, the other a full scale research laboratory. Tesla designed and built small compact and portable aether energy receivers, a developmental path which he pursued to his passing. Tesla had long investigated the use of pure dielectric field energy, a stream of aether whose individual pulsations were so very ultrashort that science had never found a means to harness the energy impulses. Tesla later held the opinion that dielectric current was composed of radiant particles, aetheric in nature. He therefore sought natural sources in which native dielectric fields could be used as they were, without the need for mammoth voltage "shocks" to stigmata aetheric currents. Tesla knew that if dielectric aether streams could be directly engaged, a true world of the future would be in his grasp. Furthermore, the mass-production of thousands and ten thousands of such power receivers would be an unstoppable army. An army of miniatures which could never by torn down.

The implications were fathomless. Tesla had found a truly new and wonderful approach to an old problem. Once because his technology had not yet grown to the level where this was possible, he had to settle for impressing the naturally prolific aether streams with "extra" pulsations. The Transmitter method was costly, gargantuan, and an easy target for

those who hated the notion of a future world where dreams rule humanity. Dielectric energy fascinated Tesla. It was everywhere, a natural emanation whose potentials far outproportioned conventional notions of power. Indeed, the early conception of natural radioactivity as an energetic source was nothing in comparison to the potential power inherent in dielectric streams. The new technology would use ultra-short pulsing aether streams, energies which occupied most of his latter press conferences in latter years. Study had convinced Tesla that the apparently smooth and native force characteristic of dielectric field energy was actually a particulate flux, a succession of ultrashort impulses. The derivation of such an impulse train would solve all energy needs for eternity with an elegance far out-reaching his own Magnifier Transmitter.

Of a truth, dielectric energy was native source of incredible proportion and virtually eternal duration. Able to use such a kinetic source, one could dispense entirely with the Power Transmitters necessary in stimulating and impressing "extra pulsations" on the aether flow. Tesla often defined the dielectric field as a natural flow of aether particles, one which seemed impossible to utilize through lack of appropriate resistive materials. In order to obtain momentum from the flowing particles of a dielectric field, one required special matter poised in equally special symmetries. The otherwise continuous flow could be absorbed directly, being exchanged to utilities, appliances, and other applications.

Tesla had already considered the condition of charged particles, each representing a tightly constricted whorl of aether. The force necessarily exerted at close distances by such aetheric constrictions was incalculably large. Aetheric ponderance maintained particulate stability. Crystalline lattices were therefore places within which one could expect to find unexpected voltages. Indeed, the high voltages inherent in certain metallic lattices, intra-atomic field energies, are enormous. The close Coulomb gradient between atomic centers are electrostatic potentials reaching humanly unattainable levels. By comparison, the voltages which Tesla once succeeded in releasing were quite insignificant. In these balanced lattices, Tesla sought the voltages needed to initiate directed aetheric streams in matter. Once such a flow began, one could simply tap the stream for power. In certain materials, these aether streams might automatically produce the contaminating electrons, a source of energy for existing appliances. One could theoretically then "tailor" the materials needed to produce unexpected aetheric power with or without the attendant detrital particles. Tesla did mention the latent aetheric power of charge forces, the explosive potentials of bound aether, and the aetheric power inherent in matter. In these studies, Tesla sought replacement for the 100,000,000 volt initiating pulses which natural law required for the implementation of space aether. Tesla had long been forced to abandon those gigantic means by other, less natural laws.

Thereafter, Tesla shifted his attentions from the appreciation of the gigantic to an appreciation of the miniature. He sought a means for proliferating an immense number of small and compact aether power receivers. With one such device, Tesla succeeded in obtaining power to drive an electric car. But for the exceptional account which follows, we would have little information on this last period in Tesla's productive life, one which very apparently did not cease its prolific streams of creativity to his last breath. The information comes through an unlikely source, one rarely mentioned by Tesla biographers. It chanced that an aeronautical engineer, Derek Ahlers, met with one of Tesla's nephews then living in New York. Theirs was an acquaintance lasting some 10 years, consisting largely of anecdotal commentaries on Dr. Tesla. Mr. Savo provided an enormous fund of knowledge concerning many episodes in Tesla's last years.

Himself an Austrian military man and a trained aviator, Mr. Savo was extremely opened about certain long-cherished incidents in which his uncle's genius was consistently made manifest. Mr. Savo reported that in 1931, he participated in an experiment involving aetheric power. Unexpectedly, almost inappropriately, he was asked to accompany his uncle on a long train ride to Buffalo. A few times in this journey, Mr. Savo asked the nature of their journey. Dr. Tesla remained unwilling to disclose any information, speaking rather directly to this issue. Taken into a small garage, Dr. Tesla walked directly to a Pierce Arrow, opened the hood and began making a few adjustments. In place of the engine, there was an AC motor. This measured a little more than 3 feet long, and a little more than 2 feet in diameter. From it trailed two very thick cables which connected with the dashboard. In addition, there was an ordinary 12-volt storage battery. The motor was

rated at 80 horsepower. Maximum rotor speed was stated to be 30 turns per second. A 6-foot antenna rod was fitted into the rear section of the car.

Dr. Tesla stepped into the passenger side and began making adjustments on a "power receiver" which had been built directly into the dashboard. The receiver, no larger than a short-wave radio of the day, used 12 special tubes, which Dr. Tesla brought with him in a box-like case. Mr. Savo told Mr. Ahler that Dr. Tesla built the receiver in his hotel room, a device 2 feet in length, nearly 1 foot wide, a ½ foot high. These curiously constructed tubes having been properly installed in their sockets, Dr. Tesla pushed in 2 contact rods and informed Mr. Savo that power was now available to drive. Several additional meters read values which Dr. Tesla would not explain. No sound was heard. Dr. Tesla handed Mr. Savo the ignition key and told him to start the engine, which he promptly did. Yet hearing nothing, the accelerator was applied, and the car instantly moved. Tesla's nephew drove this vehicle without other fuel for an undetermined long interval. Mr. Savo drove a distance of 50 miles through the city and out to the surrounding countryside. The car was tested to speeds of 90 mph, with the speedometer rated to 120.

After a time, and with increasing distance from the city itself, Dr. Tesla felt free enough to speak. Having now become sufficiently impressed with the performance of both his device and the automobile. Dr. Tesla informed his nephew that the device could not only supply the needs of the car forever, but could also supply the needs of a household "with power to spare". When originally asked how the device worked, Tesla was initially adamant and refused to speak. Many who have read this "apocryphal account" have stated it to be the result of an "energy broadcast". This misinterpretation has simply caused further confusions concerning this stage of Tesla's work. He had very obviously succeeded in performing, with this small and compact device, what he had learned in Colorado and Shoreham.

As soon as they were on the country roads, clear of the more congested areas, Tesla began to lecture on the subject. Of the motive source he referred to "a mysterious radiation which comes out of the aether". The small device very obviously and effectively appropriated this energy. Tesla also spoke very glowingly of this providence, saying of the energy itself that "it is available in limitless quantities". Dr. Tesla stated that although "he did no know where it came from, mankind should be very grateful for its presence". The two remained in Buffalo for 8 days, rigorously testing the car in the city and countryside. Dr. Tesla also told Mr. Savo that the device would soon be used to drive boats, planes, trains, and other automobiles. Once, just before leaving the city limits, they stopped at a streetlight and a bystander joyfully commented concerning their lack of exhaust fumes. Mr. Savo spoke up whimsically, saying that they had "no engine". They left Buffalo and traveled to a predetermined location which Dr. Tesla knew, an old farmhouse barn some 20 miles from Buffalo. Dr. Tesla and Mr. Savo left the car in this barn, took the 12 tubes and the ignition key, and departed.

Later on, Mr. Savo heard a rumor that a secretary had spoken candidly about both the receiver and the test run, being promptly fired for the security breach. About a month after the incident, Mr. Savo received a call from a man who identified himself as Lee De Forest, who asked how he enjoyed the car. Mr. Savo expressed his joy over the mysterious affair, and Mr. De Forest declared Tesla the greatest living scientist in the world. Later, Mr. Savo asked his uncle whether or not the power receiver was being used in other applications. He was informed that Dr. Tesla had been negotiating with a major shipbuilding company to build a boat with a similarly outfitted engine. Asked additional questions, Dr. Tesla became annoyed. Highly concerned and personally strained over the security of this design, it seems obvious that Tesla was performing these tests in a desperate degree of secrecy for good reasons. Tesla had already been the victim of several manipulations, deadly actions entirely sourced in a single financial house. For this reason, secrecy and care had become his only recent excess.

The Free Energy Secrets of Cold Electricity

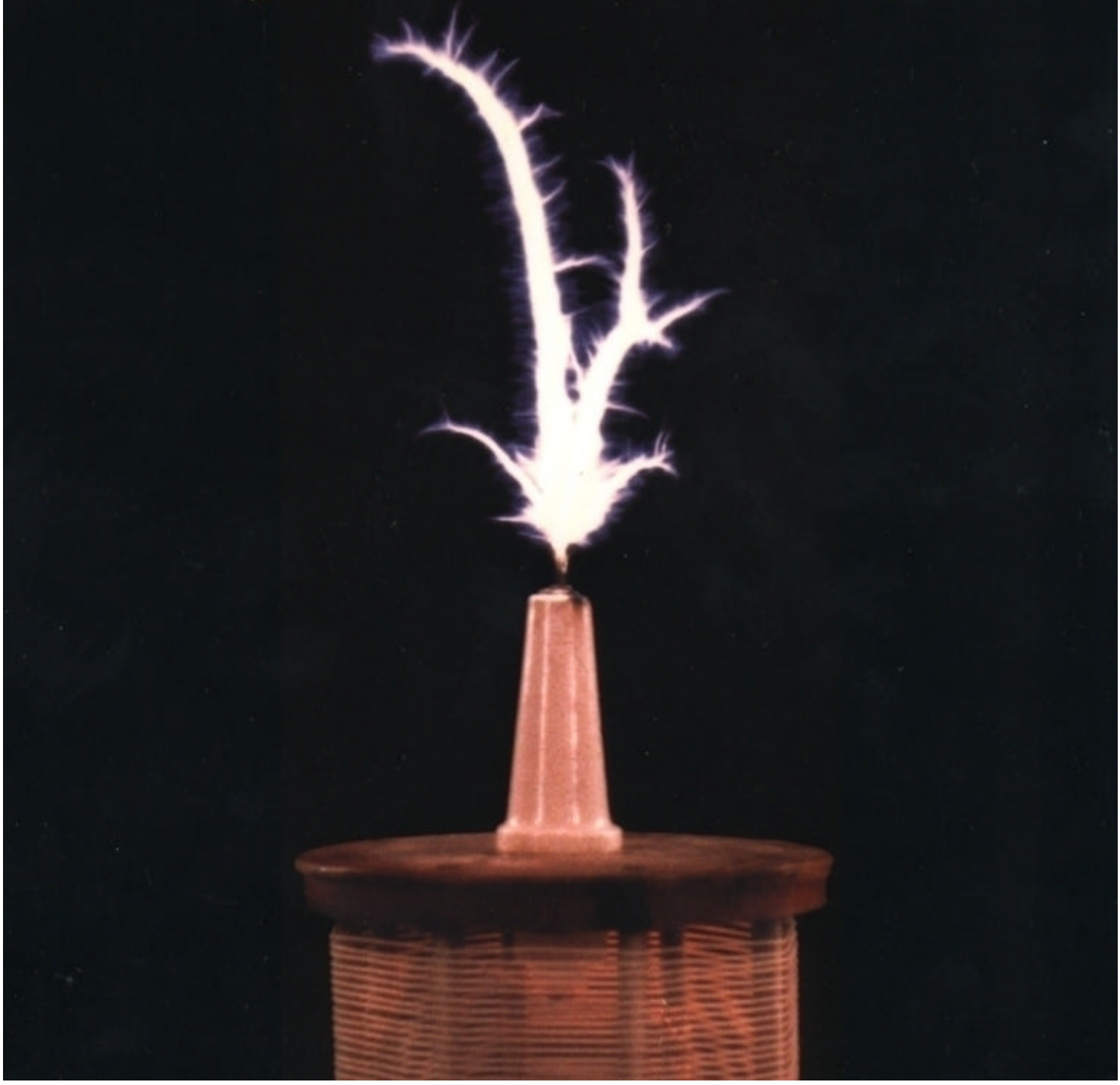

The Free Energy Secrets of Cold Electricity

Peter A. Lindemann, D.Sc.

Published By:
Clear Tech, Inc. PO Box
37 Metaline Falls, WA
99153 (509) 446-2353

TABLE OF CONTENTS

List of Illustrations vii

Preface ix

Chapter 1

The Edwin Gray Mystery 1

Edwin Vincent Gray (1923-1989) 13

Chapter 2

The Rosetta Stone 15

Chapter 3

Verifying Tesla's Secret 31

Chapter 4

Decoding Gray's Patents 47

Appendix I

Three US. Patents by Edwin V. Gray 65

Appendix II

Three U.S. Patents by Dr. Nikola Tesla 101

Appendix III

Two Articles by Dr. Peter Lindemann 117

References 129

LIST OF ILLUSTRATIONS

1 First Article from *The National Tattler* xii
2 Edwin Gray Demonstrating His Circuit 2
3 Tom Valentine With "Cold" Light Bulb in Water 2
4 Second Article from *The National Tattler* 3
5 Article from *Probe The Unknown* 4
6 Letter from EVGray Enterprises 5
7 Cover of *NewsReal* Magazine 6
8 Article from *NewsReal* Magazine 7
9 Gray's Motor Patent Cover Sheet 8
10 Gray's Motor Patent Schematic 8
11 Gray's Circuit Patent Cover Sheet 9
12 Gray's Conversion Tube Patent Cover Sheet 9
13 Gray's Circuit "Schematic" 10
14 *Secrets of Cold War Technology: Project HAARP and Beyond* 12
15 Tesla's Mechanical Circuit Controller 32
16 Magnetically Quenched Spark-Gap 34
17 Hot Air Quenched Spark Gap 34
18 Tesla's Electrical Transformer 35
19 Tesla's Transformer Patent Diagram 36
20 Tesla's Magnifying Transmitter Illustration 37
21 Tesla's Magnifying Transmitter as Described in the Patent 39
22 Illustration from a Tesla Lecture, February 1893 40
23 Close-Up of "Method of Conversion" 41
24 Radiant Energy Discharge 42
25 Summary of the Electro-Radiant Event 44
26 Gray's Circuit "Schematic"
and the Simplified Gray's Circuit "Schematic" 46
27 Common Features of Tesla's Magnifying Transmitter
and Gray's Cold Electricity Circuit 49
28 Gray's Circuit "Schematic" 50
29 Gray's Conversion Tube Diagram 53
30 Edwin Gray and His # 6 Motor Prototype 54
31 Edwin Gray and Fritz Lens in 1973 55
32 Gray's Inductive Load 56
33 Tesla's Radiant Energy Method 57
34 Probable Schematic for Gray's Cold Electricity Circuit 58
35 Paul Baumann's Testatika Machine 61
36 Testatika Machine Lighting a Light Bulb 61

PREFACE

Ever since I first encountered the work of Edwin Gray more than a quarter of a century ago, I have attempted to unravel the mystery of how he produced free energy. Only recently has sufficient information emerged to enable me to finally piece all of the clues together and reach a definitive conclusion. In "The Free Energy Secrets of Cold Electricity," I share this 27-year odyssey and the knowledge that has evolved along the way.

Edwin Gray discovered that the discharge of a high voltage capacitor could be shocked into releasing a huge, radiant, electrostatic burst. This energy spike was produced by his circuitry and captured in a special device Mr. Gray called his "conversion element switching tube." The non-shocking, cold form of energy that came out of this conversion tube powered all of his demonstrations, appliances, and motors, as well as recharged his batteries. Mr. Gray referred to this process as "splitting the positive." These claims were incomprehensible; however, because Gray did not reveal anything about the conditions the circuit had to create in order to produce the effect. This was the mystery.

It wasn't until I correlated Gray's clues with an analysis by Gerry Vassilatos, published in 1996, detailing Nikola Tesla's experimental work in the late 1880"s, that the picture started coming into focus. These experiments resulted in the discovery of what Tesla called "radiant energy" and led to the development of his Magnifying Transmitter. This material was the clue that unraveled the Gray mystery.

An exhaustive comparison between Gray's "cold electricity" systems and Tesla's "radiant energy" systems leads to the reasonable conclusion that these two discoveries are one and the same. Finally, in this light, Gray's circuit schematics are "corrected" and all of the omissions are filled in. It is my belief that enough information is provided herein to enable anyone interested in the pursuit of free energy to reproduce these "cold electricity" effects with relatively simple equipment. It is my hope that thousands of engineers and experimenters will now begin looking into reproducing this, the "Mother Lode" of Free Energy effects.

Many people have given invaluable assistance and counsel during this journey of mine, and I wish to acknowledge them with profound thanks. To Tom Valentine, for aggressively pursuing the story of Ed Gray, for his excellent and accurate reporting, for his tremendously revealing photographs, and for his exceptional generosity in making his entire archive available to me. None of this would have happened without his contribution.

To Eric Dollard for being the first one in this generation to truly understand Nikola Tesla's work with impulse currents, and for repeatedly demonstrating this knowledge with experimental apparatus. To Gerry Vassilatos for so brilliantly articulating and accurately conveying the story of Tesla's discoveries, and to David Hatcher Childress, the publisher of Gerry's book, for giving me unusually wide latitude in quoting large sections of this book.

To the late Bruce DePalma, for teaching me how to think about physics - the way things really are. To Trevor Constable, for erasing all doubt in my mind about the reality of the Ether, and for relentlessly pursuing its practical application for the betterment of humanity. To Tom Brown, for introducing me to most of these people, and for broadening my horizons in countless ways.

To Alison Davidson, for permission to use the color image of the etheric discharge from Eric Dollard's magnifying transmitter, taken at the "Integration" in the summer of 1986. To Dorothy O'Connor and Jacqueline Lindemann, for their assistance in editing this book.

And finally, of course, to Edwin V. Gray, Sr. and Dr. Nkola Tesla who, after all, discovered this astonishing technology.

Peter A. Lindemann, D.Sc.
December 2000

"When the great truth accidentally revealed and experimentally confirmed is fully recognized that this planet with all its appalling immensity is to electrical currents, virtually no more than a small metal ball, and by this fact many possibilities, each baffling imagination and of incalculable consequence, are rendered absolutely sure of accomplishment; when the first plan is inaugurated and it is shown that a telegraphic message, almost as secret and noninterferrable as a thought, can be transmitted 'to any terrestrial distance, the sound of the human voice, with all of its intonations and inflections, faithfully and instantly reproduced at any other point of the globe, the energy of a waterfall made available for supplying light, heat or motive power, anywhere - on sea or land or high in the air - humanity will be like an ant heap stirred up with a stick: see the excitement coming!"

...Nikola Tesla, 1904

Man Creates Engine That Consumes No Fuel; Invention Could Change History by 1984

By TOM VALENTINE

Copyright 1973, The National Tattler

(First of a series)

A CALIFORNIA INVENTOR has found a way to create limitless electric power without using up fuel — potentially the greatest discovery in the history of mankind.

Edwin Gray Sr., 48, has fashioned working devices that could:

•Power every auto, train, truck, boat and plane that moves in this land — perpetually.

Warm, cool and service every American home — without erecting a single transmission line.

•Feed limitless energy into the nation's mighty industrial system — forever.

•And do it all without creating a single iota of pollution.

Already, the jovial, self-educated Gray is forcing scientists to uproot their most cherished beliefs about the nature of electro-magnetism.

Eventually, his discovery will transform the economic base upon which the society of the entire planet has rested up to this point.

Despite the ever-present danger from the petroleum and other power giants who face business extinction within the decade because of his invention, Gray and his associates in EvGray Enterprises have demonstrated its worth publicly — an act requiring great courage.

And TATTLER is proud to report for the first time in America the complete nature of Gray's astounding system.

Displaying the kind of open honesty that made America great, Gray and his partners stress the fact that they want the whole world to benefit from their new technology.

"I WON'T ALLOW it to be bought up and buried by big money interests," Gray told TATTLER during the exclusive demonstration.

"I tried for 10 years to get American interests to pay some attention, but I've been tossed out of more places that most people ever think of going into."

Neither government agencies nor private enterprise would listen to Gray, so he turned in frustration to foreign interests. The innovative Japanese were eager to listen.

"AS SOON AS word got out that the Japanese were interested in what we're doing, the Americans started flocking around."

Today, the small shop facility in Van Nuys is crawling with visitors from every segment of U.S. industry and finance.

"The big money boys from Wall Street started coming around," Gray said, with a touch of defiance in his tone.

"A bunch of them came in and suggested I file bankruptcy and get rid of all my backers and friends. Then they talked about giving me 20 million shares of a new corporation at $25 a share."

Gray was being offered a deal worth more than $4 billion — on paper.

"THAT SURE sounded rich, but I know darn well they would have fixed it up to sell that corporation off somewhere for a dollar and leave me holding 20 million shares of nothing."

The key men at EvGray include Richard S. Hackenberger, an

Edwin Gray Sr.

electronics engineer who formerly worked for Sony and Sylvania corporations and the U.S. Navy; and Fritz Lens, a former Volkswagen mechanic who knows nearly as much about the fantastic electrical system as Gray.

All the corporate officers agreed that they are determined to get around the money roadblocks and bestow the discovery upon the world.

TATTLER was given a thorough demonstration of Gray's "impossible-but-true" methods for using electricity.

THE FIRST demonstration proved that Gray uses a totally different form of electrical current a powerful, but "cold" form of the energy.

A six-volt car battery rested on a table. Lead wires ran from the battery to a series of capacitors which are the key to Gray's discovery. The complete system was wired to two electro-magnets, each weighing a pound and a quarter.

"Now, if you tried to charge those two magnets with juice from that battery and make them do what I'm going to make them do, you would drain the battery in 30 minutes and the magnets would get extremely hot," Gray explained.

"I want you to watch what happens."

As Lens activated the battery, a voltmeter gradually rose to 3,000 volts. At that point, Gray closed a switch and there was a loud popping sound. The top magnet hurled into the air with tremendous force and was caught by Hackenberger. A terrific jolt of electricity had propelled the top magnet more than two feet into the air—but the magnet remained cold.

"The amazing thing," Hackenberger said, "is that only 1 per cent of the energy was used—99 per cent went back into the battery."

GRAY EXPLAINED, "The battery can last for a long time, because most of the energy returns to it. The secret to this is in the capacitors and in being able to split the positive."

When Gray said "split the positive" the faces of two knowledgeable physicists screwed up in bewilderment.

(Normally, electricity consists of positive and negative particles. But Gray's system is capable of using one or the other separately and effectively.)

"He means we have to rewrite the physics textbooks," Hackenberger grinned. It has been the engineer's job in recent months to formulate Gray's system and put it in writing.

"That's not an easy task because this system actually defies everything I've ever learned."

Gray said, "I never had no schooling in electronics or physics, so nobody told me it was impossible."

THE "IMPOSSIBLE" part of the demonstration was the lack of heat generated in the magnet. Heat is one of the biggest problems faced by electrical technology. Also "impossible" is the fact that only the "positive" nature of the energy was used.

"This thing is in its infancy," Gray explained. "When the full potential of American technology starts working with it, the results will astound everyone."

A further proof that he has an unusual source of power with unlimited potential was demonstrated next.

"We've been popping those magnets apart for the past 18 months with that same battery and it's still got a full charge. Now I want you to watch this:"

Gray showed this TATTLER reporter a small 15-amp motorcycle battery. It was hooked up to a pair of his capacitors which in turn were hooked up to a panel of outlets.

HE FLICKED a switch and the tiny battery sent a charge into the capacitors. He then plugged in six 15-watt electric light bulbs on individual cords—a 110-volt portable television set and two radios. The bulbs burned brightly, the television played and both radios blared—and, yet, the small battery was not discharging.

"You couldn't begin to get all this current out of that battery under ordinary circumstances," Gray said.

"This is the most amazing thing I've ever seen," exclaimed C.V. Wood Jr., president of the McCulloch Oil Corporation, who was also present at the demonstration. He began looking around for hidden outlets from the wall.

"MAY I PROVE it doesn't come from any wall plug?" Gray offered.

A 40-watt light bulb screwed into an ordinary extension socket was

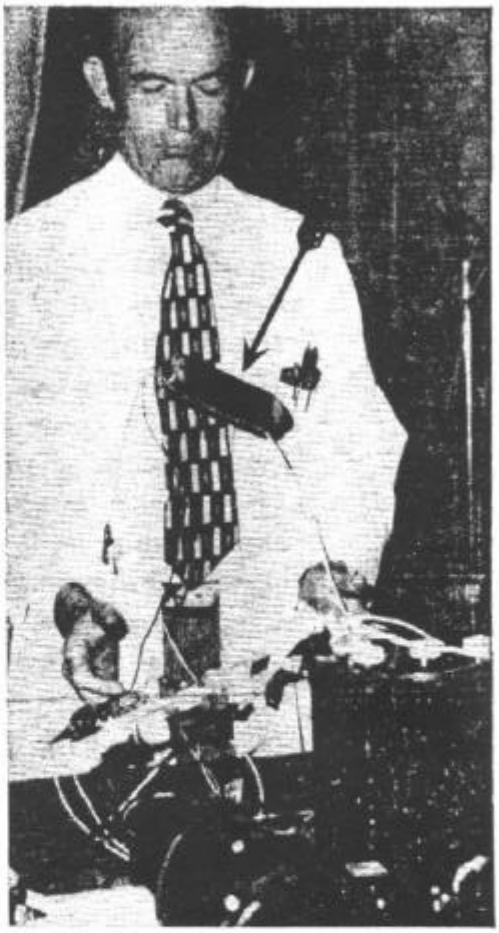

MAGNET JUMPS when jolted with "cool" electricity.

plugged into the panel powered by Gray's system. The bulb lit, then Gray dropped it into a cylinder filled with water.

"What would be happening if this was getting ordinary power right now?" Gray asked, as he stuck his hand in the water with the glowing light bulb.

"You'd be electrocuted and that thing would be popping and sputtering until the fuses blew," Wood replied.

This reporter then put his finger into the water with the light—no shock.

"Gentlemen, this is a new manifestation of electricity," Hackenberger said.

THE ENGINEER told the astounded onlookers that no laws of physics were being violated, but a new application of electricity has been discovered and put to work.

Gray, one of 14 children, comes from Washington, D.C. As a small boy, he was fascinated by electricity, magnets and gadgets in general.

"I really got excited about electricity when they tested the first radar across the Potomac in 1936. I was 11 years old then and visions of Buck Rogers danced in my head."

He learned about radar during his World War II hitch in the Navy and "I've been messing around with coils and capacitors ever since."

HE LEARNED to "split the positive" in 1958 and spent the next dozen years finding the funds to put his discovery to work.

Any abbreviated explanation of Gray's system is an oversimplification of the technical aspects of this tremendous breakthrough, but some of the best minds in the U.S. are now working with Gray to further improve his discovery.

Gray held the 40-watt bulb up out of the water and said: "You know, to light this bulb takes millions of dollars in power plant facilities, transmission lines and circuitry. With my capacitors, I can provide power to any home for a couple hundred dollars."

The economic impact of that statement is beyond the imagination—not to mention the ecology and anti-pollution benefits.

NEXT WEEK: Electro-magnetic automobile engine.

Figure 1
First Article from *The National Tattler*

Chapter 1: The Edwin Gray Mystery

My interest in Free Energy began in the summer of 1973 when I first picked up The National Tattler. In an article authored by reporter Tom Valentine, (Figure 1) the headline read: "Man Creates Engine That Consumes No Fuel; Invention Could Change History by 1984." Well, I was young and gullible but I'd sure never seen a newspaper headline like that before. The article went on to say:

A California inventor has found a way to create limitless electric power without using up fuel, potentially the greatest discovery in the history of mankind. Edwin Gray, Sr., 48, has fashioned working devices that could power every auto, train, truck, boat and plane that moves in this land perpetually; warm, cool, and service every American home without erecting a single transmission line; feed limitless energy into the nation's mighty industrial system forever, and do it all with-out creating a single iota of pollution.

After several paragraphs devoted to such subjects as raising capital and bringing a working team together, the article continued to describe two very interesting tests which the writer had personally witnessed at Gray's laboratory in Van Nuys, California in the company of several other scientists:

The Tattler was given a thorough demonstration of Gray's "impossible but-true" methods for using electricity. The first demonstration proved that Gray uses a totally different form of electrical current - a powerful but "cold" form of the energy. A 6 volt car battery rested on a table. Lead wires ran from the battery to a series of capacitors, which are the key to Gray's discovery. The complete system was wired to two electro-magnets, each weighing a pound and a quarter. "Now if you tried to charge those two magnets with juice from that battery and make them do what I'm going to make them do, you would drain the battery in 30 minutes and the magnets would get extremely hot," Gray explained. "I want you to watch what happens." As Fritz Lens activated the battery, a voltmeter gradually rose to 3,000 volts. At that point, Gray closed a switch and there was a loud popping sound. The top magnet hurled into the air with tremendous force and was caught by Richard Hackenberger. A terrific jolt of electricity had propelled the top magnet more than two feet into the air -but the magnet remained cold. `The amazing thing,' Hackenberger said "is that only 1% of the energy was used - 99% went back into the battery." Gray explained, "The battery can last for a long time because most of the energy returns to it. The secret to this is in the capacitors and in being able to split the positive." When Gray said "split the positive" the faces of two knowledgeable physicists skewed up in bewilderment. (Normally, electricity consists of positive and negative particles, but Gray's system is capable of using one or the other separately and effectively.)

Tom Valentine then described the second demonstration as shown in the photograph in Figure 2.

Gray showed this Tattler reporter a small 15-amp motorcycle battery. It was hooked to a pair of his capacitors, which in turn were hooked up to a panel of outlets.

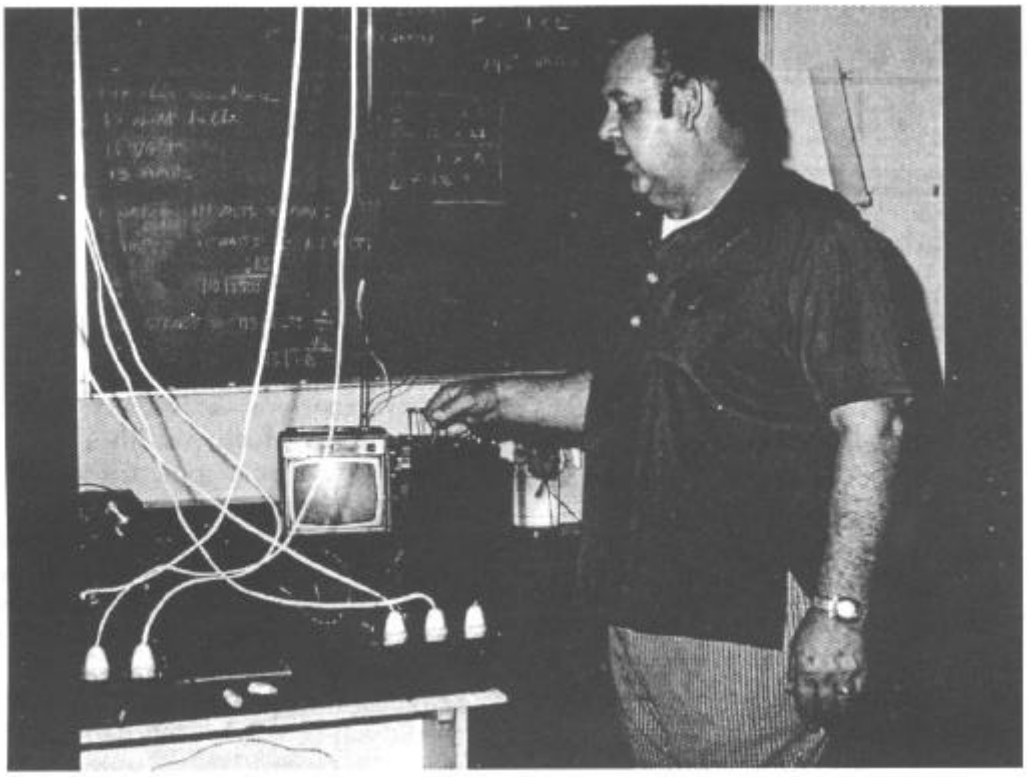

Figure 2
Edwin Gray Demonstrating His Circuit

Figure 3
Tom Valentine With "Cold" Light Bulb in Water

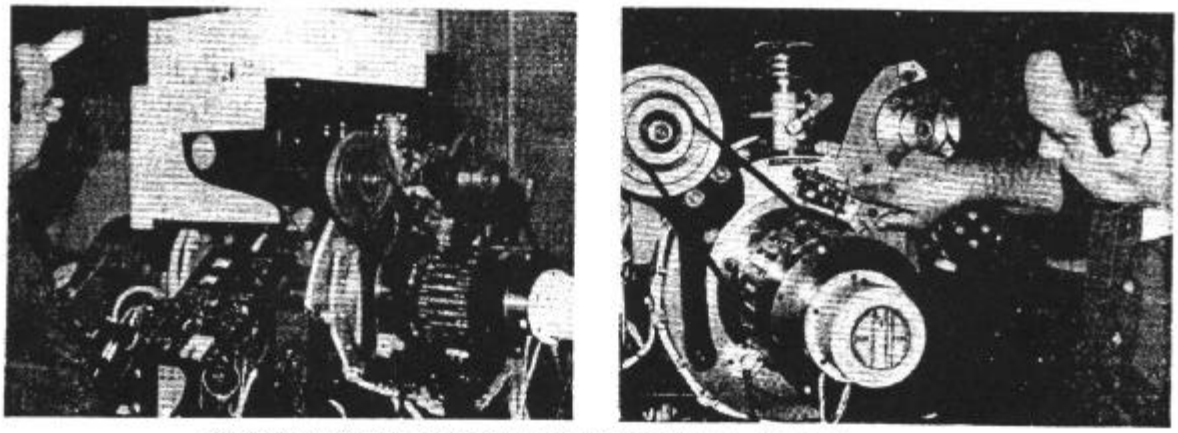

THIS IS THE 'EMA,' which can run perpetually on batteries that recharge themselves, develop 1,000 horsepower per unit.

Miracle No-Fuel Electric Engine Can Save U.S. Public $35 Billion a Year in Gasoline Bills

BY TOM VALENTINE

Copyright 1973, The National Tattler

(Second of Two Articles)

An inventor and his small but stubborn team of engineers has devised the most revolutionary technological advance in the history of mankind: A power source that uses no fuel.

As reported exclusively last week in TATTLER, the astonishing new system creates electricity without consuming the world's dwindling supply of fossil fuel, without creating pollution, and without using costly and unsightly transmission lines.

The first and most vital outcome of the theory that is forcing the science of physics to revise its fundamental assumptions is the "EMA" electric engine—a power plant that dooms noisy, dirty gasoline motors.

That means that the nation would no longer have to consume expensive and befouling gasoline. According to figures from the American Petroleum Institute, the anticipated consumption this year is 100 billion gallons at least $35 billion worth at the pump.

Invented by Edwin Gray Sr., 48, of Van Nuys, Calif., the engine has been tested and is being perfected by him and his associates in EvGray Enterprises.

The silent, pollution-free EMA recycles its own energy and can run indefinitely.

Gray's prototype is powered by four six-volt batteries which "will wear out before they'll run down," as the inventor puts it.

Edwin Gray Sr.

"WE CAN GO up to 1,000 horsepower with a single unit, or down to a miniature toy size."

The latter units, in fact, will be among the first products EvGray manufactures. They'll run off a tiny battery unit.

How?

Gray and his engineers, Richard Hackenberger and Frits Lens, explained to TATTLER that they have found a way to use both the positive and negative particles of electricity separately.

The technicians demonstrated for this reporter the phenomenon of electromagnetic repulsion—the power source for the EMA.

TWO MAGNETS, each weighing 1 3/4 pounds were repelled apart with an explosive force, but the magnets did not heat up and 99 per cent of the energy recycled to the battery.

The same "cold" energy repelling magnets, arranged on a flywheel, run the motor.

Hackenberger, an electronics specialist, explained: "A series of high-voltage energy 'spikes' are developed by our circuitry. These energy units are transferred to a control unit, which acts much like a distributor in an internal combustion engine."

The control unit is the key to the motor's efficiency. It regulates the energy spikes to determine the polarity (north or south) and directs the voltage into selected electromagnets in the main unit.

"Every time a magnet is charged, most of the energy is recycled back into the batteries without losing power," Hackenberger said.

THE EMA has been tested thoroughly. Its efficiency is undisputed.

"Engineers and physicists who see it operate have a hard time believing their eyes," Gray said. "One professor from UCLA insisted we had some sort of laser beam running it, and even though we moved it from room to room, he wouldn't believe it."

While the motor was running, Gray spun it around in a complete circle to demonstrate that it operated at any position.

The experimental model engine is 42 inches long, 18 inches wide and 22 inches high about the size of a standard six-cylinder motor.

IT TURNED better than 2,500 revolutions per minute for more than 30 minutes. The power input came from the four six-volt batteries. At the end of the trial they were tested and found to be as fully charged as they were at the beginning.

It generated 100 horsepower and 66 pounds of constant torque. The brake horsepower tests out at 32.05.

The motor has only two bearings which require lubrication, so maintenance costs will be minimal; it operates at a maximum temperature of about 170 degrees and is cooled by compressed air.

There was no vibration and the noise level was about the same as any kitchen appliance, this reporter observed.

It started with the flick of a switch. It can be accelerated or slowed by any mechanical device which programs the control unit. This means the customary foot pedal could be used for driving purposes.

GRAY DISCOVERED how to make this remarkable engine back in 1968. He fought frustration and skepticism for 18 years before finally getting about $1.1 million to help build and prove the prototype.

The search for an efficient, clean engine has cost taxpayers nearly a billion dollars in government research grants over the years.

Ed Gray did it on a fraction of that and a new direction for mankind has been uncovered.

Unique All-Girl Diving Co.

Christine Bouse, the girl at the left, may be the only teenage girl in the world to run her own underwater salvage company. While other girls her age are busy with boys, clothes and record albums, 16-year-old Chris spends most of her time in scuba diving gear at the bottom of some Florida river or lagoon. Chris, together with her partner, 18-year-old Linda Marquis, and five other 18-year-old girls, operates Sea Queen Salvage—probably the only licensed commercial diving company anywhere staffed entirely by attractive young women. Chris, pictured here with her sister, Carol Beth, works, however. She inherited her skill in the diving business from her father, Clyde (Buddy) Bouse, (at right) a 22-year veteran of underwater salvage work. "Chris is as good as diver as I'll ever be," said her father.

Figure 4
Second Article from *The National Tattler*

He flicked a switch and the tiny battery sent a charge into the capacitors. He then plugged in six 15-watt electric light bulbs on individual cords, a 110-volt portable television set and two radios. The bulbs burned brightly, the television played and both radios blared and yet the small battery was not discharging. `You couldn't begin to get all this current out of that battery under ordinary circumstances,' Gray said.

`This is the most amazing thing I've ever seen,' exclaimed C.V. Wood, Jr., president of the McCulloch Oil Corporation, who was also present at the demonstration. He began looking around for hidden outlets from the wall. `May I prove it doesn't come from any wall plug' Gray offered. A 40-watt light bulb screwed into an ordinary extension socket was plugged into the panel powered by Gray's system.

The following portion of the demonstration is shown in the photograph in Figure 3:

The bulb lit, then Gray dropped it into a cylinder filled with water. `What would be happening if this was getting ordinary power right now?' Gray asked, as he stuck his hand in the water with the glowing light bulb. `You'd be electrocuted and that thing would be popping and sputtering until the then put his finger into the water with the light. No shock. `Gentlemen, this is a new manifestation of electricity,' Hackenberger said.

Well, this was quite literally the most amazing thing I had ever read in a newspaper. I was completely hooked. The next week I picked up the second article in the series, titled "Miracle No Fuel Electric Engine Can Save Public $35 Billion A Year In Gasoline Bills" (Figure 4). It centered on an amazing new type of electric motor that ran on Gray's system:

The silent pollution-free EMA motor recycles its own energy and can run indefinitely. Gray's prototype is powered by four 6-volt batteries which `will wear out before they'll run down.' The same `cold' energy repelling magnets, arranged on a flywheel, run the motor. Hackenberger, an electronics specialist explained, `A series of high-voltage energy spikes are developed in our circuitry. These energy units are transferred to a control unit which acts much like a distributor in an internal combustion engine. Every time a magnet is charged, most of the energy is recycled back into the batteries without losing power.

THE ENGINE THAT RUNS ITSELF

BY JACK SCAGNETTI

Figure 5
Article from *Probe The Unknown*

Around that same time, there appeared another article in a magazine called *Probe The* Unknown authored by Jack Scagnetti called "The Engine That Runs Itself." (Figure 5) He presented very similar information as that contained in the articles by Tom Valentine. Gray describes the operation of his EMA motor as similar to recreating lightning:

Richard Hackenberger, Vice President in Engineering for EVGray, explains how the EMA motor system operates. `Power from the high voltage section is put through a system of electrical circuitry to produce a

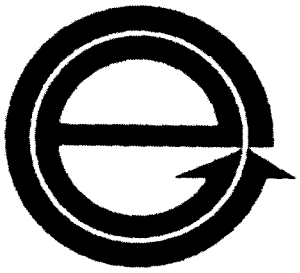

EVGRAYENTERPRISES,INC.
14737 CALVERT STREET VAN NUYS, CALIFORNIA 91401

Telephone 213 989 4210

October 11,1973

Peter A. Lindemann
P.O.Box 354
Mountainview Ha. 96771

Dear Mr. Peter A. Lindemann,

I would like to thank you for showing such interest in EvGray Ent. Inc. and for taking the time to write to us, I have also sented your brother a letter.

But due to our security we are unable to give out any information about the motor or the company.

Thank you,

Renate Gray

Renate Gray

Figure 6
Letter from EVGray Enterprises

series of high voltage energy spikes. The spikes are transferred to a control unit, which in turn operates the major motor unit'. `While this occurs, the recycle/ regeneration system is recharging the battery with 60 to 120 amp pulses.'

These several newspaper articles totally captivated my imagination. Shortly afterwards, my brother and I wrote to EVGray Enterprises in Van Nuys, California expressing our interest and desire to have more information. I received the following letter from them in October, 1973: **"Dear Mr. Lindemann: I would like to thank you for showing such interest in EVGray Enterprises, Inc. and for taking the time to write us. I have also sent your brother a letter. But due to our security, we are unable to give out any information about the motor or the Company."** (Figure 6) Needless to say, this was extremely disappointing. So, reluctantly, I put the Valentine and Scagnetti articles and the letter from EVGray away in a file, which eventually grew into my very extensive research on the subject of "Free Energy."

Figure 7
Cover of *NewsReal* Magazine

Unfortunately, I didn't read any more about Ed Gray for the next couple of years. In 1977, however, I came across another article by Tom Valentine in an issue of a magazine called NewsReal (Figure 7) devoted to suppressed inventions. Valentine wrote about a wide variety of subjects ranging from making oil from coal, to making gasoline from water, to airplanes that won't stall, and other amazing inventions. Included was an update on Edwin Gray entitled, "EMS - Electronic Power That Could Change The World's Economic Power Picture." (Figure 8)

In this article, Ed Gray says:

`I remember getting a shock when I grabbed a charged capacitor off a workbench. That simple fact never left my mind. Then I watched when the government people were testing the first radar across the Potomac River. It stuck in my mind when one of the men explained it as `pulse out, pulse back'. And I've always been a nut about thunderstorms. I watched lightning by the hours. I noticed how much stronger it appeared to be when closer to the earth, and just naturally concluded that the more air had something to do with it. These three principles, plus a super secret means of generating and mixing static electricity, make up Gray's EMS motor.'

Later in the article:

`There is no motor like this in the world' Dr. Chalfin told the group. `Ordinary electric motors use continuous current and constantly drain power. In this system, energy is used only during a small fraction of a millisecond. Energy not used is returned to an accessory battery for reuse.' `It is cool running,' Dr. Chalfin added, putting his hand on the motor. `There is no loss of energy in the system.'

Gray's first patent, issued in June of 1975, was titled "Pulsed Capacitor Discharge Electric Engine." (Figure 9) I

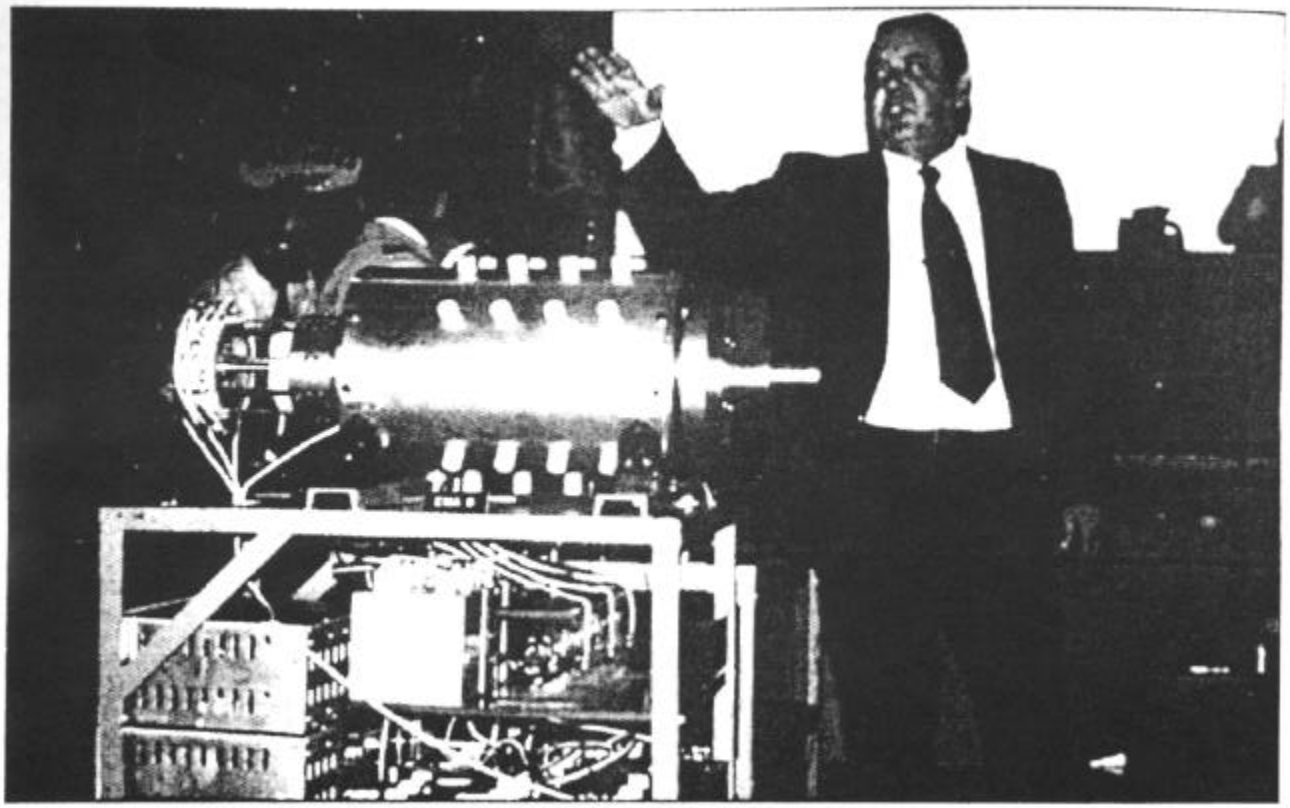

Ed Gray hailed his invention before stockholders, 1976.

EMS --Electronic Power That Could Change The World's Economic Power Picture

Though harrassed by the authorities, under-financed and ignored by science, business and industry, Edwin V. Gray, a self educated Los Angeles inventor has developed a revolutionary electromagnetic motor that promises to greatly improve conditions for the world.

A vast new technology is opening because Gray invented a motor that delivers super-efficient horsepower at lower cost with less wear and tear than any other device known. His EMS motor takes us a giant step closer to the magnificent, whirring power plants visualized by science fiction writers.

Implications for the auto industry alone are staggering: Gray appears to have the answer to Detroit's dilemma involving practical electric vehicles.

Ed Gray's name may well go down in history alongside the likes of Edison, Marconi, Goddard and Bell – that is, if the establishment will get off his back.

A social quality known as "resistance to change" and another called the "economic status quo" have made Gray's struggle to develop and market his motor a tale of bitter frustration. Most people would have quit in despair long ago.

However, tireless experimentation and remarkable determination have paid off in a technological triumph that brings the heretofore untapped source of static electricity into the workhouse of man. Any expert can tell you "static electricity will not do work." Gray is slowly and doggedly proving the experts are wrong.

His battle is not over, but perhaps the tide is finally turning in his favor. His corporation, EvGray Enterprises, is seeking the necessary financing to further develop the motor. His efforts were thwarted by serious legal problems which recently were resolved when he agreed to enter a guilty plea to a minor Securities and Exchange violation.

Thus nearly two years of legal entanglements came to a close. The legal costs alone have been near ruinous.

He's won some important battles, but he could yet lose the war.

Gray's start in life wasn't promising. He was one of six children of a poor Washington, D.C. family and grew up in the streets.

Few suspected he had the stuff of a genius. Like many kids, he was fascinated by engines and motors, but his thinking about them went far beyond normal curiosity. He wanted to know more than just what made them run.

Gray dropped out of school at 14 and began tinkering with ideas. He was so lacking in formal education that he

PAGE 38 NEWSREAL SERIES

Figure 8
Article from NewsReal Magazine

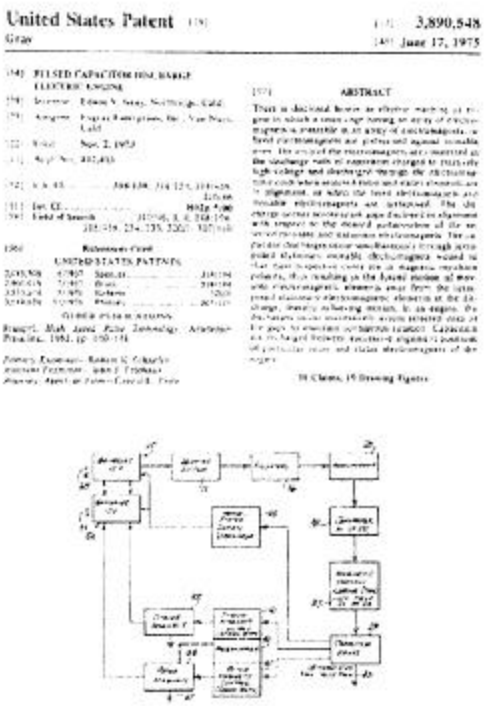
United States Patent
Gray
3,890,548
June 17, 1975

Figure 9
Gray's Motor Patent Cover Sheet

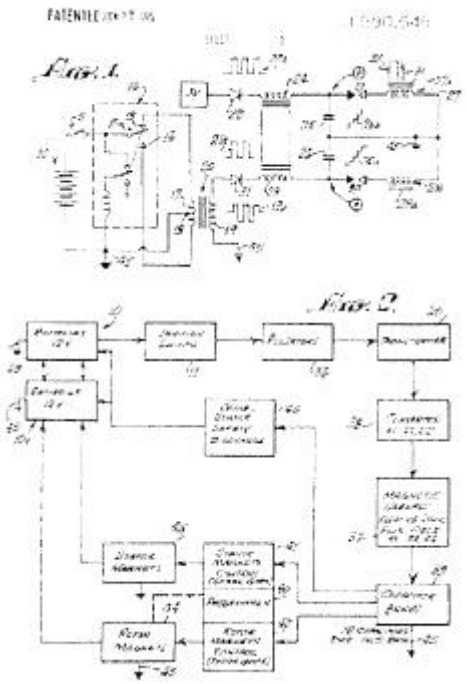

Figure 10
Gray's Motor Patent Schematic

received a copy of it in 1978. It is a rather extensive patent with 18 pages, 19 illustrations, and 18 claims. It describes an engine that is run by discharging capacitors through electromagnets that oppose each other. (Figure 10)

But I discovered soon enough that if you try to build this motor according to the principles outlined in this patent, it doesn't perform anything like what was described in the Valentine articles. In fact, it doesn't produce a cold form of electricity at all. If you happened to get into the discharge path of those capacitors, you'd be thrown clear across the room. What's more, the amount of energy that could be recycled from this arrangement is negligible compared to what Gray is talking about in those articles. It became quite obvious to me, that in spite of the fact that this patent protected the specific design of the motor, it did not reveal the *technique* of its operation.

From the beginning, I was always more interested in the solid-state circuit. I realized that the production of cold electricity really had nothing to do with the motor and that the motor was a secondary event. After all, when Gray was popping the magnets with cold electricity and running the TV and the light bulbs on cold electricity, he didn't need the motor. Intuitively, I knew from the outset that the key to unraveling the secret of Gray's discovery lay in an attempt to completely understand his solid-state circuit. However, the resources I had gathered thus far were inadequate at best, and by the late 70's, *I* had pretty much exhausted all the information that was available on this subject.

During the late 1980's, *I* only heard rumors that Gray was continuing his work, but all I could really determine was that no more news articles, or anything else for that matter, ever appeared about him.

In the mid-1990's, however, a research associate of mine told me that he had heard that Gray had been issued other patents and this completely intrigued me. Would these new patents contain the answers I was looking for? I didn't know for sure, but I knew I needed to get hold of these documents. Unfortunately, my associate didn't have them, and he didn't know what the patent numbers were. So once again, my search for Ed Gray's "cold electricity" came to a dead end, at least for a few more years.

In June of 1999, while visiting the IBM Intellectual Property Network on the internet (now the Delphion Intellectual Property Network), I noticed that the search engines within the patent database had been recently updated so it was now possible to restrict a search just to the Inventor Line. "Gray" into a search and looked at every word in every patent from 1971 forward, you got so many hits you couldn't possibly go through them all. Now, however, I was able to plug "Gray; Edwin" into the Inventor Line of this newly updated search engine. Lo and behold, on my screen 30 seconds later, the numbers of two other patents that had been issued to Edwin Gray came up. I was ecstatic!

Figure 11 shows the first of these patents entitled "Efficient Power Supply Suitable for Inductive Loads" issued in June 1986. Understanding this patent will be the primary focus of this book.

The other patent entitled "Efficient Electrical Conversion Switching Tube Suitable for Inductive Loads" (Figure 12) was issued approximately ten months later, in April 1987.

These two patents are very closely linked and are almost identical. One of them describes the circuit that drives this switching tube and the other one describes the switching tube itself. About 80% of

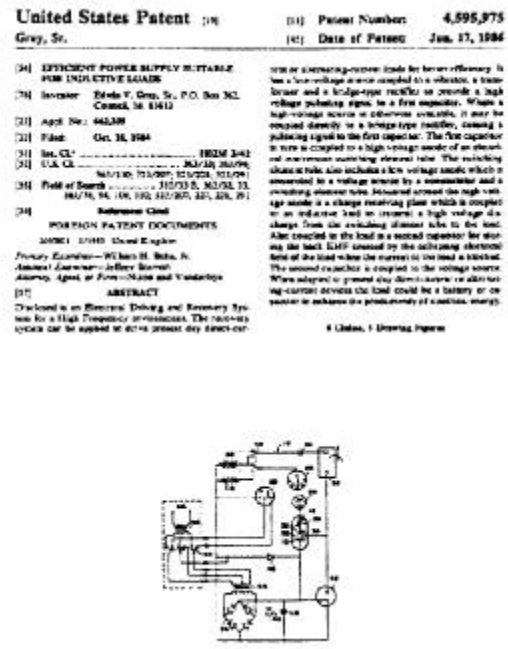
United States Patent
Gray, Sr.
Patent Number: 4,595,975
Date of Patent: Jun. 17, 1986

Figure 11
Gray's Circuit Patent Cover Sheet

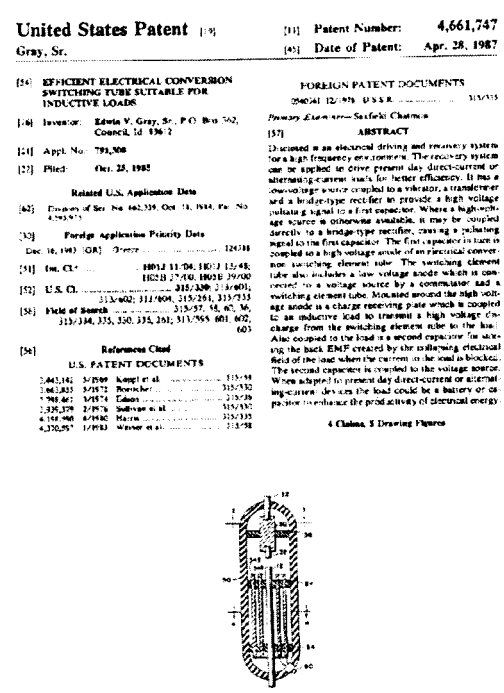
United States Patent
Gray, Sr.
Patent Number: 4,661,747
Date of Patent: Apr. 28, 1987
EFFICIENT ELECTRICAL CONVERSION SWITCHING TUBE SUITABLE FOR INDUCTIVE LOADS
Related U.S. Application Data
Foreign Application Priority Data
Reference Cited
U.S. PATENT DOCUMENTS
FOREIGN PATENT DOCUMENTS
ABSTRACT

Figure 12
Gray's Conversion Tube Patent Cover Sheet

U.S. Patent Jun. 17, 1986 Sheet 1 of 2 4,595,975

FIG. 1

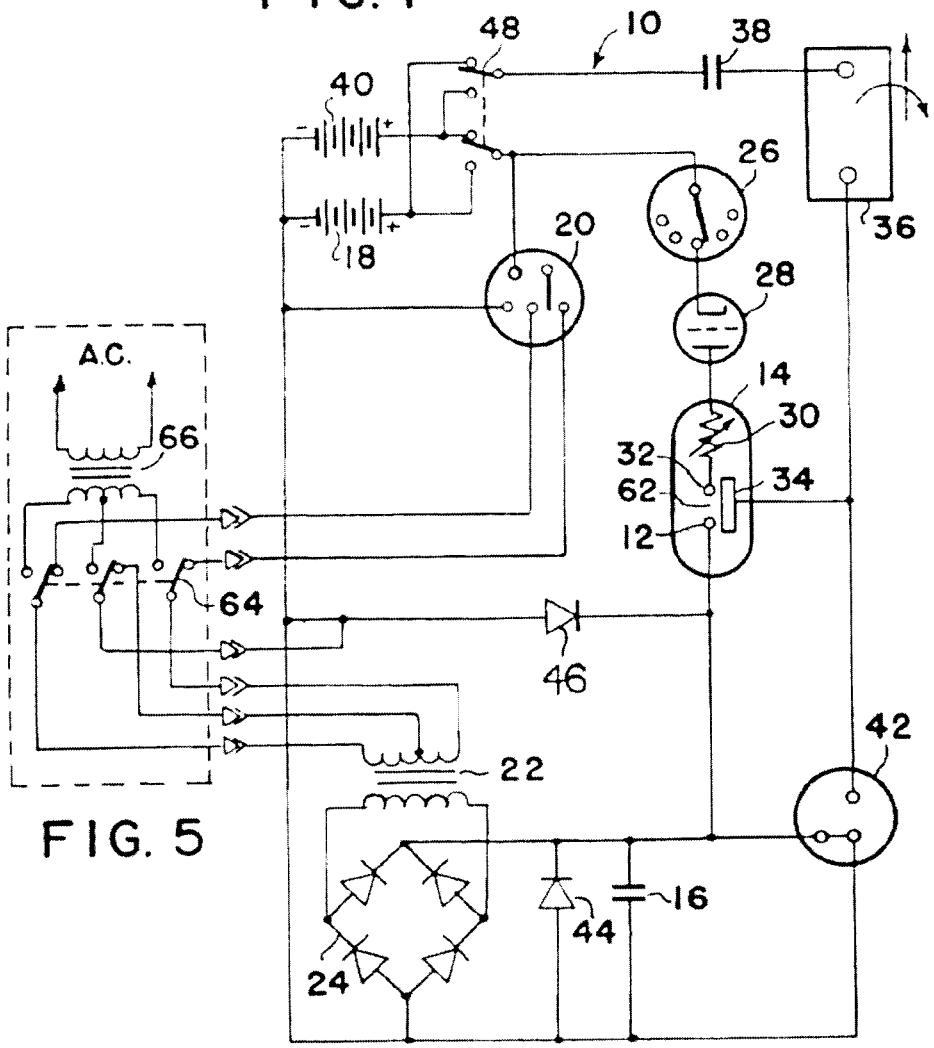

FIG. 5

Figure 13
Gray's Circuit "Schematic"

the wording in both of these patents is identical.

Figure 13 shows the circuit diagram for the first one. I had searched *26* years for this diagram, and finally I had a chance to understand what Gray was doing. I felt sure that I was looking at the basis of his "cold" electricity circuits, but Gray was still holding his cards quite close to his chest. Reading the diagram, it was not clear how these components behaved, or what they did, or why. The more I studied the text, which is relatively short compared to the motor patent, the more I realized I was looking at something that was really quite foreign to me. Intuitively, I felt I had all the pieces, but I still didn't know how the pieces fit together, and I didn't know what the true picture looked like. Why was this circuit able to create free energy? Once again, there were still far too many unknowns.

I was heartened, though, by several interesting references stated in the patent. For instance, in one small section, Gray states:

There is disclosed herein an electrical driving system which, on theory, will convert low-voltage electrical energy from a source, such as an electric storage battery, to a high-potential, high-current energy pulse that is capable of developing a work force at the inductive output of the device that is more efficient than that which is capable of being developed directly from the energy source.

That statement may sound a bit obscure, but actually as far as I was concerned, it was a pretty sneaky way of saying "free energy." Further on it says:

This system accomplishes the results stated above by harnessing the 'electro-static' or `impulse' energy created by a high intensity spark generated within a specially constructed electrical conversion switching element tube. This element utilizes a low voltage anode, a high voltage anode, and one or more electro-static or charge receiving grids. These grids are of a physical size, and appropriately positioned, as to be compatible with the size of the tube, and therefore, directly related to the amount of energy to be anticipated when the device is operating

As I continued to read this patent, I was most intrigued by components # *42*, # *44*, and # *46*. The patent states:

A spark-gap protection device, 42, is included in the circuit to protect the inductive load and the rectifier elements from unduly large discharge currents. Should the potentials within the circuit exceed predetermined values, fixed by the mechanical size and spacing of the elements within the protected device, the excess energy is dissipated (bypassed) by the protective device to the circuit common (electrical ground)..." diodes 44 and 46 bypass the excess overshoot generated when the energy conversion switching element tube is triggered.

So here we have three elements, # *42*, # *44* and # *46* in this circuit, which are specifically designed to dump excess energy when this tube fires! What this suggests is that there is the possibility of producing so much energy here that it can damage the rest of the circuit. Certainly this was quite promising, but I still didn't really understand what phenomenon would create those conditions -- or why. It was definitely apparent to me, however, that Gray expected something extremely "large" to happen when this conversion switching tube fired.

I was convinced I had discovered the secret of the device, but I still didn't really understand what I was looking at. I needed a "Rosetta Stone" -- something that would translate all of these unknowns into an understandable context.

Luckily, I found it. That Rosetta Stone was a book called *Secrets 6f Cold War Technology: Project HAARP and Beyond*, written by Gerry Vassilatos in 1996 and currently available through Adventures Unlimited Press (Figure *14)*. In Chapter 1,

titled "Nikola Tesla and Radiant Energy," Vassilatos recounts those heady days back around 1890, when Nikola Tesla is developing the experiments which led to the invention of his magnifying transmitter. It is an astonishing work, and I highly recommend that you acquire and read the entire publication. However, for the purposes of this book, the following excerpted sections from Chapter I will reveal not only a fascinating story of discovery, but, more importantly, will provide the foundation for full comprehension of Tesla's amazing magnifying transmitter and, subsequently, its connection to Edwin Gray's "cold electricity" circuit.

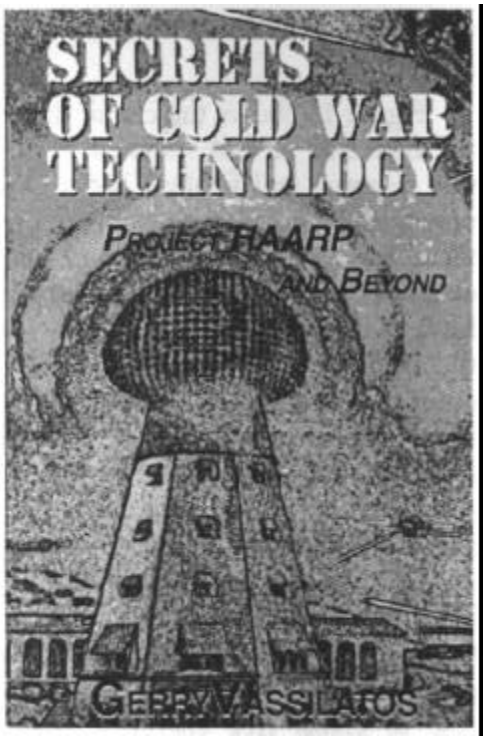

Figure 14
Secrets of Cold War Technology:
Project HAARP and Beyond

Edwin Vincent Gray

(1925 - 1989)

Edwin Gray was born in Washington, DC in 1925. He was one of 14 children. At age eleven, he became interested in the emerging field of electronics when he watched some of the first demonstrations of primitive radar being tested across the Potomac River. He left home at 15 and joined the Army, attending their advanced engineering school for one year before he was discovered and honorably discharged for being under age. After the attack on Pearl Harbor, he re-enlisted in the Navy and served three years of combat duty in the Pacific.

After the War, he worked as a mechanic and continued his studies in electro-magnetics. After experimenting for years, he learned how to "split the positive" in 1958 and had his first Electric Magnetic Association (EMA) motor model running in 1961. His third EMA prototype was successfully tested for 32 days straight before it was torn down for analysis. With this report in hand, Gray started looking for serious funding. After being turned down by every major corporation and venture capital group he approached, he formed his own limited partnership in 1971. By early 1973, EVGray Enterprises, Inc. had an office in Van Nuys, California, hundreds of private investors and a new (# 4) EMA motor prototype. Ed Gray had also received a "Certificate of Merit" from Ronald Reagan, then Governor of California.

By the summer of 1973, Gray was doing demonstrations of his technology and receiving some very positive press. By later that year, Gray had teamed up with automobile designer, Paul M. Lewis, to build the first fuelless, electric car in America. But trouble was brewing.

On July 22, 1974 an unprovoked Los Angeles District Attorney's Office raided the office and shop of EVGray Enterprises, and confiscated all of their business records and working prototypes. For 8 months, the DA tried to get Gray's stockholders to file charges against him, but none would. Gray was eventually charged with "grand theft," but even this bogus charge couldn't stick and was finally dropped. By March 1976, Gray pleaded guilty to two minor SEC violations, was fined, and released. The DA's office never returned his prototypes.

In spite of these troubles a number of good things were happening. His first US. Patent, on the motor design, issued in June of 1975, and by February 1976, Gray was nominated for "Inventor of the Year" for "discovering and proving a new form of electric power" by the Los Angeles Patent Attorney's Association. Despite this support, Gray kept a much lower profile after this time. In the late 1970's, Zetech, Inc. acquired Gray's technology and EVGray Enterprises ceased to exist. In the early 1980's, Gray offered the US. Government his technology to augment Reagan's SDI program. He actually wrote letters to every member of Congress, both Senators and Representatives, as well as the President, Vice President, and every member of the Cabinet. Remarkably, in response to this letter writing campaign, Gray did not receive a single reply or even an acknowledgment! During the early 1980's, Gray lived in Council, Idaho, where he wrote and was granted his other two US Patents. By 1986, he had a facility in Grande Prairie, Texas, where a number of new prototype EMA motors were built. By 1989, he was working on propulsion applications of the technology, and maintaining his residence in Council, Idaho, as well as shop facilities in Council, Grande Prairie, and Sparks, Nevada.

Edwin V. Gray died at his shop in Sparks, Nevada, in April 1989, under mysterious circumstances. He was 64 and in good health.

The following chapter is excerpted from Chapter 1 *of Secrets of Cold War Technology: Project HAARP and Beyond*, by Gerry Vassilatos and is reprinted here by permission *of* the publisher, Adventures Unlimited Press.

Chapter 2: The Rosetta Stone

James Clerk-Maxwell predicted the possibility that electromagnetic waves might exist. In theoretical discussions designed to more thoroughly explain his mathematical descriptions, Maxwell asked his readers to consider two different kinds of electrical disturbances possibly existing in nature. The first consideration dealt with longitudinal electric waves, a phenomenon, which required alternating concentrations of electrostatic field lines. This densified and rarefied pulsation of electrostatic fields necessarily demanded a unidirectional field, one whose vector was fixed in a singular direction. The only variable permitted in generating longitudinal waves was the concentration of the field. Subsequent propagation along the electrostatic field lines would produce pulsating thrusts of charges, pulsation moving in a single direction. These "electrical soundwaves" were rejected by Maxwell, who concluded that such a condition was impossible to achieve.

His second consideration dealt with the existence of transverse electromagnetic waves. These required the rapid alternation of electrical fields along a fixed axis. Space spreading electrical lines would supposedly "bend to and fro" under their own momentum, while radiating away at the speed of light from the alternating source. Corresponding forces, exact duplicates of the alterations produced at the source, would be detected at great distances. He encouraged that experimenters seek this waveform, suggesting possible means for achieving the objective. And so the quest to find electromagnetic waves began.

In 1887, Heinrich Hertz announced that he had discovered electromagnetic waves, an achievement at that time of no small import. In 1889, Nikola Tesla attempted the reproduction of these Hertzian experiments. Conducted with absolute exactness in his elegant South Fifth Avenue Laboratory, Tesla found himself incapable of producing the reported effects. No means however applied would produce the effects which Hertz claimed. Tesla began experimenting with abrupt and powerful electric discharges, using capacitors charged to very high potentials. He found it possible to explode thin wires with these abrupt discharges. Dimly perceiving something of importance in this experimental series, Tesla abandoned these experiments, all the while pondering the mystery and suspecting that Hertz had somehow mistakenly associated electrostatic inductions or electrified shockwaves in air for true electromagnetic waves. In fact, Tesla visited Hertz and personally proved these refined observations to Hertz who, being convinced that Tesla was correct, was about to withdraw his thesis. Hertz was truly disappointed, and Tesla greatly regretted having to go to such lengths with an esteemed academician in order to prove a point.

But while endeavoring toward his own

means for identifying electrical waves, Tesla was blessed with an accidental observation, which forever changed the course of his experimental investigations. In his own attempts to achieve where he felt Hertz had failed, Tesla developed a powerful method by which he hoped to generate and detect real electromagnetic waves. Part of this apparatus required the implementation of a very powerful capacitor bank This capacitor "battery" was charged to very high voltages, and subsequently discharged through short copper bus bars. The explosive bursts thus obtained produced several phenomena, which deeply impressed Tesla, far exceeding the power of any electrical display he had ever seen. These proved to hold an essential secret, which he was determined to uncover.

The abrupt sparks, which he termed "disruptive discharges", were found capable of exploding wires into vapor. They propelled very sharp shockwaves, which struck him with great force across the whole front of his body. Of this surprising physical effect, Tesla was exceedingly intrigued. Rather, more like gunshots of extraordinary power than electrical sparks, Tesla was completely absorbed in this new study. These electrical impulses produced effects commonly associated only with lightning. The explosive effects reminded him of similar occurrences observed with high voltage DC generators. A familiar experience among workers and engineers, the simple closing of a switch on a high voltage dynamo often brought a stinging shock, the assumed result of residual static charging.

This hazardous condition only occurred with the sudden application of high voltage DC. This crown of deadly static charge stood straight out of highly electrified conductors, often seeking ground paths which included workmen and switchboard operators. In long cables, this instantaneous charge effect produced a hedge of bluish needles, pointing straight away from the line into the surrounding space. The hazardous condition appeared briefly at the very instant of switch closure. The bluish sparking crown vanished a few milliseconds later, along with the life of any unfortunate who happened to have been so "struck". After the brief effect passed, systems behaved as designed. Such phenomena vanished as charges slowly saturated the lines and systems. After this brief surge, currents flowed smoothly and evenly as designed.

The effect was a nuisance in small systems. But in large regional power systems where voltages were excessive, it proved deadly. Men were killed by the effect, which spread its deadly electrostatic crown of sparks throughout component systems. Though generators were rated at a few thousand volts, such mysterious surges represented hundreds of thousands, even millions of volts. The problem was eliminated through the use of highly insulated, heavily grounded relay switches. Former engineering studies considered only those features of power systems that accommodated the steady state supply and consumption of power. It seemed as though large systems required both surge and normal operative design considerations. Accommodating the dangerous initial "supercharge" was a new feature. This engineering study became the prime focus of power companies for years afterward, safety devices and surge protectors being the subject of a great many patents and texts.

Tesla knew that the strange supercharging effect was only observed at the very instant in which dynamos were applied to wire lines, just as in his explosive capacitor discharges. Though the two instances were completely different, they both produced the very same effects. The instantaneous surge supplied by dynamos briefly appeared super-concentrated in long

Lines. Tesla calculated that this electrostatic concentration was several orders in magnitude greater than any voltage that the dynamo could supply. The actual supply was somehow being amplified or transformed. But how?

The general consensus among engineers was that this was an electrostatic "chocking" effect. Many concluded it to be a "bunching" action, where powerfully applied force was unable to move charge quickly through a system. Mysterious, the combined resistance of such systems seemed to influence the charge carriers before they were able to move away from the dynamo terminals! Like slapping water with a rapid hand, the surface seemed solid. So also it was with the electrical force, charges meeting up against a seemingly solid wall. But the effect lasted only as long as the impact. Until current carriers had actually "caught up" with the applied electrical field, the charges sprang from the line in all directions. A brief supercharging effect could be expected until the charges were distributed, smoothly flowing through the whole line and system. The dynamo itself thus became the brief scene of a minor shockwave. He began wondering why it was possible for electrostatic fields to move more quickly than the actual charges themselves, a perplexing mystery. Was the field itself an entity that simply drive the more massive charges along? If this was true, then of what was the electrostatic field itself "composed"? Was it a field of smaller particles? The questions were wonderfully endless.

Despite the wonderful ideas, which this study stimulated, Tesla saw a practical application that had never occurred to him. Consideration of the dynamo supercharging effect suggested a new experimental apparatus. It was one that could greatly outperform his capacitor battery in the search to find electrical waves. A simple high voltage DC generator provided his electric field source. Tesla understood that the resistance of lines or components, viewed from the dynamo end, seemed to be an impossible "barrier" for charge carriers to penetrate. This barrier caused the "bunching" effect. Electrostatic charges were literally stopped and held for an instant by line resistance, a barrier which only existed during the brief millisecond interval in which the power switch was closed. The sudden force application against this virtual barrier squeezed charge into a density impossible to obtain with ordinary capacitors. It was the brief application of power, the impact of the charge against the resistance barrier, which brought this abnormal electro-densified condition. This is why the conductive wires in his present experiment often exploded.

The analogy to steam power and steam engines was unmistakable: Large steam engines had to be valved very carefully. This required the expertise of old and well-experienced operators who knew how to "open up" an engine without rupturing the vessels and causing a deadly explosion. Too suddenly valved, even a large steam engine of very high capacity could explode. Steam had to be admitted into a system gently, until it began smoothly and gradually flowing into every orifice, conduit, and component. Here too was the mysterious "choking" effect, where a large capacity system seemed to behave like an uncommonly high resistance to any sudden and sustained application of force.

The academic world of experimenters was yet fixated on his former discovery of high frequency alternating currents. It seemed that Tesla alone now exclusively studied these impulse discharges. He was producing explosive impulses, which had not been observed in laboratories. Every component was carefully insulated, himself implementing insulator rods and rubberized regalia to insure complete safety. Tesla had observed electrostatic machines whose

ability to charge insulated metals was potent, but this demonstration exceeded the mere charging of wire by the instantaneous switch closure. This effect produced "springing" charge, phenomena like no other before witnessed by Tesla for its sheer strength. Whatever the conditions observed in previous systems, he had now learned how to maximize the effect. Balancing voltage and resistance against capacity, Tesla learned to routinely produce supercharge states which no existing device could equal

Empirical observation had long taught that ordinary capacitor discharges were oscillating currents, spark currents which literally "bounced" between each capacitor plate until their stored energy was wasted away. The high voltage of the dynamo exerted such an intense unidirectional pressure on the densified charges that alternations were impossible. The only possible backrushes were oscillations. In this case, charges surged and stopped in a long series until the supercharge was wasted away. All parameters which forced such oscillations actually limited the supercharge from manifesting its total energetic supply, a condition Tesla strove to eliminate. Indeed he spent an excessive time developing various means to block every "backrush" and other complex current echo which might force the supercharge to prematurely waste its dense energy. Here was an effect demanding a single unidirectional super pulse. With both the oscillations and alternations eliminated, new and strange effects began making their appearance. These powerful and penetrating phenomena were never observed when working with high frequency alternations.

The sudden quick closure of the switch now brought a penetrating shockwave throughout the laboratory, one that could be felt both as a sharp pressure and a penetrating electrical irritation. A "sting". Face and hands were especially sensitive to the explosive shockwaves, which also produced a curious "stinging" effect at close range. Tesla believed that material particles approaching the vapor state were literally thrust out of the wires in all directions. In order to better study these effects, he poised himself behind a glass shield and resumed the study. Despite the shield, both shockwaves and stinging effects were felt by the now mystified Tesla. This anomaly provoked a curiosity of the very deepest kind, for such a thing was never before observed. More powerful and penetrating than the mere electrostatic charging of metals, this phenomenon literally propelled high voltage charge out into the surrounding space where it was felt as a stinging sensation. The stings lasting for a small fraction of a second, the instant of switch closure. But Tesla believed that these strange effects were a simple effect of ionized shockwaves in the air, rather like a strongly ionized thunderclap.

Tesla devised a new series of experiments to measure the shockwave pressure from a greater distance. He required an automatic "trip switch". With this properly arranged, a more controlled and repetitious triggering of the effect was possible. In addition, this arrangement permitted distant observations which might cast more light on the shield-permeating phenomenon. Controlling the speed of the high voltage dynamo controlled the voltage. With these components properly adjusted, Tesla was able to walk around his large gallery spaces and make observations. Wishing also to avoid the continuous pressure barrage and its stinging sparks, Tesla shielded himself with several materials. The arrangement of rapidly interrupted high voltage direct currents resulted in the radiation of stinging rays, which could be felt at great distances from their super-sparking source. In fact, Tesla felt the stings right through the shields! Whatever had been released from the wires during the instant of switch closure,

successfully penetrated the shields of glass and of copper. It made no difference; the effect permeated each substance as if the shield were not there at all. Here was an electrical effect that communicated directly through space without material connections. Radiant electricity!

In these several new observations, the phenomenon was violating electrostatic charge principles experimentally established by Faraday. Projected electrostatic charges normally spread out over the surface of a metallic shield; they do no penetrate metal. This effect had certain very non-electrical characteristics. Tesla was truly mystified by this strange new phenomenon, and searched the literature for references to its characteristics. No such reference was found, except in the surreptitious observations of two experimenters. In one case, Joseph Henry observed the magnetization of steel needles by a heavy spark discharge. The extraordinary feature of this observation (1842) lay in the fact that the Leyden jar, whose spark apparently produced the magnetizations, stood on the upper floor of an otherwise electrically impervious building. Brick walls, thick oak doors, heavy stone and iron flooring, tin ceilings. Moreover, the steel needles were housed in a vault in the cellar. How did the spark affect such a change through such a natural barrier? Dr. Henry believed that the spark had released special "light-like rays", and these were the penetrating agencies responsible for the magnetizations.

A second such account (1872) occurred in a high school building in Philadelphia. Elihu Thomson, a physics instructor, sought to make the sparks of a large Ruhmkorrf Spark Coil more visible for his next lecture. Attaching one pole of the coil to a cold water pipe, and reactivating the coil, *Thomson was thrilled to find that the nature* of the spark had changed from blue to white. Wishing to amplify this effect, Thomson attached the other pole to a large metal tabletop. Again reactivating the coil produced a shrieking silver-white spark, entirely visible to any whom sat in the last row. Wishing to show this to a colleague, Edwin Houston, Thomson made for the door and was abruptly stopped. Touching the brass knob on the otherwise insulated oak door, Thomson received an unexpected sizzling shock. Turning off the Ruhmkorrf Coil, Thomson found it possible to stop the effect. Calling for Edwin, he summarized what had occurred. Then turning the unit back on again, the stinging charge effects returned. The two gentlemen ran throughout the huge stone, oak, and iron building with insulated metal objects now. Each touch of a penknife or screwdriver to anything metallic, however distant from the coil or insulted from the floor, produced long and continuous white sparks. The account was written up as a short article in Scientific American later in the same year.

In studying each of these two prior observations, events each separated by some thirty years, Tesla perceived an essential unity with that of his own discovery. Each observation was perhaps a slight variant of the very same phenomenon. Somehow accidentally, each experimenter had managed to produce the explosive supercharging effect. In the case of Dr. Henry, the explosive bursts occurred in a single flash, electrostatic machines being used to accumulate the initial charge. The second case was peculiar, since it evidenced the sustained and continuous production of super-charging effects. The effect was rare because it obviously required very stringent electrical parameters. Tesla deduced this from the simple fact that the effect was so infrequently observed by experimenters the world over. In addition, he was quick to remark concerning the anomalous attributes attached to the phenomenon. Tesla knew that, despite the extremely penetrating effects in each case, he had secured the only means for achieving the "complete" and

maximum manifestation of supercharging. His was an apparatus with no equal, capable of releasing an aspect of the electrostatic field which others very apparently had .not.

Though discovered by Tesla in 1889, the preliminary observation of this effect was published after an intensive battery of investigations. The "Dissipation of Electricity", published just prior to Christmas of 1892, is the pivotal Tesla lecture. This is the departure point in which Tesla abandons research and development of high frequency alternating current. Divorcing himself from the field entirely, Tesla describes the shockwaves and other effects of IMPULSES. In addition to those physical sensations, which he describes in characteristic understatements, Tesla also enlarges upon the "gaseous" aspects associated with the phenomena. He observed that the abruptly charged wires in his experiments projected a strange gaseous stream when immersed in an oil bath. A phenomenon, which he once thought due entirely to wire-adsorbed gases, he found that the effect could be so continuously produced from a single wire that no volume of ordinary adsorbed gas could supply the flow. Indeed, he was able to produce streams of this kind in oil, which so powerfully projected from charged wire ends that they visibly depressed the oil into a hole, some two inches in depth! Tesla began to realize the true nature of the fine issuing "gas" which projected from wire ends immersed in oil.

He now prepared an extensive series of tests in order to determine the true cause and nature of these shocking air pulses. In his article, Tesla describes the shield permeating shocks as "soundwaves of electrified air". Nevertheless, he makes a remarkable statement concerning the sound, heat, light, pressure, and shock which he sensed passing directly through copper plates. Collectively, they "imply the presence of a medium of gaseous structure, that is, one consisting of independent carriers capable of free motion". Since air was obviously not this "medium", to what then was he referring? Further in the article he clearly states that "besides the air, another medium is present".

Through successive experimental arrangements, Tesla discovered several facts concerning the production of his effect. First, the cause was undoubtedly found in the abruptness of charging. It was in the switch closure, the very instant of "closure and break", which thrust the effect out into space. The effect was definitely related to time, IMPULSE time. Second, Tesla found that it was imperative that the charging process occurred in a single impulse. No reversal of current was permissible, else the effect would not manifest. In this, Tesla made succinct remarks describing the role of capacity in the spark radiative circuit. He found that the effect was powerfully strengthened by placing a capacitor between the disrupter and the dynamo. While providing a tremendous power to the effect, the dielectric of the capacitor also served to protect the dynamo windings.

The effect could also be greatly intensified to new and more powerful levels by raising the voltage, quickening the switch "make-break" rate, and shortening the actual time of switch closure. Thus far, Tesla employed rotating contact switches to produce his unidirectional impulses. When these mechanical impulse systems failed to achieve the greatest possible effects, Tesla sought a more "automatic" and powerful means. He found this "automatic switch" in special electrical arc dischargers. The high voltage output of a DC generator was applied to twin conductors through his new arc mechanism, a very powerful permanent magnet sitting crosswise to the discharge path. The discharge arc was automatically and continually "blown out" by this magnetic field.

Imperative toward obtaining the desired rare effect, the capacitor and its connected wire lines had to be so chosen as to receive and discharge the acquired electrostatic charge in unidirectional staccato fashion. The true Tesla circuit very much resembles a pulse jet, where no backpressure ever stops the onrushing flow. Electrostatic charge rises to a maximum and is discharged much more quickly. The constant application of high voltage dynamo pressure to the circuit insures that continual successions of "charge-rapid discharge" are obtained. It is then and only then that the Tesla Effect is observed. Pulses literally flow through the apparatus from the dynamo. The capacitor, disrupter, and its attached wire lines, behave as the flutter valve.

The high voltage dynamo remains the true electrostatic source in the apparatus. This was a fact well appreciated by Tesla, who disliked the painful radiant effects proceeding into space. It was evident that the dynamo had somehow been modified by the addition of these "pulsing valve" circuits. The dynamos being used provided deadly voltages, capable of killing a man. The valve circuits were forcing a strange radiance of those deadly field energies. Somehow, the dynamo energy was being expanded into space with dangerous and painful force. But how? By what mysterious and provocative means was this condition established? The result of this experimental series fixed a new concept in Tesla's mind. Tesla had of course realized the implications of his mysterious shocking-field effect. This was radiant electricity.

Tesla first conducted elaborate and extensive . investigations in order to comprehend the exact nature of this new electrical effect. Tesla realized that this strange "shocking field" actually radiated through space from the impulse apparatus. If this was electrostatic energy, it was more intense and more penetrating than any electrostatic field he had ever observed. If this was merely a "stuttered" electrostatic field, why then was its strength so very intensified? Tesla began to believe that he had discovered a new electrical force, not simply a treatment of an existing force. It is for this reason that he often described the effect as “electrodynamic” or “more electrostatic”.

By properly adjusting the inherent circuit parameters, Tesla learned how to produce an extremely rapid series of unidirectional impulses on demand. When the impulses were short, abrupt, and precise in their successions, Tesla found that the shocking effect could permeate very large volumes of space with apparently no loss of intensity. He also found that the shocking effect penetrated sizable metal shields and most insulators with ease. Developing a means for controlling the number of impulses per second, as well as the intermittent time intervals between each successive impulse, he began discovering a new realm of effects. Each impulse duration gave its own peculiar effects. Able to feel the stinging shocks, though shielded at a distance of nearly fifty feet from his apparatus, Tesla recognized at once that a new potential for electrical power transmission had been revealed to him. Tesla was first to understand that electrical shock waves represented a new means for transforming the world, even as his Polyphase system had done.

Tesla fully intended to disclose his discoveries to the world at large. Radiant electricity had special characteristics of which the scientific world had no knowledge. Working with a simple but powerful embodiment of his original apparatus, Tesla found that radiant electricity could induce powerful electrical effects at a distance. These effects were not alternations, not alternating waves. They were longitudinal waves, composed of successive shocking waves. The advance of

each shocking wave, followed by short neutral zones together comprised the radiant field. Vectorial components of these shockwave successions were always unidirectional. The stuttering shockwaves were capable of forcing charges in the direction of their propagation.

Objects placed near this device became powerfully electrified, retaining a singular charge sign for many minutes after the magnetic discharger had been deactivated. Tesla found it possible to amplify these single charge effects by a simple asymmetrical alignment of the magnetic discharger. By placing the magnetic discharger closer to one or the other side of the charging dynamo, either force positive or force negative vectors could be selected and projected. Thus, charge could be projected into or drawn from any object in the field space. This was a new electrical force. Tesla realized more than ever that he was in unknown territory. The fact that these radiant forces traveled as light-like rays distinguished them from the electromagnetic waves of Maxwell.

Tesla wished to determine the effect of gradually decreased impulse durations, a job that required the greatest skill and precaution. Tesla knew that he would be exposing himself to mortal danger. Controlling the rapidity of current blowout in the magnetic DC arc, Tesla released a new spectrum of light-like energies throughout his large gallery space. These energetic species were like no other which the world has since seen. Tesla found that impulse duration alone defined the effect of each succinct spectrum. These effects were completely distinctive, endowed with strange additional qualities never purely experienced in Nature. Trains of impulses, each exceeding 0.1 millisecond duration, produced pain and mechanical pressures. In this radiant field, objects visibly vibrated and even moved as the force field drove them along. Thin wires, exposed to sudden bursts of the radiant field, exploded into vapor. Pain and physical movements ceased when impulses of 100 microseconds or less were produced.

With impulses of 1.0 microsecond duration, strong physiological heat was sensed. Further decreases in impulse duration brought spontaneous illuminations capable of filling rooms and vacuum globes with white light. At these impulse frequencies, Tesla was able to stimulate the appearance of effects, which are normally admixed among the electromagnetic energies inherent in sunlight. Shorter impulses produced cool room penetrating breezes, with an accompanying uplift in mood and awareness. There were no limits in this progression toward impulses of diminished duration. None of these impulse energies could be duplicated through the use of high frequency harmonic alternations. Few could reproduce these effects because so few understood the absolute necessity of observing those parameters set by Tesla. These facts have been elucidated by Eric Dollard, who also successfully obtained the strange and distinct effects claimed by Tesla.

By 1890, after a period of intense experimentation and design development, Tesla summarized the components necessary for the practical deployment of a radiant electrical power distribution system. Tesla had already discovered the wonderful fact that impulse durations of 100 microseconds or less could not be sensed and would do no physiological harm. He planned to use these in his power broadcast. Furthermore, shocking waves of 100 microsecond duration passed through all matter, a fitting form of electrical energy to broadcast throughout a power-needy city.

Tesla made a most startling discovery the same year, when he placed a long single turn copper helix near his magnetic disrupter. The coil, some two feet in length, did not behave as did solid copper pipes and

other objects. The thin-walled coil became ensheathed in an envelope of white sparks. Undulating from the crown of this coil were very long and fluidic silvery white streamers, soft discharges that appeared to have been considerably raised in voltage. These effects were greatly intensified when the helical coil was placed within the disrupter wire circle. Inside this “shockzone”, the helical coil was surrounded in a blast, which hugged onto its surface, and rode up the coil to its open end. It seemed as though the shockwave actually pulled away from surrounding space to cling to the coil surface, a strange attractive preference. The shockwave flowed over the coil at right angles to the windings, an unbelievable effect. The sheer length of discharges leaping from the helix crown was incomprehensible. With the disrupter discharge jumping 1 inch in its magnetic housing, the white flimmering discharges rose from the helix to a measured length of over two feet. This discharge equaled the very length of the coil itself! It was an unexpected and unheard of transformation.

Here was an action more nearly "electrostatic" in nature, although he knew that academes would not comprehend this term when used in this situation. Electrostatic energy did not fluctuate, as did his shockwaves. The explosive shockwave had characteristics unlike any other electrical machine in existence. Yet Tesla stated that the shockwave, during the brief instant in which it made its explosive appearance, more nearly resembled an electrostatic field than any other known electrical manifestation. Just as in electrostatic friction machines, where current and magnetism. are negligible, a very energetic field component fills space in radiating lines. This "dielectric" field normally launches *through space in a slow growth as charges* are gathered. Here was a case where a DC generator provided the high voltage. This voltage charged an insulated hoop of copper, growing to its maximum value. If all values in the circuit were properly balanced, in the manner prescribed by Tesla, a sudden charge collapse would then occur. This collapse was necessarily very much shorter than the interval required to charge the hoop. The collapse comes when the magnetic disrupter extinguishes the arc. If the circuit is properly structured, no backrush alternations ever occur.

This unidirectional succession of charge-discharge impulses causes a very strange field to expand outward, one, which vaguely resembles a “stuttering” or “staccato” electrostatic field. But these terms did not satisfactorily describe the conditions actually measured around the apparatus, a powerful radiant effect exceeding all expectable electrostatic values. Actual calculation of these discharge ratios proved impossible. Implementing the standard magneto-inductive transformer rule, Tesla was unable to account for the enormous voltage multiplication effect. Conventional relationships failing, Tesla hypothesized that the effect was due entirely to radiant transformation rules, obviously requiring empirical determination. Subsequent measurements of discharge lengths and helix attributes provided the necessary new mathematical relationship.

He had discovered a new induction law, one where radiant shockwaves actually auto-intensified when encountering segmented objects. The segmentation was the key to releasing the action. Radiant shockwaves encountered a helix and "flashed over" the outer skin, from end to end. This shockwave did not pass through the windings of the coil at all, treating the coil surface as an aerodynamic plane. A consistent increase in electrical pressure was measured along the coil surface. Indeed, Tesla stated that voltages could often be increased at an amazing 10,000 volts per inch of axial coil surface. This meant that a 24-inch coil could absorb radiant

shockwaves, which initially measured 10,000 volts, with a subsequent maximum rise to 240,000 volts! Such transformations of voltage were unheard with apparatus of this volume and simplicity. Tesla further discovered that the output voltages were mathematically related to the resistance of turns in the helix. High resistance meant higher voltage maxima.

He began referring to his disrupter line as his special "primary', and to the helical coil placed within the shockzone, as his special "secondary". But he never intended anyone to equate these terms with those referring to magneto-electric transformers. This discovery was indeed completely different from magneto-induction. There was a real and measurable reason why he could make this outlandish statement. There was an attribute which completely baffled Tesla for a time. Tesla measured a zero current condition in these long copper secondary coils. He determined that the current, which should have appeared, was completely absent. Pure voltage was rising with each inch of coil surface. Tesla constantly referred to his "electrostatic induction laws", a principle which few comprehended. Tesla called the combined disrupter and secondary helix a "Transformer".

Tesla Transformers are not electro-magnetic devices; they use radiant shockwaves, and produce pure voltage without current. Each transformer conducted a specific impulse duration with special force. Therefore each had to be "tuned" by adjusting the disrupter to that specific impulse duration. Adjustments of arc distance provided this control factor. Once each transformer was tuned to its own special response rate, impulses could flow smoothly through the system like gas flowing in a pipe.

Finding that gas-dynamic analogies and applications indeed provided him with a consistent record of successful assessments in these regards, Tesla began considering whether or not the white flame discharges, so different from anything he had every seen, might not be a gaseous manifestation of electro-static force. There were certainly abundant experimental instances in which a purely gaseous nature, so unlike anything electrical, was being clearly made manifest. The manner, in which the radiant shockwave traveled over the wire coilings in white flimmering lamniar streams, brought a new revolution in thought. Voltage pulses traversed the secondary surface like a gas pulse under increasing constriction. Until reaching the free end of the coil, these gaseous pulses flowed over the copper surface rather than through it. Tesla referred to this specific manifestation as the "skin effect". In this the discharge greatly resembled the manner of gases in motion over surfaces.

Furthermore, whenever a metal point was connected to the upper terminal of one of his Transformers, the stream became more directive. It behaved just like a stream of water in a pipe. When the white flimmering stream was directed at distant metal plates, it produced electronic charges. This charge production could be measured as amperage, "current", at the reception site. In transit however, no such amperage existed. Amperage appeared only when intercepted. Eric Dollard has stated that the space surrounding Tesla Impulse Transformers so surges with these streams that the "interception current" can reach several hundred or even thousands of amperes. But of what was this mysterious stream composed? Tesla struggled with the doubt that these discharge phenomena might be ordinary electricity behaving in extraordinary ways. But did electricity indeed have a smooth, soft, and flimmering nature? The electricity with which he was familiar was shocking, hot, burning, deadly, piercing, stinging, all the attributes of an irritant. But this discharge phenomenon

was, whether cool or warm to the touch, soft and gentle. It would not kill.

Even the manner, in which the pulse exploded as bright white discharges of greatly transformed voltage, suggested the way in which gases behave when released from their confinements under pressure. These reflective meditations convinced Tesla that this effect was not purely electrical in nature. Closely examining the white flames, Tesla realized why there was no measurable "electrical current" at the crown of these activated coils. The normal heavy charge carriers, electrons, could not travel as quickly as the radiant pulse itself. Choked in the metallic lattice of the coil, electrons became immobile. No electron current moved through the coil at all. The radiant pulse, which moved over the coil surface, was therefore not electronic in nature.

Additionally, Tesla discovered an amazing phenomenon, which removed all doubt concerning the true nature of energetic carriers at work in his apparatus. Tesla arranged a very heavy U-shaped copper bus bar, connecting both legs directly to his disrupter primary. Across the legs of this U -shaped bus bar were placed several incandescent lamps. The arrangement was a very evident short circuit. The lamps were illuminated to a brilliant cold white light, while being shorted by a heavy copper shunt. Uncharacteristic of particulate current electricity, the bright but cold lamps revealed that another energetic current was indeed flowing through the "short-circuits".

Those who observed this experiment did not expect it to perform any function save the incineration of the disrupter circuit and possibly of the dynamo itself. Instead of this, witnesses beheld a marvel. The lamps lit to an uncommon brightness. In this simple demonstration, Tesla was illustrating but one of his many evidences. Electronic charges would prefer the least resistant circuit, rejecting the incandescent bulbs for the copper path. The current in this situation chose to conform to a contradictory principle. Perhaps this was true because the currents were not electrical. Tesla repeatedly used this demonstration to evidence the "fractionation" of currents electronic, from currents neutral.

A single question remained, the answer to which would provide him with the essential information needed to create a new technology. What so separated or "fractionated" the diverse mobile carriers in his transformer? It was the geometric configuration of the coil, which inadvertently separated each component. Electrons were blocked from flowing through the wire length, while the radiant pulse was released over the coil surface as a gaseous pulse. Electrons should have drifted through the wire but, during each impulse period, were blocked by the line resistance. Thus, the gaseous mobile carriers were released to flow outside the wire, a pulse that traveled along the outer coil surface from end to end.

Here then was evidence that electrical discharges were indeed composed of several simultaneous mobile species. Tesla now comprehended why his first high frequency alternating currents never evidenced these powerful actions. It was the abruptness, the violence of the impulsive discharge, which gave free mobility to this unsuspected "gaseous" component. Impulses, unidirectional impulses, were the only means by which these potentials could be unlocked. Alternations were absolutely useless in this regard. Moreover, because alternations could not unleash the second gas-dynamic component, it remained an unusable and pitifully weak means. Tesla forever viewed his high frequency alternating devices as failed projects. This has great bearing on his highly critical views of Marconi and all the others like him who pursued high frequency alternating wave

radio. Tesla began to study a topic, which has found more enemies and critics than any this century. Tesla, with greatest interest now, began researching "the aether".

Tesla came to believe that dielectric fields were actually composed of aether streams. Theoretically then, one could derive limitless energy by trapping and conducting a naturally occurring dielectric field line. The problem was that no ordinarily accessible material could resist the aether enough to derive any momentum from it. With a stream so rare as to pass through all known materials, the kinetic energy inherent in dielectric field lines would remain an elusive energy source. Tesla believed he may have found the secret to tapping this energy, but it would not require an ordinary kind of matter. Tesla viewed voltage as streams of aether under various states of pressure. Raising these stresses could produce enormous xther streams, where the observed voltage would then be extremely high and luminous. This was the very condition which Tesla had come to believe had been established in his Transformers.

In fact, Tesla repeatedly stated that his Transformers effected powerful movements in the aether. In one truly mystifying experiment indicative of these comprehensions, Tesla describes the production of very rapid impulse trains with a subsequent production of "cool misty white streamers extending a yard into space". These were cool to the touch, and harmless. If electrical in nature, they would necessarily have been several million volts in potentials. Their harmlessness is coupled with their sinuous nature, one completely unlike electrical currents.

Indeed, to understand Tesla technology one must eliminate the notion that electrons are the "working fluid" in his radiant energy designs. With the lower coil end connected directly to the dynamo, high voltage aether stream were projected from the upper terminal. When describing each of his relevant patents in this new technology, Tesla forever spoke of "lightlike rays" and "the natural medium". The first term refers to the tightly constricted aether streams, which are propelled from his Transformers along infinitesimal ray lines, and the latter refers to the all-pervading aether atmosphere in which his technology operated.

It is impossible to comprehend Teslian Technology apart from the controversial topic concerning the aether. Many analysts will reject the concept without first seeking out and discovering the proofs, which have been established by experimenters such as Eric Dollard. Tesla addressed the notion that aether streams were being pulled through his Transformers, drawn in at higher natural pressure, and accelerated in the sharp electrical discharge. As electrical systems, Tesla apparatus cannot completely be understood or explained. One must view Teslian Technology as a aether gas technology, one capable of being explained only through gas-dynamic analogues.

It was now easy to understand how such projected rays, aether gas streams under high pressure, could penetrate metals and insulators alike. These powerful rays often could penetrate certain materials with inexplicable efficiency. Electricity did not perform these wonders. Tesla also now understood why these discharge streams produced their smoothly hissing sounds, visibly appearing like gas jets under high pressure. Aether gas under pressure. Tesla was completely mystified. He had successfully released the mystery current, normally suppressed and bound in electronic charge carriers. Unidirectional impulsive discharges of high voltage and abrupt durations released them. What other potentials would aether gas technology release?

The original cylindrical coils were quickly replaced with cone shaped coils.

With these bizarre geometries, Tesla was able to focus the gas-dynamic component, which now rose up like a jet of hissing white light from the coil tip. Tesla recognized that these discharges, white spectacular and awe inspiring, actually represented lost power. A power broadcast station had to evenly disperse the energetic radiance in all directions. Flame-like discharges caused the available power to undulate in space. This would produce unpredictable power drops at great distances. Consumers would not receive a reliable and consistent stream of energy. If his Power Transformer was to operate with highest broadcast efficiency, these *flame-like* discharges necessarily had to be suppressed. But suppressing these excessive aether jets proved problematic.

Tesla found that the white flimmering streams were absorbed in large capacity volumes, masses in which the streams were absorbed, filtered, and expelled. The use of copper spheres atop his Transformers forced the streams sufficiently apart to suppress the white flame. Power was now evenly dispersed throughout space as required. But a new problem appeared. The copper spheres, being impacted by the high voltage streams which they were forced to now conduct, expelled electronic components. These appeared along with the radiance, producing truly dangerous conditions. The problem was stimulated by conduction, a case where the spherical copper ball was impacted throughout its volume. The white flimmering streams permeated the copper and expelled electrons. These contaminants concentrated their escape from the system as harmful, blue stinging dartlets. By comparison, the white *flame-like* discharge was a smooth and harmless glow.

Comparing the two species, Tesla recognized the difference in charge carriers. Tesla was once nearly killed when one such dartlet jumped three feet through the air and struck him directly over the heart. The copper spheres had to be removed and replaced by another dispersion component. Metals were apparently of no utility in this case, being natural reservoirs of electrons. Tesla eventually suggested that metals manufactured electrons when impacted with these special flame-white currents, the carriers in the white flames becoming concentrated within the metallic lattice.

He had already observed how the very air near these transformers could be rendered strangely self-luminous. This was a light like no high frequency coil ever could produce, a corona of white brilliance, which expanded to ever enlarging diameters. The light from Tesla Transformers continually expands. Tesla described the growing column of light which surrounds any elevated line which has been connected to his transformers. Unlike common high frequency alternations, Tesla radiant energy effects grow with time. Tesla recognized the reason for this temporal growth process. There were no reversals in the source discharges, therefore the radiant energy would never remove the work performed on any space or material so exposed. As with the unidirectional impulse discharges, the radiant electric effects were additive and accumulative. In this respect, Tesla observed energy magnifications, which seemed totally anomalous to ordinary engineering convention.

It was easy to control the brilliance of a room by controlling the voltage in his transformers. The light from this sort of illumination was curiously bright to human perception, but nearly impossible to photograph on film. Tesla found it necessary to make long time exposures of his discharges before the faintest sort of streamers could be made visible. This strange inability to register photographically was contrasted against the brilliance perceived in the eyes, one which required delicate control. Tesla also designed, built, and utilized large globe lamps, which

required only a single external plate for receiving the radiant energies. However distantly placed from the radiant source, these lamps became brilliantly illuminated. Theirs was a brilliance approaching that of an arc lamp, and exceeding any of the conventional Edison filament lamps by several factors. It was also easy for Tesla to control the heat of any space. By controlling both the voltage and impulse duration of energy in his Transformers, Tesla could heat up a room. Cool breezes could also be arranged by appropriately setting the impulse duration.

The key to producing all aetheric action was to secure a means for actually effecting aetheric deviations, the very thing now possessed by Tesla alone. Sir Oliver Lodge stated that the only means for "getting at the aether" was "an electrical means", but not one member of the Royal Society had been able to achieve this feat with the rare exception of Sir William Crookes. The Tesla method used aether to modify aether! The secret was separating the contaminants from the aether current at the very source of generation, a feat that he had achieved in his Transformers and magnetic arc disrupters.

Tesla used the violence of magnetically disrupted arc discharges to chaoticize electronic and aetheric carriers in metal conductors. Breaking the agglomerations that bind them together, each component was free to separate. This condition could not be achieved in arc discharges where currents were allowed to alternate. In such apparatus, the electronic carriers overwhelmed the release of aether and, while aether was present in the discharge, could never be separated from the composite current. The extraordinary efficiency of the magnetic arc disrupter in developing aetheric currents derived from several principles. Tesla saw that electrical current was really a complex combination of aether and electrons. When electricity was applied to the disrupter, a primary fractioning process took place. Electrons were forcibly expelled from the gap by the strong magnetic influence. The aether streams, neutral in charge, remained flowing through the circuit however. The magnetic disrupter was his primary means for fractionating the electrons from the aether particles.

Aether particles were extremely mobile, virtually massless when compared with electrons, and could therefore pass through matter with very little effort. Electrons could not "keep up" with either the velocity or the permeability of aetheric particles. According to this view, aether particles were infinitesimals, very much smaller than electrons themselves.

The aetheric carriers contained momentum. Their extreme velocity matched their nearly massless nature, the product of both becoming a sizable quantity. They moved with superluminal velocity, a result of their incompressible and massless nature. Whenever a directed radiant matter impulse begins from some point in space, an incompressible movement occurs instantly through space to all points along that path. Such movement occurs as a solid ray, an action defying modern considerations of signal retardations in space. Incompressible raylines can move through any distance instantly. Should the path be 300,000 kilometers long, the impulse at the source end will reach that point as quickly as at all other points. This is superluminal velocity, instantaneous propagation. Radiant matter behaved incompressibly. In effect, this stream of radiant matter, virtually massless and hydrodynamically incompressible, was a pure energy! Radiant Energy.

Here was a distinct phenomenon, one that did not in fact manifest with other than impulse applications. Tesla alternately called these pure aetheric expulsions "radiant matter" and "radiant energy" Neutral in charge and infinitesimal in both mass and cross-section, Radiant Energy was unlike

any light seen since his work was concluded. If asked whether Radiant Energy can be compared with any existing physical item today, one would have to decline. We cannot draw parallels between Radiant Energy and the light energies with which science has long been preoccupied. But if light-like at all, Radiant Energy is possessed of qualities unlike any light, which we have learned to generate. And this is precisely the problem. Tesla Technology is Impulse Technology. Without the disruptive, unidirectional IMPULSE, there are no Radiant Energy effects. Generating this Radiant Energy requires special energetic applications, applications of succinct and brief impulses. These impulses must be generated through the explosive agency of a disruptive discharge, just as Tesla prescribed.

Chapter 3: Verifying Tesla's Secret

Before I return to the discussion of Ed Gray's cold electric circuits, I would like to take a little time to present evidence in support of Vassilatos' thesis.

I have been unsuccessful in my attempts to acquire a copy of Tesla's lecture, "The Dissipation of Electricity," so I have been unable to refer to that document to verify Vassilatos' analysis. However, I felt that his point of view was such a different way of looking at Tesla's work that I simply could not ask you, the reader, just to take it on faith that these are the facts. Therefore, I began researching the voluminous materials available on Tesla these days in an effort to find documentation to verify Vassilatos' thesis. In the large volume entitled *Nikola Tesla: Lectures, Patents and* Articles, I believe I was able to find more than enough evidence in Tesla's own writings to support Vassilatos' analysis of his work. First, this quote is taken from Tesla's article, "The Problems of Increasing Human Energy", that first appeared in *The Century Illustrated Morrthly Magazine* in June of 1900:

Since I described these simple principles of telegraphy without wires, I have had frequent occasion to note that the identical features and elements have been used in the evident belief that the signals are being transmitted to considerable distances by Hertzian radiations. This is only one of the many" misapprehensions to which the investigations of the lamented physicist have given rise. About 33 years ago, Maxwell, following up on the suggestive experiment made by Faraday in 1845, evolved an ideally simple theory which intimately connected light, radiant heat, and electrical phenomena, interpreting them as being all due to vibrations of a hypothetical fluid of inconceivable tenuity called the xther. No experimental verification was arrived at until Hertz, at the suggestion of Helmholtz, undertook a series of experiments to this effect. Hertz proceeded with extraordinary ingenuity and insight, but devoted little energy to the perfection of this old fashioned apparatus. The consequence was that he failed to observe the important function which the air played in his experiments and which I subsequently discovered. Repeating his experiments and reaching different conclusions, I ventured to point out this oversight. The strength of the proofs brought forward by Hertz in support of Maxwell's theory resided in the correct estimate of the rates of vibration of the circuits he used. But I ascertained that he could not have obtained the rates he thought he was getting. The vibrations with identical apparatus he employed are, as a rule, much slower, this being due to the presence of air which produces a dampening effect upon a rapidly vibrating electric circuit with high pressure as a fluid does upon a vibrating tuning fork. I have, however, discovered since that time, other causes of error, and I have long ago ceased to look upon his results as an experimental verification of the poetical concepts of Maxwell. The work of the great German physicist has acted as an immense stimulus to contemporary electrical research, but it has likewise, in a measure, by its fascination paralyzed the scientific mind, and thus hampered independent inquiry. Every new phenomenon, which was discovered, was made to fit the theory, and so, very often the truth has been unconsciously distorted.

P-288

No. 613,735. Patented Nov. 8, 1898.

N. TESLA.

ELECTRIC CIRCUIT CONTROLLER.

(Application filed Apr. 19, 1898.)

(No Model.) 2 Sheets—Sheet 1.

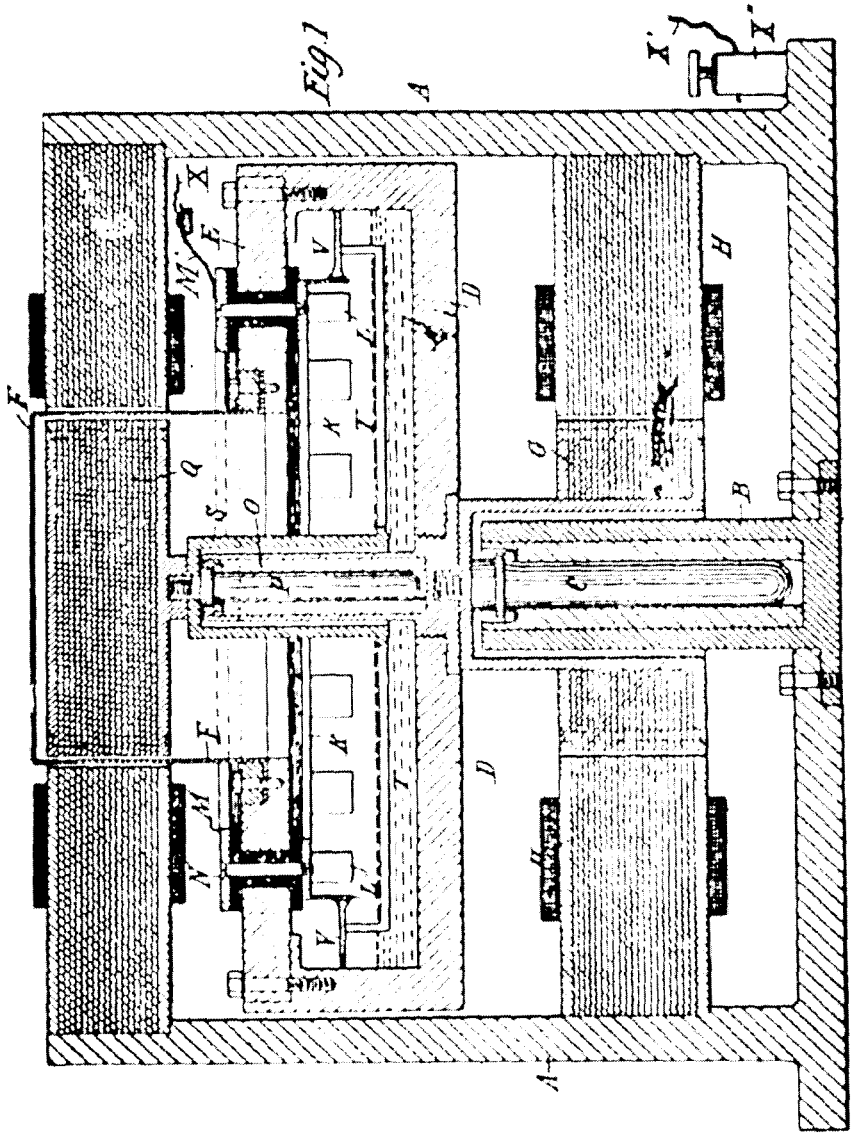

Witnesses:
Raphael Netter
Benjamin Miller

Nikola Tesla, Inventor
Kerr. Curtis & Page Attys

Figure 15
Tesla's Mechanical Circuit Controller

Obviously, Tesla did not agree with the work of Helmholtz, Hertz, and Maxwell! For those readers who do not know who these gentlemen are, Hermann von Helmholtz laid the foundation for what is now known as the "First Law of Thermodynamics", which states that "Energy can be changed from one form to another, but it is neither created nor destroyed." James Clerk-Maxwell's equations are the backbone of modern electromagnetic theory, and Heinrich Hertz' supposed verification of Maxwell's work was deemed so important that they named the *measurement* of frequency after him. These esteemed gentlemen are pivotal personalities in the way electrical science is taught today. But, as we can see, Tesla dismissed them all as not being relevant to his experimental findings. In other words, if we follow this path back into the aethers, we must be willing to leave behind the ideas and limitations defined by the "First Law of Thermodynamics" and Maxwell's equations. We now will peer beyond the boundaries of these tools, and move into a completely different realm of study.

In the closing remarks from the article called "The *Transmission of Electric Energy Without* Wires," published in "The Electrical World and Engineer" in March of 1904, Tesla states:

When the great truth accidentally revealed and experimentally confirmed is fully recognized that this planet with all its appalling immensity is to electrical currents, virtually no more than a small metal ball, and by this fact many possibilities, each baffling imagination and of incalculable consequence, are rendered absolutely sure of accomplishment; when the first plan is inaugurated and it is shown that a telegraphic message, almost as secret and non-interferrable as a *thought can be* transmitted to any terrestrial distance, the sound of the human voice, with all of its intonations and inflections, faithfully and instantly reproduced at any other point of the globe, the energy of a waterfall made available for supplying light, heat or motive power, anywhere - on sea or land or high in the air - humanity will be like a ant heap stirred up with a stick: see the excitement coming!

Here it sounds as if Tesla really has something astonishing, that he understands it, and that he is expecting it to be unlimited. It sounds like something way beyond anything that had ever been done before. Even now, a hundred years later, we are only opening the door to some of these possibilities, particularly insofar as the transmission of the human voice is concerned. But we are certainly not there with regard to the availability of energy everywhere on land or sea or air. Clearly, Tesla is referring to something that has not been brought into full, public use.

What, then, was Tesla doing? What evidence do we have that Tesla was working on the kinds of systems that Mr. Vassilatos is talking about in his book?

First, there is the evidence that Tesla was working on circuits with spark-gaps in an attempt to achieve higher and higher spark-gap discharge speeds

Figure 15 represents one of Tesla's many patents called "Electric Circuit Controller." This patent is very interesting because it consists of two electric motors, each turning in opposite directions with a spark-gap in-between the two moving members. It is evident that Tesla was clearly trying to achieve faster speeds than he could get just by rotating one member. This is a clear example of Tesla's work on a mechanical spark-gap controller in an attempt to increase speed, as Vassilatos suggested in his book.

Figure 16 represents the only illustration in the Lectures, *Patents, Articles book of a* magnetically quenched spark-gap. However, it uses an electric magnet rather than a permanent magnet as referred to by Vassilatos. From this, it is clear that Tesla

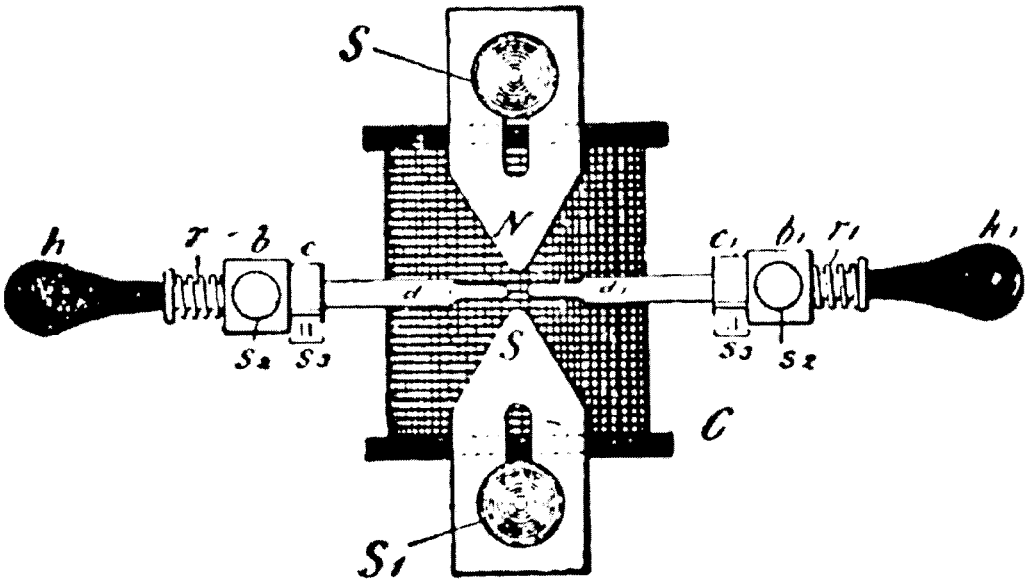

Figure 16
Magnetically Quenched Spark

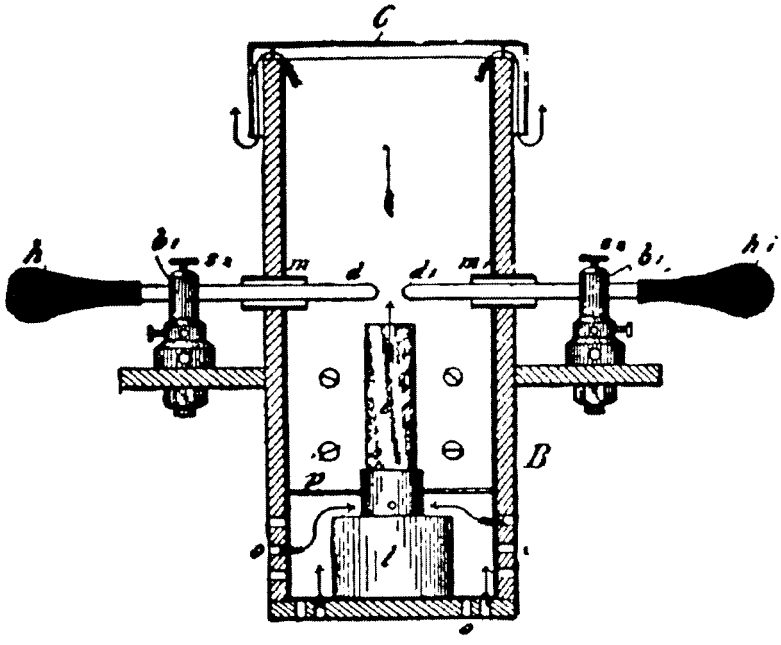

Figure 17
Hot Air Quenched Spark

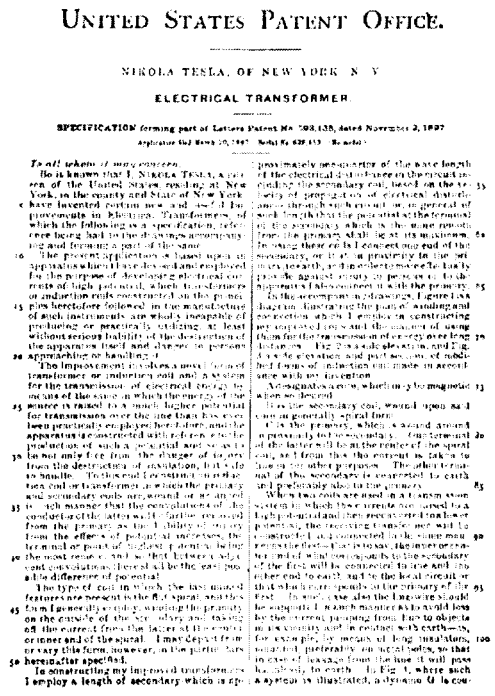

UNITED STATES PATENT OFFICE.

NIKOLA TESLA, OF NEW YORK, N. Y.

ELECTRICAL TRANSFORMER.

SPECIFICATION forming part of Letters Patent No. 593,138, dated November 2, 1897.

Application filed March 20, 1897. Serial No. 628,113. (No model.)

To all whom it may concern:

Be it known that I, NIKOLA TESLA, a citizen of the United States, residing at New York, in the county and State of New York, have invented certain new and useful Improvements in Electrical Transformers, of which the following is a specification, reference being had to the drawings accompanying and forming a part of the same.

The present application is based upon an application which I have for some time employed for the purpose of developing electrical currents of high potential, which is customary in apparatus of this character, on the principles heretofore followed in the manufacture of such instruments are wholly incapable of producing or practically utilizing, at least without serious liability of the destruction of the apparatus itself and danger to persons approaching or handling it.

The improvement involves a novel form of transformer or inductory coil and a new system for the transmission of electrical energy by means of the same in which the energy of the source is raised to a much higher potential for transmission over the line than has ever been practically employed heretofore, and the apparatus constructed with a view to the production of such a potential and so arranged as not only to be free from the danger of injury from the destruction of insulation, but also to insure the highest economy in the operation of the transformer or between the primary and secondary coils are wound or arranged in such manner that the development of the conductor of the latter will be further removed from the primary as the liability of injury from the effects of potential increases, the terminal or point of highest potential being the most remote, and so that between adjacent convolutions there will be the least possible difference of potential.

The type of coil in which the last-named features are present is the flat spiral, and this I form by preferably winding the primary on the outside of the secondary, leaving the latter on the outside of the spiral. I may depart from or vary this form, however, in the particulars hereinafter specified.

In constructing my improved transformer I employ a length of secondary which is approximately one-quarter of the wave-length of the electrical disturbance in the circuit including the secondary coil, based on the velocity of propagation of electrical disturbance through such circuit or coil, in general of such length that the potential at the terminal of the secondary, which is the outer convolution of the spiral, shall be at its maximum. In using these coils I connect one end of the secondary, or that in proximity to the primary, to the ground, and the other end is left insulated. I sometimes, however, connect both ends of the secondary to the ground, and sometimes I connect one end of the secondary to the ground through a condenser, and sometimes I connect the secondary to the ground through a condenser and a spark-gap in series with it. In the accompanying drawings, Figure 1 is a diagram illustrating the principle of winding and connection which I employ in constructing my improved coil and the manner of using them for the transmission of energy over long distances. Fig. 2 is a side elevation, and Fig. 3 is a sectional side elevation, of modified forms of the invention, and Fig. 4 is a detail view of the same.

Like letters of reference refer to like parts in each figure.

A designates a coil, which is the primary, and B the secondary coil, wound upon said coil in generally spiral form.

C is the ground-connection of the primary coil, and C' that of the secondary coil. The terminal of the latter will be at the center of the spiral coil, as I find that the current is taken to greatest advantage for most purposes. The other terminal of the secondary is connected to earth and preferably also to the primary.

When two coils are used in a manner above set forth, in which they are wound or arranged for a high potential and their proximate terminals of potential, the receiving transformer may be constructed in a somewhat similar manner, except that the primary will be connected in shunt with the secondary of the first, will be connected to the ground and to the local circuit, or both terminals may be connected to the primary coil. In such case also the inductive should be adjusted in such manner as to avoid loss by the current passing from the to object to be operated upon, or to that with earth—as, for example, by means of long insulators, or by placing the primary on local poles, so that no current will leave from the line. It will pass back directly to earth. In Fig. 1, where such a system is illustrated, a dynamo D is connected, obviously, DC spark discharges with high voltage.

The cover sheet for a patent called Electrical Transformer is shown in Figure 18. Tesla states that this is the invention that he plans to employ in constructing improved coils and a manner of using them for transmission of energy over long distances.

Figure 18
Tesla's Electrical Transformer

One of the illustrations from that patent (Figure 19) clearly shows that he has the construct that Vassilatos was talking about: just a few turns in the primary and a conical coil in the secondary. So all the structures that Vassilatos wrote about are

was working with magnetically quenched spark gaps. This illustrates one of his many experiments to "blow-out" or quench a spark discharge. This mechanism is particularly interesting, because it was obviously designed for a DC spark. DC spark discharges do not start very easily. The presence of the spring-loaded handles on either side allow the spark mechanisms to be brought closer together to draw the initial spark by tapping one end or the other. Then they would spring back to their preset distances, enabling a DC spark discharge to begin under these very difficult conditions.

Figure 17 is an illustration showing another spark-gap mechanism. In this one, Tesla is blowing hot air across a spark discharge path and, as indicated in the accompanying text, there is also a magnetic field present, Since Tesla was using both hot air and a magnetic field with a spark-gap in this apparatus, clearly he was looking at a wide variety of possibilities to get more controllable spark discharges, and,

Figure 20 is an illustration from the Tesla patent called the *Art of Transmitting Electrical Energy Through the Natural Mediums.* The diagram in Figure 21 is an enlargement of a section of this illustration showing the same basic structure of source "B" powering a 2-turn primary with a spiral coil in the middle of it. This apparatus was designed for broadcasting energy to great distances, so it also includes connections to the ground and the sky. (E) is the connection to the earth, and (E) is what Tesla called an "elevated capacitance". This was the heart of the magnifying transmitter system that Tesla attempted to construct at Wardenclyffe, New York, in order to broadcast energy to all points on the planet.

What is interesting about this is the source for energizing the system "B". When you look at this diagram, "B", on the left, looks like the symbol for a simple generator. However, the following excerpt from the patent text expands on the idea of exactly what source "B" is:

In Figure *1*, *`A'* designates a primary coil forming part of a transformer and consisting generally of a few turns of stout cable of inappreciable resistance, the ends of which are connected to the terminals of a source of power for electrical oscillations diagrammatically represented by B'. This

P-254

(No Model.) 2 Sheets—Sheet 1.

N. TESLA.

ELECTRICAL TRANSFORMER.

No. 593,138. Patented Nov. 2, 1897.

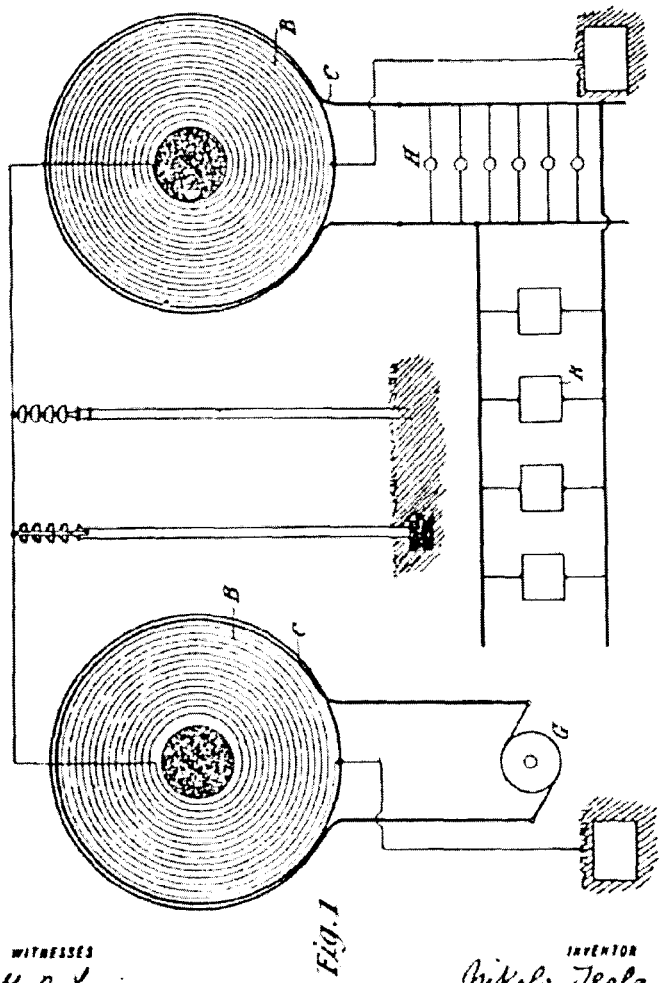

Fig. 1

WITNESSES

Y. B. Lewis.

Edward B. Hopkinson.

INVENTOR

Nikola Tesla

BY

Kerr, Curtis & Page.

ATTORNEY

P-255

(No Model.) 2 Sheets—Sheet 2

N. TESLA.

ELECTRICAL TRANSFORMER.

No. 593,138. Patented Nov. 2, 1897.

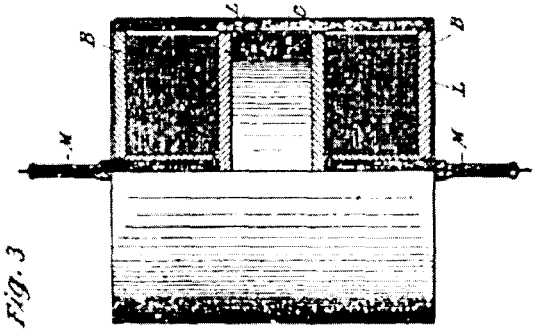

Fig. 3

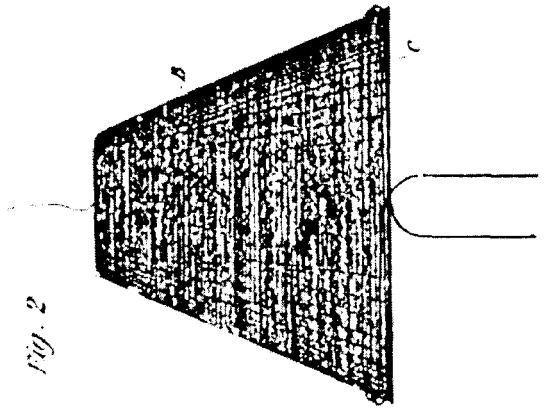

Fig. 2

WITNESSES

Y B Lewis

Edward B Hopkinson

INVENTOR

Nikola Tesla

BY

Kerr, Curtis & Page

ATTORNEYS.

P-336

No. 787,412. PATENTED APR. 18, 1905.

N. TESLA.

ART OF TRANSMITTING ELECTRICAL ENERGY THROUGH THE NATURAL MEDIUMS.

APPLICATION FILED MAY 16, 1900. RENEWED JUNE 17, 1902.

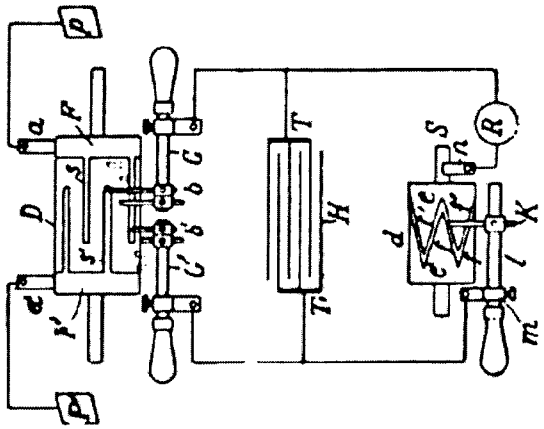

Fig. 2

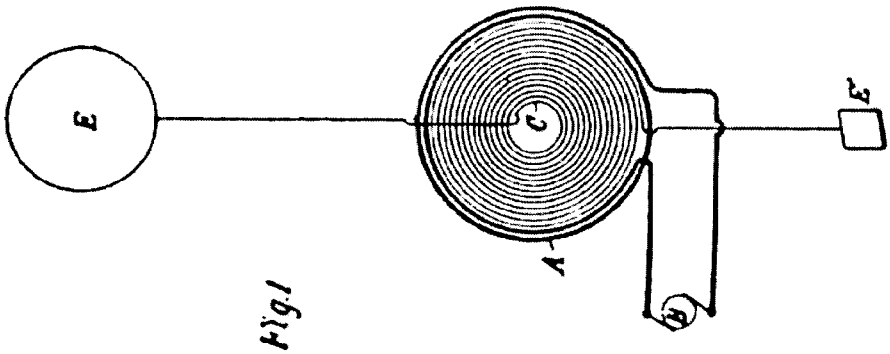

Fig. 1

Witnesses:
Raphael Netter
M. Lewern Byer.

Nikola Tesla Inventor
by Kerr, Page & Cooper Attys

Figure 20
Tesla's Magnifying Transmitter Illustration

high potential and discharged in rapid succession through the primary, as in a type of transformer invented by me.

In Figure 21, I refer to the image on the right side, as "Tesla's Magnifying Transmitter Illustration as Described in the Patent Text." This shows the capacitor and the disruptive spark-gap (in this case a magnetically quenched gap) so he could control the impulse characteristics the way he wanted.

Quoting from the text of this patent again, Tesla claims:

I have found it practicable to produce in this manner an electrical movement thousands of times greater than the initial.

So once again, he is talking about a tremendous gain in electrical *movement*. *This is* not just a gain in voltage like in ordinary transformers, but a gain in power.

Just prior to that quote on the same page, Tesla states:

These adjustments and relations being carefully completed and other constructive features indicated rigorously observed, the electrical movement produced in the secondary system by the inductive action of the primary, `A', will be enormously magnified...

Tesla obviously believed, and stated repeatedly, that this system was capable of producing more energy out than he was putting in. Today, that concept is referred to as "Free Energy."

For more evidence that Vassilatos' analysis is correct, I refer back to the Lectures, Patents, Articles book. On page L112, (Figure 22) you can see "On the Apparatus and Method of Conversion." Illustrated here is a generator that can produce alternating currents into the circuits on the left and direct currents into the circuits on the right.

Figure 23 is a close up view of the direct current side. In the middle image, Tesla is taking direct current from the main generator and running it through another apparatus that, as the text tells us, raises the DC voltage even higher. The circuit then charges a capacitor and discharges it through a magnetically quenched spark gap to run light bulbs and other apparatus.

This is direct evidence, in Tesla's published writings, that he was working with all of the components described by Vassilatos. True, he obscures them in a collection of other possibilities, but the essential elements are all present and explicitly defined.

Add to this, the following astonishing statement by Tesla taken from "The Problems of Increasing Human Energy" in the June, 1900 issue of Century Magazine (page A145):

Whatever electricity may be, it is a fact that it behaves like an incompressible fluid and the earth may be looked upon as an immense reservoir of electricity....

Considering that Nikola Tesla is the inventor of the polyphase electrical distribution system used all over the world today, it is astonishing that he states that he does not know what electricity is, but that it definitely acts like a fluid under pressure! This understanding of electricity is, of course, completely outside the accepted view.

Tesla's statement that electricity behaves like an incompressible fluid only begs the question: What fluid is he referring to? Could this be one of Tesla's cryptic references to ether gas as Vassilatos suggests?

From the text of the same article, on page A148, are these other relevant statements:

Finally, however, I had the satisfaction of accomplishing the task undertaken by the use of a new principle, the virtue of which is based on the marvelous properties of the electrical condenser.

One of these is that it can discharge or

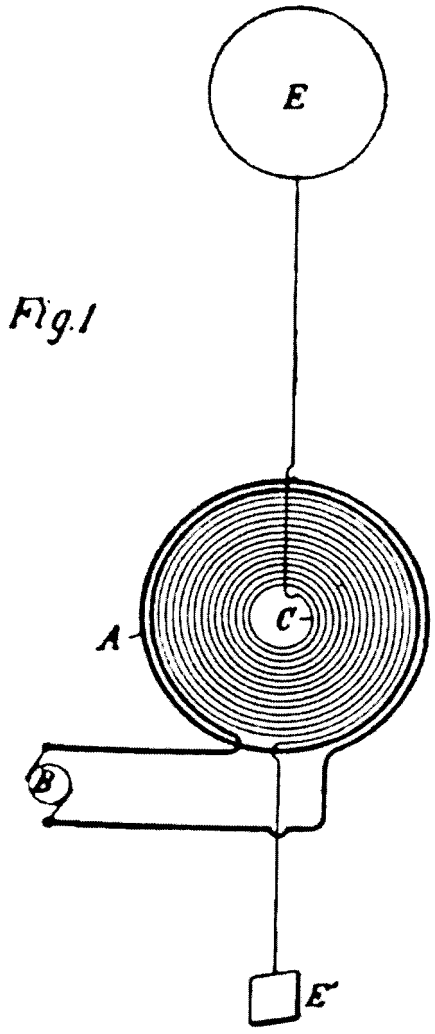

Tesla's Magnifying Transmitter Illustration

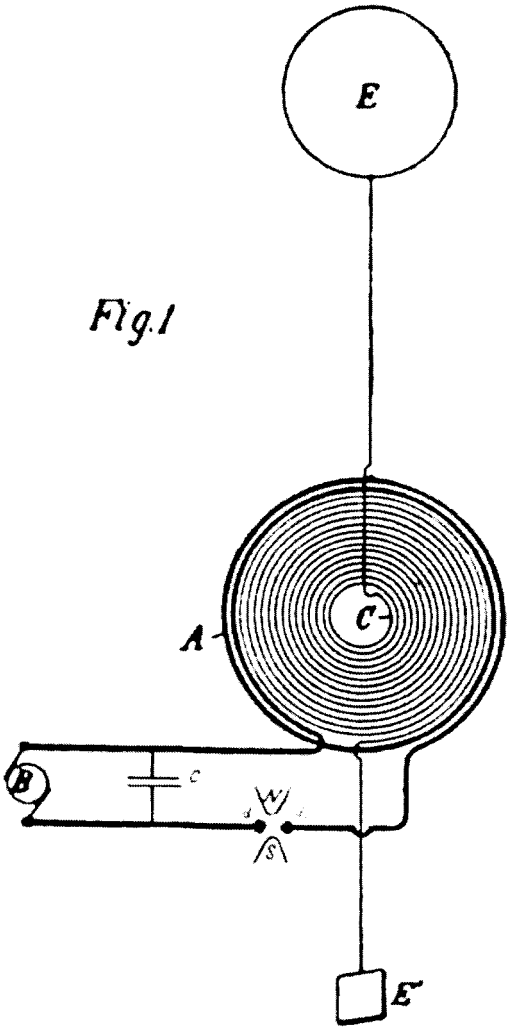

I Tesla's Magnifying Transmitter Illustration as Described in the Patent Text

Figure 21
Tesla's Magnifying Transmitter as Described in the Patent

should possess, besides instructive, also entertaining features and as such, a simple experiment, such as the one cited, would not go very far towards the attainment of the lecturer's aim. I must therefore choose another way of illustrating, more spectacular certainly, but perhaps also more instructive. Instead of the frictional ***machine*** and Leyden jar, I shall avail myself in these experiments, of an induction coil of peculiar properties, which was described in detail by me in a lecture before the London Institution of Electrical Engineers, in Feb. 1892. This induction coil is capable of yielding currents of enormous potential differences, alternating with extreme rapidity. With this apparatus I shall endeavor to show you three distinct classes of effects, or phenomena, and it is my desire that each experiment, while serving for the purposes of illustration, should at the same time teach us some novel truth, or show us some novel aspect of ***this*** fascinating science. But before doing this, it seems proper and useful to dwell upon the apparatus employed, and method of obtaining the high potentials and high-frequency currents which are made use of in these experiments.

ON THE APPARATUS AND METHOD OF CONVERSION.

These high-frequency currents are obtained in a peculiar manner. The method employed was advanced by me about two years ago in an experimental lecture before the American 'Institute of Electrical Engineers. A number of ways, as practiced in the

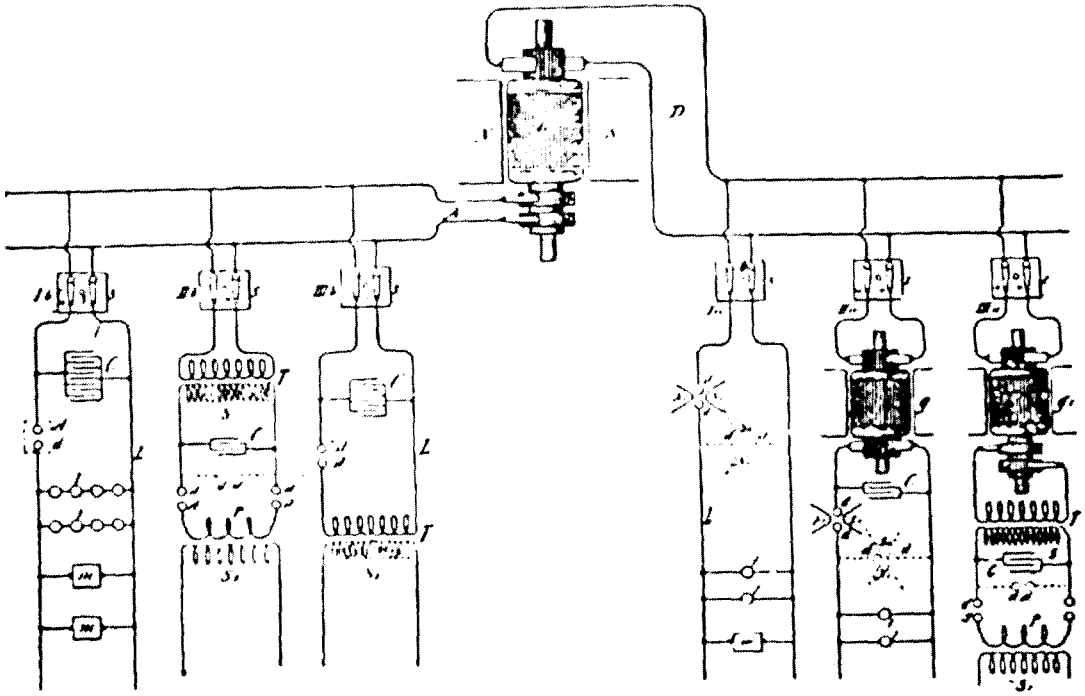

Fig. 1.

laboratory, of obtaining these currents either from continuous or low frequency altemating currents, is diagrammatically indicated in Fig. 1, which will be later described in detail. The general plan is to charge condensers, from a direct or alternate-current source, preferably of high-tension, and to discharge them disruptively while observing wcllknown conditions necessary to maintain the oscillations of the current. In view of the

Figure 22
Illustration from a Tesla Lecture. February 1893

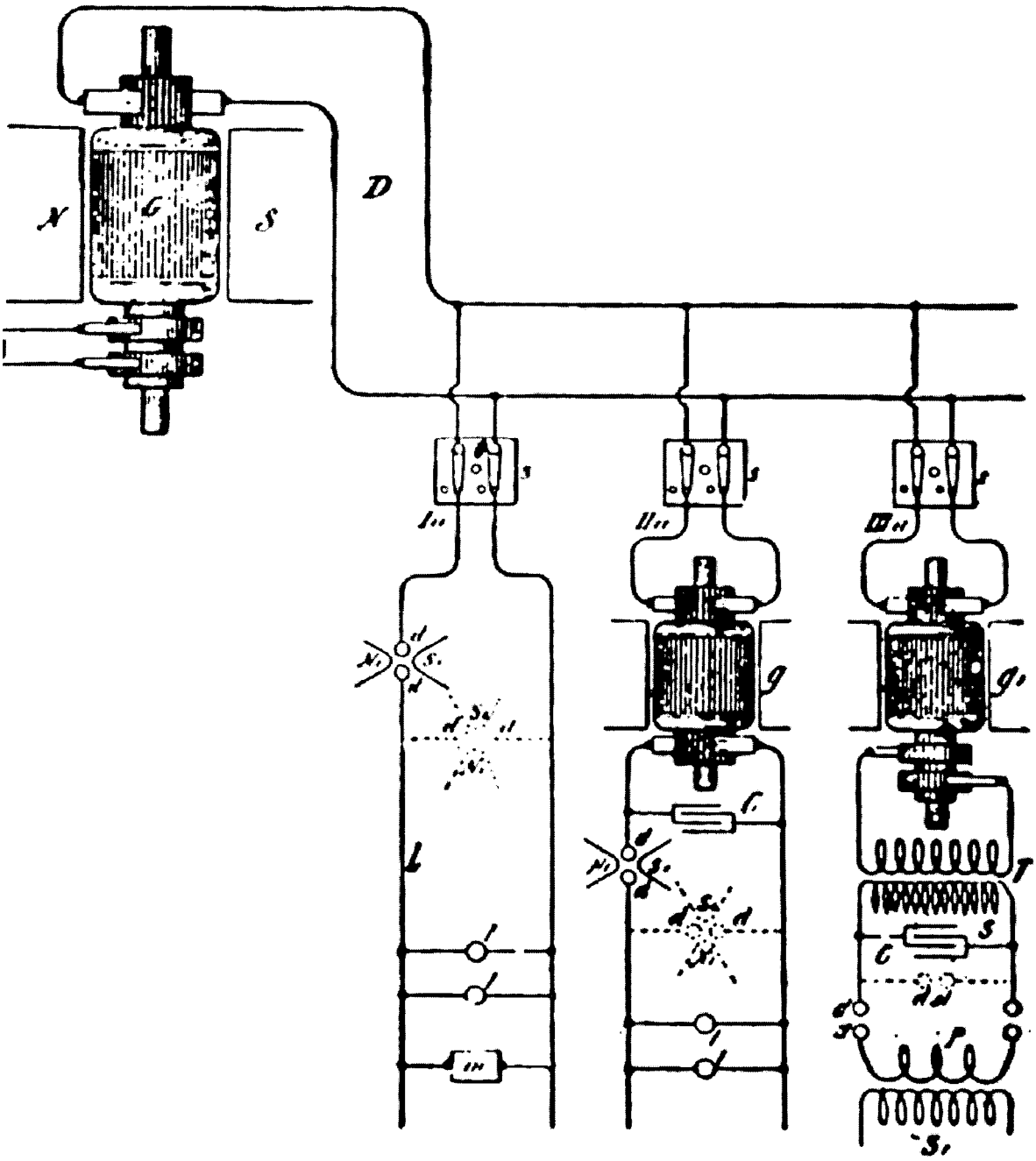

Figure 23
Close-Up of "Method of Conversion"

Figure 24
Radiant Energy Discharge

explode its stored energy in an inconceivably short time. Another of its properties, equally valuable, are that its discharge may vibrate at any rate desired up to many millions per second.

I arranged such an instrument so as to be charged and discharged alternately in rapid succession through a coil with a few turns of stout wire forming the primary of a transformer of induction coil.

Electrical effects of any desired character and of intensities undreamed of before are now easily producible by perfected apparatus of this kind, to which frequent reference has been made, and the essential parts of which are shown in Figure 6. For certain purposes, a strong inductive effect is required; for others the greatest possible suddenness; for others again, an exceptionally high rate of vibration or extreme pressure; while for certain other objects immense electrical movements are necessary.

So, now we have what I believe are ample and sufficient references in Tesla's own words supportive of Vassilatos' main thesis that, indeed, Tesla was actively engaged in charging capacitors with high voltage DC sources; he was discharging them through magnetically quenched spark gaps; he was doing this at extremely high rates of vibration, even up to many millions of times per second, and finally, that this was the method of operating his “magnifying transmitter,” the device that produced and captured what Tesla called “Radiant Energy.”

The question is, in spite of all of this written evidence, do we have any direct proof that Tesla's Magnifying Transmitter produces a different form of electricity? To answer this question, I refer to Figure 24, a black and white version of the color image of the discharge from Eric Dollard's Magnifying Transmitter shown on the front cover of this book.

This photograph was taken by Alison Davidson in 1986 and was provided to me by Tom Brown in New Zealand. The wooden top of the coil is about 8 inches across. The voltage represented by this discharge is anyone's guess, but certainly mast be approaching 400,000 volts. The other end of the coil is driving more than 4 amperes into the ground connection, measured on a radio frequency ammeter, and the entire system is drawing less than 2000 watts from the wall. This image shows an imperfectly purified etheric discharge, complete with “blue dartlets”, just as Tesla described.

At this point I would like to add one more piece of eyewitness testimony concerning the nature of Tesla's radiant energy and cold electricity. On the same day Alison Davidson's photograph was taken, Tom Brown and I conducted an astonishing experiment. I picked up an ordinary filament light bulb and held the outer screw base in my right hand. Then I asked Tom to step over and touch the

bottom connection of the light bulb with his finger. As soon as he did this, the light bulb filament lit to full brightness in our hands. I was about six feet away from the magnifying transmitter and Tom was about eight feet away. I felt no unusual sensations at all, but I was quite startled. At that time I had no idea how really safe this form of energy is.

To summarize, Tesla accidentally discovered an electrostatic "super-charging" effect while trying to verify Hertz' discovery of electro-magnetic waves. After hundreds of experiments, he learned how to control and maximize this phenomenon. This led him to the discovery that electricity is made up of different components, that can be separated from each other, and that a pure, gaseous etheric energy can be fractionated away from the flow of electrons in a circuit designed to produce short duration, unidirectional impulses. When all the conditions were right, this gaseous, etheric energy would manifest itself as a spatially distributed voltage that would radiate away from the electrical circuit as a "light-like ray" that could charge other surfaces within the field.

From now on, I would like to refer to this phenomenon as "The Electro-Radiant Event" and summarize its characteristics as follows:

- The Electro-Radiant Event is produced when a high-voltage, direct current is discharged across a spark-gap and interrupted abruptly before any reversals of current can occur.
- This effect is greatly increased when the source of direct current is a charged capacitor.
- The Electro-Radiant Event leaves wires and other circuit components perpendicular to the flow of current.
- The Electro-Radiant Event produces a spatially distributed voltage that can be thousands of times higher than the initial spark discharge voltage.
- It propagates instantaneously as a longitudinal, electrostatic "light-like ray" that behaves similarly to an incompressible gas under pressure.
- Electro-Radiant effects are solely characterized by impulse duration and voltage drop in the spark gap.
- Electro-Radiant effects penetrate all materials and create "electronic responses" in metals like copper and silver. In this case, "electronic responses" means that an electrical charge will build up on copper surfaces exposed to Electro-Radiant emissions.
- Electro-Radiant impulses shorter than 100 microseconds are completely safe to handle and will not cause shock or harm.
- Electro-Radiant impulses shorter than 100 nanoseconds are cold and easily cause lighting effects in vacuum globes.

The "Electro-Radiant Event" is essentially the "gain mechanism" that Tesla discovered that is the basis of his Magnifying Transmitter. It is the foundation of his claim that he was able to create more energy in his output than it took to initiate it in his input.

Summary of The Electro-Radiant Event

1. The Electro-Radiant Event is produced when a high-voltage, direct current is discharged across a spark gap and interrupted abruptly before any reversals of current can occur.

2. This effect is greatly increased when the source of direct current is a charged capacitor.

3. The Electro-Radiant Event leaves wires and other circuit components perpendicular to the flow of current.

4. The Electro-Radiant Event produces a spatially distributed voltage that can be thousands of times higher than the initial spark discharge voltage.

5. It propagates instantaneously as a longitudinal, electrostatic "light-like ray" that behaves similarly to an incompressible gas under pressure.

6. Electro-Radiant effects are solely characterized by impulse duration and voltage drop in the spark gap.

7. Electro-Radiant effects penetrate all materials and create “electronic responses” in metals like copper and silver. In this case, “electronic responses” means that an electrical charge will build up on copper surfaces exposed to Electro-Radiant emissions

8. Electro-Radiant impulses shorter than 100 microseconds are completely safe to handle and will not cause shock or harm.

9. Electro-Radiant impulses shorter than 100 nanoseconds are cold and easily cause lighting effects in vacuum globes.

Figure 25

FIG. 1

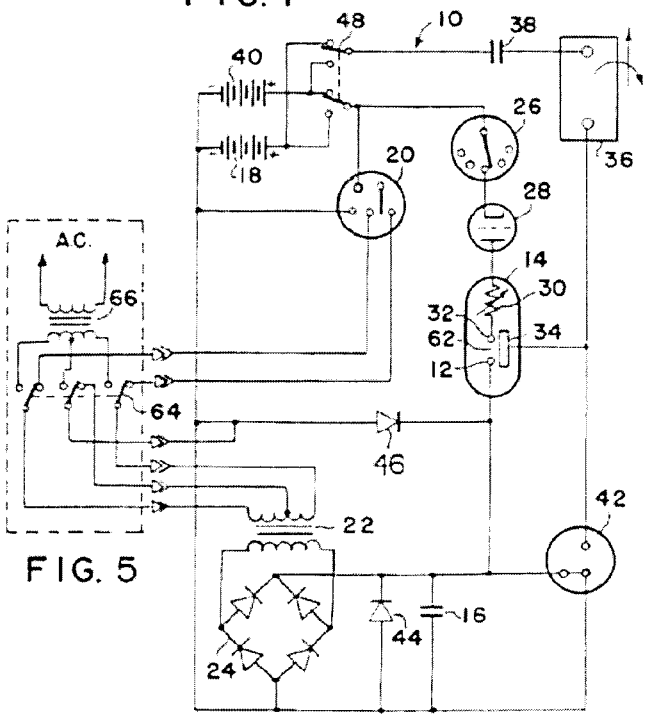

FIG. 5

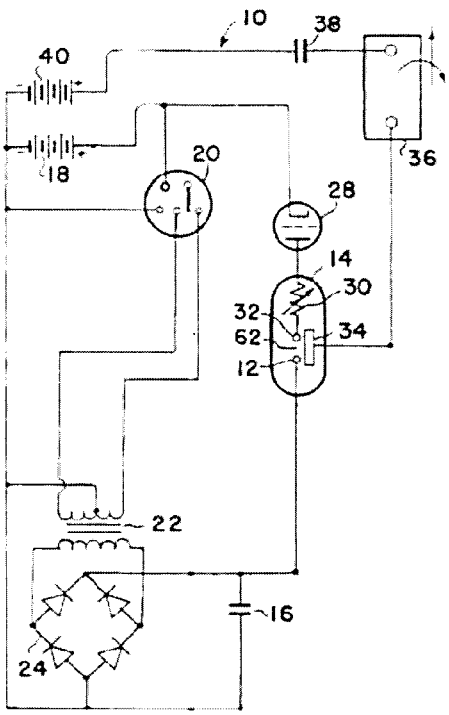

Figure 26 Gray's Circuit "Schematic" and the Simplified Gray's Circuit "Schematic"

Chapter 4: Decoding Gray's Patents

In the previous chapters, I have taken a great deal of time to explain the intricacies of Tesla's Magnifying Transmitter because of how it directly relates to the operation of Ed Gray's cold electricity circuit. To better understand what his circuit is and how it operates, Figure 26 shows Gray's "schematic" on the left, as it is presented in Patent # 4,595,975, and on the right, it shows what I refer to as the "Simplified Gray Circuit `Schematic.'" (I'm using the term "schematic" in quotes because this is not entirely a schematic diagram.) In order to better understand this circuit in its most fundamental form, I would like to eliminate a number of components, temporarily, that serve functions outside of its essential operation, as follows:

- Components # 64 and #66 (shown within the dotted-line box) indicate an alternate way of running the circuit from an AC supply. These parts can be eliminated without changing the circuit in any significant way because the circuit can be run from the batteries.
- Components # 42, # 44, and # 46, which are the safety overshoot mechanisms referred to earlier, can be eliminated because we learned in Chapter 1, reading from the patent text, that these parts are included simply to protect the circuit in case it generates too much energy.
- Component # 26, which Gray calls a "commutator," is part of the timing mechanism. However, the vacuum triode, # 28, is sufficient to give us the timing impulses for the discharge of our capacitor, so # 26 can be eliminated.
- Component # 48 is a switching mechanism that allows the operator to change which battery is powering the circuit and which battery the circuit is charging. This can be eliminated by simply indicating that battery 18 is running the circuit and battery 40 is receiving the charging impulses.

When all of these components are removed, we are left with the "Simplified Gray Circuit `Schematic'" as shown on the right side of the diagram.

Figure 27 shows Tesla's Magnifying Transmitter Circuit next to Gray's Cold Electricity Circuit. I call this *The* Common *Features of Tesla's Magnifying Transmitter and Gray's Cold Electricity Circuit.* The important common features are as follows:

- They both start off with a source of high voltage direct current. In Tesla's case, it's a high voltage direct current generator, Source "B". In Gray's case, it starts with a battery, # 18, whose output is chopped through a multi-vibrator, #20. The impulses coming from the multi-vibrator power the low voltage, primary winding on transformer #22. The high voltage secondary winding of # 22 is then rectified with the full wave bridge, # 24. The output from # 24 is high voltage DC. But either way, both circuits begin with high voltage DC.
- The next component in both circuits is

the capacitor. In Tesla's circuit it is "C"; In Grays, it is # 16. Both circuits operate by having the capacitor charged repeatedly by the high voltage DC source.

- The next component in both circuits is the spark gap. In Tesla's circuit it is represented as "d-d". In Gray's diagram it is # 62. For each circuit to work properly, the spark in the gap must be characterized by two features: first, there must be a means to insure that the discharge will occur in only one direction, and second, there must be a means to control the duration of the spark. In the case of Tesla's circuit, we have the continuous pressure from the high voltage generator to insure the unidirectional discharge of the capacitor, and a magnetic field across the spark gap to blow-out the current as soon as it appears. The duration of the spark can be determined by both the strength of the magnetic field across the gap and by the size (capacitance) of the capacitor. In the case of Gray, we know that he was using very large capacitors, so he wasn't discharging the entire capacitor at one time. But his circuit was performing two functions: the resistor, # 30, limited the current in the discharge, and the vacuum tube, # 28, could not only shut off the discharge at whatever pulse duration he desired, but it also insured that no reversals of current appeared in this section of the circuit. So, again, all the necessary features are present.
- Next, both circuits have what I call the "Preferred Location for the ElectroRadiant Event." In Tesla's case, it is "two turns of stout wire," ("A") as he calls it, which is the primary of his electrical transformer. But as we know from reading Mr. Vassilatos, this is not a magnetically inductive transformer. The magnetic coupling is very weak between the primary and the secondary coils. In fact this device runs on what Tesla refers to as his new "electrostatic induction rules." In the case of Gray, the preferred location for the ElectroRadiant Event is what he calls his "conversion switching element tube," # 14. This component is clearly an electrostatic device, as we read earlier. It is specifically designed to have an explosive, electrostatic event radiate away from its central member.
- The next common element is the "Preferred Means to Intercept the Electro-Radiant Event." In Tesla's case, it's the secondary coil of his transformer, "F"; this is the conical or spiral shaped coil that Vassilatos mentions and that we've already seen in his patents. In Gray's case, it's the charge-receiving grids, # 34, that collect the radiant voltage. It's important to see that in both of these circuits, there is no direct connection between the source of energy and the "receiver element." Only the induced electroradiant charge appears on these output components.
- The next element is the "Connection to the Preferred Output." In Tesla's case, the output is the connection to the ground (E) and the elevated capacitance (E) that constitutes his World Broadcast System. In Gray' case, the output discharges from the "charge receiving grids" are directed to the inductive load, # 36. This element can represent either the jumping magnets or a transformer output that ran his cold electric circuit or the repulsive magnets in his motor. So again, each circuit has a preferred means to intercept the Electro-Radiant Event and a preferred method to connect it to the output.
- And finally, Gray was able to reconvert some of this excess energy back into ordinary electricity, and recycle enough

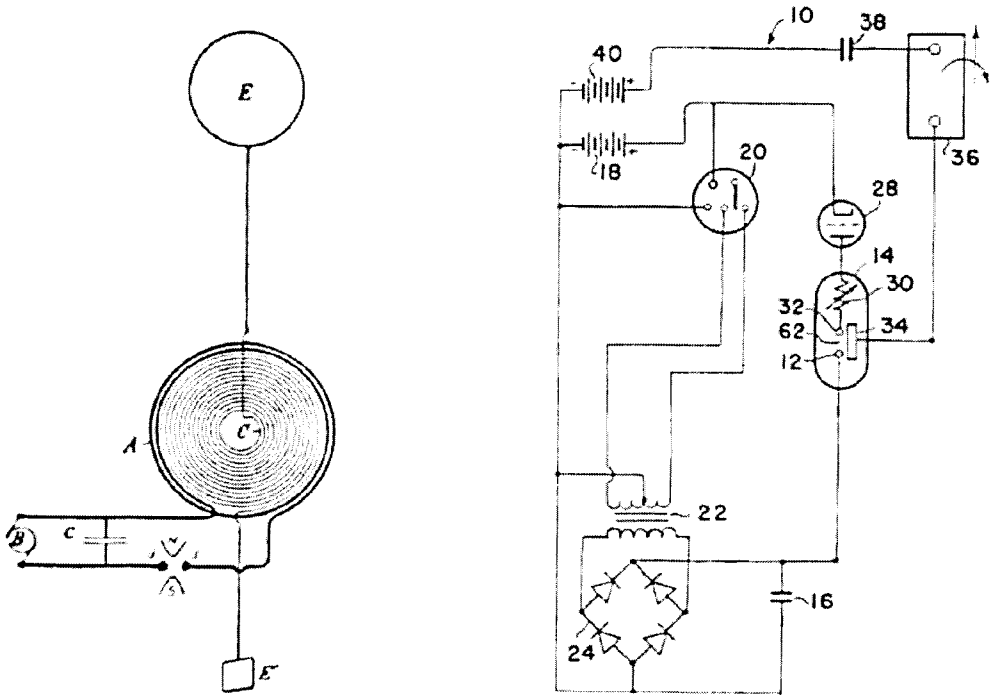

Common Features of Tesla's Magnifying Transmitter and Gray's Cold Electricity Circuit

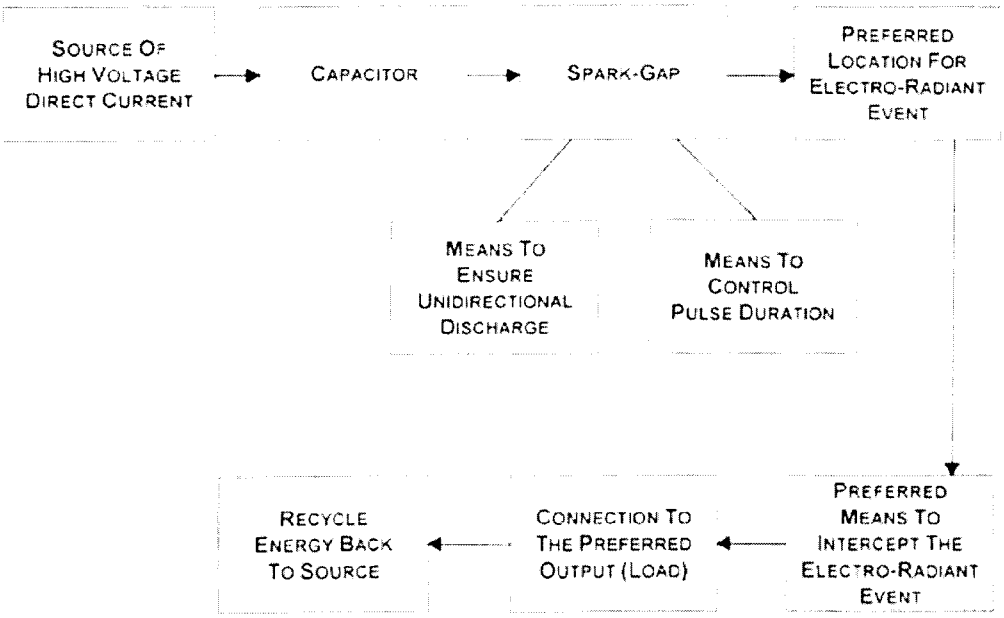

Figure 27
Common Features of Tesla's Magnifying
Transmitter and Gray's Cold Electricity Circuit

FIG. 1

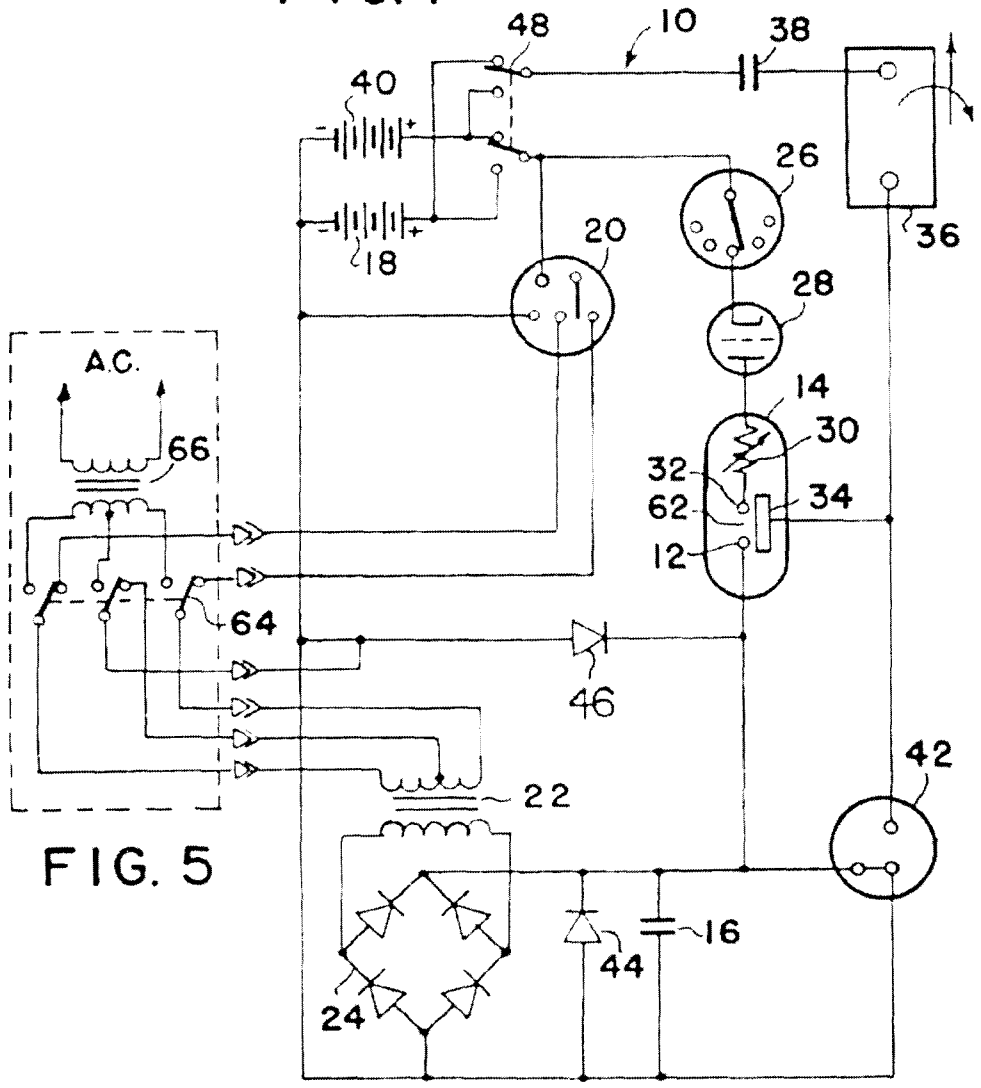

FIG. 5

Figure 28
Gray's Circuit "Schematic"

of it to actually recharge his battery, as we read earlier. Tesla was not concerned with this recycling process, since his system was designed to be powered by a hydroelectric power plant.

So it is clear from this analysis that Tesla's Magnifying Transmitter and Gray's Cold Electricity Circuits are, for all intents and purposes, the same circuit. They do the same things, in the same places, in slightly different ways, and they both claim to produce extremely high gains of a cold form of "electrostatic" energy in the output. Tesla's system was obviously much, much larger since he was planning to power up the whole world. Gray was only planning to power up your home or your car. But for all intents and purposes, these systems perform the same functions and release the same "Electro-Radiant" gain mechanism.

Once again, Figure *28* shows Gray's circuit "schematic" from his "Efficient Power Supply Suitable For Inductive Loads" patent. I realized, after studying this diagram for a long time, that there were a number of basic problems with the way it was drawn. First of all, let's look at component # *42.* As this is drawn (remember that this is a spark overshoot device) there is a line connecting all the way through the bottom half. If this were supposed to be an actual electrical connection, it would produce a short circuit, and would not allow capacitor # *16* to charge up. So, it can clearly be seen that this part of the drawing has problems.

Next we will look at components # *26* and # *28* which are defined in the patent text as follows:

Control of the conversion switching element tube is maintained by commutator *26. A* series of contacts mounted radially about a shaft or a solid state switching device sensitive to time or other variable may be used for this control element. *A* switching element tube type one-way energy path, *28,* is introduced between the commutator device and the conversion switching element tube to prevent high energy arcing at the commutator current path.

If the commutator, # *26,* were a solid state device, there would be no "arcing" to prevent. Therefore, the stated purpose of *# 28* in the patent text is misleading. However, component # *28* is described as a "one-way energy path." Gray is specifically saying that energy in this section of the circuit can only be allowed to move in one direction. This is the important condition to establish, because it is in strict compliance with the conditions Tesla set forth in order to create the "Electro-Radiant" event. There is also another glaring omission in connection to component # *28.* The control grid in this triode device is not attached to anything, and that, of course, is what could control the timing of the spark discharge. In the patent text, there is no mention of how component # *28* functions and no mention of how the grid is controlled. Recognizing that component *# 28* had no means of being controlled was an important realization for me.

The next problems I found were in the inductive load, component # *36.* The first is that # *36* is described as an inductor but is not illustrated by a coil symbol as we see with components # *22* and # 66. Second, there are also two odd arrows associated with this component. The patent text implies that these may actually be two coils that repel each other to produce mechanical work. With this in mind, the arrows may represent the idea of two members deflected away from each other in some way. This is not made clear in the patent text. Third, we don't see any real current path through this component, so we don't know where the discharge goes. And finally, fourth, the circuit comes to the second capacitor, # *38.* In the patent text this component is described as being a part of the recharging mechanism. However,

none of these component connections make any sense. For instance, if impulses coming from the inductor, # 36, start charging up capacitor # 38, there are no circuit connections shown that would allow it ever to be discharged. Therefore, because of these omissions, I came to view this section of the circuit more as a block diagram than as an actual schematic.

I came to the conclusion that all that is really apparent is that the charge receiving grids are in relationship to the inductive load, which is in relationship to the receiving capacitor, which is in some relationship to the recharging of the battery. Therefore, this section is a block diagram, merely indicating that these components are in relationship to each other, rather than showing exactly how they are wired together.

As we move towards a more complete understanding of what Gray's schematic diagram may actually look like, we will now turn our attention to his "conversion element switching tube" (Figure 29). This, finally, is the heart of the matter, the component that Gray always referred to as the "super secret means of generating and mixing static electricity." This is the element where the free energy is generated and collected.

The conversion element switching tube is really three components in one. It consists of the resistor # 30, the spark gap (the space between # 32 and # 12), and the area surrounded by the charge-receiving grids (# 34a & # 34b). Even though it is not stated in the patent text, we do know that the spark-gap is rated at about 3,000 volts, based on statements made by Gray in the newspaper articles quoted in Chapter 1. The rear extension of what Gray calls his "high voltage anode" (# 12) is the surface from which the Electro-Radiant event will be projected. This free energy blast will radiate away from # 12, perpendicular to the flow of current in the path of the spark discharge moving down that surface. The material composition of # 12 is represented as being relatively thick. It is not just a wire. But what are its characteristics? The patent doesn't describe them. We might hypothesize that this material is a bare metal with no insulation on it. It could possibly have a mirror finish, made of stainless steel or a non-magnetic material. A wide variety of options need to be tested here, but very possibly the element's diameter could be an important factor, as well as whether or not it is solid or hollow. These questions need to be explored and remain among the only unknowns.

The concentric receiving grids (# 34a & # 34b) around # 12 are designed to intercept the electro-radiant event. As indicated before, the patent states, "This element utilizes a low voltage anode, a high voltage anode, and one or more electrostatic or charge-receiving grids." This drawing clearly shows two charge-receiving grids. In the section from Gray's patent, which refers to this component, he says:

The shape and spacing of the electro-static grids is also susceptible to variations of application, voltage, current, and energy requirements.It is the contention of the inventor that by judicious mating of the elements of the conversion switching element tube and the proper selection of the components of the circuit elements of the system, the desired theoretical results may be achieved. It is the inventor's contention that this mating and selection process is well within the capabilities of intensive research and development technique.

I'm sure this was his very nice way of saying, "This is all I'm going to tell you, but you can probably figure it out if you know what you're doing." Then he says:

The preferred embodiment of this invention merely assumes optimum utilization and optimum benefit from this invention when used with portable energy devices similar in principle to the wet cell or dry cell battery. This invention proposes to

FIG. 2

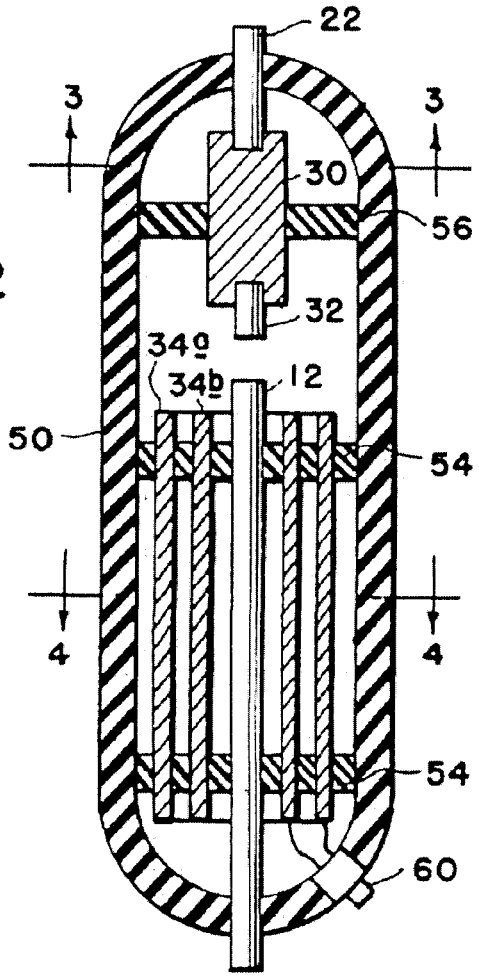

FIG. 3

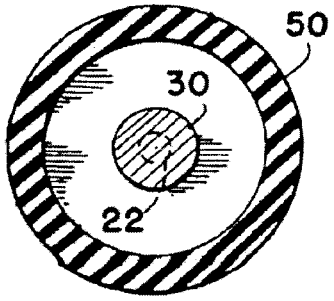

FIG. 4

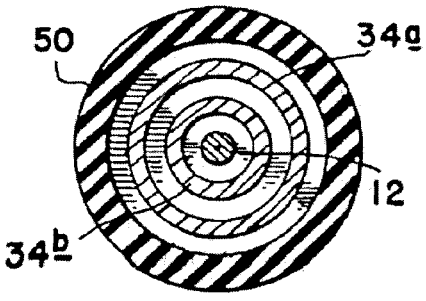

Figure 29
Grays Conversion Tube Diagram

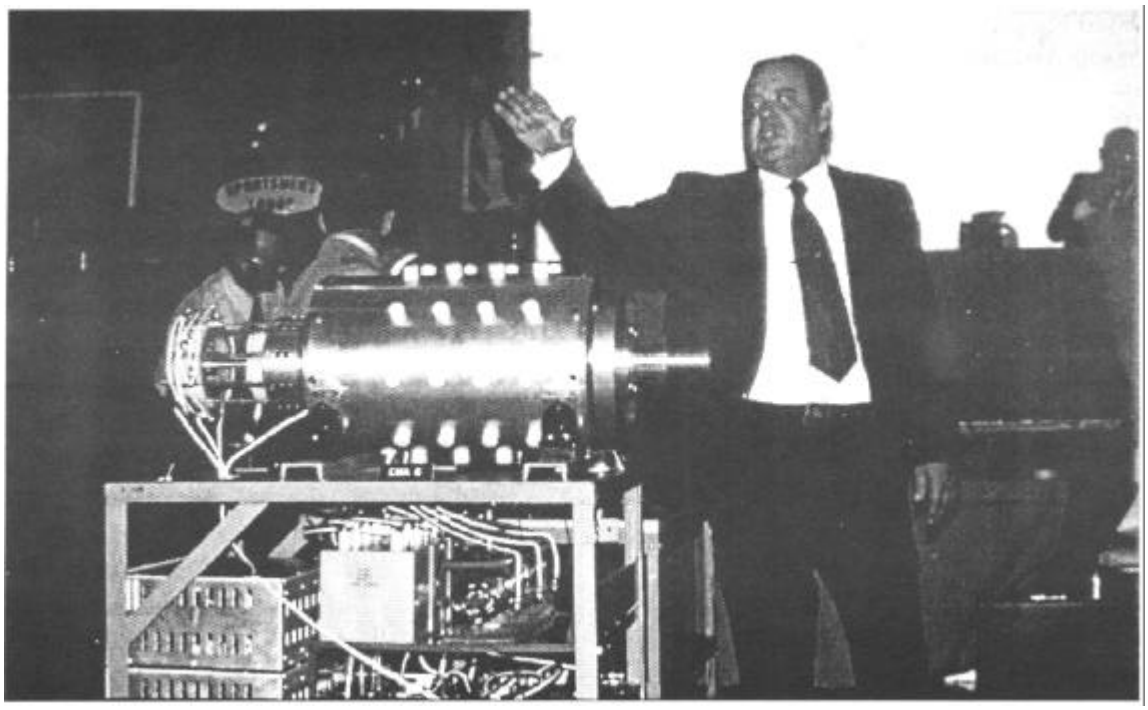

Figure 30
Edwin Gray and His # 6 Motor Prototype

utilize the energy contained in an internally-generated, high-voltage electric spike to electrically energize an inductive load, this inductive load being then capable of converting the energy so supplied into a useful electrical or mechanical output.

Here we have clear statements by Gray that the conversion element switching tube is the source of the useful outputs. In fact, this component is what powered his magnet popping experiment; this is what ran his circuit, that ran the TV, radios, and light bulbs, and this is the component that ran his motor. This is the element where the energy is both magnified and characterized as "cold electricity." Henceforth, I will refer to this structure as an "Electro-Radiant Transceiver", because it is designed to both broadcast and receive the "Electro-Radiant Event."

Having established these points, there are still a number of unknowns which need to be explored. For instance, there appears to be no provision, in these drawings or in the patent text, to determine whether or not there's a vacuum in this enclosure, or if it is filled with air or some other gas. The quotes from Gray in the *NewsReal* article reveal that he learned how to harness this effect by studying lightning. The article also states that he noticed lightning was stronger nearer the ground and that he assumed it had something to do with "more air." So, it is possible that the inside of the tube is not a vacuum environment. Although we know that the output "cold electricity" won't shock you, the capacitor discharge could, so the case around the component, # 50, might still be for safety reasons. Two safe assumptions are: 1) # 50 can be considered a mechanical means of holding the components together, and 2) that there is probably air in this enclosure.

We also don't know the physical size of this device, and we don't know the physical dimensions of the charge receiving grids, including their length or diameter. That is, until we examine the photographic evidence of Tom Valentine.

Figure 31
Edwin Gray and Fritz Lens in 1973

In Figure 30 (and the color photograph shown on the back cover of the book), Ed Gray is standing before a meeting of his stockholders. In the enlargement of the inset image on the back cover, the “magic component” can clearly be seen. A lot of information is revealed in this photograph about the layout of the device; in particular, the physical dimensions of the conversion element switching tubes, that I am now calling the Electro-Radiant Transceivers. There is a row of three conversion tubes and each one is being fed by the discharge of a single capacitor. Three very large capacitors can easily be seen. I had this image digitally scanned, and when I looked at the markings on this capacitor in extreme magnification, it read “2 micro-farads” and “4000 Volts DC.”

So, where Gray's motor patent shows a bank of eighteen capacitors being charged and discharged in sequence to run the motor, that's not what he was really doing. The evidence from the circuit patent and this photograph clearly shows that the motor coils were being powered from the output of the conversion tubes, and not directly from the capacitor discharges. The photograph shows only one wire coming out of each of the three conversion tubes going up to the commutator, with just a single wire return. So, it is most likely that Gray is discharging the charge receiving grids to ground through his magnet coils. The inset enlargement clearly shows two charge receiving grids in the tube, about 1/4 of an inch away from each other.

Exactly how they are connected is still not certain. The patent suggests that each grid is wired out to the plug, # 60, and that there is one connection from there to the output Inductor.

Figure 31 shows another unpublished photograph taken by Tom Valentine in Ed Gray's laboratory in 1973, showing Ed Gray and Fritz Lens at their laboratory bench. The arrangement of parts shown in the foreground is the setup used to demonstrate the "popping magnets." In the lower left portion of the photograph is what appears

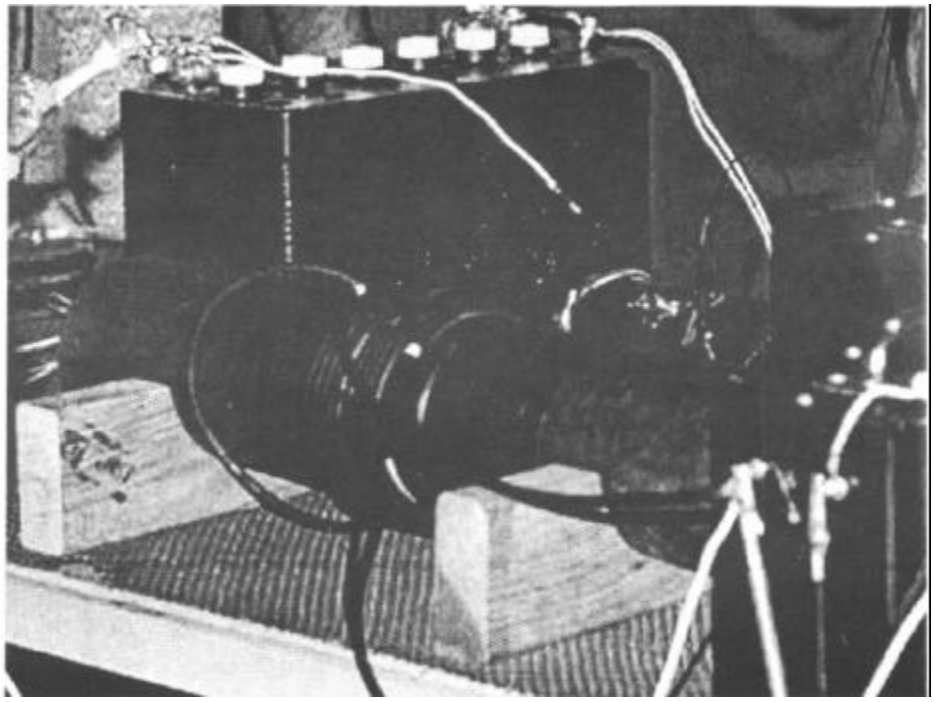

Figure 32
Gray's Inductive Load

to be an air core transformer wound on a 4-inch diameter piece of PVC, resting on some wooden blocks (Figure 32). This circuit element is probably taking the discharge from the conversion element switching tube and inductively coupling it to a secondary winding. It is the secondary winding that powers the magnets, which are wired in series, making them fly away from each other. In order to create repulsive impulses that are timed perfectly to each other, Gray has this air core transformer powering the magnets simultaneously. He is using an air core transformer here in the first stage, because the impulse frequency is so high. A digitally-enhanced close-up image of this component shows the central winding as two layers of ten turns each of what looks like spark plug wire.

This, then, is Gray's “inductive load.” This is how he is harnessing the energy from the charge receiving grids of the conversion element switching tube, enabling him to do real work.

But possibly the best piece of evidence that supports this concept of the output, is that found in Tesla's US Patent # 685,958 titled "Method of Utilizing Radiant Energy." Figure 33 shows one of the illustrations from this patent. Here we see plate "P" being exposed to some source of Radiant Energy and then being discharged to ground through the primary winding of a transformer. So all of the evidence supports this idea of the output.

At this point, we have enough evidence to theorize on what Edwin Gray's cold electricity circuit schematic may actually be. Figure 34 is a diagram I created called “Probable Schematic for Edwin Gray's Cold Electricity Circuit.” The front end is identical to Gray's drawing, complete with the battery, # 40, multi-vibrator, # 20, step-up transformer, # 22, full-wave bridge, # 24, capacitor, # 16, and the protective mechanisms, # 42, # 44, and # 46. Next, just like Gray's again, is the Electro-Radiant Transceiver mechanism, # 34, showing the spark gap, # 62, resistor,# 30, vacuum

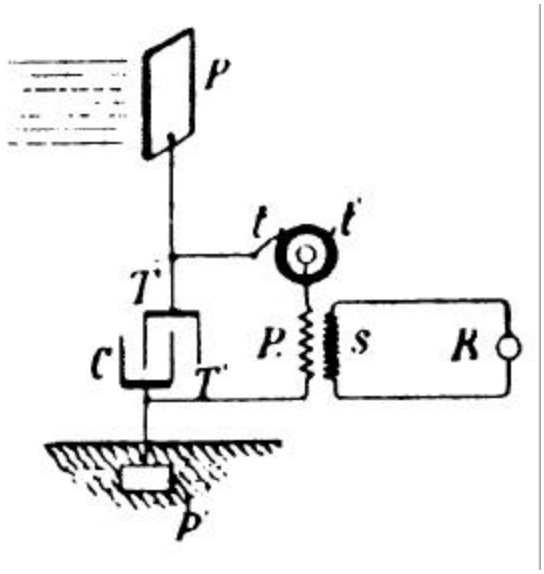

Figure 33
Tesla's Radiant Energy Method

grid of the triode is a timer control circuit capable of generating pulse trains as needed, with pulse durations in the 10 to 50-microsecond range.

In the output section, I show the two grids of the Electro-Radiant Transceiver, *# 34*, wired to each other. They, in turn are connected to the primary of the air core transformer, which is connected to the ground. The secondary of the air core transformer is a voltage step-down to power lights and other medium voltage appliances. This section of the circuit is also connected to another step-down transformer whose secondary would be rectified to charge another capacitor, *# 38*. *As* current pulses accumulate, this capacitor, *# 38*, *will* charge to a voltage that is higher than battery *# 18*, and therefore will begin to charge this secondary battery.

The spark overshoot mechanism, # 42, is shown as two separate high voltage spark gaps, one on the primary line used to dump any Electro-Radiant discharge that backs up in the primary circuit, and the other used to dump any excess voltage in the output circuit.

Referring to the vacuum tube *# 28*, we know first of all, according to Vassilatos, that in order to create the non-shocking form of electricity, Tesla said the spark duration must be limited to anything less than 100 microseconds. We also know from Dr. Chalfin's statement in the *NewsReal* article, that Gray used power for “only a small fraction of a millisecond.” The pulse timing I have suggested, at between 10 and 50 microseconds, represents between 1% and 5% of a millisecond. This certainly represents “a small fraction.” Secondly, the vacuum tube *# 28* also acts like a super-fast diode to prevent any reversals in current.

As stated before, capacitor # 16 discharges through the Electro-Radiant Transceiver back to the positive of the battery. Normally, if a capacitor is discharged, the high voltage positive would be discharged back to the negative terminal. However, it is indicated that Gray discharged his capacitor back to the positive of the battery. Tesla clearly showed that this is not necessary to create the ElectroRadiant Event, but Gray must have felt it was important. The significance of this is not yet known, but it certainly must be related to his idea of "splitting the positive," a piece of jargon used in early reports about his technology. Clearly, it had nothing to do with "recharging" battery *# 40*. The voltage drop at the spark gap reduces the amount of energy that can be returned to this battery to near zero. So this cannot be the recharging mechanism. In all probability, by connecting back to the positive of the battery, Gray is characterizing the ElectroRadiant Event in a more "positive" way. When I say "positive", I mean electropositive. So, now we have some notion of where Gray's terminology, "splitting the positive" comes from, and what its

Probable Schematic for Edwin Gray's Cold Electricity Circuit

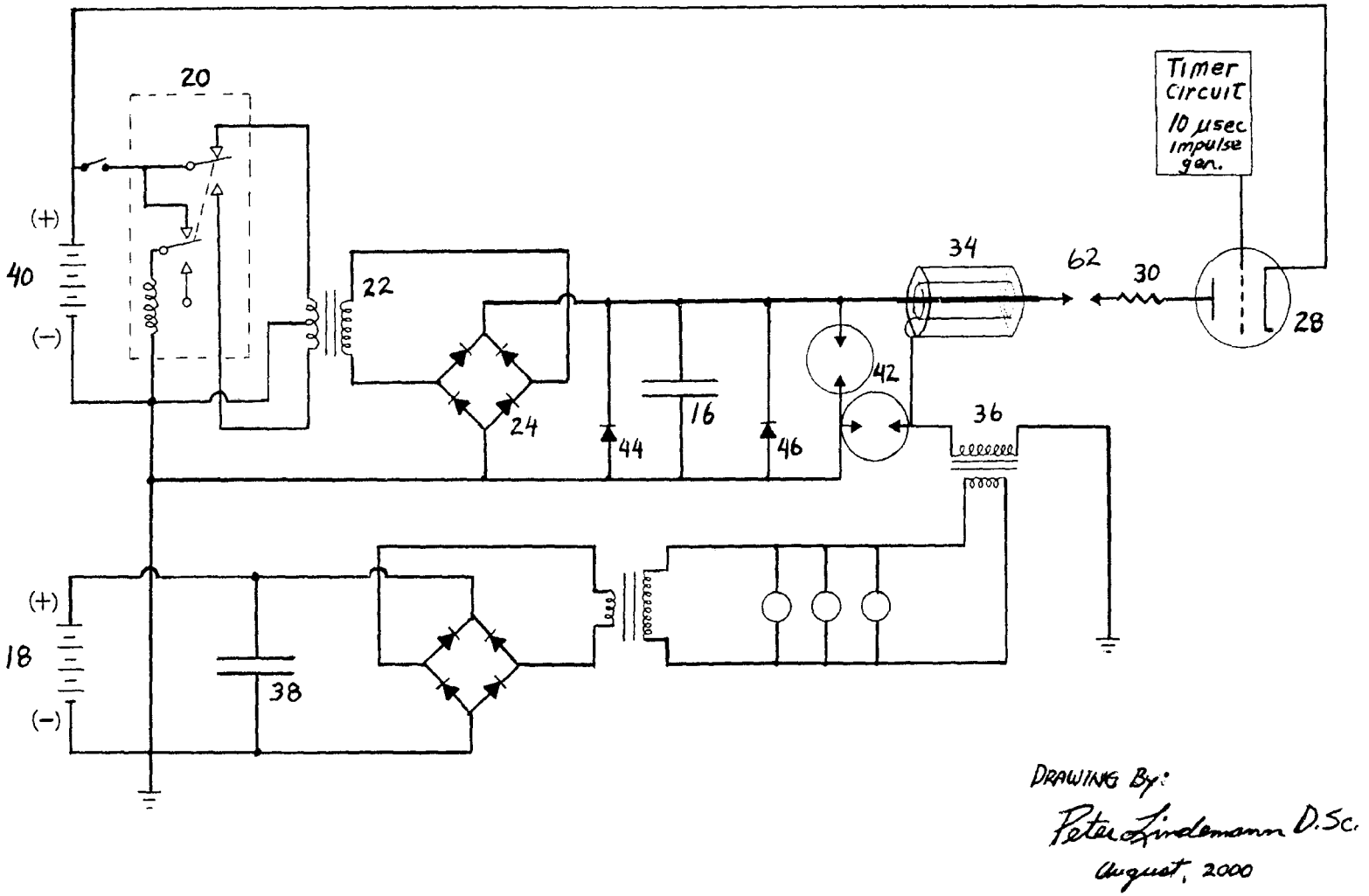

Figure 34
Probable Schematic for Gray's Cold Electricity Circuit

significance might be. Also, Gray claims that he uses only a positive form of energy. Certainly what gets radiated out onto his charge receiving grids is a positive, electrostatic charge. When that impulse is discharged to ground, he is only using the positive side of electricity. Therefore, everything Gray said makes sense.

The photographic evidence in the image on the back cover strongly suggests that the charge receiving grids in Gray's conversion tubes are copper. As we have said before, Electro-Radiant effects create “electronic” responses in certain metals. Gray must have figured out that he could create an electronic charge on his receiving grids if he intercepted the Electro-Radiant Event on copper. In Tesla's large radiant energy system, he learned to avoid using copper to prevent the electronic contamination it created. But in Gray's smaller system, this was just what he needed. The more the Electro-Radiant energy interacts with copper again, the sooner it returns to a form of electricity that will actually charge the battery in a fairly normal way. This then is how Edwin Gray produced cold electricity.

To summarize, Gray's cold electricity circuit runs like this: It starts with power out of the battery; he raises it to 3000 volts DC that he stores in a very large capacitor. He then discharges impulses through a spark gap, clipped by a vacuum tube, such that the impulse duration is less than 50 microseconds. This staccato of impulses flows through the Electro-Radiant Transceiver, which creates a series of radiant, electrostatic fields of spatially distributed voltage that is picked up by the charge-receiving grids. As soon as the Electro-Radiant Event ceases, these charged grids discharge to ground through the primary of the “inductive load.” The output recovery system is inductively coupled to this discharge primary with a voltage step-down to run light bulbs and other medium voltage appliances, as well as another step-down transformer to recharge the secondary battery. By switching the batteries back and forth periodically, Gray could keep the system going indefinitely, and still produce a sizable output.

At this point, there is only one final error to point out. In the patent text, Gray proposes a theory as to where the excess energy is coming from. He suggests that the gain in energy that appears on the receiving grids is the “equivalent” of the current from the low voltage anode (battery # 40) times the voltage from the high voltage anode (Capacitor # 16), combining in the spark discharge. He states: “Because the duration of the arc is very short, the instantaneous voltage, and instantaneous current may both be very high. The instantaneous peak apparent power is therefore, also very high.” This is clearly not true. I have tried dozens of methods to combine the voltage from one source with the current from another source in an attempt to create a power cross-product. It doesn't work. But the best evidence that Gray was not doing this he in these two points. First, such a scheme, if it were possible, would produce normal, HOT electricity. And second, Gray's conversion tube has a resistor between the spark-gap and the battery source, clearly blocking the availability of unlimited current. So, Gray's explanation of the “gain mechanism” cannot be true. He either put this in the patent because he didn't really understand the effect himself, or because he thought this explanation would get past the Patent examiners more easily. (I personally believe Gray understood how to create the effect, but he didn't know how to explain it.)

Gray's statement that he only used 1% of the energy and that 99% went back into the battery is actually a meaningless attempt to explain this phenomenon in Thermodynamic terms. Actually, all of the energy in his primary circuit is lost. The capacitor # 16 discharges into the spark-gap,

where 99% of the work potential of the energy is lost in the voltage drop, not to mention the fact that there is no output "work device" in the discharge path to take advantage of the impulse. So, 100% of the input energy is lost in terms of ordinary work conversion. It does do something else though. It produces a series of unidirectional discharges that release a series of "Electro-Radiant" events that are discharged through the real output "work device." This work output is 100 times greater than the energy lost to create it.

If, at this point, there is still skepticism regarding the properties of Gray's circuit, the following may help to put all of this in perspective. Figure 35 shows a classic image of the enigmatic Testatika Machine, designed by Paul Baumann at the Methernitha Community in Linden, Switzerland. Mr. Baumann claims he learned how to build this device by studying lightning. It has a Wimshurst Machine as the high voltage, electro-static front end, which charges two capacitors or Leyden Jars. The high voltage from those capacitors goes down into the tops of the large cans, (the insides of which Mr. Baumann has never let anyone see) then, comes out the bottoms and meets in a spark gap. There has been endless speculation regarding the construction of these "big cans," ranging from Uraniumdoped capacitors to strange arrangements of crystals and magnets. But, I submit to you that these "big cans" are Electro-Radiant Transceivers, and that they are not altogether different from Gray's Conversion Tube design.

It is interesting to note that Mr. Baumann has placed one can on either side of the spark-gap, the first, probably producing a positive Electro-Radiant Event, and the second, producing a negative Electro-Radiant Event. You may recall that Vassilatos reported that Tesla said, depending on the location of the spark-gap, he could either project a charge or deplete a charge from a surface. So this is what a fully balanced system might look like, where the output pulses actually resolve the charge from an Electro-Radiant positive surface to an Electro-Radiant negative surface, instead of just from one grid to ground, like in Gray's system.

Figure 36 clearly shows that this little Wimshurst Machine has no trouble at all creating big lighting effects. The claim in this image is 1,000 watts of light. The gain here must be close to 1000 to 1, not to mention the fact that the machine is turning itself.

All the evidence supports the conclusion that Edwin Gray's "Cold Electricity" circuit runs on Radiant Energy, and is a "close cousin" of devices developed by Dr. Nikola Tesla and Dr. Thomas Henry Moray. This also places it within a larger group of technologies that effectively tap the Ether for usable work. It is the only explanation that fits all of the evidence.

In order to understand these Etheric technologies better, the researcher must study only those teachings that contribute to these vitalistic traditions. The model of the Ether that I have found to be the most accurate and useful, is that set of ideas put forward by Dr. Rudolf Steiner. (The best source book to study Steiner's Ether model *is Etheric Formative Forces in Cosmos, Earth and Man* by Dr. Guenther Wachsmuth.) In this model, there are four primary octaves of the Ether. These are the Light Ether, the Warmth Ether, the Chemical Ether, and the integrated synthesis of these first three, called the Life Ether. Steiner describes electricity as "an unnatural combination of Warmth Ether and Light Ether." The term "unnatural" used here simply means, not found in nature. While these terms are slightly different, you may be able to see the parallels between this idea and the conclusions that Tesla was arriving at. The Light Ether is related to voltage, capacitance

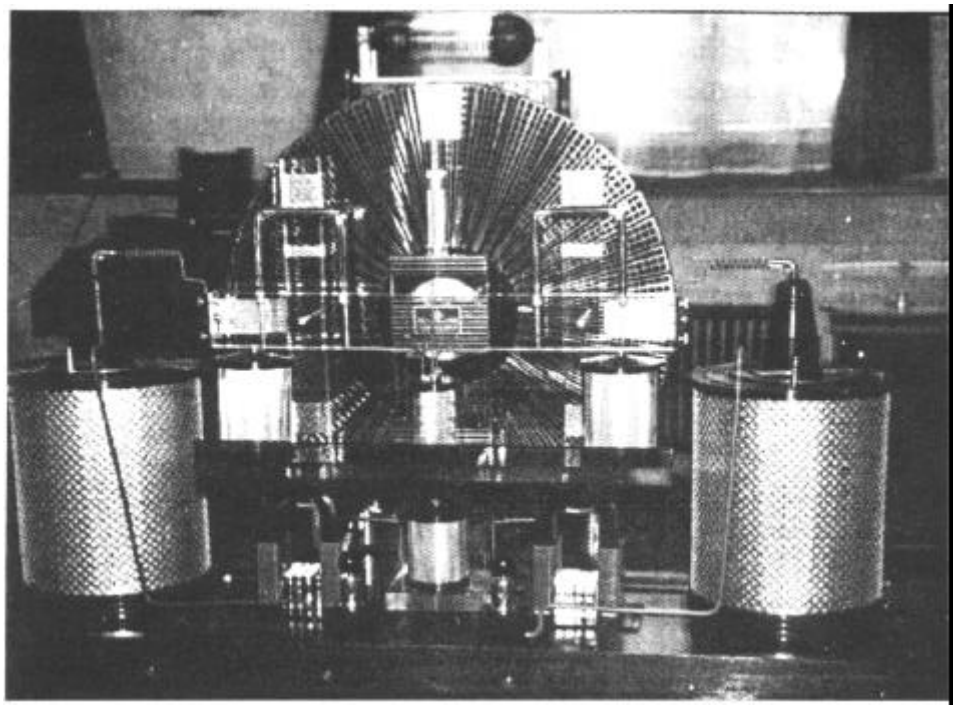

Figure 35
Paul Baumann's Testatika Machine

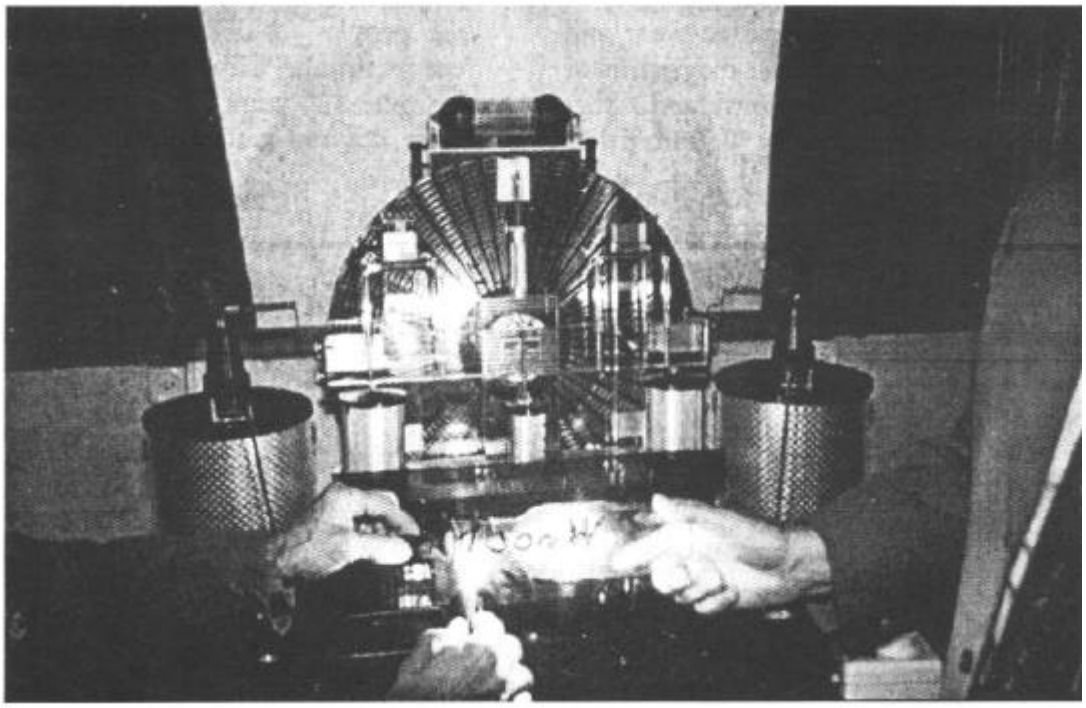

Figure 36
Testatika Machine Lighting a Light Bulb

and the dielectric forces in nature, where as the Warmth Ether is related to current, resistance, and the magnetic forces in nature. Longitudinal rays of Light Ether propagate instantaneously to any distance, even to inter-stellar and inter-galactic distances. This medium is cool, and not wholly responsive to what is generally referred to as electrical resistance. This means that even Ohm's Law is useless for accurately determining circuit behaviors when this medium is present.

More importantly, however, this relates to the great quest for the so-called “room temperature super-conductor.” It's possible that looking for the lowest resistance conductor may be the wrong goal. A purified stream of Light Ether is the true “room temperature super-conductee.” This medium is best “conducted” by pure carbon, according to Tesla, but it can also be "reflected" down a wide variety of mirror finish, silver metals, and transparent plastic polymers.

Electricity is not a monolithic event, and it is definitely not simply the movement of electrons. Tesla demonstrated that electricity can be split into its Warmth Ether and Light Ether fractions. When this happens, the Light Ether speeds off at right angles, leaving the Warmth Ether behind, and entrains a huge volume of energy from the environment. It is imperative for modern day researchers to understand that the Laws of Thermodynamics and Maxwell's equations do not pertain to Etheric technologies, and therefore do not define the total set of possible realities that can be investigated in electrical science.

Besides Tesla, Gray, and Baumann, there are many other inventors who also discovered how to tap the Ether and make it do useful work. Among these are: John W. Keely in 1872, Nathan B. Stubblefield in 1880, Thomas Henry Moray in 1926, Viktor Schauberger in the 1920's, Dr. Wilhelm Reich in 1940, and dozens of others in the last 50 years. Most notably are Trevor Constable, and Dr. Robert Adams, of New Zealand.

In light of this, there is ample evidence to suggest that God has been trying to give the peoples of this world low cost, clean energy, in the form of Etheric technology for over 120 years. It is time to spiritually wake up, and graciously accept the Divine gift.

APPENDICES I, II, III

APPENDIX I

Three U.S. Patents by Edwin V. Gray

1. USP # 3,890,548 - "Pulsed Capacitor Discharge Electric Engine"

2. USP # 4,595,977 -"Efficient Power Supply Suitable for Inductive Loads"

3. USP # 4,661,747 - "Efficient Electrical Conversion Switching Tube Suitable for Inductive Loads"

United States Patent [19]

Gray

[11] **3,890,548**

[45] **June 17, 1975**

BEST AVAILABLE COPY

[54] **PULSED CAPACITOR DISCHARGE ELECTRIC ENGINE**

[75] Inventor: **Edwin V. Gray,** Northridge, Calif.

[73] Assignee: **Evgray Enterprises, Inc.,** Van Nuys, Calif.

[22] Filed: **Nov. 2, 1973**

[21] Appl. No.: **412,415**

[52] **U.S. Cl.** **318/139;** 318/254; 318/439; 310/46

[51] **Int. Cl.** **H02p 5/00**

[58] **Field of Search** 310/46, 5, 6; 318/194, 318/439, 254, 139; 320/1; 307/110

[56] **References Cited**

UNITED STATES PATENTS

2,085,708	6/1937	Spencer	318/194
2,800,619	7/1957	Brunt	318/194
3,579,074	5/1971	Roberts	320/1
3,619,638	11/1971	Phinney	307/110

OTHER PUBLICATIONS

Frungel, *High Speed Pulse Technology*, Academic Press Inc., 1965, pp. 140–148.

Primary Examiner—Robert K. Schaefer
Assistant Examiner—John J. Feldhaus
Attorney, Agent, or Firm—Gerald L. Price

[57] **ABSTRACT**

There is disclosed herein an electric machine or engine in which a rotor cage having an array of electromagnets is rotatable in an array of electromagnets, or fixed electromagnets are juxtaposed against movable ones. The coils of the electromagnets are connected in the discharge path of capacitors charged to relatively high voltage and discharged through the electromagnetic coils when selected rotor and stator elements are in alignment, or when the fixed electromagnets and movable electromagnets are juxtaposed. The discharge occurs across spark gaps disclosed in alignment with respect to the desired juxtaposition of the selected movable and stationary electromagnets. The capacitor discharges occur simultaneously through juxtaposed stationary movable electromagnets wound so that their respective cores are in magnetic repulsion polarity, thus resulting in the forced motion of movable electromagnetic elements away from the juxtaposed stationary electromagnetic elements at the discharge, thereby achieving motion. In an engine, the discharges occur successively across selected ones of the gaps to maintain continuous rotation. Capacitors are recharged between successive alignment positions of particular rotor and stator electromagnets of the engine.

18 Claims, 19 Drawing Figures

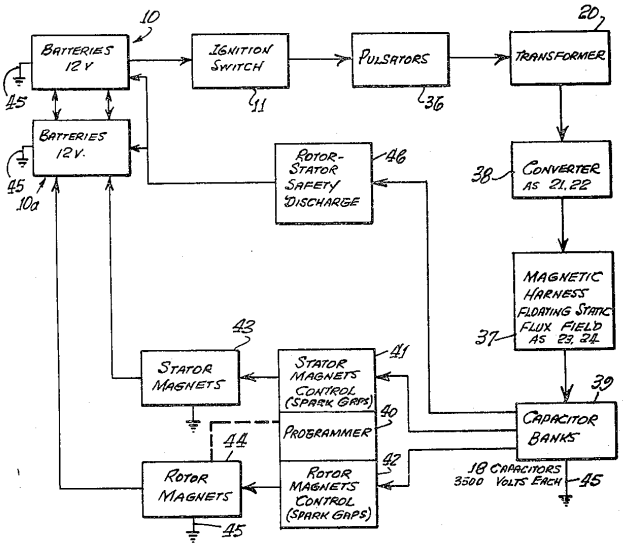

PULSED CAPACITOR DISCHARGE ELECTRIC ENGINE

BACKGROUND OF THE INVENTION

1. Field of the Invention

There is no known engine or motor operated on the principle of the present invention, that a capacitor charged to a relatively high voltage from a low-voltage d-c source is discharged across a spark gap to provide current through motor drive coils in the discharge path, these being solenoids which generate motion by magnetic repulsion of juxtaposed pairs of cores. The solenoids are preferably configured in motor and stator assemblies to effect motion of the rotor element with respect to the stator.

The present invention utilizes this principle to provide a rotary motion machine or engine which can develop considerable torque through the magnetic repulsion action of rotor and stator cores wound with coils through which capacitors are discharged synchronously with the positioning of the rotor coils opposite particular stator coils. Similarly, a linear action can be achieved with a stationary electromagnet juxtaposed against a movable electromagnet and the movable electromagnet can perform work with a tool or piston attached thereto.

A novel control mechanism is associated with the rotor is the engine to position discharge elements appropriately to create the desired discharge through the electromagnet coils when the juxtaposed rotor and stator electromagnets are in alignment. The electromagnets in the stator and rotor are so arranged that the control mechanism can advance or retard the discharge points relative to rotor-stator positions for control of rotational speed.

The discharge overshoot or back e.m.f. from the collapsing fields in the coils from the capacitor discharge is used to energize external batteries for conservation of power. The recovered energy thus stored may be used to operate equipment associated with the engine or motive force producing device.

The engine or rotary electric machine of the invention is believed to operate on the principle of conservation of energy, in that once rotation is achieved, current is needed only at the instant of a capacitor discharge in order to advance the rotor. The rotor moves to the next discharge point on the inertia of the repulsion action. The capacitor is recharged during the interval and stores the energy until discharge at the next rotor-stator coil coincidence. Thus, the new engine produces torque and stores the excess energy for subsequent use.

In a linear motion device according to the invention, only a single pulse discharge is needed to perform work.

The applications of the engine include use as an electric automotive engine which is economical and which can regenerate a part of the energy consumed to provide power for other loads in the automotive electric vehicle. As a linear actuator an economical use of power is possible because each stroke will result from a single discharge pulse of a capacitor through a coil.

2. Prior Art

Heretofore, electric engines or motors have operated on the principle that a conductor carrying a current in a magnetic field tends to move perpendicularly to that field; the electromagnetic torque developed by an armature or rotating portion of the motor is proportional to the magnetic flux in the stationary field and to the armature current.

In direct current motors the field is created by current through two or more field coils disposed in opposing magnetic relationship in the motor casing, while current through a rotatable armature positioned in the field is alternatingly reversed in polarity to provide continuous motion. The polarity reversing mechanism is a commutator. Some d-c motors have their field windings electrically in parallel with the rotor armature winding and are called "shunt-wound" motors. Other d-c motors have field and armature windings connected in series. In both series and shunt motors commutators are used for reversing the magnetic polarity of the armature to maintain rotation within the field.

A third type of d-c motor utilizes a permanent magnet field so that the operating current passes only through the armature winding. Such motors also use polarity reversing commutators to maintain direction of rotation. Reversal of direction of motion is effected by reversing the polarity of applied d-c potential.

Control of speed of d-c motors is accomplished basically by decrease or increase of magnetic field flux or the current through the armature. Either or both of these effects can be accomplished by raising or lowering the applied potential. In shunt motors, a series resistance may be varied to produce speed changes. In a permanent magnet motor or series motor, speed variation is best accomplished by voltage variation with a variable resistance in series with the motor d-c supply.

In alternating current motors, as is well known, a rotating magnetic field is created in the stator, and the rotor may be wound with as many poles as there are in the stator, with terminals connected with slip rings, or the rotor may consist of solid bars shorted by rings on each end to form a "squirrel cage" configuration. The speed of an a-c motor depends on the frequency of the applied a-c energy, if the motor is synchronous.

"Universal" motors are operable on either a-c or d-c energy.

In stepping motors, a rotor is moved from one pole to the next adjacent pole with each application of current, the rotor remaining at that position until a next application of current. This is accomplished by switching the current on and off or by pulsing the current. Examples of stepping motors are described in U.S. Pat. No. 3,467,902 to Shimizu, et al., U.S. Pat. No. 3,462,667 to Jackson, and U.S. Pat. No. 3,599,069 to Welch.

Operation of the a-c and d-c motors described above involves the consumption of substantial electric current. These motors can generate electric current when driven externally by a mechanical force. External energy to rotate the generator rotors can be provided by hydroelectric and steam sources or by other electric motors. In some of these systems, a d-c motor source drives an a-c generator for conversion of d-c energy to a-c energy or a d-c motor may drive a d-c generator which delivers a higher voltage than the source.

An extensive prior art search by the applicant uncovered no capacitor-discharge-operated motor resembling that of the present invention. All motors of the patents located in the search employed direct electrical connection between coils and electric power sources. Where selective switching is involved, semiconductor devices are employed, such as silicon-controlled rectifi-

ers. Capacitors are used only for starting and phasing purposes, and not for basic motor operation from the discharge thereof, as in this invention.

SUMMARY OF THE INVENTION

This invention relates to electric motors or engines, and more particularly to a new electric machine including electromagnetic poles in a stator configuration and electromagnetic poles in a rotor configuration wherein in one form thereof the rotor is rotatable within the stator configuration and where both are energized by capacitor discharges through rotor and stator electromagnets at the instant of the alignment of a rotor electromagnet with a stator electromagnet. The rotor electromagnet is repelled from the stator electromagnet by the discharge of the capacitor through the coils of both the stator and rotor electromagnets at the same instant.

In an exemplary rotary engine according to this invention, rotor electromagnets may be disposed 120° apart on a central shaft and major stator electromagnets may be disposed 40° apart in the motor housing about the stator periphery. Other combinations of rotor elements and stator elements may be utilized to increase torque or rotation rate.

In another form, a second electromagnet is positioned to one side of each of the major stator electromagnets on a center line 13⅓° from the center line of the stator magnet, and these are excited in a predetermined pattern or sequence. Similarly to one side of each major rotor electromagnet is a second electromagnet spaced on a 13⅓° center line from the major rotor electromagnet. Electromagnets in both the rotor and stator assemblies are identical, the individual electromagnets of each being aligned axially and the coils of each being wired so that each rotor electromagnetic pole will have the same magnetic polarity as the electromagnet in the stator with which it is aligned and which it is confronting at the time of discharge of the capacitor.

Charging of the discharge capacitor or capacitors is accomplished by an electrical switching circuit wherein electrical energy from a battery or other source of d-c potential may be applied in alternating polarity to ignition coils or other voltage step-up arrangements from which a high voltage d-c potential is derived through rectification by diodes.

The capacitor charging circuit comprises a pair of high frequency switchers which feed respective automotive-type ignition coils employed as step-up transformers. The "secondary" of each of the ignition coils provides a high voltage square wave to a half-wave rectifier to generate a high voltage output pulse of d-c energy with each switching alternation of the high frequency switcher. Only one polarity is used so that a unidirectional pulse is applied to the capacitor bank being charged.

Successive unidirectional pulses are accumulated on the capacitor or capacitor bank until discharged. Discharge of the bank of capacitors occurs across a spark gap by arc-over. The gap spacing determines the voltage at which discharge or arc-over occurs. An array of gaps is created by fixed elements in the engine housing and moving elements positioned on the rotor shaft. At the instant when the moving gap elements are positioned opposite fixed elements during the rotor rotation, a discharge occurs through the coils of the aligned rotor and stator electromagnets to produce the repulsion action between the stator and rotor electromagnet cores.

A plurality of fixed gap elements are arrayed in the motor housing to correspond to the locations of the stator electromagnets in the housing. The rotor gap elements correspond to the positions of the rotor electromagnets on the rotor so that at the instant of correct alignment of the gaps the capacitors are discharged to produce the necessary current through the stator and rotor coils to cause the electromagnets to repel one another.

The charging circuits are arranged in pairs, and are such that the discharge occurs through both rotor and stator windings of the electromagnets, which are opposite one another when the spark gap elements are aligned and arc-over.

The speed of the rotor can be changed by means of a clutch mechanism associated with the rotor. The clutch shifts the positions of the rotor gap elements so that the discharge will energize the stator coils in a manner to advance or retard the time of discharge with respect to the normal rotor/stator alignment positions. The discharge through the rotor and stator then occurs when the rotor has passed the stator 6⅔° for speed advance.

By causing the discharge to occur when the rotor position is approaching the stator, the repulsion pulse occurs 6⅔° before the alignment position of the rotor and stator electromagnets, thus slowing the speed.

The clutch mechanism for aligning capacitor discharge gaps for discharge is described as a control head. It may be likened to a firing control mechanism in an automotive combustion engine in that it "fires" the electromagnets and provides a return of any discharge overshoot potential back to the battery or other energy source.

The action of the control head is extremely fast. From the foregoing description, it can be anticipated that an increase in the speed or a decrease in speed of rotation can occur within the period in which the rotor electromagnet moves between any pair of adjacently located electromagnets in the stator assembly, which are 40° apart in the exemplary engine according to the invention. Thus, speed changes can be effected in a maximum of one-ninth of a revolution.

The rotor speed-changing action of the control head and its structure are believed to be further novel features of the invention, in that they maintain normal 120° firing positions during uniform speed or rotation conditions, but shift to ±6⅔° longer or shorter intervals for speed change by the novel shift mechanism in the rotor clutch assembly.

Accordingly, the preferred embodiment of this invention is an electric rotary engine wherein motor torque is developed by discharge of high potential from a bank of capacitors through stator and rotor electromagnet coils when the electromagnets are in alignment. The capacitors are charged from batteries by a switching mechanism, and are discharged across spark gaps set to achieve the discharge of the capacitor charge voltage through the electromagnetic coils when the gaps and predetermined rotor and stator electromagnet pairs are in alignment.

Exemplary embodiments of the invention are herein illustrated and described. These exemplary illustrations and description should not be construed as limiting the invention to the embodiments shown, because those

skilled in the arts appertaining to the invention may conceive of other embodiments in the light of the description within the ambit of the appended claims.

BREIF DESCRIPTION OF THE DRAWINGS

FIG. 1 is an explanatory schematic diagram of a capacitor charging and discharging circuit utilized in the present invention;

FIG. 2 is a block diagram of an exemplary engine system according to the invention;

FIG. 3 is a perspective view of a typical engine system according to the invention, coupled to an automotive transmission;

FIG. 4 is an axial sectional view taken at line 4—4 in FIG. 3;

FIG. 5 is a sectional view taken at line 5—5 in FIG. 4;

FIGS. 6 and 7 are fragmentary sectional views, corresponding to a portion of FIG. 5, illustrating successive advanced positions of the engine rotor therein;

FIG. 8 is an exploded perspective view of the rotor and stator of the engine of FIGS. 3 and 4;

FIG. 9 is a cross-sectional view taken at line 9—9 of FIG. 4;

FIG. 10 is a partial sectional view, similar to the view of FIG. 9, illustrating a different configuration of electromagnets in another engine embodiment of the invention;

FIG. 11 is a sectional view taken at line 11—11 in FIG. 3, illustrating the control head or novel speed change controlling system of the engine;

FIG. 12 is a sectional view, taken at line 12—12 in FIG. 11, showing a clutch plate utilized in the speed change control system of FIG. 11;

FIG. 13 is a fragmentary view, taken at line 13—13 in FIG. 12;

FIG. 14 is a sectional view, taken at line 14—14 in FIG. 11, showing a clutch plate which cooperates with the clutch plate of FIG. 12;

FIG. 15 is a fragmentary sectional view taken at line 15—15 of FIG. 13;

FIG. 16 is a perspective view of electromagnets utilized in the present invention;

FIG. 17 is a schematic diagram showing cooperating mechanical and electrical features of the programmer portion of the invention;

FIG. 18 is an electrical schematic diagram of an engine according to the invention, showing the electrical relationships of the electromagnetic components embodying a new principle of the invention; and

FIG. 19 is a developed view, taken at line 19—19 of FIG. 11, showing the locations of displaced spark gap elements of the speed changing mechanism of an engine according to the invention.

DESCRIPTION OF THE PREFERRED EMBODIMENT

As hereinbefore mentioned, the basic principle of operation of the engine of the invention is the discharge of a capacitor, across a spark gap through an inductor. When a pair of inductors is used, and the respective magnetic cores thereof are arranged opposite and another in magnetic polarity repulsion relation, the discharge through them causes the cores to repel each other with considerable force.

Referring to the electrical schematic diagram of FIG. 1, a battery 10 energizes a pulse-producing vibrator mechanism 16, which may be of the magnetic type incorporating an armature 15 moving between contacts 13 and 14, or of the transistor type (not shown) with which a high frequency bipolar pulsed output is produced in primary 17 of transformer 20. The pulse amplitude is stepped-up in secondary 19 of transformer 20. Wave form 19*a* represents the bidirectional or bipolar pulsed output. A diode rectifier 21 produces a unidirectional pulse train, as indicated at 21*a*, to charge capacitor 26. A delay coil 23 is connected in series with the unipolar pulsed output to capacitor 26. Successive unidirectional pulses of wave 21*a* charge capacitor 26 to a high level, as indicated at 26*a*, until the voltage amplitude at point A reaches the breakdown potential of spark gap 30. At the breakdown of spark gap 30, capacitor 26 discharges across the arc created through the inductor coil 28. A current pulse is produced which magnetizes core 28*a*. Simultaneously, another substantially identical charging system 32 produces a discharge through inductor 27 across spark gap 29 to magnetize core 27*a*. Cores 28*a*, 27*a* are wound with coils 28, 27 so that their magnetic polarities are the same. As the cores 27*a*, 28*a* confront one another, they tend to fly apart when the discharge occurs through coils 27 and 28 because of repulsion of identical magnetic poles, as indicated by arrow 31. If core 28*a* is fixed or stationary and core 27*a* is movable, then core 27*a* may have tools 33 attached to it to perform work when the capacitor discharges.

Referring to FIGS. 1 and 2, a d-c electrical source or battery 10 energizes pulsators 36 (including at least two vibrators 16 as previously described) when switch 11 between the battery 10 and pulsator 36 is closed, to apply relatively high frequency pulses to the primaries of transformers 20. The secondaries of transformers 20 are step-up windings which apply bipolar pulses, such as pulses 19*a* (FIG. 1) to the diodes in converter 38. The rectified unidirectional pulsating output of each of the diodes in converter 38 is passed through delay coils 23, 24, thus forming a harness 37 wound about the case of the engine, as hereinafter described, which is believed to provide a static floating flux field. The outputs from delay lines 37 drive respective capacitors in banks 39 to charge the capacitors therein to a relatively high charge potential. A programmer and rotor and stator magnet control array 40, 41, 42 is formed by spark gaps positioned, as hereinafter described, so that at predetermined positions of the rotor during rotation of the engine, as hereinafter described, selected capacitors of capacitor banks 39 will discharge across the spark gaps through the rotor and stator electromagnets 43, 44. The converters 38, magnetic harness 37, capacitor banks 39, programmer 40, and controls 41, 42 from a series circuit path across the secondaries of transformers 20 to the ground, or point of reference potential, 45. The capacitor banks 39 are discharged across the spark gaps of programmer 40 (the rotor and stator magnet controls 41, 42). The discharge occurs through the coils of stator and rotor electromagnets 43, 44 to ground 45. Stator and rotor electromagnets are similar to those shown at 27, 27*a*, 28, 28*a* in FIG. 1.

The discharge through the coils of stator and rotor electromagnets 43, 44 is accompanied by a discharge overshoot or return pulse, the output of which is applied in an appropriate polarity to a secondary battery 10*a* to store this excess energy. The overshoot pulse returns to battery 10*a* because after discharge the only

path open is that to battery **10***a*, since the gaps in **40,** 41 and **42** have broken down, because the capacitors in banks **39** are discharged and have not yet recovered the high voltage charge from the high frequency pulsers **36** and converter rectifier units **38.**

In the event of a misfire in the programmer control circuits **40, 41, 42,** the capacitors are discharged through a rotor safety discharge circuit **46** and returned to batteries **10–10***a*, adding to their capacity. The circuit **46** is connected between the capacitor banks **39** and batteries **10, 10***a*.

Referring to FIG. **3,** a motor or engine **49** according to the present invention is shown connected with an automotive transmission **48.** The transmission **48** represents one of many forms of loads to which the engine may be applied. A motor housing **50** encases the operating mechanism hereinafter described. The programmer **40** is axially mounted at one end of this housing. Through apertures **51, 52** a belt **53** couples to a pulley **57** (not shown in this view) and to an alternator **54** attached to housing **50.** A pulley **55** on the alternator has two grooves, one for belt **53** to the drive pulley **58** on the shaft (not shown) of the engine **49,** and the other for a belt **58** coupled to a pulley **59** on a pump **60** attached to housing **50.** A terminal box **61** on the housing interconnects means between the battery assembly **62** and motor **49** via cables **63** and **64.**

An intake **65** for air is coupled to pump **60** via piping **68, 69** and from pump **60** via tubing or piping **66, 70** to the interior of housing **50** via coupling flanges **67** and **71.** The air flow tends to cool the engine, and the air may preferably be maintained at a constant temperature and humidity so that a constant spark gap discharge condition is maintained. A clutch mechanism **80** is provided on programmer **40.**

Referring to FIGS. **4, 5** and **9,** rotor **81** has spider assemblies **83, 84** with three electromagnet coil assembly sets mounted thereon, two of which are shown in FIG. **4,** on **85** at **85***a* and **85***b*, and on **86** at **86***a* and **86***b*. One of the third electromagnet coil assemblies, designated **87***a*, is shown in FIG. **5,** viewed from the shaft end. As more clearly shown in the perspective view of FIG. **8,** a third spider assembly **88** provides added rigidity and a central support for the rotor mechanism on shaft **81.**

The electromagnet sets **85***a* and **85***b*, 86*a* and **86***b*, **87***a* and **87***b*, disposed on rotor **81** and spiders **83, 84,** and **88** each comprise pairs of front units **85***a*, 86*a*, 87*a* and pairs of rear units **85***b*, 86*b*, 87*b*. Each pair consists of a major electromagnet and a minor electromagnet, as hereinafter described, which are embedded in an insulating material **90,** which insulates the electromagnet coil assemblies from one another and secures the electromagnets rigidly in place on the spider/rotor cage **81,** 83, 84, 88.

The interior wall **98** of housing **50** is coated with an electrically insulating material **99** in which are embedded electromagnet coils, as hereinafter described, and the interiors of end plates **100, 101** of the housing **50.** On the insulating surface **98** of housing **50** is mounted a series of stator electromagnet pairs **104***a*, identical with electromagnet pairs **85***a*, 86*a*, 87*a*, etc. Electromagnet pairs such as **104***a* or **105***a* are disposed every 40° about the interior of housing **50** to form a stator which cooperates with the rotor **81–88.** An air gap **110** of very close tolerance is defined between the rotor and stator electromagnets, and air from pump **65** flows through this gap.

As shown in FIG. **8,** the electromagnet assemblies, such as **85** through **87,** of the rotor and magnet assemblies, such as **104***a* in the stator are so embedded in their respective insulative plastic carriers (rotor and stator) that they are smoothly rounded in a concave contour for the stator, and in a convex contour on the rotor to permit smooth and continuous rotation of rotor **81** in stator housing **50.** The air gap **110** is uniform at all positions of any rotor element within the stator assembly, as is clearly shown in FIG. **16.**

The rotor **81** and spiders **83, 84, 88** are rigidly mounted on a shaft **111** journaled in bearing assemblies **112, 113** which are of conventional type, for easy rotation of the rotor on shaft **111** within housing **50.**

Around the central outer surface of housing **50** are wound a number of turns of wire **23, 24** to provide a static flux coil **114** as hereinbefore described, which is a delay line, as previously described.

FIGS. **5, 6, 7** and **9** are cross-sectional views of the rotor assembly **81–88,** arranged to show the positioning and alignment of the rotor and stator electromagnet coil assemblies at successive stages of the rotation of rotor **81–88** through a portion of a cycle of operation thereof. For example, in FIG. **5** the rotor assembly **81–88** is shown so positioned that a minor rotor electromagnet assembly **91** is aligned with a minor stator electromagnet assembly **117.**

As shown in further detail in FIG. **16,** minor electromagnet assembly **117** consists of an iron core **118,** grooved so that there may be wound thereabout a coil of wire **119.** Core **118** is the same in stator electromagnet **117** as it is in rotor electromagnet **91.**

As a position 13⅓° to the right of rotor electromagnet **91,** as viewed in FIGS. **5** and **16,** there is a second or major rotor electromagnet **121** which has a winding **123** about its core **122.** The electromagnets **91, 121** are the pair **85***a* of FIGS. **4** and **8.**

At a position 13⅓° to the left of stator electromagnet **117,** as viewed in FIG. **5,** there is a second or major stator electromagnet **120** whose core **122** is of the same configuration as core **122** of rotor electromagnet **121.** A winding **123** about core **122** of electromagnet **120** is of the same character as winding **123** on electromagnet **121.**

Electromagnet assembly pair **85***a* on the rotor is identical in configuration with that of the electromagnet stator assembly pair **104***a* except for the position reversal of the elements **117–120** and **91–121** of the respective pairs.

There are nine pairs of electromagnets **120–117** (**104***a*) disposed at 40° intervals about the interior of housing **50.** The center line of core **122** of electromagnet **120** is positioned 13⅓° to the left of the center line of the core **118** of electromagnet **117.** Three pairs of electromagnets **85***a*, 86*a*, 87*a* are provided on rotor assembly **81–88** as shown in FIG. **5.**

Other combinations are possible, but the number of electromagnets in the rotor should always be an integral fraction of the number of electromagnets in the stator. As shown in FIG. **8,** for the rotor assembly **85***a*, 85*b*, there are three of each of the front and back pairs of electromagnetic assemblies. Similarly, as shown in FIGS. **4** and **8,** there are nine front and back pairs of electromagnets in the stator such as **104***a* and **104***b*.

In order to best understand the operation of the rotor **81–88** rotating within the stator housing **50** of an engine according to this invention, the positions of rotor

electromagnets **91** and stator electromagnets **117** are initially exactly in line at the 13⅓° peripheral starting position marked on the vertical center line of FIG. **5.** The winding direction of the coils of these magnets is such that a d-c current through the coils **119** will produce a particular identical magnetic polarity on each of the juxtaposed surfaces **125** of magnet **117,** and **126** of magnet **91,** (FIG. **5**). FIGS. **16** and **6** illustrate the next step in the motion wherein the two major electromagnets, **120** in the stator and **121** in the rotor, are in alignment.

When the d-c discharges from the appropriate capacitors in banks **39** occur simultaneously across spark gaps through the coils **119** of electromagnets **117** and **91,** at the instant of their alignment, their cores **118** will repel one another to cause rotor assembly **81–88** to rotate clockwise in the direction indicated by arrow **127.** The system does not move in the reverse direction because it has been started in the clockwise direction by the alternator motor **54** shown in FIG. **3,** or by some other starter means. If started counterclockwise, the rotor will continue to move counterclockwise.

As hereinbefore noted, the discharge of any capacitor occurs over a very short interval across its associated spark gap, and the resulting magnetic repulsion action imparts motion to the rotor. The discharge event occurs when electromagnets **117** and **91** are in alignment. As shown in FIG. **5,** rotor electromagnet **91***a* is aligned with stator electromagnet **117***c*, and rotor electromagnet **91***b* is aligned with stator electromagnet **117***e* at the same time that similar electromagnets **117** and **91** are aligned. A discharge occurs through all six of these electromagnets simultaneously (that is, **117,** 91; **117***c*, 91*a*, 117*e* and **91***b*). A capacitor and a spark gap are required for each coil of each electromagnet. Where, as in the assembly shown in FIG. **8,** front and back pairs are used, both the axial in-line front and back coils are energized simultaneously by the discharge from a single capacitor or from a bank of paralleled capacitors such as **25, 26** (FIG. **1**). Although FIGS. **4** and **8** indicate the use of front and back electromagnets, it should be evident that only a single electromagnet in any stator position and a corresponding single electromagnet in the rotor position, may be utilized to accomplish the repulsion action of the rotor with respect to the stator. As stated, each electromagnet requires a discharge from a single capacitor or capacitor bank across a spark gap for it to be energized, and the magnetic polarity of the juxtaposed magnetic core faces must be the same, in order to effect the repulsive action to produce the rotary motion.

Referring to FIGS. **5** and **6,** the repulsion action causes the rotor to move 13⅓° clockwise, while electromagnets **91, 91***a* and **91***b* move away from electromagnets **117, 117***c* and **117***e* to bring electromagnets **121, 121***a* and **121***b* into respective alignment with electromagnets **120***a*, 120*d* and **120***f*. At this time, a capacitor discharge across a spark-gap into their coils **123** occurs, thus moving the rotor. Another 13⅓° ahead, as shown in FIG. **7,** major electromagnets **121, 121***a* and **121***b* come into alignment with minor electromagnets **117***a*, 117*d* and **117***f*, at which time a discharge occurs to repeat the repulsion action, this action continuing as long as d-c power is applied to the system to charge the capacitors in the capacitor banks.

FIG. **18** further illustrates the sequencing of the capacitor discharges across appropriate spark gap terminal pairs. Nine single stator coils and three single rotor coils are shown with their respective interconnections with the spark gaps and capacitors with which they are associated for discharge. When the appropriate spark gap terminals are aligned, at the points in the positioning of the rotor assembly for most effective repulsion action of juxtaposed electromagnet cores, the discharge of the appropriate charged capacitors across the associated spark gap occurs through the respective coils. The capacitors are discharged in sets of three through sets of three coils at each discharge position, as the rotor moves through the rotor positions. In FIG. **18,** the rotor electromagnets are positioned linearly, rather than on a circular base, to show the electrical action of an electric engine according to the invention. These motor electromagnets **201, 202,** and **203** are aligned with stator electromagnets **213, 214** and **215** at 0°, 120° and 450° respectively. The stator electromagnets are correspondingly shown in a linear schematic as if rolled out of the stator assembly and laid side by side. For clarity of description, the capacitors associated with the rotor operation **207, 208, 209** and **246, 247,** 248, 249, 282 and **283** are arranged in vertical alignment with the respective positions of the rotor coils **201, 202, 203** as they move from left to right, this corresponding to clockwise rotation of the rotor. The stator coils **213, 214, 215, 260, 261, 262, 263, 264, 265,** 266, etc. and capacitor combinations are arranged side by side, again to facilitate description.

An insulative disc **236** (shown in FIG. **17** as a disc, but opened out linearly in FIG. **18**) has mounted thereon three gap terminal blocks **222, 225** and **228.** Each block is rectangularly U-shaped, and each interconnects two terminals with the base of the U. Block **222** has terminals **222***a* and **222***b*, block **225** has terminals **225***a* and **225***b*, and block **228** has terminals **228***c* and **228***d*. When insulative disc **230** is part of the rotor, as indicated by mechanical linkage **290,** it can be seen that terminal U **222** creates a pair of gaps with gap terminals **223** and **224,** respectively. Thus, when the voltage on capacitor **216** from charging circuit **219** is of a value which will arc over the air spaces between **222***a* and **223,** and between **222***b* and **224,** the capacitor **216** will discharge into the coil of electromagnet **213** to ground. Similarly gap terminal U **225** forms a dual spark gap with gap terminals **226** and **227** to result in arc-over when the voltage on capacitor **217,** charged by charging circuit **220,** discharges into the coil of electromagnet **214.** Also, U-gap terminal **228** with terminals **228***c* and **228***d*, creates a spark gap with terminals **229** and **230** to discharge capacitor **218,** charged by charging circuit **221,** into coil **215.** At the same time, rotor coils, **201, 202** and **203** across gaps **201***a*–**204,** 202*b*–**205** and **203***c*–**206** each receives a discharge from respective capacitors **207, 208,** and **209.**

When the electromagnet coils **213, 214, 215** and **201, 202, 203** are energized, the repulsion action causes the rotor assembly to move to position **2** where a new simultaneous group of discharges occurs into rotor coils **201, 202,** and **203** from capacitors **246, 248,** and **282** across gaps **201***a*–**240, 202***b*–**242** and **203***c*–**244.** Simultaneously, because gap-U-elements **222, 225** and **228** have also moved to position **2** with the rotor assembly, capacitor **261** is discharged through electromagnet coil **260,** capacitor **265** is discharged through electromagnet coil **264,** and capacitor **269** is discharged through electromagnet coil **268** in align-

ment with position **2** of the rotor electromagnet coils, thus to cause the rotor electromagnets to move to position **3** where the discharge pattern is repeated now with capacitors **247, 249** and **283** discharging through the rotor electromagnet coils **201, 202, 203,** and the capacitors **263, 267** and **281** discharging respectively through stator electromagnet coils **262, 266** and **280.**

After each discharge the charging circuits **219–221** and **272–277** for the stator capacitors, and **210–212** and **284–289** for the rotor capacitors, are operated continuously from a battery source, as described earlier with reference to FIG. **1,** to constantly recharge the capacitors to which each is connected. Those versed in the art will appreciate that, as each capacitor discharges across an associated spark gap, the resulting drop in potential across the gap renders the gap an open circuit until such time as the capacitor can recharge to the arc-over level of the gap. This recharge to a discharge potential occurs before a rotor element arrives at the next position in question.

The mechanical schematic diagram of FIG. **17** further clarifies the operation of the spark-gap discharge programming system. A forward disc **236** of an electrically insulative material, has thereon the set of U-shaped gap terminal connectors previously described. These are positioned at 0°, 120° and 240° respectively. In FIG. **17,** schematic representations of the position of the coil and capacitor arrangements at the start of a cycle are shown to correspond to the description hereinabove with reference to FIG. **18.** Accordingly, the coil and capacitor combinations **213**/216, 214/217, and **215**/218 are shown connected with their gap terminals, respectively, **223**/224, 226/227 and **229**/230. On the rotor coil and capacitor connection three separate discs **291, 292** and **293** are shown, each with a single gap terminal. The discs **291–293** are rotated so as to position their respective gap terminals **201***a*, 202*b* and **203***c* at 120° increments, with the 0° position corresponding to the 0° position of U-gap terminal **222** on disc **230.**

Representative gap terminals are shown about the peripheries of discs **230, 291–293** to clearly indicate how, as the discs turn in unison, the gap alignments correspond so that three rotor coil/capacitor positions always line up with three stator coil/capacitors at 120° intervals about the rotary path, producing an alignment every 40°, there being nine stator coils. Thus there are three simultaneous discharges into stator coils and three into rotor coils at each 40° position. Nine positions displaced 40° apart provide a total of 27 discharge points for capacitors into the rotor coils and 27 discharge points for capacitors into the stator coils in one revolution.

It will be understood that, as illustrated in FIGS. **17** and **18,** nine individual electromagnet coils are shown in the stator and three in the rotor, in order to show in its simplest form how the three rotor electromagnets are stepped forward from alignment with three of the stator electromagnets, when the appropriate spark gaps are in alignment, to effect the discharge of capacitors through juxtaposed pairs of rotor/stator electromagnets. The repulsion moves the rotor electromagnet from the stator electromagnet to the next alignment position advanced at an arc of 40° from the preceding alignment position. In the interval until another rotor electromagnet, 120° removed, is aligned with the stator electromagnet that had just been excited, the associated capacitor is recharged to a potential which will cause the spark gap to break down to produce another discharge of this capacitor on the next revolution. Thus the rotor moves from one position to the next, with capacitor discharges occurring each 40° of rotation, a total of nine per revolution. It should be obvious that, with other rotor/stator combinations, the number of electromagnet coincidences and spark-gap discharges will vary. For example, with the coil pairs shown in FIGS. **4** through **8,** a total of 27 discharges will occur. Although there are 18 stator electromagnets and three rotor electromagnets, the discharge pattern is determined by the specific spark gap arrangement.

The rotor/stator configuration of FIGS. **5** and **8,** involving the major and minor pairs of electromagnets such as **85***a* and **104***a* (the terms "minor" and "major" referring to the difference in size of the elements), include nine pairs of electromagnets in the stator, such as **104***a*, with three electromagnet pairs of the rotor, such as **85***a*. Because of the 13⅓° separation between the major and minor electromagnets in the rotor pair **85***a*, with the same separation of minor and major electromagnets of the stator pair **104***a*, the sequence of rotation and discharge described above, with respect to the illustrative example of FIG. **5,** involves the following:

1. A minor element **117** of stator pair **104***a* is aligned with the minor element **91** of rotor pair **85***a*. On the discharge, this moves the rotor ahead 13⅓°.

2. The major rotor element **122** of the pair **85***a* now is aligned with the major stator element **120***b* of the next stator electromagnet pair, in the stator array as shown in FIG. **6.** On the discharge, the rotor moves ahead 13⅓°.

3. This brings the minor rotor electromagnet **91** into alignment with the major stator electromagnet **120***b* of pair **104***d*, and the major electromagnet **122** (just discharged) of pair **85***a* into alignment with minor electromagnet **117***b* of pair **104***d*, and the rotor spark gap ements into alignment with a different position of gap elements connected with capacitors not discharged in the previous position of the rotor. It should be remembered at this point that it is the positioning of a rotatable spark gap array, similar to that illustrated in FIGS. **17** and **18,** which controls the time of discharge of capacitors connected to these gap terminals. Therefore, any electromagnet can be energized twice successively from separate capacitors as the rotor brings appropriate gap terminals into alignment with the coil terminals of a particular electromagnet.

Thus, although major electromagnet **120***b* of pair **104***d* has just been energized as described above, it can now be energized again along with minor rotor electromagnet **91** in step **3,** because the rotor moved to a new set of terminals of the spark gap arrays connected with capacitors not yet discharged. These capacitors now discharge through rotor electromagnet **91** and stator electromagnet **120***b*, causing rotor to move ahead another 13⅓°, thus again aligning two minor electromagnets again, these being **117***b* of stator pair **104***d* and **91** of rotor pair **85***a*. The rotor has now moved 40° since step **1** above. The sequence is repeated, and it is to be noted that at each 13⅓° step, the discharges rotate the rotor another 13⅓°. There are 27 steps per revolution with nine stator coil pairs. The discharge sequence is not uniform, as is shown in Table I. In the stator, three major electromagnets 120° apart are energized twice in sequence followed by a hiatus of one step while three

minor electromagnets of the stator, 120° apart, are energized during the hiatus. In the rotor the major electromagnets are energized during a hiatus step following two minor electromagnet energization steps. A total of 27 energizations are thus accomplished in the nine pairs of coils of the stator.

In Table I, the leftmost column depicts the location of each rotor arm **85, 86, 87** at an arbitrarily selected step No. **1** position. For example, in step **1** rotor arm **85** has a minor stator and minor rotor electromagnet in alignment for capacitors to discharge through them simultaneously at the 13⅓° position.

TABLE I

CAPACITOR DISCHARGE SEQUENCE FOR ONE REVOLUTION OF ROTOR IN SYSTEM OF FIGS. 5 AND 8

Step No. Rotor Arm 87	85	86	Rotor Angle	Rotor Electromagnet Minor	Major	Stator Electromagnet Minor	Major
10	1	19	13 1/3°	x		x	
11	2	20	26 2/3°		x		x
12	3	21	40°	x			x
13	4	22	53 1/3°	x		x	
14	5	23	66 2/3°		x		x
15	6	24	80°	x			x
16	7	25	93 1/3°	x		x	
17	8	26	106 2/3°		x		x
18	9	27	120°	x			x
19	10	1	133 1/3°	x		x	
20	11	2	146 2/3°		x		x
21	12	3	160°	x			x
22	13	4	173 1/3°	x		x	
23	14	5	186 2/3°		x		x
24	15	6	200°	x			x
25	16	7	213 1/3°	x		x	
26	17	8	226 2/3°		x		x
27	18	9	240°	x			x
1	19	10	253 1/3°	x		x	
2	20	11	266 2/3°		x		x
3	21	12	280°	x			x
4	22	13	293 1/3°	x		x	
5	23	14	306 2/3°		x		x
6	24	15	320°	x			x
7	25	16	333 1/3°	x		x	
8	26	17	346 2/3°		x		x
9	27	18	360°	x			x

Similarly, in step **1** rotor arm **86** is at the 133⅓° position with a minor rotor and minor stator electromagnet in alignment for discharge. Simultaneously, rotor arm **87** is at the 253⅓° position with a minor rotor and minor stator in alignment for capacitor discharge therethrough. The other steps of the sequence are apparent from Table I, for each position of the three rotor arms at any step and the juxtapositions of respective stator and rotor electromagnet elements at that position.

In the simplified motor arrangement shown in schematic form in FIG. **18**, with single electromagnet configuration the alignment is uniform and the discharge sequences follow sequentially.

As hereinbefore mentioned, a change in speed is effected by displacing the stator spark gap terminals on the rotor (shown at **236** in FIGS. **17** and **18**) either counter-clockwise or clockwise 6⅔° so that the discharge position of the stator electromagnets is displaced 6⅔° either clockwise or counter-clockwise of a rotor electromagnet at the time of discharge. Referring to FIGS. **11** to **15**, the simultaneous discharge of selected capacitors into the electromagnets so displaced results in a deceleration at the time the rotor electromagnet is just approaching the associated stator, or an acceleration if the rotor electromagnet is just leaving its associated stator electromagnet. In each event, there is a repulsive reaction between the stator and rotor electromagnets, so that if the rotor is approaching the stator, there is a slow-down and if the rotor is receding from the stator there is a speed-up.

Referring to FIG. **11**, clutch mechanism **304** about shaft **111** is operated electromagnetically in conventional manner to displace the spark-gap mechanism **236** which is operated normally in appropriate matching alignment with the rotor spark-gap discs **291, 292,** 293. Clutch **304** has a fixed drive element **311** containing an electromagnetic drive coil (not shown) and a motor element **310** which, when the electromagnetic drive coil is energized, can be operated by a direct current. The operation of motor element **310** brings into operation spark gap elements **224***r*, 223*r* or **223***f*, 224*f* of the system shown in FIGS. **4, 5** and **8**, as illustrated in FIG. **19.**

The fixed stator coil spark gap terminal pairs **223,** 224 and **266, 267** are arrayed about a cylindrical frame **322** which is fabricated in insulative material. In the illustrative example of FIGS. **17** and **18**, there are nine such spark gap terminal pairs about the periphery of cylinder frame **324.** In the engine of FIGS. **4** to **8**, a total of 27 such spark gap pairs are involved. In addition, although not shown in the drawing, there are also pairs of terminals, such as **223***r* or *f*, 224*r* or *f* and **266***r* or *f*, **267***r* or *f*, displaced 6⅔° on either side of the pairs **223, 224** or **266, 267** and all other pairs in the spark gap array, the letters *r* and *f* denoting "retard" and "faster." The latter displaced pairs of used in the control of speed of the engine rotor. The displaced pairs not shown are involved with the operation of cluth **304,** the speed changing control element.

Clutch **304** is associated with shaft **111** in that the movable element **310** draws clutch disc element **316** on shaft **111** away from clutch disc element **322** when energized by a voltage of appropriate polarity applied to its motor electromagnet **311.** Such clutch drives are well known in the art.

The clutch mechanism **304** of FIGS. **11** and **19,** when not energized is in the configuration shown in FIG. **11.** The energized configuration of clutch **304** is not specifically illustrated. Upon energization, spark-gap element **222** on disc **236** is displaced rightward, as viewed in FIG. **11,** by broken lines **236X,** into alignment with the positions of fixed spark-gap terminals **223***f*, 224*f* and **267***r*, 266*r*. When the disc is in position **236X**, the flattened edge **332** of pin **330** in disc **325** rides on surface **350** of disc **322.** Normally, the flattened edges **351** of pins **330** are engaged against the flat edge **352** in recess **331** of disc **322.** The displacement of disc **322** on shaft **111** is effected by the action of clutch **304** against spring **314** (FIG. **11**). An electric switch (not shown) of clutch mechanism **304** energizes it from a d-c power source, and has two positions, one for deceleration and one for acceleration. In either position, clutch **304** is engaged to pull clutch disc **322** from clutch disc **325,** momentarily. For the decelerate or the accelerate position, the displaced alignment of spark gap elements **222** is with the **224***f*, 223*f* and the **224***r*, 223*r* spark-gap terminal elements. However, only the **224***f*, 223*f* spark-gap elements are switched into operation with appropriate capacitors for the accelerate position, while in the decelerate position only the **223***r* and **224***r* spark-gap elements are switched into the circuit with their associated capacitors.

Of course, when insulative disc **236** is displaced by clutch **304,** its gap terminals **222, 225** and **228** (FIGS.

14 and 18) are all displaced into the alignment position of 236X so as to engage the *r* and *f* lines of fixed spark gap elements. Although the accelerate and decelerate positions of disc **236** are the same, it is the switching into operation of the **223, 224** or **266, 267** exemplary *r* or *f* pairs of terminals which determine whether speed up or slow down action of the rotor will occur.

The momentary displacement of clutch disc **322** from clutch disc **325** results in rotation of disc **325** about disc **322** through an angle of 120°. The detent ball and spring mechanism **320, 321** in disc **325** positions itself between one detent dimple **328** and a succeeding one **328** at a position 120° away on disc **325.** As stated, flat **332** of pin **330** rides on surface **350** of disc **322,** and pin **330** leaves the pin-holding groove **331**/352 along ramp **333** in disc **322** during the momentary lifting of disc **322** by clutch **304.** Pin **330** falls back into the next groove **331** at a point 120° further on about disc **322.** Pin **330** falls into place in groove **331** on ramp **334.** Pins **330** are rotatable in their sockets **353,** so that for either clockwise or counterclockwise rotation, the flat **351** will engage the flat **352** by the particular ramp it encounters.

The deceleration or acceleration due to the action of clutch **304** thus occurs within a 120° interval of rotation of disc **325.** Disc **322** during this interval may only move a fraction of this arc.

There has been described hereinabove an electromotive engine system wherein at least one electromagnet is in a fixed position and a second electromagnet of similar configuration is juxtaposed with it in a magnetic polarity relationship such that, when the cores of the electromagnets are energized, the juxtaposed core faces repel one another. One core being fixed and the second core being free to move, any attachments to the second electromagnet core will move with it. Hence, if a plurality of fixed cores are positioned about a circular confining housing, and, within the housing, cores on a shaft are free to move, the shaft is rotationally urged each time the juxtaposed fixed and rotatable cores are in alignment and energized. Both the fixed and the movable cores are connected to spark gap terminal elements, and the associated other terminal elements of the spark gaps are connected to capacitors which are changed to a high voltage from pulsed unipolar signal generators. These capacitors are discharged through the electromagnets across the spark gaps. By switching selected groups of capacitors into selected pairs of spark gap elements displaced from the normal uniformly positioned elements for discharge through the electromagnets, the rotor of the circular array systems is accelerated and decelerated.

By confining a fixed electromagnet array in a linear configuration with a linearly movable electromagnet to which a working tool is attached, exciting the juxtaposed pairs of electromagnets by capacitor discharge results in the generation of linear force for such tools as punch presses or for discharging projectiles with considerable energy.

The inventor claims:

1. An electric engine comprings:

a housing;

an array of electromagnets uniformly spaced in said housing to form a stator;

a rotor cage on a shaft journaled in and rotatable within said housing and within said stator, said rotor cage having thereon a spaced array of electromagnets similar to said stator electromagnets and in number comprising an integral fraction of the number of electromagnets in said stator array;

each of the electromagnets of said stator and of said rotor having a magnetizable core of particular configuration and each being wound with a coil such that a pulse of unidirectional electric current through said coil magnetizes the respective core thereof to a particular magnetic polarity, and the faces of rotor cores juxtaposing selected stator cores are magnetized to the same polarity, the juxtaposed cores thereby tending to repel one another, one lead of each of the stator and rotor coils being connected to a common terminal, the other lead of each of said coils being connected to a gap terminal, the gap terminals of said rotor coils being on the rotor and equal in number to the number of coils thereon and matching the positions of said rotor electromagnets thereon, the gap terminals of said stator being equal in number to the number of coils on the stator and disposed uniformly about said stator to match the positions of said stator electromagnets within said housing;

a first array of capacitors each having a terminal in common with the common coil terminal of said stator electromagnets, and each capacitor having its other terminal connected to a gap terminal arrayed adjacent the gap terminal of an electromagnet associated therewith;

a second array of capacitors, each having a terminal in common with said common terminal of said rotor electromagnet coils but equal in number to the number of capacitors in said stator array, the other terminals of said capacitors in said second array being connected to gap terminals arrayed about said housing so as to be in axial alignment with said stator gap terminal positions and being alignable with said rotor gap terminals as said rotor is rotated in said housing and respective gap terminals of said rotor coils pass each second array capacitor gap terminals at a predetermined gap distance;

gap coupling terminals on said rotor equal in number to the number of rotor electromagnet coils and positioned to match the rotor electromagnet positions on said rotor, the gap coupling terminals being rotatable with said rotor so as to pass said adjacent stator coil and associated stator capacitor gap terminal at a predetermined distance therefrom;

a plurality of capacitor charging circuits connected respectively across each of said capacitors in both said first and said second arrays of capacitors for charging each of said capacitors to a predetermined high d-c potential;

a first source of unidirectional electric potential connected to each of said capacitor charging circuits for energizing said charging circuits; and

a second unidirectional electric potential source connected to said electromagnets of said rotor and said stator of such polarity as to receive a charge from the inverse inductive discharge of the electromagnet coils as their fields collapse following the discharge of each capacitor through a rotor or stator electromagnet coil,

whereby whenever a rotor electromagnet is aligned opposite a stator electromagnet, the rotor coil gap terminal of that electromagnet is opposite an asso-

ciated second capacitor array gap terminal, and a gap coupling terminal of said rotor is aligned opposite the stator electromagnet coil gap terminal and associated first capacitor gap terminal, the capacitors discharge the charge thereon across the gaps through their associated electromagnet coils to magnetize their respective juxtaposed electromagnet cores to cause them to repel one another, thus aligning a succeeding pair of rotor and stator electromagnets for capacitor discharge across their respective gaps, to cause them to repel one another, alignments rotor rotation within the housing continuously bringing successive rotor-stator electromagnets into alignment for discharge of the capacitors therethrough to produce rotary motion of the rotor on said rotor shaft continuously so long as energy from said first source of unidirectional electric potential is applied to said charging circuits to recharge said capacitors after each discharge.

2. In an electric engine having a rotor comprising electromagnetic coil means rotatable within a stator comprising similar electromagnetic coil means, said electromagnetic coil means being polarized for magnetic repulsion;

capacitor means electrically coupled across successive spark gaps to selected ones of said coils of said stator and all of the coils of said rotor;

charging means connected to said capacitor means for charging said capacitor means to an electrical charge potential sufficient to cause arcing across said spark gaps to result in the discharge of said capacitor means through the electromagnetic coils so that the electromagnetic coil means repel one another; and

a unidirectional electric power source connected to said charging means to energize said charging means to continue charging said capacitor means following each discharge whereby the rotor of said engine is maintained in rotation by the successive discharges of said capacitor means across successive spark gaps into said electromagnetic coil means.

3. An electric engine according to claim **2,** wherein:

the charging means includes electronic square core oscillators connected to said unidirectional electric power source and includes step-up means and a rectifier to produce a substantial voltage step up from the voltage of said power source.

4. An electric engine according to claim **2,** wherein:

the charging means includes a vibrator connected to said power source, and step up transformer and rectifier means to provide a high voltage for charging said capacitor means.

5. A motive force producing means comprising:

at least a first electromagnet means including at least one coil wound about a core,

at least a second electromagnet means including at least one coil wound about a core similar to said first core,

the respective cores being positioned adjacent to one another so that the magnetic polarities of the adjacent core surfaces are the same when a unidirectional electric current is passed through the coils,

at least one capacitor means having one terminal thereof connected to one terminal of both of said electromagnet coils,

the other terminal of said capacitor means being connected to one terminal of a spark gap means, the other terminals of the coils of both said first and said second electromagnet means being connected to the other terminal of said spark gap means,

at least one unidirectional pulse charging means connected to said capacitor means to charge said capacitor means to a relatively high potential sufficient to arc across said spark gap means at predetermined spacing of said gap terminals, and

a source of unidirectional potential connected to said charging circuit to energize said charging means,

whereby upon application of current from said potential source to said charging means the successive pulses generated thereby charge said capacitor means to a voltage level sufficient to arc across said spark gap means to produce a discharge path for said capacitor means through said coils to cause said electromagnet means to repel one another with a substantial force.

6. A motive force producing means according to claim **5,** wherein:

said first electromagnet means is secured in a relatively stable housing, and said second electromagnet means is connected with and freely movable relative to said stable housing, and has utilization means connected thereto for performing work therewith when said capacitor means discharges through said coils of said electromagnet means.

7. A motive force producing means according to claim **6,** wherein said utilization means is a motor rotor coupled with said second electromagnet means and said first electromagnet means is a stator.

8. A motive force producing means according to claim **6,** wherein said utilization means is a piston attached to said second electromagnet means and is movable therewith to produce hammer-like blows when said capacitor means discharges through said electromagnet means.

9. In an electromotive force generating system as disclosed, means for accelerating or decelerating the motion of a force generating system, said means comprising:

at least two juxtaposed electromagnetic core elements, one fixed and one movable, including coils wound thereabout to provide a repulsion tendency when said cores are energized,

spark gap termimals connected with said coils,

capacitor means connected with said spark gap terminals to discharge across said spark gap terminals through said coils when a charge of sufficient voltage level appears across said capacitor means, thus to energize said juxtaposed electromagnets to induce said juxtaposed electromagnet cores to repel one another,

charging means connected to said capacitors for charging them to said sufficient voltage level, and

selective positioning means coupled with said spark gap terminals and with at least said movable electromagnet core to cause selective displacement of said movable core with respect to said fixed core to accelerate or decelerate the motion of the movable core relative to the fixed core.

10. An electromotive force generating system according to claim **9,** wherein:

said juxtaposed electromagnetic cores include a plurality of fixed cores and a smaller number of mov-

able cores, said smaller number being an integral fraction of the number of fixed cores, and

said selective positioning means is an electromagnetic clutch coupled with said smaller number of movable cores for movement therewith, and includes selective displacement means coupled with said spark gap terminals connected with selected capacitors in said capacitor means and selected combinations of coils in said plurality of fixed electromagnets.

11. The method of generating motive power comprising the steps of:

a. positioning similar electromagnets in juxtaposed relationship with their respective cores arranged for repulsion when said electromagnets are energized,

b. charging capacitors to a relatively high potential, and

c. discharging said capacitors simultaneously through said electromagnets across spark gaps set to break down at said relatively high potential,

thereby to cause said similar electromagnets to repel one another with considerable force.

12. The method of generating motive power defined in claim **11**, wherein in said positioning step at least one of said electromagnets is maintained in a fixed position and another electromagnet is free to move relative to said fixed electromagnet.

13. The method of generating motive power according to claim **11**, wherein:

the charging step includes the charging of capacitors to a relatively high potential from a pulsed unipolar source of electric energy.

14. In an electromagnetic capacitor discharge engine including movable electromagnets and fixed electromagnets, said movable electromagnets being movable into polar alignment with said fixed electromagnets, capacitor means, means for charging said capacitor means, and means for discharging said charged capacitor means through said fixed and movable electromagnets to polarize aligned fixed and polarized electromagnets for magnetic repulsion, an acceleration and deceleration control means comprising:

first selective means for momentarily delaying the discharge of the capacitors until the movable electromagnets in said engine have begun to recede from the fixed electromagnets, in order to accelerate the motion of said movable electromagnets by the added impetus of the repulsion, and

second selective means for momentarily accelerating the discharge of the capacitors to occur at a point in the motion of the movable electromagnets where said movable electromagnets are approaching said fixed electromagnets to decelerate the motion of said movable electromagnet by the tendency to repel the approaching electromagnet by the fixed electromagnet.

15. An electric engine, comprising:

fixed electromagnets;

movable electromagnets movable into alignment with said fixed electromagnets;

capacitor means;

means for charging said capacitor means; and

means for discharging said charged capacitor means through said fixed and movable electromagnets to polarize said aligned fixed and movable electromagnets for magnetic repulsion.

16. An electric engine as recited in claim **15**, wherein: said means for discharging said charged capacitor means comprises voltage breakdown switch means.

17. An electric engine as recited in claim **16**, wherein:

said voltage breakdown switch means includes at least one terminal movable with at least one of said movable electromagnets for breaking down when said at least one of said movable electromagnets is in alignment with a said fixed electromagnet.

18. An electric engine as recited in claim **17**, wherein:

said voltage breakdown switch means comprises a spark gap means.

* * * * *

FIG. 1.

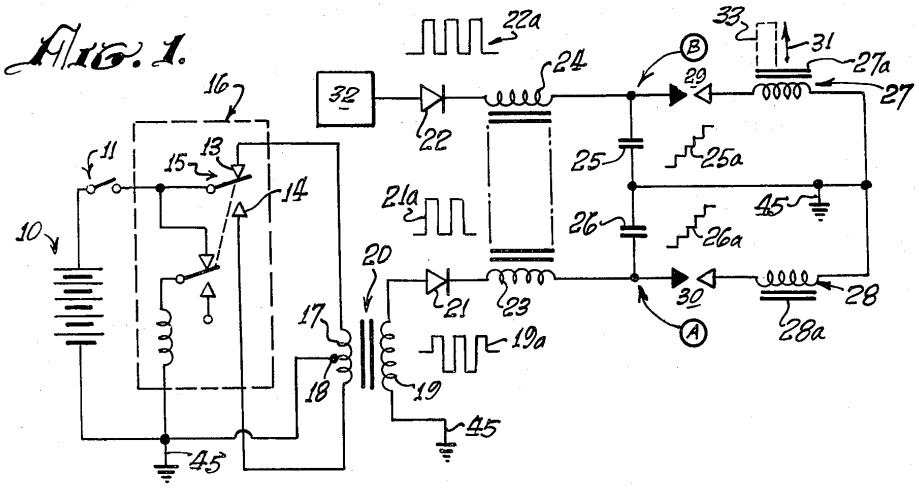
10
11
13
14
15
16
17
18
19
19a
20
21
21a
22
22a
23
24
25
25a
26
26a
27
27a
28
28a
29
30
31
32
33
45
A
B

FIG. 2.

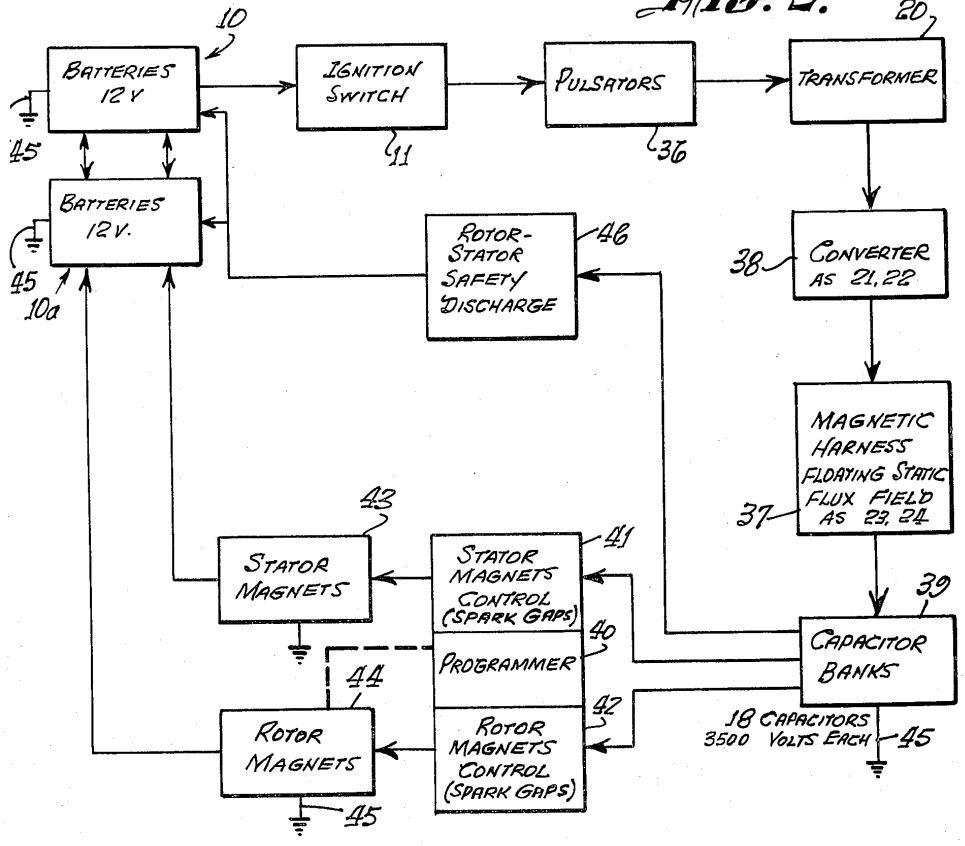
BATTERIES 12 V
10
IGNITION SWITCH
11
PULSATORS
36
TRANSFORMER
20
BATTERIES 12 V.
10a
45
ROTOR-STATOR SAFETY DISCHARGE
46
CONVERTER AS 21, 22
38
MAGNETIC HARNESS FLOATING STATIC FLUX FIELD AS 23, 24
37
STATOR MAGNETS
43
STATOR MAGNETS CONTROL (SPARK GAPS)
41
PROGRAMMER
40
CAPACITOR BANKS
39
ROTOR MAGNETS
44
ROTOR MAGNETS CONTROL (SPARK GAPS)
42
18 CAPACITORS 3500 VOLTS EACH

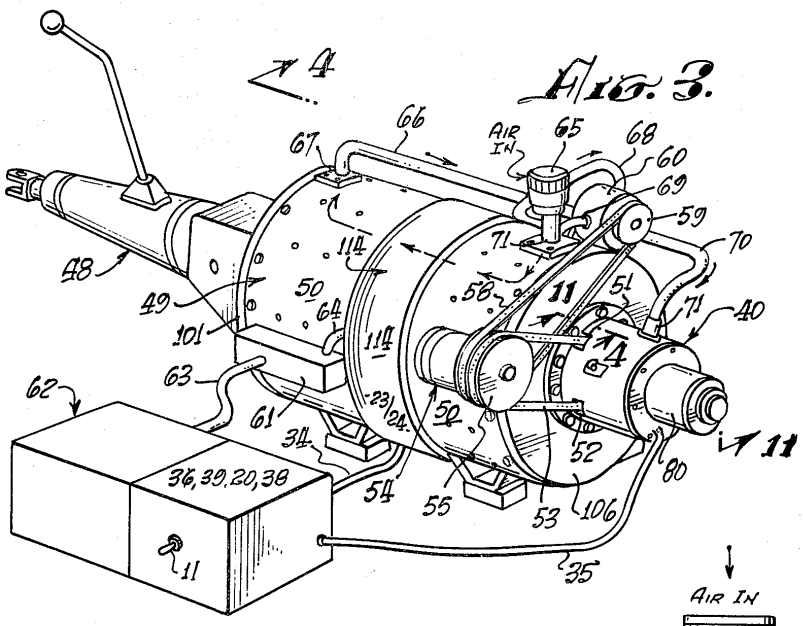
4
66
67
AIR IN
65
68
60
69
59
70
71
114
48
49
50
64
58
11
51
71
40
101
114
4
63
62
61
23/24
50
52
11
34
36,39,20,38
54
55
53
106
80
11
35

FIG. 3.

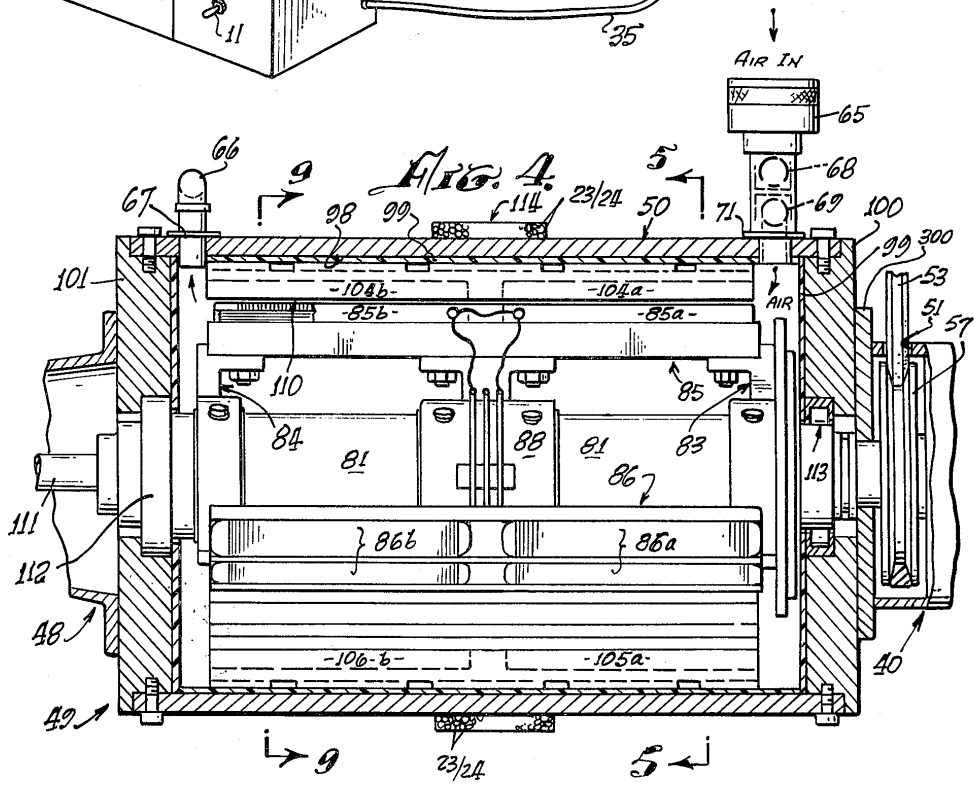
AIR IN
65
66
9
5
68
67
98
99
114
23/24
50
71
69
100
99
300
101
-104b-
-104a-
AIR
53
-85b-
-85a-
51
57
110
85
84
88
81
83
81
86
113
111
86b
86a
112
48
-106-b-
-105a-
40
49
9
23/24
5

FIG. 4.

Fig. 5.

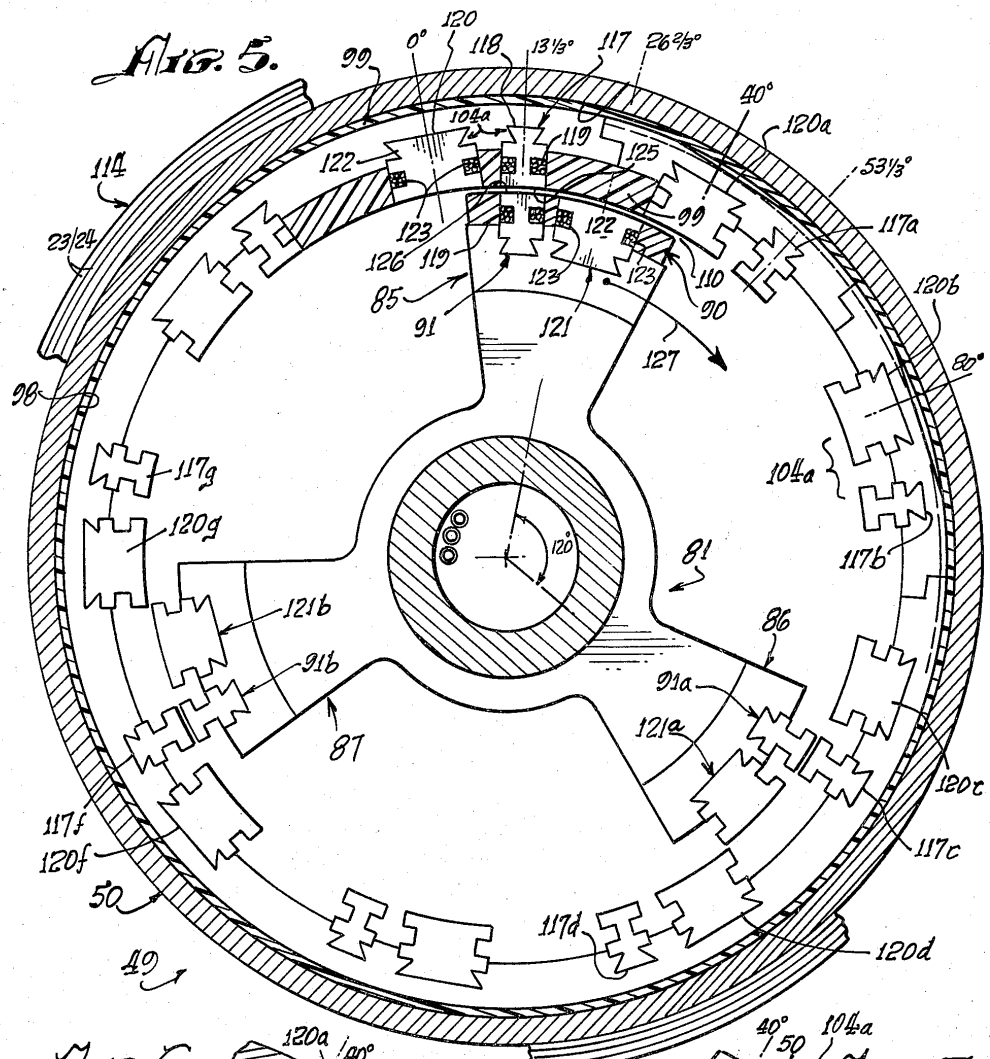

Fig. 6.

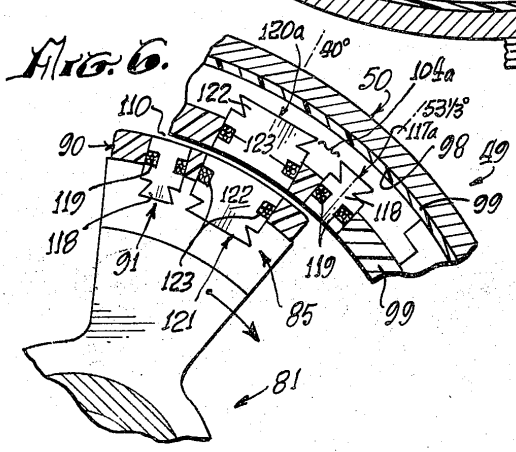

Fig. 7.

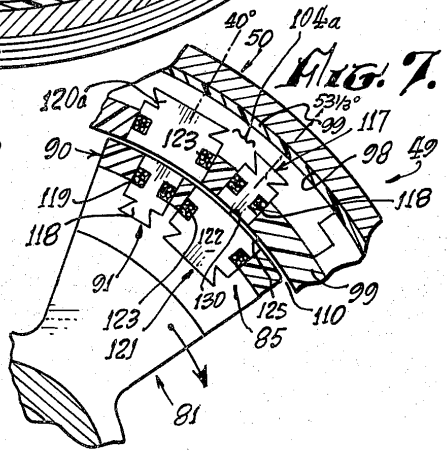

FIG. 8.

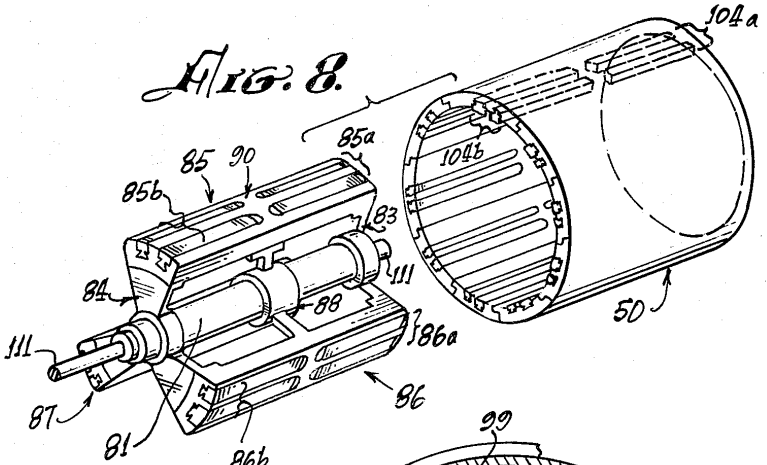

FIG. 9.

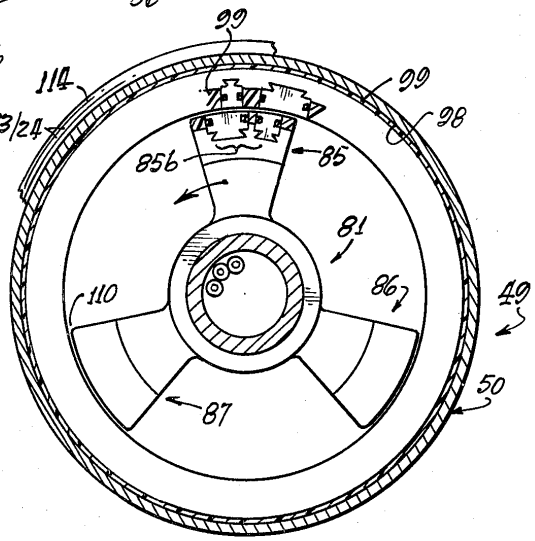

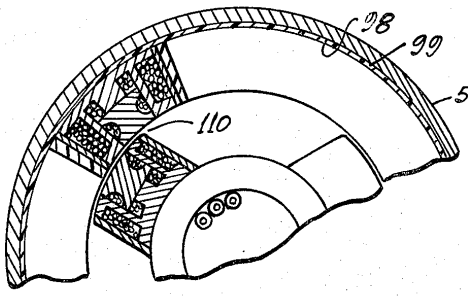

FIG. 10.

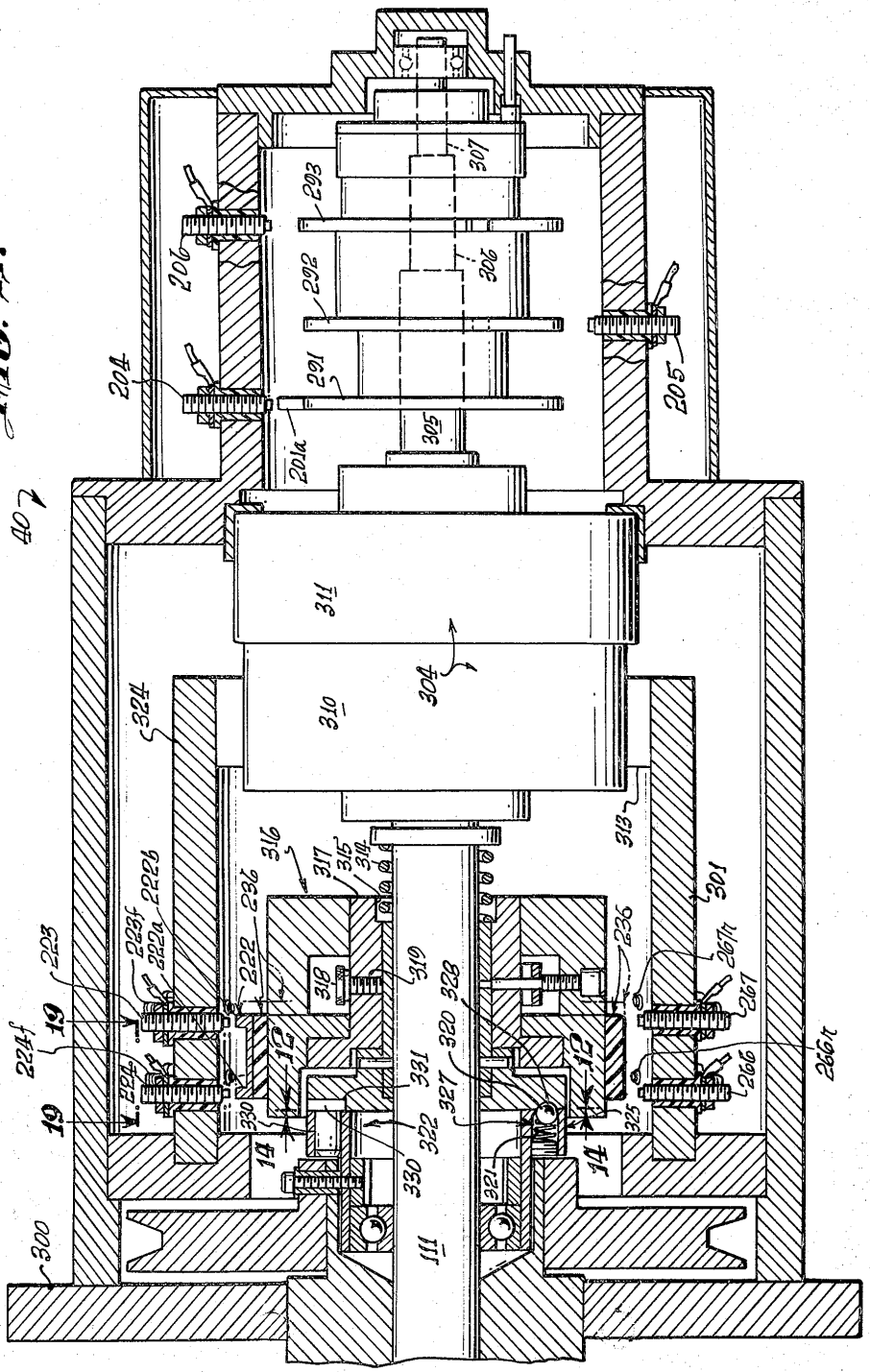
40
204
206
205
201a
291
292
293
305
306
307
311
310
304
324
313
316
317
315
314
301
223
223f
222a
222b
222
236
318
319
328
320
327
331
322
330
321
325
267
267t
266
266t
224f
224
19
12
14
111
300

FIG. 11.

Fig. 12.

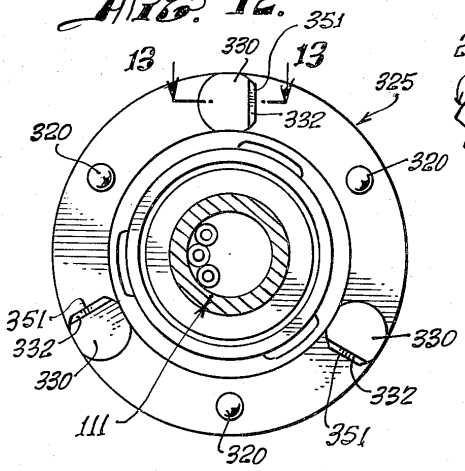

Fig. 14.

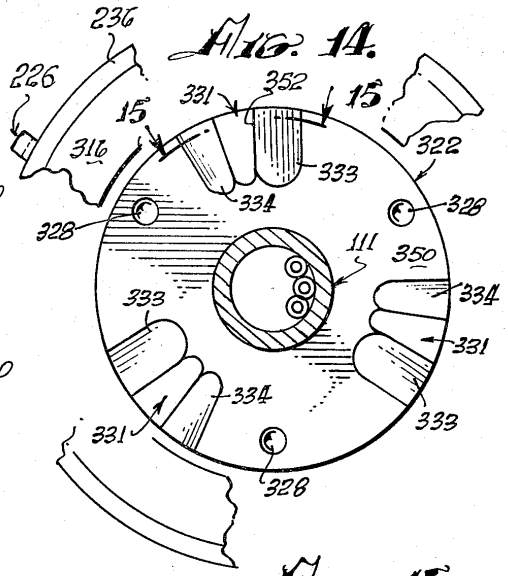

Fig. 13.

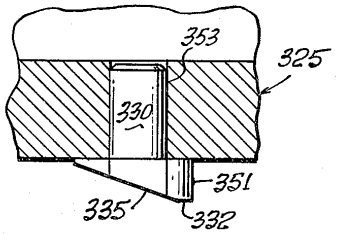

Fig. 15.

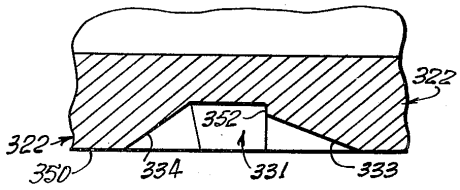

Fig. 16.

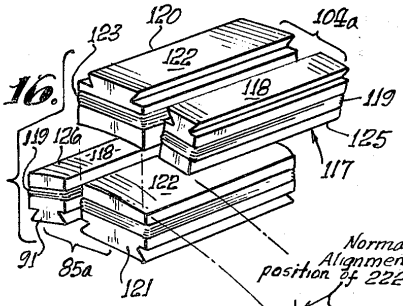

Fig. 17.

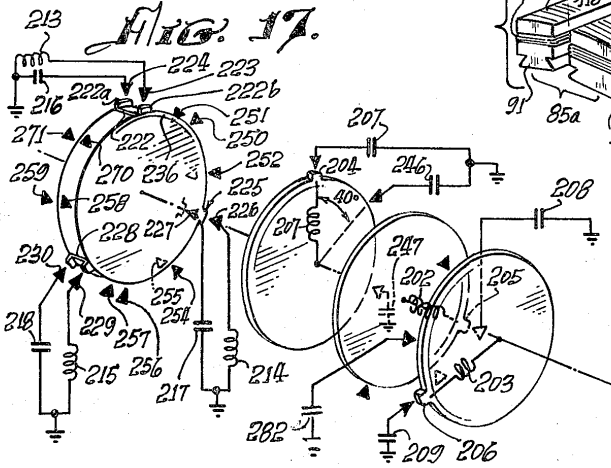

Normal Alignment position of 222

Fig. 19.

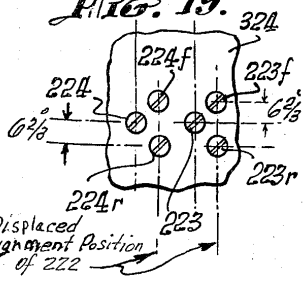

Displaced Alignment Position of 222

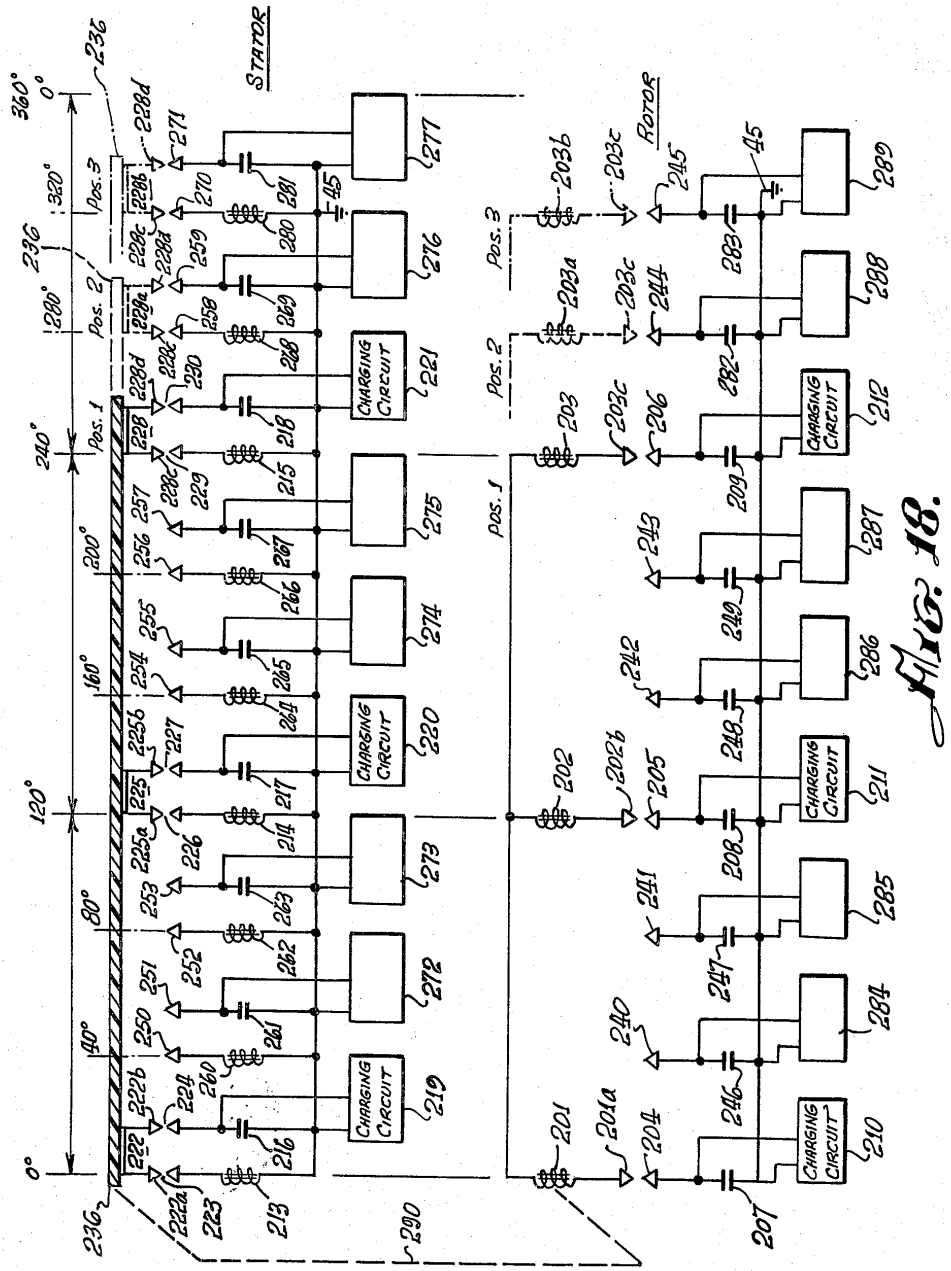
STATOR
ROTOR
Pos. 1
Pos. 2
Pos. 3
CHARGING CIRCUIT
0°
40°
80°
120°
160°
200°
240°
280°
320°
360°

Fig. 18.

United States Patent [19]

Gray

[11] **3,890,548**

[45] **June 17, 1975**

BEST AVAILABLE COPY

[54] **PULSED CAPACITOR DISCHARGE ELECTRIC ENGINE**

[75] Inventor: **Edwin V. Gray,** Northridge, Calif.

[73] Assignee: **Evgray Enterprises, Inc.,** Van Nuys, Calif.

[22] Filed: **Nov. 2, 1973**

[21] Appl. No.: **412,415**

[52] **U.S. Cl.** **318/139;** 318/254; 318/439; 310/46

[51] **Int. Cl.** **H02p 5/00**

[58] **Field of Search** 310/46, 5, 6; 318/194, 318/439, 254, 139; 320/1; 307/110

[56] **References Cited**

UNITED STATES PATENTS

2,085,708	6/1937	Spencer	318/194
2,800,619	7/1957	Brunt	318/194
3,579,074	5/1971	Roberts	320/1
3,619,638	11/1971	Phinney	307/110

OTHER PUBLICATIONS

Frungel, *High Speed Pulse Technology*, Academic Press Inc., 1965, pp. 140–148.

Primary Examiner—Robert K. Schaefer
Assistant Examiner—John J. Feldhaus
Attorney, Agent, or Firm—Gerald L. Price

[57] **ABSTRACT**

There is disclosed herein an electric machine or engine in which a rotor cage having an array of electromagnets is rotatable in an array of electromagnets, or fixed electromagnets are juxtaposed against movable ones. The coils of the electromagnets are connected in the discharge path of capacitors charged to relatively high voltage and discharged through the electromagnetic coils when selected rotor and stator elements are in alignment, or when the fixed electromagnets and movable electromagnets are juxtaposed. The discharge occurs across spark gaps disclosed in alignment with respect to the desired juxtaposition of the selected movable and stationary electromagnets. The capacitor discharges occur simultaneously through juxtaposed stationary movable electromagnets wound so that their respective cores are in magnetic repulsion polarity, thus resulting in the forced motion of movable electromagnetic elements away from the juxtaposed stationary electromagnetic elements at the discharge, thereby achieving motion. In an engine, the discharges occur successively across selected ones of the gaps to maintain continuous rotation. Capacitors are recharged between successive alignment positions of particular rotor and stator electromagnets of the engine.

18 Claims, 19 Drawing Figures

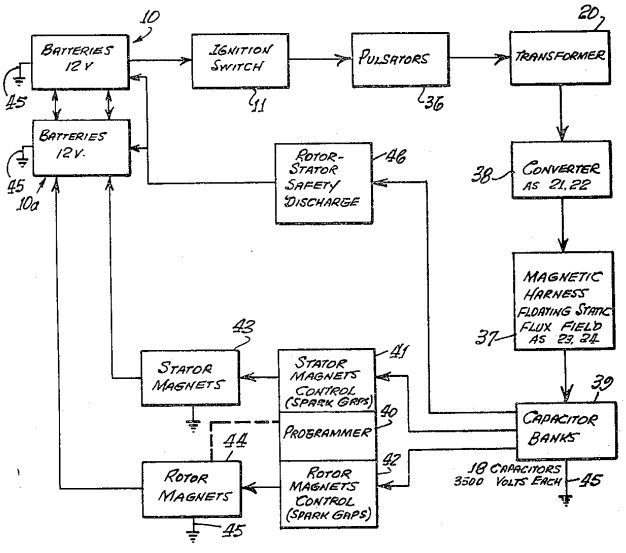

PULSED CAPACITOR DISCHARGE ELECTRIC ENGINE

BACKGROUND OF THE INVENTION

1. Field of the Invention

There is no known engine or motor operated on the principle of the present invention, that a capacitor charged to a relatively high voltage from a low-voltage d-c source is discharged across a spark gap to provide current through motor drive coils in the discharge path, these being solenoids which generate motion by magnetic repulsion of juxtaposed pairs of cores. The solenoids are preferably configured in motor and stator assemblies to effect motion of the rotor element with respect to the stator.

The present invention utilizes this principle to provide a rotary motion machine or engine which can develop considerable torque through the magnetic repulsion action of rotor and stator cores wound with coils through which capacitors are discharged synchronously with the positioning of the rotor coils opposite particular stator coils. Similarly, a linear action can be achieved with a stationary electromagnet juxtaposed against a movable electromagnet and the movable electromagnet can perform work with a tool or piston attached thereto.

A novel control mechanism is associated with the rotor is the engine to position discharge elements appropriately to create the desired discharge through the electromagnet coils when the juxtaposed rotor and stator electromagnets are in alignment. The electromagnets in the stator and rotor are so arranged that the control mechanism can advance or retard the discharge points relative to rotor-stator positions for control of rotational speed.

The discharge overshoot or back e.m.f. from the collapsing fields in the coils from the capacitor discharge is used to energize external batteries for conservation of power. The recovered energy thus stored may be used to operate equipment associated with the engine or motive force producing device.

The engine or rotary electric machine of the invention is believed to operate on the principle of conservation of energy, in that once rotation is achieved, current is needed only at the instant of a capacitor discharge in order to advance the rotor. The rotor moves to the next discharge point on the inertia of the repulsion action. The capacitor is recharged during the interval and stores the energy until discharge at the next rotor-stator coil coincidence. Thus, the new engine produces torque and stores the excess energy for subsequent use.

In a linear motion device according to the invention, only a single pulse discharge is needed to perform work.

The applications of the engine include use as an electric automotive engine which is economical and which can regenerate a part of the energy consumed to provide power for other loads in the automotive electric vehicle. As a linear actuator an economical use of power is possible because each stroke will result from a single discharge pulse of a capacitor through a coil.

2. Prior Art

Heretofore, electric engines or motors have operated on the principle that a conductor carrying a current in a magnetic field tends to move perpendicularly to that field; the electromagnetic torque developed by an armature or rotating portion of the motor is proportional to the magnetic flux in the stationary field and to the armature current.

In direct current motors the field is created by current through two or more field coils disposed in opposing magnetic relationship in the motor casing, while current through a rotatable armature positioned in the field is alternatingly reversed in polarity to provide continuous motion. The polarity reversing mechanism is a commutator. Some d-c motors have their field windings electrically in parallel with the rotor armature winding and are called "shunt-wound" motors. Other d-c motors have field and armature windings connected in series. In both series and shunt motors commutators are used for reversing the magnetic polarity of the armature to maintain rotation within the field.

A third type of d-c motor utilizes a permanent magnet field so that the operating current passes only through the armature winding. Such motors also use polarity reversing commutators to maintain direction of rotation. Reversal of direction of motion is effected by reversing the polarity of applied d-c potential.

Control of speed of d-c motors is accomplished basically by decrease or increase of magnetic field flux or the current through the armature. Either or both of these effects can be accomplished by raising or lowering the applied potential. In shunt motors, a series resistance may be varied to produce speed changes. In a permanent magnet motor or series motor, speed variation is best accomplished by voltage variation with a variable resistance in series with the motor d-c supply.

In alternating current motors, as is well known, a rotating magnetic field is created in the stator, and the rotor may be wound with as many poles as there are in the stator, with terminals connected with slip rings, or the rotor may consist of solid bars shorted by rings on each end to form a "squirrel cage" configuration. The speed of an a-c motor depends on the frequency of the applied a-c energy, if the motor is synchronous.

"Universal" motors are operable on either a-c or d-c energy.

In stepping motors, a rotor is moved from one pole to the next adjacent pole with each application of current, the rotor remaining at that position until a next application of current. This is accomplished by switching the current on and off or by pulsing the current. Examples of stepping motors are described in U.S. Pat. No. 3,467,902 to Shimizu, et al., U.S. Pat. No. 3,462,667 to Jackson, and U.S. Pat. No. 3,599,069 to Welch.

Operation of the a-c and d-c motors described above involves the consumption of substantial electric current. These motors can generate electric current when driven externally by a mechanical force. External energy to rotate the generator rotors can be provided by hydroelectric and steam sources or by other electric motors. In some of these systems, a d-c motor source drives an a-c generator for conversion of d-c energy to a-c energy or a d-c motor may drive a d-c generator which delivers a higher voltage than the source.

An extensive prior art search by the applicant uncovered no capacitor-discharge-operated motor resembling that of the present invention. All motors of the patents located in the search employed direct electrical connection between coils and electric power sources. Where selective switching is involved, semiconductor devices are employed, such as silicon-controlled rectifi-

ers. Capacitors are used only for starting and phasing purposes, and not for basic motor operation from the discharge thereof, as in this invention.

SUMMARY OF THE INVENTION

This invention relates to electric motors or engines, and more particularly to a new electric machine including electromagnetic poles in a stator configuration and electromagnetic poles in a rotor configuration wherein in one form thereof the rotor is rotatable within the stator configuration and where both are energized by capacitor discharges through rotor and stator electromagnets at the instant of the alignment of a rotor electromagnet with a stator electromagnet. The rotor electromagnet is repelled from the stator electromagnet by the discharge of the capacitor through the coils of both the stator and rotor electromagnets at the same instant.

In an exemplary rotary engine according to this invention, rotor electromagnets may be disposed 120° apart on a central shaft and major stator electromagnets may be disposed 40° apart in the motor housing about the stator periphery. Other combinations of rotor elements and stator elements may be utilized to increase torque or rotation rate.

In another form, a second electromagnet is positioned to one side of each of the major stator electromagnets on a center line 13⅓° from the center line of the stator magnet, and these are excited in a predetermined pattern or sequence. Similarly to one side of each major rotor electromagnet is a second electromagnet spaced on a 13⅓° center line from the major rotor electromagnet. Electromagnets in both the rotor and stator assemblies are identical, the individual electromagnets of each being aligned axially and the coils of each being wired so that each rotor electromagnetic pole will have the same magnetic polarity as the electromagnet in the stator with which it is aligned and which it is confronting at the time of discharge of the capacitor.

Charging of the discharge capacitor or capacitors is accomplished by an electrical switching circuit wherein electrical energy from a battery or other source of d-c potential may be applied in alternating polarity to ignition coils or other voltage step-up arrangements from which a high voltage d-c potential is derived through rectification by diodes.

The capacitor charging circuit comprises a pair of high frequency switchers which feed respective automotive-type ignition coils employed as step-up transformers. The "secondary" of each of the ignition coils provides a high voltage square wave to a half-wave rectifier to generate a high voltage output pulse of d-c energy with each switching alternation of the high frequency switcher. Only one polarity is used so that a unidirectional pulse is applied to the capacitor bank being charged.

Successive unidirectional pulses are accumulated on the capacitor or capacitor bank until discharged. Discharge of the bank of capacitors occurs across a spark gap by arc-over. The gap spacing determines the voltage at which discharge or arc-over occurs. An array of gaps is created by fixed elements in the engine housing and moving elements positioned on the rotor shaft. At the instant when the moving gap elements are positioned opposite fixed elements during the rotor rotation, a discharge occurs through the coils of the aligned rotor and stator electromagnets to produce the repulsion action between the stator and rotor electromagnet cores.

A plurality of fixed gap elements are arrayed in the motor housing to correspond to the locations of the stator electromagnets in the housing. The rotor gap elements correspond to the positions of the rotor electromagnets on the rotor so that at the instant of correct alignment of the gaps the capacitors are discharged to produce the necessary current through the stator and rotor coils to cause the electromagnets to repel one another.

The charging circuits are arranged in pairs, and are such that the discharge occurs through both rotor and stator windings of the electromagnets, which are opposite one another when the spark gap elements are aligned and arc-over.

The speed of the rotor can be changed by means of a clutch mechanism associated with the rotor. The clutch shifts the positions of the rotor gap elements so that the discharge will energize the stator coils in a manner to advance or retard the time of discharge with respect to the normal rotor/stator alignment positions. The discharge through the rotor and stator then occurs when the rotor has passed the stator 6⅔° for speed advance.

By causing the discharge to occur when the rotor position is approaching the stator, the repulsion pulse occurs 6⅔° before the alignment position of the rotor and stator electromagnets, thus slowing the speed.

The clutch mechanism for aligning capacitor discharge gaps for discharge is described as a control head. It may be likened to a firing control mechanism in an automotive combustion engine in that it "fires" the electromagnets and provides a return of any discharge overshoot potential back to the battery or other energy source.

The action of the control head is extremely fast. From the foregoing description, it can be anticipated that an increase in the speed or a decrease in speed of rotation can occur within the period in which the rotor electromagnet moves between any pair of adjacently located electromagnets in the stator assembly, which are 40° apart in the exemplary engine according to the invention. Thus, speed changes can be effected in a maximum of one-ninth of a revolution.

The rotor speed-changing action of the control head and its structure are believed to be further novel features of the invention, in that they maintain normal 120° firing positions during uniform speed or rotation conditions, but shift to ±6⅔° longer or shorter intervals for speed change by the novel shift mechanism in the rotor clutch assembly.

Accordingly, the preferred embodiment of this invention is an electric rotary engine wherein motor torque is developed by discharge of high potential from a bank of capacitors through stator and rotor electromagnet coils when the electromagnets are in alignment. The capacitors are charged from batteries by a switching mechanism, and are discharged across spark gaps set to achieve the discharge of the capacitor charge voltage through the electromagnetic coils when the gaps and predetermined rotor and stator electromagnet pairs are in alignment.

Exemplary embodiments of the invention are herein illustrated and described. These exemplary illustrations and description should not be construed as limiting the invention to the embodiments shown, because those

skilled in the arts appertaining to the invention may conceive of other embodiments in the light of the description within the ambit of the appended claims.

BREIF DESCRIPTION OF THE DRAWINGS

FIG. 1 is an explanatory schematic diagram of a capacitor charging and discharging circuit utilized in the present invention;

FIG. 2 is a block diagram of an exemplary engine system according to the invention;

FIG. 3 is a perspective view of a typical engine system according to the invention, coupled to an automotive transmission;

FIG. 4 is an axial sectional view taken at line 4—4 in FIG. 3;

FIG. 5 is a sectional view taken at line 5—5 in FIG. 4;

FIGS. 6 and 7 are fragmentary sectional views, corresponding to a portion of FIG. 5, illustrating successive advanced positions of the engine rotor therein;

FIG. 8 is an exploded perspective view of the rotor and stator of the engine of FIGS. 3 and 4;

FIG. 9 is a cross-sectional view taken at line 9—9 of FIG. 4;

FIG. 10 is a partial sectional view, similar to the view of FIG. 9, illustrating a different configuration of electromagnets in another engine embodiment of the invention;

FIG. 11 is a sectional view taken at line 11—11 in FIG. 3, illustrating the control head or novel speed change controlling system of the engine;

FIG. 12 is a sectional view, taken at line 12—12 in FIG. 11, showing a clutch plate utilized in the speed change control system of FIG. 11;

FIG. 13 is a fragmentary view, taken at line 13—13 in FIG. 12;

FIG. 14 is a sectional view, taken at line 14—14 in FIG. 11, showing a clutch plate which cooperates with the clutch plate of FIG. 12;

FIG. 15 is a fragmentary sectional view taken at line 15—15 of FIG. 13;

FIG. 16 is a perspective view of electromagnets utilized in the present invention;

FIG. 17 is a schematic diagram showing cooperating mechanical and electrical features of the programmer portion of the invention;

FIG. 18 is an electrical schematic diagram of an engine according to the invention, showing the electrical relationships of the electromagnetic components embodying a new principle of the invention; and

FIG. 19 is a developed view, taken at line 19—19 of FIG. 11, showing the locations of displaced spark gap elements of the speed changing mechanism of an engine according to the invention.

DESCRIPTION OF THE PREFERRED EMBODIMENT

As hereinbefore mentioned, the basic principle of operation of the engine of the invention is the discharge of a capacitor, across a spark gap through an inductor. When a pair of inductors is used, and the respective magnetic cores thereof are arranged opposite and another in magnetic polarity repulsion relation, the discharge through them causes the cores to repel each other with considerable force.

Referring to the electrical schematic diagram of FIG. 1, a battery 10 energizes a pulse-producing vibrator mechanism 16, which may be of the magnetic type incorporating an armature 15 moving between contacts 13 and 14, or of the transistor type (not shown) with which a high frequency bipolar pulsed output is produced in primary 17 of transformer 20. The pulse amplitude is stepped-up in secondary 19 of transformer 20. Wave form 19*a* represents the bidirectional or bipolar pulsed output. A diode rectifier 21 produces a unidirectional pulse train, as indicated at 21*a*, to charge capacitor 26. A delay coil 23 is connected in series with the unipolar pulsed output to capacitor 26. Successive unidirectional pulses of wave 21*a* charge capacitor 26 to a high level, as indicated at 26*a*, until the voltage amplitude at point A reaches the breakdown potential of spark gap 30. At the breakdown of spark gap 30, capacitor 26 discharges across the arc created through the inductor coil 28. A current pulse is produced which magnetizes core 28*a*. Simultaneously, another substantially identical charging system 32 produces a discharge through inductor 27 across spark gap 29 to magnetize core 27*a*. Cores 28*a*, 27*a* are wound with coils 28, 27 so that their magnetic polarities are the same. As the cores 27*a*, 28*a* confront one another, they tend to fly apart when the discharge occurs through coils 27 and 28 because of repulsion of identical magnetic poles, as indicated by arrow 31. If core 28*a* is fixed or stationary and core 27*a* is movable, then core 27*a* may have tools 33 attached to it to perform work when the capacitor discharges.

Referring to FIGS. 1 and 2, a d-c electrical source or battery 10 energizes pulsators 36 (including at least two vibrators 16 as previously described) when switch 11 between the battery 10 and pulsator 36 is closed, to apply relatively high frequency pulses to the primaries of transformers 20. The secondaries of transformers 20 are step-up windings which apply bipolar pulses, such as pulses 19*a* (FIG. 1) to the diodes in converter 38. The rectified unidirectional pulsating output of each of the diodes in converter 38 is passed through delay coils 23, 24, thus forming a harness 37 wound about the case of the engine, as hereinafter described, which is believed to provide a static floating flux field. The outputs from delay lines 37 drive respective capacitors in banks 39 to charge the capacitors therein to a relatively high charge potential. A programmer and rotor and stator magnet control array 40, 41, 42 is formed by spark gaps positioned, as hereinafter described, so that at predetermined positions of the rotor during rotation of the engine, as hereinafter described, selected capacitors of capacitor banks 39 will discharge across the spark gaps through the rotor and stator electromagnets 43, 44. The converters 38, magnetic harness 37, capacitor banks 39, programmer 40, and controls 41, 42 from a series circuit path across the secondaries of transformers 20 to the ground, or point of reference potential, 45. The capacitor banks 39 are discharged across the spark gaps of programmer 40 (the rotor and stator magnet controls 41, 42). The discharge occurs through the coils of stator and rotor electromagnets 43, 44 to ground 45. Stator and rotor electromagnets are similar to those shown at 27, 27*a*, 28, 28*a* in FIG. 1.

The discharge through the coils of stator and rotor electromagnets 43, 44 is accompanied by a discharge overshoot or return pulse, the output of which is applied in an appropriate polarity to a secondary battery 10*a* to store this excess energy. The overshoot pulse returns to battery 10*a* because after discharge the only

path open is that to battery **10***a*, since the gaps in **40,** 41 and **42** have broken down, because the capacitors in banks **39** are discharged and have not yet recovered the high voltage charge from the high frequency pulsers **36** and converter rectifier units **38.**

In the event of a misfire in the programmer control circuits **40, 41, 42,** the capacitors are discharged through a rotor safety discharge circuit **46** and returned to batteries **10–10***a*, adding to their capacity. The circuit **46** is connected between the capacitor banks **39** and batteries **10, 10***a*.

Referring to FIG. **3,** a motor or engine **49** according to the present invention is shown connected with an automotive transmission **48.** The transmission **48** represents one of many forms of loads to which the engine may be applied. A motor housing **50** encases the operating mechanism hereinafter described. The programmer **40** is axially mounted at one end of this housing. Through apertures **51, 52** a belt **53** couples to a pulley **57** (not shown in this view) and to an alternator **54** attached to housing **50.** A pulley **55** on the alternator has two grooves, one for belt **53** to the drive pulley **58** on the shaft (not shown) of the engine **49,** and the other for a belt **58** coupled to a pulley **59** on a pump **60** attached to housing **50.** A terminal box **61** on the housing interconnects means between the battery assembly **62** and motor **49** via cables **63** and **64.**

An intake **65** for air is coupled to pump **60** via piping **68, 69** and from pump **60** via tubing or piping **66, 70** to the interior of housing **50** via coupling flanges **67** and **71.** The air flow tends to cool the engine, and the air may preferably be maintained at a constant temperature and humidity so that a constant spark gap discharge condition is maintained. A clutch mechanism **80** is provided on programmer **40.**

Referring to FIGS. **4, 5** and **9,** rotor **81** has spider assemblies **83, 84** with three electromagnet coil assembly sets mounted thereon, two of which are shown in FIG. **4,** on **85** at **85***a* and **85***b*, and on **86** at **86***a* and **86***b*. One of the third electromagnet coil assemblies, designated **87***a*, is shown in FIG. **5,** viewed from the shaft end. As more clearly shown in the perspective view of FIG. **8,** a third spider assembly **88** provides added rigidity and a central support for the rotor mechanism on shaft **81.**

The electromagnet sets **85***a* and **85***b*, 86*a* and **86***b*, **87***a* and **87***b*, disposed on rotor **81** and spiders **83, 84,** and **88** each comprise pairs of front units **85***a*, 86*a*, 87*a* and pairs of rear units **85***b*, 86*b*, 87*b*. Each pair consists of a major electromagnet and a minor electromagnet, as hereinafter described, which are embedded in an insulating material **90,** which insulates the electromagnet coil assemblies from one another and secures the electromagnets rigidly in place on the spider/rotor cage **81,** 83, 84, 88.

The interior wall **98** of housing **50** is coated with an electrically insulating material **99** in which are embedded electromagnet coils, as hereinafter described, and the interiors of end plates **100, 101** of the housing **50.** On the insulating surface **98** of housing **50** is mounted a series of stator electromagnet pairs **104***a*, identical with electromagnet pairs **85***a*, 86*a*, 87*a*, etc. Electromagnet pairs such as **104***a* or **105***a* are disposed every 40° about the interior of housing **50** to form a stator which cooperates with the rotor **81–88.** An air gap **110** of very close tolerance is defined between the rotor and stator electromagnets, and air from pump **65** flows through this gap.

As shown in FIG. **8,** the electromagnet assemblies, such as **85** through **87,** of the rotor and magnet assemblies, such as **104***a* in the stator are so embedded in their respective insulative plastic carriers (rotor and stator) that they are smoothly rounded in a concave contour for the stator, and in a convex contour on the rotor to permit smooth and continuous rotation of rotor **81** in stator housing **50.** The air gap **110** is uniform at all positions of any rotor element within the stator assembly, as is clearly shown in FIG. **16.**

The rotor **81** and spiders **83, 84, 88** are rigidly mounted on a shaft **111** journaled in bearing assemblies **112, 113** which are of conventional type, for easy rotation of the rotor on shaft **111** within housing **50.**

Around the central outer surface of housing **50** are wound a number of turns of wire **23, 24** to provide a static flux coil **114** as hereinbefore described, which is a delay line, as previously described.

FIGS. **5, 6, 7** and **9** are cross-sectional views of the rotor assembly **81–88,** arranged to show the positioning and alignment of the rotor and stator electromagnet coil assemblies at successive stages of the rotation of rotor **81–88** through a portion of a cycle of operation thereof. For example, in FIG. **5** the rotor assembly **81–88** is shown so positioned that a minor rotor electromagnet assembly **91** is aligned with a minor stator electromagnet assembly **117.**

As shown in further detail in FIG. **16,** minor electromagnet assembly **117** consists of an iron core **118,** grooved so that there may be wound thereabout a coil of wire **119.** Core **118** is the same in stator electromagnet **117** as it is in rotor electromagnet **91.**

As a position 13⅓° to the right of rotor electromagnet **91,** as viewed in FIGS. **5** and **16,** there is a second or major rotor electromagnet **121** which has a winding **123** about its core **122.** The electromagnets **91, 121** are the pair **85***a* of FIGS. **4** and **8.**

At a position 13⅓° to the left of stator electromagnet **117,** as viewed in FIG. **5,** there is a second or major stator electromagnet **120** whose core **122** is of the same configuration as core **122** of rotor electromagnet **121.** A winding **123** about core **122** of electromagnet **120** is of the same character as winding **123** on electromagnet **121.**

Electromagnet assembly pair **85***a* on the rotor is identical in configuration with that of the electromagnet stator assembly pair **104***a* except for the position reversal of the elements **117–120** and **91–121** of the respective pairs.

There are nine pairs of electromagnets **120–117** (**104***a*) disposed at 40° intervals about the interior of housing **50.** The center line of core **122** of electromagnet **120** is positioned 13⅓° to the left of the center line of the core **118** of electromagnet **117.** Three pairs of electromagnets **85***a*, 86*a*, 87*a* are provided on rotor assembly **81–88** as shown in FIG. **5.**

Other combinations are possible, but the number of electromagnets in the rotor should always be an integral fraction of the number of electromagnets in the stator. As shown in FIG. **8,** for the rotor assembly **85***a*, 85*b*, there are three of each of the front and back pairs of electromagnetic assemblies. Similarly, as shown in FIGS. **4** and **8,** there are nine front and back pairs of electromagnets in the stator such as **104***a* and **104***b*.

In order to best understand the operation of the rotor **81–88** rotating within the stator housing **50** of an engine according to this invention, the positions of rotor

electromagnets **91** and stator electromagnets **117** are initially exactly in line at the 13⅓° peripheral starting position marked on the vertical center line of FIG. **5.** The winding direction of the coils of these magnets is such that a d-c current through the coils **119** will produce a particular identical magnetic polarity on each of the juxtaposed surfaces **125** of magnet **117,** and **126** of magnet **91,** (FIG. **5**). FIGS. **16** and **6** illustrate the next step in the motion wherein the two major electromagnets, **120** in the stator and **121** in the rotor, are in alignment.

When the d-c discharges from the appropriate capacitors in banks **39** occur simultaneously across spark gaps through the coils **119** of electromagnets **117** and **91,** at the instant of their alignment, their cores **118** will repel one another to cause rotor assembly **81–88** to rotate clockwise in the direction indicated by arrow **127.** The system does not move in the reverse direction because it has been started in the clockwise direction by the alternator motor **54** shown in FIG. **3,** or by some other starter means. If started counterclockwise, the rotor will continue to move counterclockwise.

As hereinbefore noted, the discharge of any capacitor occurs over a very short interval across its associated spark gap, and the resulting magnetic repulsion action imparts motion to the rotor. The discharge event occurs when electromagnets **117** and **91** are in alignment. As shown in FIG. **5,** rotor electromagnet **91***a* is aligned with stator electromagnet **117***c*, and rotor electromagnet **91***b* is aligned with stator electromagnet **117***e* at the same time that similar electromagnets **117** and **91** are aligned. A discharge occurs through all six of these electromagnets simultaneously (that is, **117,** 91; **117***c*, 91*a*, 117*e* and **91***b*). A capacitor and a spark gap are required for each coil of each electromagnet. Where, as in the assembly shown in FIG. **8,** front and back pairs are used, both the axial in-line front and back coils are energized simultaneously by the discharge from a single capacitor or from a bank of paralleled capacitors such as **25, 26** (FIG. **1**). Although FIGS. **4** and **8** indicate the use of front and back electromagnets, it should be evident that only a single electromagnet in any stator position and a corresponding single electromagnet in the rotor position, may be utilized to accomplish the repulsion action of the rotor with respect to the stator. As stated, each electromagnet requires a discharge from a single capacitor or capacitor bank across a spark gap for it to be energized, and the magnetic polarity of the juxtaposed magnetic core faces must be the same, in order to effect the repulsive action to produce the rotary motion.

Referring to FIGS. **5** and **6,** the repulsion action causes the rotor to move 13⅓° clockwise, while electromagnets **91, 91***a* and **91***b* move away from electromagnets **117, 117***c* and **117***e* to bring electromagnets **121, 121***a* and **121***b* into respective alignment with electromagnets **120***a*, 120*d* and **120***f*. At this time, a capacitor discharge across a spark-gap into their coils **123** occurs, thus moving the rotor. Another 13⅓° ahead, as shown in FIG. **7,** major electromagnets **121, 121***a* and **121***b* come into alignment with minor electromagnets **117***a*, 117*d* and **117***f*, at which time a discharge occurs to repeat the repulsion action, this action continuing as long as d-c power is applied to the system to charge the capacitors in the capacitor banks.

FIG. **18** further illustrates the sequencing of the capacitor discharges across appropriate spark gap terminal pairs. Nine single stator coils and three single rotor coils are shown with their respective interconnections with the spark gaps and capacitors with which they are associated for discharge. When the appropriate spark gap terminals are aligned, at the points in the positioning of the rotor assembly for most effective repulsion action of juxtaposed electromagnet cores, the discharge of the appropriate charged capacitors across the associated spark gap occurs through the respective coils. The capacitors are discharged in sets of three through sets of three coils at each discharge position, as the rotor moves through the rotor positions. In FIG. **18,** the rotor electromagnets are positioned linearly, rather than on a circular base, to show the electrical action of an electric engine according to the invention. These motor electromagnets **201, 202,** and **203** are aligned with stator electromagnets **213, 214** and **215** at 0°, 120° and 450° respectively. The stator electromagnets are correspondingly shown in a linear schematic as if rolled out of the stator assembly and laid side by side. For clarity of description, the capacitors associated with the rotor operation **207, 208, 209** and **246, 247,** 248, 249, 282 and **283** are arranged in vertical alignment with the respective positions of the rotor coils **201, 202, 203** as they move from left to right, this corresponding to clockwise rotation of the rotor. The stator coils **213, 214, 215, 260, 261, 262, 263, 264, 265,** 266, etc. and capacitor combinations are arranged side by side, again to facilitate description.

An insulative disc **236** (shown in FIG. **17** as a disc, but opened out linearly in FIG. **18**) has mounted thereon three gap terminal blocks **222, 225** and **228.** Each block is rectangularly U-shaped, and each interconnects two terminals with the base of the U. Block **222** has terminals **222***a* and **222***b*, block **225** has terminals **225***a* and **225***b*, and block **228** has terminals **228***c* and **228***d*. When insulative disc **230** is part of the rotor, as indicated by mechanical linkage **290,** it can be seen that terminal U **222** creates a pair of gaps with gap terminals **223** and **224,** respectively. Thus, when the voltage on capacitor **216** from charging circuit **219** is of a value which will arc over the air spaces between **222***a* and **223,** and between **222***b* and **224,** the capacitor **216** will discharge into the coil of electromagnet **213** to ground. Similarly gap terminal U **225** forms a dual spark gap with gap terminals **226** and **227** to result in arc-over when the voltage on capacitor **217,** charged by charging circuit **220,** discharges into the coil of electromagnet **214.** Also, U-gap terminal **228** with terminals **228***c* and **228***d*, creates a spark gap with terminals **229** and **230** to discharge capacitor **218,** charged by charging circuit **221,** into coil **215.** At the same time, rotor coils, **201, 202** and **203** across gaps **201***a*–**204,** 202*b*–**205** and **203***c*–**206** each receives a discharge from respective capacitors **207, 208,** and **209.**

When the electromagnet coils **213, 214, 215** and **201, 202, 203** are energized, the repulsion action causes the rotor assembly to move to position **2** where a new simultaneous group of discharges occurs into rotor coils **201, 202,** and **203** from capacitors **246, 248,** and **282** across gaps **201***a*–**240, 202***b*–**242** and **203***c*–**244.** Simultaneously, because gap-U-elements **222, 225** and **228** have also moved to position **2** with the rotor assembly, capacitor **261** is discharged through electromagnet coil **260,** capacitor **265** is discharged through electromagnet coil **264,** and capacitor **269** is discharged through electromagnet coil **268** in align-

ment with position **2** of the rotor electromagnet coils, thus to cause the rotor electromagnets to move to position **3** where the discharge pattern is repeated now with capacitors **247, 249** and **283** discharging through the rotor electromagnet coils **201, 202, 203,** and the capacitors **263, 267** and **281** discharging respectively through stator electromagnet coils **262, 266** and **280.**

After each discharge the charging circuits **219–221** and **272–277** for the stator capacitors, and **210–212** and **284–289** for the rotor capacitors, are operated continuously from a battery source, as described earlier with reference to FIG. **1,** to constantly recharge the capacitors to which each is connected. Those versed in the art will appreciate that, as each capacitor discharges across an associated spark gap, the resulting drop in potential across the gap renders the gap an open circuit until such time as the capacitor can recharge to the arc-over level of the gap. This recharge to a discharge potential occurs before a rotor element arrives at the next position in question.

The mechanical schematic diagram of FIG. **17** further clarifies the operation of the spark-gap discharge programming system. A forward disc **236** of an electrically insulative material, has thereon the set of U-shaped gap terminal connectors previously described. These are positioned at 0°, 120° and 240° respectively. In FIG. **17,** schematic representations of the position of the coil and capacitor arrangements at the start of a cycle are shown to correspond to the description hereinabove with reference to FIG. **18.** Accordingly, the coil and capacitor combinations **213**/216, 214/217, and **215**/218 are shown connected with their gap terminals, respectively, **223**/224, 226/227 and **229**/230. On the rotor coil and capacitor connection three separate discs **291, 292** and **293** are shown, each with a single gap terminal. The discs **291–293** are rotated so as to position their respective gap terminals **201***a*, 202*b* and **203***c* at 120° increments, with the 0° position corresponding to the 0° position of U-gap terminal **222** on disc **230.**

Representative gap terminals are shown about the peripheries of discs **230, 291–293** to clearly indicate how, as the discs turn in unison, the gap alignments correspond so that three rotor coil/capacitor positions always line up with three stator coil/capacitors at 120° intervals about the rotary path, producing an alignment every 40°, there being nine stator coils. Thus there are three simultaneous discharges into stator coils and three into rotor coils at each 40° position. Nine positions displaced 40° apart provide a total of 27 discharge points for capacitors into the rotor coils and 27 discharge points for capacitors into the stator coils in one revolution.

It will be understood that, as illustrated in FIGS. **17** and **18,** nine individual electromagnet coils are shown in the stator and three in the rotor, in order to show in its simplest form how the three rotor electromagnets are stepped forward from alignment with three of the stator electromagnets, when the appropriate spark gaps are in alignment, to effect the discharge of capacitors through juxtaposed pairs of rotor/stator electromagnets. The repulsion moves the rotor electromagnet from the stator electromagnet to the next alignment position advanced at an arc of 40° from the preceding alignment position. In the interval until another rotor electromagnet, 120° removed, is aligned with the stator electromagnet that had just been excited, the associated capacitor is recharged to a potential which will cause the spark gap to break down to produce another discharge of this capacitor on the next revolution. Thus the rotor moves from one position to the next, with capacitor discharges occurring each 40° of rotation, a total of nine per revolution. It should be obvious that, with other rotor/stator combinations, the number of electromagnet coincidences and spark-gap discharges will vary. For example, with the coil pairs shown in FIGS. **4** through **8,** a total of 27 discharges will occur. Although there are 18 stator electromagnets and three rotor electromagnets, the discharge pattern is determined by the specific spark gap arrangement.

The rotor/stator configuration of FIGS. **5** and **8,** involving the major and minor pairs of electromagnets such as **85***a* and **104***a* (the terms "minor" and "major" referring to the difference in size of the elements), include nine pairs of electromagnets in the stator, such as **104***a*, with three electromagnet pairs of the rotor, such as **85***a*. Because of the 13⅓° separation between the major and minor electromagnets in the rotor pair **85***a*, with the same separation of minor and major electromagnets of the stator pair **104***a*, the sequence of rotation and discharge described above, with respect to the illustrative example of FIG. **5,** involves the following:

1. A minor element **117** of stator pair **104***a* is aligned with the minor element **91** of rotor pair **85***a*. On the discharge, this moves the rotor ahead 13⅓°.

2. The major rotor element **122** of the pair **85***a* now is aligned with the major stator element **120***b* of the next stator electromagnet pair, in the stator array as shown in FIG. **6.** On the discharge, the rotor moves ahead 13⅓°.

3. This brings the minor rotor electromagnet **91** into alignment with the major stator electromagnet **120***b* of pair **104***d*, and the major electromagnet **122** (just discharged) of pair **85***a* into alignment with minor electromagnet **117***b* of pair **104***d*, and the rotor spark gap ements into alignment with a different position of gap elements connected with capacitors not discharged in the previous position of the rotor. It should be remembered at this point that it is the positioning of a rotatable spark gap array, similar to that illustrated in FIGS. **17** and **18,** which controls the time of discharge of capacitors connected to these gap terminals. Therefore, any electromagnet can be energized twice successively from separate capacitors as the rotor brings appropriate gap terminals into alignment with the coil terminals of a particular electromagnet.

Thus, although major electromagnet **120***b* of pair **104***d* has just been energized as described above, it can now be energized again along with minor rotor electromagnet **91** in step **3,** because the rotor moved to a new set of terminals of the spark gap arrays connected with capacitors not yet discharged. These capacitors now discharge through rotor electromagnet **91** and stator electromagnet **120***b*, causing rotor to move ahead another 13⅓°, thus again aligning two minor electromagnets again, these being **117***b* of stator pair **104***d* and **91** of rotor pair **85***a*. The rotor has now moved 40° since step **1** above. The sequence is repeated, and it is to be noted that at each 13⅓° step, the discharges rotate the rotor another 13⅓°. There are 27 steps per revolution with nine stator coil pairs. The discharge sequence is not uniform, as is shown in Table I. In the stator, three major electromagnets 120° apart are energized twice in sequence followed by a hiatus of one step while three

minor electromagnets of the stator, 120° apart, are energized during the hiatus. In the rotor the major electromagnets are energized during a hiatus step following two minor electromagnet energization steps. A total of 27 energizations are thus accomplished in the nine pairs of coils of the stator.

In Table I, the leftmost column depicts the location of each rotor arm **85, 86, 87** at an arbitrarily selected step No. **1** position. For example, in step **1** rotor arm **85** has a minor stator and minor rotor electromagnet in alignment for capacitors to discharge through them simultaneously at the 13⅓° position.

TABLE I

CAPACITOR DISCHARGE SEQUENCE FOR ONE REVOLUTION OF ROTOR IN SYSTEM OF FIGS. 5 AND 8

Step No. Rotor Arm 87	85	86	Rotor Angle	Rotor Electromagnet Minor	Major	Stator Electromagnet Minor	Major
10	1	19	13 1/3°	x		x	
11	2	20	26 2/3°		x		x
12	3	21	40°	x			x
13	4	22	53 1/3°	x		x	
14	5	23	66 2/3°		x		x
15	6	24	80°	x			x
16	7	25	93 1/3°	x		x	
17	8	26	106 2/3°		x		x
18	9	27	120°	x			x
19	10	1	133 1/3°	x		x	
20	11	2	146 2/3°		x		x
21	12	3	160°	x			x
22	13	4	173 1/3°	x		x	
23	14	5	186 2/3°		x		x
24	15	6	200°	x			x
25	16	7	213 1/3°	x		x	
26	17	8	226 2/3°		x		x
27	18	9	240°	x			x
1	19	10	253 1/3°	x		x	
2	20	11	266 2/3°		x		x
3	21	12	280°	x			x
4	22	13	293 1/3°	x		x	
5	23	14	306 2/3°		x		x
6	24	15	320°	x			x
7	25	16	333 1/3°	x		x	
8	26	17	346 2/3°		x		x
9	27	18	360°	x			x

Similarly, in step **1** rotor arm **86** is at the 133⅓° position with a minor rotor and minor stator electromagnet in alignment for discharge. Simultaneously, rotor arm **87** is at the 253⅓° position with a minor rotor and minor stator in alignment for capacitor discharge therethrough. The other steps of the sequence are apparent from Table I, for each position of the three rotor arms at any step and the juxtapositions of respective stator and rotor electromagnet elements at that position.

In the simplified motor arrangement shown in schematic form in FIG. **18**, with single electromagnet configuration the alignment is uniform and the discharge sequences follow sequentially.

As hereinbefore mentioned, a change in speed is effected by displacing the stator spark gap terminals on the rotor (shown at **236** in FIGS. **17** and **18**) either counter-clockwise or clockwise 6⅔° so that the discharge position of the stator electromagnets is displaced 6⅔° either clockwise or counter-clockwise of a rotor electromagnet at the time of discharge. Referring to FIGS. **11** to **15**, the simultaneous discharge of selected capacitors into the electromagnets so displaced results in a deceleration at the time the rotor electromagnet is just approaching the associated stator, or an acceleration if the rotor electromagnet is just leaving its associated stator electromagnet. In each event, there is a repulsive reaction between the stator and rotor electromagnets, so that if the rotor is approaching the stator, there is a slow-down and if the rotor is receding from the stator there is a speed-up.

Referring to FIG. **11**, clutch mechanism **304** about shaft **111** is operated electromagnetically in conventional manner to displace the spark-gap mechanism **236** which is operated normally in appropriate matching alignment with the rotor spark-gap discs **291, 292,** 293. Clutch **304** has a fixed drive element **311** containing an electromagnetic drive coil (not shown) and a motor element **310** which, when the electromagnetic drive coil is energized, can be operated by a direct current. The operation of motor element **310** brings into operation spark gap elements **224***r*, 223*r* or **223***f*, 224*f* of the system shown in FIGS. **4, 5** and **8**, as illustrated in FIG. **19.**

The fixed stator coil spark gap terminal pairs **223,** 224 and **266, 267** are arrayed about a cylindrical frame **322** which is fabricated in insulative material. In the illustrative example of FIGS. **17** and **18**, there are nine such spark gap terminal pairs about the periphery of cylinder frame **324.** In the engine of FIGS. **4** to **8**, a total of 27 such spark gap pairs are involved. In addition, although not shown in the drawing, there are also pairs of terminals, such as **223***r* or *f*, 224*r* or *f* and **266***r* or *f*, **267***r* or *f*, displaced 6⅔° on either side of the pairs **223, 224** or **266, 267** and all other pairs in the spark gap array, the letters *r* and *f* denoting "retard" and "faster." The latter displaced pairs of used in the control of speed of the engine rotor. The displaced pairs not shown are involved with the operation of cluth **304,** the speed changing control element.

Clutch **304** is associated with shaft **111** in that the movable element **310** draws clutch disc element **316** on shaft **111** away from clutch disc element **322** when energized by a voltage of appropriate polarity applied to its motor electromagnet **311.** Such clutch drives are well known in the art.

The clutch mechanism **304** of FIGS. **11** and **19,** when not energized is in the configuration shown in FIG. **11.** The energized configuration of clutch **304** is not specifically illustrated. Upon energization, spark-gap element **222** on disc **236** is displaced rightward, as viewed in FIG. **11,** by broken lines **236X,** into alignment with the positions of fixed spark-gap terminals **223***f*, 224*f* and **267***r*, 266*r*. When the disc is in position **236X**, the flattened edge **332** of pin **330** in disc **325** rides on surface **350** of disc **322.** Normally, the flattened edges **351** of pins **330** are engaged against the flat edge **352** in recess **331** of disc **322.** The displacement of disc **322** on shaft **111** is effected by the action of clutch **304** against spring **314** (FIG. **11**). An electric switch (not shown) of clutch mechanism **304** energizes it from a d-c power source, and has two positions, one for deceleration and one for acceleration. In either position, clutch **304** is engaged to pull clutch disc **322** from clutch disc **325,** momentarily. For the decelerate or the accelerate position, the displaced alignment of spark gap elements **222** is with the **224***f*, 223*f* and the **224***r*, 223*r* spark-gap terminal elements. However, only the **224***f*, 223*f* spark-gap elements are switched into operation with appropriate capacitors for the accelerate position, while in the decelerate position only the **223***r* and **224***r* spark-gap elements are switched into the circuit with their associated capacitors.

Of course, when insulative disc **236** is displaced by clutch **304,** its gap terminals **222, 225** and **228** (FIGS.

14 and 18) are all displaced into the alignment position of 236X so as to engage the *r* and *f* lines of fixed spark gap elements. Although the accelerate and decelerate positions of disc **236** are the same, it is the switching into operation of the **223, 224** or **266, 267** exemplary *r* or *f* pairs of terminals which determine whether speed up or slow down action of the rotor will occur.

The momentary displacement of clutch disc **322** from clutch disc **325** results in rotation of disc **325** about disc **322** through an angle of 120°. The detent ball and spring mechanism **320, 321** in disc **325** positions itself between one detent dimple **328** and a succeeding one **328** at a position 120° away on disc **325.** As stated, flat **332** of pin **330** rides on surface **350** of disc **322,** and pin **330** leaves the pin-holding groove **331**/352 along ramp **333** in disc **322** during the momentary lifting of disc **322** by clutch **304.** Pin **330** falls back into the next groove **331** at a point 120° further on about disc **322.** Pin **330** falls into place in groove **331** on ramp **334.** Pins **330** are rotatable in their sockets **353,** so that for either clockwise or counterclockwise rotation, the flat **351** will engage the flat **352** by the particular ramp it encounters.

The deceleration or acceleration due to the action of clutch **304** thus occurs within a 120° interval of rotation of disc **325.** Disc **322** during this interval may only move a fraction of this arc.

There has been described hereinabove an electromotive engine system wherein at least one electromagnet is in a fixed position and a second electromagnet of similar configuration is juxtaposed with it in a magnetic polarity relationship such that, when the cores of the electromagnets are energized, the juxtaposed core faces repel one another. One core being fixed and the second core being free to move, any attachments to the second electromagnet core will move with it. Hence, if a plurality of fixed cores are positioned about a circular confining housing, and, within the housing, cores on a shaft are free to move, the shaft is rotationally urged each time the juxtaposed fixed and rotatable cores are in alignment and energized. Both the fixed and the movable cores are connected to spark gap terminal elements, and the associated other terminal elements of the spark gaps are connected to capacitors which are changed to a high voltage from pulsed unipolar signal generators. These capacitors are discharged through the electromagnets across the spark gaps. By switching selected groups of capacitors into selected pairs of spark gap elements displaced from the normal uniformly positioned elements for discharge through the electromagnets, the rotor of the circular array systems is accelerated and decelerated.

By confining a fixed electromagnet array in a linear configuration with a linearly movable electromagnet to which a working tool is attached, exciting the juxtaposed pairs of electromagnets by capacitor discharge results in the generation of linear force for such tools as punch presses or for discharging projectiles with considerable energy.

The inventor claims:

1. An electric engine comprings:

a housing;

an array of electromagnets uniformly spaced in said housing to form a stator;

a rotor cage on a shaft journaled in and rotatable within said housing and within said stator, said rotor cage having thereon a spaced array of electromagnets similar to said stator electromagnets and in number comprising an integral fraction of the number of electromagnets in said stator array;

each of the electromagnets of said stator and of said rotor having a magnetizable core of particular configuration and each being wound with a coil such that a pulse of unidirectional electric current through said coil magnetizes the respective core thereof to a particular magnetic polarity, and the faces of rotor cores juxtaposing selected stator cores are magnetized to the same polarity, the juxtaposed cores thereby tending to repel one another, one lead of each of the stator and rotor coils being connected to a common terminal, the other lead of each of said coils being connected to a gap terminal, the gap terminals of said rotor coils being on the rotor and equal in number to the number of coils thereon and matching the positions of said rotor electromagnets thereon, the gap terminals of said stator being equal in number to the number of coils on the stator and disposed uniformly about said stator to match the positions of said stator electromagnets within said housing;

a first array of capacitors each having a terminal in common with the common coil terminal of said stator electromagnets, and each capacitor having its other terminal connected to a gap terminal arrayed adjacent the gap terminal of an electromagnet associated therewith;

a second array of capacitors, each having a terminal in common with said common terminal of said rotor electromagnet coils but equal in number to the number of capacitors in said stator array, the other terminals of said capacitors in said second array being connected to gap terminals arrayed about said housing so as to be in axial alignment with said stator gap terminal positions and being alignable with said rotor gap terminals as said rotor is rotated in said housing and respective gap terminals of said rotor coils pass each second array capacitor gap terminals at a predetermined gap distance;

gap coupling terminals on said rotor equal in number to the number of rotor electromagnet coils and positioned to match the rotor electromagnet positions on said rotor, the gap coupling terminals being rotatable with said rotor so as to pass said adjacent stator coil and associated stator capacitor gap terminal at a predetermined distance therefrom;

a plurality of capacitor charging circuits connected respectively across each of said capacitors in both said first and said second arrays of capacitors for charging each of said capacitors to a predetermined high d-c potential;

a first source of unidirectional electric potential connected to each of said capacitor charging circuits for energizing said charging circuits; and

a second unidirectional electric potential source connected to said electromagnets of said rotor and said stator of such polarity as to receive a charge from the inverse inductive discharge of the electromagnet coils as their fields collapse following the discharge of each capacitor through a rotor or stator electromagnet coil,

whereby whenever a rotor electromagnet is aligned opposite a stator electromagnet, the rotor coil gap terminal of that electromagnet is opposite an asso-

ciated second capacitor array gap terminal, and a gap coupling terminal of said rotor is aligned opposite the stator electromagnet coil gap terminal and associated first capacitor gap terminal, the capacitors discharge the charge thereon across the gaps through their associated electromagnet coils to magnetize their respective juxtaposed electromagnet cores to cause them to repel one another, thus aligning a succeeding pair of rotor and stator electromagnets for capacitor discharge across their respective gaps, to cause them to repel one another, alignments rotor rotation within the housing continuously bringing successive rotor-stator electromagnets into alignment for discharge of the capacitors therethrough to produce rotary motion of the rotor on said rotor shaft continuously so long as energy from said first source of unidirectional electric potential is applied to said charging circuits to recharge said capacitors after each discharge.

2. In an electric engine having a rotor comprising electromagnetic coil means rotatable within a stator comprising similar electromagnetic coil means, said electromagnetic coil means being polarized for magnetic repulsion;

capacitor means electrically coupled across successive spark gaps to selected ones of said coils of said stator and all of the coils of said rotor;

charging means connected to said capacitor means for charging said capacitor means to an electrical charge potential sufficient to cause arcing across said spark gaps to result in the discharge of said capacitor means through the electromagnetic coils so that the electromagnetic coil means repel one another; and

a unidirectional electric power source connected to said charging means to energize said charging means to continue charging said capacitor means following each discharge whereby the rotor of said engine is maintained in rotation by the successive discharges of said capacitor means across successive spark gaps into said electromagnetic coil means.

3. An electric engine according to claim **2,** wherein:

the charging means includes electronic square core oscillators connected to said unidirectional electric power source and includes step-up means and a rectifier to produce a substantial voltage step up from the voltage of said power source.

4. An electric engine according to claim **2,** wherein:

the charging means includes a vibrator connected to said power source, and step up transformer and rectifier means to provide a high voltage for charging said capacitor means.

5. A motive force producing means comprising:

at least a first electromagnet means including at least one coil wound about a core,

at least a second electromagnet means including at least one coil wound about a core similar to said first core,

the respective cores being positioned adjacent to one another so that the magnetic polarities of the adjacent core surfaces are the same when a unidirectional electric current is passed through the coils,

at least one capacitor means having one terminal thereof connected to one terminal of both of said electromagnet coils,

the other terminal of said capacitor means being connected to one terminal of a spark gap means, the other terminals of the coils of both said first and said second electromagnet means being connected to the other terminal of said spark gap means,

at least one unidirectional pulse charging means connected to said capacitor means to charge said capacitor means to a relatively high potential sufficient to arc across said spark gap means at predetermined spacing of said gap terminals, and

a source of unidirectional potential connected to said charging circuit to energize said charging means,

whereby upon application of current from said potential source to said charging means the successive pulses generated thereby charge said capacitor means to a voltage level sufficient to arc across said spark gap means to produce a discharge path for said capacitor means through said coils to cause said electromagnet means to repel one another with a substantial force.

6. A motive force producing means according to claim **5,** wherein:

said first electromagnet means is secured in a relatively stable housing, and said second electromagnet means is connected with and freely movable relative to said stable housing, and has utilization means connected thereto for performing work therewith when said capacitor means discharges through said coils of said electromagnet means.

7. A motive force producing means according to claim **6,** wherein said utilization means is a motor rotor coupled with said second electromagnet means and said first electromagnet means is a stator.

8. A motive force producing means according to claim **6,** wherein said utilization means is a piston attached to said second electromagnet means and is movable therewith to produce hammer-like blows when said capacitor means discharges through said electromagnet means.

9. In an electromotive force generating system as disclosed, means for accelerating or decelerating the motion of a force generating system, said means comprising:

at least two juxtaposed electromagnetic core elements, one fixed and one movable, including coils wound thereabout to provide a repulsion tendency when said cores are energized,

spark gap termimals connected with said coils,

capacitor means connected with said spark gap terminals to discharge across said spark gap terminals through said coils when a charge of sufficient voltage level appears across said capacitor means, thus to energize said juxtaposed electromagnets to induce said juxtaposed electromagnet cores to repel one another,

charging means connected to said capacitors for charging them to said sufficient voltage level, and

selective positioning means coupled with said spark gap terminals and with at least said movable electromagnet core to cause selective displacement of said movable core with respect to said fixed core to accelerate or decelerate the motion of the movable core relative to the fixed core.

10. An electromotive force generating system according to claim **9,** wherein:

said juxtaposed electromagnetic cores include a plurality of fixed cores and a smaller number of mov-

able cores, said smaller number being an integral fraction of the number of fixed cores, and

said selective positioning means is an electromagnetic clutch coupled with said smaller number of movable cores for movement therewith, and includes selective displacement means coupled with said spark gap terminals connected with selected capacitors in said capacitor means and selected combinations of coils in said plurality of fixed electromagnets.

11. The method of generating motive power comprising the steps of:

a. positioning similar electromagnets in juxtaposed relationship with their respective cores arranged for repulsion when said electromagnets are energized,

b. charging capacitors to a relatively high potential, and

c. discharging said capacitors simultaneously through said electromagnets across spark gaps set to break down at said relatively high potential,

thereby to cause said similar electromagnets to repel one another with considerable force.

12. The method of generating motive power defined in claim **11**, wherein in said positioning step at least one of said electromagnets is maintained in a fixed position and another electromagnet is free to move relative to said fixed electromagnet.

13. The method of generating motive power according to claim **11**, wherein:

the charging step includes the charging of capacitors to a relatively high potential from a pulsed unipolar source of electric energy.

14. In an electromagnetic capacitor discharge engine including movable electromagnets and fixed electromagnets, said movable electromagnets being movable into polar alignment with said fixed electromagnets, capacitor means, means for charging said capacitor means, and means for discharging said charged capacitor means through said fixed and movable electromagnets to polarize aligned fixed and polarized electromagnets for magnetic repulsion, an acceleration and deceleration control means comprising:

first selective means for momentarily delaying the discharge of the capacitors until the movable electromagnets in said engine have begun to recede from the fixed electromagnets, in order to accelerate the motion of said movable electromagnets by the added impetus of the repulsion, and

second selective means for momentarily accelerating the discharge of the capacitors to occur at a point in the motion of the movable electromagnets where said movable electromagnets are approaching said fixed electromagnets to decelerate the motion of said movable electromagnet by the tendency to repel the approaching electromagnet by the fixed electromagnet.

15. An electric engine, comprising:

fixed electromagnets;

movable electromagnets movable into alignment with said fixed electromagnets;

capacitor means;

means for charging said capacitor means; and

means for discharging said charged capacitor means through said fixed and movable electromagnets to polarize said aligned fixed and movable electromagnets for magnetic repulsion.

16. An electric engine as recited in claim **15**, wherein: said means for discharging said charged capacitor means comprises voltage breakdown switch means.

17. An electric engine as recited in claim **16**, wherein:

said voltage breakdown switch means includes at least one terminal movable with at least one of said movable electromagnets for breaking down when said at least one of said movable electromagnets is in alignment with a said fixed electromagnet.

18. An electric engine as recited in claim **17**, wherein:

said voltage breakdown switch means comprises a spark gap means.

* * * * *

FIG. 1.

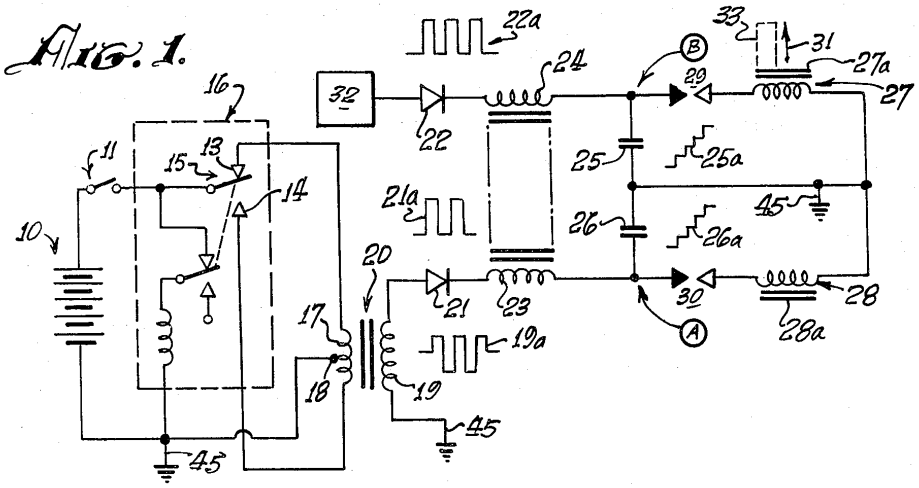
10
11
13
14
15
16
17
18
19
19a
20
21
21a
22
22a
23
24
25
25a
26
26a
27
27a
28
28a
29
30
31
32
33
45
A
B

FIG. 2.

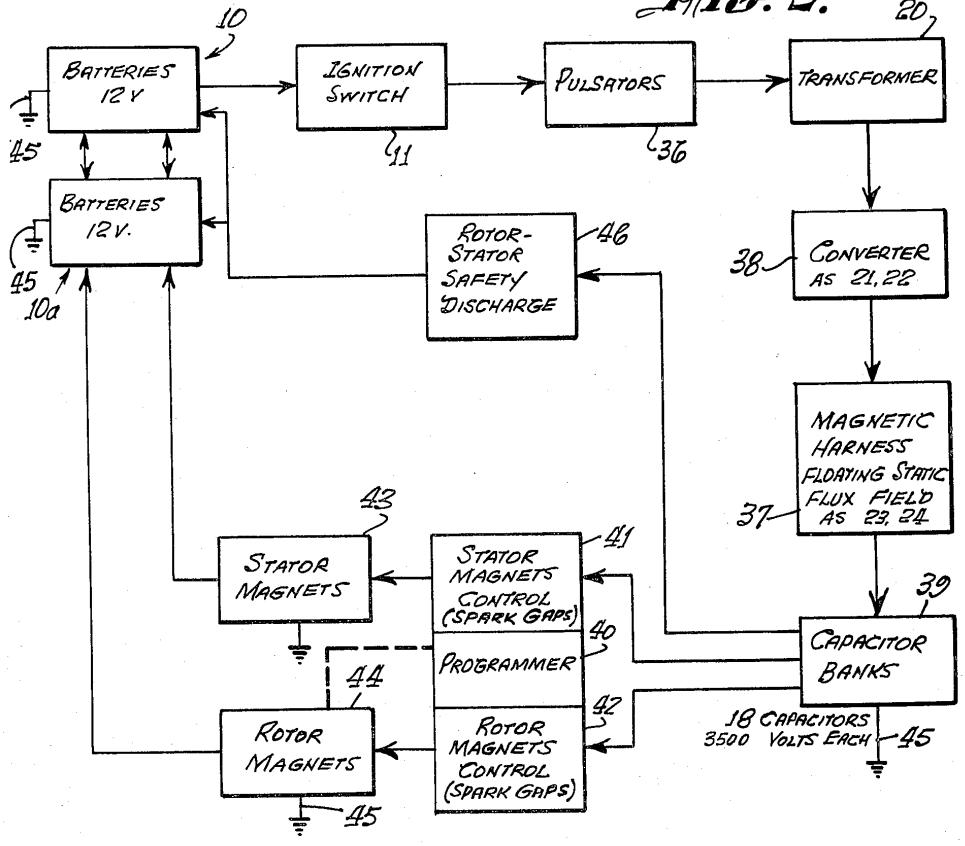
BATTERIES 12 V
10
IGNITION SWITCH
11
PULSATORS
36
TRANSFORMER
20
BATTERIES 12 V.
10a
45
ROTOR-STATOR SAFETY DISCHARGE
46
CONVERTER AS 21, 22
38
MAGNETIC HARNESS FLOATING STATIC FLUX FIELD AS 23, 24
37
STATOR MAGNETS
43
STATOR MAGNETS CONTROL (SPARK GAPS)
41
PROGRAMMER
40
CAPACITOR BANKS
39
ROTOR MAGNETS
44
ROTOR MAGNETS CONTROL (SPARK GAPS)
42
18 CAPACITORS 3500 VOLTS EACH

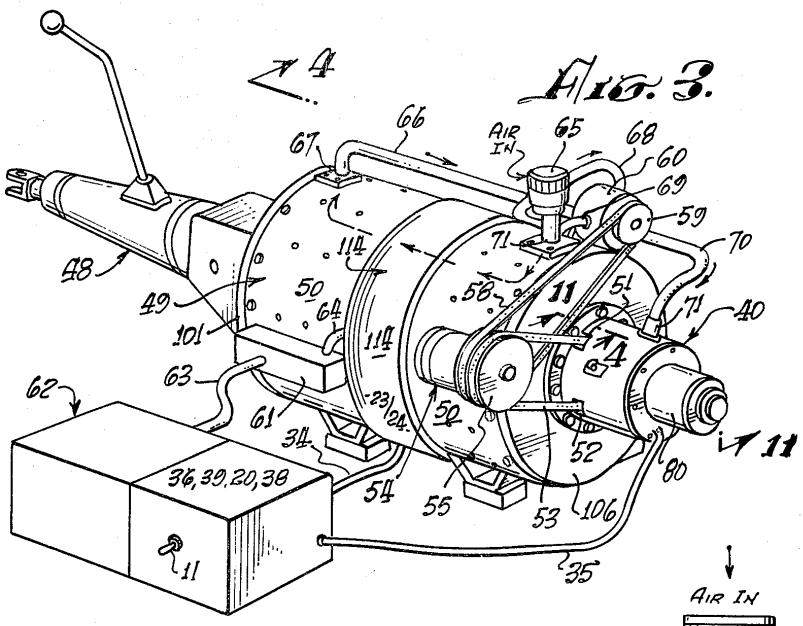
4
66
67
AIR IN
65
68
60
69
59
70
71
114
48
49
50
64
58
11
51
71
40
101
114
4
63
62
61
23/24
50
52
11
34
36,39,20,38
54
55
53
106
80
11
35

FIG. 3.

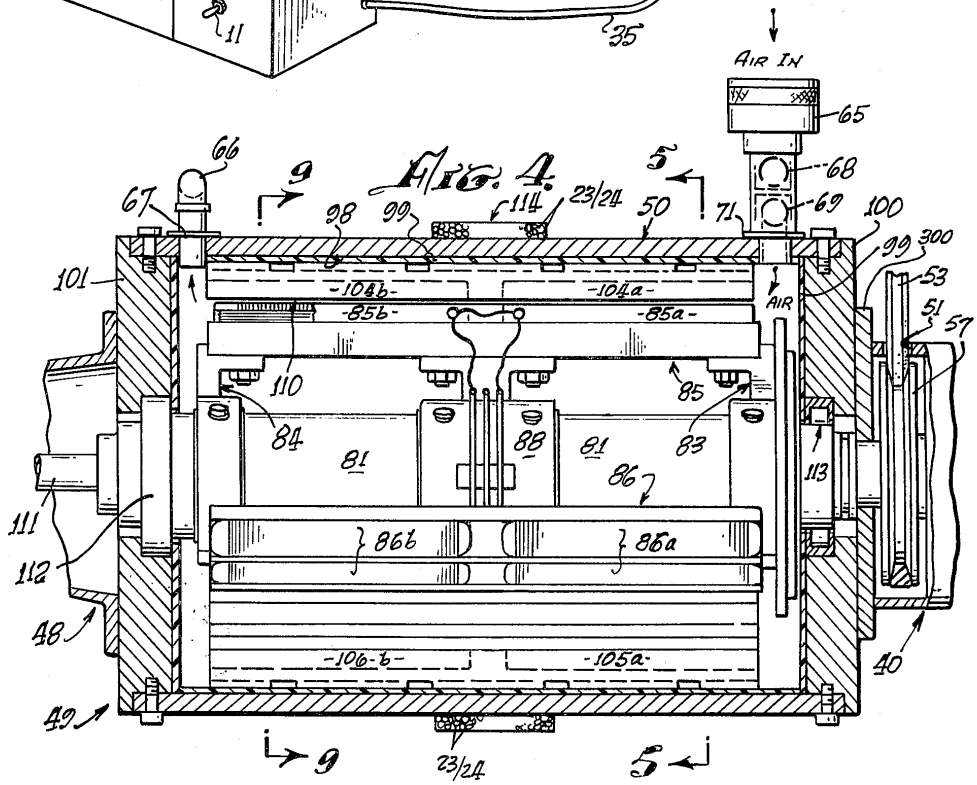
AIR IN
65
66
9
5
68
67
98
99
114
23/24
50
71
69
100
99
300
101
-104b-
-104a-
AIR
53
-85b-
-85a-
51
57
110
85
84
88
81
83
81
86
113
111
86b
86a
112
48
-106-b-
-105a-
40
49
9
23/24
5

FIG. 4.

Fig. 5.

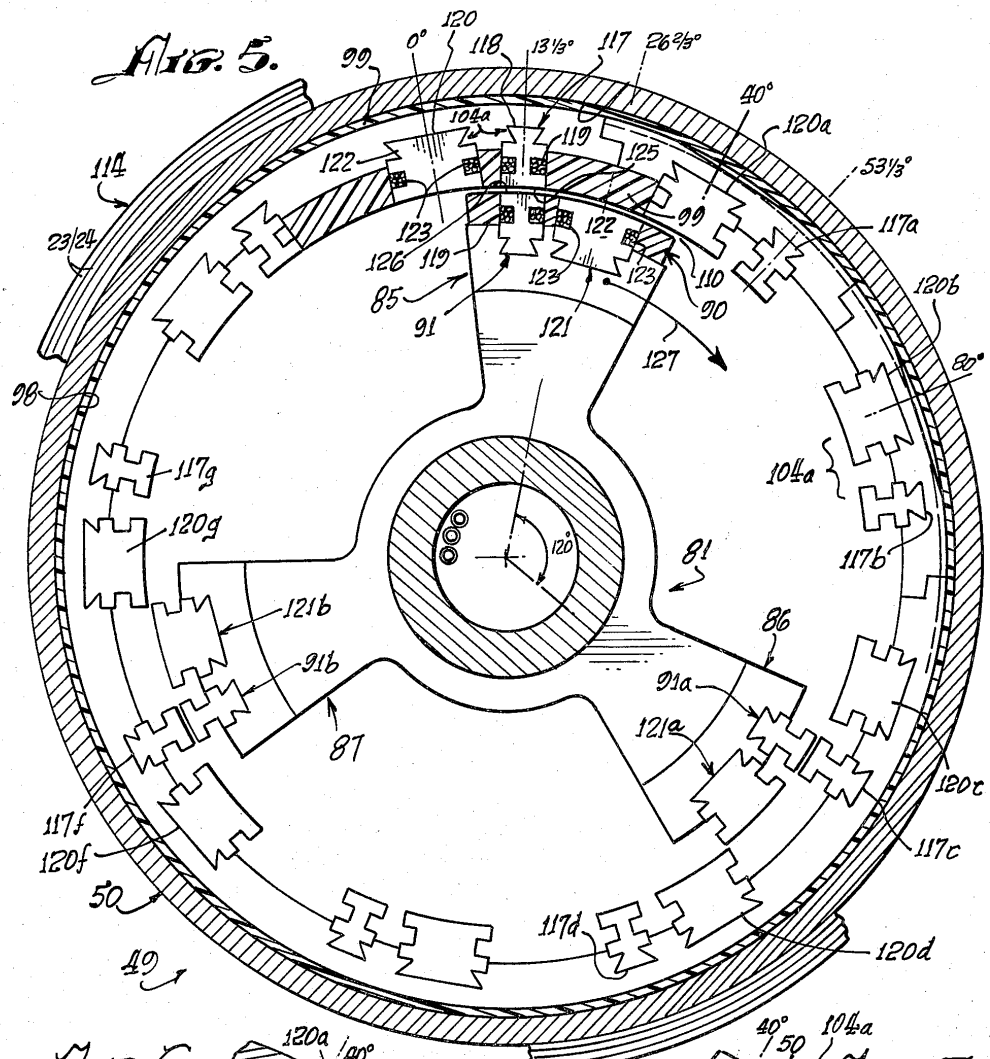

Fig. 6.

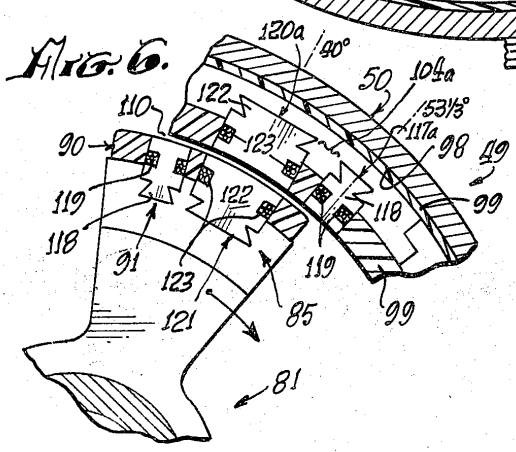

Fig. 7.

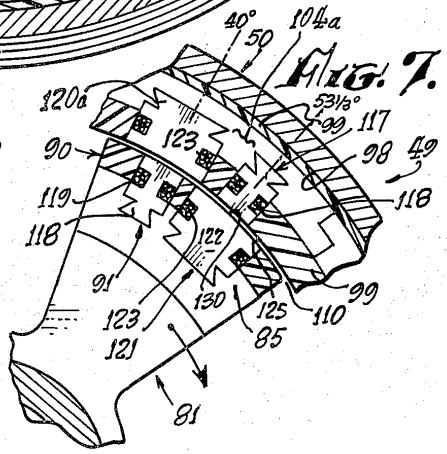

FIG. 8.

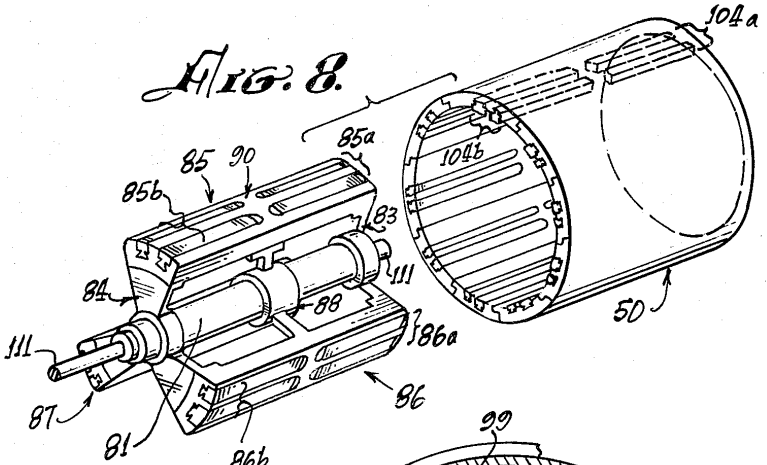

FIG. 9.

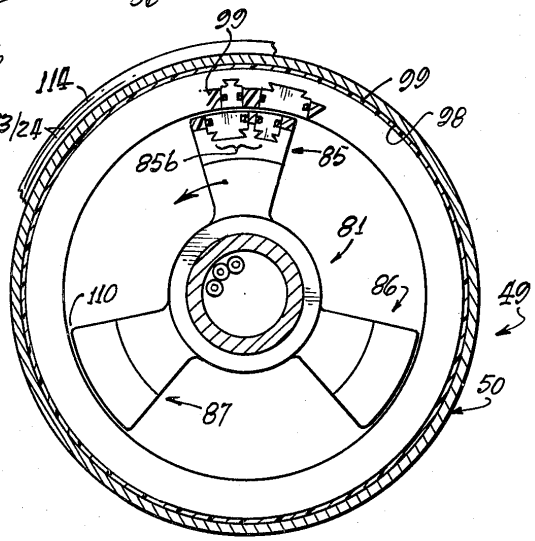

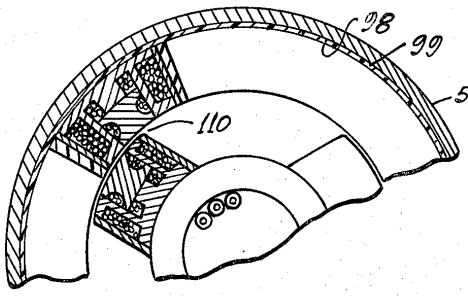

FIG. 10.

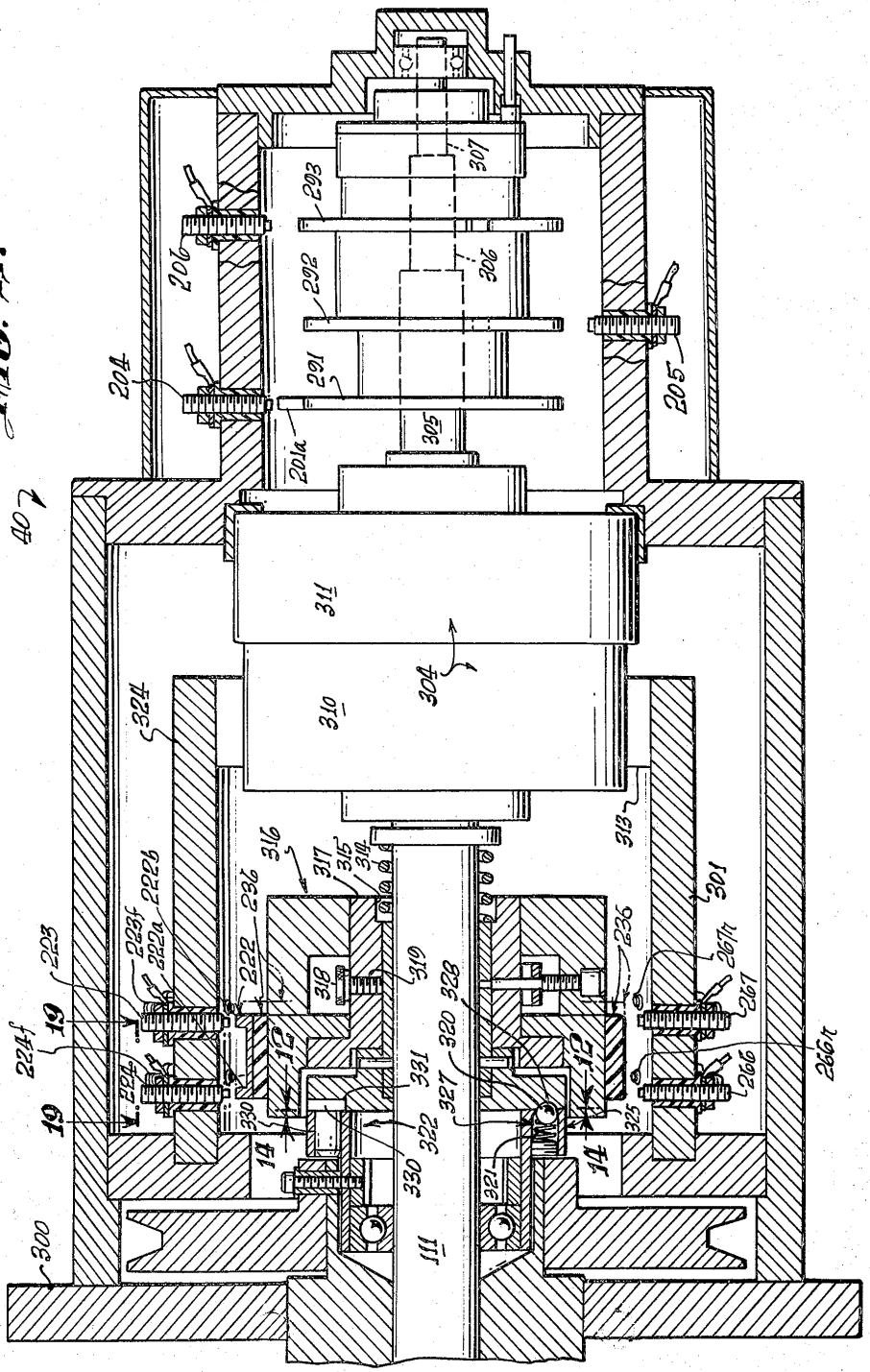
40
204
206
205
201a
291
292
293
305
306
307
311
310
304
324
313
316
317
315
314
301
223
223f
222a
222b
222
236
318
319
328
320
327
331
322
330
321
325
267
267t
266
266t
224f
224
19
12
14
111
300

FIG. 11.

Fig. 12.

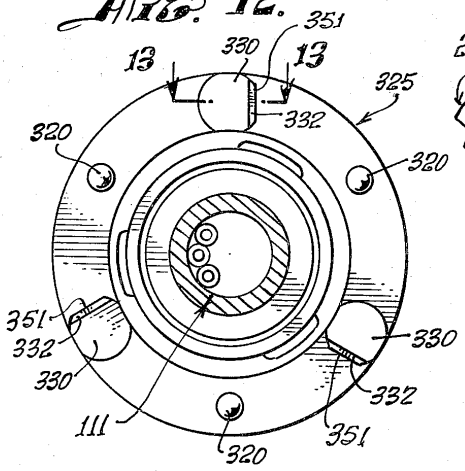

Fig. 14.

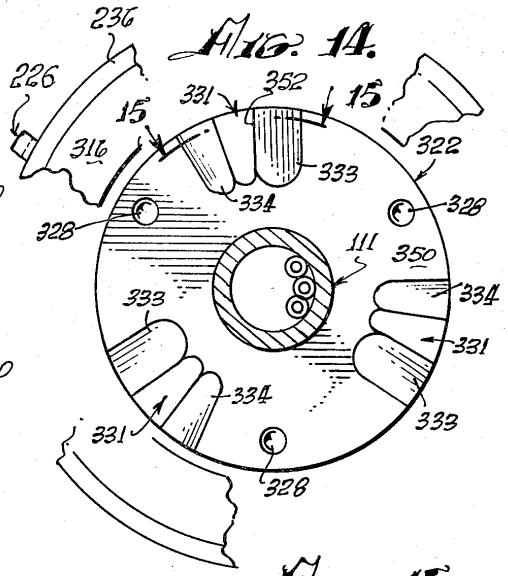

Fig. 13.

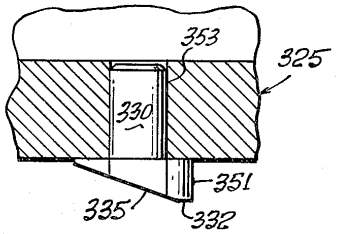

Fig. 15.

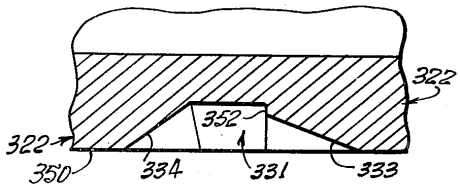

Fig. 16.

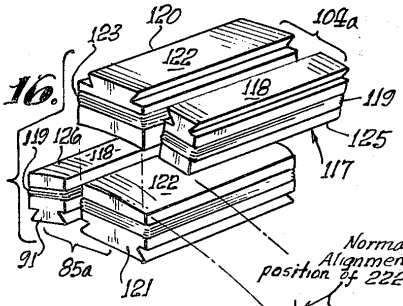

Fig. 17.

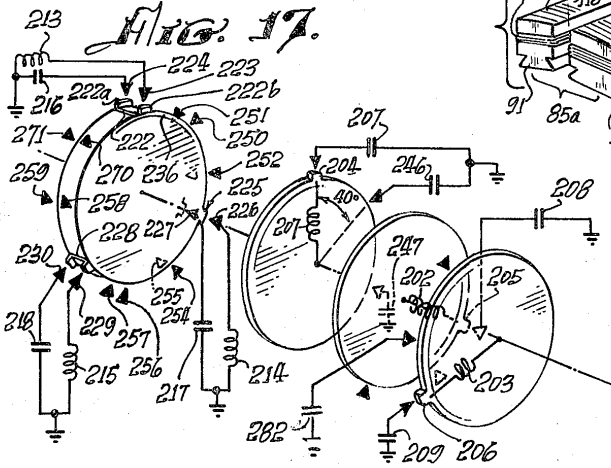

Normal Alignment position of 222

Fig. 19.

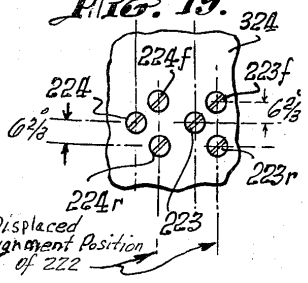

Displaced Alignment Position of 222

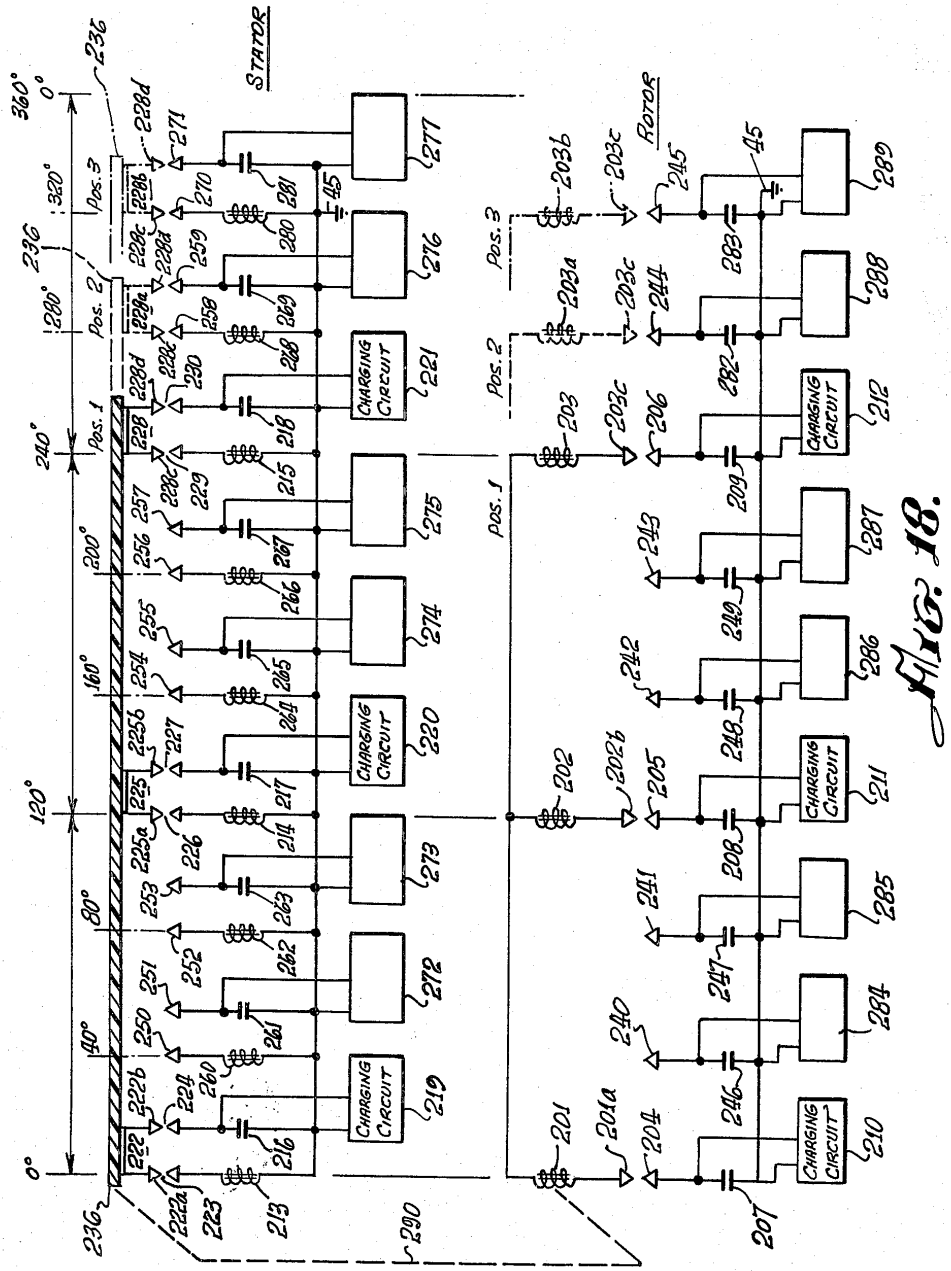
STATOR
ROTOR
Pos. 1
Pos. 2
Pos. 3
CHARGING CIRCUIT
0°
40°
80°
120°
160°
200°
240°
280°
320°
360°

Fig. 18.

United States Patent [19]

Gray, Sr.

[11] **Patent Number: 4,595,975**

[45] **Date of Patent: Jun. 17, 1986**

[54] **EFFICIENT POWER SUPPLY SUITABLE FOR INDUCTIVE LOADS**

[76] Inventor: **Edwin V. Gray, Sr.**, P.O. Box 362, Council, Id. 83612

[21] Appl. No.: **662,339**

[22] Filed: **Oct. 18, 1984**

[51] **Int. Cl.**[4] **H02M 3/42**

[52] **U.S. Cl.** **363/33**; 363/94; 363/110; 323/207; 323/228; 323/291

[58] **Field of Search** ..... 315/33 S; 363/32, 33, 363/76, 94, 109, 110; 323/207, 227, 228, 291

[56] **References Cited**

FOREIGN PATENT DOCUMENTS

2030801 3/1983 United Kingdom .

Primary Examiner—William H. Beha, Jr.
Assistant Examiner—Jeffrey Sterrett
Attorney, Agent, or Firm—Nixon and Vanderhye

[57] **ABSTRACT**

Disclosed is an Electrical Driving and Recovery System for a High Frequency environment. The recovery system can be applied to drive present day direct-current or alternating-current loads for better efficiency. It has a low-voltage source coupled to a vibrator, a transformer and a bridge-type rectifier to provide a high voltage pulsating signal to a first capacitor. Where a high-voltage source is otherwise available, it may be coupled directly to a bridge-type rectifier, causing a pulsating signal to the first capacitor. The first capacitor in turn is coupled to a high voltage anode of an electrical conversion switching element tube. The switching element tube also includes a low voltage anode which is connected to a voltage source by a commutator and a switching element tube. Mounted around the high voltage anode is a charge receiving plate which is coupled to an inductive load to transmit a high voltage discharge from the switching element tube to the load. Also coupled to the load is a second capacitor for storing the back EMF created by the collapsing electrical field of the load when the current to the load is blocked. The second capacitor is coupled to the voltage source. When adapted to present day direct-current or alternating-current devices the load could be a battery or capacitor to enhance the productivity of electrical energy.

8 Claims, 5 Drawing Figures

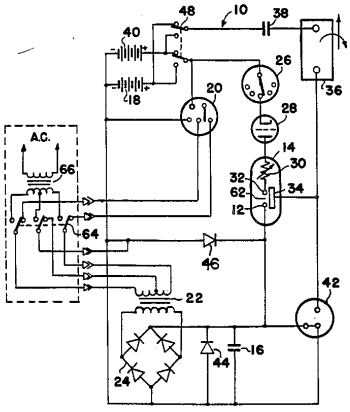

EFFICIENT POWER SUPPLY SUITABLE FOR INDUCTIVE LOADS

BACKGROUND OF THE INVENTION

1. Field of the Invention

The present invention relates to an electrical driving system and a conversion element, and more particularly, to a system for driving an inductive load in a greatly improved and efficient manner.

2. Description of the Prior Act

In the opinion of the inventor, there is no known device which provides the conversion of energy from a direct-current electric source or an alternating-current electric source to a mechanical force based on the principle of this invention. EXAMPLE: A portable energy source, (1) such as a battery, (2) such as alternating-current, (3) such as the combination of battery and alternating-current, may be used with highly improved efficiency to operate a mechanical device, whose output is a linear or rotary force, with an attendant increase in the useful productive period between external applications of energy restoration for the energy source.

SUMMARY OF THE INVENTION

The present invention provides a more efficient driving system comprising a source of electrical voltage; a vibrator connected to the low-voltage source for forming a pulsating signal; a transformer connected to the vibrator for receiving the pulsating signal; a high-voltage source, where available, connected to a bridge-type rectifier; or the bridge-type rectifier connected to the high voltage pulse output of the transformer; a capacitor for receiving the voltage pulse output; a conversion element having first and second anodes, electrically conductive means for receiving a charge positioned about the second anode and an output terminal connected to the charge receiving means, the second anode being connected to the capacitor; a commutator connected to the source of electrical voltage and to the first anode; and an inductive load connected to the output terminal whereby a high energy discharge between the first and second anodes is transferred to the charge receiving means and then to the inductive load.

As a sub-combination, the present invention also includes a conversion element comprising a housing; a first low voltage anode mounted to the housing, the first anode adapted to be connected to a voltage source; a second high voltage anode mounted to the housing, the second anode adapted to be connected to a voltage source; electrically conductive means positioned about the second anode and spaced therefrom for receiving a charge, the charge receiving means being mounted to the housing; and an output terminal communicating with the charge receiving means, said terminal adapted to be connected to an inductive load.

The invention also includes a method for providing power to an inductive load comprising the steps of providing a voltage source, pulsating a signal from said cource; increasing the voltage of said signal; rectifying said signal; storing and increasing the signal; conducting said signal to a high voltage anode; providing a low voltage to a second anode to form a high energy discharge; electrostatically coupling the discharge to a charge receiving element; conducting the discharge to an inductive load; coupling a second capacitor to the load; and coupling the second capacitor to the source.

It is an aim of the present invention to provide a system for driving an inductive load which system is substantially more efficient than any now existing.

Another object of the present invention is to provide a system for driving an inductive load which is reliable, is inexpensive and simply constructed.

The foregoing objects of the present invention together with various other objects, advantages, features and results thereof which will be evident to those skilled in the art in light of this disclosure may be achieved with the exemplary embodiment of the invention described in detail hereinafter and illustrated in the accompanying drawings.

BRIEF DESCRIPTION OF THE DRAWINGS

FIG. **1** is a schematic circuit diagram of the electrical driving system.

FIG. **2** is an elevational sectional view of the electrical conversion element.

FIG. **3** is a plan sectional view taken along line **3—3** of FIG. **2**.

FIG. **4** is a plan sectional view taken along line **4—4** of FIG. **2**.

FIG. **5** is a schematic circuit diagram of the alternating-current input circuit.

DESCRIPTION OF THE PREFERRED EMBODIMENT

While the present invention is susceptible of various modifications and alternative constructions, an embodiment is shown in the drawings and will herein be described in detail. It should be understood however that it is not the intention to limit the invention to the particular form disclosed; but, on the contrary, the invention is to cover all modifications, equivalents and alternative constructions falling within the spirit and scope of the invention as expressed in the appended claims.

There is disclosed herein an electrical driving system which, on theory, will convert low voltage electric energy from a source such as an electric storage battery to a high potential, high current energy pulse that is capable of developing a working force at the inductive output of the device that is more efficient than that which is capable of being developed directly from the energy source. The improvement in efficiency is further enhanced by the capability of the device to return that portion of the initial energy developed, and not used by the inductive load in the production of mechanical energy, to the same or second energy reservoir or source for use elsewhere, or for storage.

This system accomplishes the results stated above by harnessing the "electrostatic" or "impulse" energy created by a high-intensity spark generated within a specially constructed electrical conversion switching element tube. This element utilizes a low-voltage anode, a high-voltage anode, and one or more "electrostatic" or charge receiving grids. These grids are of a physical size, and appropriately positioned, as to be compatible with the size of the tube, and therefore, directly related to the amount of energy to be anticipated when the device is operating.

The low-voltage anode may incorporate a resistive device to aid in controlling the amount of current drawn from the energy source. This low-voltage anode is connected to the energy source through a mechanical commutator or a solid-state pulser that controls the timing and duration of the energy spark within the element. The high-voltage anode is connected to a high-

voltage potential developed by the associated circuits. An energy discharge occurs within the element when the external control circuits permit. This short duration, high-voltage, high-current energy pulse is captured by the "electrostatic" grids within the tube, stored momentarily, then transferred to the inductive output load.

The increase in efficiency anticipated in converting the electrical energy to mechanical energy within the inductive load is attributed to the utilization of the most optimum timing in introducing the electrical energy to the load device, for the optimum period of time.

Further enhancement of energy conservation is accomplished by capturing a significant portion of the energy generated by the inductive load when the useful energy field is collapsing. This energy is normally dissipated in load losses that are contrary to the desired energy utilization, and have heretofore been accepted because no suitable means had been developed to harness this energy and restore it to a suitable energy storage device.

The present invention is concerned with two concepts or characteristics. The first of these characteristics is observed with the introduction of an energizing current through the inductor. The inductor creates a contrary force (counter-electromotive force or CEMF) that opposes the energy introduced into the inductor. This CEMF increases throughout the time the introduced energy is increasing.

In normal applications of an alternating-current to an inductive load for mechanical applications, the useful work of the inductor is accomplished prior to terminating the application of energy. The excess energy applied is thereby wasted.

Previous attempts to provide energy inputs to an inductor of time durations limited to that period when the optimum transfer of inductive energy to mechanical energy is occuring, have been limited by the ability of any such device to handle the high current required to optimize the energy transfer.

The second characteristic is observed when the energizing current is removed from the inductor. As the current is decreased, the inductor generates an EMF that opposes the removal of current or, in other words, produces an energy source at the output of the inductor that simulates the original energy source, reduced by the actual energy removed from the circuit by the mechanical load. This "regenerated", or excess, energy has previously been lost due to a failure to provide a storage capability for this energy.

In this invention, a high-voltage, high-current, short duration energy pulse is applied to the inductive load by the conversion element. This element makes possible the use of certain of that energy impressed within an arc across a spark-gap, without the resultant deterioration of circuit elements normally associated with high energy electrical arcs.

This invention also provides for capture of a certain portion of the energy induced by the high inductive kick produced by the abrupt withdrawal of the introduced current. This abrupt withdrawal of current is attendant upon the termination of the stimulating arc. The voltage spike so created is imposed upon a capacitor that couples the attendant current to a secondary energy storage device.

A novel, but not essential, circuit arrangement provides for switching the energy source and the energy storage device. This switching may be so arranged as to actuate automatically at predetermined times. The switching may be at specified periods determined by experimentation with a particular device, or may be actuated by some control device that measures the relative energy content of the two energy reservoirs.

Referring now to FIG. **1**, the system **10** will be described in additional detail. The potential for the high-voltage anode, **12** of the conversion element **14** is developed across the capacitor **16**. This voltage is produced by drawing a low current from a battery source **18** through the vibrator **20**. The effect of the vibrator is to create a pulsating input to the transformer **22**. The turns ratio of the transformer is chosen to optimize the voltage applied to a bridge-type rectifier **24**. The output of the rectifier is then a series of high-voltage pulses of modest current. When the available source is already of the high voltage, AC type, it may be coupled directly to the bridge-type rectifier.

By repetitious application of these output pulses from the bridge-type recrifier to the capacitor **16**, a high-voltage, high-level charge is built up on the capacitor.

Control of the conversion switching element tube is maintained by a commutator **26**. A series of contacts mounted radially about a shaft, or a solid-state switching device sensitive to time or other variable may be used for this control element. A switching element tube type one-way energy path **28** is introduced between the commutator device and the conversion switching element tube to prevent high energy arcing at the commutator current path. When the switching element tube is closed, current from the voltage source **18** is routed through a resistive element **30** and a low voltage anode **32**. This causes a high energy discharge between the anodes within the conversion switching element tube **14**.

The energy content of the high energy pulse is electrostatically coupled to the conversion grids **34** of the conversion element. This electrostatic charge is applied through an output terminal **60** (FIG. **2**) across the load inductance **36**, inducing a strong electromagnetic field about the inductive load. The intensity of this electromagnetic field is determined by the high electromotive potential developed upon the electrostatic grids and the very short time duration required to develop the energy pulse.

If the inductive load is coupled magnetically to a mechanical load, a strong initial torque is developed that may be efficiently utilized to produce physical work.

Upon cessation of the energy pulse (arc) within the conversion switching element tube the inductive load is decoupled, allowing the electromagnetic field about the inductive load to collapse. The collapse of this energy field induces within the inductive load a counter EMF. This counter EMF creates a high positive potential across a second capacitor which, in turn, is induced into the second energy storage device or battery **40** as a charging current. The amount of charging current available to the battery **40** is dependent upon the initial conditions within the circuit at the time of discharge within the conversion switching element tube and the amount of mechanical energy consumed by the work load.

A spark-gap protection device **42** is included in the circuit to protect the inductive load and the rectifier elements from unduly large discharge currents. Should the potentials within the circuit exceed predetermined values, fixed by the mechanical size and spacing of the elements within the protective device, the excess en-

ergy is dissipated (bypassed) by the protective device to the circuit common (electrical ground).

Diodes **44** and **46** bypass the excess overshoot generated when the "Energy Conversion Switching Element Tube" is triggered. A switching element **48** allows either energy storage source to be used as the primary energy source, while the other battery is used as the energy retrieval unit. The switch facilitates interchanging the source and the retrieval unit at optimum intervals to be determined by the utilization of the conversion switching element tube. This switching may be accomplished manually or automatically, as determined by the choice of switching element from among a large variety readily available for the purpose.

FIGS. **2**, **3**, and **4** show the mechanical structure of the conversion switching element tube **14**. An outer housing **50** may be of any insulative material such as glass. The anodes **12** and **22** and grids **34***a* and **34***b* are firmly secured by nonconductive spacer material **54**, and **56**. The resistive element **30** may be introduced into the low-voltage anode path to control the peak currents through the conversion switching element tube. The resistive element may be of a piece, or it may be built of one or more resistive elements to achieve the desired result.

The anode material may be identical for each anode, or may be of differing materials for each anode, as dictated by the most efficient utilization of the device, as determined by appropriate research at the time of production for the intended use.

The shape and spacing of the electrostatic grids is also susceptible to variation with application (voltage, current, and energy requirements).

It is the contention of the inventor that by judicious mating of the elements of the conversion switching element tube, and the proper selection of the components of the circuit elements of the system, the desired theoretical results may be achieved. It is the inventor's contention that this mating and selection process is well within the capabilities of intensive research and development technique.

Let it be stated here that substituting a source of electric alternating-current subject to the required current and/or voltage shaping and/or timing, either prior to being considered a primary energy source, or thereafter, should not be construed to change the described utilization or application of primary energy in any way. Such energy conversion is readily achieved by any of a multitude of well established principles. The preferred embodiment of this invention merely assumes optimum utilization and optimum benefit from this invention when used with portable energy devices similar in principle to the wet-cell or dry-cell battery.

This invention proposes to utilize the energy contained in an internally generated high-voltage electric spike (energy pulse) to electrically energize an inductive load; this inductive load being then capable of converting the energy so supplied into a usefu1 electrical or mechanical output.

In operation the high-voltage, short-duration electric spike is generated by discharging the capacitor **16** across the spark-gap in the conversion switching element tube. The necessary high-voltage potential is stored on the capacitor in incremental, additive steps from the bridge-type rectifier **24**.

When the energy source is a direct-current electric energy storage device, such as the battery **12**, the input to the bridge rectifier is provided by the voltage step-up transformer **22**, that is in turn energized from the vibrator **20**, or solid-state chopper, or similar device to properly drive the transformer and rectifier circuits.

When the energy source is an alternating-current, switches **64** disconnect transformer **22** and the input to the bridge-type rectifier **24** is provided by the voltage step-up transformer **66**, that is in turn energized from the vibrator **20**, or solid-state chopper, or similar device to properly drive the transformer and rectifier circuits.

The repetitions output of the bridge rectifier incrementally increases the capacitor charge toward its maximum. This charge is electrically connected directly to the high-voltage anode **12** of the conversion switching element tube.

When the low-voltage anode **32** is connected to a source of current, an arc is created in the spark-gap designated **62** of the conversion switching element tube equivalent to the potential stored on the high-voltage anode, and the current available from the low-voltage anode. Because the duration of the arc is very short, the instantaneous voltage, and instantaneous current may both be very high. The instantaneous peak apparent power is therefore, also very high. Within the conversion switching element tube, this energy is absorbed by the grids **34***a* and **34***b* mounted circumferentially about the interior of the tube.

Control of the energy spike within the conversion switching element tube is accomplished by a mechanical, or solid-state commutator, that closes the circuit path from the low-voltage anode to the current source at that moment when the delivery of energy to the output load is most auspicious. Any number of standard high-accuracy, variable setting devices are available for this purpose. When control of the repetitive rate of the system's output is required, it is accomplished by controllihg the time of connection at the low-voltage anode.

Thus there can be provided an electrical driving system having a low-voltage source coupled to a vibrator, a transformer and a bridge-type rectifier to provide a high voltage pulsating signal to a first capacitor. Where a high-voltage source is otherwise available, it may be coupled direct to a bridge-type rectifier, causing a pulsating signal to a first capacitor. The capacitor in turn is coupled to a high-voltage anode of an electrical conversion switching element tube. The element also includes a low-voltage anode which in turn is connected to a voltage source by a commutator, a switching element tube, and a variable resistor. Mounted around the high-voltage anode is a charge receiving plate which in turn is coupled to an inductive load to transmit a high-voltage discharge from the element to the load. Also coupled to the load is a second capacitor for storing the back EMF created by the collapsing electrical field of the load when the current to the load is blocked. The second capacitor in turn is coupled to the voltage source.

What is claimed is:

1. An electrical driving system comprising:

a source of electrical voltage;

a vibrator connected to said source for forming a pulsating signal;

a transformer connected to said vibrator for receiving said pulsating signal;

a rectifier connected to said transformer having a high-voltage pulse output;

a capacitor for receiving said voltage pulse output;

a conversion switching element tube having first and second anodes, electrically conductive means for receiving a charge positioned about said second anode and an output terminal connected to said charge receiving means, said second anode being connected to said capacitor;

a commutator connected to said source of electrical voltage and to said first anode; and

an inductive load connected to said output terminal whereby a high energy discharge between said first and second anodes is transferred to said charge receiving means and then to said inductive load.

2. A system as claimed in claim **1**, including

a second capacitor for receiving a charge from said load.

3. A system as claimed in claim **2**, including

a switching element tube positioned in series between said commutator and said first anode.

4. A system as claimed in claim **3**, including

a second source of voltage and a switch for receiving a signal from said second capacitor.

5. A system as claimed in claim **4** wherein:

said conversion switching element tube includes a resistive element in series with said first anode; and

said charge receiving means is tubularly shaped.

6. A system as in claim **1** wherein said source comprises a direct current source and wherein said system further comprises:

a source of alternating current; and

a switch means for selecting said direct-current or said alternating-current power source as input to said rectifier.

7. A system as in claim **1** wherein said rectifier comprises a bridge-type rectifier.

8. A method for providing power to an inductive load comprising the steps of

providing a voltage source;

pulsating a signal from said source;

increasing the voltage of said signal;

rectifying said signal;

storing and increasing said signal;

conducting said signal to a high-voltage anode;

providing a low-voltage to a second anode to form a high energy discharge;

electrostatically coupling said discharge to a charge receiving element;

conducting said discharge to an inductive load;

coupling a second capacitor to said load; and

coupling said capacitor to said source.

* * * * *

FIG. 1

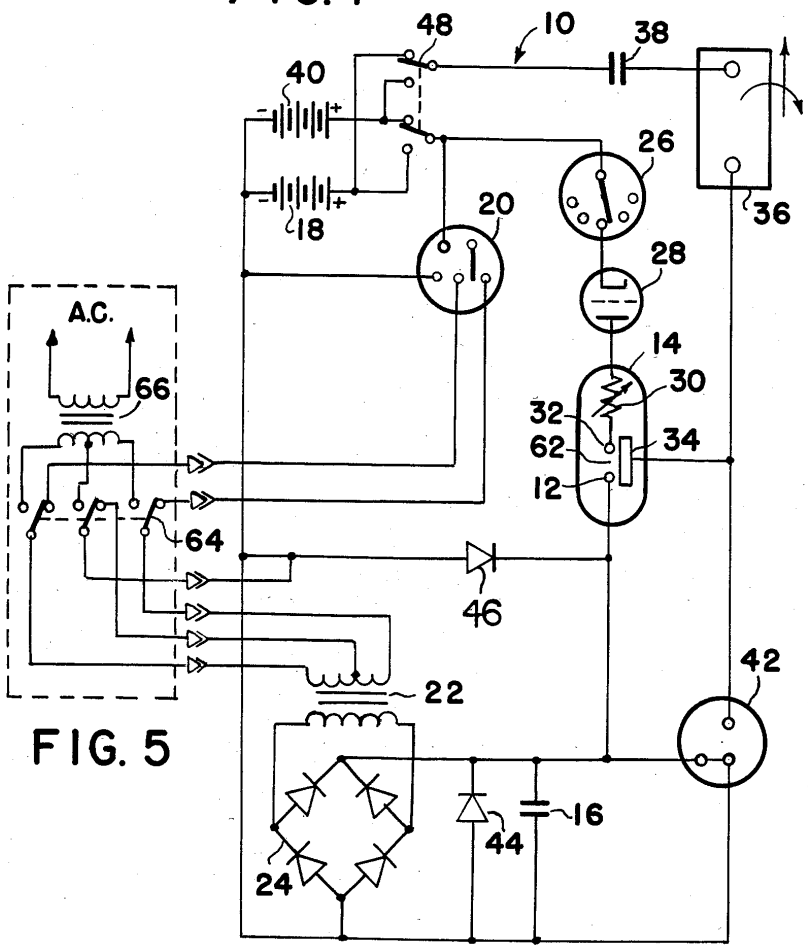

FIG. 5

FIG. 2

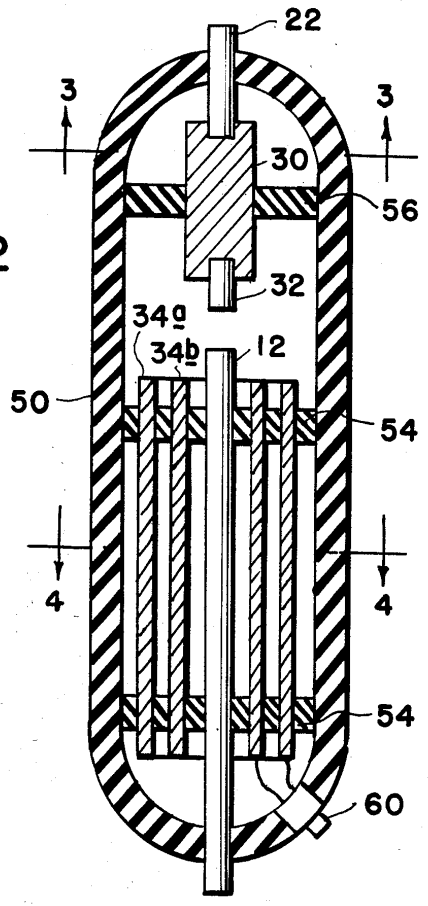

FIG. 3

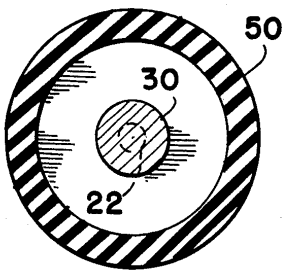

FIG. 4

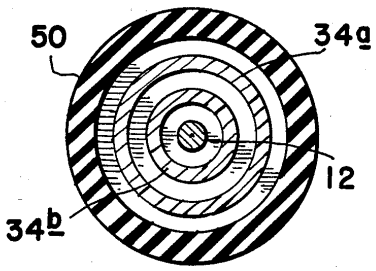

United States Patent [19]

Gray, Sr.

[11] **Patent Number: 4,661,747**

[45] **Date of Patent: Apr. 28, 1987**

[54] **EFFICIENT ELECTRICAL CONVERSION SWITCHING TUBE SUITABLE FOR INDUCTIVE LOADS**

[76] Inventor: **Edwin V. Gray, Sr.**, P.O. Box 362, Council, Id. 83612

[21] Appl. No.: **791,508**

[22] Filed: **Oct. 25, 1985**

Related U.S. Application Data

[62] Division of Ser. No. 662,339, Oct. 18, 1984, Pat. No. 4,595,975.

[30] **Foreign Application Priority Data**

Dec. 16, 1983 [GR] Greece 124388

[51] **Int. Cl.**[4] **H01J 11/04;** H01J 13/48; H05B 37/00; H05B 39/00

[52] **U.S. Cl.** **315/330;** 313/601; 313/602; 313/604; 315/261; 315/335

[58] **Field of Search** 315/57, 58, 60, 36, 315/334, 335, 330, 336, 261; 313/595, 601, 602, 603

[56] **References Cited**

U.S. PATENT DOCUMENTS

3,443,142	5/1969	Koppl et al.	315/58
3,663,855	5/1972	Boettcher	315/330
3,798,461	3/1974	Edson	315/36
3,939,379	2/1976	Sullivan et al.	315/330
4,198,590	4/1980	Harris	315/335
4,370,597	1/1983	Weiner et al.	315/58

FOREIGN PATENT DOCUMENTS

0540361 12/1976 U.S.S.R. 315/335

Primary Examiner—Saxfield Chatmon

[57] **ABSTRACT**

Disclosed is an electrical driving and recovery system for a high frequency environment. The recovery system can be applied to drive present day direct-current or alternating-current loads for better efficiency. It has a low-voltage source coupled to a vibrator, a transformer and a bridge-type rectifier to provide a high voltage pulsating signal to a first capacitor. Where a high-voltage source is otherwise available, it may be coupled directly to a bridge-type rectifier, causing a pulsating signal to the first capacitor. The first capacitor in turn is coupled to a high voltage anode of an electrical conversion switching element tube. The switching element tube also includes a low voltage anode which is connected to a voltage source by a commutator and a switching element tube. Mounted around the high voltage anode is a charge receiving plate which is coupled to an inductive load to transmit a high voltage discharge from the switching element tube to the load. Also coupled to the load is a second capacitor for storing the back EMF created by the collapsing electrical field of the load when the current to the load is blocked. The second capacitor is coupled to the voltage source. When adapted to present day direct-current or alternating-current devices the load could be a battery or capacitor to enhance the productivity of electrical energy.

4 Claims, 5 Drawing Figures

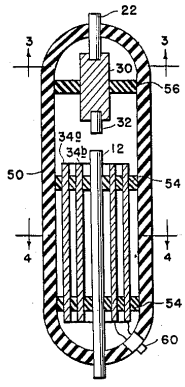

EFFICIENT ELECTRICAL CONVERSION SWITCHING TUBE SUITABLE FOR INDUCTIVE LOADS

This is a division of application Ser. No. 662,339, filed Oct. 18, 1984, now U.S. Pat. No. 4,595,975.

BACKGROUND OF THE INVENTION

1. Field of the Invention

The present invention relates to an electrical driving system and a conversion element, and more particularly, to a system for driving an inductive load in a greatly improved and efficient manner.

2. Description of the Prior Act

In the opinion of the inventor, there is no known device which provides the conversion of energy from a direct-current electric source or an alternating-current electric source to a mechanical force based on the principle of this invention. EXAMPLE: A portable energy source, (1) such as a battery, (2) such as alternating-current, (3) such as the combination of battery and alternating-current, may be used with highly improved efficiency to operate a mechanical device, whose output is a linear or rotary force, with an attendant increase in the useful productive period between external applications of energy restoration for the energy source.

SUMMARY OF THE INVENTION

The present invention provides a more efficient driving system comprising a source of electrical voltage; a vibrator connected to the low-voltage source for forming a pulsating signal; a transformer connected to the vibrator for receiving the pulsating signal; a high-voltage source, where available, connected to a bridge-type rectifier; or the bridge-type rectifier connected to the high voltage pulse output of the transformer; a capacitor for receiving the voltage pulse output; a conversion element having first and second anodes, electrically conductive means for receiving a charge positioned about the second anode and an output terminal connected to the charge receiving means, the second anode being connected to the capacitor; a commutator connected to the source of electrical voltage and to the first anode; and an inductive load connected to the output terminal whereby a high energy discharge between the first and second anodes is transferred to the charge receiving means and then to the inductive load.

As a sub-combination, the present invention also includes a conversion element comprising a housing; a first low voltage anode mounted to the housing, the first anode adapted to be connected to a voltage source; a second high voltage anode mounted to the housing, the second anode adapted to be connected to a voltage source; electrically conductive means positioned about the second anode and spaced therefrom for receiving a charge, the charge receiving means being mounted to the housing; and an output terminal communicating with the charge receiving means, said terminal adapted to be connected to an inductive load.

The invention also includes a method for providing power to an inductive load comprising the steps of providing a voltage source, pulsating a signal from said source; increasing the voltage of said signal; rectifying said signal; storing and increasing the signal; conducting said signal to a high voltage anode; providing a low voltage to a second anode to form a high energy discharge; electrostatically coupling the discharge to a charge receiving element; conducting the discharge to an inductive load; coupling a second capacitor to the load; and coupling the second capacitor to the source.

It is an aim of the present invention to provide a system for driving an inductive load which system is substantially more efficient than any now existing.

Another object of the present invention is to provide a system for driving an inductive load which is reliable, is inexpensive and simply constructed.

The foregoing objects of the present invention together with various other objects, advantages, features and results thereof which will be evident to those skilled in the art in light of this disclosure may be achieved with the exemplary embodiment of the invention described in detail hereinafter and illustrated in the accompanying drawings.

BRIEF DESCRIPTION OF THE DRAWINGS

FIG. **1** is a schematic circuit diagram of the electrical driving system.

FIG. **2** is an elevational sectional view of the electrical conversion element.

FIG. **3** is a plan sectional view taken along line **3—3** of FIG. **2**.

FIG. **4** is a plan sectional view taken along line **4—4** of FIG. **2**.

FIG. **5** is a schematic circuit diagram of the alternating-current input circuit.

DESCRIPTION OF THE PREFERRED EMBODIMENT

While the present invention is susceptible of various modifications and alternative constructions, an embodiment is shown in the drawings and will herein be described in detail. It should be understood however that it is not the intention to limit the invention to the particular form disclosed; but, on the contrary, the invention is to cover all modifications, equivalents and alternative constructions falling within the spirit and scope of the invention as expressed in the appended claims.

There is disclosed herein an electrical driving system which, on theory, will convert low voltage electric energy from a source such as an electric storage battery to a high potential, high current energy pulse that is capable of developing a working force at the inductive output of the device that is more efficient than that which is capable of being developed directly from the energy source. The improvement in efficiency is further enhanced by the capability of the device to return that portion of the initial energy developed, and not used by the inductive load in the production of mechanical energy, to the same or second energy reservoir or source for use elsewhere, or for storage.

This system accomplishes the results stated above by harnessing the "electrostatic" or "impulse" energy created by a high-intensity spark generated within a specially constructed electrical conversion switching element tube. This element utilizes a low-voltage anode, a high-voltage anode, and one or more "electrostatic" or charge receiving grids. These grids are of a physical size, and appropriately positioned, as to be compatible with the size of the tube, and therefore, directly related to the amount of energy to be anticipated when the device is operating.

The low-voltage anode may incorporate a resistive device to aid in controlling the amount of current drawn from the energy source. This low-voltage anode is connected to the energy source through a mechanical

commutator or a solid-state pulser that controls the timing and duration of the energy spark within the element. The high-voltage anode is connected to a high-voltage potential developed by the associated circuits. An energy discharge occurs within the element when the external control circuits permit. This short duration, high-voltage, high-current energy pulse is captured by the "electrostatic" grids within the tube, stored momentarily, then transferred to the inductive output load.

The increase in efficiency anticipated in converting the electrical energy to mechanical energy within the inductive load is attributed to the utilization of the most optimum timing in introducing the electrical energy to the load device, for the optimum period of time.

Further enhancement of energy conservation is accomplished by capturing a significant portion of the energy generated by the inductive load when the useful energy field is collapsing. This energy is normally dissipated in load losses that are contrary to the desired energy utilization, and have heretofore been accepted because no suitable means had been developed to harness this energy and restore it to a suitable energy storage device.

The present invention is concerned with two concepts or characteristics. The first of these characteristics is observed with the introduction of an energizing current through the inductor. The inductor creates a contrary force (counter-electromotive force or CEMF) that opposes the energy introduced into the inductor. This CEMF increases throughout the time the introduced energy is increasing.

In normal applications of an alternating-current to an inductive load for mechanical applications, the useful work of the inductor is accomplished prior to terminating the application of energy. The excess energy applied is thereby wasted.

Previous attempts to provide energy inputs to an inductor of time durations limited to that period when the optimum transfer of inductive energy to mechanical energy is occuring, have been limited by the ability of any such device to handle the high current required to optimize the energy transfer.

The second characteristic is observed when the energizing current is removed from the inductor. As the current is decreased, the inductor generates an EMF that opposes the removal of current or, in other words, produces an energy source at the output of the inductor that simulates the original energy source, reduced by the actual energy removed from the circuit by the mechanical load. This "regenerated", or excess, energy has previously been lost due to a failure to provide a storage capability for this energy.

In this invention, a high-voltage, high-current, short duration energy pulse is applied to the inductive load by the conversion element. This element makes possible the use of certain of that energy impressed within an arc across a spark-gap, without the resultant deterioration of circuit elements normally associated with high energy electrical arcs.

This invention also provides for capture of a certain portion of the energy induced by the high inductive kick produced by the abrupt withdrawal of the introduced current. This abrupt withdrawal of current is attendant upon the termination of the stimulating arc. The voltage spike so created is imposed upon a capacitor that couples the attendant current to a secondary energy storage device.

A novel, but not essential, circuit arrangement provides for switching the energy source and the energy storage device. This switching may be so arranged as to actuate automatically at predetermined times. The switching may be at specified periods determined by experimentation with a particular device, or may be actuated by some control device that measures the relative energy content of the two energy reservoirs.

Referring now to FIG. **1**, the system **10** will be described in additional detail. The potential for the high-voltage anode **12** of the conversion element **14** is developed across the capacitor **16**. This voltage is produced by drawing a low current from a battery source **18** through the vibrator **20**. The effect of the vibrator is to create a pulsating input to the transformer **22**. The turns ratio of the transformer is chosen to optimize the voltage applied to a bridge-type rectifier **24**. The output of the rectifier is then a series of high-voltage pulses of modest current. When the available source is already of the high voltage AC type, it may be coupled directly to the bridge-type rectifier.

By repetitious application of these output pulses from the bridge-type recrifier to the capacitor **16**, a high-voltage high-level charge is built up on the capacitor.

Control of the conversion switching element tube is maintained by a commutator **26**. A series of contacts mounted radially about a shaft, or a solid-state switching device sensitive to time or other variable may be used for this control element. A switching element tube type one-way energy path **28** is introduced between the commutator device and the conversion switching element tube to prevent high energy arcing at the commutator current path. When the switching element tube is closed, current from the voltage source **18** is routed through a resistive element **30** and a low voltage anode **32**. This causes a high energy discharge between the anodes within the conversion switching element tube **14**.

The energy content of the high energy pulse is electrostatically coupled to the conversion grids **34** of the conversion element. This electrostatic charge is applied through an output terminal **60** (FIG. **2**) across the load inductance **36**, inducing a strong electromagnetic field about the inductive load. The intensity of this electromagnetic field is determined by the high electromotive potential developed upon the electrostatic grids and the very short time duration required to develop the energy pulse.

If the inductive load is coupled magnetically to a mechanical load, a strong initial torque is developed that may be efficiently utilized to produce physical work.

Upon cessation of the energy pulse (arc) within the conversion switching element tube the inductive load is decoupled, allowing the electromagnetic field about the inductive load to collapse. The collapse of this energy field induces within the inductive load a counter EMF. This counter EMF creates a high positive potential across a second capacitor **38** which, in turn, is induced into the second energy storage device or battery **40** as a charging current. The amount of charging current available to the battery **40** is dependent upon the initial conditions within the circuit at the time of discharge within the conversion switching element tube and the amount of mechanical energy consumed by the work load.

A spark-gap protection device **42** is included in the circuit to protect the inductive load and the rectifier

elements from unduly large discharge currents. Should the potentials within the circuit exceed predetermined values, fixed by the mechanical size and spacing of the elements within the protective device, the excess energy is dissipated (bypassed) by the protective device to the circuit common (electrical ground).

Diodes **44** and **46** bypass the excess overshoot generated when the "Energy Conversion Switching Element Tube" is triggered. A switching element **48** allows either energy storage source to be used as the primary energy source, while the other battery is used as the energy retrieval unit. The switch facilitates interchanging the source and the retrieval unit at optimum intervals to be determined by the utilization of the conversion switching element tube. This switching may be accomplished manually or automatically, as determined by the choice of switching element from among a large variety readily available for the purpose.

FIGS. **2**, **3**, and **4** show the mechanical structure of the conversion switching element tube **14**. An outer housing **50** may be of any insulative material such as glass. The anodes **12** and **32** and grids **34***a* and **34***b* are firmly secured by nonconductive spacer material **54**, and **56**. The resistive element **30** may be introduced into the low-voltage anode path to control the peak currents through the conversion switching element tube. The resistive element may be of a piece, or it may be built of one or more resistive elements to achieve the desired result.

The anode material may be identical for each anode, or may be of differing materials for each anode, as dictated by the most efficient utilization of the device, as determined by appropriate research at the time of production for the intended use.

The shape and spacing of the electrostatic grids is also susceptible to variation with application (voltage, current, and energy requirements).

It is the contention of the inventor that by judicious mating of the elements of the conversion switching element tube, and the proper selection of the components of the circuit elements of the system, the desired theoretical results may be achieved. It is the inventor's contention that this mating and selection process is well within the capabilities of intensive research and development technique.

Let it be stated here that substituting a source of electric alternating-current subject to the required current and/or voltage shaping and/or timing, either prior to being considered a primary energy source, or thereafter, should not be construed to change the described utilization or application of primary energy in any way. Such energy conversion is readily achieved by any of a multitude of well established principles. The preferred embodiment of this invention merely assumes optimum utilization and optimum benefit from this invention when used with portable energy devices similar in principle to the wet-cell or dry-cell battery.

This invention proposes to utilize the energy contained in an internally generated high-voltage electric spike (energy pulse) to electrically energize an inductive load; this inductive load being then capable of converting the energy so supplied into a useful electrical or mechanical output

In operation the high-voltage, short-duration electric spike is generated by discharging the capacitor **16** across the spark-gap in the conversion switching element tube. The necessary high-voltage potential is stored on the capacitor in incremental, additive steps from the bridge-type rectifier **24**.

When the energy source is a direct-current electric energy storage device, such as the battery **12**, the input to the bridge rectifier is provided by the voltage step-up transformer **22**, that is in turn energized from the vibrator **20**, or solid-state chopper, or similar device to properly drive the transformer and rectifier circuits.

When the energy source is an alternating-current, switches **64** disconnect transformer **22** and the input to the bridge-type rectifier **24** is provided by the voltage step-up transformer **66**, that is in turn energized from the vibrator **20**, or solid-state chopper, or similar device to properly drive the transformer and rectifier circuits.

The repetitious output of the bridge rectifier incrementally increases the capacitor charge toward its maximum. This charge is electrically connected directly to the high-voltage anode **12** of the conversion switching element tube.

When the low-voltage anode **32** is connected to a source of current, an arc is created in the spark-gap designated **62** of the conversion switching element tube equivalent to the potential stored on the high-voltage anode, and the current available from the low-voltage anode. Because the duration of the arc is very short, the instantaneous voltage, and instantaneous current may both be very high. The instantaneous peak apparent power is therefore, also very high. Within the conversion switching element tube, this energy is absorbed by the grids **34***a* and **34***b* mounted circumferentially about the interior of the tube.

Control of the energy spike within the conversion switching element tube is accomplished by a mechanical, or solid-state commutator, that closes the circuit path from the low-voltage anode to the current source at that moment when the delivery of energy to the output load is most auspicious. Any number of standard high-accuracy, variable setting devices are available for this purpose. When control of the repetitive rate of the system's output is required, it is accomplished by controlling the time of connection at the low-voltage anode.

Thus there can be provided an electrical driving system having a low-voltage source coupled to a vibrator, a transformer and a bridge-type rectifier to provide a high voltage pulsating signal to a first capacitor. Where a high-voltage source is otherwise available, it may be coupled direct to a bridge-type rectifier, causing a pulsating signal to a first capacitor. The capacitor in turn is coupled to a high-voltage anode of an electrical conversion switching element tube. The element also includes a low-voltage anode which in turn is connected to a voltage source by a commutator, a switching element tube, and a variable resistor. Mounted around the high-voltage anode is a charge receiving plate which in turn is coupled to an inductive load to transmit a high-voltage discharge from the element to the load. Also coupled to the load is a second capacitor for storing the back EMF created by the collapsing electrical field of the load when the current to the load is blocked. The second capacitor in turn is coupled to the voltage source.

What is claimed is:

1. An electrical conversion switching element tube comprising:

a closed insulative housing (**50**);

a first low-voltage anode (**32**) mounted internally to said housing and extending internally to an electri-

cal discharge area (62), said first anode adapted to be connected to a voltage source external to the housing;

a second high-voltage anode (12) mounted internally to said housing and extending internally to said electrical discharge area (62), said second anode also being adapted to be connected to a voltage source external to the housing;

electrically conductive means (34*b*) positioned internally within said housing and extending circumferentially about said second anode while being directly exposed thereto but not conductively connected thereto but, rather, spaced therefrom for receiving an electrostatic charge from the second anode when a discharge current is triggered across said discharge area between said first and second anodes, said charge receiving electrically conductive means also being internally mounted to said housing; and

an output terminal (60) communicating with said charge receiving electrically conductive means, said terminal adapted to be connected to an inductive load externally of said housing.

2. An electrical conversion switching element tube as claimed in claim 1, including a resistive element (30) in series with said first anode.

3. An electrical conversion switching element tube as claimed in claim 1 wherein:

said charge receiving electrically conductive means is tubularly shaped.

4. An electrical conversion switching element tube as claimed in claim 3, including

a second tubularly shaped charge receiving electrically conductive means (34*a*) positioned circumferentially about said first mentioned charge receiving electrically conductive means.

* * * * *

FIG. 1

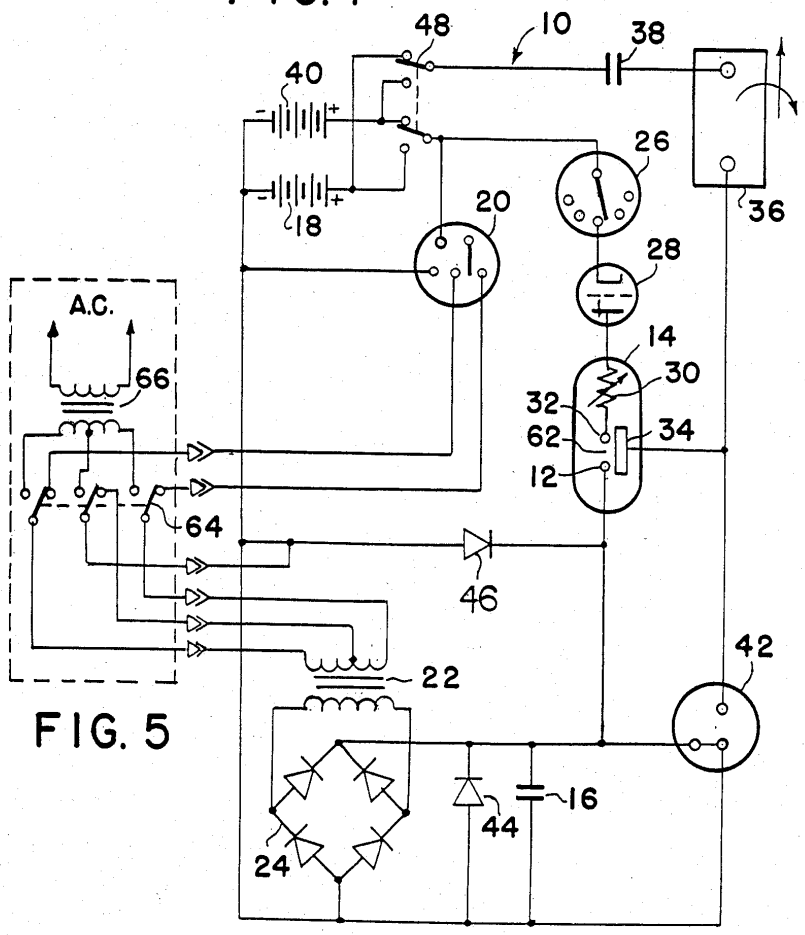

FIG. 5

FIG. 2

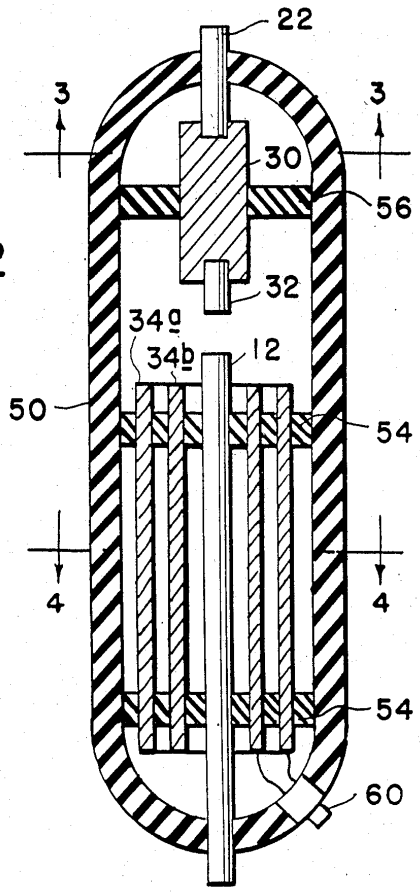

FIG. 3

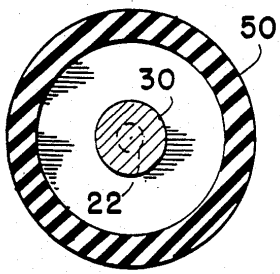

FIG. 4

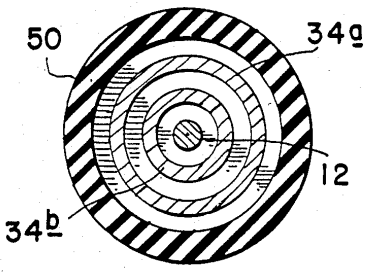

APPENDIX II

Three U.S. Patents by Dr. Nikola Tesla

1. USP # 593,138 - "Electrical Transformer"

2. USP # 685,958 - "Method Of Utilizing Radiant Energy"

3. USP # 787,412 - "Art of Transmitting Electrical Energy Through the Natural Medium"

UNITED STATES PATENT OFFICE.

NIKOLA TESLA, OF NEW YORK, N. Y.

ELECTRICAL TRANSFORMER.

SPECIFICATION forming part of Letters Patent No. 593,138, dated November 2, 1897.

Application filed March 20, 1897. Serial No. 628,453. (No model.)

To all whom it may concern:

Be it known that I, NIKOLA TESLA, a citizen of the United States, residing at New York, in the county and State of New York, have invented certain new and useful Improvements in Electrical Transformers, of which the following is a specification, reference being had to the drawings accompanying and forming a part of the same.

The present application is based upon an apparatus which I have devised and employed for the purpose of developing electrical currents of high potential, which transformers or induction-coils constructed on the principles heretofore followed in the manufacture of such instruments are wholly incapable of producing or practically utilizing, at least without serious liability of the destruction of the apparatus itself and danger to persons approaching or handling it.

The improvement involves a novel form of transformer or induction-coil and a system for the transmission of electrical energy by means of the same in which the energy of the source is raised to a much higher potential for transmission over the line than has ever been practically employed heretofore, and the apparatus is constructed with reference to the production of such a potential and so as to be not only free from the danger of injury from the destruction of insulation, but safe to handle. To this end I construct an induction-coil or transformer in which the primary and secondary coils are wound or arranged in such manner that the convolutions of the conductor of the latter will be farther removed from the primary as the liability of injury from the effects of potential increases, the terminal or point of highest potential being the most remote, and so that between adjacent convolutions there shall be the least possible difference of potential.

The type of coil in which the last-named features are present is the flat spiral, and this form I generally employ, winding the primary on the outside of the secondary and taking off the current from the latter at the center or inner end of the spiral. I may depart from or vary this form, however, in the particulars hereinafter specified.

In constructing my improved transformers I employ a length of secondary which is approximately one-quarter of the wave length of the electrical disturbance in the circuit including the secondary coil, based on the velocity of propagation of electrical disturbances through such circuit, or, in general, of such length that the potential at the terminal of the secondary which is the more remote from the primary shall be at its maximum. In using these coils I connect one end of the secondary, or that in proximity to the primary, to earth, and in order to more effectually provide against injury to persons or to the apparatus I also connect it with the primary.

In the accompanying drawings, Figure 1 is a diagram illustrating the plan of winding and connection which I employ in constructing my improved coils and the manner of using them for the transmission of energy over long distances. Fig. 2 is a side elevation, and Fig. 3 a side elevation and part section, of modified forms of induction-coil made in accordance with my invention.

A designates a core, which may be magnetic when so desired.

B is the secondary coil, wound upon said core in generally spiral form.

C is the primary, which is wound around in proximity to the secondary. One terminal of the latter will be at the center of the spiral coil, and from this the current is taken to line or for other purposes. The other terminal of the secondary is connected to earth and preferably also to the primary.

When two coils are used in a transmission system in which the currents are raised to a high potential and then reconverted to a lower potential, the receiving-transformer will be constructed and connected in the same manner as the first—that is to say, the inner or center end of what corresponds to the secondary of the first will be connected to line and the other end to earth and to the local circuit or that which corresponds to the primary of the first. In such case also the line-wire should be supported in such manner as to avoid loss by the current jumping from line to objects in its vicinity and in contact with earth—as, for example, by means of long insulators, mounted, preferably, on metal poles, so that in case of leakage from the line it will pass harmlessly to earth. In Fig. 1, where such a system is illustrated, a dynamo G is con-

veniently represented as supplying the primary of the sending or "step-up" transformer, and lamps H and motors K are shown as connected with the corresponding circuit of the receiving or "step-down" transformer.

Instead of winding the coils in the form of a flat spiral the secondary may be wound on a support in the shape of a frustum of a cone and the primary wound around its base, as shown in Fig. 2.

In practice for apparatus designed for ordinary usage the coil is preferably constructed on the plan illustrated in Fig. 3. In this figure L L are spools of insulating material upon which the secondary is wound—in the present case, however, in two sections, so as to constitute really two secondaries. The primary C is a spirally-wound flat strip surrounding both secondaries B.

The inner terminals of the secondaries are led out through tubes of insulating material M, while the other or outside terminals are connected with the primary.

The length of the secondary coil B or of each secondary coil when two are used, as in Fig. 3, is, as before stated, approximately one-quarter of the wave length of the electrical disturbance in the secondary circuit, based on the velocity of propagation of the electrical disturbance through the coil itself and the circuit with which it is designed to be used—that is to say, if the rate at which a current traverses the circuit, including the coil, be one hundred and eighty-five thousand miles per second, then a frequency of nine hundred and twenty-five per second would maintain nine hundred and twenty-five stationary waves in a circuit one hundred and eighty-five thousand miles long, and each wave length would be two hundred miles in length. For such a frequency I should use a secondary fifty miles in length, so that at one terminal the potential would be zero and at the other maximum.

Coils of the character herein described have several important advantages. As the potential increases with the number of turns the difference of potential between adjacent turns is comparatively small, and hence a very high potential, impracticable with ordinary coils, may be successfully maintained.

As the secondary is electrically connected with the primary the latter will be at substantially the same potential as the adjacent portions of the secondary, so that there will be no tendency for sparks to jump from one to the other and destroy the insulation. Moreover, as both primary and secondary are grounded and the line-terminal of the coil carried and protected to a point remote from the apparatus the danger of a discharge through the body of a person handling or approaching the apparatus is reduced to a minimum.

I am aware that an induction-coil in the form of a flat spiral is not in itself new, and this I do not claim; but

What I claim as my invention is—

1. A transformer for developing or converting currents of high potential, comprising a primary and secondary coil, one terminal of the secondary being electrically connected with the primary, and with earth when the transformer is in use, as set forth.

2. A transformer for developing or converting currents of high potential, comprising a primary and secondary wound in the form of a flat spiral, the end of the secondary adjacent to the primary being electrically connected therewith and with earth when the transformer is in use, as set forth.

3. A transformer for developing or converting currents of high potential comprising a primary and secondary wound in the form of a spiral, the secondary being inside of, and surrounded by, the convolutions of the primary and having its adjacent terminal electrically connected therewith and with earth when the transformer is in use, as set forth.

4. In a system for the conversion and transmission of electrical energy, the combination of two transformers, one for raising, the other for lowering, the potential of the currents, the said transformers having one terminal of the longer or fine-wire coils connected to line, and the other terminals adjacent to the shorter coils electrically connected therewith and to the earth, as set forth.

NIKOLA TESLA.

Witnesses:
M. LAWSON DYER,
G. W. MARTLING.

(No Model.) 2 Sheets—Sheet 1.

N. TESLA.

ELECTRICAL TRANSFORMER.

No. 593,138. Patented Nov. 2, 1897.

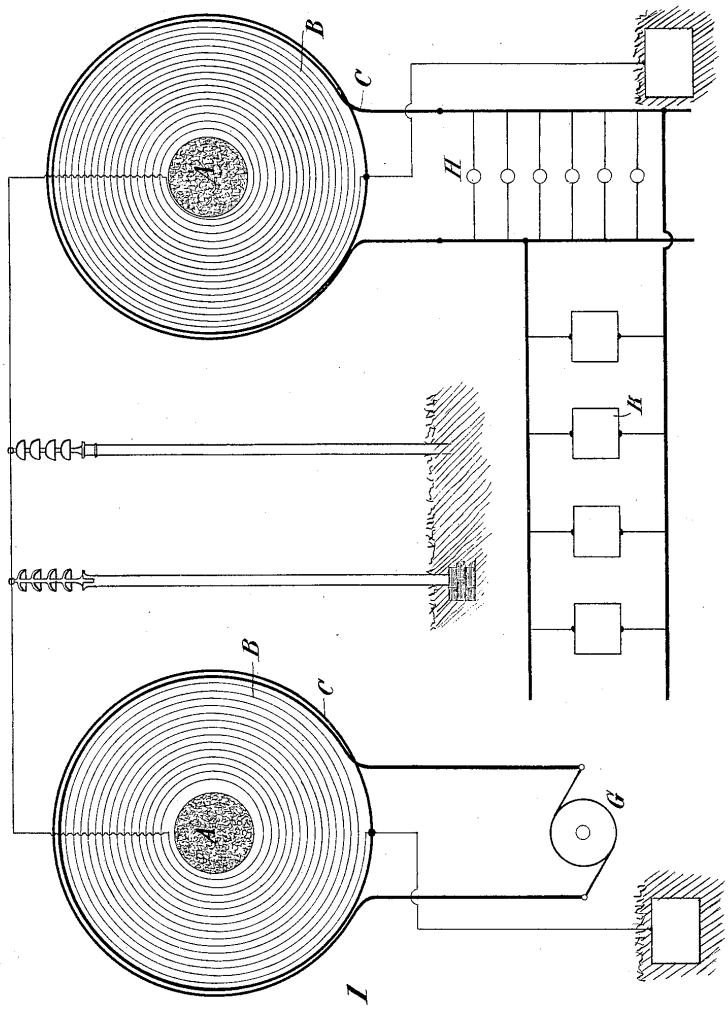

Fig. 1

WITNESSES

G. B. Lyons.

Edwin B. Hopkinson.

INVENTOR

Nikola Tesla

BY

Ken. Curtis & Page.

ATTORNEY

THE NORRIS PETERS CO., PHOTO-LITHO., WASHINGTON, D. C.

(No Model.) 2 Sheets—Sheet 2.

N. TESLA.

ELECTRICAL TRANSFORMER.

No. 593,138. Patented Nov. 2, 1897.

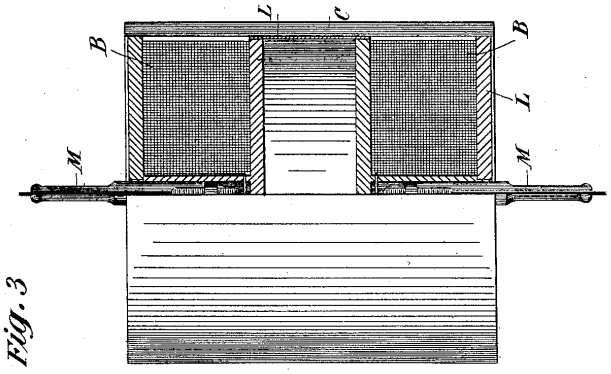

Fig. 3

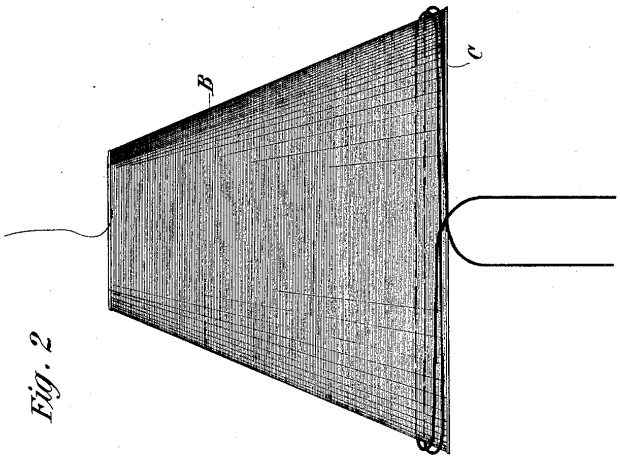

Fig. 2

WITNESSES

G. B. Lewis.

Edwin B. Hopkinson.

INVENTOR

Nikola Tesla

BY

Kerr, Curtis & Page

ATTORNEYS.

THE NORRIS PETERS CO., PHOTO-LITHO., WASHINGTON, D. C.

UNITED STATES PATENT OFFICE.

NIKOLA TESLA, OF NEW YORK, N. Y.

METHOD OF UTILIZING RADIANT ENERGY.

SPECIFICATION forming part of Letters Patent No. 685,958, dated November 5, 1901.

Application filed March 21, 1901. Serial No. 52,154. (No model.)

To all whom it may concern:

Be it known that I, NIKOLA TESLA, a citizen of the United States, residing at the borough of Manhattan, in the city, county, and State of New York, have invented certain new and useful Improvements in Methods of Utilizing Radiant Energy, of which the following is a specification, reference being had to the drawings accompanying and forming a part of the same.

It is well known that certain radiations—such as those of ultra-violet light, cathodic, Roentgen rays, or the like—possess the property of charging and discharging conductors of electricity, the discharge being particularly noticeable when the conductor upon which the rays impinge is negatively electrified. These radiations are generally considered to be ether vibrations of extremely small wave lengths, and in explanation of the phenomena noted it has been assumed by some authorities that they ionize or render conducting the atmosphere through which they are propagated. My own experiments and observations, however, lead me to conclusions more in accord with the theory heretofore advanced by me that sources of such radiant energy throw off with great velocity minute particles of matter which are strongly electrified, and therefore capable of charging an electrical conductor, or even if not so may at any rate discharge an electrified conductor either by carrying off bodily its charge or otherwise.

My present application is based upon a discovery which I have made that when rays or radiations of the above kind are permitted to fall upon an insulated conducting body connected to one of the terminals of a condenser, while the other terminal of the same is made by independent means to receive or to carry away electricity, a current flows into the condenser so long as the insulated body is exposed to the rays, and under the conditions hereinafter specified an indefinite accumulation of electrical energy in the condenser takes place. This energy after a suitable time interval, during which the rays are allowed to act, may manifest itself in a powerful discharge, which may be utilized for the operation or control of mechanical or electrical devices or rendered useful in many other ways.

In applying my discovery I provide a condenser, preferably of considerable electrostatic capacity, and connect one of its terminals to an insulated metal plate or other conducting body exposed to the rays or streams of radiant matter. It is very important, particularly in view of the fact that electrical energy is generally supplied at a very slow rate to the condenser, to construct the same with the greatest care. I use by preference the best quality of mica as dielectric, taking every possible precaution in insulating the armatures, so that the instrument may withstand great electrical pressures without leaking and may leave no perceptible electrification when discharging instantaneously. In practice I have found that the best results are obtained with condensers treated in the manner described in a patent granted to me February 23, 1897, No. 577,671. Obviously the above precautions should be the more rigorously observed the slower the rate of charging and the smaller the time interval during which the energy is allowed to accumulate in the condenser. The insulated plate or conducting body should present as large a surface as practicable to the rays or streams of matter, I having ascertained that the amount of energy conveyed to it per unit of time is under otherwise identical conditions proportionate to the area exposed, or nearly so. Furthermore, the surface should be clean and preferably highly polished or amalgamated. The second terminal or armature of the condenser may be connected to one of the poles of a battery or other source of electricity or to any conducting body or object whatever of such properties or so conditioned that by its means electricity of the required sign will be supplied to the terminal. A simple way of supplying positive or negative electricity to the terminal is to connect the same either to an insulated conductor, supported at some height in the atmosphere, or to a grounded conductor, the former, as is well known, furnishing positive and the latter negative electricity. As the rays or supposed streams of matter generally convey a positive charge to the first condenser-terminal, which is connect-

ed to the plate or conductor above mentioned, I usually connect the second terminal of the condenser to the ground, this being the most convenient way of obtaining negative electricity, dispensing with the necessity of providing an artificial source. In order to utilize for any useful purpose the energy accumulated in the condenser, I furthermore connect to the terminals of the same a circuit including an instrument or apparatus which it is desired to operate and another instrument or device for alternately closing and opening the circuit. This latter may be any form of circuit-controller, with fixed or movable parts or electrodes, which may be actuated either by the stored energy or by independent means.

The rays or radiations which are to be utilized for the operation of the apparatus above described in general terms may be derived from a natural source, as the sun, or may be artificially produced by such means, for example, as an arc-lamp, a Roentgen tube, and the like, and they may be employed for a great variety of useful purposes.

My discovery will be more fully understood from the following detailed description and annexed drawings, to which reference is now made, and in which—

Figure 1 is a diagram showing typical forms of the devices or elements as arranged and connected in applying the method for the operation of a mechanical contrivance or instrument solely by the energy stored; and Fig. 2 is a diagrammatical representation of a modified arrangement suitable for special purposes, with a circuit-controller actuated by independent means.

Referring to Fig. 1, C is the condenser, P the insulated plate or conducting body, which is exposed to the rays, and P′ another plate or conductor, all being joined in series, as shown. The terminals T T′ of the condenser are also connected to a circuit including a receiver R, which is to be operated, and a circuit-controlling device *d*, which in this case is composed of two very thin conducting-plates *t t′*, placed in close proximity and very mobile, either by reason of extreme flexibility or owing to the charater of their support. To improve their action, they should be inclosed in a receptacle from which the air may be exhausted. The receiver R is shown as consisting of an electromagnet M, a movable armature *a*, a retractile spring *b*, and a ratchet-wheel *w*, provided with a spring-pawl *r*, which is pivoted to armature *a*, as illustrated. The apparatus being arranged as shown, it will be found that when the radiations of the sun or of any other source capable of producing the effects before described fall upon the plate P an accumulation of electrical energy in the condenser C will result. This phenomenon, I believe, is best explained as follows: The sun as well as other sources of radiant energy throw off minute particles of matter positively electrified, which, impinging upon the plate P, communicate an electrical charge to the same. The opposite terminal of the condenser being connected to the ground, which may be considered as a vast reservoir of negative electricity, a feeble current flows continuously into the condenser, and inasmuch as these supposed particles are of an inconceivably small radius or curvature, and consequently charged to a relatively very high potential, this charging of the condenser may continue, as I have found in practice, almost indefinitely, even to the point of rupturing the dielectric. Obviously whatever circuit-controller be employed it should operate to close the circuit in which it is included when the potential in the condenser has reached the desired magnitude. Thus in Fig. 2 when the electrical pressure at the terminals T T′ rises to a certain predetermined value the plates *t t′*, attracting each other, close the circuit connected to the terminals. This permits a flow of current which energizes the magnet M, causing it to draw down the armature *a* and impart a partial rotation to the ratchet-wheel *w*. As the current ceases the armature is retracted by the spring *b* without, however, moving the wheel *w*. With the stoppage of the current the plates *t t′* cease to be attracted and separate, thus restoring the circuit to its original condition.

Many useful applications of this method of utilizing the radiations emanating from the sun or other source and many ways of carrying out the same will at once suggest themselves from the above description. By way of illustration a modified arrangement is shown in Fig. 2, in which the source S of radiant energy is a special form of Roentgen tube devised by me having but one terminal *k*, generally of aluminium, in the form of half a sphere with a plain polished surface on the front side, from which the streams are thrown off. It may be excited by attaching it to one of the terminals of any generator of sufficiently-high electromotive force; but whatever apparatus be used it is important that the tube be exhausted to a high degree, as otherwise it might prove entirely ineffective. The working or discharge circuit connected to the terminals T T′ of the condenser includes in this case the primary *p* of a transformer and a circuit-controller comprising a fixed terminal or brush *t* and a movable terminal *t′* in the shape of a wheel with conducting and insulating segments which may be rotated at an arbitrary speed by any suitable means. In inductive relation to the primary wire or coil *p* is a secondary *s*, usually of a much greater number of turns, to the ends of which is connected a receiver R. The terminals of the condenser being connected as indicated, one to an insulated plate P and the other to a grounded plate P′, when the tube S is excited rays or streams of matter are emitted from the same, which convey a positive charge to the plate P and condenser-terminal T, while terminal T′ is continuously receiving negative electricity from the plate

P'. This, as before explained, results in an accumulation of electrical energy in the condenser, which goes on as long as the circuit including the primary p is interrupted. Whenever the circuit is closed, owing to the rotation of the terminal t', the stored energy is discharged through the primary p, this giving rise in the secondary s to induced currents which operate the receiver R.

It is clear from what has been stated above that if the terminal T' is connected to a plate supplying positive instead of negative electricity the rays should convey negative electricity to plate P. The source S may be any form of Roentgen or Lenard tube; but it is obvious from the theory of action that in order to be very effective the electrical impulses exciting it should be wholly or at least preponderatingly of one sign. If ordinary symmetrical alternating currents are employed, provision should be made for allowing the rays to fall upon the plate P only during those periods when they are productive of the desired result. Evidently if the radiations of the source be stopped or intercepted or their intensity varied in any manner, as by periodically interrupting or rythmically varying the current exciting the source, there will be corresponding changes in the action upon the receiver R, and thus signals may be transmitted and many other useful effects produced. Furthermore, it will be understood that any form of circuit-closer which will respond to or be set in operation when a predetermined amount of energy is stored in the condenser may be used in lieu of the device specifically described with reference to Fig. 1, and also that the special details of construction and arrangement of the several parts of the apparatus may be very greatly varied without departure from the invention.

Having described my invention, what I claim is—

1. The method of utilizing radiant energy, which consists in charging one of the armatures of a condenser by rays or radiations, and the other armature by independent means, and discharging the condenser through a suitable receiver, as set forth.

2. The method of utilizing radiant energy, which consists in simultaneously charging a condenser by means of rays or radiations and an independent source of electrical energy, and discharging the condenser through a suitable receiver, as set forth.

3. The method of utilizing radiant energy, which consists in charging one of the armatures of a condenser by rays or radiations, and the other by independent means, controlling the action or effect of said rays or radiations and discharging the condenser through a suitable receiver, as set forth.

4. The method of utilizing radiant energy, which consists in charging one of the armatures of a condenser by rays or radiations and the other by independent means, varying the intensity of the said rays or radiations and periodically discharging the condenser through a suitable receiver, as set forth.

5. The method of utilizing radiant energy, which consists in directing upon an elevated conductor, connected to one of the armatures of a condenser, rays or radiations capable of positively electrifying the same, carrying off electricity from the other armature by connecting the same with the ground, and discharging the accumulated energy through a suitable receiver, as set forth.

6. The method of utilizing radiant energy, which consists in charging one of the armatures of a condenser by rays or radiations, and the other by independent means, and effecting by the automatic discharge of the accumulated energy the operation or control of a suitable receiver, as set forth.

NIKOLA TESLA.

Witnesses:
M. LAWSON DYER,
RICHARD DONOVAN.

455-619 AU 233 EX
FIP8106 OR 685,958

No. 685,958. Patented Nov. 5, 1901.

N. TESLA.

METHOD OF UTILIZING RADIANT ENERGY.

(Application filed Mar. 21, 1901.)

(No Model.)

Electric stepping motor energized by corpuscular energy from sun

Fig.1

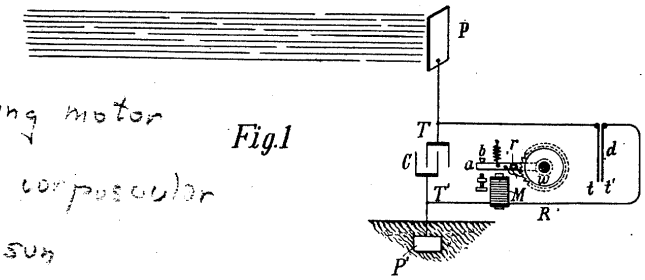

No rays.

Fig.2

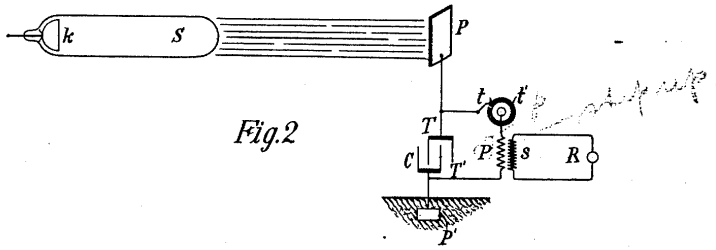

Witnesses:
Raphael Netter
M. Lawson Dyer

Nikola Tesla, Inventor
by Kerr, Page & Cooper Attys

No. 787,412. Patented April 18, 1905.

UNITED STATES PATENT OFFICE.

NIKOLA TESLA, OF NEW YORK, N. Y.

ART OF TRANSMITTING ELECTRICAL ENERGY THROUGH THE NATURAL MEDIUMS.

SPECIFICATION forming part of Letters Patent No. 787,412, dated April 18, 1905.

Application filed May 16, 1900. Renewed June 17, 1902. Serial No. 112,034.

To all whom it may concern:

Be it known that I, NIKOLA TESLA, a citizen of the United States, residing in the borough of Manhattan, in the city, county, and State of New York, have discovered a new and useful Improvement in the Art of Transmitting Electrical Energy Through the Natural Media, of which the following is a specification, reference being had to the drawings accompanying and forming a part of the same.

It is known since a long time that electric currents may be propagated through the earth, and this knowledge has been utilized in many ways in the transmission of signals and the operation of a variety of receiving devices remote from the source of energy, mainly with the object of dispensing with a return conducting-wire. It is also known that electrical disturbances may be transmitted through portions of the earth by grounding only one of the poles of the source, and this fact I have made use of in systems which I have devised for the purposes of transmitting through the natural media intelligible signals or power and which are now familiar; but all experiments and observations heretofore made have tended to confirm the opinion held by the majority of scientific men that the earth, owing to its immense extent, although possessing conducting properties, does not behave in the manner of a conductor of limited dimensions with respect to the disturbances produced, but, on the contrary, much like a vast reservoir or ocean, which while it may be locally disturbed by a commotion of some kind remains unresponsive and quiescent in a large part or as a whole. Still another fact now of common knowledge is that when electrical waves or oscillations are impressed upon such a conducting-path as a metallic wire reflection takes place under certain conditions from the ends of the wire, and in consequence of the interference of the impressed and reflected oscillations the phenomenon of "stationary waves" with maxima and minima in definite fixed positions is produced. In any case the existence of these waves indicates that some of the outgoing waves have reached the boundaries of the conducting-path and have been reflected from the same. Now I have discovered that notwithstanding its vast dimensions and contrary to all observations heretofore made the terrestrial globe may in a large part or as a whole behave toward disturbances impressed upon it in the same manner as a conductor of limited size, this fact being demonstrated by novel phenomena, which I shall hereinafter describe.

In the course of certain investigations which I carried on for the purpose of studying the effects of lightning discharges upon the electrical condition of the earth I observed that sensitive receiving instruments arranged so as to be capable of responding to electrical disturbances created by the discharges at times failed to respond when they should have done so, and upon inquiring into the causes of this unexpected behavior I discovered it to be due to the character of the electrical waves which were produced in the earth by the lightning discharges and which had nodal regions following at definite distances the shifting source of the disturbances. From data obtained in a large number of observations of the maxima and minima of these waves I found their length to vary approximately from twenty-five to seventy kilometers, and these results and certain theoretical deductions led me to the conclusion that waves of this kind may be propagated in all directions over the globe and that they may be of still more widely differing lengths, the extreme limits being imposed by the physical dimensions and properties of the earth. Recognizing in the existence of these waves an unmistakable evidence that the disturbances created had been conducted from their origin to the most remote portions of the globe and had been thence reflected, I conceived the idea of producing such waves in the earth by artificial means with the object of utilizing them for many useful purposes for which they are or might be found applicable. This problem was rendered extremely difficult owing to the immense dimensions of the planet, and consequently enormous movement of electricity or rate at which electrical energy had to be delivered in order to approximate, even in a remote degree, movements or rates which are manifestly attained in the displays of elec-

trical forces in nature and which seemed at first unrealizable by any human agencies; but by gradual and continuous improvements of a generator of electrical oscillations, which I have described in my Patents Nos. 645,576 and 649,621, I finally succeeded in reaching electrical movements or rates of delivery of electrical energy not only approximating, but, as shown in many comparative tests and measurements, actually surpassing those of lightning discharges, and by means of this apparatus I have found it possible to reproduce whenever desired phenomena in the earth the same as or similar to those due to such discharges. With the knowledge of the phenomena discovered by me and the means at command for accomplishing these results I am enabled not only to carry out many operations by the use of known instruments, but also to offer a solution for many important problems involving the operation or control of remote devices which for want of this knowledge and the absence of these means have heretofore been entirely impossible. For example, by the use of such a generator of stationary waves and receiving apparatus properly placed and adjusted in any other locality, however remote, it is practicable to transmit intelligible signals or to control or actuate at will any one or all of such apparatus for many other important and valuable purposes, as for indicating wherever desired the correct time of an observatory or for ascertaining the relative position of a body or distance of the same with reference to a given point or for determining the course of a moving object, such as a vessel at sea, the distance traversed by the same or its speed, or for producing many other useful effects at a distance dependent on the intensity, wave length, direction or velocity of movement, or other feature or property of disturbances of this character.

I shall typically illustrate the manner of applying my discovery by describing one of the specific uses of the same—namely, the transmission of intelligible signals or messages between distant points—and with this object reference is now made to the accompanying drawings, in which—

Figure 1 represents diagrammatically the generator which produces stationary waves in the earth, and Fig. 2 an apparatus situated in a remote locality for recording the effects of these waves.

In Fig. 1, A designates a primary coil forming part of a transformer and consisting generally of a few turns of a stout cable of inappreciable resistance, the ends of which are connected to the terminals of a source of powerful electrical oscillations, diagrammatically represented by B. This source is usually a condenser charged to a high potential and discharged in rapid succession through the primary, as in a type of transformer invented by me and not well known; but when it is desired to produce stationary waves of great lengths an alternating dynamo of suitable construction may be used to energize the primary A. C is a spirally-wound secondary coil within the primary having the end nearer to the latter connected to the ground E′ and the other end to an elevated terminal E. The physical constants of coil C, determining its period of vibration, are so chosen and adjusted that the secondary system E′ C E is in the closest possible resonance with the oscillations impressed upon it by the primary A. It is, moreover, of the greatest importance in order to still further enhance the rise of pressure and to increase the electrical movement in the secondary system that its resistance be as small as practicable and its self-induction as large as possible under the conditions imposed. The ground should be made with great care, with the object of reducing its resistance. Instead of being directly grounded, as indicated, the coil C may be joined in series or otherwise to the primary A, in which case the latter will be connected to the plate E′; but be it that none or a part or all of the primary or exciting turns are included in the coil C the total length of the conductor from the ground-plate E′ to the elevated terminal E should be equal to one-quarter of the wave length of the electrical disturbance in the system E′ C E or else equal to that length multiplied by an odd number. This relation being observed, the terminal E will be made to coincide with the points of maximum pressure in the secondary or excited circuit, and the greatest flow of electricity will take place in the same. In order to magnify the electrical movement in the secondary as much as possible, it is essential that its inductive connection with the primary A should not be very intimate, as in ordinary transformers, but loose, so as to permit free oscillation—that is to say, their mutual induction should be small. The spiral form of coil C secures this advantage, while the turns near the primary A are subjected to a strong inductive action and develop a high initial electromotive force. These adjustments and relations being carefully completed and other constructive features indicated rigorously observed, the electrical movement produced in the secondary system by the inductive action of the primary A will be enormously magnified, the increase being directly proportionate to the inductance and frequency and inversely to the resistance of the secondary system. I have found it practicable to produce in this manner an electrical movement thousands of times greater than the initial—that is, the one impressed upon the secondary by the primary A—and I have thus reached activities or rates of flow of electrical energy in the system E′ C E measured by many tens of thousands of horsepower. Such immense movements of elec-

BEST AVAILABLE COPY

tricity give rise to a variety of novel and striking phenomena, among which are those already described. The powerful electrical oscillations in the system E' C E being communicated to the ground cause corresponding vibrations to be propagated to distant parts of the globe, whence they are reflected and by interference with the outgoing vibrations produce stationary waves the crests and hollows of which lie in parallel circles relatively to which the ground-plate E' may be considered to be the pole. Stated otherwise, the terrestrial conductor is thrown into resonance with the oscillations impressed upon it just like a wire. More than this, a number of facts ascertained by me clearly show that the movement of electricity through it follows certain laws with nearly mathematical rigor. For the present it will be sufficient to state that the planet behaves like a perfectly smooth or polished conductor of inappreciable resistance with capacity and self induction uniformly distributed along the axis of symmetry of wave propagation and transmitting slow electrical oscillations without sensible distortion and attenuation.

Besides the above three requirements seem to be essential to the establishment of the resonating condition.

First. The earth's diameter passing through the pole should be an odd multiple of the quarter wave length—that is, of the ratio between the velocity of light—and four times the frequency of the currents.

Second. It is necessary to employ oscillations in which the rate of radiation of energy into space in the form of hertzian or electromagnetic waves is very small. To give an idea, I would say that the frequency should be smaller than twenty thousand per second, though shorter waves might be practicable. The lowest frequency would appear to be six per second, in which case there will be but one node, at or near the ground-plate, and, paradoxical as it may seem, the effect will increase with the distance and will be greatest in a region diametrically opposite the transmitter. With oscillations still slower the earth, strictly speaking, will not resonate, but simply act as a capacity, and the variation of potential will be more or less uniform over its entire surface.

Third. The most essential requirement is, however, that irrespective of frequency the wave or wave-train should continue for a certain interval of time, which I have estimated to be not less than one-twelfth or probably 0.08484 of a second and which is taken in passing to and returning from the region diametrically opposite the pole over the earth's surface with a mean velocity of about four hundred and seventy-one thousand two hundred and forty kilometers per second.

The presence of the stationary waves may be detected in many ways. For instance, a circuit may be connected directly or inductively to the ground and to an elevated terminal and tuned to respond more effectively to the oscillations. Another way is to connect a tuned circuit to the ground at two points lying more or less in a meridian passing through the pole E' or, generally stated, to any two points of a different potential.

In Fig. 2 I have shown a device for detecting the presence of the waves such as I have used in a novel method of magnifying feeble effects which I have described in my Patents Nos. 685,953 and 685,955. It consists of a cylinder D, of insulating material, which is moved at a uniform rate of speed by clockwork or other suitable motive power and is provided with two metal rings F F', upon which bear brushes a and a', connected, respectively, to the terminal plates P and P'. From the rings F F' extend narrow metallic segments s and s', which by the rotation of the cylinder D are brought alternately into contact with double brushes b and b', carried by and in contact with conducting-holders h and h', supported in metallic bearings G and G', as shown. The latter are connected to the terminals T and T' of a condenser H, and it should be understood that they are capable of angular displacement as ordinary brush-supports. The object of using two brushes, as b and b', in each of the holders h and h' is to vary at will the duration of the electric contact of the plates P and P' with the terminals T and T', to which is connected a receiving-circuit including a receiver R and a device d, performing the duty of closing the receiving-circuit at predetermined intervals of time and discharging the stored energy through the receiver. In the present case this device consists of a cylinder made partly of conducting and partly of insulating material c and c', respectively, which is rotated at the desired rate of speed by any suitable means. The conducting part c is in good electrical connection with the shaft S and is provided with tapering segments $f f'$, upon which slides a brush k, supported on a conducting-rod l, capable of longitudinal adjustment in a metallic support m. Another brush, n, is arranged to bear upon the shaft S, and it will be seen that whenever one of the segments f' comes in contact with the brush k the circuit including the receiver R is completed and the condenser discharged through the same. By an adjustment of the speed or rotation of the cylinder d and a displacement of the brush k along the cylinder the circuit may be made to open and close in as rapid succession and remain open or closed during such intervals of time as may be desired. The plates P and P', through which the electrical energy is conveyed to the brushes a and a', may be at a considerable distance from each other in the ground or one in the ground and the other in the air, preferably at some height. If but one plate is connected to earth and the other maintained at an

elevation, the location of the apparatus must be determined with reference to the position of the stationary waves established by the generator, the effect evidently being greatest in a maximum and zero in a nodal region. On the other hand, if both plates be connected to earth the points of connection must be selected with reference to the difference of potential which it is desired to secure, the strongest effect being of course obtained when the plates are at a distance equal to half the wave length.

In illustration of the operation of the system let it be assumed that alternating electrical impulses from the generator are caused to produce stationary waves in the earth, as above described, and that the receiving apparatus is properly located with reference to the position of the nodal and ventral regions of the waves. The speed of rotation of the cylinder D is varied until it is made to turn in synchronism with the alternate impulses of the generator, and the position of the brushes b and b' is adjusted by angular displacement or otherwise, so that they are in contact with the segments S and S' during the periods when the impulses are at or near the maximum of their intensity. These requirements being fulfilled, electrical charges of the same sign will be conveyed to each of the terminals of the condenser, and with each fresh impulse it will be charged to a higher potential. The speed of rotation of the cylinder d being adjustable at will, the energy of any number of separate impulses may thus be accumulated in potential form and discharged through the receiver R upon the brush k coming in contact with one of the segments f''. It will be understood that the capacity of the condenser should be such as to allow the storing of a much greater amount of energy than is required for the ordinary operation of the receiver. Since by this method a relatively great amount of energy and in a suitable form may be made available for the operation of a receiver, the latter need not be very sensitive; but when the impulses are very weak or when it is desired to operate a receiver very rapidly any of the well-known sensitive devices capable of responding to very feeble influences may be used in the manner indicated or in other ways. Under the conditions described it is evident that during the continuance of the stationary waves the receiver will be acted upon by current impulses more or less intense, according to its location with reference to the maxima and minima of said waves; but upon interrupting or reducing the flow of the current the stationary waves will disappear or diminish in intensity. Hence a great variety of effects may be produced in a receiver, according to the mode in which the waves are controlled. It is practicable, however, to shift the nodal and ventral regions of the waves at will from the sending-station, as by varying the length of the waves under observance of the above requirements. In this manner the regions of maximum and minimum effect may be made to coincide with any receiving station or stations. By impressing upon the earth two or more oscillations of different wave length a resultant stationary wave may be made to travel slowly over the globe, and thus a great variety of useful effects may be produced. Evidently the course of a vessel may be easily determined without the use of a compass, as by a circuit connected to the earth at two points, for the effect exerted upon the circuit will be greatest when the plates P P' are lying on a meridian passing through ground-plate E' and will be *nil* when the plates are located at a parallel circle. If the nodal and ventral regions are maintained in fixed positions, the speed of a vessel carrying a receiving apparatus may be exactly computed from observations of the maxima and minima regions successively traversed. This will be understood when it is stated that the projections of all the nodes and loops on the earth's diameter passing through the pole or axis of symmetry of the wave movement are all equal. Hence in any region at the surface the wave length can be ascertained from simple rules of geometry. Conversely, knowing the wave length, the distance from the source can be readily calculated. In like ways the distance of one point from another, the latitude and longitude, the hour, &c., may be determined from the observation of such stationary waves. If several such generators of stationary waves, preferably of different length, were installed in judiciously-selected localities, the entire globe could be subdivided in definite zones of electric activity, and such and other important data could be at once obtained by simple calculation or readings from suitably-graduated instruments. Many other useful applications of my discovery will suggest themselves, and in this respect I do not wish to limit myself. Thus the specific plan herein described of producing the stationary waves might be departed from. For example, the circuit which impresses the powerful oscillations upon the earth might be connected to the latter at two points. In this application I have advanced various improvements in means and methods of producing and utilizing electrical effects which either in connection with my present discovery or independently of the same may be usefully applied.

I desire it to be understood that such novel features as are not herein specifically claimed will form the subjects of subsequent applications.

What I now claim is—

1. The improvement in the art of transmitting electrical energy to a distance which consists in establishing stationary electrical waves in the earth, as set forth.

2. The improvement in the art of transmit-

ting electrical energy to a distance which consists in impressing upon the earth electrical oscillations of such character as to produce stationary electrical waves therein, as set forth.

3. The improvement in the art of transmitting and utilizing electrical energy which consists in establishing stationary electrical waves in the natural conducting media, and operating thereby one or more receiving devices remote from the source of energy, as set forth.

4. The improvement in the art of transmitting and utilizing electrical energy which consists in establishing in the natural conducting media, stationary electrical waves of predetermined length and operating thereby one or more receiving devices remote from the source of energy and properly located with respect to the position of such waves, as herein set forth.

5. The improvement in the art of transmitting and utilizing electrical energy, which consists in establishing in the natural conducting media, stationary electrical waves, and varying the length of such waves, as herein set forth.

6. The improvement in the art of transmitting and utilizing electrical energy, which consists in establishing in the natural conducting media stationary electrical waves and shifting the nodal and ventral regions of these waves, as described.

NIKOLA TESLA.

Witnesses:
M. LAWSON DYER,
BENJAMIN MILLER.

No. 787,412. PATENTED APR. 18, 1905.

N. TESLA.

ART OF TRANSMITTING ELECTRICAL ENERGY THROUGH THE NATURAL MEDIUMS.

APPLICATION FILED MAY 16, 1900. RENEWED JUNE 17, 1902.

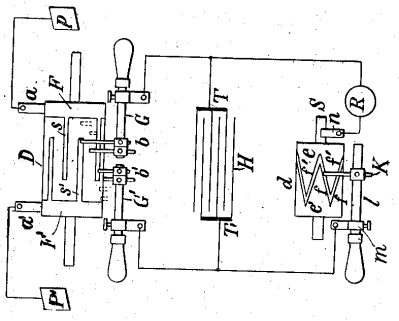

Fig. 2

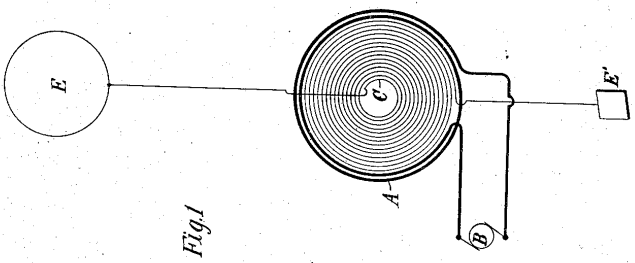

Fig. 1

Witnesses:
Raphael Netter
M. Lawson Dyer.

Nikola Tesla Inventor
by Kerr, Page & Cooper Attys

APPENDIX III

Two Articles by Dr. Peter Lindemann

1. "Thermodynamics and Free Energy", *Journal of Borderland Sciences Research,* Third Quarter, 1994.

2. "Tesla's Self-Acting Engine", *Journal of Borderland Sciences Research,* Third Quarter, 1995

THERMODYNAMICS & FREE ENERGY

by Peter A. Lindemann

The mainstream scientific community dismisses the idea of "Free Energy" or "Over-Unity" machines because they say that the behavior of such machines violates the "SecondLaw of Thermodynamics." The purpose of this article is to squarely face this issue from an alternative science point of view. Many engineers and inventors, working in the alternative energy field, still mistakenly believe that the "Laws of Thermodynamics" are universally true. For them, the "free energy" machine can only be a clever scientific slight of hand where the machine becomes "outlaw", breaking some fundamental universe law. For progress to be made in this field, the limitations and errors inherent in the "Laws of Thermodynamics" must be exposed. Only then will people realize that scientific experimentation is the only reliable tool for revealing the behavior of physical reality.

In order to bring this about, it will be helpful to quickly review some of the pivotal historical events which helped shape the modem scientific era with regards to thermodynamics. Before the year 1800, perpetual motion machines were considered possible and heat was not regarded as a form of energy. Both of these long standing assumptions, dating back thousands of years, were effectively toppled by the ideas of Hermann von Helmholtz in 1847 when he postulated that since no one had ever been able to build a working perpetual motion machine, that just probably, it was not possible. In order to deny the possibility of perpetual motion and hold the argument together, he had to assume that energy in the system was being conserved. It had long been observed that mechanical devices could not transfer energy perfectly. There was always some friction in the working parts. Friction was not only known to impede the transfer of energy in the machine, but it was known to produce heat. In order to simultaneously explain the work loss and the heat gain, so that **conservation** could be satisfied, Helmholtz postulated that heat was a form of energy consisting of a small, random motion in the molecules of matter. He went on to speculate that the loss of work in the machine as large scale motion was still present as heat in the small scale motion of the molecules in the material the machine was made o£ He suggested from this that both the heat and work must be considered energy, and that it was the total that was **conserved,** rather than the heat or work separately.

By 1850, Rudolf Clausius was able to synthesize the work of Helmholtz, James Joule, Sadi Camot and others to express a generalized statement that has become known as the "First Law of Thermodynamics." It states that "energy can be changed from one form to another, but it is neither created nor destroyed." By the time this thought became universally believed, it had totally transformed the intellectual landscape of mechanics, physics and energy dynamics. This was a clean break from the set of thoughts and assumptions that had come forward from antiquity. A new era in science had begun.

In understanding these historical developments, it is important to realize that besides the new theoretical explanation about the nature of heat, all of the other data that led to the new theoretical generalizations was derived experimentally. This can be illustrated by an observation made by Sadi Camot in his extensive work regarding the behavior of heat in machines. He states that "in all cases in which work is produced by the agency of heat, a quantity of heat is consumed that is proportional to the work done; and conversely, by the expenditure of an equal quantity of work, an equal quantity of heat is produced.' This statement by Carnot was based on hundreds of experimental measurements. Aftersuch convincing experimentation, it was not unreasonable for Clausius to conclude that heat could be converted into mechanical work It was, however, a theoretical leap of logic to conclude that energy, in general, could be changed from one form to another.

Before we go on, it is important, for our purposes, to be reminded that this new idea expressed as the "First Law of Thermodynamics" consists of a number of overlapping ideas and assumptions that can be expressed as follows:

1) Perpetual motion machines are impossible
2) The nature of heat is reduced to the random motions of molecular matter
3) Energy can be changed from one form

to another without any explanation as to how this conversion is actually accomplished in any specific case

4) Energy is not created in or destroyed by its passage through a mechanism
5) All forms of energy behave the same way

All of these ideas are fundamentally inherent in "The First Law of Thermodynamics." From an alternative science point of view, the experimental work of Carrot and joule will stand for all time. It is the intellectual overlay of Hehnholtz and Clausius, on this experimental work, where the problems are introduced. The theory of conversion and the ideas about the nature of heat will be taken up again later in this article, after more ground work has been laid.

The “Second Law of Thermodynamics” evolved out of further studies of the behavior of heat in closed systems. Remarkably, there is no one statement that is universally recognized as the definitive expression of this so called Law." Among the more popular statements which reflect the general understanding of the "Second Law of Thermodynamics" are the following. "In a closed system, entropy does not decrease', "The state of order in a closed system does not spontaneously increase without the application of work", "Among all the allowed states of a system with given values of energy, number of particles and constraints, one and only one is a stable equilibrium state", and It is impossible to construct a device that operates in a cycle and produces no other effect than the production of work and exchange of heat with a single reservoir." For those who can fathom the language, these statements clearly do not all express the same idea. Some have brad ramifications while others are more narrowly defined. All of these statements grew out of the idea, expressed fairly well as the last statement in the series, that a perpetual motion machine could not be made that operated on the a work/heat exchange when quantity of heat at the start After that amount of heat was converted to work and ture ambient temperature outside, no further

This is not only reasonable, but it is backed up by thousands of experiments.

narrowly defined as a statement that reflects upon the behavior of heat in author has no problem with agreeing completely.

Problems arise, however, with some of he more generalized interpretations of

dosed system does not spontaneously increase without the application of to

Researchers in the “free energy” field should not concern themselves with the outmoded ideas presented as the so-called "Laws of Thermodynamics". They embody an erroneous concept of a mechanical universe that mysteriously burst forth as a fully wound spring that has been unwinding ever since. It is a lifeless, empty vision that ignores the Source of the energy it started with and closes the minds of its adherents to the solutions at hand.

univer-

define our terms. We must understand what is meant by the "state of order" in a

boundaries of the "closure" of that system. In the first ca

system is generally regarded as the temperature.

Understanding this, we can rephrase this statement to say, that in a thermally

not increase unless work or energy is added to the syst

clearly defining our terms, and limiting the discussion to heat and work, we have a ment backed up by mountains of experimental data. If,

a generalized "quantity of energ

further define the "dosed system" as the Universe, we are led to believe that under

possible to create a condition where the

spontaneously. This is not true!

While it should be understood that

electrical equipment and heat generally do

of the planet does not. The Etheric Energy Field behaves in direct opposition to the he "Second Law of Thermodynamics" and

experimental data. One of the best documented examples of this is the

the "orgone accumulator', invented by Dr. Wilhelm Reich in 1940. He enclosure made of alternating layers of organic and inorganic

density of the Etheric Energy Field to be concentrated in the local area, without the ap work. This new and higher energy concent tion is then reflected as a spontaneous rise ture. This situation does not break the "Second

because we admit that new energy is en

It does break the "Second Law" in the gen

energy is entering without the application of

designed as an attempt to shield and isolate this energy from its presence in the

however, that he was not able to isolate y effects inside the accumulator be

penetrated the walls of the enclosure. He eventually realized that with regard to

to" close the system" in the local sense. This is important

directly refutes the assumption that the universe consists only of dosed systems at

Here then is a major problem with how the

Thermodynamics." When the discussion is

systems, the "Second Law of Thermody-

description of what happens under those

circumstances. It is when it is incorrectly assumed that all forms of energy behave this way and that enclosure of the system is possible at all levels, that grossly false conclusions can be drawn from what started out as experimentally derived observations. The scientific community-at-large obviates these problems simply by denying the existence of the Etheric Energy Field because it doesn't fit within their intellectual model Unfortunately for them, the mounting experimental evidence is making this increasingly hard to do.

Certainly, the best evidence to date of the existence of the Etheric Energy Field and its capability of being drawn to high concentrations without the application of work is demonstrated by the Etheric Weather Engineering techniques developed by Trevor James Constable and his Atmos Engineering group. As a member of this group, I have personally seen how simple Etheric Energy projectors, that do no work in the classical sense, can cause the etheric potentials in the atmosphere to rise to such high concentrations that millions of gallons of water **will** precipitate from the air for hours at a time.

When these Etheric Energy projectors are motorized, they draw a few hundred watts of electric energy. If the rain produced is dropped behind a dam and then released through a hydroelectric turbine, the electrical energy gain in the system can be enormous, on the order of 100,000 to 1. This method of creating "free energy" is a practical reality today. While I know of no community using this method for supplying its energy needs, it is eminently practicable. This example is theoretical in the sense that it has never been done, but it is a good model of other "free energy" systems under development around the world today.

Because the input to motorize the Etheric Energy projectors is electric and the output from the hydroelectric generators is electric, many people might mistake this for a so-called "over-unity' system There is nothing "over-unity" about this situation. Each and every component of the machinery used in this system has operational and frictional losses. The energy tapped by the system is the atmospheric ether and all of the energy gain in the system occurs outside of the equipment The fact that a small electric input yields a huge electric output does not mean the system is operating "over-unity.'

The problem with the `over-unity' concept goes back to the "First Law of Thermodynamics" and its inherent idea about the ability to convert one form of energy into another. This assumption includes the idea that these various conversions are accomplished at known and accepted rates of exchange. The idea of efficiency of conversion requires that the various rates of exchange are fixed and ad as an upper limit for the calculation of a ratio that approaches one (10096) where the numerator of this fraction is the "output' and the denominator is the "input." Since it is generally agreed that every machine experiences so-called losses, the idea that this ratio could be greater than one is, of course, ridiculous. This, coupled with the assumption in the "Second Law' that all energy systems are dosed, (meaning that no new energy can enter the system in-between the "input" and the "output") makes the idea of an "over-unity' system even more impossible than a mere perpetual motion machine. The line of logic embodied in the "Laws of Thermodynamics" is flawless. The problem doesn't exist in the logic, but it does illustrate that logic alone is not enough to reveal the truth. The problem exists in certain interpretations of these "Laws." Let's go back and look at the "First Law' again in light of our "over-unity" discussion. "Energy can be changed from one form to another, but it is neither created nor destroyed." This seems simple enough to understand. Underneath the surface, however, there is an assumption that this also means that energy will not spontaneously appear or disappear from the system. This is also a necessary condition if conservation of energy is to be satisfied LOCALLY as well as UNIVERSALLY.

This discussion becomes relevant, for instance, in describing the operation of the rotating magnet generator, the so called N-machine or Space Power Generator (SPG). Most of the important work in this field has been done by Bruce DePalma and Paramahamsa Tewari. The following is a brief summary. The rotation of the magnet sets up two force fields that act at right angles to each other. These two force fields are the racially distributed inertial frame of space (centrifugal force) and the intersecting axially distributed magnetic field of the rotating magnet The area of magnetized, polarized, inertial space appears to open up a region through which new energy can enter the system. When careful measurements are taken of current flows in the generator and in the external circuit, evidence suggests that electric charges are appearing at the periphery of the generator and disappearing at the center of the generator that do not actually ***pass through*** the generator. This experimental finding may explain why this configuration of electric generator experiences less mechanical drag than standard generator designs for each unit of electrical output produced. While energy is probably not being created or destroyed in the universal context, it is apparently appearing and disappearing from the machine during operation in the local space. This extra energy can be used to produce useful work in external circuits. Tewari has shown that twice as much hydrogen can be generated from an electrolysis cell run from the output of a SPG than if the cell is run directly. It is impossible to rationalize the behavior of this style of electric generator with the ideas of simple conversion and local conservation as they are postulated in the "First Law of Thermodynamics."

In a standard generator, if all losses are ignored for the moment, conventional *theory* says if 550 Ft Lbs of work are applied to the input shaft in one second, 746 Watts will be delivered at the output If I blindly believe that the generator simply has the mysterious ability to convert the mechanical energy into electrical energy, l don't ask the following questions: what is the mechanism of this conversion?, where does the torque go?, and where does the electrical energy come from? The apparent observation that the generated current produces a motoring effect that opposes the input torque should not be interpreted as a vindication of the conservation rule, but as an admission that this is an inefficient way to generate electricity. The Space Power Generator experiences far less drag per unit of electrical output than a standard generator.

This opens up a much larger discussion about the validity of the conversion idea all together. Are there actual and universal equivalents between the various forms of heat, mechanical work, and electricity? At this point, all we know for sure are the various measurements that have been taken from the devices that demonstrate these energy translations. For instance, in 1845, James joule found that if he placed a small paddle wheel in a bucket of water, he had to

apply 772.5 foot-pounds of mechanical work to spin the paddle wheel to raise the temperature of one pound of water, one degree Fahrenheit. This has led to very careful calculations that now set this "universal conversion' between mechanical work and heat at 778.26 FT-Lbs = 1 BTU. For paddle wheels in water, this is no doubt true. But what happens if paddle wheels are not used? Is there another method that does not use paddle wheels in water to convert ruechanical work to heat that does the job better, with less expenditure of work for the same heat gained? The answer is yes. In fact, there are numerous patents on record to accomplish this. One uses rotating parallel disks, not unlike the design of Tesla's turbine, to heat water with less than half the mechanical expenditure.

Once again, we have entered a new scientific era where the exact equivalence between mechanical work as foot-pounds, electrical work as watt-hours, and heat work as BTU's is not known! A wide variety of physical experiments have demonstrated a broad range of differing energy translation effects. The intellectual edifice of Clausius' conversion idea is crumbling; and no one should allow their thinking to be constrained by it any longer. The results of physical experiments have all but disproved it. The "First Law of Thermodynamics" should be seen only as an outmoded, intellectual MODEL that is not supported by all of the experimental data. Likewise, the idea of "over-unity" should be abandoned by those working on 'free energy" systems as it is an intellectual contradiction based both on the belief in conversion and the ability to circumvent it 'Over-unity" is an oxymoron that should be removed from the vocabulary of the alternative science community-This brings me back to the other problem presented earlier, namely, the nature of heat itself. Is heat, as Hermann Yon Helmholtz suggests, simply the random motion of molecular matter, or is it something completely different, whose presence causes molecular matter to exhibit random motion?. This is a very long and involved exploration that has already been handled masterfully by Rudolf Steiner in March of 1920 and published as his Warmth Course. I will summarize some of these ideas briefly.

The ancient's believed that there were four 'elements" that all physical reality was composed o£ These were Earth, Water, Air and Fire. In modern language, we can restate this as follows. There are four "states" that all matter appears as. These are solid, liquid, gas and heat. From an etheric science point of view, heat is the fourth state of matter and the transition state between matter and ether. Here is why. The only difference between the appearance of ice, water, or steam, for example, is its temperature or internal heat condition. Heat is absolutely fundamental in all considerations regarding matter because a change in heat

“Over-unity” is an oxymoron that should be removed from the vocabulary of the alternative science, community.

is the only element required to bang about a change of state from solid to liquid or from liquid to gas. In solid matter, the "atoms" are very close together and they bind each other in a way that allows them to hold their shape without being in a container. Heat can be added to the solid and its temperature will rise, correspondingly, until the melting point is reached At this point, adding more heat does not raise its temperature, but rather causes the material to change state as the solid melts into a liquid. Once all of the material is liquefied, adding more heat once again causes the temperature to rise. In liquid matter, the `atoms" are less close together and they bind each other in a way that allows the liquid to take the shape of whatever open topped container it is put in. As more heat is added to the liquid, the "atoms" move farther apart until the boiling point is reached. At this point, once again, adding more heat does not raise its temperature, butrather causes the material to change state as the liquid boils into a gas. Once all of the material is gaseous, adding more heat once again causes the temperature to rise. In gaseous matter, the "atoms" are so far apart that they will hold no shape at all and can only be contained by a complete enclosure. As more heat is added to the gas, the "atoms" become so dispersed that eventually, all thatis left is the heat_ The relationships between heat, temperature, matter and state are quite complex and cannot easily be reduced to simple explanations. Steiner's explorations of these relationships go into great detail, forming a seamless line of logic, backed up by a great deal of experimental data. Anyone interested in the nature of heat should study Rudolf Steiner's Warmth Course.

While this may make no sense to people trained in mechanistic thought processes, it is much closer to the truth about heat than the ideas of Helmholtz, with which Steiner was completely familiar. Helmholtz's idea that the nature of heat can be fully described by the random motions of molecular matter is far too simplistic. It ignores many of the well known behaviors of heat and matter as well as the existence of the Etheric Energy Field. It should be considered an "interesting' historical attempt to describe heat that is not supported by all of the experimental data.

For those who are not familiar with etheric science, it might be useful to review some of the characteristics of the Etheric EnergyField at this time. The Etheric Energy Field is made up of an extremely fine, mass-free fluid. Its activity can be divided into four main levels. These different aspects of the Ether have been called: the Warmth Ether, the Light Ether, the Tone (or Chemical) Ether, and the Life Ether. The Etheric Energy Field, as a whole, penetrates all matter, flows around and through the planet in well defined ways, exhibits elastic characteristics, and spontaneously moves from low concentrations to high concentrations before discharging. Understanding all of these factors has made engineering the weather a practical reality today. Many other amazing technologies also become possiblewhen the ether is fully understood. Likewise, many aspects of today's science that are still confusing eventually become clear.

One area of the greatest confusion lies in

the field of electrical science. The entire study ofwhat has been called "static electricity' is just a confusing encounter with the Light Ether as it behaves under certain circumstances. When fully understood, socalled "static electricity" will be seen to be neither static nor electricity. Normal electricity always flows from high potential to low potential and usually requires metallic conductors to flow along. On the other hand, "static electricity" does not discharge in the same way, and readily moves and collects on both conductors and insulators. Because "static electricity" behaves more like ether than electricity, I am going coin a term for this form of energy when it is present in wires and circuits. I call it “ETHERICITY”, to distinguish it from electricity all together.

In some ways, electricity behaves like electricity and in some ways it behaves differently. This has been the source of confusion. Up until now, most people have thought that there was only one kind of energy moving in electrical style circuits. This can now change. Electric appliances are designed to run on the discharge of electric potential from high to low, as in the draining of a battery to power a load. Properly designed circuits employing ethericlty run the appliance on the charging phase, as the energy spontaneously moves from low potential to high. Once the behaviors of etheric ity are clearly understood, it will be just as easy to run motors and lights from this source as we now do on electricity. In the 1940's, Dr. Wilhelm Reich demonstrated both lighting and motoring effects running on the Etheric Energy Field that he tapped using his "orgone accumulators" and special circuitry. Bit many other ways have been discovered to harness elecricity. The patent office has many designs of so-called "electrostatic' motors on file that work quite well They all run on ethencity, including some powered by circuits set up between the ground and a wire suspended high in the air. Many types of capacitors will spontaneously charge up on days with low relative humidity. This, too, is the classic appearance of ethecricity. I have seen how an "electrostatic" generator failed to do anything, one humid morning, until the moment that sunlight fell on the metallic surfaces. It then jumped to life. This was one of the most convincing demonstrations I have ever seen that "static electricity" (ethericity) is related to light (the Light Ether).

Here then are some of the known characteristics of elecricity that engineers and inventors should understand

1) Ethericity can be accumulated from the ground or the air at almost any location
2) It can be "reflected' down wires (this is not conduction)
3) Flows of electricity can be interrupted by diodes and Mosfet type devices
4) Its potential can be raised or lowered in air core transformers
5) It can be stored in capacitors
6) It will operate neon style lighting; when the potential is high enough
7) It can create fields of opposing forces in coils and motor windings

"Free energy' is here in the Etheric Energy Field. Etheric Energy can be accumulated without the expenditure of work, and then released in controlled ways to perform work, in properly engineered systems. Understanding this fact presents engineers and inventors the most direct and dear path to follow. Systems that precipitate heat directly from the ether have already been demonstrated in Dr. Reich's accumulator. Placing one of these accumulators over a moving body of water increases the precipitation of heat dramatically. This is a rich vane of truth waiting to reveal its secrets to the systematic researcher. Likewise, power circuits that run on ethericity for lighting and motive power are waiting to be perfected.

Researchers in the "free energy" field should not concern themselves with the ideas presented as the so-called "Laws of Thermodynamics". The "First Law", with its ideas of conversion and conservation, is essentially incorrect There is no way to convert mechanical energy into etheric energy, actually make one into the other. This one example is enough to disprove the universal interpretation of the conversion idea all together. Beyond this, the energy forms that can be transmuted by the action o£ certain kinds of machines, apparently do so within a wide range of activity, depending on the geometry of the machine. This throws into question the idea of conservation, especially local conservation. These experimental findings render the "First Law" without any basis in fact The real universe does not behave in accordance with these ideas.

In the narrow case, the "Second Law' is really only a statement which describes the behavior of heat under certain circumstances. **This** much is basically true, as it is founded on experimental observation. In the general case, however, the "Second Law' is an intellectual extrapolation that does not accurately describe the behavior of physical reality under all circumstances. It embodies an erroneous concept of a mechanical ini- verse which mysteriously burst forth (Big Bang) as a fully wound spring that has been unwinding ever since ("in a dosed system, entropy does not decrease"). It is a lifeless, empty vision that ignores the Source of the energy it started with and doses the minds of its adherents to the solutions at hand.

Learning how to tap the non-thermodynamic forces in nature is the hope of the future. A modem society needs light, heat, and motive power, all of which can be derived directly from the Etheric Energy Field without consuming limited physical resources owned by monopoly interests.

In this society, theoretical science has been elevated to a very high level of prestige. Under this system of belief, the real needs of humanity have not been well served. Itis time that these incorrect theories be carefully examined and discarded, so that experimental science can once again take the leading role in defining the nature of physical reality. Only then will Etheric Science be free to offer its bounty of solutions to a desperate and waiting world.

Bibliography

1) The Cancer Biopathy by Dr. Wilhelm Reich (Vol. II of The Discovery of the Orgone), Farar, Straus and Girous, 1973
2) Man or Matter by Ernst Lehrs, Rudolf Sterner Press, London, 1958
3) The Cosmic Pulse of Life byTrevor James Constable, BSRF, Garberville, California, 1991
4) Warmth Course by Rudolf Sterner, Mercury Press, Spring Valley, New York
5) Etheric Formative Forces in Cosmos, Earth and Man by Guenter Wachsmuth, 1932, reprinted 1993 by BSRF, Garberville, California 6) The Vril Compendium by Gerry Vassilatos, Vols I-VII released 1993, BSRF, Garberville, California
7) Loom of the Future - The *Weather Engineering Work of Trevor James Constable* (an interview book/ photo album soon to be released), BSRF, Garberville, California, 1994

Tesla's “Self-Acting” Engine

by Peter A. Lindemann

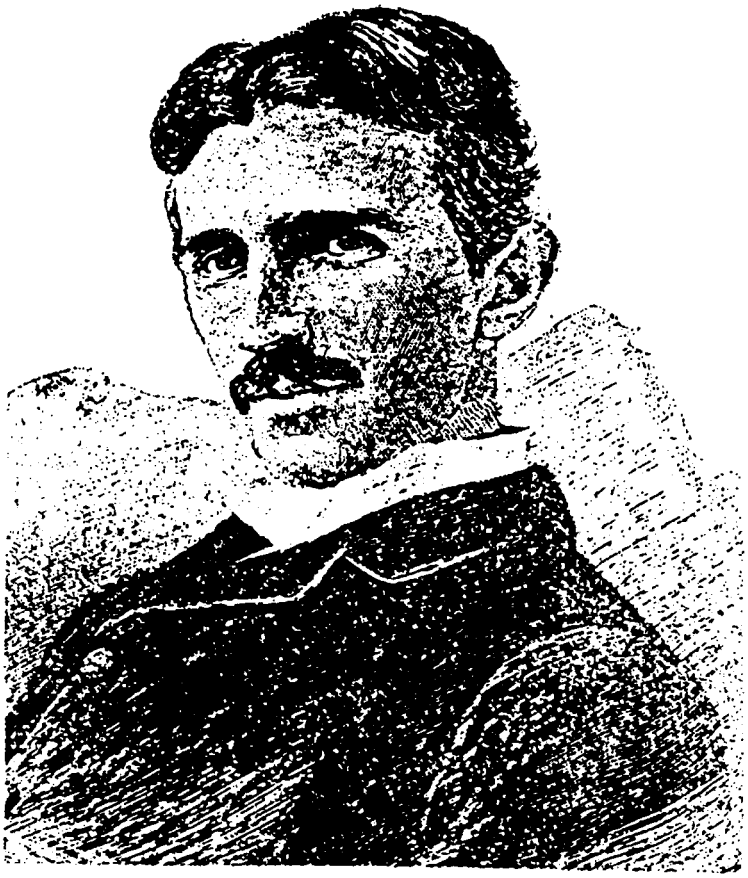

In June of the year 1900, Nikola Tesla published an article in Century Magazine titled *The Problems of Increasing Human Energy.* Never be fore or since has there been such a masterful and exhaustive discussion of how to extract useful energy from the environment In its original magazine format, this article is 31 pages in length. After discussing every known method for energy generation then in use, Tesla begins a discussion of "a departure from known methods - possibility of a 'self-acting' engine - the ideal way of obtaining motive power".

Beginning on page 200, and continuing to page 204 of the original Century Magazine article, Tesla outlines his ideas. The following quotations are extracted from this section of the article.

"...a survey of the various ways of utilizing the energy of the medium convinced me, ..that to arrive at a practical solution, a radical departure from the methods then known had to be made. The windmill, the solar engine, the engine driven by terrestrial heat, had their limitations in the amount of power obtainable. Some new way had to be discovered which would enable us to get more energy."

"..the problem was to discover some new method which would make it possible both to utilize more of the heat-energy of the medium and also to draw it away from the same at a more rapid rate."

"I was vainly endeavoring to form an idea of how this might be accomplished, when I read some statements from Carnot and Lord Kelvin which meant virtually that it is impossible for an inanimate mechanism or *self-acting machine to cool a portion of the medium below the temperature of the surrounding, and operate by the heat extracted.* These statements interested me intensely. Evidently, a living being could do this very thing, and since the experiences of my early life ... convinced me that a living being is only an automaton, or, otherwise stated, a 'self-acting engine,' I came to the conclusion that it was possible to construct a machine which would do the same."

"Suppose that an extremely low temperature could be maintained by some process in a given space; the surrounding medium would then be compelled to give off heat, which could be converted into mechanical or other form of energy, and utilized. By realizing such a plan, we should be enabled to get at any point of the globe a continuous supply of energy, day and night."

"A closer investigation of the principles involved, and calculation, now showed that the result I aimed at could not be reached in a practical manner by ordinary machinery, as I had in the beginning expected. This led me, as a next step, to the study of a type of engine generally designated as `turbine,' which at first seemed to offer better chances for a realization of the idea."

"..my conclusions showed that if an engine of a peculiar kind could be brought to a high degree of perfection, the plan I had conceived was realizable, and I resolved to proceed with the development of such an engine, the primary object of which was to secure the greatest economy of transformation of heat into mechanical energy."

"(In early 1895) Dr. Carl Linde announced the liquefaction of air by a self-cooling process, demonstrating that it was practicable to proceed with the cooling until liquefaction of air took place. This was the only experimental proof which I was still wanting that energy was obtainable from the medium in the manner contemplated by me."

"Much 01 "3 task on which I have labored so long remains to be done. A number of mechanical details are still to be perfected and some difficulties of a different nature to be mastered, and I cannot

hope to produce a self-acting machine deriving energy from the ambient medium for a long time yet, even if all my expectations should materialize."

Testa's idea was radical. Design a machine powered by the heat resident in the ambient air that produced an output of mechanical energy and refrigeration simultaneously. He called it "the ideal way of obtaining motive power". Such a machine would be able to produce useful energy at any time of the day or night, at any location on the globe, drawing upon the vast heat reservoir of the atmosphere. He worked for years toward this goal and absolutely convinced himself, by the power of his own nearly infallible logic, of its potential reality.

To my knowledge, Testa never finished the work on this invention. But his pioneering efforts clearly conceived the idea, as well as outlined most of the engineering problems to be solved.

It's remarkable to me, that with all of the attention given to Nikola Testa in the last few years, I have not heard any mention of this aspect of his work. Volumes have been written on so-called "free energy" devices, wherein the would-be inventors are searching in vain for a ubiquitously present, inexhaustible source of energy from which their machines may draw. Imaginative theories have postulated "tachyons", "zero-points", and "magnetism" as the source of choice from which to extract energy. And, while future work may prove that these sources can be made practical, it is still surprising that the most readily available, untapped source of energy from which to draw, atmospheric heat, has been all but neglected.

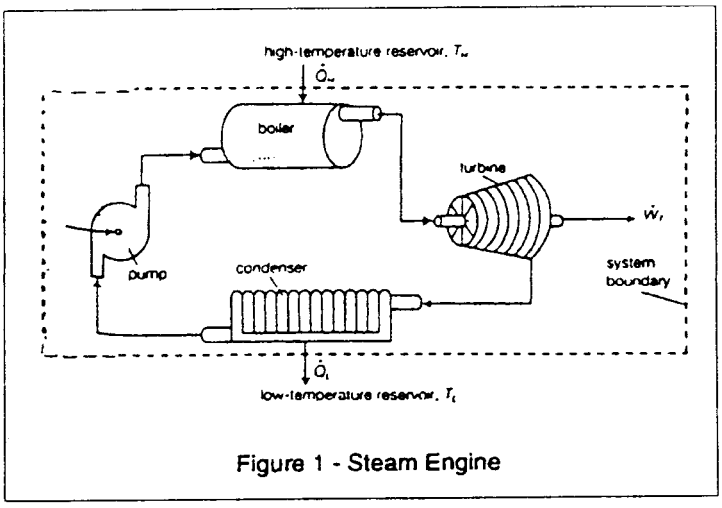

Figure 1 - Steam Engine

The patent office is crammed with hundreds of "permanent magnet motors", none of which work, to my knowledge. Testa dismisses these ideas with a short stroke, "We may even find ways of applying forces such as magnetism or gravity for driving machinery without using any other means. Such realizations, while highly improbable, are not impossible." While leaving the door open, Tesla considers this area of research worthy of only a brief mention. He then goes on for four pages, discussing his efforts to tap the ambient temperature as a source of power.

Tesla was a master thinker and inventor. His mind penetrated the ultimate solution to humanity's energy needs. Like a scientific Sherlock Holmes using the power of his own deduction, when all of the 'improbables' and "impossibles" were removed, what remained must be the solution. Atmospheric heat was the largest untapped reservoir of energy on the planet Tesla refused to overlooked the obvious. He was that rare fish capable of contemplating the water he was swimming in. Few were able to follow his ideas. Even fewer were able to follow-up on his work

When I first read this article from Century Magazine, I was fascinated by the section on the "self-acting" engines. But Testa's idea of gaining energy by dumping heat into an inexhaustible "cold spot" seemed unrealizable. My mind could not penetrate the unknowns involved. Luckily, other minds were not so dull.

To begin to get an understanding of Tesla's idea, let's fast look at the fundamentals of fluid dynamics. Follow along if you can. If a gaseous fluid (like air) is confined in a closed space, three properties of this gas become interdependent upon each other. These properties are: 1) Volume, how much space it occupies, 2) Temperature, how much heat it contains, and 3) Pressure, how much force it exerts on the walls of the container. For instance, if the container remains the same size and we increase the temperature of the air inside, the pressure it exerts on the walls also rises. Likewise, if the volume stays the same and we reduce the pressure, the temperature must also drop. Conversely, if we increase the volume, either the temperature or the pressure will go down (or both). From this we may see that temperature and pressure are directly related to each other, but are inversely related to the volume. This is how Dr. Carl Linde liquefied air by his "self-cooling" process. By manipulating the pressure and volume of a quantity of gaseous air, he was able to liquefy some of it by taking advantage of these principles.

One hundred years ago, this was an amazing accomplishment. Now, these processes are used commercially every day. To illustrate, we need go no further than a useful novelty available in a mail order catalog. Many compressed gases are available today. One of them is carbon dioxide. For less than $30, you can buy a special nozzle that attaches to a canister of compressed carbon dioxide. When the gas is released through this nozzle, "dry ice" is formed. Room temperature compressed carbon dioxide, when allowed to expand rapidly under controlled conditions, refrigerates itself to form "dry ice'. By this method, about 20% of the compressed gas can be liquefied, or in this case, solidified. This illustrates what Tesla refers to as the "self-cooling" process that allowed Dr. Carl Linde to liquefy air in 1895. Tesla immediately understood the implications. He states that his invention could be designed to run on liquid air, but that "its temperature is unnecessarily low." All that was needed was a working fluid that changed from a gas to a liquid at a temperature below the ambient

Dr. Linde's process required a mechanical energy input to compress the air. But Tesla knew that mechanical processes were reversible. The machine he envisioned used the methods discovered by Dr. Linde, but ran them backwards. To understand how this can be done, we need go no further than our own medicine cabinet If room temperature isopropyl alcohol is rubbed on your

arm, it "feels . cold". It feels cold because it is evaporating. It is evaporating because of a change in "vapor pressure" between the closed bottle and the open air. This change of pressure is "forcing" the evaporation to take place. But, for the alcohol to evaporate (change from a liquid to a gas), it needs heat Since no heat source is available, it must get the necessary heat from the immediate environment So, it extracts that heat from your arm. That's why your arm feels cold (refrigeration). Believe it or not, Tesla saw an energy machine in all of this. The one part of the equation that is not so apparent here, is that the volume of space occupied by the evaporating alcohol is increasing dramatically. This increasing volume of gas could be confined to form a pressure that could drive an engine. Tesla saw it all, and knew what it meant He spent years trying to solve all of the engineering problems associated with it, so that a future society could have all of its energy needs supplied by these processes.

So, what does Tesla's "self-acting" engine really look like? In order to visualize this, it may be helpful first to review the workings of two different kinds of heat systems that operate on "two phase fluids"; the first is a steam engine and the second is a heat pump. In Figure 1, water is boiled in the boiler to become pressurized steam. This high temperature, high pressure steam is then used to drive a turbine engine to convert the vapor pressure into mechanical work. The low temperature, low pressure steam coming out of the turbine is then allowed to cool further in the condenser, becoming liquid water again. The liquid water is then pumped back into the boiler, and the cycle begins again. In this example, we can easily see that the system takes in heat at the boiler and gives off heat at the condenser.

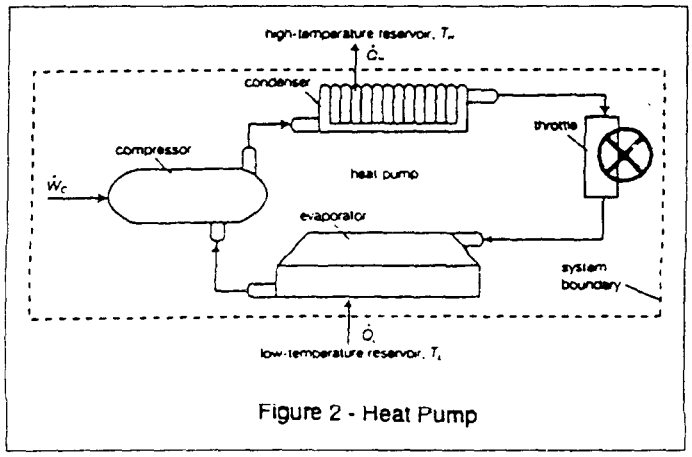

Figure 2 - Heat Pump

Figure 2 is a diagram of a heat pump. Low temperature vapor enters the compressor and is compressed to a high pressure and temperature. This vapor is then condensed to a liquid in the condenser. Then, the pressurized liquid is throttled through a special nozzle to low pressure and temperature. Releasing the pressure allows some of the liquid to vaporize. This "two phase fluid", part liquid and part vapor, now enters the evaporator, in which the remaining liquid is boiled. The resultant low temperature vapor then enters the compressor, completing the cycle. In this example, we can see that the system takes in heat at the evaporator and gives off heat at the condenser.

There is a high degree of similarity between these two systems. Both have a location where heat is absorbed (boiler and evaporator). Both have a location where the pressure is released (turbine and throttle). Both have a location where heat is released (condensers). And both have a *location* where the working fluid is pressurized to complete the cycle (pump and compressor). In the steam engine, heat energy is added to the system at the boiler and mechanical energy is removed from the system at the turbine. That amount of heat that was not successfully transformed to mechanical energy at the turbine, is then thrown away at the, condenser and represents a loss of efficiency. In the heat pump, mechanical energy is added to the system at the compressor and heat energy is removed from the system at the condenser. That amount of liquid that vaporizes at the throttle represents a loss of efficiency because no heat is absorbed from .the environment to create the vaporization.

The main difference between these two systems is that the steam engine runs on a working fluid (water) that changes phase from a liquid to a gas at 212' Fahrenheit, whereas the heat pump runs on a working fluid (freon) that changes phase from a liquid to a gas at -50' Fahrenheit Tesla's "self-acting" engine was a unique hybrid between these two systems.

Tesla knew that his system, if it was to work, had to be much more efficient than standard systems. In our steam engine example, for instance, if we could elimi nate the condenser, the system would be more efficient In our heat pump example, if we integrated the throttle into the evaporator so that all of the expansion happened there, the system would be more efficient. These are the .kinds of engineering problems Tesla was attempting to solve. By taking elements from both of these systems, we can begin to understand what Tesla had discovered. Figure 3 shows such a system. It runs on a low temperature phase change material, like freon. The first element acts like a combination of the pump and the compressor. Its job is to take the "two phase fluid", part liquid and part vapor, and compress it until it is 100% liquid. The next element of the system takes the place of the boiler. It is really a heat exchanger that allows the working fluid to absorb heat from the environment without boiling. On the outside, this element gets cold and produces refrigeration effects. On the inside, the working fluid is gaining in its stored heat potential. The next element of the system is the throttle or control valve. This component allows the pressurized, liquid material to experience a rapid pressure drop that promotes instant vaporization of some of the working fluid. Since no heat source is available here, the heat of vaporization must come from the stored heat in the working fluid itself. This rapidly expanding vapor/liquid combination is then harnessed by the next element of the system, the turbine. As Tesla said, this is "an engine of a peculiar kind." It must be able to efficiently operate on the part vapor, part liquid material coming through it When the volumetric expansion is spent, the "two phase fluid" is then re-compressed to a liquid, and the cycle starts over. Tesla envisioned that his turbine would produce more mechanical energy than the compressor required, so that the s*ystem would* produce a net gain of mechanical energy.

Unlike the two previously discussed systems, Tesla's "self acting" engine has no condenser where unused heat is thrown away. Heat energy is absorbed from the ambient, mechanics energy is removed from the turbine and all of the remaining hea potential in the working fluid is recycled for the next go-round.

The whole thing is an amazing idea, but will it work? Can the necessary efficiencies actually be attained? In the 1930's, an Austrian engineer named Rudolf Doczekal successfully built a steam engine that ran on a combination of water and benzene. To his amazement, it could run with or without the condenser in the system. Its efficiency was well above the calculated Carnot Cycle maximum. He was granted a Patent on this system in 1939 (NR. 155744). It took 39 years, and someone else to prove it, but Tesla was right; a high efficiency heat engine could be run without a condenser.

But can all of the other efficiencies be attained? Is there a device that can efficiently compress the "two phase fluid" back to a liquid?

The answer is yes. Today, the Copeland Scroll Compressor can perform this function. Is there a turbine that can run efficiently on the rapidly expanding "two phase fluid?" Again, the answer is yes. Impulse turbines with the pressure nozzles built directly into the housing can perform this function, so that all of the fluid expansion occurs inside the engine. In fact, all of the other engineering problems have been solved.

Today there are working models of machines that convert the ambient temperature of the air into mechanical energy, while creating refrigeration as a by-product One hundred years after Tesla identified the "ideal way of gaining motive power", the gigantic reservoir of atmospheric heat has been successfully tapped. Real "free energy" has arrived on planet Earth. Obviously, the working details of these machines are complicated. The average reader will not have a thorough understanding of them without considerable study. Still, the basic principles upon which they operate have been outlined here with only minor oversimplification.

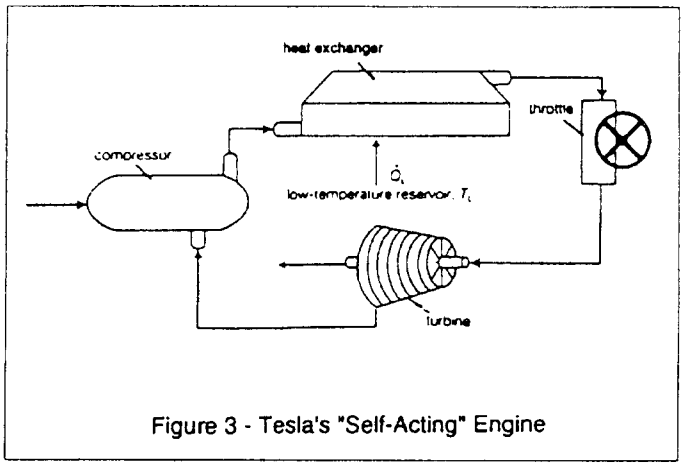

Figure 3 - Tesla's "Self-Acting" Engine

As of June, 1995, there are two slightly different processes being pursued that give the same basic result The first is a machine designed by a German physicist, Dr. Bernhard Schaeffer, along with a Russian inventor, Albert Serogodski, building on the pioneering work of Doczekal. Their latest machine has been granted German Patent # DE 42 44 016 A 1, and is capable of being embodied as a refrigerator that produces electricity rather than consumes it The other development is based on the work of Canadian engineer, George Wiseman, building more directly on Tesla's ideas. Wiseman has written three books that fully outline the principles of this amazing invention. His **HEAT Technology Series, Book 1, Book 2, and Book 3** are must reading for anyone interested in this subject In these books, turbine designs are explored along with complete mathematical models of the system. For copies of these books, write to: Eagle Research, Box 145, Eastport, ID, 83826 USA. Each book is $15, post paid in North America. Add $5 more for overseas postage. Buy both books, as they cover different aspects of the system.

One hundred years ago, Nikola Tesla discovered the ultimate way to harness the energy of the sun by converting the ambient temperature of the air into mechanical energy. He outlined the entire method and even solved many of the difficulties himself. But forces during his lifetime prevented him from completing this work. His "self-acting" engine is a true fuel-less power plant, capable of producing useful energy at any location on the planet, at any time of the day or night It has taken one hundred years for others to finally complete this work, but that day has now arrived. While I do not wish to minimize the irreplaceable and outstanding contributions by Wiseman, Schaeffer, Doczekal and others, still, it is to Tesla that the future owes its thanks once again.

When Tesla first conceived of this invention, he started by deciding that the basic assumptions embodied in the "Second Law of Thermodynamics" were not universally true and therefore could not act as an absolute limiting case. These assumptions are built into our lives today by the idea that if I want the temperature of my environment to be either warmer or cooler than the ambient, I have to expend energy to do it Tesla was not afraid to question or even disagree with these assumptions. Even the stature and historic "authority" of Sadi Carnot and Lord Kelvin, whose work was the basis of the "Laws of Thermodynamics", did not intimidate him. He was willing to rethink all of the fundamentals in the light of his own experiments and insight, and draw his own conclusions. By doing so, he was able to conceive of an invention that has taken 100 years to create.

REFERENCES

Encyclopedia Britannica, section on Thermodynamics, 1989 edition

Planetary Association for Clean Energy, *PACE Newsletter, Vol. 8, #2* Feb., *1995*

Schaeffer, B and Bauer, *W. D., How to win energy with an adiabatic-isochoricadiabatic cycle over labile states of the P-V-diagram,* WDB-Verlag, *1991*

Tesla, Nikola, *The Problems of Increasing Human Energy,* The Century Illustrated monthly Magazine, June, *1900*

Wisemann, George, *Heat Technology, Books 1, 2, and 3,* Eagle Research, 1994

PETER LINDEMANN became interested in alternative energy and health technologies in 1973. He joined BSRF in 1975, studying Radionics, Bio-circuits, implosion, and related subjects. *His* first article was published in BORDERLANDS in 1986 on ELF devices. In 1988, he joined the Board of Directors of BSRF as well as helped supervise research at Borderland Labs. Since that time he has written 14 Fizix Korner columns, and contributed numerous articles on MWO research, Radionics, and Free Energy.

REFERENCES

Books:

Adams, Dr. Robert, *Applied Modern 20th Century Aether Science, Aetheric E nergy*

Tesla, Dr. Nikola, *Nikola Tesla: Lectures, Patents, and Articles*, Tesla Museum Reprint, Belgrade, Yugoslavia.

Vassilatos, Gerry, *Secrets of Cold War Technology, Project HAARP and Beyond,*

Wachsmuth, Dr. Guenther, *The E theric Formative Forces in Cosmos, Earth & Man, A Path of Investigation Into The World of The L iving,* Volume I, Borderland Science Research Foundation Reprint.

Periodicals:

"Man Creates Engine That Consumes No Fuel", *The National Tattler,* July 1, 1973.

"Miracle No-Fuel Electric Engine", *The National Tattler,* July 8, 1973.

"2 Inventors Work To Devise Fuelless Car", *The National Tattler,* January 24, 1974.

"Inventor of World's First No-Fuel Engine is Suppressed by LA District Attorney", *The National Tattler,* March 16, 1975.

"Auto Motor Inventor Just Fueling Around?", *The Progressive Bulletin,* July 8, 1977.

"EMS - Electronic Power That Could Change The World's Economic Power Picture", *NewsReal* June 1977 .

United States Patents:

593,138 - November 2, 1897; "Electrical Transformer".
685,958 - November 5,1901; "Method of Utilizing Radiant Energy".
787,412 - April 18, 1905; "Art of Transmitting Electrical Energy Through the Natural Mediums".

3,890,548 - June 17, 1975; "Pulsed Capacitor Discharge Electric Engine".
4,595,975 - June 17, 1986; "Efficient Power Supply Suitable for Inductive Loads".
4,661,747 - April 28, 1987; "Efficient Electrical Conversion Switching Tube Suitable for Inductive Loads".

Videos:

Free Energy Research; Borderland Labs, Borderland Science Research Foundation, *1987.*

Transverse and *Longitudinal Electric* Waves; Borderland Labs, Borderland Science Research Foundation, *1988.*

Tesla's Longitudinal Electricity ; Borderland Labs, Borderland Science Research Foundation, *1988.*

Other:

Previously unpublished photographs by Tom Valentine.

Still unreleased video footage of experiments in Borderland Labs, Borderland Science Research Foundation, *1986-1989.*

"Technological, historical, and philosophical dynamite! Clarifies the fundamental juncture at which electric power technology diverged from Tesla's liberating genius."—*Trevor James Constable (Researcher and Author)*

"From my own experiments, once you split the electron from the etheric carrier, the problem then is not generating tremendous energy, its limiting it! A lot of my incoming spikes are well over 1000 amps. Definitely, this kind of circuit, its for real!"—*Brian Desborough (Free Energy Researcher)*

". . .Dr. Lindemann explains Tesla's bizarre electricity experiments, which no amount of exposure to Tesla's work, from all other sources, has ever done for me. ...The video tape [book] gives enough general and specific information that a detailed design can confidently be built by any competent tinkerer with a working knowledge of electronics and electric power circuitry."—*Ken Rauen (Infinite Energy Magazine, January 2001)*

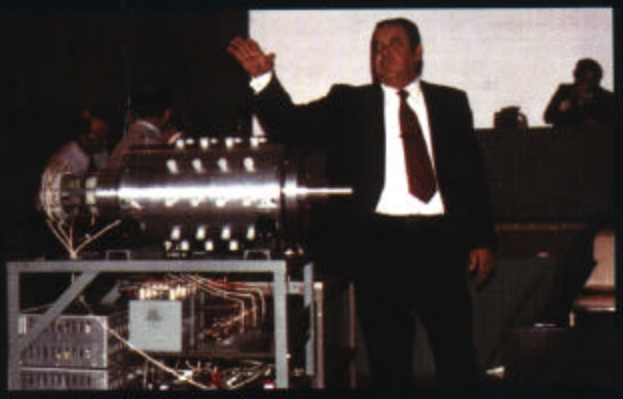

Ed Gray in 1977

Conversion Tube Close Up

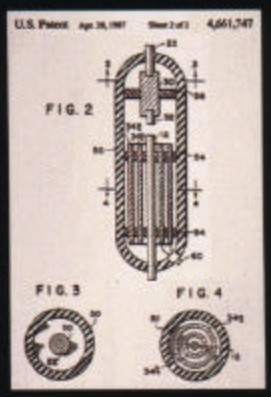

Conversion Tube Patent

Finally, long-time Free Energy researcher Dr. Peter Lindemann steps up and tells all. This four part book explains exactly how Edwin Gray, Sr. produced what he called "cold electricity." Mr. Gray discovered that the discharge of a high voltage capacitor could be shocked into releasing a huge, radiant, electrostatic burst. This energy spike was produced by his circuitry and captured in a special device Mr. Gray called his "conversion element switching tube." The non-shocking, cold form of energy that came out of this "conversion tube" powered all of his demonstrations, appliances, and motors, as well as recharged his batteries. Mr. Gray referred to this process as "splitting the positive."

Even more remarkable, Dr. Lindemann found that Nikola Tesla actually discovered this same effect, back in 1889. With the information in this book, you will learn what it took Tesla, Gray and others decades to figure out. Using articles, patents, diagrams, and photographs, Dr. Lindemann unravels the mystery until the whole method is fully revealed. Now you can do it too! This is the information free energy enthusiasts have been waiting for.

Nikola Tesla

Wardenclyffe Tower

UNITED STATES PATENT OFFICE.

NIKOLA TESLA, OF NEW YORK, N. Y.

METHOD OF INSULATING ELECTRIC CONDUCTORS.

SPECIFICATION forming part of Reissued Letters Patent No. 11,865 dated October 23, 1900.

Original No. 655,838, dated August 14, 1900. Application for reissue filed September 21, 1900. Serial No. 30,722.

To all whom it may concern:

Be it known that I, NIKOLA TESLA, a citizen of the United States, residing in the borough of Manhattan, in the city, county, and State of New York, have invented certain new and useful Improvements in Methods of Insulating Electric Conductors, of which the following is a specification, reference being had to the accompanying drawings.

It has long been known that many substances which are more or less conducting when in the fluid condition become insulators when solidified. Thus water, which is in a measure conducting, acquires insulating properties when converted into ice. The existing information on this subject, however, has been heretofore of a general nature only and chiefly derived from the original observations of Faraday, who estimated that the substances upon which he experimented, such as water and aqueous solutions, insulate an electrically-charged conductor about one hundred times better when rendered solid by freezing, and no attempt has been made to improve the quality of the insulation obtained by this means or to practically utilize it for such purposes as are contemplated in my present invention. In the course of my own investigations, more especially those of the electric properties of ice, I have discovered some novel and important facts, of which the more prominent are the following: first, that under certain conditions, when the leakage of the electric charge ordinarily taking place is rigorously prevented, ice proves itself to be a much better insulator than has heretofore appeared; second, that its insulating properties may be still further improved by the addition of other bodies to the water; third, that the dielectric strength of ice or other frozen aqueous substance increases with the reduction of temperature and corresponding increase of hardness, and, fourth, that these bodies afford a still more effective insulation for conductors carrying intermittent or alternating currents, particularly of high rates, surprisingly-thin layers of ice being capable of withstanding electromotive forces of many hundreds and even thousands of volts. These and other observations have led me to the invention of a novel method of insulating conductors, rendered practicable by reason of the above facts and advantageous in the utilization of electrical energy for industrial and commercial purposes.

This method consists in insulating an electric conductor by freezing or solidifying and maintaining in such state the material surrounding or contiguous to the conductor, using for the purpose a gaseous cooling agent circulating through one or more suitable channels extending through or in proximity to the said material.

In the practical carrying out of my method I may employ a hollow conductor and pass the cooling agent through the same, thus freezing the water or other medium in contact with or close to such conductor, or I may use expressly for the circulation of the cooling agent an independent channel and freeze or solidify the adjacent substance in which any number of conductors may be embedded. The conductors may be bare or covered with some material which is capable of keeping them insulated when it is frozen or solidified. The frozen mass may be in direct touch with the surrounding medium, or it may be in a degree protected from contact with the same by an inclosure more or less impervious to heat. The cooling agent may be any kind of gas, as atmospheric air, oxygen, carbonic acid, ammonia, illuminating-gas, or hydrogen. It may be forced through the channel by pressure or suction produced mechanically or otherwise. It may be continually renewed or indefinitely used, being driven back and forth or steadily circulated in closed paths under any suitable conditions as regards pressure, density, temperature, and velocity.

To conduce to a better understanding of the invention, reference is now made to the accompanying drawings, in which—

Figures 1, 3, 6, 7, 8, and 9 illustrate in longitudinal section typical ways of carrying out my invention; and Figs. 2, 4, 5, and 10, in section, or partly so, constructive details to be described.

In Fig. 1, C is a hollow conductor, such as a steel tube, laid in a body of water and communicating with a reservoir r', but electrically insulated from the same at j. A pump or compressor p, of any suitable construction, connects r' with another similar tank r^2, provided with an inlet-valve v^2. The air or other

gas which is used as the cooling agent entering through the valve v^2 is drawn through the tank r^2 and pump p into the reservoir r', escaping thence through the conductor C under any desired pressure which may be regulated by a valve v'. Both the reservoirs r' and r^2 are kept at a low temperature by suitable means, as by coils or tubes t' t' and t^2 t^2, through which any kind of refrigerating fluid may be circulated, some provision being preferably made for adjusting the flow of the same, as by valves v'. The gas continuously passing through the tube or conductor C being very cold will freeze and maintain in this state the water in contact with or adjacent to the conductor and so insulate it. Flanged bushings i' i^2, of non-conducting material, may be used to prevent the leakage of the current which would otherwise occur, owing to the formation of a superficial film of moisture over the ice projecting out of the water. The tube being kept insulated by this means may then be employed in the manner of an ordinary telegraphic or other cable by connecting either or both of the terminals b' b^2 in a circuit including the earth.

In many cases it will be of advantage to cover the hollow conductor with a thick layer of some cheap material, as felt, this being indicated by C^3 in Fig. 2. Such a covering, penetrable by water, would be ordinarily of little or no use; but when embedded in the ice it improves the insulating qualities of the same. In this instance it furthermore serves to greatly reduce the quantity of ice required, its rate of melting, and the influx of heat from the outside, thus diminishing the expenditure of energy necessary for the maintenance of normal working conditions. As regards this energy and other particulars of importance they will vary according to the special demands in each case.

Generally considered, the cooling agent will have to carry away heat at a rate sufficient to keep the conductor at the desired temperature and to maintain a layer of the required thickness of the substance surrounding it in a frozen state, compensating continually for the heat flowing in through the layer and wall of the conductor and that generated by mechanical and electrical friction. To meet these conditions, its cooling capacity, which is dependent on the temperature, density, velocity, and specific heat, will be calculated by the help of data and formulæ familiar to engineers. Air will be, as a rule, suitable for the use contemplated; but in exceptional instances some other gas, as hydrogen, may be resorted to, which will permit a much greater rate of cooling and a lower temperature to be reached. Obviously whichever gas be employed it should before entering the hollow conductor or channel be thoroughly dried and separated from all which by condensation and deposition or otherwise might cause an obstruction to its passage. For these purposes apparatus may be employed which is well known and which it is unnecessary to show in detail.

Instead of being wasted at the distant station the cooling agent may be turned to some profitable use. Evidently in the industrial and commercial exploitation of my invention any kind of cooling agent capable of meeting the requirements may be conveyed from one to another station and there utilized for refrigeration, power, heating, lighting, sanitation, chemical processes, or any other purpose to which it may lend itself, and thus the revenue of the plant may be increased.

As to the temperature of the conductor, it will be determined by the nature of its use and considerations of economy. For instance, if it be employed for the transmission of telegraphic messages, when the loss in electrical friction may be of no consequence, a very low temperature may not be required; but if it be used for transmitting large amounts of electrical energy, when the frictional waste may be a serious drawback, it will be desirable to keep it extremely cold. The attainment of this object will be facilitated by any provision for reducing as much as possible the flowing in of the heat from the surrounding medium. Clearly the lower the temperature of the conductor the smaller will be the loss in electrical friction; but, on the other hand, the colder the conductor the greater will be the influx of heat from the outside and the cost of cooling agent. From such and similar considerations the temperature securing the highest economy will be ascertained.

Most frequently in the distribution of electricity for industrial purposes, as in my system of power transmission by alternate currents, more than one conductor will be required, and in such cases it may be convenient to circulate the cooling agent in a closed path formed by the conductors. A plan of this kind is illustrated in Fig. 3, in which C' and C^2 represent two hollow conductors embedded in a frozen mass underground and communicating, respectively, with the reservoirs R' and R^2, which are connected by a reciprocating or other suitable pump P. Cooling coils or tubes T' T' and T^2 T^2, with regulating-valves v' v^2 are employed, which are similar to and serve the same purpose as those shown in Fig. 1. Other features of similarity, though unnecessary, are illustrated to facilitate an understanding of the plan. A three-way valve V^2 is provided, which when placed with its lever 1 as indicated allows the cooling agent to enter through the tubes u' u^2 and pump P, thus filling the reservoirs R' R^2 and hollow conductors C' C^2; but when turned ninety degrees the valve shuts off the communication to the outside through the tube u' and establishes a connection between the reservoir R^2 and pump P through the tubes u^2 and u^2, thus permitting the cooling agent to be circulated in the closed path C' C^2 R^2 u^2 u^2 P R' by the

action of the pump. Another valve V', of suitable construction, may be used for regulating the flow of the cooling agent. The conductors C' C^2 are insulated from the reservoirs R' R^2 and from each other at the joints J' J^2 J^3, and they are furthermore protected at the places where they enter and leave the ground by flanged bushings I' I' I^2 I^3, of insulating material, which extend into the frozen mass in order to prevent the current from leaking, as above explained. Binding-posts B' B' and B^2 B^2 are provided for connecting the conductors to the circuit at each station.

In laying the conductors, as C' C^2, whatever be their number, a trench will generally be dug and a trough, round or square, as T, of smaller dimensions than the trench, placed in the same, the intervening space being packed with some material (designated by M M M) more or less impervious to heat, as sawdust, ashes, or the like. Next the conductors will be put in position and temporarily supported in any convenient manner, and, finally, the trough will be filled with water or other substance W, which will be gradually frozen by circulating the cooling agent in the closed path, as before described. Usually the trench will not be level, but will follow the undulations of the ground, and this will make it necessary to subdivide the trough in sections or to effect the freezing of the substance filling it successively in parts. This being done and the conductors thus insulated and fixed, a layer of the same or similar material M M M will be placed on the top and the whole covered with earth or pavement. The trough may be of metal, as sheet-iron, and in cases where the ground is used as the return-circuit it may serve as a main, or it may be of any kind of material more or less insulating. Figs. 4 and 5 illustrate in cross-section two such underground troughs T' and T'', of sheet metal, with their adiathermanous inclosures, (designated M' and M'', respectively,) each trough containing a single central hollow conductor, as C' C''. In the first case the insulation W' is supposed to be ice obtained by freezing water preferably freed of air in order to exclude the formation of dangerous bubbles or cavities, while in the second case the frozen mass W'' is some aqueous or other substance or mixture highly insulating when in this condition.

It should be stated that in many instances it may be practicable to dispense with a trough by resorting to simple expedients in the placing and insulating of the conductors. In fact, for some purposes it may be sufficient to simply cover the latter with a moist mass, as cement or other plastic material, which so long as it is kept at a very low temperature and frozen hard will afford adequate insulation.

Another typical way of carrying out my invention, to which reference has already been made, is shown in Fig. 6, which represents the cross-section of a trough, the same in other respects as those before shown, but containing instead of a hollow conductor any kind of pipe or conduit L. The cooling agent may be driven in any convenient manner through the pipe for the purpose of freezing the water or other substance filling the trough, thus insulating and fixing a number of conductors *c c c*. Such a plan may be particularly suitable in cities for insulating and fixing telegraph and telephone wires or the like. In such cases an exceedingly-low temperature of the cooling agent may not be required, and the insulation will be obtained at the expense of little power. The conduit L may, however, be used simultaneously for conveying and distributing any kind of gaseous cooling agent for which there is a demand through the district. Obviously two such conduits may be provided and used in a similar manner as the conductors C' C^2.

It will often be desirable to place in the same trough a great number of wires or conductors serving for a variety of purposes. In such a case a plan may be adopted which is illustrated in Fig. 7, showing a trough similar to that in Fig. 6 with the conductors in cross-section. The cooling agent may be in this instance circulated, as in Fig. 3 or otherwise, through the two hollow conductors C^3 and C^4, which if found advantageous may be covered with a layer of cheap material *m m*, such as will improve their insulation, but not prevent the freezing or solidification of the surrounding substance W. The tubular conductors C' C^2, preferably of iron, may then serve to convey heavy currents for supplying light and power, while the small ones *c' c' c'*, embedded in the ice or frozen mass, may be used for any other purposes.

While my invention contemplates, chiefly, the insulation of conductors employed in the transmission of electrical energy to a distance, it may be, obviously, otherwise usefully applied. In some instances, for example, it may be desirable to insulate and support a conductor in places as is ordinarily done by means of glass or porcelain insulators. This may be effected in many ways by conveying a cooling agent either through the conductor or through an independent channel and freezing or solidifying any kind of substance, thus enabling it to serve the purpose. Such an artificial insulating-support is illustrated in Fig. 8, in which *a* represents a vessel filled with water or other substance *w*, frozen by the agent circulating through the hollow conductor C'', which is thus insulated and supported. To improve the insulation on the top, where it is most liable to give way, a layer of some substance *w'*, as oil, may be used, and the conductor may be covered near the support with insulation *i i*, as shown, the same extending into the oil, for reasons well understood.

Another typical application of my inven-

tion is shown in Fig. 9, in which P' and S' represent, respectively, the primary and secondary conductors, bare or insulated, of a transformer, which are wound on a core N and immersed in water or other substance W, contained in a jar H, and, as before stated, preferably freed of air by boiling or otherwise. The cooling agent is circulated in any convenient manner, as through the hollow primary P', for the purpose of freezing the substance W. Flanged bushings *d d* and oil-cups *e e*, extending into the frozen mass, illustrate suitable means for insulating the ends of the two conductors and preventing the leakage of the currents. A transformer as described is especially fitted for use with currents of high frequency when a low temperature of the conductors is particularly desirable, and ice affords an exceptionally-effective insulation.

It will be understood that my invention may be applied in many other ways, that the special means here described will be greatly varied according to the necessities, and that in each case many expedients will be adopted which are well known to engineers and electricians and on which it is unnecessary to dwell. However, it may be useful to state that in some instances a special provision will have to be made for effecting a uniform cooling of the substance surrounding the conductor throughout its length. Assuming in Fig. 1 the cooling agent to escape at the distant end freely into the atmosphere or into a reservoir maintained at low pressure, it will in passing through the hollow conductor C move with a velocity steadily increasing toward the end, expanding isothermally, or nearly so, and hence it will cause an approximately-uniform formation of ice along the conductor. In the plan illustrated in Fig. 3 a similar result will be in a measure attained, owing to the compensating effect of the hollow conductor C' and C², which may be still further enhanced by reversing periodically the direction of the flow in any convenient manner; but in many cases special arrangements will have to be employed to render the cooling more or less uniform. For instance, referring to Figs. 4, 5, and 6, instead of a single channel two concentric channels L' and L² may be provided and the cooling agent passed through one and returned through the other, as indicated, diagrammatically, in Fig. 10. In this and any similar arrangement when the flow takes place in opposite directions the object aimed at will be more completely attained by reducing the temperature of the circulating cooling agent at the distant station, which may be done by simply expanding it into a large reservoir, as R², or cooling it by means of a tube or coil T³ or otherwise. Evidently in the case illustrated the concentric tubes may be used as independent conductors if insulated from each other and from the ground by the frozen or solidified substance.

Generally in the transmission of electrical energy in large amounts, when the quantity of heat to be carried off may be considerable, refrigerating apparatus thoroughly protected against the inflow of heat from the outside, as usual, will be employed at both the stations and when the distance between them is very great also at intermediate points, the machinery being advantageously operated by the currents transmitted or cooling agent conveyed. In such cases a fairly-uniform freezing of the insulating substance will be attained without difficulty by the compensating effect of the oppositely-circulating cooling agents. In large plants of this kind when the saving of electrical energy in the transmission is the most important consideration or when the chief object is to reduce the cost of the mains by the employment of cheap metal, as iron or otherwise, every effort will be made to maintain the conductors at the lowest possible temperature, and well-known refrigerating processes, as those based on the regenerative principle, may be resorted to, and in this and any other case the hollow conductors or channels instead of merely serving the purpose of conveying the cooling agent may themselves form active parts of the refrigerating apparatus.

From the above description it will be readily seen that my invention forms a fundamental departure in the principle from the established methods of insulating conductors employed in the industrial and commercial application of electricity. It aims, broadly, at obtaining insulation by the continuous expenditure of a moderate amount of energy instead of securing it only by virtue of an inherent physical property of the material used as heretofore. More especially, its object is to provide, when and wherever required, insulation of high quality, of any desired thickness, and exceptionally cheap, and to enable the transmission of electrical energy under conditions of economy heretofore unattainable and at distances until now impracticable by dispensing with the necessity of using costly conductors and insulators.

What I claim as my invention is—

1. The method of insulating electric conductors herein described which consists in imparting insulating properties to material surrounding or contiguous to the said conductor by the continued action thereon of a gaseous cooling agent, as set forth.

2. The method of insulating electric conductors herein described which consists in reducing to and maintaining in a frozen or solidified condition the material surrounding or contiguous to the said conductor by the action thereon of a gaseous cooling agent maintained in circulation through one or more channels as set forth.

3. The method of insulating electric conductors herein described which consists in surrounding or supporting the conductor by material which acquires insulating properties when in a frozen or solidified state, and main-

taining the material in such a state by the circulation through one or more channels extending through it of a gaseous cooling agent, as set forth.

4. The method of insulating an electric conductor which consists in surrounding or supporting said conductor by a material which acquires insulating properties when frozen or solidified, and maintaining the material in such state by passing a gaseous cooling agent continuously through a channel in said conductor, as set forth.

5. The method of insulating electric conductors, which consists in surrounding or supporting the said conductors by a material which acquires insulating properties when in a frozen or solidified state, and maintaining the material in such state by the continued application thereto of a gaseous cooling agent, as set forth.

6. The method of insulating conductors herein set forth which consists in surrounding or supporting the conductors by a material which acquires insulating properties when in a frozen or solidified state, and maintaining the material in such state by the circulation of a gaseous cooling agent through a circuit of pipes or tubes extending through the said material as set forth.

7. The method of insulating electric conductors which consists in laying or supporting the conductors in a trough or conduit filling the trough with a material which acquires insulating properties when frozen or solidified, and then causing a gaseous cooling agent to circulate through one or more channels extending through the material in the trough so as to freeze or solidify the material, as set forth.

8. The method of insulating electric conductors which consists in embedding the same in a moist or plastic compound which acquires insulating properties when in a frozen or solidified state, and maintaining the compound in such state by circulating a gaseous cooling agent through one or more channels extending through the compound, as set forth.

9. The method of insulating electric conductors which consists in laying or supporting the conductors in a trough or conduit, filling the trough with a material which acquires insulating properties when frozen or solidified, protecting the trough from the surrounding medium in which it is laid by an adiathermanous inclosure, and then freezing or solidifying the material surrounding the conductors and maintaining the same in such state by circulating a gaseous cooling agent through one or more channels extending through the same, as set forth.

NIKOLA TESLA.

Witnesses:
DRURY W. COOPER,
JOHN C. KERR.

No. 11,865. Reissued Oct. 23, 1900.

N. TESLA.

METHOD OF INSULATING ELECTRIC CONDUCTORS.

(Application filed Sept. 21, 1900.)

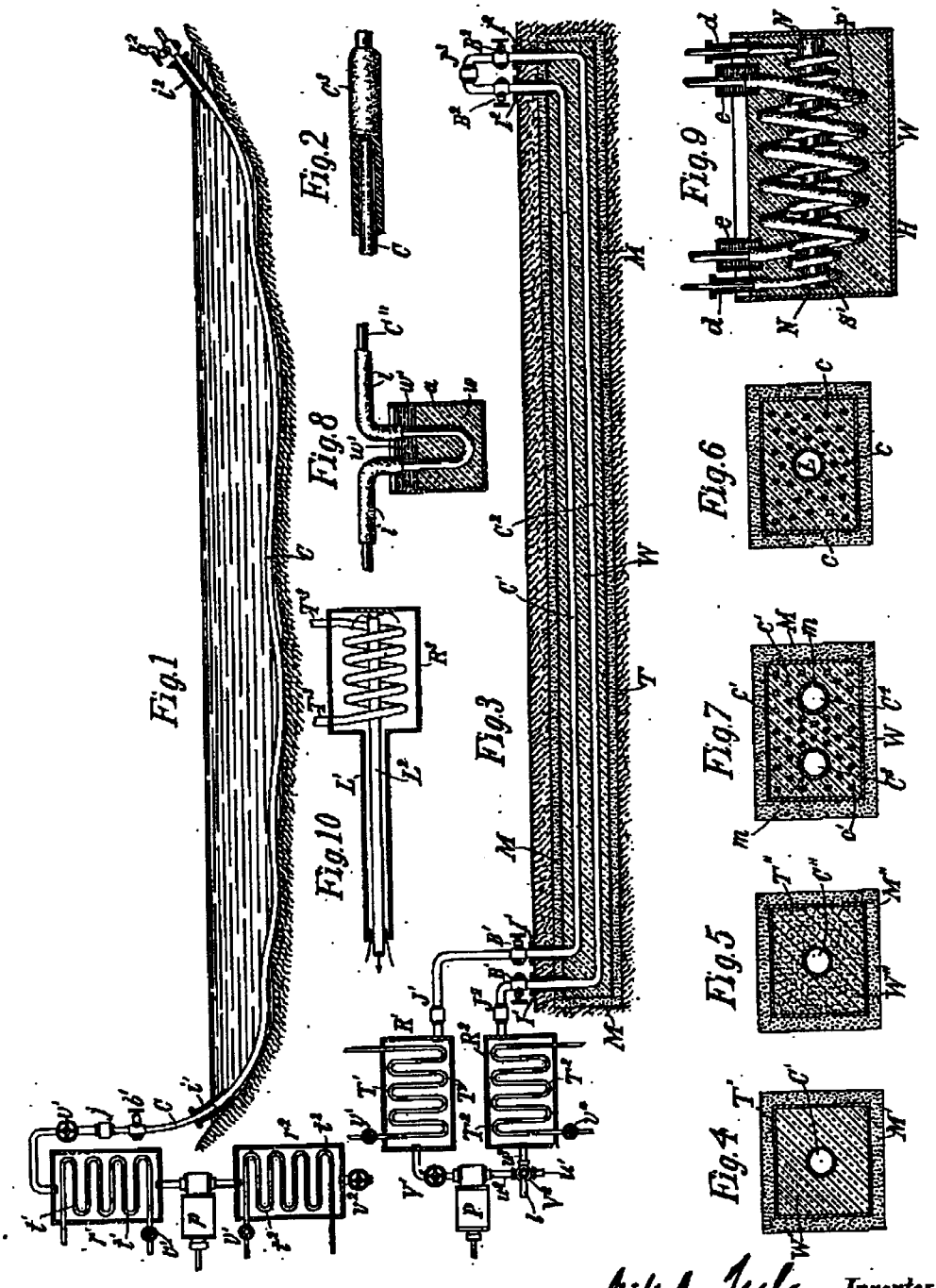

Witnesses:
Raphael Netter
Benjamin Miller

Nikola Tesla Inventor

by Kerr Page & Cooper Attys.

UNITED STATES PATENT OFFICE.

ALBERT SCHMID, OF ALLEGHENY, AND NIKOLA TESLA, OF PITTSBURG, ASSIGNORS TO THE WESTINGHOUSE ELECTRIC COMPANY, OF PITTSBURG, PENNSYLVANIA.

ARMATURE FOR ELECTRIC MACHINES.

SPECIFICATION forming part of Letters Patent No. 417,794, dated December 24, 1889.

Application filed June 28, 1889. Serial No. 315,937. (No model.)

To all whom it may concern:

Be it known that we, ALBERT SCHMID and NIKOLA TESLA, citizens, respectively, of the Republic of Switzerland and Smiljan, Lika, border country of Austria-Hungary, now residing in Allegheny and Pittsburg, both in the county of Allegheny and State of Pennsylvania, have invented a certain new and useful Improvement in Armatures for Electric Machines, (Case No. 310,) of which the following is a specification.

The invention relates to the construction of armatures for electric generators and motors, and the object is to provide an electrically-efficient armature, the construction of which is simple and economical, and in which the coils of insulated conducting wire or ribbon may be conveniently wound or formed into bobbins so located with reference to the body of the armature as to afford as good results as possible.

For certain purposes it is desirable to construct the armatures of electric generators and motors with their cores of magnetizable material projecting through the coils into close proximity to the field-magnet poles. When armatures are constructed in this manner, some means are necessary for holding the coils in position and preventing them from being thrown out by centrifugal force.

This invention aims to provide such means in an armature having polar projections, and also to form an armature in such manner as to expose a large area of core-surface to the field-magnet poles.

The invention consists, in general terms, in forming an armature-core which is preferably built up of laminæ of magnetizable material insulated from each other, with diverging slots or openings for receiving the armature wire or ribbon, which slots are connected with the exterior of the armature by openings through which the wire may be laid in the slots, and in placing the wire in such slots in the proper manner.

We are aware of the United States Patents No. 327,797, granted to Immisch, and No. 292,077, granted to Wenstrom, and the British patent of Coerper, No. 9,013 of 1887, and do not claim the constructions shown and described therein.

The invention will be described more particularly in connection with the accompanying drawings, in which—

Figure 1 is an end view, partly in section, of an armature embodying the features of the invention, and Fig. 2 is a plan of the armature.

Referring to the figures, F F indicate field-magnet poles, and A represents the body or core of an armature composed, in this instance, of laminæ of magnetizable material built up in any suitable manner, the laminæ being preferably separated by intervening strata of insulating material. The individual plates or laminæ are constructed with radial openings *c*, extending a short distance from the surface, and with slots or openings *b*, which extend in different directions from the openings *c*. The slots diverge from each other at such angles as to cause the two slots upon the opposite sides of each web *e* thus formed to lie in the same chord of the circle of the armature. The plates may also be stamped or formed with openings G to remove the unnecessary metal. After the plates are formed they are laid up in the proper manner to form the entire armatur-core, the slots *b* being placed opposite each other to form continuous openings through the entire length of the armature. These openings may be lined by pockets *h* of insulating material—such, for instance, as vulcanized fiber—and the wires are then wound into the slots from the openings *c* and around the respective webs *e*. Winding-clips *k* may be placed at the respective ends of the armature opposite each web *e* to hold the wires in the proper positions as they are wound in the slots and down upon the armature ends.

The wires having been wound into their proper positions, they may be held more securely in position by means of blocks K of non-magnetic material, placed at intervals or extending through the entire slots or openings *c* and projecting into the slots *b*.

An armature constructed in the manner

described is found to be very efficient in its operations and at the same time simple in its construction.

The connections between the armature-coils and the conductors or collecting-plates may be made in any usual well-known manner, according to the purposes desired to be served.

We claim as our invention—

1. A core for electrical machines, composed of plates of magnetizable material separated by insulation, said plates having diverging slots for receiving the armature-conductors and an opening to the exterior of the plate at the origin of the diverging slots.

2. A core-plate for electrical machines, stamped with diverging slots at intervals near its periphery and an opening to the periphery at the angle formed by each two diverging slots.

3. A core for electrical machines, composed of plates of magnetizable material separated by insulation, said plates having diverging slots for receiving the armature-conductors and an opening to the exterior of the plate at the origin of the diverging slots, the width of such openings being approximately equal to the width of the slot.

4. An armature-core for electric machines, consisting of plates of magnetizable material separated by insulation, having radial openings at intervals, slots diverging from said openings for receiving armature-coils, and winding blocks or clips at the ends of the core.

5. An armature-core for electrical apparatus, composed of plates of magnetizable material separated by insulation and having radial openings at intervals, slots extending in opposite directions from said openings for receiving wires, and insulating-linings for said slots.

6. An armature for electric machines, consisting of a laminated core formed with diverging slots for receiving the wires, said slots leaving intervening webs, and coils of wire wound in said slots.

7. An armature for electric machines, consisting of a laminated core formed with diverging slots for receiving the wires, said slots leaving intervening webs, coils of wire wound in said slots, and non-magnetizable material closing the openings of the adjacent slots outside the wires, substantially as described.

8. An armature for electric machines, consisting of a core having its outer surface continuous except for narrow longitudinal openings at intervals and having slots diverging from said openings, armature-coils wound in said slots, and blocks or strips of non-magnetizable material closing the openings and forming with the metal of the armature a practically continuous surface.

In testimony whereof we have hereunto subscribed our names this 25th day of June, A. D. 1889.

ALBERT SCHMID.
NIKOLA TESLA.

Witnesses:
W. D. UPTEGRAFF,
CHARLES A. TERRY.

(No Model.) 2 Sheets—Sheet 1.

A. SCHMID & N. TESLA.

ARMATURE FOR ELECTRIC MACHINES.

No. 417,794. Patented Dec. 24, 1889.

Fig. 1.

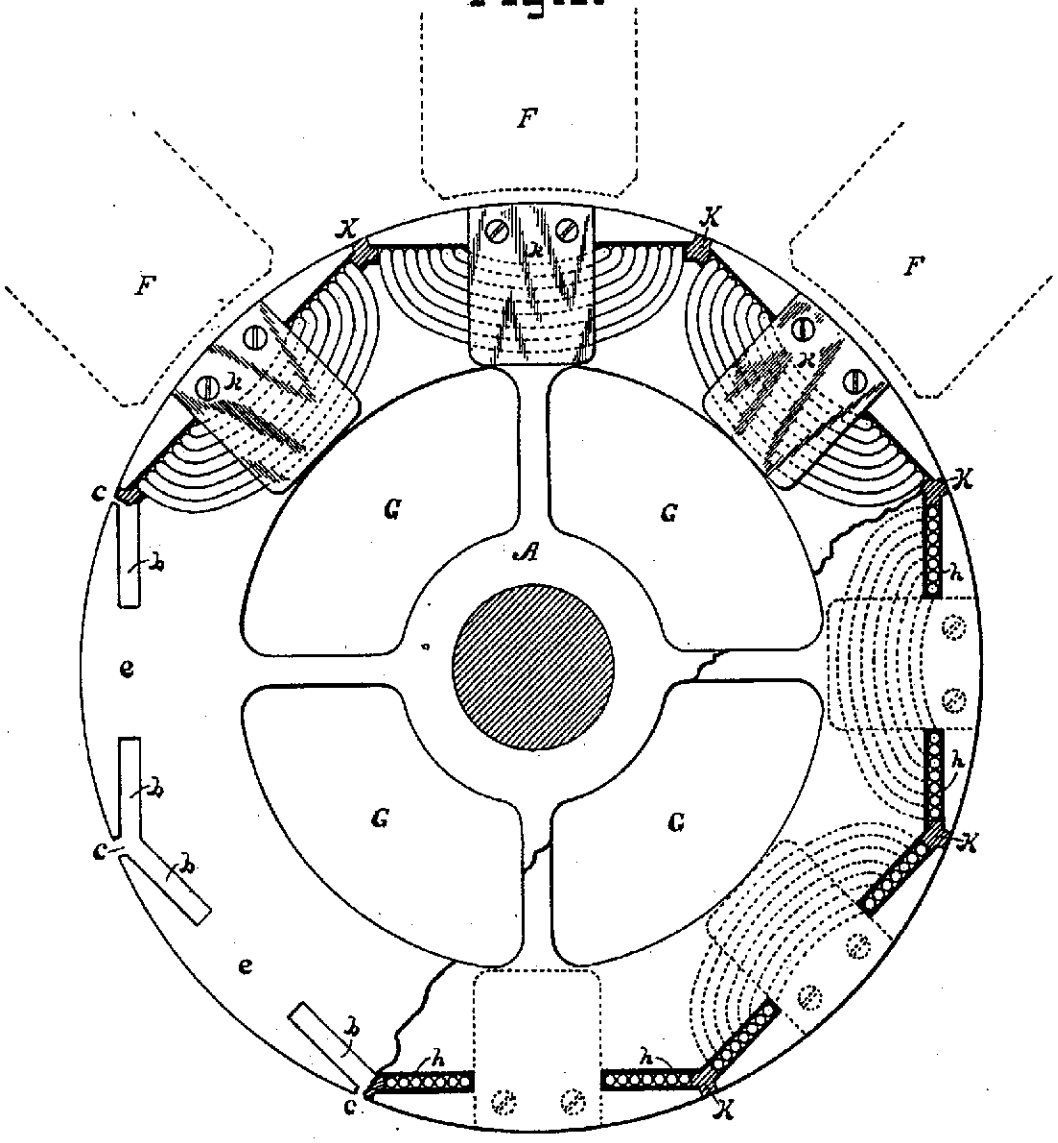

WITNESSES:

George Brown, Jr.

J. Wm. Smith.

INVENTORS

Albert Schmid,

Nikola Tesla.

Charles A. Terry

Att'y.

(No Model.) 2 Sheets—Sheet 2.

A. SCHMID & N. TESLA.

ARMATURE FOR ELECTRIC MACHINES.

No. 417,794. Patented Dec. 24, 1889.

Fig. 2.

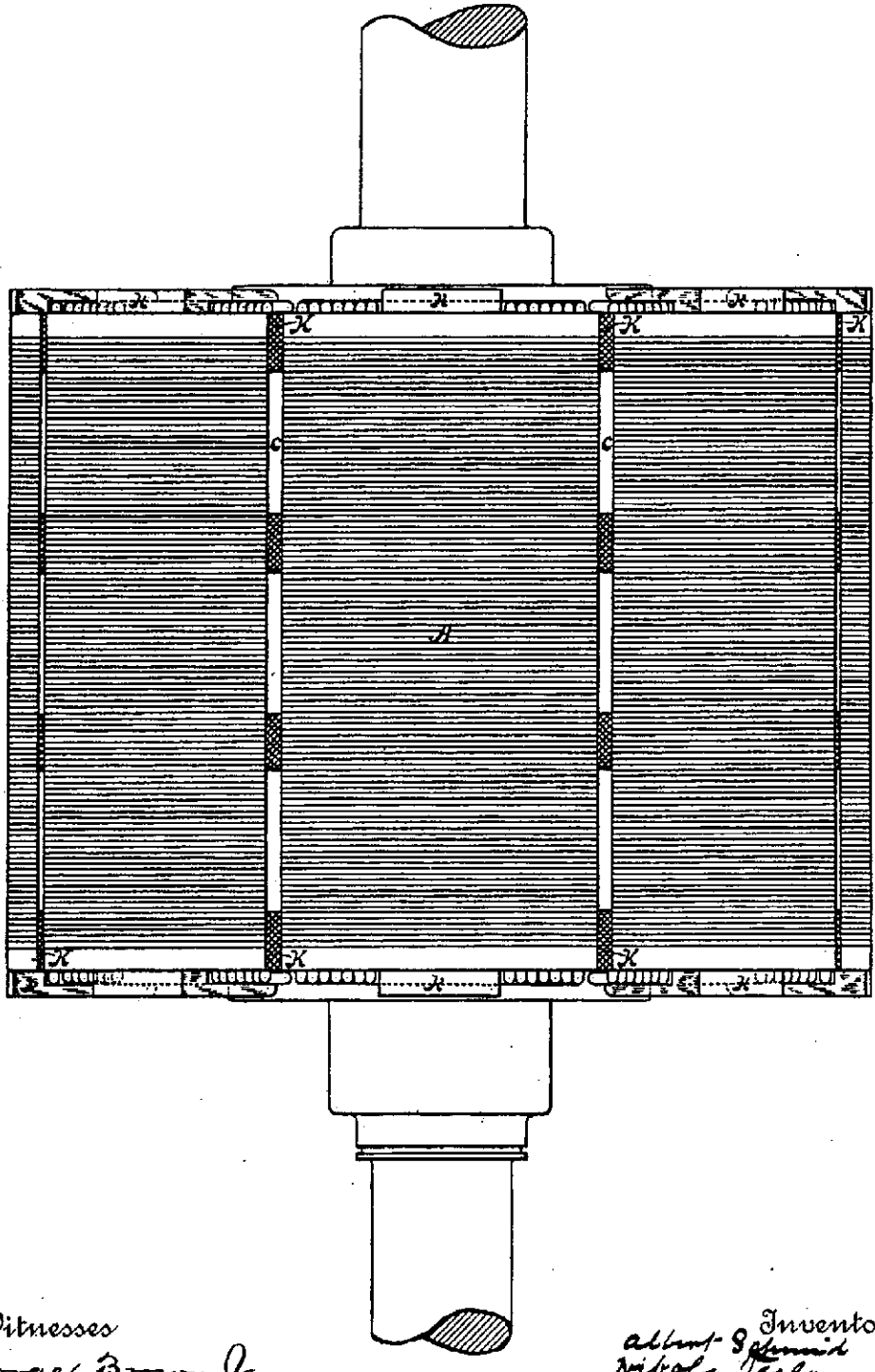

Witnesses
George Brown Jr.
J. Wm. Smith

Inventor
Albert Schmid
Nikola Tesla

By their Attorney
Charles A. Terry

UNITED STATES PATENT OFFICE.

NIKOLA TESLA, OF NEW YORK, N. Y.

MANUFACTURE OF ELECTRICAL CONDENSERS, COILS, &c.

SPECIFICATION forming part of Letters Patent No. 577,671, dated February 23, 1897.

Application filed November 5, 1896. Serial No. 611,126. (No model.)

To all whom it may concern:

Be it known that I, NIKOLA TESLA, a citizen of the United States, residing at New York, in the county and State of New York, have invented certain new and useful Improvements in the Manufacture of Electrical Condensers, Coils, and Similar Devices, of which the following is a specification, reference being had to the drawing which accompanies and forms a part of the same.

My invention is an improvement in the manufacture of electrical condensers, coils, and other devices of a similar character in which conductors designed to form paths for currents of high potential are brought into close proximity with each other. Among such devices are included many forms of condensers, transformers, self-induction coils, rheostats, and the like.

It has heretofore been shown by me that the efficiency and practicability of such devices are very greatly enhanced by the exclusion of air or gas from the dielectric separating the conductors or remote portions of the same conductor; and the object of my present improvement is to secure such exclusion of air in as perfect a manner as possible in a convenient and practicable way. To this end I place the condenser or other device to be treated in a receptacle from which the air may be more or less perfectly exhausted, and while in vacuum I introduce an insulating substance, which liquefies when subjected to heat, such as paraffin, which surrounds the said device and finds its way into its interstices.

When the device has become thoroughly saturated with the insulating material, it is allowed to cool off usually until the material begins to solidify. Air is then admitted under pressure to the receptacle containing the device and the pressure maintained until the whole mass of insulating material has solidified. By this treatment the presence of air or vacuous spaces in the dielectric, which are otherwise liable to form by the contraction of the insulating material when cooling, is prevented.

Any plan may be followed or apparatus used for securing the two conditions necessary to the attainment of the desired result; that is to say, applying the fluid insulating material in vacuum and subsequently subjecting it to or solidifying it under pressure. The degree of exhaustion or of pressure may vary, very good results being secured by a vacuum of about twenty-nine inches and a pressure of about one hundred pounds. It may be stated, however, that when hydraulic pressure is applied very much higher pressures are readily secured and are of advantage.

In order to facilitate the carrying out of the process, I have devised a simple and useful apparatus, which is illustrated partly in section in the accompanying drawing. As the parts of said apparatus are all of well-known construction, the apparatus as a whole will be fully understood without a full description of its details.

A is a tank or receptacle that may be closed air-tight. Within this tank is a steam-coil C, surrounding a vessel B, preferably with slightly-sloping sides and provided with a tube or pipe D, opening into it near its base.

The condenser or other device to be treated is placed in the vessel B, and around the receptacle is packed a suitable insulating material in quantity sufficient when liquefied by heat to flow through the pipe D into the vessel B and fill the space in the latter up to the top of the condenser or other device placed therein.

It is desirable to run into the pipe D enough melted material to fill it before using the apparatus and to make the pipe of a poor heat-conducting material, so that a little time will elapse after the heat is applied to melt the material in the tank A before the flow through the pipe begins.

When the apparatus has been thus prepared, the air from the interior of the tank A is withdrawn as completely as practicable by an air-pump E and steam is passed through the coil C. In order to prevent access of any of the volatile constituents of the insulating material to the pump, a condenser F, with a cooling-coil G, is interposed in the piping between the tank and pump. After a partial vacuum has been secured in the tank A and the liquefied insulating material has been run into the vessel B the pump may be stopped and the tank connected with a receiver H, from which the air has been exhausted, and the apparatus allowed to stand until all the interstices

of the condenser have been permeated with the insulating material. The steam is then shut off and cold water passed through the coil C. The connections with the pump are then reversed and air is forced into the tank and receiver H and the further cooling and solidification of the insulating material carried on under a pressure considerably greater than that of the atmosphere. After the insulating material has cooled and solidified the condenser or other device, with the adhering mass of insulating material, is removed from the receptacle and the superfluous insulating material taken off.

I have found that condensers, transformers, and similar apparatus treated by this process are of very superior quality and especially suited for circuits which convey currents of high frequency and potential.

I am aware that conductors covered with a more or less porous material have been treated by placing them in a closed receptacle, exhausting the air from the receptacle, then introducing a fluid insulating compound and subjecting the same to pressure, for the purpose of more perfectly incorporating the insulating compound with the surrounding coating or covering of the conductors and causing such compound to enter the interstices in said covering, and I apply this principle of exhausting the air and introducing the fluid insulating compound under pressure in carrying out my improvement. My process, however, differs from the foregoing mainly in this, that I seek not only to fill the pores of any porous material that may be interposed between the conductors of such a device as a condenser or coil, but to fill up all the spaces in the dielectric, whereby air or vacuous spaces, the presence of which in the dielectric is so deleterious to the device, may be effectually prevented. To this end I permit the insulating compound after its incorporation with the device, under exhaustion and pressure, to cool and solidify, so that not only is the air replaced by a solid insulating compound, but the formation of vacuous spaces by the contraction of the mass on cooling prevented.

What I claim is—

The improvement in the manufacture of electrical devices such as condensers, which consists in inclosing the device in an air-tight receptacle, exhausting the air from the receptacle, introducing into a vessel containing the device an insulating material rendered fluid by heat, and then when said material has permeated the interstices of the said device, subjecting the whole to pressure, and maintaining such pressure until the material has cooled and solidified, as set forth.

NIKOLA TESLA.

Witnesses:
M. LAMSON DYER,
PARKER W. PAGE.

(No Model.)

N. TESLA.

MANUFACTURE OF ELECTRICAL CONDENSERS, COILS, &c.

No. 577,671. Patented Feb. 23, 1897.

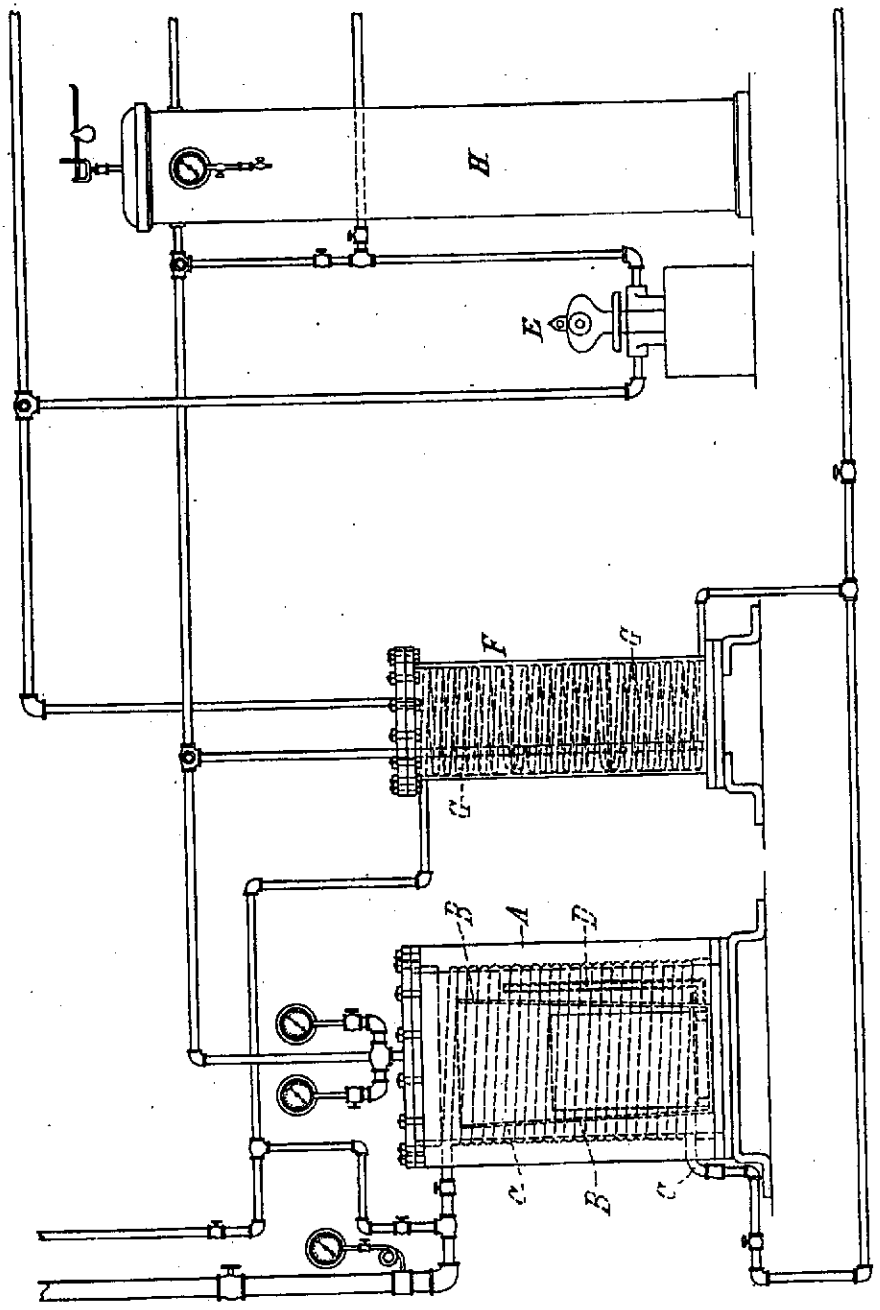

WITNESSES

Edwin B. Hopkinson,

Benjamin Miller,

INVENTOR

Nikola Tesla

BY

Kerr, Curtis & Page

ATTORNEYS.

Multiple Mini Capacitor Project

Date Started:
October 1, 2000

Purpose:
To replace the saltwater capacitor used in Project Mercury - a Tesla coil

Current Phase of the Project:
Completed

Projected Completion date (or Date Completed):
Jan 8, 2001

Abstract:
The Multiple Mini Capacitor, or MMC, has revolutionized the Tesla coiling community. An MMC offers the performance of a standard commercial pulse capacitor, but is significantly less expensive and has internal healing properties that virtually all home-made capacitors and many commercial pulse capacitors don't have. An MMC is also far easier to construct than a typical home made rolled or stacked-plate capacitor. The Geek Group's MMC project is described herein including theory and history of MMCs and construction details of our MMC arrays.

Project specifications:
A total of four MMC arrays were built: two rated for.067 microfarads at 18 kilovolts, to be used with 12 kilovolt transformers, and two rated for .055 microfarads at 22 kilovolts, to be used with 15 kilovolt transformers. Each array is constructed of six individually selectable strings of capacitors to allow easy adjustment of capacitance. All arrays were built using .10 microfarad 2000VDC polypropylene film capacitors from Cornell-Dubilier (part number 942C20P1K) with Â½ watt, 10 meg-ohm bleeder resistors in parallel. The capacitors a nd resistors are sandwiched between two .125 inch thick sheets of Lexan. Copper lug connectors are used to terminate the capacitor strings with a large, 2AWG lug connector used as the master terminal connector for each array.

Theory behind MMC:
High voltage capacitors are difficult to make as a do it yourself project, and expensive to purchase commercially. Commercial pulse capacitors are generally made using an MMC design, where many smaller capacitors are connected in a series/parallel arrangement to realize the design voltage and capacitance. The typical hobbyist can use this technique to obtain their own capacitors with performance approaching that of the commercial capacitors.

Using the correct type of smaller capacitor is one of the keys to the success of this design. The smaller capacitor must be suitable to the application. In the case of a Tesla coil primary capacitor, the smaller capacitors must be able to handle high voltage and high pulse currents at very high frequency (50 to 250 kilohertz is typical). Generally, these requirements necessitate the use of polypropylene film capacitors. Polyester capacitors do not tolerate the high frequencies very well, and tend to overheat very quickly in Tesla coil service. Similarly, metallized-film capacitors generally have poor connections to the end caps and leads since the aluminum layer is much thinner than that of a film capacitor.

The polypropylene film capacitors chosen for a Tesla coil MMC feature a property known as "self healing." Self healing capacitors are able to tolerate over-voltage conditions without destroying themselves. Home made capacitors typically do not have this feature, and were rendered inoperable when the dielectric was arced through due to an accidental over-voltage condition. Self healing was accomplished by the metal film, itself. The current caused by the capacitor shorting internally "blasts away" the thin foil around the hole in the polypropylene. This can happen so many times that the capacitor looks like a window screen when unrolled! Therefore self healing capacitors can be run closer to their tolerances.

History:
Here is a brief history of the MMC by Terry Fritz, one of the original creators.

The MMC project was initiated back when the most common MMC capacitor being used was a 1600 volt DC, .056 microfarad capacitor. Tesla coil hobbyist Terry Fritz was organizing 1000 piece purchases of this capacitor from Digikey, and selling them to the www.pupman.com Tesla coil list members. Other people on said list were organizing smaller, regional purchases for those not living in the United States. When Panasonic would not donate the required capacitors to The Geek Group, the project was tabled until another company could be found to donate the capacitors.

Eventually, Cornell-Dubilier Electronics was contacted about donating some of their 2000 volt 942C series capacitors. CDE was generous enough to donate 200 of their .10 microfarad capacitors and 50 of their .15 microfarad capacitors for this project. Only the smaller capacitors were used for this project, due to the physical size difference. The .15 microfarad capacitors were eventually shipped to our United Kingdom chapter for use on their Tesla coil.

After construction of the first MMC array, it was tested using Project Mercury, The Geek Group's six inch secondary Tesla coil. The Tesla coil was set up outside in a January evening in Michigan. Spark length had not increased significantly over the previous salt water capacitor, which was attributed to poor tuning (it was too cold to spend significant time tuning). However, the sparks were no longer thin, wispy, and purple, but were now thick, forceful, and light-blue - indications of a higher current spark. With proper tuning in a warmer environment, the Tesla coil spark length increased approximately ten percent over the previous salt water capacitor.

This project was declared a tremendous success.

Construction details:
The MMCs were originally planned to be soldered onto a custom printed circuit board. However, a less ordinary construction method was desired. Substituting .125 inch thick Lexan for the substrate was considered. Eventually it was decided by executive decision to sandwich the axial-leaded capacitors between two sheets of .125 inch thich Lexan.

Sheets of Lexan were cut and drilled for the capacitors and bleeder resistors. A significant space was left between all capacitors and resistors to virtually eliminate the potential for sparking between components. For some reason, each array has room for an extra string of capacitors, and an extra capacitor in each string, and no one remembers why. Picture 1 below shows the overall MMC layout.

Picture 1
The 15kVAC MMC array shows the layout of the capacitors and resistors in the array.

This layout, although visually appealing, led to some unforeseen problems. Although inserting the capacitors between the two sheets of Lexan was relatively easy, which Chris Boden demonstrates in Picture 2 below, much effort went into the bleeder resistors. Specifically, the resistor leads were too short to reach the capacitor leads. It was determined that two resistors in series would reach, but were very difficult to insert into the holes in the Lexan sandwich. After some deliberation, it was decided to extend one lead of the resistor by soldering a 18AWG bare copper wire to the lead, shown in Picture 5 below.

Picture 2
Chris Boden inserting capacitors into the holes in the Lexan sheets.

A soldering station was set up at Boden's apartment, shown in Picture 3 below, where MMC team member Mark Broker made his home for the majority of the weekend. The thick pieces of plastic were used to protect the table from burns, which it did.

Picture 3
Mark Broker's soldering station for the project.

While Broker was soldering resistor lead extensions, Betsy Smeed began to twist the capacitor leads together, shown in Picture 4 below. Twisting the leads ensures good electrical contact before the leads were soldered, ensuring a very good joint.

Picture 4
Betsy Smeed twisting capacitor leads together so Broker can solder them.

The capacitors leads had been twisted together such that the joint was approximately over the hole for the resistors. The bleeder resistors were inserted into the arrays using forescepts and long-fingers. A small hook was made on the resistor lead, and soldered to the capacitor leads. On the other side, the extension wire was bent flush to the Lexan, and soldered to the capacitor lead. The excess leads were trimmed.

The capacitor strings were terminated using 1/4-20 brass machine screws and copper lug connectors, as shown in Picture 5 below. At one end, the master electrical connector is another, larger copper lug connector, shown in Picture 6 below. A pair of 4 AWG MonsterCableÂ® power cables can be inserted into this connector and tightened down with a screwdriver. The Geek Group uses 4 AWG MonsterCableÂ® power cables designed for car-audio power supply since the c able is high quality, very flexible, and short pieces can usually be obtained for free from installation shops.

Picture 5

Close-up of the end terminations of the MMC. The vertical rod passing through the copper lugs is a 3/16 inch diameter brass rod. Capacitance can be added or removed by lowering or raising this rod. The resistor extensions can be clearly seen as well.

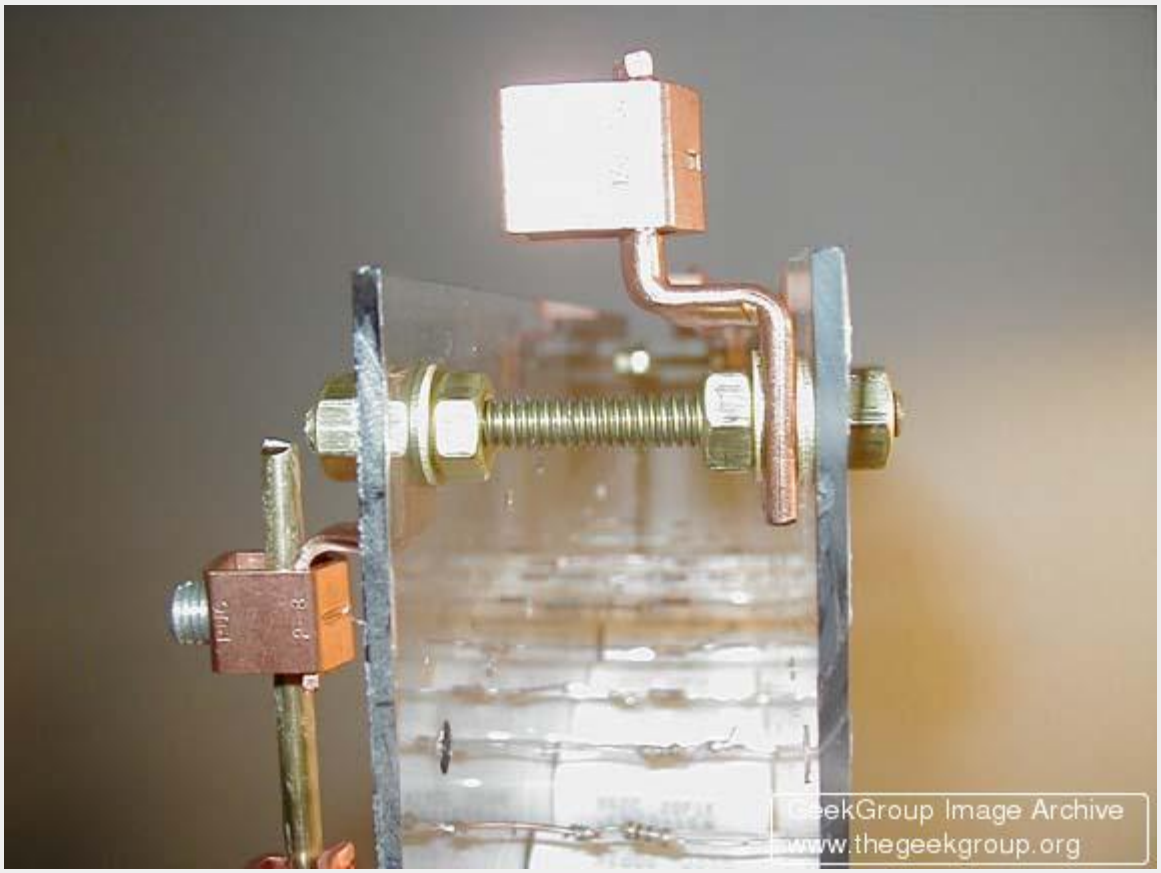

Picture 6
Close-up of the master termination of the MMC. The lug was eventually moved to the same side as the string-selector lugs to remove as many electrical joints as possible.

The finished array is shown in Picture 7 below. The Geek Group has received many compliments regarding the visual appeal of the MMCs.

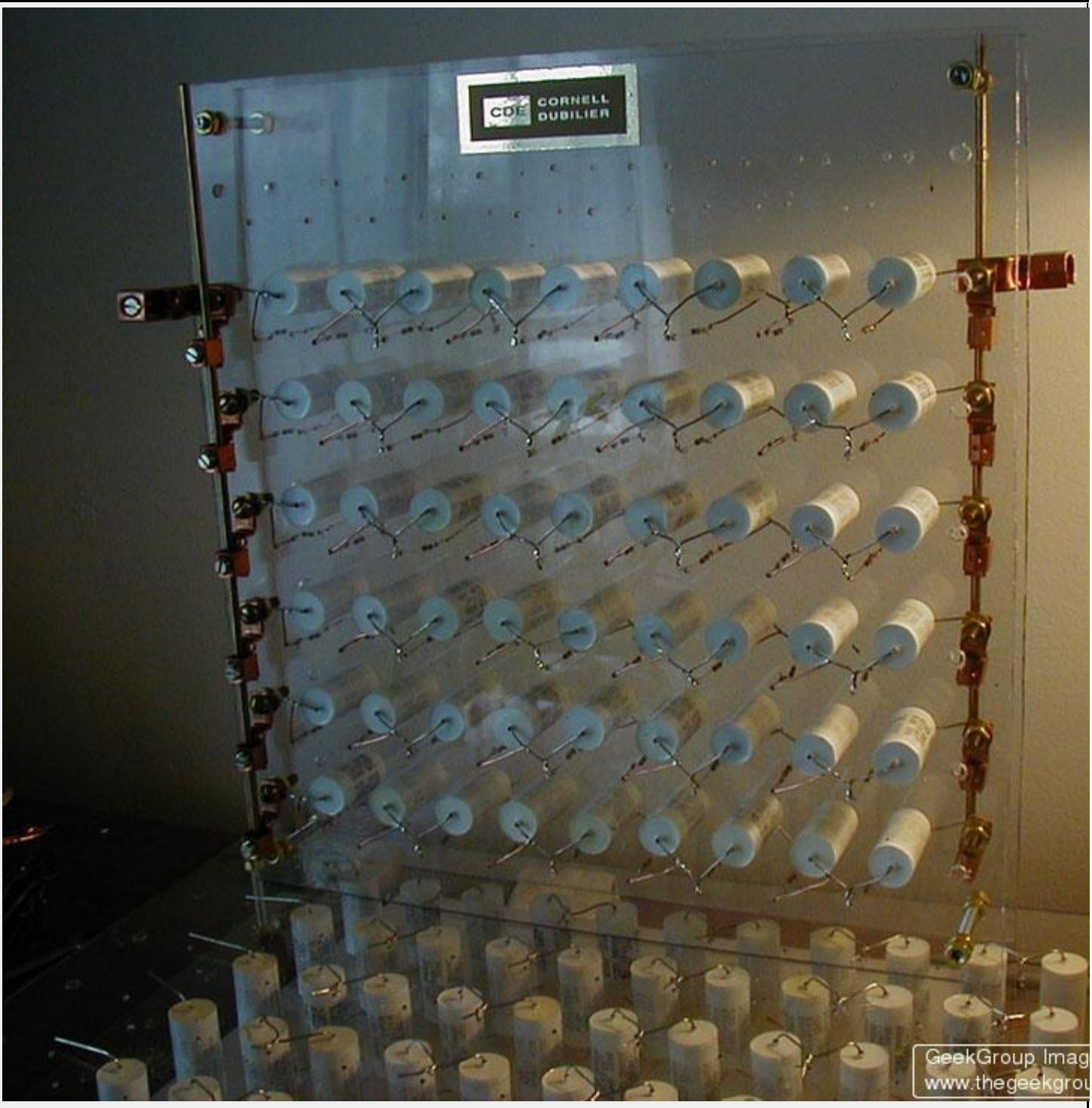

Picture 7
A finished 12kilovolt MMC array, complete with the obligatory Cornell-Dubilier sticker.

Past Donations matched with needs:
Capacitors:
Quantity 200 of Cornell-Dubilier 942C20P1K: 2000volt DC at .10 microfarad
Quantity 50 of Cornell-Dubilier 942C20P15K: 2000volt DC at .15 microfarad

Resistors:
1/2 watt, 10 megohm carbon composition - purchased by Chris Boden

Mounting:
.125 inch thick Lexan from Commercial Plastics. This was actually left over from the Geek Mobile Unit 3 dashboard

Electrical connections:
Purchased by Alia Shaw and Chris Boden from Home Depot

List of Sponsors (links):
Cornell-Dubilier
Commercial Plastics

NIKOLA TESLA

MASTER OF IMAGINATION

Submitted to
Ray Russell, Course Instructor
EE 155

Prepared by
Thomas Penick, Student

October 14, 1998

TABLE OF CONTENTS

EARLY EXPERIENCES 1

THE ALTERNATING CURRENT SYSTEM 2

TESLA'S GIFTS TO ENGINEERING 4

REFERENCES 5

NIKOLA TESLA

Nikola Tesla was born on July 9/10 (midnight), 1856 in Smiljam, Croatia, to a Serbian family. His father was an orthodox priest. His mother was unschooled but quite intelligent. Nikola was a dreamer who loved poetry. He was self-disciplined and compulsive. His principle contribution to the field of electromagnetic engineering is the discovery of the rotating magnetic field and the development of the polyphase electrical system [1 p. 161]. Historians credit Tesla with being a genius because he not only made unique discoveries in electromagnetic engineering but developed these discoveries into working systems in an area of science that had almost no existing body of knowledge other than what he himself had uncovered. Pioneering experiments were also conducted in fluorescent lighting, vacuum tube, radio, robotics, and X-ray technologies [3 pp. 9-13].

EARLY EXPERIENCES

Circumstances in Nikola's early life resulted in his imagination being exercised to the extreme. In his mind, Nikola would see flashes of light and vivid images. These images were not of imagined subjects, but were familiar scenes. The effect was so intense that it affected his ability to see. Interestingly, his brother exhibited similar difficulties. To gain relief, Nikola would take control of his hallucinations by conjuring up his own images—creating his own imaginary world. He would take imaginary journeys to strange places. These experiences were intense and made as strong an impression on young Nikola as his real life experiences. He played this game constantly from early childhood until the age of 17 when he began channeling his thoughts toward invention [2 p. 11-12].

As an inventor, he was able to eliminate a lot of models, drawings, and experiments by using the imagination he had developed in childhood to work through the development and trials of a new idea. He would conduct his first experiments in his imaginary world, noting problems and making adjustments, thus completing much of the preliminary work before conducting physical experiments [2 p. 12].

The first commercially generated power was direct current. Although alternating current could be more efficiently transmitted, it was not used because no satisfactory alternating current motor had been developed. Tesla pondered this problem for many years. Finally, while walking through a park in Budapest, the idea came to him in a flash. He conceived of a rotating magnetic field, created by multiple phases of AC power. This concept would eventually permit him to develop the first successful AC motor [2 p. 22, 23].

In 1882, Tesla worked at a telegraph office. He invented a telephone amplifier, which he didn't bother to patent. In the fall of 1882, he went to Paris to work for an Edison subsidiary. He worked as a troubleshooter at power plants in France and Germany. He wanted to sell Mr. Edison on his AC power ideas, but was told that Edison was solidly in favor of DC current over AC. On his own time, he built his first AC motor [2 p. 24, 25].

In 1884, Tesla immigrated to America, bringing a letter of recommendation addressed to Thomas Edison. He happened to catch Edison at a time when the inventor desperately needed help maintaining his many DC electrical systems. Edison sent Tesla immediately to repair dynamos aboard the SS Oregon. Tesla worked through the night to complete the repairs [2 p. 30-31].

Tesla informed Edison that he could make major improvements in Edison's DC dynamos. Edison said if he did, there would be $50,000 in it for him. Tesla worked long hours for almost a year to complete the redesign. He visited Edison and asked about his $50,000. Edison replied, "Tesla, you don't understand our American humor." Tesla resigned [2 p. 33-34]. America was entering an economic depression and Nikola Tesla found himself working on a New York street gang from 1886 to 1887 [2 p. 36].

THE ALTERNATING CURRENT SYSTEM

Finally, Tesla's foreman took him to meet A. K. Brown, manager of Western Union Telegraph Co. With Brown's help, Tesla Electric Co. was formed in April 1887. Tesla patented single-phase, two-phase, and three-phase AC systems, and two AC motors. In the first four years of

operation, he was granted 40 patents. The patents were processed quickly since there was nothing like them at the patent office. Both scientific and business interests took note of the patent office activity and Tesla was soon receiving invitations to lecture. He turned out to be a natural speaker [2 p. 36-39].

George Westinghouse had more than 30 AC power systems in operation at the time (under a different patent) and was interested in Tesla's motor. Westinghouse paid Tesla a visit at his lab. Tesla went to work for Westinghouse and moved to Pittsburgh. Tesla's motors ran at 60 Hz AC and could not be adapted to the 133 Hz Westinghouse system. Westinghouse was forced to switch to 60 Hz and this has become the standard electrical power frequency in the U.S. After several months in Pittsburgh, Tesla returned to New York [2 p.40]. He became a U.S. citizen on July 30, 1891, a status which he valued above all scientific honors. In September 1891 he went to Paris to lecture at the International Exposition and also visited his family in Croatia [2 p. 41].

Edison was outraged when he learned of Tesla's alliance with Westinghouse. He issued propaganda about the dangers of AC current. Edison conducted weekly demonstrations in which dogs and cats were electrocuted. Through a third party, he bought rights to Tesla's AC patents and worked a deal with New York prison authorities to carry out the first execution by electrocution on 8/6/1890. The convict failed to die after the first shock and the ordeal had to be repeated. It was reported as "an awful spectacle, far worse than hanging [2 p, 41-45]."

George Westinghouse became worn down financially by Edison's anti-alternating current initiatives. A major obstacle to the ability of Westinghouse to get new funding was his contract with Tesla to pay him $2.50 for each horsepower manufactured. George Westinghouse appealed to Tesla to relinquish his claim to the patents. Tesla, interested in seeing his inventions put to use, agreed and settled for a cash sum [2 p. 48-49].

Tesla proved to be quite a showman on the lecture circuit. He had glass tubes that glowed without electrical connections. This was the forerunner of the florescent bulb, another invention he didn't bother to patent. He wore insulated shoes and allowed high-voltage, high-frequency electric current to flow across his body. His purpose in doing this was, in part, to counter

Edison's propaganda about the danger of AC current. At high frequencies and voltages, electricity would run across the surface of the skin without penetrating. He demonstrated a motor run on one wire, with the return path through air. He spoke of the possibility of transmitting power long distances through the upper atmosphere. One dazzling display was his "carbon-button lamp," a partially evacuated glass globe with a piece of carborundum in one end connected to a single wire terminal. When high-frequency current was applied, "The central 'button' of material electrostatically propelled the surrounding gas molecules toward the glass globe. They were then repelled back toward the button, striking it and heating it to incandescence [2 p. 54]." The bulb was 20 times as efficient as the Edison bulb. Since a technical language had not yet evolved to describe these phenomena, Tesla described them poetically. For example, a static discharge he called a *brush* or a *luminous stream* [2 p. 54-55].

George Westinghouse won the contract for electrifying the Chicago World's Fair of 1893—the first electrical fair. He invited Tesla to speak. 25 million Americans visited the fair, which was one-third of the population at the time. Tesla had blown tubes to spell "Welcome Electricians," as well as the names of many famous scientists. He dazzled audiences with numerous demonstrations of high frequency, high-voltage current.

TESLA'S GIFTS TO ENGINEERING

Tesla's discovery of the rotating magnetic field and his inventions of the transformer and induction motor were valuable advancements that are still the means for the production, transmission and use of electrical power today. Less tangible but important contributions were his inspiring lectures and the ideas he left unpatented. In his dazzling demonstrations, he not only amazed his audiences but also sparked the interest of many contemporary and future inventors. It has taken decades for scientists to reproduce some of the experiments he demonstrated publicly. How Tesla was able to electrically produce a ball of flame and hold it in his hands remains a mystery. He energized a wave of invention during the late 19th and early 20th centuries and continues to inspire engineers today.

REFERENCES

[1] "Tesla, Nikola," *Encyclopaedia Britannica,* 1976 ed.

[2] Cheney, Margaret, *Tesla, Man Out of Time*, New York: Barnes & Noble Books, 1993.

[3] O'Neill, John J., *Prodigal Genius, The Life of Nikola Tesla*, Albuquerque: Brotherhood of Life, Inc., 1996.

TESLA'S DEATH RAY
A RECONSTRUCTIVE POSTULATE
BY TIMOTHY VENTURA

INTRODUCTION:

Nikola Tesla, the practical inventor of the alternating current, the Tesla-Coil, and over 700 other patented inventions, is also known for his assertion to have invented a method of projecting an extremely potent "death-ray" through space to destroy predetermined targets.

The July 11, 1934 issue of the New York Times ran a story concerning this supposed invention of his, which he claimed to be powerful enough destroy, "10,000 planes 250 miles away...without a trace."

"My apparatus projects particles which may be relatively large or of microscopic dimensions, enabling us to convey to a small area at a great distance trillions of times more energy than is possible with rays of any kind. Many thousands of horsepower can thus be transmitted by a stream thinner than a hair, so that nothing can resist."

"Teleforce, said Tesla, was based on four new inventions, of which two had already been tested: 1. a method of producing rays on the free air without a vacuum; 2. a method of producing 'very great electrical force'; 3. a method of amplifying this force; 4. a new method for producing 'tremendous electrical propelling force.'"

EXAMINATION:

Several aspects of the "Death Ray" have intrigued modern researchers--one of the most important of those being Tesla's expertise in fields related to his description of the device. When Tesla's experimentation with High Voltage Alternating Currents is examined, as well as his unique approach to visualizing the way in which electricity is manipulated, a picture of expertise emerges that tends to lend credence to his "Death Ray" device.

Many engineers have speculated that the "Death Ray" was actually a variation of the more commonly known "particle-beam"--a weapon popular in the annals of science fiction. Particle beams--steady streams of electrons, protons, neutrons, or ions--are a product of particle accelerators, and to date, there has been no known way to use a particle beam as a weapon. Particle beams do have extremely destructive capabilities, however, the apparatus now used to generate them requires accelerators miles in diameter using billions of Joules of energy. Although Tesla never claimed to have invented a "portable model", there are photos of him with a scale model of his weapon, igniting gunpowder from a distance of a few feet. Particle beams are even more inefficient when used in an atmosphere, which tends to scatter and absorb the beam to

such a great extent as to render it virtually useless--thus, a "hair-thin" beam would be a seeming mechnical impossibility.

THEORETICAL CONSIDERATIONS:

In a hopefully accurate approximation of the thought processes that occupied Tesla while designing this device, one must fully consider that nearly all of his work revolved around High Voltage Alternating Currents. In fact, his death ray is publicized as being based on his designs for the wireless electrical transmission of power. While based on unidisputable scientific principles, most of Tesla's work fell in between the areas of physics and engineering. Hence, when Tesla wanted to transmit a focussed beam of energy, his thought processes might have gone as thus:

There are three means (if not more) of directly transmitting electrical energy from one location to a remote location in a "wireless" fashion: 1. The broadcasting of Electromagnetic waves from point A to point B--where those waves excite atoms to produce electricity. This method is feasible for power transmission and weapons applications, but unfortunately is impractical to technology except in the microwave region of the spectrum. Tesla's equipment, being primarily alternator-based and not using any solid-state components, could not have reached a high enough frequency by orders of magnitude to transmit microwave-band energy. 2. Direct-current transmission of energy from source to target. This is the principle of particle accelerators--the electrons or other particles are moved in a linear fashion through the accelerator, to be then directed at a target. This method of wireless transmission was also impractical to Tesla, because it requires a mechnical arrangement that is monumentally expensive, complicated, and energy-consumptive, and produces a beam that is unfocusable, easily distorted and dissapated, and has an effective distance measured in feet, not miles. 3. Alternating current transmission of power--the longitudinal wave interference device. An alternating current at a high voltage--such as those that Tesla worked with for his entire career--could be a means of providing transmission of power between remote locations with substantially smaller losses. Alternating atmosheric currents, however, have several drawbacks--including the fact that they are inherently unfocussed in nature. The possible solutions to this problem will be discussed below.

There are a few various possibilities for the transmission of power, and Tesla probably entertained them all. The real problem, of course, was simply "how to get electricity to point B". Tesla wouldn't have even cared if it came from point A, which brings two choices to mind. Firstly, the transmission of power from Point A to Point B requires a few things. Since electricity moves from a point with a high potential to a point with a low (or opposite) potential, it was in Tesla's best interests to have the "target"

Point B at a lower electrical potential than the surrounding environment--otherwise, the electrons would get "lost" after only a few feet. Tesla would have considered this potential difference to be the only thing of any import to the transmission of power, and hence, why move the electricity from Point A at all--simply make Point B a lower potential than its surrounding environment.

Tesla would have wanted a device that could create a "positive" potential (at least temporarily) around the target object. Once that target was "ionized" to a high enough voltage, electrons from the surrounding environment would simply flood into the target due to electrostatic attraction. Once he had created a device that could positively ionize an object at a distance, he simply had to arrange a terminal at Point A with a high opposite potential to supply electrons, which would then literally be pulled to the target source. Apparently, the easiest way to do this also tends to focus the beam of electrons, creating a directed bolt of lightening from A to B.

THE WEAPON:

Tesla's Death Ray lies somewhere in between wave mechanics and electrical engineering--and is thus easily missed by the increasingly specialized numbers of scientists and technicians in the world today. He basically used A Fresnel Lens to focus a "Longtudinal-Wave", hence creating a focussed electrostatic potential at the target. This "fresnel" effect is also responsible for the focussing of the subsequent electron beam from A to B.

Tesla concept used longitudinal waves--which are not really waves at all. Longitudinal Waves correspond to variations in pressure (such as acoustics), and in electricity, they correspond to variations in electrostatic potential--such as those produced by an AC current "travelling" through the atmosphere. Longitudinal electrical waves can be focused with a Fresnel lens like ordinary waves, meaning that the "wave amplitudes" add at the focal point--Hence, the environment receives a theoretical potential of -15 volts, and the target recieves -30 volts. A multizoned Fresnel Lens would undoubtably increase this focal potential a great deal more than a single zoned lens, but a single-zone lens has an infinite number of focal points at regularly spaced intervals, whereas a multizoned lens has only one...

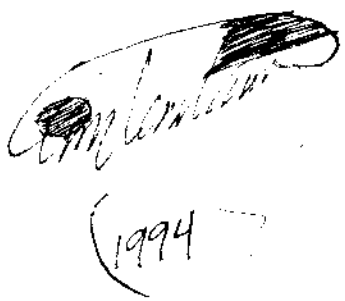

1994

Tesla's Electric Car #1 - 01/09/98

This file was originally posted on the KeelyNet BBS on January 30, 1993 as TESLAFE1.ASC.

This file was inspired by a newspaper article in the local Dallas Morning News. It was in a column called "Texas Sketches" written by A.C. Greene. I called Mr. Green and Mr. Langkop who both courteously sent the additional source material. Both also expressed an interest in more Tesla information as well as Texas experimenters, we are sending them material in return. There is also a second file with my thoughts on the Tesla power box, that file is listed on KeelyNet as TESLAFE2.ASC.

---

from January 24th, Sunday - Dallas Morning News
Texas Sketches column

The Electric Auto that almost triumphed
Power Source of '31 car still a mystery
by A.C. Greene

Not long ago, Texas Sketches told the story of Henry "Dad" Garrett and his son C.H.'s water-fueled automobile, which was successfully demonstrated in 1935 at White Rock Lake in Dallas.

Eugene Langkop of Dallas (a Packard lover, like so many of us) notes that the "wonder car" of the future may be a resurrection of the electric car. It uses no gasoline, no oil - just some grease fittings - has no radiator to fill or freeze, no carburetor problems, no muffler to replace and gives off no pollutants.

Famous former electrics include Columbia, Rauch & Lang and Detroit Electric.

Dallas had electric delivery trucks in the 1920s and 30s. Many electric delivery vehicles were used in big cities into the 1960s.

The problem with electrics was slow speed and short range.

Within the past decade two Richardson men, George Thiess and Jack Hooker, claimed to have used batteries operating on magnesium from seawater to increase the range of their electric automobile from 100 miles to 400 or 500 miles.

But it is a mystery car once demonstrated by Nikola Tesla, developer of alternating current, that might have made electrics triumphant.

Supported by the Pierce-Arrow Co. and General Electric in 1931, he took the gasoline engine from a new Pierce-Arrow and replaced it with an 80-horsepower alternating-current electric motor with no external power source.

At a local radio shop he bought 12 vacuum tubes, some wires and assorted resistors, and assembled them in a circuit box 24 inches long, 12 inches wide and 6 inches high, with a pair of 3-inch rods sticking out. Getting into the car with the circuit box in the front seat beside him, he pushed the rods in, announced, "We now have power," and proceeded to test drive the car for a week, often at speeds of up to 90 mph.

As it was an alternating-current motor and there were no batteries involved, where did the power come from?

Popular responses included charges of "black magic," and the sensitive genius didn't like the skeptical comments of the press. He removed his mysterious box, returned to his laboratory in New York - and the secret of his power source died with him.

A.C. Greene is an author and Texas historian who lives in Salado.

The original article from which Mr. Greene gleaned the above info was from a Packard Newsletter. Mr. Gene Langkopf kindly sent us a copy of that article which now follows.

The Forgotten Art of Electric - Powered Automobiles
by Arthur Abrom

Electric powered automobiles were one of the earliest considerations and this mode of propulsion enjoyed a brief but short reign. The development of electricity as a workable source of power for mankind has been studded with great controversy.

Thomas A. Edison was the first to start to market systems (i.e. electric generators) of any commercial value. His research and developmental skills were utilized to market a "direct current" system of electricity. Ships were equipped with D.C. systems and municipalities began lighting their streets with this revolutionary D.C. electric system. (At that time) Edison was the sole source of electricity!

While in the process of commercializing electricity, Thomas Edison hired men who knew of the new scientific gift to the world and were capable of new

applications for electricity. One such man was a foreigner named Nikola Tesla. This man, although not known to many of us today, was without a doubt the greatest scientific mind that has ever lived. His accomplishments dwarfed even Thomas Edison's! Whereas Mr. Edison was a great experimenter, Mr. Tesla was a great theoretician. Nikola Tesla became frustrated and very much annoyed at the procedures Edison followed.

Tesla would rather calculate the possibility of something working (i.e. mathematical investigation) than the hit and miss technique of constant experimentation. So in the heat of an argument, he quit one day and stormed out of Edison's laboratory in West Orange, New Jersey.

Working on his own, Tesla conceived and built the first working alternating current generator. He, and he alone, is responsible for all of the advantages we enjoy today because of A.C. electric power.

Angered by Edison, Tesla sold his new patents to George Westinghouse for 15 million dollars in the very early 1900's. Tesla became totally independent and proceeded to carry on his investigative research in his laboratory on 5th Avenue in New York City.

George Westinghouse began to market this new system of electric generators and was in competition with Edison. Westinghouse prevailed because of the greater superiority of the A.C. generators over the less efficient D.C. power supplies of Thomas Edison. Today, A.C. power is the only source of electricity the world uses. And, please remember, Nikola Tesla is the man who developed it.

Now specifically dealing with automobiles in the

infant days of their development, electric propulsion was considered and used. An electric powered automobile possessed many advantages that the noisy, cantankerous, smoke-belching gasoline cars could not offer.

First and foremost is the absolute silence one experiences when riding in an electrically powered vehicle. There is not even a hint of noise. One simply turns a key and steps on the accelerator - the vehicle moves instantly! No cranking from the start, no crank to turn (this was before electric starters), no pumping of the accelerator, no spark control to advance and no throttle linkage to pre-set before starting. One simply turned the ignition switch to on!

Second, is a sense of power. If one wants to increase speed, you simply depress the accelerator further - there is never any hesitation. Releasing the accelerator causes the vehicle to slow down immediately - you are always in complete control. It is not difficult to understand why these vehicles were so very popular around the turn of the century and until 1912 or so.

The big disadvantage to these cars was their range and need for re-charging every single night. All of these electric vehicles used a series of batteries and a D.C. motor to move itself about. The batteries require recharging every night and the range of travel was restricted to about 100 miles. Understand that this restriction was not a serious one in the early part of this century. Doctors began making house calls with electric cars (do you remember doctors making house calls?) because he no longer needed to tend to the horse at night time - just plug the car into an electric socket! No feeding, no rub-

down and no mess to clean up!

Many of the large department stores in metropolitan areas began purchasing delivery trucks that were electrically powered. They were silent and emitted no pollutants. And, maintenance was a minimum on electrically powered vehicles. There were few mechanics and garages in operation in the early 1900's. So city life and travel appeared to be willing to embrace the electric automobile. Remember, these masterfully built vehicles all ran on D.C. current.

Two things happened to dampen the popularity of the electric automobile. One was the subconscious craving for speed that gripped all auto enthusisasts of this era. Each manufacturer was eager to show how far his car could travel (i.e. the transcontinental races) and what was its top speed!

Col. Vanderbilt constructed the first all concrete race track in Long Island and racing became the passion for the well-to-do. Newspapers constantly record new records of speed achieved by so-in-so. And, of course, the automobile manufacturers were quick to capitalize on the advertising effect of these new peaks of speed. Both of these events made the electrically powered vehicles appear to only belong to the "little old lady" down the street or the old retired gentleman who talked about the "good old days".

Electric vehicles could not reach speeds of 45 or 50 m.p.h. for this would have destroyed the batteries in moments. Bursts of speeds of 25 to 35 m.p.h. could be maintained for a moment or so. Normal driving speed-depending upon traffic conditions, was 15 to 20 m.p.h. by 1900 to 1910 standards, this was an acceptable speed limit to obtain from your electric

vehicle.

Please note that none of the manufacturers of electric cars ever installed a D.C. generator. This would have put a small charge back into the batteries as the car moved about and would have thereby increased its operating range. This was considered by some to be approaching perpetual motion - and that, of course, was utterly impossible! Actually, D.C. generators would have worked and helped the electric car cause.

As mentioned earlier, Mr. Westinghouse's A.C. current generating equipment was being sold and installed about the country. The earlier D.C. equipment was being retired and disregarded. As a side note, Consolidated Edison Power Company of New York City still has one of Thomas Edison's D.C. generators installed in its 14th St. powerhouse - it still works! About this time, another giant corporation was formed and entered the A.C. generating equipment field - General Electric. This spelled the absolute end for Edison's D.C. power supply systems as a commercial means of generating and distributing electric power.

The electric automobile could not be adapted to accomodate and utilize a polyphase motor (i.e. A.C. power). Since they used batteries as a source of power, their extinction was sealed. No battery can put out an A.C. signal. True, a converter could be utilized (i.e. convert the D.C. signal from the battery to an A.C. signal), but the size of the equipment at this time was too large to fit in an automobile - even one with the generous dimensions of this era.

So, somewhere around 1915 or so, the electric automobile became a memory. True, United Parcel Service still utilizes several electric trucks in New

York City today but the bulk of their fleet of vehicles utilizes gasoline or diesel fuel. For all intensive purposes, the electrically powered automobile is dead - they are considered dinosaurs of the past.

But, let us stop a moment and consider the advantages of utilizing electric power as a means of propelling vehicles. Maintenance is absolutely minimal for the only oil required is for the two bearings in the motor and the necessary grease fittings. There is no oil to change, no radiator to clean and fill, no transmission to foul up, no fuel pump, no water pump, no carburetion problems, no muffler to rot out or replace and no pollutants emitted into the atmosphere. It appears as though it might be the answer we have been searching for!

Therefore, the two problems facing us become top speed and range of driving - providing, of course, the A.C. and D.C. problems could be worked out. With today's technology this does not seem to be insurmountable. In fact, the entire problem has already been solved - in the past, the distant past and the not so distant! Stop! Re-read the last sentence again. Ponder it for a few moments before going on.

Several times earlier in this article, I mentioned the man, Nikola Tesla and stated that he was the greatest mind that ever lived. The U.S. Patent Office has 1,200 patents registered in the name of Nikola Tesla and it is estimated that he could have patented an additional 1,000 or so from memory!

But, back to our electric automobiles - in 1931, under the financing of Pierce-Arrow and George Westinghouse, a 1931 Pierce-Arrow was selected to be tested at the factory grounds in Buffalo, N.Y. The standard internal combustion engine was removed

and an 80-H.P. 1800 r.p.m electric motor installed to the clutch and transmission. The A.C. motor measured 40 inches long and 30 inches in diameter and the power leads were left standing in the air - no external power source!

At the appointed time, Nikola Tesla arrived from New York City and inspected the Pierce-Arrow automobile. He then went to a local radio store and purchased a handful of tubes (12), wires and assorted resistors. A box measuring 24 inches long, 12 inches wide and 6 inches high was assembled housing the circuit. The box was placed on the front seat and had its wires connected to the air-cooled, brushless motor. Two rods 1/4" in diameter stuck out of the box about 3" in length.

Mr. Tesla got into the driver's seat, pushed the two rods in and stated, "We now have power". He put the car into gear and it moved forward! This vehicle, powered by an A.C. motor, was driven to speeds of 90 m.p.h. and performed better than any internal combustion engine of its day! One week was spent testing the vehicle. Several newspapers in Buffalo reported this test. When asked where the power came from, Tesla replied, "From the ethers all around us". Several people suggested that Tesla was mad and somehow in league with sinister forces of the universe. He became incensed, removed his mysterious box from the vehicle and returned to his laboratory in New York City. His secret died with him!

It is speculated that Nikola Tesla was able to somehow harness the earth's magnetic field that encompasses our planet. And, he somehow was able to draw tremendous amounts of power by cutting these lines of force or causing them to be multiplied

together. The exact nature of his device remains a mystery but it did actually function by powering the 80 h.p. A.C. motor in the Pierce-Arrow at speeds up to 90 m.p.h. and no recharging was ever necessary!

In 1969, Joseph R. Zubris took his 1961 Mercury and pulled out the Detroit internal combustion engine. He then installed an electric motor as a source of power. His unique wiring system cuts the energy drain at starting to 75% of normal and doubles the electrical efficiency of the electric motor when it is operating! The U.S. Patent Office issued him a patent No. 3,809,978. Although he approached many concerns for marketing, no one really seemed to be interested. And, his unique system is still not on the market.

In the 1970's, an inventor used an Ev-Gray generator, which intensified battery current, the voltage being induced to the field coils by a simple programmer (sequencer). By allowing the motor to charge separate batteries as the device ran, phenomenally tiny currents were needed. The device was tested at the Crosby Research Institute of Beverly Hills, Ca., a 10-horepower EMA motor ran for over a week (9 days) on four standard automobile batteries.

The inventors estimated that a 50-horsepower electric motor could traverse 300 miles at 50 m.p.h. before needing a re-charge. Dr. Keith E. Kenyon, the inventor of Van Nuys, California discovered a discrepancy in the normal and long accepted laws relating to electric motor magnets. Dr. Kenyon demonstrated his invention for many scientists and engineers in 1976 but their reaction was astounding. Although admitting Dr. Kenyon's device worked, they saw little or no practical application for

it!

So the ultimate source for our electrically powered automobile would be to have an electric motor that required no outside source of power. Sounds impossible because it violates all scientific thought! But it has been invented and H.R. Johnson has been issued a patent No. 4,151,431 on April 24, 1979 on such a device!

This new design although originally suggested by Nikola Tesla in 1905, is a permanent magnet motor. Mr. Johnson has arranged a series of permanent magnets on the rotor and a corresponding series - with different spacing - on the stator. One simply has to move the stator into position and rotation of the rotor begins immediately.

Howard Johnson Permanent Magnet Motor

His patent states,

> **"The invention is directed to the method of utilizing the unpaired electron spins in ferro magnetic and other materials as a source of magnetic fields for producing power without any electron flow as occurs in normal conductors and to permanent magnet motors for utilization of this method to produce a power source.**
>
> **In the practice of this invention, the unpaired electron spins occurring within permanent magnets are utilized to produce a motive power source solely through the super-conducting characteristics of a permanent magnet and the magnetic flux created by the**

> **magnets are controlled and concentrated to orient the magnetic forces generated in such a manner to do useful continuous work such as the displacement of a rotor with respect to a stator.**
>
> **The timing and orientation of magnetic forces at the rotor and stator components produced by permanent magnets to produce a motor is accomplished with the proper geometrical relationship of these components".**

Now before you dismiss the idea of a magnetically run motor - a free energy source, consider the following :

> **Engineers of Hitachi Magnetics Corp. of California have stated that a motor run solely by magnets is feasible and logical but the politics of the matter make it impossible for them to pursue developing a magnet motor or any device that would compete with the energy cartels.**

In a book entitled, "Keely and His Discoveries" by Clara B. Moore published in 1893, we find the following statemtents,

> **"The magnet that lifts a pound today if the load is gradually increased day by day will lift double that amount in time. Whence comes this energy? Keely teaches that it comes from sympathetic association with one of the currents of the polar stream and that its energy increases as long as the sympathetic flow lasts, which is through eternity".**

Now consider some basic observations concerning magnets:

- **1) Two permanent magnets can either attract or repel depending on the arrangement of the magnetic poles.**
- **2) Two magnets repel further than they attract because of friction and inertia forces.**
- **3) Most of our energy comes directly or indirectly from electromagnetic energy of the sun, e.g. photosynthesis and watercycle of ocean to water vapor to rain or snow to ocean.**
- **4) Magnetic energy "travels" between poles at the speed of light.**
- **5) Permanent magnets on both sides of an iron shield are attracted to the shield and only weakly to each other at close proximity to the shield.**
- **6) Permanent magnets are ferrous metals and are attractive only. Attraction is an inverse square force.**
- **7) Magnetic energy can be shielded.**
- **8) The sliding or perpendicular force of a keeper is much less than the force in the direction of the field to remove the keeper.**
- **9) Most of the magnetic energy is concentrated at the poles of the magnet.**
- **10) A permanent magnet loses little strength unless dropped or heated. Heating misaligns the magnetic elements within the magnet.**
- **11) If a weight lifted by a permanet magnet is slowly increased, the lifting power of the magnet can be increased until all the magnetic domains in the magnet are aligned in the same direction. This becomes the limit.**
- **12) Using magnets to repel tends to weaken them as it causes more misalignment of the domains.**
- **13) A magnetic material placed between two magnets will always be attracted to the stronger magnet.**

So, our ultimate motor becomes a permanent magnet motor of proper size with speed being controlled through the automobiles transmission. And, here is the biggest plus, permanent magnets keep their strength for a minimum of 95 years! So here we have a fuel-less automobile that would last us our lifetime.

There is only one drawback to an automobile powered by a permanent magnet motor - if the vehicle gets involved in an accident, the shock of the crash could jar the magnets and cause them to lose power! But this seems to be a small price to pay for an automobile that could run all day at 60 m.p.h. - use no fuel - and never need a recharge!

Now the only question left to be answered is, "Where do you buy one?" or perhaps, "When will we be able to buy one?" At present there are several companies offering interim solutions. Some offer electric powered designs - but this is strictly batteries, while others offer a hybrid combination of batteries and small gasoline engines. All of these so-called "modern alternatives" suffer from the same lack of accessories we've become accustomed to.

They do not, or cannot offer power steering, brakes or windows or air- conditioning, etc. Since they are small aerodynamically shaped packages holding only two people, their appeal is distinctly limited.

When someone constructs an automobile run by a permanent magnet motor attached to the differential thus eliminating the transmission, the world will beat a path to his door - providing the energy cartel doesn't find him first!

In Richardson, Texas last year, two men - George

Thiess and Jack Hooker have advanced the storage battery to a new level. Their new batteries will operate on magnesium made from seawater.

Thiess/Hooker Advanced Storage Battery

The magnesium is used to charge the battery while in an electrolene solution and the range of their auto is increased by replacing the magnesium rods every 400 to 500 miles. Their studies are being officially watched by the Department of Energy. Perhaps an all new era of electrically powered automobiles may be on its way to reality.

This subject is intensely interesting to many researchers so if you have any suggestions or comments, we here at KeelyNet would greatly appreciate your sharing with us.

TESLAFE2.HTM - commentary

TESLCAR.HTM - another viewpoint

□

UNITED STATES PATENT OFFICE.

NIKOLA TESLA, OF NEW YORK, N. Y.

ELECTRICAL-CIRCUIT CONTROLLER.

SPECIFICATION forming part of Letters Patent No. 609,245, dated August 16, 1898.

Application filed December 2, 1897. Serial No. 660,518. (No model.)

To all whom it may concern:

Be it known that I, NIKOLA TESLA, residing at New York, in the county and State of New York, have invented certain new and useful Improvements in Electrical-Circuit Controllers, of which the following is a specification, reference being had to the drawings accompanying and forming a part of the same.

In every form of electrical apparatus involving a means for making and breaking, more or less abruptly, a circuit a waste of energy occurs during the periods of make or break, or both, due to the passage of the current through an arc formed between the receding or approaching terminals or contacts, or, more generally, through a path of high resistance. The tendency of the current to persist after the actual disjunction or to precede the conjunction of the terminals exists in varying degrees in different forms of apparatus, according to the special conditions present. For example, in the case of an ordinary induction-coil the tendency to the formation of an arc at the break is, as a rule, the greater, while in certain forms of apparatus I have invented in which the discharge of a condenser is utilized this tendency is greatest at the instant immediately preceding the conjunction of the contacts of the circuit-controller which effects the discharge of the condenser.

The loss of energy occasioned by the causes mentioned may be very considerable and is generally such as to greatly restrict the use of the circuit-controller and render impossible a practical and economical conversion of considerable amounts of electrical energy by its means, particularly in cases in which a high frequency of the makes and breaks is required.

Extended experiment and investigation conducted with the aim of discovering a means for avoiding the loss incident to the use of ordinary forms of circuit-controllers have led me to recognize certain laws governing the waste of energy and making it dependent chiefly on the velocity with which the terminals approach and recede from one another and also more or less on the form of the current-wave. Briefly stated, from both theoretical considerations and practical experiment it appears that the loss of energy in any device for making and breaking a circuit, other conditions being the same, is inversely proportional rather to the square than to the first power of the speed or relative velocity of the terminals in approaching and receding from one another in an instance in which the current-curve is not so steep as to materially depart from one which may be represented by a sine function of the time; but such a case seldom obtains in practice. On the contrary, the current-curve resulting from a make and break is generally very steep and particularly so when, as in my system, the circuit-controller effects the charging and discharging of a condenser, and consequently the loss of energy is still more rapidly reduced by increased velocity of approach and separation. The demonstration of these facts and the recognition of the impossibility of attaining the desired results by using ordinary forms of circuit-controllers led me to invent new and essentially different means for making and breaking a circuit in which I have utilized a conducting fluid, such as mercury, as the material for one or both of the terminals and devised novel means for effecting a rapidly-intermittent contact between the fluid and a conductor or series of conductors forming the other terminal.

With a view, however, to securing a more practical and efficient circuit-controller in which not only the relative speed of the terminals but also the frequency of the makes and breaks should be very high I devised the the form of instrument described in an application filed by me June 3, 1897, Serial No. 639,227, in which a receptacle is rotated to impart a rapid movement to a body of conducting fluid contained therein, which is brought in rapidly-intermittent contact with a conductor having peripheral projections extending into the fluid, the movement of the latter being conveniently utilized to rotate the conductor. Such a device, though meeting fully many requirements in practice, is nevertheless subject to certain limitations in the matter of attaining a high relative speed of approach and separation of the terminals, since the path of movement of the conducting projections is not directly away from and toward the fluid, but more or less tangential to the surface of the latter, the velocity of

approach and separation being of course the smaller the greater the diameter of the rotated conductor or terminal.

With the object of securing a greater relative speed of the terminals and a consequently more efficient form of circuit-controller of this type I devised the modified form of apparatus which constitutes the subject of my present application.

In this apparatus one of the members or terminals is a conducting fluid which is caused to issue from an orifice against a series of spaced conductors in rapid succession. For this purpose the series of conductors, or it may be a single conductor, is moved transversely through the stream or jet of fluid, or the jet is moved so as to impinge upon the conductors, or both jet and conductors are moved. This is preferably accomplished by mounting the conductors and the tube or duct from which the fluid issues concentrically and revolving one or both.

The chief feature of novelty which distinguishes the apparatus and in which my improvement resides is the plan adopted for maintaining the stream or jet of conducting fluid. This consists in utilizing the same power that actuates or drives the circuit-controller in effecting the necessary relative movement of its terminals to maintain the proper circulation of the conducting fluid by combining the two mechanisms (the controller and the means for maintaining a circulation of the conducting fluid) in one. This feature is of great practical advantage and may be effected in many ways. A typical arrangement for this purpose is to provide a tube or duct having an orifice at one end directed toward the spaced conductors and its other end in a position to take up a portion of the rapidly-rotating body of conducting fluid, divert it through the duct, and discharge it against the conductors. With this object when a closed receptacle is used a holder for the tube is employed, mounted within the receptacle and concentrically therewith, and this holder, when the receptacle is revolved, is held or influenced by any suitable means, as by magnetic attraction exerted from the outside or otherwise, in such manner as to keep it either in a fixed position or impress upon it a velocity different from that of the rotated fluid.

Such other improvements in details as I have devised and applied to the construction and operation of my improved circuit-controller will be more fully hereinafter described; but from the above general statement of the nature of the device it will be observed that by means of the same the velocity of relative movement of the two parts or elements may be enormously increased and the duration of the arc or discharge between them at the periods of make and break thereby greatly reduced without material increase in the power required to effect it and without impairing the quality of contact or deteriorating the terminals.

In the drawings hereto annexed, Figure 1 is a diagram illustrating the system for which the improvement was more especially designed. Fig. 2 is a top plan view of the circuit-controller. Fig. 3 is a view showing the induction-coil of Fig. 1 with its condenser-case in side elevation and the circuit-controller in vertical central section.

The general scheme of the system for use with which my improved circuit-controller is more especially designed will be understood by a brief reference to Fig. 1. In said figure, A A represent the terminals of a source of current. A′ is a self-induction or choking coil included in one branch of the circuit and permanently connected to one side of a condenser A″. The opposite terminal of this condenser is connected to the other terminal of the source through the primary B of a transformer, the secondary B′ of which supplies the working circuit containing any suitable translating devices, as B″.

The circuit-controller C, which is represented conventionally, operates to make and break a bridge from one terminal of the source to a point between the choking-coil A′ and the condenser A″, from which it will result that when the circuit is completed through the controller the choking-coil A′ is short-circuited and stores energy which is discharged into the condenser when the controller-circuit is broken, to be in turn discharged from the condenser through the primary B when these two are short-circuited by the subsequent completion of the controller-circuit.

I refer now to Figs. 2 and 3 for an illustration of the more important and typical features of my improved circuit-controller. The parts marked *a* compose a closed receptacle of cylindrical form having a dome or extension of smaller diameter. The receptacle is secured to the end of a spindle *c*, which is mounted vertically in bearings of any character suitable for the purpose. As it is intended to impart a rapid rotation to the receptacle *a*, I have shown a convenient device for this purpose comprising a field-magnet *d*, secured to the base or frame *e*, and an annular armature *f*, secured to the receptacle *a*. The coils of the armature are connected with the plates *g* of a commutator secured to the receptacle *a* and made in cylindrical form, so as to surround the socket in which the spindle *c* is stepped. A body of magnetic material *h*, which serves as an armature, is mounted on antifriction-bearings on an extension of the spindle *c*, so that the receptacle and the body *h* may have freely independent movements of rotation. Surrounding the dome *b*, in which the armature *h* is contained, is a core with pole-pieces *o*, which are magnetized by coils *p*, wound on the core. The said core is stationary, being

supported by arms *r*, Fig. 2, independently of the receptacle, so that when the receptacle is rotated and the core energized the attractive force exerted by the poles *o* upon the armature *h* within the receptacle *a* holds the said armature against rotation. To prevent loss from currents set up in the shell of the dome *b*, the latter should be made of German silver or other similar precaution taken. An arm *i* is secured to the armature *h* within the receptacle *a* and carries at its end a short tube *k*, bent, as shown in Fig. 2, so that one open end is tangential to the receptacle-wall and the other directed toward the center of the same. Secured to the top plate of the receptacle *a* are a series of conducting-plates *l*. The part of the top plate *s* from which said conducting-plates *l* depend is insulated from the receptacle proper by insulating packing-rings *t*, but is electrically connected with the dome *b*, and in order to maintain electrical connection from an external circuit to the conductors *l* a mercury-cup *w* is set in the top of the dome, into which cup extends a stationary terminal plug *n*. A small quantity of a conducting fluid, such as mercury, is put into the receptacle *a*, and when the latter is rotated the mercury by centrifugal action is forced out toward its periphery and rises up along its inner wall. When it reaches the level of the open-mouthed tube *k*, a portion is taken up by the latter, which is stationary, and forced by its momentum through the tube and discharged against the conductors *l* as the latter pass in rapid succession by the orifice of said tube. In this way the circuit between the receptacle and the conductors *l* is completed during the periods in which the stream or jet of mercury impinges upon any of the conductors *l* and broken whenever the stream is discharged through the spaces between the conductors.

From the nature of the construction and mode of operation of the above-described apparatus it is evident that the relative speed of separation and approach of the two elements or terminals (the jet and the conductors *l*) may be extremely high, while such increased speed affects in no material respect the quality of contact.

A circuit-controller of the kind described is applicable and useful in many other systems and apparatus than that particularly described herein, and may be greatly modified in construction without departure from the invention.

I am aware that a jet or stream of conducting fluid has heretofore been employed as a means for completing an electric circuit, and I do not claim, broadly, the employment of a conducting fluid in such form as a contact or terminal; but so far as I am aware both the purpose for which I employ such form of contact or terminal and the manner in which I apply it are wholly of my invention, neither having been heretofore proposed.

What I claim is—

1. The combination with a receptacle of a conductor or series of spaced conductors, a nozzle or tube for directing a jet or stream of fluid against the same, the nozzle and conductor being capable of movement relatively to each other, and means for maintaining a circulation of conducting fluid, contained in the receptacle, through the said nozzle, and dependent for operation upon such relative movement, as set forth.

2. The combination with a closed receptacle of a conductor or series of spaced conductors, a nozzle or tube for directing a jet or stream of fluid against the same, and means for forcing a conducting fluid contained in the receptacle through the said nozzle, these parts being associated within the receptacle and adapted to be operated by the application of a single actuating power, as set forth.

3. The combination with a receptacle containing a series of spaced conductors, a duct within the receptacle having one of its ends directed toward the said conductors, means for maintaining a rapid movement of relative rotation between the said end and the conductors and means for maintaining a circulation of a conducting fluid contained in the receptacle through the duct against the conductors, the said conductors and jet constituting respectively the terminals or elements of an electric-circuit controller.

4. The combination with a receptacle capable of rotation and containing a series of spaced conductors, a duct within the receptacle having an orifice directed toward the said conductors, and an open end in position to take up a conducting fluid from a body of the same contained in the receptacle, when the latter is rotated, and direct it against the conductors, the said conductors and the fluid constituting the terminals or elements of an electric-circuit controller.

5. The combination with a receptacle for containing a conducting fluid and a series of spaced conductors thereon, of a duct having an orifice directed toward the said conductors and forming a conduit through which the fluid when the receptacle is rotated is forced and thrown upon the conductors.

6. The combination with a receptacle capable of rotation, and a series of conductors mounted therein, of a duct having an orifice directed toward the conductors, a holder for said duct mounted on bearings within the receptacle which permit of a free relative rotation of said receptacle and holder, and means for opposing the rotation of the said holder in the direction of the movement of the fluid while the receptacle is rotated, whereby the conducting fluid within the receptacle will be caused to flow through the duct against the conductors.

7. The combination with a receptacle and a motor for rotating the same, of a magnetic body mounted in the receptacle, a magnet exterior to the receptacle for maintaining the body stationary while the receptacle rotates,

a series of conductors in the receptacle and a duct carried by the said magnetic body and adapted to take up at one end a conducting fluid in the receptacle when the latter rotates and to direct such fluid from its opposite end against the series of conductors.

8. The combination with a receptacle for containing a conducting fluid, a series of spaced conductors within the same, and a motor, the armature of which is connected with the receptacle so as to impart rotation thereto, a magnetic body capable of turning freely within the receptacle about an axis concentric with that of the latter, a duct carried by the said body having one end in position to take up the conducting fluid and the other in position to discharge it against the spaced conductors, and a magnet exterior to the receptacle for holding the magnetic body stationary when the receptacle is rotated.

NIKOLA TESLA.

Witnesses:
M. LAWSON DYER,
G. W. MARTLING.

No. 609,245. Patented Aug. 16, 1898.

N. TESLA.

ELECTRICAL CIRCUIT CONTROLLER.

(Application filed Dec. 2, 1897.)

(No Model.)

Fig. 1

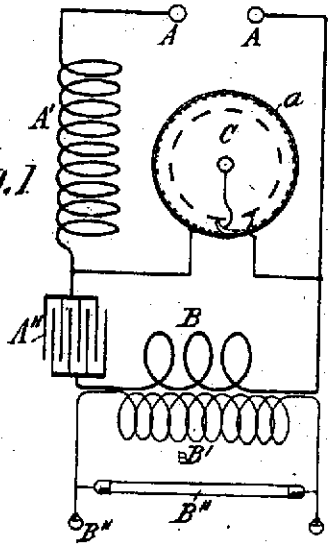

Fig. 2

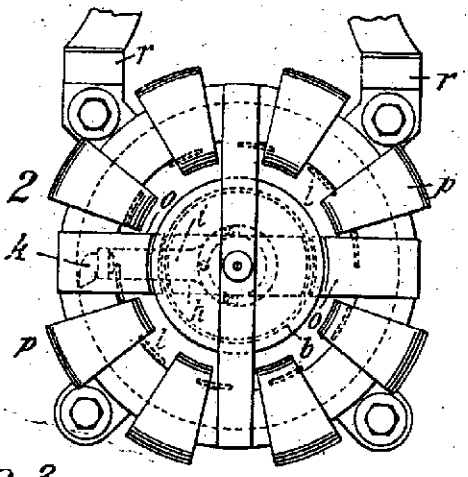

Fig. 3

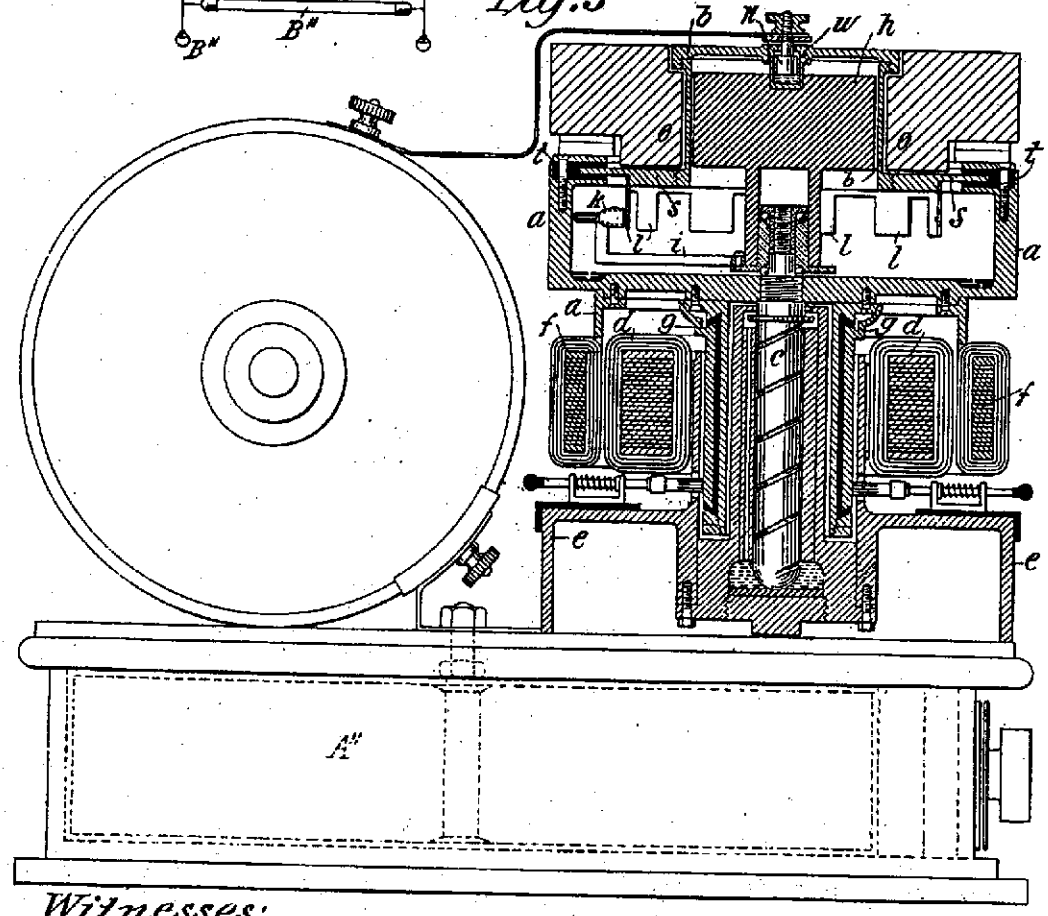

Witnesses:
Raphael Netter
M. Lawson Dyer.

Nikola Tesla, Inventor
by Kerr, Curtis & Page Attys

UNITED STATES PATENT OFFICE.

NIKOLA TESLA, OF NEW YORK, N. Y.

ELECTRIC-CIRCUIT CONTROLLER.

SPECIFICATION forming part of Letters Patent No. 609,246, dated August 16, 1898.

Application filed February 28, 1898. Serial No. 671,897. (No model.)

To all whom it may concern:

Be it known that I, NIKOLA TESLA, a citizen of the United States, residing in the borough of Manhattan, in the city, county, and State of New York, have invented certain new and useful Improvements in Electric-Circuit Controllers, of which the following is a specification, reference being had to the drawing accompanying and forming a part of the same.

The invention which forms the subject of my present application is an improvement in a novel class of circuit-controlling appliances heretofore invented by me and more especially designed to be used with my now well-known apparatus for the production of electric currents of high frequency by means of condenser-discharges, but applicable generally as a means for making and breaking an electric circuit.

In the circuit-controllers of the particular class or type to which my present improvement pertains I have utilized a conducting liquid as one of the terminals and have employed as the other terminal a solid conductor and provided various means for bringing the two into rapidly-intermittent contact.

The distinguishing feature of my present improvement lies chiefly in the use of a conducting liquid for both the terminals under conditions which permit of a rapidly-intermittent contact between them, as will be herein set forth.

The accompanying drawing illustrates an apparatus embodying the principle of my said improvement.

The figure is a central vertical section of the circuit-controller.

In the drawing is shown a receptacle composed of two cylindrical metallic portions A A', secured together by bolts B and nuts C, but insulated from each other. The receptacle is journaled, by means of trunnions formed on or secured to its ends, in standards D D, and any suitable means is employed to impart rotation to it. This is conveniently effected by constructing or organizing the receptacle in such manner that it may serve as the rotating element of an electromagnetic motor in conjunction with a surrounding stationary element E E. The abutting ends of the two parts of the receptacle are formed with inwardly-extending flanges F, which divide the peripheral portions of the receptacle into two compartments G G'. Into one of these compartments, as G, extends a spindle H, having its bearing in the end of the part A and the trunnion secured to or extending therefrom. Into the other compartment G' extends a spindle H', similarly journaled in the end of part A' and its trunnion. Each spindle carries or is formed with a weighted arm K, which, remaining in a vertical position, holds its spindle stationary when the receptacle is revolved.

To the weighted arm of spindle H is secured a standard L, carrying a tube L', with one open end in close proximity to the inner peripheral wall of the compartment G and the other directed toward the axis, but inclined toward the opposite compartment. To the weighted arm of spindle H' is similarly secured a standard M, which is hollow and constitutes a portion of a duct or passage which extends through a part of the spindle and opens through a nozzle M' into a circular chamber N in the wall of the part A'. From this chamber run passages N' to nozzles O, in position to discharge jets or streams of liquid in such directions as to intersect, when the nozzles are rotated, a stream issuing from the end of tube L'.

In each portion or compartment of the receptacle is placed a quantity of a conducting liquid, such as mercury, and the ends of the tubes L' and M are provided with openings which take up the mercury when on the rotation of the receptacle it is carried by centrifugal force against the peripheral wall. The mercury when taken up by the tube L' issues in a stream or jet from the inner end of said tube and is projected into the compartment G'. The mercury taken up by the tube M runs into the circular chamber N, from which it is forced through the passages N' to the nozzles O, from which it issues in jets or streams directed into the compartment G. As the nozzles O revolve with the receptacle the streams which issue from them will therefore be carried across the path of the stream which issues from the tube L' and which is stationary, and the circuit between the two compartments will be completed by

the streams whenever they intersect and interrupted at all other times.

The continuity of the jets or streams is not preserved ordinarily to any great distance beyond the orifices from which they issue, and hence they do not serve as conductors to electrically connect the two sides of the receptacle beyond their point of intersection with each other.

It will be understood that so far as the broad feature of maintaining the terminal jets is concerned widely-different means may be employed for the purpose and that the spindles mounted in free bearings concentrically with the axis of rotation of the receptacle and held against rotation by the weighted arms constitute but one specific way of accomplishing this result. This particular plan, however, has certain advantages and may be applied to circuit-controllers of this class generally whenever it is necessary to maintain a stationary or nearly stationary body within a rotating receptacle. It is further evident from the nature of the case that it is not essential that the jet or jets in one compartment or portion of the instrument should be stationary and the others rotating, but only that there should be such relative movement between them as to cause the two sets to come into rapidly-intermittent contact in the operation of the device.

The number of jets, whether stationary or rotating, is purely arbitrary; but since the conducting fluid is directed from one compartment into the other the aggregate amount normally discharged from the compartments should be approximately equal. However, since there always exists a tendency to project a greater quantity of the fluid from that compartment which contains the greater into that which contains the lesser amount no difficulty will be found in this respect in maintaining the proper conditions for the satisfactory operation of the instrument.

A practical advantage, especially important when a great number of breaks per unit of time is desired, is secured by making the number of jets in one compartment even and in the other odd and placing each jet symmetrically with respect to the center of rotation. Preferably the difference between the number of jets should be one. By such means the distances between the jets of each set are made the greatest possible and hurtful short-circuits are avoided.

For the sake of illustration let the number of jets or nozzles L′ in one compartment be nine and the number of those marked O in the other compartment ten. Then by one revolution of the receptacle there will be ninety makes and breaks. To attain the same result with only one jet, as L′, it would be necessary to employ ninety jets O in the other compartment, and this would be objectionable, not only because of the close proximity of the jets, but also of the great quantity of fluid required to maintain them.

In the use of the instrument as a circuit-controller it is merely necessary to connect the two insulated parts of the receptacle to the two parts of the circuit, respectively, as by causing brushes X Y, connected with circuit-wires, to bear at any suitable points on the said two parts A A′.

In instruments of this character in which both terminals are formed by a liquid element there is no wear or deterioration of the terminals and the contact between them is more perfect. The durability and efficiency of the devices are thus very greatly increased.

Having now described my invention, what I claim is—

1. A circuit-controller comprising in combination means for producing streams or jets of conducting liquid forming the terminals, and means for bringing the jets or streams of the respective terminals into intermittent contact with each other, as set forth.

2. In a circuit-controller, the combination with two sets of orifices adapted to discharge jets in different directions, means for maintaining jets of conducting liquid through said orifices, and means for moving said orifices relatively to each other so that the jets from those of one set will intermittently intersect those from the other, as set forth.

3. The combination in a circuit-controller of ducts and means for discharging therefrom streams or jets of conducting fluid in electrical contact with the two parts of the circuit respectively, the orifices of said ducts being capable of movement relatively to each other, whereby the streams discharged therefrom will intersect at intervals during their relative movement, and make and break the electric circuit, as set forth.

4. In a circuit-controller the combination with one or more stationary nozzles and means for causing a conducting fluid forming one terminal to issue therefrom, of one or more rotating tubes or nozzles, means for causing a conducting liquid forming the other terminal to issue therefrom, the said rotating nozzles being movable through such a path as to cause the liquid issuing therefrom to intersect that from the stationary nozzles as set forth.

5. The combination with a rotating receptacle divided into two insulated compartments, a spindle in one compartment with its axis concentric with that of the receptacle, means for opposing the rotation of said spindle, and a tube or duct carried by the spindle and adapted to take up a conducting fluid at one end from the inner periphery of the compartment when the receptacle is rotated and direct it from the other end into the other compartment, of a similar spindle in the other compartment and means for opposing its rotation, a tube carried by the spindle and having an opening at one end near the inner periphery of the compartment and discharging into a chamber from which lead one or more passages to nozzles fixed to the rotating re-

ceptacle and adapted to discharge across the path of the jet from the stationary nozzle, as set forth.

6. In a circuit-controller the combination with a rotating receptacle of a body mounted therein and formed or provided with a weighted portion eccentric to its axis which opposes its rotation and a tube or duct carried by said body and adapted to take up a conducting fluid from the rotating receptacle as set forth.

7. In a circuit-controller the combination of two sets of nozzles and means for projecting from the same, jets of conducting fluid which constitute respectively the terminals of the controller, means for moving the nozzles relatively to each other so that the jets of the two sets are brought successively into contact, the nozzles of each set being arranged symmetrically about an axis of rotation, there being one more nozzle in one set than in the other.

NIKOLA TESLA.

Witnesses:
M. LAWSON DYER,
G. W. MARTLING.

No 609.246. Patented Aug. 16, 1898.

N. TESLA.

ELECTRIC CIRCUIT CONTROLLER.

Application filed Feb. 28, 1896.

(No Model.)

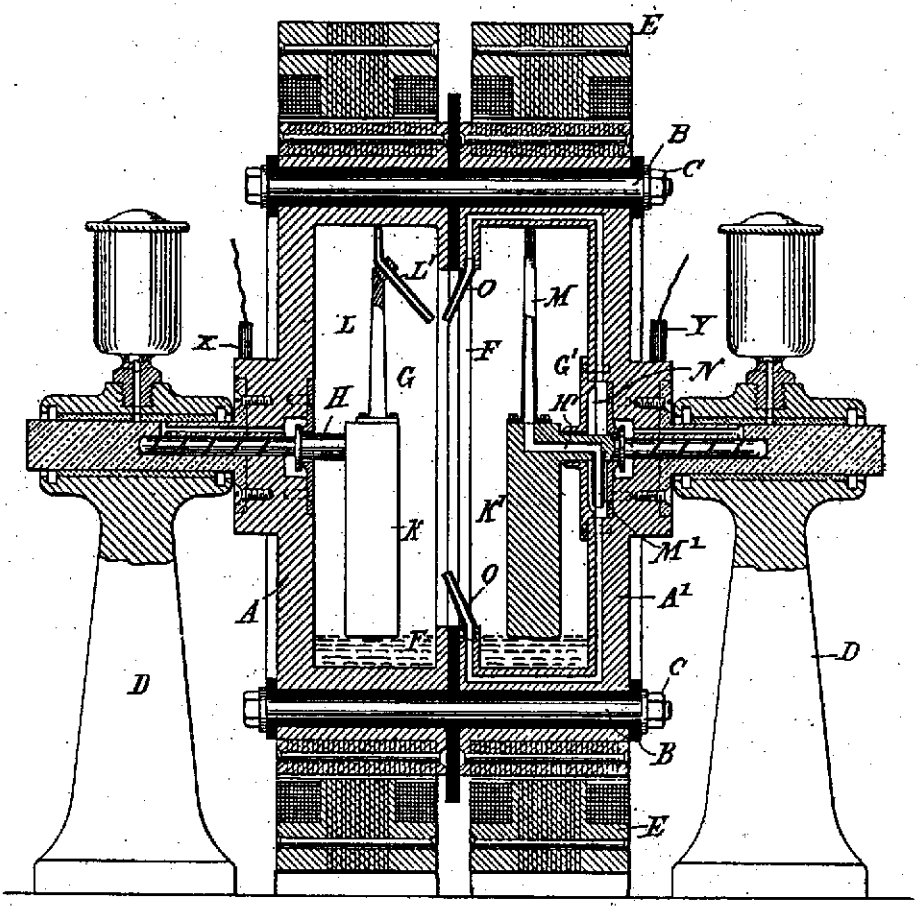

Witnesses:
Benjamin Miller
Augustine Fenton

Inventor
Nikola Tesla
by Kerr, Curtis & Page
Att'ys.

UNITED STATES PATENT OFFICE.

NIKOLA TESLA, OF NEW YORK, N. Y.

ELECTRIC-CIRCUIT CONTROLLER.

SPECIFICATION forming part of Letters Patent No. 609,247, dated August 16, 1898.

Application filed March 12, 1898. Serial No. 673,668. (No model.)

To all whom it may concern:

Be it known that I, NIKOLA TESLA, of the borough of Manhattan, in the city, county, and State of New York, have invented certain new and useful Improvements in Circuit-Controllers, of which the following is a specification, reference being had to the drawings accompanying and forming a part of the same.

In an application filed by me on June 3, 1897, Serial No. 639,227, I have shown and described a device for making and breaking an electric circuit comprising a rotary receptacle containing a conducting fluid and a terminal mounted within but independently of the receptacle and caused by the rotation of the latter to make and break electrical contact with the fluid.

The invention on which my present application is based is an improvement in devices of this particular class, and has primarily as its object the production of a circuit-controller in which an independently-mounted terminal operated in a similar manner by a rotating body of conducting fluid may be inclosed within a gas-tight receptacle.

The invention comprises features of construction by which this object is practically secured and certain improvements applicable to this and other analogous devices, as will be more fully hereinafter set forth.

In the accompanying drawings, Figure 1 is vertical central section of the improved circuit-controller, and Fig. 2 a top plan view of the same with the top or cover of the receptacle removed.

The operative portions of the circuit-controlling mechanism are contained in a closed cylindrical receptacle A, of iron or steel, mounted on a spindle B in a suitable socket or support C to permit it to be freely and rapidly rotated. The socket C is secured to or forms a part of a base or stand D.

As a means of producing the proper rotation of the receptacle A, I have shown a field-magnet E, mounted on or secured to the base D, and an armature F, supported by a bracket G from the under side of the receptacle A. The same bracket also carries a series of commutator-segments H, upon which bear brushes I, these parts being arranged to constitute an electromagnetic motor with stationary field and rotating armature. It may be stated that any other suitable means may be employed to rotate the receptacle and the fluid.

In the spindle B and concentric with its axis is a spindle J in bearings specially constructed to reduce friction in order that the spindle J may be as little as possible influenced by the rotation of the main spindle and receptacle carried thereby. A suitable provision is made to oppose or prevent the rotation of the spindle J during the rotation of the receptacle. I have devised for this purpose the following:

The spindle B is held by its bearings at an angle to the vertical, and a weight K is secured eccentrically to the spindle J and tends to hold the said spindle always in one position. The inclination of the axes of rotation necessary for this result may be substantially that shown and should not be materially greater, for the reason that it is especially advantageous to preserve the spindles and bearings as nearly as practicable vertical on account of lesser friction and easier lubrication.

Attached to the spindle J or weight K is an insulated bracket L, carrying a standard or socket M, in which is mounted on antifriction-bearings a spindle N. Secured to this latter is a plate with radial arms O, from which depend vanes or blades P, with projections Q extending radially therefrom. A shield or screen R incloses the vanes, except on the side adjacent to the inner periphery of the receptacle A.

A small quantity of a conducting fluid S is placed in the receptacle, and in order to secure a good electrical connection between the vanes P and a terminal on the outside of the receptacle a small mercury-cup T, in metallic contact with the vanes through the bracket L and socket M, is secured to the weight K. A metal stud V, set in an insulated bolt W, projects into the cup T through a packed opening in its cover. One terminal of the circuit-controlling mechanism will thus be any part of the metal receptacle and the other the insulated bolt W. The apparatus may be connected up in circuit by connecting the wires of the circuit to a brush X, bearing on the bolt W, and to a binding-post Y in contact with the base D.

To operate the apparatus, the receptacle is

set in rotation, and as its speed increases the mercury or other conducting fluid which it contains is carried by centrifugal force up the sides of the inner wall, over which it spreads in a layer. When this layer rises sufficiently to encounter the projections Q on the blades or vanes P, the latter are set in rapid rotation, and the electrical connection between the terminal of the apparatus is thereby made and broken, it may be, with very great rapidity.

The projections Q are preferably placed at different heights on the vanes P, so as to secure greater certainty of good contact with the mercury film when in rapid rotation.

As to the forms of the circuit-controller heretofore referred to and upon which my present invention is an improvement the blades or vanes P may be regarded in a broad sense as typical of any device—such, for example, as a stelliform disk—which will be set and maintained in rotation by that of the receptacle. So, also, having regard to the feature of my invention which provides for maintaining such a device in operation in a receptacle which may be hermetically sealed, so as to be capable of containing an inert medium under pressure in which the makes and breaks occur and which medium is practically essential to a long-continued and economical operation of the device, I may employ other and widely-different means for opposing or preventing the rotation of the part carrying such vanes in the direction of the rotation of the receptacle and fluid.

Having now described my invention, what I claim is—

1. A circuit-controller comprising, in combination, a closed receptacle containing a fluid, means for rotating the receptacle, a support mounted within the receptacle, means for opposing or preventing its movement in the direction of rotation of the receptacle, and a conductor carried by said support and adapted to make and break electric connection with the receptacle through the fluid, as set forth.

2. A circuit-controller comprising, in combination, a terminal capable of rotation and formed or provided with radiating contacts, a closed receptacle containing a fluid which constitutes the opposite terminal, means for rotating the receptacle, a support therein for the rotating terminal, and means for opposing or preventing the rotation of the support in the direction of the rotation of the receptacle, as set forth.

3. In a circuit-controller, the combination with a receptacle capable of rotation about an axis inclined to the vertical and containing a fluid which constitutes one terminal, a second terminal mounted within the receptacle, on a support capable of free rotation relatively to the receptacle, and a weight eccentric to the axis of rotation of the support for said terminal for opposing or preventing its movement in the direction of the rotation of the said receptacle, as set forth.

4. The combination with a receptacle mounted to revolve about an axis inclined to the vertical, of a spindle within the receptacle and concentric with its axis, a weight eccentric to the spindle, and a terminal carried by the said spindle, and adapted to be rotated by a body of conducting fluid contained in the receptacle when the latter is rotated, as set forth.

5. The combination with a receptacle mounted to rotate about an axis inclined to the vertical, a spindle within the receptacle and concentric with its axis, a weighted arm attached to said spindle, a bracket or arm also secured to said spindle, a rotary terminal with radiating contact arms or vanes mounted on said bracket in position to be rotated by a body of conducting fluid contained in said receptacle when said fluid is displaced by centrifugal action, as set forth.

NIKOLA TESLA.

Witnesses:
M. LAWSON DYER,
G. W. MARTLING.

No. 609,247. Patented Aug. 16, 1898.

N. TESLA.

ELECTRIC CIRCUIT CONTROLLER.

(Application filed Mar. 12, 1896.)

(No Model.)

Fig. 1

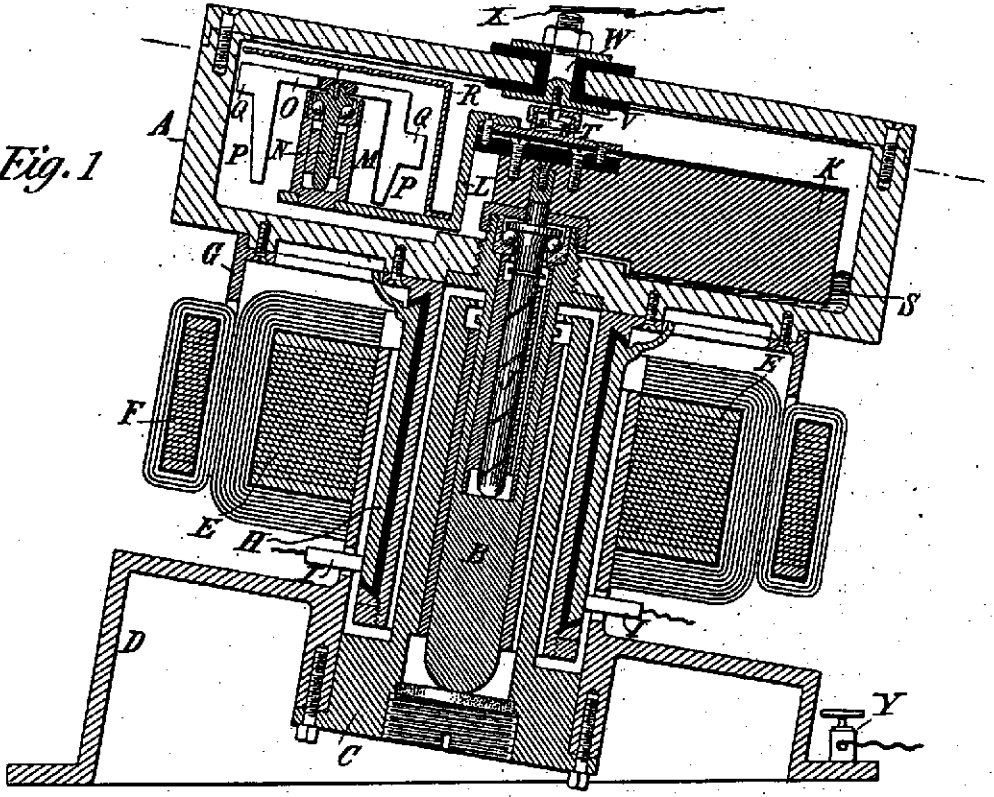

Fig. 2

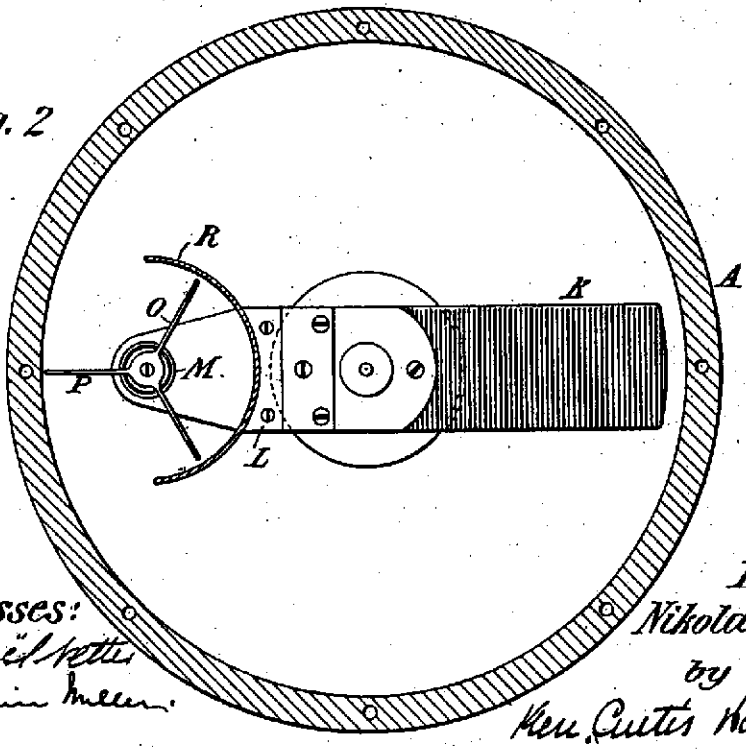

Witnesses:
Raphael Netter
Benjamin Miller.

Inventor
Nikola Tesla
by
Kerr, Curtis & Page Attys.

UNITED STATES PATENT OFFICE.

NIKOLA TESLA, OF NEW YORK, N. Y.

ELECTRIC-CIRCUIT CONTROLLER.

SPECIFICATION forming part of Letters Patent No. 609,248, dated August 16, 1898.

Application filed March 12, 1898. Serial No. 673,559. (No model.)

To all whom it may concern:

Be it known that I, NIKOLA TESLA, of the borough of Manhattan, in the city, county, and State of New York, have invented certain new and useful Improvements in Circuit-Controllers, of which the following is a specification, reference being had to the drawing accompanying and forming a part of the same.

In previous applications filed by me, notably in Serial No. 660,518, filed December 2, 1897, and others, I have shown and described various forms of electric-circuit controllers in which a conducting fluid is used for one or both of the terminals. These contrivances, while applicable generally as a means of making and breaking an electric circuit with great rapidity, were devised by me more especially for use in my now well-known system of electrical conversion by means of condenser-discharges and for this reason have been designed with especial reference to the peculiar and exceptional conditions which obtain in such systems. My present invention is an improvement in circuit-controllers of this kind, and in order that the object and nature of the improvement may be more readily understood and appreciated I may refer briefly to the more essential characteristics of the devices described before upon which the present improvement is based. As it was primarily essential that these controllers be capable of making and breaking the circuit at a very rapid rate and as such a result could not be secured practically or economically by any of the ordinary devices employing rigid contacts or terminals I was led to invent apparatus in which the circuit connections were established and broken between a rigid terminal and a fluid conductor or between two fluid conductors in the form of jets or streams. In the forms of apparatus employing a rigid or solid conductor as one terminal and a fluid as the other the makes and breaks of course occur always between a solid and a fluid terminal, and although the operative parts of my improved circuit-controllers were usually contained in air or gas tight receptacles and in an inert medium, both for the purpose of improving their action and preventing deterioration of the terminals, there is still a liability to wear of the rigid or solid terminal.

Under certain conditions, as when the circuit-controller is operated from a source of direct current, the deterioration of the solid terminal may be materially reduced by connecting it to the negative pole of the generator. Nevertheless, there will be always a slow wearing away of the metal, which to overcome entirely in a novel manner is the object of my present improvement. To do this, I effect the closure of the circuit through two parts of conducting fluid; but instead of breaking the circuit by the movement of these two parts or terminals, as before, I separate them periodically by the interposition of an insulator which is preferably solid and refractory. For example, I provide a plate or disk with teeth or projections—preferably of glass, lava, or the like—which are caused by the rotation of the disk to pass through the fluid conductor, jet, or whatever it may be, and thus effect a make and break of the circuit.

By means of such a device the breaks always occur between fluid terminals, and hence deterioration and consequent impairment of the qualities of the apparatus are avoided.

A preferred form of my improved circuit-controller is illustrated in the accompanying drawing, which shows a central vertical section of the same.

The two terminals are contained in an air-tight receptacle A, of iron or steel, which is mounted on a spindle B in a suitable socket or support C, so as to rotate freely. The socket C is secured to or forms part of a base or stand D. Any suitable means may be employed for effecting the rotation of the receptacle, and in illustration of a convenient and practicable means for this purpose I have shown an armature E, secured to a cylindrical extension of the receptacle that surrounds the socket C, and a field-magnet F, which is supported independently and is stationary. The armature-coils are connected with the segments S of a commutator on which bear brushes G.

In the spindle B and concentric with its axis is a spindle H, supported on ball-bearings or otherwise arranged to have a free movement of rotation relatively to the spindle B, so as to be as little as possible influenced by the rotation of the latter.

Any convenient means is provided to oppose or prevent the rotation of the spindle H

during the rotation of the receptacle. In the particular arrangement here shown for this purpose a weight or weighted arm J is secured to the spindle H and eccentrically to the axis of the latter, and as the bearing for the spindle B holds the same at an angle to the vertical this weight acts by gravity to hold the spindle H stationary.

Secured to the top or cover of the receptacle A by a stud K, which passes through an insulating-bushing in said cover and is held by a nut L, is a circular disk M, of conducting material, preferably iron or steel, having its edge turned downwardly and then inwardly to provide a peripheral trough on the under side of the disk.

To the under side of the disk M is secured a second disk N, having downwardly-inclined peripheral projections O O, of insulating and preferably refractory material, in a circle concentric with the disk M.

A tube or duct P is mounted on the spindle H or the weight J and is so arranged that the orifice at one end is directed outwardly toward the trough of the disk M, while the other lies close to the inner peripheral wall of the receptacle, so that if a quantity of mercury or other conducting fluid be placed in the receptacle and the latter rotated the tube or duct P, being held stationary, will take up the fluid which is carried by centrifugal action up the side of the receptacle and deliver it in a stream or jet against the trough or flange of the disk M or against the inner surfaces of the projections O of disk N, as the case may be.

Obviously, since the two disks M and N rotate with respect to the jet or stream of fluid issuing from the duct P, the electrical connection between the receptacle and the disk M through the fluid will be completed by the jet when the latter passes to the disk M between the projections O and will be interrupted whenever the jet is intercepted by the said projections.

The rapidity and the relative duration of the makes and breaks is determined by the speed of rotation of the receptacle and the number and width of the intercepting projections O.

By forming that portion of the disk M with which the jet makes contact as a trough, which will retain when in rotation a portion of the fluid directed against it, a very useful feature is secured. The fluid under the action of centrifugal force accumulates in and is distributed along the trough and forms a layer over the surface upon which the jet impinges. By this means a very perfect contact is always secured and all deterioration of the terminal surfaces avoided.

The principle of interrupting the circuit by intermittently passing an insulator through a fluid conductor may be carried out by many specifically-different forms of apparatus, and in this respect I do not limit myself to the particular form herein shown.

What I claim is—

1. In an electrical-circuit controller, the combination with a conductor forming one of the terminals, of means for maintaining a jet or stream of conducting fluid forming the other terminal, and directing it against said conductor, and a body adapted to be intermittently moved through and to intercept the jet or stream, as set forth.

2. In an electrical-circuit controller, the combination with a rigid terminal, of means for directing against such terminal a jet or stream of conducting fluid in electrical connection with the other terminal, and a body adapted to be intermittently moved through and to intercept the jet or stream, as set forth.

3. In an electrical-circuit controller, the combination with a rigid terminal, of means for directing against such terminal a jet or stream of conducting fluid in electrical connection with the other terminal, a body having a series of radial projections and means for rotating the same so that the said projections will intermittently intercept the stream or jet, as set forth.

4. In a circuit-controller, the combination with a rotary conductor forming one terminal, means for directing against such terminal a jet or stream of conducting fluid in electrical connection with the other terminal, and a body with spaced projections mounted to rotate in a path that intercepts the jet or stream of fluid, as set forth.

5. In a circuit-controller, the combination with a rotary conductor forming one terminal, and means for directing intermittently against such terminal a jet or stream of fluid in electrical connection with the other terminal, the part of said rotary conductor upon which the jet or stream impinges being formed so as to retain, by centrifugal force, a portion of the fluid directed against it, as set forth.

6. The combination of the receptacle, the conducting-disk secured within it, the insulated disk with peripheral projections and the stationary tube or duct for directing a stream or jet of conducting fluid toward the conducting-disk and across the path of the projections O, as set forth.

7. The combination of the receptacle, the conducting-disk with a peripheral trough-shaped flange, the insulated disk with peripheral projections O, and the stationary tube or duct for directing a stream or jet of conducting fluid into the trough-shaped flange of the conducting-disk and across the path of the projections O, as set forth.

NIKOLA TESLA.

Witnesses:
M. LAWSON DYER,
G. W. MARTLING.

No. 609,248. Patented Aug. 16, 1898.

N. TESLA.

ELECTRIC CIRCUIT CONTROLLER.

(Application filed Mar. 12, 1898.)

(No Model.)

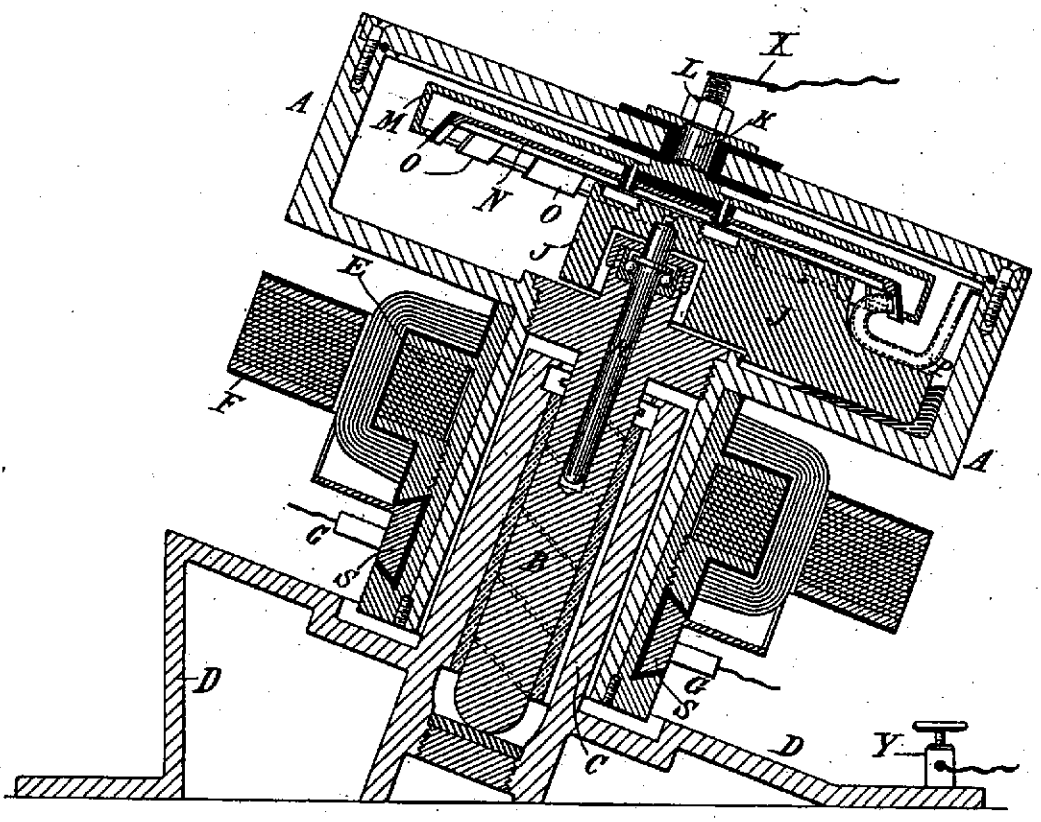

Witnesses:
Raphael Netter
Benjamin Mueller

Nikola Tesla, Inventor

by Munn, Curtis & Page Atty's.

UNITED STATES PATENT OFFICE.

NIKOLA TESLA, OF NEW YORK, N. Y.

ELECTRIC-CIRCUIT CONTROLLER.

SPECIFICATION forming part of Letters Patent No. 609,249, dated August 16, 1898.

Application filed March 12, 1898. Serial No. 673,560. (No model.)

To all whom it may concern:

Be it known that I, NIKOLA TESLA, of the borough of Manhattan, in the city, county, and State of New York, have invented certain new and useful Improvements in Electrical-Circuit Controllers, of which the following is a specification, reference being had to the drawing accompanying and forming part of the same.

The present application is based upon improvements in electrical-circuit controllers of the kind heretofore invented by me and described in previous applications, notably in an application filed December 2, 1897, Serial No. 660,518. The chief distinguishing features of these devices are the use of a conducting fluid for one or both of the terminals under conditions which permit of a very rapid succession of makes and breaks and a construction or arrangement which allows the inclosing of the terminals in an air-tight receptacle in which an inert medium may be maintained. My efforts to meet the practical requirements of apparatus of this kind have led me to adopt expedients and to invent mechanisms entirely novel in such devices. For example, in order to effect a rapidly-intermittent contact between two terminals by the use of a jet or jets in a closed receptacle it is obviously necessary to employ special means which will operate to hold one part of the apparatus stationary while the other rotates or to rotate both the essential parts or terminals in opposite directions or, as the case may be, in the same direction at different speeds.

The present invention is embodied in a device for securing the proper relative movement of the two parts or terminals of the circuit-controller and involves two salient features of novelty, one that it provides for maintaining in a rotating receptacle a stationary jet or jets which by impinging on a rigid conductor maintain the latter in rotation, thereby securing the requisite rapidly-intermittent contact between the two, and the other that it utilizes the rotation of such rigid conductor as a means for opposing or preventing the movement of its own supports in the direction of rotation of the receptacle, thereby securing, among other things, an approximately constant relative movement between the parts, a feature which in devices of this kind is often very desirable.

In the drawing hereto annexed I have illustrated the preferred form of apparatus which I have devised for carrying out these improvements. The figure is a central vertical cross-section of a circuit-controller.

A designates a receptacle, usually of iron or steel and mounted in any suitable manner, as by trunnions B B, having bearings in standards C C, so as to be capable of rapid rotation about a horizontal axis.

In the particular form of device under consideration the receptacle is divided into two parts insulated by a washer D and held together by insulated bolts E with nuts F. These two parts are electrically connected, respectively, with the two terminals of the apparatus, as hereinafter described, and by means of brushes X Y, bearing at any suitable points on the two parts of the receptacle, the circuit-controller is connected with the wires of a circuit.

Any convenient means may be employed to rotate the receptacle; but a simple way to effect this is to surround the same with a field-magnet G and to make the receptacle itself the armature of an electric motor or else to secure to it armature-cores, as H.

A body I is supported by trunnions J, having bearings in the ends of the receptacle and concentric with the axis of rotation of the same. The weight of the body I being eccentric to this axis tends to oppose its turning about the axis when the receptacle is rotated.

Upon the body or support I, but insulated therefrom, is secured a vertical standard K, in which there is a freely-rotatable spindle L, carrying a disk M, with radial arms inclined to the plane of the disk, so as to form vanes N. Arms O P are also secured to the body I and are formed with or carry at their ends ducts or tubes Q, with one end directed toward and opening upon the vanes N and the other end close to the inner wall of the receptacle and opening in the direction opposite to that of the rotation of the receptacle.

A suitable quantity of mercury R is placed in the receptacle before the latter is sealed or closed.

The operation of the device is as follows:

The receptacle is started in rotation, and as it acquires a high velocity the mercury or other conducting fluid R is caused by centrifugal action to distribute itself in a layer over the inner peripheral surface of the receptacle. As the tubes or ducts Q do not take part in the rotation of the fluid, being held at the start by the weighted body I, they take up the mercury as soon as it is carried to the points where the ducts open and discharge it upon the vanes of the disk M. By this means the disk is set in rapid rotation, establishing the contact between the two sides of the receptacle which constitute the two terminals of the circuit-controller whenever the two streams or jets of fluid are simultaneously in contact with the vanes, but breaking the contact whenever the jets discharge through the spaces between the vanes. The chief object of employing more than one insulated jet is to secure a higher velocity of approach and separation, and in respect to the number of jets thus employed the device may be obviously modified as desired without departure from the invention. The disk M, having acquired a very rapid rotation, operates to prevent by gyrostatic action any tendency of the body I to rotate or oscillate, as such movement would change the plane of rotation of the disk. The movement of the parts, therefore, and the operation of the device as a whole are very steady and uniform, and a material practical advantage is thereby secured. The speed of the disk will be chiefly dependent on the velocity of the streams and pitch of the blades, and it is of course necessary in order to produce a constant speed of rotation of the disk that the velocity of the streams be constant. This is accomplished by rotating the receptacle with a constant speed; but when this is impracticable and the uniformity of motion of the disk very desirable I resort to special means to secure this result, as by providing overflowing-reservoirs V V, as indicated by dotted lines, from which the fluid issues upon the vanes with constant velocity, though the speed of the receptacle may vary between wide limits.

It may be stated that the jets can be produced in any other known ways and that they may be utilized in any desired manner to produce rotation of the disk.

Having now described my invention, what I claim is—

1. The combination in a circuit-controller with a closed rotary receptacle, of a rigid conductor mounted within the same and through which the circuit is intermittently established, and means for directing a jet or stream of a fluid which is contained in the receptacle, against the said body so as to effect its rotation independently of the receptacle, as set forth.

2. In an electric-circuit controller, the combination of a closed rotary receptacle, a conducting body therein adapted to be rotated independently of the receptacle by the impingement thereon of a jet or stream of conducting fluid, and means for maintaining such a jet and directing it upon the said conductor, as set forth.

3. In a circuit-controller, the combination with a rotary receptacle of a body or part mounted within the receptacle and concentrically therewith, a conducting-terminal supported by said body and capable of rotation in a plane at an angle to the plane of rotation of the receptacle so as to oppose, by gyrostatic action, the rotation of the support, and means for directing a jet of conducting fluid against the said terminal, as set forth.

4. In a circuit-controller, the combination with a rotary receptacle of a support for a conductor mounted thereon concentrically with the receptacle and a gyrostatic disk carried by the support and adapted, when rotating, to oppose its movement in the direction of rotation of the receptacle, as set forth.

5. In a circuit-controller, the combination with a rotary receptacle containing a conducting fluid, a support mounted within the receptacle, means for opposing or preventing its movement in the direction of rotation of the receptacle, one or more tubes or ducts carried thereby and adapted to take up the fluid from the rotating receptacle and discharge the same in jets or streams, and a conductor mounted on the support and adapted to be rotated by the impingement thereon of said jet or jets, as set forth.

6. The combination in a circuit-controller of a rotary receptacle, one or more tubes or ducts and a support therefor capable of rotation independently of the receptacle, a conductor mounted on said support in a plane at an angle to that of rotation of the receptacle, and adapted to be maintained in rotation by a jet of fluid taken up from the receptacle by and discharged upon it from the said tube or duct, when the receptacle is rotated.

7. The combination with a rotary receptacle of one or more tubes or ducts, a holder or support therefor mounted on bearings within the receptacle, which permit of a free relative rotation of said receptacle and holder, a disk with a bearing on the said holder and having its plane of rotation at an angle to that of the receptacle, the disk being formed or provided with conducting-vanes, upon which a jet of conducting fluid, taken up by the tube or duct from the receptacle when in rotation, is directed.

NIKOLA TESLA.

Witnesses:
M. LAWSON DYER,
G. W. MARTLING.

No. 609,249. Patented Aug. 16, 1898.

N. TESLA.

ELECTRIC CIRCUIT CONTROLLER.

(Application filed Mar. 12, 1896.)

(No Model.)

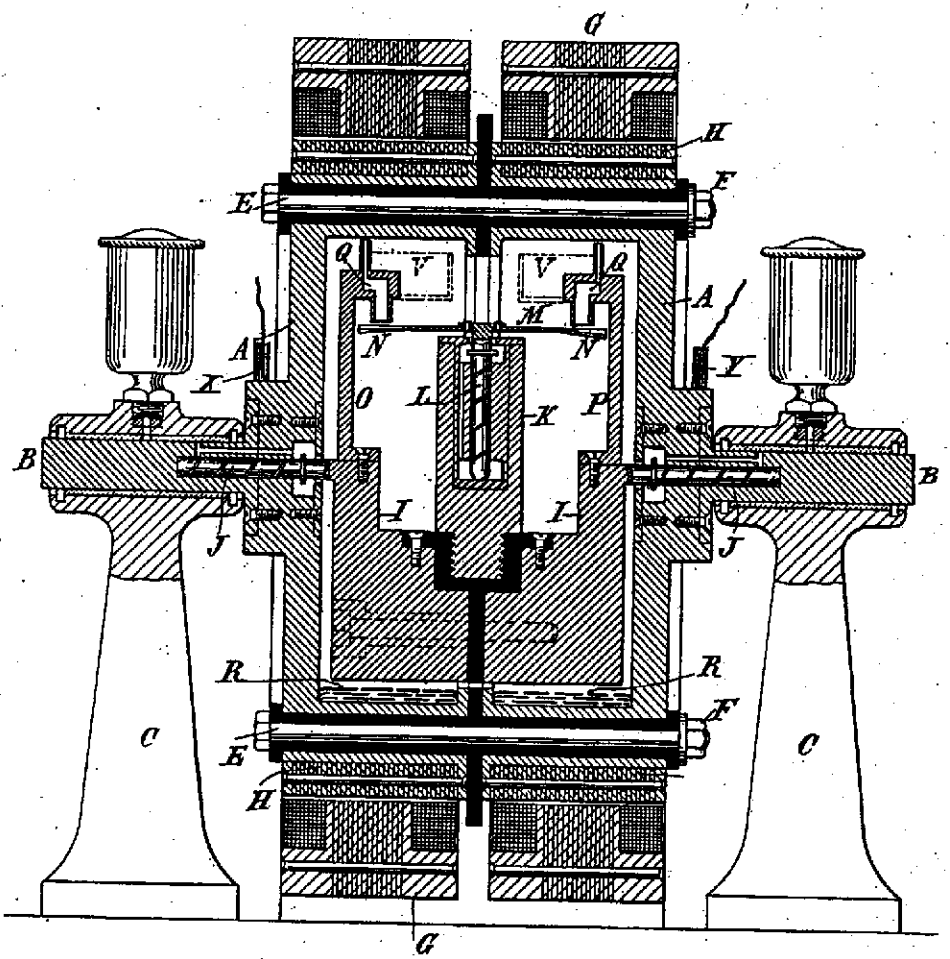

Witnesses:
Raphael Netter
Benjamin Miller.

Nikola Tesla, Inventor
by Kerr Curtis Page Attys

UNITED STATES PATENT OFFICE.

NIKOLA TESLA, OF NEW YORK, N. Y.

ELECTRICAL IGNITER FOR GAS-ENGINES.

SPECIFICATION forming part of Letters Patent No. 609,250, dated August 16, 1898.

Application filed February 17, 1897. Renewed June 15, 1898. Serial No. 683,524. (No model.)

To all whom it may concern:

Be it known that I, NIKOLA TESLA, a citizen of the United States, residing at New York, in the county and State of New York, have invented certain new and useful Improvements in Electrical Igniters for Gas-Engines and Analogous Purposes, of which the following is a specification, reference being had to the drawing accompanying and forming a part of the same.

In certain kinds of apparatus it is necessary for the operation of the machine itself or for effecting the object for which it is used to produce an electric spark or any other similar local effect at a given instant of time or at predetermined intervals. For example, in certain gas or explosive engines a flame or spark is necessary for the ignition of an explosive mixture of air and gas under the piston, and the most effective way of igniting the gaseous mixture has been found to be the production in the cylinder at the proper moments of an electric spark. The only practicable device by which this has been accomplished heretofore is an induction-coil comprising a primary and secondary circuit with a buzzer or rapidly-acting automatic circuit-breaker in the primary and a circuit-controller, such as a switch or commutator, located also in the primary or battery circuit and operated by some moving portion of the apparatus to temporarily close such circuit at the proper time, and thereby set in operation the automatic circuit-breaker, which causes between secondary terminals in the cylinder the discharge which is necessary for the proper ignition of the explosive mixture. Instead of thus temporarily closing the primary circuit the automatic circuit-breaker might be permitted to operate continuously, and the secondary, circuit normally broken, might be closed at the proper time to cause the spark to pass at any point. In either case the employment of a quick-acting circuit-breaker is necessary, for unless the induction-coil be of large size and the source of current of considerable power a slow or gradual make and break of the primary of a simple transformer, such as would ordinarily be effected by a switch or commutator, would not effect a discharge of the character necessary for the proper ignition of the gas.

There is, however, no form of vibrating or quick-acting circuit-breaker of which I am aware that can be depended upon to operate with certainty to produce such a spark or which will continue to operate for any length of time without deterioration, and hence not only in the case of engines of the kind described, but in other forms of apparatus which involve the use of a high-tension induction-coil with a quick-acting circuit-breaker, the operation of the machine is contingent upon the proper operation of a comparatively insignificant but essential part.

The object of my invention is to provide a more certain and satisfactory means for use with and control by such machines or apparatus as I have mentioned for producing sparks or discharges of the desired character, and to this end I employ the following arrangement: Any suitable moving portion of the apparatus is caused to mechanically control the charging of a condenser and its discharge through a circuit in inductive relation to a secondary circuit leading to the terminals between which the discharge is to occur, so that at the desired intervals the condenser may be discharged through its circuit and induce in the other circuit a current of high potential which produces the desired spark or discharge.

One practical means of accomplishing this is to employ any proper form of switch or commutator operated directly or through suitable intermediate devices by a moving part of the apparatus and which is caused to complete an electric circuit which has been previously broken or interrupted for an appreciable time when the occurrence of the spark or discharge is necessary. The circuit thus closed includes a condenser, which by this operation of the switch is permitted to discharge, through the primary of a transformer, energy which it had previously received during the interruption of said circuit from a battery or discharge of a self-induction coil in series with the battery in the charging-circuit.

The ends of the secondary circuit of the transformer above mentioned are connected with the points or terminals in the machine between which the spark is to pass, and following the short-circuiting of the condenser by the closing of the switch a strong secondary discharge induced by the discharge of the

condenser through the primary will occur. It is possible by this means not only to produce a strong discharge of high tension, as in the form of a spark well adapted for the ignition of gas or other purposes for which sparks are employed, but to secure such result by apparatus very much less complicated and expensive than that heretofore employed for the purpose and which will be capable of certain and effective operation for an indefinite period of time.

I have illustrated the principle of my improvement and the manner in which the same is or may be carried out in the drawing hereto annexed. The invention is shown as used for effecting the operation of the piston of a gas-engine, the figure being a diagram.

A designates the cylinder of a gas-engine, B the piston, and C the piston-rod. Other parts of the engine are omitted from the illustration as unnecessary to an understanding of the invention.

On the piston-rod C is a commutator or circuit-controller upon which bear the terminals *a b* of an electric circuit D. This commutator comprises a continuous ring *c* and a split ring *d* side by side, so that when the terminals are on the latter the circuit is interrupted, but when on the former it is closed. The to-and-fro movement of the piston, therefore, operates to alternately make and break the circuit, the position of the commutator being such that the make occurs at the moment desired for the ignition of the explosive charge under the piston.

In the circuit D is a battery or other source of current E and the primary F of a transformer. Across the two conductors of the circuit, between the battery and the primary F, is a condenser G, which is charged by the battery when circuit D is interrupted at the commutator and which discharges through the primary when such circuit is closed.

In order that the condenser may receive a charge of high tension, a self-induction coil H is introduced in the circuit between itself and the battery, which coil stores up the energy of the battery when the circuit D is closed at the commutator and discharges it into the condenser when the circuit is broken.

The primary F is combined with a secondary K, the conductors from which lead, respectively, to an insulated terminal L within the cylinder A and to any other conducting-body in the vicinity of such point as to the cylinder itself. In consequence of this arrangement, when the piston reaches the proper point the circuit D is closed, the energy of the condenser is discharged through the primary with a sudden rush, and a strong and effective spark or flash is produced between the point L and the cylinder or piston which ignites the charge of explosive gas.

It will be understood from the preceding description that I do not limit myself to the specific construction or arrangement of the devices employed in carrying out my improvement and that these may be varied within wide limits.

What I claim is—

1. In an apparatus which depends for its operation or effect upon the production of a sudden electric discharge at a given instant, or at predetermined intervals of time, the combination with a moving part of said apparatus of a switch or commutator, a condenser, a charging-circuit for the same, a primary circuit through which the condenser discharges, and a secondary circuit in inductive relation to the said primary circuit and connected with the terminals at the point in the apparatus where the discharge is required, the switch or commutator being operated by the said moving part to effect the discharge of the condenser at the proper intervals, as set forth.

2. In an apparatus which depends for its operation or effect upon the production of a sudden electric discharge at a given instant, or at predetermined intervals of time, the combination with a moving part of said apparatus of a circuit and a circuit-controller adapted to close said circuit at the time when the occurrence of said discharge is desired, a source of current in said circuit, a condenser adapted to be charged by said source while the circuit is interrupted, and a transformer through the primary of which the condenser discharges when the circuit is closed, the secondary of the transformer being connected with the terminals at the point in the apparatus where the discharge is required, as set forth.

3. In an apparatus which depends for its operation or effect upon the production of an electric discharge, at a given instant, or at predetermined intervals of time, the combination with a moving part of said apparatus of a circuit and a circuit-controller adapted to close said circuit at the time when the occurrence of the spark is desired, a source of current in said circuit, a self-induction coil which stores the energy of the source while the circuit is closed, a condenser into which said coil discharges when the circuit is broken, and a transformer through the primary of which the condenser discharges, the secondary of said transformer being connected with separated terminals at the point where the discharge is required.

4. In a gas or explosive engine of the kind described, the combination with a moving part of said engine of a circuit-closer or switch controlling the charging and discharging of a condenser, separated terminals in the cylinder or explosive-chamber, and a transformer through the primary of which the condenser discharges, the secondary being connected with the terminals in the cylinder, as set forth.

NIKOLA TESLA.

Witnesses:
M. LAWSON DYER,
EDWIN B. HOPKINSON.

No. 609,250. Patented Aug. 16, 1898.

N. TESLA.

ELECTRICAL IGNITER FOR GAS ENGINES.

(Application filed Feb. 17, 1897. Renewed June 15, 1898.)

(No Model.)

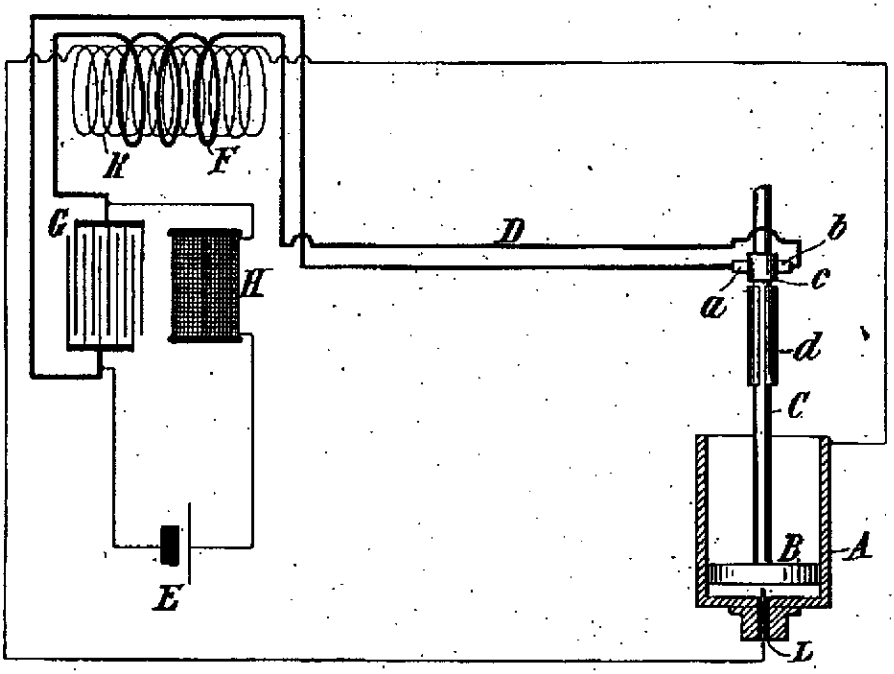

Witnesses:
M. Lawson Dyer
Edwin B. Hopkinson.

Nikola Tesla, Inventor
by Kerr, Curtis & Page Attys

UNITED STATES PATENT OFFICE.

NIKOLA TESLA, OF NEW YORK, N. Y.

METHOD OF UTILIZING RADIANT ENERGY.

SPECIFICATION forming part of Letters Patent No. 685,958, dated November 5, 1901.

Application filed March 21, 1901. Serial No. 52,154. (No model.)

To all whom it may concern:

Be it known that I, NIKOLA TESLA, a citizen of the United States, residing at the borough of Manhattan, in the city, county, and State of New York, have invented certain new and useful Improvements in Methods of Utilizing Radiant Energy, of which the following is a specification, reference being had to the drawings accompanying and forming a part of the same.

It is well known that certain radiations—such as those of ultra-violet light, cathodic, Roentgen rays, or the like—possess the property of charging and discharging conductors of electricity, the discharge being particularly noticeable when the conductor upon which the rays impinge is negatively electrified. These radiations are generally considered to be ether vibrations of extremely small wave lengths, and in explanation of the phenomena noted it has been assumed by some authorities that they ionize or render conducting the atmosphere through which they are propagated. My own experiments and observations, however, lead me to conclusions more in accord with the theory heretofore advanced by me that sources of such radiant energy throw off with great velocity minute particles of matter which are strongly electrified, and therefore capable of charging an electrical conductor, or even if not so may at any rate discharge an electrified conductor either by carrying off bodily its charge or otherwise.

My present application is based upon a discovery which I have made that when rays or radiations of the above kind are permitted to fall upon an insulated conducting body connected to one of the terminals of a condenser, while the other terminal of the same is made by independent means to receive or to carry away electricity, a current flows into the condenser so long as the insulated body is exposed to the rays, and under the conditions hereinafter specified an indefinite accumulation of electrical energy in the condenser takes place. This energy after a suitable time interval, during which the rays are allowed to act, may manifest itself in a powerful discharge, which may be utilized for the operation or control of mechanical or electrical devices or rendered useful in many other ways.

In applying my discovery I provide a condenser, preferably of considerable electrostatic capacity, and connect one of its terminals to an insulated metal plate or other conducting body exposed to the rays or streams of radiant matter. It is very important, particularly in view of the fact that electrical energy is generally supplied at a very slow rate to the condenser, to construct the same with the greatest care. I use by preference the best quality of mica as dielectric, taking every possible precaution in insulating the armatures, so that the instrument may withstand great electrical pressures without leaking and may leave no perceptible electrification when discharging instantaneously. In practice I have found that the best results are obtained with condensers treated in the manner described in a patent granted to me February 23, 1897, No. 577,671. Obviously the above precautions should be the more rigorously observed the slower the rate of charging and the smaller the time interval during which the energy is allowed to accumulate in the condenser. The insulated plate or conducting body should present as large a surface as practicable to the rays or streams of matter, I having ascertained that the amount of energy conveyed to it per unit of time is under otherwise identical conditions proportionate to the area exposed, or nearly so. Furthermore, the surface should be clean and preferably highly polished or amalgamated. The second terminal or armature of the condenser may be connected to one of the poles of a battery or other source of electricity or to any conducting body or object whatever of such properties or so conditioned that by its means electricity of the required sign will be supplied to the terminal. A simple way of supplying positive or negative electricity to the terminal is to connect the same either to an insulated conductor, supported at some height in the atmosphere, or to a grounded conductor, the former, as is well known, furnishing positive and the latter negative electricity. As the rays or supposed streams of matter generally convey a positive charge to the first condenser-terminal, which is connect-

ed to the plate or conductor above mentioned, I usually connect the second terminal of the condenser to the ground, this being the most convenient way of obtaining negative electricity, dispensing with the necessity of providing an artificial source. In order to utilize for any useful purpose the energy accumulated in the condenser, I furthermore connect to the terminals of the same a circuit including an instrument or apparatus which it is desired to operate and another instrument or device for alternately closing and opening the circuit. This latter may be any form of circuit-controller, with fixed or movable parts or electrodes, which may be actuated either by the stored energy or by independent means.

The rays or radiations which are to be utilized for the operation of the apparatus above described in general terms may be derived from a natural source, as the sun, or may be artificially produced by such means, for example, as an arc-lamp, a Roentgen tube, and the like, and they may be employed for a great variety of useful purposes.

My discovery will be more fully understood from the following detailed description and annexed drawings, to which reference is now made, and in which—

Figure 1 is a diagram showing typical forms of the devices or elements as arranged and connected in applying the method for the operation of a mechanical contrivance or instrument solely by the energy stored; and Fig. 2 is a diagrammatical representation of a modified arrangement suitable for special purposes, with a circuit-controller actuated by independent means.

Referring to Fig. 1, C is the condenser, P the insulated plate or conducting body, which is exposed to the rays, and P′ another plate or conductor, all being joined in series, as shown. The terminals T T′ of the condenser are also connected to a circuit including a receiver R, which is to be operated, and a circuit-controlling device *d*, which in this case is composed of two very thin conducting-plates *t t′*, placed in close proximity and very mobile, either by reason of extreme flexibility or owing to the charater of their support. To improve their action, they should be inclosed in a receptacle from which the air may be exhausted. The receiver R is shown as consisting of an electromagnet M, a movable armature *a*, a retractile spring *b*, and a ratchet-wheel *w*, provided with a spring-pawl *r*, which is pivoted to armature *a*, as illustrated. The apparatus being arranged as shown, it will be found that when the radiations of the sun or of any other source capable of producing the effects before described fall upon the plate P an accumulation of electrical energy in the condenser C will result. This phenomenon, I believe, is best explained as follows: The sun as well as other sources of radiant energy throw off minute particles of matter positively electrified, which, impinging upon the plate P, communicate an electrical charge to the same. The opposite terminal of the condenser being connected to the ground, which may be considered as a vast reservoir of negative electricity, a feeble current flows continuously into the condenser, and inasmuch as these supposed particles are of an inconceivably small radius or curvature, and consequently charged to a relatively very high potential, this charging of the condenser may continue, as I have found in practice, almost indefinitely, even to the point of rupturing the dielectric. Obviously whatever circuit-controller be employed it should operate to close the circuit in which it is included when the potential in the condenser has reached the desired magnitude. Thus in Fig. 2 when the electrical pressure at the terminals T T′ rises to a certain predetermined value the plates *t t′*, attracting each other, close the circuit connected to the terminals. This permits a flow of current which energizes the magnet M, causing it to draw down the armature *a* and impart a partial rotation to the ratchet-wheel *w*. As the current ceases the armature is retracted by the spring *b* without, however, moving the wheel *w*. With the stoppage of the current the plates *t t′* cease to be attracted and separate, thus restoring the circuit to its original condition.

Many useful applications of this method of utilizing the radiations emanating from the sun or other source and many ways of carrying out the same will at once suggest themselves from the above description. By way of illustration a modified arrangement is shown in Fig. 2, in which the source S of radiant energy is a special form of Roentgen tube devised by me having but one terminal *k*, generally of aluminium, in the form of half a sphere with a plain polished surface on the front side, from which the streams are thrown off. It may be excited by attaching it to one of the terminals of any generator of sufficiently-high electromotive force; but whatever apparatus be used it is important that the tube be exhausted to a high degree, as otherwise it might prove entirely ineffective. The working or discharge circuit connected to the terminals T T′ of the condenser includes in this case the primary *p* of a transformer and a circuit-controller comprising a fixed terminal or brush *t* and a movable terminal *t′* in the shape of a wheel with conducting and insulating segments which may be rotated at an arbitrary speed by any suitable means. In inductive relation to the primary wire or coil *p* is a secondary *s*, usually of a much greater number of turns, to the ends of which is connected a receiver R. The terminals of the condenser being connected as indicated, one to an insulated plate P and the other to a grounded plate P′, when the tube S is excited rays or streams of matter are emitted from the same, which convey a positive charge to the plate P and condenser-terminal T, while terminal T′ is continuously receiving negative electricity from the plate

P'. This, as before explained, results in an accumulation of electrical energy in the condenser, which goes on as long as the circuit including the primary p is interrupted. Whenever the circuit is closed, owing to the rotation of the terminal t', the stored energy is discharged through the primary p, this giving rise in the secondary s to induced currents which operate the receiver R.

It is clear from what has been stated above that if the terminal T' is connected to a plate supplying positive instead of negative electricity the rays should convey negative electricity to plate P. The source S may be any form of Roentgen or Lenard tube; but it is obvious from the theory of action that in order to be very effective the electrical impulses exciting it should be wholly or at least preponderatingly of one sign. If ordinary symmetrical alternating currents are employed, provision should be made for allowing the rays to fall upon the plate P only during those periods when they are productive of the desired result. Evidently if the radiations of the source be stopped or intercepted or their intensity varied in any manner, as by periodically interrupting or rythmically varying the current exciting the source, there will be corresponding changes in the action upon the receiver R, and thus signals may be transmitted and many other useful effects produced. Furthermore, it will be understood that any form of circuit-closer which will respond to or be set in operation when a predetermined amount of energy is stored in the condenser may be used in lieu of the device specifically described with reference to Fig. 1, and also that the special details of construction and arrangement of the several parts of the apparatus may be very greatly varied without departure from the invention.

Having described my invention, what I claim is—

1. The method of utilizing radiant energy, which consists in charging one of the armatures of a condenser by rays or radiations, and the other armature by independent means, and discharging the condenser through a suitable receiver, as set forth.

2. The method of utilizing radiant energy, which consists in simultaneously charging a condenser by means of rays or radiations and an independent source of electrical energy, and discharging the condenser through a suitable receiver, as set forth.

3. The method of utilizing radiant energy, which consists in charging one of the armatures of a condenser by rays or radiations, and the other by independent means, controlling the action or effect of said rays or radiations and discharging the condenser through a suitable receiver, as set forth.

4. The method of utilizing radiant energy, which consists in charging one of the armatures of a condenser by rays or radiations and the other by independent means, varying the intensity of the said rays or radiations and periodically discharging the condenser through a suitable receiver, as set forth.

5. The method of utilizing radiant energy, which consists in directing upon an elevated conductor, connected to one of the armatures of a condenser, rays or radiations capable of positively electrifying the same, carrying off electricity from the other armature by connecting the same with the ground, and discharging the accumulated energy through a suitable receiver, as set forth.

6. The method of utilizing radiant energy, which consists in charging one of the armatures of a condenser by rays or radiations, and the other by independent means, and effecting by the automatic discharge of the accumulated energy the operation or control of a suitable receiver, as set forth.

NIKOLA TESLA.

Witnesses:
M. LAWSON DYER,
RICHARD DONOVAN.

No. 685,958. Patented Nov. 5, 1901.

N. TESLA.

METHOD OF UTILIZING RADIANT ENERGY.

(Application filed Mar. 21, 1901.)

(No Model.)

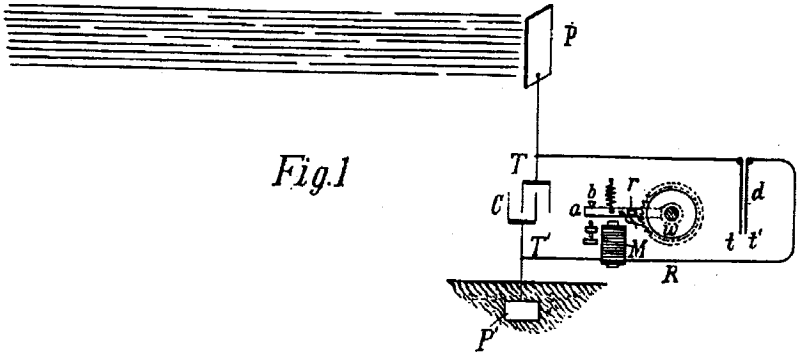

Fig. 1

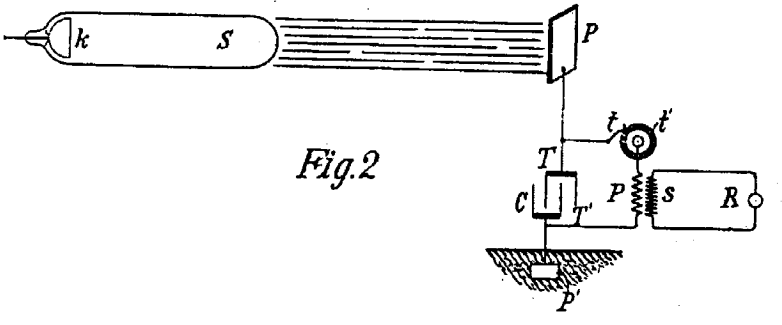

Fig. 2

Witnesses:
Raphael Netter
M. Lawson Dyer

Nikola Tesla, Inventor
by Kerr, Page & Cooper
Attys

THE HORRIS PETERS CO., PHOTO-LITHO., WASHINGTON, D. C.

No. 787,412. Patented April 18, 1905.

UNITED STATES PATENT OFFICE.

NIKOLA TESLA, OF NEW YORK, N. Y.

ART OF TRANSMITTING ELECTRICAL ENERGY THROUGH THE NATURAL MEDIUMS.

SPECIFICATION forming part of Letters Patent No. 787,412, dated April 18, 1905.

Application filed May 16, 1900. Renewed June 17, 1902. Serial No. 113,034.

To all whom it may concern:

Be it known that I, NIKOLA TESLA, a citizen of the United States, residing in the borough of Manhattan, in the city, county, and State of New York, have discovered a new and useful Improvement in the Art of Transmitting Electrical Energy Through the Natural Media, of which the following is a specification, reference being had to the drawings accompanying and forming a part of the same.

It is known since a long time that electric currents may be propagated through the earth, and this knowledge has been utilized in many ways in the transmission of signals and the operation of a variety of receiving devices remote from the source of energy, mainly with the object of dispensing with a return conducting-wire. It is also known that electrical disturbances may be transmitted through portions of the earth by grounding only one of the poles of the source, and this fact I have made use of in systems which I have devised for the purposes of transmitting through the natural media intelligible signals or power and which are now familiar; but all experiments and observations heretofore made have tended to confirm the opinion held by the majority of scientific men that the earth, owing to its immense extent, although possessing conducting properties, does not behave in the manner of a conductor of limited dimensions with respect to the disturbances produced, but, on the contrary, much like a vast reservoir or ocean, which while it may be locally disturbed by a commotion of some kind remains unresponsive and quiescent in a large part or as a whole. Still another fact now of common knowledge is that when electrical waves or oscillations are impressed upon such a conducting-path as a metallic wire reflection takes place under certain conditions from the ends of the wire, and in consequence of the interference of the impressed and reflected oscillations the phenomenon of "stationary waves" with maxima and minima in definite fixed positions is produced. In any case the existence of these waves indicates that some of the outgoing waves have reached the boundaries of the conducting-path and have been reflected from the same. Now I have discovered that notwithstanding its vast dimensions and contrary to all observations heretofore made the terrestrial globe may in a large part or as a whole behave toward disturbances impressed upon it in the same manner as a conductor of limited size, this fact being demonstrated by novel phenomena, which I shall hereinafter describe.

In the course of certain investigations which I carried on for the purpose of studying the effects of lightning discharges upon the electrical condition of the earth I observed that sensitive receiving instruments arranged so as to be capable of responding to electrical disturbances created by the discharges at times failed to respond when they should have done so, and upon inquiring into the causes of this unexpected behavior I discovered it to be due to the character of the electrical waves which were produced in the earth by the lightning discharges and which had nodal regions following at definite distances the shifting source of the disturbances. From data obtained in a large number of observations of the maxima and minima of these waves I found their length to vary approximately from twenty-five to seventy kilometers, and these results and certain theoretical deductions led me to the conclusion that waves of this kind may be propagated in all directions over the globe and that they may be of still more widely differing lengths, the extreme limits being imposed by the physical dimensions and properties of the earth. Recognizing in the existence of these waves an unmistakable evidence that the disturbances created had been conducted from their origin to the most remote portions of the globe and had been thence reflected, I conceived the idea of producing such waves in the earth by artificial means with the object of utilizing them for many useful purposes for which they are or might be found applicable. This problem was rendered extremely difficult owing to the immense dimensions of the planet, and consequently enormous movement of electricity or rate at which electrical energy had to be delivered in order to approximate, even in a remote degree, movements or rates which are manifestly attained in the displays of elec-

trical forces in nature and which seemed at first unrealizable by any human agencies; but by gradual and continuous improvements of a generator of electrical oscillations, which I have described in my Patents Nos. 645,576 and 649,621, I finally succeeded in reaching electrical movements or rates of delivery of electrical energy not only approximating, but, as shown in many comparative tests and measurements, actually surpassing those of lightning discharges, and by means of this apparatus I have found it possible to reproduce whenever desired phenomena in the earth the same as or similar to those due to such discharges. With the knowledge of the phenomena discovered by me and the means at command for accomplishing these results I am enabled not only to carry out many operations by the use of known instruments, but also to offer a solution for many important problems involving the operation or control of remote devices which for want of this knowledge and the absence of these means have heretofore been entirely impossible. For example, by the use of such a generator of stationary waves and receiving apparatus properly placed and adjusted in any other locality, however remote, it is practicable to transmit intelligible signals or to control or actuate at will any one or all of such apparatus for many other important and valuable purposes, as for indicating wherever desired the correct time of an observatory or for ascertaining the relative position of a body or distance of the same with reference to a given point or for determining the course of a moving object, such as a vessel at sea, the distance traversed by the same or its speed, or for producing many other useful effects at a distance dependent on the intensity, wave length, direction or velocity of movement, or other feature or property of disturbances of this character.

I shall typically illustrate the manner of applying my discovery by describing one of the specific uses of the same—namely, the transmission of intelligible signals or messages between distant points—and with this object reference is now made to the accompanying drawings, in which—

Figure 1 represents diagrammatically the generator which produces stationary waves in the earth, and Fig. 2 an apparatus situated in a remote locality for recording the effects of these waves.

In Fig. 1, A designates a primary coil forming part of a transformer and consisting generally of a few turns of a stout cable of inappreciable resistance, the ends of which are connected to the terminals of a source of powerful electrical oscillations, diagrammatically represented by B. This source is usually a condenser charged to a high potential and discharged in rapid succession through the primary, as in a type of transformer invented by me and not well known; but when it is desired to produce stationary waves of great lengths an alternating dynamo of suitable construction may be used to energize the primary A. C is a spirally-wound secondary coil within the primary having the end nearer to the latter connected to the ground E′ and the other end to an elevated terminal E. The physical constants of coil C, determining its period of vibration, are so chosen and adjusted that the secondary system E′ C E is in the closest possible resonance with the oscillations impressed upon it by the primary A. It is, moreover, of the greatest importance in order to still further enhance the rise of pressure and to increase the electrical movement in the secondary system that its resistance be as small as practicable and its self-induction as large as possible under the conditions imposed. The ground should be made with great care, with the object of reducing its resistance. Instead of being directly grounded, as indicated, the coil C may be joined in series or otherwise to the primary A, in which case the latter will be connected to the plate E′; but be it that none or a part or all of the primary or exciting turns are included in the coil C the total length of the conductor from the ground-plate E′ to the elevated terminal E should be equal to one-quarter of the wave length of the electrical disturbance in the system E′ C E or else equal to that length multiplied by an odd number. This relation being observed, the terminal E will be made to coincide with the points of maximum pressure in the secondary or excited circuit, and the greatest flow of electricity will take place in the same. In order to magnify the electrical movement in the secondary as much as possible, it is essential that its inductive connection with the primary A should not be very intimate, as in ordinary transformers, but loose, so as to permit free oscillation—that is to say, their mutual induction should be small. The spiral form of coil C secures this advantage, while the turns near the primary A are subjected to a strong inductive action and develop a high initial electromotive force. These adjustments and relations being carefully completed and other constructive features indicated rigorously observed, the electrical movement produced in the secondary system by the inductive action of the primary A will be enormously magnified, the increase being directly proportionate to the inductance and frequency and inversely to the resistance of the secondary system. I have found it practicable to produce in this manner an electrical movement thousands of times greater than the initial—that is, the one impressed upon the secondary by the primary A—and I have thus reached activities or rates of flow of electrical energy in the system E′ C E measured by many tens of thousands of horsepower. Such immense movements of elec-

tricity give rise to a variety of novel and striking phenomena, among which are those already described. The powerful electrical oscillations in the system E' C E being communicated to the ground cause corresponding vibrations to be propagated to distant parts of the globe, whence they are reflected and by interference with the outgoing vibrations produce stationary waves the crests and hollows of which lie in parallel circles relatively to which the ground-plate E' may be considered to be the pole. Stated otherwise, the terrestrial conductor is thrown into resonance with the oscillations impressed upon it just like a wire. More than this, a number of facts ascertained by me clearly show that the movement of electricity through it follows certain laws with nearly mathematical rigor. For the present it will be sufficient to state that the planet behaves like a perfectly smooth or polished conductor of inappreciable resistance with capacity and self induction uniformly distributed along the axis of symmetry of wave propagation and transmitting slow electrical oscillations without sensible distortion and attenuation.

Besides the above three requirements seem to be essential to the establishment of the resonating condition.

First. The earth's diameter passing through the pole should be an odd multiple of the quarter wave length—that is, of the ratio between the velocity of light—and four times the frequency of the currents.

Second. It is necessary to employ oscillations in which the rate of radiation of energy into space in the form of hertzian or electromagnetic waves is very small. To give an idea, I would say that the frequency should be smaller than twenty thousand per second, though shorter waves might be practicable. The lowest frequency would appear to be six per second, in which case there will be but one node, at or near the ground-plate, and, paradoxical as it may seem, the effect will increase with the distance and will be greatest in a region diametrically opposite the transmitter. With oscillations still slower the earth, strictly speaking, will not resonate, but simply act as a capacity, and the variation of potential will be more or less uniform over its entire surface.

Third. The most essential requirement is, however, that irrespective of frequency the wave or wave-train should continue for a certain interval of time, which I have estimated to be not less than one-twelfth or probably 0.08484 of a second and which is taken in passing to and returning from the region diametrically opposite the pole over the earth's surface with a mean velocity of about four hundred and seventy-one thousand two hundred and forty kilometers per second.

The presence of the stationary waves may be detected in many ways. For instance, a circuit may be connected directly or inductively to the ground and to an elevated terminal and tuned to respond more effectively to the oscillations. Another way is to connect a tuned circuit to the ground at two points lying more or less in a meridian passing through the pole E' or, generally stated, to any two points of a different potential.

In Fig. 2 I have shown a device for detecting the presence of the waves such as I have used in a novel method of magnifying feeble effects which I have described in my Patents Nos. 685,953 and 685,955. It consists of a cylinder D, of insulating material, which is moved at a uniform rate of speed by clockwork or other suitable motive power and is provided with two metal rings F F', upon which bear brushes a and a', connected, respectively, to the terminal plates P and P'. From the rings F F' extend narrow metallic segments s and s', which by the rotation of the cylinder D are brought alternately into contact with double brushes b and b', carried by and in contact with conducting-holders h and h', supported in metallic bearings G and G', as shown. The latter are connected to the terminals T and T' of a condenser H, and it should be understood that they are capable of angular displacement as ordinary brush-supports. The object of using two brushes, as b and b', in each of the holders h and h' is to vary at will the duration of the electric contact of the plates P and P' with the terminals T and T', to which is connected a receiving-circuit including a receiver R and a device d, performing the duty of closing the receiving-circuit at predetermined intervals of time and discharging the stored energy through the receiver. In the present case this device consists of a cylinder made partly of conducting and partly of insulating material c and c', respectively, which is rotated at the desired rate of speed by any suitable means. The conducting part c is in good electrical connection with the shaft S and is provided with tapering segments f f', upon which slides a brush k, supported on a conducting-rod l, capable of longitudinal adjustment in a metallic support m. Another brush, n, is arranged to bear upon the shaft S, and it will be seen that whenever one of the segments f' comes in contact with the brush k the circuit including the receiver R is completed and the condenser discharged through the same. By an adjustment of the speed or rotation of the cylinder d and a displacement of the brush k along the cylinder the circuit may be made to open and close in as rapid succession and remain open or closed during such intervals of time as may be desired. The plates P and P', through which the electrical energy is conveyed to the brushes a and a', may be at a considerable distance from each other in the ground or one in the ground and the other in the air, preferably at some height. If but one plate is connected to earth and the other maintained at an

elevation, the location of the apparatus must be determined with reference to the position of the stationary waves established by the generator, the effect evidently being greatest in a maximum and zero in a nodal region. On the other hand, if both plates be connected to earth the points of connection must be selected with reference to the difference of potential which it is desired to secure, the strongest effect being of course obtained when the plates are at a distance equal to half the wave length.

In illustration of the operation of the system let it be assumed that alternating electrical impulses from the generator are caused to produce stationary waves in the earth, as above described, and that the receiving apparatus is properly located with reference to the position of the nodal and ventral regions of the waves. The speed of rotation of the cylinder D is varied until it is made to turn in synchronism with the alternate impulses of the generator, and the position of the brushes b and b' is adjusted by angular displacement or otherwise, so that they are in contact with the segments S and S' during the periods when the impulses are at or near the maximum of their intensity. These requirements being fulfilled, electrical charges of the same sign will be conveyed to each of the terminals of the condenser, and with each fresh impulse it will be charged to a higher potential. The speed of rotation of the cylinder d being adjustable at will, the energy of any number of separate impulses may thus be accumulated in potential form and discharged through the receiver R upon the brush k coming in contact with one of the segments f'. It will be understood that the capacity of the condenser should be such as to allow the storing of a much greater amount of energy than is required for the ordinary operation of the receiver. Since by this method a relatively great amount of energy and in a suitable form may be made available for the operation of a receiver, the latter need not be very sensitive; but when the impulses are very weak or when it is desired to operate a receiver very rapidly any of the well-known sensitive devices capable of responding to very feeble influences may be used in the manner indicated or in other ways. Under the conditions described it is evident that during the continuance of the stationary waves the receiver will be acted upon by current impulses more or less intense, according to its location with reference to the maxima and minima of said waves; but upon interrupting or reducing the flow of the current the stationary waves will disappear or diminish in intensity. Hence a great variety of effects may be produced in a receiver, according to the mode in which the waves are controlled. It is practicable, however, to shift the nodal and ventral regions of the waves at will from the sending-station, as by varying the length of the waves under observance of the above requirements. In this manner the regions of maximum and minimum effect may be made to coincide with any receiving station or stations. By impressing upon the earth two or more oscillations of different wave length a resultant stationary wave may be made to travel slowly over the globe, and thus a great variety of useful effects may be produced. Evidently the course of a vessel may be easily determined without the use of a compass, as by a circuit connected to the earth at two points, for the effect exerted upon the circuit will be greatest when the plates P P' are lying on a meridian passing through ground-plate E' and will be *nil* when the plates are located at a parallel circle. If the nodal and ventral regions are maintained in fixed positions, the speed of a vessel carrying a receiving apparatus may be exactly computed from observations of the maxima and minima regions successively traversed. This will be understood when it is stated that the projections of all the nodes and loops on the earth's diameter passing through the pole or axis of symmetry of the wave movement are all equal. Hence in any region at the surface the wave length can be ascertained from simple rules of geometry. Conversely, knowing the wave length, the distance from the source can be readily calculated. In like ways the distance of one point from another, the latitude and longitude, the hour, &c., may be determined from the observation of such stationary waves. If several such generators of stationary waves, preferably of different length, were installed in judiciously-selected localities, the entire globe could be subdivided in definite zones of electric activity, and such and other important data could be at once obtained by simple calculation or readings from suitably-graduated instruments. Many other useful applications of my discovery will suggest themselves, and in this respect I do not wish to limit myself. Thus the specific plan herein described of producing the stationary waves might be departed from. For example, the circuit which impresses the powerful oscillations upon the earth might be connected to the latter at two points. In this application I have advanced various improvements in means and methods of producing and utilizing electrical effects which either in connection with my present discovery or independently of the same may be usefully applied.

I desire it to be understood that such novel features as are not herein specifically claimed will form the subjects of subsequent applications.

What I now claim is—

1. The improvement in the art of transmitting electrical energy to a distance which consists in establishing stationary electrical waves in the earth, as set forth.

2. The improvement in the art of transmit-

ting electrical energy to a distance which consists in impressing upon the earth electrical oscillations of such character as to produce stationary electrical waves therein, as set forth.

3. The improvement in the art of transmitting and utilizing electrical energy which consists in establishing stationary electrical waves in the natural conducting media, and operating thereby one or more receiving devices remote from the source of energy, as set forth.

4. The improvement in the art of transmitting and utilizing electrical energy which consists in establishing in the natural conducting media, stationary electrical waves of predetermined length and operating thereby one or more receiving devices remote from the source of energy and properly located with respect to the position of such waves, as herein set forth.

5. The improvement in the art of transmitting and utilizing electrical energy, which consists in establishing in the natural conducting media, stationary electrical waves, and varying the length of such waves, as herein set forth.

6. The improvement in the art of transmitting and utilizing electrical energy, which consists in establishing in the natural conducting media stationary electrical waves and shifting the nodal and ventral regions of these waves, as described.

NIKOLA TESLA.

Witnesses:
M. LAWSON DYER,
BENJAMIN MILLER.

No. 787,412. PATENTED APR. 18, 1905.

N. TESLA.

ART OF TRANSMITTING ELECTRICAL ENERGY THROUGH THE NATURAL MEDIUMS.

APPLICATION FILED MAY 16, 1900. RENEWED JUNE 17, 1902.

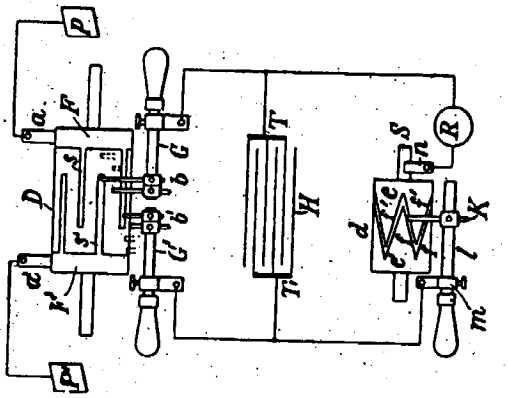

Fig.2

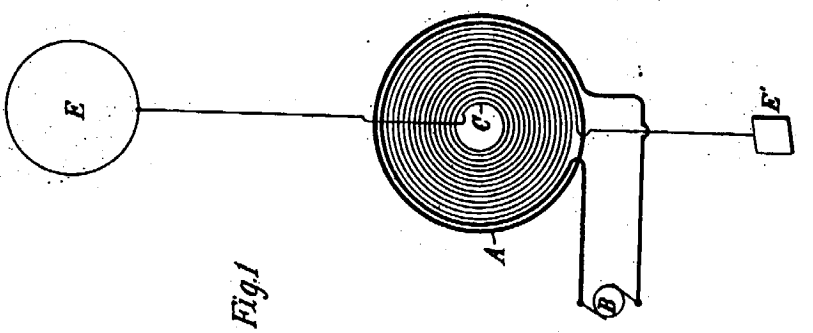

Fig.1

Witnesses:
Raphael Netter
M. Lawson Byer.

Nikola Tesla Inventor
by Knight Page & Cooke Attys

A MACHINE TO END WAR

by Nikola Tesla

Previous Article Next Article

A Famous Inventor, Picturing Life 100 Years from Now, Reveals an Astounding Scientific Venture Which He Believes Will Change the Course of History

Liberty, February 1937

by Nikola Tesla
as told to
George Sylvester Viereck

Tesla. "It seems," he says, "that I have always been ahead of my time."

Editor's Note: Nikola Tesla, now in his seventy-eighth year, has been called the father of radio, television, power transmission, the induction motor, and the robot, and the discoverer of the cosmic ray. Recently he has announced a heretofore unknown source of energy present everywhere in unlimited amounts, and he is now working upon a device which he believes will make war impracticable.

Tesla and Edison have often been represented as rivals. They were rivals, to a certain extent, in the battle between the alternating and direct current in which Tesla championed the former. He won; the great power plants at Niagara Falls and elsewhere are founded on the Tesla system. Otherwise the two men were merely opposites. Edison had a genius for practical inventions immediately applicable. Tesla, whose inventions were far ahead of the time, aroused antagonisms which delayed the fruition of his ideas for years.

However, great physicists like Kelvin and Crookes spoke of his inventions as marvelous. "Tesla," said Professor A. E. Kennelly of Harvard University when the Edison medal was presented to the inventor, "set wheels going round all over the world. . . . What he showed was a revelation to science and art unto ail time."

"Were we," remarks B. A. Behrend, distinguished author and engineer," to seize and to eliminate the results of Mr. Tesla's work, the wheels of industry would cease to turn, our electric cars and trains would stop, our towns would be dark, our mills would be dead and idle."

FORECASTING is perilous. No man can look very far into the future. Progress and invention evolve in directions other than those anticipated. Such has been my experience, although I may flatter myself that many of the developments which I forecast have been verified by events in the first third of the twentieth century.

It seems that I have always been ahead of my time. I had to wait nineteen years before Niagara was harnessed by my system, fifteen years before the basic inventions for wireless which I gave to the world in 1893 were applied universally. I announced the cosmic ray and my theory of radio activity in 1896. One of my most important discoveries—terrestrial resonance—which is the foundation of wireless power transmission and which I announced in 1899, is not understood even today. Nearly two years after I had flashed an electric current around the globe, Edison, Steinmetz, Marconi, and others declared that it would not be possible to transmit even signals by wireless across the Atlantic. Having anticipated so many important developments, it is not without assurance that I attempt to predict what life is likely to be in the twenty-first century.

Life is and will ever remain an equation incapable of solution, but it contains certain known factors. We may definitely say that it is a movement even if we do not fully understand its nature. Movement implies a body which is being moved and a force which propels it against resistance. Man, in the large, is a mass urged on by a force. Hence the general laws governing movement in the realm of mechanics are applicable to humanity.

There are three ways by which the energy which determines human progress can be increased: First, we may increase the mass. This, in the case of humanity, would mean the improvement of living conditions, health, eugenics, etc. Second, we may reduce the frictional forces which impede progress, such as ignorance, insanity, and religious fanaticism. Third, we may multiply the energy of the human mass by enchaining the forces of the universe, like those of the sun, the ocean, the winds and tides.

The first method increases food and well-being. The second tends to bring peace. The third enhances our ability to work and to

achieve. There can be no progress that is not constantly directed toward increasing well-being, peace, and achievement. Here the mechanistic conception of life is one with the teachings of Buddha and the Sermon on the Mount.

While I am not a believer in the orthodox sense, I commend religion, first, because every individual should have some ideal—religious, artistic, scientific, or humanitarian—to give significance to his life. Second, because all the great religions contain wise prescriptions relating to the conduct of life, which hold good now as they did when they were promulgated.

There is no conflict between the ideal of religion and the ideal of science, but science is opposed to theological dogmas because science is founded on fact. To me, the universe is simply a great machine which never came into being and never will end. The human being is no exception to the natural order. Man, like the universe, is a machine. Nothing enters our minds or determines our actions which is not directly or indirectly a response to stimuli beating upon our sense organs from without. Owing to the similarity of our construction and the sameness of our environment, we respond in like manner to similar stimuli, and from the concordance of our reactions, understanding is barn. In the course of ages, mechanisms of infinite complexity are developed, but what we call "soul " or "spirit," is nothing more than the sum of the functionings of the body. When this functioning ceases, the "soul" or the "spirit" ceases likewise.

I expressed these ideas long before the behaviorists, led by Pavlov in Russia and by Watson in the United States, proclaimed their new psychology. This apparently mechanistic conception is not antagonistic to an ethical conception of life. The acceptance by mankind at large of these tenets will not destroy religious ideals. Today Buddhism and Christianity are the greatest religions both in number of disciples and in importance. I believe that the essence of both will he the religion of the human race in the twenty-first century.

The year 2100 will see eugenics universally established. In past ages, the law governing the survival of the fittest roughly weeded out the less desirable strains. Then man's new sense of pity began to interfere with the ruthless workings of nature. As a result, we continue to keep alive and to breed the unfit. The only method compatible with our notions of civilization and the race is to prevent the breeding of the unfit by sterilization and the deliberate guidance of the mating instinct, Several European countries and a number of states of the American Union sterilize the criminal and the insane. This is not sufficient. The trend of opinion among eugenists is that we must make marriage more difficult. Certainly no one who is not a desirable parent should be permitted to produce progeny. A century from now it will no more occur to a normal person to mate with a person eugenically unfit than to marry a habitual criminal.

Hygiene, physical culture will be recognized branches of education and government. The Secretary of Hygiene or Physical Culture will he far more important in the cabinet of the President of the United States who holds office in the year 2035 than the Secretary of War. The pollution of our beaches such as exists today around New York City will seem as unthinkable to our children and grandchildren as life without plumbing seems to us. Our water supply will he far more carefully supervised, and only a lunatic will drink unsterilized water.

MORE people die or grow sick from polluted water than from coffee, tea, tobacco, and other stimulants. I myself eschew all stimulants. I also practically abstain from meat. I am convinced that within a century coffee, tea, and tobacco will be no longer in vogue. Alcohol, however, will still be used. It is not a stimulant but a veritable elixir of life. The abolition of stimulants will not come about forcibly. It will simply be no longer fashionable to poison the system with harmful ingredients. Bernarr Macfadden has shown how it is possible to provide palatable food based upon natural products such as milk, honey, and wheat. I believe that the food which is served today in his penny restaurants will be the basis of epicurean meals in the smartest banquet halls of the twenty-first century.

There will be enough wheat and wheat products to feed the entire world, including the teeming millions of China and India, now chronically on the verge of starvation. The earth is bountiful, and where her bounty fails, nitrogen drawn from the air will refertilize her womb. I developed a process for this purpose in 1900. It was perfected fourteen years later under the stress of war by German chemists.

Long before the next century dawns, systematic reforestation and the scientific management of natural resources will have made an end of all devastating droughts, forest fires, and floods. The universal utilization of water power and its long-distance transmission will supply every household with cheap power and will dispense with the necessity of burning fuel. The struggle for existence being lessened, there should be development along ideal rather than material lines.

Today the most civilized countries of the world spend a maximum of their income on war and a minimum on education. The twenty-first century will reverse this order. It will be more glorious to fight against ignorance than to die on the field of battle. The discovery of a new scientific truth will be more important than the squabbles of diplomats. Even the newspapers of our own day are beginning to treat scientific discoveries and the creation of fresh philosophical concepts as news. The newspapers of the twenty-first century will give a mere "stick" in the back pages to accounts of crime or political controversies, but will headline on the front pages the

proclamation of a new scientific hypothesis.

"It will be possible to destroy anything approaching within 200 miles. My invention will provide a wall of power," declares Tesla.

PROGRESS along such lines will be impossible while nations persist in the savage practice of killing each other off. I inherited from my father, an erudite man who labored hard for peace, an ineradicable hatred of war. Like other inventors, I believed at one time that war could he stopped by making it more destructive. But I found that I was mistaken. I underestimated man's combative instinct, which it will take more than a century to breed out. We cannot abolish war by outlawing it. We cannot end it by disarming the strong. War can be stopped, not by making the strong weak but by making every nation, weak or strong, able to defend itself.

Hitherto all devices that could be used for defense could also be utilized to serve for aggression. This nullified the value of the improvement for purposes of peace. But I was fortunate enough to evolve a new idea and to perfect means which can be used chiefly for defense. If it is adopted, it will revolutionize the relations between nations. It will make any country, large or small, impregnable against armies, airplanes, and other means for attack. My invention requires a large plant, but once it is established it will he possible to destroy anything, men or machines, approaching within a radius of 200 miles. It will, so to speak, provide a wall of power offering an insuperable obstacle against any effective aggression.

If no country can be attacked successfully, there can be no purpose in war. My discovery ends the menace of airplanes or submarines, but it insures the supremacy of the battleship, because battleships may be provided with some of the required equipment. There might still be war at sea, but no warship could successfully attack the shore line, as the coast equipment will be superior to the armament of any battleship.

I want to state explicitly that this invention of mine does not contemplate the use of any so-called "death rays." Rays are not applicable because they cannot be produced in requisite quantities and diminish rapidly in intensity with distance. All the energy of New York City (approximately two million horsepower) transformed into rays and projected twenty miles, could not kill a human being, because, according to a well known law of physics, it would disperse to such an extent as to be ineffectual.

My apparatus projects particles which may be relatively large or of microscopic dimensions, enabling us to convey to a small area at a great distance trillions of times more energy than is possible with rays of any kind. Many thousands of horsepower can thus be transmitted by a stream thinner than a hair, so that nothing can resist. This wonderful feature will make it possible, among other things, to achieve undreamed-of results in television, for there will be almost no limit to the intensity of illumination, the size of the picture, or distance of projection.

I do not say that there may not be several destructive wars before the world accepts my gift. I may not live to see its acceptance. But I am convinced that a century from now every nation will render itself immune from attack by my device or by a device based upon a similar principle.

At present we suffer from the derangement of our civilization because we have not yet completely adjusted ourselves to the machine age. The solution of our problems does not lie in destroying but in mastering the machine.

Innumerable activities still performed by human hands today will be performed by automatons. At this very moment scientists working in the laboratories of American universities are attempting to create what has been described as a "thinking machine." I anticipated this development.

I actually constructed "robots." Today the robot is an accepted fact, but the principle has not been pushed far enough. In the twenty-first century the robot will take the place which slave labor occupied in ancient civilization. There is no reason at all why most of this should not come to pass in less than a century, treeing mankind to pursue its higher aspirations.

And unless mankind's attention is too violently diverted by external wars and internal revolutions, there is no reason why the electric millennium should not begin in a few decades.

A NEW SYSTEM OF ALTERNATE CURRENT MOTORS AND TRANSFORMERS

by Nikola Tesla

Previous Article Next Article

Delivered before the American Institute of Electrical Engineers, May 1888.

I desire to express my thanks to Professor Anthony for the help he has given me in this matter. I would also like to express my thanks to Mr. Pope and Mr. Martin for their aid. The notice was rather short, and I have not been able to treat the subject so extensively as I could have desired, my health not being in the best condition at present. I ask your kind indulgence, and I shall be very much gratified if the little I have done meets your approval.

In the presence of the existing diversity of opinion regarding the relative merits of the alternate and continuous current systems, great importance is attached to the question whether alternate currents can be successfully utilized in the operation of motors. The transformers, with their numerous advantages, have afforded us a relatively perfect system of distribution, and although, as in all branches of the art, many improvements are desirable, comparatively little remains to be done in this direction. The transmission of power, on the contrary, has been almost entirely confined to the use of continuous currents, and notwithstanding that many efforts have been made to utilize alternate currents for this purpose, they have, up to the present, at least as far as known, failed to give the result desired. Of the various motors adapted to be used on alternate current circuits the following have been mentioned: 1. A series motor with subdivided field. 2. An alternate current generator having its field excited by continuous currents. 3. Elihu Thomson's motor. 4. A combined alternate and continuous current motor. Two more motors of this kind have suggested themselves to me. 1. A motor with one of its circuits in series with a transformer and the other in the secondary of the transformer. 2. A motor having its armature circuit connected to the generator and the field coils closed upon themselves. These, however, I mention only incidentally.

The subject which I now have the pleasure of bringing to your notice is a novel system of electric distribution and transmission of power by means of alternate currents, affording peculiar advantages, particularly in the way of motors, which I am confident will at once establish the superior adaptability of these currents to the transmission of power and will show that many results heretofore unattainable can be reached by their use; results which are very much desired in the practical operation of such systems and which cannot be accomplished by means of continuous currents.

Before going into a detailed description of this system, I think it necessary to make a few remarks with reference to certain conditions existing in continuous current generators and motors, which, although generally known, are frequently disregarded.

In our dynamo machines, it is well known, we generate alternate currents which we direct by means of a commutator, a complicated device and, it may be justly said, the source of most of the troubles experienced in the operation of the machines. Now, the currents so directed cannot be utilized in the motor, but they must—again by means of a similar unreliable device—be reconverted into their original state of alternate currents. The function of the commutator is entirely external, and in no way dues it affect the internal working of the machines. In reality, therefore, all machines are alternate current machines, the currents appearing as continuous only in the external circuit during their transit from generator to motor. In view simply of this fact, alternate currents would commend themselves as a more direct application of electrical energy, and the employment of continuous currents would only be justified if we had dynamos which would primarily generate, and motors which would be directly actuated by such currents.

But the operation of the commutator on a motor is twofold; firstly, it reverses the currents through the motor, and secondly, it effects, automatically, a progressive shifting of the poles of one of its magnetic constituents. Assuming, therefore, that both of the useless operations in the system, that is to say, the directing of the alternate currents on the generator and reversing the direct currents on the motor, be eliminated, it would still be necessary, in order to cause a rotation of the motor, to produce a progressive shifting of the poles of one of its elements, and the question presented itself,—How to perform this operation by the direct action of alternate currents? I will now proceed to show how this result was accomplished.

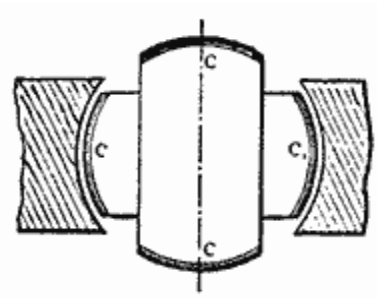

Fig. 1.

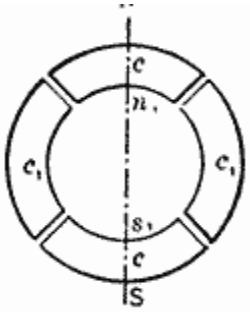

Fig. 1a.

In the first experiment a drum-armature was provided with two coils at right angles to each other, and the ends of these coils were connected to two pairs of insulated contact-rings as usual. A ring was then made of thin insulated plates of sheet-iron and wound with four coils, each two opposite coils being connected together so as to produce free poles on diametrically opposite sides of the ring. The remaining free ends of the coils were then connected to the contact-rings of the generator armature so as to form two independent circuits, as indicated in figure 9. It may now be seen what results were secured in this combination, and with this view I would refer to the diagrams, figures 1 to 8*a*. The field of the generator being independently excited, the rotation of the armature sets up currents in the coils C C_1, varying in strength and direction in the well-known manner. In the position shown in figure 1 the current in coil C is nil while coil C_1 is traversed by its maximum current, and the connections my be such that the ring is magnetized by the coils c_1 c_1 as indicated by the letters N S in figure 1*a*, the magnetizing effect of the coils *c c* being nil, since these coils are included in the circuit of coil C.

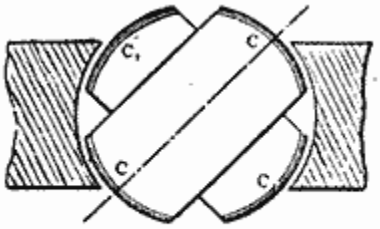

Fig. 2.

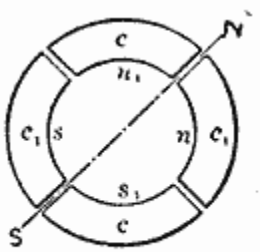

Fig. 2a.

In figure 2 the armature coils are shown in a more advanced position, one-eighth of one revolution being completed. Figure 2*a* illustrates the corresponding magnetic condition of the ring. At this moment the coil c_1 generates a current of the same direction as previously, but weaker, producing the poles n_1 s_1 upon the ring; the coil c also generates a current of the same direction, and the connections may be such that the coils *c c* produce the poles *n s*, as shown in figure 2*a*. The resulting polarity is indicated by the letters N S, and it will be observed that the poles of the ring have been shifted one-eighth of the periphery of the same.

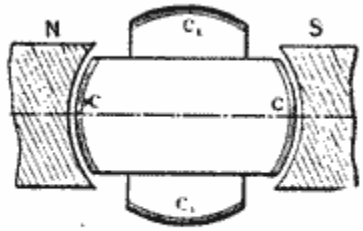

Fig. 3.

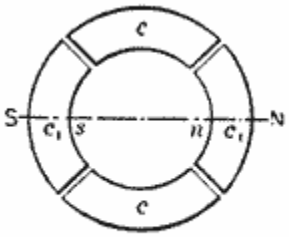

Fig. 3a.

In figure 3 the armature has completed one-quarter of one revolution. In this phase the current in coil C is maximum, and of such direction as to produce the poles N S in figure 3*a*, whereas the current in coil C_1 is nil, this coil being at its neutral position. The poles N S in figure 3*a* are thus shifted one-quarter of the circumference of the ring.

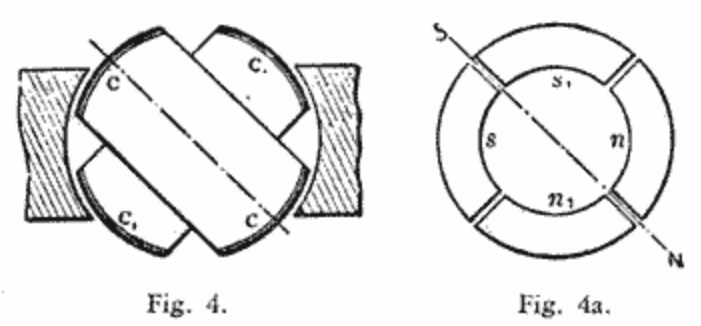

Fig. 4. Fig. 4a.

Figure 4 shows the coils C C in a still more advanced position, the armature having completed three-eighths of one revolution. At that moment the coil C still generates a current of the same direction as before, but of less strength, producing the comparatively weaker poles *n s* in figure 4*a*, The current in the coil C_1 is of the same strength, but of opposite direction. Its effect is, therefore, to produce upon the ring the poles n_1 and s_1 as indicated, and a polarity, N S, results, the poles now being shifted three-eighths of the periphery of the ring.

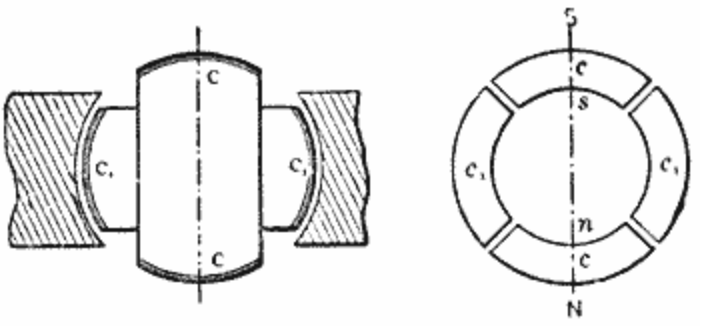

Fig. 5. Fig. 5a.

In figure 5 one-half of one revolution of the armature is completed, and the resulting magnetic condition of the ring is indicated in figure 5a. Now, the current in coil C is nil, while the coil C_1yields its maximum current, which is of the same direction as previously; the magnetizing effect is, therefore, due to the coils C_1 C_1 alone, and, referring to figure 5a, it will be observed that the poles N S are shifted one-half of the circumference of the ring. During the next half revolution the operations are repeated, as represented in the figures 6 to 8*a*.

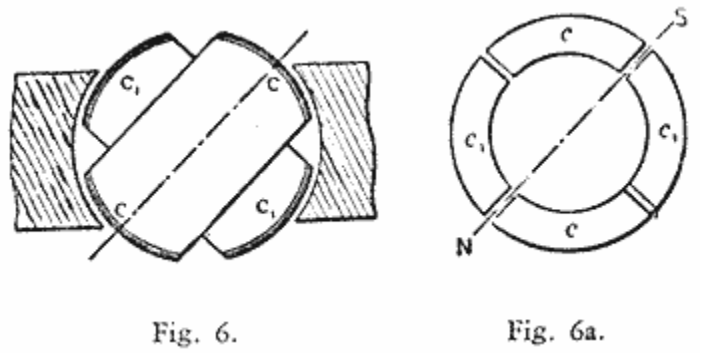

Fig. 6. Fig. 6a.

A reference to the diagrams will make it clear that during one revolution of the armature the poles of the ring are shifted once around its periphery, and each revolution producing like effects, a rapid whirling of the poles in harmony with the rotation of the armature is the result. If the connections of either one of the circuits in the ring are reversed, the shifting of the poles is made to progress in the opposite direction, but the operation is identically the same. Instead of using four wires, with like result, three wires may be used, one forming a common return for both circuits.

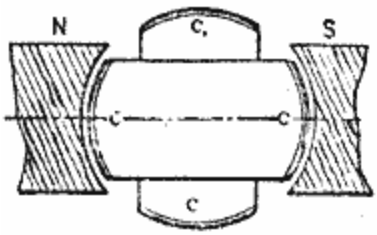

Fig. 7.

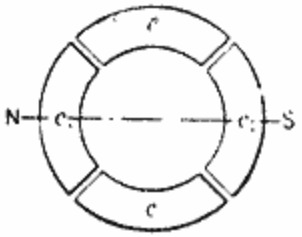

Fig. 7a.

This rotation or whirling of the poles manifests itself in a series of curious phenomena. If a delicately pivoted disc of steel or other magnetic metal is approached to the ring it is set in rapid rotation, the direction of rotation varying with the position of the disc. For instance, noting the direction outside of the ring it will be found that inside the ring it turns in an opposite direction, while it is unaffected if placed in a position symmetrical to the ring. This is easily explained. Each time that a pole approaches it induces an opposite pole in the nearest point on the disc, and an attraction is produced upon that point; owing to this, as the pole is shifted further away from the disc a tangential pull is exerted upon the same, and the action being constantly repeated, a more or less rapid rotation of the disc is the result. As the pull is exerted mainly upon that part which is nearest to the ring, the rotation outside and inside, or right and left, respectively, is in opposite directions, figure 9. When placed symmetrically to the ring, the pull on opposite sides of the disc being equal, no rotation results. The action is based on the magnetic inertia of the iron; for this reason a disc of hard steel is much more affected than a disc of soft iron, the latter being capable of very rapid variations of magnetism. Such a disc has proved to be a very useful instrument in all these investigations, as it has enabled me to detect any irregularity in the action. A curious effect is also produced upon iron filings. By placing some upon a paper and holding them externally quite close to the ring they are set in a vibrating motion, remaining in the same place, although the paper may be moved back and forth; but in lifting the paper to a certain height which seems to be dependent on the intensity of the poles and the speed of rotation, they are thrown away in a direction always opposite to the supposed movement of the poles. If a paper with filings is put flat upon the ring and the current turned on suddenly; the existence of a magnetic whirl may be easily observed.

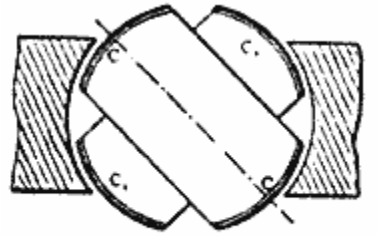

Fig. 8.

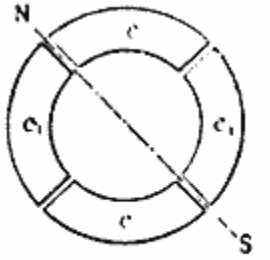

Fig. 8a.

To demonstrate the complete analogy between the ring and a revolving magnet, a strongly energized electro-magnet was rotated by mechanical power, and phenomena identical in every particular to those mentioned above were observed.

Obviously, the rotation of the poles produces corresponding inductive effects and may be utilized to generate currents in a closed conductor placed within the influence of the poles. For this purpose it is convenient to wind a ring with two sets of superimposed coils forming respectively the primary and secondary circuits, as shown in figure 10. In order to secure the most economical results the magnetic circuit should be completely closed, and with this object in view the construction may be modified at will.

The inductive effect exerted upon the secondary coils will be mainly due to the shifting or movement of the magnetic action; but there may also be currents set up in the circuits in consequence of the variations in the intensity of the poles. However, by properly designing the generator and determining the magnetizing effect of the primary coils the latter element may be made to disappear. The intensity of the poles being maintained constant, the action of the apparatus will be perfect, and the same result will be secured as though the shifting were effected by means of a commutator with an infinite number of bars. In such case the theoretical relation between the energizing effect of each set of primary coils and their resultant magnetizing effect may be expressed by the equation of a circle having its center coinciding with that of an orthogonal system of axes, and in which the radius represents the resultant and the co-ordinates both of its components. These are then respectively the sine and cosine of the angle U between the radius and one of the axes (***O X***). Referring to figure 11, we have $r^2 = x^2 + y^2$; where $x = r \cos a$, and $y = r \sin a$.

Assuming the magnetizing effect of each set of coils in the transformer to be proportional to the current—which may be admitted for weak degrees of magnetization—then $x = \boldsymbol{K}c$ and $y = \boldsymbol{K}c^1$, where $\boldsymbol{K}$ is a constant and c and c^1 the current in both sets of coils

respectively. Supposing, further, the field of the generator to be uniform, we have for constant speed $c^1 = \boldsymbol{K}^1 \sin a$ and $c = \boldsymbol{K}^1 \sin (90^o + a) = \boldsymbol{K}^1 \cos a$, where $\boldsymbol{K}^1$ is a constant. See figure 12.

Therefore,

$x = \boldsymbol{K}c = \boldsymbol{K}\boldsymbol{K}^1 \cos a;$
$y = \boldsymbol{K}c^l = \boldsymbol{K}\boldsymbol{K}^1 \sin a$; and
$\boldsymbol{K}\boldsymbol{K}^1 = r.$

That is, for a uniform field the disposition of the two coils at right angles will secure the theoretical result, and the intensity of the shifting poles will be constant. But from $r^2 = x^2 + y^2$ it follows that for $y = O$, $r = x$; it follows that the joint magnetizing effect of both sets of coils should be equal to the effect of one set when at its maximum action. In transformers and in a certain class of motors the fluctuation of the poles is not of great importance, but in another class of these motors it is desirable to obtain the theoretical result.

In applying this principle to the construction of motors, two typical forms of motor have been developed. First, a form having a comparatively small rotary effort at the start, but maintaining a perfectly uniform speed at all loads, which motor has been termed synchronous. Second, a form possessing a great rotary effort at the start, the speed being dependent on the load.

These motors may be operated in three different ways: 1. By the alternate currents of the source only. 2. By a combined action of these and of induced currents. 3. By the joint action of alternate and continuous currents.

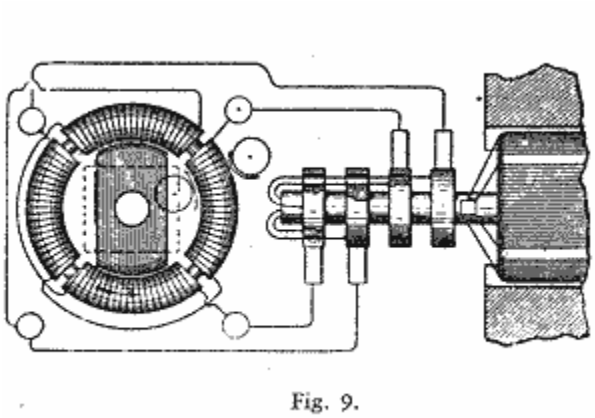

Fig. 9.

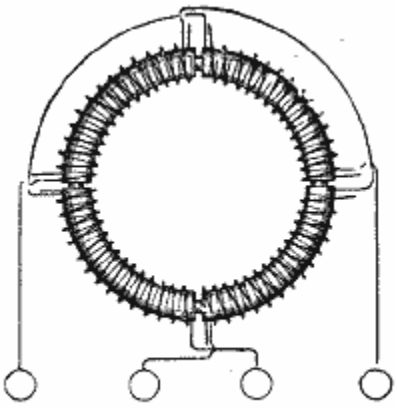

Fig. 10.

The simplest form of a synchronous motor is obtained by winding a laminated ring provided with pole projections with four coils, and connecting the same in the manner before indicated. An iron disc having a segment cut away on each side may be used as an armature. Such a motor is shown in figure 9. The disc being arranged to rotate freely within the ring in close proximity to the projections, it is evident that as the poles are shifted it will, owing to its tendency to place itself in such a position as to embrace the greatest number of the lines of force, closely follow the movement of the poles, and its motion will be synchronous with that of the armature of the generator; that is, in the peculiar disposition shown in figure 9, in which the armature produces by one revolution two current impulses in each of the circuits. It is evident that if, by one revolution of the armature, a greater number of impulses is produced, the speed of the motor will be correspondingly increased. Considering that the attraction exerted upon the disc is greatest when the same is in close proximity to the poles, it follows that such a motor will maintain exactly the same speed at all loads within the limits of its capacity.

To facilitate the starting, the disc may be provided with a coil closed upon itself. The advantage secured by such a coil is evident. On the start the currents set up in the coil strongly energize the disc and increase the attraction exerted upon the same by the ring, and currents being generated in the coil as long as the speed of the armature is inferior to that of the poles, considerable work may be performed by such a motor even if the speed be below normal. The intensity of the poles being constant, no currents will be generated in the coil when the motor is turning at its normal speed.

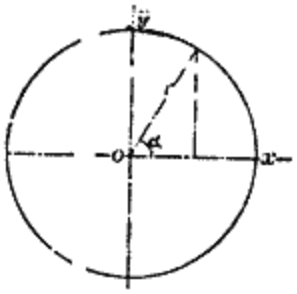

Fig. 11.

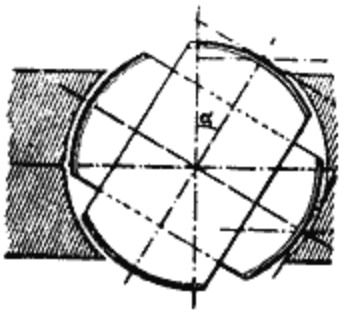

Fig. 12.

Instead of closing the coil upon itself, its ends may be connected to two insulated sliding rings, and a continuous current supplied to these from a suitable generator. The proper way to start such a motor is to close the coil upon itself until the normal speed is reached, or nearly so, and then turn on the continuous current. If the disc be very strongly energized by a continuous current the motor may not be able to start, but if it be weakly energized, or generally so that the magnetizing effect of the ring is preponderating it will start and reach the normal speed. Such a motor will maintain absolutely the same speed at all loads. It has also been found that if the motive power of the generator is not excessive, by checking the motor the speed of the generator is diminished in synchronism with that of the motor. It is characteristic of this form of motor that it cannot be reversed by reversing the continuous current through the coil.

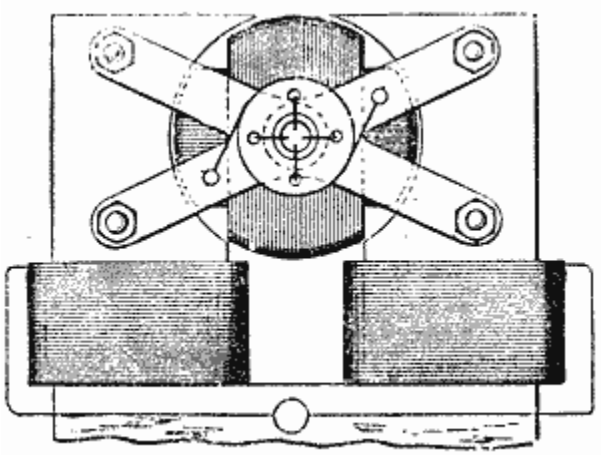

Fig. 13.

The synchronism of these motors may be demonstrated experimentally in a variety of ways. For this purpose it is best to employ a motor consisting of a stationary field magnet and an armature arranged to rotate within the same, as indicated in figure 13. In this case the shifting of the poles of the armature produces a rotation of the latter in the opposite direction. It results therefrom that when the normal speed is reached, the poles of the armature assume fixed positions relatively to the field magnet and the same is magnetized by induction, exhibiting a distinct pole on each of the pole-pieces. If a piece of soft iron is approached to the field magnet it will at the start be attracted with a rapid vibrating motion produced by the reversals of polarity of the magnet, but as the speed of the armature increases; the vibrations become less and less frequent and finally entirely cease. Then the iron is weakly but permanently attracted, showing that the synchronism is reached and the field magnet energized by induction.

The disc may also be used for the experiment. If held quite close to the armature it will turn as long as the speed of rotation of the poles exceeds that of the armature; but when the normal speed is reached, or very nearly so; it ceases to rotate and is permanently attracted.

A crude but illustrative experiment is made with an incandescent lamp. Placing the lamp in circuit with the continuous current generator, and in series with the magnet coil, rapid fluctuations are observed in the light in consequence of the induced current set up in the coil at the start; the speed increasing, the fluctuations occur at longer intervals, until they entirely disappear, showing that the motor has attained its normal speed. A telephone receiver affords a most sensitive instrument; when connected to any circuit in the motor the synchronism may be easily detected on the disappearance of the induced currents.

In motors of the synchronous type it is desirable to maintain the quantity of the shifting magnetism constant, especially if the

magnets are not properly subdivided.

To obtain a rotary effort in these motors was the subject of long thought. In order to secure this result it was necessary to make such a disposition that while the poles of one element of the motor are shifted by the alternate currents of the source, the poles produced upon the other element should always be maintained in the proper relation to the former, irrespective of the speed of the motor. Such a condition exists in a continuous current motor; but in a synchronous motor, such as described, this condition is fulfilled only when the speed is normal.

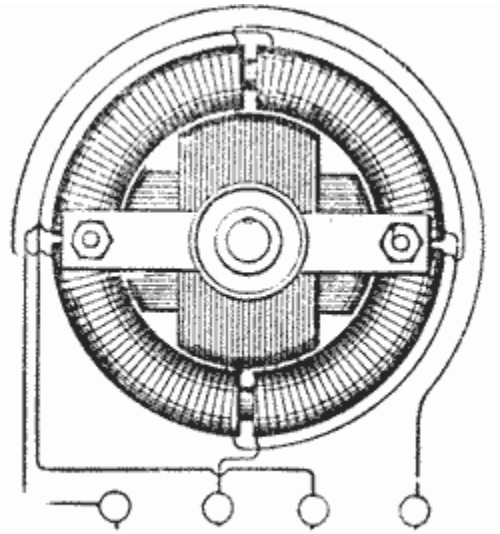

Fig. 14.

The object has been attained by placing within the ring a properly subdivided cylindrical iron core wound with several independent coils closed upon themselves. Two coils at right angles as in figure 14, are sufficient, but greater number may he advantageously employed. It results from this disposition that when the poles of the ring are shifted, currents are generated in the closed armature coils. These currents are the most intense at or near the points of the greatest density of the lines of force, and their effect is to produce poles upon the armature at right angles to those of the ring, at least theoretically so; and since action is entirely independent of the speed—that is, as far as the location of the poles is concerned—a continuous pull is exerted upon the periphery of the armature. In many respects these motors are similar to the continuous current motors. If load is put on, the speed, and also the resistance of the motor, is diminished and more current is made to pass through the energizing coils, thus increasing the effort. Upon the load being taken off, the counter-electromotive force increases and less current passes through the primary or energizing coils. Without any load the speed is very nearly equal to that of the shifting poles of the field magnet.

It will be found that the rotary effort in these motors fully equals that of the continuous current motors. The effort seems to be greatest when both armature and field magnet are without any projections; but as in such dispositions the field cannot be very concentrated, probably the best results will be obtained by leaving pole projections on one of the elements only. Generally, it may be stated that the projections diminish the torque and produce a tendency to synchronism.

A characteristic feature of motors of this kind is their capacity of being very rapidly reversed. This follows from the peculiar action of the motor. Suppose the armature to be rotating and the direction of rotation of the poles to be reversed. The apparatus then represents a dynamo machine, the power to drive this machine being the momentum stored up in the armature and its speed being the sum of the speeds of the armature and the poles.

If we now consider that the power to drive such a dynamo would be very nearly proportional to the third power of the speed, for this reason alone the armature should be quickly reversed. But simultaneously with the reversal another element is brought into action, namely, as the movement of the poles with respect to the armature is reversed, the motor acts like a transformer in which the resistance of the secondary circuit would be abnormally diminished by producing in this circuit an additional electromotive force. Owing to these causes the reversal is instantaneous.

If it is desirable to secure a constant speed, and at the same time a certain effort at the start, this result may be easily attained in a variety of ways. For instance, two armatures, one for torque and the other for synchronism, may be fastened on the same shaft, and any desired preponderance may be given to either one, or an armature may be wound for rotary effort, but a more or less pronounced tendency to synchronism may be given to it by properly constructing the iron core; and in many other ways.

As a means of obtaining the required phase of the currents in both the circuits, the disposition of the two coils at right angles is the simplest, securing the most uniform action; but the phase may be obtained in many other ways, varying with the machine employed. Any of the dynamos at present in use may be easily adapted for this purpose by making connections to proper points of the generating coils. In closed circuit armatures, such as used in the continuous current systems, it is best to make four derivations from equi-distant points or bars of the commutator, and to connect the same to four insulated sliding rings on the shaft. In this case each of the motor circuits is connected to two diametrically opposite bars of the commutator. In such a disposition the motor may also be operated at half the potential and on the three-wire plan, by connecting the motor circuits in the proper order to three of the contact rings.

In multipolar dynamo machines, such as used in the converter systems, the phase is conveniently obtained by winding upon the armature two series of coils in such a manner that while the coils of one set or series are at their maximum production of current, the coils of the other will be at their neutral position, or nearly so, whereby both sets of coils may be subjected simultaneously or successively to the inducing action of the field magnets.

Fig. 15. Fig. 16. Fig. 17.

Generally the circuits in the motor will be similarly disposed, and various arrangements may be made to fulfill the requirements; but the simplest and most practicable is to arrange primary circuits on stationary parts of the motor, thereby obviating, at least in certain forms, the employment of sliding contacts. In such a case the magnet coils are connected alternately in both the circuits; that is 1, 3, 5 . . . in one, and 2, 4, 6 . . . in the other, and the coils of each set of series may be connected all in the same manner, or alternately in opposition; in the latter case a motor with half the number of poles will result, and its action will be correspondingly modified. The figures 15, 16 and 17, show three different phases, the magnet coils in each circuit being connected alternately in opposition. In this case there will be always four poles, as in figures 15 and 17, four pole projections will be neutral, and in figure 16 two adjacent pole projections will have the same polarity. If the coils are connected in the same manner there will be eight alternating poles, as indicated by the letters *n*' *s*' in fig.15.

The employment of multipolar motors secures in this system an advantage much desired and unattainable in the continuous current system, and that is, that a motor may be made to run exactly at a predetermined speed irrespective of imperfections in construction, of the load, and, within certain limits, of electromotive force and current strength.

In a general distribution system of this kind the following plan should be adopted. At the central station of supply a generator should be provided having a considerable number of poles. The motors operated from this generator should be of the synchronous type, but possessing sufficient rotary effort to insure their starting. With the observance of proper rules of construction it may be admitted that the speed of each motor will be in some inverse proportion to its size, and the number of poles should be chosen accordingly. Still exceptional demands may modify this rule. In view of this, it will be advantageous to provide each motor with a greater number of pole projections or coils, the number being preferably a multiple of two and three. By this means, by simply changing the connections of the coils, the motor may be adapted to any probable demands.

If the number of the poles in the motor is even, the action will he harmonious and the proper result will be obtained; if this is not the case the best plan to be followed is to make a motor with a double number of poles and connect the same in the manner before indicated, so that half the number of poles result. Suppose, for instance, that the generator has twelve poles, and it would be desired to obtain a speed equal to 12/7 of the speed of the generator. This would require a motor with seven pole projections or magnets, and such a motor could not be properly connected in the circuits unless fourteen armature coils would be provided, which would necessitate the employment of sliding contacts. To avoid this the motor should be provided with fourteen magnets and seven connected in each circuit, the magnets in each circuit alternating among themselves. The armature should have fourteen closed coils. The action of the motor will not be quite as perfect as in the case of an even number of poles, but the drawback will not be of a serious nature.

However, the disadvantages resulting from this unsymmetrical form will be reduced in the same proportion as the number of the poles is augmented.

If the generator has, say, n, and the motor n_1 poles, the speed of the motor will be equal to that of the generator multiplied by n/n_1.

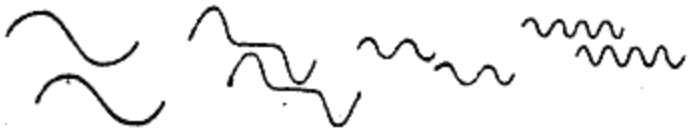

Fig. 18. Fig. 19. Fig. 20. Fig 21.

The speed of the motor will generally be dependent on the number of the poles, but there may be exceptions to this rule. The speed may be modified by the phase of the currents in the circuits or by the character of the current impulses or by intervals between each or between groups of impulses. Some of the possible cases are indicated in the diagrams, figures 18, 19, 20 and 21, which are self-explanatory. Figure 18 represents the condition generally existing, and which secures the best result. In such a case, if the typical form of motor illustrated in figure 9 is employed, one complete wave in each circuit will produce one revolution of the motor. In figure 19 the same result will he effected by one wave in each circuit, the impulses being successive; in figure 20 by four, and in figure 21 by eight waves.

By such means any desired speed may be attained; that is, at least within the limits of practical demands. This system possesses this advantage besides others, resulting from simplicity. At full loads the motors show efficiency fully equal to that of the continuous current motors. The transformers present an additional advantage in their capability of operating motors. They are capable of similar modifications in construction, and will facilitate the introduction of motors and their adaptation to practical demands. Their efficiency should be higher than that of the present transformers, and I base my assertion on the following:

In a transformer as constructed at present we produce the currents in the secondary circuit by varying the strength of the primary or exciting currents. If we admit proportionality with respect to the iron core the inductive effect exerted upon the secondary coil will be proportional to the numerical sum of the variations in the strength of the exciting current per unit of time; whence it follows that for a given variation any prolongation of the primary current will result in a proportional loss. In order to obtain rapid variations in the strength of the current, essential to efficient induction, a great number of undulations are employed. From this practice various disadvantages result. These are, increased cost and diminished efficiency of the generator, more waste of energy in heating the cores, and also diminished output of the transformer, since the core is not properly utilized, the reversals being too rapid. The inductive effect is also very small in certain phases, as will be apparent from a graphic representation, and there may be periods of inaction, if there are intervals between the succeeding current impulses or waves. In producing a shifting of the poles in the transformer, and thereby inducing currents, the induction is of the ideal character, being always maintained at its maximum action. It is also reasonable to assume that by a shifting of the poles less energy will be wasted than by reversals.

ANGELS DON'T PLAY THIS HAARP

ADVANCES IN TESLA TECHNOLOGY

Jeane Manning

Dr. Nick Begich

Environmental Warfare?

The U. S. Government has a new ground-based "Star Wars" weapon which is being tested in the remote bush country of Alaska. This new system manipulates the environment in a way which can:

- Disrupt human mental processes.
- Jam all global communications systems.
- Change weather patterns over large areas.
- Interfere with wildlife migration patterns.
- Negatively affect your health.
- Unnaturally impact the Earth's upper atmosphere.

The U.S. military calls its zapper HAARP (High-frequency Active Auroral Research Project). But this skybuster is not about the Northern Lights. This device will turn on lights never intended to be artificially manipulated.

Their first target is the electrojet - a river of electricity that flows thousands of miles through the sky and down into the polar icecap. The electrqjet will become a vibrating artificial antenna for sending electromagnetic radiation raining down on the earth. The U.S. military can then "X-ray" the earth and talk to submarines. But there's much more they can do with HAARP. This book reveals surprises from secret meetings.

PROJECT CENSORED - a prestigious panel of journalists - judged HAARP to be in the top ten under-reported news stories of 1994.

POPULAR SCIENCE - As a front-cover story, HAARP began to be revealed in September, 1995. This book is - the rest of the story.

The High-frequency Active Auroral Research Project is

The HAARP that Angels Don't Play.

About the Authors

Dr. Nick Begich is the eldest son of the late United States Congressman from Alaska, Nick Begich Sr., and political activist Pegge Begich. He is well known in Alaska for his own political activities. He was twice elected President of both the Alaska Federation of Teachers and the Anchorage Council of Education. He has been pursuing independent research in the sciences and politics for most of his adult life. Begich received his doctorate in traditional medicine from The Open International University for Complementary Medicines in November, 1994.

He co-authored the book Earth Rising - The Revolution: Toward a Thousand Years of Peace with James Roderick in January 2000. He is also the editor of Earthpulse Flashpoints, a new-science book series. Begich has published articles in science, politics and education and is a well known lecturer, having presented throughout the United States and in nineteen countries. He has been featured as a guest on thousands of radio broadcasts, reporting on his research activities including new technologies, health and earth science related issues. He has also appeared on dozens of television documentaries and other programs throughout the world including BBC-TV, CBC-TV, TeleMundo, and others.

Begich has served as an expert witness and speaker before the European Parliament. He has spoken on various issues for groups representing citizen concerns, statesmen and elected officials, scientists and others. He is the publisher and co-

owner of Earthpulse Press and is also under contract as Tribal Planner for the Chickaloon Village Council, a federally recognized American Indian Tribe of the Athabascan Indian Nation.

Dr. Begich is married to Shelah Begich-Slade and has five children. He resides just north of Anchorage in the community of Eagle River, Alaska, USA.

Jeane Manning is an experienced magazine journalist, reporter for daily newspapers and former editor of a community newspaper. A decade of re-searching nonconventional electrical energy technologies culminated in her book The Coming Energy Revolution (Avery Publishing Group, NY, 1996). She is co-author of a 1994 book published by Auckland Institute of Technology Press, New Zealand, Suppressed Inventions and other Discoveries. Born in Cordova, Alaska, she tracked HAARP with deep interest. She now lives in Vancouver, Canada.

CONTENTS

TIMELINE 1

Foreword 5

Introduction 8

CHAPTERS

PART ONE: THE PEOPLE WAKE UP TO HAARP

1 The Sorcerer's Apprentices 11

2 Trail from Tesla to Star Wars 17

3 What's going on Up There? 23

4 Skybusters Under Secrecy 31

5 High on the Sky 40

6 Northern Exposure 47

7 In the Wilderness 52

PART TWO: SCIENTISTS ARE CONCERNED

8 Who Can Stop the Big Zapper? 60

9 Tesla's Weather Apprentices 66

10 Putting the Heat on Mom Earth 75

PART THREE: ELECTROPAINTINGS IN THE SKY

11 The Compilers 84

12 Twisted Words, Star Wars and Poker Flats 86

13 Star Wars -- Company Control 90

14 "The Project's Not Classified" 94

15 The Twelve Patents of APTI -Technically Tesla..... 97

16 Turning on a Billion Watts 109

17 Nuclear Excavation - Creating the Bay..... 111

18 Thermonuclear Weapons Replaced by Electropulse 114

19 Charged Particle Rain Critical Omission..... 118

20 Blurred Visions of the Military 121

21 Race with the Russians 131

22 Entrain the Brain to go Insane?..... 134

23 Psychocivilized Society and the CIA 140

24 Zapping the "Nonlethal" Way 151

PART FOUR: STOP THE MUSIC

25 Playing the HAARP..... 171

26 Soft Sell, The Environmental Impact Statement..... 173

27 Pandora's Box the Great Temptation..... 176

28 Power and Control-The End of Freedom..... 179

29 A Clear Note..... 183

Glossary 191

Illustrations 192

Updates 206

Looking Through The Earth..... 210

Resource Guide..... 215

This illustration shows the ionosphere's relationship to the Earth. The illustration appeared in the HAARP Environmental Impact Statement on page 10-125 of Volume II.

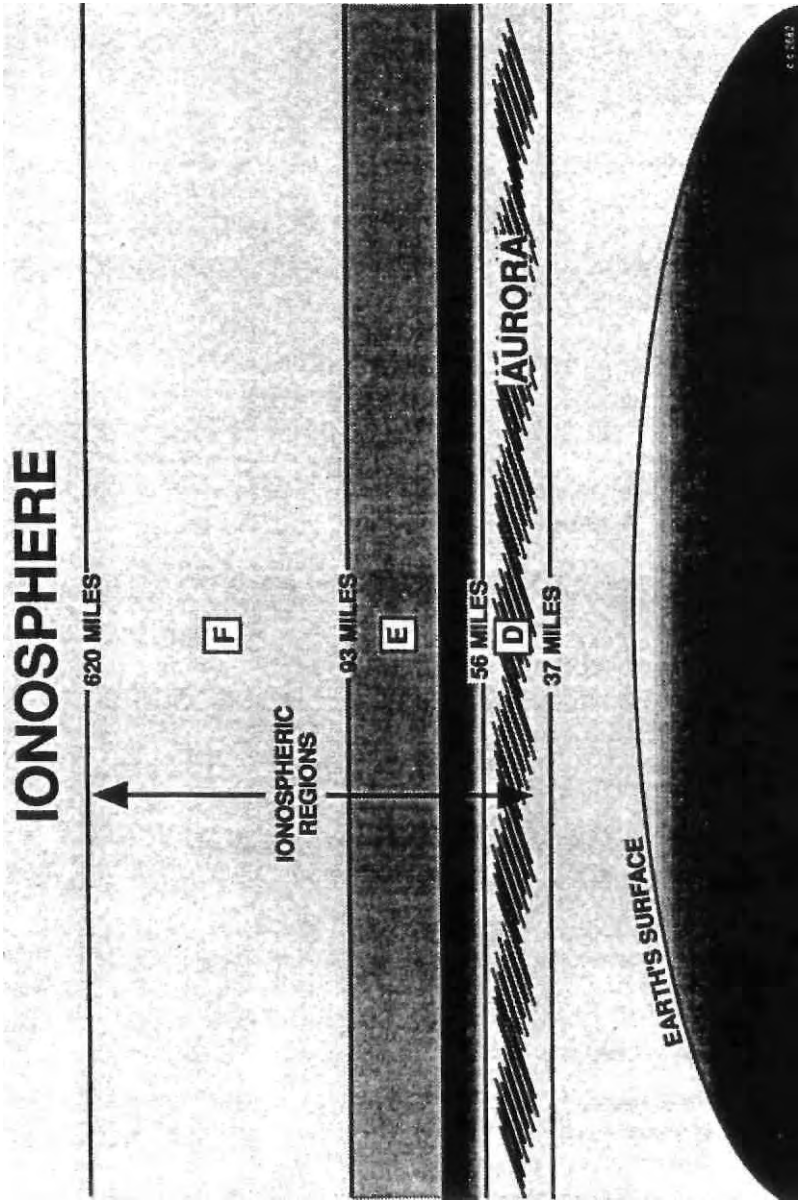

MESSING WITH 'MOTHER EARTH' AND HER KIDS ELECTROMAGNETICALLY: A BRIEF HISTORY OF EVENTS & DISCOVERIES

1886-8: Nikola Tesla invents system of Alternating Current (AC) power source and transmission system. As 60-pulse-per-second (Hertz) AC power grids spread over the land, Mom Earth will eventually dance to a different beat than her usual 7-8 Hertz frequency.

1900: Tesla applies for patent on a device to "Transmit Electrical Energy Through the Natural Mediums".

1905: U.S. Patent #787,412 issued for above.

1924.: Confirmation that radio waves bounce off ionospherel (electrically charged layer starting at altitude of 50 kilometers).

1938: Scientist proposes to light up night sky by electron gyrotron heating from a powerful transmitter.

1940: Tesla announces "death ray" invention.

1945: Atomic bomb tests begin - 40,000 electromagnetic pulses to follow.

1952: W.O. Schumann identifies 7.83 Hertz resonant frequency of the earth.

1958: Van Allen radiation belts discovered (zones of charged particles trapped in earth's magnetic field) 2,000+ miles up. Violently disrupted in the same year.

1958: Project Argus, U.S. Navy explodes three nuclear bombs in Van Allen belt.

1958: White House advisor on weather modification says Defense Department studying ways to manipulate charges "of earth and sky, and so affect the weather".

1960: Series of weather disasters begin.[2]

1961?: Copper needles dumped into ionosphere as "telecommunications shield".[3]

1 Victor A. Schmidt, Planet Earth and the New Geoscience. Kendall/Hunt, Iowa, 1986, pg. 428
2 Editor's page, "Weather Modification",Saturday Review 2/5/1977.
3 Keesings Historisch Archief, courtesy of Nigel Harle, Netherlands,

1961: Scientists propose artificial ion cloud experiments. In 1960's the dumping of chemicals (barium powder etc.) from satellites/rockets began. [4]

1961-62: U.S.S.R. and U.S.A. create many electromagnetic pulses (EMPs) in the atmosphere; 300 megatons of nuclear devices deplete ozone layer by about 4%.[5]

1962: Launch of Canadian satellites & start of stimulating plasma resonances by antennas within the space plasma.6

1966: Gordon J. F. MacDonald publishes military ideas on environmental engineering.[7]

1960's: In Wisconsin, US Navy Project Sanguine lays extremely low frequency (ELF) antennae.

1968: Moscow scientists tell the West that they have pinpointed which pulsed magnetic field frequencies help mental and physiological functions and which frequencies do harm. [8]

1972: First reports on "ionospheric heater" experiments with high frequency radio waves, at Arecibo.9 A 100 megawatt heater in Norway built later in decade can change conductivity of auroral ionosphere. [10]

1973: Documentation that launch of Skylab "halved the total electron content of the ionosphere for three hours"(by rocket exhaust gases). [11,12]

1973: Recommendations for study of Project Sanguine's biological effects denied by Navy. [13]

1974: United Nations General Assembly bans environmental warfare.

4 Manfred Scholer, "On the Motion of Artificial Ion Clouds in the Magnetosphere", Planet Space Sci. 1970, Vol. 18 pp 977 to 1004. Printed in Northern Ireland.

5 National Academy of Sciences, "Long-Term Effects of Multiple Nuclear-Weapon Detonation", 1975 pges. 6-7.

6 Michael J. Rycroft, "Active Experiments in Space Plasmas" Nature vol. 287 4 Sept. 1980, pg, 7.

7 Lowell Ponte, The Cooling. Prentice-Hall, NJ, 1976, pg. 166-7

8 Sheila Ostrander and Lynn Schroeder Super Memory: The Revolution. Carroll & Graf, NY, pg. 303.

9 W.E. Gordon and H.C, Carlson/'Arecibo Heating Experiments", Radio Science,Vol. 9, No.11, pges 1041-7, Nov. 1974.

10 Michael J. Rycroft, "Active Experiments in Space Plasmas", Nature Vol. 287, Sept. 1980, pg. 7.

11 Michael J. Rycroft, "Ionospheric Hole Caused by Rocket Engine", Nature Vol. 297, June 1982, pg. 537.

12 Michael Mendillo, Gerald S. Hawkins, John A. Klobuchar, "A Sudden Vanishing of the Ionospheric F Region Due to the Launch of Skylab", Journal of Geophysical Research, Vol. 80 No. 16, June 1, 1975, pg. 2217.

13 Robert O. Becker, Cross Currents. Jeremy Tarcher LA 1990, pg. 201-3.

1974: High frequency experiments at Plattesville, Colorado; Arecibo, Puerto Rico; and, Armidale, New South Wales heat "bottom side of ionosphere". [14]

1974: Experiments - airglow brightened by hitting oxygen atoms in ionosphere with accelerated electrons.

1975: Stanford professor Robert Helliwell reports that very low frequency (VLF) from power lines is altering the ionosphere. [15]

1975: U.S. Senator Gaylord Nelson forces Navy to release research showing that extremely low frequency (ELF) transmissions can alter human blood chemistry. [16]

1975: Pell Senate Subcommittee urges that weather and climate modification work be overseen by civilian agency answerable to U.S. Congress. Didn't happen.

1975: Soviets begin pulsing "Woodpecker" extremely low frequency (ELF) waves, at key brainwave rhythms. [17] Eugene, Oregon, one of locations where people were particularly affected.

1976: Drs. Susan Bawin & W. Ross Adey show nerve cells affected by ELF fields. [18]

1979: Launch of NASA's third High-Energy Astrophysical Observatory causes large scale, artificially induced depletion in the ionosphere. Plasma hole caused by "rapid chemical processes" between rocket exhaust and ozone layer." [19] "Ionosphere was significantly depleted over a horizontal distance of 300 km for some hours."

1985: Bernard J. Eastlund applies for patent "Method and Apparatus for Altering a Region in the Earth's Atmosphere, Ionosphere and/or Magnetosphere," (First of three Eastlund patents assigned to ARCO Power Technologies Inc.)

14 G. Meltz, F.W. Perkins, "Ionospheric Modification Theory: Past, Present and Future", Radio Science, Vol. 9, No. 11, Nov. 1974.

15 Lowell Ponte, The Cooling. Prentice-Hall, NJ.1976, pg. 169.

16 Ibid., pg, 168.

17 Sheila Ostrander and Lynn Schroeder, Super-Memorv: The Revolution. Carol & Graf Publishers, NY 1991, pg. 299.

18 Dr, Robert O. Becker, Cross-Currents: The Perils of Elecropollution The Promise of Electromedicine Jeremy Tarcher, LA 1990, pg. 233

19 Michael Mendillo, Donald Rote, Paul A. Bernhardt, "Preliminary Report of the HEAO Hole in the Ionosphere", American Geophysical Union, EOS, Vol, 61, No. 28, July 8, 1980, pg. 529.

1986: U.S. Navy Project Henhouse duplicates Delgado (Madrid) experiment - very low level, very low frequency pulsed magnetic fields harm chick embryos. [20]

1980's: In the later part of the decade the U.S. begins network of Ground Wave Emergency Network (GWEN) towers, each to generate Very Low Frequency (VLF) waves for defense purposes .

1987-92: Other Arco Power Technologies Incorporated (APTI) scientists build on Eastlund patents for development of new weapon capabilities.

1994: Military contractor E-Systems buys APTI, holder of Eastlund patents and contract to build biggest ionospheric heater in world High-frequency Active Auroral Research Project (HAARP).

1994: Congress freezes funding on HAARP until planners increase emphasis on earth penetrating tomography uses, for nuclear counterproliferation efforts.

1995: Raytheon buys E-Systems and old APTI patents. The technology is now hidden among thousands of patents within one of the largest defense contractor portfolios.

1995: Congress budgets $10 million for 1996 under "nuclear counterproliferation" efforts for HAARP project.

1995: HAARP planners to test patent number 5,041,834 in September.

1994-6: Testing of first stage HAARP equipment continues, although funding was frozen.

1996: HAARP planners to test the earth penetrating tomography applications by modulating the electroject at ELF frequencies.

1998: The European Parliament's Subcommittee on Security and Disarmament holds a hearing on HAARP on February 5, 1998. Coauthor Begich presents on HAARP and new weapon technologies.

2001-17: Projected period for HAARP operations. Fully operating HAARP developmental proto-type system by early part of the period.

20 Dr. Robert O. Becker. Cross-Currents: The Perils of Elecropollution, The Promise of Electromedicine, Jeremy Tarcher, LA ,1990

Updates - September 2001

In February 1998, while testifying before the European Parliament, I indicated that the United States would violate the Anti-Ballistics Missile (ABM) Treaty with the former Soviet Union. I asserted that the United States would take the position that because the Soviet Union had dissolved, the agreement was no longer valid. On this point, the Members of the Committee could not agree with us because most believed that the United States would honor the agreement, recognizing the Treaty as a stabilizing document for the entire world. In less than ten months from our pronouncement, the United States announced their new initiative for a missile defense system outside of the Treaty. United States Senator Ted Stevens made the arguments just as predicted.

The original ABM Treaty allowed only one defense system in each country - the United States and the Soviet Union. It had been our contention that HAARP represented research which would lead to me eventual deployment of a new missile defense system based in Alaska. We also made clear that me United States was moving forward with new technologies while giving the world, and our allies, the impression mat there was a real effort underway toward reductions in arms. The reality, time would demonstrate, was a new race toward the new technology.

What Ever Happened to Star Wars?

Remember Star Wars, the concept which would move the theater of war to space? In 1995, the funding for Star Wars was widely reported as a dead issue when full funding was defeated by the United States Congress. However, Star Wars did not end as many unpopular programs do - they just get new names.

> "This year the Ballistic Missile Defense Organization (once called the Strategic Defense Initiative) got $3.7 billion. That's up from $2.8 billion in 1995, and is very near the peak level spent during the Cold War."21

The problem was that the United States was not fully covered under its single ABM system, leaving Alaska and Hawaii unprotected. Alaska produces about 22% of U.S. oil requirements, holds all 33 strategic minerals in commercial quantities and represents tremendous natural resource wealth. Hawaii is a strategic point for the entire Pacific presence of the United States military. These two areas, in the estimation of military planners, had to be protected. The need for a system to protect Alaska and Hawaii is acknowledged and we agree that these regions should be protected. We believe that this could be accomplished in a more open and honest way, particularly when it affects our allies and the American public.

What is interesting is that the billions spent on Star Wars systems, which these became known as, were only for "research," according to the military's mission statements. The technology is being advanced in the hope that a system might be developed early in the next century. The external threats are now being characterized as "rogue states and terrorist organizations" which might gain nuclear weapon delivery technologies. While the threats are not imagined and need to be addressed, it is not responsible to create word games which end public debate and allow systems

21. Fox, Adrienne. "Star wars: Force Not With Us, US Remains Defenseless Against Missile Attack." Investor's Business Daily, Aug. 25, 1997. EPI150

thought to be discontinued the latitude to proceed.

In another "offshoot of the Reagan administration's Strategic Defense Initiative" satellite-disabling lasers have been developed. A test, at less than full power, was performed at the end of 1997 to demonstrate the ability of the system to hit its target. The demonstration was a success and now many are concerned that this may provoke an arms race in space."22

What has become clear is that what the United States says to its citizens, friends and adversaries tends to be variations of the same misinformation and manipulations of the facts.

HAARP

This is where our story began. HAARP - The High Frequency Active Auroral Research Program is a joint project of the United States Air Force and Navy, based in Alaska. The project is a research program designed to study the ionosphere in order to develop new weapons technology.

The HAARP system is designed to manipulate the ionosphere, a layer which begins about thirty miles above the earth. The transmitter or HAARP device on the ground is a phased array antenna system - a large field of antennas designed to work together in focusing radio-frequency energy for manipulating the ionosphere. The radio frequency energy can be pulsed, shaped, and altered in ways never possible with other transmitters or at the power levels of this new facility.

The device will have an effective-radiated-power of 1 billion watts when completed in the first phase of the project. It will be used for "earth penetrating tomography" (looking through layers of the earth to locate underground facilities or minerals), communications with submarines, to manipulate communication of others, over-the-horizon radar, energy transfers from one part of the world to another, creating artificial plasma (energy) layers or patches in the ionosphere, to alter weather and may be used as an anti-satellite weapon. The story of HAARP and its related technology is a part of the puzzle of a "Revolution in Military Affairs" being pursued by the United States government, but it is only a small part.

"Millions of dollars have gone to Alaska universities to harness the power of the aurora borealis, the electrical energy shimmering in the northern skies... The earmarks also financed, among other things, 'a supercomputer north of the Arctic Circle' without naming the University of Alaska. Fairbanks as the beneficiary."23 Early on in the HAARP project there was confusion about "harnessing the energy of the aurora" (the northern lights) for use by the military. The real use appears to be for over-the-horizon effects, communications and ABM defense-related research. The University of Alaska again is the recipient of a supercomputer for "academic" research. The reality once again is that the University is being used to conduct military experiments for advanced weapon systems without full public disclosure or debate.

The above updated material is quoted from the book Earth Rising - The Revolution: Toward a Thousand Years of Peace by Dr. Nick Begich and James Roderick

22. Richter, Paul, "Army laser zaps satellite." Anchorage Daily News, Oct. 21, 1997. EPI426
23. Weiner, Tim. "Universities tap Congress' deep pockets." Anchorage Daily News, Aug. 24, 1999. EPI563

Immediate Release

Dr. Nick Begich founder of Earthpulse Press and co-author of Angel's Don't Play This HAARP and Earth Rising the Revolution, delivered a lecture on Arctic issues and HAARP in Brussels in the European Parliament on May 5-7, 1997 at the 12th General Assembly Globe International. In attendance were several members of the Russian Duma including Vitaliy Sevastyanov one of the delegates listed below. Dr. Begich's book, an expose' published in September 1996, launched the international investigation into the issues surrounding HAARP.

US HAARP Weapon Development Concerns Russian Duma
Interfax News Agency - August 9, 2002

"MOSCOW (Interfax) - The Russian State Duma has expressed concern about the USA's programme to develop a qualitatively new type of weapon.

"Under the High Frequency Active Auroral Research Programme (HAARP) [website address: http://server5550.itd.nrl.navy.mil/projects/haarp/], the USA is creating new integral geophysical weapons that may influence the near-Earth medium with high-frequency radio waves," the State Duma said in an appeal circulated on Thursday [8 August].

"The significance of this qualitative leap could be compared to the transition from cold steel to firearms, or from conventional weapons to nuclear weapons. This new type of weapons differs from previous types in that the near-Earth medium becomes at once an object of direct influence and its component.

These conclusions were made by the commission of the State Duma's international affairs and defence committees, the statement reads: The committees reported that the USA is planning to test three facilities of this kind. One of them is located on the military testing ground in Alaska and its full-scale tests are to begin in early 2003. The second one is in Greenland and the third one in Norway.

"When these facilities are launched into space from Norway, Alaska and Greenland, a closed contour will be created with a truly fantastic integral potential for influencing the near-Earth medium," the State Duma said.

The USA plans to carry out large-scale scientific experiments tinder the HAARP programme, and not controlled by the global community, will create weapons capable of breaking radio communication lines and equipment installed on spaceships and rockets, provoke serious accidents in electricity networks and in oil and gas pipelines and have a negative impact on the mental health of people populating entire regions, the deputies said.

They demanded that an international ban be put on such large-scale geophysical experiments.

The appeal, signed by 90 deputies, has been sent to President Vladimir Putin, to the UN and other international organizations, to the parliaments and leaders of the UN member countries, to the scientific public and to mass media outlets.

Among those who signed the appeal are Tatyana Astrakhankina, Nikolay Kharitonov, Yegor Ligachev, Sergey Reshulskiy, Vitaliy Sevastyanov, Viktor Cherepkov, Valentin Zorkaltsev and Aleksey Mitrofanov."

INTRODUCTION

Raising the Roof of the World

A four-year old child in his sandbox looks up at a blue sky with his eyes full of trust. His mother places a straw hat on his head, dabs sun blocking cream on his freckled nose, and expects that, because she shielded him from the sun's ultraviolet rays, he is safe from harmful radiations. But is he? Both his body and his planet are being penetrated by an unprecedented mix of man-caused radiations, and now the U.S. military plans to stir up the mix even further. They could go too far this time.

This book is about people who search for the truth about the Pentagon's project that is quietly being built at a remote outpost in Alaska. The $30 million project euphemistically named HAARP (High frequency Active Auroral Research Program) is made to beam more than 1.7 gigawatts (billion watts) of radiated power into the ionosphere - the electrically-charged layer above Earth's atmosphere.

Put simply, the apparatus is a reversal of a radio telescope - just transmitting instead of receiving. It will "boil the upper atmosphere".24 After disturbing the ionosphere, the radiations will bounce back onto the earth in the form of long waves which penetrate our bodies, the ground and the oceans.

Could the invasion of radiations damage plants and animal life on the ground? One technician/researcher told National Public Radio affiliate KCHU, "I can hardly find an expert who knows anything about this, because they're all working for the government. Or working for a university which by proxy is for the government, because they're funded either through (defense subcontracts) contracts or through grants from the Department of Defense."

"Working for the government" can certainly be an honorable position. But in the case of science, it gets in the way of objectivity and courage to explore. Throughout this century, scientists are increasingly hesitant to investigate freely outside their specialty. They are all too aware that the military/industrial/academic complex decides who gets the lucrative grant, consultancy or academic position. However, there are independent experts such as those who looked into HAARP. They speak out in the pages of this book.

These researchers learned that HAARP represents a technology which could lead to a new class of weapons that could change our world profoundly - an all-purpose military tool. If misused, the tool could mess up the weather. It could be used against humanity in a way that would change what people think, believe and feel. It could be used for good or evil, just as a harp can produce the music of Mozart or the melody of a death march.

24 Electronics tecnnician Eric Nashlund describing HAARP for National Public Radio, KCHU Apr. 27, 1994.

Many technological "notes" could be played by HAARP-type military experiments. They can:

* manipulate global weather;

* hurt ecosystems;

* knock out electronic communications; or

* change our moods and mental states.

That last item will surprise researchers who have been looking only at the possible environmental effects of HAARP-type technologies. However, the authors believe that no sane person wants to be manipulated into artificially-induced moods or actions, and that these possibilities are real. As you will see in the research cited in this book, U.S. decisionmakers for the first time are proposing to mix military and civilian police resources, under the banner of "non-lethal" weaponry for crowd control and other purposes.

This book looks at what can be done with modulated radio frequencies - the stuff of the HAARP experiments - and what environmental effects the experiments could trigger.

The intent of this book is to call for a moratorium on use of the super powerful ionospheric heaters until independent scientists and other nonmilitary decisionmakers can have an educated look at what the experimenters could do. To put it simply, no one is supervising the big boys who have the big toys and the fat black wallets.

Despite the end of the Cold War, their allowances are still enviable. Even with some cutbacks to their spending, the military gets more than other sectors, For example, the Clinton administration as of May 1995 planned to spend at least $15 billion on "theater defense missile" systems in the next seven years.25 We contend that it's time for the public to take a closer look at how such money is used. It is being used to raise the roof of the world.

The authors' purpose is not to scare you, but instead to inform you on under-reported crucial issues, and to provide sources for more information. HAARP has been misrepresented by both the military/contractors and by its opponents. It's time to open up the debate to bring in an informed public, In these pages you will meet some of the people, from the Alaskan bush to a Princeton science laboratory, who courageously dug into the topic and, in the process, mobilized many other people.

25 Pilita Clark, "Australia, 05 Missile Deal for Star Wars II", Sydney Morning Herald, May 19, 1995.

"This project has nothing to do with musical instruments or the natural aurora."
Clare Zickuhr, former accountant for ARCO, and HAARP researcher.

PART ONE

The People Wake Up To HAARP

"Tesla appeared as a real-life sorcerer, depicting...the ability to tame mysterious natural phenomena to the will of the human species." Marc J.Seifer, Ph.D.

Chapter One

THE SORCERERS APPRENTICES

Lightning flickered and thunder crashed through the mountain air as if cued up to open the International Tesla Society's July 1986 symposium. A woman admired the jagged streaks of light as she walked from downtown Colorado Springs to the College of the Canyon.

The display of light and sound seemed to have a life of its own, and triggered thoughts ahout Earth's life-protecting layers. The layers appear immensely deep to a human looking up from a sidewalk. But the few hundred miles of depth of the atmospheric layers are, to the planet, as a film of paint is to a student's desk globe.26 Unlike layers of paint, however, the atmospheric veils swirl and flow and interact.

She found comfort in thinking that surely no one could tame Earth's dynamic atmosphere. Granted, nature is under siege elsewhere. Engineers straighten undulating wild rivers and slap them into concrete flood-control channels. They shave Earth's forests and drain unruly tidal marshes. But who is arrogant enough to say that they own the sky?

After a brief downpour, the storm curtain opened to an electric blue sky, and the air sparkled with vitality. "No wonder Tesla did his most dramatic experiments here," Jeane Manning thought.

As a freelance journalist, she was in Colorado to learn more about the work of some maverick engineers and their hero, the electrical genius Nikola Tesla. In her research into non-conventional energy technologies, she had encountered more than a few books about Tesla, and thought it strange that mainstream textbooks ignore such a historical figure. In the nineteenth century he patented the alternating current (AC) system now used to generate and send electrical power to every home along this avenue, every building on the campus ahead and factories all over the world. His genius did not stop there, however, and before he died in 1943 he had discovered more radical inventions - apparently more than the tycoons of the early years of the twentieth century wanted to see developed.

Manning was curious about the stories. Did Tesla really send electricity more than twenty miles without wires? There was also the legend that Tesla invented a "space energy receiver" and powered a Pierce-Arrow car in a demonstration of the receiver. Yet he died penniless in 1943.

She expected this conference would give a broader picture of Tesla than her impression of a would-be God of Lightning, a view that came from seeing photographs of Tesla with bolts of light streaming from his fingertips. In front of

26 Hans J. Lugt. Vortex Flow in Nature and Technology, p. 150, John Wiley and Sons, NY 1978.

audiences of New York's cultural elite in his laboratory, he had allowed hundreds of thousands of volts to pass over his body and light up lamps, melt metal and explode small light bulbs. It was a don't try this at home scene, with the sLender inventor sprayed with crackling electrical current as he stood stork like on insulated shoes. Manning was fascinated at the thought of the elegant Tesla showing off for his cultured friends, in his laboratory lit with dazzling, pulsating waves of light in unearthly warm hues.27, 28

In the college where the conference was held, she picked up a press pass, then joined two hundred or so spectators in Armstrong auditorium. Onstage, man-made lightning sizzled through the air, zig-zagging from a giant electrical device called a Tesla coil which dwarfed three technicians. Blue light streaked along the paths of fried air and members of the audience covered their ears against the deafening electric buzz.

It looked lethal, but the demonstrator explained that although Tesla used high voltage (electrical pressure) current, it was of such a high-frequency that it danced over his skin instead of zapping his internal organs. A man sat on top of the apparatus before the coil was turned on with a deafening roar, then long sparks jumped from his fingers.

In other meeting rooms, would-be Gods of Lightning told about their research. One of those speakers was Robert Golka, a sturdily built man with the cocky personality of a lone adventurer. He prided himself on making fireballs by whatever means - even from a circuit breaker in a railroad engine when he had slammed the engine into reverse. A fireball, or ball lightning, is a glowing sphere of what looks like gases. The speaker said that Nikola Tesla's "wireless power" experiments near Colorado Springs made 30 second golfball-sized ball lightning in 1899.

Why would anyone want to play with lightning, in any shape? Golka was explaining; ball lightning might hold the secrets of thermonuclear fusion and eventually cheap power. He had rented an empty hangar in Wendover, Utah - the hangar where the atomic bomb was loaded into a bomber for its death-drop debut - and built a Tesla coil that was 51 feet wide for experiments. Golka spoke of voltages of 15 million volts and lightning-like discharges forty feet long. He hinted that the technology could be used as an "ultra-high megavolt source for particle beam weaponry".

Manning wondered what the engineer on stage really wanted to do - send electrical energy without wires or get a grant from the military. Or both. As if in answer to her question, Golka began to talk about wireless power transmission. Nikola Tesla had claimed to be able to send electrical energy without wires before the turn of the century, and he envisioned people all around the globe sticking rods into the earth to extract that energy - free. He didn't get to send power to the people, however. After Tesla admitted to financier J.P. Morgan that an experimental tower on Long Island was meant to send power as well as messages, his public career ended.

27 Hesearch by Dr. Marc J. Seifer, p. 1-33, Proceedings of 1988 International Teste Symposium, available from International Tesla Society, PO Box 5636, Colorado Springs, CO 80931.
28 SUPPRESSED INVENTIONS, edited by Jon Eisen, Auckland Institute of Technology Press1994.

Although he continued to invent and to learn, he was kicked out of the spotlight. Corporate moguls who were interested in creating monopolies and metering electrical power blackballed him.

Golka spoke about his own "Project Tesla", which involved building a 122-foot resonating tower high in the mountains. Manning struggled to understand what he meant by his efforts to get "earth resonance". She could visualize the more familiar resonance in musical instruments, and that helped to picture the earth vibrating as if its note was struck, If someone strikes a piano key of the same pitch as a string on her violin nearby, for example, the string will vibrate. The pitch of a note comes from how many times per second the sound vibrates. Similarly, the earth may have a resonant frequency; if electrical oscillations pound through the earth at a certain rate for a long enough time, the small periodic input may build up to a large vibration. Could Tesla's knowledge about resonance really be used for advanced technologies?

"We're losing to the Japanese," Golka insisted. "We have the technology and we're sleeping on it,"

Another short, lively speaker, an engineering professor, said there is "definite evidence that Nikola Tesla did excite the Schumann cavity in 1899". (This cavity is the area between the earth and the electrically- charged ionosphere.)

A man from Albuquerque, New Mexico, brought the talk down to earth again with a demonstration of a squat piece of equipment called The Tesla Earthquake Oscillator. Stroking his beard - a trim gray goatee - he assured onlookers that the oscillator would not be coupled to the earth during the demonstration and therefore would not cause any earthquakes. The mechanical device had a frictionless piston in a heavy casing. "This oscillator pounds the earth and impresses on it rhythmic vibrations of certain controllable frequencies," he said. The sound vibrations would bounce back and forth "in a reflection pattern which produces standing wave overlappings, or nodes, which act as lenses to propagate waves which set up a resonance condition."

There was that word "resonance" again. The electrical engineers talked about a buildup of ever more powerful effects. Manning may have had a puzzled expression on her face, because one man turned to her and offered to further explain resonance. He gave the example of a child pushing a larger person on a swing. Small pushes, correctly timed, gradually increase the distance through which the swing speeds. In other words, small input at regular intervals can produce big effects. Resonance would turn out to be an important concept, used deliberately or inadvertently by men who try to tame the sky and in the process accidentally interfere with our weather, health and minds. But Manning wouldn't encounter the skybusters until five years later.

In another meeting room, a graduate student from Montana State University, Kyle Klicker, talked about the hypothesis of William Hooper, who gave new twists on magnetic theory. In the early 1970's, Hooper had been showing that not all

electrical fields are the same. What he called a "motional electric field" was different from the well-known electrostatic fields; the motional electric field results in a force that passes through lead. In other words, the field is unshieldable.

Electricity of a different quality? Manning wasn't ready for that; she was still studying beginner-level books about standard electricity whenever she went to a library. Over the previous few years she had realized that there was a shortage of journalists looking into this scene. Engineering lectures were a long way from her university training as a social-worker and job experience as a reporter, but she would look back on this 1986 conference, and more than a dozen other energy conferences to follow, as an introduction to the scene. They introduced her to the fast growing field of study called "non-conventional energy technologies". Even the William Hooper patent would turn up in her life again later, quoted in a "skybuster" document that would frighten some otherwise- unflappable scientists.

In the 1986 meeting, however, she tried to narrow down what she was learning in order to make sense of it. History; she could easily grasp history. Next on the Tesla program was a man with a craggy face and the erect posture of a military officer. Dr. Bill Jones of Los Angeles was a physicist, retired naval officer and former Top Gun pilot, who spoke about Nikola Testa's place in history. Fortunately, Jones ran through his talk at a much slower pace than the Mach 2 speed at which he had flown fighter planes. This physicist made it clear that he wanted Tesla reinstated in a place of honor in history. For example, Jones said, Guglielmo Marconi got recognition for radio, but Tesla had demonstrated a remote-control boat in Madison Square Gardens several years before Marconi's announcement. Dr. Jones also told about incidents such as the time in 1911 when Tesla described how radar could work. Tesla was too far ahead of his time to be heard. Six years later Tesla had offered his invention of a particle-beam weapon to the U.S. Department of War, and was laughed out of the war office. Again, he was too early in the century to be believed.

With a reporter's habit of taking notes, Manning penned the speaker's words in a notebook. "What do we really know about magnetism?....What do we really know about electrostatics?"

Dr. Jones talked about something described as "force potential manifested by stress, and not necessarily in the presence of mass." Some researchers looked at this force potential as being "scalar electromechanics". Mainstream scientists are reluctant to accept these new and revolutionary ideas, Dr. Jones said, but the ideas hold promise for clean energy technology.

On the last day of the conference as people flowed out of the auditorium, the crowd eddied around a man of wiry build, probably in his late thirties, who was speaking in an abrupt insistent voice that could be heard at the end of the hall.

"I object to this deliberate build-up of a cult around Tesla - referring to things he never invented, never said, as Tesla science'!"

The agitator was having a negative effect on the men arguing with him about power-beaming inventions. He appeared to feed on their annoyance. Later in the afternoon Manning again wandered out of the meeting hall for a mid-lecture break, head throbbing with new concepts. The same loud-voiced man, whom we will call Gregory Jones, was talking to another man and the two drew her into conversation. Gregory had the bouncy energy of someone who was looking for a quick laugh as well as an argument. Asked why he insults Nikola Tesla at a Tesla symposium, he replied, "I like deflating idols."

This iconoclast was a full-time researcher regarding what he said is a subtle, powerful but little-known dynamic energy which resides in the atmosphere and nearly everywhere. He said a number of experiments have proven that a dynamic non-material energy exists in all living forms.

Manning had enough of wild concepts for one day. However, at a gut level she felt that it was true. Living people, animals, plants and even the atmosphere seemed to exude some type of electricity or vitality when in a healthy state and when free from the effects of pollution. Was it possible that official science really doesn't know much about something so basic, because the measuring instruments hadn't yet been invented to detect it?

Gregory was saying that the coarse form of electricity used in nineteenfh- and twentieth-century technologies is an irritant to the primal form of energy in the air. According to that worldview, if Tesla had been able to send electricity wirelessly all over the world, it would have been an ecological disaster.

"Humans. My least-favorite species!" Gregory bellowed, following the embarrassed journalist toward the door to the meeting hall. "Listen to this. I just about got myself kicked out of the meeting. I went up to the speaker; you heard his talk?"

The electrical engineering professor with a Ph.D. that Gregory mentioned had seemed highly respected by the audience. The scientist had done much experimenting toward the goal of repeating Tesla's wireless electricity experiments. He had talked about wanting to "resonate the Schumann cavity". But Gregory was no respecter of academic degrees; he apparently had caused another commotion in the hallway by confronting this professor. "1 told him that if he tried to be another Tesla, he could cause the biggest ecological disaster we've ever had."

In Gregory's view, it was fortunate for the planet that Tesla's tower on Long Island - intended to broadcast power around the earth - was never completed. After the banker J .P. Morgan withdrew funding, no other financier would touch the project. It was just as well; the project would have been insane, Gregory insisted. Whether they send their electrical power through the air or through the earth, he said, these experimenters would be playing with our planet on a big scale.

"So what did the professor say?"

"He said 'well, we'll just have to try it and find out'."

Hearing this, Manning stood in silence. Gregory's concern for his planet's natural systems felt sincere. He asked for her business card. To her surprise, he would telephone her occasionally for about six years, and he would turn out to be ferociously intelligent, and the most relentless information-seeker she would meet in the coming years of travels to conferences of inventors and other energy researchers. She was careful to pass on to him only non-confidential information from published sources, never fully trusting Gregory because of his extremism. But she did appreciate the long-distance calls over the next few years to educate her about what he called "mad science".

"If Tesla's resonance effects, as shown by the Stanford team, can control enormous energies by minuscule triggering signals, then...with Godlike arrogance, we someday may yet direct the stars in their courses. "29

Frederic Jueneman, 1974.

Chapter Two

TRAIL FROM TESLA TO STAR WARS

After she returned home to Vancouver, Canada, Manning reported to a new friend who wanted to hear about the Tesla conference. He was John Hutchison, an inventor who had discovered an anomalous "anti-gravity" effect some years earlier while he had been restoring antique electrical equipment and building Tesla coils. During the previous years, unofficial delegations from Canadian and United States military groups had visited his laboratory to see the "Hutchison effect". Now he was working alone; the visitors had apparently learned all that they came to learn. His requests for copies of the videos they filmed in his laboratory were met with "sorry; we destroyed all those videos because there wasn't anything on them." He didn't believe it.

John Hutchison told Manning some of the amusing twists of his search for reports about his experiments. "I was phoning the Pentagon and asking for 'John South', because I was told that was the name of one of the guys who were here in my lab. By chance a secretary put me through to the man 1 described, and it turns out his name was Col. John Alexander."

The name would come up again more than five years later, as Manning gradually found out what else could be done with "Tesla technology" - so-called nonlethal weaponry. John Hutchison described Col. Alexander as a handsome, personable man who was a fun guy to be around throughout the days of the "anti-gravity" experiments in the "Vancouver laboratory.

Hutchison had leisure time to chat with Manning in a now-silent laboratory. He shared Tesla lore about beamed weaponry, and told her that the Soviet Union was mysteriously experimenting with radio-frequency signals, beaming them toward North America. Beginning in late 1976 he had been one of many ham radio operators who began picking up the 10-Hertz (cycles, "beats" or pulses per second) frequencies on radio receivers. Hams called these signals "the Soviets' Woodpecker" because of the sharp tapping they heard from the extremely low frequency (ELF) waves. Some researchers speculated that the Woodpecker signal was a Tesla-type weapon for mind control, because the ELF was at a frequency which could resonate with neurons in the human brain, and the transmission could be a carrier wave that was modulated (varied in amplitude, frequency or phase) to carry a hidden effect.

"Spoo-kyyy," she joked, dismissing what seemed to be a paranoid speculation,

29 Frederic Jueneman, "Innovative Notebook", Industrial Research magazine, February 1974.

Manning learned more about Nikola Testa two years later, after another symposium in Colorado Springs. One of the papers in the proceedings of that meeting was by a historian and psychology professor, Dr. Marc Seifer. She would recall it years later when learning about unpublicized experiments in lighting up the upper atmosphere.

Seifer gave Tesla credit for inventing fluorescent lights, just as the revered American inventor Thomas Edison is the inventor of the incandescent light bulb. The biographer notes that Tesla and Edison clashed over Edison's insistence that the country should stick to his direct current (DC) technologies for electrical lighting and power distribution. Tesla's AC system was better because AC electricity can travel hundreds of miles over power lines at high voltages, while a wire carrying DC would be unable to light bulbs a mile away from the generating plant.

Strangely, Edison was the one who was lionized in American history books. One of the stories that is told and retold, for example, is how he sent men to the Amazon to look for materials for the best filament for his light bulb. Edison's persistence is highly praised. However, most people today are unaware that Tesla's demonstrations showed the filament to be superfluous - not needed for electric lights. Using very high-frequencies (increased vibrations of the electrical current), he showed that the action of the air was more important than the filament. And thus he out-'Edisoned' Edison, said Dr. Seifer.

Seifer pulled together parts from 53 reference works, in his presentation "Nikola Tesla: The History of Lasers and Particle Beam Weapons".30 For an example of Tesla research, two brothers, both scientists, traveled to the Tesla Museum in Yugoslavia and read materials not available in North America. They suggested that Testa's particle-beam work evolved from his pioneering experiments with X-rays, as well as from his idea of lighting up the skies with his "magnifying transmitter" by beaming up electrical energy to the stratosphere (a level of the atmosphere above the clouds - about seven to thirty-one miles above the ground).

"That would be some light-up display!" Manning thought as she read the article. However, she wondered about the wisdom of treating the upper atmosphere as if it were merely gases in a giant fluorescent bulb.

She winced as she read a list of military uses for Tesla's many inventions: earthquake contrivances, world radar, particle beam weapons and brain wave manipulation. "One or more magnifying transmitters could theoretically send destructive impulses through the earth to any location," said Seifer. "For instance, a well-placed jolt of many millions of volts could theoretically destroy the communications network of any major city."

30 Dr. Marc J. Seifer, "Nikola Tesla: The History of Lasers and Particle Beam Weapons", Proceedings of 1988 International Tesla Symposium.

Seifer had been intrigued by issues that emerged from his investigation:

- Particle beam weaponry was such a high-level secret that President Jimmy Carter, for example, "was screened from vital technical developments by the bureaucracy of the CIA and Defense Intelligence Agency" (according to General George Keegan, former head of Air Force Intelligence);

- Wright-Patterson Air Force base in Dayton, Ohio, was mentioned, in regard to the air force base's use of bright young geniuses to attempt a breakthrough
in Tesla technology.

Based on FBI files as well as other literature, Seifer concluded, "Great support is lent to the hypothesis that Tesla's work and papers were systematically hidden from public view in order to protect the trail of this top secret work, which today is known as Star Wars."

It was a paradox, Nikola Tesla's name was indeed invoked when describing proposed technologies that are as potentially planet- cleansing as "free energy" - non-polluting power generation. At the same time he was credited with inventing weapons which could be used for the Strategic Defense Initiative (S.D.I., popularly known as Star Wars). And his "wireless power" engineering experiments may have led to a disaster in Siberia, Manning later learned from scientist Oliver Nichelson. Tesla's love of nature seemed to be a contradiction to his desire to arrogantly manipulate it - to light up the sky. Over the next nine years, she had occasions to think about the deep frustration in Gregory's eyes at the Tesla conference as he described the professor's attitude of "We'll just have to try it, and find out."

Meanwhile one would-be god of the elements wasn't pulling any punches. A Texan, Dr. Bernard Eastlund, aimed his sights high -up to the ionosphere, In 1990 Gregory sent Manning a copy of a 1987 patent which cited Nikola Tesla under the heading "prior art". He suggested she send for the audiotape of a National Public Radio interview with Eastlund.

Manning was astonished when she read the patent, titled "A Method and Apparatus for Altering a Region of the Earth's Atmosphere, Ionosphere and Magnetosphere". Whichever way she looked at it, the proposed high-power beaming of radio frequency energy into the upper atmosphere sounded insane. For example, the patent said the technology could manipulate global weather systems. Gregory had been sending her articles which indicated that electric forces do affect the weather, so it came as no surprise.

More horrifying, she remembered what a brilliant physicist by the name of Walter Richmond had written about a possible technology which sounded very much like Eastlund's concept. The late Walter Richmond and anthropologist Leigh Richmond wrote a book titled The Lost Millennium, using the novel format to get their ideas out to the world A disastrous technology described as a "solar tap" in the book was startlingly similar to aspects of Eastlund's patent.31

31 Walter and Leigh Richmond. The Lost Millennium. Interdimensional Sciences Inc., Lakemont, Georgia 1967.

Although ionospheric heaters beam power from antennae on the ground up to the ionosphere, and the Richmonds' "solar tap"concept goes the other direction, both involve connecting the earth with the ionosphere. The novel described a solar tap that just wouldn't quit. It began from a technology that started on the ground, from which engineers beamed up a pathway for some of the ionospheric electricity to ride back down on. This planetary short-circuit usually blew out in a fraction of a second, but one day the fictional engineers made a fatal mistake. They kept a solar tap going while a solar flare surged into the ionosphere and then to the ground via the ionized pathway of the tap beam.

"And the surge of power from the tap became an avalanche. An avalanche at the pole in the vertical plane of the planet's magnetic field where the winds of magnetism would not rise to blow it out. One trillion watt-seconds of energy unleashed their fury on the polar cap in the first flash...Even as it discharged, the ionosphere was recharged from the solar furnace. The first flash became a mighty roar that poured an increased and now steady stream...of energy through the now-stabilized short circuit. Kilocubit after square kilocubit of frozen wasteland boiled. Watt after watt of ever-increasing avalanche energy lit the polar cap with a glare that had never before been seen..."

Could such a disaster happen in real life? Manning reread the introduction to The Lost Millennium. It said that in 1962 Walter Richmond was researching atmospheric electricity and developed the theory of what the couple called the solar tap - a source of abundant power from the electrical current that exists as a "potential" between the ground and the ionosphere. "The physics is exact. The power is there for the tapping".

Such massive amounts of power would be distributed by broadcasting it, "which Nikola Tesla had proven could be done, before 1911". The two scientists believed that automobiles, industries and homes could be tuned into broadcast power, just as radios are tuned to certain frequencies. The bad news was that unless carefully handled, broadcast power would resonate with the structural steel of buildings in a destructive way, Richmond said.

Manning's attention was caught by the scientists' own life story. In 1963 the Richmonds' took their research papers on the solar tap to then-President John F. Kennedy's science advisor. They planned to also take them to the United Nations Science Advisory Committee. Instead they received a shock from their government.

"Our papers were placed under the Secrecy label (Secrecy Act legislation) and we were offered a government contract for research, which we refused. It would have placed us under the Secrecy Syndrome, in which we had refused for some years to take part, Leigh wrote. We were told to sit down and shut up, in no uncertain terms."

The vision of the fictional solar tap lingered in Manning's mind. The book described an experiment-gone-wrong that started an unquenchable avalanche of electrons. A character in the book said "the power's there. Enough to blow up the Earth if it's misused."

Is this what the late Walter Richmond knew, that had to be placed under the Secrecy Act? If the electrical power of the ionosphere avalanched onto Earth in a continuous flow, his book's character said, it would

"burn hell out of the spot where it touched Earth Empty the capacitor that's the ionosphere, and feed directly from the solar wind. Earth's an electrical motor...When the motor began to run wild, it would increase its rotational speed...Eventually the Earth would explode from increased centrifugal stress."

Manning read the novel's description of the fiery, steamy noisy destruction of a planet. "A shock wave, racing at the speed of sound...toppling great cities..." Destruction continued for days, and the planet "whipped about on its axis like a thing tortured." The Richmonds' novel vividly raised questions about the wisdom of pulsing
a radio-frequency beam which could make an ionized (and therefore electrically-conducting) channel between earth and the ionosphere.

Even if there were no danger of accidentally tapping into the ionospheric powerhouse and getting zapped in return, disrupting a part of the upper atmosphere violently is in itself a dangerous experiment, she later was told by independent scientists.32 Ionospheric heaters were nothing new, Manning had learned from articles sent her from Gregory. However, Eastlund's invention made it possible to stab the ionosphere with a much more powerful and more focused beam.

A few years later Gregory telephoned and said in a choked voice, "The maniacs are actually going to do it. In Alaska."

The U.S. Navy and Air Force would be paying a contractor, Arco Power Technologies Inc., to build a super-powerful ionospheric heater - an array of antennae - in the Alaskan bush outside of Anchorage. Over the next year Gregory mailed her articles, on ionospheric heaters and related topics, which he found in science journals dating back to the 1970's. He gave her the phone number for a man named Clare Zickuhr in Anchorage. Gregory became increasingly angry and pessimistic about the state of his planet's health, and eventually sent his entire file on ionospheric heaters to her. "I give up. I've written to everyone I could think of. You're a journalist; do something with this."

His words and the thought of what he called "mad science in our sky" weighed on her, but she was again employed as a reporter for a daily newspaper in a British Columbia city and had no time for starting any campaign. One day she photocopied excerpts from the file, wrote an introductory page, and gave the packet to the managing editor at the newspaper. He sent it to the newspaper chain's columnist in Ottawa, but the man never published a word about ionospheric experiments.

In early 1994 she telephoned a reporter at the Anchorage paper; Gregory had said the man was writing an article about the project that would beam so much power up to the ionosphere for military experiments. In a discouraged tone of voice the

32 Dr. Richard Williams, Physics and Society and interview with Adam Trombly, physicist.

reporter said that his editor was not interested in art investigative story of any depth about the project; the stance of the paper was that the military's infusion of money would provide jobs. Manning photocopied her now-thick file on the topic of ionospheric heaters and electric weather forces and sent it to the reporter anyway.

Her next call was to Clare Zickuhr. A year later, she would be in Alaska interviewing him and others who were concerned about the "skybuster", as Dr. Richard Williams of Princeton had named the proposed super-powerful ionospheric heater. The sequence of events that took her to Anchorage began when Dennis Specht, an anti-nuclear activist then living in Alaska, sent a news item to an Australian magazine.

"(HAARP) should be carefully studied by large groups of independent scientists..."
Dr. Patrick Flanagan

Chapter Three

WHAT'S GOING ON UP THERE?

Nick Begich can't be categorized by his long ponytail and youthful appearance; he started his first business in 1974 at the age of 16 and has worked in mining, construction, real estate and, more recently, a mid-level managerial job in the Anchorage School District.

Service in Alaskan politics and labor union organizing brought him public service awards, a couple of appointments to the Alaska Council for Economic Education and two terms as president of the Alaska Federation of Teachers (AFT). But it was his longtime interest in science that earned Begich the informal title of "evolving eclectic".

His life took another turn when he happened to be thumbing through the April 1994 issue of an Australian magazine that Patrick Flanagan suggested he check out, when the name of Nick's hometown newspaper caught his eye. "Odd that Nexus would print an item from the Anchorage Daily News," he commented to his wife Shelah.

The contents of the news brief startled them - the federal government was about to introduce some weird technology right in their backyard, figuratively speaking. Nick copied the reference and headed to the Anchorage municipal library to search out the original story, a November 20, 1994 letter to Anchorage Daily News from Eric Nashlund. It told about a military-funded project called HAARP - High-frequency Active Auroral Research Program - intended to "perturb" the ionosphere for Department of Defense experiments.

Nashlund's letter said:

"Some startling revelations came to light while researching the background of a military-sponsored project starting construction in Gakona...HAARP will be used to understand, stimulate and control ionospheric processes that might alter the performance of communications and surveillance systems, according to a HAARP fact sheet. The HAARP environmental impact statement claims negligible ionospheric impact, with no impact to climate, weather or ozone layer.

"An ARCO company has the bid for construction of HAARP: ARCO Power Technologies Inc. APTI holds a patent (# 4,686,605, "Method and Apparatus for Altering a Region in the Earth's Atmosphere, Ionosphere, and/or Magnetosphere", inventor: Bernard J. Eastlund; assignee: APTI Inc., Los Angeles) which matches closely the HAARP proposal dealing with transmitting extremely large amounts of

radio-frequency energy into the ionosphere. It is evident that HAARP will at least test, if not fully implement, the patent capabilities.

"Patent #4,686,605 claims it has the following uses: 'cause...total disruption of communications over a very large portion of the Earth...disrupting not only land-based communications, but also airborne communications and sea communications (both surface and subsurface)...missile or aircraft destruction, deflection or confusion... weather modification...by altering solar absorption...ozone, nitrogen etc. concentrations could be artificially increased..."

Whether or not APTI was using that particular patent for HAARP, Begich questioned the wisdom of the whole effort, "If this technology works, is it in humanity's interest for a secretive bureaucracy to control something which could stop all electronic communications or change the planet's weather patterns?"

The library had the patent on microfiche. Its abstract (summary) read:

"A method and apparatus for altering at least one selected region which normally exists above the earth's surface. The region is excited by electron cyclotron resonance heating to thereby increase its charged particle density. In one embodiment, circularly-polarized electromagnetic radiation is transmitted upward in a direction substantially parallel to and along a field line which extends through the region of plasma to be altered. The radiation is transmitted at a frequency which excites electron cyclotron resonance to heat and accelerate the charged particles. This increase in energy can cause ionization of neutral particles which are then absorbed as part of the region, thereby increasing the charged particle density of the region."

When Begich examined the patent's section titled "prior art", he was surprised to see references to articles about Nikola Tesla. Eastlund's drawings did appear similar to patents issued to Nikola Tesla in the late 19th and early 20th century!

Tesla's name had been associated with wild schemes, and Begich wanted to find out why would-be planetary engineers were still quoting the deceased inventor. Begich knew that Tesla was credited with startling an earthquake, generating "balls of electromagnetic energy" and other wonders. Toward the end of his life Tesla had claimed to hold the keys to creating a shield in the upper atmosphere that would destroy any incoming aircraft.

A cold chill ran through Begich after he read the articles cited. The first was the New York Times of December 8, 1915:

"Nikola Tesla, the inventor, has filed patent applications on the essential parts of a machine, possibilities which test a layman's imagination and promise a parallel of Thor's shooting thunderbolts from the sky to punish those who had angered the gods...Suffice it to say that the invention will go through space with a speed of 300 miles a second, a manless ship without propelling engine or wings sent, by electricity to any desired point on the globe on its errand of destruction, if destruction its manipulator wishes to effect. '

It is not a time, said Dr. Tesla yesterday, 'to go into the details of this thing. It is founded upon a principle that means great things in peace; it can be used for great things in war. But I repeat, this is no time to talk of such things.'

'It is perfectly practicable to transmit electrical energy without wires and produce destructive effects at a distance. 1 have already constructed a wireless transmitter which makes this possible, and have described it in my technical publications, among which 1 refer to my patent number 1,119,732 recently granted. With transmitters of this kind we are enabled to project electrical energy in any amount to any distance and apply it for innumerable purposes, both in war and peace, through the universal adoption of this system, ideal conditions for the maintenance of law and order will be realized, for then the energy necessary to the enforcement of right and justice will be normally productive, yet potential, and in any moment available, for attack and defense. The power transmitted need not be necessarily destructive, for, if distance is made to depend upon it, its withdrawal or supply will bring about the same results as those now accomplished by force of arms'

Begich noticed the next article referred to in the patent also ran in the New York Times, on September 22, 1940 and read:

"Nikola Tesla, one of the truly great inventors, who celebrated his eighty—ourth birthday on July 10, tells the writer that he stands ready to divulge to the United States government the secret of his 'teleforce', with which, he said, airplane motors would be melted at a distance of 250 miles, so that an invisible Chinese Wall of Defense would be built around the country..."

"This 'teleforce', he said, is based upon an entirely new principle of physics that 'no one has ever dreamed about', different from the principle embodied in his inventions relating to the transmission of electrical power from a distance, for which he has received a number of basic patents. This new type of force, Mr. Tesla said, would operate through a beam one one hundred-millionth of a square centimeter in diameter, and could be generated from a special plant that would cost no more than $2,000,000 and would take only about three months to construct."

"The beam, he states, involves four new inventions, two of which already have been tested. One of these is a method and apparatus for producing rays 'and other manifestations of energy' in free air, eliminating the necessity for a high vacuum; a second is a method and process for producing 'very great electrical force'; the third is a method for amplifying this force and the fourth is a new method for producing 'a tremendous electrical repelling force'. This would be the projector, or gun, of the system. The voltage for propelling the beam to its objective, according to the inventor, will attain a potential of 50,000,000 volts."

"With this enormous voltage, he said, microscopic electrical particles of matter will be catapulted on their mission of defensive destruction. He has been working on this invention, he added, for many years and has recently made a number of improvements in it."

There was a third reference, apparently written by Tesla, that Begich could not obtain. Tesla's ideas in these articles raised more questions in Begich's mind about the version of a "law and order" likely to rise from any military organization controlling such technology. He believed that if this technology were to be implemented anywhere, it should be done so openly and honestly, and only when it can be safe and worthwhile for improving the human condition. The idea of unleashing such power into the planet's ionosphere disturbed him deeply.

Begich made telephone calls, did more reading and heard the reaction of a few independent scientists to the military-funded project in the sky. Their request to the military could be stated bluntly as: "Back off, Charlie; this is our planet too."

There was another aspect that concerned him besides HAARP's possible effect on weather or on emergency communications in the Alaskan bush. Over the years he had seen impressive studies saying that even low power levels of pulsed radio frequency beaming could affect human physiology, minds and moods. He decided to find out more, much more, from reputable sources. It would be foolish to hit the alarm button about HAARP without being certain.

One concern was clearly speculative. One of the HAARP documents[33] stated that "Ionospheric disturbances have been detected and ascribed to earthquakes such as the Alaska earthquake on March 28, 1964," He wondered if the reverse might be true - if deliberate ionospheric disturbances could in turn resonate with the materials in the earth and trigger an earthquake.

The earthquake question was only one of the questions nagging at the independent researchers. Begich did not know it at the time, but the research would focus his energies in a way that would attract additional similar minded people. Eventually their directed energies would "perturb" something bigger than themselves. Perhaps his life had led up to this.

Nick Begich, Jr. was raised in a political family where "making a difference" was a way of life. His father, Nick Begich, Sr., served as a state senator and later a representative in the United States Congress, and his mother Pegge was politically active in Alaska for more than 30 years.

After the disappearance of the airplane carrying his father and U.S. House Majority Leader Hale Boggs in 1972 when Nick Jr. was a teenager, his life changed irrevocably. However, the theme instilled by his parents was one of service and persistence. He and his five siblings between themselves also chalked up a lifetime of political experience.

But an equally strong thread in Nick's life was an interest in science. His early investigations led to an invitation to the 1978 International Biorhythm Research Association conference in Atlanta, as a youthful science "outsider" among

33 National Telecommunications and Information Administration Preliminary Assessment of Air Force Ionospheric Research Instrument, Stage 2, Oct. 1,1993.

fifty senior scientists from around the world. Most were in the life sciences. The youth presented a simple paper about the idea that his country's researchers over-specialized and that multidisciplinary teams were the way to breakthroughs in science. His associations from this early experience led to a lasting interest in electrophysiology and life sciences. The studies became his creative outlet while he worked at mundane administrative jobs.

With this background, he could sort through the HAARP technical documents and see implications of its type of ionospheric interference. As he saw it, the government had understated the risks. As had fellow Alaskan Clare Zickuhr and others, he sent "piles of files" out to friends around the world, and information flooded back.

In the summer of 1994, Begich wrote an article about HAARP for Nexus magazine, to get the story out. He mentioned the Eastland patent, but acknowledged that it was controversial,

"The United States military denies that the HAARP project has anything to do with these patents. However, a careful review of the government documents leading to the contract with APTI leads one to the conclusion that... the military is deliberately attempting to mislead."

"While it is true that the device being built will not produce the full effects described in the patents, it is a necessary step in proving the effectiveness of the technology, in advance of a larger antenna array..."

"...patent number 4,686,605, issued August 11, 1987...is one of three related patents by the same inventor, one of which was locked up under a Navy National Security Order in the late 1980's."

In his Nexus article, Begich said that the Eastlund patents go beyond the applications dreamed of by Tesla. The Eastlund patent said that scientists in the previous few years had been trying to learn about the belts of trapped electrons and ions above the earth, in order to control and use the phenomena for beneficial uses;

"For example, in the late 1950's and early 1960s, both the United States and the USSR detonated a series of nuclear devices...to generate large numbers of charged particles at various altitudes..."34

"This can cause confusion of or interference with, or even complete disruption of, guidance systems employed by even the most sophisticated of airplanes and missiles. "35

'The ability to employ and transmit over very wide areas of the earth...electromagnetic waves of varying frequencies...provides a unique ability to interfere at will with all modes of communication, land sea and/or air, at the same time."36

34 united States patent number 4,686,605, issued August 11,1987.
35 Ibid.
36 Ibid.

"...this invention provides the ability to put unprecedented amounts of power in the Earth's atmosphere at strategic locations and to maintain the power injection level, particularly if random pulsing is employed, in a manner far more precise and better controlled than heretofore accomplished by the prior art, particularly by the detonation of nuclear devices., ."37

"...what is used to disrupt another's communications can be employed by one knowledgeable of this invention as a communication network at the same time. In addition, once one's own communication network is established, the far-reaching effects of this invention could be employed to pick up communications signals of others for intelligence purposes... "38

Eastlund spelled out other possible developments of his super-heater in the sky: "...missile or aircraft destruction, deflection or confusion could result, particularly when relativistic particles are employed."

"Also, large regions of the atmosphere could be lifted to an unexpectedly high altitude so that missiles encounter unexpected...drag forces with resultant destruction or deflection..."39

"Weather modification is possible by, for example, altering upper atmosphere wind patterns by constructing one or more plumes of atmospheric particles which will act as a lens or focusing device. "40

"Also...molecular modification of the atmosphere can take place so that positive environmental effects can be achieved. Besides actually changing the molecular composition of an atmospheric region, a particular molecule or molecules can be chosen for increased presence. For example, ozone, nitrogen etc. concentrations in the atmosphere could be artificially increased. Similarly, environmental enhancement could be achieved by causing the breakup of various chemical entities such as carbon dioxide, carbon monoxide, nitrous oxides, and the like..."4l

Begich pointed out to Nexus readers that the HAARP device being built at that time was not big enough to test ail of Easthmd's ideas. But it certainly looked like the military was interested in his patents. Begich had experience with "procurement" - the bureaucratic term for getting government contracts - and had once worked in the heart of Texas' defense contractor country. The facts of this case jumped out at him.

On November 3, 1993, the U.S. Air Force announced that the prime contractor on the first phase of the HAARP project was ARCO Power Technologies Inc. (APTI). At the time the project was put out for bids, APTI was a subsidiary of Atlantic Richfield Oil Company (ARCO) and owned the patent rights to Eastlund's

37 united States patent number 4,686,605, issued August 11, 1987.
38 Ibid.
39 Ibid.
40 Ibid.
41 Ibid.

ionosphere-altering schemes, Begich looked up APT1 in the Dun & Bradstreet directory of corporations42 and learned that APTI had a president in Los Angeles and a staff of 25 employees in Washington DC, with sales of only $5 million a year,

How did a small subsidiary get the military contract for such a large project? According to the record, it won the right to build the project through exemptions in the military procurement process. The HAARP contract with APTI was more than five times larger than APTIs annual sales. As Begich saw it, the only way a virtually-unknown company in the military contracting arena could get such a contract is if they had proprietary information needed by the project. The trail circled back to the Eastlund patents,

Begich quoted the May-June 1994 issue of Microwave News, in which Eastlund described a "full, global shield" of accelerated electrons created with radio frequency (RF) transmitters. The HAARP project "obviously looks like a first step inwards this", Eastlund told the editor. However, he noted that the uses he described would need a significantly more powerful device with a much larger antenna than the HAARP array.

While the Eastlund controversy continued, Begich wrote that a February 1990 paper from the Navy and Air FoTce43 made it clear that the project goal is to learn how to manipulate the ionosphere on a more grand scale than the then Soviet Union could do with its similar facilities. HAARP would be the largest ionospheric heater in the world, located in a latitude most conducive to putting Eastlund's invention into practice. Looking at the northern lights, as the aurora is called in Alaska, was not the point of HAARP. Begich quoted from the U.S. Air Force "Record of Decision, High-frequency Active Auroral Research Program (HAARP), Final Environmental Impact Statement" of October 18, 1993:

"The data obtained from the proposed research would be used to analyze basic ionospheric properties and to assess the potential for developing ionospheric enhancement technology for communications and surveillance systems... Apotential DoD (Dept. of Defense) application of the research is to provide communications to submerged submarines. These and many other research applications are expected to greatly enhance present DoD technology."

"The Air Force and Navy proposes to build and operate the most versatile and capable ionospheric research facility in the world. The government intends to utilize the unused Over-the-Horizon Backscatter (radar) site near Gakona, Alaska, for this program... Research requirements stipulated that the selected site must fall in the range of latitudes between 61 and 65 degrees, either north or south. Siting constraints included that the site must be: on US soil, on DoD land to the maximum extent practical..."

The response to the Nexus article showed that more people were interested in HAARP than the Alaskan researchers had originally expected, Begich noticed that

42 America's Corporate Families 1993 ,1, p. 156.
43 "Joint Services Program Plans and Activities", February 1990.

many of the independent researchers were afraid to identify themselves and "take on the government", One group of individuals whom Begich - appreciating their wish to be anonymous - began to refer to as "the guys in the bush" sent him volumes of files that they saw as relating to HAARP, Books, papers, news clippings and Internet items arrived each week, as well as occasional government records. He paid less attention to the Internet items, unless they mentioned books or articles or patents he could check out firsthand. One day a box arrived at the Begich family home, containing about eighteen inches of new files.

About this time, Sir Anton Jayasuriya of the Open International University of Complementary Medicines invited Begich to present a paper at the World Congress on Alternative Medicines and to receive a doctorate degree in traditional medicine. The honor was totally unexpected, and he packed for travel. As it turned out, circumstances did not allow him to travel to Sri Lanka, so he planned a trip to Finland instead. In Finland he would at last see his old friend (from the 1978 conference and from correspondence) Dr. Reijo Makela, in order to talk about promoting Makela's scientific discoveries in electrophysiology.

Meanwhile one of the HAARP researchers in Canada had written to thank him for the Nexus article. Jeane Manning was a writer who had just completed a manuscript, The Coming Energy Revolution. She suggested they collaborate on an article for an American publication. Begich replied by telephoning her in Vancouver. They learned that each had too much pressing information in their files to compress into an article. It had to be a book.

On his stopover at the Seattle airport before flying to Finland, Begich met with Manning for a few hours and found they shared similar values. They decided to try long-distance book authoring.

While he was in Finland, the only unsettling event was that HAARP-related files which he had forwarded to Reijo Makela had mysteriously disappeared from Reijo's office. The two men discussed the project anyway, and concluded that HAARP was an affront to good sense and a threat to safety. This conclusion was based on Makela's advanced understanding of the effects of radio waves upon people.

Back in Anchorage, in early 1995 the Begiches sent an airline ticket to Jeane Manning, and their nine year old son moved into his sisters' bedroom for two weeks when she arrived. Nick took time off from work and they spread HAARP-related files for twenty feet across the carpet in his study, while typing on his computer and a borrowed notebook computer. Shelah joined them for a visit to NO HAARP activist Clare Zickuhr and his wife, and they also drove hours into the "bush" country to speak with other activists. The most revealing interviews, however, took place over the telephone lines. While in Alaska, Jeane phoned Houston, Texas, and interviewed a man who has apparently been elbowed out of the inner circle of gigawatt-heater project planners. Was it because he talked too much to the media?

"Scientists build toys. This is a neat big toy."44
Dr. Bernard Eastlund, talking about HAARP.

"Tests of this kind could cause irreversible damage."45
Dr. Richard Williams, 1988.

Chapter Four

SKYBUSTERS UNDER SECRECY

Dr. Bernard Eastlund chuckles as he tells about the time that the metaphorical light bulb clicked between his mind and that of Dr. Simon Ramo.

"He's a big guy in military science," Eastlund explained to Manning in a telephone interview. "He was the founder of TRW and all these big companies. They're a big defense contractor. At the time he was a board member for ARCO (Atlantic Richfield Oil Company)."

When Eastlund walked into the meeting room that day in the 1980's to give a presentation, he was aware of the senior scientist's presence. Eastlund had a collection of transparencies ready to slap onto the audiovisual table, to illustrate his new concept for focusing a powerful beam of radio-frequency or microwave energy onto the ionosphere. He had several reasons to expect approval. For one, whoever would fire up electrical generators to power his proposed giant transmitter could be a big paying customer for ARCO's natural gas fields on the North Slope of Alaska,

"I came in with my viewgraphs," Eastlund recalls. "I showed one viewgraph on the location of the North Slope of Alaska. Where the earth's magnetic field is, where Russia is, and everything. Then 1 had another slide where I showed taking the gas, having an antenna and beaming it up."

Eastlund didn't have to show the next slide. The idea clicked and the military contractor apparently wanted to just think about it foT a minute.

"(Ramo) basically told me to shut up, and sat there and said, 'such a great idea!' I didn't have to show any of the detail," Eastlund said with obvious pride. "It's that kind of a concept. In fact, dealing with knowledgeable people, I never made it beyond the third view graph. Then they all started inventing, themselves."

The senior scientist whom Eastlund impressed is an inventor who has patents on microwave technology, electron optics and guided missiles. Ramo co-authored the book Fields and Waves in Modern Radio in 1944, and in general he is a knowledgeable engineer.

Eastlund has been described as a soft-spoken, highly-reputable physicist, president of a technological company in Houston. "Eastlund is no wire-haired

44 Dr. Bernard Eastlund Feb, 20, 1995 interview with Jeane Manning.
45 Dr. Richard Williams, "Atmospheric Threat", Physics and Society, Apr. 1988.

madman," Omni magazine once said46, citing his degrees from Massachusetts institute of Technology and Columbia University, While working for eight years in the Atomic Energy Commission's fusion program in the early 1970's, for example, he co-invented a "fusion torch" that would use plasma leftovers from fusion reactors in recycling solid waste.

Some time after the meeting where Ramo heard Eastlund's beam focusing ideas, the two worked together on a patent that they filed in early 1985. Their "Method and Apparatus for Creating an Artificial Electron Cyclotron Heating Region of Plasma" was the second of a series of three patents that Eastlund assigned to a subsidiary of ARCO - Arco Power Technologies Inc. (APTI). Ramo's contribution to the concept was to use a large superconducting coil on the ground to modify earth's magnetic field at a high altitude, Eastlund said.

It had been a good time for Eastlund. The controversy over "the Eastlund patents" had not yet begun. No physicist had yet warned that experimenting with his patents could turn into "an act of global vandalism".

Eastlund had been hired by ARCO as a consultant, to come up with uses for the 30 trillion cubic feet of natural gas in ARCO's reserves on the North Slope of Alaska. ARCO's problem was the remote location of the gas. Building a pipeline and shunting the gas to industrial centers was no answer; that pipeline megaproject had been on the oil industry agenda for more than twenty years without development. The company would get maximum profit if it found a use for its product right there on the North Slope itself.

In that scarcely-populated stretch of icebound real estate, who would be the customers for massive amounts of power? Looking at it in terms of burning the gas on the spot to power a huge generator and make electricity, Eastlund realized that they were talking billions of watts of electricity, not just the millions watts put out by a city's megawatt power plant. What could his boss possibly do with a few gigawatts?

He rejected every idea that needed smaller amounts of power. Eventually Eastlund came up with a wild plan - use all that energy to power the biggest "ionospheric heater" in the world. The equipment on the ground would beam focused energy up to the ionosphere, where the beamed radio frequency (RF) waves would interact powerfully with charged particles that are always trapped there. The heating effect of the focused beam would then dramatically push a plume - a large section of the ionosphere - up and outward from Earth.

As it later turned out, the big ionospheric heater in Alaska would be located far from the North Slope gas fields. But the challenge had served to spark Eastlund's inventiveness.

Anyone outside the military-industrial-academic complex, watching Eastlund research the history of other ionospheric heaters, might wonder - why would anyone want to heat and lift part of the upper atmosphere? Was the motive to allow

46 Bill Lawren, "Rediscovering Tesla", Omni magazine, March 1988.

his country to get a jump ahead of the Soviet Union, which had experimented with related technology? Only they know for sure, Some of Eastlund's research was supported by the Defense Advanced Research Projects Agency (DARPA)[47] under the project title "Alaska North Slope Electric Missile Shield".

The United States already had smaller antennae in several locations, for experiments in bouncing radio waves off the ionosphere. With a bigger tool than anyone else and the ability to focus its beam, the United States military could fry incoming missiles, disrupt global communications, change the chemical composition of the upper atmosphere and even engineer weather by redirecting very high wind patterns (jet streams).

Other tricks which his invention could do would be debated a few years later. "Earth-penetrating tomography", (scanning the earth with radiations bounced off the sky - basically, X-raying the ground in a search for tunnels and hidden caches) is a use which would show up in the National Defense Authorization Act for 1995. And there are possible uses that are more futuristic than the tomography.

In the 1980's it wasn't an easy sell to the patent office, however. When he applied for the first of several patents on his ionospheric- heater invention, the patent examiner told Eastlund that his invention sounded like science fiction. Eastlund replied that the technology was all known. Step-by-step, he backed up his claims with paperwork that proved that the technology was possible. Then the government officials were impressed. But before the document moved out into the public literature in 1991, the Navy first slapped a Secrecy Order on his U.S. patent number 5,038,664 for a year. That patent told how to make a "shell of relativistic particles" high in the sky. "Relativistic" particles travel at near the speed of light.

When Eastlund had the military's attention, the Pentagon opened its pocketbook and spent hundreds of thousands of dollars on the initial study of his claims. Eastlund said in a 1988 radio interview that the defense department had done a lot of work on his concepts, but he was not at liberty to give details. He later told Manning that after he had worked within ARCO foT a year and applied for patents, Defense Advanced Research Project Agency (DARPA) had combed through his theories then issued a contract for him to study how to generate the relativistic electrons in the ionosphere.

After 1986 he was off the ARCO payroll, before the invention drew much lire in the media. Its first major publicity was in 1988, the year after one of his patents on the system - how to beam huge amounts of electromagnetic energy to selected regions of the upper atmosphere48 - was made public.

The publicized patent was titled "A Method and Apparatus for Altering a Region of the Earth's Atmosphere, Ionosphere and Magnetosphere". Eastlund told Alex Chadwick of National Public Radio that the patent should have been kept under government secrecy. He said he had been unhappy that it was issued publicly, but, as

47 DARPA Contract No. DAAHDJ-86-C-0420 "Alaska North Slope Electric Missile Shield.
46 Bill Lawren, "Rediscovering Tesla", Omni magazine, March 1988.

he understood it, the patent office does not keep basic "fundamental information" secret. "You don't get a patent if you don't describe in enough detail to another person how to use it," he said. Specifics of military applications of his patent remain proprietary (secret), he added.

The radio interviewer, Chadwick, confronted Eastlund about aspects which troubled the interviewer - mainly the enormity of what the inventor claimed his invention could do. Effects such as changing the planet's atmosphere sounded like something out of a Jules Verne novel.

Sounding quite proud of his accomplishments, Eastlund replied that nothing in the patent was science fiction; it is based on combining known technologies. "Many of the applications in here are aimed at beneficial effects."

Are artificial sunspot-effects beneficial? Chadwick pointed to page eleven of the patent, where Eastlund claimed that his invention could disrupt communications all over the world. With a short laugh, the inventor acknowledged the claim. "And obviously that doesn't sound too beneficial, so I'm contradicting my answer to the last statement. But in the patent itself is the fact that you can do that. Sunspots or solar flares will disrupt communications badly. This would do that through basically the same mechanism."

Eastlund's enthusiasm for planetary-scale engineering came through just as clearly in an interview with Omni magazine. While acknowledging that many of the uses of his invention are warlike, he also talked about "more benign" uses. His view of benign included using the technology to reroute the high-altitude jet stream, which is a major player in shaping global weather. Another way to control the weather with his technology would be to build "plumes of atmospheric particles to act as a lens or focusing device" for sunlight, he told Omni. With this, the people controlling the antennae could aim in such a way that the return beams would hit a certain part of the earth. With the heating ability, they could experiment until they could control wind patterns in a specific place.

The Omni article explained. "What this means, he says, is that by controlling local weather patterns one could, say, bring rain to Ethiopia or alter the summer storm pattern in the Caribbean. His device might even help regenerate the depleted ozone layer, patch the ozone hole over Antarctica, or break up atmospheric industrial pollutants like carbon monoxide or nitrous oxide."

Not every scientist shared Eastlund's eagerness to experiment with the ionosphere. Dr. Richard Williams, a physicist with the David Sarnoff Research Center in Princeton, New Jersey, sent a letter to a scientific journal warning that Eastlund's invention might become a serious threat to the earth's atmosphere49. Williams summed up the contents in Eastlund/APTI's patent for altering the atmosphere, ionosphere and/or magnetosphere:

49 Richard Williams, "Atmospheric Threat", Physics and Society Vol. 17 No. 2 April 1988, page 16.

"The idea of the invention is to generate a beam of radio waves of enormous intensity and direct this toward the upper atmosphere. At certain altitudes, electron cyclotron resonance heating of existing electrons would cause further ionization of the neutral particles of the atmosphere. Among the intended uses of the invention are to 'disrupt microwave transmissions of satellites' or to cause 'even total disruption of communications over a very large portion of the earth'. Other intended uses include weather modification, lifting large regions of the atmosphere, and intercepting incoming missiles,"

Williams came up with a pithy one-word description of the concept - skybusting. "This 'skybusting' concept may sound like a tall order, but look at the power levels that will be used (10-to-the-ninth-power up to 10-to-the-eleventh-power watts)! This is equivalent to the output of ten to 300 large power generating stations."

High-energy experiments pose a danger to the upper atmosphere, Williams said. He then referred to Eastlund's statement in the radio interview - that a secret military project was already underway to study and implement the invention. Williams had a chilling warning.

"Tests of this kind could cause irreversible damage."

Williams reminded his fellow physicists that small changes in the upper atmosphere, such as mere traces of manmade substances, can have a profound effect. An example is the destructive effects on the ozone layer, a protective layer of Earth's atmosphere which absorbs dangerous ultraviolet radiation. While making it clear that the ozone layer and ionosphere are separate layers, physicists say the layers are interconnected as well as separate. Regarding the ozone layer, Williams said, "After long negotiations, the federal government had joined in an international treaty to protect the ozone layer. A few tests of the Eastlund invention might undo all that we have accomplished with the treaty."

Effects in the upper atmosphere cannot be kept in one spot, Williams noted.

The publicity was apparently not welcomed by ARCO Power Technologies Inc. In August of 1992, Jeane Manning had confronted the president of APTI, Ramy Shanny, Ph.D., after a power-beaming workshop at an International Energy Conversion Engineering Conference. She had come to the IECEC meeting to further educate herself about energy alternatives, but one item on the program took her away from the "advanced and innovative systems" sessions for a morning. The schedule said that a representative of APTI would be in a workshop on poweT-beaming, and she wanted to ask the person whether APTI was going to build Eastlund's invention.

Manning slipped in the room without needing to point to the press pass on her suit jacket. The workshop was a rather intimate gathering of colleagues from national laboratories, the federal department of energy and universities; the meeting room held less than thirty people. There was one other woman in the room, also

looking severely professional as befits a senior research scientist at a national laboratory.

The discussion bounced from topic to topic, as if the participants were in a hurry to get the formal meeting over and meet informally. Canada was involved in an experimental aircraft that flew to 150 miles in 1987 from microwave power beamed from the ground, Manning learned. ARCO, Raytheon, Jet Propulsion Laboratory and Japanese scientists made history in microwave-power beaming, These aircraft or satellite projects can be used for surveillance, the speakers bragged. Or to relay power for "development of remote natural resources".

One well-dressed man stood up and asked for cooperation among the champions of laser beaming and the proponents of microwave beaming, "...to find out what the stuff can do. Let's get a team together and solicit money from the folks with the pocketbooks."

A project engineer for a large university's Center for Space Power was asked about environmental effects of microwave power beaming. He replied that the biggest challenge for the people in the room was the public perception of an environmental impact. Studies about microwave energy and microwave ovens were done in the 1970's and '80's, he noted, but since then the bulk of the environmental studies have focused on 60-hz transmission lines. "But I think, with the data that's out there, you can show that at the power densities we're talking about operating, there certainly will not be any thermal effects, and the power densities where the people will be going close to the beam will be such that you're not going to have a problem."

To Manning's surprise, he admitted that "the big question is 'what (when people are exposed to power-beaming) are the effects from low-density, long-term duration?' There hasn't been any kind of study on that, and that's going to be such a detailed involved intensive study that it's not going to be done in the near future. Because there's no mandate."

Manning swore quietly into her tape recorder. "Then why in the world are they asking for money to build their toys before such a study is done?" She didn't ask the question aloud, because she wanted to hear as much as possible from the next speaker - the president of APTI. Perhaps she could find out if the beaming to ionosphere experiment had been canceled,

Dr. Shanny was a rather swarthy and large man, dressed in a well-tailored dark suit, His presentation was brief, with an audiovisual about ARCO's experiment in beaming microwave power to an aircraft in Canada, and a few comments. Perhaps being there was more important than giving a detailed report.

Afterward, Manning waited outside the meeting room door on the sun-dazzled patio, and stopped Shanny as he came out. She introduced herself with her business card from Explore! magazine, then asked him about the status of the Bernard Eastlund patented technology.

Shanny backed away from her, gesturing with his hands and using facial expressions to convey the impression that Eastland is crazy and the company was not going to have anything further to do with Eastlund's futuristic patent.

Momentarily assured that APTI would not be building the mega-instrument, Manning let him rejoin his group and head for a restaurant. Then she replayed the scene in her mind and realized he had not given her a single complete sentence that she could quote. The message - disavowing Eastlund's work and reassuring her that APTI would not build such a technology - had cleverly been conveyed without Shanny having committing to uttering words.

A couple of years later, the giant defense contractor E-Systems bought Shanny's company, APTI. The trail from Eastlund's schemes was further buried in 1995, after Raytheon corporation bought the HAARP contract - and thus the APTI patents - from E-Systems,

Even if the contractors really did completely disown the controversial Eastlund patent # 4,686,605, APTI was the assignee on a dozen others whose technologies were related. APTI, and the larger defense contractors who later swallowed APTI and its patents, probably did leave Bernard Eastlund's controversial patents in their dust50 as they accelerated their power-beaming technology. Among the unpublicized patents - also assigned to APTI Inc. -that Nick Begich uncovered were

- 5,068,669 "Power Beaming System";
- 5,041,834 "Artificial Ionospheric Mirror Composed of a Plasma Layer..";
- 4,999,637 "Creation of Artificial Ionization Clouds Above the Earth";
- 4,817,495 "Defense System for Discriminating Between Objects in Space";
- 4,873,928 "Nuclear-Sized Explosions Without Radiation".

In the interview with Manning, Eastlund explained why his method for creating a high-energy missile shield was an improvement over the current Strategic Defense Initiatives type of beaming - no satellites needed. The antennae on the ground radiate energy into the areas high above the Earth without the use of particle beaming from satellites to accelerate electrons in the ionosphere. At very high altitudes, the effects would multiply if a high enough power level was used.

"I took a factor of about a million steps {increase) in power it could deliver at, say, 100 kilometers altitude. 1 took it way beyond what the slate of the art was at the time...It opened up new things. As I understand it, that's one of the selling points of HAARP-by having this massively-greater power, you can do a lot more interesting things. Basically, what 1 said in the patents."

50 Eastlund/APTI patent #4,686,605 "Method and Apparatus for Altering a Region in the Earth's Atmosphere, Ionosphere and Magnetosphere"; # 5,038,664 "Method for Producing a Shell of Relativistic Particles, held up one year by Navy secrecy order; and # 4,712,155 "Method and Apparatus for Creating an Artificial Electron Cyclotron".

Is it possible that the HAARP scientists could have miniaturized the technology so that they don't need such a large area of land and electrical power as called for in Eastlund's patents? Manning asked him.
"It's entirely possible," he replied. "They have had a lot of good engineers working on it for some time. I would hope they have improved it."

In 1994 Eastlund wrote to an Australian who was concerned about HAARPs impact on New Zealand and Australia, David White.51 "As we discussed, this (HAARP) antenna may be a first step toward determining if some of the applications discussed in my patents could be accomplished. Most of the military applications require generation of relativistic electrons in the ionosphere. It is my understanding that one of the purposes of the HAARP antenna is to study the generation of relativistic electrons."

The speeded-up electrons would travel along Earth's magnetic field lines and could either "bounce" on a field line over Australia and return to the north, or "be lost and fall into the atmosphere". "Don't panic," Eastlund wrote, "this happens very high in the atmosphere,"

"It is...years in the future that enough electrons might be generated to merit concern in the Southern hemisphere, and that only if it can be proven that such electrons can be created with the antenna."

In the meantime, Eastlund said, "since I stopped working for ARCO, I have spent some time investigating uses of the antenna for possible replenishment of the ozone holes, and for steering the jet stream for weather modification."

When the ionizing beams make some ozone by a breakdown in the atmosphere, he later told Manning, they also increase nitrogen compounds up there. "The problem is, it takes a lot of energy to make a lot of ozone." The scientist planned to continue to work on the problem.

He would like recognition for his part in inventing the HAARP advanced ionospheric heater. "They own it, but they can't take credit for it," he said. "I was upset, because 'internal politics' is why I was let go. I went to my patent lawyer, and he said 'Ben, don't worry about it. It's a far out idea...If it works, the United States government says you invented it. And they can't take that away.' "

As evidence that HAARP was based on Eastlund-type technology, he said, "...In the RFP (Request for Proposal) for the project, for example, they stated that generation of relativistic electrons was one of the objectives of the program."

Eastlund gave a vivid picture of how energetic those electrons are. "The electron that hits your TV screen is moving at 25,000 electron- volts. When it gets more than a half-a-million, that's when you call it relativistic. The ones (HAARP) is talking about are one to three million electron-volts."

51 March 26, 1994, letter from Bernard Eastlund to David White of Production Technologies Inc., quoted with permission from Dr. Eastlund.

The patent he wrote with Simon Ramo dealt with the how-to. "How you turn the knobs on your antennae and beam things and make things happen." Since the Earth's magnetic field is barely strong enough to turn the needle on a compass, Ramo added the concept of using a very large ground-based superconducting coil to modify the amount of the earth's magnetic field at a certain altitude, Eastlund told Manning, "To give you a little more ability to control things...It would allow you to more effectively do things up at the high altitude."

The reporter asked, "Has anyone raised the thought of things getting out of control?"

Eastlund didn't seem to notice the anger behind her question, and he gave an enthusiastic technical answer. "I don't mean control in that sense," he said, "Let's say you want electrons to get hot. You send your waves through and they get hot, but only use up one per cent of what you sent...So you have to use a huge antenna....Control in terms of doing what you want."

The physicist emphasized that he is in favor of HAARP. "If ten per cent of any of these things work out, it's going to be a very neat thing."

A growing number of people don't agree. Before we meet Clare Zickuhr and "the guys in the bush", the next chapter will look back at the history of attempts to do "neat things" in the upper atmosphere.

"When the Earth came alive it began constructing its own membrane, for the general purpose of editing the sun...The sky is a miraculous achievement. "52
Lewis Thomas, 1973

Chapter Five

HIGH ON THE SKY

Countless suns in other galaxies spray cosmic rays in all directions continuously. Closer to home, our own sun radiates gamma rays, X-rays and shorter wavelengths of ultraviolet light. When they hit the outer layers of earth's atmosphere, these cosmic rays are absorbed by atoms, but in the process electrons are knocked off the atoms. Thus there is a constant flux (flow) of electrons at this altitude, and the atoms are changed to positively charged ions. This process gave the ionosphere its name. Although ionization happens at heights as high above the earth as 1,000 kilometers and as low as 50, the positively charged ions and negative electrons are most dense at altitudes of 80 to 400 kilometers. In non-metric terms, the ionosphere begins at an altitude of about 30 miles and goes up to about 300 miles or more.

This natural electrically charged shield around the earth filters harmful wavelengths of solar radiation, protecting the surface of Earth from significant bombardment.53

Blown toward Earth on the solar wind, electrically charged particles follow Earth's magnetic field lines. Along such paths of least resistance, high energy particles funnel toward the magnetic poles of Earth, squeeze into a poleward current called the electrojet, and are dumped toward the earth. Sometimes the electrojet dwindles, but at other times a solar flare floods the system with high energy particles and the sky lights up into the dancing, shifting curtains of an auroral display. At the south pole it is called the aurora australis, and the northern lights is the aurora borealis.

For eons the electrojet has flowed in the form of a direct current into the polar regions of Earth. Who would want to change the electrojet?

THE PATH TO A GIGA PROJECT

In a way it began with a few puzzled radio listeners. In 1933 a man in Eindhoven, Holland tried to listen to a radio station in Beromunster, Switzerland. Suddenly he was hearing two stations. The powerful Radio Luxembourg was not supposed to tune in at this frequency; it broadcast at a frequency far apart on the dial, but here it was superimposed on the Swiss station.

52 Lewis Thomas, "The World's Biggest Membrane, The Lives of a Cell", Massachusetts Medical Society 1973.
53 Robert W. Christopherson, Geosystems. Macmilian NY 1992.

The Luxembourg Effect, as it was later called, did not remain a mystery long. The Dutch scientist named Tellegen figured out that the cross modulation of the radio signals was a wave interaction caused by nonlinear characteristics of the ionosphere.54 What this means to non-scientists is that reactions of the ionosphere are unpredictable.

Then other scientists also realized that high power radio waves changed the temperature and density of electrons in the ionosphere and that other radio signals passing through the "modified" region were influenced. They experimented with wave interaction for thirty years and eventually were certain that directing high power waves into the ionosphere produced instabilities. Their tool was a transmitter – array of antennae - called an ionospheric heater. (Press releases now refer to it as an Ionospheric Research Instrument, but this book will call a heater a heater.) For the most part, ionospheric heaters were operated by universities and research institutes. Stanford Research Institute (SRI) International developed much of the high frequency transmitting programs with money from the Defense Nuclear Agency.55 The newest, multi-purpose, tool being built for HAARP, however, is directed from Phillips Air Force Base.

PENN STATE PIONEERED HEATERS

Anthony Ferraro, Ph.D., is a professor of electrical engineering at Penn State university, a school that was a pioneer in experimenting with this knowledge. In 1966, electrical engineers built a 500 kilowatt (kw) ionospheric heater at a site near the campus, with an effective radiated power of 14 megawatts. Ferraro developed a technique of beaming power with two transmitters at the same time, as a way of probing. A high-power transmitter would heat a region of the lower ionosphere while a weaker transmitter was pulsing. Thus the experimenters could study the wave interaction.56 Penn State has been paid to do ionospheric modification research continuously for 30 years.

Although they had a heateT before Alaska or Norway, the university had to give up operating theirs after the neighbors complained. Firefighters in northeastern Canada, foT example, had high frequency radios on board their airplanes. Although Penn State's ionospheric heater was not on the same frequency, it was so strong that the airplane radios would "kind of blank out", recalls Ferraro. "We developed cooperative techniques; we would shut down whenever they wanted us to, but it became so difficult that we just had to give up. Heaters went to remote areas like Puerto Rico."57

The first large ionospheric heater in the United States was built at Plattesville, Colorado, in the 1960's. In 1983 the transmitter and antenna array were moved from Colorado to a site 40 km east of Fairbanks, Alaska. The Perm State research team was among those who won contracts from the Navy to conduct experiments using the High Power Auroral Stimulation (HIPAS) facility there.

54 Ray J. Lunnen, Jr. and Anthony J. Ferraro, "High Frequency Active Auroral Research Program", Pennsylvania State in house publication.
55 National Telecommunications and information Administration memo, "NTIA Preliminary Assessment of Air Force Ionospheric Research Instrument", Oct, 1, 1993.
56 Interview with John D. Matthews, electrical engineering department, Penn State,
57 Jeane Manning's May, 1995, interview with Tony Ferraro.

"The initial idea, not connected with my work, was to create an artificial northern Lights," said Tony Ferraro. "There was not sufficient power to do that."

Why make an artificial aurora borealis? He replied that the plasma physicists wanted to control the northern lights to learn more about the physics which created them. Ferraro instead came in and used the facility to modulate the electrojet. "These currents can be modulated by high power transmitters so that they could be made to act as little antennas." Ferraro explained that in their natural state the ionospheric currents are direct current (DC), as is the electricity from a battery. "By modulating that atmospheric region from these high power transmitters we can convert (the electrojet current), in a small volume, into alternating currents. Alternating current flowing in a wire is an antenna. Now, these are not flowing in wires; they're flowing in space. But it's the same principle. We can create a little antenna."

The experimenters wanted to generate Very Low Frequency (VLF) and Extremely Low Frequency (ELF) electromagnetic waves from that antenna in the upper sky, because VLF and ELF waves can travel almost around the world with very little loss. They generated the waves, "...but not strong enough to be of practical interest...That led to the Navy and Air Force funding an even larger ionospheric modifier - HAARP." HAARP is not only meant for generating the low frequencies that would occur with a strong electrojet, Ferraro said. "It has a wide, diverse utilization."

The operators sitting at HAARPs instrument control/monitoring console indeed have a versatile tool at their fingertips. It includes a waveform generator capable of sending a wide variety of modulated signals to the antenna array. Then the operators can whip the narrow beam of radio frequency (RF) energy around in the sky at will. An article from a Penn State publication says "array control permits slewing the beam to arbitrary locations within the overhead 30 degree cone within ten microseconds."

Visual displays tell the operators how the experiment is progressing, and local and remote sensors - incoherent scatter radar, riometers and ionsounders and other esoteric sounding apparatus - monitor the ionosphere.

The Penn State publication article adds that after the major parts of HAARP are evaluated in the field, "a comprehensive series of tests will be completed as a demonstration of the IRI (Ionospheric Research Instrument) capability to the user community. The goals of HAARP are ambitious, nevertheless, state of the art capability will allow us to realize this powerful scientific research instrument which will probe the Alaskan sky."

Long before HAARP was conceived, the former Soviet Union built more powerful (one gigawatt at Zelenogradskaya near Moscow) heaters than the west, and involved more scientists in ionosphere changing experiments than the West. More recently, Max Planck Institute in Germany built a heater at Tromso, Norway. In 1991 the Europeans caught up to the Russians by beaming one gigawatt of effective radiated power from Tromso.

The language in some documents hints that an element of mine is bigger than yours competition goaded the Americans to build a facility that would be three times more powerful than anything the Russians or the Germans have. Here we must make it clear that an ionospheric heater isn't judged by height. It may look like a five or ten acre field of fifty-foot high crosses (technically called crossed dipoles) in a square arrangement. The larger the area covered by antennae, the more powerful.

Although they are without an ionospheric heater, Penn State still has a respectably sized department involved in ionospheric modification - "about ten faculty and maybe 20 grad students". Formerly called the ionospheric research lab, it has become Communications and Space Sciences.

"It used to be very large, and very interdisciplinary with math, chemistry and physics people in it. Now it's primarily electrical engineering," Ferraro said.

* * *

John D. Matthews is a physicist who finds himself in the electrical engineering department at Penn State because of consolidation of departments. His specialty is the area of the ionosphere down at about the 100 kilometer altitude. During a phone interview he noted that the main radar (for high frequency ionospheric heating experiments) at Arecibo, Puerto Rico, can significantly heat the lower ionosphere as well as the upper. The heating is a Tesult of a high poweT "diagnostic" instrument. Arecibo is currently getting a major upgrade.

Most of the heating is done at around 200 kilometers altitude - called the Lower F region of the ionosphere - because it is easier to heat that higher region to the maximum.

Penn State got in on the ground floor with HAARP. In 1991 several departments at the university - the Applied Research Laboratory, Computer Engineering and Engineering Electronic Design Services - combined resources to go after a desirable contract. They were among the winners. Penn State, APTI and Raytheon Corporation were each given contracts to study how to design the HAARP facility. Afterward, APTI invited Penn State to join it, along with SRI International and Ahtna Inc., an Alaskan corporation, as a team. The Office of Naval Research chose their team to build and demonstrate the powerful ionospheric heater near Gakona, Alaska. "The capability will be further expanded to its final world class performance capability in 1996."58

HAARP: SECRET DUETS AND TRIOS?

Ionospheric heaters are a very specialized area of research. "There are two groups in the Soviet Union, several people in Europe and maybe ten people in the states. That's about it," said Sacha Koustov, a Canadian/Russian ionospheric scientist at the University of Saskatchewan. Like most of the atmospheric scientists interviewed, he was not familiar with the HAARP literature.

58 Hay J. Lunnen, Jr. and Anthony J. Ferraro, "High Frequency Active Auroral Research Program", Pennsylvania State in house publication,

The only way there could be amplification of the electromagnetic waves once they reach the ionosphere, in his opinion, would be with a special experiment using two transmitters beaming onto the same spot. The interactions of the radio waves can cause amplifications, said Koustov. Such highly energetic reactions can even create so-called gravity waves, he said. That is getting into an area of advanced science which is beyond the scope of this book.

Co-author of Angels Don't Play This HAARP Dr. Nick Begich discovered recently that HAARP planners intend to fire up more than one ionospheric heater at a time and operate them in concert. This test is to be conducted between September 11, 1995 and September 22, 1995 using HIPAS and HAARP at low power settings. What will happen even at these low levels of power is unknown and unclear.

A HISTORY OF MAD SCIENCE

Begich's home state of Alaska has met ambitious scientists in the past. One may have had more academic credentials, clout and charm than common sense. Dr. Edward Teller, known as the "Father of the H-bomb", traveled to Alaska in 1958 with a proposal to blast a chunk of that state's coastline off the map. As spokesman for the nuclear establishment, he wanted to prove that nuclear explosions were a tool for geographical engineering. Teller was widely quoted as telling Alaskans "If your mountain isn't in the right place, drop us a card."

Teller's colleagues at Lawrence Radiation Laboratory came up with Project Chariot as part of Project Plowshare. Their plan was to explode six thermonuclear bombs underground at Cape Thompson, Alaska, to dig a harbor.

Uncritical technophiles almost bought the plan.

The Firecracker Boys, by Dan O'Neill reveals common threads that run through the history of proposals for questionable megaprojects. For one, the promoter sold it as an economic development opportunity - jobs for the people. That pitch convinced legislators, business groups and the media. Another supporter, as with HAARP, was the University of Alaska administration. Again, the appeal was the prospect of money and jobs for the state's residents.

O'Neill points out that during the planning stage the scientists ignored the Inupiat people who lived nearest to the site of the proposed nuclear bomb blasts - 30 miles from Ground Zero. A review of The Firecracker Boys said "O'Neill still marvels at the determination of the Eskimos who saw through the government's empty promises and outright lies."59

In the end they didn't blast that hole in the coast. Between the native peoples' stubborn opposition, and three heroic scientists who stood up and said it was a bad idea, it didn't happen.

59 Marilee Enge, "Blowing the Lid off a Nuclear Tale", Anchorage Daily News, Dec. 25, 1994.

As if to set an example of what happens to academics who speak out with independent views, the three brave scientists who opposed Project Chariot lost their jobs at the university and were blackballed from academia elsewhere. One had to leave the country to find work. When O'Neill researched his book, he told a newspaper reporter later, "there were still a lot of people on campus who were very sensitive about the topic, who didn't talk about it for years, decades."60

DESTROYING A RADIATION BELT

Milestones in the history of arrogant science also include the three space explosions of the U.S. military's Project Argus in 1958. Each shot spewed atomic particles into Earth's magnetic field where they were trapped and spiraled back and forth at high speeds. "In essence," said the New York Times, "the Argus experiments produced artificial belts comparable to the natural Van Allen radiation belt (regions of high- energy charged particles around the earth at between 2,000 and 12,000 miles altitudes). Thus, after each shot a curtain of radiation - that is, of extremely high speed particles - spread around the world."61

In the opinion of the authors, psychiatrists should be invited into thinktanks where decisions are made to "modify" one of Earth's protective layers. Shortly after Dr. James A. Van Allen discovered the two radiation belts around Earth - in the International Geophysical Year (1GY) of 1958, two physicists at the University of Minnesota proposed that a hydrogen bomb be exploded inside that radiation belt. According to the New York Times, the two physicists wrote "It might be amusing to end the IGY by destroying some of the radiation field first discovered during the IGY."

COPPER-WIRING THE SKY

The folksy saying, "what goes around, comes around", applies to what experimenters inject into a lower altitude jet stream as well as into the Van Allen belt. In the early 1960"s someone in the U.S. military apparently decided that the ionosphere had to be replaced because it was unpredictable (dynamic, lively - it danced with the ebb and flow of charged particles). They decreed that it had to be controlled. In their mindset, were telecommunications more important than the integrity of Earth's natural electric circuit?

The planetary-scale engineers tried to replace a ten by forty kilometer section of the ionosphere with a "telecommunications shield" of 350,000 copper needles tossed into orbit.62

The U.S. military did not know what the outcome would be in the early 1960s when they planned an assault on earth's magnetic field with copper needles (each 2-4 cm long). They planned to increase the size of the needle dump in space "if the project proves successful". Apparently it was a bust; it was hushed up and kept out of the mass media,

60 Marilee Enge, "Blowing the Lid off a Nuclear Tale", Anchorage Daily News, Dec. 25,1994.
61 Walter Sullivan, "Blast May Erase Radiation Belt," New York Times Apr. 30,1962.
62 Nigel Harle of Holland, "Vandalizing the Van Allen Belts", winter 1988-89, Earth Island Journal p. 11.

Another independent researcher, Leigh Richmond Donahue63 tracked events during the postwar years and through 1977 alongside a physics genius, her late husband Walter Richmond. She writes, "...when the military sent up a band of tiny copper wires into the ionosphere to orbit the planet so as to 'reflect radio waves and make reception clearer' we had the 8.5 Alaska earthquake, and Chile lost a good deal of its coast. That band of copper wires interfered with the planetary magnetic field."

Any ecological insensitivity of engineers in the US has been more than matched by their peers in other countries. Often the scientists in North America just had bigger allowances to spend and therefore could cause more damage. The former Soviet Union was reportedly getting ready to change the climate before the 1970's. That country's director of hydrometeorological work described proposals to make Russia a more comfortable place to live - at least until the ecological backlash that could have hit afterward. Proposals included removal of the Arctic ice pack, damming of the Bering Strait and rerouting Siberian rivers.64

If ordinary common sense people were invited into military thinktanks to vote on such projects, what would they say to the big boys with the big toys?

63 Private communication with Leigh Richmond Donahue of the Centric Foundation, Maggie Valley, North Carolina.
64 Lowell Ponte, The Cooling. Prentice-Hall Inc, NJ 1976.

"The military is going to give the ionosphere a big kick and see what happens."
Clare Zickuhr, formerly of Anchorage, Alaska, founder of NO HAARP.

They're like boys playing with a sharp stick, finding a sleeping bear and poking it in the butt to see what's going to happen."
Barbara Zickuhr

Chapter Six

NORTHERN EXPOSURE

At an age of about fifty years, Clare Zickuhr took time for assessment, and was satisfied as he looked around in the early 1990's. He had worked his way through data management jobs to a position as accountant for a multinational oil company, ARCO. The good life included hosting friends in a 3,000 square foot house on the bluff outside Anchorage, with a wall of windows overlooking Cook Inlet. And watching Beluga whales romp in the inlet, or standing beside his wife Barbara in companionable silence, contemplating a panoramic sunset over a distant mountain range. Barbara was content with her own range of interests, from collecting art to studying medical anthropology.

That the Zickuhrs would become activists in an eclectic group of environmentalists was too foreign a possibility to consider. A visit from a neighbor in October of 1993 changed their serene existence, however. Jim, a pilot with Alaska Airlines, came over one night and mentioned that at a pilots' meeting he had heard about a government project called HAARP that was going up "in the bush" northeast of Anchorage. Jim knew Clare was a ham radio operator who spent a couple of nights a week closeted with his shortwave equipment and that he ran three ham-nets. Jim bunded him a flyer which said HAARP was an acronym chosen by military agencies to name their project, which would include a large array of antennae on the ground beaming a billion watts of electromagnetic power - at radio frequencies - up through the atmosphere. It would be the biggest zapper in the world! Even if it didn't get beyond the megawatt (millions of watts) stage, such a transmitter was certain to interfere with communications in the bush. People in remote areas of Alaska rely on radios for life or death calls such as for a Medivac aircraft to save a child's life.

Jim wondered what electronic interference from HAARP could do to onboard systems on the jets which he pilots Clare listened to his worries about aircraft that are controlled by remote operation instead of having direct cable levering rudders and other equipment. Such a craft could be more susceptible to a big blast of energy that might lock it into position or over ride the remote control. Reassurances from the Federal Aviation Administration reported in the media were not the last word as far as pilots were concerned.

That night when Zickuhr sat down in front of his shortwave apparatus and went on the air, he asked other ham radio operators if they had heard about the HAARP

transmitter. They hadn't heard, but wanted to learn about the biggest "ionospheric heater" in the world. They learned that similar antennae in other countries had beamed electromagnetic power into high level experiments for years, but HAARP would be the most powerful, zapping the upper atmosphere with an unprecedented power level of energetic particles. Engineering Mother Nature - the planetary environment - would become a new ball game.

Some hams lived in areas where HAARP public relations people were holding public briefings, and these operators reported back on the air. The Pentagon had been shopping for a site, because HAARP's radio interference would be too strong to locate near military facilities.

"Then why do they think we want it in our own backyards?" asked some individuals whose communities were considered as possible sites. When the choice was made to build it near Gakona, a hamlet about 140 miles north of Prince William Sound, some of the on the air chatter died down.

While he still had time to sit in front of the two-story fireplace for a leisurely read, Clare had finished a book titled Miles from Nowhere. It was about people living in "the lower 48" states, in places where there were fewer than two people per square mile. The military had of course chosen such areas to do its hazardous testing such as nuclear blasts.

"Gakona reminds me of that Miles, from Nowhere theme," he told Barbara. "Few people around to complain."

Although he sympathized with bush dwellers concerned about how close they were to electromagnetic radiations from HAARP, his main question was more global. "What all is this thing going to do to the upper atmosphere?"

HAARP's public relations sheet described it as pure scientific research on the aurora borealis and research on the ionosphere's ability to affect communications. The U.S. Air Force and Navy were paying for the project, but they said it was not a weapons system. Later, Clare Zickuhr would learn that the technology definitely could be used for military purposes. He wondered what else they weren't telling the taxpayers about HAARP.

His training as an accountant led him to ask about the checks and balances in the situation. HAARP planners would choreograph experiments on the crucial envelope of charged particles which circled the planet - the ionosphere, which protects Earth's inhabitants, like a spherical umbrella, from cosmic radiations. What independent scientists - not in any way funded by the military - were monitoring this project? He could find none. Especially missing were biologists and independent atmospheric physicists, if there are any such independents.

"Basically," he concluded, "the military is going to give the ionosphere a big kick and see what happens. My biggest worry is what they're going to do by

punching holes in the ionosphere or heating it. It's going to have reactions that they don't know how to predict. Look at the past -they set off nuclear explosions in the atmosphere before they figured out 'hey that's going to cause problems' and changed the wind patterns for years."

Barbara shared his view, and expressed it with an Alaskan's common sense observation. "They're like boys playing with a sharp stick, finding a sleeping bear and poking it in the butt to see what's going to happen."

Clare ordered a copy of the HAARP Environmental Impact Statement (EIS), from which he took names of others who had questioned HAARP. He used that first mailing list to contact people who wanted to learn more about it, and he tried to get a group going in Anchorage.

Near the end of 1993, the Zickuhrs hosted a couple of meetings in their home. In the first meeting, as the assembled Alaskans expressed their views, Barbara realized she and Clare had opened their doors to people they probably would not have met in any social situation.

It was a bit of a shock, From the comfort of an upper middle class home and removed from subsistence level rural or urban alternative lifestyles, the Zickuhrs' world had turned fairly smoothly. She joked about being a bleeding heart liberal herself and Clare being more middle of the road in his views. These guests, however, ran the gamut of extremes from "let's shoot the government people" to "aliens are involved in this". Sometimes it felt like she was in a bad mystery novel. Previously neither of the Zickuhrs had run into fringe political views about, for a mild example, "black budget projects" which not even legislators know about,

Barbara later reflected that "For me, it was an exercise in social restraint, which isn't my gift. But I grew to really accept these people for what they were and worked with them. There were an amazing range of views, but in the end I could see that was a real plus."

By the next meeting, more people were involved in seriously trying to get answers about HAARP. One of the people pointed out that "the Environmental Impact Statement sort of pooh-poohed, or played down, the reactions in the ionosphere." Someone else at the meeting looked at a possible effect which would be more visible to Alaskans - game birds. The effect on migrating waterfowl was also played down in the EIS, someone mentioned, although to the credit of the government scientists they had admitted "we really don't know what the effect will be",

The first mailing list of around fifteen grew to one hundred and fifty who were sent updated information - a HAARP fact sheet, decision documents from the Air Force, and then the most valuable in terms of information, the Request for Proposal documents. With Zickuhr's accounting experience, he could understand it. HAARP documents they received at that time generally restricted discussion of military plans to the category "enhance C3 systems" which seemed to mean keeping track of where submarines are and what might be happening in a battle.

"That's ELF waves they're using for that," Clare pointed out. "Extremely Low Frequency waves, which peopLe in the lower forty-eight (states) fought against because of health risks, but we're up here 'miles from nowhere' and no one is going to react to it."

If no one else was going to resist the intrusive technology, he would have to do what he could. Who else would stand up? He ran into a wall of apathy:

- Local people around the site had been led to view HAARP as a source of a few gravel hauling or site maintenance jobs.

- A reporter at the Anchorage newspaper contributed to the NO HAARP "library", by passing on information he had been sent. However, his bosses apparently did not support his wish to write an in-depth article about the project.

- After Clare Zickuhr dropped off an information packet at the city's television station, he never got a response.

- A "grassroots" environmental group showed interest but didn't do anything.

- After the NO HAARP group sent information about waterfowl vs. HAARP to the headquarters of the Audubon Society, the society did not reply.

The Zickuhrs spent about $3,000 on telephone bills and mailings while opposing HAARP. Meanwhile, one of the "guys in the bush" encouraged other activists to write a couple of thousand words about HAARP, and Clare gave it a try. He wrote an article titled "Monster in the Wilderness" and sent it to Gar Smith in San Francisco, editor of Earth Island Journal. A technical consultant told the journal that the technology would be impossible. That stalled the printing of the article, until another tireless networker, Remy Chevalier of Connecticut, urged Gar to reconsider. Clare sent more information and in the end the published co-authored article was included in the "Most Under-reported News of 1994" list, for the book Project

Since he worked for ARCO, and its subsidiary APTI had the contract to build HAARP, Clare filed an internal conflict of interest statement in early 1994 so that his employers would know that he was working against a project that another arm of the company was working on.

Early in his involvement, Clare became frustrated by being unable to get what he felt were straight answers from the government about HAARP. Barbara eventually grew discouraged too. "I feel we're just like a mosquito buzzing around, treated like we're not worth paying attention to."

As it turned out, the Zickuhrs' sacrifices did play a major role - keeping the

65 Project Censored, Four Walls Eight Windows, NY 1995.

resistance alive until the NO HAARP momentum grew stronger in 1995 when the media had noted its "Project Censored" status. When Clare retired from bis job with ARCO during company cutbacks and he and Barbara sold their house to go traveling through the "lower 48", the guys in the bush carried on. It was March, 1995.

"Project HAARP is driven by fear psychology - preparation for nuclear Armageddon. That path won't lead to the next century."
David Yarrow[66]

Chapter Seven

IN THE WILDERNESS

The log home sits in a clearing in one of the small timber stands which carpet much of Alaska - the largely silent tracts of spruce called "the bush". The small house is within hailing distance of a two lane paved road. On the February day that Nick Begich and Jeane Manning visited, the remains of a moose carcass dominated the driveway.

Stepping around a snowmobile parked beside the house, the burly owner offered a warm handshake. Wally wore a National Rifle Association baseball cap, plaid flannel shirt over sweatpants, unzipped snow boots and a brief smile of welcome.

Up to this moment the two writers knew of him only as a man of diverse skills - from trucking to wildlife management - who spent up to $500 a month on phone bills to oppose HAARP.

Inside the family home, parkas and boots were shed in the kitchen, then the trio moved into a larger room. The wooden table that they settled around held a Mac computer with modem and printer. At the far end of the room, a large TV screen dominated a seating area that faced a wood burning furnace. Peeled pine logs supported the ceiling.

As he turned off the television, Wally commented on how life in the bush had changed in only twenty years. A satellite receiving dish in his backyard collected a world of communication channel signals out of the sky. He often tuned in news from an English speaking station out of Moscow, and regularly listened to radio broadcasts from Australia and New Zealand. Cabin bound months in the winter give bush dwellers time for short wave radio as well as reading, he noted. With all this and the Internet too, they could become better informed than some city dwellers. However, he did not find all the news reassuring.

He paced nervously on wool-stockinged feet and then suggested his guests climb into his four wheel drive truck for a drive to the HAARP site near Gakona. On the way they could ask him questions.

Wally recalled how he had stumbled into the HAARP controversy. Through forestry fire-fighting courses he had previously known one of the other protesters from the bush country, whom he referred to as Ed. Wally recognized the man's name under letters to the local newspaper, the Copper River Journal and to the Anchorage Daily News.

66 David Yarrow, authnor of Raturn of the Dragon: Hazards of Made-Made Magnetism. Albany.NY.

Of most concern to these local activists were HAARP documents that clearly stated the project was intended to find out how the ionosphere could be exploited for military purposes. It was not pure auroral research. They were also suspicious of the HAARP environmental impact statement that said there would be no impact on climate, the ozone layer or weather.

As Wally talked about his reluctance to get involved in the NO HAARP campaign. Jeane Manning remembered a 1994 letter from a Northern homesteader who ran a mail order business she carried the letter in her pocket with the intention of phoning the writer while in the North. "...Most Alaskans are anti-environmentalist,"
Howard wrote. "It has something to do with the frontier mentality and the fact that almost all of our money comes from the oil industry and other mineral extraction." He then zeroed in on HAARP. "The E1S and various Department of the Air Force press releases have disingenuously pictured the project as a swell international research project where - in a really sappy detail - even local high school students would be free to use the facility to conduct science project research on the aurora borealis! Of course, the project is pure Star Wars, aimed at enhancing the ability to disrupt enemy communications by disturbing the ionosphere."

Two main groups opposed HAARP, he said - trappers, miners and others in the bush who rely on ham radio communications because they have no telephone service, and pilots. "I'm sure the military planners, as do most Americans, considered Alaska to be empty enough that a trapper here or there or an unlucky bird would be of minor consequence, and were perhaps surprised by the volume of local opposition."67

Wally and Nick were chatting as the vehicle bucked along into a white landscape with occasional glimpses of black asphalt ahead. The discussion returned to HAARP. Because his background included computers and government contracts, Wally had looked into getting work with APTI, which held the contract to build HAARP at that time. The effort to get the jobs went nowhere, but Wally had a look at the HAARP contract.

"I saw the site had to be 'open for inspection according to Intermediate Nuclear Defense Force Treaty or something. Saw a number of things in provisions of the contract... The way information was handled didn't add up. Everything had to go through (John) Heckscher (HAARP project manager) in Massachusetts; people here locally didn't know anything."

"The further we dug, after we had a look at the contract, we knew it was a secret project; there was hokey pokey going on that the government didn't want to disclose. There were provisions in the contract that tripped my bells. 'Contractors can't disclose if there's something injurious'...clauses like that."

Wally said he had then telephoned two men who publicly opposed HAARP. Clare Zickuhr, who was at the time still an accountant with ARCO in Anchorage, told

67 The "guys in the bush" have been given pseudonyms in this book, at the suggestion of three of them who are concerned about keeping low profiles in their communities.

Wally that for environmental reasons Clare wanted to see the site shut down. Ed agreed and added that as a ham operator he had concerns about whether the high power RF beaming would interfere with life-and-death situations in the bush.

"Ed prodded me into doing computer searches on the Internet - go into the Library of Congress and different databases. As soon as I started looking stuff up, that was all she wrote. Eventually some of us formed a network."

Some of the people were concerned about possible military applications of a technology that could knock out the Internet or blackout the power grid. More close at hand, they figured, what goes up must come down, especially if the radiations bounce off the ionosphere. Wally worried when he heard talk of the HAARP technicians planning to install filters on the radio and satellite receiving dishes in and around every home in the vicinity. The filters would screen out incoming radio wave interference, he was told. He got together with an electronics whiz who lived on an even more remote homestead, to study the proposal for high power beaming. Concerned about their families' health, they came to a conclusion. "It's not innocuous."

Nor was the proposed violation of Earth's atmospheric electrical system, he said. "You read about a tremendous heated plume rising, and raising part of the upper atmosphere with it, and that it could change weather conditions and that the actual effects can be intensified. Then (HAARP spokesmen) come back and say 'don't worry'."

He did worry - about his family on the ground receiving reflected radiation, and then about swans, ducks, geese and other frequent flyers that could be fried in the intense radio frequency beam above the project site. The ionospheric heater, as the HAARP antennae were called, would beam upward in a prime corridor for migrating waterfowl.

Another of the guys in the bush worried that migrating salmon might lose their way, as they use the geomagnetic field as part of their road map for returning to spawning grounds. The magnetically- sensitive material magnetite had been found in salmon, as it had in human brains. Therefore changes in the magnetic field would be confusing, he said. A powerful ionospheric heater such as HAARP could create an artificial electromagnetic storm high above the earth.

"All we have is John Heckscher's comments that there'll be no more magnetic disturbances than what occurs naturally," Wally said skeptically.

The bush dwellers and their science advisors, on the other hand, contended that even naturally occurring disturbances, caused by solar storms, do disrupt living systems. A psychologist at the University of Alaska did a study trying to connect Alaska's high rate of suicides to disturbances from geomagnetic storms generated by the aurora borealis.68 And scientific articles about the sensitivities of living cells and nervous systems said it doesn't take strong magnetic fields to make a difference;

68 Vancouver Province newspaper, "Electric Impulse", Apr. 4, 1995

fluctuations of very weak fields can dramatically affect the cellular level of life. Leaning against the passenger side window of the truck, Nick nodded agreement with the NO HAARP researcher. His yeaTS of research had uncovered studies that proved this point.

As his pickup truck swayed in the strong gusts of snow driving wind, Wally recalled the early days of their battle. "We tried to find ways to bring it to the public's attention. But the newspapers just blocked the thing out; they didn't want to deal with it. We thought we had a good contact with (a large Alaskan newspaper), but the reporter told me the story was being quashed."

The loose network of activists tried to keep up their momentum despite the lack of publicity. "We had our meetings by conference call. Seemed like every time we turned around we were bringing up new information...Joe knew a lot about this directed weapon stuff. Ed on the other hand knew the technical end very well. He performed all the calculations on his computer and his calculations didn't jive with the reports put out by Mitre Corporation."

Wally glanced over to see if his listeners were paying attention to this part of the story. "Mitre Corporation does all the work for NSA (National Security Agency). They're NSA, owned, operated, signed sealed and delivered. Mitre corporation is the main defense communications contractor for the United States government. Another bell goes off. What are we talking about here? Satellite communications, ASAT (satellite) weapon or what?"

Members of the rural NO HAARP group researched different aspects of the puzzle, each taking a different slant. They never sat down together in the same room, but collaborated long distance. Wally met Clare Zickuhr once in Anchorage, and received copies of documents that Clare had dug out of the library. When Wally returned home to his computer, he filed "a whopping big request" for more information on HAARP.

"I thought it was going to Heckscher, but it was forwarded to Kirtland Air Force Base. When that happened, 1 remembered that Kirtland hosts the Air Force space command and it also stores atomic weapons. And they do the black (hidden budget) stuff for Los Alamos. It shocked the hell out of me that my request came back from Kirtland Air Force base. Then 1 knew this project probably has a lot of classified stuff."

Wally's brow creased in an anxious frown. "You're gut checking yourself all along the way - 'am 1 damaging national security?' Ed and I a lot of times would kick this back and forth on the phone, always second guessing what we're doing."

Despite their desire to be patriotic, he said, it always came back to a gut feeling that they were correct in opposing HAARP. So they spared no expense. Wally estimated the few individuals spent between five and ten thousand dollars on photocopying and mailings of information packets.

"The last package we did, with Clare, went to a writer in New York who was from a national environmental news service. Said he could do a good job. I drove all the way into town and sent this stuff out to him FedEx. Yeah, its' a seven or eight hour round trip. How do you determine the cost of our time?"

As he casually steered through waves of snow drifting across the road, Wally recalled the meeting which he and Ed had in the city of Fairbanks with Paul Brodeur, the author of books such as The Zapping of America. "He told us about a situation where a community put up a stand against a proposed project, but (their protest) never panned out. The people even got injunctions, but the Air Force never gave in. It was about a similar type of system, where it could be increased incrementally...He told us about the hazards involved in HAARP."

Wally abruptly steered off the road and onto a plowed driveway. The locked gate of a fence stopped the truck, and signs hung on the wire mesh warned that the three were looking at a "Controlled area. It is unlawful to enter this area without permission of the Installation Commander. Sec. 21 Internal Security Act of 1950 USC 797. While on this Installation all personnel and the property under their control are subject to search." A black "No Trespassing" sign hung beside one of the warnings.

The trio jumped out of the truck to survey the site from which antennae would zap the upper reaches of the sky with more power than the human race had previously been able to throw. Beyond a line of spruce, a box like building, appearing to be about the size of an industrial warehouse or grain elevator, loomed between them and the gravel pad base for the antennae. Manning remembered that Clare Zickuhr once came up with a melodramatic name for this innocuous appearing installation - the Monster in the Wilderness. She also recalled that a scientist from Princeton, New Jersey, Dr. Richard Williams of the David Samoff research laboratory, coined a simpler name for HAARP type ionospheric heaters - skybusters. He said high energy experiments pose a danger to the upper atmosphere and could cause irreversible damage in a short time. Effects could spread around the globe. "What we do know," the physicist had added, "is that secrecy always lowers the standards of environmental accountability."

In the cautious manner of a scientist, Williams had taken his concerns to me journal Physics and Society instead of to the mass media. An equally polite reply printed in the next issue came from Caroline Herzenberg of Argonne National Laboratory who wrote as a private individual, in 1988 and again in April of 1994. She warned that the advanced type of ionospheric heater could be used as a weapons system, and its use might violate the Environmental Modification Convention ratified by the United States in 1979. The atmosphere, ionosphere and near-Earth space are included in the convention. Herzenberg called on the physics community to closely critique the HAARP technology. The analysis hasn't been done.

Manning shot a photograph of Nick shivering in the February wind, but Wally did not want to be photographed. They joked half-heartedly about climbing

over the fence and getting arrested. Clambering back into the cab of the pickup felt like a better idea.

On the drive back, Wally said he doubted if there would be the vaunted economic benefits to locals, from money spent by contractors who come in to complete the site. "It's a short term deal - one summer, two summers and the construction jobs are out of here, We were sold a bill of goods; they said there would be u lot of spinoffs. Visiting scientists. But in the contract it states that this facility is built to be remotely operated. 'Remotely operated'? The only person that's going to make out here is the fuel oil dealer, from the millions of gallons of fuel that'll be burnt there. They sold us a lot of bullshit."

There were long silences on the ride back, as if all three were reflecting on how down to earth concerns of life in the Alaskan bush contrasted with the multi-gigawatt beam which will rise from that desolate site. The high energy beam could have global consequences, according to a few independent scientists.

As if sensing that his companions in the wind buffeted truck needed a hearty laugh, Nick told about a telephone call from a reporter for a major newspaper who had heard that Nick was researching HAARP. "(The reporter) said he had talked to the people at E-Systems (the defense-contracting corporation that bought APTI), and they had heard there were rumors in Alaska about black helicopters and aliens and
black cars harassing people...guys being beat up by men in black! I said 'You know, it's funny you would hear those rumors in Washington, D.C., when I've never heard any of that in Alaska. And I live here.

'I laughed at him; I wasn't going to feed into that."

Nick shrugged off the memory of the reporter's attempts to elicit rural paranoia to quote. "He was playing games, when I look back on it."

When the reporter's article was printed, the Alaskan researchers were outraged to see what the leading sentences said;

"The rumors are buzzing across the Internet that a Pentagon physics experiment on a wind whipped tract of U.S. Air Force land in Alaska has a secret purpose - digging up bodies of UFO Aliens. Another rumor has it that men in black suits...are jumping out of a black sedan to beat up Alaskan opponents of the project. Countering these odd speculations is all in a day's work for Ramy Shanny,.."69

Playing games. The phrase stuck in Manning's mind. Is that what defense contractors and the military public relations men are doing? The PR man tells a reporter that nah, we aren't going to do any ambitious tests on the upper atmosphere, Just some megawatt stuff. If the reporter digs a bit farther, however, he or she would find a paper from Penn State, for example, It shows a graph of the hierarchy of thresholds that increasing input of radio frequency (RF) power makes in the ionosphere. Heating comes first, then "parametric instabilities and stimulated electromagnetic radiation". Pump in more RF power and you accelerate electrons until

69 John Mintz, "Pentagon Fights Secret Scenario Speculation Over Alaska Antennas", Washington Post, Apr, 17, 1995, A3.

the air glows. The next threshold is "shock fronts and stimulated ionization". The Penn State experimenters proudly say they don't know what will happen when the new super powerful HAARP instrument drives the effects past a new threshold.

* * *

When the trio returned to Wally's home, his wife sat on the sofa with the weary look of a school teacher resting after a day in the classroom. Three teenagers came in and joined her in front of a TV newscast.

While Nick telephoned the local newspaper editor to ask for a photo of the HAARP site, Jeane asked Wally if the project was still controversial among local residents. He replied that many of his neighbors scattered through the Copper River Valley had attended public meetings earlier. "They came forward one after another saying they were concerned. Then later (the HAARP organizers) came out and said they'd addressed all of the concerns, and started building the project. People still feel powerless."

They half listened to Nick's conversation. Apparently the local editor was quite impressed with what charming gentlemen the HAARP manager and his associates were.

Wally rummaged through books on the table and found one, written in 1993 by science journalist Bill Sweetman70, which one of the guys in the bush had passed on to him. Wally pointed to a section about a strange how to lie manual, and read aloud:

"The U.S. Air Force's credibility is further undermined by the fact that the Department of Defense explicitly authorizes the dissemination of misleading information in order to protect classified programs. In a supplement to the National Industrial Security Program manual, released in draft form in March, 1992, the DoD told contractors how to draft cover stories that 'must be believable and cannot reveal any information regarding the true nature of the contract'."

Wally pointed out that the next paragraph contained a comment by Steven Aftergood of the Federation of American Scientists. "Once we know that the DoD practices this type of deception, it becomes harder to discern what's for real and what is not."71

Snapping the book shut, Wally said he was already suspicious of certain individuals who leave messages on Internet files as if planting them for the gullible, and he distrusted Department of Defense public relations releases. Aftergood's comments only confirmed his gut feelings. What can a guy trust?

Outside the window, the wind hammered at the log walls. The farewells were brief.

70 Bill Sweetman. Aurora: The Pentagon's Secret Hypersonic Skyplane. Motor Books Internationa!, WI 1993.

71 Ibid.

"I think HAARP could be a disaster."
Phillip S. Callahan, Ph.D.

PART TWO

SCIENTISTS ARE CONCERNED

"Some of these (electromagnetic) emissions may be reaping irreparable damage to the ionosphere and earth, which threatens our very existence."
Dr. Elizabeth Rauscher, Particle Physicist

Chapter Eight

WHO CAN STOP THE BIG ZAPPER?
Independent scientists seek 'return to sanity'

William van Bise of Nevada is a scientist who is passionate about the safety of his children and grandchildren, and he can't understand why some high level military planners seemingly are not. According to documents about the HAARP, the military's disrespect for dynamic natural systems hasn't changed much in the decades since nuclear bombs were the favored research tool for studying Earth's geomagnetic field.

Van Bise, an electronics and biomedical engineer, says bluntly "They're suicidal!" He made the comment after reading about HAARP, the military's plan to pump unprecedented levels of radio frequency power up through the upper atmosphere to heat parts of the unpredictable ionosphere. His concern is that the experimenters admit they do not know what the outcome might be.72

Surprisingly few scientists know about ionospheric heaters. "Why in the world would anyone want to heat up the ionosphere? It's already hot enough," said one head of a large university's physics department. Co-author Manning gave him the benefit of the doubt, but as it turned out, he was not joking. Other department heads at universities with sizable atmospheric physics departments had heard about ionospheric heaters but said their knowledge of the research was vague.

The University of Alaska's geophysical department knows what an ionospheric research instrument is, because their university is directly involved in HAARP funding. But although "auroral research" involvement of the University of Alaska is played up in press releases, HAARP's internal documents say the goal of the experiments is to control ionospheric processes so that they can be exploited by the Department of Defense.

Concerned scientists such as van Bise are doubly discouraged, because the people who want to control the electrojet or make "nuclear-sized explosions"73 or an "artificial cyclotron"74 in the upper atmosphere are the most difficult to stop. Traditionally they have held the biggest handfuls of taxpayers' money. Their power base includes mega-corporation defense contractors and their lobbyists. Few physicists are willing to risk their livelihood (government contracts) by contradicting these people.

72 Telephone conversations Between William van Bise and co-author of Angels Don't Play This HAARP Jeane Manning, May 1995.
73 U.S. Patent No. 4,873,928 "Nuclear-sized Explosions without Radiation".
74 U.S. Patent No. 4,712,155, "Method and Apparatus for Creating an Artificial Electron Cyclotron", among patents assigned to APTI.

WHISTLE-BLOWERS

Elizabeth Rauscher has a Ph.D., a long and impressive career in high energy physics, and has been published in prestigious science journals and books.75 Yet her warnings apparently go unheeded. For example, in 1984 she presented scientific findings at a Pentagon briefing and then tried to address the colonels and generals person to person about global environmental issues. They refused to respond to her blunt question, "Don't you worry about your children and grandkids?"

Seven years ago Rauscher and her partner William van Bise wrote a paper76 that discussed the earth's magnetic field emanations in technical language, but ended with a strongly worded warning.

Earth and life forms on it vibrate and resonate in harmony, they noted; radiant energy from the sun and materials and vibrations of the earth support life. "Is there a symbiosis between the earth and the life forms upon it?" After mentioning chemical and radioactive pollution of our life support systems, they injected a less-publicized concern, "some of the electromagnetic waves generated by man may have global significance..."

DAMAGE TO IONOSPHERE

The paper had discussed natural sources of electromagnetic waves such as Earth's mechanical rotation, earthquake and volcanic activities, solar wind and solar "broadband noise activity". Manmade sources, the two experts said, are disturbing the harmony. "Some of these emissions may be reaping irreparable damage to the ionosphere and earth which, in turn, threatens our very existence."

Societies and nations must examine what we are doing and develop a new awareness, the two scientists warned, or destruction of life will inevitably result. As if predicting the goals of HAARP, they noted that most recent technologies have been aimed at shielding people from nature - "to 'conquer' and control her, while designing ever more dangerous weapons systems with which to more efficiently strip all life from the planet."

Rauscher and van Bise ended the paper with a suggestion that society examine why we have moved toward such insane motivation, and then go forward to again pursue mutual life enhancement and sanity.

75 Relevant publications include, "Application of Soliton Physics to Plasma-MHD and Superconductivity -BCS: Theoretical Implications for Primary Energy" report prepared for Primary Energy Technology LA; "Ambient Electromagnetic Fields as Possible Seismic and Volcanic Precursors', by W.L., Van Bise and E.A. Rauscher, in Electromagnetic Phenomena Related to Earthquake Prediction edited by M. Hayakawa and Y Fujinawa, Terra Scientific Publishing Co. Tokyo; "ELF Signatures Arising from Space Vehicle Disturbances of the Ionosphere" by E.A. Rauscher and W.L. Van Bise, unpublished paper from Electromagnetic Signal Laboratory, Golden

76 "Fundamental Excitatory Modes of the Earth and Earth-Ionosphere Resonant Cavity" by Dr. Elizabeth A. Rauscher and William L. Van Bise of Technic Research Laboratories, Reno, Nevada, article published in The Proceedings of the 1988 International Tesla Symposium.

BUBBLE OF ELECTRIC PARTICLES

In May of 1995 Dr. Rauscher was asked to comment specifically on HAARP. "You're pumping tremendous energy into an extremely delicate molecular configuration that comprises these multi-layers we call the ionosphere," she replied. The ionosphere is prone to catalytic reactions. In other words, she explained, if a small part is changed, a major change in the ionosphere can happen.77

In describing the ionosphere as a delicately balanced system, Dr. Rauscher shared her mental picture of it - a soap bubble like sphere surrounding Earth's atmosphere, with movements swirling over the surface of the bubble.

"If you've ever watched a large bubble closely, you see these rainbow-like patterns flowing over it. Then you see a black spot where the wavelengths of light are so short that they can't show the bubble. But it hasn't burst yet. Then a hole forms, and then it pops."

Project planners who experiment with the ionosphere do not agree with her model of what could happen, Rauscher said. "But I strongly believe the ionosphere works that way."

When human activities make massive holes in the real ionosphere, the holes at the north and south poles migrate just like the shapes on the bubble. This is how a dramatic loss of the ozone layer happens to appear over Australia, for example. There have even been sun watches (ozone-hole watches) over high altitude states such as Nevada, where Rauscher and Van Bise live.

"(Decision makers) know the cause - the SST (supersonic transport) and the space shuttle and its Russian equivalent. I have the Russian report that calculates how many space shuttles it will take to destroy the ionosphere."

In a corresponding situation at a lower altitude, while anyone who ever used a spray propellant is made to feel guilty about holes in the ozone layer, scientists continue to send up rockets and launch satellites to study the ozone layer! Each bum of rocket fuel destroys another part of a percent of the ozone layer.

BRAGGING ABOUT PUNCTURES

Returning to the higher altitudes, we see that science journals in the early 1980's reported openly on the ionospheric disruption caused by scientists themselves. But how many outside of their specialty read papers on topics such as the High-Energy Astrophysical Observatories (HEAO) Hole in the lonosphere78. The launch of one of NASA's High-Energy Astrophysical Observatories, on Sept. 20, 1979, for example, by an Atlas-Centaur rocket "produced an extraordinary opportunity to monitor a large scale, artificially induced depletion of the earth'

77 Jeane Manning's May 1995 interviews with Dr. Elizabeth Rauscher and William van Btse.
78 Michael Mendilio, Donald Rote and Paul Bernhardt, "Preliminary Report on the HEAO Hole in the Ionosphere" The American Geophysical Union, 1980.

ionosphere" the scientists exulted. They were being paid to study the impact of repeated rocket exhaust activity in the ionosphere. Data showed the "HEAO hole followed the rocket's ground track, extending at least 2,000 km - and probably 3,000 km - to the east of Cape Canaveral. It's north-south extent spanned 600 to 1,000 km, and thus the overall disturbed region totaled 1 to 3 million km in effective surface area." For about three hours the depleted area centered on the rocket's path, then moved northward. Within hours, evidence of the hole disappeared from the "affected region".

SLICING THE IONOSPHERE

David Yarrow of Albany, New York, is a researcher with a background in electronics, and has spent countless hours exchanging ideas with physicist Dr. Daniel Winter, now of Waynesville, North Carolina. Yarrow puts Winter's insights into simpler terms - "Dan Winter...explained HAARP high frequency emissions can couple (heterodyne, in technical terms) with longwave (low frequency, or ELF) pulses the Earth grid uses to distribute information as vibrations to synchronize dances of life in the biosphere. Dan terms this geomagnetic action 'Earth's information bloodstream'. Likely, coupling of HAARP HF (high-frequency) with natural ELF (extremely low frequency) can cause a dimension of unplanned, unsuspected side effects."

In his own words, David Yarrow described possible interactions of HAARP radiations with the ionosphere and Earth's magnetic grid:

"HAARP will not burn 'holes' in the ionosphere. That is a dangerous understatement of what HAARP's giant gigawatt beam will do. Earth is spinning relative to thin electric shells of the multilayer membrane of 'ionospheres' that absorb and shield Earth's surface from intense solar radiation, including charged particle storms in solar winds erupting from the sun. Earth's axial spin means that HAARP - in a burst lasting more than a few minutes - will slice through the ionosphere like a microwave knife. This produces not a 'hole', but a long tear - an incision." 79

"An acute concern here is Earth's thin shell of ionized molecular oxygen - the ozone layer..." 80

CRUDELY PLUCKING THE STRINGS

"Second concept: As Earth rotates, HAARP will slice across geomagnetic flux...a donut-shaped spool of magnetic strings - like longitude meridians (on maps). HAARP may not 'cut' these strings in Gala's magnetic mantle, but will pulse each thread with harsh, out-of-harmony high frequencies. These noisy impulses will vibrate geomagnetic flux lines, sending vibrations all through the geomagnetic web, even as a single thunderstorm's lightning flashes emit pulses felt globally by sensitive sensors. "81

79 Letter from David Yarrow to Gar Smith, Earth Island Journal, August 18, 1995,
80 ibid.
81 Ibid.

"The image comes to mind of a spider on its web. An insect lands, and the web's vibrations alert the spider to possible prey. HAARP will be a man-made microwave finger poking at the web, sending out confusing signals, if not tearing holes in the threads. "82

"Effects of this interference with symphonies of Gala's geomagnetic harp are unknown, and I suspect barely thought of. Even if thought of, the intent (of HAARP) is to learn to exploit any effects, not to play in tune to global symphonies. "83

'CORRECT' WORDS

What is the condition of the ionosphere, after the rocket scientists went ahead with 15 years of burning through it with rocket exhaust and, puny in comparison, the early generation of ionospheric heaters? Is it damaged?

Manning found that scientists dislike the word "damaged"; it's too strong, one ionospheric physicist said. "We say 'disturbed'...you know it is going to be the same as it was before. If you lose your leg, that's damage, but if it is just cut, that's not damage."

The head of his department set the tone for this attitude. Although there were ionospheric specialists on his staff, he told Manning that he has neither the interest nor the time to get too deeply involved in the topic of ionospheric heaters. "Why are you interested (in HAARP)?"

The journalist replied that she had some questions about a reported multiplying effect from the new ionospheric instrument, and the tone of his reply was amused putdown. "If you're concerned about the ionosphere over Vancouver vanishing..."

"I'm not trying to be an alarmist..."

"It sounded like it," he said.

No wonder the media doesn't push environmental topics, the reporter thought.

UNREPENTANT ALARMIST

That department head would not welcome the views of Paul Schaefer, who sounds an alarm vigorously. His degree is in electrical engineering and he spent four years building nuclear weapons. "But most of the theories that we have been taught by scientists to believe in seem to be falling apart," he says.84

82 Letter from David Yarrow to Gar Smith, Earth Island Journal, August 18,1995.
83 Ibid.
84 Letter to Jeane Manning from Paul Schaefer, Feb. 1995.

In a publication titled, "Energy and Our Earth", he synthesizes research about imbalances caused by the industrial and atomic age, especially by radiation of large numbers of tiny, high velocity particles "like very small spinning tops into our environment.These highly energetic particles radiate into the earth and its atmosphere, disrupting the natural balance, in a chain reaction fashion as they desperately seek a balance with their surroundings." Such particles accumulate in the polar region during winter. "When polar spring occurs, the repulsive effect of the sun's energy causes the entire mass of negatively charged particles to move toward
the earth, creating a hole in the ozone layer."

The unnatural levels of motion of highly energetic particles in the atmosphere and in radiation belts surrounding Earth is the villain in the weather disruptions, according to this model, which describes an Earth discharging its buildup of heat, relieving stress and regaining a balanced condition through earthquakes and volcanic action.85 Among the technologies which produce clouds of particles - unnaturally elevated in charge - are transmission lines, electronic warfare systems, command, control and communications systems for space flights and testing of Star Wars weapon systems.

'FEVERISH' EARTH

"One might compare the abnormal energetic state of the Earth and its atmosphere to a car battery which has become overcharged with the normal flow of energy jammed up, resulting in hot spots, electrical arcing, physical cracks and general turbulence as the pent-up energy tries to find some place to go."

In a second analogy, Schaefer says "Unless we desire the death of our planet, we must end the production of unstable particles which are generating the earth's fever. A first priority to prevent this disaster would be to shut down all nuclear power plants and end the testing of atomic weapons, electronic warfare and 'Star Wars'."

William van Bise and Elizabeth Rauscher note that orbiting hardware is praised as a way to study the ozone layer, but each time a space shuttle burns its way through the sky it destroys another increment of the ionosphere, just as every meteorite does. Then as if rocket exhausts have not done enough, space capsules have ejected chemicals that dramatically interact with charged particles.

"They light up the aurora borealis (artificially), but when they light it up completely is when they kill off the ionospheric layers."

Meanwhile, the military builds its biggest ionospheric heater yet, to deliberately create more instabilities in a huge plasma layer - the ionosphere - and to rev up the energy level of charged particles.

85 Information from Paul Schaefer, Kansas City, MO 64110.

"We can artificially influence the earth's aurora with a relatively small amount of energy, and we know that outbursts of the northern lights do change weather patterns." Gary Lockhart, author of The Weather Companion86

"If the ionosphere is greatly disturbed, the atmosphere below is subsequently disturbed."
Charles A. Yost87

Chapter Nine

TESLA'S WEATHER APPRENTICES

Archimedes (287-212 B.C.) started a Long tradition of ambitious engineers who want to make their mark on the world. "Give me a long enough lever and a place to stand on and I will move the Earth," Archimedes said. Fortunately, he never found that big a tool. More than twenty centuries later, his spirit lives on in the military's engineers. They would like to at least be able to move the upper-atmosphere jet stream, changing global weather to one country's advantage.

Is electromagnetism that tool? Two scientists from the Stanford University Radioscience Laboratory, H.C. Chang and U.S. Iman, are among the experts who offer evidence of what our technology can do to affect the sky by making waves on earth.They have published papers about electron precipitation from the magnetosphere (the outer belts of charged particles which stream toward Earth's magnetic poles) caused by man-made very low frequency electromagnetic waves.88 "These precipitated particles can produce secondary ionization, emit X-rays, and cause significant perturbation in the lower ionosphere."

In 1974 Dr. Robert Helliwell and John Katsufrakis of Stanford University's radio science laboratory showed that very low frequency radio waves can vibrate the magnetosphere. In the Antarctic, with a 20km antenna and five kiloHertz transmitter, they learned that the magnetosphere can be modulated to cause high energy particles to cascade into Earth's atmosphere. By turning the signal on or off, they could stop the flow of energetic particles.

WEATHER CONTROL

Avalanches of energy dislodged by such radio waves could hit us hard. "The theoretical implication suggested by their work is that global weather control can be attained by the injection of relatively small 'signals' into the Van Allen belts (radiation belts around Earth) - something like a super-transistor effect," said Frederic Jueneman. The columnist for Industrial Research magazine speculated further, "If Tesla's resonance effects, as shown by the Stanford team, can control enormous

86 Gary Lockhart. "Ancient Ham Making". The Weather Companion, p. 199, Wiley & Sons Inc. NY.
87 Charles A. Yost, "Electrical Forces Applied to Basic Weather Phenomena", paper presented at 1992 International Aerospace and Ground Conference on Lightning and Static Electricity.
88 H.C. Chang and U.S.Iman, "Quasi-Relativistic Electron Precipitation due to Interactions with Coherent VLF Waves in the Magnetosphere" Journal of Geophysical Research, Jan. 1, 1983.

energies by minuscule triggering signals, then by an extension of this principle we should be able to affect the field environment of the very stars in the sky...With godlike arrogance, we someday may yet direct the stars in their courses."89

The question is will that knowledge be used by war-oriented or biosphere-oriented scientists?

A 1977 editorial in Saturday Review warned about weather warfare and called it a moral issue, saying "If the world is in for a long spell of crippling weather, then we are fools and monsters if we don't get together for the purpose of mounting a response as though our life depended on it - as indeed it does."90

A series of weather disasters began in 1960, according to a CIA report mentioned in the editorial, but at the time climatologists couldn't look ahead and see that droughts, floods and abnormal temperatures would continue beyond that decade. As if natural disasters weren't bad enough, the CIA reported that national governments were already able to manipulate weather for military purposes. The editorialist had an impertinent thought: "It is difficult to read the CIA report without wondering whether some of the climatic aberrations in recent years may not have been part of military experimental programs."

Saturday Review's 1977 editorial used strong words to describe the desensitization of the public and decision makers - a deadening of moral indignation that came from seeing an endless procession of super-weapons. That process was described as mass insanity. "If the collective conscience does not now respond, then all our philosophy and religion and education,..have been abstract, irrelevant, futile."

The collective conscience was silent, however, and by 1995 the military has had another 18 years to work on weather warfare methods, which it euphemistically calls weather modification. For example, rainmaking technology was taken for a few test rides in Vietnam. The DoD sampled lightning and hurricane-manipulation studies in Project Skyfire and Project Stormfury. And they looked at some complicated technologies that would give big effects. Lowell Ponte, author of The Cooling, says the military studied both lasers and chemicals which they figured could damage the ozone layer over an enemy. Looking at ways to cause earthquakes, as well as to detect them, was part of the project code named Prime Argus, decades ago. The money for that came from the Defense Advanced Research Projects Agency (DARPA, now under the acronym ARPA.)

In 1993 Air Force Chief of staff General Merrill McPeak told a meeting of the U.S. Space Foundation that those opposing a larger military role in space must reconsider their viewpoint. He emphasized that the country must develop new systems so that it can control the space environment in the future. He and other Air Force officials wouldn't say what they had in mind, but said that new systems are more of a political question than a technological challenge.91

89 Frederic Jueneman, industrial Research magazine Feb. 1974, quoted by Margaret Cheney, Tesla: Man Out of Time, p. 287.

90 "Weather Modification", unsigned editorial, Saturday Review 2 5 77, p, 4.

91 Neff Hudson an Andrew Lawler, "USAF Chief Calls for Space Defense Upgrades", Space News Apr. 19-25 1993.

The next year the Air Force revealed a bit more - its Spacecast 2020 master plan includes weather control as a possible new weapons initiative. Defense News excerpted the report. Under "weather control", the article said that scientists have experimented with weather control since the 1940's, but Spacecast 2020 noted that "using environmental modification techniques to destroy, damage or injure another state are prohibited". Having said that, the Air Force claimed that advances in technology "compels a reexamination of this sensitive and potentially risky topic."92

What could the new technology do? For one, military forces may have the tool for zapping a hole through a cloud in order to target their enemy. That would be costly and risky, but "the potential benefits for national security could be even higher".

Air Force officials said the weather control section of their report is classified and won't be released.

40 YEARS OF ZAPPING THE SKY?

As far back as 1958, the chief White House advisor on weather modification, Captain Howard T. Orville, said the U.S. DoD was studying "ways to manipulate the charges of the earth and sky and so affect the weather" by using an electronic beam to ionize or deionize the atmosphere over a given area.93

In 1966, Professor Gordon J. F. MacDonald, associate director of the Institute of Geophysics and Planetary Physics at the University of California, Los Angeles, was a member of the President's Science Advisory Committee, and later a member of the President's Council on Environmental Quality. He published papers on the use of environmental control technologies for military purposes. MacDonald made a revealing comment:

"The key to geophysical warfare is the identification of environmental instabilities to which the addition of a small amount of energy would release vastly greater amounts of energy. "94

MacDonald had a number of ideas for using the environment as a weapon system and he contributed to what was, at the time, the dream of a futurist. When he wrote his chapter, "How To Wreck The Environment", for the book Unless Peace Comes.95 he was not kidding around. In the text he describes the use of weather manipulation, climate modification, polar ice cap melting or destabilization, ozone depletion techniques, earthquake engineering, ocean wave control and brain wave manipulation utilizing the planet's energy fields. He also said that these types of

92 "Air Force Space Master Plan Envisions Weather Control", Defense News, Sept 26-Oct. 2, 1994.
93 Between Two Ages: America's Role in the Technetronic Era, by Zbigniew Brzezinski, Penguin Books, Mass. 1976.
94 Unless Peace Comes. A Scientific Forecast of New Weapons. Edited By Nigel Calder, Geophysical Warfare, How to Wreak the Environment by Gordon J. F. MacDonald, pges 181-205, 1968. (provided by: International Committee for The Convention Against Offensive Microwave Weapons)
95 Ibid.

weapons would be developed and, when used, would be virtually undetectable by their victims. He was not some wire haired fanatic when he made these observations in 1966 - he had the credentials of a world recognized scientist. What his futuristic concepts became, are the things which projects like HAARP are made of...

U.S. Congress' subcommittee hearings on Oceans and International Environment looked into military weather and climate modification conducted in the early 1970's. "What emerged was an awesome picture of far ranging research and experimentation by the DoD into ways environmental tampering could be used as a weapon," said Lowell Ponte.96

The revealed secrets surprised legislators. Would an inquiry into the state of the art of electromagnetic manipulation surprise lawmakers today? They may find out that technologies developed out of the HAARP experiments in Alaska could deliver
on Gordon MacDonald's vision, because leading edge scientists are describing global weather as not only air pressure and thermal systems, but also as an electrical system.

'SMALL INPUT, BIG EFFECT'

A point to remember is that the ionosphere is an active electrical shield protecting the planet from the constant bombardment of high-energy particles from space. This conducting plasma, along with Earth's magnetic field, traps the electrical plasma of space and holds it back from going directly to the earth's surface, says Charles Yost of Dynamic Systems, Leicester, North Carolina. HAARP zaps the ionosphere where it is relatively unstable.

"If the ionosphere is greatly disturbed, the atmosphere below is subsequently disturbed. "97

It is reasonable to expect Earth's relatively thin atmosphere of insulating gas (water vapor) to be mechanically pushed and pulled by the surrounding electrical forces, Yost says. Electrical currents in the ionosphere are said to be 100 times larger than those produced lower down at any moment by all the world's thunderstorms. Yost concludes that electrical forces should be included along with thermodynamics, gravity waves and effects of Earth's rotation, as causes of weather variations. According to his experiments and analyses, ionospheric currents and changing magnetic fields in the ionosphere must produce "global oscillating gradients" that go down as far as the ground.

A connection between manmade electromagnetic forces and the weather showed up in a paper Yost wrote about lightning and earth harmonics. The apparent global interaction of electrical storms prompted Yost to take another look at how clouds form. He found that electrostatic forces can influence the dynamics of cumulus clouds. On a copy of his paper that Yost sent to Jeane Manning, he wrote "man can make these levels of force artificially".

96 The Cooling, by Lowell Ponte. Prentice-Hall inc. NJ 1976.
97 Charles A. Yost, "Electrical Forces Applied to Basic Weather Phenomena", Proceedings of the 1992 International Aerospace and Ground Conference on Lightning and Static Electricity, Atlantic City, 1992. Document available through Nat'l Technical Information Service, Springfield, Virginia, 22161.

In its early stages, a currtulo nimbus cloud's transition layer is in a delicately balanced condition of pressure, temperature and water vapor content, according to Yost, "such that minor change triggers condensation. A radiation particle, a localized electric field transient or a slight local thermal disturbance might trigger the change of state," Yost said.

The first two factors may help explain strange extremes of weather over industrialized/electrified/atomic-powered North America. For one thing, the unnatural 60 hz electromagnetic fluctuations from a dense web of powerlines have entrained the vibrations of the ionosphere in some places. Again, Tesla's favorite phenomenon - resonance - explains how a relatively small force can have large effects.

Dr. Robert O. Becker explains how one man-made electrical effect - power line harmonic resonance - causes fallout of charged particles from the Van Allen (radiation) belts, and how the falling ions cause ice crystals (which precipitate rain clouds).98

What about HAARP? Energy blasted upward from an ionospheric heater is not much compared to the total in the ionosphere, but HAARP documents admit that thousandfold greater amounts of energy can be released in the ionosphere than injected. As with MacDonald's "key to geophysical warfare", "nonlinear" effects (described in the literature about the ionospheric heater) mean small input and large output.

At a 1983 science conference in Atlanta, one of the presentations held clues about where engineers and physicists were heading with that small input/ large output goal.99 E.E. Richards talked about the above mentioned Stanford University experiment in beaming VLF radio waves to the magnetosphere. The signals followed the curves of the magnetic field and swung back to Earth. They were detected halfway around the world away from their origin in California. In some cases the signals were amplified a thousand times.

What strengthens these radio signals a thousandfold? According to Richards' research, the signals gather energy from electrons within the Van Allen radiation belts which surround Earth's atmosphere. Each time one of the world's fifty or so VLF (3 to 30 KHz) transmitters sends out its signal; streams of excited particles from the outermost regions of the magnetosphere cascade into our atmosphere. "Even low frequency (LF: 30-300 KHz) radio waves leak into the upper layers, causing this same phenomenon. The injection of small signals into the energy belts creates something like a super-transistor effect, altering the motion of free electrons thousands of miles out from the earth's surface. This Tesla Magnifying Resonance effect can control enormous energies by minuscule triggering signals." As did Nikola Tesla, Richards works with the principle of resonance.

98 Hobert O. BecKer, The Body Electric, William Morrow NY 1985.
99 E.E. Richards, "Earth Power Spectrum", Proceedings, The Second International Symposium on Non-Conventional Energy Technology, p. 136, Cadake Publishing, PO Box 1490, Clayton, Georgia 30525.

In a recent interview[100], Richards explained the super-transistor effect which others also describe as an avalanche of electrons. At certain frequencies and at a certain energetic threshold, there is a large energy transfer between levels in the upper atmosphere.

EFFECTS REACH THE GROUND

How far down from the magnetosphere or ionosphere through the atmosphere can such an "avalanche" come? Surprisingly, in various locations Richards found effects reaching the earth. The first time he saw this recorded on scientific instruments, he was living at 8,000 feet above sea level in central-west New Mexico where the air was clear and electromagnetically quiet. That day there was
a large buildup of electrical energy in the atmosphere very close to the surface of the earth, but not a thunderstorm condition. As the non-lightning electrical condition passed through the area, Richards and his associates monitored surprisingly large oscillations (vibrations) on their antennae array and learned at what frequencies the local atmosphere readily vibrates. The vibrations charged capacitors (energy storage units) to a rather high voltage.

One quiet March day while monitoring the Russian and American ELF transmissions, they tried running an antenna array (twisted wires) a mile along the ground, and received unexpectedly strong and continuous signals. Briefly, the findings and further monitoring were a springboard for discovering correlations with harmonic interactions between the planets. They also learned how nature handles the influx of cosmic energy towards earth's surface through the auroral vibrations. The researchers saw how energies could be stored within the magnetosphere, and "we have a mechanism, confirming Tesla, for drawing this energy into the lower atmospheric cavity."

'COUPLING' BETWEEN IONOSPHERE AND WEATHER

While Richards' interest in their work was to find a usable clean- energy source for the inhabitants of Earth, physicists at Stanford University worked on a government funded project. They wanted to amplify waves in the magnetosphere for the goal of global communication at lower frequencies.101

The authors of this book have a different aim - to understand the ramifications of the high-level experiments. Could it affect our weather? The atmospheric physicists we have spoken to are vague in their answers.

The paper by Richards gives strong clues. Recent scientific evidence suggests that strong electrical coupling exists between the ionosphere and lower atmosphere, he said. Large scale horizontal electric fields move down from the magnetosphere and ionosphere, with little loss of amplitude, to around ten kilometers above the earth, he said, "The total potential voltage drop across regions like the polar caps and the auroral ionosphere can be a significant fraction of the average ionospheric potential with respect to the earth..."

100 E.E. Richards, conversation with Jeane Manning, May 1995,

101 "VLF: Getting Panicles Excited," Science News, Dec, 18 and 25, 1982, pg. 392.

What this means to us is that there is a powerful electrical connection between the ionosphere and the part of the atmosphere where our weather comes onstage, the lower atmosphere. Furthermore, scientific theories describe how the electrical energetic levels of the atmosphere are connected to cloud processes. 102

E.E. Richards reported the following conclusions from his search of the literature. "The conducting ionosphere can affect the instability by short circuiting the electrostatic part of the earth electric field, thus requiring less energy to release charge from the upper layers. These auroral arcs result in an acceleration process called ring currents, precessing along the magnetic field lines that connect the magnetotail with the ionosphere. This is the primary supply of energy for the auroras..."

He explains how electrostatic waves stimulate the ionosphere, allowing the powerful radiations described above to flow in from space. He adds that observations from satellites and from the ground tend to confirm Nikola Tesla's claims about his Colorado Springs experiments. "With his oscillator he was able to stimulate the ionosphere through high voltage, and then allow the cascading of the upper layer currents, thereby simulating the natural action of the aurora and also of lightning."

Tesla was one of several inventors cited by E.E. Richards who were on the path to using the "abundant energy source that surrounds us each minute". Humanity lives within the cosmically stimulated bubble of the magnetosphere, Richards said, and upon the twirling spherical generator that is the earth. In the spirit of previous generations of scientists called natural philosophers, he is awed by the beauty of the system. In our experience, this appreciation of the processes of the universe often comes to independent researchers who aim to work in harmony with nature. In other words, resonance seems a gentler way to transfer power than direct zapping.

The weather can be changed using electrostatics. A discovery allowing the manipulation of weather was made by Elate Intelligent Technologies, Incorporated, a small Russian company. They found a way to fine tune weather patterns over a 200 mile range. The "system consists of dozens of aerials, each 25 feet tall, that discharge electrical energy upward to react with ions in the air". 103 These aerials are connected to a computer system and power supply which is controlled by an operator to create the desired effects.

Lev Pokhmelnykh is the company founder and a respected physicist, specializing in "electrostatics". Pokhmelnykh demonstrated the system for the Wall Street Journal reporter with startling results. He used the system to clear clouds in an otherwise dreary day. The technology points out how little we know about such effects and the way weather can be manipulated by people.

102 Ralph Markson and Michael Muir, "Solar Wind Control of the Earth's Electrical Field", Science, May 30, 1980, Vol. 208 No. 4447.

103 Adi Ignatius, "Rain, Rain, Go Away, Go Soak Someone Less Willing to Pay; Moscow Firm Offers 'Weather Made to Order'; Our Man Requests Three Days", The Wall Street Journal, October 2, 1992, pg. A1 & A11.

There was another unexpected discovery of an atmospheric phenomenon in 1993. It was found that the Earth's lower atmosphere contains "rivers of water vapor rivaling the Amazon in the massiveness of their flow". 104 Reginald E. Newell of the Massachusetts Institute of Technology reported that these vapor rivers were the main mechanism for moving water from the equatorial regions of the earth to the poles. However, he did not expect to find that the water vapor was contained in narrow bands which are 420 to 480 miles wide and up to 4,800 miles long. These bands are about 1.9 miles above the earth, and have flow volumes of 165 million kilograms of water per second. The observers found that there are five atmospheric rivers in the Northern Hemisphere and five in the Southern Hemisphere, each with these typical flow rates.

We speculate that if HAARP were located at the right place, it could be used to deflect these flows in a way that alter weather patterns. This is another concern which should be considered in the operation of HAARP - a fact not known before HAARP was planned.

BEAMING ABOUT TESLA'S ELECTRIC GUN

Weapons-oriented researchers, on the other hand, are quite interested in other, more invasive, aspects of Tesla's knowledge besides resonance, such as the "explosive channelization of air" which he is said to have learned about this phenomena as he injected successive pulses of energy along the same channel, According to Dr. J.F.X.Daum, Ken Corum and Dr. James Corum, Teste experimented with atmospheric tunneling. By the 3930's Teste had invented a "channelized beam composed of a coherent burst of electrically charged material particles" moving as fast as the speed of light. The three scientists calculated that such a particle beam would easily pierce armored vehicles.105

COULD THEY SHORT CIRCUIT EARTH?

Earth as a spherical electrical system is a fairly well accepted model. However, those experimenters who want to make unnatural power connections between parts of this system might not be thinking of possible consequences. Electrical motors and generators can be caused to wobble when their circuits are affected. Could human activities cause a significant change in a planet's electrical circuit or electrical field? A quote plucked from a lengthy paper in the respected journal Science deals with manmade ionization from radioactive material, but perhaps it could also be studied with HAARP-type skybusters in mind:

"For example, while changes in the earth's electric field resulting f,om a solar flare modulating conductivity may have only a barely detectable effect on meteorology, the situation may be different in regard to electric field changes caused by manmade ionization,,."106

104 Kathy Sawyer, "Climatology: Space Data Indicate Rivers in the Sky,", The Washington Post, Science Notebook, Jan. 25, 1993.
105 "Thoughts on Tesla's Particle Beam Technology", presentation by Or. J.F.X. Daum, Ken Corum and Dr. James Corum to International Tesla Society.
106 Ralph Markson and Michael Muir, "Solar Wind Control of the Earth's Electrical Field", Science, May 30,1980, Vol. 208 No. 4447, p. 989.

Meteorology, of course, is the study of the atmosphere and weather. Ionization is what happens when a higher level of power is zapped into atoms and knocks electrons off the atoms. The resulting charged particles are the stuff of HAARP. "One took at the weather should tell us that we are on the wrong path," says Paul Schaefer, electrical engineer, commenting on HAARP-type technologies.

An administrator of the National Oceanic and Atmospheric Administration once said, "It is not possible to draw clear distinctions between research and technological development on weather modification for hostile and non-hostile purposes."

"Our planetary environment is becoming progressively more energetic, with unusual activity, like mysterious bursts of energy that mimic radio waves from atomic explosions, being detected in the atmosphere..."
Paul Schaefer, engineer and researcher, Kansas City MO.

"The Earth is becoming a disturbed planet, and man is doing the disturbing."
Acres USA

Chapter Ten

PUTTING THE HEAT ON MOM EARTH

The journey toward understanding "Tesla technology" had taken Jeane Manning to science conferences in Germany in 1987 and Switzerland two years later.
At both meetings, she heard an American astrophysicist, Adam Trombly, give eloquent speeches on environmental issues. A protege of the late Buckminster Fuller, Trombly had founded the non-profit Project Earth through which he worked with other scientists toward understanding global ecosystems - the big picture.

In July of 1995, Manning telephoned Trombly at the Institute of Advanced Studies at Aspen, Colorado, to ask about possible effects of the HAARP-type experiments which would make artificial electromagnetic storms above the earth - experiments which would lift parts of the ionosphere and would literally expand those areas while accelerating more high energy particles in the already energetic ionosphere.

HAARP would add more energy to a global system that is already stretched, replied the scientist. By "stretched", he meant hyperstimulated by particle flows from the sun. To put it into perspective, think of our planet as a somewhat wobbly dynamo motoring around a sun. Our sun is an aging star and getting unreliable, to say the least. Through telescopes, people have been eying sunspots since Galileo's time, and learned that magnetic storms above Earth and the northern lights are connected to those dark patches on the sun. In recent decades our sun has been throwing major fits
- spewing larger than usual bursts of high energy particles into our planet's systems. Some of this hyperactivity started before men got into the act with nuclear explosions. With an effect similar to solar flares, manmade Tadiation from atomic technologies adds to the crossfire of super-speedy particles in which we live.

It's difficult to tell how long the sun has been going through a hyperactive cycle, because sensitive scientific instruments to measure "coronal hole activity" on the sun are fairly new. A thorough study has only been possible in the last couple of decades. (The corona is the super-hot halo of plasma around the sun.)

Judging by the increase in the geomagnetic "noise" (disturbances in the earth's magnetic field) heard on earth, some scientists speculate that the sun may be approaching a time of change. Whether or not the sun goes through a time of

spectacular hot flashes in the near future and throws even more particles at Earth, the fact is that Earth is being affected right now.

EARTH GETS HOTTER

"Eleven years ago we were predicting ground heating," Trombly said, "...the earth actually getting hotter inductively."

(To understand what he was talking about, Manning later had to turn to a dictionary of science. Induction heating means that electrically conducting material - in this case, materials in the earth - is heated as a result of the electric current induced in it by an alternating magnetic field (due to interaction with the sun and even with the moon). She began to see how Earth's magnetic field could be in danger of breaking down and opening the way for a pole shift. Heat is an enemy to the strength of a magnet. (The fact that the earth is getting hotter was reported in the New York Times in 1991. The article said that Arctic ice had decreased by 2% in only a nine year period.) 107

Trombly was saying that before men detonated underground nuclear tests or did anything else that was massively invasive to the state of balance of Earth's systems, we were already on an unstable planet. When will Earth be electrodynamically saturated with an "energy burden" from the sun? "The system is already at near-terminal capacity in our opinion," said Trombly.

Then HAARP comes along..."a project that could further destabilize an earth that's already an unstable environment", as Trombly put it. The thought of a planet whose systems are overloaded, and which may soon reach the point where it couldn't take any more high-energy particles, was sobering. Manning thought about the enthusiastic attitude of the scientists and military contractors whom the NO HAARP group called "the big boys with the big toys". Those big time experimenters admit that they don't know what will happen when they push ionospheric heating experiments into the next level of effects. They seem to be excited about the macho adventure of passing the next "threshold of effects" in the ionosphere, and do not hesitate to pump gigawatts of power up there and intentionally accelerate particles in the ionosphere to "relativistic" speeds - nearly the speed of light. Why would they be so irresponsible?

Trombly answered in a word - denial. The decision makers are not being malicious, Trombly said; they are just refusing to face the facts about how flimsy is the web of life on Earth. "We do not want to admit that we are in a situation that is tenuous, where there are gradual (planetary) processes that are punctuated by catastrophic processes."

Specialists tend to look at their own experiments as isolated incidents, without seeing long term effects on larger systems, Trombly noted. As Manning heard him talk about lack of respect for Earth's systems, she thought about a

107 "Receding Ice on Arctic Sea Hints at Global Warming" by William K. Stevens, New York Times, July 4, 1991, pg. A11.

professor she had interviewed who was connected with HAARP. The professor's enthusiasm encompassed the possibility of HAARP creating a massive airglow in the ionosphere, and of giving his doctoral students some technical challenges so they could get their Ph.D.s.

Could their experiments set off a catastrophe? The research of the Institute for Advanced Studies looks into such questions. For example, earth monitoring with sensitive instruments revealed a connection between underground nuclear tests and earthquakes.

While nuclear explosions zap more high energy particles into our global environment, HAARP specifically gives a sharp jab to the ionosphere. Trombly is concerned about atmospheric storms "once you create a point-like stress differential... What is it going to do in terms of gating influx from particles, from the magnetosphere down?...we already have real problems with particle influx into this planet, now."

Pole Shift

The Soviets considered the impact of electromagnetic "smog" on living organisms. They concluded that because living organisms evolved under the influence of the Earth's micropulsations in the magnetic field, changes in these pulsations might alter fundamental body rhythms, including the rate that DNA replicates. From the Soviet perspective, electromagnetic pulses can influence everything from health to behavior. Russian scientists are also concerned that continued increases in electromagnetic radiations could contribute to a premature and cataclysmic reversal or position shift of Earth's poles, 108

Western scientists have noted that chemical changes occur which can account for some effects of electromagnetic pulses on living systems. James D. Hays of Columbia University found microorganism extinctions corresponding to pole reversals. He believes that, in some way, these living creatures used the magnetic fields of the earth. When the fields were altered by reversal, they died,109 This issue was also explored by one of the country's leaders in bioelectric science, Robert O. Becker, M.D. His research results also pointed to similar findings as those of the Soviets - animal extinctions.110

The possibility of electromagnetic pollution bringing changes that could cause a pole shift is alarming. However, the interrelationship of earth movement and atmospheric effects was discussed in a 1991 article.[111] It is known that Earth slows down by about 1.4 milliseconds every century, but scientists more recently discovered that this can also happen in jumps.

108 Cross. Currents, The Perils of Electropollution, The Promise of Electromedicine, by Robert O. Becker, M,D.
109 "The Mind Fields", by Kathleen McAuliffe, Omni Magazine, February 1985.
110 Ibid.
111 "Fitfully, the Rotation of the Earth is Slowing", by John Noble Wilford, The New York Times, August 9, 1991.

They already knew that tidal forces from the gravitational effects of the moon, sun and other astronomical bodies contribute to slowing the Earth's spin. The new discovery is that wind, polar ice melting, ocean currents and movements within the Earth's molten core are causing an increased slowing. The forces generated by atmospheric motion have the most significant impact on either speeding up or slowing down the spin rate. In the article, Dr. Jean Dickey of the Jet Propulsion Laboratory said that "Ninety percent of these variations are caused by changes in wind", when describing the shifts in atmospheric mass such as that associated with El Nino. (El Nino is a periodic change in ocean currents which have altered weather patterns.) Dr. Dickey said, "If the atmosphere is speeding up. Earth is slowing down".

The movement of atmospheric mass adds stress over new portions of the earth, and lowers stress in other parts. This shift in pressure or forces in the planet can increase earthquake frequency in all areas which experience changes in atmospherically created stresses.

This can be related to the HAARP technologies, because changing ionospheric balance might shift weather patterns that are already contributing to the planet's instabilities. How much stress is needed or created by this kind of experimentation is unknown. What is known is that the Earth is a balanced organism which is increasingly being affected by reckless experimentation, either deliberate or out of ignorance.

The idea that these kinds of weapon systems could be used for weather modification is not new. The real work leading to the area of geophysical warfare goes back to at least 1958, when the chief White House advisor on weather modification, Captain Howard T. Orville, said the Defense Department was studying "ways to manipulate the changes of the earth and sky and so affect weather" by using "an electronic beam to ionize or deionize the atmosphere over a given area." 112

As far back as 1977, scientists observed that just the location of power plant clusters could affect weather as much as could intentional injection of power into the atmosphere. They discovered that when power plants are clustered together, they alter local weather patterns. Within six to twelve miles downwind of these facilities, rainfall could increase by as much as 25 percent more than normal, and at further distances rainfall might decrease. They concluded that the changes were the result of released heat. 113 The heat energy alone released by technology can have a debilitating effect on weather patterns!

Earth's equilibrium is undergoing other disconcerting shifts. This again shows our lack of understanding of the complex processes of the planet. A New York Times article said that wave heights in the northeast Atlantic had risen by up to 20 percent since the 1960's. The reported study took more than two decades, so the effect could not be explained away by seasonal variations. 114 The article explained that

112 The Cooling, by Lowell Ponte, 1976, page 169.

113 "Cluster of Power Plants Found to Change Weather", The New York Times, June 5,1977.

114 "Puzzled Scientists Find Waves Off Britain Are Growing Larger", the New York Times, April 19, 1988, pg. C4.

these changes in wave heights could be caused by weather system changes occurring a thousand miles away. Tampering via HAARP will only exaggerate such anomalies in the upper atmosphere, and perhaps set in motion a chain reaction.

Electrical power generation and use of energy in the northeastern United States steadily increased over the same two decades. Could it be that the "downwind" effects of weather, described earlier, could be contributing to this wave height observation? Could we be reaching a new level where instabilities will tilt over some unknown threshold, thereby causing unexpected geophysical reactions?

ACUPUNCTURE POINTS

There are simpler ways to look at Mom Earth's natural electrical system. For example, Adam Trombly said the acupuncture model is relevant. "What happens when you overstimulate an acupuncture point? You can give somebody a heart attack very easily with a very low amplitude input...Hit one of those ionospheric acupuncture points in the dynamic matrix of the ionosphere as a wave guide - what is the effect going to be?"

He challenges HAARP scientists to answer a big question before they send multi-gigawatt pulses up to the ionosphere. "What are the saturation parameters for the ionosphere?"

Manning asked him about the warning implied in the book Lost Millennium by Walter and Leigh Richmond. In that novel, "advanced" technology tapped into the ionosphere successfully, until one day when the timing was unfortunate. A solar flare set off an unquenchable avalanche of electrons that traveled back down the technicians' beam and fried a planet. Could today's ionosphere modifying scientists make a similar mistake?

"That's what I'm talking about," Trombly said quietly.

Technically, he explained what could happen in an electrodynamically saturated situation. If a natural source - solar - hyperstimulates the entire system, it could cause "chaotic dissipative motions". Events in the ionosphere then could stretch way beyond the normal limits of the physics law of conservation of energy. "It doesn't mean the energy isn't ultimately conserved; it just means that the initial environment is pervaded with far more energy than we've taken into account." In order to dissipate this energy, tremendous turbulence develops in the ionosphere and the magnetosphere.

Manning pondered what she had learned at New Energy Science conferences. Does twentieth-century textbook science have an incomplete picture of what is in "empty space"? Could there be interactions with the background sea of electromagnetic radiations - perhaps from distant stars - that flickers throughout space? She recalled papers in prestigious science journals that indicate there is a lot

to learn about the energetic nature of the space that surrounds us.115, 116, 117, 118, 119

Trombiy was saying that for years Russian scientists have documented unusual effects that violate physicists' expectations - "nonlinear, nonthermodynamic effects that violate entropy, in the resonant system of the atmosphere". In the light of these discoveries of unexpected energetic effects, he raised a few more questions for the skybusting HAARP experimenters.

"Where are those energies coming from? Tell me where the point is when you reach instability! Tell me what your critical points of stress are, before you do this!"

The ionosphere exists at a certain level of "magnetoplasmadynamic order". At various levels of energy, certain gases or elements exist. If the energy level is dramatically changed, the system goes through a chaotic transition before it reconstitutes itself at another level of order. Nobel prize winner Ilya Prigogine documented this self- ordering process in chemical systems. Since then, Trombly and many others continue to observe atmospheric processes in the light of this background understanding.

Resonance - a phenomenon related to the natural frequency of each part of a system - figures strongly in Tesla technology as well as in interactions between electromagnetism and mental processes or living cells which Dr. Nick Begich researched. Regarding global systems, interconnectedness through resonance is undeniable, Trombiy said. "We have observed that, when a system is near saturation you don't know what is going to send it over the line."

LARGE-SCALE ELECTROMAGNETICS

The interconnectedness between the ionosphere and the lithosphere (earth's crust) or the ionosphere and the inner core of the earth, is partly an inductive relationship, he said. What does Trombiy mean, using an electrical term such as "inductive" in relation to layers of the earth? He admits that some "people who call themselves geophysicists would scratch their heads; they wouldn't know what I was talking about. But there plenty of other ones who are good enough with electromagnetic systems on a grand scale, who would at least stop and pause before they would do anything as stupid as send multi-gigawatt pulses into the ionosphere.

Since earthquakes are known to cause the ionosphere to react electromagnetically, Manning asked if the reverse could happen - could pulsed disturbances in the ionosphere set off earthquakes?

115 Daniel C. Cole and Harold E. Puthoff, "Extracting Energy and Heat from the Vacuum", Physical Review E, Vol. 48 No. 2, Aug. 1993.
116 Bernard Haisch, Alfonso Rueda and Harold Puthoff "Beyond E=mc2", The Sciences, November/Dec. 1994, pp 26-31.
117 Harold Puthoff, "Ground State of Hydrogen as a Zero-point-fluctuation-determined State," Phys. Rev. D, Vol. 33, No. 10, May 15, 1987 pp 3266-3269.
118 Harold Puthoff, "Source of Vacuum Electromagnetic Zero-Point Energy", Physical Review A, Vol. 40, No, 9, Nov. 1 1989, PP 4857-4862.
119 Puthoff, Harold, "Everything for Nothing", New Scientist, July 28, 1990.

He replied that he would not be so naive as just to say "yes, if they stimulate the ionosphere in this way then they're going to set off earthquakes. However, I would not be so cavalier as to say that if they happen to stimulate the ionosphere at a moment when it is already saturated, or near saturation, that they couldn't set off an event that could induce chaos - where you could end up having a kind of magnetic storming, almost a runaway event up there."

In documents the HAARP planners put together in 1990 they say that they were intentionally trying to get a "runaway" effect in the ionosphere. This effect was new and would represent an energy threshold not yet reached with these kinds of military tools. The document said "...that at the highest HF (high frequency) powers available in the West, the instabilities commonly studied are approaching (heir maximum RF (radio frequency) energy dissipative capability, beyond which the plasma processes will 'runaway' until the next limiting factor is reached."120 What will happen when this runaway event occurs?

Trombly pointed out a similarity between the decision to pulse several gigawatts into the ionosphere (HAARP) without knowing what will happen, and the first atomic weapon testing. Years afteT that test, physicist Robert Oppenheimer admitted that the scientists had not known what would happen when they set off the bomb - if the chain reaction was going to stop or keep on going. "The government knew that the scientists didn't know!"

More recently, spectrum analysis work, especially in the ultra low frequency (ULF) part of the electromagnetic spectrum, has clearly shown how non-linear the effects from underground nuclear testing were, Trombly said. (Nonlinear means having an output that is not directly proportional to the input. In other words, unexpected or unpredictable.) Scientists were completely surprised by these results - they represented many many times the expected effect.

HAARP: DANGEROUS EXPERIMENT

Manning commented that Dr. Bernard Eastlund, the inventor of an ionospheric heater technology which may be a precursor to HAARP, claims the ionospheric heater approach could change the chemistry of the ionosphere beneficially. Trombly indicated there were safer ways to increase the ozone content.

"My knee-jerk reaction is still the same," he said. "With a system as close to saturation as it is, why would 1 believe this guy when he says that by beaming this into the ionosphere we're going to be able to heal it? I also don't want to be dogmatic and say it can't work, if it is done properly. But it just doesn't seem like a wise and prudent act to me."

Trombly sounded discouraged. He and his colleagues at the non-profit Institute for Advanced Studies use any money that they get from clients for further research. However, he would consider their efforts a waste of time if the people with

120 HAARP HF Active Auroral Research Program, Joint Program Plans and Activities, Air Force Geophysics Laboratory, Navy Office of Naval Research, February 1990.

big pocketbooks aren't going to do anything constructive about the global environmental situation.

"There are very basic things we could do if we want to heal the stratosphere. We already know these things will be effective..."

Will the big money continue to go into destructive instead of constructive experiments?

"Trying to pin these guys down is
like nailing jello to the wall."

PART THREE

ELECTROPAINTINGS IN THE SKY

Chapter Eleven

THE COMPILERS

The NO HAARP group really wasn't a group in the formal sense. The independent research efforts always flowed to the "library". This was a floating set of documents which grew to more than three hundred source items. The library was periodically copied and sent to trusted "compilers" across the globe, and was also moved from one person to the next depending on who was developing the most data and had the greatest need for the information at their finger tips at a given time. It could be said that the NO HAARP members, each acting as their own independent collection points, were a living Internet. Each person could continue to operate even if some researchers dropped off the project.

The military presented a challenge to researchers in the way they handle information in weapon development projects. From the beginning of the development of the information until the writing of these words, the data on HAARP, gathered by the compilers, has continued to grow. We recognized that there would be additional information found even after the first printing of this book but it could be added later as the collection of facts had an urgency which required publication. We needed to begin to disclose the potentials of this new weapon system and the risks associated with it.

Getting information from the military presented a challenge because of the way they handle information in weapon development projects. The United States military and intelligence community work under a number of principles. These include "compartmentalization" and "need-to-know". Compartmentalization is the idea of taking a large multifaceted project and breaking it down into subparts which can be researched and devetoped independent of the others. Through compartmentalization, the concept of need-to-know develops, where only the part that each individual needs to be aware of is relayed to that person. What these two concepts allow the military is "containment". A third principle in intelligence circles. An intelligence circle keeps the project going, but in a way which masks the overall (government) plan. In the case of the HAARP project, Hanscom Air Force Base runs the public effort on the program. Kirtland Air Force Base (the home of high-tech weapons systems) runs the information distribution process, Maxwell Air Force Base develops doctrine and policy for non-lethal weapon systems and Brooks Air Force Base puts together research on the bio-effects of radiofrequency radiation. UCLA, Stanford University, Penn State, and the University of Alaska all work on the project. Lest we forget, there are also industry contributions by Atlantic Richfield Company (ARCO) through ARCO Power Technologies Incorporated (APTI), their subsidiary. E-Systems bought APTI and formed a new subsidiary called APTI. This company was then acquired by Raytheon Corporation in a huge buyout. 121 There are many other organizations connected to the project some of whom appear in the remaining chapters of this book.

121 The Wall Street Journal, "Raytheon to Acquire E-Systems For $64 a Share, or $2.3 Billion, Offer is 41% Premium Over Friday's Close; Rival Bid Is Unlikely", by Steven Lipin and Jeff Cole, page 1 column 2 and A3 column 1 and A16 column 1, Monday, April 3,1995.

The HAARP project is part of the larger work of Strategic Defense Initiative ("Star Wars") technologies, a program first brought forward during the Reagan Administration. We are also certain that many of those associated with this project are unaware of the other ways HAARP transmitters could be used. The scientists at work within the University of Alaska Fairbanks' Geophysical Institute are specialists and brilliant leaders in their fields. However, their disciplines do not cross over into the biological sciences sufficiently to consider the effects of their work on living things, nor does their work consider the uses of radiofrequency radiation contemplated by the intelligence community and within the various agencies of the United States government.

Part three considers the risks to people if these "ionospheric heaters" are misused. It explores the use of radiofrequency for mind manipulation, as a weapon system as well as those DoD applications described in the HAARP records.

The information presented throughout this book, it is hoped, will stimulate people to approach their government projects with the same healthy skepticism demonstrated by the "guys in the bush" and all of the others who contributed to this research effort. The people whose stories were told in the first section of the book are scientists, researchers and very ordinary people who had the will to cause change in the world.

This part of the book is the work of the "compilers" in weaving together the tapestry of information developed over what has become years of effort on the part of many, This is the story behind the story of HAARP.

Chapter Twelve

TWISTED WORDS, STAR WARS AND POKER FLATS

'Trying to pin these guys down is like nailing jello to the wall," That was how one "No HAARP" member described the military's public relations efforts on the project. The HAARP, had little or nothing to do with nature's electropaintings in the sky, the aurora borealis. The project name was the mask behind which the military hid, letting the University of Alaska Fairbanks, through the Geophysical Institute, moved out front on the project, parading it as a research effort with an economic development spin.

The latest additions to the research have revealed government disinformation. The first new item was found in the library at the Geophysical Institutel22 and revealed the true scope planned, over the long term, for HAARP and the technologies it uses. Other important items recently uncovered were the remaining nine of twelve patents originally assigned to ARCO Power Technologies Incorporated (APTI) 123 which would eventually end up in the patent portfolio of Raytheon Corporation, one of the world's largest companies.

The meetings and information put together by the military as part of the Environmental Impact Statement (EIS) process seemed alright to most, although several people were pretty well informed about the possible ill effects of radiofrequency radiation. In most areas of the country this level of knowledge would have been unusual but in "bush" Alaska, radios are a way of life, and many plug into the planet via satellite dish and Internet connections to stay up on the latest research in many fields. In the winter, time passes slowly, and the new technologies have brought relief and stimulation to the minds of many in these remote reaches of North America. Alaskans also tend to have independent spirits, having had to carve out their niche in some of the most severe environmental conditions in the world. Alaskans are a bit skeptical. For many, the EIS meetings raised more questions than they answered.

The government seemed to try to create the illusion that the project was standing alone when, in fact, it was tied to a number of other experiments and systems. The project requires other equipment to run with the HAARP facility, some of which was described in the military's and University of Alaska Fairbanks' various documents.

The Poker Flat Rocket Range is the largest land based (5,132 acresl24) research facility in the world and the only high latitude rocket range in the United States. It is the only University operated range in the country. Poker Flat Rocket Range has been funded in past years with NASA grants of $1.5 million annually. The

122 PL/GP Technical Memorandum No. 195; "Presentations from the HAARP Workshop on Ionospheric Heating Diagnostics, 30 April - 2 May 1991, Phillips Laboratory (AFSC), Hanscom AFB, MA. 01731-5000"; Editor, Major Drew Fisher, October 22, 1991.

123 United States Patent Numbers 4686605; 4712155; 4817495; 4873928; 4954709; 4999637; 5038664; 5041834; 5068669; 5202689; 5218374; and 5293176.

124 Geophysical Quarterly, Volume 10, No. 1 & 2, Winter 1992, pg, 1.

site also received a $30 million upgrade as a part of a national defense bill passed by the Congress in the early 1990'sl25 when Dr. Syun-Ichi Akasofu declared, "We plan to build the best upper atmospheric research facility in the world."126

Public relations communications on HAARP, during 1993 and 1994 denied that the project was formally tied to the Poker Flat Rocket range. During 1992 the Air Force funded, under a separate program, the launch of a 17,000 pound rocket carrying a payload of 2,770 pounds. The Spirit 11 rocket was used to send a high-tech telescope about 205 miles above the Earth to measure emissions from auroral displays. The Geophysical Institute disclosed that "Researchers at Hanscom Air Force Base in Massachusetts plan to use the measurements as a part of a larger Strategic Defense Initiative Organization (commonly known as Star Wars) study on atmospheric disturbances. Studying infrared light is important because it can prevent some Air Force satellites from being able to detect targets, other satellites, or clutter in space, just as city lights can prevent people from seeing stars in the sky." 127 A number of otheT military projects have been reported in the Geophysical Institute's publications which, although they were funded separately, produced information crucial to the planned uses of HAARP. Many of these kinds of projects are revealed throughout this book.

At the same time that the HAARP project started, and the Poker Flat upgrades were funded the University also received, again under separate Congressional funding, $25 million foT a Cray Supercomputer which the military indicated was also not "formally" tied to HAARP. 128 However, upon investigating, it was determined that this computer would be committed to 30% Defense Department uses. While the military couched their wording in ways that deflected interest away from these facts, the records were clear. What was not so clear was why they were not just saying yes, they were going to use all of these systems, yes, these systems interface with this hardware while being funded under separate programsl29 as indicated in their own planning documents. It just didn't add up; what was the big deal anyway?

In a letter to one of Alaska's legislators, the public relations man for HAARP, John Heckscher, stated that "the HAARP program is not formally tied to the Poker Flat Rocker Range, nor to the new super-computer at the University of Alaska... However, the research capabilities associated with those excellent facilities will undoubtedly be of interest and use to scientists using the HAARP facility."130 John Heckscher was at the military planning sessions which clearly described the use of these other facilities, The summary of those meetings, in 1990 and 1991, contained the following: "the incoherent scatter radar facility, envisioned to complement the planned new HF heater, is currently being funded in a separate DoD

125 Geophysical Quarterly, Volume B, No, 1 & 2, Winter 1990, pg. 2.
126 Ibid.
127 Geophysical Quarterly, Volume 10, No, 1 & 2, Winter 1992, pg. 1.
128 "Porkpie in the Sky", Anchorage Daily News, We Alaskans , December 15,1991, pages 9-14.
129 PL/GP Technical Memorandum No. 195; "Presentations from the HAARP Workshop on Ionospheric Heating Diagnostics, 30 April - 2 May 1991, Phillips Laboratory (AFSC), Hanscom AFB, MA. 01731-5000"; Editor, Major Drew Fisher, October 22,1991,
130 Department of the Air force, Phillips Laboratory, John Heckscher, HAARP Program Manager, Letter to Alaska State Representative Jeannette James, November 12, 1993.

program, as part of an upgrade at the Poker Flat rocket range, in Alaska." At the same time it turned out that 30% of the computer time on the Supercomputer was for Department of Defense (DoD) purposes.

So why the misinformation? What could be gained by deception, and how much other material was being hidden behind the programs of the University of Alaska? The reports go on to describe the additional need for "rocket-borne instrumentation", discussion of which was also evaded in the responses by Heckscher to Alaskans inquiring about this project. A review of just one year's grants to the University of Alaska shows dozens of projects not "directly or formally" tied to HAARP, but forming complements of research which will undoubtedly further the program objectives 131. It was found that the military's public relations program was intended to minimize the significant factors regarding the technology, the interactivity of other projects and the real control and direction of the project. The records showed that HAARP was part of a global cooperative effort which included the USSR, Canada, Japan, Greenland, Norway, Finland, New Zealand and others[132]. NO HAARPer's questioned how much of what information was being shared with the countries uninvolved in the project, considering that all could be adversely affected by HAARP.

The University of Alaska Fairbanks is beginning to build a reputation as a leader in geophysical research and planetary system modeling. The Geophysical Institute will continue to attract researchers, but their biggest source of money is from federal governmental agencies tied to the military. The HAARP project is wholly controlled by the military, with the same warning signs around the facility as at other military installations throughout the country. The HAARP facility is a military facility. It seems the University is increasingly being "sidelined" on the project.

At this time, HAARP is "A congressionally initiated effort, HAARP is being managed cooperatively by the Air Force and Navy."133 HAARP is not a university research project; it is a "proof-of-concept" project for the military. A "proof-of-concept" project is one where advanced research experiments are designed to test, on generally a smaller scale, specific applications of research. These tests allow experimenters to extrapolate results which can then be used to engineer full size technology implementing systems. In other words, this is the step just before full weapon systems development.

The military carefully hid the interaction of the patents originally assigned to APTI and used in conceptualizing HAARP. These twelve patents are described in another chapter of this book, and show how the HAARP system will actually be used as a weapon. The risks associated with the system are also discussed. The most revealing document was one the government has kept in a very tight box - PL/GP Technical Memorandum No. 195. This document which explains the military

131 University of Alaska Fairbanks, Geophysical institute Summary of 1993/94 grants.
132 PL/GP Technical Memorandum No. 195; "Presentations from the HAARP Workshop on Ionospheric Heating Diagnostics, 30 April - 2 May 1991, Phillips Laboratory (AFSC), Hanscom AFB, MA. 01731-5000"; Editor, Major Drew Fisher; October 22,1991.
133 HAARP Fact Sheet, Office of Naval Research, Phillips Laboratory, November 4, 1993.

applications of the project was supposed to be sanitized before public release. This writer was fortunate in finding this document which was misplaced in a library; as shown in another chapter. This document most effectively dismantles the public relations disinformation put forward by the military.

Chapter Thirteen

STAR WARS - 'COMPANY' CONTROL

Companies involved in the HAARP project are both interesting and mysterious. The evolution of the HAARP contract is a story within this story.

Atlantic Richfield Company (ARCO) created a subsidiary called ARCO Power Technologies Incorporated (APTI) which was based in Washington, D.C. The company had reported annual sates of $5 million and had 25 employees as late as 1992.134 ARCO, the parent company, is the second largest private employer in Alaska, primarily involved in the North Slope oil fields where it controls trillions of cubic feet of natural gas and billions of barrels of oil. The natural gas on the North Slope has been reinjected into the earth rather than "flared" off or produced for use as it is in most other parts of the world. The gas has been reinjected in order to maintain oil field pressure for enhanced production while pumping up to two million barrels of crude oil a day out of the ground. No market for this natural gas currently exists, although a $20 billion pipeline remains on the drawing boards. Finding a market for the gas is in the interests of ARCO. The site where the HAARP project has been built is close to an already granted right-of-way for a future TransAlaska Gas Pipeline. All of the significant regulatory hurdles have been passed for constructing the gas line should markets be found.

HAARP at its present stage does not represent a high energy consumer in terms of input power. The first two phases of the project might not consume more than one to ten megawatts of power. In the future, however if the project continues to grow the way that project planners want it to or expands to involve other facilities, power demands would sharply increase. ARCO originally hoped to find a large consumer for their presently unmarketable natural gas. It was this market search which brought Dr. Eastlund together with ARCO in the mid 1980's, and his inventive genius gave birth to APTI.

Eventually ARCO was able to cluster twelve patents that would provide the basis for new markets for their North Slope natural gas. The possibility of not even having to transport the gas far from the source was an even more promising possibility - a possibility which would put ARCO in the Star Wars business.

How does a small subsidiary company like APTI get a military contract for such a project? The contract with APTI was more than five times the organization's projected annual sales [135]. We believe that the only way a virtually unknown company, in the military contracting environment, could get a contract like this is if they possessed proprietary information of use in the project (i.e., the twelve APTI patents). This fact was recently confirmed by Dr. Eastlund who was interviewed by Jeane Manning. He said APTI was formed a year after he made his discovery while under contract to ARCO to find a use for their gas. The company was formed to develop his patent by encouraging the military to test and eventually build

134 America's Corporate Families. 1993, Volume I, page 156.

135 Ibid.

the system. The military has continued to deny the connection between Eastlund, APTI and HAARP throughout the project. However, the three Eastlund patents were all assigned to APTI. 136 The other nine patents, according to the Patent Office records,
were also assigned to APTI by their inventors. This begins to unravel the disinformation spin of the HAARP planners. APTI won the contract to build HAARP, while bidding against an experienced government contractor with a strong success record - Raytheon. Raytheon was number 52 on the Fortune 500 list for 1993 and is one of the biggest defense contractors in the world. In the bid rating process with the military the only thing that APTI had going for it was a set of twelve compelling patents.

APTI's twelve patents are discussed in another chapter. These patents were used in the HAARP project and some of their inventors were listed as "key personnel" in the HAARP contract with APTI. Also, according to the contract if APTI switched any of the key personnel they could lose the entire project.

After the contract was awarded, APTI was sold to E-Systems of Dallas, Texas. The June 10, 1994 sale was transacted under undisclosed terms, APTI had shown no net income since it opened in the late 1980's, which made the sale particularly interesting. 137 It was reported that APTI was involved in research financed by government grants. E-Systems changed the name of the company to Advanced Power Technologies Incorporated, and assumed control of the patents and the HAARP project. 138 E-Systems reported annual sales of $1,9 billion a year, had 18,662 employees 139 (1992) and is one of the largest intelligence contractors in the United States. So why would E-Systems buy a company with no net income and no major assets except for the twelve patents and an unfunded second phase of a construction contract? The only real value was the contract, and the technology in the package of patents.

E-Systems was the subject of a lengthy article in the Washington Post by staff writer John Mintz. He disclosed that E-Systems' technologies were "part of the central nervous system for the nation's intelligence community." $1.8 billion of their $2.1 billion in sales was for classified projects. A large part of the projects came from the National Security Agency (NSA) and Central Intelligence Agency (CIA) and other intelligence organizations. Many of the company employees are former personnel from the NSA, CIA and military retirees. People with highly technical backgrounds and a history of working in government intelligence circles are hired by the company almost automatically, according to the Washington Post article. Retired Navy Admiral William Raborn, CIA director under Lyndon B. Johnson, for years served on the board of directors, 140

E-Systems was one of the featured stories in a CBS, 60 Minutes segment was aired February 26, 1995, The report echoed the assertions which were made in the

136 United States Patent Numbers 4686605; 4712155; 5038664.
137 "E-Systems Buys ARCO Power Technologies", The New York Times, June 30, 1994.
138 Ibid.
139 America's Corporate Families. 1993, Volume I, page 552.
140 The Secret's Out; Covert E-Systems Inc. Covets Commercial Sales", by John Mintz, Washington Post, October 24,1994, pg, A1, A10.

Washington Post article. The company was described as an organization operating in the "black world" - an area so secret that employees are not permitted by law to discuss anything about their work except with those individuals who have an official "need to know" classification. Of the company's annual sales, 85 percent was for classified work, with an estimated $800 million involved in projects so sensitive that the government denies that the projects even exist. The story went on to paint a picture of an organization which thrives on contracts issued by the CIA, NSA and military intelligence organizations.141

In the CBS, 60 Minutes segment, the secret relationship with the United States government was illustrated by describing one of E-Systems more public law suits. In the course of the law suit, a court order was issued which forbad the disclosure of E-Systems' classified relationship to the United States government. The most unusual part of the order was that none of the parties to the suit could even disclose that the order existed or that the government had even sought such an order. Even more revealing about this shadowy organization was that no one was allowed to have a copy of the document. They could only view it for a few moments in the United States Attorney's office. They were not allowed to take notes or in any way record their comments about the order, and they were forbidden from even talking about the existence of the document, under threat of incarceration. The order was so secret that even the judge could not have a copy of it, and could only view it upon special request. The secrecy of the document was appealed all the way to the United States Supreme Court where a ruling was issued which allowed the parties to talk about the order. Even now, nobody can get a copy of the document itself. 142

According to the E-Systems 1994 annual report to stockholders, their business mission is clear. "Our core business activities continue to be focused on intelligence, reconnaissance and surveillance." In the report they describe a number of their most promising prospects for increases in profits. They also describe the purchase of APTI from ARCO, although they do not indicate the amount paid. 143

The technologies that E-Systems developed are awesome. They include systems for law enforcement which can intercept faxed messages, telephone calls, modem transfers, and video transmissions on a single system in eavesdropping by the government. Their Global Positioning System (GPS) technologies (satellite based) can locate objects anywhere in the world within one foot of the object's actual location. The refitting of aircraft for border monitoring and defense purposes are also disclosed in the report. The company's operations are mostly hidden, and the annual reports seem to be one of the few sources for information on the organization. 144

As this book was in its final days of writing, another twist to the corporate tangle occurred. Raytheon Corporation bought out E-Systems for $2.3 billion. 145

141 "E-Systems", 60 Minutes, CBS News, N.Y, N.Y.,, February 26,1995.
142 Ibid.
143 "E-Systems, Inc. Nineteen ninety-four Annual Report to Stockholders"; March 10,1995.
144 Ibid.
145 "Raytheon to Acquire E-Systems for $64 a Share, or $2.3 Billion; Offer is 41% Premium Over Friday's Close; Rival Bid is Unlikely" by Steven Lipin and Jeff Cote, The Wall Street Journal, April 3, 1995, pges A1, A3 and A16.

The entire E-Systems' board of directors were kept as advisors for five years with full pay. The article went on to describe the company's main activities as super secret projects operated out of the Pentagon. Raytheon's profits mostly came from their government contracts, according to the same article.

So who is Raytheon, and why would they acquire E-Systems? They are a $10 billion a year organization, ranked number 52 among the Fortune 500 with more than 60,000 employees. They were also one of the original bidders on the HAARP project, and now they have the patents and the Phase-Two contract on the project. Buying E-Systems will give Raytheon a significant increase in annual sales and cut competition in an environment of shrinking defense budgets. The combination of these two organizations' resources will create one of the most powerful intelligence contractors in the world. The systems that these companies can now develop, as a single organization, will make those old Jules Verne stories look like Mother Goose. Those little grains of information on E-Systems appearing in their annual reports will cease to exist, as their existence is buried in the depths of their new owner's corporate identity.

APT1, when it was owned by ARCO, was relatively easy to keep track of because it was small. The patent records and the data surrounding ownership could be traced. Its purchase by E-Systems raised eyebrows and began to mask the assets behind a clouded corporate structure. With the takeover, it seemed that the HAARP project would go into the black world of hidden programs. HAARP was now at the bottom of the sea of the corporate structure of one of the largest private companies in the world.

Besides their newly acquired HAARP contract, E-Systems had developed a number of other technologies. They have developed clustered computer networks called EMASS systems which can store five trillion pages of text - a file pile that would reach a hundred and fifty miles high - from the surface of the Earth right into the ionosphere. Their computer can sort data at lightning speed, and has applications in the oil industry for storing and sorting seismic information. 146 They also control once secret remote sensing equipment capable of mapping the Earth's underground formations. 147 These technologies, coupled with what APT1 brought together in their patents, formed an incredible technology package for one of the most profound weapon systems yet conceived. Could the marriage of technologies in these companies create the possibility of those types of uses contemplated in intelligence circles as necessary for the ultimate control of mankind through bloodless warfare and manipulation of mental functioning? E-Systems had amassed huge capabilities for the most secret organizations in the country, and had gained control of the HAARP technologies.

Now that it controls E-Systems and APT1 assets, Raytheon can develop even the most bizarre ideas of the military and intelligence communities. The integration of the patents, resources and capabilities into this huge organization can now produce even the most machiavellian dreams of "national security" thinkers...

146 "The Secret's Out: Covert E-Systems inc. Covets Commercial Sales", by John Mintz, Washington Post, October 24,1994, pg. A1, A10.
147 Ibid.

Chapter Fourteen

"THE PROJECT'S NOT CLASSIFIED."

The military representatives maintain that HAARP is not classified and that they are making all information available to the public. In April 1995, a document, PL/GP Technical Memorandum No. 195, came into the hands of this researcher, even though it was not supposed to be released to the public. 148 The document was developed from presentation notes and papers delivered at Hanscom Air Force Base between April 30, and May 1, 1991, and was 613 pages long. The meeting developed HAARP specifications, and provided insights into the hopes of project planners.

The military limited distribution of PL/GP Technical Memorandum No. 195. On page ii of the document, the "Preface" appears with notations:

"The PL/GP Technical Memorandum Series is intended to make results of PL (Phillips Laboratory) in-house scientific efforts rapidly available to specific groups and individuals known to have an immediate interest in the results obtained...A Technical Memorandum may not be referenced in the open literature; however, results presented therein may be referenced as 'private communication' with the written consent of the originating office."

This revealing paragraph explained how the government could say, in slick word games, that there was no record or that there was no published document available when one was requested. They considered the document a "private communication" of the sort that would not be readily available under a freedom of information request, In the "Foreword" (page iii), the intent to hide this important document became more clear,

"The report is intended for the use of the workshop attendees, PL (Phillips Laboratory), and ONR (Office of Naval Research)...The contents of the report is not available to the general public. Consequently, the appearance of any material herein does not constitute publication."

How do you print a pile of documents 613 pages thick, and say it "does not constitute publication"? "Non-published" material does not exist, so it will not be produced unlike a classified document which the government at least has to acknowledge is not available for release. This document's very existence could be denied and it would never be produced through normal channels. It becomes obvious, upon reading the document, why they did not want it out to the public. This particular document sort of kicked a few holes in the song and dance given by the government in the public meetings by program planners. We know there are additional Technical Memoranda on the project. Perhaps these other documents will come to light.

148 PL/GP Technical Memorandum No. 195; "Presentations from the HAARP Workshop on Ionospheric Heating Diagnostics, 30 April - 2 May 1991, Phillips Laboratory (AFSC), Hanscom AFB, MA. 01731-5000"; Editor, Major Drew Fisher; October 22,1991.

But what did the Technical Memorandum describe? First, a system of ionospheric heaters, as these radio transmitters are described by the government, was suspected by Begich and Manning to be networked in a web of cooperation which would allow for these devices to be used together. If these ionospheric heaters could be used in resonance (harmony) with each other, a significantly larger effect could be realized through their collective energies being focused at a point far above the Earth. This particular memorandum revealed that this was exactly what the military had intended. It was also obvious that the military had been working with the systems in the USSR as well as the West in recent years. We discovered mat the maps issued by the HAARP program managers neglected to list a number of transmitter sites around the world, including systems in Greenland, the South Pacific, Japan, and Europe (Eiscat) among others. The Technical Memorandum showed that this program would run a number of experiments together with these other transmitters and diagnostic tools.

The documents specified the need for powerful computers[149] and the need for rocket launching facilities 150. Upgrades to the Poker Flat Rocket Range were discussed at some length, and these upgrades were mostly made under separate funding. The military continued, even after this conference, to insist that the super-computing and launching facilities built near Fairbanks were really separate from HAARP but might be somehow, as kind of an afterthought, useful. These facilities were not just handy extras; they were required to make the project a complete program and were specified from the beginning. This is clear in the Technical Memorandum, but the military denied it.

A crucial point was diagramed in the documents[151] - three radio frequency transmitters were spaced several hundred kilometers apart with their energy focused on the same point in the ionosphere. This would allow a significant increase in power density, well over what was possible with just a single transmitter. The global shield concept envisioned by Eastlund began to make a lot more sense in light of these systems being used together. If these transmitters could be tuned in resonance (harmony) with each other, a very large effect could be obtained. If those positioned around the northern latitudes were turned on and tuned just so, they would energize a very large portion of the ionosphere, creating many of the effects described in the patents and sought by the military.

The use of the system for generating ELF signals was also well illustrated[152]. It was obvious that these ELF signals would be sent through the atmosphere and the lithosphere (upper portion of the earth itself) in order to communicate with sub-marines. These signals would pass through every living thing in the radiated areas which covered most of Alaska, Western Canada and possibly the

149 PL/GP Technical Memorandum No. 195; "Presentations from the HAARP Workshop on Ionospheric Heating Diagnostics, 30 April - 2 May 1991, Phillips Laboratory (AFSC), Hanscom AFB, MA. 01731-5000"; Editor, Major Drew Fisher, October 22,1991, page 55.

150 Ibid., pages 145-152.

151 Ibid., page 144.

152 Ibid., pages 256-261,

rest of the world, once a full shield of connected facilities is developed. These types of radiations and their effects on living organisms, including humans, are discussed in another section of this book. It is these specific ELF radiations which potentially have the most devastating effects on people and animals.

Another interesting section of the report[153] discusses the use of satellites controlled by the "Blackbeard Team" of the Los Alamos National Laboratory. "Blackbeard is a satellite RF experiment designed to study distortion and discrimination of transionospheric VLF signals originating from the earth." Blackbeard is part of the Alexis satellite. This was another very expensive project which was funded separately from HAARP. It should also be remembered that Los Alamos is the heart of some of the most secret defense systems in the world, including "nonlethal" RF radiation weapons which are explored in another chapter of this book.

The work of the Blackbeard Team was described, in part, in an article published in 1994.154 The article described "gamma ray flashes" emanating from some thunderstorms. These flashes were unusual in that they went up toward the ionosphere as opposed to down to the earth like most bolts of lightning. "A satellite launched last year to test ways to monitor nuclear blasts detected microsecond radio flashes, apparently linked to thunderstorms, that are 10,000 times more intense than the radio crackling such storms normally generate", was how one of the new discoveries was described in the article. These flashes can not be explained in terms of known science. They are extremely short in duration, which is why they were not detected years ago. The gamma rays themselves are found at over 30 - to 100 kilometers above the cloud tops. This new knowledge was later confirmed by further investigations conducted by the Geophysical Institute of the University of Alaska Fairbanks.

This latest discovery was unexpected, and demonstrates the general lack of knowledge about our upper atmosphere. It is more reason to worry about additional tampering planned by HAARP managers.

The entire unpublished report, PL/GP Technical Memorandum No. 195, lays open the project linkages for the directions of the HAARP program. Government research going back many years contributed to the perceived need for a more versatile controllable heater. Dr. Bernard Eastlund had the missing link through his patents which describe a system capable of packing unheard of power densities into the ionosphere, levels which could pierce the natural shield which protects us all from being bombarded by death delivering cosmic radiations. The possibilities presented in the other APTI controlled patents took Eastlund's basic concept forward toward applications predicted as early as the 1950's. It is doubtful that Eastlund understood the reach his device would have, or the state of the technologies which he helped to enhance with his invention. To the military, Dr. Eastlund was just an outsider unknown to military planners, and a person who was too open about his science. They took what they needed, through their research surrogates at APTI and within the University research centers, and moved forward without them.

153 Ibid, pages 352-355,
154 "Atmospheric Scientists Puzzle Over High-Altitude Flashes", Science, Vol 264, May 27, 1994, pages 1250-1251.

Chapter Fifteen

THE TWELVE PATENTS OF APTI TECHNICALLY TESLA

APTI held twelve patents, all of which were linked to Star Wars defense systems. APTI was the main contractor on the first phase of the HAARP project. These patents represented technologies which were inconsistent with the normal activities of ARCO, the parent organization of APTI. In ARCO's 1994 annual report, no mention of APTI OT the HAARP contract was found. Apparently ARCO was not in the kind of technology and military construction contracting business suggested by this technology. APTI was an anomalous subsidiary of ARCO, with ARCO having no real expertise, outside of APTI, for developing these kinds of patents.

This writer believes that ARCO did not want to be involved in the defense industry development of these patents. After all, they were just looking for a market for natural gas. Gas on the North Slope of Alaska was the issue for ARCO. The cost of a pipeline and related facilities needed to move the gas to southern Alaska was estimated at more than $20 billion, pricing the gas out of the market. So APTI acquired the twelve patents and a potentially lucrative market.

The patents originally held by APTI are described below.

United States Patent Number 4,686,605
Issued: August 11, 1987
Invented by: Bernard J. Eastlund
Titled; "Method and Apparatus for Altering a Region in the Earth's Atmosphere, Ionosphere, and/or Magnetosphere".

This patent was filed on January 10, 1985. On April 11, 1986, the Office of Naval Research Code 308 in Arlington, Virginia sealed the patent application under a "Secrecy Order" which forbade further work or any disclosure of information on the patent. This, no doubt, concerned Dr. Eastlund and APTI. 155 The order was a standard form letter stating provisions of the National Security Act that allowed the Defense Department to seal the information. The penalties for disobeying it were spelled out in the document, and included fines and long prison terms.

Patent examiner Salvatore Cangialosi of the U.S. Patent Office rejected the application on November 28, 1986. According to the Summary of Action, "Claims 1-38 are rejected under 35 U.S.C. 101 because the invention as disclosed is inoperative and therefore lacks utility."

On December 9, 1986 Dr. Eastlund and his attorney met with the patent examiner to discuss the rationale behind the decision to reject it. On January 14, 1987, an amendment was filed which reduced the number of claims and provided

155 United States Patent Office Master File 06/690,333 (SC/Serial Number) on Patent No. 4,686,605.

documentation to prove that the invention would work. The file notes say it was reviewed again in early February 1987. In late March, the Secrecy Order was lifted.

The Eastlund patent was different than technologies of ionospheric heaters already operating around the world. The first significant difference was the way the RF radiation was concentrated. The energy was focused to a point in the ionosphere, with a wide base of the energy at the transmitter site. The other antenna designs operating around the world radiated RF in the opposite way, so that it was like a cone with the point at the transmitter and the wide end in the ionosphere. In other words, the Eastlund invention concentrated the power in the ionosphere, while the others spread
it out over an increasingly larger area as the energy moved further away from the transmitter. This difference allowed a significant concentration of energy into the ionosphere. The Eastlund device would allow a concentration of one watt per cubic centimeter, compared to others only able to deliver about one millionth of one watt.

This was a huge difference, which was "sufficient to cause movement of a plasma region along said diverging magnetic field lines to an altitude higher than the altitude at which said excitation was initiated." 156 What this means is that it would lift the ionosphere and alter its character in the ways necessary to create the effects described in the patent.

Eastlund further explained the effect of cyclotron resonance in building the power density over a large area of the ionosphere. The military would use this knowledge later in describing the "painting" of the ionosphere, which is why they wanted a system that would scan a fairly large area. They could, with this new technology, focus the energy and cover a large area for their effects.

Three publications cited in the patent formed the basis for the research into the technology. It was these references which sparked the original investigation which led to this book. The articles related to the work of Nikola Tesla in the early 1900's. The articles from the New York Times, December 8, 1915 and September 22, 1940, were quoted earlier in this book.

What would this technology be worth to ARCO? The profits they could generate by transmitting power from the point of production to the point of consumption without wires were enormous. Through normal powerline transmission this was not possible because of power losses over long distances. What wireless transfers of electrical energy could provide, with the right complement of equipment, could be astounding. Natural gas could be converted to transferable energy and literally beamed to wherever it needed to go. Between May, 1994, and April, 1995, no clear indications of this application for HAARP were found until the other patents listed in this section and the "key personnel" list for APTI was found and connected. In the articles referenced by Eastlund in his patent, was another patent of Tesla's (United States Patent 1,119,732). This patent led to several others which were related (787,412 and 685,956, among others). Some of these new APTI patents were exactly what was suspected - a wireless power transmission system.

156 Amendment January 1987 to the original Patent Application of Bernard Eastlund for the subseauentlv issued Patent Number 4,686,605.

Patent number 4,686,605, issued August 11, 1987 to Bernard J, Eastlund and assigned to APTI, is one of three related patents by the same inventor cited in this chapter. These patents revisit and go beyond the technical applications envisioned by Tesla. We quote from Eastlund's patent:

"In the past several years, substantial effort has been made to understand and explain the phenomena involved in belts of trapped electrons and ions, and to explore the possible ways to control and use these phenomena for beneficial purposes. For example, in the late 1950's and early 1960's both the United States and the U.S.S.R. detonated a series of nuclear devices of various yields to generate large numbers of charged particles at various altitudes, e.g. 200 kilometers or greater."

"This can cause confusion of or interference with or even complete disruption of guidance systems employed by even the most sophisticated of airplanes and missiles. The ability to employ and transmit over very wide areas of the Earth a plurality of electromagnetic waves of varying frequencies and to change same at will in a random manner, provides a unique ability to interfere with all modes of communication, land, sea, and/or air, at the same time. Because of the unique juxtaposition of a usable fuel source at the point where desirable field lines intersect the Earth's surface, such wide ranging and complete communication interference can be achieved in a reasonably short period of time...Thus, this invention provides the ability to put unprecedented amounts of power in the Earth's atmosphere at strategic locations and to maintain the power injection level, particularly if random pulsing is employed, in a manner far more precise and better controlled than heretofore accomplished by the prior art, particularly by detonation of nuclear devices of various yields at various altitudes...Further, by knowing the frequencies of various electromagnetic beams employed in the practice of this invention it is possible not only to interfere with third party communications but to take advantage of one or more such beams to carry out a communications network even though the rest of the world's communications are disrupted. Put another way, what is used to disrupt another's communications can be employed by one knowledgeable of this invention as a communication network at the same time. In addition, once one's own communication network is established, the far reaching extent of the effects of this invention could be employed to pick up communication signals of others for intelligence purposes."

"This invention has a phenomenal variety of possible ramifications and potential future developments. As alluded to earlier, missile or aircraft destruction, deflection, or confusion could result, particularly when relativistic particles are employed. Also, large regions of the atmosphere could be lifted to an unexpectedly high altitude so that missiles encounter unexpected and unplanned drag forces with resultant destruction or deflection of same. Weather modification is possible by, for example, altering upper atmosphere wind patterns by constructing one or more plumes of atmospheric particles which will act as a lens or focusing device. Also as alluded to earlier, molecular modifications of the atmosphere can take place so that positive environmental effects can be achieved. Besides actually changing the molecular composition of an atmospheric region, a particular molecule or molecules can be chosen for increased presence. For example, ozone, nitrogen, etc., concentrations in

the atmosphere could be artificially increased. Similarly, environmental enhancement could be achieved by causing the breakup of various chemical entities such as carbon dioxide, carbon monoxide, nitrous oxides, and the like."

While the HAARP device being constructed in Alaska at present may not be large enough to create all of these effects, it could test the ideas Dr. Eastlund expressed. The military denies that they are using any of the Eastlund ideas; however, careful review of the materials leads to the conclusion that the military is misleading the public. Moreover, Dr. Eastlund in a National Public Radio broadcast in 1988 reported that the military had tested some of the ideas presented in the patents.

United States Patent Number 5,038,664
Issued: August 13, 1991
Invented by: Bernard I. Eastlund
Titled: "Method for Producing a Shell of Relativistic Particles at an Altitude above the Earth's Surface".

In outlining the background of this invention in the patent, Dr. Eastlund describes the development of particle beam weapons for destroying incoming hostile missiles. The problem with particle beams is that they require perfect targeting so that the object could be hit and destroyed. The new invention eliminated the need for such precision, in that it created a literal "shell" of particles which would drift around the planet, destroying electrical components of objects passing through the "shell". According to the patent, "The shell so formed may be used as an antimissile shield. The high-energy, relativistic particles in the shell will collide with any missile passing therethrough to give up energy which, in turn, will damage or destroy the missile."

The power level described in the patent is extremely high, and the effects on the environment, and most particularly on the weather are unknown. What is known is that this type of power manipulation would significantly destabilize natural ionospheric systems.

Another important aspect of this invention is that it also requires large supplies of energy, and would have to be ctose to where the magnetic lines of force around the planet intersect the earth, The North Slope of Alaska is described as providing the ideal location.

United States Patent Number 4,712,155
Issued: December 8, 1987
Invented by: Bernard J. Eastlund and Simon Ramo.
Titled: "Method and Apparatus for Creating an Artificial Electron Cyclotron Heating Region of Plasma".

The same previously cited New York Times articles about Teste's work were referred to in this patent, with the same emphasis on the North Slope of Alaska being the ideal place. Alaska has the right amount of natural gas and is situated in the right place relative to the natural magnetic lines of force. This invention could be used in communication systems, and perhaps for energy transfers through the ionosphere, to be tapped off at distant points.

The three Eastlund patents represent the advances on which HAARP planners have hung their hats in putting forward the project.

* * *

United States Patent Number 5,068,669
Issued: November 26, 1991
Invented by: PeteT Koert and James T. Cha.
Titled; "Power Beaming System".

Peter Koert was listed as one of the key people on the HAARP project, in the government contract with APTI.157 Power beaming was a technology that Nikola Tesla had developed through his patent series referenced in Eastlund's work. The idea that Peter Koert would become a key person to the HAARP program made a good deal of sense, considering his expertise in power beaming technologies.

This "Star Wars" technology developed by ARCO Power Technologies, Incorporated was used in a microwave-powered aircraft. The aircraft was reported to be able to stay aloft for up to 10,000 hours at 80,000 foot altitudes in a single mission. This craft was envisioned as a surveillance platform. The craft had no need for refueling because the energy was beamed to it and then converted to electrical energy for use by the aircraft. Flight tests were undertaken at Tyendinga Airport near Kingston, Ontario, Canada in the early 1990's.l58 This test by APT1 most likely involved this patent and patent number 5,218,374 which is described in this chapter.

According to the patent, "The present invention relates in general to the transfer of energy by means of electromagnetic waves to power a remote device. More specifically, the present invention relates to a system for 'power beaming' energy from a source at high frequencies and rectifying such energy to provide a source of DC energy to a remote device." The patent went on to describe the attempts over the years to create a device which could be used and was practical. The background section states, "...the concept of powering a satellite or free flying aircraft by power beaming has received a great deaf of attention. The advantages of such a system are readily apparent, for example, an aircraft could be maintained on station indefinitely to act as a low cost communications or reconnaissance platform."

The idea is to convert microwaves to DC power, which can be done very efficiently and cost effectively with the right kind of transmission system capable of

157 Office of Naval Research, Contract Number N00014-92-C-0210, ARCO Power Technologies Incorporated as Contractors, September 16,1992 with Amendments through October 19,1993.
158 Aviation Week, Volume 135, No, 22.

focusing the power into a narrow beam. The HAARP system provides a very effective means of transferring such power at maximum efficiency. Within the patent, the use of the term "gyrotron" appears. It refers to cyclotron resonance, a concept and primary part of the Eastlund patents and an attribute of the HAARP transmitter, according to the government records.

This technology has already been tested by APTI.

United States Patent Number 5,218,374
Issued: June 8, 1993
Invented by. Peter Koert and James T. Cha.
Titled: "Power Beaming System with Printed Circuit Radiating Elements having Resonating Cavities".

Again, Peter Koert was listed as one of the key people assigned to the HAARP project by APTI, according to the government contract. 159 Also important to note in this patent and the previous one, is the mention of NASA report No. CR179558, March 11, 1987 by William C. Brown of Raytheon Company. Raytheon did the basic work leading to this patent. William C. Brown is now at the University of Alaska Fairbanks where he is continuing the development of these technologies, His current project at UAF is called SABER which is an acronym for "Semi-Autonomous Beam Rider". The concept is to beam radio-frequency energy to a helicopter in order to suspend it in the air without an on-board fuel supply. The project "is intended to promote public interest and understanding concerning microwave power transmission." 160

The system to be used by Brown in the wireless transmission of energy to power the craft will be from a 2,45 GHz beam. This will complete a series of tests which he started in 1965. The transmission, and conversion, of this energy is now possible via the APTI patents and HAARP.

Raytheon, Brown's old employer and the new owner of the APTI patents, was one of three bidders on the HAARP project. Eventually, through a series of corporate buyouts, Raytheon would come to own all of the patents described in this chapter as well as the contract for the second phase of HAARP construction.

In the patent it was made clear that this was "a continuation-in-part" of the previous patent by Koert and Cha. This patent describes a system for converting radiofrequency (RF) radiation into DC power using a "cross dipole antenna" which is to be used to receive the RF energy before conversion to DC. This patent carries the power-beaming ideas further, to the point where they can be used. Previously such systems were impractical because of technical limitations.

159 Office of Naval Research, Contract Number N00014-92-C-0210, ARCO Power Technologies Incorporated as Contractors, September 16,1992 with Amendments through October 19,1993.
160 Internet copy obtained from http://asgp.uafsoe.alaska.edu/saber.html.

* * *

United States Patent Number 5,293,176
Issued: March 8, 1994
Invented by: Paul G. Elliot.
Titled: "Folded Cross Grid Dipole Antenna Element".

Although it is unknown whether this particular patent was used in the HAARP program, what is known is that the inventor, Paul Elliot, was part of the team identified in the government documents. He obviously brought to the project a high level of knowledge of antenna arrays and related technology. It is not known whether this antenna was intended to be used for sending energy, receiving power or both. This technology is useful in power-beaming systems as well as the other applications described in other patents in this chapter.

We speculate that this antenna provided a more efficient system of energy transfer for use in the Eastlund applications. It is possible that, with the antenna gain realized by this design, a larger amount of power could be sent up to the ionosphere. This might be possible from a much smaller antenna field than originally contemplated by Eastlund.

* * *

United States Patent Number 5,202,689
Issued: April 13, 1993
Invented by: Robert W. Bussard and Thomas H. Wallace.
Titled: "Lightweight Focusing Reflector For Space".

The reflector is intended to complement power-beaming systems previously described in this chapter. According to the patent, "Large reflectors have many important applications in space. Reflectors can be used, for example, to reflect sunlight onto a solar collector or redirect a microwave power beam." The system for the power-beaming described in this patent was designed for sending 10 gigawatts of power.

The transmitting, reflecting and receiving system is massive, and the cost of building and using such a system is immense. However, according to the patent,

"The instant invention can be used to transmit power less expensively than the use of microwaves within the Earth's atmosphere. It is expected that as the cost of deploying equipment in space decreases, the cost of using the instant invention to transmit power will become lower than the cost of transmitting power using conventional transmission lines. A cost analysis has been performed using cost projections for the 2000 to 2010 time frame. This cost analysis suggests that a principle limiting factor is efficiency and the cost of the radio frequency sources, not the cost of fabricating and launching the reflector."

The HAARP radiofrequency transmitter, using a focused beam, largely addresses the transmitter-limiting factors described in the patent.

The patent goes on to describe the idea of generating energy in locations where it is cheap, and beaming it to areas where energy costs are high. The economic viability is shown, although the size of the project is quite targe. The construction of the TransAlaska natural gas pipeline has been estimated at over $20 billion dollars, without considering the costs of special ships, off loading facilities and then power generating plants in addition to operating costs. To produce energy at the source and redirect the capital costs of alternate systems to power beaming systems would likely be economically feasible. However, there would be a significant risk to anything flying in the path of the ten-gigawatt beam or if the reflector was somehow turned, reflecting the energy into the wrong receiving location and into perhaps a populated area. This risk is not adequately dealt with in the patent.

* * *

United States Patent Number 5,041,834
Issued: August 20, 1991
Invented by: Peter Koert.
Titled: "Artificial Ionospheric Mirror Composed of a Plasma Layer Which can be Tilted".

The expertise that Peter Koert brought to the HAARP project is most evident in this application. This application was scheduled to be tested in September, 1995. This test will be done using both HAARP and HIPAS transmitters. The Artificial Ionospheric Mirror, or AIM as it is referred to in the government records, will be very useful to the military. This patent also refers to two of the Eastlund patents 161.

This invention creates an Artificial Ionospheric Mirror (AIM) by creating a plasma layer in the ionosphere which will allow a transmitting station to bounce radiofrequency energy off of the AIM for a variety of uses. This invention provides "over-the-horizon" radar and communication capabilities to the military, over great distances. It will allow the military to send communications, and locate incoming objects, with significantly improved control and efficiency. In early HAARP planning, this was one of the areas considered very important to the program and was referred to with great enthusiasm by the military.

* * *

United States Patent Number 4,999,637
Issued: March 12, 1991
Invented by: Ronald M. Bass.
Titled: "Creation of Artificial Ionization Clouds Above the Earth".

161 Eastlund Patent Numbers 4,686,605 and 4,712,155.

This invention also drew from the Eastlund patents[162] which were cited in the issued patent document. This is similar to the previous invention, but it uses two antenna systems which send energy to the same point, thus creating, by a complex set of ionospheric interactions, a "plasma cloud". The cloud can also be made with one antenna. The cloud is created with minimum energy, and allows a much improved "over-the-horizon" (OTH) radar system in terms of detection of both far out and close
in objects.

An interesting part of the OTH radar system that HAARP, in part, represents is that the HAARP transmitter is sitting on the incomplete construction site of the original OTH radar system funded by the United States Congress. The site was being demobilized because the military suggested that with the Cold War ending it was no longer needed.

It appears that the reason that the old OTH system was abandoned was because it was obsolete - based on this new technology. The OTH radar project never ended at this location; it just changed to a much more versatile multi-use tool, the HAARP transmitter. Another consideration was that to build a HAARP radiofrequency transmitting system was much quicker and cost effective.

United States Patent Number 4,954,709
Issued: September 4, 1990
Invented by: Arie Zigler, Yossef Elsen from Rishon Le Zion, Israel.
Titled: "High Resolution Directional Gamma Ray Detector".

This device was designed to work with some of the other patents. It is intended to distinguish the "signature" (the unique characteristics of the object which allow it to be identified at a distance) of incoming airborne objects to determine if they are carrying nuclear devices, among other things. The device allows an operator to see the direction of the incoming objects by screening out the directions which are of no concern. In the words of the patent,

"The present invention relates to gamma ray detection. More specifically, the present invention is related to light weight directional gamma ray detectors having a high degree of angular resolution, high efficiency, and an ability to discriminate low energy gamma rays."

The invention is-able to operate effectively in areas which have a "large number of low energy background gamma rays." Gamma ray detection of this type is required in order to operate the system in the patent described below. It is also of use in other technologies described in this chapter. Gamma ray detection tells an operator a great deal about an incoming object, and is particularly useful in identifying objects carrying nuclear warheads.

162 Eastlund Patent Numbers 4,686,605 and 4,712,155.

* * *

United States Patent Number 4,817,495
Issued: April 4, 1989
Invented by: Adam T. Drobot.
Titled: "Defense System for Discriminating Between Objects in Space".

This patent refers to Eastlund's earlier patent number 4,686,605 as well as other documents about "Particle Beam Weapons" and "Space-Based Ballistic-Missile Defense" systems more commonly refer-red to as Star Wars systems. This invention is intended to work with gamma ray detectors and was described as;

"A defense system and a method for discriminating between armed reentry vehicles and unarmed objects which are in close proximity of each other. The reentry vehicles and the unarmed objects are bathed in a cloud of relativistic electrons with the resulting signatures from heavy objects, i.e., reentry vehicles, being imaged directly. Detectors sense the location and identity of the reentry vehicles and pass this information onto a weapons platform for tracking and interception."

In reading this, we are tinked back to other patents described in this chapter, and can see how these varied uses of Eastlund's original ideas will have far-reaching effects on the way in which wars are fought.

The importance of this invention to the military is described in the patent;

"Presently, the expected scenario for any large-scale intercontinental ballistic missile attack includes the deployment of a large number of decoys and penetration aids in a 'threat cloud' around one or more armed, reentry vehicles in an attempt to confuse any defense systems set up to counteract the armed missiles...Since the total number of objects expected in a typical threat cloud may well exceed one hundred thousand, any truly effective defense system must include a system which is capable of 'interrogating' all of the objects in the threat cloud and quickly discriminating between the deadly reentry vehicles and harmless decoys and penetration aids."

Also in the patent emphasis is placed on the value of a ground-based system as opposed to other Star Wars systems which rely heavily on earth-orbiting space hardware. Space borne systems are not as easy to maintain, and more easily disabled by adversaries. This invention reduces the computing needs of defense systems significantly. Reducing the number of tracked objects to just those which are a real threat allows for targeting resources and counter measures to be focused on them specifically.

The ideal location for this system is also identified as the North Slope of Alaska, the most likely path for over the pole nuclear missiles. It is also where the

large gas reserves could be used to create the necessary radiofrequency radiation transmitting system. The same magnetohydrodynamic generators mentioned by Eastlund are mentioned, along with the same type of antenna arrays. The patent describes the concept in the same general way that Eastlund did, but defines how the defense components would interact with the system most efficiently.

Another application of this technology is described;

"While the present invention has been described for discriminating between armed and unarmed vehicles in a threat cloud during an impending attack, it can also be employed to 'interrogate' orbiting satellites to determine if any said satellites may be carrying nuclear weapons for future launch. Again, a cloud of relativisiic electrons would be created around the satellite of interest for interaction therewith to produce a signature from that satellite which, when analyzed, would reveal the nature of the materials contained in the satellite."

This invention is demonstrated, in prototype form, by the HAARP project. HAARP can be used in this way, and is intended to be used for this purpose,

* * *

United States Patent Number 4,873,928
Issued: October 17, 1989
Invented by: Frank E. Lowther.
Titled: "Nuclear-Sized Explosions without Radiation".

This device was designed for "producing explosions from an explosive gas mixture which has a shock yield comparable to a nuclear explosion, but one which produces no radioactive fallout."

The patent described the background of the invention.

"Between 1945 and 1960, the United States exploded nuclear devices which had a total yield equivalent to approximately 200 megatons (MT) of trinitrotoluene (TNT). Tests conducted by other countries during this time brought the total yield of nuclear explosions to approximately 400 MT. It was quickly recognized that such testing could not continue since each nuclear explosion produced radioactivity that seriously threatened the environment. To protect the environment from such radioactive fallout, most of the world's nuclear powers signed the Nuclear Test Ban Treaty in 1963 which prohibited nuclear explosions in the atmosphere, underwater, and in space..."

"The necessary prohibition against above-ground testing of nuclear explosives, however, has created situations where alternates to such explosions are needed. For example, all of the sophisticated communication systems, defense systems, weapons systems, etc. that have been designed and built for the military since 1963 have never been tested in their ultimate operating environments, i.e. under nuclear

blast conditions...Radiation dosages and electromagnetic pulses which simulate those from nuclear explosions have been produced in shielded laboratories but the extreme shock energies which can be expected from nuclear explosions, e.g. 1 kiloton (KT) or larger, have not been satisfactorily duplicated..."

So, APTI filled another technological void for military planners by developing a way to test the effects of a nuclear sized shock wave's impact on the electronics of defense systems. The invention side steps the treaties on nuclear testing in the atmosphere which allow the military the opportunity to test their hardware without violating these international agreements. As far as is known, this particular invention is not part of the HAARP program but is the last of the APTI patents.

The ideal location of this invention, like the others, was identified in the patent as the North Slope of Alaska.

"Preferably, the combustible gas is one that is naturally available in large quantities and is one that can easily and safely be transported to the test site. For example, large quantities of natural gas, i.e. ,methane, are readily available in several geographical areas. Especially attractive are the huge quantities of methane in the North Slope area of Alaska, since there are remote areas nearby which are suitable as a test site. The methane can be produced and safely transported to the test site by a common pipeline. However, the test site does not have to be in close proximity to the methane production area since the methane can be gathered and safely pipelined for long distances as is now commonly done in supplying energy to areas remote from the production area."

The idea of using the North Slope for nuclear sized weapons testing is not new. It is a myth that the North Slope is some big wasteland suitable only for creating craters with nuclear-size devices. This is home for about 8,000 Alaska natives, and has been for thousands of years. This area also supports significant animal life which the United States has decided to preserve by carefully regulating development, but the balance is delicate. In the authors' opinion, the North Slope is not the place for explosions of the size contemplated in this patent.

Chapter Sixteen

TURNING ON A BILLION WATTS

The actual HAARP instrument - the "ionospheric heater", as it is described by the military was designed as a modular unit so that it could be increased in size fully utilizing all previously constructed parts. In other words, they could make it bigger and bigger without abandoning the parts already installed. The "proof-of-concept" stage of the program could change smoothly to a full weapon system phase. Moreover, the entire system could be relocated anywhere in the world in a few months time.

This is an important factor in enlarging or relocating the facility. The first phase of the HAARP heater construction is completed and began testing in December, 1994, with testing scheduled through 1995. The second phase of the contract is set up to increase the power thresholds of the heater several times. Phase one of the project will yield an effective radiated power of one gigawatt, according to the records, with the second phase of the project having an effective-radiated-power of "at least lOOdbW", which is equal to 10 billion watts of power. 163 This concept was illustrated by Princeton, New Jersey, physicist, Dr. Richard Williams. While commenting on the HAARP project he said,

"My main abjection to HAARP is that they intend to dump electromagnetic radiation into the upper atmosphere at very high power levels...The radiated power level will be between '90 dbW and 100 dbW'...They refer at one point to the need to go 'at least' 100 dbW, One way to visualize this power level is that a 10-billion watt generator, running continuously for one hour, would deliver a quantity of energy equal to that of a Hiroshima-size atomic bomb. "164

This is a significant amount of energy, when beamed into a dynamic portion of the planet's upper atmosphere in order to create artificially controlled high energy interactions.

In the most elusive document, the future hope of the program planners was shown to be on the order of 100 gigawatts (100 billion watts) of effective radiated power. 165 This is futuristic because power sources are not available at this location to provide the required input power to gain this output.

The effective-radiated-power, in a focused beam, which HAARP produces can be modulated in a number of ways, giving the operator an incredibly versatile weapon. The versatility of the system is disclosed in both the APTI patents and other government documents.

163 HAARP HF Active Auroral Research Program, Joint Program Plans and Activities, Air Force Geophysics Laboratory, Navy Office of Naval Research, February 1990,
164 Letter to Ryan Ross, Natural Resources News Service from Dr. Richard Williams, Physicist, Princeton University. November 7, 1994.
165 PL/GP Technical Memorandum No. 195; "Presentations from the HAARP Workshop on Ionospheric Heating Diagnostics, 30 April - 2 May 1991, Phillips Laboratory (AFSC), Hanscom AFB, MA. 01731-5000"; Editor, Major Drew Fisher; October 22, 1991.

There has always been some confusion on the part of many HAARP opponents over the power used in the HAARP "heater". The government explained this as, "a difference between 'total radiated power' and 'effective radiated power' (ERP). That difference is antenna gain, which in HAARP's case is a factor of nearly 1000 (at 10 MHz)."166 What this means is that to get to one gigawatt of output requires one megawatt of input power which can be delivered by the on-site generators. Another way to state this would be: one megawatt of input power is equal to one million watts, multiplied by one thousand (antenna gain). This will yield one billion watts of effective radiated power - one gigawatt.

1 megawatt x 1000 = 1 gigawatt = 1 billion watts ERP

166 Letter From John Heckscher, HAARP Program Manager, Department of the Air Force, Phillips Laboratory, to Dr. Arther Grey, Secretary, Spectrum planning Subcommittee, National Telecommunications Information Administration, United States Department of Commerce, November 17,1994.

Chapter Seventeen

NUCLEAR EXCAVATION CREATING THE BAY

The University of Alaska, Fairbanks, in its zeal for recognition as a leader in geophysics and engineering, has a marred history. "Project Chariot" was a program proposed as part of "Project Plowshare" which was designed to find peaceful uses for nuclear energy. This project was researched by Dan O'Neill and reported in his 1994 book, The Firecracker Boys. The project was promoted by the Lawrence Radiation Laboratory, which planned to detonate six thermonuclear bombs underground to excavate a harbor at Cape Thompson, Alaska. The plan of the project organizers was that if this application of nuclear technology could be tested on United States soil these technologies could be easily promoted in other friendly countries, This would enable, for example, easy excavation of a new Suez or Panama Canal, both of which were in the minds of program planners. Project Plowshare was another Jules Verne story which was only too true.

The idea that a few activists could stop these types of experiments, even during the peak of the "Cold War", was amazing. Equally outstanding are the ongoing efforts of "NO HAARP' members in slowing and perhaps preventing the environmental vandalism contemplated by these new military planners.

Is the HAARP project another error in the judgment of the military, using the University and others in Alaska? Are they playing with the same incredible level of power that Edward Teller tried to sell Alaska in the past with Project Plowshare? Dr. Teller returned to Alaska in 1987 to promote the Star Wars defense initiative. He was proposing to install a laser-like weapon on the North Slope of Alaska, These new system details were not openly discussed, because "Star Wars" systems are classified. From the tone, and content, of his presentations however, we deduce that what he was promoting in 1987 may have been a new and complex weapon system the HAARP project.

When Dr. Bernard Eastlund, the inventor of much of the innovative HAARP technology, described his ideas they sounded a lot like Star Wars. He said his invention would allow many of the same effects achieved with satellite deployed systems, but from the ground. The use of ground, rather than satellite systems, was explained by Eastlund in a recent interview when he said, "In other words, you radiate energy up there in such a way that you accelerate the electrons without using a machine up there. That's the advantage" 167. This allows steering, focusing, modulating, and otherwise manipulating, to the will of the operator, provided the operator knows the frequencies and wave forms necessary to change the electromagnetic structure of ionospheric chemicals and conditions. The ability to manipulate the ionosphere is critical to a planetary shield, which was one of the applications defined by Dr. Eastlund and referred to in his, and the other, patents assigned to APTI.

167 Interview with Dr. Eastlund by Jeane Manning, February 20,1995.

The advantage of a ground based system is its limited vulnerability to attack. To position a ground based Star Wars system within the United States would mean that a country wishing to destroy it would have to enter the territory of the United States, which would be an overt act of war. The use of this system will have possible ramifications throughout the world. Those transmitters already operating have been reported by some to have had negative effects beyond the borders of the countries using them. 168,169 Even though firing up these new heaters would violate the interests of the majority of humans on the planet, by impinging on internationally recognized free spaces, the project moves forward in the interest of "science" and one country's "national security". At whose expense, and under whose control, is the naturally occurring global shield - the ionosphere - being vandalized?

Eastlund went on to talk about his patents and what he envisioned by putting so much energy into the ionosphere. He discussed creating a "mirror" and bouncing radio waves off of it in order to gain a number of effects. These are the same effects described in the February 1990 HAARP document[170] put out by the military and in a later 1991 report buried by theml71. In these two reports they disclosed the development of an "Artificial Ionospheric Mirror (AIM)". In fact, a careful reading of the Eastlund patents and the nine other patents uncovered in our research and the HAARP Documents read as though they were written by the same person. As Eastlund said, "If you read my patent, one of the things I do is put a burst up and make the mirror, and there's a way of doing a lot of things with a ground-based system. At the time, SDI (Strategic Defense Initiative, Star Wars) was a very big program. Everybody wanted to put things up in space to do these things; this was a real alternative approach to it, a ground based system." 172

Dr. Eastlund's system was Star Wars without the vulnerability of satellites, but with a lot of other implications. In August 1991, Peter Koert was granted a patent for a system which could produce an Artificial Ionospheric Mirror composed of a plasma layer which could be tilted. In his patent he cites the earlier work of Dr. Eastlund. 173 Koert was also one of the "key personnel" identified in the contracts between APTI and the United States military for building the HAARP transmitter. 174 The HAARP system provides a "proof-of-concept" system for demonstrating this technology. The patent issued to Koert was one of several of his patents useful to the HAARP project, all of which were assigned to APTI, as shown in the United States government's own records.

In February, 1995, the Star Wars missile defense shield was supposed to be dead. The United States House of Representatives by a 218 to 212 voted to kill the

168 Scorched Earth: The Military's Assault on the Environment, by William Thomas, New Society Publishers, Chapter 11.
169 Super-Memory: The Revolution, by Sheila Ostrander and Lynn Schroeder, pages 292-304.
170 HAARP HF Active Auroral Research Program, Joint Program Plans and Activities, Air Force Geophysics Laboratory, Navy Office of Naval Research, February 1990.
171 PL/GP Technical Memorandum No. 195; "Presentations from the HAARP Workshop on Ionospheric Heating Diagnostics, 30 April - 2 May 1991, Phillips Laboratory (AFSC), Hanscom AFB, MA. 01731-5000"; Editor, Major Drew Fisher; October 22,1991.
172 Interview with Dr. Eastlund by Jeane Manning, February 20,1995.
173 United States Patent Number 5,041,834.
174 Office of Naval Research Contract Number N00014-92-C-0210.

program.175 Yet HAARP continues on while the motives of the military are hidden from the world.

In 1962, Project Plowshare was stopped because the project was identified as too risky and unnecessary. It was discontinued because the scientists were able to conduct their "proof-of-concept" experiments in Nevada (where objections were not presented by the populace, and the damage not disclosed by the government until decades later). It was also finally admitted by the government that these uses were unsafe and had to be cast aside, in the end, as international disarmament talks conducted through the 1960's and 1970"s. So ended the concept of nuclear excavation and Dr. Teller's "safe" use of nuclear energy. Perhaps its time we took a harder look at HAARP?

175 GOP's Military Revamp Stumbles on 'Star Wars', by David Hess, Knight-Ridder Newspapers, reported in the Anchorage Daily News, February 16,1995, pg. A3.

Chapter Eighteen

THERMONUCLEAR WEAPONS REPLACED BY ELECTROPULSE

Patent number 4,686,605, issued August 11, 1987 to Bernard J. Eastlund and assigned to APTI. is one of three related patents by the same inventor. The primary patent, once demonstrated to be effective to the satisfaction of the patent examiner, was sealed under a National Security Order for a year in the late 1980's. The patent is quoted as follows:

"In the past several years, substantial effort has been made to understand and explain the phenomena involved In belts of trapped electrons and ions, and to explore the possible ways to control and use these phenomena for beneficial purposes. For example, in the late 1950's and early 1960's both the United States and the U.S.S.R. detonated a series of nuclear devices of various yields to generate large numbers of charged particles at various altitudes, e.g. 200 kilometers or greater." 176

The Eastlund patented technology effectively replaced the electromagnetic pulse effects which were previously created by atmospheric thermonuclear detonations. This particular Eastlund ionospheric heater application took the concept to a new level of control and manipulation not previously possible. To gain the ability to "control" the processes with a non-radioactive producing technology is viewed as highly favorable for military planners. Radio frequency radiation (RFR) can produce negative health effects, the mechanism by which these effects occur is not well understood enough to raise the same level of concerns as thermonuclear fallout eventually did. However, the effects of RFR can have serious health consequences as indicated in numerous studies conducted by the military. These health effects have never been adequately disclosed to the American public or international community by the HAARP project planners.

The Eastlund patent went on;

"This can cause confusion of or interference with or even complete disruption of guidance systems employed by even the most sophisticated of airplanes and missiles. The ability to employ and transmit over very wide areas of the earth a plurality of electromagnetic waves of varying frequencies and to change same at will in a random manner, provides a unique ability to interfere with all modes of communication, land, sea, and/or air, at the same time. Because of the unique juxtaposition of usable fuel source at the point where desirable field lines intersect the earth's surface, such wide ranging and complete communication interference can be achieved in a reasonably short period of time...Thus, this invention provides the ability to put unprecedented amounts of power in the earth's atmosphere at strategic locations and to maintain the power injection level, particularly if random pulsing is employed, in a manner far more precise and better controlled than heretofore accomplished by the prior art, particularly by detonation of nuclear devices of

176 U.S. Patent #4,686,605.

various yields at various altitudes...Further, by knowing the frequencies of various electromagnetic beams employed in the practice of this invention it is possible not only to interfere with third party communications but to take advantage of one or more such beams to carry out a communications network even though the rest of the world's communications are disrupted. Put another way, what is used to disrupt another's communications can be employed by one knowledgeable of this invention as a communication network at the same time. In addition, once one's own communication network is established, the far-reaching extent of the effects of this invention could be employed to pick up communication signals of others for intelligence purposes." 177

"This invention has a phenomenal variety of possible ramifications and potential future developments. As alluded to earlier, missile or aircraft destruction, deflection, or confusion could result, particularly when relativistic particles are employed. Also, large regions of the atmosphere could be lifted to an unexpectedly high altitude so that missiles encounter unexpected and unplanned drag forces with resultant destruction or deflection of same. Weather modification is possible by, for example, altering upper atmosphere wind patterns by constructing one or more plumes of atmospheric particles which will act as a lens or focusing device. "178

It should be pointed out that the device invented by Eastlund would be ideally employed where there were large sources of natural gas and that it had to be erected in the most northern latitudes possible, to take advantage of the location where the earth's naturally occurring lines of force intersect the planet. In the patents, he recommended the North Slope of Alaska, where the largest reserves of natural gas in the United States are found and where these lines intersect the planet. Moreover, Atlantic Richfield Company (ARCO) was the parent company of APTI, the assigned owner of the Eastlund patents, and the owner of trillions of cubic feet of natural gas on the North Slope. 179 APTI became the initial HAARP contractor.

In 1987 Dr. Edward Teller described a new component of Star Wars technology, a laser like weapon for the North Slope of Alaska. Could HAARP be part of the Star Wars weapons system being promoted in 1987 by Dr. Teller? We believe that this is the case, and that what HAARP represents is a first stage "proof-of-concept" undertaking which, if proven valid, will expand to a full-blown military program. The idea of a ground-based versus a satellite-based defense shield is an important consideration in that satellites arc significantly more vulnerable and costly to repair once launched into orbit. Moreover, to stop a United States ground based system would require a terrorist attack or invasion. That would be an overt act of war on the part of an adversary. If deployed from ground based locations in the United States, or within the territorial boundaries of our allies, the shield has distinct military advantages.

While the currently constructed and planned future expansion of HAARP may not be large enough to create all of the Eastlund effects, it is of sufficient size to

177 U.S. Patent #4,686,605.
178 Ibid,
179 United States Patent No. 4,686,605 issued August 11, 1987 to Bernard J. Eastlund and assigned to APTI, Inc.

test many of the ideas in the patents. 180 Military spokesmen deny that they are using any of the Eastlund ideas; however, careful review of the materials lead to the inescapable conclusion that the military is misleading the public again. Moreover, it was reported by Dr. Eastlund in a National Public Radio broadcast in 1988181 that the military had tested some of the ideas in the patents before removing the secrecy orders. In a more recent interview, this fact was again confirmed by Dr. Eastlund. 182 A review of the other nine patents originally held by APTI, when overlain on the military planning documents, leaves researchers with an understanding of this new weapon system experiment - clearly countering the military's public pronouncements.

Going back to 1984, the United States Air Force's Major Norman H. Ruotanen, wrote a paper which became a chapter in a most interesting publication. "Nuclear and Electromagnetic Warfare in Low-Intensity Conflict". The chapter considered the use of nuclear weapons for creating electromagnetic pulses (EMP) in order to disable electronic systems of adversaries. The Major went on to discuss a less intrusive method and perhaps a method which could be better controlled. He describes the system:

"Nuclear EMP devices are not the only way to create damaging electromagnetic pulses. Electrical power supply, power conditioning, and microwave source device technologies have advanced to the point where one could feasibly generate electromagnetic pulses in the radio frequency regime by conventional means that are powerful enough to disrupt, damage, or destroy systems utilizing the highly susceptible electrical components. "183

"A conventional EMP weapon would somewhat resemble a very powerful radar system. It could be deployed on a space platform, in an aircraft, or on a truck or ship. Unlike the nuclear EMP devices that illuminate large areas with damaging EMP, the conventional system would be used against specific point targets. At long ranges, the EMP could disrupt or upset target electrical systems. At closer ranges, electrical components in the target would be burned out and permanently damaged. Both aggressor and the defender in the low-intensity conflict would have many uses for such conventional EMP weapons. This type of electromagnetic warfare is quite bloodless and, therefore, quite appealing when international opinions are considered...Although this electromagnetic warfare is a relatively benign form of combat that generally kills systems, not people, some antipersonnel applications are currently being considered, such as the use of the very powerful microwave devices to confuse, disable, or even kill the enemy. The use of these advancing technologies for intelligence gathering, disinformation, and enemy interrogation is even speculated.. "184

The military planners and strategists of the early-to-middle 1980's were

180 Interview with Dr. Eastlund by Jeane Manning, February 20,1995.

181 Interview with Dr. Eastlund by National Pubic Radio, 1988.

182 Interview with Dr. Eastlund by Jeane Manning, February 20, 1995.

183 Low-Intensity Conflict and Modern Technology, Lt Col. David J. Dean USAF, Editor, Air University Press, Center for Aerospace Doctrine, Research, and Education, Maxwell Air Force Base, Alabama, June 1986.

184 Ibid. pages 245-246.

convinced of the long predicted possibilities of radio frequency radiation weapons systems. Given this interest, it becomes obvious why the military was so quick to develop the Eastlund technology. His ideas were the missing link which stimulated the series of other patents needed for the HAARP program. The HAARP system, with its collection of technological breakthroughs, would provide a tool for performing its disruptive tasks over a wide geographical area and perhaps eventually over the entire planet.

Obviously these concepts were already well understood by the military in 1984, The HAARP system is the largest concept-delivery system ever built by the military for this technology. The use of HAARP for these applications is spoken about throughout the government records, excluding the uses against humans. This is where the information and military disinformation becomes cloudy. What is clear is that HAARP can be used for these purposes. Meanwhile, it is still being misrepresented by the military as only a scientific research tool.

Chapter Nineteen

CHARGED PARTICLE RAIN CRITICAL OMISSION

An article in Science News in 1982 said joint research carried out by scientists from Lockheed Space Sciences Laboratory in Palo Alto, California and Stanford University had found that very low frequency transmitters (HAARP will produce emissions in these ranges in some applications) caused streams of particles to rain down from the outermost regions of the atmosphere. The research was funded by the Office of Naval Research (one of the project controllers of HAARP). Their experiments confirmed that "even low frequency radio waves leak into the magnetosphere, causing the phenomenon. There the radio signals are amplified as much as 1,000 times, altering the motion of free electrons thousands of miles out in space."185 Even though one of the scientists involved in HAARP, Dr. Amran Iman, was quoted in the article, none of this information was in the Environmental Impact Statement on HAARP. This scientist's involvement in the current project was confirmed by John Heckscher, HAARP Program Manager, in a letter responding to a request for information.186 Dr. Iman, at the time of the Stanford University research, saw this as an opportunity to use the magnetic lines of force in the upper atmosphere to enhance communications and to be able to conduct controlled experiments in the ionosphere (which later became an expressed area of interest for the HAARP program).

As mentioned in Chapter Nine, Stanford University's work goes back even further, to the research efforts of Robert Helliwell, who revealed in 1975 that we were already inadvertently altering the ionosphere with Very Low Frequency (VLF) radio waves from power lines. While working in Antarctica, he discovered that these energy signals could be multiplied by up to 1000 times by a coherent interaction With particles in the radiation belts. These radio waves cause an "electronic rain in the ionosphere, and this inevitably alters weather patterns in the lower atmosphere." 187 It turned out that the Department of Defense (DoD) was working on this concept before 1976.188 The use of "coherent VLF" was also discussed with John Heckscher, HAARP Program Managerl89, regarding geophysical probing for earth-penetrating tomography applications of HAARP. In that discussion, he did not mention this multiplying factor (which happens when the signal in the VLF range reaches the ionosphere). This 1000-times multiplying factor creates a huge question, a big hole in the Environmental Impact Statement, and maybe disruption in normal weather patterns. This "coherent signal" is also mentioned in a communication from Paul C. Roosa, Jr., Chairman of the United States Department of Commerce, National Telecommunications and Information Administration, Inter-department Radio

185 "VLF: Getting Particles Excited", Science News, December 18 and 25, 1982, pg.392.
186 Letter From John Heckscher, HAARP Program Manager, Department of the Air Force, Phillips Laboratory, to Dr. Arther Grey, Secretary, Spectrum planning Subcommittee, National Telecommunications Information Administration, United States Department of Commerce, November 17,1994.
187 The Cooling, by Lowell Ponte, 1976, pg 169.
188 Ibid.
189 Interview with John Heckscher by Jeane Manning, 2-21-95.

Advisory Committee, Spectrum Planning Committee which oversees frequency assignments and reviews interactions of broadcasters.

This multiplying factor was either ignored by Roosa's group, or they lacked the understanding of this upper atmospheric interaction. 190 The research into "charged particle rain" started in the Antarctic, moved to Stanford and then to Alaska - from the bottom of the globe to the top of the world. The problem with this being omitted from HAARP documents is that these energy/atmospheric interactions, at current levels of man-induced radiations, are already causing possible weather and other environmental hazards. Increasing the energy deliberately transferred to the upper atmosphere through ionospheric heaters becomes a horrendous act of bad judgment. In fact, in the early 1990's it was reported by Dr. W. Volkrodt of Bad Neustadt, West Germany, that these low frequency radio radiations might be responsible for both environmental and human health problems.191

Throughout the press releases and "fact sheets" spewed out by the military representatives on the project, the focus is on the innocuous academic/scientific research inquires made via HAARP. This is a deception, and deflection from the real "heart" of the program as described in the early planning sessions on the project. A full list of the participants in the planning session was released, and it includes all of the principal players from the universities, APTI, and the military. These same individuals worked together, over the next several years, deflected public attention away from the project.

How much these people individually knew of the project's real intent is unknown. Following the standard military approach to these types of efforts, we assume that participants were only given the pieces of information they needed to do their jobs. The research shows that APTI was a Star Wars subsidiary of Atlantic Richfield Corporation (ARCO), and some of the "key personnel" assigned by APTI to the project were the inventors of some of the patents eventually discussed in the military records on the HAARP project.

The HAARP system is a tool, a radio frequency transmitter and broadcasting system of immense power. From the perspective of the geophysicist, it has certain applications, but to the physiologist and behaviorist perhaps it offers a much different set of possibilities. Regard-less of the public relations proclamations by Heckscher and others, the record says it all,

"The heart of the program will be the development of a unique ionospheric heating capability to conduct the pioneering experiments required to adequately assess the potential for exploiting ionospheric enhancement technology for DoD purposes."

* * *

190 Letter To Mr. Larry D. Gondek from Paul C, Roosa, Jr., Chairman of the United States Department of Commerce, National Telecommunications and Information Administration, Interdepartment Radio Advisory Committee, Spectrum Planning Committee, December 15, 1994.
191 American/European magazine, Raum & Zeit, Vol. 1 No. 2, 1989, pages 52-57,

Are these DoD purposes for innocuous scientific research or for someone's vision of high-tech hardware for enhancing the warfare capability of the United States? 192

192 HAARP HF Active Auroral Research Program, Joint Program Plans and Activities, Air Force Geophysics Laboratory, Navy Office of Naval Research, February 1990.

CHAPTER TWENTY

BLURRED VISIONS OF THE MILITARY

In a fact sheet issued by the Office of Naval Research and Phillips Laboratory about HAARP dated November 4, 1993 the following is written:

"The proposed research will be undertaken using high power radio transmitters to probe the overhead ionosphere, combined with a complement of modem scientific diagnostic instruments to investigate the results of the interactions. "193

"HAARP will be constructed at auroral latitudes in Alaska. A unique feature of the research facility would be a high-power high-frequency radio transmitter with the capability of rapidly steering a narrow beam of energy toward a designated region in the sky. (This innovation of the Eastlund patent makes it the most unique ionospheric heater in the world.) Similar, though less capable, research facilities exist today at many locations throughout the world and are operated routinely for the purpose of scientific investigation of the ionosphere. In the U.S. such systems are located in Arecibo, Puerto Rico, and Fairbanks, Alaska. Other installations are at Tromso, Norway; Moscow, Nizhny Novgorod and Apatity, Russia; Kharkov, Ukraine and Dushanbe, Tadzhikistan. None of these existing systems, however, have the combination of frequency capability and beam steering agility required to perform the experiments planned for HAARP. "194

A significant difference between what these other facilities are capable of is that HAARP was designed to focus the radiofrequency transmission into a narrow beam. 195 At the time that Eastlund invented his particular phased array method of focusing radiofrequency radiation, the best which could otherwise be achieved, from the ground to altitudes of 100 kilometers, was about one millionth of one watt per cubic centimeter. Using a full sized Eastlund ionospheric heater, power levels of one watt per cubic centimeter could be achieved, a million times increase in delivered power. Even with a smaller array, like the first phase of HAARP, a comparison to the other ionospheric heaters cannot be fairly made because even the smaller HAARP transmitter would have many times more power than anything in the world at the present time, in terms of power delivered into the ionosphere. The other ionospheric heaters spread the radiation out, rather than focusing it like the HAARP transmitter. 196

The way the energy is focused can be visualized using one of the diagrams Eastlund submitted to the patent examiner when getting his first patent filed. The diagram shows the old technology beaming the energy up to the ionosphere in a cone of power with the wide end of the cone reaching the ionosphere. The new technology utilizes the opposite approach: the beamed energy is focused to a point in the

193 HAARP Fact Sheet, November 4, 1993, issued by Phillips Laboratory.
194 Ibid.
195 HAARP Fact Sheet, March 2,1995, issued by Phillips Laboratory.
196 Interview Dr. Eastlund by Jeane Manning, February 20, 1995.

ionosphere. It is this concept which differentiates Eastlund's concept from that of other existing radio transmitters used for ionospheric heating. It is this concept that the military is moving toward at the HAARP site, although a full-size Eastlund system, at this time, is not being used. The second phase planned for HAARP will have between 4,700,000,000 and 10,000,000,000 watts of effective radiated power (ERP) coming off the antennas at ground level. This was what was planned according
to the contract for construction, 197 which specified ERP levels of "at least" 10 billion watts. However, this was not what was "desired" in terms of upper power level thresholds. What was "desired" by the planning team was 100 billion watts of ERP, according to the record, ten times the phase two level of the project. 198

"An exciting and challenging aspect of ionospheric enhancement is its potential to control ionospheric processes in such a way as to greatly improve the performance of C3 systems (C3 systems are Communications, Control and Command systems. The military refers to them as C3. These are usually linked to Intelligence as C31 systems.). A key goal of the program is the identification and investigation of those ionospheric processes and phenomena that can be exploited for DoD purposes, such as those outlined below... Generation of ELF waves... Geophysical probing... Generation of ionospheric lenses...Electron acceleration...Generation of geomagnetic-field aligned ionization... Oblique heating... Generation of ionization layers below 90KM... the most exciting and challenging aspect of ionospheric enhancement is its potential to control ionospheric processes in such a way as to greatly enhance the performance of C3 systems (or, to deny accessibility to an adversary). "199

The military goes on to describe their excitement about the possibility of "seizing" control of the ionosphere and bending it into the shape which serves their purposes. These are the statements within the government reports which ring the loudest with the inflections of Eastlund, the inventor of the primary APTI patents. A look at the government claimed capabilities follows, and is explained further in other sections of this book.

Geophysical Probing

In the 1990 planning meeting summary, HAARP planners devote few words to geophysical probing. They say that this is a "by-product" of other applications of the ionospheric heater, the HAARP transmitter. As the years moved forward, however, this use becomes increasingly important to the project. The idea that this tool, HAARP, could be used for earth probing purposes is never explored in the federal Environmental Impact Statement on the project. That document says that the radio-frequency radiation coming from HAARP will be directed upward and would not have an affect on surface areas, while other HAARP records describe and diagram a ground effect. Yet, it is precisely this use which may have the most far-reaching effects on animal migration patterns and human health.

197 Office of Naval Research, Contract Number N00014-92-C-0210, ARCO Power Technologies Incorporated as Contractors, September 16,1992 with Amendments through October 19,1993.

198 PL/GP Technical Memorandum No. 195; "Presentations from the HAARP Workshop on Ionospheric Heating Diagnostics, 30 April - 2 May 1991, Phillips Laboratory (AFSC), Hanscom AFB, MA. 01731-5000"; Editor, Major Drew Fisher; October 22, 1991, page 182.

199 HAARP HF Active Auroral Research Program, Joint Program Plans and Activities, Air Force Geophysics Laboratory, Navy Office of Naval Research, February 1990.

To better understand this use of HAARP - earth-penetrating tomography - we need to explore a few different documents. First, let's look again at that 1990 HAARP summary,200 which includes a section dealing with the generation of extremely low frequency and very low frequency (ELF and VLF) waves. These energy waves are sent up from the antenna array (HAARP) in such a way so it "produces a virtual antenna in the ionosphere for radiation of radio waves" back to earth. The antenna created in the ionosphere then radiates, or sends back, the pulsed frequency,
It then moves through the earth, giving the military the ability to locate underground anomalies such as shelters, nuclear facilities, oil fields, tunnels and other natural and man made formations.

The second document which explains this application is not revealed until much later in the program. In the National Defense Authorization Act for Fiscal Year 1995, the United States Senate stops additional spending on the project until the military outlines a plan which includes a full earth-penetrating tomography program. The report specifies:

"This transmitter in Alaska, besides providing a world class research facility for ionospheric physics, could allow earth-penetrating tomography over most of the northern hemisphere. Such a capability would permit the detection and precise location of tunnels, shelters, and other underground shelters.,."201

The Senate went on to criticize the military for not bringing forward a complete plan for implementation of this specific capability as part of the HAARP program. They told the military to come back with a more comprehensive plan before they could get any more money.

The third piece of information in this part of the puzzle came out in a radio interview conducted on December 23, 1994, by Linda Moulton Howe with the HAARP program director, John Heckscher. Heckscher expressed his frustration in not being able to move forward on the project because of the Senate action. He made clear that HAARP could not continue unless the "nonproliferation people" put in the proper documents which would clarify earth-penetrating tomography as a HAARP project mission. The non-proliferation people, referred to by Heckscher, are those in the Pentagon and elsewhere who develop the plans for locating underground military installations, especially nuclear research and development facilities.

Our research, and critiques by independent scientists, raised questions about whether or not the earth-penetrating tomography application would work in a "hot war" environment. For it to work there need to be instruments on the ground, or traversing the ground at very, very low altitudes. Our technical review indicated that it would be difficult to do this in combat. But it could be used in other situations. It could be used to verify nonproliferation agreements and other peace agreements where the country to be probed allowed the U. S. military to install ground sensors.

200 HAARP HF Active Auroral Research Program, Joint Program Plans and Activities, Air Force Geophysics Laboratory, Navy Office of Naval Research, February 1990.
201 The National Defense Authorization Act for Fiscal Year 1995,103rd Congress, 2nd Session, Report #103-282, Calendar No. 459, Report to Accompany S.2182, Committee on Armed Services United States Senate, June 14 (legislative day June 7)1994.

Earth-penetrating tomography could also be used for minerals, and oil exploration, as referred to in the Anchorage Daily News:

"UAF researchers have plans for HAARP's radio waves when they bounce back to the Earth. They hope to harness the energy waves after they hit the ground with
a small antenna affixed to a helicopter. They might be able to use the radio waves to explore for mineral deposits and even oil... "202

Searching for oil is one of the many HAARP experiments which is not part of the estimated $175 million budget for the first two phases of the project.

To find out more about earth-penetration mapping the authors contacted HAARP program manager Heckscher in late February, 1995. He said it would use "in terms of frequency, like 10 or 20 Hertz (pulses per second) or maybe one Hertz, one cycle per second type waves."203 This range of frequencies is a very important point. These frequencies are the same dominate frequencies within which the human brain normally operates! This potential impact on people will be explored further in another chapter.

The idea of using HAARP for earth-penetrating tomography was anticipated from the very beginning of HAARP. That this tool could be used to produce this "by-product" was always known but downplayed in the records. However, the usage must have been promoted in selling the project to the United States Senate, The unexpected result was that the Senate gave priority to this aspect.

The fact that the system will send a huge amount of energy into the ionosphere, and return a large portion of that energy to the earth, with possible ionospheric amplifications or induced charged particle rain, is alarming. Potential environmental implications have not been fully disclosed and most likely are not well understood.

These uses were never discovered by those opposed to the HAARP project until late 1994, and only confirmed by a review of the Congressional Record at that time. Formal objections to the nondisclosure of the biological effects of ELF on living things in the earth-penetrating tomography application of the technology were filed with various governmental agencies, but to no avail. We could not clearly find out the facts until late January 1995, much after the regulating authorities had already granted the go-ahead for HAARP testing. The only remaining barrier to HAARP raised by the United States Senate was the question of funding. This question was partially resolved in the 1996 defense budget funding that included $10 million for HAARP, 20% of the total allocated for counterproliferation projects.

Generation of ELF/VLF Waves

These kinds of waves are used for DoD communication systems. Currently, waves are produced "from the Navy's existing antenna systems in Wisconsin and

202 "Transmitter Plan Leaves Public Uneasy", Anchorage Daily News, pages B-1 and B-3.
203 Interview of John Heckscher, HAARP Program Manager, with Jeane Manning, 2-21-1995.

Michigan. Because this area of research appears especially promising, and because of existing DoD requirements for ELF and VLF, it is already a primary driver of the proposed HAARP research program."

As a "primary driver" this again shows that the project is important to the military in terms of Department of Defense (DoD) applications. Beyond the communication possibilities, these types of radio frequencies could be used to manipulate the radiation belts of the ionosphere in a manner which would allow satellites to operate safely in these regions without damage to the satellites' electronics. This use was discussed in the Eastlund patents as well as the HAARP records.

The possibility of using HAARP for these multiple purposes is particularly attractive to the military at a time when funding is increasingly a greater issue for all United States governmental agencies. The HAARP system could consolidate costs of several otheT defense systems by combining them into one tool.

Another consideration that is not discussed in the Environmental Impact Statement, to any significant degree, is the raging global scientific debate on the effects of extremely low frequencies (ELF) on living organisms, including human beings. The military's representative, Dr. Klaunenberg, during one of the hearings on the project, made a point of referring to a large file containing materials on the various radiations emitted by HAARP and then stated, "All that didn't go into the Environmental Impact Statement (EIS); as a matter of fact, that reduced to just a couple of lines. And 1 know what your, wheTe you're coming from and 1 share your concerns."204

The military, particularly the Air Force and Navy, have extensive research on the negative effects of ELF. These effects have been well documented with basic research which is expanding geometrically in volume every year. The government handily deflected the concerns raised in the public hearings in Alaska by playing down the results of this research and minimizing the risks. This was the same way the government promoted other military systems while deflecting public concern in such areas as nuclear testing experiments205,206, LSD experiments on unknowing individuals207, 208, radiation experiments on people who were not informed of the risks and in many other areas - under the guise of National Security209, 210.

204 Final Environmental Impact Statement Volume II, Proposed High Frequency Active Auroral Research Program, July 1993, pg. 10-42.
205 staff Memorandum, Advisory Committee Staff to the Member of the President's Advisory Committee on Human Radiation Experiments, June 27,1994, (provided by: International Committee lor The Convention Against Offensive Microwave Weapons)
206 National Journal, Volume 27, No. 18, "Rays ot Terror" by Margaret Kritz, May 6, 1995, Pages 1099-1109. (provided by: International Committee for The Convention Against Offensive Microwave Weapons)
207 Report to the President bv the Commission on CIA Activities Within The United States. June 1975, pages 225-231.
206 Staff Memorandum, Advisory Committee Staff to the Member of the President's Advisory Committee on Human Radiation Experiments, June 27, 1994. (provided by: international Committee for The Convention Against Offensive Microwave Weapons)
209 Ibid.
210 National Journal, Volume 27, No. 18, "Rays of Terror" by Margaret Kritz, May 6,1995, Pages 1099-1109. (provided by: International Committee for The Convention Against Offensive Microwave Weapons)

Electron Acceleration

This trick of HAARP would allow the military to alter the ionosphere in a way which would effectively block satellite observation of areas under a selected portion of the ionosphere. Thus the military could more easily "condition the ionosphere so that it would support HF (high-frequency) propagation during periods when the natural ionosphere was especially weak. This could potentially be exploited for long range (Over-the-Horizon) HF communication/surveillance purposes."

This use was previously envisioned by Eastlund and others.

The HAARP facility was located at the site originally intended for the "Over the Horizon Radar" facility, which was dropped after the end of the Cold War according to the government record. The HAARP facility will allow the government to replace the "Backscatter Radar" with a new, more versatile facility, in a more bang for the buck application!

There were other patents controlled by APTI which grew out of the Eastlund patents which could be used in this application. They are U.S. patent numbers 4,999,637 and 5,041,834, which are exactly what the government seemed to be seeking and now has achieved in HAARP. The military claimed that they were not using the Eastlund patents for this particular use, but what they couldn't deny was that the patents they were using were the outgrowth of the Eastlund concepts. These two patents specifically refer to Eastlund's work in their conceptual development. The HAARP program offers the military the over-the-horizon radar capability, again demonstrating the sort of all in one tool that HAARP is designed to provide.

The projects that HAARP technology replaces make it potentially one of the most powerful and cost-effective weapon systems yet developed by the military, while at the same time being potentially one of the most dangerous since the development of thermonuclear weapons.

Generation of Field-Aligned Ionization

In this section of the military documents describing HAARP, control of the ionospheric processes would allow the military to maintain communication above a nuclear disturbed ionospheric region, and would allow very long range detection of missiles. The document also mentioned a 1992 satellite experiment that tested this theory, using a "heater in Alaska".

The only other known heater in Alaska is HIPAS, at the University of Alaska facilities near Fairbanks (although this was not specifically named). HAARP was not yet constructed in 1992.

This use has to do with the control and manipulation of the ionosphere for military purposes. The technology which makes these effects is referred to in several of the patents held by APTI.

Oblique HF Heating

This area involves projection of the beam, to alter the ionosphere up to 1000 km or more from the heater. This is an interesting ability, considering the military - throughout their public relations efforts - has stated that the heater affected region would be mainly above the HAARP facility itself. The idea that the beam might be steered in a way which reached these lateral (side) distances was not fully disclosed in the Environmental Impact Statements. The point here is that the device can manipulate the ionosphere over a wide area and not just above the heater.

Oblique HF heating is useful for over-the-horizon radar, as well as for many of the other uses desired by the military. We talk about the steering elsewhere, when discussing the use of the HAARP transmitter as the military's long sought after radio frequency radiation weapon. This type of use was first publicly disclosed by an Air Force captain who was reporting on new technologies in a military conference in 1984.211 Such a weapon could disable humans and impair their mental functions, among other things.

Generation of Ionization Layers Below 90 km

This use has already been proven, according to the HAARP summary by the Air Force and Navy,

"The Air Force in particular has carried the concept, termed Artificial Ionospheric Mirror (AIM), to the point of demonstrating its technical viability and proposing a new initiative to conduct proof-of-concepts experiments."

This concept will lead to a number of other uses, including "long range, over-the-horizon, HF/VHF/UHF surveillance purposes, including the detection of cruise missiles and other low observables."

This again is the more bang for the buck military application which, on the surface, feels good to most taxpaying Americans. The idea that one tool can be used to achieve all of these capabilities is astounding. The idea that so many weapon systems of perceived adversaries could be rendered obsolete is far reaching in its implications. However, the risks are still not well defined in the documents issued by the government on HAARP. The project has not been reviewed because of the limited releases of information which has denied more-objective observers and other scientists the opportunity to consider the HAARP system. The fundamental question, as yet unanswered or even addressed, surrounds the risks associated with energizing this critical portion of our upper atmosphere.

The patents developed by APTI which describe these systems were discovered in researching this book in April, 1995. It then appeared obvious why

211 Low-Intensity Conflict and Modern Technology, Lt Col. David J. Dean USAF, Editor, Air University Press, Center for Aerospace Doctrine, Research, and Education, Maxwell Air Force Base, Alabama, June 1986.

military planners had included some of the "key personnel" in the APTI contract. Having the technology's inventors and innovators made the project that much more viable. The military contact had clear language which required the use of these key people. The contract said that substitution was not permitted without government consent. More-over, the military added that failure to assign these people to the project could result in forfeiture of the contract entirely[212].

Having the patents remain undiscovered until after the first phase of HAARP was constructed and tested reduced the possibility of the project being halted. What the discovery did prove was that HAARP was not just some university research project, but was the military tool always suspected by the "NO HAARP" compilers.

The press releases and information coming from the military on this project have continually downplayed its potentials. In the HAARP summary, the government discusses the need for a high-power heater. Meanwhile, in the public documents and the letters sent to Congress-men, state legislators and others insist that the HAARP project is no different than other heaters operating safely throughout the world. In the 1990 documents the governments says,

"...that at the highest HF powers available in the West, the instabilities commonly studied are approaching their maximum RF energy dissipative capability, beyond which the plasma processes will 'runaway' until the next limiting factor is reached."

What the HAARP planners go on to say, when referring to heating the ionosphere, is that they are certain that they can "drastically alter its thermal, refractive, scattering, and emission character over a wide electromagnetic (radio frequency) and optical spectrum."213 The difference with HAARP has to do with the power beam focusing ability of the transmitter, unlike anything operating elsewhere. Focusing the energy to a specific point is the unique aspect which planners were so enthused about.

In summary, according to the military records about HAARP, we have a project designed to prove the concepts originally discussed in February 1990 and hatched years before. The direction the military was heading in their research was finally possible with the invention of the Eastlund ionospheric heater - the most powerful directed multiple use energy weapon yet conceived.

According to the military, the device had the greatest set of possible uses. These are uses already proven by Eastlund to the satisfaction of the United States Patent Office and tested by the military. It was clear that if the military, in cooperation with the University of Alaska Fairbanks, could show that this new ground-based "Star Wars" technology was sound, they would both win. The military would have a relatively inexpensive secure defense shield within the economic reach of their planners, and the University would be recognized for the most remarkable

212 office of Naval Research, Contract Number N00014-92-C-0210, ARCO Power Technologies Incorporated as Contractors, September 16,1992 with Amendments through October 19,1993.
213 HAARP HF Active Auroral Research Program, Joint Program Plans and Activities, Air Force Geophysics Laboratory, Navy Office of Naval Research, February 1990.

manmade geophysical manipulation since atmospheric detonations of nuclear bombs. What would follow with the success of the testing would be the military megaprojects of the future, and huge markets foT North Slope natural gas.

Looking at the other patents which built on the work of Eastlund, it becomes clearer how the military intends to use the HAARP transmitter, It also makes governmental denials less believable. The military knows how it intends to use this technology, and has made it clear in their documents. The military has deliberately misled the public, through sophisticated word games, deceit and outright disinformation.

* The HAARP system could give the military a tool to replace the electromagnetic pulse effect of atmospheric thermonuclear devices, still considered a viable option by the military through at least 1986.214

* It could replace the huge Extremely Low Frequency (ELF) submarine communication system operating in Michigan and Wisconsin with a new and more compact technology.

* It could be used to replace the over-the-horizon radar system once planned for the current location of HAARP, with a more flexible and accurate system.

* It could provide a way to wipe out communications over an extremely large area, while keeping operator controlled communications systems working.

* It could provide a wide area earth-penetrating tomography which, if combined with the computing abilities of EMASS and Cray computers, would make it possible to verify many parts of nuclear nonproliferation and peace agreements.

* It could provide a tool for geophysical probing which would define oil, gas and mineral deposits over a large geographical area.

* It could even also be used to detect incoming low level planes and cruise missiles, making other technological advantages obsolete.

The above abilities seem like a good idea for all of us who believe in sound national defense and a secure world. These advances seem reasonable to those of us concerned with the large amounts of national productivity being spent on higher and higher cost weapon systems at a time when government spending is out of control.

However, the possible uses which the HAARP records do not explain, and which can only be found in Air Force, Army, Navy and other federal agency records, are alarming. Moreover, the disaster which could befall all of us on the planet by the reckless use of these power levels in our natural shield, the ionosphere, could be cataclysmic.

214 Low-Intensity Conflict ana Modern Technology. Lt Col, David J. Dean USAF, Editor, Air University Press, Center for Aerospace Doctrine, Research, and Education, Maxwell Air Force Base, Alabama, June 1986.

What the military fails to say is that they do not know what exactly will happen. It should be remembered that this project represents the largest energy levels yet played with by the big boys with their new toys. This project is an experiment, and experiments are done when we want to find out something that we do not already know. So, what will really happen? When we find the answer, we all may be out of luck and out of time.

Chapter Twenty-one

RACE WITH THE RUSSIANS

"Similar, though less capable, research facilities exist today at many locations throughout the world and are operated routinely for the purpose of scientific investigation of the ionosphere...None of these existing systems, however, have the combination of frequency capability and beam steering agility required to perform the experiments planned for HAARP. "215

The program handlers continued to talk to the public as if this ionospheric heater were really no different than any others around the world. Yet, while promoting the project and in internal communications, they couldn't resist talking about HAARP as the biggest "heater" in the world - more powerful than anything in existence. This technology is more than just the level of effective-radiated-power, or frequency/wave-form variability, or steering capability. The biggest factor is that in combination with these abilities, the device focuses power in a way which yields many, many times more delivered power to the ionosphere than anything on Earth resembling this device.

This device is a jump ahead in technology, beyond anything else. It is a leap like comparing a squirt gun to an artillery piece, and the effects are, to a great extent, unknown once the energy is released beyond certain thresholds. Yet, in answer to Congressional inquiries, citizen complaints and interagency requests for information, project manager Heckscher, continuously denies that the system is any different from what he and other previously said was already operating. He delivers this information in the form of sophisticated word games, The government craft of bureaucratese reaches new highs with the HAARP promoters.

In a 1990216 meeting that Heckscher attended, the record stated that "To date, (only) the Soviet Union has built such a powerful HF (high-frequency) heater. The highest ERPs (Effective Radiated Power) achieved by U.S. facilities is about one fourth of that. Presently, a heater in Norway, operated by the Max Planck Institute in the Federal Republic of Germany, is being reconfigured to provide 1 gigawatt of ERP at a single HF frequency. The HAARP is to ultimately have an HF heater with an ERP well above 1 gigawatt (on the order of 95-100 dbW); in short, the most powerful facility in the world..."217

Was the race with the Soviets part of the picture and the justification for spending the money? The Russians had been at the game a good deal longer and had a greater understanding of ionospheric heaters. Again, the emphasis on output size alone is not enough to describe the technology. It is the combination of size, focused power beaming, beam maneuverability, waveform generation and frequency -among a number of other unique capabilities - which make this system so powerful.

2TB HAARP fact sheet, Office of Naval Research, Phillips Laboratory, November 4, 1993.
216 HAARP HF Active Auroral Research Program, Joint Program Plans and Activities, Air Force Geophysics Laboratory, Navy Office of Naval Research, February 1990.
217 Ibid.

The issue of power has always been a bit on the confusing side to those trying to decipher exactly what this device would generate in output power through the antenna array and what it would take in input power to get there. This issue was finally cleared up in a letter by John Heckscher where he said, "There is a difference between 'total radiated power' and 'effective radiated power'. That difference is antenna gain, which in HAARP's case is a factor of nearly 1000 (at 10 MHz)."218 What was also new about this Eastlund invention is that it could focus the huge power levels onto a single point in the ionosphere. For the first time, the western military establishment could begin to use the new weapon capabilities.

The Soviets had been playing with their ELF and VLF toys for two decades by the time the HAARP transmitter was built. They had been testing their ideas and theories for use of radiofrequency in new weapon systems during those years. The Soviet radio frequency transmitters had been the source of much controversy throughout the West. Some in the United States and Canada had blamed such things as weather manipulation, mind control, radio interference and other unexplainable atmospheric events219 on the Soviet transmitters which created what became known as the "woodpecker" signal220.

The sales pitch for HAARP funding fell to the academics at the University of Alaska Fairbanks Geophysical Institute, and they had a friend in the powerful Senator from Alaska, Ted Stevens. It is doubtful that Stevens had been fully informed by these professors; the record indicates that he may have been duped into being their voice in the halls of Congress. Senator Stevens was quoted in a news article as he defended the funding of the HAARP program, It appears from the report that the Senator may have been left with incomplete information by the project promoters.

Harness the Aurora?

In mid-1990 Senator Stevens defended his project in a committee meeting when he said, "1 could tell you about the time when the University of Alaska came to me and said it might be possible to bring the aurora to Earth. We might be able to harness the energy in the aurora...". He went on to say, "No one in the Department of Defense, no one in the Department of Energy, no one in the executive branch was interested in pursuing it at alt. Why? Because it did not come from the good old boy network. So I did just what you say I should do. I got Congress to ear-mark the money, and the experiment is going on now. It will cost $10 million to $20 million. If it is successful, it will change the history of the world." The actual direct costs of the first phase of HAARP was about $25 million with the second phase estimated at $150 million. This does not include the numerous other projects related to, or complimenting, the HAARP program.

218 Letter From John Heckscher, HAARP Program Manager, Department of the Air Force, Phillips Laboratory, to Dr. Arther Grey, Secretary, Spectrum planning Subcommittee, National Telecommunications Information Administration, United States Department of Commerce, November 17, 1994.

219 Super-Memory : The Revolution, by Sheila Ostrander and Lynn Schroeder, pages 292-304.

220 Ibid.

Senator Stevens went to the floor of the Senate late in the summer of 1990 and declared, "We have in Alaska what I consider to be one of the most exciting research projects that I have ever encountered," He went on to say, "It is the experiments that are going on trying to determine if it is possible to harness the energy of the electrojet for the use of mankind." He said the project "has the potential of using a laser beam to be a conductor of this energy back to Earth...It is an experiment that, when 1 first heard about it, I thought someone had rewritten a new chapter of Jules Veme."221

"The research facility would be used to understand, stimulate and control ionospheric processes that might alter the performance of communication and surveillance systems...Potential applications of the HAARP research include developing DoD technology for detecting cruise missiles and aircraft and for communicating with submarines. Although HAARP is being managed by the Air Force and Navy, it is purely a scientific research facility which represents no threat to potential adversaries and would therefore have no value as a military target. "222

Again it appears that what is really being said is that this is not an operational weapon system, only a proof-of-concept system. It is designed to provide a better understanding for future uses as a weapon system. This is an outrageous statement, which plays on the ignorance of readers of the HAARP records, and could be equated to the suggestion that the development centers for the atom bomb during World War II were not potential military targets.

"As the result of a competitive procurement, the Air Force and Navy have awarded a contract to ARCO Power Technologies, Inc. (APTI) for the design and construction of the IRI and associated support facilities."223 APTI, according to liastlund, was set up to do one thing - develop his ideas into marketable technologies. APTI was not set up as a construction company or an ionospheric research organization. It was set up to exploit energy in a way which maximized a return to one of the world's oil giants, Atlantic Richfield Company. What Eastlund did was put ARCO into the Star Wars business until a company more suited to the project could be located to buy out their interests. That company was E-Systems. E-Systems' history and controversy has been documented by CBS's, 60 Minutes as well as by the Washington Post, and is discussed in this book.

The original bidders on the HAARP project were Penn State University, Raytheon and APTI.224 The chain of corporate events has been discussed previously, In June, 1994, APTI was bought out by E-Systems, which in April, 1995, was bought out by Raytheon Corporation. So, in the end, one of the project's losing bidders, Raytheon - one of the largest defense contractors in the world - came to own the technology and the contract.

221 "Porkpie in the Sky", Anchorage Daily News, We Alaskans , December 15,1991 pages 9-14.
222 HAARP Fact Sheet, Office of Naval Research, Phillips Laboratory, November 4, 1993.
223 Ibid.
224 Interview with John Heckscher, HAARP Program Manager and Jeane Manning, February 21, 1995.

Chapter Twenty-two

ENTRAIN THE BRAIN TO GO INSANE?

New technologies have incredible possibilities for improving the human brain potential. These technologies are being used to improve learning, memory, and for human behavior modification. The high-tech tools of the future are here now, and are being introduced into the market place. A leading writer in the area of brain technologies has been Michael Hutchison, who opened this field to lay people.

As Hutchison describes it, the brain operates within a relatively narrow band of predominant frequencies. The predominant brain wave frequencies indicate the kind of activity taking place in the brain. There are four basic groups of brain wave frequencies which are associated with most mental activity. The first, beta waves, (13-35 Hertz or pulses per second) are associated with normal activity when a person's attention is directed outward, toward normal activities. The high end of this range is associated with stress or agitated states which can impair thinking and reasoning skills. The second group, alpha waves (8-12 Hertz), can indicate relaxation. Alpha frequencies are ideal for learning and focused mental functioning. The third, theta waves (4-7 Hertz), indicate mental imagery, access to memories and internal mental focus. This state is often associated with young children, behavioral modification and sleep/dream states. The last, ultra slow, delta waves (0.5-3 Hertz) are found when a person is in deep sleep. The general rule is that the brain's predominant wave frequency will be lowest, in terms of pulses per second, when relaxed, and highest when people are most alert or agitated.225

External stimulation of the brain by electromagnetic means can cause the brain to be entrained or locked into phase with an external signal generator. Predominant brain waves can be driven or pushed into new frequency patterns by external stimulation. In other words, the external signal driver or impulse generator entrains the brain, overriding the normal frequencies causing changes in the brain waves; which then cause changes in brain chemistry; which then cause changes in brain outputs in the form of thoughts, emotions or physical condition. As you are driven, so you arrive - brain manipulation can be either beneficial or detrimental to the individual being impacted.

In combination with specific wave forms the various frequencies trigger precise chemical responses in the brain. The release of these neurochemicals cause specific reactions in the brain which result in feelings of fear, lust, depression, love, etc. All of these, and the full range of emotional/intellectual responses, are caused by very specific combinations of these brain chemicals which are released by frequency-specific electrical impulses. "Precise mixtures of these brain juices can produce extraordinarily specific mental states, such as fear of the dark, or intense concentration."226 The work in this area is advancing at a very rapid rate with new

225 Mega Brain. New Tools and Techniques (or Brain Growth and. Mind Expansion, by Michael Hutchison, 1986,

226 Mega Brain, New Tools and Techniques for Brain growth and Mind, Expansion, by Michael Hutchison, 1986, pg 114.

discoveries being made regularly. Unlocking the knowledge of these specific frequencies will yield significant breakthroughs in understanding human health. Radio frequency radiation, acting as a carrier for extremely low frequencies (ELF), can be used to wirelessly entrain brain waves. This is what HAARP could do in certain of its applications; however, the side effects of this on humans are not explored in the HAARP records but do appear in other government documents referred to in this book.

Mr. Light, a researcher and owner of Biomedical Instruments, Inc., an organization which markets electromedical devices used to control or manipulate brain activity, was quoted extensively in Hutchison's book.227 The power level needed to achieve a measure of control over brain activity is very small - from 5 to 200 microamperes - which is thousands of times less than the power needed to run a 60 watt light bulb. We are talking about very, very low power requirements. The trick for influencing brain activity is in the combination of frequency, power level and wave form. What has taken place oveT the last two decades, and most particularly in the last several years, represents huge moves forward.

Research internationally found that the brain can be easily entrained or can be influenced to change states by external electromagnetic fields. These discoveries have provided new tools for both scientists and lay people. The new tools include electrical cranial stimulation devices, sound systems, light pulse systems and a large variety of other brain entrainment and feedback devices. Technological advances also have been applied to special monitoring and control devices which allow people to learn how to control and manipulate their own brain activity for beneficial results. Reports include relaxation, pain control, speed learning and memory improvements, among others.228, 229, 230

The most recent work of Hutchison has yielded the finest descriptions of mind technologies yet put together. His latest book, Mega Brain Power, updates readers in an area which is changing so rapidly that the science is being formed faster than the applications can be fully recognized. As a result, he has for some years published the latest research in a newsletter. Recent issues231 discussed technologies for healing nervous system disorders, correcting attention deficit and hyperactive disorders in children and curing drug and alcohol dependencies among other things. Electromedicine of this type is emerging as one of the most exciting areas of medical research.

The research in recent years has extended to medical and psychological applications with startling positive results. Some of these results have been recognized by the United States Air Force, as you will see in the following chapter. Unfortunately, military research continues to look at these technologies as weapon systems rather than as human potential enhancing tools.

227 Mega Brain Power, by Michael Hutchison, 1994.
228 Super-Learning, by Sheila Ostrander and Lynn Schroeder, 1982.
229 Mega Brain Power, by Michael Hutchison, 1994.
230 Meaa Brain. New Tools and Techniques tor Brain Growth and Mind Expansion, by Michael Hutchison, 1986.
231 Megabrain Report, The Journal of Optimal Performance, Volume 2, Number 4, 1994.

One of America's most gifted inventors, Dr. Patrick Flanagan, predicted in 1962 that medicine would change. He said, "I believe some day the entire concept of medical practice will be changed by electronics. People will be treated electronically rather than with medicine."232 At that time, Dr. Flanagan had just been recognized for inventing what was the most advanced brain entrainment device, and possibly human-to-computer interface, on the planet - the Neurophone.

As Flanagan noted in a recent interview the HAARP project could be not only the biggest "ionospheric heater" in the world, but also the biggest brain-entrainment device ever conceived. According to HAARP records, when the device is built to full power it can send VLF and ELF waves using many wave forms at energy levels sufficient to affect entire regional populations.

The HAARP planners have never discussed any of this research, although the Air Force and Navy have been working in these areas since the early 1960's. Using the concept of "compartmentalization" and "need-to-know", discussed earlier in this book, it is highly likely that most of those, if not all of those, involved in building and operating the HAARP project at this early stage are unaware of these possible applications.

Dr. Robert O. Becker experimented in the early 1960's with ELF (Extremely Low Frequencies) by putting the signal on top of a DC current to carry the ELF signal. In other words, ELF rode like the passenger on a bus, maintaining its own integrity but being carried, to its specific destination. Dr. Becker tested this concept by using an ELF, 1-10 Hertz (cycles or pulses per second) signal on humans resulting in an increased loss of consciousness among test subjects. The weak ELF alone had no effect, and the DC current had a significantly reduced effect without the combination. Above 10 Hertz with DC current, the effect increasingly declined until it was no better than with DC current alone.233 What this demonstrated was that ELF, those frequencies which most effect human brain functions, could be manipulated externally with profound results.

Flanagan's Brain Tool

In 1958 when Dr. Patrick Flanagan was 14 years old, he invented the Neurophone, which won him world recognition as one of the brightest inventors of our time. The Neurophone device can convert sound (like words and music) into electrical impulses which can be transferred through any point on the body directly into the brain, bypassing the ear and associated hearing mechanisms entirely. For more than six years the United States Patent Office refused to issue a patent for the device while they debated the fine points of the technology. In the end, the government declared that the Neurophone would never work, and refused the patent. Patrick and his lawyer then went to Washington D.C. with a working model of the device to show the patent examiner. The examiner told the duo that if the device could make one of their employees who was deaf hear, he would reopen the case and issue the patent. The device was tested, the employee "heard" and the patent was granted.

232 "Whiz Kid, Hands Down", Life Magazine, September 14, 1962.

233 Cross Currents. The Perils of Electropollution, The Promise of Electromedicine, by Robert o. Becker, M.D.,pg 227.

Dr. Flanagan later went to work for Tufts University and began his next stage of research on the Neurophone, As a research scientist for Tufts, he began to work on a man to dolphin speech system for the Navy. This research led to the development of a 3-D holographic sound system which could place sounds in any location in space as perceived by a listener.

Additional research led to a vastly improved digital Neurophone, for which a patent application was filed. Immediately, the United States Defense Intelligence Agency placed it under a secrecy order as a matter of national security. Dr. Flanagan was forbidden from conducting further research or even talking about his technology for four years.

This technology has now been replaced with superior technology developed in Europe in 2001. The technology far surpasses the performance of the Flanagan invention in all applications by integrating modern circuit designs with 21st century engineering. The new technology delivers significantly gTeateT eneTgy efficiency through a more biologically compatible signal. This technology will be made available in late 2001 or early 2002 for accelerated learning applications, body system balancing and trials in hearing enhancement applications.

In the years since, Dr. Flanagan periodically toyed with new concept and design advances for Neurophonic technology. This device could be used as the ultimate computer to brain interface tool, and is being considered for reintroduction into the market place. The idea that large amounts of properly formatted information can be transferred into long term memory would revolutionize education, making the current model obsolete. Education would shift to greater emphasis on learning strategies and resources, rather than data accumulation. These changes would establish greater possibilities for creative advancement and self-actualization by mastery of intellectual potentials.

The Neurophone was one of the most powerful brain entrainment devices developed until new advances were made in the science in Europe in 2001. In recent years, these other researchers have advanced the technology and continued to work on the possibilities it offers, with an emphasis on other modes of transmission. Given the Defense Intelligence Agency's interest in the earlier device, it is very likely that they have also continued to woTk to improve it. Discussions with several inventors over the last few years about the HAARP project revealed that this radio transmitter, the ionospheric heater, could possibly be used as a wireless brain entrainment device. This use has the greatest invasive possibilities.234

Brain Biofeedback

Real time brain biofeedback is another area of brain research which is beginning to provide great opportunities to many individuals. This area has yielded new approaches foT gaining control of the mind. Through interactive computer technologies, it is now possible to monitor brain waves on a real-time basis, so that

234 Discussions with Dr. Patrick and Dr. Gael Crystal Flanagan with Dr. Nick Begich through 1994-95

the individual using these tools can see what brain waves graphically look like on a computer screen, while the person is thinking.

There are several systems now on the market, with one of the finest being produced in the United States by American Biotech Corporation. Using these systems, a person can learn to manipulate his or her own brain waves in profound ways. Some of the things which have been achieved include reaching high meditative states (states of consciousness not otherwise reached without years of practice), increasing the recovery rates of brain dysfunctions resulting from strokes or accidents, and improvements in children suffering from attention deficit and other disorders.

These new brain technologies are being used to help people with various problems. A number of researchers have shown the effectiveness of brain biofeedback in breaking drug and alcohol dependencies. The tools and techniques have been used for curing a number of mental disorders by teaching a person how to create brain patterns within themselves, at will, to change their state of consciousness. Researchers found that within 30 to 60 days most people can learn how to create a number of specific mental states at will, and without the continued use of these machines. The machines serve as a bridge to new levels of mental control. The techniques using the computer interfaces can be explained simply as a system for teaching how to control one's own thinking in one's own way to gain specific results. It can be viewed as a small child learning to control his or her legs crawling, then walking and then running. We, as adults, are still at the crawling stage when it comes to mental control. These technologies are bringing to us opportunities to take greater control of ourselves through better control of our minds. The value of this technology can not be understated.

Changing the way we think, if we are individually in control of our changes, is a healthy thing. It is disturbing to realize that governments are interested in these technologies, not for beneficial individual uses but in order to gain increased control over populations they view as dangerous. These technologies offer both great promise and a high potential for abuse. Since the technologies are here now, all of the work in these areas should be open to public review. This would help assure the preservation of the most fundamental right of humankind, the right to think in our own way.

The work being done in these fields has profound implications for all of us. The knowledge held by government agencies, under the guise of national security, would speed the understanding of these technologies and their implications. If the government's research were made public, we would have a significant advance into one of the most import-ant areas of human development. The increased efficient use of the human brain would make it more likely that we could solve the very complex problems existing in the world, in addition to improving the quality of life for many people.

This chapter introduces readers to some of the concepts which we explored, and direct readers, who become "compilers" in their own research pursuits, to new sources. This chapter also amplifies knowledge of energy in various wave forms and frequencies which can increase rather than destroy human potential. The use and development of these applications does not need to be imposed on people through the military's manipulation of the ionosphere or by other external means. These technological innovations should be chosen by individuals based upon their own decisions. In the next chapter we begin to explore the military's level of knowledge and uses of these technologies, based on the work of the Air Force, major universities and private industry.

Chapter Twenty-three

PSYCHOCIVILIZED SOCIETY AND THE C.I.A.

This chapter explores a complex subject - the use of electromagnetic waves for mind manipulation. The material is translated into simpler concepts and can be understood without a great deal of technical background. One of the main goals of the authors has been to make these concepts understandable to the layperson.

The idea of HAARP as a system for mind manipulation, some will say, is a big leap from the ionosphere. For low level military planners, it may well be. However, after a careful review of the possibilities described in the HAARP contract documents and planning records, coupled with the array of Air Force materials gathered by the authors, the possibilities are evident. The HAARP transmitting system could be used inadvertently or intentionally to alter mental functions. These next chapters will inform the reader and raise serious questions regarding what might be hidden behind the HAARP project.

"I foresee the time when we shall have the means and therefore, inevitably, the temptation to manipulate the behavior and intellectual functioning of all people through environmental and biochemical manipulation of the brain."235 The 1968 New York Times article quoted Dr. David Krech of UC Berkeley, who predicted a new technology which in the intervening years has become a reality. The work in this area has moved far beyond what anyone would think was possible a few years ago. These developments raise profound questions which should be dealt with squarely and openly, considering their far-reaching implications. Moreover, the use of the ionosphere as an antenna by the United States or any other country to manipulate in a military self-serving manner, is probably in violation of international treaties and should be forbidden by international organizations.

Dr. Jose M. R. Delgado, M.D., has researched the human brain and published his results in professional papers since 1952. He was educated in Spain and came to the United States to work at Yale University in 1950. He became a Professor of Physiology at Yale, where he continued his research work focusing on the control of the mind. His early work pioneered our understanding of the human brain and was summarized through 1969 in a book he wrote, called Physical Control of the Mind. Toward a Psychocivilized Society.236 This early work was mainly animal research, and included insertion of electrodes into the brains of animals. He found that by inducing an electrical current in the brain of his subject, he could manipulate behavior. Delgado discovered that he could create a number of effects from sleep to highly agitated states of consciousness. His later work was done wirelessly, with his most advanced efforts developed without electrode implants used at all. Stated differently, he achieved the brain manipulating effects at a distance, without any physical contact or devices attached to the living creature being manipulated. Dr.

235 The New York Times, Scientist Says Control of Intelligence Is Possible, by Harold M. Schmeck Jr., Wednesday, April 3,1968, quoting Dr. David Krech, UC Berkeley.
236 Physical Control of the Mind: Toward a Psychocivilized Society, by Jose M.R. Delgado, M.D., 1969.

Delgado found that by changing the frequency and waveform on an experimental subject, he could completely change their thinking and emotional state.

Dr. Delgado's work set the foundation for many other researchers, while at the same time opening the possibilities of misuse by the government. On page 229 of Dr. Delgado's book, he uses a quote from the UNESCO's Constitution which, in the context of his work and this book, is foreboding: "Since war begins in the mind of men, it is in the minds of men that the defenses of peace must be constructed."237 It
is a thought, in the context of Delgado's work, which smacks of the Orwellian story, 1984.

In a book about the Central Intelligence Agency's (CIA) pursuit of mind control technology, Dr. Delgado's work is also diseussed.238 Dr. Delgado's research was reviewed in 1969 by Dr. Gottlieb, who worked for the CIA's Office of Research and Development (OR) while looking for the possible uses of this technology. At that time, the work was still crude, although the CIA shared Dr. Delgado's vision for techniques which would allow for a "psychocivilized society".

During this period, a neurosurgeon at Tulane University, Dr. Robert G. Heath, brought this prospect closer to reality with his work in electrical stimulation of the brain. As one author recently put it, "Like Dr. Delgado, the neurosurgeon concluded that ESB (Electrical Stimulation of the Brain) could evoke hallucinations as well as fear and pleasure. It could literally manipulate the human will at will."239

The CIA's interest in mind control began with the Korean War, during which the North Koreans demonstrated skills in the area of mind control not previously seen in the West. The CIA undertook a significant research effort into this area which extended to numerous related fiascos. Some of these were uncovered in subsequent scandalous revelations which included Canadian citizens being mentally manipulated without consent, treatment of thousands of university students and military personnel with LSD, etc.240

To the CIA, Dr. Delgado's "wireless" effects were thought-provoking. He discovered that animals could be placed within an electromagnetic field (EMF) and be manipulated without any physical contact. Moreover, "the fields Delgado uses are as low as one fiftieth the strength of the Earth's own magnetic fields...yet when the signal is tuned to precise frequencies, Delgado can do much more than make a monkey sleepy."241 These technologies are increasingly being recognized by other researchers, and the data base has reached a level of certainty not understood as little as ten years ago.

237 United Nations Educational, Scientific and Cultural Organization's Constitution.
238 Journey into Madness. The True Story or Secret CIA Mind Control and Medical Abuse, by Gordon Thomas. 1989, pges 276-279.
239 Ibid., pg 276.
240 Report to the President bv the Commission on CIA Activities Within The United States. June 1975, pages 225-231.
241 "The Mind Fields", by Kathleen McAuliffe, Omni Magazine, February 1985.

Today, a number of tools for brain entrainment are even being marketed. Very sophisticated brain biofeedback devices have also been developed which are being used to teach individuals to alter their own brain activity to more desirable states. These devices are being used to help people with various mental dysfunctions, and others reach higher peak performance mental states. These devices can be likened to mental gym equipment designed to create individually controlled exercise programs for the brain, with the outcome being increased mental functioning.

It should be kept in mind that John Heckscher, HAARP program manager, made clear in an interview that the frequencies and energies used in HAARP were controllable and in some applications would be pulsed in the 1-20 Hertz range. The ranges of frequency and energy levels, he also stated, were small, but distinguishable from the Earth's own pulsations.242 This point was further amplified by Heckscher when he said, "The ELF/ULF waves to be generated by HAARP through interaction with the polar electrojet will have power levels so small compared with me existing background that special integrating receivers wilt have to be used to detect them."243

The issue is one of controlled coherent signals, which as we stated above can be one fiftieth the energy level of the Earth's natural fields and still have profound effects on brain activity. The HAARP system creates a huge coherent controllable electromagnetic field which could be compared to a Delgado EMF, except HAARP's doesn't fill a room, it potentially fills a region the size of a large western state and, possibly, a hemisphere. Basically, the HAARP transmitter in this application will emit energy of the same level as the Earth's which is 50 times more than was needed in the wireless experiments of Dr. Delgado. What this means is that if HAARP is tuned to the right frequency, using just the right wave forms, mental disruption throughout a region could occur intentionally or as a side effect of the radio frequency transmissions.

Another important factor not thoroughly reviewed in the HAARP documents is cyclotron resonance. The HAARP signal uses this concept in its radiated energy. The effect of cyclotron resonance is a large increase in reactions in the ionosphere and in living organisms on the ground, under certain conditions. Many activities in living cells involve charged particles, and cyclotron resonance allows for the transfer of energy to cause ions to move more rapidly. It is cyclotron resonance which allows very low strength electromagnetic fields, together with earth's magnetic field, to produce significant biological effects. It occurs because the total effect has an impact on very specific particles when tuned to the right frequency. When combined with the Earth's normal magnetic fields, it is important to note, only ELF frequencies (1-100 Hertz, pulses per second) appear to cause these biological effects,

Cyclotron resonance can be visualized as a particle being spun like a coiled spring and then screwed right through the cell wall into the cell. This effect is one of the major considerations in electromedicine. To some degree this explains why non-

242 Interview of John Heckscher, HAARP Program Manager, with Jeane Manning, 2-21-1995.
243 Letter to Mr. Arther Grey, Secretary to the United States Department of Commerce, National Telecommunications and Information Administration, Interdepartment Radio Advisory Committee, Spectrum Planing Committee, Novembers, 1994.

ionizing levels of radiation produce the effects they do.244 In other words, cyclotron resonance provides a condition where a significant interaction can take place, causing chemical reactions or other physiological responses. The manipulation of energy, when applied to living systems, can be used for enhancing the potentials of people or for harming them. It is here where the reactions occur leading to good, neutral or negative health effects.

The concept of cyclotron resonance was applied to the research carried out by the U.S. Naval Medical Research Center. They were able to apply external fields in such a way as to affect the brain chemistry of rats.245 The same effects can be created in humans. The Navy research showed that they were able to affect the lithium ion, occurring naturally in the brain, so as to create the same effect as if they had treated the animal with a chemical introduction of lithium (lithium is used as a strong anti-depressant).246 Stated another way, you could say that by harmonizing or resonating with the frequency of naturally-occurring chemicals, you could amplify their potency in the body of the animal, thereby creating the same chemical changes as would have occurred with a massive dose of the chemical being administered.

One military application of this knowledge would be to introduce to adversaries on the battlefield a minute amount of a chemical compound in their water supply, air supply or by other means and then (after they consume the contaminants) transmit the right frequencies toward them to activate the otherwise benign chemicals. It would cause debilitating effects. The chemical introductions would be below generally accepted levels for toxic effects, and yet toxic effects would occur. This is a way a country could slide around international agreements regarding chemical warfare. This technique has not been lost on the military; it is clearly understood and described in Air Force documents.247, 248 These documents offer a clear example of the "electrical medicine" predicted by Dr. Patrick Flanagan in September, 1962. Unfortunately, the military's applications are being developed for the wrong purposes. The research base controlled by the United States government and others is being withheld from those engaged in human development and healing an unfortunate situation given the current state of the world and human health.

A better application of this technology would be to rebalance peoples' chemistry using a combination of low levels of chemicals with properly tuned transmitters. This technique is being applied to healing in Europe and Asia through electro-laser acupuncture techniques perfected by researchers in those areas. Dr. Reijo Makela has developed a system of treatment for use in altering body energy levels in such a way as to induce chemical changes leading to cures of disorders heretofore considered incurable. Dr. Makela's work involves treatment of cancer, diabetes and other debilitating diseases. He has lectured throughout Europe and Asia on the methods he uses and is recognized as a leader in alternative medicine. He has trained a

244 Cross Currents, The Perils of Electropollution. The Promise of Electromedicine. by Robert O. Becker, M.D., pg 238-237.
245 Ibid.
246 Ibid, pg 236-240.
247 Final Report On Biotechnology Research Requirements For Aeronautical Systems Through the Year 2000, Volume I, Southwest Research Institute, San Antonio, Texas, 1982.
248 Ibid.

number of technicians in Europe and operates clinics in Spain and Finland. As a result of his success with over 12,000 patients in twelve years, more than 600 former patients joined together to form a support organization for Dr. Makela's research. The idea that a group of patients would come together for such a purpose is unheard of in the United States.

The HAARP radiated energy pulses, and the wave forms cited in the contract documents, are within the ranges most cited by research scientists as those responsible for controlling and manipulating the mind and body. This is an important factor which the military never discloses in any of its documents associated with the HAARP project, most particularly the Environmental Impact Statement.

The effects that Delgado's teams in Spain are studying include behavior modifying in animals, inhibiting bacterial growth, altering migratory movements in snails and healing bone fractures in rats. Electromagnetic fields (EMF) have also produced some effects with significant negative ramifications, including genetic mutations in fruit flies and gross deformations in chick embryos.249, 250 What this implies is that these low level effects alter the building blocks of the cells, which then alter the body components; which then alter the body. This translates into big problems for people when applied to human physiology. Scientists have known for some time that high levels of this type of radiation can heat up (ionizing radiation) the body, but they have assumed that low levels were not a problem. However, the current research, including military research, indicates that this is not the case. "For better or worse, weak electromagnetic fields are emerging as a potent biological force - a discovery with staggering implications for future medicine, science, industry and perhaps even the military... There is growing concern among experts that EMFs have been - or will be - deployed as invisible weapons to disrupt brain functioning and health."25l

The work of Delgado would not be particularly alarming if it were isolated. However, "animals exposed to radiation from radio waves show subtle changes in blood cell count, immunity, the nervous system, and behavior, according to a 1984 EPA document."252 The majority of these observed effects were from exposures which were within the government approved safety thresholds.

Here is where the Office of Naval Research, our "good neighbors" on the HAARP project, return to the scene. These are the same people that insist that the HAARP project is safe and is operating within the safety levels determined to be safe for humans by the government. However, United States safety levels are 1000 times LESS strict than the Soviets, which raises the question of why the United States standards are so low and what the Soviets observed to convince them that safety considerations required their higher standards.

249 The Mind Fields", by Kathleen McAuliffe, Omni Magazine, February 1985.
250 Cross Currents. The Perils of Electropollution. The Promise of Electromedicine, by Robert O. Becker, M.D., pg 210.
251 "The Mind Fields", by Kathleen McAuliffe, Omni Magazine, February 1985.
252 Ibid.

The Navy supported an international research effort to duplicate Delgado's chick embryo experiments by initiating Project Henhouse, which involved six laboratories. In 1988, the results were reported in a meeting of the Bioelectromagnetics Society with five of the six laboratories reporting "apparently, very low-level, very low frequency, pulsed magnetic fields contribute to increased abnormality incidence in early embryonic chicks."253 This study which was paid for with Naval resources showed that low levels of radiation could cause health problems.

The Navy is aware of all of the global research going on in the area of non-ionizing (non heat producing) radiations. The Office of Naval Research has been collecting published scientific reports on the biological effects of non-ionizing electromagnetic radiation, and publishing a compiled set of abstracts, since 1974. This set of abstracts, in digest form, has grown to the point where over a thousand papers are listed each year.254 These scientific papers show differing results, and can be selectively used to make any number of points which might be positive, neutral or negative. The point made here is that the HAARP folks reduced this huge body of
research to a couple of lines in the Environmental Impact Statement, which is wholly inadequate, considering the power levels to be employed with their "ionospheric heater".

The analogy can be made about the old story that a good lawyer can argue any point from either side and win by selecting the right citations. It is no different for the HAARP planners. They can selectively choose the research needed to demonstrate that there are no ill effects from their radio frequency transmitter and then, across the country on another project, select the research they want to show the opposite effect, in order to gain funding for a new weapon. In the case of HAARP, there are potential negative effects which are not being disclosed.

A neuroscientist at the Loma Linda, California, Veterans Administration Hospital, Dr. Ross Adey, has demonstrated that the brain waves of animals can be manipulated. He has shown that they can be locked in phase with external pulsating waves, which thereby affect subtle changes in behavior including enhanced learning. He has further demonstrated, in work with Dr. Suzanne Bawin, that fields too weak to trigger a nerve impulse can alter the way calcium ions bind to cell surfaces, causing an array of chemical reactions within the cell itself.255 What this means is that the kind of chemical changes which are needed to cause alterations in thinking or health can he started by very small amounts of controlled power, through understood and manipulatable means. This point is extremely important when contemplating the HAARP technologies.

Adey is also the only U.S. scientist to test a Russian machine which generates pulsed radio frequencies. Combined with other stimuli, it has been reported

253 Cross Currents. The Perils of Electropollution. The Promise ot Electromedicine. by Robert O. Becker, M.D., pg 210.
254 Ibid, pg 214.
255 "The Mind Fields", by Kathleen McAuliffe, Omni Magazine, February 1985.

to induce deep sleep. When interviewed, Adey acknowledged that the device worked, but refused to comment on the United States military's use of this technology.256, 257

A lengthy article in the Wall Street Journal discussed the direction of the military in the development of what they were calling, at the time, "non-lethal" weapons. The article explored the use of anew class of weapons which could be used to disrupt communications, radars and other electronic equipment. In the article, retired Lt. General Richard Trefry, a military advisor to President Bush, said, "They're all real." he then went on to say, "But you're bordering on classified stuff here."258 The article described a series of new developments leading to these technologies which did not exist ten years before. Time schedules for the development of these technologies had been established in 1982, with the systems expected to be ready for use in the early to middle 1990's.259 One of the major contributors to the "nonlethal" effort was John Alexander, mentioned in Chapter Two, who had written an earlier article for Military Review magazine about "the new mental battlefield". The article described the emerging technologies for use in telepathic weapons and systems which would interfere with the brain's electrical functioning. This article caught the attention of the military, who began to research this area.

John Alexander was one of the prime movers in the advanced development of nonlethal systems, from his office at Los Alamos National Laboratories. He pursued his interests in obscure science and parapsychology, connecting with Janet Morris with whom he wrote a book on mind training techniques.260 In putting the book together, she recruited Ray Cline, a former deputy director of the CIA, who opened doors to the White House and Pentagon according to a Wall Street Journal article.261 The use of the technologies was apparently known by Alexander to be problematic, because some of the weapon systems would violate international agreements. Moreover, individuals began to raise concerns suggesting that the use of "nonlethals" might cause escalation, rather than control, of volatile conflicts.

The Pentagon's nonlethal study group concluded that a major effort should be made to develop these technologies, and suggested that President Bush announce a new initiative in this area similar to President Reagan's announcement of the Strategic Defense Initiative ("Star Wars"),262

Military officials objected that such a "new initiative" announcement might have the effect of spurring other governments and possible adversaries to develop their own new systems and that it might cause policy makers to begin "political

256 The Mind Fields", by Kathleen McAuliffe, Omni Magazine, February 1985.
257 Resonance, Newsletter of the Bioelectromagnetics SIG, Number 28, May 1995, Judy Wall, Editor, 684 C.R. 535, Sumtervilte, Florida, USA. (This is a special Interest Group of M.E.N.S.A.)
258 The Wall Street Journal, "Nonlethal Arms, New Class of Weapons Could Incapacitate Foe Yet Limit Casualties, by Thomas E. Ricks, January 4, 1993, page A1 and A4.
259 Final Report On Biotechnology Research Requirements For Aeronautical Systems Through the Year 2000. Volumes I and II, Southwest Research Institute, San Antonio, Texas, 1982.
260 The Wall Street Journal, "Nonlethal Arms, New Class of Weapons Could Incapacitate Foe Yet Limit Casualties, by Thomas E. Ricks, January 4, 1993, page A1 and A4.
261 Ibid.
262 Ibid.

meddling" into this militarily promising area. These military objections drove the program into even more layers of secrecy, and Janet Morris and Ray Cline were cut out of the inner circle. The policy makers then decreed that the nonlethal technologies would be referred to in softer terms as "disabling systems" in the future.263

The new technology race was already on, and it appeared America's "adversaries" may have already made significant advances in the development of new weapon systems. The limits for microwaves were set in the United States 1,000 times higher than the level considered safe in the former Soviet Union. The reason that the Soviets set their safety standard as high as they did was because they detected biological effects at levels ignored by the West.264,265 The Russians abandoned the thermal model that the U.S. Military ascribed to when setting American standards in the 1950's (standards were subsequently adopted by civilian regulators).

The thermal model only acknowledges heating effects as potentially debilitating, and disregards the lower level radiations which also have significant effects when interacting with the fields of living things. The Soviets showed that electromagnetic fields, well within the U.S. "safety" standards, could disrupt heart rhythms, blood pressure and metabolism. In addition, Soviet scientist A.S. Presman said these fields can produce "visual, acoustic, and tactile sensations in man as well as emotional states in animals, (inducing everything) from suppressed states similar to narcosis to excited states reaching epilepsy."266 Presman went on to discuss the pronounced negative impact on creatures, from the embryonic stage up to the beginning of sexual maturity. The idea that genetic alteration could be caused by low-level electromagnetic fields causing deformation, death or other debilitating effects was the problem. The lack of mainstream medical understanding, beyond that found in leading edge research facilities, was the underlying barrier to recognizing the risks. What all of this means is that real damage to living things, including people, is likely being done by use of transmitters like HAARP. While on the other hand, if we gained a better understanding of these non-thermal levels of energy positive applications could be more widely used.

The Beam Team

From the 1960's through the 1970's, there were news and intelligence reports of microwave beams being directed at the U.S. Embassy in Moscow. There are some indications that beaming of the Embassy was also conducted as late as 1983. This beaming has been the subject of much speculation over the years. The government has not released the full story, and for the most part it remains

263 The Wail Street Journal, "Nonlethal Arms, New Class ot Weapons Could Incapacitate Foe Yet Limit Casualties, by Thomas E. Ricks, January 4,1993, page A1 and A4..

264 "The Mind Fields", by Kathleen McAuliffe, Omni Magazine, February 1985.

265 Low-Intensity,Conflict and Modern Technology, Lt Col. David J. Dean USAF, Editor, Air University Press, Center for Aerospace Doctrine, Research, and Education, Maxwell Air Force Base, Alabarna, June 1986.

266"The Mind Fields", by Kathleen McAuliffe, Omni Magazine, February 1985.

classified.267, 268 Speculated effects of the radiation include health impairment and mind manipulation,269 Beginning in 1965, the government tested embassy personnel for genetic damage which may have been caused by the microwave beaming. At the same time, they launched operation Pandora, where monkeys were exposed to the same type of signals in order to measure the effects

While government representatives have maintained that there were no ill affects from the microwaves, the results of the embassy personnel testing and Pandora remain classified.270 Even though the impact of Russian microwave radiation is unclear, it turns out that there may very well have been some effect. When Dr. Gottlieb, the MKULTRA program director for the CIA, testified to the United States Congress, he said that when President Nixon went to the USSR in 1971 members of his party showed abnormal behavior including crying and depression. The spy community already knew that the Soviets had developed microwave beaming technologies which can affect mind, memory and health. Soviet research had already shown that it was also possible to create hallucinations and significant perceptual changes in people.271

The CIA's use of mind altering technologies is not new. Under MKULTRA, the CIA conducted memory experiments on thousands of unknowing people across the United States in 180 hospitals, research centers and prisons. The CIA used LSD and other drugs, brainwashing, sensory deprivation, hypnosis and many other mind control techniques until 1976 when the United States Senate investigated these practices.272, 273, 274 It appears the names of the programs and their approaches changed but the programs may have continued beyond 1976.275

Meanwhile the Soviets had moved way ahead of the United States in their development of mind war technologies. They had perfected a device called the Lida which produced an Extremely Low Frequency (ELF) pulsing field. Lida was used to put prisoners of war into trance, so that secrets could be extracted from them more readily. As mentioned earlier, this device was tested by Dr. Ross Adey in the United States at the Loma Linda VA Hospital. The Soviets went on to discover that by slight manipulation - by reversing brain polarity (by passing very low voltage current through the front of the brain to me back) - they could induce deep sleep. Mounting evidence also indicated that they may have perfected "telepathic hypnosis" which could be deployed from hundreds of miles away from the target person.276

267 Cross Currents, The Perils of Electropollution, The Promise of Electromedicine. by Robert O. Becker, M.D.
268 Super-Memory- The Revolution, by Sheila Ostrander and Lynn Schroeder,1991.
269 Ibid.
270 The Mind Fields", by Kathleen McAuliffe, Omni Magazine, February 1985.
271 Super-Memory- The Revolution, by Sheila Ostrander and Lynn Schroeder, 1991, pges. 298-299.
272 Journev into Madness. The True Story of Secret CIA Mind Control and Medical Abuse, by Gordon Thomas, 1989

273 Super-Memory' The Revolution, by Sheila Ostrander and Lynn Schroeder,1991, pges. 292-304,
274 Report to the President by the Commission on CIA Activities Within The United States. June 1975, pages 225-231,
275 Journey Into Madness. The True Story of Secret CIA Mind Control and Medical Abuse, by Gordon Thomas, 1989.
276 Super-Memory- The Revolution, by Sheila Ostrander and Lynn Schroeder,1991, pges. 292-304,

The Soviets took their technologies a huge jump forward by 1975. It was that year that they began using seven giant radio transmitters to pulse ELF waves in the 3.26 to 17.54 megaHertz range. These waves were pulsed at 6 and 11 Hertz- key brain wave rhythms - and became known to ham radio operators as the "woodpecker" signal. The story, like the HAARP story, indicated that these were used for communication with submarines, but many believe that the negative side effects were intentional.277 These "side effects" have been speculated to have caused communications interference, power failures, mood alterations over significant distances, affecting a large percentage of the population and weather modifications which have had a devastating effect on food production since the 1970's.278

A brilliant electrophysiologist, Dr. Makela studied physics and chemistry in 1953-59, followed by a two year study in psychology and additional studies in electrophysiology. He continued his education with advanced studies in Western and Chinese medicine and acupuncture, and has practiced medicine as either a research scientist or physician for over forty years.

During a 1994 visit with Dr. Makela, Dr. Nick Begich discussed the HAARP project. The idea that the HAARP system could be used as a transmitting system for brain entrainment was explored, and it reminded Dr. Makela of a number of devices with whose features he was familiar. The idea that HAARP could create various wave forms across a large segment of the electromagnetic spectrum was of concern, considering the health risks. This system had the possibility of being misused, and the risks had not been well defined. Inadvertently there could also be negative health effects if the operators were unaware of the consequences of pulsed electromagnetic radiations in the wave forms they were using - waves which were being bounced back to the earth from the ionosphere.

In particular, when reviewing the HAARP materials, Dr. Makela was reminded of a particular device which was marketed for a short time in Japan. This device was a radio transmitter which carried a pulsed wave {6-12 Hertz). The pulses were in resonance with the radio waves, so that the radio waves acted as a carrier wave to create the desired effect. The device was used to relax or focus attention. The effect was created wirelessly and at a distance.279 It should be remembered that a United States military representative has already acknowledged that they intend to use HAARP to transmit pulsed radio frequency radiation (which we assert, if modulated in just the right way and with the right wave form, could cause serious negative health effects on people and animals). HAARP specifications call for a very versatile set of parameters[280] which can do what has otherwise only been demonstrated in the laboratory or under other controlled conditions disrupt minds and create negative health effects.

277 Super-Memory- The Revolution, by Sheila Ostrander and Lynn Schroeder,1991, pges. 299- 302.
278' ibid.
279 Dr. Nick Begich visits and conversations with Dr. Reijo Makela in Finland, November 1994.
280 Office of Naval Research, Contract Number N00014-92-C-0210, ARCO Power Technologies Incorporated as Contractors, September 16, 1992 with Amendments through October 19,1993.

The United States military is very familiar with these technologies. Captain Paul Tyler was the director of the U.S. Navy's Electromagnetic Radiation Project from 1970 through 1977. He was quoted in a February 1985 Omni article about the effects of electromagnetic radiations. He concluded that effects which could be stimulated chemically could also be stimulated electrically. "With the right electromagnetic field, for example, you might be able to produce the same effects as psychoactive drugs."281 The ideas first kicked around by the CIA and early researchers were now being pursued by the military for use in controlling human behavior - a prospect of profound implications.

Another player in this seemingly-disconnected group was Arthur Guy. Under contract to the United States Air Force, he helped compile the Radiofrequency Radiation Dosimetry Handbook. The book is the only one of its kind that explores a number of areas required for the development of weapon systems. In that publication, Guy's work from the University of Washington was described. At the University of Washington he exposed rats to low levels of electromagnetic radiation. The effect of these exposures included immunological stress and increases in the formation of tumors - four times the rate of unexposed animals. This study produced negative effects at radiation levels twenty times below the established United States safety thermal level!282

The research in non-thermal effects is being conducted throughout the world. In Germany, the Deutsche Forschungsgemein-schaft - the equivalent of the American Academy of Sciences - announced their research results concerning ELF. They concluded that "nonthermal effects due to EMF exposures can be triggered in living cells under selected conditions." Reportedly, their research in these areas would continue.283

This chapter has shown that the state of the technology in the understanding of human physiology continues to advance at a very rapid rate. The result has been the discovery of effects not previously known or well understood. The controversy which still surrounds these areas is not so much one of "does it or doesn't it work", but more about widespread ignorance of the impact of energy fields which surround all life.

Scientists in various fields tend to specialize. Moreover, basic research is delayed - sometimes for decades - in being integrated into applied technologies. This occurs largely because old standards die hard and new breakthroughs in knowledge are slowly applied. New research takes many years to migrate from the high-tech defense laboratories to the practicing physician. In the interim, the military has free rein to use these new technologies for weapon systems rather than healing systems.

281 "The Mind Fields", by Kathleen McAuliffe, Omni Magazine, February 1985.
282 Cross Currents. The Perils of Electropollution. The Promise of Electromedicine. by Robert O. Becker, M.D., pges 194-197,
283 German Workshop on Mechanisms of EMF Interactions, Microwave News, November/December, 1991.

Chapter Twenty-four

ZAPPING THE "NONLETHAL" WAY

The area of "nonlethal" technologies has in recent years gained increased public attention. The various agencies of the federal government for over a decade gradually increased public releases regarding this technology. The "sensitizing" of people to the acceptance of these new weapons has slowly worked its way into open view. Introducing these technologies has been carefully orchestrated to avoid "change shock" and to increase the probability of public acceptance.

The possibilities offered to the defense, justice and intelligence communities in "nonlethal" systems development were enthusiastically embraced by the various agencies, Eldon Byrd of the Naval Surface Weapons Center was commissioned in 1981 and 1982, to investigate the potential for developing electromagnetic devices which could be used as 'non-lethal' weapons for riot control, hostage removal, embassy security and other clandestine operations. Byrd concluded that remote manipulation of the mind was feasible. Funding was discontinued in 1982 as far as the public knows. It is more likely that this type of research was classified and moved to other facilities and to new researchers[284] in the "black" world of hidden research projects. This type of technology would not advance beyond the concept stage without becoming a "black" project based on "national security" assertions by the military.

The Nonlethal Conference

In 1986, the United States' attorney general held a conference on the development of these new high-tech weapons. It was summarized the following year[285] in a report discussing problems and solutions for what was believed to be an area with significant future possibilities. Several areas were reported to offer new possibilities for the Department of Justice.

The Department of Justice's report disclosed that:

"Participants also discussed the use of various wave lengths and forms of administration of electromagnetic energy as a non-lethal weapon. A substantial amount of preliminary research has been conducted in this area...One conference participant noted that scientific knowledge of human physiology is progressing to the point where it may soon be possible to target specific physiologic systems with specific
frequencies of electromagnetic radiation to produce much more subtle and fine-tuned effects than those produced by photic driving."

Photic driving is the use of visible light pulsed at frequencies which have been shown to impact the brain. In some people they cause epileptic seizures. The report went on:

284 "The Mind Fields", by Kathleen McAuliffe, Omni Magazine, February 1985.
285 Report on the Attorney General's Conference on Less Than Lethal Weapons, by Sherri Sweetman, March 1987, U.S. Department of Justice, National Institute of Justice.

"There is some evidence (and a good deal of supposition) that sustained, extremely low frequency (ELF) radiation can produce nausea or disorientation, One researcher has subjected animals to ELF electromagnetic radiation through electrode implants, and feels that similar results could be produced from afar, without electrodes. One participant suggested that ideally, one might like to develop the ability to design these electromagnetic fields for specialized use, for instance to produce sleep or confusion. It is known that sleep can be induced by electrodes in the brain, and Russian scientists claim to be able to produce sleep from afar (electrosleep). "286

What these conference participants were referring to was the work conducted by Dr. Jose Delgado of Yale University and the Russian Lida machine tested by Dr. Adey, referenced earlier.

Los Alamos and Friends

The report on the Department of Justice's 1986 conference also noted, "The nature of weapons to be tested and the necessity for the tests must not be a secret of the kind whose 'leak' would result in an exaggerated expose and associated public outcry." The report went on to recognize that the military had made a number of advances in these areas but that these advances were classified. It also recommended that the military should develop the technologies for less than lethal weapons, because defense contracts were large and technically sophisticated enough to do the job.

The concern about open investigation must have been lain aside when the true extent of the military advancements were eventually realized. The idea of an open discussion of these emerging areas was abandoned to the shadowy world of secrecy and hidden agendas. The next major conference where the military unveiled its new technologies to the Justice Department was classified and not open to the press or public.287 That which was to be open had become buried in secrecy by some of the same people who limited access to knowledge in the past. The public outcry they sought to avoid is now justifiably being made by many opposed to such weapons.

In November, 1993 about 400 scientists gathered at John Hopkins University Applied Physics Lab to discuss their work in developing non-lethal weapons technologies, including radiofrequency radiation (RF), electromagnetic pulse (EMP), ELF fields, lasers and chemicals. The meeting was classified, and no detailed reports were ever publicly released.288 According to the press statements and the conference agenda (which was released) the programs developing the technologies had made significant advances, Enough advancement had been made to establish a secrecy veil and classify the conference. This conference took the whole program of nonlethal weapons a step forward by bringing the leading experts together for this event. The conference was sponsored by Los Alamos National Laboratory and focused on both military and law enforcement uses for these

286 Report on me Attorney General's Conference on Less Than Lethal Weapons, by Sherri Sweetman, March 1987, U.S. Department of Justice, National Institute of Justice.
287 The Wall Street Journal, "Nonlethal Arms, New Class of Weapons Could Incapacitate Foe Yet Limit Casualties, by Thomas E. Ricks, January 4,1993, page A1 and A4.
288 Microwave News November/December 1993, Military on Nonlethal Weapons: 'A very Attractive Option'.

technologies. Dr. Edward Teller and U.S. Attorney General Janet Reno were the scheduled keynote speakers at the conference, although Reno was unable to attend.289 (The same Dr. Teller, "father of the H-bomb", had sold the use of thermonuclear weapons to make deep water ports in Alaska in the early 1960's, promoted a Star Wars weapons system for the North Slope of Alaska in the late 1980's, and was now the cheerleader for nonlethal electromagnetics.)

Dr. Clay Easterly of Oak Ridge National Laboratories led a session on ELF/EMFs. "My major point was that there seem to be some biological sensitivities or responses to ELF fields that could be useful for nonlethal technology." He could not discuss the specific applications because the information was classified by the military. He went on to say that the military was interested in the use of non ionizing (non thermal) radiation which could be used for disabling enemy electronics, although his presentation dealt with uses which would affect people.290 This again demonstrates the level of knowledge which the military ignores in HAARP disclosures to the public - potential uses or risks associated with the generation of ELF radiations over large areas of Alaska and eventually, the planet.

A number of papers were presented at the conference, and gave the latest information on applied technologies in this area. Dr. Henry Brisker from the U.S. Army Research Laboratory presented work dealing with High Power Microwave Technology, while Dr. George Baker of the Defense Nuclear Agency, presented a paper titled "RF Weapons: A Very Attractive Nonlethal Option".

What is obvious from the number of participants and the scope of the subject matter is that the development of these ideas in new military hardware did not just arrive on the scene but rather, had been a part of the military agenda for some time. The current emphasis on these technologies reflects the level of interest of the government, and the increased visibility the government is giving these areas indicates an intention to use these systems in a more open manner.291 It is common practice to let things like these types of technological advances come out in small bits in order to "test the waters" of public opinion. In this way the population can be co-opted into accepting greater levels of intrusion by governmental agencies. The idea is to indoctrinate by being taught to believe, Tather than being given all of the facts so that a prudent person could think about the issues and make reasoned decisions. The contrast can be better stated as; "propaganda -versus- persuasion by reason".

These technologies extend beyond the Air Force, CIA and Navy. "The U.S. Army has its own product - a radiofrequeney (RF) weapon. In the August 24, 1987 issue of Defense News, John Rosado of Harry Diamond Labs in Adephi, MD, is quoted as saying that 'the nature of warfare will be completely changed by the use of (RF) weapons." Rosado also noted that RF radiation could be used over a wide battlefield

259 Microwave News November/December 1993, Military on Nonlethal Weapons: 'A very Attractive Option'.
290 Ibid.
291 Non-Lethal Defense, a classified Conference sponsored by Los Alamos National Laboratory, November 16-17,1993.

with phased arrays... ".292 A phased array antenna system is what HAARP uses to send its signals to the ionosphere.

From Adversaries to Allies

Now that the "Cold War" is over and there is increased cooperation between the superpowers and former foes, Russian and American scientists have begun cooperating in a number of research efforts including electromagnetics. The Soviet counterpart to Los Alamos National Laboratory, Arzamas-16 located east of Moscow, has begun collaborating with the U.S.A.

In the early 1990's, the two tabs worked together on research regarding "an electromagnetic super generator capable of creating a pulse of electrical power greater than any found in nature." A second test was planned for "America's only similar pulsed power program", located at Los Alamos National Laboratory.293 The nuclear detonations in the upper atmosphere which were once used to create electromagnetic pulses could now be created using the technology developed in the Eastlund patents.

Electromagnetic pulse weapons also are the subject of ongoing research into new "nonlethal" systems. These types of systems present the greatest challenges and risks to health. HAARP represents more than an experimental atmospheric physics device. It has the potential for profound and far reaching effects by delivering dangerous electromagnetic pulses (BMP).

The Russian "non-lethal" or perhaps more accurately, the lethal technologies, were discussed in a 1993 article. It discloses the Cold War development of a device called a "gyrotron", which was designed to "sweep the sky of Western warplanes" by using high energy micro-waves. The article described this weapon as being able to cleanse the atmosphere of chemicals which cause ozone depletion. In developing the weapon system, the Russians discovered that this technology could be used to help the ozone problem or otherwise alter the chemical composition of the upper atmosphere294.

The technology designed to sweep the sky of warplanes has the same use envisioned by Nikola Tesla in the 1940's when he offered his technology to the United States government. Further, Eastlund described how his patents could be used to alter the chemical composition of the ionosphere, including adding ozone or destroying other selected chemicals.

The gyrotron described in the article was developed as one of the "woodpecker" radio transmitters, and works on the same principles as the Western devices. During the Cold War, the Russians' work was much more advanced than the work being done in the United States. Scientists from Russia are now collaborating with Lawrence Livermore National Laboratory on these projects.

292 Microwave News, May/June, 1988.

293 "From Russia with Love...at Los Alamos?, Intelligence Report, Parade Special Supplement, 1993?

294 "Calif.'s Livermore Weighs Plan to Use Russian Technology", by Tom Schmitz, The Journal of Commerce, April 8, 1993.

From National Defense to the Justice Department

On July 21, 1994, Dr. Christopher Lamb, Director of Policy Planning, issued a draft Department of Defense directive which would establish a policy for non-lethal weapons. The policy was intended to take effect January 1, 1995, and formally connected the military's non-lethal research to civilian law enforcement agencies.

The government's plan to vise pulsed electromagnetic and radio frequency systems as a nonlethal technology for domestic Justice Department use rings the alarm for some observers. Nevertheless, the plan for integrating these systems is moving forward. Coupling these uses with expanded military missions is even more disturbing. This combined mission raises additional constitutional questions for Americans regarding the power of the federal government.295

In interviews with members of the Defense Department the development of this policy was corrfirmed.296 In those February 1995, discussions, it was discovered that these policies were internal to agencies and were not subject to any public review process.

In its current draft form, the policy gives highest priority to development of those technologies most likely to get dual use, i.e. law enforcement and military applications. According to this document, non-lethal weapons are to be used on the government's domestic "adversaries". The definition of "adversary" has been significantly enlarged in the policy:

"The term 'adversary' is used above in its broadest sense, including those who are not declared enemies but who are engaged in activities we wish to stop. This policy does not preclude legally authorized domestic use of the nonlethal weapons by United States military forces in support of taw enforcement."297

This allows use of the military in actions against the citizens of the country that they are supposed to protect. This policy statement begs the question; who are the enemies that are engaged in activities they wish to stop, what are those activities, and who will make the decisions to stop these activities?

An important aspect of non-lethal weapon systems is that the name non-lethal is intentionally misleading. The Policy adds, "It is important that the public understand that just as lethal weapons do not achieve perfect lethality, neither will 'non-lethal' weapons always be capable of precluding fatalities and undesired collateral damage",298 In other words, you might still destroy property and kill people with the use of these new weapons.

295 Department of Defense Directive, Policy for Non-Lethal Weapons, Office of the Assistant Secretary of Defense, Draft July 21, 1994.

296 Interviews in late February by Nick Begich.

297 Department of Defense Directive, Poiicy for Non-Lethal Weapons, Office of the Assistant Secretary of Defense, Draft July 21,1994.

298 Ibid.

Pentagon officials said they would like to get $41 million in 1995, for developing these weapons which include their electromagnetic pulse systems.299 This "meager" sum has a good deal of reach, because it is for implementing already understood technology, for building prototype weapons out of mostly "off the shelf parts. The only challenge would be putting them together. The basic research for these technologies was done with "black budget" money. (These are funds which are so secret even the Congress does not know how the money will be spent, behind which organizations like the CIA, government laboratories run by the military and other intelligence organizations, hide their programs.) The Pentagon actually received $50 million to be used jointly with the Department of Justice in developing these "non-lethal" weapons.300

In press statements, the government continues to downplay the risks associated with such systems, even though the lethal potential is described in context of their own usage policy. In Orwellian double speak, what is nonlethal can be lethal.

The development of these technologies is being jointly managed by the Non-Lethal Weapons Steering Committee, which is co-chaired by the Undersecretary of Defense for Acquisition and Technology and the Office of the Assistant Secretary of Defense for Special Operations and Low Intensity Conflict.301 This crystallizes the new Justice Department and Department of Defense alliance for future law enforcement and military initiatives, in the United States.

The weaving together of Department of Defense missions with civilian Department of Justice missions is unprecedented. Not since the Civil War has the military machinery - except in very limited riot control actions - been turned against United States citizens. The idea of using these dangerous and intrusive systems is counter to good public policy. This raises serious questions regarding use of our Department of Defense for domestic police actions, which may be a violation of constitutional law by being in conflict with the narrowly-defined federal use of the military "for the national defense".

International Alarm Bells Begin to Sound

Questions are not just being raised by the authors of this book, they are being raised by the International Committee of the Red Cross. In their report from mid-1994,302 a number of points were raised.

The idea of "war without death" was not new but began in the I950's, according to the report. The military interest in these systems dealt with chemical weapons, later advancing to radiation weapons. The report looked at the ramifications of international law regarding use of these new technologies. It pointed

299 The wall street Journal, "Nonlethal Arms, New Class of Weapons Could Incapacitate Foe Yet Limit Casualties, by Thomas E. Ricks, January 4,1993, page A1 and A4.
300 Warren Hough, "High-Tech Civilian Control Studied; Secret Pentagon - DoJ Memo of Understanding, 'Non-lethal' weapons under development, are being added to the government arsenal in its war against its own citizens.", The Spotlight, July 31, 1995.
301 Perry Plans to Launch Nonlethal Warfare Effort, Defense News September 19-25, 1994.
302 "Expert Meeting on Certain Weapon Systems and on Implementation Mechanisms in International Law", Report of the International Committee of the Red Cross, Geneva, Switzerland, May 30 - June 1, 1994. Issued July 1994.

out weaknesses in the international conventions regarding the use of chemical weapons:

"Therefore, when the Convention (Chemical Weapons Convention) comes into force next year, activities involving them - activities such as development, production, stockpiling and use - will become illegal, unless their purpose is a purpose that is expressly not prohibited under the Convention. One such purpose is 'law enforcement including domestic riot control purposes'[303] Unfortunately, the Convention does not define what it means by law enforcement' (whose law? what law? enforcement where? by whom?), though it does define what it means by 'riot control agent', namely 'any chemical...which can produce rapidly in humans sensory irritation or disabling physical effects which disappear within a short time following termination of exposure'. Stales parties are enjoined 'not to use riot control agents as a method of warfare' ". 304

In other words, we can use on our own citizens what we cannot use in warfare with real enemies who are threats to national security. This explains why the development of nonlethals has moved out of the Department of Defense into the Department of Justice. For the Department of Defense to continue to work on these weapons, as instruments of war, is now illegal under international law. The Red Cross report went on to discuss the shift from weapons of war to police tools which they called - "riot control agents".

What does this mean for Americans? This places Americans, and citizens of other counties, in a lesser protected class than individuals seeking to destroy our counties - our real adversaries. This language really represents a way for countries to continue to develop these weapons. This is a loop hole in the agreement. So while the treaty looks good on the surface, it is hollow rhetoric underneath.

In another section of the report, "Future Weapons Using High Power Microwaves" are discussed at length. This section describes microwave frequencies, for HAARP developed for use in weapons against machines and people.

One of the uses described is an Electromagnetic Pulse (EMP) weapon which gives an operator the same ability to wipe out electronic circuits as a nuclear blast would provide. The main difference is that this new technology is controllable, and can be used without violating nuclear weapons treaties.

This section of the report then described energy levels needed for the following to occur:

- "Overheats and damages animal tissue."
- Possibly affects nervous system."

303 Chemical Weapons Convention, Article II 9(d).
304 "Expert Meeting on Certain Weapon Systems and on Implementation Mechanisms in International Law", Report of the International Committee of the Red Cross, Geneva, Switzerland, May 30 - June 1, 1994. Issued July 1994.

* "Threshold for microwave hearing."

* "Causes bit errors in unshielded computers."

* "Burns out unprotected receiver diodes in antennas."

The effects are based on radio frequency radiation being pulsed "between 10 and 100 pulses per second". The report confirmed that non-thermal effects were being researched. These non-thermal effects included damage to human health when the effects occurred "within so-called modulation frequency windows (10 Hertz is one such window305) or power density windows306".

The way these weapons work was clearly described when the report noted their effect on machines:

"A HPM (High Power Microwave) weapon employs a high power, rapidly pulsating microwave beam that penetrates electronic components. The pulsing action internally excites the components, rapidly generating intense heat which causes them to fuse or melt, thus destroying the circuit."

Tesla described his speed of light system as being able to melt aircraft hundreds of miles away. The Red Cross report echoes Tesla:

"HPM (weapons) attack at the speed of light thus making avoidance of the beam impossible, consequently negating the advantage of weapon systems such as high velocity tactical missiles."

In other words, with this kind of weapon there is no machine which could get by this invisible wall of directed energy. HAARP sets in motion the beginning of a system which could have these effects over the entire world.

In the last section of the report, the power levels that the Red Cross expects by the end of the decade are set at 100,000,000,000 watts307 - the same 100 gigawatt level "desired" by HAARP planners.308

Another report on non-lethal technologies, issued by the Council on Foreign Relations points out that, "The Nairobi Convention, to which the United States is a signatory, prohibits the broadcast of electronic signals into a sovereign state without its consent in peacetime. "309

305 Discussion with Dr. Patrick Flanagan on August 2, 1995 (by co-author Begich).
306 "Expert Meeting on Certain Weapon Systems and on Implementation Mechanisms in International Law", Report of the International Committee of the Red Cross, Geneva, Switzerland, May 30 - June 1, 1994. Issued July 1994.
307 "Expert Meeting on Certain Weapon Systems and on Implementation Mechanisms in International law", Report of the International Committee of the Red Cross, Geneva, Switzerland, May 30 - June 1, 1994. Issued July 1994.
308 PL/GP Technical Memorandum No. 195; "Presentations from the HAARP Workshop on Ionospheric Heating Diagnostics, 30 April - 2 May 1991, Phillips Laboratory (AFSC), Hanscom AFB, MA. 01731-5000"; Editor, Major Drew Fisher; October 22,1991.
309 "Non-Lethal Technologies; Military Options and implications", Report of an Independent Task Force sponsored by the Council on Foreign Relations, Malcom H. Weiner, Chairman, released June 22, 1995.

This report opens discussion of the use of these weapons against terrorists and drug traffickers.310 The CFR report recommends that this be done secretly so that the victims do not know where the attack is from, or if there even is an attack. There is a problem with this approach. The use of these weapons, even against these kinds of individuals, may be in violation of United States law in that it presumes guilt rather than innocence. In other words the police, CIA, DEA or other enforcement organization becomes the judge, jury and executioner.

The Universal Tool - HAARP

In a summary document produced at Maxwell Air Force Base, the real potentials of these weapon applications for the universal military tool, HAARP, are described. Although the HAARP literature produced by the military is silent on the topics discussed below, the Air Force showed, by this publication, that they are well aware of the potential use of a transmitting system like HAARP. More importantly politically is the "Newt Gingrich spin" placed on the development efforts in the foreword, by today's Speaker of the House, to the military's report on this subject.

The foreward to Low-intensity Conflict and Modern Technology was written by Congressman Newt Gingrich in 1986 before he rose to the position of Speaker. This position makes him currently the third most powerful person in the United States government. Gingrich's views on "low intensity conflicts" become relevant when considered along with the development of non-lethal technology. He focuses on creating approaches to conflict which can dispense with radicals who, in his words, "engage quietly in dirty little wars in faraway places with almost no regard for legal nicety or the technical problems of international law".311

The ability of the United States to meet these challenges is also discussed in the loreword as Gingrich wrote:

"The organization of power in the State and Defense Departments and the relationships between Congress, the news media, and the executive branch are all unsuited to fighting low-intensity conflict effectively."

He goes on to describe the limits of the military in addressing these types of conflicts, and commends the military foT developing the policy doctrine and the new technology directions of the Air Force put forward in the book. Newt Gingrich apparently remains a fan of non-lethal weapons, which he views as useful technology for domestic law enforcement. Specifically, he said, when commenting on these technologies, that they "are our real peace dividend" and that they will "preserve the defense industrial base, stimulate jobs in high-technology industry, and provide needed new options to local police and law enforcement authorities."312

310 Non-Lethal Technologies; Military Options and Implications", Report of an Independent Task Force sponsored by the Council on Foreign Relations, Malcom H. Weiner, Chairman, released June 22, 1995.
311 Low-Intensity Conflict and Modern Technology. Lt Col. David J. Dean USAF, Editor, Air University Press, Canter for Aerospace Doctrine, Research, and Education, Maxwell Air Force Base, Alabama, June 1986.
312 "Armageddon Killing Them Softly" by Russell Shorto, GQ, March 1995.

Another interesting issue to contemplate is the Defense Department's new Policy on non-lethal weapon systems, where "adversaries" and "enemies" have been more broadly deftned, as here the use of such systems against American citizens. The idea that these systems can be used almost without detection to manipulate the behavior and thinking of people raises moral questions. This use also appears to be in conflict with Constitutional rights regarding free expression and speech. The fact that the military together with the United States Justice Department can now use these technologies, under their broad definitions, should sound an alarm for all people, not just Americans.313

In our opinion, the only redeeming discussion in Low-Intensity Conflict. and Modern Technology, (a compilation of papers presented in 1984) was that some at the meeting saw the "new" technologies for what they were, and began heated debates about the morality of using these weapon systems. In the closing page of the technology overview the following was written:

"Paul Tyler also discusses the application of electromagnetic radiation (EMR) to low-intensity conflict. He surveys ongoing scientific research into the biological effects of electromagnetic radiation. Tyler tells us current evidence indicates that specific biological effects can be achieved by controlling the perimeters of electromagnetic radiation directed at human subjects. Thus there is the potential to use EMR to control human behavior or even to maim or kill adversaries. Tyler urges that the United States should devote considerable resources to exploring the possibilities of developing EMR weapons technology, which could be of particular value in low-intensity scenarios. "314

It becomes increasingly obvious that the inner circle of the Department of Defense placed a substantial amount of effort and emphasis in these areas.

The writer continued:

"Both Tyler's and Ruotanen's (another contributor to Low-Intensity Conflict and Modern Technology) papers created heated discussions. Some panel members questioned the advisability of employing nuclear, EMP (electromagnetic pulse), and EMR (electromagnetic radiation) weapons.They felt the ever-present danger of escalation would negate any advantage to be gained from surgical ground or atmospheric nuclear burst. Some on the panel saw Tyler's article as bordering on moral heresy. It is acceptable to have weapons and strategies to blow bodies into little pieces or burn them to a crisp, but not to use medical research and techniques to develop more subtle ways of eliminating or controlling enemies. There was some feeling that any benefit to be gained from research into EMR effects - dangerous in itself - might well be overshadowed by indignant outcries against the use of EMR weapons on human beings. "315

313 Department of Defense Directive, Policy for Non-Lethal Weapons, Office of the Assistant Secretary of Defense, Draft July 21,1994.
314 Low-Intensity Conflict and Modern Technology,. Lt Col. David J. Dean USAF, Editor, Air University Press, Center for Aerospace Doctrine, Research, and Education, Maxwell Air Force Base, Alabama, June 1986.
315 Ibid.

The development of these new weapons helps demonstrate the general immorality of war, particularly when the military establishment presents mind manipulation as a preferable outcome to death. The authors of Angels Don't Play This HAARP believe that we need open debate on these types of weapons. These discussions should be similar to nuclear arms talks.

Another revealing section of this military compiled book apparently aimed at a rationale which would make sense in the minds of defense planners and would help them deal with the moral issues:

"The articles and discussions in the technology panels generated quite a bit of heat and quite a bit of light. Chief among the concepts brought into the light was that the application of technology to low-intensity conflict should not hinge on the debate over simple or advanced systems, or high versus low technologies...The key is to recognize specific requirements and apply suitable systems and technologies to meet those requirements. "316

Stated differently, the military's means justifies the military's end. (For Ruotanen's comments on electromagnetic pulses see our chapter, "Thermonuclear Weapons Replaced By Electropulse.")

Obviously, these concepts were well understood by the military in 1984 when the original work was presented which led to this book's publication in 1986. The system's development moved forward- most likely within "black budgets" - from 1984 onward. The HAARP system is the largest concept-delivery system ever constructed by the military which could create the effects described in 1984.

The next chapter in Low-Intensity Conflict and Modern Technology is the section written by Captain Paul Tyler. Tyler discusses, to some degree, the application of non-ionizing radiation using external fields including radiofrequency radiation and other electromagnetic radiations. He discusses some of the beneficial effects of this energy for healing wounds, bone regeneration in fractures, electroanesthesia, acupuncture and pain relief.

He then jumps into the military applications of this technology:

"The potential applications of artificial electromagnetic fields are wide-ranging and can be used in many military or quasi-military situations... Some of these potential uses include dealing with terrorist groups, crowd control, controlling breaches of security at military installations, and antipersonnel techniques in tactical warfare. In all of these cases the EM systems would be used to produce mild to severe physiological disruption or perceptual distortion or disorientation. In addition, the ability of individuals to function could be degraded to such a point that they would be combat ineffective. Another advantage of electromagnetic systems is that they can provide coverage over large areas with a single system. They are silent and

316 Low-lntensity Conflict and Modern Technology. Lt Col. David J. Dean USAF, Editor, Air University Press, Center for Aerospace Doctrine, Research, and Education, Maxwell Air Force Base, Alabama, June 1986.

countermeasures to them may be difficult to develop... One last area where electromagnetic radiation may prove of some value is in enhancing abilities of individuals for anomalous phenomena. "317

Tyler's comments point to applications which may already be somewhat developed. He refers to an earlier Air Force document about the uses of radio frequency radiation in combat situations, (note that HAARP is the most versatile and the largest radio frequency radiation transmitter in the world.) He also points out that the uses may include enhancement of "anomalous phenomena" in individuals. Anomalous phenomena are those kinds of things which are not readily explained. You might say these are the quirks in human potentials. These could be called extrasensory or super-normal phenomena. This significant area is carefully screened in the writing. He refers to Eastern European research and the Soviet work also, without disclosing what exactly they were doing with this technology.

Another document prepared for the Air Force in 1982 reveals the direction that branch of the armed services took the technology. While commenting on radio frequency radiation usages the report stated:

"Biotechnology research must consider the significant advances that can be made in electromagnetic radiation weapons and defenses that could be in place by the year 2000.. .Research is first needed to develop and apply methods for assessing pulsed RFR (radio frequency radiation) effects. Techniques are needed for depositing RFR at selected organ sites. Mathematical models and physical measurement capabilities must be developed to track, real time, RFR energy distributions within these organ sites as a function of physiological processes such as diffusion and blood flow. These studies will require prudent extrapolation of physical and physiological data obtained from laboratory animals to humans in operational environments. "318

This 1982 report called for research to develop hardware that could deliver the radiation through new weapons for the Air Force.

A research publication commissioned by the Air Force - Radio Frequency Dosimetry Handbook - described these models, in time to meet the schedules they had put forward in 1982.319 The book gives mathematics for calculating the dosages (Dosimetry) of radio frequency radiation necessary to cause changes in animals and humans. The book compiled research spanning five decades, and contains a bibliography which is 29 pages long. It is the only book of its kind available on the subject in the world. This book, and more importantly the research behind it, forms the matrix of thought and theory for the finest electromedical devices for healing yet contemplated. However, this military research is not being used to heal; it is being used to develop better methods of killing.

317 Low-lntensitv Conflict and Modern Technology, Lt Col. David J. Dean USAF, Editor, Air University Press, Center for Aerospace Doctrine, Research, and Education, Maxwell Air Force Base, Alabama, June 1986, pages 249-251.
318 Final Report On Biotechnology Research Requirements For Aeronautical Systems Through the Year 2000. Volume I, Southwest Research Institute, San Antonio, Texas, 1982, pg. 44.
319 Radiofrequency Radiation Dosimetry Handbook , United States Air Force School of Aerospace Medicine, Brooks Air Force Base, Texas, October 1986.

One of the principal reviewers of the Radiofrequency Radiation Dosimetry Handbook for the Air Force was Dr. Herman P. Schwan. Dr. Schwan was also the largest contributor to the book, having two full pages of his work alone cited in the bibliography. His basic research is being used for the development of military hardware for use by the West. His recruitment for this is another case of the "military means justifying the military ends". An interesting aside to this individual's history Includes his work in Nazi Germany during World War II, where he worked in scientific laboratories. He was later admitted to the United States under a special military operation called "Project Paperclip"320, a pro-gram designed to bring to the United States prominent scientists who had been employed in Nazi laboratories during the war.321 In 1957, Dr. Schwan was working for the Biological Warfare Laboratories at Fort Detrick, Maryland, where the United States military gave him a "Top Secret" security clearance.322 Dr. Schwan is now working at University of Pennsylvania.

Going back for a moment to the 1982 Air Force report referred to earlier, the use of radiofrequency radiation in the new weapon systems contemplated by the Air Force was intended to change the central nervous system, cardiovascular system and the respiratory system. We were distressed to read about the idea of using this technology to alter the way people think in order to make the "enemy" of the government incapable of waging war.323 This type of use of a technological advancement is inherently evil, in the opinion of the authors of this book. Thinking is a fundamental right of all people. No individual or government should interfere with the free will of individuals in this way. Moreover, the fact that these technologies are classified - and hidden from the medical community - denies humanity the opportunity to explore these areas for healing people rather than for destructive purposes.

The report speaks about using this technology in a way which could interact with biological or chemical agents, The report states, "it may be possible to sensitize large military groups to extremely dispersed amounts of biological and chemical agents. It should be noted that this may require relatively low level RFR."324 The idea expressed here is that depositing small amounts of chemicals in a person's physiological system, in amounts below normal levels where negative physical effects are known to occur, will ensure they have no perceivable effect until radio frequency radiation (RFR) is introduced. Once introduced, the RFR creates physiological reactions which are detrimental to the host. This would allow individuais who are not exposed to the chemicals to then enter the area of the RFR without harm to their own bodies. When an operator tunes the RFR in just the right

320 Proiect Paperclip, by Dr. Clarence Rasby, Athenaeum Press, 1975,
321 Memorandum, Office of the Deputy Director of Intelligence, Headquarters European Command,
October 30, 1947. (provided by: International Committee for The Convention Against Offensive Microwave Weapons)
322 Memorandum, Headquarters Second United States Army, Fort Meade, Maryland, September 5, 1957. (provided by: International Committee for The Convention Against Offensive Microwave Weapons)
323 Final Report On Biotechnology Research Requirements For Aeronautical Systems Through the Year 2000, Volumes I and II, Southwest Research Institute, San Antonio, Texas, 1982.
324 Final Report On Biotechnology Research Requirements For Aeronautical Systems Through the Year 2000, Volumes 1 and II, Southwest Research Institute, San Antonio, Texas, 1982.

way, changes are caused in the energy state of atoms, which cause chemical reactions in the body, which in turn manifest as physiological or psychological changes.

The introduction of small amounts of chemicals is a very important concept when cyclotron resonance is considered. The HAARP transmitter uses cyclotron resonance in radiating its energy transmissions into the ionosphere. This causes a large increase in reactions in the ionosphere and in living organisms. Cyclotron resonance occurs when, as a result of complex electromagnetic interactions, a charged particle or ion begins to go into a circular, or orbital, motion. The speed of the orbits
is determined by the ratio between the charge and weight of the particle and the strength of the applied field. Once this happens, and a specific charged particle frequency determined, if an electric field is added that is in harmony with this frequency at right angles to the magnetic field, energy is transferred from the electric field to the charged particle.

Many activities in living cells involve charged particles. Cyclotron resonance allows for the transfer of energy to cause ions to move more rapidly. it_is cyclotron resonance which allows very low strength electromagnetic fields, together with Earth's magnetic field, to produce major biological effects. It happens because the total effect impacts very specific particles when tuned to the right frequency. To some degree, this explains why non-ionizing levels of radiation produce the effects which they do.325 The right weapon system could literally be tuned like a radio by an operator for the maximum negative effect. The principle could also be applied for healing purposes, and this area is being researched in some quarters.

Cyclotron resonance can be visualized as a particle being spun like a coiled spring and then screwed right through the cell wall into the cell. Here, reactions can lead to good, neutral or negative health effects. This effect is one of the major factors in electromedicine.

When combined with the Earth's normal magnetic fields, it is important to note, only ELF (1-100 Hertz) frequencies can cause controlled or accidental negative health effects. As far as is generally known, this is true until the strength of radiation escalates to the ionizing level.

The concept of cyclotron resonance was applied to the research carried out by the U.S. Naval Medical Research Center. They were able to apply external fields in a way which affected the brain chemistry of animals. They were able to affect the lithium ion to create the same effect as if they had treated the animal with the chemical lithium (lithium is used as a strong anti-depressant).326 In other words, affecting a chemical which was already in the body, or one that is introduced to the body, a person could literally amplify the effect of the chemical to the point where a very significant effect is caused, even death. Many naturally occurring chemicals are not dangerous in the amounts present in the body. If these chemicals are affected by

325 Cross Currents. The Perils of Electropoliution. The Promise of Electromedicine. by Robert O. Becker, M.D., pg 236-237.
326 Cross Currents. The Perils of Electropoliution. The Promise of Electromedicine. by Robert O. Becker, M.D., pg 236-240.

RFR, however, their potency increases to the point of being dangerous. The introduction of RFR causes a change in energy states, which cause chemical reactions. The results depend on wave form, frequency and energy level introduced, among other things. HAARP could be used to deliver the type of radiofrequency radiation described by Tyler and others. The use of HAARP in this way could be intentional or accidental, depending on the level of knowledge held by the equipment operators.

The 1982 report, Final Report On Biotechnology Research Requirements For Aeronautical Systems Through the Year 2000. went on to describe graphically the research efforts, breaking them into three primary areas.

* "Pulsed RFR Effects" which covered a research period from 1980 through 1995, emphasized "considerably increased efforts" in this area.

* "Mechanisms of RFR with Living Systems" was referred to as a "continuation of ongoing research" beginning in 1980 and forecast to conclude around 1997.

* The last area of emphasis was "RFR Forced Disruptive Phenomena", which they considered a "major new initiative". It was to begin around 1986 and continue until 2010. This last area could be characterized as applied technology, scheduled to begin at the same time as the Radiofrequency Radiation Dosimetry Handbook's completion. The handbook gave the basic information needed to develop new and powerful weapon systems which would have a negative effect on humans and electronics, but would leave otheT property unscathed.327 By the mid-1990's, the timeline for development was on or ahead of schedule.

The above report grew into a second volume, which gave a more detailed account of the Air Force's 1982 level of knowledge of radio frequency radiation (RFR) impacts on people. This report says, "As the technological race continues, knowledge of mechanisms of action of RFR with living systems and the assessment of pulsed RFR effects will demonstrate the vulnerability of humans to complex pulsed electromagnetic radiation fields in combination with other stresses."328

The Air Force document laid out the aims and approaches for developing technological expertise to make adversaries helpless. The use of the technologies crystallized in the Radiofrequency Radiation Dosimetry Handbook, previously cited. The researchers' intent was to monitor the effects of the radiofrequency radiations at a chemical, molecular and atomic level. The document stated,

"Currently available data allow the projection that specially generated radiofrequency radiation (RFR) fields may pose powerful and revolutionary antipersonnel military threats. Electroshock therapy indicates the ability of induced electric current to completely interrupt mental functioning for short periods of time, to obtain cognition for longer periods and to restructure emotional responses over

327 Final Report On Biotechnology Research Requirements For Aeronautical Systems Through the Year 2000. Volumes I and II, Southwest Research Institute, San Antonio, Texas.
328 Final Report On Biotechnology Research Requirements For Aeronautical Systems Through the Year 2000. Volumes I and II, Southwest Research Institute, San Antonio, Texas, pg. 181-188.

prolonged intervals. Experience with electroshock therapy, RFR experiments and the increasing understanding of the brain as an electrically mediated organ suggest the serious probability that impressed electromagnetic fields can be disruptive of purposeful behavior and may be capable of directing and/or interrogating such behavior. Further, the passage of approximately 100 milliamperes through the myocardium can lead to cardiac standstill and death, again pointing to a speed-of-light weapons effect. "329

The advances in wireless transmission of energy for these kinds of weapons has reached the stage where we could see them used in the coming decade. It is likely that the research will give technicians increasingly more versatile and controlled effects.

The document then built into a wild scheme which, upon first reading, escaped our research focus. We couldn't quite get the idea of what the Air Force meant by "interrogating", and how this would fit into the picture of radiofrequency radiation weapons hardware.

It became clear when we read the following:

"While initial attention should be toward degradation of human performance through thermal loading and electromagnetic field effects, subsequent work should address the possibilities of directing and interrogating mental functioning, using externally applied fields within the possibility of a revolutionary capability to defend against hostile actions, and to collect intelligence data prior to conflict onset. "330

What this seemed to say was that the objective of the research would be toward mind manipulation at a distance, where the military could alter what people thought and, at the same time, know what they thought. It seemed too much like a science fiction novel. How in the world could this effect be possible? How long had research been underway, so that the military would be so bold as to publish this kind of material in an unclassified document? Could it be that they had quietly advanced their research into these technologies under a veil of secrecy? Then again, the Neurophone technology had been around since the 1960's. It had been thoroughly investigated and most likely used in forming the basis for new weapons. After all, the military had confiscated and controlled the technology under a secrecy order decades before (see Chapter Twenty-two)

The report went on to describe a system which again pointed to the HAARP project. The report called for the development of:

"A rapidly scanning RFR system [which] could provide an effective stun or kill capability over a large area. System effectiveness will be a function of waveform,

329 Final Report On Biotechnology Research Requirements For Aeronautical Systems Through the Year 2000, Volumes I and II, Southwest Research Institute, San Antonio, Texas, pg. 181-188.
330 Ibid.

field intensity, pulse widths, repetition frequency and carrier frequency. The system can be developed using tissue and whole animal experimental studies, coupled with mechanisms and waveform effects research."

This is what HAARP is, among other things. Page V of the HAARP HF Active Auroral Research Program. Joint Program Plans and Activities specifies that the RFR heater must have a rapid scanning capability. Other HAARP documents define the waveform and frequency characteristics as if the same writer had written all of the documents.331 It is the new tool for the military in meeting their self imposed challenge of a "technological race." HAARP is the one-size-fits-all RFR universal tool.

The grossly unfortunate part of this type of experimentation is how it is used. In our opinion, using RFR and other energies to destroy human life, as opposed to enhancing it, is immoral. The new directions of the energy sciences in healing people and enhancing health are not considered by the military - a travesty and a disservice to us all. At a time when health care costs are rising, and the threats of major conflict declining, our government continues to spend billions on killing rather than on enhancing the human experience. These areas are important, and the research should be available so that more prudent uses can be developed. If this happened, we believe it would speed the positive developments being pursued by those who have great energy and creativity; but limited resources.

Unfortunately, the idea of using RFR for destructive purposes negates the entire area of positive life science applications. The research in life sciences using electromagnetic radiations (EMR) is advancing outside of the mainstream medical establishment, but is beginning to be used there as well. Some genetic engineering researchers for example, are already using this knowledge in their work.

Going back to the text by Captain Paul Tyler, we can look at the debate between classical theories and recent research. There is a gulf of conflict between these two schools of thought. The debate centers on the classical idea that only ionizing radiation (that which generates heat in tissue) can cause reactions in the body, while new research indicates that subtle, small, amounts of energy can cause reactions as well. What Tyler wrote in 1984, as an officer in the Air Force, puts the debate simply. He said,

"Even though the body is basically an electrochemical system, modem science has almost exclusively studied the chemical aspects of the body and to date has largely neglected the electrical aspects. However, over the past decade researchers have devised many mathematical models to approximate the internal fields in animals and humans. Some of the later models have shown general agreement with experimental measurements made with the phantom models and animals. Presently most scientists in the field use the concept of specific absorption rate for determining the Dosimetry (dosages) of electromagnetic radiation. Specific absorption rate is the intensity of the internal electric field or quantity of energy absorbed... However, the use of these classical concepts of electrodynamics does not explain some experimental

331 Ionospheric Research Instrument (HAARP), March 6,1992, Attachment to contract PR. No. N00014-92-C-0210 issued to ARCO Power Technologies, inc. pages 15-19.

results and clinical findings. For example, according to classical physics, the frequency of visible light would indicate that it is reflected or totally absorbed within the first few millimeters of tissue and thus no light should pass through significant amounts of tissue. But it does. Also, classical theory indicates that the body should be completely invisible to extremely low frequencies of light where a single wave length is thousands of miles long. However, visible light has been used in clinical medicine to trans illuminate various body tissues. "332

In other words, the classical theories are partially wrong in that they do not fully explain all of the reactions which are observed in the body. The Navy has abstracted over a thousand international professional papers by private and government scientists which explore these issues. The Navy is well aware of the current research which shows the non-thermal effects of various electromagnetic radiations when they interact with living tissue,

Tyler continues, "A second area where classical theory fails to provide an adequate explanation for observed effects is in the clinical use of extremely low frequency (ELF) electromagnetic fields. Researchers have found that pulsed external magnetic fields at frequencies below 100 Hertz (pulses/cycles per second) will stimulate the healing of nonunion fractures, congenital pseudarthroses, and failed arthroses. The effects of these pulsed magnetic fields have been extremely impressive, and their use in orthopedic conditions has been approved by the Food and Drug Administration. "333

Even the FDA, one of the most vigorous regulatory authorities in the country, accepts these non-thermal effects.

Tyler adds, "Recently, pulsed electromagnetic fields have been reported to induce cellular transcription (this has to do with the duplication or copying of information from DNA, a process important to life). At the other end of the non ionizing spectrum, research reports are also showing biological effects that are not predicted in classical theories. For example, Kremer and others have published several papers showing that low intensity millimeter waves produce biological effects. They have also shown that not only are the effects seen at very tow power, but they are also frequency-specific. "

Tyler goes on to discuss the results of this new thinking and the possible effects of these low energy radiations in terms of information transfer and storage, and their effects on the nervous system. Research has shown that very specific frequencies cause very specific reactions, and, once a critical threshold is passed, negative reactions occur.334 The key to Pandora's box has been turned, and the box has now been opened. Will it result in life or death?

Tyler's paper created a good deaL of controversy but was based upon good research and an in-depth knowledge of the subject matter covered. In the decade since

332 Low-Intensity Conflict and Modern Technology. Lt Col. David J. Dean USAF, Editof, Air University Press, Center for Aerospace Doctrine, Research, and Education, Maxwell Air Force Base, Alabama, June 1986.
333 ibid.
334 ibid.

its publication, the public debate on the material has continued to grow, even though many of the sources cited in these pages have limited distribution.

The topics in this section could elevate the debate on military technologies. What will these areas of research yield? Should citizens take a greater interest in public affairs and remove the layers of secrecy which mask these research efforts? These are the issues we all face now, and will continue to face as we move further down the road of new technology.

"If you adequately educate your community,
you will find that the politicians will be scrambling to
become better educated themselves."

Helen Caldicott, M.D., Missile Envy

PART FOUR

STOP THE "MUSIC"

Chapter Twenty-five

PLAYING THE HAARP

The HAARP program funding was temporarily frozen in 1995 by the United States Senate. Yet the project moved forward, funded from unknown sources. The activity was on schedule for the most part, and it included the normal kinds of start-up activity. The schedule was as follows:

* December 18-22, 1994. This period was used to integrate the system through a number of tests.

* January 18-25, 1995. The system integration phase of testing was continued.

* February 21 - March 2, 1995. A number of performance tests were run on the system.

* March 29 - April 13, 1995. Formal testing of the device was done.

* July 25 - August 10, 1995. Improvement evaluations were made, to correct problems with the transmitter. Low power testing was being done, in which the military "swept 5000 channels in 3.2 second sweeps between 2.8 and 10 megaHertz".
In the sweep there were three "even mode resonances" discovered which, when hit, caused a malfunction in the device. Electrical arcing occurred between the antenna array and the lightning arresters, causing a four inch diameter aluminum plug to vaporize. The only thing left of the plug was an aluminum coating it left on insulating wires when it disappeared. The interesting fact about this problem was it occurred with only 100 watts of power from each of thirty-six operating antennas.335 What unexpected things will happen when the array is fully energized?

* September 11-22, 1995. The system will be used to test patent number 5,041,834. The HIPAS facility near Fairbanks, Alaska will be used with HAARP. Both heaters will be sending energy to the same point in the ionosphere during these tests. The heating will take place at 250 - 300 kilometers above the earth. Sensing instruments will be set up in Alaska at facilities in Anchorage, Glenallen and near Fairbanks.336

* Winter/Spring 1996. Testing of earth-penetrating-tomography will begin.337 This testing is part of a $10 million 1996 appropriation for HAARP.338 This funding was provided under the Counterproliferation Support section of the U.S. federal budget, used for limiting and monitoring nuclear weapons development in other countries.

335 Memorandum from Eric Nashlund, Member of the Radio Frequency Interference Committee for HAARP dated August 2, 1995.
336 ibid.
337 HAARP Fact Sheet, Phillip's Laboratory, July 17, 1995.
338 Department of Defense Appropriation Bill, 1996, Chaired by United States Senator Ted Stevens R-Alaska, Report 104-124, pg. 190. (Provided by Steven Aftergood, Federation of American Scientists, Washington, D.C.)

The HAARP antennae are rated for 10,000 watts each at full power. In the second phase planned for HAARP the array will be increased in size in order to provide 4,700,000,000 to 10,000,000,000 watts of effective radiated power.

HAARP is going forward but there are still some mechanical problems which are delaying its progress. These delays are the result of some problems with the power levels coming from the array. The energy gain is caused by an effect referred to as "negative impedance".339 The effect was described as "more power returning to the transmitter than is outgoing from the adjacent antennas". Instead of the energy level matching with say 10,000 watts going out and 10,000 watts returning - it is returning energy at 12,000 to 18,000 watts. What does this mean? It is an unexpected result which is occurring in low energy level testing. What will happen at the higher levels of energy planned for the future is not known. Is there a HAARP acting like a harpoon - is there an accident in the making?

339 Telephone interview between Nick Begich and Eric Nashlund a member of the HAARP Radio Frequency Interference Committee, August 2, 1995.

Chapter Twenty-six

SOFT SELL, THE ENVIRONMENTAL IMPACT STATEMENT

The Environmental Impact Statement (EIS) and its public hearings were completed long ago. There is no independent monitoring of the HAARP project or of the related University experiments. With the completion of the EIS process, the hurdle of "oversight" is over for the HAARP players, and nobody is looking over their shoulders. They now work without significant public scrutiny.

This type of project, is very different from projects which are monitored continually by independent inspectors with differing program goals than military and university scientists. The ionosphere belongs to the world. The immediate area belongs to Americans/Alaskans, who should be monitoring HAARP independently of its personnel.

The authors of this book believe that the HAARP activity should be monitored by a panel of multidisciplinary scientists, without conflicts of interest, who continually review the work under the oversight of the Alaska Department of Environmental Conservation. Moreover, laws should be passed to put enforcement teeth into the monitoring. This could be done by giving the oversight committee the power to freeze all state appropriations to the University if the project presents significant dangers not disclosed by the military or University. This could halt the project if the University were otherwise unwilling to follow the recommendations of the oversight committee. In addition, as long as the local power generating company was controlled and operated as a member-owned cooperative with an elected Board of Directors, they could literally unplug HAARP if it eventually connects to the regional power grid. This could temporarily stop the project while the federal government argues in the courts about its power demand requirements.

The only real way to stop this project, and others like it though, is through international pressure. These military projects should have some international watchdog component, considering the fact that these programs could negatively impact other countries who are not declared enemies of the United States. What are the safeguards for any country tampering with atmospheric systems which we all rely on for life?

The environmental review process is supposed to explore all risks and impacts in a given project. It was the omission of significant international community review which led to disputes over thermonuclear testing, dumping waste into the open seas and other inter-national environmental problems. It is arrogant, and inexcusable, for any country to think they can create upper atmospheric energy litter without full disclosure and consent from the other countries which may, pay the price for these programs in the end.

While there may be some good effects from this technology, the negative possibilities are immense. Understanding the planet cannot occur by dissecting the ionosphere, yet another part of our living system. Environmental Impact Statements are supposed to be comprehensive and disclose all risks. These documents, and hearings, are not just some compliance hurdle to be jumped over by the military, the University and their contractors in their single minded pursuit of their program mission, These are rules intended to inform the public and protect the environment from very real hazards. What are the environmental risks which were inadequately disclosed or explored in the public documents on the project?

The Navy, Air Force and University have not adequately defined the following risks, nor provided opportunities for public testimony after-ward:

1. Issues missing in the EIS include the possible impacts on the upper atmosphere. The military and the University should describe the amplification effects which occur
in the ionosphere when Very Low Frequency radiation (VLF) impacts the magnetosphere creating a "charged particle rain" (as described in the Navy's research conducted by Lockheed and Stanford and referred to elsewhere in this book).

2. The issue of non-ionizing radiation has not been disclosed even though the Navy has cataloged and reviewed more than 1,000 research papers from around the world on this subject. The risks of this kind of systems' outputs have been explored by the Army, Navy, Air Force, CIA and others, and yet their research has not been mentioned at all in any of the HAARP records. Other records from these organizations are discussed elsewhere in this book, and will serve to dramatize the substantial risks and potential problems of the electromagnetic radiations being emitted from this system.

3. The Navy conducted international research, modeled after the work of Yale physiologist Jose MR. Delgado, M.D., which clearly showed that Extremely Low Frequency (ELF) energy waves cause significant increases in genetic mutation and alteration in animal embryos. This research may be extrapolated to infer the same kind of effects on human embryos. The use of ELF in the earth-penetrating tomography has been acknowledged by John Heckscher, HAARP Program Manager, although nowhere does he or anyone associated with the project discuss this research. The potential impact on animal life and people is never disclosed in the EIS. In fact, it is avoided, except for a couple of lines where the HAARP planners say there is no effect. When challenged on the issue, they say that the energy is being beamed up and not down, leaving out entirely the earth-penetrating tomography applications. It is likely that when challenged on this point they will say, as the government has in the past, that the energy level is small and not harmful. They have said it is about the same as that which naturally occurs in the earth. Even if this were true, research has shown that energy at l/50th of the Earth's natural strength - when pulsed in the right waveform, at the right frequency - will cause harmful physiological and psychological effects. The military is not disclosing their own research in this very important area.

4. Another one of HAARP's tricks, described by the military (see previous chapter) is moving the ionosphere in such a way as to allow satellites to operate in the space previously occupied by that section of the ionosphere. What does this do? It makes a hole so that all living things under that hole are irradiated, instead of being naturally shielded from them, The ionosphere is our natural umbrella which lets the good parts of the electromagnetic spectrum in and filters out the bad. Making holes without describing these risks is a gross miscarriage of responsibility by our university professors and defenders of peace - people that Americans, and all citizens of the world, should be able to trust.

5. The Eastlund patents also discuss molecular manipulation and weather manipulation. These applications are forbidden by international agreements, and are avoided in the HAARP documents. They are clearly described in the Eastlund patents and are alluded to in other govern-mental records.

These are the most glaring risks which require further clarification by our government. It is important that these and other possible risks be assessed independently through a process more complete than the normal Environmental Impact Statement. The ionosphere is not any country's national asset; it is an international asset and should not be tampered with unless all countries take part in the decisions which might otherwise result in our mutual demise. Are we so arrogant as a country to believe that we are the gods of the upper atmosphere and the keepers of the keys to possibly life and death on Earth?

Chapter Twenty-seven

PANDORA'S BOX AND THE GREAT TEMPTATION

Some will say that the government would not do the kinds of things described in these pages. The compilers of this material wish this were the case. However, American history is littered with the carcasses of bad science and ill-conceived technologies. Each year, in fact each month, it seems the citizens of all of the countries of the world are introduced to new scandals of military, "intelligence" and governmental abuses. The temptation, the compulsion, and the addiction for more power and control over people are the first evils released from the Pandora's Box of modern gadgetry. The authors are not against technological advancement but, rather, hope science can be pursued in the open light of day and can lead toward improved human conditions.

"Political strategists are tempted to exploit research on the brain and human behavior. Geophysicist Gordon J. FMacDonald - specialist in problems of warfare - says accurately-timed, artificially-excited electronic strokes 'could lead to a pattern of oscillations that produce relatively high power levels over certain regions of the earth...In this way, one could develop a system that would seriously impair the brain performance of very large populations in selected regions over an extended period'...No matter how deeply disturbing the thought of using the environment to manipulate behavior for national advantages to some, the technology permitting such use will very probably develop within the next few decades. "340

This statement was made over twenty-five years ago, and was a precursor for what became reality in 1995.

In 1966, MacDonald was a member of the President's Science Advisory Committee and later a member of the President's Council on Environmental Quality. He published papers on the use of environmental control technologies for military purposes. The most profound comment he made as a geophysicist was, "The key to geophysical warfare is the identification of environmental instabilities to which the addition of a small amount of energy would release vastly greater amounts of energy."341 While yesterday's geophysicists predicted today's advances, the HAARP program managers are delivering on the vision.

The geophysicists recognized that adding energy to the environmental soup could have large effects. What was not considered is the fact that humanity has already added substantial amounts of electromagnetic energy into our environment without understanding what might constitute critical mass. The questions come... have these additions been without effect, or is there a cumulative amount beyond which irreparable damage can be done? Is HAARP another step in a journey from which we cannot turn back? Are we about to embark on another energy experiment which unleashes another set of demons from Pandora's box?

340 Between Two Ages: America's Role in the Technetronic Era, Zbigniew Brzezinski, Penguin Books, Mass. 1976

341 The Cooling, by Lowell Ponte, 1976, pges. 166-169.

As early as 1970, Zbigniew Brzezinski, later National Security Advisor to President Jimmy Carter, predicted a "more controlled and directed society" would gradually appear, linked to technology. This society would be dominated by an elite group which impresses voters by allegedly superior scientific know-how.

"Unhindered by the restraints of traditional liberal values, this elite would not hesitate to achieve its political ends by using the latest modern techniques for influencing public behavior and keeping society under close surveillance and control. Technical and scientific momentum would then feed on the situation it exploits" 342, Brzezinski predicted.

His forecasts proved accurate beyond what most people would have expected. Today, a number of new tools for the "elite" are emerging, and the temptation to use them increases steadily. The policies to permit use are already in place. We are at the door to our "brave new world".

How would the United States be changed, bit by bit, into the predicted highly controlled technosociety? Among the "steppingstones" Brzezinski expected were persisting social crises and use of the mass media to gain the public's confidence.343

Brzezinski apparently saw that both conservatives and "the doctrinaire left" might be inclined to justify heavy handed tactics. The left could say that it serves progress, and the conservatives "preoccupied with public order and fascinated by modern gadgetry, would be tempted to use the new techniques as a response to unrest, since they would fail to recognize that social control is not the only way to deal with rapid social change."344

Even today, February 25, 1995, as we write these words, NBC Nightly News is announcing the widespread domestic surveillance of Americans and others, through the CIA's and NSA's monitoring and intrusion into the global Internet. When does the proliferation of power end and a new compact with freedom begin?

Brzezinski's vision, expressed in his book 25 years ago, was a prophetic view of the state of the world. It predicted a direction which time has proven correct, in terms of outcome. Those predictions yet to be realized are profound, and could lead to a very different and less desirable world, The idea that science is the hammer of politicians is a reality which people can not ignore. Government should consider a shift - from war to peace - for the use of these very advanced research efforts.

The possibilities of these innovations offer all people an opportunity to excel in health and intelligence. All men and women should press for opening these technologies to positive and constructive, rather than destructive, purposes. What

342 Between Two Ages: America's Role in the Technetronic Era. Zbigniew Brzezinski, Penguin Books, Mass. 1976,
343 Ibid.
344 Ibid.

propels these advances into the wrong directions'? It is the tax dollars of unwitting Americans.

The system which can promote the use of science, for the true advancement of mankind, is an open system with a focus on individual opportunities for self actualization. Systems which promote secrecy by military and intelligence leaders are fundamentally wrong. They are too likely to be misused, which has been amply demonstrated in govern-mental systems. Government flows from the people, and should be a full reflection of the value and belief systems of people, and not some shadow of the will of those with secret agendas, hidden in the dark rooms of paranoia. We must press government to reflect our collective views towards a more balanced world, embracing foundational ideas upon which good governments are formed.

Chapter Twenty-eight

POWER AND CONTROL
THE END OF FREEDOM

The Manhattan Project which developed the first atomic bomb started in 1942. The first atomic bomb was exploded on July 16, 1945 more than 50 years ago. That project started with a $6,000 funding appropriation to the Uranium Committee and ended, by 1945, at $1.7 billion ($20 billion today). The total cost of the United States nuclear weapons program since the Manhattan Project has been $4 trillion - 80% of the entire national debt on the government books in 3995.345 Is HAARP another program about to plunge the world into a rash of waste and human misery?

The War Against Democracy

"The buzzwords haunting the Pentagon today are 'revolution in military affairs', The idea, simply put, is that the same technologies that have transformed the American workplace may have no less profound an effect on the American way of war. "346

This concept, "revolution in military affairs" (RMA), first emerged in a document issued by the U.S. Army War College in July, 1994 - The Revolution in Military Affairs.347 This document said a philosophy of "conflict short of war" ("terrorism, insurgency or violence associated with narcotrafficking") requires new weapons and a change in public opinion. It asserts that this change in opinion does not have to evolve naturally, but can be deliberately shaped by the government. The idea is that belief systems of Americans can be slowly altered to allow the military to introduce new weapons technology which, at this time, would be resisted by most Americans.

What this book puts forward is:

"In its purest sense, revolution brings change that is permanent, fundamental, and rapid. The basic premise of the revolution in military affairs (RMA) is simple: throughout history, warfare usually developed in an evolutionary fashion, but occasionally ideas and inventions combined to propel dramatic and decisive change. This not only affected the application of military force, but often altered the geopolitical balance in favor of those who mastered the new form of warfare."

The Revolution in Military Affairs describes "people's wars", which it limits to Marxist ideologies. The phrase could be equally applied to what occurred in the Philippines and to Eastern Europe's popular revolutions in the late 1980's. The

345 U.S. News & World Report, "Outlook, Database", July 17, 1995.
346 Eliot A Cohen, "Come the Revolution", Defense and Technology Issue; National Review, July 31, 1995, Vol XLVII, No. 14.
347 The Revolution in Military Affairs, toy Steven Metz and James Kievit, July 25, 1994, U.S Government Printing Office: 1994-504-111/00089.

military's writers say that there is a shift to "spiritual" and "commercial" insurgencies, which they do not define well. They imply that these kinds of "insurgencies" represent national security risks to be defended against. This may be the case but, who will decide what is "spiritually" or "commercially" correct?

The military's authors discuss emerging technologies which may go against Americans' beliefs in such things as the presumption of innocence, the right to disagree with the government, and the right to free expression and movement throughout the world. At one point in the document they discuss the need to use new technology to keep track of Americans traveling out of the United States:

"While advances in robotics and information technologies may make it possible to perform many commercial activities with fewer employees in dangerous regions, those Americans who are overseas will be more isolated and dispersed. This complicates the main problems of NEOs (noncombatant evacuation operations): identification and notification of the individuals to be evacuated, identification of safe routes, and assessment of threats to the evacuation. Technology could diminish these problems. In the near future every American at risk could be equipped with an electronic individual position locator device (IPLD). The device, derived from the electronic bracelet used to control some criminal offenders or parolees,would continuously inform a central data bank of the individuals' locations. Eventually such a device could be permanently implanted under the skin, with automatic remote activation either upon departure from the U.S. territory (while passing through the security screening system at the airport, for example) or by transmission of a NEO alert code to areas of conflict. Implantation would help preclude removal of the device (although, of course, some terrorists might be willing to remove a portion of the hostage's body if they knew where the device was implanted). The IPLD could also act as a form of IFFN (identification friend, foe or neutral) if U.S. military personnel were equipped with appropriate challenge/response devices."

The most likely people to receive the implants are military personnel who will be told that this will help rescue them if they are captured. They may be the first, setting the stage for the rest of the country. Will our military personnel object? Will our defenders recognize that this is an invasion by our government into the rights guaranteed by our Constitution - a Constitution they have sworn to defend?

Another technology mentioned is a method for interfering with activities the government judges to be wrong. In the examples given, most of us would agree intervention should take place at some level. However, the methods contemplated are extreme. Will those with the power to invade the privacy of individuals do so and without just cause? Will the holders of the power be trusted by the rest of the population? The military planners anticipate a resounding - "NO"! There-fore, they propose a series of events to shift the popular view to the opposite extreme. They propose a revolution of society which will allow for a Revolution in Military Affairs. At this point, they lay out a fictional scenario where the illusion of the need for this

kind of control could be created. In the scenario, a plan to desensitize the population to increasing control and, introduction of the new technology, through systematic manipulation and disinformation by the government is initiated. What they have put forward might even be underway.

E-Systems developed Global Positioning System (GPS)348 technologies (satellite based) which can locate objects anywhere in the world within one foot of the object's actual location. They also developed systems for law enforcement which can intercept faxed messages, telephone calls, modem transfers, and video transmissions on a single system. They developed the EMASS computers which are powerful enough to sort the volumes of information needed for tracking billions of people. They were the owners of HAARP, under their controlling company, Raytheon.

Under their nonfiction scenario the military's writers say:

"For example, remote intrusive monitoring of the financial computer networks of offshore banks could identify the deposits associated with money laundering. If desired, such accounts could be electronically emptied."

In another section, the document emphasizes behavior and attitude alteration. This is the very heart of an RMA.

"Greatly improved intelligence gathering and fusion is a primary component of the RMA, and proposed information warfare capabilities might be ideally suited for helping develop desired emotions, attitudes, or behavior."

The entire text of this little book will leave readers wondering - If this is the kind of material the military is letting out for public review, what are they hiding in those billion dollar "black budgets"? In another section The Revolution in Military Affairs discusses the reality of the RMA:

"Even with all the constraints and countermeasures, there is some value in applying emerging technology using existing strategy, doctrine, organization, force structure, objectives, concepts, attitudes and norms. But there is another alternative: we could deliberately engineer a comprehensive revolution, seeking utter transformation rather than simply an expeditious use of new technology. However alluring, such a program is rife with hidden dangers and unintended consequences. Unlike the Manhattan Project, we are not forced to pursue revolution without considering the implications. In conflict short of war, RMA is a Pandora's box desperately in need of careful scrutiny before opening".

The National Review article quoted earlier in this chapter says that this box has already been opened and that the concept of an RMA is already occupying the best minds in the Pentagon. (The Revolution in Military Affairs, has been reprinted and is available - see Resource Guide at the end of this book for ordering information.)

348 "E-Systems, Inc. Nineteen ninety-four Annual Report to Stockholders"; March 10,1995.

The Cold War is not over, but has changed. We know that there are concerns which, being a free people, we must address and bring to the attention of others. We believe that the greatest threat to freedom is an over-oppressive and increasingly secretive government. To many, the government has shifted from one "of the people, by the people and for the people" to a government "of special interests, for their own benefit, at the people's expense". What went wrong, and where it went wrong, to a large extent, is a product of the intelligence bureaucracies which thrive through one administration to the next with unrestrained growth. These secretive bureaucracies hide more and more of their secrets under a cloak of "national security", while drifting further from the principles which have allowed the United States to exist for over two hundred years. Secret government policy is not sanctioned by the free will of the population, and threatens the core beliefs of liberty, honest government and public responsibility.

The only truly free people are those who live in an open society, a society which cherishes above all the right of men and women to control and set the values that their government should reflect. These are the popularly set values which must be pressed into the philosophy of all projects, policies and programs our governments seek to project into reality. No program should be permitted to grow out of democratic governments which does not reflect the values and will of those governed. There have been too many Watergates, Irangates, and political wars which have only served politicians and protected corporate America. Our military and economic policies are increasingly empty of the values upon which our democratic forms of government rest.

When we look at HAARP documents, we see that the military, the contractors and the University of Alaska all appear to have deliberately misled the public and elected officials.

In other projects - tike proposed nuclear excavation discussed earlier - it was the biologists at the University who objected. In the HAARP project, the environmental, biological and life sciences are again not explored enough. Given its potential impacts, the project should be subjected to continuous rigorous independent review by specialists in the life sciences and atmospheric science. Those deriving their incomes and future positions from HAARP-type projects should not be called upon to be the guardians of the interests of the rest of the world. It is impossible for these geophysicists to have had all of the training required to assess all of the risks. This is not to say that Institute scientists are reckless in their approach, but are they fully aware of the potential environmental and health risks?

Is HAARP the beginning of the "Brave New World"? It is time to think about a change in the way we allow our government to evolve - into oppressor rather than servant. Our system of democracy was set up to serve and enhance life, liberty and the pursuit of happiness. Are these dead concepts? We think not, it is time to rise from the ashes of our apathy and take a step to improve our world.

"Magnetism is a unifying factor that interlinks all events,
forms and life on Earth."
International Earth Emergency Network[349]

"Everything is connected to everything to everything else,
especially by the electromagnetic spectrum."
Philip S. Callahan, Ph.D., author, The Paramagnetic ELF Forces

"It's insane to bounce our atmosphere around with what's holding the atmosphere
to the planet in the first place."
Daniel Winter, Ph. D.

Chapter Twenty-nine

A CLEAR NOTE

Nick Begich's exploration of the HAARP protest took him literally to the ends of the land. In July 1995 he and Shelah took their children to Homer, the community in a location that Alaskan's call Land's End. While setting up camp on the beach, they were greeted with hearty Alaskan bear hugs by one of the activists with whom Nick had been corresponding. Like others from the bush country who chose anonymity in their NO HAARP activities, he will be known by a pseudonym, Joe.

Joe turned out to be a sturdily built man, nearing middle age, who obviously cares deeply about his planet. Perhaps too deeply. Although living on a subsistence income, he had spent too much on the NO HAARP campaign, had become exhausted, and had only recently recuperated. His perception of being isolated had been an emotional challenge during the previous year, as he personally dealt with the concerns outlined in this book. Now, however, he realized the strength that comes from connection with a network of people who share his concerns: Joe has learned that people can make a difference.

Reading the first draft manuscript for this book, Joe noticed that independent scientists were expressing much of what he felt. For example, Dr. Elizabeth Rauscher and William van Bise ended a scientific paper by pointing out that most of the recent technologies have stripped nature away from people.350 Too many technologists' aim seem to be "to shield us from nature, to 'conquer' and control her while designing ever more dangerous weapons systems with which to more efficiently strip all life from the planet", they said. The two concerned scientists had added that "we must examine why man has moved toward such insane motivation, toward mutual destruction..." They concluded that we must ask whether or not society will again decide to pursue noble objectives..."

349 Dr. Daniel Winter and friends, International Earth Emergency Network, Waynesville NC 28786, E-mail: danwinter@aol.com; and Dr. B.K. Wee, World Research Information Center, 22 White House Park, Singapore 1025; voice 65-323-2032; fax 65-235-9862.
350 Elizabeth Rauscher and Wm. van Bise, "Fundamental Excitatory Modes of the Earth and Earth-Ionosphere Resonant Cavity", Proceedings of the 1988 International Tesla Symposium Colorado Springs.

Meanwhile, individuals such as the Alaskan activists do what they can. Clare Zickuhr handed over to Joe the job of co-coordinating the No HAARP campaign before Clare and Barbara sold their house and went traveling. (His employment had ended, through ARCO cutbacks and early retirements in 1994.)

Dr. Bernard Eastlund's ideas continued to be mentioned, but not in the media that he preferred. Reporters for small publications and radio talk shows noted the connection between his patents and HAARP, but unfortunately many of those reports were inaccurate in some of the details. The accurate reports, however, raised common questions. Will those scientists who punch the ionosphere with gigawatt pulses be remembered as the true mad scientists of the century? The spirit of sorcerer's apprentices is alive in those who get National Science Foundation grants to "turn on the northern lights by heating the ionosphere with radio waves" and stir up "magnetospheric substorms".35l

While the Begiches discussed these issues with fellow Alaskans, coauthor Jeane Manning put a call through to one of the increasingly rare generalists with a Ph.D. in science, Philip Callahan, an expert on radio systems/electronics as well as biology. He sums up the situation in plain words: "Every living human being is like a sponge in a bowl of jelly. When the atmospheric jelly shakes - the ELF waves - then the jelly in the sponge also shakes at the same frequency."352

Callahan has sharp words for the people who are putting up HAARP "... talking about shooting a hole in the ionosphere. They don't know a hill of beans about the ionosphere! There's nothing wrong with studying Mother Nature and then copying her. But they're trying to jam up the system, that's the problem."

Callahan knows low frequency systems; he put them up in Japan for the U.S. defense department before he went back to school and became an entomologist and biophysicist. (With his multidisciplinary interests, he learned it is possible to tune into unwanted insects by knowing the resonant frequency of an insect's antenna. Because of this knowledge, he has been fighting insecticide use for 35 years. The non- poisonous alternative, on the other hand, jams the insects' homing beacon system with electromagnetic static.)

Jeane Manning asked him if HAARP is any threat to the insects of the world, and Callahan replied "Yes. It's bound to be, because their antennas are tuned into some of the frequencies that will bounce down from HAARP's ionospheric modification."

He was working for a government agency when the ionospheric-modification plan heated up. "I got a call from them; they wanted to know what I thought it would do to insects. I said 'You'll probably mess some of them up, because it messes up the insects under the power lines...I've seen night time moths flying around and feeding in the daytime when they're under power lines. I've also seen them

351 Neil M. Brice, "Method and Apparatus for Triggering a Substantial Change in Earth Characteristics and Measuring Earth Changes", U.S. Patent No. 4,042,196.

352 Dr. Philip Callahan's recent books, Exploring the Spectrum and Paramagnetism are available from Acres USA, Po box 8800, Metairie, LA. 70011, Ph. 504-889-2100.

under power lines feeding until they swell up and burst. So what it boils down to is, it's like when insecticides came out - we don't know what they do."

HAARP is going ahead, however, despite the warning of possible biological effects. Callahan adds, "Nobody's studying it; they just sit there and say 'there's no harm in it'. Out of sight, out of mind."

FORBID THE CENTIMETER-WAVES!

Dr. Wolfgang Volkrodt of West Germany takes an extreme position on this challenge facing the people of Earth.353 "Centimeter-wave technology must disappear from our environment! We need a UNO (United Nations Organization) charter which would prohibit the entire field of electromagnetic wave technology which causes disastrous resonance in biological systems," Volkrodt insists, He calls
for monitoring centers that can detect use of the prohibited wavelengths anywhere, even those harmful wavelengths beamed from satellites.

While the authors see a total ban on microwave relay and radio frequency technology as being unrealistic, we agree with Volkrodt that there is widespread denial of the hazards. Dr. Volkrodt says "the path seems long and arduous until our politicians realize what is happening in the research institutes of the super powers, and what explosive findings will confront the inhabitants of this endangered world before the end of this century. Let us hope that those in positions of responsibility will awake before it is too late."

The authors interviewed other experts whose warnings were more low-key. For example, James Beale of Louisiana, whose career has been in a variety of electromagnetic research venues, regrets to see that there are not many experts on bioelectromagnetics, and fewer still who are independent of military contracts. Furthermore, said Beale, those experts prefer to talk among themselves instead of with the public. "This is where you need bridge science', which is what is going to come about by talking on the Internet."

Bridging between specialties, and between scientists and the public, is one of the most pressing needs uncovered by our research. It isn't hard to do. Today's engineers can walk into a library or across campus to the biological sciences departments and find stacks of information about the inter-relatedness of Earth's electrical, magnetic and biological systems. But to what extent do they bother to look outside their own specialty?

The life sciences such as biology look at the web of connections between living organisms and Earth's natural systems. Sciences which deal with what is dead or mechanical are over- represented in the board rooms where military projects are conceived, bought and sold. For example, one engineer commented on the educational background of Col. John A. Alexander, chief spokesman for the U.S. military's "non-lethal" weapons campaign. "He's the only person I've met who brags about having a degree in thanatology, the study of death."

353 Raum & Zeit, Vol. 1, Nov. 2, 1989, pg. 57.

As we look back at the messes humanity made while industrializing this world, leading-edge thinking has evolved beyond the goal of dominion over nature. Instead, an emerging outlook respects each form of life as having an integrity of its own while at the same time inter- related to all species.

Nikola Tesla's thinking was a product of his times, and therefore his genius was limited by a sometimes mechanistic viewpoint. Tesla wanted his inventions to help humanity. He can be excused for not mentioning ecology, because in his time the word had not been coined yet. As a trailblazing technophile, he thought it would be exciting to manipulate weather and light up the ionosphere just as you would charge up the contents of a fluorescent bulb. He imagined the upper atmosphere glowing over a selected region of cities to illuminate the earth at night. This megaproject mindset lives on, a century later.

What has happened to Tesla's ideas of sending vast amounts of electrical power wirelessly? The ideas are out of date, now that inventors are making rapid advances in tapping the free energy in space which Tesla prophesied could be used. (The topic is beyond the scope of this book, but we will mention that in 1995 John Hutchison, mentioned in chapter one, was one of those who successfully built such an invention - a small scale electricity generating device that could make the central power station obsolete.) Nevertheless, it seems that engineers are still fascinated by wireless concepts. A paper presented to an engineering society[354] talks about Tesla's idea to use the electrically-conductive layers in the upper atmosphere as the conductive path, and other possibilities for beaming power. We excerpt a comment from the Weather Modification section of the paper: "Since the potential of the electrosphere is about 300 KV relative to the earth, and the wireless system as proposed by Tesla was designed to operate at 30-100 MV, there is a significant potential for electrically disturbing the atmosphere. It is not known whether this would be beneficial or harmful."

Under the heading of Economic Viability, the paper notes, "Multiple transmitters could conceivably be phased to control the location of antinodes from which power could be extracted,.." (By the way, the paper's 76 footnotes includes the Eastlund/Ramo patent 4,712,155, "Method and Apparatus for Creating an Artificial Electron Cyclotron Heating Region of Plasma", cited under the heading Transmission Line Coupling. The often cited patents...)

In his autobiography, Tesla said the impulse that dominated him was "to harness the energies of nature to the service of man." A fine sentiment, but it can be carried too far when the Sorcerer's Apprentices try to harness the electric rivers in the sky through HAARP.

The tones of voices talking about HAARP range from helpless anger to calm determination. The man called Gregory whom you met in Chapter One, on the one end, had shouted that the "Mad scientists are getting even with all the crap they had to put up with as kids and as nerdy adolescents, and they want to kill our planet!"

354 Kurt L. VanVoorhies, P.E., and James E. Smith, Ph.D., "The Promises and Prospects of Worldwide Wireless Power Transfer: An Overview", 1991 Intersoctety Energy Conversion Engineering Conference proceedings.

On the other hand, with a scientist's habit of understatement Rosalie Bertell, Ph.D. said about HAARP: "I am also concerned."[355] She was writing a book for the Women's Press in London, England, on a broader but related topic - militarism and the environment.

HOW DO WE TURN IT AROUND?

Dr. Bertell says women can help reverse the destructive trends. Bertell, who holds a doctorate degree in biometry and has worked on cancer/birth defect research for decades, documents the impact, on the earth's environment, of war preparation. [356]

"Because of the non violent tendencies of women and their interpersonal skills already developed, it is imperative that women take their rightful place in decision making. This is especially true of participation in strategic "think tanks", military command posts and areas of international law."

She further points out that resolving conflict without excessive damage to our life-support system is not purely a women's skill, nor do all women have it. But admitting women into the circles of power could open the doors.

Dr. Bertell suggests guidelines for recovery from our addiction to violence. Here is a shortened list of her recommendations:

* "Acknowledge that war is not a natural human trait but rather a learned behavior..."

* "Embrace justice and international equity as a way to peace."

* "Demand environmental impact hearings on all military undertakings, including the space programs. Unmask the self-destructive tendencies of war making. Freeze military budgets at the current level, and every year reduce them by 20 per cent, putting the savings into UN currency that can only be used for human needs." (Environmental cleanup included.)

* "Learn to love and appreciate biological organisms...and the intricacies of the web of life."

* "Teach your children to make peace, to break the habits of violence."

* "See yourself as one with your planet home, 'a child of the universe, capable of feeling a blow to any part of the life system anywhere in the universe. The web of life is intricately interconnected and fragile. Fracture it and we are all doomed."

* * *

355 From a June 2,1994, letter to Jeane Manning from Dr. Rosalie Bertell, International Institute of Concern for Public Health, 830 Bathurst St., Toronto, Ont. M5R 3G1,
356 Rosalie Bertell, "Exposing the Agenda of the Military Establishment", Sept. 1993 Ecodecision,

The authors of this book don't expect life scientists or women to suddenly appear around the tables in the Pentagon in significant numbers. However, our hope is that a wider range of voices will be increasingly heard when decisions are made about whether to violate the integrity of a huge natural system such as Earth's ionosphere. Or whether to violate the very consciousness of the people on this planet.

As long as the macho attitudes prevail, people with taxpayers' money in their pockets will try to "engineer" planetary systems. As more and more ordinary people realize that the U.S. military wants to experiment with the earth's electrical shield, they express feelings akin to the scientist Dr. Malcolm portrayed in the film Jurassic Park. He said he was staggered by the lack of humility before nature - men wielding an awesome power, "like a kid that's found his dad's gun."

Not all engineers are enthusiastic about wielding big guns, of course. An engineer from Europe told Manning that he doesn't want to jump to conclusions, but he pictures the emanations from the HAARP apparatus as creating nodes in the upper atmosphere, "where they superimpose on one another and have a resonating and amplifying effect." He asks "how can we have the slightest idea what that will do to the planetary environment?"

The editor of Acres USA, commenting on a letter about HAARP, is blunt. "We have had enough of scientists going off half-cocked."

Meanwhile, Dr. Robert Becker expresses his opinion that "the military establishment still believes that the survival of the military organism is worth the sacrifice of the lives and health of large segments of the American population."

The authors of this book are neither technophiliac nor anti-military. However, military funded technology has been allowed to steamroll over the planet. Isn't it time for educated citizens to cut the allowances of the big boys and supervise them more closely? Isn't it time for fear based thinking to be replaced by the more grownup policy of love and consideration?

That may sound abstract and unscientific, until the skeptic has a serious dialogue with frontier scientists such as Dr. Daniel Winter, author of Alphabet of the Heart and co-founder of the Earth Grid Emergency Network.357 In a letter to Manning, he said "the key concept to under-standing how HAARP will undermine our planet is the principle that charge recursion - or maximum possible fractal embeddedness in spin systems - is what creates gravity in the first place."

Recursion is the repeating of patterns within patterns in nature. Whether or not the reader understands his cross disciplinary discussions - of nature's fractal symmetry, harmonics series, platonic series at the atomic level, spin geometry, resonance, coherence and trees as antennae - the emerging science that Winter writes about shines a powerful light of both hope and warning. There is hope for stabilizing

357 Daniel Winter and Friends, Alphabet of the Heart: Sacred Geometry , 137 Biodome Drive, Waynesville, NC 28786. E-mail DanWinter@aol.com

both Earth's crust and its atmosphere. Winter cites experiments that seem to prove the principle that "fractality of (electromagnetic) charge creates gravity." Such features of the magnetic grid keep an atmosphere nestled around a planet.

On the other hand, his warnings include this:

"Mars lost her atmosphere; we're losing ours. Let's understand why microwave coherence around long wave magnetic domains creates microclimates, before we decide to aggravate Earth with poisonous gigawatts of power to poke away at her atmosphere. The long-term question of gene pool survival depends on the skill of learning to retain atmosphere. HAARP is a very poor start at demonstrating that our gene pool has the skill to terraform planets."

"Particularly now, with Earth's orbital pole doing radical excursions out of tilt - with the lunar orbit destabilizing - and with the ability to hold atmosphere and ozone weakening, particularly at the poles, the planet is very sensitive to bouncing the atmosphere in and out for scientists' gigawatt 'probes',"

Dan Winter concluded: "HAARP stands to slice a huge tear in the fractal of magnetic Alaska, Earth will feel this change in charge, as a tearing wound that will not heal..."

The authors suggest that anyone concerned about HAARP contact a federal legislator to protest, and insist that life sciences get meaningful funding and decision making power. And that emerging advanced technologies be in the hands of our wisest men and women, not our most aggressive or those entrenched in the biggest budgets.

We hope that independent scientists will meet face to face as well as on the Internet, regarding HAARP related topics. An international symposium is urgently needed. Philanthropists could help with travel and research funding for the scientists, because independent thinkers have been blackballed out of the high salaried jobs. For example, financially struggling consultants cannot even afford the yearly fees now charged for accessing National Oceanic and Atmospheric Administration (NASA) data.

Researchers who shun the "black budget" world of military programs need a "white budget". White-budget projects could include the spreading of ground up volcanic rock to restore Earth's paramagnetism.358 Dr. Callahan says that chemical agriculture and clear cutting of forests caused the soil's paramagnetic ingredients to change or wash into the sea.) Such constructive projects could be carried out by ordinary people all over the world, replacing feelings of fear with those of empowerment.

358 For study of paramagnetism as a part of the glue which holds the atmosphere in place, see recent books by Dr. Philip Callahan, available from Acres USA, PO box 8800, Metairie, LA 70011-8800. Fax 504-889-2777.

In Brave New World Revisited. Aldous Huxley said, in 1958;

"Meanwhile there is still some freedom left in the world..some of us believe that without freedom a human being cannot become fully human, and that freedom is therefore supremely valuable. Perhaps the forces that now menace freedom are too strong to be resisted for long. It is still our duty to do whatever we can to resist them."

On the road to that goal, other thinkers point toward a possible manmade barrier. They question whether an increasingly stressful electromagnetic environment is interfering with clear thinking on a large scale. If so, then society's ignorance of this invisible crazymaker is the problem. Humanity has the resources to change its technologies if we have the political will to do so. Non-scientists must educate themselves on the issues and speak up; the sciences as a self regulating system seems to have broken down. The breakup of the sciences into ever- narrower specialties has made it difficult for specialists to synthesize a wide range of facts about our planet and come up with wisdom.

GLOSSARY

Electromagnetic field (EM field). A force field which radiates out from any moving electrical current. They have both an electric field and a magnetic field and move in a direction away from the electric current.

Electromagnetic pulse (EMP). A pulse or blast of electromagnetic energy. These kinds of pulses are caused by nuclear explosions and can be created with an electrical device. The pulses created can cause electrical circuits to burn out.

Electromagnetic spectrum. This refers to a continuum which organizes electromagnetic fields based on their relative number of oscillations or frequency. Nonionizing portions of the electromagnetic spectrum starts with zero (no oscillations) extending to visible light with trillions of oscillations peT second. Frequencies which are above that of visible light are said to be ionizing. Ionizing frequencies include X-rays and cosmic rays, among others. The spectrum is divided into various parts based upon their usage including ELF, microwaves, radiowaves, etc.

Extremely Low Frequency (ELF). 0 - 1000 cycles or pulses per second.

Field. A area around a source of electric or magnetic energy where in which a measurable force exists. This is sometimes referred to as radiation because it radiates out, and away, from the source.

Hertz (Hz). The frequency - number of pulses, cycles or oscillations per second. One thousand cycles per second equals one kiloHertz (KHz); one million equals one megaHertz (MHz); and, one billion equals one gigaHertz (GHz).

Ion. An atom which has either a positive or negative charge because it has either gained or lost an electron.

Ionizing. The production of ions from atoms by exposure to radiation with enough energy to dislodge electrons.

Microwave. The part of the electromagnetic spectrum from 500 million cycles per second up to visible light.

Nonionizing radiation. The part of the electromagnetic spectrum from zero to the frequencies of visible light.

Radio frequency (RF). The part of the electromagnetic spectrum from .5 million cycles per second through 500 million cycles per second.

Very low frequency (VLF). The part of the electromagnetic spectrum from 1000 cycles per second through .5 million cycles per second.

ILLUSTRATIONS

HAARP

The diagram was taken from the "Biennial Report 1991-92, Geophysical Institute, University of Alaska Fairbanks". It shows the interrelationships of the various programs being operated by the University.

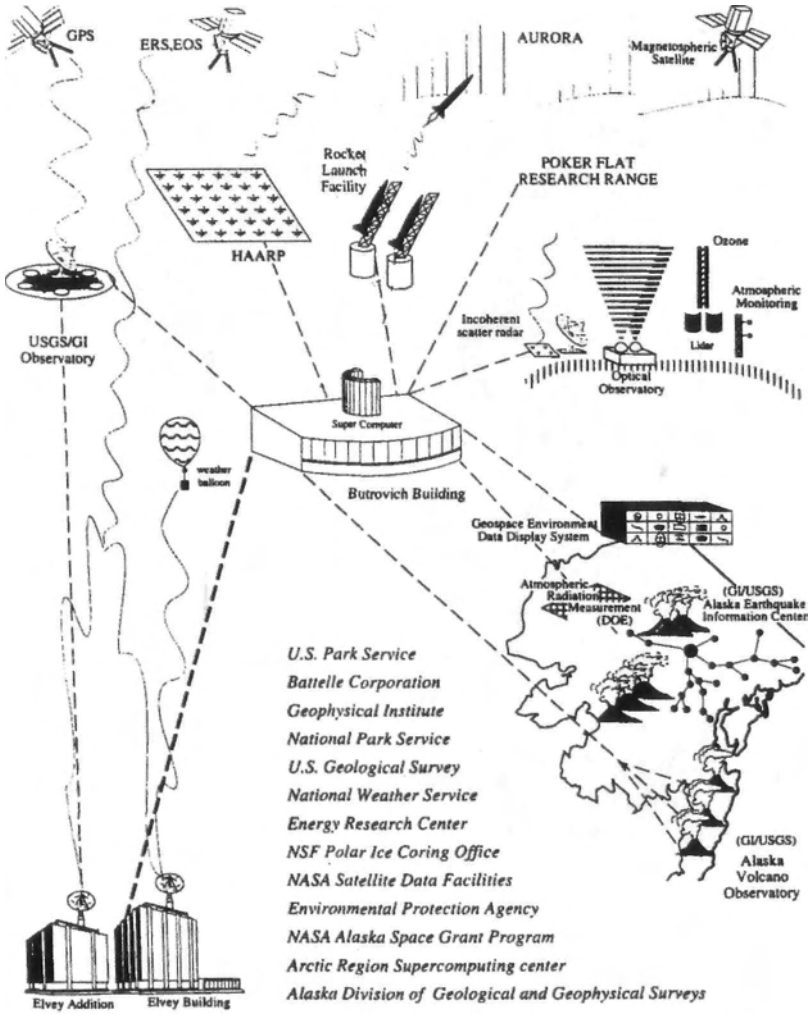

This diagram appeared in the Environmental Impact Statement on HAARP on page 10-127, Volume II. It shows the locations of other "ionospheric heaters" that are now operating. These other "heaters" are much smaller and less versatile than the new HAARP transmitter.

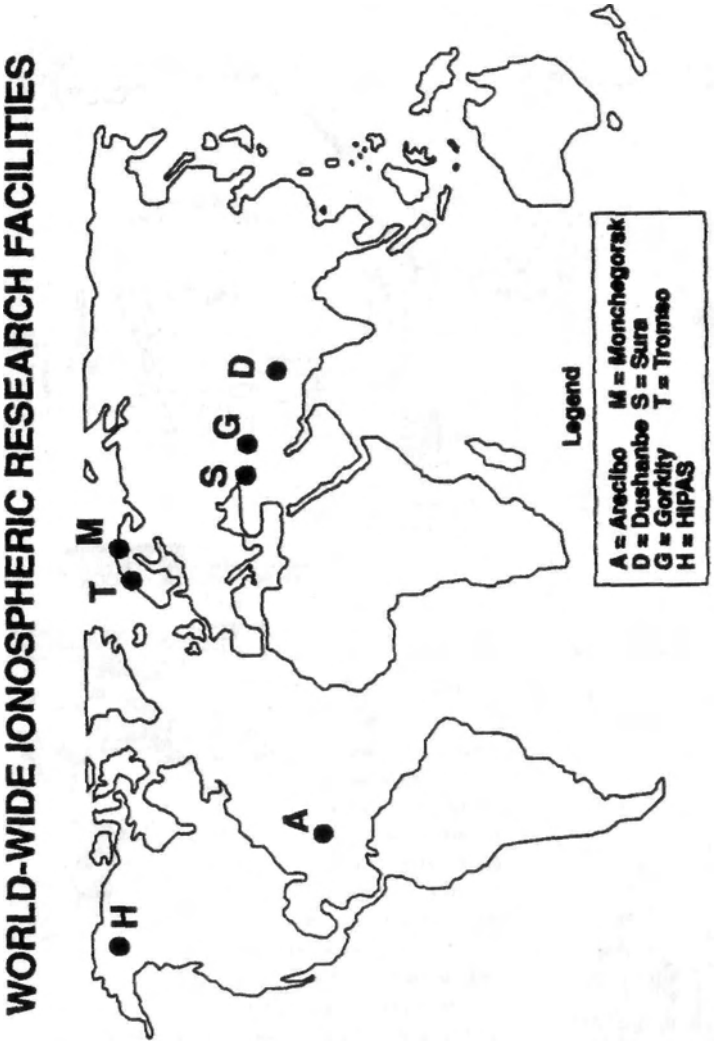

This illustration was taken from the HAARP Environmental Impact Statement, page 10-126 Volume II. It shows a number of the applications of the technology which the military planners have acknowledged.

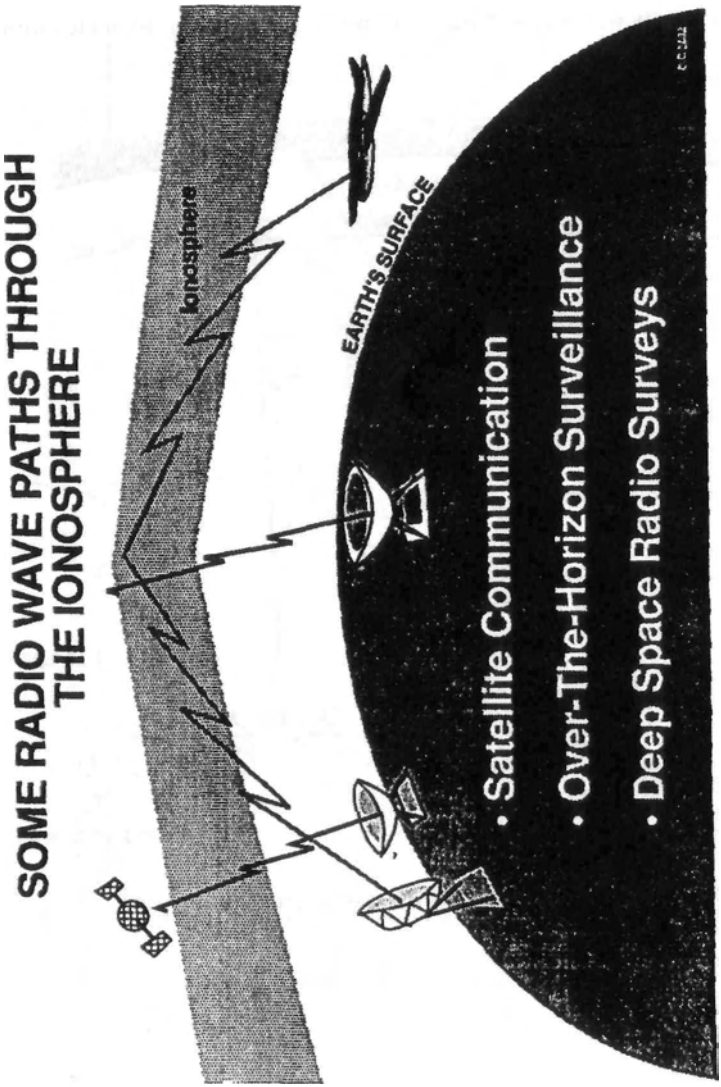

The diagram below (taken from government records) shows the focusing power of the HAARP ionospheric heaters. This diagram shows the unique feature of Eastlunds idea - to focus the energy to a point in the ionosphere. Other ionospheric heaters project the energy in the opposite way with the energy beam getting wider and wider as it moves up into the atmosphere. The new heater concentrates the energy whereas with the old technology the energy dissipates with height.

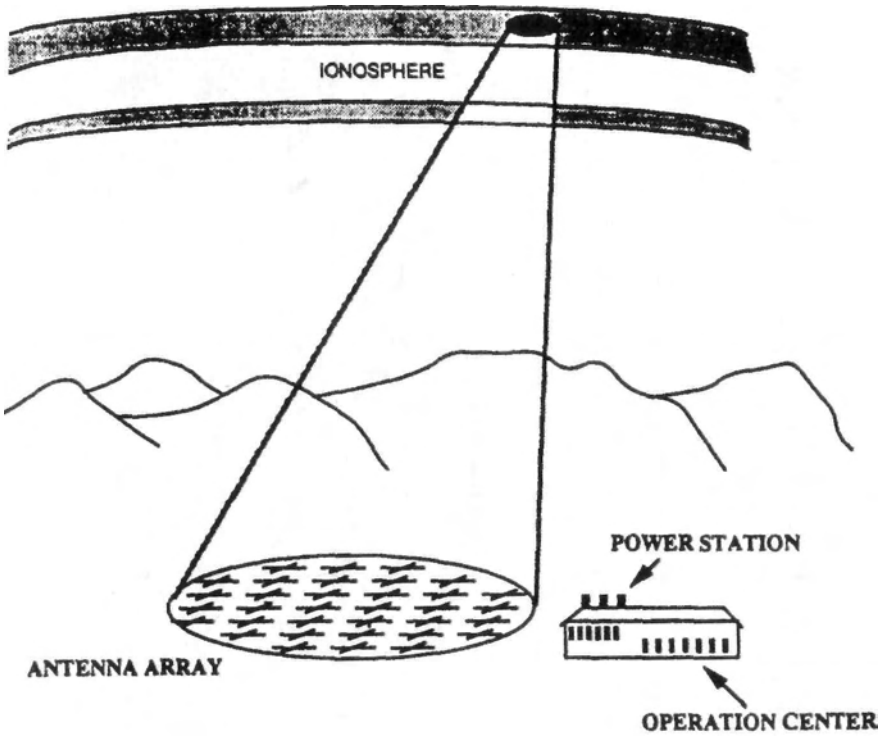

FIGURE 1. Ionospheric Research Instrument Conceptual Drawing

This diagram was also drawn by Eastlund to show the effect of his full sized heater. It shows the charged particle motion in the Earth's Geomagnetic Field.

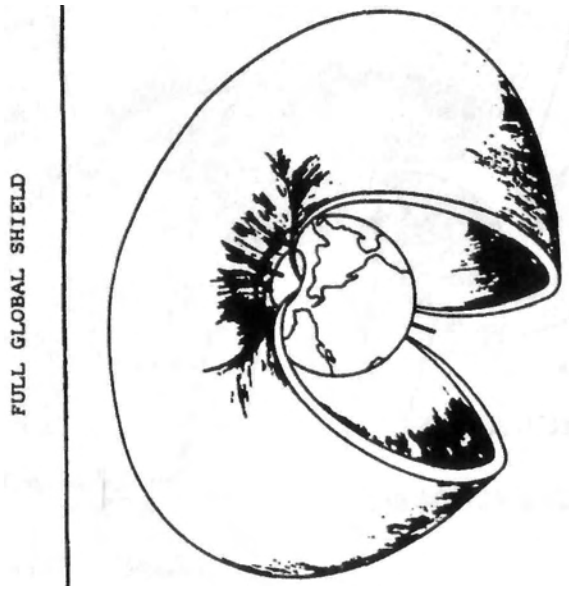

This diagram below was drawn by Eastlund to illustrate his global shield concept.

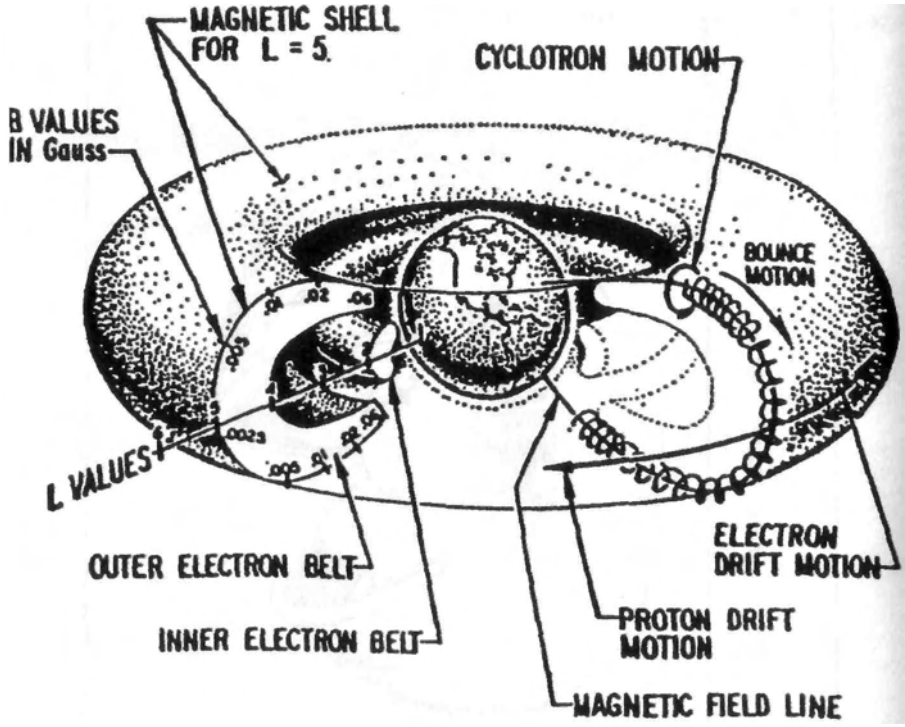

Charged Parttcle Motion in Earth's Geomagnetic Field

This diagram below was taken from the primary U.S. Patent of Eastiund (4,686,605).

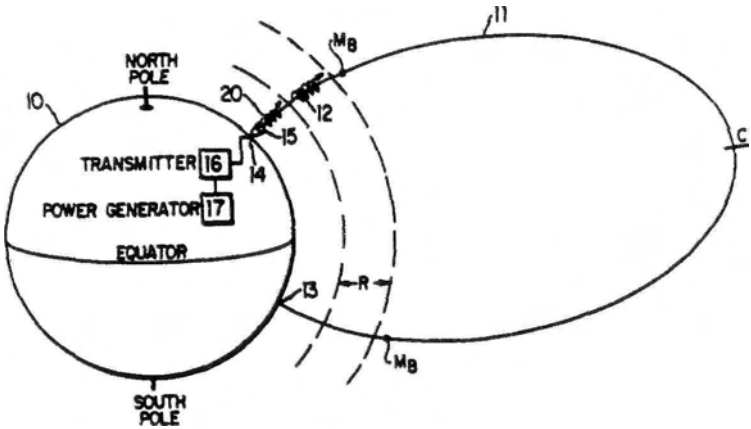

This diagram shows the over-the horizon radar applications of the HAARP technology. This diagram was from U.S. Patent #4,999,637 which was based, in part, on Eastlund's patents #4,686,605 and #4,712,155.

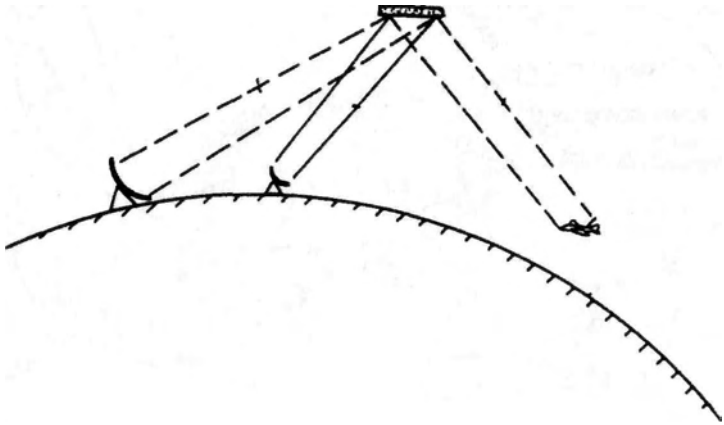

The diagrams below appear in U.S. Patent #5,038,664 and #4,817,495 and depict the shielding and discriminating effects of the HAARP heater at full size.

US. Patent Apr. 4,1989 4,817,495

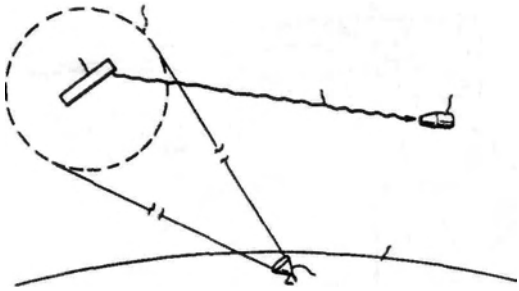

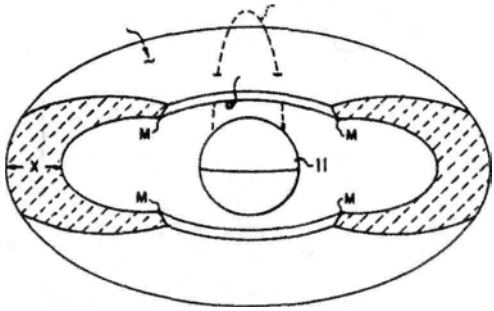

these diagrams were taken from patent #4,817,495. They show the HAARP system being used to locate and distinguish between incoming objects from space. This application of the system would be used for determining the nature of payloads on incoming crafts in order to locate those carrying nuclear warheads.

US. Patent Apr.4,1989 4,817,495

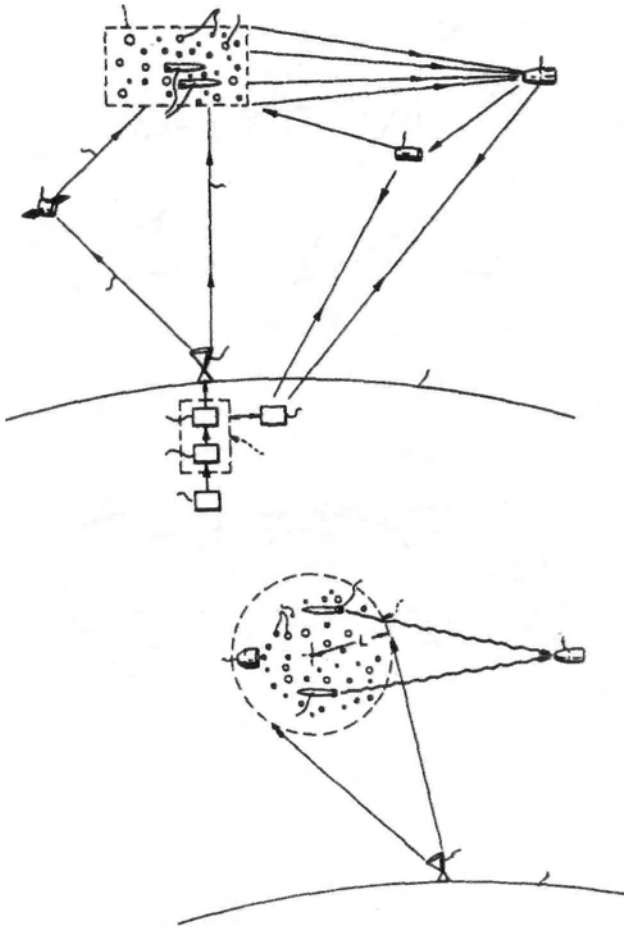

This diagram was taken from U.S. Patent #5,041,834 and shows the over-the-horizon applications of the HAARP technology. 1 is the HAARP heater. 2 is an artificially created mirror in the atmosphere which is used to bounce a signal for use in communications and distinguishing between incoming objects.

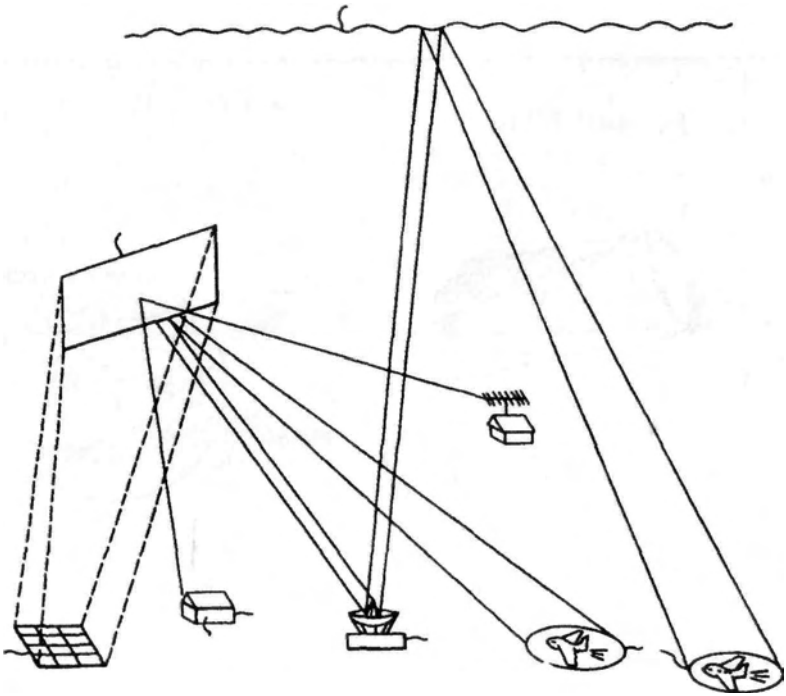

This diagram shows part of the power beaming systems described in the patents. This illustration show an energy beam being projected from the Earth into space and bounced to a remote tocation thereby providing power to a point where it would otherwise not be available.

U.S. Patent Apr. 13, 1993 5,202,689

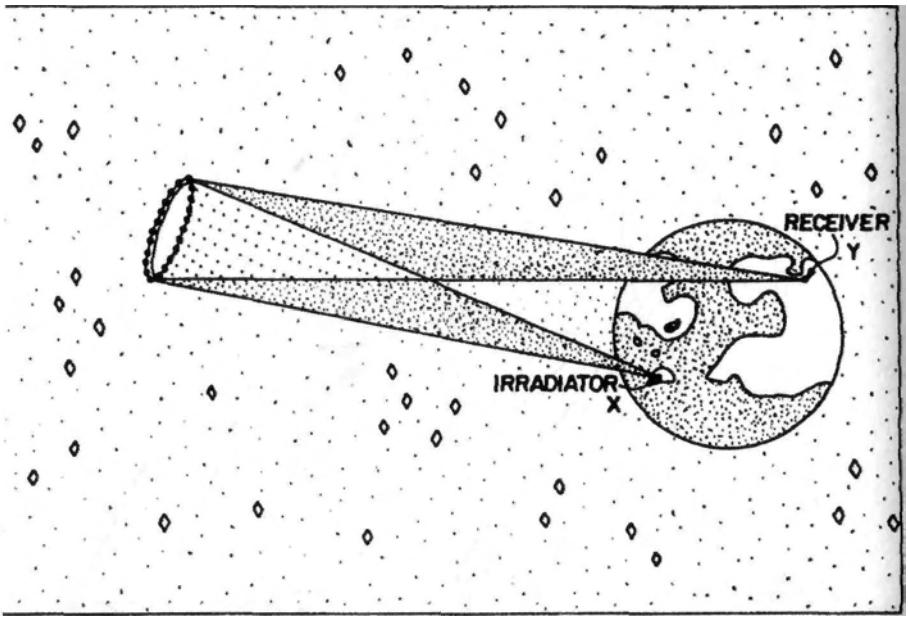

This illustration is from presentations made at the HAARP Workshop on Ionospheric Heating Diagnostics which was held April 30 - May 2, 1991 at Phillips Laboratory (AFSC) Hanscom AFB, Massachusetts. The illustration shows graphically how the ionosphere will be used to bounce Extremely Low Frequency (ELF) waves through the earth and atmosphere. The waves in this picture are being used for communication with submarines. These ELF waves can disrupt mental functions and may impact wildlife migration patterns.

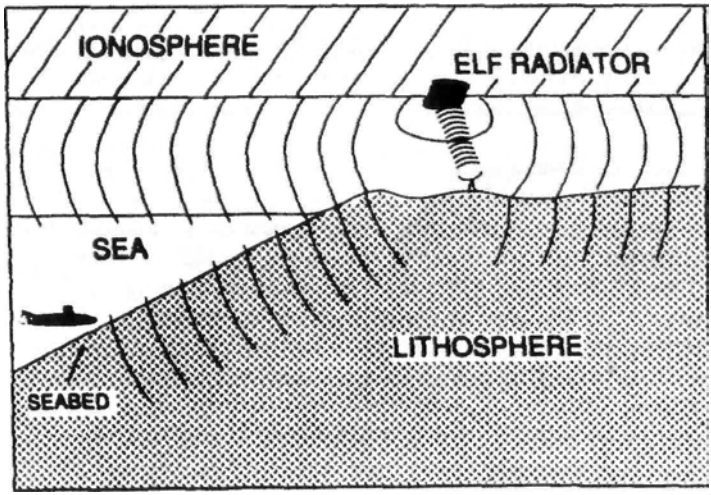

HAARP continues to occupy a significant amount of our attention and has remained the focus of much of our current work. We have had the opportunity to speak out about this project in numerous radio and television programs. In addition, a number of news articles have begun to be published throughout the country on this very important subject. We are thankful to all of the media people which have granted us time to bring our work out in front of the citizenry. The issue has not slowed down in terms of general interest in the topic. The story has served as a catalyst for involvement in political and governmental affairs for many individuals.

We have received a number of articles and news clippings from across the country which has provided a good deal of material for use in this publication. One of the most interesting pieces of information arrived just after the book was published.

An article, "Behind the Russian SDI Offer: A Scientific, Technological, and Strategic Revolution", appeared in the magazine 21st Century in the summer of 1993. The article was based on a front page story appearing in a Soviet government newspaper, Izvestia, on April 2, 1993. The article disclosed a whole new area of science and invited the United States to participate in the joint development of this new technology in a "Star Wars" weapons program. The initiative indicated that the Russians were far ahead in many of the areas important to the development of this "Star Wars" technology. One of the key components of the Russian technology was their greater under-standing of "nonlinear" processes involved in the generation, propagation and absorption of powerful pulses of electromagnetic radiations.

What are "nonlinear" processes? This relates to the idea of a small input of additional energy creating a disproportionally larger output of energy. A research scientist, Al Zielinski, recently sent us the following example of nonlinear effects:

Experiment #1

Imagine we had an unlimited amount of dominoes and we lined them up from here to, let's say, Paris. Then we could tip the first domino with 10 grams; it will fall down and cause the second domino to tumble, too, etc. The first action of 10 grams will cause all the dominoes to tumble including the last domino in Paris,

Prom this experiment we should understand that it b not the 10 gram action that causes all the dominoes to tumble, but the 10 gram action just creates an imbalance of the first domino. It is the gravity, however, that causes the dominoes to fall. In other words: only a 10 gram action is required to trigger a gravitational activity of all our dominoes from here to Paris.

Experiment #2

Imagine we had an unlimited amount of special dominoes of which only the first one we line up here is of normal size, and all the subsequent dominoes we line up

again from here to Paris are of continuously increased size. By the time we reached Paris, the last domino block would be 1000 meters high and weigh millions of ions. Again we tip the first domino here with 10 grams, which will fall down causing all the subsequent dominoes to tumble. By the time the gravitational action reaches Paris, the last domino in Paris will smash the Eiffel Tower.

From this experiment we should understand that it is not the 10 gram action here that will smash the Eiffel Tower in Paris, but it is the gravitational energy that is picked up on the way to Paris that smashes the Eiffel Tower.

In other words: only a 10 gram action is required to trigger a non-linear gravitational activity which will cause the destruction of the Eiffel Tower.

With the above examples in mind imagine the nonlinear effects of 1 billion watts of effective radiated power being directed at the ionosphere by the HAARP transmitter. This is the first phase capability of the project. The second phase will increase the effective radiated power levels even further- to 4.7 billion watts! In our book we point out that energy in certain frequencies when reaching the outermost portions of the ionosphere can be amplified up to 1000 times by natural processes. This phenomena has been recorded by scientists at UCLA who have observed the results of these power amplifications at a fraction of the power level which HAARP will transfer to this region. This is extremely important in considering what may occur with this level of energy. A serious environmental disaster may well be the result.

The earlier referenced article from 21st Century magazine goes on to describe the implications of the use of phased array antennas and their potentials at 1 billion watt power levels. This is the antenna array HAARP uses and the level of power it is designed to broadcast. What the article describes is a system which can be used for knocking down missiles and aircraft by effecting their guidance systems and creating atmospheric disturbances which lead to them crashing. They also talk about the ability, at lower power levels, to be able to look down from the ionosphere and detect cruise missiles and other incoming objects utilizing what was described as an advanced form of radar. Again this is exactly what has been described in the HAARP patents.

Plasma is a term for an electrically conductive state of matter generated from a gas. It can be created by action of extreme heat, powerful electromagnetic fields and by high levels of focused radio frequency energy such as the energy created with the HAARP instrument. 21st Century magazine suggests that, "The term plasmoid refers to the fact that under certain conditions a plasma can develop a self-contained, self-stabilizing structure based on the magnetic and other effects of internal configurations of electric currents within the plasma," This particular concept is important when referring to the concept of "painting the ionosphere" which was described by the military in the HAARP documents. This is in fact what the military will do with HAARP for certain applications. These plasmas are much different than those described in fusion research in that they involve very low electron energies.

What is known is that although they are "cool" by comparison to fusion plasmas they are remarkably long lived and strong when generated in certain gases. Those specific gases include nitrogen and oxygen, the major components of the earth's atmosphere!

So what does all of this translate into? According to the article it is suggested that this technology can be used for modifying the ionosphere over very large areas for "over-the-horizons" telecommunications disruption, creating computer errors and perhaps even creating negative biological effects. What is known from other government documents, HAARP planning documents and International Red Cross documents is that all of this is possible with these new systems. What is also known now is that a single complex system can combine radar tracking with a speed-of-light means of destruction - the plasmoid. This is but one application of HAARP. The writers of the 21st Century article were not acquainted with the patents regarding HAARP or they would have recognized that the United States military was not interested in the Russian overture of cooperation because we already possessed the means to produce these effects. What also rings throughout the article brings us back to where we began our research into the HAARP system two years ago - to the ideas of Nikola Tesla.

A New York Times article of December 8, 1915 says:

"Nikola Tesla, the inventor, has filed patent applications on the essential parts of a machine, possibilities which test a layman's imagination and promise a parallel of Thor's shooting thunderbolts from the sky to punish those who had angered the gods...Suffice it to say that the invention will go through space with a speed of 300 miles a second, a manless ship without propelling engine or wings sent by electricity to any desired point on the globe on its errand of destruction, if destruction its manipulator wishes to effect.

'It is not a time, said Dr. Tesla yesterday, 'to go into the details of this thing. It is founded upon a principle that means great things in peace; it can be used for great things in war. But I repeat, this is no time to talk of such things.'

'It is perfectly practicable to transmit electrical energy without wires and produce destructive effects at a distance. I have already constructed a wireless transmitter which makes this possible, and have described it in my technical publications, among which I refer to my patent number 1,119,732 recently granted. With transmitters of this kind we are enabled to project electrical energy in any amount to any distance and apply it for innumerable purposes, both in war and peace. Through the universal adoption of this system, ideal conditions for the maintenance of law and order will be realized, for then the energy necessary to the enforcement of right and justice will be normally productive, yet potential, and in any moment available, for attack and defense. The power transmitted need not be necessarily destructive, far, if distance is made to depend upon it, its withdrawal or supply will bring about the same results as those now accomplished by force of arms'

A second article also appeared in the New York Times, on September 22, 1940 and read:

"Nikola Tesla, one of the truly great inventors, who celebrated his eighty-fourth birthday on July 10, tells the writer that he stands ready to divulge to the United States government the secret of his 'teleforce', with which, he said, airplane motors would be melted at a distance of 250 miles, so that an invisible Chinese Wall of Defense would be built around the country..."

"This 'teleforce', he said, is based upon an entirely new principle of physics that 'no one has ever dreamed about', different from the principle embodied in his inventions relating to the transmission of electrical power from a distance, for which he has received a number of basic patents. This new type of force, Mr. Tesla said, would operate through a beam one one hundred-millionth of a square centimeter in diameter, and could be generated from a special plant that would cost no more than $2,000,000 and would take only about three months to construct."

"The beam, he states, involves four new inventions, two of which already have been tested. One of these is a method and apparatus for producing rays 'and other manifestations of energy' in free air, eliminating the necessity for a high vacuum; a second is a method and process for producing 'very great electrical force'; the third is a method for amplifying this force and the fourth is a new method for producing 'a tremendous electrical repelling force'. This would be the projector, or gun, of the system. The voltage for propelling the beam to its objective, according to the inventor, will attain a potential of 50,000,000 volts."

"With this enormous voltage, he said, microscopic electrical particles of matter will be catapulted on their mission of defensive destruction. He has been working on this invention, he added, for many years and has recently made a number of improvements in it."

As the ideas reverberate through my mind I cannot help but to feel that we again are walking down a darkened road of destruction. We are again on a path which may in fact lead to greater problems than those we seek to solve by tampering with the ionosphere.

In March 1996 the military begins to demonstrate the earth-penetrating-tomography applications of this technology -the idea of "x-raying" the earth with ELF waves generated by HAARP. These waves will pass through every living thing in the path and may have perceptible effects on people's health. This demonstration of this capability is critical for the military to gain the additional funding for the second phase of their project. That phase was originally estimated at $175 million dollars and will give the military power levels of 4.7 billion watts of effective radiated power.

Politically, things are only beginning to move as the opposition to this project continues to grow. Researchers, independent scientists and most importantly

lay people, all over the world are beginning to let their ideas be felt on this very important issue. Elsewhere in this microbook is an essay on creating political realities. We ask all of our readers to consider taking a step for change and activating some of the ideas contained in that essay.

LOOKING THROUGH THE EARTH
Radio Tomography of Geologic Strata

By Brooks A. Agnew

When the energy crisis of the 1970's seemed real enough to affect the prices of crude oil sufficiently to inspire domestic drilling, it seemed everyone wanted to invest in oil & gas. Drillers resurrected shallow rigs from old Ingersoll Rand units to even older hammer drillers. Lease speculation was very lucrative. Even owners of fields of sagebrush or Kentucky fescue were making millions of dollars off high density drilling - called "checkerboards " by oil drillers - whether they found oil or not. The people who ended up paying in the long run were the taxpayers. One of the very nice enticements to invest in oil speculation was the tax break.

This environment meant that there was often funding for new technology which could offer some advantage over the normal ten percent odds of locating a wildcat well. Such was the case for a visionary approach to oil and gas exploration. My theory was that each chemical bond had a resonant frequency which could be detected and mapped if excited with harmonic wavelengths of radiation at low power levels. This was already being done with IR spectrometers in some lab instruments, but no one had ever tried it with harmonic radio waves broadcast into the earth.

The major obstacle to lab testing with radio waves turned out to be the signal to noise ratio. What inspired me to begin developing this technology in the summer of 1993 was a phenomenon that occurred while surveying a known oil field for a new well site. My team and I were using twenty-five watt marine radios with half wave whip antennae. Normally these radios will reach out ten to fifteen miles without any trouble. We were within eyesight of each other, say a quarter of a mile apart, and could not communicate across the oil field. There was a magnetic fissure caused by a quake or mild plate shift in the petroliferous structure beneath us. The radio signal was virtually shunted into the ground which silenced the six meter marine radios. The apparent signal to noise ratio was very high under these conditions. These subtle magnetic shifts are what dowsers detect with forked sticks or metal rods held loosely by hand.

I decided right away to quantify the drop in radio frequency (RF) power. I had a pair of old Yaesu HAM base units that were capable of broadcasting a constant two meter wave. The broadcasting unit was about five watts sent through a quarter wave four-element square wave antenna pointed straight into the ground; exactly zero degrees. The receiving unit was moved at least as far away as the petroliferous

formation was deep. That is to say, the well pump was about 850 feet deep so we moved the receiver about 900 feet away from the broadcasting unit. The receiving antenna was a quarter wave four-element square wave that was mounted on a transit stand with a precision inclinometer.

Both units were mobile. The broadcasting unit was mounted on a Yamaha 250cc four wheel all terrain vehicle equipped with a two-way radio as well. The receiving unit was inside a modified four-wheel drive Chevy van and tied to a spectrographic analyzer that could read out in third octaves. The signal strength was monitored on a multi range analog dB meter. The phenomenon was verified when the mobile broadcasting unit passed over the fissure. The signal dropped over 60 dB to almost absolute silence. I say almost, because there was still something clearly indicated on the spectrograph.

When the transmitting unit was held stationary pointing directly to the center of the earth, right over the petroliferous fissure, the receiving unit could scan from parallel with the ground to about 50 degrees below parallel in line with the broadcasting unit. The spectrum would change as the receiving antenna was scanned through the layers of rock, shale, water, gas, oil, or open caves that were beneath the surface This was remarkable enough to record. What was discovered over the next three years would confirm the above mentioned theory beyond any reasonable doubt. The actual depth of the various formations was determined through simple triangulation. Multiplying the tangent of the receiving angle by the distance away from the transmitting unit provided the depth of the formation being scanned. A laser distance meter and an oversized inclinometer proved to be very precise.

Each day our crew would travel to oil fields in the Western Kentucky area. The transmitting and receiving stations were set up in alternating radii around a particular well site. The spectrographic information was compared to actual drill cutting samples obtained each five feet when the hole was originally drilled. After six months on these sites, we were able to positively identify rock formations by interpreting the spectra. The variables of reported sun spots, electromagnetic radiation from high power transmission lines, and all types weather were considered carefully. The reliability and repeatability of the technique were astonishingly high.

The following year I took the equipment and technology into the field as an exploration unit for hire. I was convinced the technology was quite robust after the fifth wildcat well was discovered. There was one instance around Burkesville, Kentucky that really turned some heads in the local oil and gas industry. My crew was asked to "survey" a lease that was claimed to have already six operating wells. Upon arrival at 7:30 AM we observed six well-maintained pumps that were spaced the mandatory 400 feet across a well-manicured farm field. After walking the area we decided to scan the very center of the field so the receiving unit was set up about a thousand feet off the property.

The days are rather long, hot, and humid in Kentucky in the summer. By 8:00 PM on the second day 1 had asked the mobile transmitter to drive a total of about 60 miles around and around this field 1 made about 100 prints of the spectra. There was

no indication of oil or gas on this property. The entire crew was hot and tired. How could there be 6 operating wells on this property without any indication from the readings we were collecting? I personally looked inside each of the six oil tanks and saw my reflection in the crude oil. What was wrong? We were being paid to report what we found and I was very nervous about what I saw.

I knew from thousands of hours with this equipment that it did not lie. I decided to make my report on the data we collected. The land owner and lease holders were furious. They were relying upon our results to sell another investment group another well site on this farm. I stood by my report. There was no oil indicated on this property. Reluctantly our clients paid, and we left. About ten days later I was recounting this experience with a local geologist. He laughed and expressed his confidence in out equipment. He informed me that those wells were all fakes. They did not even have pumps on the end of the steel. The holes on that farm were only about 50 feet deep. The entire scene was fabricated to entice foreigners to invest in drilling another hole, which of course would be dry. I breathed a long sigh of relief and learned to believe what I saw in the spectra.

After locating another seven wells in the Coniferous, Warsaw, and Cyprus formations of Kentucky ranging from 480 to about 1250 feet deep, we accepted contracts to go exploring in the San Marcus, Texas area. The formations in this region are volcanic chimneys which are very difficult to locate with seismographic methods. The sites we examined had many holes where dynamite had been used to set up shock waves which echo back to geophones. These vibrations can be mapped to reveal cavities in the substrata. Sometimes these cavities contain oil or gas. These petroliferous chimneys sometimes are only a few yards in diameter and practically vertical. This type of formation does not respond well to seismic mapping. We scanned thousands of acres for about three weeks. The only formation we located had already been tapped about thirty years prior and exhausted. The explanation 1 offered the lease holders was. "The oil is where we find it."

The next challenge came in the overthrust area of Wyoming outside Evanston. The exploration site covered land outside a national park. Our environmental friendliness allows us to explore anywhere that will allow a 4 wheeler with a spark arrester. We discouraged this particular oil company from drilling. They took our advice, and I believe they saved a million dollars. The other well we examined was a hole being drilled by Quazar. The rig was already seventeen thousand feet down. This type of rig uses various weights of drill mud to contain high pressure subterranean releases and carry the cuttings to the surface. Drilling mud is pumped through the drill steel and is forced to the surface along the clearance between the drill pipe and the edge of the hole. This mud is closely analyzed by mudloggers who chart the structures and discoveries. Hydrogen Sulfide alarms set up around the Kelly - the unit that turns the drill pipe - protect the crew from sudden exposure.

This was the first time the technology had been tested on formations that deep. We spent one day scanning the site. We spent another day preparing a radio tomographical map of the strata below their drill rig, Our results were compared to the mud log. Although we were not allowed to keep a copy of the log, as it did cost the

investors over a million dollars, I can tell you that each change in formation matched perfectly. I can also tell you that the hole was dry. This site had been selected using Landsats satellite photos of the surface of the earth which illuminate fractures and subterranean fissures and surface gamma ray scanning. The best guess the petroleum experts could muster was a million dollar dry hole.

Upon returning to Kentucky, I decided to incorporate gamma ray mapping into the data collection scheme. As it turned out a 4' crystal positioned a few inches from the ground on the four-wheeler produced timely results. Radon gas migrates up through the earth from who knows where. It can seep through any geological structure except petroliferous zones. Like upside down rain, radon gas migrates to the edges of these zones and then makes its way to the surface. These resulting halos can be detected with gamma ray mapping. The "dead zones" indicate the presence of petroleum. The velocities of the gamma collisions with the crystal detector are directly proportional to the porosity of the rock. This is very important to know. All the oil pump does is clear the hole of oil that has drained into the hole. If the formations are too tight the oil will never flow into the hole. Even fracking, a technique of pumping high pressure sulfuric acid into the target rock formation, cannot create enough pathways to allow oil to flow if the formation is too tight. We collected enough data to be able to predict the porosity of the target formation before the hole was ever drilled. Gamma ray neutron logs taken on site by Haliburton confirmed many times our ability to predict porosity within 0.5% of their measurements.

The radio tomographical techniques that I developed are the most accurate and reliable in the world When the demand for hard-to-find oil or water reserves becomes high again perhaps this technology will be valuable. As long as our country wishes to maintain its dependence on foreign erode oil, those who make money drilling dry holes will only be interested in using this technology as a marketing device. When the world is ready to find oil, water, natural gas, shale, coal, or even silver - we scanned a silver mine in Roseburg, Oregon once - this technology will be here.

HAARP Correlatives

I developed the most accurate and sensitive tomographical scanning techniques in the world using less than 30 watts of energy. The cumulative resonating energy from molecular bonds in hundreds of cubic yards of similar material could be detected and deciphered to reveal a distinctive voice of these compounds. The energy absorbed by these compounds was not detected. Instead the energy transmitted through or by these compounds, as a result of subtle and precise radiation, was interpreted scientifically.

Extrapolations are always exciting. In accounting or business it is the future gains or profits we love to imagine as we punch in numbers on an imaginary spreadsheet. In nuclear science, the weapons technology imagined by Fermi, Oppenheimer, and Einstein were mathematically possible. The actual effects of the

energy release from critical mass could not be imagined or computed. The frightening fact is that our government was insanely eager to test the equation. The situation has come up again.

Mathematically it is possible to stack antennae in a somewhat precise manner to effectively amplify a radio signal to thousands of times its original source power. The frequencies broadcasted, as I have proven for over 15 years, have exact and immediate affects on molecular bonds. When the molecular bond cannot absorb any more energy, or change it into work, heat builds in a matter of milliseconds. If this heat is intense enough the bonds comes apart. If the particles come apart with enough energy, and there is enough nearby mass with which to collide, a chain reaction begins. Once the activation energy is achieved, like striking a match, the reaction continues by itself until the source of matter is entirely converted into pure energy.

The High-frequency Active Auroral Research Project (HAARP) is designed to test the effects of billions of watts of concentrated radio energy on the ionosphere of our planet. Extremely high altitude lenses, formed with billions of cubic yards of ionic atmospheric particles, are being used to focus radio carrier waves onto the surface of our planet for military purposes. From my research I know that if the correct frequency harmonic for that carrier is chosen randomly, the result will be an absolutely catastrophic release of pure energy. The sky would literally appear to burn. What cannot be calculated or imagined is how hot the fire would be, or how long it would burn, or what elements or isotopes would remain after the reaction is complete.

The plain and simple fact is that the risk of scorching every organic molecule off of several states in a few moments, for the sake of experimenting with a new weapon, is unacceptable for the world. Only a small handful of scientists in the world know what is being done by the United States Military with HAARP. The excitement and zeal of these military children is not checked by the wisdom and experience of any civilian scientific community. Their experiments are being conducted and funded in secret. I do not think that the citizens of the world want the surprise of having half the upper atmosphere turn to flames because the HAARP technicians didn't stop to think what might happen if a couple of billion watts at the right frequency were beamed into the ionosphere during a sunstorm.

Our country has been blessed with freedom largely because we have the right to speak out against injustice or corruption. It seems most of the media have been bought and paid for by parties who wish to remain in power no matter what the people think or say. This paper is to inform you that your planet is under assault by absolute power. We need to have a civilian scientific review and publication of the results of the HAARP experiments before any more transmissions are conducted.

The Principles of Ultra Relativity

by

Shinichi SEIKE

1 9 8 6

(*The Eighth Edition, revised*)

Gravity Research Laboratory

"In the full conception, all manifestations of all forms are like beautiful flowers in a vast garden where many colors and many kinds bloom harmoniously together. Each blossom feels itself through the manifestation of another. The low looks up to the tall. The tall looks down the low. The various colors are a delight to all. The manner of growth fills their interest and intensifies a desire for fulfillment. In observing the beauty unfold that lies dormant within, whether in a day or a century, design gradually becomes manifest – in color, in a fragrance sweet to all others. Each glorifies itself by service rendered unto others ; and in turn, receives from all others. All in that great field of beauty are the givers and receivers, vessels through which flows a melody from the Highest. Thus some serve at the foot of the throne, while others serve above the throne and all around it. Each blends with every other, expressing only joy because privileged to serve." (The Great Master in that country)

Preface

A Phoenix which has been called a creature with eternal lives is told, in old Egyptean tales, to firstly die upon a piled perfumes, carried by himself, in the end of every interval of his life time of five hundred years and to revive just from that ash. A Holy Phoenix shall be seen to revive from hot ashes of Einsteinean theory of relativity and to fly over sky. This is very the principles of ultra relativity along with that background spirit of <cosmic philosophy>.
This title will be found to contain general mathematics, physics and engineerings in order to make our planet a paradise. The theory would be a legitimate sequential of Einsteinean theory of special relativity and general, and, furthermore, that of anti-matter of P.A.M. Dirac's, and contain much an ultra dynamics upon hyper surfaces. It, of course, blongs to frontiers in natural sciences, and also favours classical mechanics (especially does a mechanics on gyroes and vector analysis), which will make you feel a nostalgia for better old days. ⑧ Quantum Gravitational Generator ⑨ Inverse-G Engine and ⑩ Time Reversing Machine have been presented as three representative experimentals of <inverse atomic technology> in the latter part of this title, which will be nothing but a new realm of experimental physics. Inverse Gravitation could dramatically be verified with a great work of John Roy Robert Searl's. It might also be useful as an educational model as like eight fundamentals of Japanese manual lettering (SHODOH).
On the other hand, it can, however, be a fearful weapon. The author emphatically hopes that it may peacefully be used by his Noble Brothers and Sisters.

Contents

§ 1 Total Angular Momentum Wave Equation

(1−1) Lorentz invariant Total Angular Momentum Wave Equation 14

(1−2) Spin Wave and Gravitation 18

(1−3) Lorentz Transformation of Gravitational Field 20

(1−4) Spin Induction Law 24

(1−5 A Crucial Test 26

§ 2 Relativistic Spherical Harmonics

(2−1) Six Angular Momentum Operator 34

(2−2) Relativistic Spherical Harmonics 38

(2−3) Eigen Value of Polar Angular Momentum 40

§ 3 Quantum Operator for Electric Polarizability

(3−1) Lorentz Invariant Hamiltonian 46

(3−2) Lorentz Transformation of Magnetization and Electric Polarizability 50

(3−3) Lorentz Invariant Heisenbergean Equation 52

§ 4 SEIKE−Kramers Equation

(4−1) Gyration of Four Dimensional Top 54

(4−2) Solutions to Circularly Polarized Electromagnetic Field 56

(4−3) Gyro Electromagnetic Equation under Maxwellean Braking Action (Ceased) 58

§ 5 Equation of Motion to State Four Momentum

(5−1) Electromagnetic Behaviour of State Four Momentum 60

(5 2) Solutions under Gravitational Deceleration 60

(5−3) Behaviours of the Second Order and Third Derivative of Time 64

§ 6 Several Relativistic Problems

(6-1) Four Dimensional Kepler's Problem 66
(6-2) Lorentz Transformation of Impedance 68
(6-3) Super Signal Lorentz Transformation 70
(6-3-1) Ultra Dynamics upon the First Hyper Surface 70
(6-3-2) Lorentz Transformation upon the First Hyper Surface 72
(6-3-3) Hyper Energy 76

§ 7 Multi-harmonic Equation

(7-1) Potentials to Stress Tensor 78
(7-2) Tri-harmonic Stress Function 80
(7-3) Elasticity of Electromagnetic Ether 84
(7-4) Explicit Expressions of Energy Momentum Tensor 90

§ 8 Loss of Weight

(8-1) Energy Density of Gravitation 96
(8-2) Moebius Wound 96
(8-3) Loss of G 98
(8-4) Return of History 100
(8-5) Growth of State Momentum under G-Deceleration 104
(8-6) Statistical and Thermodynamical Probability 110
(8-7) Locking Magnetic Field 114
(8-8) Output Electric Potential 120
(8-9) Output Power 122
(8-10) Condenser Coil 124
(8-11) Feedback Locking Coil 126

§ 9 Inverse Atomic Engine

(9-1) G field of Negative Energy 132
(9-2) The Transformation with Naclear Electric Resonance 136
(9-3) Thrust and Output of Inverse Atomic Motor 138

(9−4) (Revised) (Ceased) 146
(9−5) Semiconductor Coil/Landau Oscillator 148
(9−6) Landau Oscillator of Torus Shape 154
(9−7) IC Coil/G Reactor 158
(9−8) Seike's Law to G Reactor 162

§ 10 Time Reversing Machine

(10−1) ~ (10−4) (Revised) (Ceased) 164
(10−5) Infinite Degrees of Freedom of Torus Shape 164
(10−6) Heisenbergean Chain of Uncertainty 168
(10−7) Time Reflection of Electromagnetic Wave 174

§ 11 Inverse-G Space Vehicle of John R.R. Searl's

(11−1) Experimental Results in United Kingdom 180
(11−2) The Searl Effects 184
(11−3) Geodesic Sailing towards the Moon (Lunar Journey) 190

§ 12 The Tenth Planet

(12−1) Introduction 198
(12−2) Distribution of Energy Tensor 198
(12−3) Mass Distribution of Terrestrial Planets 202
(12−4) The Orbit of the Tenth Planet 206

§ 13 Periodic Chart of Elementary Particles

(13−1) Intrinsic Principal Quantum Number 210
(13−2) Classification with Intrinsic Principal Quantum Number 214

§ 14 Solid State Battery (Revised) (Ceased) 216

§ 15 Decay of Lucifer 218

§ 16 Experimental Results

(16−1) Imaginary DC−Current by G 224
(16−2) (Revised/Ceased) 230

Contents

§ 17 Electro-G Induction

(17-1) Gradual Increase of Electro G Induction 232
(17-2) Topological Translation into Electronic Circuit of Möbius Strip 232
(17-3 Double Solenoid Circuit 234
(17-4)(17-5) (Revised/Ceased) 234

§ 18 Properties of Tachyon

(18-1) Properties of Four Vectors of Tachyon 236
(18-2) Kinetic Energy of Tachyon 242
(18-3) Periodic Chart of Tachyon 244

§ 19 Possibility of Time Reversing Oscillator (Ceased) 248

§ 20 Possibility of Imaginary Distance (Revised)(Ceased) 248

§ 21 Signal Number

(21-1) Signal Number 250
(21-2) Cross Word Transcendental Number 250
(21-3) Signal Velocity on Other Planets 252

§ 22 Center of Wave 258

Concluding Remarks 264

Appendix (A) Mathematics and Physics 275
(B) Nostalgic (Time Reversing) Melodies (Revised)
(C) & (D) (Revised)

Table of Physical Constants 344

§1 Total Angular Momentum Wave Equation

(1−1) Lorentz invariant angular momentun wave Equation

Angular momentum forms six vector (Ref 11) in Minkowskean space-time such that

$$M^{23} = x^2\ p^3 - x^3\ p^2 - \frac{i\hbar}{2}\gamma^2\ \gamma^3,$$

$$M^{31} = x^3\ p^1 - x^1\ p^3 - \frac{i\hbar}{2}\gamma^3\ \gamma^1,$$

$$M^{12} = x^1\ p^2 - x^2\ p^1 - \frac{i\hbar}{2}\gamma^1\ \gamma^2,$$

$$M^{41} = x^4\ p^1 - x^1\ p^4 - \frac{i\hbar}{2}\gamma^4\ \gamma^1,$$

$$M^{42} = x^4\ p^2 - x^2\ p^4 - \frac{i\hbar}{2}\gamma^4\ \gamma^2,$$

$$M^{43} = x^4\ p^3 - x^3\ p^4 - \frac{i\hbar}{2}\gamma^4\ \gamma^3,$$

where $\mathsf{x} = (x^1,\ x^2,\ x^3,\ x^4 = ict)$

and $\mathsf{p} = (p^1,\ p^2,\ p^3,\ p^4 = ip_o)$

stand for Minkowskean coordinate of a mass and that four vector (Ref 12), respectively. M^{jk} are skew symmetric such that

$$M^{jk} = -M^{kj}$$

with respect to super scripts j and k. The latter terms mean intrinsic angular momentum (six spin) (Ref 13). We shall further specify total angular momentum deusity upon the pth hyper surface with m^{jkp} and energy momentum tensor with T^{jp}, of. $\partial_k\ m^{jkp}(x) = 4\pi\ T^{jk}(x)$, (1−1)

because we easily verify the relations of

$$4\pi\ \partial j\ T^{jp} = \partial j\ \partial_k\ m^{jkp}$$

$$= \frac{1}{2!}\ (\partial_j\ \partial_k\ m^{jkp} + \partial_k\ \partial_j\ m^{kjp})$$

$$= \frac{1}{2}\ (\partial_j\ \partial_k\ m^{jkp} - \partial_j\ \partial_k\ m^{jkp}) \equiv 0,$$

which have been nothing but conseavation of energy momentum tensor (Ref 16). We have made use of

$$m^{jkp} = -m^{kjp} \text{ (skew symmetric)}.$$

The same number of super scripts and lower stands for contraction (sum from 1 to 4). Secondly we shall take the dual of (1－1) (Ref 17) such that

$$\partial_k \, {}^{*}m^{jkp}(x) = 0, \qquad (1-2)$$

where the dual means, for instance

$${}^{*}T^{jk} = \frac{\varepsilon^{jkmn}}{2!} T_{mn}$$

ε^{jkmn} are perfectly skew symmetric pseudo tensor of the fourth rank (ipsilon of Eddington's). The right hand side of the dual of (1－1) identically vanishes such as

$$\varepsilon^{jkmn} T_{mn} = \frac{1}{2} (\varepsilon^{jkmn} T_{mn} + \varepsilon^{jknm} T_{nm})$$

$$= -\frac{1}{2} (\varepsilon^{jkmn} T_{mn} - \varepsilon^{jkmn} T_{mn})$$

$$\equiv 0,$$

since

$$T^{mn}(T_{mn}) = T^{nm}(T_{nm})$$

while only the left hand side remains, leading us to (1－2). Confining our analysis only to $p=0$, namely to the zeroth hyper surface (ordinary physical space, Ref 14 and 15), and putting the tensor to be

$$\left.\begin{aligned} \text{Ж} &= (m^{230} \quad m^{310} \quad m^{120}) \\ i\text{Я} &= (m^{410} \quad m^{420} \quad m^{430}) \\ (T^{01} \quad T^{02} \quad T^{03} \quad iT^{04}) &= (p, \; iq) \end{aligned}\right\}$$

we finally find

$$rot \, \text{Ж} = 4\pi p + \frac{1}{c} \frac{\partial \text{Я}}{\partial t},$$

$$div \, \text{Ж} = 0,$$

(1－1) Lorentz inriariant angular momentum wave Equation

$$rot\ Я = -\frac{1}{c}\frac{\partial Ж}{\partial t},$$

$$div\ Я = 4\pi q, \qquad (1-3)$$

where Ж and iЯ stand for total axial angular momentum density (on the zeroth hyper surface = ordinary physical space) and total polar (Ref 18), respectively.
We namely derive a pair of wave Eqn.

$$-\Box Ж = 4\pi rot\ \mathrm{p},$$

$$\Box Я = \frac{4\pi}{c}\frac{\partial \mathrm{p}}{\partial t} + 4\pi\ grad\ \mathrm{q}, \qquad (1-4)$$

which shows that behaviour of total anpular momentum propagates at signal velocity. (1－4) are also spin wave Equation in relativistie form (Ref 19).

(1－2) Spin Wave and Gravitation

One of the physical prospects of spin or total six angular momentum has been interaction with electromagnetic field. Axial spin has been quantum operator for magnetization, while polar will be found to be that for electric polarizability as described later. On the other hand a particle immersed in ether of spin field must enjoy Coriolis force and centrifugal force in accordance with that vertex.
It has been essentially identical with gravitational force. while polar spin of that confronting entity must enjoy some gravitational interactions. Let a sheet of paper be present. You will recognize it to be a plane if you see it over.

while you will feel that it would be a line if you do it laterally. Gravitational interactions of six spin and that electromagnetic are nothing but two different prospects of the single object. We shall suppose that

$$q = \rho c / \sqrt{1-\beta^2}, \qquad (1-5)$$

in (1－4) for the medium of resting center of mass that enjoys internal motion. Under static field of six spin

$$\Delta Я = \frac{4\pi c\ grad\ \rho\ (\vec{R})}{\sqrt{1-\beta^2}}, \qquad (1-6)$$

where $\rho(\vec{R})$ stands for mass density. Comparing (1－6) with Equation of gravitation of Poisson's of

$$\Delta \rho = 4\pi K \rho, \qquad (1-7)$$

we found polar angular momentum density Я and gravitational field G to be associated by the relation of

$$\frac{G}{\sqrt{1-\beta^2}} = -\frac{K}{C} Я。 \qquad (1-8)$$

A glance at (1－8) leads us to the conclusion that gravitation has been caused by internal translation of ambient ether, because axial argular momentum has been generating operator of infinitesimal (spatial) rotation, while polar that of infinitesimal tianslation (Ref 29). From weightless field in an artificial satellite, every body may think that gravitation will be caused by a vortex. It has, however, been found to rather a little be different although that estimation was not much remote from the truth.

(1－3) Lorentz Transformation of Gravitational Field

Internal four momentum and total six angular momentum have been a cause of gavitation and also that relult, the latter having defined the former and the former the latter, each

other. The former obeys a Lorentz transformation of

$$p'^1 = \frac{p^1 + i\beta p^4}{\sqrt{1-\beta^2}}, \qquad p'^2 = p^2, \quad p'^3 = p^3,$$

$$p'^4 = \frac{p^4 - i\beta p^1}{\sqrt{1-\beta^2}}, \qquad (1-9)$$

which implies that the latter must enjoy that transformation. The second set of (1−3) and that third one we may take four-potential of $\varphi = (\varphi^1, \varphi^2, \varphi^3, \varphi^4 = i\varphi^0)$ of six spin of Ж and iЯ by

$$(Ж, -iЯ) = Rot\ \varphi = \partial_j \varphi^k - \partial_k \varphi^j, \qquad (1-10)$$

so that the second set of (1−3) and that third one may identically be satisfied (Ref 30), where Rot denotes rotation with respect to space-time (which has six components and, is, therefore, an extension of rot).

Not only $\varphi = (\varphi^1, \varphi^2, \varphi^3, \varphi^4)$

but also $\partial = (\partial^1, \partial^2, \partial^3, \partial^4)$

are four vectors. They obey Lorentz transformations of

$$\varphi'^1 = \frac{\varphi^1 + i\beta\varphi^4}{\sqrt{1-\beta^2}}, \qquad \varphi'^2 = \varphi, \quad \varphi'^3 = \varphi^3,$$

$$\varphi'^4 = \frac{\varphi^4 - i\beta\varphi^1}{\sqrt{1-\beta^2}}, \qquad (1-11)$$

and

$$\partial'_1 = \frac{\partial_1 + i\beta\partial_4}{\sqrt{1-\beta^2}}, \qquad \partial'_2 = \partial_2, \quad \partial'_3 = \partial_3,$$

$$\partial'_4 = \frac{\partial_4 - i\beta\partial_1}{\sqrt{1-\beta^2}}, \qquad (1-12)$$

owing to which total six angular momentum enjoys a Lorentz transformation of $Ж'_1 = Ж_1$

$$Ж'_2 = \frac{Ж_2 + \beta Я_3}{\sqrt{1-\beta^2}}, \qquad Ж'_3 = \frac{Ж_3 - \beta Я_3}{\sqrt{1-\beta^2}},$$

(1−4) Spin Induction Law

$$Я_1' = Я_1 ,$$

$$Я_2' = \frac{Я_2 - \beta Ж_3}{\sqrt{1-\beta^2}} ,$$

$$Я_3' = \frac{Я_3 + \beta Ж_2}{\sqrt{1-\beta^2}} , \qquad (1-13)$$

with reference to (1−10). In recourse to the relation between polar angular momentum and gravitation of (1−8) we finally obtain a Lorentz transformation of gravitational field of

$$Ж_1' = Ж_1 , \qquad Ж_2' = \frac{Ж_2 - \frac{c\beta}{k} G_3}{\sqrt{1-\beta^2}} ,$$

$$Ж_3' = \frac{Ж_3 - \frac{c\beta}{k} G_3}{\sqrt{1-\beta^2}} , \qquad G_1' = G_1 ,$$

$$G_2' = \frac{G_2 + \frac{k\beta}{c} Ж_3}{\sqrt{1-\beta^2}} , \qquad G_3' = \frac{G_3 - \frac{k\beta}{c} Ж_2}{\sqrt{1-\beta^2}} .$$

(1−4) Spin Induction Law

Static vector field of axial angular momentum and polar has been irrotational such that $rot\ Ж = 0 ,$ (1−15) in recourse to (1−3). We may take potential of spin (axial angular momentum) of , $Ж = grad\ \varphi .$ (1−16) We further suppose that potential at $Q(\times)$ is proportional to the solid angle Ω governing closed curve C which contains momentum flux, $P(\times)$ such as $\varphi(x') = \Omega P(x) ,$ (1−17) We also use a famous expression of classical mechanics

$$\mathrm{grad}\,\Omega = rot\ \alpha , \qquad (1-18)$$

where $\alpha = \oint_C \frac{ds}{r} .$ (1−20)

Spatial vector $\vec{r} = (x^1 - x^1,\ x^2 - x^2,\ x^3 - x^3)$ starts from a

point on the curve and terminated at $Q(x)$. We finally ootain a rather familiar relation of

$$Ж = \oint_C \frac{Pds \times \vec{r}}{r^3} , \qquad (1-19)$$

with referece to the first set of (1−3) of

$$rot\ Ж = 4\pi p. \qquad (1-20)$$

(1−19) is nothing but spin induction law, in which internal momentum is thought to be a cause of spin. The one has been defined by auother in (1−3). Pds and ds denote infinitesimal element of internal momentum and element of curve, respectively.

(1−5) The Crucial Test

New Eqn. of gravitation proposed must satisfy the so-called crucial tests. We shall examine our theory of gravitation to furnish satisfactory explanation to the motion of perihelion of a planet as one of the crucial tests.

The moving planet observes a gravitational field of

$$G' = \gamma \left(G + \frac{k\vec{\beta}}{c} \times Ж\right), \qquad (1-21)$$

in recourse to (1−14), where γ stands for Lorentz factor of

$$\gamma = \frac{1}{\sqrt{1-\beta^2}} ,$$

with $$\beta = \frac{v}{c}$$

and v for the velocity of a planet. Gravitation will be found to act upon the planet such that

$$F = m\gamma \left(G + \frac{k\vec{\beta}}{c} \times Ж\right). \qquad (1-22)$$

in which m means rest mass of a planet. The Eqn. of motion of a planet may be found to have the form

$$m\frac{d^2\mathbf{r}}{d\tau^2} = \frac{\mathbf{F}}{\sqrt{1-\beta^2}},$$

$$\frac{dq}{d\tau} = \frac{\mathbf{p}\cdot\mathbf{G}}{c\sqrt{1-\beta^2}}, \qquad (1-22)$$

where

$$\mathbf{r} = (x^1, x^2, x^3)$$

$$\mathbf{p} = m\frac{d\mathbf{r}}{d\tau}, \qquad q = mc\frac{dt}{d\tau}$$

and $cq = W$ stands for total energy of a planet. It is supposed to enjoy an axially symmetric gravitational field of

$$G_R = -\frac{\mu}{R^2}$$

$$G_\varphi = 0, \qquad (1-24)$$

where R and φ denote two dimensional polar co-ordinate of $X^1 = R\cos\varphi$,

and $X^2 = R\sin\varphi$.

We namely derive

$$q = mc\gamma\left(1+\frac{\mu}{c^2R}\right), \qquad (1-25)$$

owing to the latter Eqn. of (1−23), which is nothing but Brillouin's result and that of Lucas'es (Ref 64 and 65). Boundary conditions have been taken to be

$$\lim_{R\to\infty} q = mc\gamma. \qquad (1-26)$$

They stated that Einsteinean relation of

$$W = \frac{mc^2}{\sqrt{1-\beta^2}},$$

must be corrected with gravitational potential. We have to replace Lorentz factor by $\gamma' = \gamma\left(1+\frac{\mu}{c^2R}\right)$. (1−27)

The radial part of the Eqn. of motion in terms of the corrected Lorentz factor reads

(1−5) The Crucial Test

$$\frac{d^2R}{c^2d\tau^2} - \frac{h^2}{R^3} = \left(1+\frac{\mu}{c^2R}\right)^2\frac{\mu}{c^2R^2}$$

$$= -\left(1+\frac{2\mu}{c^2R}+\frac{\mu^2}{c^4R^2}\right)\frac{\mu}{c^2R^2}, \quad (1-28)$$

where we suppose that $\frac{k\beta}{c} \ll 1$

and $\beta \ll 1$,

and $|\mathcal{K}|$ is assumed to be small relatively to gravitational field of a celestial body. The latter term of (1−22) has thus been neglected. h stands for aerial velocity of

$$R^2\frac{d\varphi}{cd\tau} = h, \quad (1-29)$$

which was led to in recourse to $G_\varphi = 0$.

(See the ordinary problem of Kepler's). The Eqn. of (1−28) can be solved by the familiar method of planetary motion, and we find the angle Ψ covered by one cycle

$$\psi = \frac{4}{A\sqrt{\gamma-\alpha}}\int_0^{2\pi}\frac{d\varphi}{\sqrt{1-k^2\sin^2\varphi}}, \quad (1-30)$$

with $k^2 = \frac{\beta-\alpha}{\gamma-\alpha}$,

α, β and γ being the roots of cubic Eqn. which appears in the right hand side of the integral such that

$$\alpha+\beta+\gamma = \frac{3c^6h^2}{2\mu^3}\left(1-\frac{\mu^2}{c^4h^2}\right),$$

and $A^2 = \frac{3\mu^3}{3c^6h^2}$.

The parameters α and β are determined by

$$\alpha = \frac{1}{a(1+e)},$$

and $$\beta = \frac{1}{a(1-e)},$$

where a and e mean major radius of the orbit and eccentricity, respectively (γ does not stand for Lorentz factor this time).

Expanding (1－30) and neglecting infinitesimal terms, we finally find

$$= 2\pi + \frac{24\pi^3}{c^2(1-e^2)}\left(\frac{a}{T}\right)^2$$

in which T means the period expressed in seconds.

The latter term shows secular rotation of the elliptic orbit in the same sense as the revolution (Fig A).

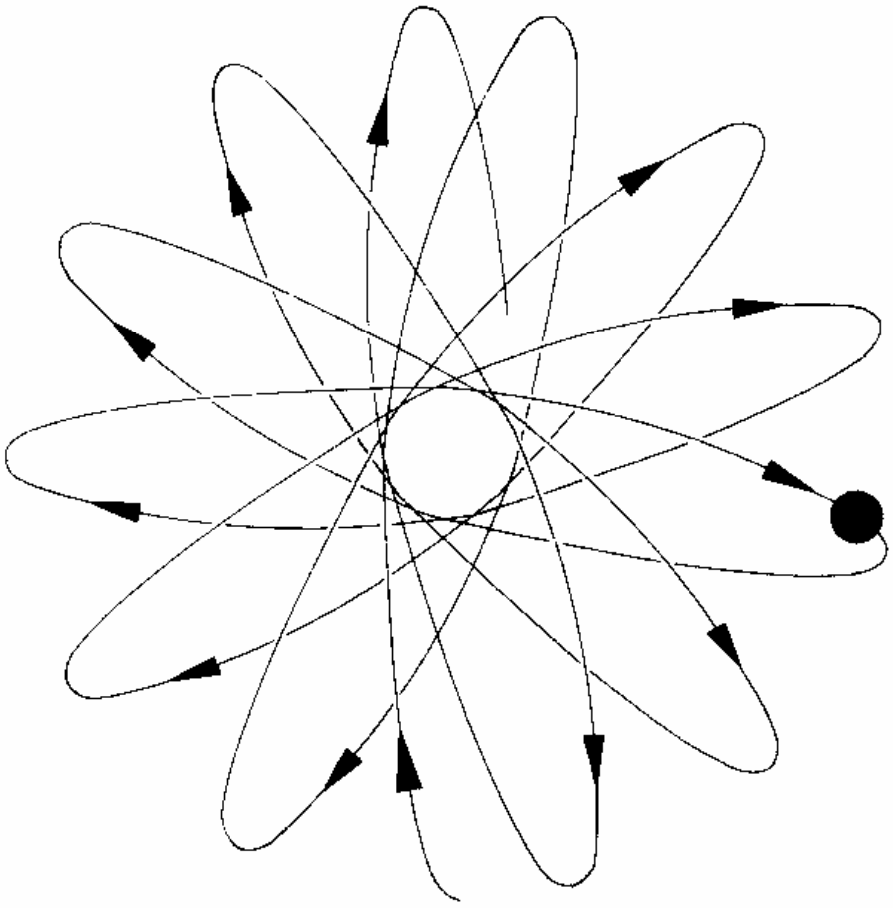

Fig. A

It is just identical with Einstein's result, and will furnish a satisfactory verification of our Eqn. of gravitation.

§ 2 Relativistic Spherecal Harmonics

(2－1) Angular Momentum Operator as Six Vector

Whe shall solve Klein-Gordon Eqn. of

$$(\Box - \kappa^2)\,\Psi(\times) = 0. \qquad (2-1)$$

with four dimensional polar co-ordinate of,

$$x^1 = x = r \sin\theta \sin\varphi \cos\Psi,$$
$$x^2 = y = r \sin\theta \sin\varphi \sin\Psi,$$
$$x^3 = z = r \sin\theta \cos\varphi,$$
$$x^4 = u = r \cos\theta, \qquad (2-2)$$

where $0 \leqq r < \infty$, $0 \leqq \theta \leqq \pi$, $0 \leqq \varphi \leqq \pi$

and $0 \leqq \Psi \leqq 2\pi$.

We shall further let D́ Alambertian of $\Box$ anallytically continue into Euclidean space-time (unitary trick) such that

$$\Box \to -\Delta_4 = -\frac{1}{r^3}\frac{\partial}{\partial r}\left(r^3\frac{\partial}{\partial r}\right) + \frac{K^2}{r^2}$$

with $$K^2 = -\left[\frac{1}{\sin^2\theta}\frac{\partial}{\partial\theta}\left(\sin^2\theta\frac{\partial}{\partial\theta}\right) - \frac{L^2}{\sin^2\theta}\right],$$

and $$L^2 = -\left[\frac{1}{\sin\varphi}\frac{\partial}{\partial\varphi}\left(\sin\varphi\frac{\partial}{\partial\varphi}\right) + \frac{1}{\sin^2\varphi}\frac{\partial^2}{\partial\Psi^2}\right]. \qquad (2-3)$$

K^2 stands for the openator of square of six angular momentum (Ж, iЯ) of,

$$Ж = \begin{pmatrix} x^2p^3 - x^3p^2 = i\hbar\,(x^2\partial_3 - x^3\partial_2) \\ x^3p^1 - x^1p^3 = i\hbar\,(x^3\partial_1 - x^1\partial_3) \\ x^1p^2 - x^2p^1 = i\hbar\,(x^1\partial_2 - x^2\partial_1) \end{pmatrix}$$

$$iЯ = \begin{pmatrix} x^4p^1 - x^1p^4 = i\hbar\,(x^4\partial_1 - x^1\partial_4) \\ x^4p^2 - x^2p^4 = i\hbar\,(x^4\partial_2 - x^2\partial_4) \\ x^4p^3 - x^3p^4 = i\hbar\,(x^4\partial_3 - x^3\partial_4) \end{pmatrix}$$

namely of,

$$K^2 = Ж^2 - Я^2 = Ж^2 + (iЯ)^2,$$

(2－1) Angular Momentum Operator as Six Vector

L^2 being ordinary angular momentum operator, the eigen functions and the eigen values of which are furnished with

$$L^2 Y_L^m(\varphi, \Psi) = L(L+1) Y_L^m(\varphi, \Psi),$$

$$Y_L^m(\varphi, \Psi) = (-1)^{\frac{|m|+m}{2}} \sqrt{\frac{2L+1}{2} \cdot \frac{L-|m|}{L+|m|}}$$

$$\sin^{|m|}\varphi \frac{d^{|m|}}{d(\cos\varphi)^{|m|}} \frac{1}{2^L} \sum_{j=0}^{j=\left\{\frac{L}{2}\right\}} (-1)^j$$

$$\frac{(2L-2j)!}{j!(L-j)!(L-2j)!} (\cos\varphi)^{L-2j} \cdot \frac{\exp(im\Psi)}{\sqrt{2\pi}}. \qquad (2-4)$$

$Ж^2$ commutes with $Я^2$ by

$$[Ж^2, \quad Я^2] = 0. \qquad (2-4b)$$

Я are also observable since so are Ж (Ref 47).

We have made use of commutation relations of four momentum operator and corresponding co-ordinate of space-time of,

$$[p^j, x^k] = -i\hbar\delta^{jk}, \quad [p^j, x^k] = [x^j, x^k] = 0$$

$(j, k = 1 \sim 4)$.

δ^{jk} stands for Kronecker's delta (Ref 48). We also obtain

$$[K^2, Ж^2] = [K^2, Я^2] = 0. \qquad (2-4c)$$

from (3—4b). K is also oleservable. L means orbital quantum number (Ref 2) and is a non-negative integer, which satisfies a relation of,

$$L + 1 \leqq n, \qquad (2-5)$$

n being principal quantum number. m denotes magnetic quantum number, which satisfies

$$|m| \leqq L$$

(integers). Δ_4 stands for four dimensional Laplacian. The following differential Eqn. of, radially:

$$\left[\frac{d^2}{dr^2} + \frac{3}{r}\frac{d}{dr} + \left(k^2 - \frac{n^2-1}{r^2}\right)\right] R_n(r) = 0, \qquad (2-6)$$

(2−1) Angular Momentum Operator as Six Vector

the first angular part :

$$\left[(1-Z^2)\frac{d^2}{dZ^2} - 3Z\frac{d}{dZ} - \frac{L(L+1)}{1-Z^2} \right.$$

$$\left. - (n^2-1) \right] \text{Ⓗ}_n^L(\theta) = 0 , \qquad (2-7)$$

with $Z = \cos\theta$.

(3−7) can be obtained by differentiating Gegenbauer differential Eqn. (Ref 3) of,

$$\left[(1-Z^2)\frac{d^2}{dZ^2} - 3Z\frac{d}{dZ} + N(N+2) \right] C_N^1(\cos\theta) = 0 ,$$

by L times. We finally derive

$$\text{Ⓗ}_n^L(\theta) = \sin^L\theta \left[\frac{d}{d(\cos\theta)} \right]^L C_{n-1}^1(\cos\theta) . \qquad (2-8)$$

We have $L+1 \leqq n$,

so that (2−8) may physically be meaningful.

(2−2) Relativistic Spherical Harmonics

In recourse to the relation among principal quantum numbers and orbital the eigen value in (2−6) is noshing but principal of

$$n = L+1 , \ L+2 , \ \cdots\cdots\cdots .$$

The orthonormal associations are

$$\int_0^\pi \text{Ⓗ}_n^L(\cos\theta)\ \text{Ⓗ}_{n'}^L(\cos\theta)\sin^2\theta\, d\theta$$

$$= \frac{\pi}{2} \cdot \frac{(n+L)!}{n[(n-L-1)!]} \delta nn' , \qquad (2-9)$$

where $\delta nn'$ stands for Kronecker's symbol (Ref 4), and $\sin^2\theta\, d\theta$ means the first angular segment of space-time volume element of

$$d\tau = r^3 \sin^2\theta \sin\varphi \, dr\, d\theta\, d\varphi\, d\Psi .$$

Radially we derive elementary solutions which are regular at $r=0$ (also finite when $r\to\infty$),

$$R_n(r) = \frac{\sqrt{\kappa}}{r} J_n(\kappa r). \qquad (2-10)$$

Their normalization relations are furnished by

$$\int_0^\infty [R_n(r)]^2 r^3 dr = \delta(0), \qquad (2-11)$$

where r^3dr denotes radial segment of space-time volume element of

$$d\tau = r^3 \sin^2\theta \sin\varphi \, dr\, d\theta\, d\varphi\, d\Psi ,$$

and $\delta(Z)$ stands for Diracean delta function, and does not for Kronecker's one.

(2−3) Eigen Values of Polar Angular Momentum

The eigen value λ of polar angular momentum of $я^2$ is determined by,

$$я^2 \Pi(\theta, \varphi, \Psi) = [\sec^2\theta \frac{\partial}{\partial\theta}(\cos^2\theta \frac{\partial}{\partial\theta}) - \tan^2\theta L^2]\Pi(\theta, \varphi, \Psi) = \lambda\Pi(\theta, \varphi, \Psi). \qquad (2-12)$$

Putting Π to be

$$\Pi(\theta, \varphi, \Psi) = Ⓗ(\theta)\, Y_L^m(\varphi, \Psi),$$

we obtain separated differential Eqn. of,

$$[\sec^2\theta \frac{\partial}{\partial\theta}(\cos^2\theta \frac{\partial}{\partial\theta}) - L(L+1)\tan^2\theta - \lambda]\, Ⓗ(\theta) = 0,$$

$$L^2 Y_L^m(\varphi, \Psi) = L(L+1) Y_L^m(\varphi, \Psi). \qquad (2-13)$$

along with

$$x = r\cos\theta \sin\varphi \cos\Psi, \qquad z = r\cos\theta \cos\varphi,$$

$$y = r\cos\theta \sin\varphi \sin\Psi, \qquad x^4 = u = r\sin\theta .$$

(2－3) Eigen Values of Polar Angular Momentum

and with $0 \leqq r < \infty$, $0 \leqq \theta \leqq \pi$,

$0 \leqq \varphi \leqq \pi$ and $0 \leqq \Psi \leqq 2\pi$.

The differential Eqn. of,

$$[\sec^2\theta \frac{\partial}{\partial\theta}(\cos^2\theta \frac{\partial}{\partial\theta}) + L(L+1)\tan^2\theta - \lambda \times \text{Ⓗ}(\theta) = 0, \qquad (2-14)$$

determines that eigen value of λ. We namely obtain

$$[(1-t^2)\frac{d^2}{dt^2} - 3t\frac{d}{dt} - \frac{L(L+1)}{1-t^2} + \lambda + L(L+1)] \times \text{Ⓗ}(t) = 0,$$

$$(t = \sin\theta) \qquad (2-15)$$

which is nothing but associated Gegenbauer differential Eqn with

$$\lambda + L(L+1) = n^2 - 1 = N(N+2), \qquad (2-16)$$

and along with

$$H(t) = \cos^L\theta [\frac{d}{d(\sin\theta)}]^L C^1_{n-1}(\sin\theta), \qquad (2-17)$$

where $L+1 \leqq n$, $(2-18)$

and $C^1_n(\sin\theta)$ stands for Gegenbauer polynoms (Ref 3) refferred to in (2－8). Thus, amplitude of polar angular momentum is determined by

$$|Я| = \sqrt{n^2 - 1 - L(L+1)}\ \hbar, \qquad (2-19)$$

in which n means principal quantum number in recourse to the former analysis.

Orthonormal eigen functions in Minkowskean space-time are,

$$\text{Ⓗ}^L_N(\theta) = [i(ch\theta)^L / M_L][\frac{d}{d(sh\theta)}]^{L+1} \times \cos(N+1)(\theta + \frac{i\pi}{2}), \qquad (2-20)$$

(Ref 24) where

$$M_L^2 = N^2(N^2+1) \cdots\cdots (N^2 + L^2)$$

(2−3) Eigen Values of Polar Angular Momentum

Orthogonal associations are expressed by

$$\int_0^{\infty} \textcircled{H}_N^L(\theta)\ \textcircled{H}_{N'}^{L}(\theta)\ c\hbar^2\ \theta\, d\theta = \frac{\pi}{2}\ \delta(N-N') \qquad (0 \leqq N < \infty) \qquad (2-21)$$

in which $\delta(N-N')$ stands for Diracean delta function, and according to which principal quantum number can analytically be continued onto complex plane (Ref 25).
It is analogical to Regge poles of complex orbital quantum numbers (Ref 26).

§ 3 Quantum Operator for Electric Polarizability

(3−1) Lorentz Invariant Hamiltonian

Polar angular momentum contains Hamiltonian as the eighth variable. We have to develope relativistic Hamiltonian formulation of eight canonical variables so that we may describe that behaviour. This Hamiltonian formulation has been examimed by several researchers (Ref 31, 32), recently by H. Enatsu (Ref 33). The Eqn. of motion under relativistic formulation of a particle immersed in electromagnetic ether

$$mc\frac{d}{dt}\left(\frac{dr}{ds}\right) = e\frac{dr}{ds}\times H + eE, \qquad (3-1)$$

can be derived by variating the action of,

$$\delta I_1 = \delta \int L_0 \, ds, \qquad (3-2)$$

under relativistic constraint of

$$ds^2 = -dx^2,$$

where $r = (x^1, x^2, x^3)$,

and Lagrangian density is furnished by,

$$L_0 = -mc + 2m\alpha\frac{dx}{ds}\cdot A. \qquad (3-3)$$

m, $\alpha = \frac{e}{2me}$ and A stand for rest mass, a half of coupling constant of electromagnetic interaction and (four) vector potential of external electromagnetic field, respectively. Adding indeterminate part of Lagrangian density of

$$\lambda\left(\frac{dx}{ds}\right)^2,$$

to L_0, and variating

$$I = \int \left[L_0 + \lambda\left(\frac{dx}{ds}\right)^2 \right] ds, \qquad (3-4)$$

(3−1) Lorentz Invariant Hamiltonian

outside the geodetic, the Eqn. of motion of,

$$2\lambda \frac{d^2 r}{dS^2} = e\frac{dr}{dS} \times H + eE\frac{dx^0}{dS}$$

$$2\lambda \frac{d^2 x^0}{dS^2} = 2m\alpha \frac{dr}{dS} \cdot E, \qquad (3-5)$$

is obtained. λ means indeterminate constant of Lagrange's. We emphatically write dS outside the geodetic. We again come onto the geodetic taking as

$$2\lambda = mc,$$

so that (3−5) may coincide with (3−1). We namely derive eight canonical variables of x and

$$p^j = \frac{\partial L}{\partial(\frac{dx^j}{ds})} = mc\frac{dx^j}{ds} + 2m\alpha A^j, \qquad (3-6)$$

in recourse to which Lorentz invariant Hamiltonian of

$$H = (P - 2m\alpha A)^2/2mc + mc, \qquad (3-7)$$

can be obtained. Eight canonical relations are

$$\frac{dx}{ds} = \frac{\partial H}{\partial P},$$

$$\frac{dP}{ds} = -\frac{\partial H}{\partial x}, \qquad (3-8)$$

the eighth of which leads us to

$$\frac{dH^0}{ds} = \frac{\partial H}{\partial t}. \qquad (3-9)$$

Ordinary Hamiltonian $H^0 = \frac{cp^4}{i}$,

is related to that Hamiltonian by (3−9). We finally derive an expression of

$$\frac{dH^2}{ds} = \frac{ds}{dt} \cdot \frac{dH}{ds},$$

$$\Longrightarrow \gamma H^0 = cH,$$

especially in a resting system of internal motion (Ref 34),

where γ denotes Lorentz factor. This implies a physical meaning of Lorentz scalar of H. That conservation law of

$$\frac{dH}{ds} = 0 , \qquad (3-11)$$

corresponds with that of ordinary Hamiltonian of,

$$\frac{dH^0}{dt} = 0 . \qquad (3-12)$$

Interaction part with external field takes the form of,

$$\gamma H^0 = cH$$
$$= -\alpha (Ж \cdot H - Я \cdot E) , \qquad (3-13)$$

where Ж and iЯ stand for axial angular momentum and polar, respectively. Conventional magnetic moment i has been furnished by $4\pi i = -\frac{\partial H^0}{\partial H} . \qquad (3-14)$

Can't electric moment be done by

$$4\pi i P = -\frac{\partial H^0}{\partial (iE)} = +\frac{i\alpha Я}{\gamma} , \qquad (3-15)$$

and can't we call polar angular momentum guantum operator for electric polarizability ? Magnetic field and electric are axial vector field and polar in Minkowskean space-time. Axial angular momentum Ж and polar iЯ also correspond with this and that, respectively. We namely obtain an expression of

$$4\pi (i, P) = g\alpha \begin{pmatrix} 0, & Ж_3, & -Ж_2, & -iЯ_1 \\ -Ж_3, & 0, & Ж_1, & -iЯ_2 \\ Ж_2, & -Ж_1, & 0, & -iЯ_3 \\ iЯ_1, & iЯ_2, & iЯ_3, & 0 \end{pmatrix} \qquad (3-16)$$

where g means nuclear g-factor.

(3－2) Lorentz Transformation of Magnetization and Electrie Polarization

Lorentz transformation of axial angular momentum and polar

has been determined by (1－13). In recourse to (3－14) and (3－15) we derive that of magnetization and electric polarization of,

$$I_1' = I_1 , \qquad P_1' = P_1$$

$$I_2' = \frac{I_2 + \beta p_3}{\sqrt{1-\beta^2}} , \qquad P_2' = \frac{P_2 - \beta I_3}{\sqrt{1-\beta^2}} ,$$

$$I_3' = \frac{I_3 - \beta p_2}{\sqrt{1-\beta^2}} , \qquad P_3' = \frac{P_3 + \beta I_2}{\sqrt{1-\beta^2}} , \qquad (3-17)$$

which just corresponds with the result of W. G. V. Rosser's (Ref 35) and subsequently verifies (3－14) and (3－15).

(3－3) Lorentz Invariant Heisenbergean Equation

In recourse to eight canonical relations of (3－8) as many canonical Eqn. of,

$$\frac{dx}{ds} = \frac{i}{\hbar} [H, x] ,$$

$$\frac{dP}{ds} = \frac{i}{\hbar} [H, P] , \qquad (3-18)$$

can be obtained with reference to Poisson's brackets.

Secondly we derive Lorentz invariant Heisenbergean Eqn. of,

$$\frac{df}{ds} = \frac{i}{\hbar} [H, f] , \qquad (3-19)$$

where f stands for physical quantity composed of sums and products of eight canonical variables. This Epn. is a Lorentz invariant (contravariant) generalization of usual Heisenbergean Eqn. of motion of,

$$\frac{df}{dt} = \frac{i}{\hbar} [H^0, f] . \qquad (3-20)$$

If we put f to be

$$f = H, \quad \text{in} \quad (3-19)$$

we again verify (3－11).

§ 4 SEIKE・Kramers Equation

(4－1) Gyration of Four Dimensional Top

In the former section we obtained Lorentz invariant Eqn. of motion of Heisenberg's. If we apply this Eqn. to several physical quantities, we will have some Eqn. which must naturally be Lorentz invariant. Firstly we derive

$$\frac{d\text{Ж}}{d\tau} = \alpha(\text{Ж}\times\text{H} - \text{Я}\times\text{E}),$$
$$\frac{d\text{Я}}{d\tau} = \alpha(\text{Ж}\times\text{E} + \text{Я}\times\text{H}), \qquad (4-3)$$

in recourse to commutation relations of six angular momentum of $\text{Ж}\times\text{Ж} = i\hbar\text{Ж}$, $\text{Я}\times\text{Я} = i\hbar\text{Ж}$.

$$[\text{Ж}_j, \text{Я}_k] - i\hbar\text{Я}_m, [\text{Я}_j, \text{Ж}_k] = i\hbar\text{Я}_m, \qquad (4-2)$$

when we take Lorentz scalar and that physical quantity to respectively be interaction of six angular momentum with external electromagnetic field of

$$\text{H} = -\frac{\alpha}{c}(\text{Ж}\cdot\text{H} - \text{Я}\cdot\text{E}), \qquad (4-1)$$

and that six angular momentum. j, k and m are taken to be cyclic and (4－2') holds under commutation relations among relativistic canonical variables of

$$[p^j, x^k] = i\hbar\delta^{jk}, \quad [p^j, p^k] = [x^j, x^k] = 0, \quad \delta^{44} = -1, \qquad (4-4)$$

(δ^{jk} are Kronecker's symbols). Canonical variables are supposed to commute with electromagnetic field. If we take

$$\text{Я} = \text{E} = 0,$$

in (5－3), we easily find

$$\frac{d\text{Ж}}{d\tau} = \alpha\,\text{Ж}\times\text{H}, \qquad (4-5)$$

which is nothing but ordinary gyro magnetic Eqn. (Ref 36), but in which correction of motion to clock of the system.

(4−1) Gyration of Four Dimensional Top

(4−3) is Lorentz invariant gyro electromagnetic Eqn. (Ref 18). (4−3) is also rearranged in the form of

$$\frac{d\,I}{d\tau} = \alpha\,(\,I \times H + P \times E\,),$$

$$+\frac{d\,P}{d\tau} = \alpha\,(\,I \times E + P \times H\,), \qquad (4-7)$$

in recourse to (3−14) and (3−15), where I and P stand for magnetic moment and electric of the system, respectively (Ref 37). We may observe gyrational torque to electric moment with external electric field, which has been introduced by K. OKANO (Ref 38). This electric moment also contains oscillation of anti-particles, namely negative component of Zitterbewegungen, because eigen value of polar angular momentum (α-mal operators) corresponds with those of positive evergy and negative. This is analogical with the fact that axial angular momentum specifies rotation and counter one on the zeroth hyper surface (ordinary physical space).

(4−3) seems to classically state gyrations of four dimensional top. (5−3) was firstly introduced by H. A. Kramers in the former age, several insufficient points would, however, be found in the succeeding analysis (Ref 38). They will naturally be corrected if you fabricate inverse (anti-) atomic motor presented later. This would, as it were, be like eight fundamentals to inverse (anti-) atomic technology, which will be experimental physics in twenty first century.

(4−2) Solutions to Circularly Polarizcd Electromagnetic Field

What is the behaviour of four dimensional top if it is immersed in circularly polarized electromagnetic field of

$$H = (\,H_1 \cos\Omega\tau,\ H_1 \sin\Omega\tau,\ H_0\,),$$

(4－2) Solutions to Circularly Polarized Electromagnetic Field

$$\boldsymbol{E} = (-\boldsymbol{E}_1 \sin \Omega \tau ,\ \boldsymbol{E}_1 \cos \Omega \tau ,\ 0) \ ? \qquad (4-8)$$

That of polar angular momentum Я is described by

$$\frac{Я}{Я_0} = \begin{pmatrix} A\cos\alpha , & A\sin\alpha , & -B \\ -\sin\alpha , & \cos\alpha , & 0 \\ B\cos\alpha , & B\sin\alpha , & A \end{pmatrix} \eta \begin{pmatrix} -A\cos\omega\tau \\ -A\sin\omega\tau \\ B \end{pmatrix}$$

$$\begin{pmatrix} \cos\Omega\tau , & \sin\Omega\tau , & 0 \\ -\sin\Omega\tau , & \cos\Omega\tau , & 0 \\ 0 , & 0 , & 1 \end{pmatrix} = \eta , \qquad (4-9)$$

where boundarry conditions are assumed to be

$$\frac{Я(0)}{Я_0} = \begin{pmatrix} A\cos\alpha , & A\sin\alpha , & -B \\ -\sin\alpha , & \cos\alpha , & 0 \\ B\cos\alpha , & B\sin\alpha , & A \end{pmatrix} \begin{pmatrix} -A \\ 0 \\ B \end{pmatrix} . \qquad (4-10)$$

We have started from a particled state, with

$$\alpha = Arctan \frac{\boldsymbol{E}_1}{\boldsymbol{H}_1} ,$$

$$\boldsymbol{B}/\boldsymbol{A} = \alpha \sqrt{\boldsymbol{H}_1^2 + \boldsymbol{E}_1^2} \ / \ (\alpha \boldsymbol{H}_0 + \Omega) ,$$

and $\boldsymbol{A}^2 + \boldsymbol{B}^2 = 1$.

As stated in the former section, the eigon value of the last component of polar angular momentum specifics positively energied state or negatively (Ref 39). The system enjoys negatively energied state under the condition of,

$$\bar{P}(\tau) = \frac{1}{2\pi\omega} \int_0^{2\pi} Я_3(\tau)\, d(\omega\tau)$$

$$= \alpha \sqrt{H_1^2 + E_1^2}\ (\alpha H_0 + \Omega) / \omega^2 < 0 , \qquad (4-11)$$

with $\omega^2 = \alpha^2 (H_1^2 + E_1^2) + (\alpha H_0 + \Omega)^2$

For the material entities of Ferroxplane or Barium Strontium Titanate $\alpha < 0$,

We finally obtain $0 < \alpha H_0 + \Omega$ (4－12)

We move to negative energy state starting from particled with (4－12). We shall later state statistical regulation (in the section of inverse atomic motor).

(4－3) Gyro Electromagnetic Equation under Maxwellean Braking Action (Ceased)

§ 5 Equation of Motion to State Four Momentum

(5－1) Electromagnetic Behaviour of State Four Momentum

If we observe state four momentum of (p, iq) as a physical quantity f with Lorentz invariant Heisenbergean Eqn. of (3－1) an Eqn. of motion of

$$\frac{dP}{d\tau} = \alpha (P \times H + qE),$$

$$\frac{dq}{d\tau} = \alpha P \cdot E, \qquad (5-1)$$

is obtained under electromagnetic field. For single charged particle

$$\alpha = \frac{e}{mc}, \quad P = m\frac{dr}{d\tau}, \quad \frac{e}{c}\frac{dx}{d\tau} = \frac{i}{c},$$

(current)

(5－1) reduces to ordinary Eqn. of motion with Lorentz force of,

$$\frac{dp}{d\tau} = \frac{i}{c} \times H + \frac{e}{c} E,$$

$$\frac{dW}{d\tau} = \frac{i}{c} \cdot E, \quad (C.G.S) \quad (5-2)$$

where W stands for energy of that particle. We here point out that it is nothing but (c times) momentum along the normal (t axis) on the zeroth hyper surface (ordinary physical space). We shall later state that momentum along the normal on the other hyper surface is generalized energy. (5－1) will be a generalization of Eqn. of motion with an ordinary charged particle into a neutral but with electromagnetic interaction (for instance, of a neutron or atoms in general).

(5－2) Solutions under Gravitational Deceleration

The above system enjoys a solution of,

(5－2) Solutions under Gravitational Decceleration

$$p^1(\tau) = -mc\frac{db}{a^2+d^2}\left[\, exp(-a\tau) + \frac{a}{d}\sin d\tau - \cos d\tau \,\right],$$

$$p^2(\tau) = -mc\frac{b}{a^2+d^2}\left[\, a\cos d\tau + d\sin d\tau - a\, exp(-a\tau)\,\right],$$

$$p^3(\tau) = -mc\frac{a}{a^2+d^2}\left[\, 2d\sin d\tau + \frac{a^2-d^2}{a}\times sha\tau \,\right],$$

$$\mathcal{Q}(\tau) = -\frac{mc}{a^2+d^2}\left[\,(a^2+b^2+d^2)\, cha\tau - b^2\cos d\tau \,\right], \qquad (5-3)$$

where we observe the momentum from upon the system rotating at the angular frequency of Ω around Z axis on the zero-th hyper surface (ordinary physical space) such that

$$\begin{pmatrix} p^1 \\ p^2 \\ p^3 \end{pmatrix} = \begin{pmatrix} \cos\Omega\tau, & \sin\Omega\tau, & 0 \\ -\sin\Omega\tau, & \cos\Omega\tau, & 0 \\ 0, & 0, & 1 \end{pmatrix} \begin{pmatrix} P^1 \\ P^2 \\ P^3 \end{pmatrix},$$

$$q = Q,$$

and boundary conditions are taken to be

$$p^1(0) = p^2(0) = p^3(0) = 0,$$

$$Q(0) = -w^0 = -mc \;(<0).$$

We have namely started from resting state of negative energy The notations have been defined by

$$a = g/c, \qquad b = a\boldsymbol{H}_1 = a\boldsymbol{E}_1,$$

and $$d = a\boldsymbol{H}_0 + \Omega.$$

We have also applied electromagnetic field of (4－8) and gravitational field of.

$$G = (0,\ 0,\ -g). \qquad (5-4)$$

We can realize an initial condition of negative energy with the fequency condition of (4－12). We find energy of external gravitational field to flow into the system by.

$$\frac{dw}{dt} = \frac{mc\dfrac{dw}{d\tau}}{mc\dfrac{dt}{d\tau}} = \frac{mc^2\dfrac{d\mathcal{Q}(\tau)}{d\tau}}{\mathcal{Q}(\tau)}$$

$$= \frac{mc^2\left[\, a(a^2+b^2+d^2)\, sha\tau + db^2\sin d\tau \,\right]}{\left[\,(a^2+b^2+d^2)\, cha\tau - b^2\cos d\tau \,\right]}$$

$$= mc^2 \frac{\{ a(a^2+b^2+d^2)\ th a\tau + d b^2 \sin d\tau\ sech a\tau \}}{(a^2+b^2+d^2) - b^2 \cos d\tau\ sech a\tau}$$

$$\longrightarrow mgc \quad (\tau \to \infty), \qquad (5-5),$$

after longer driving. Stress energy of gravitation (Ref 40) of $W = -g^2/8\pi k$,

($\approx 5.4 \times 10^{11}$ ergs/cm^3 on the surface of the earth) is consumed.

(5−3) Behaviours of the Second Order and Third Derivative of Time

If we apply

$$f = \frac{dp}{d\tau}$$

to Lorentz invariant Heisenbergean Eqn. of (3−19). and make use of relativistic commutation relations of (4−4), we obtain electromagnetic behaviour of second order of four momentum of the system concerned

$$\frac{d^2p}{d\tau^2} = \alpha^2 \{ (p \times H) \times H + q(E \times H) + (p \cdot E) E \},$$

$$\frac{d^2q}{d\tau^2} = \alpha^2 \{ (p \times H) \cdot E + q E^2 \}, \qquad (5-6)$$

the second set of which becomes

$$mc \frac{d^3t}{d\tau^3} = \alpha^2 \{ (p \times H) \cdot E + q E^2 \},$$

replacing q with $mc \frac{dt}{d\tau}$.

This implies behaviours of the third derivative of time, where τ should be thought to be invariant time (the fifth variable) of Enatsu's (Ref 41). (mc^2 times) velocity of time with respect to the geodetic is nothing but energy on the zeroth hyper surface (ordinary physical), but will directly be behaviours of time (See time reversing machine).

§ 6 Several Relativistic Problems

(6－1) Four Dimensional Kepler's Problem

Relativistic Eqn. of motion of

$$m\frac{d^2x}{d\tau^2} = f, \qquad (6-1)$$

with $x = (x^1, x^2, x^3, x^4)$

$= (x, y, Z, u)$,

and $f = (f^1, f^2, f^3, f^4)$

leads us to

$$\frac{d^2r}{d\tau^2} - r\left[\left(\frac{d\theta}{d\tau}\right)^2 + \left(\frac{d\varphi}{d\tau}\right)^2 \sin^2\theta + \left(\frac{d\Psi}{d\tau}\right)^2 \sin^2\theta \times \sin^2\varphi\right] = -\frac{kM}{r^2},$$

$$\frac{d}{d\tau}\left(r^2\frac{d\theta}{d\tau}\right) - r\left[r\left(\frac{d\varphi}{d\tau}\right)^2 \sin\theta\cos\theta + r \times \left(\frac{d\Psi}{d\tau}\right)^2 \sin\theta\cos\theta\sin^2\varphi\right],$$

$$\frac{d}{d\tau}\left(r^2\sin^2\theta\,\frac{d\varphi}{d\tau}\right) - r^2\sin^2\theta\sin\varphi\cos\varphi\left(\frac{d\Psi}{d\tau}\right)^2 = 0,$$

$$\frac{d}{d\tau}\left(r^2\sin^2\theta\sin\varphi\,\frac{d\Psi}{d\tau}\right) = 0, \qquad (6-3)$$

if we put $f_r = -\frac{kM}{r^2}$,

$$f_\theta = f_\varphi = f_\Psi = 0, \qquad (6-2)$$

and make use of space-time polar co-ordinate (r, θ, φ, of (2－2). Space-time gravitational potential of $-\frac{\mu}{r}$ ($r^2 = x^2 + y^2 + Z^2 + u^2$) has been introduced by Eanat (Ref 41). (6－3) is nothing but fundamental Eqn. of space-time Kepler's problem and a generalization of

in three dimensional space (Ref 42). The last set of Eqn. states conservation of axial angular momentum.

(6－2) Lorentz Transformation of Impedance

A telegraphic Eqn. (Ref 43) reads

$$\left(L\frac{\partial^2}{c^2\partial t^2} + c_0 R\frac{\partial}{c\partial t} - \frac{1}{c_0}\frac{\partial^2}{\partial x^2} \right) I = 0 , \qquad (6-4)$$

where L, c_0 and R are impedance par unit length of transmission line. (A) Maxwellean Eqn. is invariant in electromagnetic medium in terms of electric permeability and magnetic. (B) Total angular momentum wave Eqn. of (1－1) and (1－2) are invariant in terms of six spin, while it is natural that a telegraphic Eqn. should be invariant under Lorentz transformation when we observe the medium to be composed of impedance. The telegraphic Eqn. may easily be found to have the form

$$\left\{ \gamma\left(L' - \frac{\beta^2}{C_0'} \right)\frac{\partial^2}{c^2\partial t^2} + R'\frac{\partial}{c\partial t} - \gamma\left(\frac{1}{c_0'} - \beta^2 L' \right)\frac{\partial^2}{\partial x^2} \right.$$

$$\left. -\beta\left[R' + 2\gamma\left(L'\frac{1}{C_0'} \right)\frac{\partial}{c\partial t} \right]\frac{\partial}{\partial x} \right\} I = 0 , \qquad (6-5)$$

since four derivative enjoys Lorentz transformation of(1－12). We must have the relation of

$$L' = \frac{\gamma}{1+\beta^2}\left(L + \frac{\beta^2}{C_0} \right) ,$$

$$\frac{1}{C_0'} = \frac{\gamma}{1+\beta^2}\left(\frac{1}{C_0} + \beta^2 L \right) ,$$

$$R' = R , \qquad (6-6)$$

so that (6－5) may coincide with (6－4). (6－6) is nothing but Lorentz transformation of impedance. γ stands for Lorentz factor of $\gamma = \frac{1}{\sqrt{1-\beta^2}}$.

(6－3－1) Ultra Dynamics upon the First Hyper Surface

(6－3) Super Singnal Lorentz Transformation

(6－3－1) Ultra Dynamics upon the First Hyper Surface.

Infinitesimal space element in three dimensional space is expressed with $dx\,dy\,dz$, and is closed by six infinitesimal plane elements of ($dydz$, that confronting surface), ($dzdx$, that confronting) and ($dxdy$, that confronting), while Minkowskean infinitesimal space-time element is specified by

$$dx\,dy\,dz\,du\ (u=x^4=ict),$$

and is closed by eight infinitesimal hyper surface elements of ($dydzdu$, that confronting hyper surface), ($dzdu\times dx$, that comfronting), ($dudxdy$, that confronting) and ($dxdydz$, that confronting) as shown in Fig. 1:

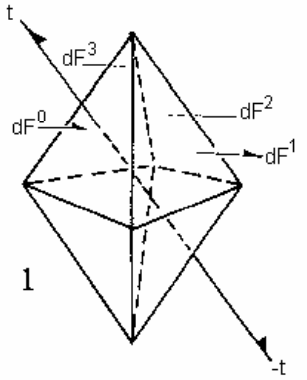

Fig. 1

We have called a section of Minkowskean space-time <hyper surface> (Ref 14, 15) in comparison with infinitesimal space-time element although it is essentically a solid. The hyper surface composed with

$$dF^0=dx\,dy\,dz,$$

is called the zeroth hyper, to which time axis is orthogonal. This is Ordinary Physical Space, on which most of physical observations are performed. Lorentz transformation on the zeroth hyper surface (Ordinary Physical Space) was furnished with

$$x'=(x-\beta t)/\sqrt{1-\beta^2},$$
$$y'=y,\qquad z'=z,$$

(6−3−1) Ultra Dynamics upon the First Hyper Surface

$$t' = \left(t - \frac{V}{c^2} x \right) / \sqrt{1-\beta^2} \quad , \qquad (6-7)$$

with $\beta = \frac{V}{C}$.

We have widely known that a mass can not exceed the signal velocity on that hyper plane(Ordinary Physical Space) where that <proper time> (Ref 20) is determined by

$$d\tau = \sqrt{1-\beta^2}\ dt. \qquad (6-8)$$

Generally speaking, physical phenomena on the other hyper surface must be present. For instance, we can think of <the first hyper surface>, onto which (dydzdu) x axis is orthogonal, and where the role of x is replaced by that on the zeroth (Ordinary Physical Space), (Ref 14, 15). On that plane the history of a person is observed along t axis which corresponds with x axis on the zeroth hyper surface (Ordinary Physical Space) as shown in Fig. 2.

Fig. 2

(See the corresponding leaf.)

Proper time of a mass may easily be found to have the form

$$d\tau' = \sqrt{1 - c^2 \left(\frac{dt}{dx} \right)^2} \cdot \frac{dx}{c} \quad , \qquad (6-9)$$

$$= \sqrt{1 - \left(\frac{C}{V} \right)^2} \cdot \frac{dx}{c} \quad , \qquad (6-10)$$

if we replace dt by dx in (6−8). We have emphasized that V is anything but inverse of velocity by explicitely writing as $\frac{dt}{dx}$.

(6−3−2) Lorentz Transformation on the First Hyper Surface (Super signal Lorentz Transformation)

Thus, (6−10) is physically meaningfal only to $C < V$, and Lorentz factor becomes $\gamma' = \frac{1}{\sqrt{1 - \left(\frac{C}{V} \right)^2}}$,

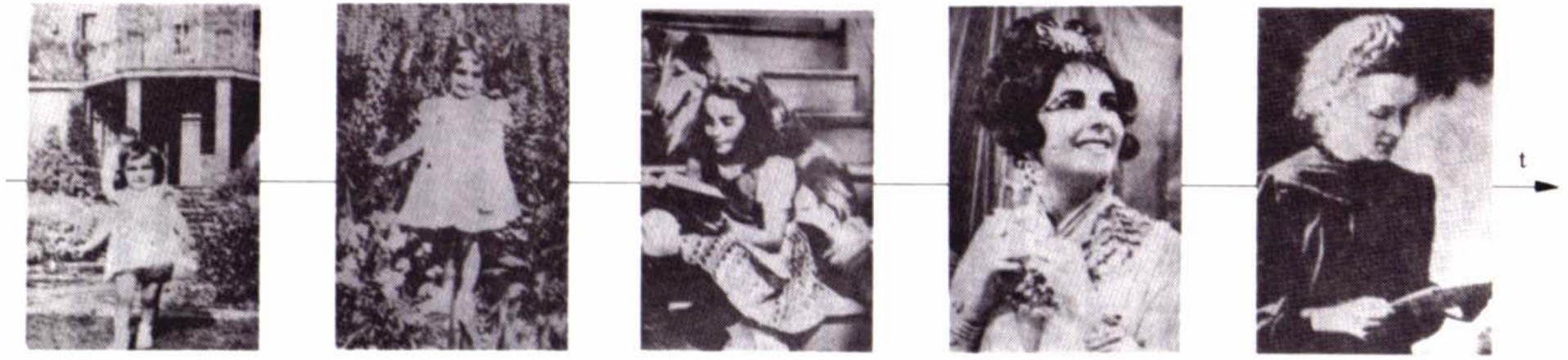

(Fig. 2)

1

[History of entities is observed along time axis on the 1st hyper surface corresponding with x axis on the zeroth hyper surface (ordinary physical

(6−3−2) Lorentz Transformation on the First Hyper Surface (Super Signal Lorentz Transformation)

We namely derive Lorentz transformation on that plane by replacing the role of t by that of x, such that

$$t' = (t - \frac{x}{V}) / \sqrt{1 - (\frac{c}{V})^2} = (t - \frac{dt}{dx} \cdot x) / \sqrt{1 - (\frac{c\,dt}{dx})^2}$$

$$z' = z, \qquad y' = y,$$

$$x' = (x - \frac{c^2 t}{V}) / \sqrt{1 - (\frac{c}{V})^2} = (x - c^2 t \cdot \frac{dt}{dx}) / \sqrt{1 - (\frac{c\,dt}{dx})^2} \qquad (6-11)$$

which is physically meaningful only when a mass is super signal. We also verify that $x'^2 + y'^2 + z'^2 + c^2 t'^2 = x^2 + y^2 + z^2 - c^2 t^2 =$ constant. We have emphatically remarked the same fact as in (6−9) by expressing $V = \frac{dx}{dt}$, explicitely. <The first hyper surface> is nothing but the plane on which super signal phenomena can be described. The component T^{1k} of energy momentum tensor has been the quantity which belongs to that plane.

(6−3−3) Hyper Energy

Energy is nothing but (c times) momentum along time on the zeroth hyper surface (Ordinary Physical Space), such that

$$W = mc^3 \frac{dt}{ds} = \pm mc^3 \cdot \frac{dt}{c\sqrt{1 - \beta^2}\,dt}$$

$$= \pm \frac{mc^2}{\sqrt{1 - \beta^2}},$$

which has, in other terms, been (c times) momentum along normal onto that plane. We can therefore, define energy on the first hyper surface of

$$W = c\,p^x = mc\frac{dx}{dt} = mc^2 / \sqrt{1 - (\frac{c}{v})^2}, \qquad (6-12)$$

as (c times) momentum along that normal of x axis.
This can be developed by Laurent expansion (Ref 22) as

$$= mc^2 \left[1 + \frac{1}{2}(\frac{c}{v})^2 + \cdots\cdots \right], \qquad (6-13)$$

inside light cone (Ref 21).
Direct application of definition of energy on the zeroth hyper surface (Ordinary Physical Space) to the first can not furnish a beautiful formula.

§ 7 Multi-harmonic Equation

(7－1) Potentials to Stress Tensor

Equilibrium of internal force in three dimensional isotropic elastic medium reads (Ref 6)

$$\partial_k f^{jk} = 0, \qquad (7-1)$$

(contracted over k)

where f^{jk} strands for three dimensional stress tensor with

$$f^{jk} = f^{kj}$$

(j and k = 1 ~ 3).

They are associated with ordinary expression with

$$\sigma_x = f^{11}, \quad \sigma_y = f^{22}, \quad \sigma_z = f^{33},$$

$$\tau_{yz} = f^{23}, \quad \tau_{zx} = f^{31}, \quad \tau_{xy} = f^{12}. \qquad (7-2)$$

We may take stress potential of φ^1, φ^2, and φ^3 (Ref 7) such that $f^{jj} = -(\partial_k^2 \varphi^m + \partial_m^2 \varphi^k)$

(j, k and m = 1, 2 and 3, cyclic),

$$f^{jk} = \partial_j \partial_k \varphi^m \quad (j \neq k \neq m), \qquad (7-3)$$

so that (7－1) may identically be satisfied, or

$$\sigma_x = -\left(\frac{\partial^2 \varphi^3}{\partial y^2} + \frac{\partial^2 \varphi^2}{\partial z^2}\right),$$

$$\sigma_y = -\left(\frac{\partial^2 \varphi^1}{\partial z^2} + \frac{\partial^2 \varphi^3}{\partial x^2}\right),$$

$$\sigma_z = -\left(\frac{\partial^2 \varphi^2}{\partial x^2} + \frac{\partial^2 \varphi^1}{\partial y^2}\right),$$

$$\tau_{yz} = \frac{\partial^2 \varphi^1}{\partial y \partial z},$$

$$\tau_{zx} = \frac{\partial^2 \varphi^2}{\partial z \partial x},$$

$$\tau_{xy} = \frac{\partial^2 \varphi^3}{\partial x \partial y}. \qquad (7-4)$$

(7－1) Potentials to Stress Tensor

On the other hand, stress potential is associated with displacement potential by the relation of

$$\varphi^m(\vec{r}) = G[\Psi^j(\vec{r}) + \Psi^k(\vec{r})] + X(x^m), \qquad (7-7)$$

in recourse to fundamental Eqn. of elasticity of

$$f^{jk} = G(\partial_j e^k + \partial_k e^j), \quad (j \neq k) \qquad (7-6)$$

if we take displacement potential Ψ of

$$\Psi = (\Psi^1, \Psi^2, \Psi^3)$$

with $$e = (\partial_1 \Psi^1 \quad \partial_2 \Psi^2 \quad \partial_3 \Psi^3). \qquad (7-5)$$

$e = (e^1, e^2, e^3)$ and $2G = mE/(m+1)$

mean displacement and modulus of shearing elasticity, respectively. m and E are Poisson's number and modulus of longitudinal elasticity, respectively, with

$$r = (x^1, x^2, x^3).$$

The function $X(x^m)$ only depends upon x^m. We shall suppose that $\Psi^j \to 0$, when $r \to \pm\infty$. Then, $X(x^m) \equiv 0$.

We accordingly obtain

$$2G\Psi^j = \varphi^k + \varphi^m - \varphi^j,$$

namely

$$2G\Psi^1 = \varphi^2 + \varphi^3 - \varphi^1,$$
$$2G\Psi^2 = \varphi^3 + \varphi^1 - \varphi^2,$$
$$2G\Psi^3 = \varphi^1 + \varphi^2 - \varphi^3. \qquad (7-8)$$

(7－2) Tri－harmonic Stress Function

Putting (7－8) into fundamental Eqn. of elasticity of

$$\varepsilon^j = \partial_j e^j = \frac{1}{E}\left[\sigma^j - \frac{\sigma^k + \sigma^m}{m}\right],$$

(not contracted over k)

(7－2) Tri-harmonic Stress Funcvion

we obtain a secular Eqn. of

$$\begin{pmatrix} \partial_1^2 + \Delta/m, & -(\partial_3^2 + \partial_1^2), & -(\partial_1^2 + \partial_2^2) \\ -(\partial_2^2 + \partial_3^2), & \partial_2^2 + \Delta/m, & -(\partial_1^2 + \partial_2^2) \\ -(\partial_2^2 + \partial_3^2), & -(\partial_3^2 + \partial_1^2), & \partial_3^2 + \Delta/m \end{pmatrix} \begin{pmatrix} \varphi^1 \\ \varphi^2 \\ \varphi^3 \end{pmatrix} = 0 .$$

We namely derive

$$\frac{(m+1)(1-m^2)}{m^3} \Delta^3 \varphi^j = 0, \qquad (7-10)$$

$$(j = 1, \ 2 \ \text{and} \ 3),$$

which leads us to

$$\left(\frac{\partial^2}{\partial x^2} + \frac{\partial^2}{\partial y^2} + \frac{\partial^2}{\partial z^2}\right)^3 \varphi^j = 0, \qquad (7-11)$$

except in the case where $m = 1$.

(7－11) can be rearranged in the form of,

$$\left(\frac{\partial^6}{\partial x^6} + \frac{\partial^6}{\partial y^6} + \frac{\partial^6}{\partial z^6} + 3\frac{\partial^6}{\partial x^4 \partial y^2} + 3\frac{\partial^6}{\partial x^2 \partial z^4} + 3\frac{\partial^6}{\partial x^2 \partial y^4} + 6\frac{\partial^6}{\partial x^2 \partial y^2 \partial z^2} + 3\frac{\partial^6}{\partial x^2 \partial z^4} + 3\frac{\partial^6}{\partial y^4 \partial z^2} + 3\frac{\partial^6}{\partial y^2 \partial z^4}\right) \varphi^j = 0, \qquad (7-12)$$

Which is nothing but three dimensional extension of Airy's bi-harmonics (partial differential Eqn. of the fourth order) (Ref 8) and can, therefore, be called Tri-harmonic Eqn. (that of the sixth order). There are six unknowns of f^{jk} and as many Eqn. of (7－1) and (7－11). Stress components can uniquely be determined by chosing three independent solutions of (7－11). Plane harmonics has the single potential. Three canponents of potential are, however, necessary in the theory of three dimensional elasticity, according to which partial differential Eqn. of the sixth order appears.

(7－3) Elasticity of Electromagnetic Ether

Multi-harmonics of the sixth order is found to appear in the former section to six components of stress and shearing stress. There are, however, sixteen components of tensor of internal force in Minkowskean space-time. In this case, fundamental Eqn. also enjoys higher order since components of stress potential increase. Preceding the examination of that Eqn. we must reveal elasticity along (axis of) time. Let two magnetic charges with opposite sign and bound with magnetic lines of force be present in electromagnetic space governed by Maxwellean Eqn. That lines of force would shrink longitudinally and elongate laterally. Let two electric charges with the identical sign and bound with electric lines of force further be present. They are repelled each other, and that lines of force would elongate longitudinally and shrink laterally. This is the so-called elasticity of background ether of electromagnetic field. There, however, arises a very puzzling question

(Q) : What is the difference between elasticity with respect to magnetic field and that to electric ? Three dimensional elasticity will be sufficient with the former only. The answer would be furnished by

(A) : Magnetic elasticity has been only spatial, electric elasticity, however, implies that of ether along time, because magnetic fields are spatial components of electromagnetic tensor, while electric those concerned with time. We may, therefore, introduce modulus of longitudinal elasticity per unit volume of hyper seerface by

$$\partial_j e^j = \varepsilon^j = \frac{1}{E}\left(f^{jj} - \frac{f^{kk} + f^{mm} + f^{nn}}{m}\right)$$

(not contracted over j), (7－13)

where f^{jk} stands for k-th component of stress upon < the j-th hyper surface >. ε^j are strains in x^j sense. The latter terms mean lateral contribution of f^{kk}, f^{mm} and f^{nn}.

$$e = (e^1, e^2, e^3, e^4)$$

denote space-time displacement. We also derive fundamental Eqn. on space-time elasticity

of $\mathsf{f}^{jk} = G\,(\partial_j e^k + \partial_k e^j)$, (7−15) ($j \neq k$, three Eqn.)

if we perform observations with co-ordinate fixed upon electric lines of force, where

G of, $2G = \frac{mE}{m+1}$, (7−16)

stands for modulus of shearing elasticity upor hyper surfaces. Thirdly we introduce displacement potential of

$\Psi = (\Psi^1, \Psi^2, \Psi^3, \Psi^4)$, by $e = (\partial_1 \Psi^1, \partial_2 \Psi^2, \partial_3 \Psi^3, \partial_4 \Psi^4)$. (7−17)

On the other hand, we define stress potential φ^{jk} (six components) by

$$\mathsf{f}^{jj} = -\,(\partial_k^2 \varphi^{mn} + \partial_m^2 \varphi^{nk} + \partial_n^2 \varphi^{mk}),$$

$$\mathsf{f}^{jk} = \partial_j \partial_k \varphi^{mn} \quad (j \neq k \neq m \neq n) \qquad (7-19)$$

so that equilibrium of stress of, $\partial_k \mathsf{f}^{jk} = 0$, (7−18)

when no volumetric (four dimensional) force is present. Elliminating Ψ with (7−13), (7−17) and (7−19), we obtain a secular Eqn. of

$$\begin{pmatrix}
(b+c)(d+a), & b(\Box-a)-mcd, & c(\Box-a)-mbd, & -m(b+c)^2, & c(\Box-d)-mab, & b(\Box-d)-mca \\
a(\Box-b)-mcd, & (d+b)(c+a), & c(\Box-b)-mda, & c(\Box-a)-mab, & -m(c+a)^2, & a(\Box-d)-mbc \\
a(\Box-c)-mbd, & b(\Box-c)-mda, & (a+b)(c+d), & b(\Box-d)-mca, & a(\Box-d)-mbc, & -m(a+b)^2 \\
-m(d+a)^2, & d(\Box-c)-mab, & a(\Box-b)-mca, & (d+a)(b+c), & a(\Box-b)-mcd, & a(\Box-c)-mdb \\
d(\Box-c)-mab, & -m(d+b)^2, & d(\Box-a)-mbc, & b(\Box-a)-mdc, & (c+a)(b+d), & b(\Box-c)-mda \\
d(\Box-b)-mca, & d(\Box-a)-mbc, & -m(c+d)^2, & c(\Box-a)-mbd, & c(\Box-b)-mda, & (a+b)(c+d)
\end{pmatrix}
\begin{pmatrix} \varphi^{23} \\ \varphi^{31} \\ \varphi^{12} \\ \varphi^{41} \\ \varphi^{42} \\ \varphi^{43} \end{pmatrix} = 0,$$

with $a+b+c+d = \Box$, and

$a = \partial_1^2$, $b = \partial_2^2$, $c = \partial_3^2$ and $d = \partial_4^2$,

We further derive $(\det \beta)\ \varphi^{jk} = 0$, (7-21)

rearranging it so that it may be symmetrical, where

$$\beta = \begin{pmatrix} -m(a+b)^2, & a(\Box-d)-mbc, & b(\Box-d)-mca, & (a+b)(c+d), & b(\Box-c)-mda, & a(\Box-c)-mbd, \\ a(\Box-d)-mbc, & -m(c+a)^2, & c(\Box-d)-mab, & c(\Box-b)-mda, & (d+b)(c+a), & a(\Box-b)-mcd, \\ b(\Box-d)-mca, & c(\Box-d)-mab, & -m(b+c)^2, & c(\Box-a)-mbd, & b(\Box-a)-mcd, & (b+c)(d+a), \\ (a+b)(c+d), & c(\Box-b)-mda, & c(\Box-a)-mbd, & -m(c+d)^2, & d(\Box-a)-mbc, & d(\Box-b)-mca, \\ b(\Box-c)-mda, & (c+a)(d+b), & b(\Box-a)-mdc, & d(\Box-a)-mbc, & -m(d+b)^2, & d(\Box-c)-mab, \\ a(\Box-c)-mdb, & a(\Box-b)-mcd, & (d+a)(b+c), & d(\Box-b)-mca, & d(\Box-c)-mab, & -m(d+a)^2, \end{pmatrix}$$

with $\beta^{jk} = \beta^{kj}$

(Ref. 27). $\det \beta$ finally leads us to a beautiful relation of

$$8(m+1)^5(m-2)(\partial_1\partial_2\partial_3\partial_4)^4 \Box^4 \varphi^{jk} = 0, \quad (7-22)$$

after some complicated arithmeties presented in appendix.

It naturally holds that $0 < m$, and we obtain

$$\Box^4 (\partial_1\partial_2\partial_3\partial_4)^4 \varphi^{jk} = 0, \quad (7-23) \qquad \text{for} \quad m \neq 2.$$

The factor of differentiations of $(\partial_1\partial_2\partial_3\partial_4)^4$ can be taken off if we suppose that stress vanishes at (four dimensionally) infinity. We finally arrive at

$$\Box^4 \varphi^{jk}(\infty) = 0, \quad (7-24)$$

in which static field is described by $\Delta^4 \varphi^{jk}(x, y, z) = 0$. (7-25)

This is called Tetra-harmonic Eqn. (Ref. 27) and a further extension of tri-harmonic Eqn. of

$$\Delta^3 \varphi^j (x, y, z) = 0. \quad (7-11)$$

We first start from Airy's bi-harmonic Eqn. of,

$$\left(\frac{\partial^2}{\partial x^2}+\frac{\partial^2}{\partial y^2}\right)^2 \varphi(x, y)=0, \qquad (A)$$

which is secondly extended into tri-harmonic Eqn. of,

$$\left(\frac{\partial^2}{\partial x^2}+\frac{\partial^2}{\partial y^2}+\frac{\partial^2}{\partial z^2}\right)^3 \varphi^{jk}(x, y, z)=0. \qquad (B)$$

(B) has further been generalized into tetra-harmonic of,

$$\left(\frac{\partial^2}{\partial x^2}+\frac{\partial^2}{\partial y^2}+\frac{\partial^2}{\partial z^2}-\frac{1}{c^2}\frac{\partial^2}{\partial t^2}\right)^4 \varphi^{jk}(\times)=0, \qquad (C)$$

which are interesting proccesses.

(7－4) Explicit Representation of Components of Energy Tensor

A particular solution to (7－25) in static Maxwellean field of stress is given by $\varphi^{jk}(x, y, z)=AR^5$, (7－27)

with $R^2=x^2+y^2+z^2$, by solving

$$\left[\frac{1}{R^2}\frac{\partial}{\partial R}\left(R^2\frac{\partial}{\partial R}\right)\right]^4 \varphi^{jk}(x, y, z)=0, \qquad (7-26)$$

in recourse to

$$\Delta=\frac{1}{R^2}\frac{\partial}{\partial R}\left(R^2\frac{\partial}{\partial R}\right)-\frac{L^2}{R^2},$$

where L^2 stands for axial angular momentum operator of

$$L^2=-\frac{1}{\sin\varphi}\frac{\partial}{\partial\varphi}\left(\sin\varphi\frac{\partial}{\partial\varphi}\right)-\frac{1}{\sin^2\varphi}\frac{\partial^2}{\partial\Psi^2},$$

with $x=R\sin\varphi\cos\Psi$,

$y=R\sin\varphi\sin\Psi$,

$z=R\cos\varphi$.

A is normalization constant. Elementary solutions are generally determined by

$$\varphi^{jk}_{mnpq}=A\left(\frac{\partial}{\partial x}\right)^m\left(\frac{\partial}{\partial y}\right)^n\left(\frac{\partial}{\partial z}\right)^p\left(\frac{\partial}{\partial u}\right)^q R^5 \qquad (7-28)$$

(7−4) Explicit Representation of Components of Energy Tensor

We shall take φ^{mn} to be $\varphi^{mn} = A(\partial_m^6 + \partial_m^6) R^5$.

Then, explicit representations of energy momentum tensor are furnished by

$$T^{jk} = f^{jk} = A\partial_j \partial_k (\partial_m^6 + \partial_n^6) R^5,$$
$$T^{jj} = f^{jj} = -A[\partial_k^2 (\partial_m^6 + \partial_n^6) + \partial_m^2 (\partial_n^6 + \partial_k^6) + \partial_n^2 (\partial_m^6 + \partial_k^6)]R^5$$

which leads us to those of stress (energy) tensor of, (7−29)

$$T^{11} = -45A\{4/R^3 - (17x^2 + 6y^2 + 17z^2)/R^5 + [17x^4 + 25y^2 \times (z^2 + x^2) + 20z^2x^2 + 17z^4]/R^7 + 7[2(2x^2 + 10y^2 + 5z^2)z^2x^2 - y^2(z^4 + x^4) - 2z^2x^2 \times (z^2 + x^2)]/R^9 + 63z^2x^2[2z^2x^2 + y^2(z^2 + x^2)]/R^{11}\},$$

$$T^{22} = -45A\{4/R^3 - (17y^2 + 6z^2 + 17x^2)/R^5 + [17y^4 + 25z^2 \times (x^2 + y^2) + 20x^2y^2 + 17x^4]/R^7 + 7[2(2y^2 + 10z^2 + 5x^2)x^2y^2 - z^2(x^4 + y^4) - 2x^2y^2 \times (x^2 + y^2)]/R^9 + 63x^2y^2[2x^2y^2 + z^2(x^2 + y^2)]/R^{11}\},$$

$$T^{33} = f^{33} = -45A\{4/R^3 - (17z^2 + 6x^2 + 17y^2)/R^5 + [17z^4 + 25x^2(y^2 + z^2) + 20y^2z^2 + 17y^4]/R^7 + 7[2(2z^2 + 10x^2 + 5y^2)y^2z^2 - x^2(y^4 + z^4) - 2y^2z^2 \times (y^2 + z^2)]/R^9 + 63y^2z^2[2y^2z^2 + x^2(y^2 + z^2)]/R^{11}\},$$

$$T^{44} = f^{44} = -45A\{-28/R^3 + 2[17(x^4 + y^4 + z^4) + 35(y^2z^2 + z^2z^2 + x^2y^2)]/R^7 + 7[(y^2z^4 + z^2x^4 + x^2y^4) + 78x^2y^2z^2 + 7(y^4z^2 + z^4x^2 + x^4y^2)]/R^9 + 126(y^4z^4 + z^4x^4 + x^4y^4)/R^{11}\},$$

$$T^{23}\ (= T^{32}) = f^{23}\ (= f^{32}) = -\frac{45Ayz}{R^7} \times [5(y^2 + z^2) - 2x^2] - (63x^4/R^4)(y^2 + z^2)],$$

(7－4) Explicit Representation of Components of Energy Tensor

$$T^{31}(=T^{13})=f^{31}(=f^{13})=-(45AZX/R^{7})\times\{12R^{2}-5[3(z^{2}+x^{2})-8y^{2}]-(14y^{2}/R^{2})\times[5(z^{2}+x^{2})-2y^{2}]-(63y^{4}/R^{4})(z^{2}+x^{2})\},$$

$$T^{12}(=T^{21})=f^{12}(=f^{21})=-(45Axy/R^{7})\times\{12R^{2}-5[3(x^{2}+y^{2})-8z^{2}]-(14z^{2}/R^{2})[5(x^{2}+y^{2})-2z^{2}]-(63z^{4}/R^{4})(x^{2}+y^{2})]\},$$

and the remainings of

$$T^{41}(=T^{14})=f^{41}(=f^{14})=T^{42}(=T^{24})=f^{42}(=f^{24})=T^{43}(=T^{34})=f^{43}(=f^{34})=0$$ (Ref. 28).

Each of the components of Maxwellean stress is identical with that of the corresponding energy momentum tensor.

§8 Loss of Weight

(8-1) Energy Density of G-field

Stress energy of gravitation of,

$$W = -\frac{g^2}{8\pi k}, \qquad (8-1)$$

is contained in unit volume of the zeroth hyper surface (Ordinary Physical Space) in Riemannean space (Ref. 44) near a planet (Ref. 40).

It particularly reduces to

$$\approx -5.4 \times 10^{11} \ ergs/cm^3 \qquad (8-2)$$

upon the surface of the Earth since

$$g = 980 \ cm/sec^2$$

which is about identical with stress one $(-\frac{E^2}{8\pi k})$ of electric field of

$$E = 8.8 \times 10^8 \ V/cm,$$

and is about **ten thousand times ordinary stress energy of magnetization.**

This is present not only at the palace but also at the old Black Joe's cabin, and can become energy source which is **more general than that with Nuclear Fusion.**

(8-2) Moebius Wound

We shall firstly translate Moebius Band into electric device.

The following drawing shows Mobius wound. We shall secondly make a trourus of Moebius wound, which forms Klein Bottle (the following photo).

Photo 38

The next photo shows Moebius Band (educational model, respectively).

(8 2) Moebius Wound
(8－3) Loss of G

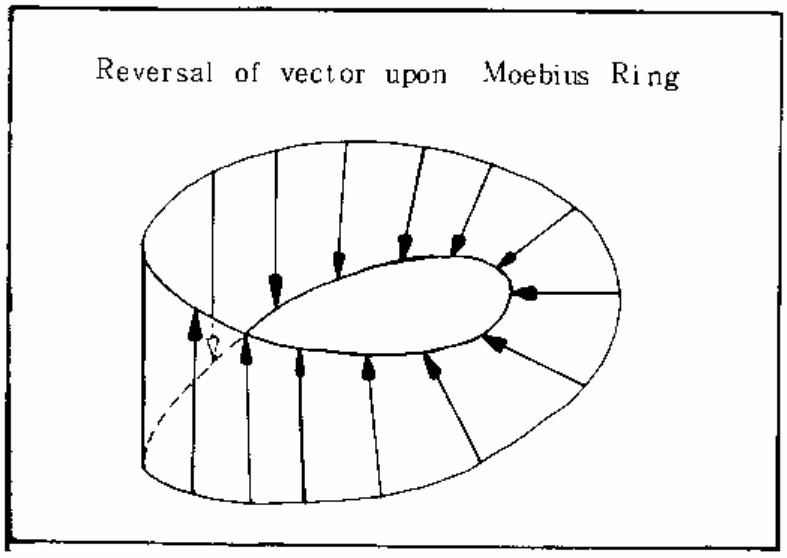

Fig. 92

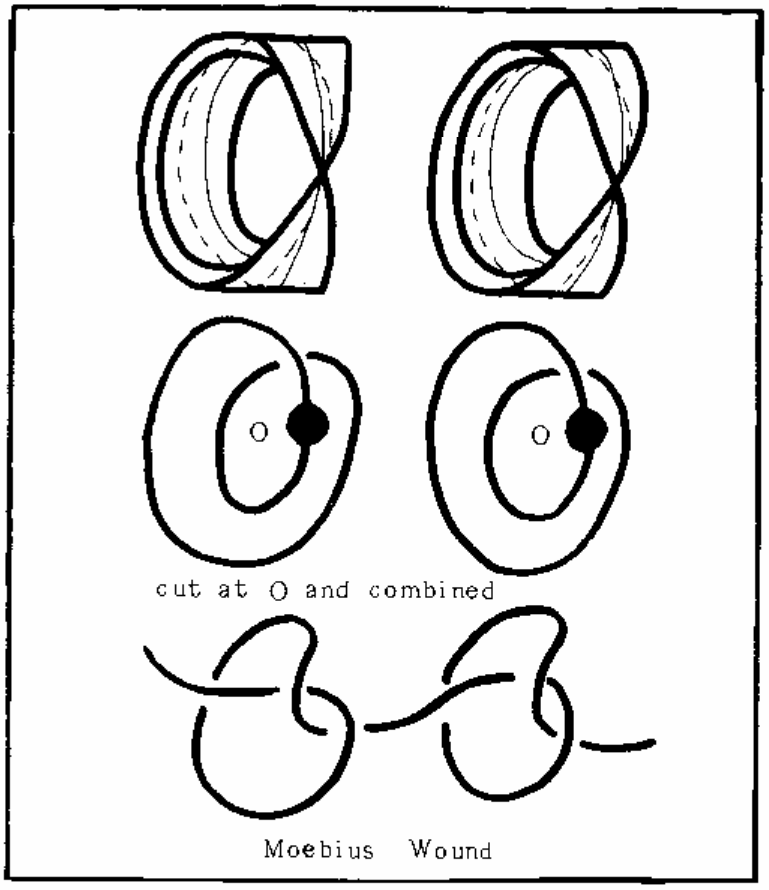

Fig. 93

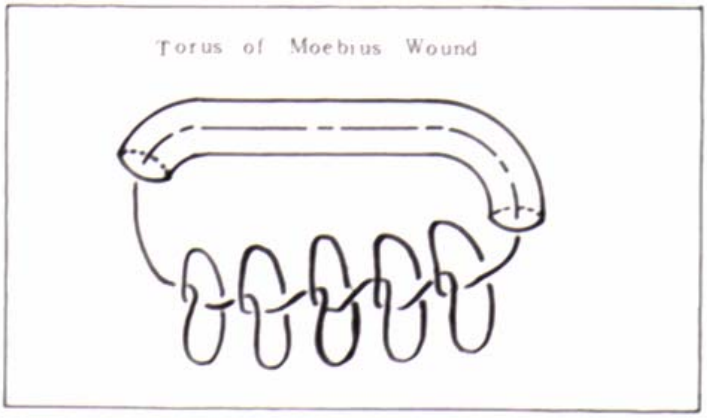

(Fig. 94)

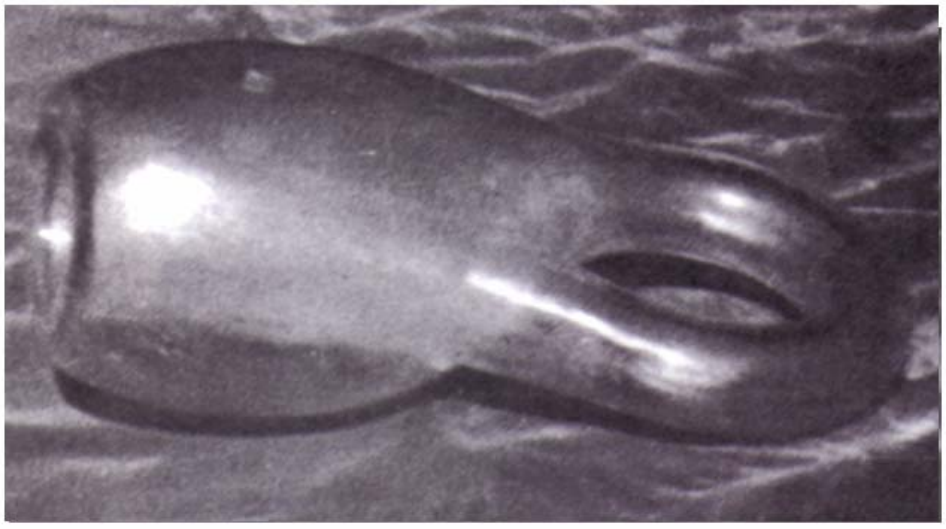

(Photo 39)

(8－3) Loss of G

We shall feed electric current to Moebius Coil as in the following Fig. Then, Klein Bottle (torus coil) loses weight as on the following table. Experimental specifications are as

Ampere (DC)	Grams
2	－ 0. 0 5 9
3	0. 1 2 3
4	－ 0. 1 6 9
5	－ 0. 2 1 3
6	－ 0. 2 9 1

follows／torus coil／17 turns of Moebius wound／own weight of the coil／about 30 gr／power supply／regulated (NPS 151D／Dendy)／Balaner／Ex 200N (200gr Max and resolution of 0.001 gr) (digital).

If we feed about 620 amperes by superconduction, loss of g exceeds the own weight, leviting.

(8－4) Return of History

As tachyon is super signal, it catches past signal. Then, time reverses. The system returns a history (falling path by g), being repelled by g and attaining loss of g.

(Photo 40)

That is to say, we find that tachyon upon the first hyper seerface goes out onto the zeroth (physical space).

For example, the following photo shows －0.657 gr of loss. The greater the current, the more the loss.

It attains －2.18 gr as the next photo shows when we feed

60A DC to a Moebius coil of 3 turns.

(Photo 41)

Falling mass attains／

$$s = -\frac{g}{2}(2)^2 = -1.960\ cm$$

at／

$$t = 2 \text{ second},$$

while does

$$s = -1.960 + \frac{g}{2} \times 1^2 = -1,470\ cm \quad \text{at} \quad t = 3$$

after timereversal of／

$$t = 2 \text{ second}.$$

Fachyon of 2c attains

$$\ell = 20c$$

at／

$$t = 10 \text{ second}$$

while signal does

$$\ell = 10c\ .$$

That tachyon catches a signal of／

$$t = -10 \text{ second},$$

resulting in time reversal of this system.

Mass is repelled by g, resulting in loss of weight.

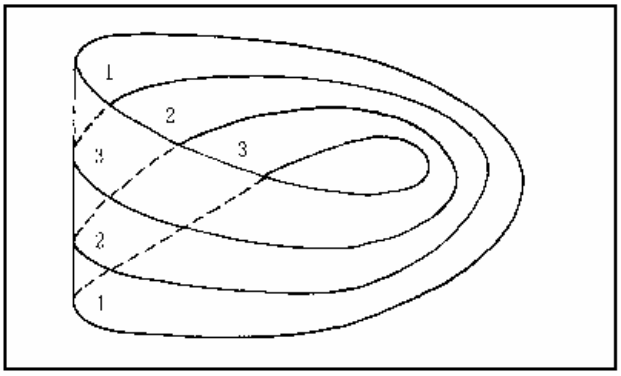

(Fig. 95)

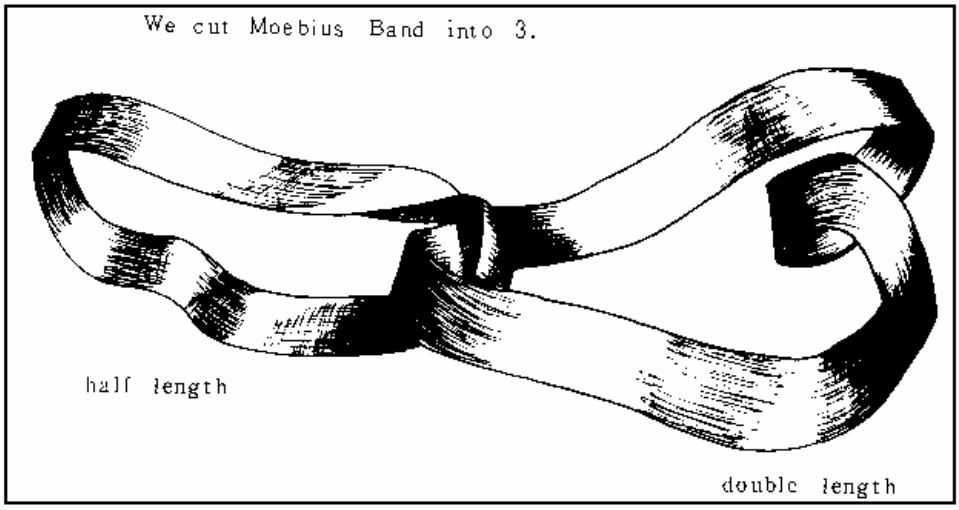

(Fig. 96)

Cutting Moebius Strip into 3, we label 1, 2 and 3. The 1 continues onto the 3, the 2 onto itself and the 3 onto the 1. As shown in the following figure, we have 2 strips.

The one is half another. Wave with the velocity of c is on the longer strip, that with the velocity of 2c cannot but be on the short. This reason is why tachyon flows in Moebius Strip (or Moebius wound coil).

(8－5) Growth of State Momentum under G-Deceleration

Four momentum of the atoms of **Barium Strontium Titanate** or **Ferroxplana** (or Ferrite) grows under circularly polarized

electromagnetic field of (4－8) in recourse to (5－4) such that

$$\frac{dp^3}{dt} = \frac{mc\,\dfrac{dp^3}{d\tau}}{mc\,\dfrac{dt}{d\tau}} = \frac{mc\,\dfrac{dp^3}{d\tau}}{Q(\tau)}$$

$$= \frac{mca\left[\,2d^2\cos d\tau + (a^2-d^2)\cosh a\tau\,\right]}{(a^2+b^2+d^2)\cosh a\tau - b^2\cos d\tau}$$

$$= \frac{mca\left[(a^2-d^2) + 2d^2\cos d\tau\,\mathrm{sech}\,a\tau\,\right]}{(a^2+b^2+d^2) - b^2\cos d\tau\,\mathrm{sech}\,a\tau}$$

$$\to \frac{a^2-d^2}{a^2+b^2+d^2} \times mg \quad (\tau \to \infty)\,, \qquad (8\text{－}26)$$

which is invariant under positive value of Q(o). We take Q(o) to be positive since negative Q(o) furnishes **negative growth of total energy** and, therefore, provokes pair annihilation with ambient atmosphere and it becomes dangerous. The frequency condition is preseribed by

$$\alpha H_0 + \Omega < 0\,, \qquad (8\text{－}27)$$

in which α, H_0 and Ω are **coupling constant, vertical magnetic field** (static) and **rotation frequency of electric field** (of Nuclear Electric Resonance), respectively. They are stated of in the fifth chapter. **Resultant state four momentum** of Barium Strontium Titanate and Ferroxplana (or Ferrite) can be described by (5－1), in which the growth of the third component of **resultant state four momentum** is determined by

$$\frac{dP^3}{dt} \to \frac{a^2-d^2}{a^2+b^2+d^2} \cdot \mu g \quad (\tau \to \infty) \qquad (8\text{－}28)$$

μ stands for **reduced mass** of ferroxplana (or ferrite) m_1 and Barium Strontium Titanate m_2 such that

$$\mu = \frac{m_1 m_2}{m_1 + m_2} . \qquad (8\text{–}29)$$

They occupy different positions upon **the zeroth hyper surface** (physical space) and form reduced mass, on which we stated in **appendix (A–4)**. Growth of momentum reduces to that of current such that

$$\alpha \frac{dP^3}{dt} = \frac{e}{mc} \frac{d}{dt} \left(m \frac{dZ}{d\tau} \right)$$

$$= \frac{d}{dt} \left(\frac{e}{c} \frac{dZ}{d\tau} \right) = \frac{1}{c} \times \frac{dI^3}{dt} , \qquad (8\text{–}30)$$

to the single charged particle, where I^3 means the third component of current. Thus, we reasonably regard growth of generalized current to be,

$$c\alpha \frac{dP^3}{dt} = \frac{di^3}{dt} \qquad (8\text{–}31)$$

to generalized flux of **state density with coupling constant α of electromagnetic interaction**. We namely derive

$$\frac{di^3}{dt} = \frac{\mu \alpha g}{r} \times \frac{a^2 - d^2}{a^2 + b^2 + d^2} \quad (\tau \to \infty) , \qquad (8\text{–}32)$$

in recourse to (8–28), which is nothing but growth of quantum current with G–deceleration. On the other hand, induction law of Faraday's is given by,

$$\Psi = - \frac{L}{c^2} \times \frac{di^3}{dt} \quad \text{(Ref. 46)} .$$

Electric potential across the inductor coupled with mutual inductance L to vertical infinite line (the line along

regulated current of P^3) becomes

$$\Psi = -\frac{\alpha L \mu g}{g' c^2} \cdot \frac{a^2 - d^2}{a^2 + b^2 + d^2} \quad . \tag{8–33}$$

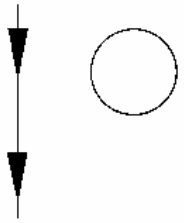

Fig. 5

(Faraday's induction is done upon a circle coupled with mutual inductance L to vertical quantum current)

$$\frac{a^2 - d^2}{a^2 + b^2 + c^2} \approx -1$$

holds since

$$a = \frac{g}{c} \ll 1$$

is so small, and we can technologically and easily realize

$$|b| \ll |d| \quad .$$

We finally obtain

$$\Psi = -\frac{\alpha L \mu g}{g' c} \quad (|b| \ll |d|) \tag{8–34}$$

owing to (8–33).

(8–6) Thermodynamical and Statistical Probability

Orientation of four momentum of an atom in space–time can be split into those of axial angular momentum and polar on the zeroth hyper surface (physical space). Then, orientation of a pair of angular momenta(axial one and polar) Ж and Я owns four degrees of freedom in general, but they are orthogonal such that

$$Ж \cdot Я = Я \cdot Ж = 0 \quad . \tag{8–35}$$

Three parameters are, therefore, necessary.

We verified orthogonality with reference to the commutation relations of (4–4).

Let α, β and Ψ be Eulerian angles (in Fig.3) when magnetic

field and electric [those of circularly polarized electromagnetic field of (4-8) are orthgonal are x-axis and y, respectively].

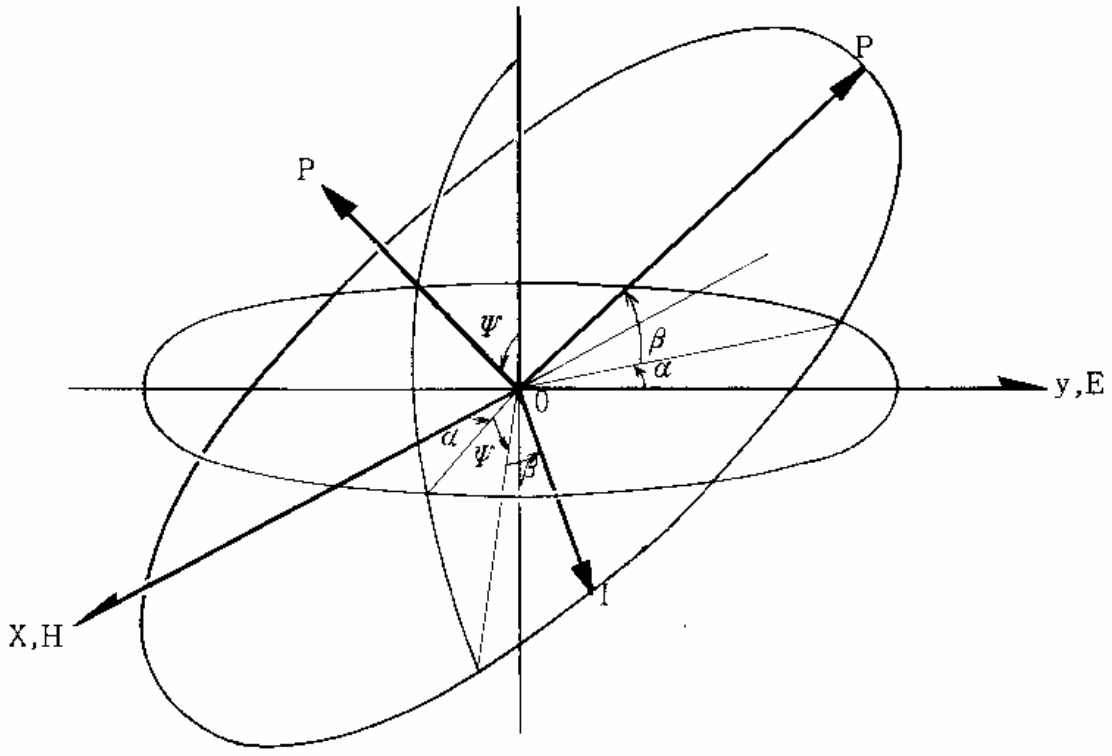

Fig. 3

[Eulerian angles formed by axial angular momentum and polar. See the right leaf.]

Vector producted vector Ж × Я of a pair of angular momenta has been thought to form the angle Ψ with Z axis. Magnetic field and axial angular momentum Ж forms the angle of

$$\cos\theta = \cos\alpha\cos\Psi\cos\beta - \sin\alpha \times \sin\beta ,$$

while electric field and polar one do that of,

$$\cos\varphi = -\sin\alpha\cos\Psi\sin\beta + \cos\alpha\cos\beta .$$

Our Boltzmannean factor becomes

$$\frac{1}{kT\gamma}\left[(I\,|H|\cos\alpha\cos\beta + P\,|E|\times\sin\alpha\sin\beta)\cos\Psi - (I\,|H|\times\sin\alpha\sin\beta - P|E|\cos\alpha\cos\beta)\right] ,$$

where $I = \alpha\,|Ж|$, and $P = \alpha\,|Я|$,

Lorentz factor having appeared since Hamiltonian (energy) is given in recourse to (3-13). Performing transformation of,

$$\alpha + \beta = u$$

and $\alpha - \beta = v$, and with reference to integral expressions of modified Bessel function of the lowest order, we find statistical and thermodynamical probability Z of an atom [Also see the appendix (A-7)] of,

$$Z = \frac{\int_0^{\pi} I_0\left[a(\cos\Psi + 1)\right] I_0\left[b(\cos\Psi - 1)\right]\times\sin\Psi\cos\Psi\,d\Psi}{\int_0^{\pi} I_0\left[a(\cos\Psi + 1)\right] I_0\left[b(\cos\Psi - 1)\right]\times\sin\Psi\,d\Psi}$$

in which a and b stand for a pair of Boltzmannean factor of

$$a = \frac{I\,|H|}{kT} \tag{8-37}$$

and

$$b = \frac{P\,|E|}{kT}\ , \tag{8-38}$$

and $I_0(Z)$ in integrand for modified Bessel function of the lowest order, respectively. Amplitudes of axial angular momentum and polar are determined by

$$|Ж| = \sqrt{L(L+1)}\ \hbar\ ,$$
$$|Я| = \sqrt{n^2 - 1 - L(L+1)}\ \hbar \tag{2-19}$$

in recourse to ordinary spherical harmonics and ultra spherical harmonics of (2-17), respectively.

(8-7) Locking Magnetic Field

Statistical and thermodynamical probability obtained in the former section is so small to our higest electromagnetic field that we may not manufacture < Möbius Generator (Quantum G-generator). We shall proceed to **locking magnetic field** in order to cure the difficulty. Circulation of spin density line of force is generated such that

$$Ж_s = \frac{P_3\,Z}{r^2} \tag{8-41}$$

Fig. 4

(circulation of spin density line of force)
around momentum flux in recourse to spin induction law of (1-19) by the third component of vector state momentum [See the appendix of (A-3)], where $Ж_S$ stands for circumferential component along a circle of radius r [in Fig.4].
Boltzmannean factor becomes

$$\exp \beta = \exp \frac{\alpha Ж_S h\sqrt{1-\beta^2}}{kT} \tag{8-42}$$

(8–7) Locking Magnetic Field

when real of torus magnetic field ih is applied along this circulation, in which $Ж_S$ means the value to unity degree of freedom. Lorentz factor appears since the relation of (3–10) is present between energy and Lorentz scalar H.

Orientation of the third component of vector state momentum can be evaluated by

$$P'^3(\tau) = P^3(\tau)\, L(\beta) \ , \qquad (8–43)$$

where $L(\beta)$ is the so-called **Langevin function**. We namely define in order that $P'^3(\tau)$ may take a maximal value $P^3(\tau)$ in the limit for h to be infinity. We have applied **statistics of paramagnetism** (Ref.48) to the theory since $Ж_S$ is present outside momentum pillar although **Barium Strontium Titanate** and **Ferrite** are ferroelectrics and ferromagnetic subtance, respectively. We have a philosophy that spin density is determined by momentum density while the latter by former, respectively, namely by

$$\text{rot}\, Ж = 4\pi p \ . \qquad (8–45)$$

What we arrange spin by magnetic field, we do momentum. This effect can experimentally be verified.

Induced electric potential is determined by

$$\Psi = -\frac{\alpha L \mu g}{g' c} L(\beta) \ , \qquad (8–46)$$

when we take statistical thermodynamics into consideration in recourse to (8–43) and with reference to

$$\frac{dP'^3}{dt} = \frac{dP^3}{dt} L(\beta) \ .$$

Langevin function attains $L(\beta) \approx 0.99$ to

$$\beta = 100 \ ,$$

and does unity to $\beta \to \infty$. We must have

$$\beta \approx 100$$

for sufficient induction obtained. On the other hand, it follows that

$$\beta = \frac{\alpha P^3(\tau)\, Z \sqrt{1-\beta^2}\, h}{k T}$$

in recourse to (8–41) and (8–42). We further derive

(8–7) Locking Magnetic Field

$$\beta = \frac{\alpha mca\left[\,2d\,\sin d\tau + \frac{a^2-d^2}{a}\times \sinh a\tau\,\right] Zh}{kTr^2\left[\,(a^2+b^2+d^2)\cosh a\tau - b^2\cos d\tau\right]}$$

$$= \frac{c\alpha mZh\left[\,2d\,\sin d\tau\ \operatorname{sech} a\tau + \frac{a^2-d^2}{a}\tanh a\tau\,\right]}{kTr^2\left[\,a^2+b^2+d^2-b^2\cos d\tau\ \operatorname{sech} a\tau\,\right]}$$

$$\to \frac{c\alpha mZh}{kTr^2}\cdot\frac{a^2-d^2}{a^2+b^2+d^2}\quad(\tau\to\infty) \tag{8–47}$$

$[\operatorname{sech} a\tau \to 0\ ,\ (\tau\to\infty)]$, when we take

$$\frac{1}{\sqrt{1-\beta^2}} = \frac{dt}{d\tau} = \frac{Q(\tau)}{mc}$$

into consideration, (8–47) finally reduces to

$$\approx \frac{-cm\alpha Zh}{kTr^2}, \tag{8–48}$$

since $a \ll 1$, and $|b| \ll |d|$ as stated in (8–34), while

$$Z = \frac{ab}{3!} \tag{8–49}$$

to a and b of (8–37) and (8–38) and to the value of

$$\alpha\,|Ж|\approx\alpha\,|Я|\approx M_B \qquad (a\ll 1\ ,\ b\ll 1)$$

M_B = Bohrmagneton.

M_B appears because amplitudes of Ж and Я of an atom is determined by (2–19), and coupling constant of electromagnetic interaction α by

$$e/mc \approx -1.8\times 10^7/\text{gauss}\cdot\text{sec}\ .$$

We finally evaluate (8–48) with

$$\approx \frac{-\alpha mcabh}{6kTr^2} \tag{8–50}$$

which reduces to

$$100 \approx \frac{1.8\times 10^7\times 10^{-24}\times 3\times 10^{10}abh}{k\times 300\times (2.5)^2} \tag{8–51}$$

(8-7) Locking Magnetic Field

to the value of m (mass of an atom)

$$\approx 10^{-24} \text{gr} ,$$

$T = 300^{\circ}K$ (room temperature) and when we use a locking coil of $2r = 5\text{cm}$ and bind circulation of spin with this magnetic field of the coil.

E_1 and H_1 can not be so high as **static (imaginary) magnetic field** since they stand for the amplitudes of electromagnetic field with high frequency, and can we have reasonable value of $E_1 = 3 \times 10^4$ V/cm and $H_1 = 10^2$ gauss, respectively? (8-52)

We have taken $E_1 = H_1$

(nill magnetic field) (C.G.S) into consideration. **Orthogonal rotary magnetic field** is induced owing to induction law of Faraday's to rotary electric field whe we realize it with three spherical condensers (as stated later). We namely need a locking magnetic field of, $ih \approx 10^6 i$ gauss, (8-53)

with reference to (8-51). (8-53) must be applied to **spin density line** (in Fig.4). This magnetic field is realized by a **toroidal Möbius coil**. The **imaginary** current of,

$$j \approx 5.0 \times 10^6 i \text{ Ampere} \qquad (8\text{-}54)$$

can sufficiently furnish (8-53) although it may vary according to the size of coil. This current would be the key to **Möbius generator.**

(8-8) Output Electric Potential

Möbius generator operates when we put output coil as in Fig.9.

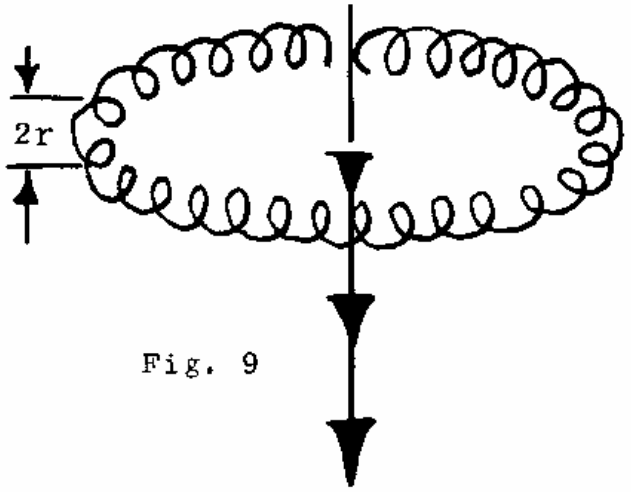

Fig. 9

(8–8) Output Electric Potential

(Output coil around momentum pillar. See the right.)

That electric potential becomes

$$\Psi = 6.0 \times 10^{2} L(\beta) \text{ esu}$$

for μ in (8–46) to be $\mu = 100$ gr, and $L = 10^{-8}$ H

$= 10$ cm (CGS)

at the surface of the earth ($g = 980$ cm/sec^2 $\approx 10^3$ cm/sec^2),

which reduces to

$$\approx 1.8 \times 10^{5} \text{ V} \qquad \text{(D.C.)} \qquad (8\text{–}55)$$

to a locking magnetic field of (8–53), namely to

$$L(\beta) \approx 99\ \% .$$

Mutual inductance between vertical infinite line and toroidal coil is determined by

$$L = 4\pi n\,(R - \sqrt{R^2 - r^2}) \qquad \text{(CGS)},$$

as discussed in appendix (A–8), in which n, R and r mean the value in turns and radii of toroidal coil shown in Fig.9.

Our value of

$$L = 10^{-8} \text{ H} \approx 10 \text{ cm}$$

corresponds with those of

$$n = 10 \text{ turns},$$

$R = 4$ cm, and $r = 1$ cm, respectively, which has no core, but can't be greater, since stationary current of generator is so large.

(8–9) Output Power

We shall next proceed to output power of that generator.

Flowing rate of energy from outer Riemannean space–time under geogravitational deceleration is stated by

$$\frac{dw}{dt} \to \mu g c \quad (\tau \to \infty) \qquad (8\text{–}56)$$

when we use μ in (8–29) to (5–5).

(8–28) is modulated also with $L(\beta)$ such that

$$\frac{dw}{dt} \longrightarrow \mu g c L(\beta), \qquad (8\text{–}57)$$

when we look at the fundamental Egn. of (5–1) and with reference to

$$P'^{3}(\tau) = P^{3}(\tau)\, L(\beta) . \qquad (8\text{–}58)$$

Statistical and thermodynamical probability has been taken

(8–9) Output Power

into consideration. It finally reduces to

$$\approx 100 \times 10^{3} \times 3.0 \times 10^{10} L(\beta) \quad \text{ergs} / \text{sec} .$$
$$\approx 3.0 \times 10^{8} L(\beta) \quad \text{W}$$
$$\approx 3.0 \times 10^{5} L(\beta) \quad \text{kW}$$
$$\approx 3.0 \times 10^{5} \quad \text{kw} , \qquad (8\text{–}59)$$

to the value of $\mu = 100\text{gr}$ in (8–57), and with $L(\beta) = 99\,\%$, where $g \approx 10^{3}\ cm / \text{sec}^{2}$, (8–60) is used at the surface of the earth, which becomes about a sixth at the lunar surface.

$$m_1 = m_2 = 200\text{gr}$$

of Barium Strontium Titanate and Feroxplana (or Ferrite) have been used with reference to (8–29). This value would be reasonable with a locking coil of,

$$2r = 5\ cm ,$$
$$R = 4\ cm$$

and $$r = 1\ cm ,$$

and output coil of the same order of size.

(8–10) Condenser Coil

We can feedback electric potential in order that we may obtain rotary electric field, when we set three coils as in Fig.10 with the same order of mutual inductance (with vertical infinite line) as output coil. That output electric potential becomes $\Psi \approx 1.8 \times 10^{5}$ V (D.C.) with the same inductance of coil as output one.

(Three Coils as Feedback One and three spherical condenser.)

Mutual electric induction of condensers is determined by

$$Q_1 = -(Q_2 + Q_3)$$
$$\therefore Q_1 + Q_2 + Q_3 = 0 ,$$

when we feedback this electric potential with the circuit in Fig.11, to three spherical condensers in Barium Strontium Titanate, where Q_1, Q_2 and Q_3 stand for charges of the indi-

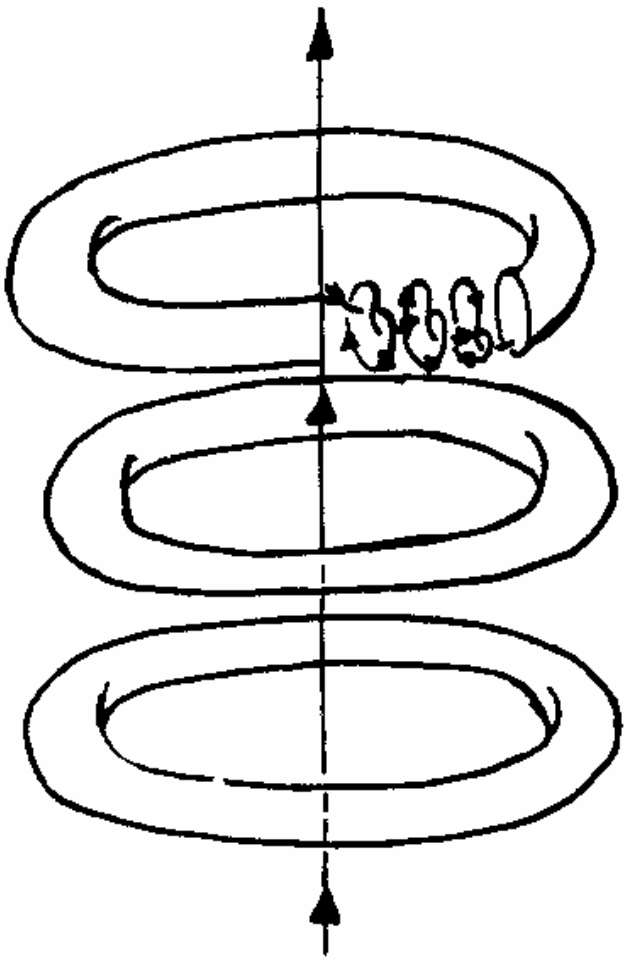

Fig.10

vidual condensers. It also follows

$$C_0 \Psi_1 + C_0 \Psi_2 + C_0 \Psi_3 = 0 ,$$
$$\therefore \; C_0 (\Psi_1 + \Psi_2 + \Psi_3) = 0 ,$$
$$\therefore \; \Psi_1 + \Psi_2 + \Psi_3 = 0 , \qquad (8–61)$$

if we denote the capacitance of the same condensers with C_0, and their electric potential with Ψ_1, Ψ_2 and Ψ_3, respectively. (8–61) is nothing but the condition of three phases current. It can, therefore, supply **rotary electric field.**

Fig. 11

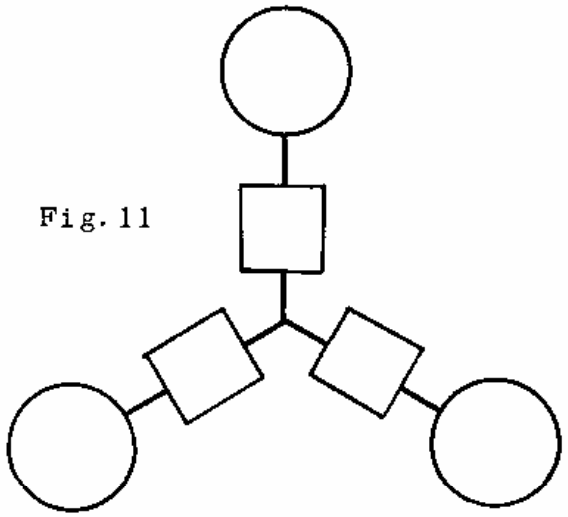

(Circuit diagram three condensers among coils and three spherical condensers.)

We shall call these coils **star–conjunction condenser coil.** They are formed with **Kleinean Roll** which is shown in Fig.48.

Fig. 48

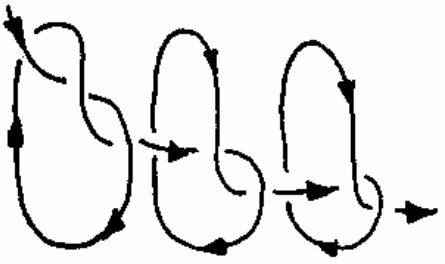

(Kleinean Condenser Coils.)

(8-11) Feedback Locking Coil

We shall so finally proceed to locking coil that we may bind circulation of spin.

We can derive an imaginary requested locking current of (8-58) in recourse to (8-54) and (8-58) when we put **Kleinean coils** indicated in Fig.47 and Picture22 around **growing momentum pillar** in Fig.12.

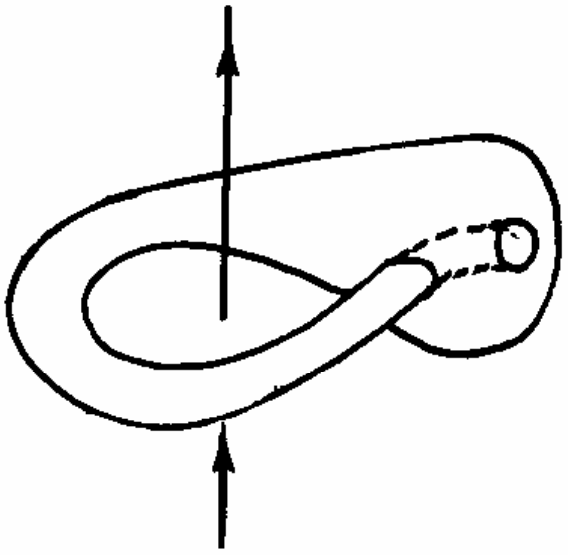

Fig. 12

(**Kleinean tube around momentum pillar.** See the right.)
Upper limit of the absolute value of **imaginary locking current** is determined by

$$10^7 \times K^2 R \leqq \mu g c L(\beta) \ . \qquad (8\text{-}62)$$

Kleinean coil absorbs electromagnetic energy as shown in (8-18), while that electric potential is induced by working of G to **quantum current pillar**, which is explaind by the right hand side of (8-62). That is to say, negative ohmic

(8-11) Feedback Locking Coil

loss can not exceeds G-deceleration.

$$R = 10^{-4} \ \Omega \tag{8-63}$$

can be realized with Möbius coil of pure cupper. We have the Eqn. of inequality of,

$$10^{7} \times K^{2} \times 10^{-4} \leqq 10^{2} \times 10^{3} \times 3 \times 10^{10} \times 0.99 \ , \tag{8-64}$$

when

$$\mu = 100 \text{ gr} \ ,$$

which leads us to

$$K \leqq 1.73 \times 10^{6} \text{ A} \ . \tag{8-65}$$

(8-64) furnishes stationary locking magnetic field of (8-53), where 10^{7} stands for a factor of,

watt / ergs / sec .

Total view of quantal G-generator is given in Fig.13 with reference to Fig.9, Fig.10 and Fig.12 and also to locking coil for excitation.

(8−11) Feedback Locking Coil

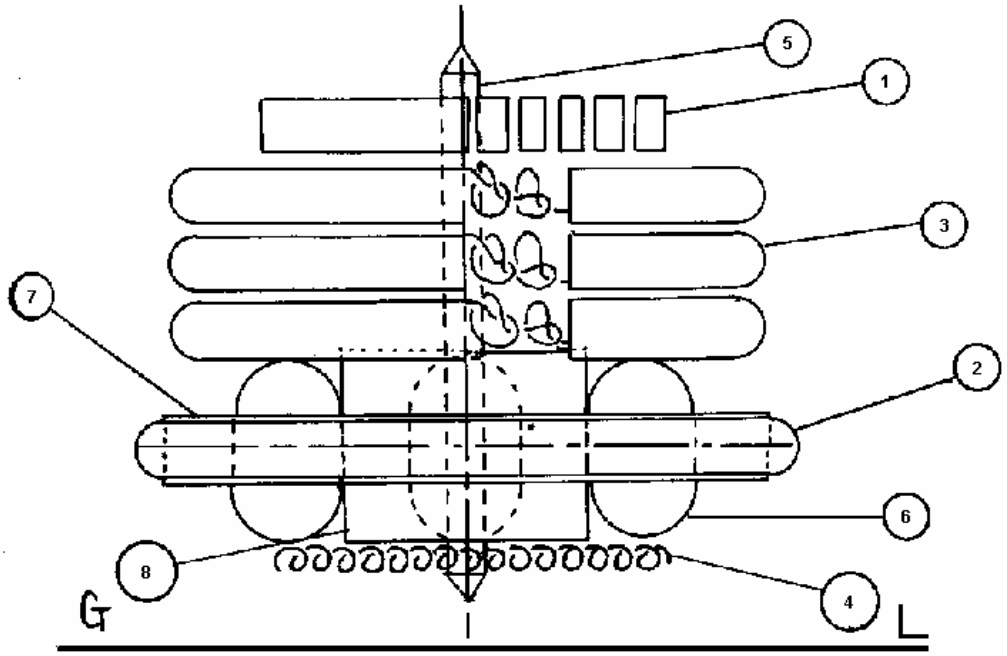

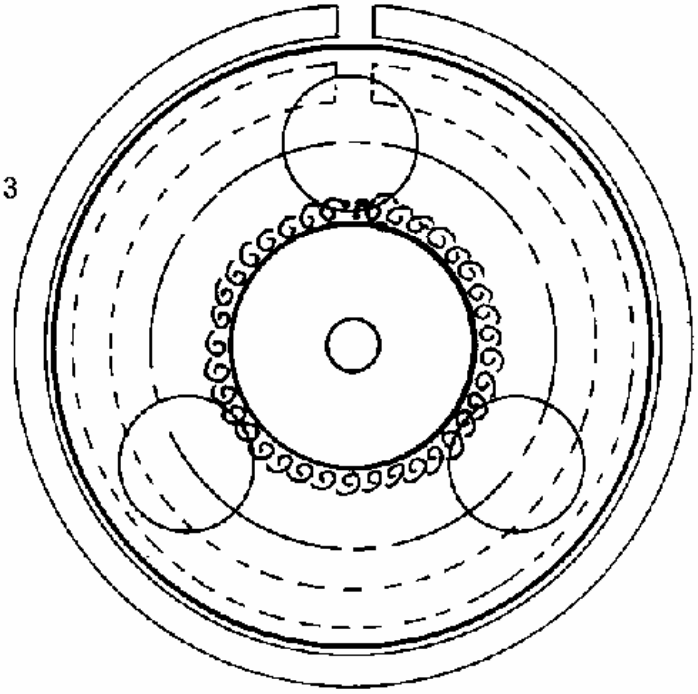

Fig. 13

(Total View of Möbius G-generator)

① means locking coil also in Fig.12,
② standing for excitation,
③ for condenser coil also in Fig.10(triplet),
④ for output coil also in Fig.9,
⑤ for magnetic pillar which supplies vertical static magnetic field,
⑥ for three spherical condensers,
⑦ for Barium Strontium Titanate Block and
⑧ for Ferrite Block, respectively.

⑤ would correspond with magnetizing field of ordinary dynamo.

§ 9 Inverse Atomic Engine

Sketch of inverse atomic engine.
Circularly polarized electromagnetic field produced with three spherical condensers charged by three phases current converts quantal fuel into negative energy state.

(9−1) G−field of Negative Energy

G-field of G and polar angular momentum я are related by,

$$\frac{G}{\sqrt{1-\beta^2}} = -\frac{k}{c}я\,, \qquad (9-1)$$

as stated in the first chapter. If we put (9−1) into (1−4) we obtain

$$\Box\frac{G}{\sqrt{1-\beta^2}} = -\frac{4\pi k}{c^2}\cdot\frac{\partial p}{\partial t} - \frac{4\pi k}{c}\cdot \mathrm{grad}\, q\,, \qquad (9-2)$$

the first term in the right hand side of which is about $1/c$ times the second. Gravitation of negative energy owns the potential with opposite sign of that of positive energy. Gravitation of negative energy is repulsive since that of positive energy attractive. Einsteinean Equation of gravitation (Ref. 70) of,

(9−1) G-Field of Negative Energy

$$\Box \gamma^{00} = -\frac{8\pi K}{c^4} T^{00}, \qquad (9-3)$$

furnishes the same result which shows γ^{00} of strain of Riemannean space-time to have the different sign to

$$T^{00} \lesseqgtr 0,$$

and g-potential of φ to own the samely different signs (φ being potentialof g-field where $G = -\operatorname{grad}\varphi$.),

with $$\gamma^{00} = \frac{2\varphi}{c^2}.$$

We have known four kinds of entities of

(α) occupied state of positive energy

(β) unoccupied state of positive energy

(γ) occupied state of negative energy and finally

(δ) unoccupied state of negative energy,

in which (α) and (δ) belong to positive energy, while (β) and (γ) do to negative energy (Ref. 71). We derive TABLE 1 if we denote attractive gravitation with + and repulsive with −.

TABLE 1

	Occupied	Unoccupied
Positive Energy	+	−
Negative Energy	−	+

It would be clear that gravitation to negative energy is repulsive according to the following Gedanken Experiment : (G) A mass occupies $s = -4.9\,m$ at $t = 1$ sec. and $s = -19.6\,m$ at $t = 2$ sec. when it freely falls from the origin near the surface of the earth. It will also do $s = -14.7\,m$ at $t = 3$ sec. and the origin at $t = 4$ sec. of the clock synchronized with that of mass at infinity if time is reversed. The latter process is free rising which is nothing but the motion of negative time since negatively energied entity owns $\frac{dt}{ds} < 0$,

owing to the definition of total energy of,

$$W = mc^3 \frac{dt}{ds} \quad \left(= \pm \frac{mc^2}{\sqrt{1-\beta^2}} \right)$$

$$\left(ds = \pm c\sqrt{1-\beta^2}\, dt \right),$$

energy being momentum along time or that velocity (except mc^3). In other words, it is repelled by G-field, where rest mass of,

$$m = \frac{\sqrt{q^2 - p^2}}{c}$$

can never be negative. $\frac{W}{c^2} = \pm \frac{m}{\sqrt{1-\beta^2}}$

can either become positive or negative, but this mass is quite different from the mass that specifies inertia of motion.

(9−2) The Transformation with Nuclear Electric Resonance

The component with negative energy exceeds when we take frequency condition of (4−12) of Nuclear Electric Resonance (NER) under circularly polarized electromagnetic field of (4−8), namely quantal seeds fall into negatively energied state. In virtue of g-deceleration we may apply growth of four momentum of (5−3) to this NER, namely energy of the system of,

$$c\, Q_4(\tau) = W(\tau),$$

enjoys negative growth. The flowing rate of g-stress energy from outer G-space is also expressed with (5−5). That of resultant four momentum is expressed with (8−29), in which reduced mass of μ and statistical and thermodynamical probability are taken into consideration.

Electric field which are the components concerned with time suffix of electromagnetic field plays an essential role in Nuclear Electric Resonance, you would please notice. Polar angular momentum which specifies Zitterbewegung are the components done with time of angular momentum tensor, correspon-

ded with wnich electric field within electromagnetic tenso: plays an important role. Electric instruments which make use of magnetic field are more than what do of electric fi- ld. What do of electric field can regulate essentially rel ativistic parameters such as energy, time or gravitation. For instance, three phases induction motor has **rotating magnetic field**, but none of machines does **rotating electric field**, while inverse-G engine owns it. We have not yet know what occurs if we replace **rotating magnetic field** with **that electric** in NMR. This answer will be found in NER.

(9−3) Thrust and Output of <Inverse-G Engine>

In accordance with the conclusions in the former section, inverse-G motor is realized when we take the frequency condition of (4−12) and use quantum gravitational generator except ④ output coil. This motor is roughly shown in Fig.7

Fig. 7.

(See the next page)

We excite it by putting a giant pulse into ② exciting coil from differentiators as stated in the last part of (8−10). You had better drive it with the frequency condition of (4 −12). Four momentum of quantal seeds grows such that $m \rightleftarrows \mu$ in (5−3), where μ stands for the value of (8−5). We shall denote the distribution of energy of $c\,Q_{(\tau)} = W_{(\tau)}$ with

$$W_{(\tau)} = -\frac{\mu c^2\,\delta(x)\,\delta(y)\,\delta(z)}{a^2+d^2}\left[(a^2+b^2+d^2)\,\mathrm{cha}\,\tau - b^2\cos d\tau\right], \qquad (9-4)$$

since it is mainly concentrated upon the origin of **zeroth hyper surface** (Ordinary Physical Space), in which $\delta(x)$

(9—3) Thrust and Output of <Inverse-G Engine>

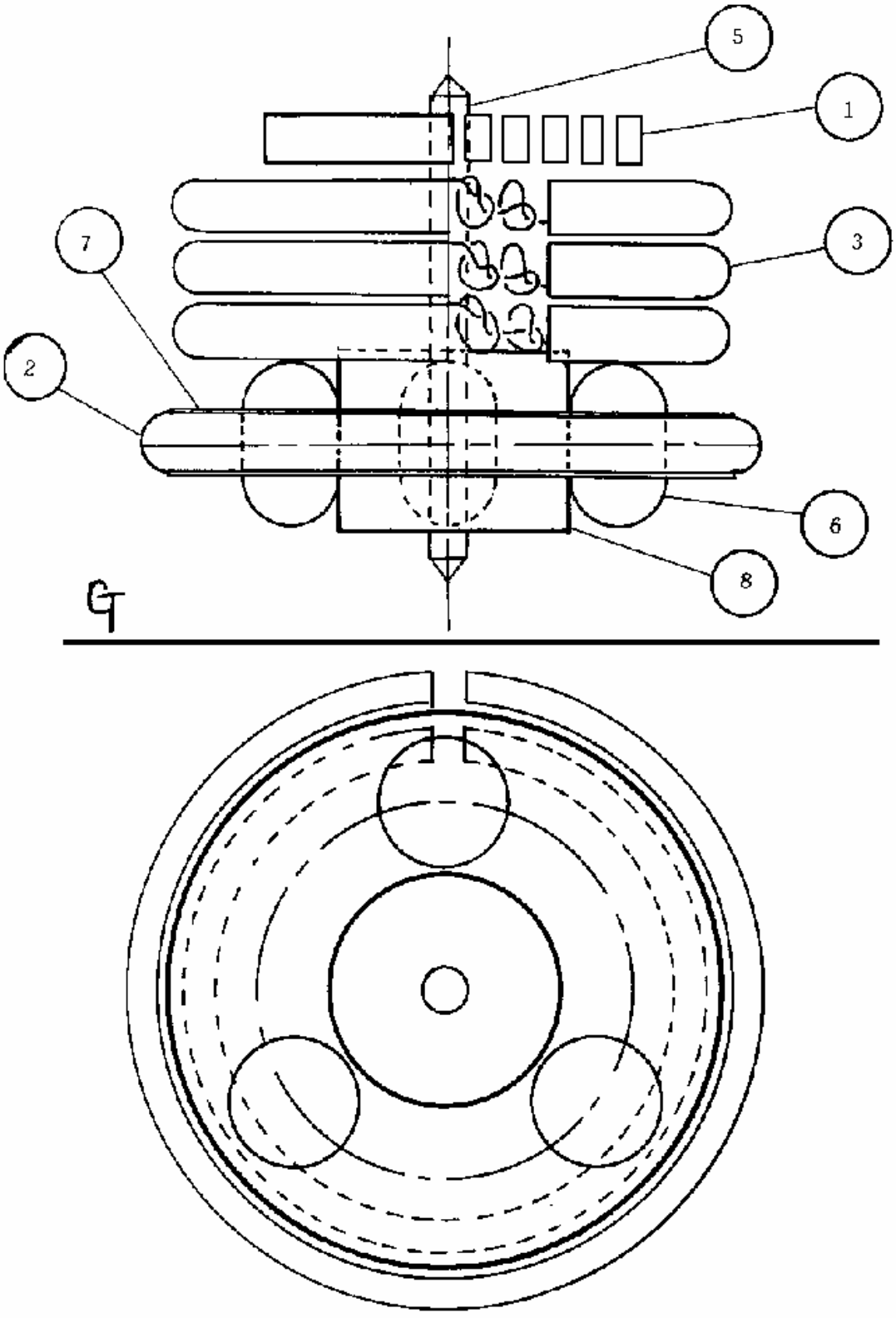

means **delta function of Dirac's** (Ref. 5), and the origin does center of mass of the quantal seeds. Quantal seeds are composed of **Barium Strontium Titanate** and **Ferroxplana** (or Ferrite). It also follows,

$$\Box\frac{G_x}{\sqrt{1-\beta^2}}=\frac{4\pi k}{c}\cdot\frac{\mu c}{a^2+d^2}\left(\frac{\partial}{\partial x}\delta(x)\right)\delta(y)\,\delta(z)\left((a^2+b^2+d^2)\,\mathrm{cha}\,\tau-b^2\cos d\tau\right),$$

$$\Box\frac{G_y}{\sqrt{1-\beta^2}}=\frac{4\pi k}{c}\cdot\frac{\mu c}{a^2+d^2}\delta(x)\left(\frac{\partial}{\partial y}\delta(y)\right)\delta(z)\left((a^2+b^2+d^2)\,\mathrm{cha}\,\tau-b^2\cos d\tau\right),$$

$$\Box\frac{G_z}{\sqrt{1-\beta^2}}=\frac{4\pi k}{c}\cdot\frac{\mu c}{a^2+d^2}\delta(x)\,\delta(y)\left(\frac{\partial}{\partial z}\delta(z)\right)\left((a^2+b^2+d^2)\,\mathrm{cha}\,\tau-b^2\cos d\tau\right), \tag{9－5}$$

in recourse to (9－2) and neglecting the first term in that expression in comparison with the latter. We can solve (9-5) such that

$$\frac{G_x}{\sqrt{1-\beta^2}}=-\frac{k\mu\left((a^2+b^2+d^2)\,\mathrm{cha}\,\tau-b^2\cos d\tau\right)}{a^2+d^2}$$
$$\times\int_{-\infty}^{\infty}\delta(x^0)\int_{-\infty}^{\infty}\delta(y^0)\int_{-\infty}^{\infty}\frac{\frac{\partial}{\partial z^0}\delta(z^0)\,dx^0\,dy^0\,dz^0}{\sqrt{(x-x^0)^2+(y-y^0)^2+(z-z^0)^2}}, \tag{9－6}$$

owing to the familiar method of retarded potential in electrodynamics, where τ does not concern integration since it is thought to be **Enatsuean invariant time** (Ref. 41) and, therefore, the fifth variable. In recourse to the formula on **delta function** of,

$$\int\varphi(x)\left(\frac{d}{dx}\right)^n\delta(x)dx=(-1)^n\left(\frac{d}{dx}\right)^n\varphi(x),$$
$$(n\text{ is non-negative integer}),$$

we obtain

$$=\frac{-k\mu\left((a^2+b^2+d^2)\,\mathrm{cha}\,\tau-b^2\cos d\tau\right)}{a^2+d^2}\cdot\frac{\partial}{\partial z}\left(\frac{1}{r}\right),$$
$$(r^2=x^2+y^2+z^2). \tag{9－7}$$

On the other hand,

$$\frac{1}{\sqrt{1-\beta^2}}=\left|\frac{Q'(\tau)}{\mu c}\right|,$$

holds in which

$$Q'(\tau)=\int_{-\infty}^{\infty}\int_{-\infty}^{\infty}\int_{-\infty}^{\infty}Q(\tau)\,dx\,dy\,dz=\frac{\mu c\{(a^2+b^2+d^2)\,\mathrm{cha}\,\tau-b^2\cos d\tau\}}{a^2+d^2}$$

$$\times\int_{-\infty}^{\infty}\delta(x)\,dx\int_{-\infty}^{\infty}\delta(y)\,dy\int_{-\infty}^{\infty}\delta(z)\,dz=\frac{\mu c\{(a^2+b^2+d^2)\,\mathrm{cha}\,\tau-b^2\cos d\tau\}}{a^2+d^2} \qquad (9-8)$$

since **Lorentz factor** concerns with center of mass of what determines g-field. We finally obtain

$$G_z=\frac{k\mu z}{r^3}, \qquad (9-9)$$

the remaining solutions of which are

$$G_x=\frac{k\mu x}{r^3}, \qquad G_y=\frac{k\mu y}{r^3}. \qquad (9-10)$$

The repulsive gravitation of,

$$G=\frac{k\mu}{r^3}(x,\ y,\ z), \qquad (9-11)$$

is generated around <**inverse atomic motor**>. It is repulsive because we let negative energy grow under the frequency condition of (4－12). The earth M is repelled by

$$MG=(0,\ 0,\ \frac{k\mu M}{R^2})=(0,\ 0,\ \mu g), \qquad (9-12)$$

in －Z-direction in recourse to (9－11), where M and R stand for mass of the earth and that radius, respectively. The one is related to another by,

$$g=\frac{kM}{R^2}. \qquad (9-13)$$

We have thought the earth to be sphere and M is concentrated upon that center. We shall think about an important problem for a while. The Z-sense in (9－11) possesses no physical character. **Resonance magnetic field** H_0 is found to orient in that sense if we examine (4－8). Mean component of resultant magnetic field with circular polarization remains in Z-sense while it enjoys a precession around Z-axis. Characteristic sense of (9－11) will be that of magnetic fiel You will please remember that the Z-sense of **magnetic**

quantum number of a hydrogen atom is magnetic direction when we calmly take off the field (Ref. 58) although it can be taken in any direction. <Inverse Atomic Motor> is repelled by the earth at μg with reference to (9−12), which is nothing but a thrust of that motor. It is unnecessary for to again take g-deceleration into consideration as with chemical rockets since it is repelled by μg instead of $-\mu g$. Payloads must, however, be less than μ since the instruments except quantal seeds possess ordinary gravitation. The acceleration of α is determined by

$$\alpha = \frac{\mu - \nu}{\mu + \nu} g , \qquad (9-14)$$

when a payload is ν, and it can escape from at the bottom of potential well of gravitation only when

$$\nu < \mu .$$

On the other hand, the flowing rate of g-stress energy into the motor amounts to

$$\frac{dW}{dt} \approx 3 \times 10^9 \text{ kw} \approx 3 \times 10^9 \text{ HP} , \qquad (9-15)$$

when $\mu = 1$ ton,
namely with $m_1 = m_2 = 2$ ton,
since it is determined by (8−29). Most of that energy was fed to locking coil as stated in the eighth chapter. (9−15) is far greater than the output of Saturn of NASA Jets and automobiles make use of gasoline as fuel and it is finite. <Inverse atomic motor> is nothing but ether in g-field (g-stress energy) which is infinitely present anywhere in the universe. Picture №3 shows a sketch of that motor. We can see three spherical condensers which furnish Nuclear Electric Resonance.
The frequency condition of negative energy is taken. Pair annhilation with air molecules occurs, with negative energy. Vacuum of boundary layer is produced, which decreases flying resistance and makes her sail at very high speed.

(9−4) Experimental Estimation (Revised) (Ceased)

(9-5) Semiconductor Coil/Landau Oscillator

Semiconductor of P type carries holes. They enjoy negative energy state as they belong to unoccupied state of electron.

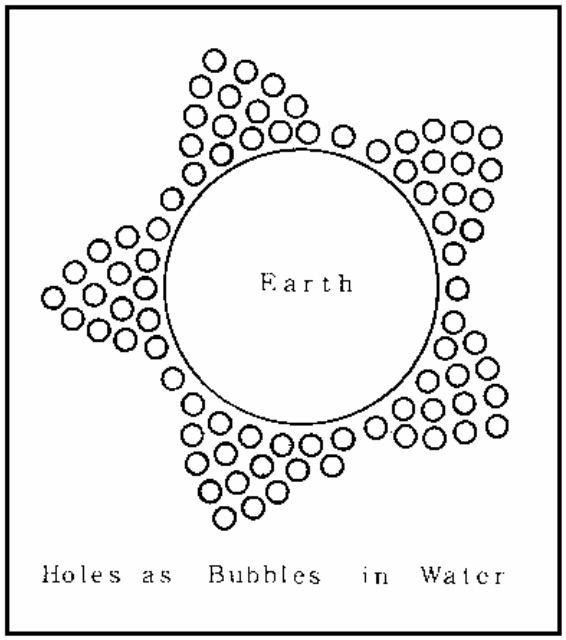

Fig. 66

The left drawing indicates g strain energy as unoccupied state of particles as it is distributed around Earth as negative energy. Coil of P type semiconductor can, therefore, absorb g strain energy. It is difficult to, for example, make coil by round wire of Si as its hardness almost equals to crystal.

We shall, therefore, make a coil by combining many transistors.

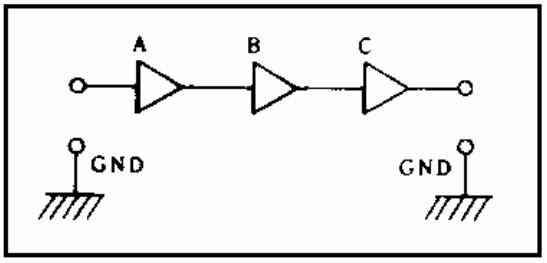

Fig. 67

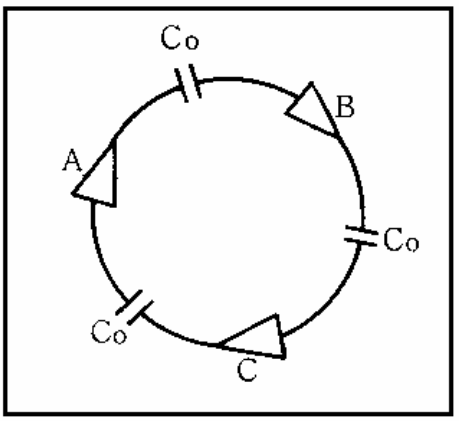

Fig. 68

The right drawing shows that conventional amplifier is composed of, for example, A. B and C stage, and that signal is amplified by A stage, B and C, and then terminates.

At this time, we shall combine C stage with A. Signal can be

Amplified infinite times as it is again done by A stage after the amplification by A, B and C stage. This round amplifier is, therefore, called < Endless Amplifier >, which makes single turn of semiconductor coil.

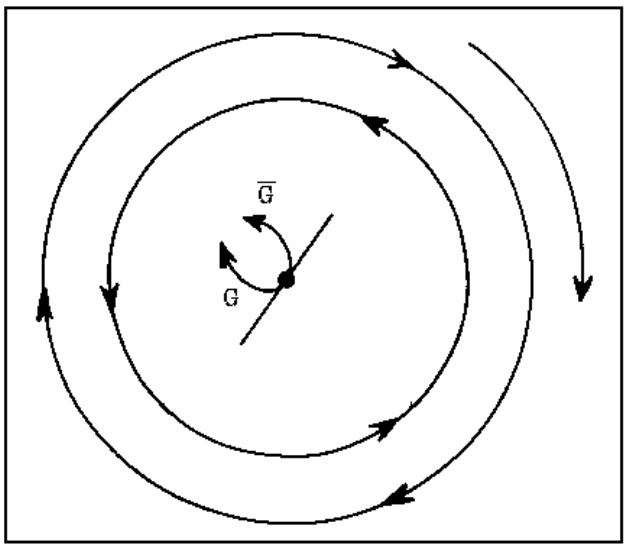

Fig. 82

Holes enjoy clockwise rotation, while electrons run counter clockwise, when mixed current of holes and electrons is present. Right turning g-field of holes is superposed upon left turning g-field of electrons upon center.

Well, graviton owns the following properties／

A) Rest mass m is zero／

$$m = 0 \qquad (9\ 16)$$

Graviton G, of course, obeys Klein-Gordon Eqn. of／

$$(\Box - \kappa^2)\ \Psi\ (x,\ y,\ z,\ t) = 0 \qquad (9-17)$$

that potential φ being expressed by Yukawa's one of／

$$\varphi = \frac{\varphi_0\ exp\ (-\frac{mc}{\hbar} R\ )}{R} \qquad (9-18)$$

where R, for example, stands for the distance from center of earth.

G potential owns the form of／

$$\frac{kM}{R}$$

which implies that

$$m = 0.$$

B) That spin is 2／

$$s = 2\hbar \qquad (9-19)$$

which Einstein found as his energy tensor is symmetric.

C) Anti-particle of graviton is nothing but graviton itself as it is one of bosons and most of them have been so.

D) G of left polarization is anti-particle of that of right one as anti-paiticle of left polarized particle is that of right

polarization (Ref. 76).

Superposition of right turning g−field and left one, thereforo, gives pair annhilation of G and anti graviton of $\overline{G}$ of/

$$G+\overline{G}\rightarrow 4r \quad \cdots\cdots \qquad (9-20)$$

which occurs at the center of endless amplifier as carriers of transistor are electrons and holes.

In quantum theory of fields it is often discussed that quantal energy W of oscillating quantum is expressed by/

$$W=\hbar\omega=hf \quad \cdots\cdots \qquad (9-21)$$

where h, ω and f are Planck's constant, angular frequency and frequency, respectively, and

$$2\pi\hbar=h.$$

r of (9−20) does not stand for Lorentz factor of/

$$r=\frac{1}{\sqrt{1-(\frac{v}{c})^2}},$$

but for photon.

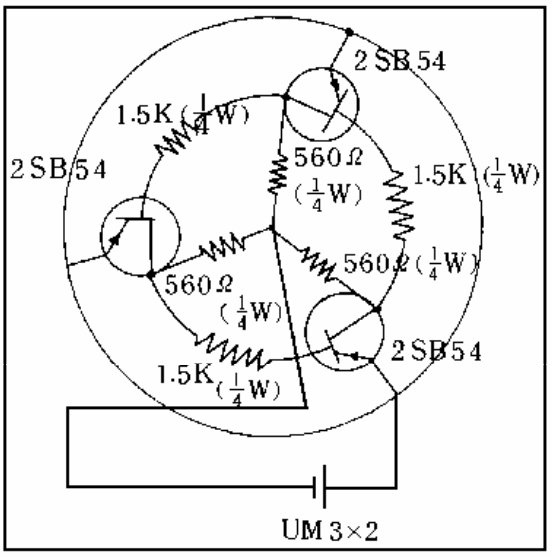

Fig. 83

Quantal energy of this electrical system comes down by this pair annhilation as graviton G carries total energy of W′ of electron or hole of/

$$W'=Mc^2+\frac{M}{2}v^2+\frac{3Mc^2}{8}(\frac{v}{c})^4+\cdots\cdots \qquad (9-22)$$

(electrons, for example, either absorb or emit gravitons).

The frequency of <Endless Amplifier of Takahashi Type> comes down such that/

Time	Frequency (kHz)	Time	Frequency (kHz)
15：36	20.625	15：41	20.492
〃 37	20.597	(……)	↓
〃 38	20.556	15：55	20.402
〃 39	20.525	(……)	↓
〃 40	20.492	16：01	20.362

Experimental specifications being/Source/UM3×2/3.2 Volt DC

//Attenuation/ 1/10 // Impedance Matching/ 1 MΩ // Date/ 19/September /1981. Unit circuit of Takahashi's can be applied to any transistors of 2SA, 2SB or 2SC type.

It is difficult to make multi turns of endless amplifier if the unit circuit is complicated even though it is theoretically possible. The following drawing indicates a simplified circuit with 2 transistors only to each transistor (We cannot use coupling condensers to IC which has this type of coupling circuit). Mr. Yoshitomo TAKAHASHI found this circuit. One may use about 1 KΩ and 500 Ω, and should supply higher potential of about 15 volt DC.

(9-6) Landau Oscillator of Torus Shape

We made 13 phases Landau oscillator (Endless Amplifier) by combining units of that oscillator of Takahashi type as in the right drawing, the collector resistor of which is 560 Ω ($\frac{1}{4}$ W type), that coupling resistor being 1.5 KΩ($\frac{1}{4}$ W type also). One should notice odd parity.

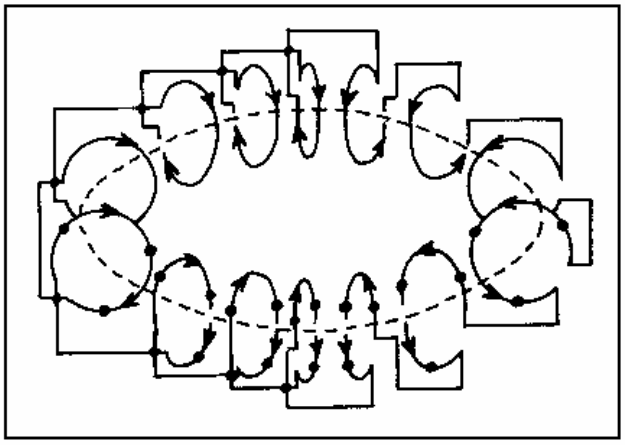

Fig. 84

Even stages give no oscillation.

Owing to pair annhilation of gravitons that frequency comes down with time as upon the following table, which shows the result of 8 hours drive.

(9－6) Landau Oscillator of Torus Shape

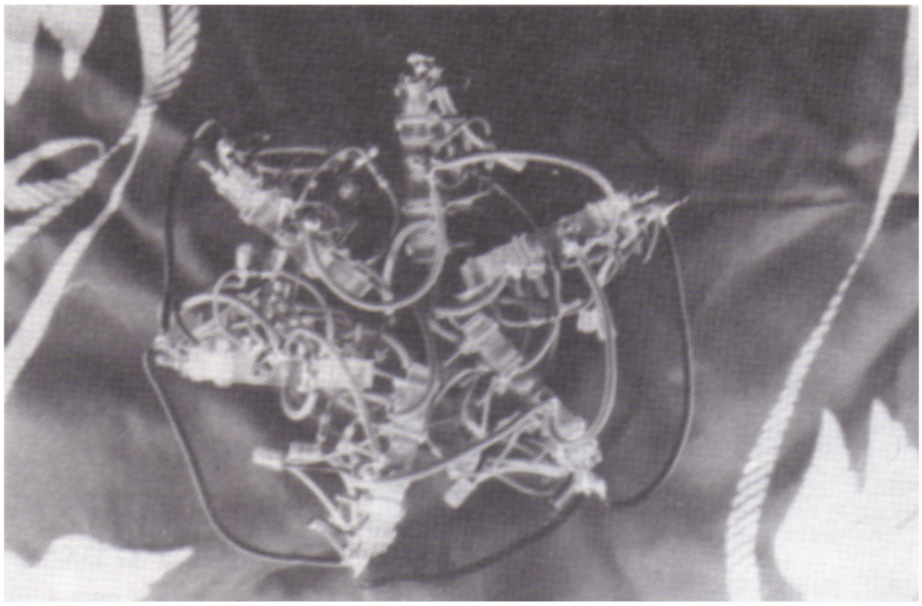

Photo 31

Time	Frequency(kHz)	Time	Frequency(kHz)
7：44	3.530	9：13	3.293
〃 45	3.500	(……)	↓
〃 46	3.475	10：14	3.222
〃 47	3.456	(……)	↓
〃 48	3.443	12：01	3.147
〃 49	3.433	(……)	↓
(……)	↓	14：39	3.092
8：01	3.392	(……)	↓
(……)	↓	16：03	3.076

Experimental specifications are／Date／28／September／1981／B Potential／DC 15 volt (stabilized)／Attenuation／$1/10$／impedance Matching／1 MΩ／Frequency Counter／FC 756 (Trio Co. Ltd)

Phase potertial (between neighbouring collectors) is／

10.2 volt AC,

while theoretical value is computed to be／

$$\Psi_2 - \Psi_1 = \mathrm{DC} \times \frac{2}{n} \cdots\cdots \qquad (9\ 23)$$

$$= 2.3077 \text{ volt},$$

where

$$\mathrm{DC} = 15 \text{ volt}$$

denotes input potential, and

$$n = 13$$

does number of stages.

One gets voltage ratio percentage η of／

$$\eta = 100\,\% \times \frac{10.2}{\Psi_2 - \Psi_1} \fallingdotseq 442\,\%$$

which exceeds 100 % although quantal energy comes down against time. The next photo indicates oscillogram of 17 phases endless amplifier, which is rectangular wave.

13 stages automatically generate 13 phases rectangular current.

The following oscillogram shows the first phase of 21 staged endless amplifier and the second.

One can find phase shift of $4\pi/21$. Stabilized power supply is passable and dry battery is best.

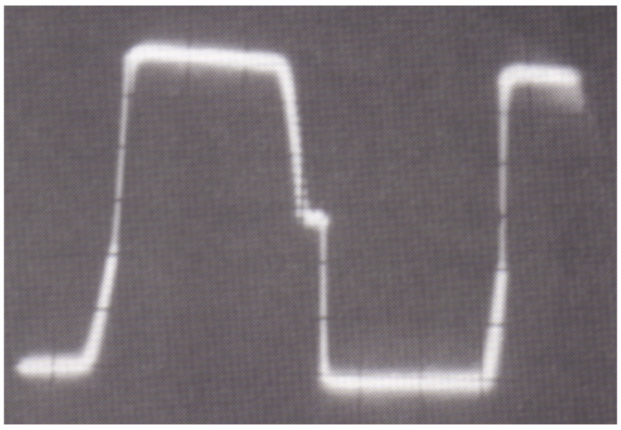

Photo 35

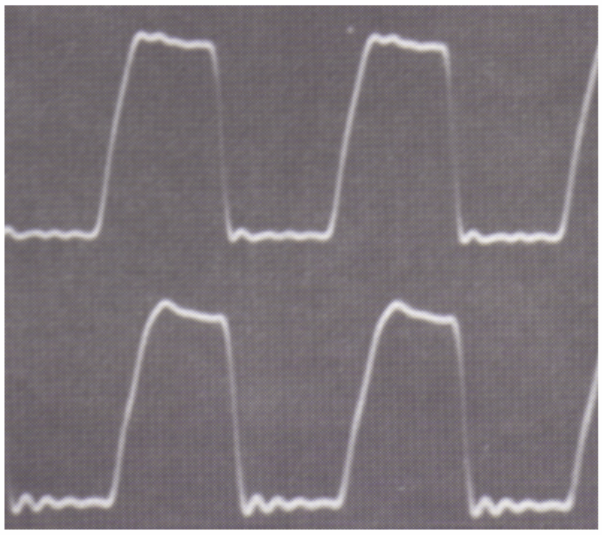

Photo 36

(9-7) IC Coil／G Reactor

We can also make Landau Oscillator with SN7404 (Hex Inverters) as it has 6 invertors when we combine odd number of invertors serially (See the next drawing). 3 ICs of SN7404 form 17 phases Landau Oscillator as／

$$6 \times 3 - 1 = 17$$

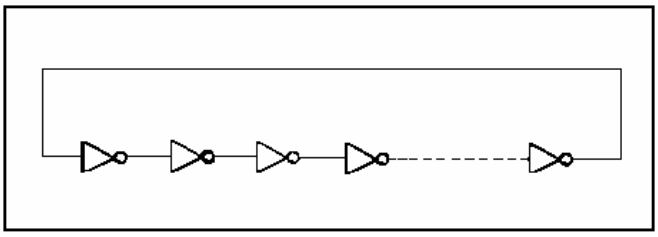

Fig. 85

which is shown upon the right drawing.

The frequency also comes down against time as upon the next table/

Quantal energy almost attains zero when cell is smaller and electron current small against decreasing ratio. Experimental specifications being/
B Potential/UM3×3/4.8 volts DC/Cycle Counter/FC756/ Impedance Matching/1MΩ/ Attenuation/0.1/Date/10/ October/1982.

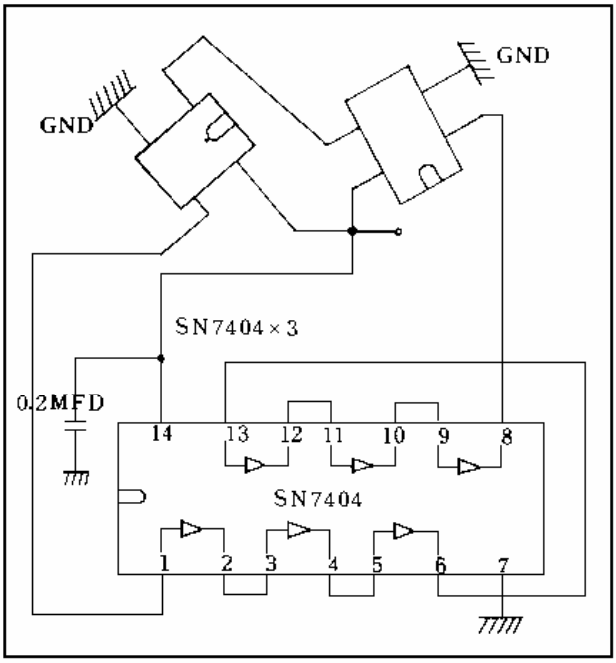

Fig. 86

Time	Frequency(MHz)
6:44	4.9712
(·····)	↓
19:22	4.0785
(night)	
8:00	2.7064
(·····)	↓
14:05	943.686
(·····)	↓
19:50	113.069
(·····)	↓
19:57	130.087
(·····)	↓
19:59	0

The former drawing is top view although that of tube or transistor is bottom one. One can easily make IC coil as one may not use resistors, but only combine IN and OUT of invertors.

It is also called <G Reactor> as pair annhilation of gravitons of/

$$G + \overline{G} \rightarrow 4r .$$

Electrons and holes are unlimited although Uranium is limited.

(9-8) Seike's Law of Pair Annhilation of Gravitons

<C Reactor> of 13 phases endless amplifier gives the curve which we can express with the Eqn. of ／

$$W - W_1 \quad W_0 e^{-\alpha t} \qquad (9-24)$$

where W and W_1 are energy and asymptotic value of energy as

$$t \to \infty$$

as upon the following drawing. We can also express this relation with a differential Eqn. of ／

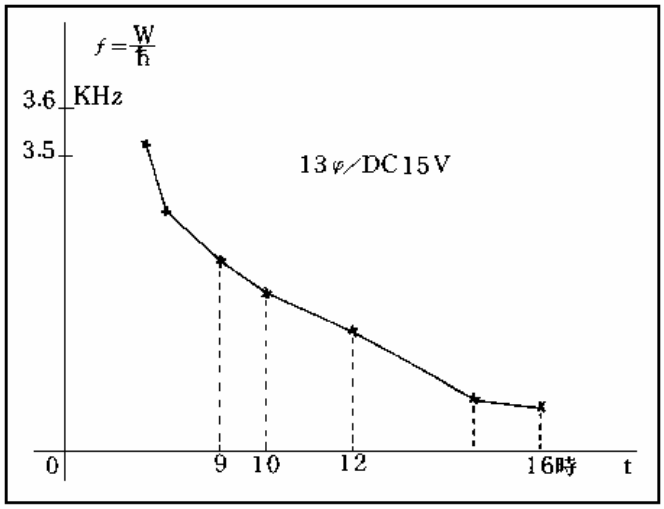

Fig. 87

$$\frac{\frac{dW}{dt}}{W \quad W_1} = -\alpha$$

or ／

$$\frac{\frac{df}{dt}}{f - f_1} = -\alpha$$

where f stands for frequency. The former Eqn. resembles that of radio activity of ／

$$N \quad N_0 e^{-dt} \cdots\cdots \qquad (9-25)$$

where N denotes the number of atoms.

We shall call this relation <Seike's Law of Pair Annhilation of Gravitons>.

§ 10 Time Reversing Machine

(10−1) ～ (10−4) (Revised) (Ceased)

(10−5) Infinite Degrees of Freedom of Torus

Landau oscillator of torus shape is possessed of 2 degrees of round freedom as it is composed of circular Landau oscillators. The following drawing indicates that its units can be composed of smaller circular oscillators of Landau's.

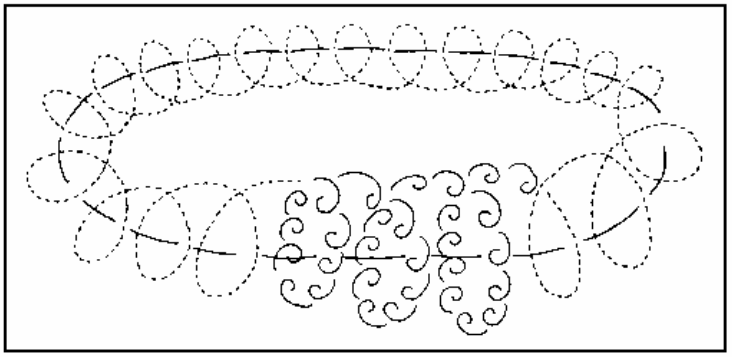

Fig. 77

We can again composed small units of smaller circular oscillators of Landau's.

We can, therefore, obtain even 5 degrees of freedom of torus or 6 degrees of that freedom as the left drawing shows.

We finally obtain theoretical infinite degrees of that freedom. The right photo indicates this relation that there is a person who has a book, on which a person owns a book, on which a man has a book, on which (·····) and so on beyond.

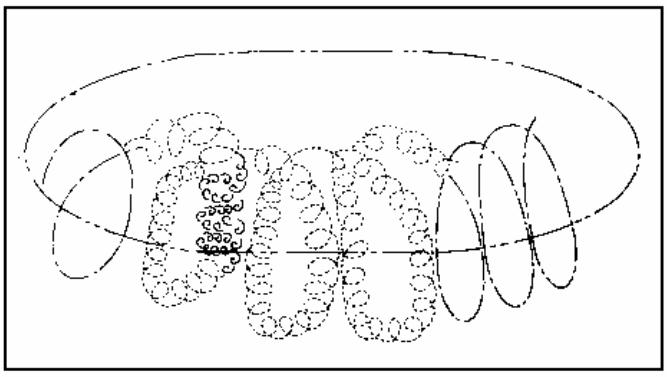

Fig. 78

By making Landau oscillator of multi degrees of round freedom with this in mind we can get greater incoming rate of negative energy and higher percentage efficiency of OUT potential to driving one.

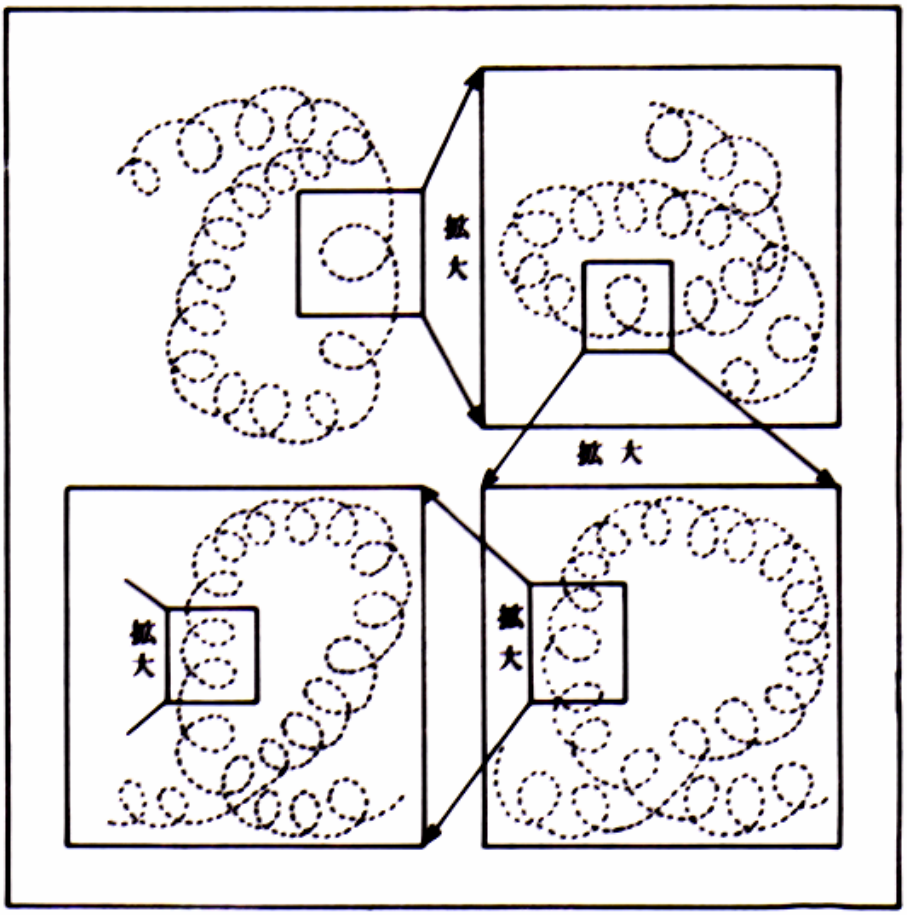

Fig.79

Fig.32

(10-6) Heisenbergean Chain of Uncertainty

With the former photo in mind, we shall examine uncertainty of Heisenberg's relativistically.

It maintains that either momentum p^1 or co-ordinate x is uncertain by the relation of.

$$\hbar \leqq \Delta p^1 \cdot \Delta x ,$$

which leads to that in the y-direction of,

$$\hbar \leqq \Delta p^2 \cdot \Delta y ,$$

and also to that in the z-direction of,

$$\hbar \leqq \Delta p^3 \cdot \Delta z ,$$

where p^2 and p^3 stand for the 2nd component of momentum and the 3rd one, respectively.

Relativistically we naturally obtain that in time-direction of,

$$\hbar \leqq \Delta p^0 \cdot (c \Delta t).$$

As we often discussed, p^0 (momentum in time-direction) and energy W are related by,

$$W/c = p^0 \quad (i p^0 = p^4),$$

which leads us to,

$$\hbar \leqq \Delta W \cdot \Delta t ,$$

in which $c t = x^0$,

and $x^4 = i x^0$,

are well known.

It maintains that/

≪Time becomes uncertain when one tries to precisely determine energy W, while energy becomes uncertain when one does to precisely observe time.≫

For example, uncertainty of time of,

$$t = 15 \text{ minute } 30 \text{ second} \pm \Delta t$$

occure when we precisely observe energy W at,

$$t = 15 \text{ minute } 30 \text{ second.}$$

The left drawing schematically indicates that time of,

$$t = 15 \text{ minute } 30 \text{ second}$$

is superposed either on,

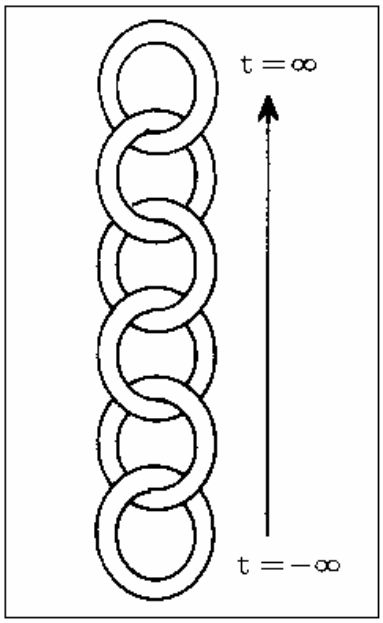

Fig. 80

$t_{(-1)} = 15\ minute\ 29\ second$

or

$t_1 = 15\ minute\ 31\ second$,

in recourse to which there is an infinite chain of time from,

$t = -\infty$

to

$t = \infty$.

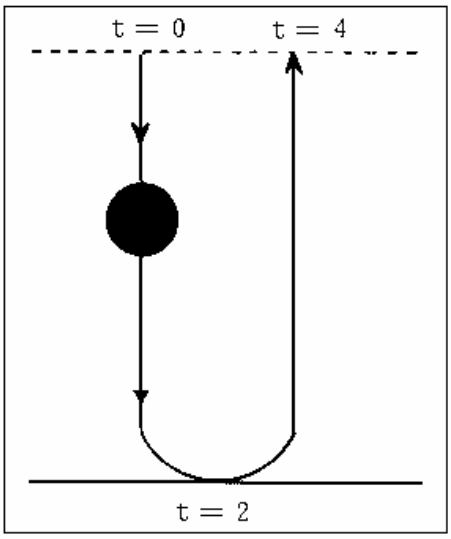

Fig. 81

On the other hand, we shall examine mass with negative energy repelled by G.

Mass attains

$$s = -\frac{g}{2} t^2 = -490\ cm$$

at

$t = 1\ second$,

after it begins to fall in g space at

$t = 0$,

and does

$$s = \frac{g}{2} t^2 = -\frac{g}{2} \cdot (2)^2 = -1,960\ cm\ ,$$

at

$t = 2\ second$,

while does

$$s = -1,960 - \frac{g}{2} \cdot 1^2 = -1,470\ cm\ ,$$

at

$t = 3\ second$

after time reversal at

$t = 2\ second$

as it is repelled by G, and it does

$$s = -1,960 + \frac{g}{2} \cdot (2)^2 = 0 ,$$

at

$$t = 4 \ second ,$$

which is nothing but the initial position.

It is reasonable to understand that time begins to reverse at,

$$t = 2 \ second$$

We shall again remember that energy is nothing but c times momentum in time direction such that/

$$W = c p^0 = mc^2 \frac{dt}{d\tau} \ (d\tau = \pm\sqrt{1-\beta^2}\, dt).$$

We accordingly obtain/

$$mc^2 \frac{dt}{d\tau} < 0 ,$$

$$\therefore \ \frac{dt}{d\tau} < 0 ,$$

to negatively energied body.

That is to say, velocty along time axis is negative with respect to proper time. Time becomes negative with proper time, which is always positive. Namely, time reverses. We can go backwards along the infinite chain of Heisenbergean uncertainty, stated before. The former photo of books on the cover of the other book states this physical fact.

The following photo explains one of the properties of creature, in which eggs stand for genes. A hen is determined to

Photo 33

appear in gene. This hen owns genes, in which a hen is determind to do, and this hen owns genes.

(.....)

Negative energy, time reversal and biophysical chain can be related together. If one makes nucleic acid, can he make a creature only with it? No, there should be an infinite chain of background time.

About 8 degrees of freedom of torus of Landau oscillator will generate negative energy field, which will give reversible time field, and by which one can get one of the solutions of puzzles with respect to G, time and life at the same time. Relativistic biophysics will also appear.

(10-7) Time Reflection of Electromagnetic Wave

We shall make <Mixed Transistorized Coil> with PNP transistors and NPNs as upon the following drawing.

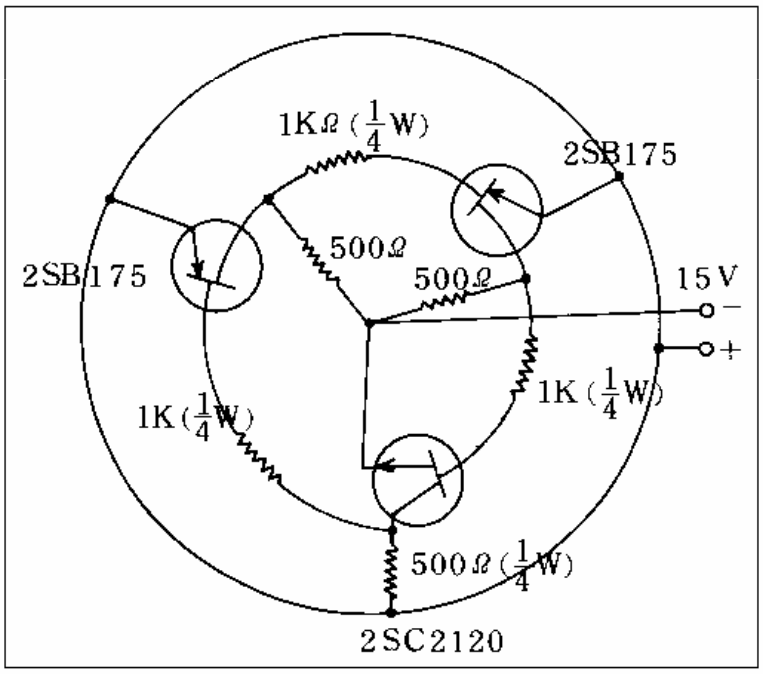

Fig. 88

Oscillation of 3 phases mixed one stops when one feeds higher potential (about 15 volt), but 9 phases one enjoys oscillation when one does even 15 volt DC between lines (2SB175×5+2SC2120×4) and delta pulse appear as the succeeding oscillogram indicates between collectors of 2SC2120 (Also see the next drawing).

Delta function can be obtained when angular frequency of ∕

$$f(t)=\frac{\sin \omega t}{\pi t}$$

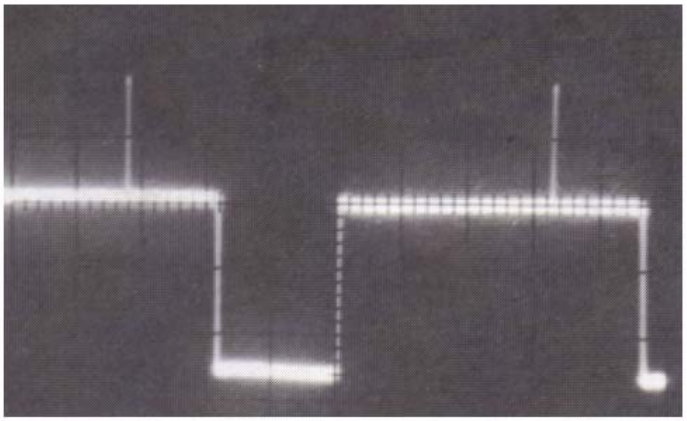

Photo 37

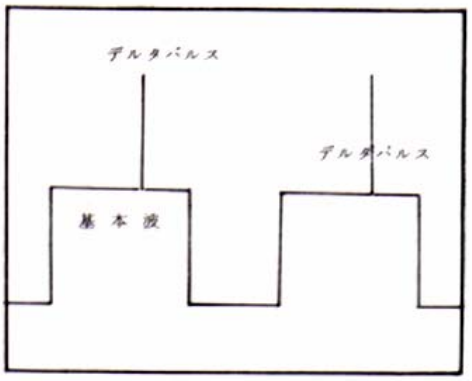

Fig. 89

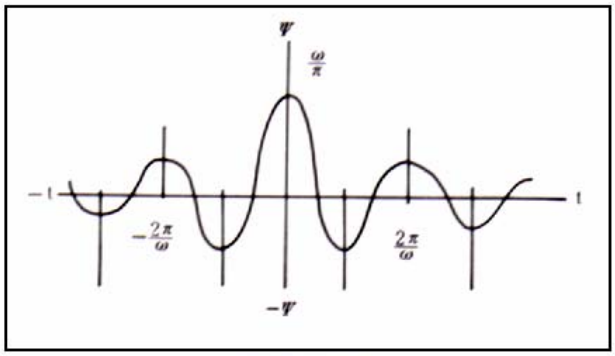

Fig. 90

goes up to infinity as it is defined by the limit of /

$$\delta(t) = \lim_{\omega \to \infty} \frac{\sin \omega t}{\pi t}$$

as shown upon the following drawing. Peak at origin attain infinity and wave lenght does zero when

$$\omega = 2\pi f \to \infty.$$

Very high frequency corresponds with negative time to <Mixed Transistorized Coil> when that frequency comes down as upon the next drawing.

That is to say, time of delta pulse is reflected (negative time).

Detection of this pulse gives fading as that of Moscow

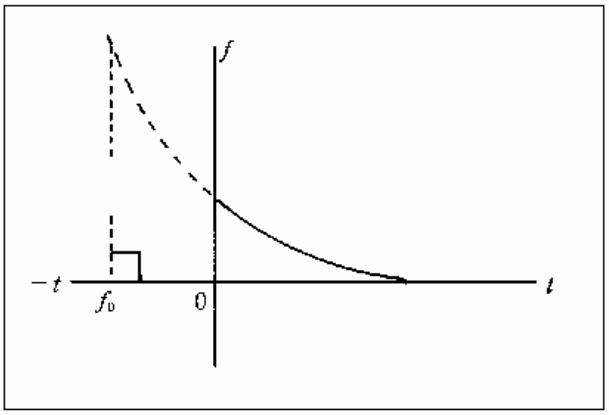

Fig. 91

Broad Casting.

We shall remember relativistic (four dimensional) distance of／

$r^2 = x^2 + y^2 + z^2 - c^2 t^2$

or／

$= x^2 + y^2 + z^2 + c^2 t^2$ (Eulidean space-time)

Electromagnetic wave from Moscow owns fading, and that (relativistic) distance is great when it belongs to remote time. This fading maintains that it belongs to remote past.

r is high in Euelidean space-time. We should remember that Gegenbauer ultra spherical harmonics can be obtained when it is analytically continued from Minkowskean space-time on to Euclidean space -time.

Direction of current in 2SC2120 (NPN type transistor) of <Mixed Transistorized Coil> is opposite to that of 2SB175 (PNP type of transistor), which corresponds with opposite turning coil.

As hole is in state of negative energy,

$$W = mc^2 \frac{dt}{d\tau} < 0$$

which leads us to／

$$\frac{dt}{d\tau} < 0,$$

and to negative time／

$$t < 0,$$

which generates the pulse of very high ω (delta pulse).

§ 11 Inverse-G Space Vehicle of John R.R. Searl's

(11－1) Experimental Results in United Kingdom

Rotating electric field of inverse-G engin is realized by ⓞ charging or discharging **n spherical condensers** set at n verteces of regular n-polygon with **n-phases current** or ⓟ **rotating electric dipole** of a pair of charged spheres. **John R.R. Searl** (17 Stephen's Close, *MORTIMER*, Berkshire, RG7－3TX, *ENGLAND*) produced inverse-G field by rotating segmented rotors between electromagnets, which corresponds with the method of ⓟ. The craft was dramatically repelled by the earth g-field as calculated in the chapter 10, and just as in Picture 17 and 18.

Picture 17

Mr. Searl (the left) and his disc which dramatically floats in g-space.

(11−1) Experimental Results in United Kingdom

Picture 18

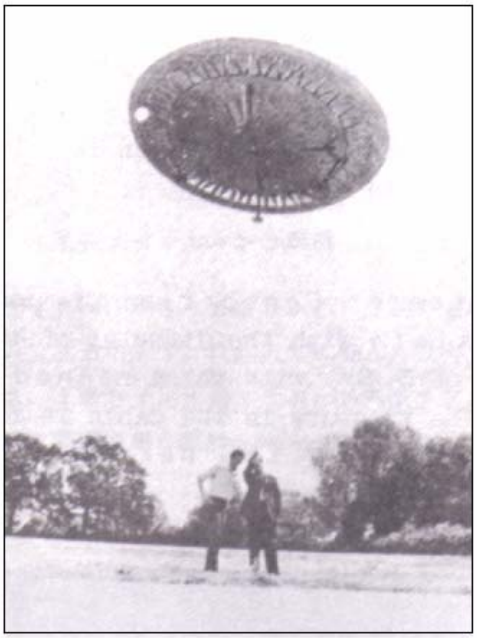

Mr. Searl, one of his friends and his disc which shows pair annhilation glow on the rim.

On the other hand, induced electric potential as stated by (8−17), is obtained, which is fed back to electro-magnets. The carft herself is a great electric generator. In virtue of this feed-back the rotor speeds up on and on, and finally attains a certain equilibrium. It is, then, at the electric potential of some modest 10^{13} (ten trillion) **volt**. Ambient vacuum which is characteristic to negative energy (concerned with pair annhilation) makes it keep such an ultra high electric potential.

On the third hand, flowing rate of energy from outer g-space is estimated $10^{14} \sim 10^{16}$ (hundreds trillion or ten thousands trillion) **watts** (thousands billion ~ ten trillion horse-power), which has been predicted by (8−28). This working corresponds with $\mu = 5$ ton in (8−28).

Mr. Searl has constructed **40 vehicles**, several of which are operating. Most of them have the diameter of about twenty feet, while the largest that of about 38 feet (Ref. 68 and 69). He sent her drawing as in Fig. 35.

Fig. 35

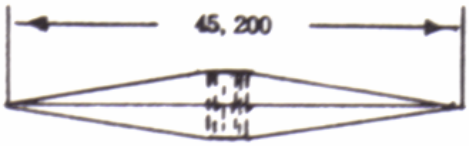

Rough Sketch of Starship Ezekiel which is intended to go over to the moon.

National Space Research Consortium is constructing <Starship Ezekiel> with the diameter of 45. 20 meter and the summit of 5.8m, with which manned lunar flight is planned. The pressure in the cabin is adjustable from 5 LBS per SQ. inch to 7 LBS per SQ. inch, temparature from 60° F to 105° F.
He showed her structure as in Picture 19.

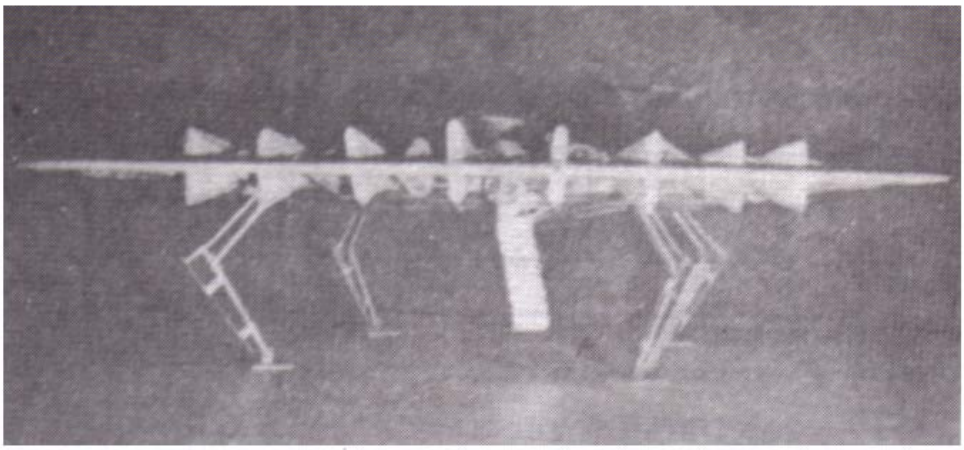

Picture 19 Structure of Searl's Disc.

(11－2) The Searl Effects

(1) Inverse Gravitation

Gravitation to negative energy state is repulsive, according to which negatively energied body is repelled by Earth.
The law of Newtonian gravitation is described by,

$$f = \frac{kMm}{r^2}, \qquad (11-1)$$

in which f stands for a force when masses of m and M interact at the distance of r.

Positive sign corresponds with attractive force. On the other hand, we have known Einsteinean formula of mass-energy relation of,

$$W = mc^2 , \qquad (11-2)$$

and

$$W' = Mc^2 , \qquad (11-3)$$

from which we have

$$m = \frac{W}{c^2} , \qquad (11-4)$$

and

$$M = \frac{W'}{c^2} , \qquad (11-5)$$

If we put (11－4) and (11－5) into (11－1), we derive

$$f = \frac{kWW'}{c^4 r^2} , \qquad (11-6)$$

in which the signs of f are different in the cases of

$${}_2C_1 \times {}_2C_1 = 4$$

for $W \lesseqgtr 0$ or $W' \gtreqless 0$.

They are tabulated in TABLE 5.

TABLE 5

W	+	+	−	−
W′	+	−	+	−
f	+	−	−	+

The positive sign stands for attractive gravitation, while the negative for repulsive. Positively energied bodies or negatively energied ones attract each other, while repulsive force acts upon positively energied body and negatively.

⑵ Electromagnetic Induction with G-deceleration

The generator produces D.C. static field with negative polarity at the rim and positive at the center. However the magnetic field from the generator produces induction in conductive loops when there is no relative movement. It seems

therefore that the flux from the generator is continuelly expanding. This implies that growth of internal momentum of atoms in rotor by g-deceleration of (8－10) produces electromagnetic induction.

(3) Working of Gravitation

G-stress energy flows into the craft when gravitation works upon the growing internal momentum. That working amounts to 10^{14} watts ($\approx$ thousands billion horsepower) $\sim 10^{16}$ watts ($\approx$ 10 trillion horsepower), which is about identical with the value of (8－29) of

$$\mu = 5 \text{ ton.}$$

(4) Threshold Electric Potential

The craft sufficiently operates at the potential higher than 10^{13} volt, which implies that thermodynamical probability attains $L(\beta) \approx 1$ (See (8－18)) at such a higher potential.

(5) Thrust

Horizontal propulsion can also be obtained by changing the potential distribution of the surface of the craft. This is because the plane upon which electric field rotates (See (4－8)) inclines.

(6) Pair Annhilation Glow

Pair annhilation gives rise to a transluscent glow surrounding the craft and glowing trails such that

$$e^+ + e^- \rightarrow \gamma , \qquad (11-7)$$

which is accompanied with negative energy.

(7) Permanent Electric Polarity

One notices that after working near craft or generators he has a <cobweb> sensation on the skin. His clothes clung to him and also the bed linen. This was accompanied by occasional crackling and lasted some hours. This effect could be attributed to a permanent polarity. <Paraelectric substance> such as clothes can enjoy a sufficent polarity with $L(\beta) \rightarrow 1$, (11－8) by higher electromagnetic field surrounding a craft.

(8) Matter Snatch during Acceleration

This occurs when the craft is on the ground and the drive is suddenly switched on. The rising craft takes up a lump of the ground with it, leaving the well known hole in the ground.

(11−3) Geodesic Sailing towards the Moon (The Lunar Trip)

Ordinary chemical rockets get large kinetic energy at launch, but it is gradually lost in g-field of the earth and reaches the equilibrium point of gravitation of the earth-moon line. Passing that point it is gradually accelerated, while <inverse atomic motor> is gradually done, but decelerated in g-field of the moon, after reaching the maximal velocity at the equilibrium point.

Under g-acceleration of the earth Eqn. of motion may easily be found to have the form of,

$$(\mu+\nu)\frac{d^2x}{dt^2} = (\mu-\nu)\frac{kM}{x^2}, \qquad (11-9)$$

where μ and ν are defined by (9−14).

$$\frac{\mu-\nu}{\mu+\nu} \approx 1, \qquad (11-10)$$

holds when quantal seeds are far greater than payloads, namely the vehicle has quite a large <inverse-G engine>. (11−9) leads us to

$$\frac{d^2x}{dt^2} = \frac{kM}{x^2}, \qquad (11-11)$$

where x, k and M stand for the distance from center of the earth on the earth-moon line, Newtonean constant of gravitation and mass of the earth, respectively.

We know a relation of (9−13) among the radius of the earth and them. (11−11) reduces to a differential Eqn. of separable variable with respect to p and x, if we put

$$\frac{dx}{dt} = p.$$

(11−3) Geodesic Sailing towards the Moon (The Lunar Trip)

We shall suppose that the vehicle start from the resting state on the surface of the earth, namely at the boundary condition of $p = 0$, at $x = R$.

Then, we find an Eqn. of.

$$\frac{dx}{dt} = \sqrt{2gR}\sqrt{1-\frac{R}{x}}. \qquad (11-12)$$

and, $$\sqrt{2kM}\,t = 2R^{\frac{3}{2}}\int_0^{\theta}\frac{d\theta}{\cos^3\theta}. \qquad (11-13)$$

with $$\sin\theta = \sqrt{\frac{x-R}{x}}. \qquad (11-14)$$

The moon is situated from the earth

$$a = 38.44\times 10^4\ \text{Km}, \qquad (11-15)$$

on the earth−moon line, while her mass being

$$m = 0.0123\ \text{AU}. \qquad (11-16)$$

If the equilibrium point is r_1 from the earth and r_2 from the moon we find

$$\frac{k\times 1}{r_1^2} = \frac{k\times 0.0123}{r_2^2}, \qquad (11-17)$$

which leads us to

$$\frac{r_1}{r_2} = 9.02. \qquad (11-18)$$

We namely derive $$r_1 = 34.6\times 10^4\ \text{Km}. \qquad (11-19)$$

The maximal velocity of <inverse−G space vehicle> on her lunar trip is,

$$\frac{dx}{dt} \approx 11.3\ \text{Km/sec}. \qquad (11-20)$$

in recourse to (11−12).

We shall call this process <geodesic sailing> since she only depends upon g-acceleration, following A. Einstein who called g-trajectory <geodetic>. This trajectry can represent the nearest path however space-time may be curved.

The integral of (11−13) of,

$$i = \int_0^{\theta}\frac{d\theta}{\cos^3\theta}, \qquad (11-21)$$

reduces to

$$=\frac{1}{2}\left[\lambda\sqrt{1+\lambda^2}+\ln\left(\lambda+\sqrt{1+\lambda^2}\right)\right]=\frac{1}{2}\left[\frac{\sqrt{x(x-R)}}{R}+\ln\frac{\sqrt{x-R}+\sqrt{x}}{\sqrt{R}}\right]$$

$$\left[=\int_0^{\lambda}\sqrt{1+\lambda^2}\,d\lambda\right], \qquad (11-22)$$

if we put $\tan\theta=\lambda$. Using

$$x=r_1=34.5\times10^4\ \text{Km},$$

of (11−13) and (11−19). we obtain

$$t\approx 8.94\ \text{hours}, \qquad (11-23)$$

which shows that it takes only about nine hours to reach the g-field of the moon.

You will please remember that chemical rockets of NASA take nearly three days, and how fast it is. We finally show <inverse-G space vehicle> which is on the ground.

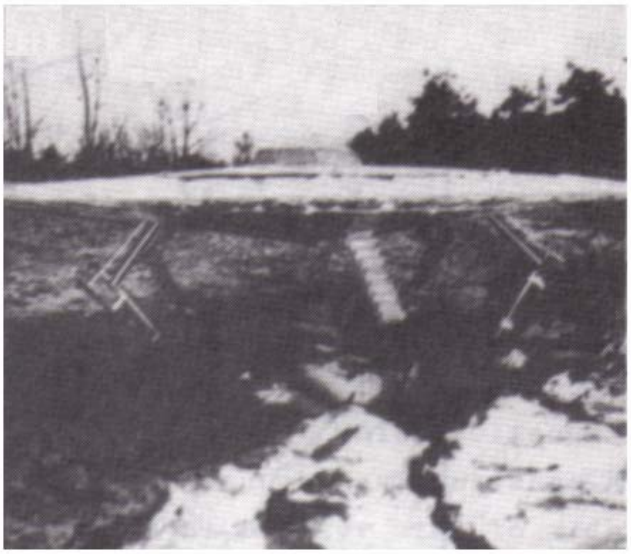

Picture 20

Inverse-G Space Vehicle on the ground.

(11-3) Geodesic Sailing towards the Moon (The Lunar Trip)

Dip of geomagnetic field is 69 degree in Berkshire. Leaning angle of Levity Disc is also 69 degree in Picture17

Fig. 50

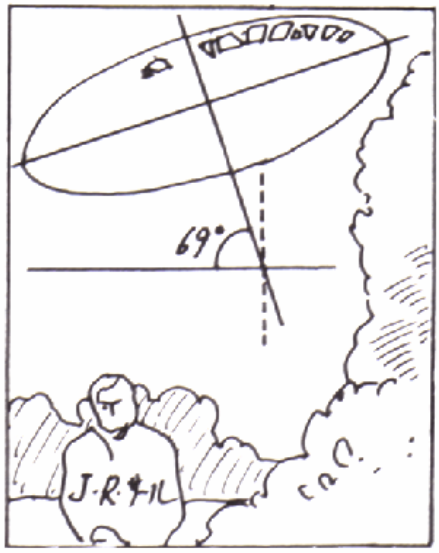

(Inverse-G Space Vehicle orients in geomagnetic direction)

Namely, Z-direction of Nuclear Electric Resonance coincides with geomagnetic. We can find that geomagnetic field is made use of resonance magnetic field.

Mr. Searl has been constructing Demonstration Craft #1 (February in 1972). Cabin of this vehicle is shown on Picture #23, where we can find a large number of controlling panels.

Pic. 23

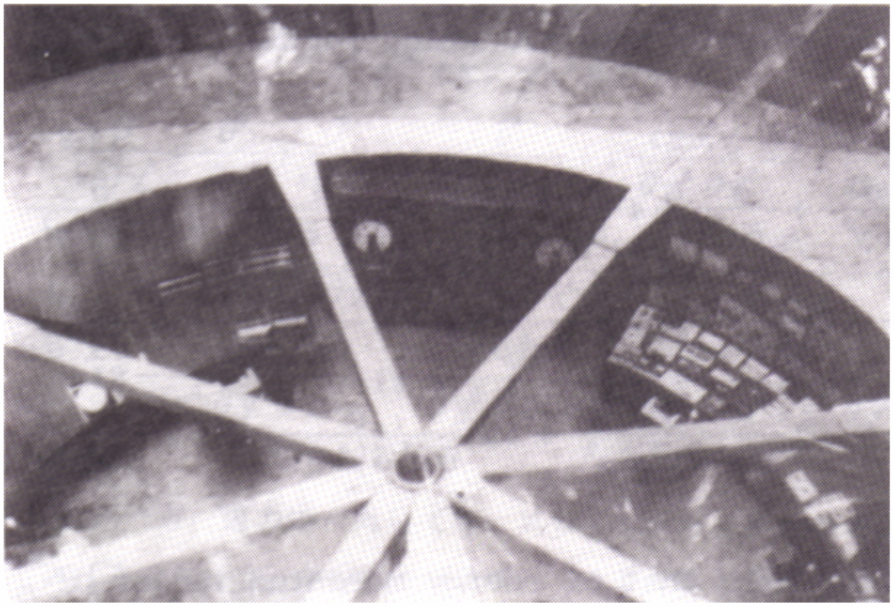

This Demonstration Craft is to be used as training vehicle of launching and landing. Star Ship Ezekiel with diameter of about 50 meters is, furthermore, constructed for Lunar Journey.

§ 12 The Tenth Planet

(12－1) Introduction

It has often been said that unknown planets may be present outside Pluto. We shall examine this problem and where it is. The planets in the solar system are Mercury, Venus, Earth, Mars. Jupiter, Saturn, Uranus, Neptune and Pluto, so far. The planet just outside Pluto is the tenth. These nine ones are classified into three groups of (A) Terrestrial Planets (Mercury, Venus, Earth and Mars). (B) Giant Planets (Jupiter, Saturn, Uranus and Neptune) and finally (C) Pluto (which belongs to Terrestrial Planets).

(12－2) Distribution of Energy Tensor

Potential of energy momentum tensor of electromagnetic field obeys Tetra-Harmonic Equation of,

$$\Box^4 \varphi^{jk}(x) = 0 , \qquad (12-1)$$

as stated in the seventh chapter, which further takes the form of,

$$\Delta^4 \varphi^{jk}(x, y, z) \qquad (12-2)$$

$$= \left(\frac{\partial^8}{\partial x^8} + \frac{\partial^8}{\partial y^8} + \frac{\partial^8}{\partial z^8} + 4\frac{\partial^8}{\partial y^6 \partial z^2} + 4\frac{\partial^8}{\partial z^6 \partial y^2} + 4\frac{\partial^8}{\partial x^6 \partial y^2}\right.$$

$$+ 4\frac{\partial^8}{\partial x^6 \partial z^2} + 4\frac{\partial^8}{\partial y^6 \partial x^2} + 4\frac{\partial^8}{\partial z^6 \partial y^2} + 6\frac{\partial^8}{\partial x^4 \partial y^4} + 6\frac{\partial^8}{\partial x^4 \partial z^4}$$

$$\left. + 6\frac{\partial^8}{\partial y^4 \partial z^4} + 12\frac{\partial^8}{\partial x^4 \partial y^2 \partial z^2} + 12\frac{\partial^8}{\partial x^2 \partial y^4 \partial z^2} + 12\frac{\partial^8}{\partial x^2 \partial y^2 \partial z^4}\right)$$

$$\times \varphi^{jk}(x, y, z) = 0 ,$$

to static field, while that of energy momentum tensor of g-field of $\Psi^{jk}(x)$ $(j \neq k,\ j,\ k = 1 \sim 4)$ is thought to also obey the equation with the form of (12－1) or (12－2). For (A) g-field G is related to polar angular momentum density of Я

(as stated in (9－1)) by,

$$\frac{G}{\sqrt{1-\beta^2}} = -\frac{k}{c} Я \ , \qquad (12-3)$$

which implies elasticity in the direction of time since

$$i\,Я = (M^{41},\ M^{42},\ M^{43})$$

are the components of total angular momentum density associated with time-suffix.

The two masses with positive energy which attract each other (See Fig. 36) are bound by polar angular momentum density line of force whose flux would shrink longitudinally, while elongate laterally.

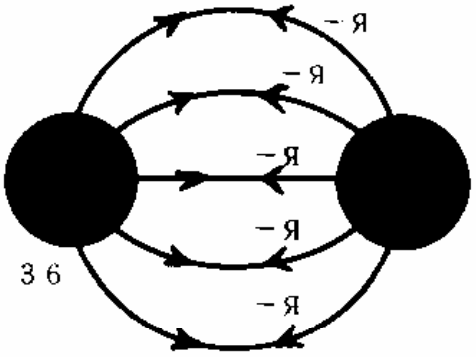

Fig. 36 Polar Angular Momentum Density Lines of Force which would shrink longitudinally, while elongate laterally.

Potential $\Psi^{jk}(x, y, z)$ of energy momentum tensor in static g-field obeys partial differential equation of the eighth order of,

$$\Delta^4 \varphi^{jk}(x, y, z) = 0 \ , \qquad (12-4)$$

where $T^{jk} = \partial_j \partial_k \Psi^{mn}$ $(j \neq k)$

$$T^{jj} = -(\partial_k^2 \Psi^{mn} + \partial_m^2 \Psi^{nk} + \partial_n^2 \Psi^{mk}) \ , \qquad (12-5)$$

in recourse to the same kind of analysis which leads to (7－24). The appendix (A－9) states that stress tensor (on hyper surfaces) is governed by the same potential as energy momentum tensor.

Owing to (12－4) and (12－5), energy momentum tensor of T^{jk} associated with the zeroth hyper surface are:

$$T^{01} = T^{02} = T^{03} = 0 \ ,$$

$$T^{00} = 45A\{-\frac{28}{R^3} + 2[17(x^4+y^4+z^4) + 35(y^2z^2+z^2x^2+x^2y^2)]/R^7$$
$$+ 7[(y^2z^4+z^2x^4+x^2y^4) + 78x^2y^2z^2 + (y^4z^2+z^4x^2+x^4y^2)]/R^9$$
$$+ 126(y^4z^4+z^4x^4+x^4y^4)/R^{11}\} \ , \qquad (12-6)$$

where T^{44} differs from T^{00} by the factor of -1.

$$c\rho = \sqrt{(T^{00})^2 - \{(T^{01})^2 + (T^{02})^2 + (T^{03})^2\}} = |T^{00}|, \qquad (12-7)$$

stands for mass density, because four momentum density of (p, iq) is associated with the tensor by,

$$p = (T^{01}, T^{02}, T^{03}),$$
$$q = -T^{00}. \qquad (12-8)$$

For T^{03} means the third component of momentum on the zeroth hyper surface.

(12－3) Mass Distribution of Terrestrial Planets

At the origin of solar system mass distribution is governed by the equation of (12－4) and (12－5), center of the sun being the origin. We obtain

$$x_2 = \frac{a_2 M_3 + a_3 M_2}{M_2 + M_3}, \qquad (12-9)$$

when we denote the distance from the origin to the point which divides $a_2 \sim a_3$ by $M_2 : M_3$, a_3, a_4 and a_2 being radii of Earth, Mars and Venus. Mass inside infinite cylinder with inner radius of a_2 and outer of x_2 is concentrated on to M_2, while that inside infinite (vertical) one with inner radius of x_2 and outer of a_3 is done onto M_3 when M_2 and M_3 are at a certain radius of the orbit of M_3

Fig. 37

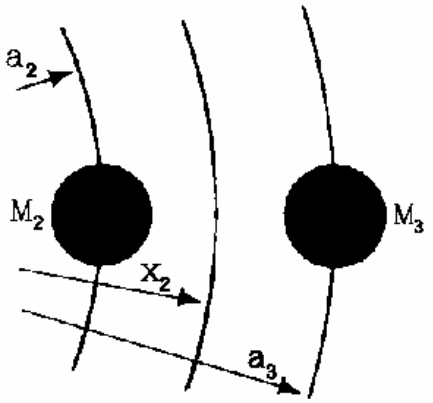

Inner radius and outer of vertical infinite cylinder which contained the mass that is concentrated upon the planet.

(12−3) Mass Distribution of Terrestrial Planets

This point is supposed to divide mass distribution at the origin of formation of solar system. We namely have a relation of,

$$M_3 = \int_{x_2}^{x_1}\int_{-\infty}^{\infty}\int_0^{2\pi} \left|\frac{T^{00}}{c}\right| r\,d\,r\,dz\,d\varphi$$

with
$$\begin{cases} x = r\cos\varphi\,, \\ y = r\sin\varphi\,, \\ z = z\,, \end{cases} \qquad (12-10)$$

since mass distributed inside a vertical infinite cylinder with inner radius of x_2 and outer of x_3 is concentrated upon M_3.

Performing integrations, we obtain

$$= B\log\frac{x_3}{x_2}\,, \qquad (12-11)$$

because the last term of the part which is inversely proportional to R^{11} is, for instance,

$$I = \int_{x_2}^{x_3}\int_{-\infty}^{\infty}\int_0^{2\pi} \frac{126\,r^8\cos^4\varphi\sin^4\varphi\,r\,d\,r\,dz\,d\varphi}{(r^2+z^2)^{\frac{11}{2}}}$$

$$= 252\int_{x_2}^{x_3}\int_0^{\infty}\int_0^{2\pi} \frac{r^9\cos^4\varphi\sin^4\varphi\,d\,r\,dz\,d\varphi}{(x^2+z^2)^{\frac{11}{2}}}\,.$$

This integrand becomes

$$= 252\int_{x_2}^{x_1}\frac{dr}{r}\int_0^{\frac{\pi}{2}}\cos^9\lambda\,d\lambda\int_0^{2\pi}\cos^4\varphi\sin^4\varphi\,d\varphi\,, \qquad (12-12)$$

if we put $z = r\tan\lambda$.

All the remaining terms are proportional to

$$\ln\frac{x_3}{x_2}\,,$$

which can be transformed into log and we finally obtain (12−11)

Normalization constant of B can be determined such that

$$B = 4.5776 \quad (A.U.) \qquad (12-13)$$

in virtue of mass of Earth, Venus and Mars, and radii of their orbits, where these constants are tabulated in TAB. 2.

TABLE 2

	Mercury	Venus	Earth	Mars	Pluto
radii	0.3871	0.7233	1.00	1.5237	39.5
mass	0.054	0.815	1.00	0.108	0.8

We have supposed their orbits to almost be circles since their eccentricities are so small. With reference to (12－13) and the TABLE 2 we can calculate masses of Mercury, Venus and Mars as in TABLE 3.

TABLE 3

	Mercury	Venus	Earth	Mars
Observation	0.054	0.815	1.00	0.108
Theory	0.105 (rather larger)	1.452 (rather larger)	1.00 (standard)	0.068 (rather smaller)

The distribution law of logarithm is quite appropriate to Terrestrial Planets. We must select the other normalization constant with the boundary condition of Jupiter to Giant Planets.

(12－4) The Orbit of the Tenth Planet

Normalization constant to Terrestrial Planets are applied to Pluto and the other planets since mass of Pluto is :

$$M_9 = 0.8 \quad (A.U.)$$

which is nearer to mass of the earth.

x_9 of the radius which determines mass distribution between Pluto and the Tenth Planet is calculated by

$$0.8 = 4.5776 \log \frac{x_9}{39.112}, \qquad (12-14)$$

where $x_8 = 39.112$ (A. U.)

shows the point which divides mass distribution between

Neptune and Pluto. We namely obtain

$$x_9 = 62.02 \quad (A.U.). \tag{12-15}$$

Next we shall suppose that the Tenth Planet belongs to Terrestrial Family and owns the mass of about 0.8 A.U. Then, x_{10} of the radius of outer dividing point is determined by

$$0.8 \approx 4.5776 \log \frac{x_{10}}{62.02}, \tag{12-16}$$

namely deriving $$x_{10} \approx 94.20. \tag{12-17}$$

On the other hand, a_{10} of the orbit of the Tenth Planet is calculated such that

$$x_9 = 62.02 = \frac{0.8a_9 + 0.8a_{10}}{0.8 + 0.8}, \tag{12-18}$$

in recourse to (12－9), having namely

$$a_{10} = 84.54, \tag{12-19}$$

which reduces to

$$a_{10} = 125.7 \times 10^8 \text{ Km}, \tag{12-20}$$

if we take the number of I.A.U. $= 1.495 \times 10^8$ Km.

On the third hand, astronomers predicted that

$$a_{10} \approx 126 \times 10^8 \text{ Km}, \tag{12-21}$$

in virtue of the orbits of comets (Ref. 72), which is just identical with our result. We can predict that the Tenth Planet is present at the distance of 126×10^8 Km from the sun, owing to both of the conclusions.

§ 13 Periodic Chart of Elementary Particles

(13−1) Intrinsic Principal Quantum Number

In accordance with orbital quantum number of L of,

$$< L^2 > = L(L+1)\hbar^2 , \qquad (13-1)$$

spin quantum number of s of,

$$< s^2 > = s(s+1)\hbar^2 , \qquad (13-2)$$

is present. On the other hand, principal quantum number of n is defined with relativistic angular momentum (See the chapter 2) of,

$$< L^2 + (i\text{Я})^2 > = (n^2-1)\hbar^2 . \qquad (13-3)$$

The components with time suffices $i\lambda$ of relativistic spin are also present, in recourse to which we naturally introduce

$$< s^2 + (i\lambda)^2 > = (\lambda^2-1)\hbar^2 , \qquad (13-4)$$

in analogy of,

$$(13-1) \Longleftrightarrow (13-2) .$$

We shall call λ <intrinsic principal quantum number> which also takes the eigen value of half odd integer since s is so although L nonnegative integer only.

To electrons we know that

$$i\lambda = \begin{cases} -\frac{i}{2}\hbar\gamma^4\gamma^1 \\ -\frac{i}{2}\hbar\gamma^4\gamma^2 \\ -\frac{i}{2}\hbar\gamma^4\gamma^3 , \end{cases} \qquad (13-5)$$

while $i\lambda$ may take various eigen values to particles in general where γ^j stands for Diracean spinor.

Then, the eigen value of iЯ associated with orbital motion of particles are expressed by

$$< \text{Я}^2 > = ((n^2-1) - L(L+1))\hbar^2 , \qquad (13-6)$$

(See the chapter 2), where we have applied unitary trick to Klein-Gordon Equation. Accordingly, the eigen value

classified with (λ, s) as that of elements with (n, L). We have known spin quantum numbers of all the elementary particles. We emphatically find that mass of a particle with $s=1/2$ is a little less than that with $s=0$ which has the same intrinsic principal quantal number of λ. Meanwhile we have known that μ meson owns a little less mass than π meson, which seems to imply that they do the same λ but the former does $s=1/2$ while the latter $s=0$. Accordingly we may determine their λ so that the ratio of their masses may be 134.975 : 105.659, which leads us to

$$\lambda = 2 .$$

We, therefore, obtain normalization constant of

$$K = \frac{134.975}{\sqrt{2^2-1}} \approx 77.91409 , \qquad (13-13)$$

making use of π^0 as boundary condition.

This normalization constant gives a little larger mass of calculation of

$$m_\mu = 116.8711 \text{ Mev},$$

than observed.

If we take $\lambda = \frac{3}{2}$ which is just before $\lambda = 2$ or $\lambda = \frac{5}{2}$ which is just after, theoretical ratio of their masses does not agree with observed. Thus, we may determine intrinsic principal quantum number of pion and muon to be

$$\lambda = 2 . \qquad (13-14)$$

and that mass of muon is a little smaller than that of pion because of the difference of spin quamtum number of s.

(13－2) Classification with Intrinsic Principal Quantum Number and Spin

In recourse to the conclusion in the former section we have the following periodic chart making use of normalization constant of (13－13), where Ж, Э, Ю and Я stand for the state of $s=0$, $s=\frac{1}{2}$

(13－2) Classification with Intrinsic Principal Quantum Number and Spin

$s = 1$ and $s = \frac{3}{2}$,

respectively. Their symbols correspond with s, p, d and f in the periodic chart of elements. For instance, (20 я) means that it is in the eigen state of $\lambda = 20$ and $s = \frac{3}{2}$.

TABLE 6

particles	eigen state	theory (Mev)	observation (Mev)
μ	(2 э)	116.871	105.659
$\pi^{\pm}$	(2 ж)	134.975	139.578
π^0			134.975
$K^{\pm}$	($\frac{13}{2}$ ж)	500.411	493.88
p	(12 э)	929.374	938.256
n			939.550
λ^0	($\frac{29}{2}$ э)	1,125.041	1,115.6
Σ^+	($\frac{31}{2}$ э)	1,203.227	1,189.4
Σ^0			1,192.5
Σ^-			1,197.3
ξ^-	(17 э)	1,321.578	1,321
ξ^0			1,315
Ω^-	($\frac{43}{2}$ я)	1,667	1,672

§ 14 Solid State Battery (Revised) (Ceased)

§15 Decay of Lucifer

There are many small planets, called **Asteroid**, between the orbit of **Mars** and that of **Jupiter**. Most of them are smaller than even ordinary sattellites, and some of them are not spherical.

Representative one are **Ceres, Pallas, Juno, Vesta, Eros, Icarus** and so on. Their masses and radii are tabulated in **TABLE 7.**

TABLE 7

(See the right. **Specifications of Asteroid.**)

More than 1,600 are found. There will be more than fifty thousand, including the smallest which is now undiscovered. They will be **the ruins of one more mother planet** which was decayed in the ancient Era. It has been called **< Lucifer >** by some astronomers. We shall study specifications of that marvelous planet in this chapter. It is situated on the fifth orbit.

We, therefore, call **the fifth planet. Bode number** is 2.8 to the fifth. That is to say, the mother planet had enjoyed the orbit of 2.8 **Astronomical Unit from the Sun.**

The specifications are tabulated on the **TABLE 8,** along with the inner planet of **Mars** and the outer of **Jupiter.**

TABLE 8

	Mars	Lucifer	Jupiter
radii of orbits	1.524	2.8	5.203
Mass	0.108	x	317.904

§15 Decay Lucifer

As studied in the twelfth chapter, the following Eqn. determines the mass of terrestrial planet,

$$x = 4.5776 \log \frac{y}{Z} \qquad (15\text{–}1)$$

where Z and y are radius which distributes energy tensor to the inner planet and that one, and what does the outer planet and that, concerned. Would you please read the Eqn. of (12–9)?

From inside, we shall denote the masses of three planets with m,n and p. The following Eqn. reads

$$Z = \frac{2.8\,m + nu}{m + n}\ , \qquad (15\text{–}2)$$

$$y = \frac{nu + 2.8\,p}{n + p}\ , \qquad (15\text{–}3)$$

where

m,n and p are mass of Mars, that of Lucifer and that of Jupiter. u and p are radius of Martian orbit and that of Jupiterean one. The reader can find the reason in section (12–3). (15–2) and (15–3) give the radius of the orbit at which g–potential of the inner planet and the outer are equal.

We must know mass of Lucifer so that we may determine them (the radii of orbits). With regards to terrestrial planet, they become larger, Mercury → Venus → Earth, and the final Mars is smaller than Earth, as indicated in Fig. 49.

Fig. 49

The sizes of terrestrial planets

Accordingly, Lucifer is about equal to Mars or owns about the same mass as Mars. Therefore,

$$Z \approx 2.8$$

as Jupiter's mass is about 3,000 times that of Mars, if we use

0.108

§15 Decay Lucifer

to Lucifer.

Similarly,

$$y = \frac{1.524 + 2.8}{2} = 2.162 \qquad (15\text{–}4)$$

as mass of Mars and that of Lucifer are supposed equal.

Then, we obtain

$$x \approx 0.52 \quad \text{(Astronomical Unit)} ,$$

and x is also expressed by

$$\approx 3.1 \times 10^{27}\text{gr} . \qquad (15\text{–}5)$$

On the other hand, total mass of Asteroid are calculated as

$$x' = 1.7 \times 10^{24}\text{gr} . \qquad (15\text{–}6)$$

That is to say,

$$\frac{x'}{x} \approx 5.5 \times 10^{-4} .$$

Only 0.06 per cent of mass remains when decayed. The other mass was decayed into Gamma ray and so on. 10^{47}ergs of energy were made free. There was an astounding explosion.

Thirdly, mean density of Asteroids are known

$$3.5 \text{ gr}/cm^3 ,$$

which shows that of Lucifer.

In virtue of mathematical formulae of sphere

$$3.5 \times \frac{4\pi}{3} R^3 = 3.1 \times 10^{27} , \qquad (15\text{–}7)$$

we finally derive the radius of,

$$R \approx 6,000\text{km} .$$

The size of Lucifer was about identical with that of Earth.

§ 16 Experimental Results

(16－1) Imaginary Output Potential with G-Kleinean Coil

Firstly we fabricated three phases current source of about 1MHz as shown in the following circuit. The core of the center osclating coil, for instance, owns the size as displayend in the following figure.

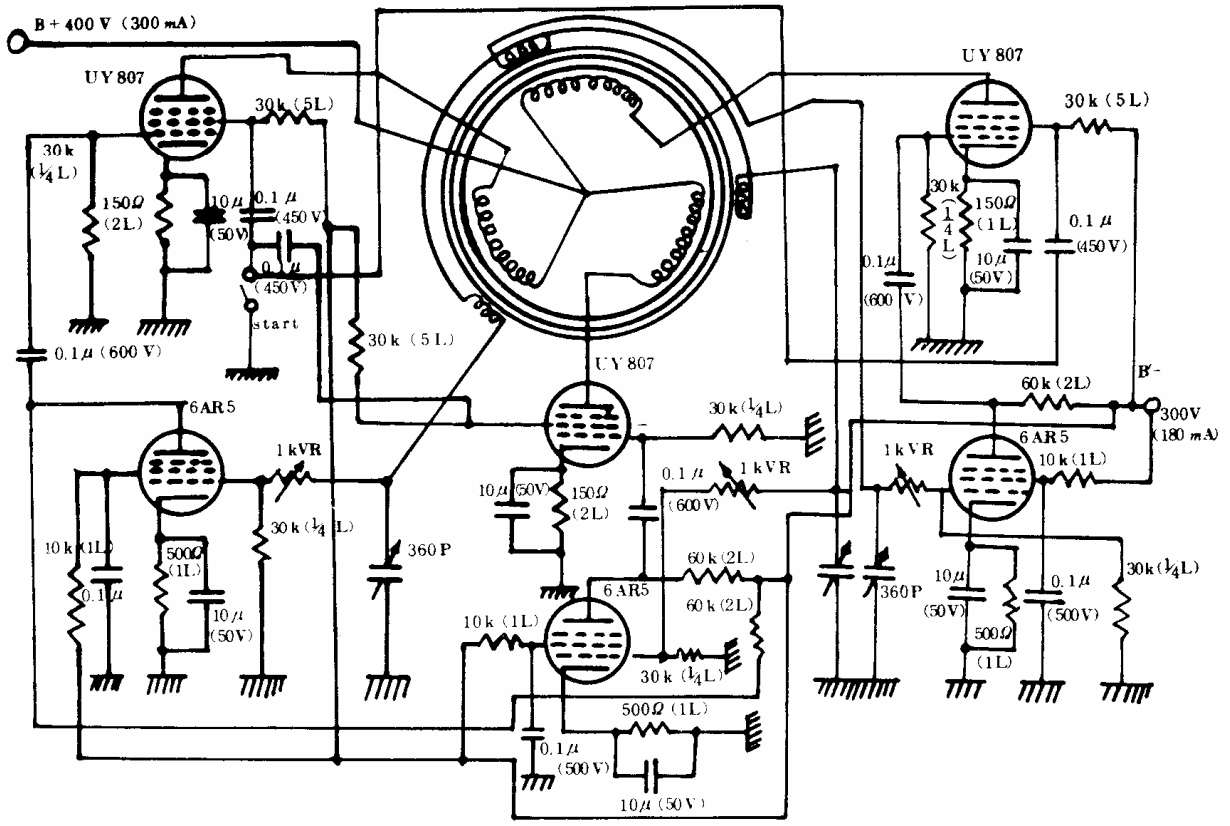

Fig. 51

The oscillating coil should be composed of Kleinean Roll instead of Solenoid.

The 3 phases current is fed onto 3 spherical condensers of G－generator upon Fig.13 as, for instance, in the next figure.

The output coil of ④ in Fig.13 should also be done of Kle-

(16－1) Imaginary Output Potential with G－Kleinean Coil

inean Roll.

We secondly measure gravitoelectric output potential of this coil with high frequency AC transistorized volt meter, through the switching device as shown in the succeeding figure.

RMS (Root Mean Square) output electric potential in the one electrical direction differs from another as shown in the following pictures.

One example is displayed in the next table with experimental specifications.

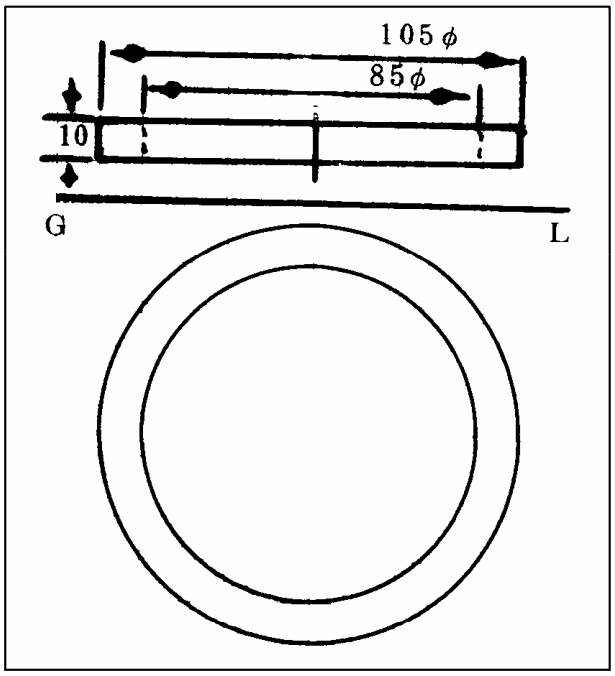

Fig. 52

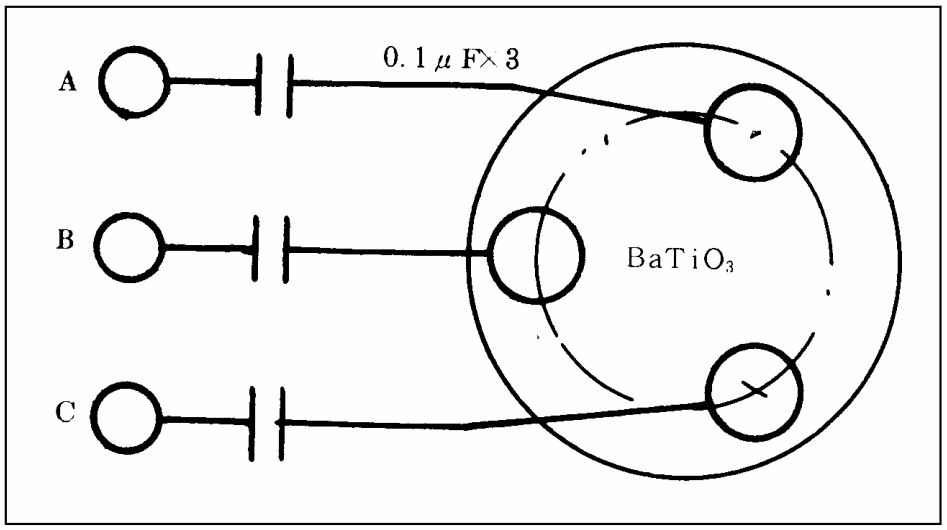

Fig. 53

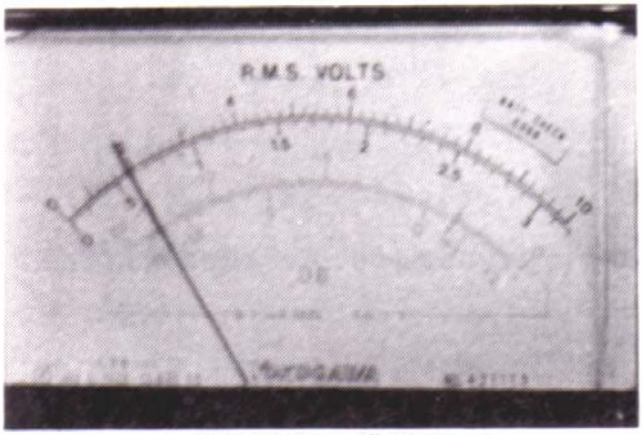

Picture # 24

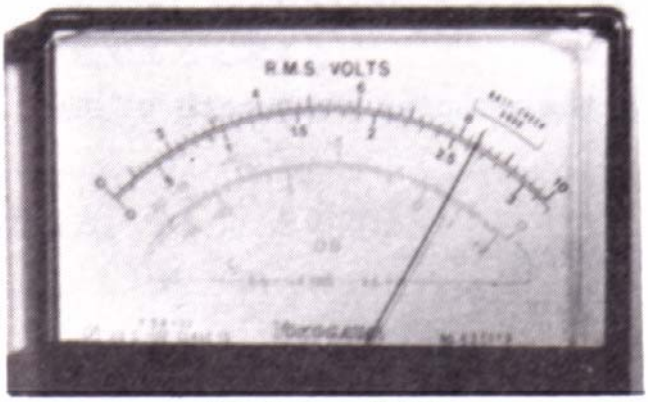

Picture # 25

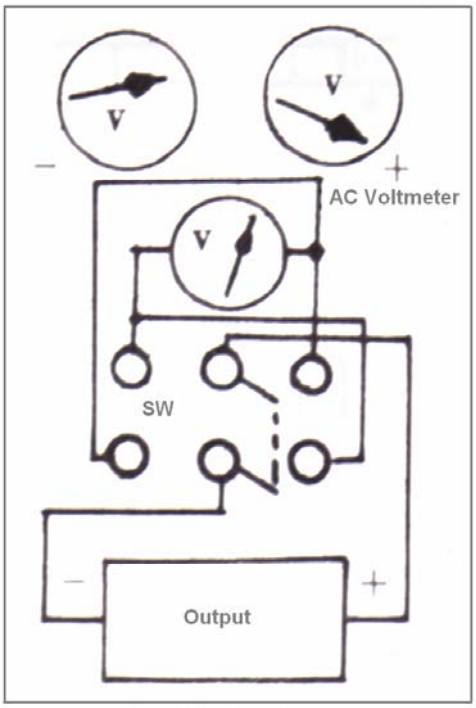

Fig. 54

RMS Output in the one direction	1.9 V
another switching direction	1.6 V
frequency of 3 phases current	2 MHz
3 phases current potential	100 V
Output Coil	20 Kleinean Turns (of vinyl cupper wire)
$BaTiO_3$ Disc	diameter of 40 ㎜
Date	45/20h/18/March/1974

(16-1) Imaginary Output Potential
with G-Kleinean Coil

If we suppose the output potential in the one electrical direction to be

$$\Psi_1 = x + \Psi_0 \, e^{i\omega t},$$

another must be

$$\Psi_2 = -\Psi_1 = -x - \Psi_0 \, e^{i\omega t},$$

owing to the conventional electrodynamics. We easily find the difference of,

$$\Psi_1 - \Psi_2 = 2\,(x + \Psi_0 \, e^{i\omega t}),$$

the RMS value of which is thought to be,

$$\Psi = 2x,$$

but, marvelously, we can not detect with DC meter.

We can not but conclude that x is quite particular.

The author suppose this difference must be that between complex conjugates.

Namely, the former value is the complex conjugate of the latter as

$$\Psi_1 = \Psi_2^{*}$$

We should express the difference to be,

$$\Psi_1 - \Psi_2 = x + \Psi_0 \, e^{i\omega t} - x - \Psi_0 \, e^{-i\omega t}$$
$$= 2\,i\,\Psi_0 \sin\omega t,$$

which is purely imaginary. With reference to the topological characteristics of Kleinean rolled coil is this suggestion quite natural ?

(16-2) Tachyon Oscillator (Revised) (Ceased)

§ 17 Electro – G Induction

(17-1) Increasing Electro-g Induction

In Fig.13, we use single toroidal ferrite core, upon which three divided Kleinean Roll Coils are wound, as in the following Fig.57. The upper coil is Opt. coil, electric potential of which was measured day after day.

We drove three spherical condensers with 2SC42PP (transistorized) three phases current of which has the frequency of about 1.5 MHz. The potential amplitude was 200 V. The Opt. potential increased hour by hour, day after day as g-stress energy flows in the set.

That increasing curve is shown in the following Fig.58. In three months the final potential became 37 volt, compared with the initial of 2 volt.

Fig. 58

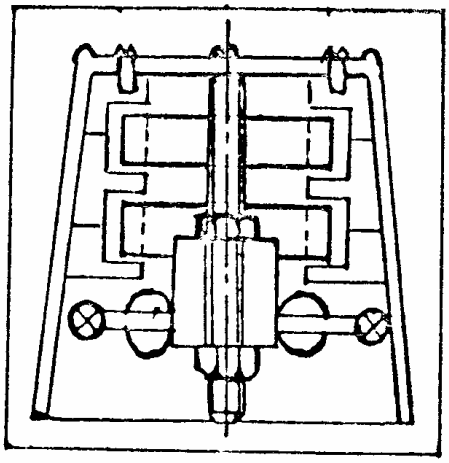

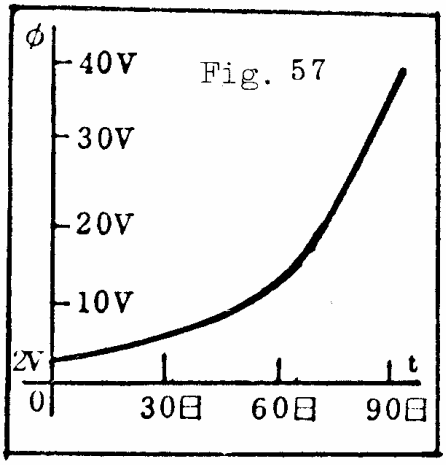

Fig. 57

(17-2) Topological Translation of Möbius Strip into Electronic Circuit

Reverse side of Möbius Strip can be expressed by, as it were, imaginary ground in electronic circuit, because of which that electrical translation is double solenoid.

Fig. 59

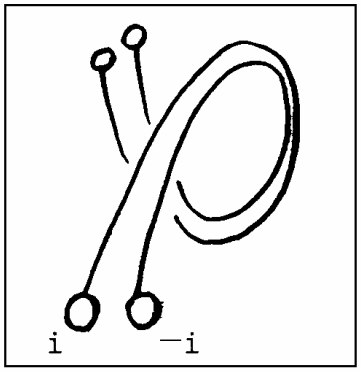

(17−3) Double Solenoid Circuit

One of the examples with Double Solenoid is shown in the succeeding Fig. which is blocking oscillator with double solenoid. Opt. electric potential is 300 V , which is realized by Tachyon fully stored in space-time.

25 turns double coil is used as spherical condenser, as it were.

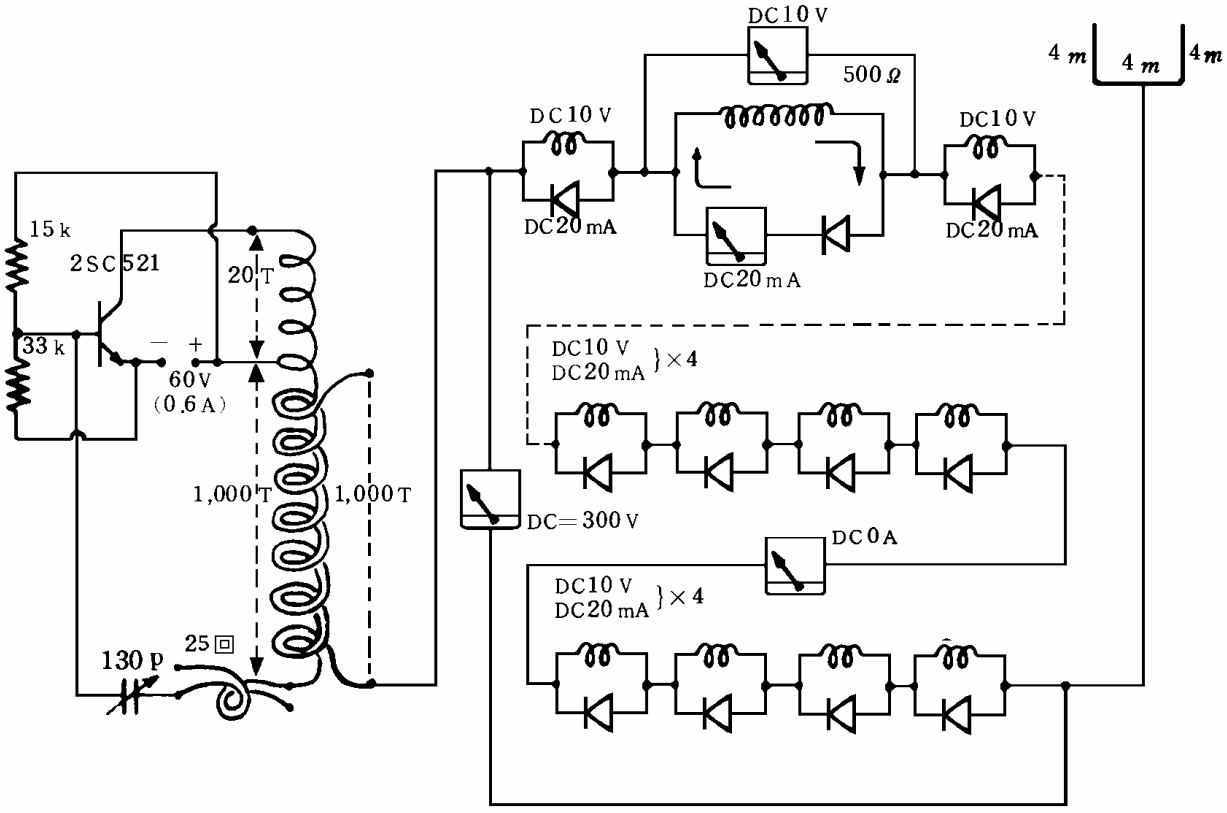

Fig. 60

(17−4) (17−5) (Revised) (Ceased)

§18 Properties of about Tachyon

(18-1) Four Vectors about Tachyon

The square of any four vector of particles forms constant as

$$p^2-(p^0)^2=-(mc)^2, \qquad (18-1)$$

where

$$p^0=mc\frac{dt}{d\tau}$$

and

$$cp^0=W$$

which is called energy.

Naturally, we can form

$$A_x{}^2+A_y{}^2+A_z{}^2-\frac{\varphi^2}{1-\beta^2}=-\varphi^2 \qquad (18-2)$$

to particles, in which φ is electric potential. and in analogy to which we obtain

$$A_x{}^2+A_y{}^2+A_z{}^2-\frac{\varphi^2}{\beta^2-1}=-(i\varphi)^2 \qquad (18-3)$$

to super signal particle.

Of course, A_x, A_y and A_z are spatial components of vector potential. We can call φ rest potential.

Real current j_z is defined by

$$j_z=\frac{e}{c}\cdot\frac{dz}{d\tau}, \qquad (18-4)$$

which naturally leads us to

$$j_t=\frac{e}{c}\cdot c\frac{dt}{d\tau},$$

where $d\tau=\sqrt{1-\beta^2}\,dt$.

Namely we obtain

$$j_t=\frac{e}{\sqrt{1-\beta^2}}, \qquad (18-5)$$

and also

$$jx^2+jy^2+jz^2-jt^2=constant. \qquad (18-6)$$

The principle of four vector is that: the 4th component is relativistically variable (: increasing or decreasing) one, the constant of which gives the right hand side of formulae of this kind.

The constant may easily be found to become

$$e$$

in (18-6).

Moreover we also derive

$$jx^2+jy^2+jz^2-jt^2=-(ie)^2 \qquad (18-7)$$

to tachyon (to, for instance, tachy-electron or that proton).

$$jt=\frac{ie}{\sqrt{1-\beta^2}}=\frac{e}{\sqrt{\beta^2-1}} \qquad (18-8)$$

can be given as real like that W is real (energy) to super signal particle, in G. Feinberg's formula.

These are also Lorentz increase of electric potential and that of charge.

The word of rest charge is given to e. Finally we shall proceed to four vector of acceleration of,

$$\alpha x^2+\alpha y^2+\alpha z^2-\alpha t^2=const. \qquad (18-9)$$

where

$$\alpha_t=\frac{d^2t}{d\tau^2}.$$

We already found:

$$\frac{dt}{d\tau}=\frac{W}{mc^2} \qquad (18-10)$$

because of which we express

$$\frac{d^2t}{d\tau^2}=\frac{1}{mc^2}\cdot\frac{dW}{d\tau}=\frac{1}{mc^2}\cdot\frac{1}{\sqrt{1-\beta^2}}\cdot\frac{dW}{d\tau}$$

$$=\frac{1}{mc^2\sqrt{1-\beta^2}}\cdot S, \qquad (18-11)$$

where

$$S=\frac{dW}{dt}$$

is the so-called power (energy flowing rate), which leads us to

$$mc^2\alpha_t=\frac{S}{\sqrt{1-\beta^2}}\ . \qquad (18-12)$$

In any relativistic case of four vector constant term in the right hand side has been that of 4th (0-th) component.

This conception finally leads us to

$$\alpha x^2+\alpha y^2+\alpha z^2-\left(\frac{S}{mc^2\sqrt{1-\beta^2}}\right)^2=-S^2\ . \qquad (18-13)$$

The 4-th component denotes Lorentz increase of power, where S is rest power (working).

We shall proceed to the case of Tachyon. From (18-13) that notation is easily found to have the form

$$\alpha x^2+\alpha y^2+\alpha z^2-\left(\frac{S}{mc^2\sqrt{\beta^2-1}}\right)^2=S^2\ , \qquad (18-14)$$

by replacing S in the former formula with iS.

We have oversighted the most basic physical quantity of

$$\vec{x}=(x,\ y,\ z,\ ict)\ . \qquad (18-15)$$

The reader will easily find:

$$x^2+y^2+z^2-c^2t^2=-c^2T^2\ , \qquad (18-16)$$

where T is invariant time. This time seems to coincide with Enatsuean invariant one stated in the former chapter (the 3rd one). Especially to Tachyon

$$x^2+y^2+z^2-c^2t^2=c^2T^2\ , \qquad (18-17)$$

replacing T with iT.

(18-2) Kinetic Energy of Tachyon

Total energy of tachyon is given by the familiar form of,

$$W=\frac{\mu c^2}{\sqrt{\beta^2-1}}=\frac{\mu c^2}{\beta}\left(1-\frac{1}{\beta^2}\right)^{-\frac{1}{2}}\left(\beta=\frac{V}{c},\ i\mu=m\right), \tag{18-18}$$

which is developed by Laurent expansion of,

$$=\frac{\mu c^2}{\beta}\left[1+\frac{1}{2}\cdot\frac{1}{\beta^2}+\frac{3}{8}\cdot\frac{1}{\beta^4}+\cdots\cdots\right]$$

$$=\mu c^2\left(\frac{c}{V}\right)+\frac{\mu c^2}{2}\left(\frac{c}{V}\right)^3+\frac{3}{8}\mu c^2\left(\frac{c}{V}\right)^5+\cdots\cdots . \tag{18-19}$$

The first term gives what corresponds with rest energy of real particle, but super signal particle never enjoys such state. It is interpreted to be rest one when one observes tachyon from moving frame at signal velocity.

The second term of,

$$\frac{\mu c^2}{2}\left(\frac{c}{V}\right)^3,$$

is that kinetic energy, which decreases with V at super signal. The remaining terms are corrections to that kinetic energy.

Momentum of tachyon owns the form of,

$$P=\frac{\mu V}{\sqrt{\beta^2-1}}\ , \tag{18-20}$$

which is developed into Laurent series such that,

$$=\mu c+\frac{\mu c}{2}\left(\frac{c}{V}\right)^2+\frac{3}{8}\mu c\left(\frac{c}{V}\right)^4+\cdots\cdots, \tag{18-21}$$

the first term of which,

$$\mu c$$

should be called <fundamental momentum of tachyon>.

The remaining

$$\frac{\mu c}{2}\left(\frac{c}{V}\right)^2+\frac{3}{8}\mu c\left(\frac{c}{V}\right)^4+\cdots\cdots \qquad (18-22)$$

are correction terms.

(18-3) Periodic Chart of Tachyon

Absolute value of, as it were, rest mass of Tachyon of,

$$|i\mu|=m, \qquad (18-22)$$

probably takes discrete value. For instance, proton can arrive super signal when accelerated by g. It takes certain value of μ which corresponds with that mass on the zeroth hyper surface.

Mass formula of periodic chart of elementary particles (table 6) took the form of,

$$m=77.91409\sqrt{\lambda^2-1-s(s+1)}\ (MeV), \qquad (18-23)$$

where λ is called <intrinsic principal quantum number> and what enjoys analytic continuation of eigen value upon ultra spherical harmonics of (referred to chapter 2),

$$\theta_n^L(\cos\theta)=\sin^L\theta\left[\frac{d}{d(\cos\theta)}\right]^L C_{n-1}^1(\cos\theta)\ . \qquad (18-24)$$

A. Z. Dolginov finds that principal quantum number of n enjoys analytic continuation upon the other ultra spherical harmonics of,

$$\theta_n^L(\theta)=\frac{i(ch\theta)^L}{M_L}\left[\frac{d}{d(sh\theta)}\right]^{L+1}\cos(N+1)\left(\theta+\frac{i\pi}{2}\right), \qquad (18-25)$$

where

$$M_L^2=N^2(N^2+1^2)(N^2+2^2)\cdots\cdots\times(N^2+L^2),$$

[referred to section (2-3)]

$$n=iN\ . \qquad (18-26)$$

It is quite natural that <intrinsic principal quantum number> corresponding with (18-26) should be pure imaginary

such that

$$n \to \lambda = i Z \ . \qquad (18-27)$$

Then, tachyon enjoys different eigen state from that in periodic chart of real particles in section 13 . We, therefore. put

$$\lambda = i Z,$$

in mass formula of (18−23).

We easily find that it takes the form of,

$$m = 77.91409\, i\sqrt{Z^2+1+s(s+1)}, \qquad (18-28)$$

which reveals that, as it were, rest mass of tachyon is specified by instrinsic quantum nunrbers, and is pure imaginary.

The N given by A.Z.Dolginov of (18−25) is real and serial. Then, we naturally regard Z in (18−27) as real serial number. The author, however, propose that super signal proton (tachy-proton) can be labelled by letting it analytically continue onto 12 iэ (eigen state on the first hyper surface), and that all the real particles can be done similarly.

A super signal particle with

$$Z = 12 \ ,$$

and

$$s = \frac{1}{2},$$

is present on the first hyper surface (neighbouring hyper surface) when we take up (18−28) as formula of periodic chart of tachyon. This particle should be called tachy-proton (the first hyper surface entity analytically continued from the zeroth hyper surface; ordinary physical space).

Then, we finally obtain

$$m = 939.4105\, i\ MeV, \qquad (18-29)$$

from mass formula of (18−28).

Proton owns mass of,

$$m = 938.256\, MeV, \qquad (18-30)$$

than which absolute value of (18−29) is a little larger.

Most of scientists understand that they must not simply

conclude imaginary mass of tachy-proton to be,

$$m' = 938.256\,i \quad \text{MeV}.$$

They also know how much different it is from m′ with (18－29). Generally speaking, absolute value of tachyon's imaginary mass is a little larger than corresponding real particle on the zeroth hyper surface.

We finally derive the following table by making calculations to the former periodic chart of real particles.

TABLE 14

eigen state	real particles		tachyons
2 i Э	μ	105.659	186.830 i
2 i Ж	$\pi^{\pm}$ π^{0}	139.578 134.975	174.224 i
$\frac{13}{2}$ i Ж	$K^{\pm}$	493.82	512.402 i
12 i Э	P n	938.256 939.550	939.410 i
$\frac{29}{2}$ i Э	λ^{0}	1,115.6	1,134,468 i
$\frac{31}{2}$ i Э	Σ^{+} Σ^{0} Σ^{-}	1,189.4 1,192.5 1,197.3	1,212,032 i
17 i Э	ξ^{-} ξ^{0}	1,321 1,315	1,328,552 i
$\frac{43}{2}$ i Я	Ω^{-}	1,672	1,675.149 i

For instance, 2 i Э means analytic continuation of eigon state of 2 onto the first hyper surface.

§ 19 Time Reversing Oscillator (Revised/Ceased)

§ 20 Imaginary Distance (Ceased)

§21 Signal Number

(21-1) Signal Number

Signal velocity is widely known to be,

$$c = 2.997929 \times 10^{10} \ {}^{cm}/_{sec}$$

which happens to be expressed by the transcendental number of,

$$2\pi \log 3 = 2.9978458 ,$$

the 3 of which seems to be planetary number of earth.

If a particle attains 99 % of signal velocity;

$$V = 0.99\,c , \qquad (21-3)$$

Lorentz factor happens to become integer of,

$$\begin{aligned} r\,(0.99\,c) &= \frac{1}{\sqrt{1-\left(\frac{0.99\,c}{c}\right)^2}} \\ &= 7.088815 \\ &\doteqdot 7. \end{aligned} \qquad (21-4)$$

We shall discuss physical meaning of this characteristic value of V elsewhere.

(21-2) Cross Word Transcendental Number

Two transcendental number are present

$$\left.\begin{aligned} e &= 2.71828 \\ \pi &= 3.14159 \end{aligned}\right\} \qquad (21-5)$$

$$(\,e < 2\pi \log 3 < \pi \ , \quad e \approx 2\pi \log 3 \approx \pi \approx 3\,)$$

one of which is a little smaller, while the other of which a little larger. These transcendental numbers forms the following relation:

$$\begin{aligned} e - 2\pi \log 3 + \pi &= 2.88202 \ (2\pi \log 3) \\ -e + 2\pi \log 3 + \pi &= 3.40116 \ (\pi) \\ e + 2\pi \log 3 - \pi &= 2.54906 \ (e) \end{aligned} \qquad (21-6)$$

Three transcendental numbers in parenthesises means that numerical values on the right hand side nearly equal respectively.

Sum of transcendental numbers seems to produce transcendental ones, because of which we put these into parenthesises.

In recourse to characteristic form of (21-6) we call these <cross word transcendental number>, which seems to play important roles when one performs analysis of fundamental physical relations.

We shall discuss elsewhere.

(21-3) Signal Velocity on Other Planets

As signal number of,

$$C_0 = 2\pi \log 3 \times 10^{10} \ {}^{cm}/_{sec}$$
$$= 2.9978458 \times 10^{10} \ {}^{cm}/_{sec}$$

is nothing but,

$$= 2\pi \log (\text{planet number}) \times 10^{10} \ {}^{cm}/_{sec} \quad (21-7)$$

that upon Mars as the 4th planet would be,

$$C_4 = 2\pi \log 4 \times 10^{10} \ {}^{cm}/_{sec}$$
$$= 3.7828544 \times 10^{10} \ {}^{cm}/_{sec} \quad (21-8)$$

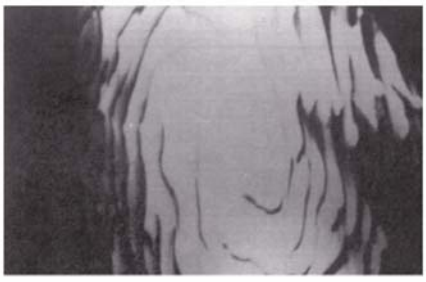

Photo 34

(21-3) Signal Velocity on Other Planets

In <Special Relativity> invariant is the signal velocity throughout entire space-time, but Einsteinean <General Relativity> maintains that it is variable throughout that space time.

Namely, it starts from the invariance of,

$$ds^2 = g_{11}\,dx^2 + g_{12}\,dx\,dy + g_{13}\,dx\,dz + g_{14}\,dx\,du + \cdots\cdots + g_{44}\,du^2 , \qquad (21-9)$$

where s stands for geodetic, and

$$u = ict \ ,$$

g^{ik} being functions depending upon space-time co-ordinate of (x, y, z, u).

In Minkowskean space-time blonging to <Special Relativity> Einstein defines

$$g_{44} = -1 \ ,$$

accordingly

$$ds^2 = dx^2 + dy^2 + dz^2 - c^2\,dt^2 , \qquad (21-10)$$

which leads us to that g_{00} becomes square of signal velocity.

If g_{44} is a function depending upon space-time co-ordinate, cannot signal number be that of space-time co-ordinate? Then, it becomes variable throughout entire space-time. That is to say, one finds that the formula of (21-8) is general relativist

With reference to (21-7) we obtain the following table, calculating signal velocities from Venus to the 10th planet.

Table 15

planet	signal velocity	signal number
Venus	1.8914272×10 cm/sec	$2\pi \log 2$
Earth	2.9978458 〃	$2\pi \log 3$
Mars	3.7828544 〃	$2\pi \log 4$
(Lucifer	4.3917579 〃	$2\pi \log 5$)
Jupiter	4.8892668 〃	$2\pi \log 6$
Saturn	5.3099072 〃	$2\pi \log 7$
Uranus	5.6742817 〃	$2\pi \log 8$
Neptune	5.9956854 〃	$2\pi \log 9$
Pluto	6.2831852 〃	$2\pi \log 10$
(The 10th Planet	6.543265 〃	$2\pi \log 11$)

§22 Center of Wave

Mass is called <wavicle> which means that it is a particle, and also wave on the other hand.

Both center of mass and of wave are, therefore, present.

For instance, a swing moves without external force. It has been interpreted to move by transition of center of mass, but slip of center of mass and that of wave provoke a motion without external force.

Real particle is absorbing and emitting tachyons. One of the expressions of microscopic motion is given by imaginary quantities.

This quantity periodically changes such that,

$$m = iW\sin(\omega t+\alpha), \tag{22-1}$$

when center of wave moves, while center of mass similarly does:

$$M = \mu\sin\omega t \tag{22-2}$$

Resultant quantity owns the form of,

$$\nu = \mu\sin\omega t + iW\sin(\omega t+\alpha), \tag{22-3}$$

root mean square of which becomes

$$\bar{\nu}^2 = \frac{1}{T}\int_0^T \nu^2\,dt \tag{22-4}$$

$$= \int_0^T \frac{1}{T}\left[\mu^2\sin^2\omega t + 2i\mu W\sin\omega t\,\sin(\omega t+\alpha) - W^2\sin^2(\omega t+\alpha)\right]dt$$

$$= \frac{1}{2}(\mu^2 - W^2 + i\mu W\cos\alpha). \tag{22-5}$$

Taking square root of (22-5), we obtain

$$\bar{\nu} = \sqrt{\frac{\mu^2 - W^2 + i\mu W\cos\alpha}{2}}, \tag{22-6}$$

$$(0<\mu,\quad 0<W)$$

which reduces to

$$\bar{\nu} = \sqrt{\frac{\mu^2 - W^2}{2}}, \tag{22-7}$$

when

$$\alpha = \frac{\pi}{2} \ .$$

If $\mu < W$

(22－7) leads us to

$$\bar{\nu} = i\sqrt{\frac{W^2-\mu^2}{2}} \ . \qquad (22-8)$$

Inertia becomes pure imaginary, Then, test piece loses weight, and rests on balancer. Weight namely vanishes when it enjoys periodic motion with slip of center of mass and wave.

To any value of α we have general solution : putting

$$\left.\begin{aligned} \frac{\mu^2-W^2}{2} &= A, \\ \frac{(\cos\alpha)\mu W}{2} &= B \end{aligned}\right\} \qquad (22-9)$$

$$\sqrt{A+Bi} = x+yi \ , \qquad (22-10)$$

we find :

$$\left.\begin{aligned} x^2-y^2 &= A \\ 2xy &= B \end{aligned}\right\}, \qquad (22-11)$$

and that

$$\left.\begin{aligned} (x^2+y^2)^2 &= A^2+B^2 \ , \\ \therefore \quad x^2+y^2 &= \sqrt{A^2+B^2} \\ x^2y^2 &= \frac{B^2}{4} \end{aligned}\right\} \qquad (22-12)$$

from which parameter Eqn. of

$$t^2 - \sqrt{A^2+B^2}\,t + \frac{B^2}{4} = 0, \qquad (22-13)$$

appears. Then,

$$t = \frac{\sqrt{A^2+B^2} \pm |A|}{2} \ ,$$

is obtained along with

$$\left.\begin{aligned} x &= \pm\sqrt{\frac{\sqrt{A^2+B^2}+|A|}{2}} \\ y &= \pm\sqrt{\frac{\sqrt{A^2+B^2}-|A|}{2}} \end{aligned}\right\}, \qquad (22-14)$$

four combinations of sign are possible .

One finds different solution to

$$0 \leqq \alpha \leqq \frac{\pi}{2},$$

and

$$\frac{\pi}{2} < \alpha < \frac{3}{2}\pi \ ,$$

respectively, since

$$xy = \frac{|B|}{2} = \begin{cases} \dfrac{B}{2} & (0 \leqq B) \\ -\dfrac{B}{2} & (B < 0) \end{cases},$$

holds.

For instance, one obtains

$$\sqrt{A+Bi} = \frac{1}{2}\left\{\sqrt{\sqrt{(\mu^2-W^2)^2+\mu^2W^2\cos^2\alpha}+|\mu^2-W^2|}\right.$$
$$\left.+i\sqrt{\sqrt{(\mu^2-W^2)^2+\mu^2W^2\cos^2\alpha}-|\mu^2-W^2|}\right\},$$

in case of,

$$0 \leqq \alpha \leqq \frac{\pi}{2} \ (0 \leqq B) \ .$$

After some arithmetics the solution will be found in case of $\frac{\pi}{2} < \alpha < \frac{3}{2}\pi$.

Concluding Remarks

Just after the revised edition, there was a remarkable dovelopement of the theory.

We came to realize **Möbius coils** and **Kleinean coil**. We are publishing the fifth and revised edition, for one of the reasons of which many Brothers and Sisters had recently requested this title. For the new readers we remark that **Levity Disc** of **Mr. John Roy Robert Searl** is a realization of <**Inverse-G Engine**> stated in the 9th chapter. A little difference is that it becomes negatively energied state with a rotor. while our <**Inverse-G Engine**> does with a rotary electric field. There is no mechanical revolution. **Levity Disc** was at such a high imaginary electric potential of **Ten trillion i volt** that could have never been realized in the realm of **accelerator physics** or electrical engineering. The output power of **a thousand billion~ten trillion** horse power could have never been. Even **Saturn Rocket of NASA** could have never attained. Even existcnce of **inverse gravitation** has a significant meaning in Physics. We can find that **the late A. Einstein** tacitly predicted. **P. A. M. Dirac** made negatively energied state of unoccupied own a characteristic meaning.

By this title and the deed of Mr. Searl's **unoccupied state of positive energy** and **occupied state of negative energy** also become physically meaningful (See the table #1 in the 9 th chapter). The author expresses a scincere gratitude to **Mr. Lars-Uno Bernhardsson** in Sweden for his first information, and does to **Mr. William T. Sherwood** for his latest information when he called on Mr. Searl, and for his wide introduction in the scientific realm of U. S. A. He also thanks **Mrs. Alice B. Pomeroy** for her international introduction.

In Japan, many members of The Association of Aeronautical

and Space Sciences, and the Physical Society of Japan, the readers of <SPACE VEHICLE> did him a favour to appreciately read, for which he thanks very much, and is presenting a sequential reports.

<Mobius Coil Element> and <Kleinean Bottle> are inheritances of classical topology. They contribute to the new machines, which is interesting.

On the other hand scientists became to much be interested in Super Signal Moving Matter since Dr.G.Feinberg presented F Faster-Than-Light Particles of tachyons (ref 73). We have used real super signal mass to Super Signal Lorentz Transformation in the 6 th chapter which may appreciately be compared with imaginary super signal mass of G.Feinberg's.

This conception is the sequential of the late A.Einstein's but it contains some latent ones, which was indebted to Prof. Shoji MAEBARA of Department of Pure and Applied Mathematics, Tokyo University of Education, who is one of the authorities of Relativity.

We have called <Anti-atomic Motor> in the first edition <Inverse Atomic Engine> in this edition. As explained in the second edition, anti-particles have positive energy, while negative energy is inverse state of particles and anti-particles.

Just by these conceptions we surely recognize that negatively energied state has quite deeper meaning, and that inverse atomic engine can be realized without dangers of pair annhilation.

After we published the revised edition, the author appeared on TV, which was supported by youth throughout the country. He thanks on this section. He also expresses nostalgic thanks to Mr. Takumi SHIBANO (Rei of KOZUMI=Cosmic Ray) who is a pioneer of G-field engine. He is also indebted to Mr. Akiharu SHIGEMATSU who gave the strongest support, and to Mr. Sa-

daaki NISHIDA for his valuable kindness.

He also does scincere gratitude to Mr. Masakatsu OKI who fabricated educational model of Kleinean bottle. This technology of mold belongs to the most difficult.

Also in the earlier stage, an old person in Kyohto, a youth in Settsu City and a person in Suita City financially supported him, which are recorded in his internal empire of his heart. He pays a scincere respect to Mr. Hachiroh KUBOTA and a college teacher in Zama City who continuelly encouraged him, and to Toshihiko ICHIMURA (physicist), and finally to Mr. T of electronics company for his fabrication of three phases generator.

Would you understand that the perticles in the 13th chapter is the simplest classification? Could you think that <Decay of Lucifer (the fifth planet)> and Prediction of the Tenth Planet are magnificent analysis?

The 4th edition states several experimental results, too, by which the readers will understand physical meaning of Kleinean Roll.

The 5th edition also does many experimental results, for which the author is indebted to the late Kohji TAKAMURA and Mr. W. P.

The last section states Time Reversing Oscillator, which was fabricated by W. P. and no earth people owns yet.

The author emphasizes that he thanks Masayuki JINBO and Miki NISHINA for their financial support throughout the construction of G-research Laboratory (The right picture shows this laboratory).

Swedish Royal Academy of Science in which Nobel Prize Committee is present, purchased 14 copies of this title.

Notice : Would you do us a favour to enclose two or more International Reply Coupons when you communicate G-research Laboratory?

☆ Just after the 7th edition the author succeeded in the experiment of <Loss of Weight>, which the 8th edition includes.

The author makes use of Moebius Wound. About a century has passed since Moebius Strip appeared. Tachyon plays an important role, the theory of which was proposed in 1967, and about 20 years have passed. The readers will deeply be impressed at realization of inverse (anti-) G in their long history.

Photo 29

参　考　文　献

1) 梅沢博臣，場の量子論特論，岩波（1959）。

2) 梅沢博臣，量子力学，裳華房（1959）171。

3) L. Gegenbauer , Wiener Sitzungsberichte , 102（1893）942。

4) ＝2）172。

5) 犬井鉄郎，偏微分方程式の応用Ⅰ，岩波（1958）64。

6) 鵜戸口英善，弾性学，共立出版（1964）3。

7) S. SEIKE, Ind. J. Phys. Vol. 41. No 2（1967）121。

8) ＝6）170。

9) 矢野健太郎，相対性理論，至文堂（1964）47。

10) 富山小太郎，相対性理論，岩波（1958）17。

11) ＝9）。 12）＝9）86。 13）＝10）46。

14) A. Einstein, The Meaning of Relativity, Methuen & Co. Ltd.（1960）42。

15) 清家新一，テレパシ No. 9（1969）19。

16) ＝10）37。 17）＝10）26。

18) 清家新一，第11回宇宙科学技術講演会抄録（1968）44。

19) 清家新一，日本物理学1965年秋季年会抄録，No 2（1965）339。

20) ＝14）43。 21）＝9）53。

22) 遠木幸成，関数論，共立出版（1961）87。

23) 山内恭彦，回転群及び対称群の応用，岩波（1958）27。

24) A. Z. Dolginov, JETP, 30 No 4（1956）746。

25) ＝22）6。

26) S. C. Frautschi, Regge Poles and S — Matrix Theory, Benjamin (Frontiers in Phyics)（1963）99。

27) 清家新一，第16回応用力学連合講演会抄録，第1部（1966）3。

28) 清家新一，第13回材料研究連合講演会抄録（1969）No 327。

29) 梅沢博臣，場の量子論特論，岩波（1959）21。

30) ＝40）77。

31) V. Fock, Z. für Physik, 98（1935）145。

32) ＝10) 45。
33) H. Enatsu, Prog. Theor. Phys. 30 (1963) 236。
34) O. Hara and et al., Prog. Theor. Phys. 12 (1954) 177。
35) W.G.V. Rosser, An Introduction to the Theory of Relativity, London Butterworth (1964) 335。
36) L. Landau & E. Lipschitz, Phys. Z. Sowjet U. 8 (1935) 153。
37) H. Yamasaki, Prog. Theor. Phys. 36 №1 (1966) 72。
38) H.A. Kramers, Physica, 1 (1934) 825。
39) P.A.M. Dirac, The Principles of Quantum Mechanics, Oxford Uni. Press (1958) 261。
40) L. Landau, ТЕОЛЯ ПОЛЯ, МОСКВА (1962) 377。
41) H. Enatsu, Prog. Theor. Phys. 30 (1963) 236。
42) 山内恭彦, 一般力学, 岩波 (1965) 24。
43) 久賀道郎, スミルフ高等数学教程, II巻, №2, 共立出版 (1959) 336。
44) ＝10) 66。
45) G.H. Jonker et al., Philips Tech. Rew. 18 №6 (1956) 145。
46) ＝59) 216。
47) ＝39) 23。
48) 強磁性体の物理, 裳華房 (1963) 43。
49) 城憲三, 応用数学解析, 養賢堂 (1961) 322。
50) ＝49) 357。 51) ＝39) 60。
52) 室賀三郎, 電算機入門, 共立出版 (1961) 56。
53) 梅沢博臣, 場の量子論特論, 岩波書店 (1959) 57。
54) 清家新一, テレパシ, Vol. 3 №12 (1969)
55) 猪木正文, 宇宙時代の常識, 講談社 (1968) 234。
56) 清家新一, テレパシ, Vol. 3 №10 (1969) 25。
57) 清家新一, 第19回応用力学連合講演会抄録 (1969) 137。
58) 野上茂吉郎, 東大に於ける教談 (1957)。
59) 高橋秀俊, 電磁気学, 裳華房 (1960) 253。
60) ＝9) 53。

Appendix (A) Mathematics and Physics

1. Transformations of Four Dimensional Co-ordinate.

(1-1) Four Dimensional Curvilinear Co-ordinate

If we express four dimensional polar co-ordinate by

$x^1 = x = r\sin\theta\sin\varphi\cos\Psi$, $x^2 = y = r\sin\theta\sin\varphi\sin\Psi$, $x^3 = z = r\sin\theta\cos\varphi$, $x^4 = u = r\cos\theta$,

with $0 \leqq r < \infty$, $0 \leqq \theta \leqq \pi$, $0 \leqq \varphi \leqq \pi$, and $0 \leqq \Psi \leqq 2\pi$,

line elements of that co-ordinate become

$ds^1 = dr$ (in r-direction), $ds^2 = r\,d\theta$ (in θ-direction),

$ds^3 = r\sin\theta\,d\varphi$ (in φ-direction), $ds^4 = r\sin\theta\sin\varphi\,d\Psi$ (in Ψ-direction).

When we denote the transformations a^{jk}_{mn} among $dx^j dx^k$ and $ds^m ds^n$ with

$dx^j dx^k = a^{jk}_{mn}\,ds^m ds^n$ (contracted over m and n),

and

$$a^{jk}_{mn} = \frac{\partial x^j}{\partial s_m}\cdot\frac{\partial x^k}{\partial s_n} + \frac{\partial x^k}{\partial s_m}\cdot\frac{\partial x^j}{\partial s_n},$$

we obtain the transformation matrix of,

$(a^{jk}_{mn}) =$

$$\left\{\begin{array}{llllll}
\cos\theta\cos 2\varphi\sin\Psi, & \sin\theta\cos 2\varphi\sin\Psi, & \cos\theta\sin\theta\sin 2\varphi\sin\Psi, & \sin\theta\cos\varphi\cos\Psi, & \cos\theta\cos\varphi\cos\Psi, & -\sin\varphi\cos\Psi,\\
\cos\theta\cos 2\varphi\cos\Psi, & \sin\theta\cos 2\varphi\cos\Psi, & \cos\theta\sin\theta\sin 2\varphi\cos\Psi, & -\sin\theta\cos\varphi\sin\Psi, & -\cos\theta\cos\varphi\sin\Psi, & \sin\varphi\sin\Psi,\\
\cos\theta\sin 2\varphi\cos\Psi\sin\Psi, & \sin\theta\sin 2\varphi\cos\Psi\sin\Psi, & \sin 2\theta\sin 2\varphi\cos\Psi\sin\Psi, & \sin\theta\sin\varphi\cos 2\Psi, & \cos\theta\sin\varphi\cos 2\Psi, & \sin\theta\cos\varphi\cos 2\Psi\\
-\sin\theta\cos\varphi\cos\Psi, & \cos\theta\cos\varphi\cos\Psi, & \cos 2\theta\sin\varphi\cos\Psi, & -\cos\theta\sin\Psi, & \sin\theta\sin\Psi, & 0,\\
-\sin\theta\cos\varphi\sin\Psi, & \cos\theta\cos\varphi\sin\Psi, & \cos 2\theta\sin\varphi\sin\Psi, & \cos\theta\cos\Psi, & -\sin\theta\cos\Psi, & 0,\\
-\sin\theta\sin\varphi, & -\cos\theta\sin\varphi, & \cos 2\theta\sin\Psi, & 0, & 0, & 0.
\end{array}\right\}$$

where the suffix of the second rank tensor runs like (23, 31, 12, 41, 42, 43). The same notice is asked in the succeeding parts.

(1-2) Four Dimensional Volume Elements

$$d\tau = r^3 \sin^2\theta \sin\varphi \, dr d\theta d\varphi d\Psi ,$$

(in Euclidean space-time $\times$ $0 \leqq r < \infty$, $0 \leqq \theta \leqq \pi$)

$$d\tau = r^3 \mathrm{sh}^2\theta \sin\varphi \, dr d\theta d\varphi d\Psi$$

(in Minkowskean space-time, $0 \leqq r < \infty$, $-\infty < \theta < \infty$)

(1-3) Hyper Surface Segment

(3-a) Polar co-ordinate

$$dydzdu = r^3 \sin^3\theta \sin^2\varphi \cos\Psi \, d\theta d\varphi d\Psi ,$$
$$dzdudx = r^3 \sin^3\theta \sin^2\varphi \sin\Psi \, d\theta d\varphi d\Psi ,$$
$$dudxdy = r^3 \sin^3\theta \sin\varphi\cos\varphi \, d\theta d\varphi d\Psi ,$$
$$dxdydz = r^3 \sin^2\theta \cos\theta \sin\varphi \, d\theta d\varphi d\Psi ,$$

(in Euclidean space-time)

$\theta \to i\theta$ $(-\infty < \theta < \infty)$ in Minkowskean space-time.

(3-b) Cylindrical co-ordinate.

$$x = r\sin\theta\cos\Psi , \qquad z = z ,$$
$$y = r\sin\theta\sin\Psi , \qquad u = r\cos\theta ,$$
$$dS_{r\theta z} = dS_{r\theta\Psi} = dS_{rz\Psi} = 0 , \qquad dS_{\theta z\Psi} = r^2 \sin\theta \, d\theta d\Psi dz ,$$

on a hyper sphere of,

$$r = a ,$$

in Euclidean space-time.

$\theta \to i\theta$ $(-\infty < \theta < \infty)$ in Minkowskean space-time.

(3-c) Three Dimensional Polar co-ordinate.

$$dydzdu = r^2 \sin^2\varphi \cos\Psi \, d\varphi d\Psi du ,$$
$$dzdudx = r^2 \sin^2\varphi \sin\Psi \, d\varphi d\Psi du ,$$
$$dudxdy = r^2 \sin\varphi\cos\varphi \, d\varphi d\Psi du ,$$
$$dxdydz = 0 ,$$

with

$$x = r\sin\varphi\cos\Psi , \qquad z = r\cos\varphi ,$$
$$y = r\sin\varphi\sin\Psi , \qquad u = u$$

(3-d) Polar co-ordinate on a hyper sphere of $r = a$,

$$dS_{r\theta\Psi} = dS_{r\theta\varphi} = dS_{r\varphi\Psi} = 0 ,$$
$$dS_{\theta\varphi\Psi} = r^3 \sin^2\theta \sin\varphi \, d\theta \, d\varphi \, d\Psi .$$

(1−4) Four Dimensional Jacobian and Fransformations among Derivatives.

Four dimensional Jacobian to polar co-ordinate

$$\beta = \frac{\partial(r, \theta, \varphi, \Psi)}{\partial(x^1, x^2, x^3, x^4)} = \frac{\partial(r, \theta, \varphi, \Psi)}{\partial(x, y, z, u)} =$$

$$\begin{pmatrix} \sin\theta\sin\varphi\cos\Psi , & \frac{\cos\theta\sin\varphi\cos\Psi}{r} , & \frac{\cos\varphi\cos\Psi}{r\sin\theta} , & -\frac{\sin\Psi}{r\sin\theta\sin\varphi} , \\ \sin\theta\sin\varphi\sin\Psi , & \frac{\cos\theta\sin\varphi\sin\Psi}{r} , & \frac{\cos\varphi\sin\Psi}{r\sin\theta} , & -\frac{\cos\Psi}{r\sin\theta\sin\varphi} , \\ \sin\theta\cos\varphi , & \cos\theta\cos\varphi / r , & -\sin\varphi / r\sin\theta , & 0 , \\ \cos\theta , & -\sin\theta / r , & 0 , & 0 , \end{pmatrix}$$

$$\alpha = \frac{\partial(x^1, x^2, x^3, x^4)}{\partial(r, \theta, \varphi, \Psi)} = \frac{\partial(x, y, z, u)}{\partial(r, \theta, \varphi, \Psi)} =$$

$$\begin{pmatrix} \sin\theta\sin\varphi\cos\Psi , & \sin\theta\sin\varphi\sin\Psi , & \sin\theta\cos\varphi , & \cos\theta \\ r\sin\theta\sin\varphi\cos\Psi , & r\cos\theta\sin\varphi\sin\Psi , & r\cos\theta\cos\varphi , & -r\sin\theta \\ r\sin\theta\cos\varphi\cos\Psi , & r\sin\theta\cos\varphi\sin\Psi , & -r\sin\theta\sin\varphi , & 0 \\ -r\sin\theta\sin\varphi\sin\Psi , & r\sin\theta\sin\varphi\cos\Psi , & 0 , & 0 \end{pmatrix}$$

Derivatives transform such that ;

$$\beta \begin{pmatrix} \frac{\partial}{\partial r} \\ \frac{\partial}{\partial\theta} \\ \frac{\partial}{\partial\varphi} \\ \frac{\partial}{\partial\Psi} \end{pmatrix} = \begin{pmatrix} \partial_1 \\ \partial_2 \\ \partial_3 \\ \partial_4 \end{pmatrix}$$

(1−5) Surface Segments on Hyper Sphere.

$$dS_{r\theta} = dS_{\psi r} = dS_{r\varphi} = 0, \qquad dS_{\theta\varphi} = a^2 \sin\theta \, d\theta \, d\varphi,$$
$$dS_{\varphi\psi} = a^2 \sin^2\theta \sin\varphi \, d\varphi d\psi, \qquad dS_{\psi\theta} = a^2 \sin\theta \sin\varphi \, d\theta \, d\psi,$$

on a hyper sphere of $r = a$.

2. Elementary Solutions to Multi-Harmonic Equation.

(2-A) Bi-Harmonic Equation.

$$\varphi = Ar\psi \sin\psi,$$

to $$\left(\frac{\partial^2}{\partial x^2} + \frac{\partial^2}{\partial y^2}\right)^2 \varphi = 0, \qquad \text{with} \quad \begin{cases} x = r\cos\psi \\ y = r\sin\psi, \end{cases}$$

(2-B) Tri-Harmonic Equation

$$\varphi^j = Ar^3$$

to $$\Delta^3 \varphi^j = \left(\frac{\partial^2}{\partial x^2} + \frac{\partial^2}{\partial y^2} + \frac{\partial^2}{\partial z^2}\right)^3 \varphi^j = 0,$$

with $$r^2 = x^2 + y^2 + z^2,$$

(2-C) Tetra-Harmonic Equation

(C-1) which depends upon time.

$$\varphi^{jk} = Ar^4 \ln r,$$

to $$\Box^4 \varphi^{jk} = \left(\frac{\partial^2}{\partial x^2} + \frac{\partial^2}{\partial y^2} + \frac{\partial^2}{\partial z^2} + \frac{\partial^2}{\partial u^2}\right)^4 \varphi^{jk} = 0,$$

along with $$r^2 = x^2 + y^2 + z^2 + u^2,$$

(C-2) which is static.

$$\varphi^{jk} = AR^5,$$

to $$\Delta^4 \varphi^{jk} = \left(\frac{\partial^2}{\partial x^2} + \frac{\partial^2}{\partial y^2} + \frac{\partial^2}{\partial z^2}\right)^4 \varphi^{jk} = 0,$$

with $$R^2 = x^2 + y^2 + z^2,$$

in all the case of which the constant A is normalized owing to boundary conditions.

3. Lorentz Transformarions

(3—A) Four Vector (A^1, A^2, A^3, A^4)

(A-1) Infra Signal :

$$'A^1 = \frac{A^1 + i\beta A^4}{\sqrt{1-(\frac{V}{C})^2}}, \quad 'A^2 = A^2, \quad 'A^3 = A^3, \quad 'A^4 = \frac{A^4 - \frac{iV}{C}A^1}{\sqrt{1-(\frac{V}{C})^2}}.$$

Examples are vector potential $(A^1, A^2, A^3, A^4 = i\varphi)$, spin potential $(\varphi^1, \varphi^2, \varphi^3, \varphi^4)$, space-time co-ordinate $(x^1, x^2, x^3, x^4 = ict)$ and derivatives $(\partial_1, \partial_2, \partial_3, \partial_4)$.

(3—B) Electromagnetic Field

$$'H_x = H_x$$

$$'H_y = \frac{H_y + \beta E_z}{\sqrt{1-\beta^2}}, \qquad 'H_z = \frac{H_z - \beta E_y}{\sqrt{1-\beta^2}},$$

$$'E_x = E_x,$$

$$'E_y = \frac{E_y - \beta H_z}{\sqrt{1-\beta^2}}, \qquad 'E_z = \frac{E_z + \beta H_y}{\sqrt{1-\beta^2}}.$$

(A-2) Super Signal (on the first hyper surface. $c < v$)

$$'A^1 = \frac{A^1 + i\frac{C}{V}A^4}{\sqrt{1-(\frac{C}{V})^2}}, \quad 'A^2 = A^2, \quad 'A^3 = A^3, \quad 'A^4 = \frac{A^4 - i\frac{C}{V}A^1}{\sqrt{1-(\frac{C}{V})^2}}.$$

(3—C) Magnetization of I and Electric Polarization of P.

$$'I_x = I_x,$$

$$'I_y = \frac{I_y + \beta P_z}{\sqrt{1-\beta^2}}, \qquad 'I_z = \frac{I_z - \beta P_y}{\sqrt{1-\beta^2}},$$

$$'P_x = P_x,$$

$$'P_y = \frac{P_y - \beta I_z}{\sqrt{1-\beta^2}}, \qquad 'P_z = \frac{P_z + \beta I_y}{\sqrt{1-\beta^2}},$$

(3—D) Kelvinean Temparature $T' = \frac{T}{\sqrt{1-\beta^2}}$.

(3—E) Quantity of Heat $Q' = Q/\sqrt{1-\beta^2}$.

(3—F) Entropy $S' = S$.

(3—G) Impedance,

Inductance : $L' = \frac{\gamma}{1+\beta^2}\left(L + \frac{\beta^2}{c_0}\right)$,

Capacitance : $\frac{1}{c_0'} = \frac{\gamma}{1+\beta^2}\left(\frac{1}{c_0} + \beta^2 L\right)$,

Resistance : $R' = R$,

where they are defined per unit length of transmission line, which you will please see (6-2), γ being Lorentz factor of $\gamma = \frac{1}{\sqrt{1-\beta^2}}$.

(3—H) Six Angular Momentum

$$Ж_x' = Ж_x,$$

$$Ж_y' = \frac{Ж_y + \beta Я_z}{\sqrt{1-\beta^2}}, \qquad Ж_z' = \frac{Ж_z - \beta Я_y}{\sqrt{1-\beta^2}},$$

$$Я_x' = Я_x,$$

$$Я_y' = \frac{Я_y - \beta Ж_z}{\sqrt{1-\beta^2}}, \qquad Я_z' = \frac{Я_z + \beta Ж_y}{\sqrt{1-\beta^2}},$$

which you will please see (1-13).

(3—I) Six Bending Moment

$$n_x' = n_x,$$

$$n_y' = \frac{n_y - \beta m_z}{\sqrt{1-\beta^2}}, \qquad n_z' = \frac{n_z + \beta m_y}{\sqrt{1-\beta^2}},$$

$$m_x' = m_x,$$

$$m_y' = \frac{m_y + \beta n_z}{\sqrt{1-\beta^2}}, \qquad m_z' = \frac{m_z - \beta n_y}{\sqrt{1-\beta^2}},$$

4．立体角の解析表示

（第8図）

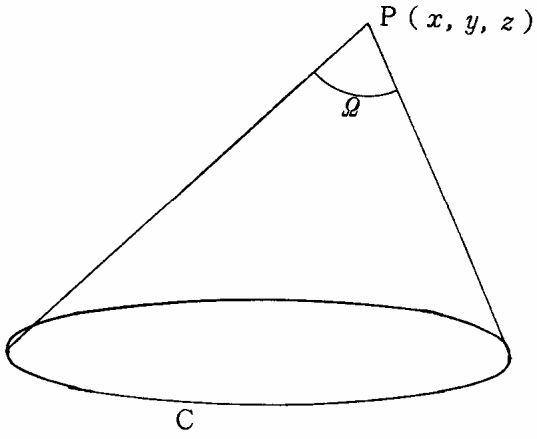

第0超平面上の点P（x，y，z）から閉曲線Cを見込む立体角Ωは，

$$\mathrm{grad}\,\Omega = \mathrm{rot}\,\alpha, \qquad \alpha = \oint_{\circ} \frac{ds}{r},$$

但し，rはPからC上の点P′（x′，y′，z′）迄の距離で，$ds = (dx', dy', dz')$

5．常微分方程式

随伴ゲーゲンバウエル微分方程式，

$$\left[(1-z^2)\frac{d^2}{dz^2} - 3z\frac{d}{dz} - \frac{L(L+1)}{1-z^2} - (n^2-1)\right]\textcircled{H}_n^L(\theta) = 0,$$

$z = \cos\theta$，

$$\left\{\mathrm{cosec}^2\theta\frac{\partial}{\partial\theta}(\sin^2\theta\frac{\partial}{\partial\theta}) + L(L+1)\cot^2\theta - [n^2-1-L(L+1)]\right\}$$

$$\times\textcircled{H}_m^L(\theta) = 0,$$

$\textcircled{H}_m^L(\theta)$ は，極性角運動量の固有関数，$\pi^2\Pi(\theta, \varphi, \Psi) = [n^2-1-L(L+1)]\Pi(\theta, \varphi, \Psi)$，但し，(1)の4次元球座標に依拠した。ユークリッド時空の場合は，□をユークリッド時空へ解析延長（unitary trick）。

L：方位量子数

$Y_L^m(\varphi, \Psi)$ being spherical harmonice of Legendre's.
Four dimensional polar co-ordinate of (1−1) is used, and unitary trick of continuing D'Alembertian (□) into Eudidean space-time ($\square \to -\Delta_4$) is made use of.
Ortho-normal relations are

$$\int_0^\pi \textcircled{H}_n^L(\cos\theta)\ \textcircled{H}_{n'}^L(\cos\theta)\ \sin^2\theta\, d\theta = \frac{\pi}{2} \cdot \frac{(n+L)!}{n[(n-L-1)!]}\ \delta_{nn'}$$

where $\delta_{nn'}$ means Kronecker's delta.

6. Differentiators and Integrators

(A) Miller Differentiator

Fig. 32
(See the right leaf.)

$$e_0 = -C_1 R_1 \frac{de_i}{dt},$$

holds if we denote output electric potential and input with e_0 and e_i, respectively. C_1 and R_1 are coupling capacitor and feedback resister, respectively.

(B) Miller Integrator

Fig. 33
(See the right leaf.)

$$e_0 = \frac{1}{C_1 R_1} \int e_i\, dt,$$

holds if we denote output electric potential and input with e_0 and e_i, respectively. C_1 and R_1 are, at this time, feedback capacitor and coupling resister, respectively.

7. Laplace Transformation with respect to Proper Time

(A) Laplace Transformation with respect to Proper Time :

$$P(s) = \int_0^\infty P(\tau) \exp(-s\tau)\, d\tau,$$

n：主量子数。　　L＋1≦n。

直交関係：$^{*}\pi(\theta,\varphi,\Psi)=\textcircled{H}^{L}_{m}(\theta)\,Y^{m}_{L}(\varphi,\Psi)$ の第1角部分。

$\pi^{2}=(i\pi)^{2}$。

$$\int_{0}^{\pi}\textcircled{H}^{L}_{m}(\cos\theta)\,\textcircled{H}^{L}_{m'}(\cos\theta)\sin^{2}\theta\,d\theta=\frac{\pi}{2}\cdot\frac{(n+L)!}{n[(n-L-1)!]}\times\delta nn',$$

6．微　積　分　器

(A)　ミラー微分器　　(第32図)

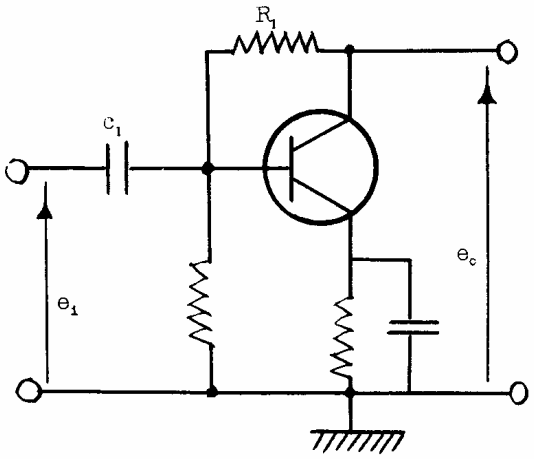

$$e_{0}=-C_{1}R_{1}\frac{de_{i}}{dt},$$

(B)　ミラー積分器　　(第33図)

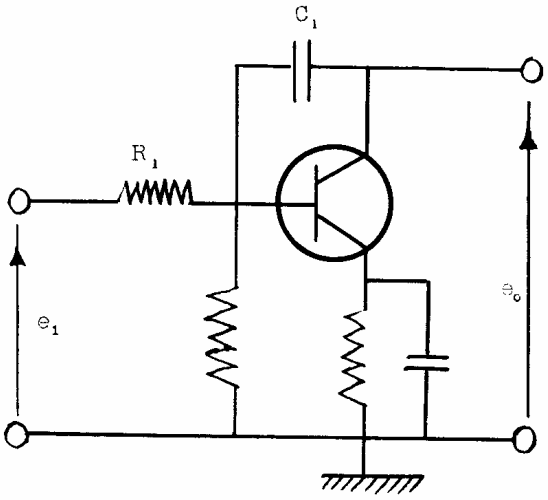

$$e_{0}=-\frac{1}{C_{1}R_{1}}\int e_{i}\,dt,$$

7．ラプラス変換

(A)　ラプラス変換：$P(s)=\int_{0}^{\infty}P(\tau)\exp(-s\tau)\,d\tau,$

(B)　同逆変換：$P(\tau)=\frac{1}{2\pi i}\int_{\gamma-i\infty}^{\gamma+i\infty}P(s)\exp s\tau\,ds,$

但し，τは江夏の不変時（文献33）又は，固有時。又(B)の積分路は，P(s)の全ての極を右に見て廻る。

(A) **Mathematics and Physics**

(B) Laplace Inversion :

$$P(\tau) = \frac{1}{2\pi i}\int_{\gamma-i\infty}^{\gamma+i\infty} P(s)\ \exp s\tau\, ds,$$

where τ stands for proper time or Enatsuean invariant time (Ref. 33). The contour of (B) is taken clock-wise with respect to all the poles of P(s) upon complex plane of s.

(C) Various Theorems. Laplace transformation of $\frac{d^n P(\tau)}{d\tau^n}$ is :

$$\frac{d^n}{d\tau^n} P(\tau) \supset s^n P(s) - s^{n-1}P'(0) - \cdots\cdots - P^{(n-1)}(0),$$

Final Value Theorem : $P(\infty) = \lim_{s\to 0} sP(s)$,

Initial Value Theorem : $P(0) = \lim_{s\to\infty} sP(s)$.

8. Behaviours of State Angular Momentum

(A) Frenker-Kramers Equation

$$\frac{d\text{ж}}{d\tau} = \alpha\ (\text{ж}\times H - \text{я}\times E), \qquad \frac{d\text{я}}{d\tau} = \alpha\ (\text{ж}\times E + \text{я}\times H),$$

where α, ж, я, E, H and τ stand for coupling constant of electromagnetic interaction, axial angular momentum, polar, electromagnetic field and proper time, respectively. See the Ref. 38 and the 4th chapter.

(B) Landau-SEIKE-Frenker-Kramers Equation

$$\left[\frac{d}{d\tau} + \alpha\left(H + iE - \frac{\mu}{|Y|}\cdot\frac{dY}{d\tau}\right)\times\right] Y = 0,$$

$$\left[\frac{d}{d\tau} + \alpha\left(H - iE - \frac{\nu}{|Z|}\cdot\frac{dZ}{d\tau}\right)\times\right] Z = 0,$$

where $Y = I + iP$, and $Z = I - iP$,
I and P being such that $I = \alpha\text{ж}$, and $P = \alpha\text{я}$, respectively. μ is damping factor $(0 < \mu, \nu)$. See the 4th chapter.

9. Four Dimensional Vector Analysis

(A) Four Dimensional Rotation $(\text{ж}, -i\text{я}) = \mathrm{Rot}\, A$,

where A means four vector and Rot is defined by

$$\mathrm{Rot}\, A = \partial_j A_k - \partial_k A_j \quad (\text{six components})$$

as six vector, which splits into a pair of vectors on the zeroth hyper surface (Ordinary Physical Space).

(B) Four Dimensional Divergence

$$\mathrm{Div}\, A = \partial_j A^j = \partial_1 A^1 + \partial_2 A^2 + \partial_3 A^3 + \partial_4 A^4 .$$

(C) Four Dimensional Green's Formula

$$\iiiint \mathrm{Div}\, A \, d\tau = \iiint A^1 \, dF^1 + \iiint A^2 \, dF^2 + \iiint A^3 \, dF^3 + \iiint A^4 \, dF^4 ,$$

where $dF = (dy\,dz\,du,\ dz\,du\,dx,\ du\,dx\,dy,\ dx\,dy\,dz)$ (hyper surface segment)

and $d\tau = dx\,dy\,dz\,du \quad (u = x^4 = ict)$.

(D) Four Dimensional Stokes'es Formula

$$\iint \mathrm{Rot}\, A \cdot dS = \oint_c A \cdot ds ,$$

where $ds = (dx^1, dx^2, dx^3, dx^4)$,

c being a four dimensionally closed curve.

(E) Vector Product and Scalar Product

(E−1) Vector Product

$$x \times P = x^j P^k - x^k P^j \quad (\text{six components}),$$

which is six angular momentum, $x = (x^1, x^2, x^3, x^4)$ and P being space-time co-ordinate and four momentum, respectively.

(E−2) Scalar Product

$$A \cdot P = A^1 P^1 + A^2 P^2 + A^3 P^3 + A^4 P^4 ,$$

in which A denotes four vector potential.

10. Maxwellean Equation

(10−1) Relativistic Representation

$$\partial_k F^{jk}(x) = 4\pi I^j , \qquad \partial_k {}^*F^{jk}(x) = 0 ,$$

where F^{jk} stands for electromagnetic tensor, namely

$$H = (F_{23}, F_{31}, F_{12}) , \qquad iE = (F_{41}, F_{42}, F_{43}) .$$

asterisk denotes the dual of,

$${}^*F^{jk} = \frac{\varepsilon^{jkmn}}{2!} F_{mn} ,$$

ε^{jkmn} being Eddington's perfectly skew symmetric tensor of the 4th rank, and $I = (I^1, I^2, I^3, I^4)$ standing for four current.

(10-2) Solution to magnetic dipole or electric.

(a) $$E_r = \frac{p}{\varepsilon}\left(\frac{2}{r^3} + \frac{2ik}{r^2}\right)\cos\varphi \exp i(\omega t - kr),$$

$$E_\varphi = \frac{p}{\varepsilon}\left(\frac{1}{r^3} + \frac{ik}{r^2} - \frac{k^2}{r}\right)\sin\varphi \exp i(\omega t - kr),$$

$$H_\psi = \frac{i\omega p}{c}\left(\frac{1}{r^2} + \frac{ik}{r}\right)\sin\varphi \exp i(\omega t - kr),$$

$$H_\varphi = H_r = E_\psi = 0, \quad k^2 = \frac{\omega^2 \varepsilon \mu}{c^2}, \quad r^2 = x^2 + y^2 + z^2,$$

when electric dipole of $p \exp(i\omega t)$, is present at the origin, orineting in Z-direction.

(b) $$H_r = \frac{m}{\mu}\left(\frac{2}{r^3} + \frac{2ik}{r^2}\right)\cos\varphi \exp i(\omega t - kr),$$

$$H_\varphi = \frac{m}{\mu}\left(\frac{1}{r^3} + \frac{ik}{r^2} - \frac{k^2}{r}\right)\sin\varphi \exp i(\omega t - kr),$$

$$E_\psi = \frac{i\omega\mu}{c}\left(\frac{1}{r^2} + \frac{ik}{r}\right)\sin\varphi \exp i(\omega t - kr),$$

$$E_\varphi = E_r = H_\psi = 0,$$

when magnetic dipole of $m \exp i\omega t$ is present at the origin, orienting in Z-direction [in which we replace $E \to H$, and $H \to -E$.].

11. Spin Wave Equation in Relativistic Form

$$\partial_k m^{jkp}(x) = 4\pi T^{jp}(x), \qquad \partial_k {}^*m^{jkp}(x) = 0,$$

where m^{jkp} is the jk component of angular momentum density on the p-th hyper surface and T^{jp} stands for energy tensor. Asterisk denotes the dual of,

$${}^*m^{jkp} = \frac{\varepsilon^{jkmn}}{2!} m^p_{mn}.$$

12. Self Inductance and Mutual

With respect to P and r in Fig. 9, mutual inductance between

vertical infinite line and a torus coil is determined by

$$L_{12} = 4\pi n\,(R - \sqrt{R^2 - r^2})\,,$$

as calculated in appendix 8, while self inductance by

$$L_{11} = 4\pi n^2\,(R - \sqrt{R^2 - r^2})$$ (Ref. 59).

13. Three Dimensional Vector Analysis
(for beginners)

(13-A) Scalar Product of Three Dimensional Vector Analysis

Scalar product of a pair of three dimensional vectors of,

$A = (A^1, A^2, A^3)$ and $B = (B^1, B^2, B^3)$

is : $A \cdot B = A^1B^1 + A^2B^2 + A^3B^3 = |A||B|\cos\varphi$,

$|A|^2 = (A^1)^2 + (A^2)^2 + (A^3)^2$, and $|B|^2 = (B^1)^2 + (B^2)^2 + (B^3)^2$,

A and B forming the angle of φ.

(13-B) Vector product $A \times B$ (A cross B) is determined by,

$$A \times B = (A^2B^3 - A^3B^2,\ A^3B^1 - A^1B^3,\ A^1B^2 - A^2B^1) = |A||B|\sin\varphi.$$

(13-C) Divergence

$$\operatorname{div} A = \frac{\partial A^1}{\partial x} + \frac{\partial A^2}{\partial y} + \frac{\partial A^3}{\partial z} = \partial \cdot A,$$

along with $\partial = \left(\frac{\partial}{\partial x}, \frac{\partial}{\partial y}, \frac{\partial}{\partial z}\right)$.

(13-D) Gradient

$$\operatorname{grad}\varphi = \left(\frac{\partial\varphi}{\partial x}, \frac{\partial\varphi}{\partial y}, \frac{\partial\varphi}{\partial z}\right).$$

(13-E) Rotation

$$\operatorname{rot} A = \left(\frac{\partial A^3}{\partial y} - \frac{\partial A^2}{\partial z},\ \frac{\partial A^1}{\partial z} - \frac{\partial A^3}{\partial x},\ \frac{\partial A^1}{\partial x} - \frac{\partial A^1}{\partial y}\right) = \partial \times A \quad (\partial \text{ cross } A)$$

(13-F) Mutual Operations $\operatorname{rot}(\operatorname{grad}\varphi) \equiv 0$,

$\operatorname{div}(\operatorname{rot} A) \equiv 0$, $\operatorname{div}(\operatorname{grad}\varphi) = \Delta\varphi$,

$\operatorname{rot}(\operatorname{rot} A) = \operatorname{grad}(\operatorname{div} A) - \Delta A$,

$\operatorname{div}\varphi A = \varphi \operatorname{div} A + A \cdot \operatorname{grad}\varphi$,

$\operatorname{rot}\varphi A = \varphi \operatorname{rot} A - A \cdot \operatorname{grad}\varphi$,

$\operatorname{div}(A \times B) = B \cdot \operatorname{rot} A - A \cdot \operatorname{rot} B$,

$\operatorname{rot}(A \times B) = A \operatorname{div} B - B \operatorname{div} A + (B \cdot \partial) A - (A \cdot \partial) B$.

(13-G) Green's Theorem

$$\iiint_v \operatorname{div} A\, dx\, dy\, dz = \iint_s A \cdot dS,$$

where V denotes the domain inside a closed surface of S, and $dS = (dy\,dz,\ dz\,dx,\ dx\,dy)$.

That four dimensional extension was stated in (9−C).

(13−H) Stokes'es Theorem

$$\int_c A \cdot ds = \iint_s \mathrm{rot}\, A \cdot dS$$

where C stands for a closed curve on the zeroth hyper surface (Ordinary Physical Space), and S for that corresponding surface. This formula is applied to the third set of Maxwellean Equation and to the first and the third of total angular momentum wave equation of (1−3).

(A−2) Calculation of a Seqular Equation

We shall rewrite the seqular equation of the 7th chapter, defining the matrix as $\xi - m\eta$ and putting the terms with the form of $(a+b)^2$ diagonally and counter dictionary wise by

row wise : $(3\to1,\ 2\to2,\ 1\to3,\ 4\to4,\ 5\to5,\ 6\to5)$

and column wise : $(6\to1,\ 5\to2,\ 4\to3,\ 1\to4,\ 2\to5,\ 3\to6)$

such that

$$\xi = \begin{pmatrix} 0, & a(\square-d), & b(\square-d), & a(\square-c), & b(\square-c), & (a+b)(c+d) \\ a(\square-d), & 0, & c(\square-d), & a(\square-b), & (a+c)(b+d), & c(\square-b) \\ b(\square-d), & c(\square-d), & 0, & (a+c)(b+d), & b(\square-a), & c(\square-a) \\ a(\square-c), & a(\square-b), & (a+d)(b+c), & 0, & d(\square-c), & d(\square-b) \\ b(\square-c), & (b+d)(c+a), & b(\square-a), & d(\square-c), & 0, & d(\square-a) \\ (c+d)(a+b), & c(\square-b), & c(\square-a), & d(\square-b), & d(\square-a), & 0 \end{pmatrix}$$

and the coefficient of η of,

$$\eta = \begin{pmatrix} (a+b)^2, & bc, & ca, & bd, & da, & 0 \\ bc, & (c+a)^2, & ab, & cd, & 0, & da \\ ca, & ab, & (b+c)^2, & 0, & cd, & db \\ ba, & cd, & 0, & (d+a)^2, & ab, & ca \\ da, & 0, & cd, & ab, & (b+d)^2, & bc \\ 0, & da, & ba, & ca, & bc, & (c+d)^2 \end{pmatrix}$$

We apparently find det $(\xi - m\eta)$ to be symmetrical with respect to a, b, c and d. At first we easily find det $\beta = \det(\xi - m\eta)$ to have the factor of d^2 : because

$$\eta = \left(\begin{array}{c|ccc} & \text{parts which are proportional to d.} & & \\ \hline & a^2+2da+d^2, & ab, & ca \\ & ab, & b^2+2bd+d^2, & bc \\ & ca, & bc, & c^2+2cd+d^2 \end{array} \right),$$

the latter three columns of which are proportional to : rank 1 + what are proportional to d, and are a : b : c except what are proportional to d. We can let the two columns of the three be proportional to d.

The coefficient of 1 of ξ is given by,

$$\xi = \left(\begin{array}{ccc|c} (a+b)b+ad, & (a+b)b+bd, & (u+b)c+(a+b)d & \\ (c+a)a+da, & (c+a)b+(c+a)d, & (c+a)c+cd & \\ (b+c)a+(b+c)d, & (b+c)b+bd, & (b+c)c+cd & \\ \hline \multicolumn{3}{c|}{\text{what are proportional to d.}} & \end{array} \right),$$

the latter three columns of which are a : b : c except what are proportional to d. Thus, the sixth column and the fifth in both of ξ and η can be let proportional to d if we subtrat, for instance, the fourth column multiplied by c/a from the fifth. We finally find detβ to be proportional to d^2 since the denominator has not what d concerns. We shall further proceed to the sequential discussion. We next put the representative D of the factor concerned to be zero (at this time D = d). detβ owns the factor of D^k if we find that rank to be smaller by k than the formal order (at this time, 6). In the above example, the rank is not greater than four. detβ must own the factor of $D^{6-4} = d^2$. It also has the factor of $a^2 b^2 c^2 d^2$ from the symmetry with respect to a, b, c and d. We shall thirdly how many D'Alembertians are contained. ξ becomes

$$\xi \to \begin{pmatrix} 0, & -da, & -bd, & -ca, & -bc, & -(a+b)^2 \\ -da, & 0, & -cd, & -ab, & -(c+a)^2, & -bc \\ -bd, & -cd, & 0, & -(b+c)^2, & -ab, & -ca \\ -ca, & -ab, & -(d+a)^2, & 0, & -cd, & -db \\ -ca, & -(b+d)^2, & -ba, & -cd, & 0, & -da \\ -(c+d)^2, & -bc, & -ca, & -db, & -da, & 0 \end{pmatrix}$$

although η is rather invariant, where the relation of

$$a+b=\square-(c+d)=-(c+d)$$

is used to the toppest of the last column of ξ. This matrix resembles η very well. From this symmetry ξ is almost identical with η if we perform

$$\det\begin{pmatrix} A & B \\ C & D \end{pmatrix}=\frac{1}{2}\det\begin{pmatrix} A-B, & A+B \\ C-D, & C+D \end{pmatrix}$$

$$=\left(\frac{1}{2}\right)^2\det\begin{pmatrix} A-B-(C-D), & A+B-(C+D) \\ A-B+C-D, & A+B+C+D \end{pmatrix},$$

with the 2×2 matrix of A, B, C and D.

If we arrange such that (the first column) − (the sixth column) → (the first column),

and (the first column) + (the sixth column) → (the sixth column),

and, futhermore, (2) − (5) → (2) and (2) + (5) → (5),

and (the first row) − (the sixth row) → (the first row),

and (the first row) + (the sixth row) → (the sixth row),

we obtain

$$\xi=\left(\begin{array}{c|c} \begin{matrix} -(a+b)^2-(bc-ad) \\ -2(ac-bd)-(c+d)^2 \end{matrix} & 0 \\ \hline 0 & \begin{matrix} (a+d)^2+(b+c)^2+2(ab+cd) \\ +2(ca+bd) \end{matrix} \end{array}\right)$$

$$\eta=\left(\begin{array}{c|c} \begin{matrix} -(a+b)^2-2(bc-da) \\ -2(ca-bd)-(c+d)^2 \end{matrix} & 0 \\ \hline 0 & \begin{matrix} -(a+d)^2+(b+c)^2-2(ab+cd) \\ -2(ca+bd) \end{matrix} \end{array}\right),$$

where we put $d=\square-(a+b+c)=-(a+b+c)$

to the first, the second and the third row (column), deriving

$$\xi=\eta=\left(\begin{array}{ccc|c} -2(a+b)^2, & -2(a+b)(c+a), & -2(a+b)(b+d) & \\ -2(c+a)(a+b), & -2(c+a)^2, & -2(c+a)(b+c) & 0 \\ -2(b+c)(a+b), & -2(b+c)(c+a), & -2(b+c)^2 & \\ \hline & 0 & & \times \end{array}\right)$$

the rank of which is 1. We also have (the fourth column) = 0, in virtue of $a+b+c+d=\Box=0$, when we make (the 4 th column) + (the 5 th column) + (the sixth column) → (the 4 th column). The rank of the part $\times$ is not greater than a ($\leqq 2$). Then, rank $\leqq 3$, to $\Box=0$, which shows that $\det\beta$ owns the factor of $\Box^3$. We finally find that there is the factor of, $a^2b^2c^2d^2\Box^3$, which is a homogeneous of the eleventh order. The remaining factor is a homogeneous of the first order. This is noting but $a+b+c+d=\Box$. Now we finally put

$$\det\beta=a^2b^2c^2d^2\Box^4 f(m),$$

$f(m)$ of which we shall determine. When we put $a=b=c=d=1$, then we derive

$$\det\beta(a=b=c=d=1)=(1^2)^4\cdot 4^4\cdot f(m),$$

$$\xi(a=b=c=d=1)=\begin{pmatrix} 0, & 3, & 3, & 3, & 3, & 4 \\ 3, & 0, & 3, & 3, & 4, & 3 \\ 3, & 3, & 0, & 4, & 3, & 3 \\ 3, & 3, & 4, & 0, & 3, & 3 \\ 3, & 4, & 3, & 3, & 0, & 3 \\ 4, & 3, & 3, & 3, & 3, & 0 \end{pmatrix}$$

$$\eta(a=b=c=d=1)=\begin{pmatrix} 4, & 1, & 1, & 1, & 1, & 0 \\ 1, & 4, & 1, & 1, & 0, & 1 \\ 1, & 1, & 4, & 0, & 1, & 1 \\ 1, & 1, & 0, & 4, & 1, & 1 \\ 1, & 0, & 1, & 1, & 4, & 1 \\ 0, & 1, & 1, & 1, & 1, & 4 \end{pmatrix}$$

$$\therefore\det\beta=\begin{vmatrix} -4m, & 3-m, & 3-m, & 3-m, & 3-m, & 4 \\ 3-m, & -4m, & 3-m, & 3-m, & 4, & 3-m \\ 3-m, & 3-m, & -4m, & 4, & 3-m, & 3-m \\ 3-m, & 3-m, & 4, & -4m, & 3-m, & 3-m \\ 3-m, & 4, & 3-m, & 3-m, & -4m, & 3-m \\ 4, & 3-m, & 3-m, & 3-m, & 3-m, & -4m \end{vmatrix}$$

$$= \begin{vmatrix} -4(m+1), & 0, & 0, & 3-m, & 3-m, & 4 \\ 0, & -4(m+1), & 0, & 3-m, & 4, & 3-m \\ 0, & 0, & -4(m+1), & 4, & 3-m, & 3-m \\ 0, & 0, & 4(m+1), & -4m, & 3-m, & 3-m \\ 0, & 4(m+1), & 0, & 3-m, & -4m, & 3-m \\ 4(m+1), & 0, & 0, & 3-m, & 3-m, & -4m \end{vmatrix}$$

$$\det\beta = \left(\begin{array}{ccc|c} -4(m+1), & 0, & 0 & \\ 0, & -4(m+1), & 0 & \ast \\ 0, & 0, & -4(m+1) & \\ \hline & 0 & & \begin{matrix} 4(1-m), & 2(3-m), & 2(3-m) \\ 2(3-m), & 4(1-m), & 2(3-m) \\ 2(3-m), & 2(3-m), & 4(1-m) \end{matrix} \end{array} \right)$$

$$= [-4(m+1)]^3 \begin{vmatrix} 1, & 0, & 0 & \\ 0, & 1, & 0 & \ast \\ 0, & 0, & 1 & \\ \hline & 0 & & \begin{matrix} -2(1+m), & 0, & 2(3-m) \\ 0, & -2(1+m), & 2(3-m) \\ 2(3-m), & 2(1+m), & 4(1-m) \end{matrix} \end{vmatrix}$$

$$= -4^3(m+1)^3 \begin{vmatrix} 1, & 0, & 0 & \\ 0, & 1, & 0 & \ast \\ 0, & 0, & 1 & \\ \hline & 0 & & \begin{matrix} -2(1+m), & 0, & 2(3-m) \\ 0, & -2(1+m), & 2(3-m) \\ 0, & 0, & 16-8m \end{matrix} \end{vmatrix}$$

$$= -4^3(m+1)^3[-2(m+1)]^2 8(2-m)$$
$$= (-1)(-1)^2(-1)(m+1)^5 \cdot 4^3 \cdot 2^2 \cdot 8(m-2)$$
$$= 4^4 \cdot 8(m+1)^5(m-2),$$

We lastly obtain $f(m) = 8(m+1)^5(m-2)$,
which leads us to

$$\det\beta = 8(m+1)^5(m-2)(abcd)^2\square^4$$

This result is made use of in the 4th chapter.

(A－3) Circulation of Spin Density Line of Force

Fig. 26

(See the right leaf.)

When momentum segment $P\delta(z)$ is concentrated at the origin such that $\int_{-\infty}^{\infty} P\delta(z)\,dz = P$ along vertical infinite line of Z-axis, we shall determine the components of spin density at $(r, 0, R)$.

From (1－19) we obtain

$$P\,ds \times \vec{r} = [\,0,\ rP\delta(z)dz,\ 0\,], \qquad (A-3-1)$$

and $|\vec{r}|^3 = [\,r^2 + (R-z)^2\,]^{\frac{3}{2}}$,

which leads us to $\mathcal{K}_x = \mathcal{K}_z = 0$,

and

$$\mathcal{K}_y = \int_{-\infty}^{\infty} \frac{rP\delta(z)\,d}{[\,r^2+(R-z)^2\,]^{\frac{3}{2}}} = \frac{rP}{(r^2+R^2)^{\frac{3}{2}}}, \qquad (A-3-2)$$

there being a circulation of spin density line of force around momentum flux.

(A−3) スピン循環の計算

(第２６図)

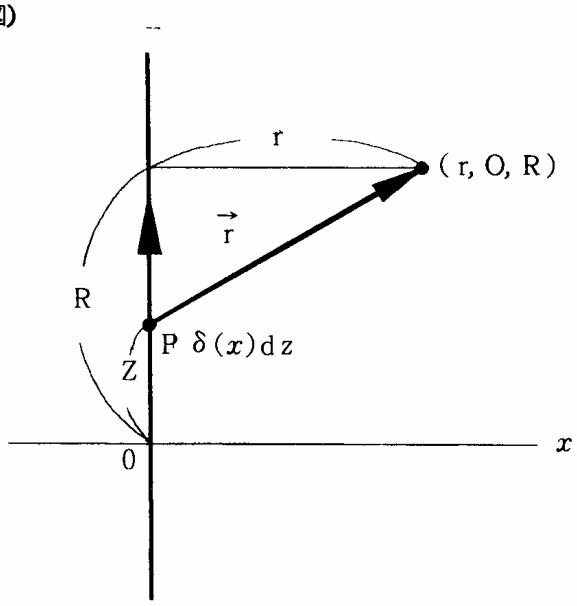

今，鉛直無限直線ｃ上に，運動量素片Ｐδ(z) ｄｚが，運動量全体が，

$$\int_{-\infty}^{\infty} P\delta(z)\,dz = P$$

となる様に原点附近に集中して（０＜ｒ，０＜Ｒ）上のスピン密度の成分を求める。（１−１９）式から，

$$Pds \times \vec{r} = (0,\ rP(z)\delta(z)dz,\ 0), \qquad (A-3-1)$$

と，

$|\vec{r}|^3 = \{ r^2 + (R-z)^2 \}^{\frac{3}{2}}$ ですので，

$\mathcal{K}_x = \mathcal{K}_z = 0$,

$$\mathcal{K}_y = \int_{-\infty}^{\infty} \frac{rP(z)\delta(z)dz}{\{ r^2 + (R-z)^2 \}^{\frac{3}{2}}} = \frac{rP}{(r^2+R^2)^{\frac{3}{2}}}, \qquad (A-3-2)$$

となって，運動量の柱の周囲にスピン密度力線の循環が出来る（第２５図）。

（第２５図参照）

但し，（Ａ−３−２）では，$\int_{-\infty}^{\infty} f(z)\,\delta(z)\,dz = f(0)$ なる関係を用いました。

Fig. 25
(See the right leaf.)

We have used a famous relation of,

$$\int_{-\infty}^{\infty} f(z)\,\delta(z)\,dz = f(0)$$

in (A − 3 − 2).

(A − 4) Determination of Reduced Mass

If masses of m_1 and m_2 are present at the one point of

$$\vec{x}_1 = (x_1^1,\ x_1^2,\ x_1^3,\ x_1^4)$$

and another of,

$$\vec{x}_2 = (x_2^1,\ x_2^2,\ x_2^3,\ x_2^4)\ , \qquad (A-4-1)$$

the center of mass is expressed by

$$\vec{x} = \frac{m_1\vec{x}_1 + m_2\vec{x}_2}{m_1 + m_2}\ , \qquad (A-4-2)$$

in Minkowskean space-time. Four dimensional angular momentum around the center of mass is given by,

$$\begin{aligned} \boldsymbol{M} &= (\vec{x}_1 - \vec{x}) \otimes m_1 \frac{d\vec{x}_1}{d\tau} + (\vec{x} - \vec{x}_2) \otimes m_2 \frac{dx_2}{d\tau} \\ &= \frac{m_1 m_2}{m_1 + m_2} (\vec{x}_1 - \vec{x}_2) \otimes \frac{d}{d\tau} (\vec{x}_1 - \vec{x}_2) \\ &= \mu (\vec{x}_1 - \vec{x}_2) \otimes \frac{d}{d\tau} (\vec{x}_1 - \vec{x}_2)\ , \qquad (A-4-3) \end{aligned}$$

in which τ and μ stand for proper time to the center of mass and a new reduced mass of,

$$\mu = \frac{m_1 m_2}{m_1 + m_2}\ . \qquad (A-4-4)$$

$\otimes$ means four dimensional vector product, for instance, of,

$$\vec{x}_1 \otimes \vec{x}_2 = (x_1^2 x_2^3 - x_1^3 x_2^2,\ x_1^3 x_2^1 - x_1^1 x_2^3,\ x_1^1 x_2^2 - x_1^2 x_2^1,\ x_1^4 x_2^1 - x_1^1 x_2^4,\ x_1^4 x_2^2 - x_2^4 x_2^2,\ x_1^4 x_2^3 - x_2^4 x_1^3)\ .$$

(第２５図)

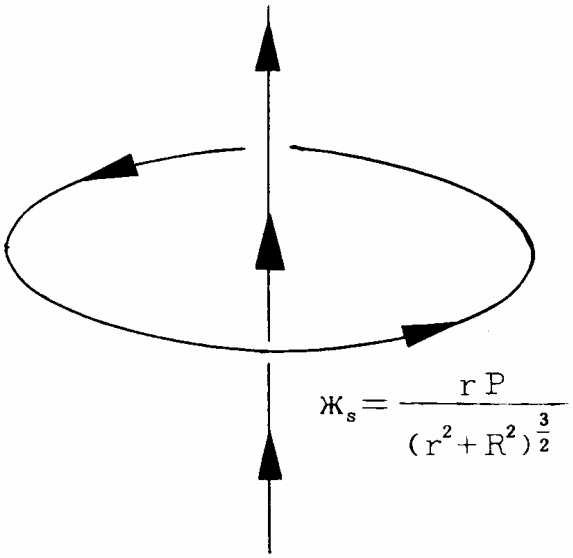

(A－4) 換算質量の算定

ミンコウスキ時空内の２点

$$\vec{x}_1 = (x_1^1,\ x_1^2,\ x_1^3,\ x_1^4)$$

及び $$\vec{x}_2 = (x_2^1,\ x_2^2,\ x_2^3,\ x_2^4)\ ,\qquad (A-4-1)$$

に質点m_1及びm_2が有るとすれば，其の重心は，

$$\vec{X} = \frac{m_1\vec{x}_1 + m_2\vec{x}_2}{m_1+m_2}\ ,\qquad (A-4-2)$$

です。重心の周囲の４次元的角運動量は，

$$\begin{aligned} M &= (\vec{x}_2 - \vec{X}) \otimes m_2 \frac{d\vec{x}_2}{d\tau} + (\vec{x}_1 - \vec{X}) \otimes m_1 \frac{d\vec{x}_1}{d\tau} \\ &= \frac{m_1 m_2}{m_1+m_2}(\vec{x}_2 - \vec{x}_1) \otimes \frac{d}{d\tau}(\vec{x}_2 - \vec{x}_1)\ , \\ &= \mu(\vec{x}_2 - \vec{x}_1) \otimes \frac{d}{d\tau}(\vec{x}_2 - \vec{x}_1)\ , \qquad (A-4-3) \end{aligned}$$

です。μが新しい質量ですが，此れは，

$$\mu = \frac{m_1 m_2}{m_1+m_2}\ ,\qquad (A-4-4)$$

(A－5) Generation of Rotating Electric Field

Three spherical condensers are situated at the tops of an equilateral triangle in Fig. 10.

Fig. 30

(See the right leaf.)

We shall again illustrate them in Fig. 30 and charge and discharge them with three phases current of $\Psi_0 \sin \Omega\tau$, $\Psi_0 \sin (\Omega\tau + \frac{2}{3}\pi)$ and $\Psi_0 \sin (\Omega\tau + \frac{4}{3}\pi)$. Then, electric potentials across A, B; B, C and C, A are expressed by

$$\begin{aligned}\Psi_{BA} &= \Psi_0 [\sin (\Omega\tau + \tfrac{2}{3}\pi) - \sin \Omega\tau] \\ &= 2\Psi_0 \cos (\Omega\tau + \tfrac{\pi}{3}) \sin \tfrac{\pi}{3} \\ &= \sqrt{3}\,\Psi_0 \cos (\Omega\tau + \tfrac{\pi}{3}),\end{aligned}$$

$$\begin{aligned}\Psi_{CB} &= \Psi_0 [\sin (\Omega\tau + \tfrac{4}{3}\pi) - \sin (\Omega\tau + \tfrac{2}{3}\pi)], \\ &= \sqrt{3}\,\Psi_0 \cos (\Omega\tau + \pi),\end{aligned}$$

and

$$\begin{aligned}\Psi_{AC} &= \Psi_0 [\sin \Omega\tau - \sin (\Omega\tau + \tfrac{4}{3}\pi)] \\ &= -\sqrt{3}\,\Psi_0 \cos (\Omega\tau + \tfrac{2}{3}\pi).\end{aligned}$$

で換算質量です。尚，⊗は4次元の外積で，例えば，

$$\vec{x}_1 \otimes \vec{x}_2 = (x_1^2 x_2^3 - x_1^3 x_2^2,\ x_1^3 x_2^1 - x_1^1 x_2^3,\ x_1^1 x_2^2 - x_2^1 x_1^2,$$
$$x_1^4 x_2^1 - x_2^4 x_1^1,\ x_1^4 x_2^2 - x_2^4 x_1^2,\ x_1^4 x_2^3 - x_2^4 x_1^3)$$

となります。

(A−5) 回転電場の創生

第10図の3個の球型コンデンサは，正三角形の3個の頂点上に位置して居る。

(第30図)

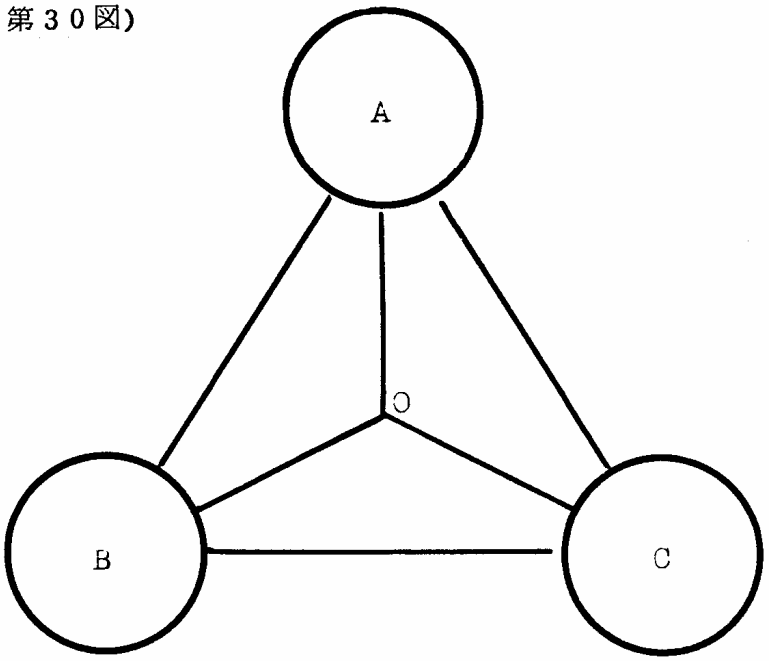

此れを第30図の様に示し，各コンデンサに三相交流の各相 $\Psi_0 \sin\omega\tau$，$\Psi_0 \sin(\omega\tau+\frac{2}{3}\pi)$ 及び $\Psi_0 \sin(\omega\tau+\frac{4}{3}\pi)$ を充放電すると，A，B；B，C・及びC，A間の電位差は，

$$\Psi_{BA} = \Psi_0 \left[\sin(\omega\tau+\frac{2}{3}\pi) - \sin\omega\tau\right] = 2\Psi_0 \cos(\omega\tau+\frac{\pi}{3}) \sin\frac{\pi}{3}$$
$$= \sqrt{3}\ \Psi_0 \cos(\omega\tau+\frac{\pi}{3})$$
$$\Psi_{CB} = \Psi_0 \left[\sin(\omega\tau+\frac{4}{3}\pi) - \sin(\omega\tau+\frac{2}{3}\pi)\right] = \sqrt{3}\,\Psi_0 \cos(\omega\tau+\pi)$$
$$\Psi_{AC} = \Psi_0 \left[\sin\omega\tau - \sin(\omega\tau+\frac{4}{3}\pi)\right] = -\sqrt{3}\,\Psi_0 \cos(\omega\tau+\frac{2}{3}\pi),$$

(A−5−1)

If a side of the equilateral triangle is ℓ, we derive electric fields of,

$$E_{BA} = \frac{\sqrt{3}\,\Psi_0}{\ell}\cos\left(\Omega\tau + \frac{\pi}{3}\right),$$

$$E_{CB} = \frac{\sqrt{3}\,\Psi_0}{\ell}\cos\left(\Omega\tau + \pi\right),$$

and

$$E_{AC} = \frac{\sqrt{3}\,\Psi_0}{\ell}\cos\left(\Omega\tau + \frac{5}{3}\pi\right), \qquad (A-5-2)$$

along the sides. E_{AC} is obtained by making use of a relation of, $\cos(\Omega\tau + \pi) = -\cos\Omega\tau$.

Transforming (A − 5 − 2) into star diagram with star-delte transformation (Ref. 61), we have Fig. 31 (Ref. 62),

Fig. 31

(See the right leaf.)

owing to which we finally obtain

$$|E_A| = |E_B| = |E_C| = \frac{|E_{BC}|}{\sqrt{3}} = \frac{|E_{CA}|}{\sqrt{3}} = \frac{|E_{AB}|}{\sqrt{3}} = \frac{\Psi_0}{\ell}$$

$$E_A = \frac{\Psi_0}{\ell}\cos\left(\Omega\tau + \frac{\pi}{3}\right), \qquad E_B = \frac{\Psi_0}{\ell}\cos\left(\Omega\tau + \pi\right),$$

and

$$E_C = \frac{\Psi_0}{\ell}\cos\left(\Omega\tau + \frac{5}{3}\pi\right).$$

Putting $\Omega\tau + \frac{\pi}{3}$ to be θ, we find

$$E_A = \frac{\Psi_0}{\ell}\cos\theta, \qquad E_B = \frac{\Psi_0}{\ell}\cos\left(\theta + \frac{2}{3}\pi\right),$$

and

$$E_C = \frac{\Psi_0}{\ell}\cos\left(\theta + \frac{4}{3}\pi\right).$$

となります。正三角形の一辺の長さを l と致しますれば，各々

$$E_{BA}=\frac{\sqrt{3}\Psi_0}{l}\cos(\omega\tau+\frac{\pi}{3}) \qquad E_{CB}=\frac{\sqrt{3}\Psi_0}{l}\cos(\omega\tau+\pi)$$

$$E_{AC}=\frac{\sqrt{3}\Psi_0}{l}\cos(\omega\tau+\frac{5}{3}\pi)\,, \qquad (A-5-2)$$

の電場が，各辺に沿つて得られます。E_{AC} の表現は，（A－5－1）から（A－5－2）に移る時に，$\cos(\omega\tau+\pi)=-\cos\omega\tau$ の関係を用いました。此れをスタ・デルタ変換（文献61）に依拠してスタ型に変換致しますと，第31図の様になります（文献62）。

（第31図）

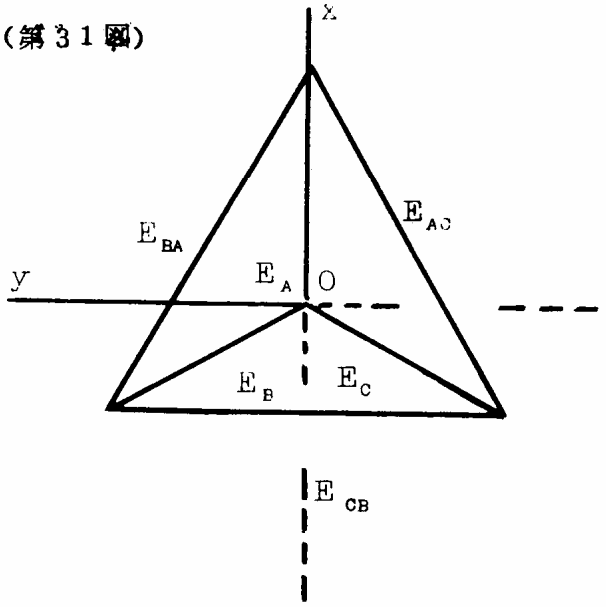

$$|E_A|=|E_B|=|E_C|=\frac{|E_{BA}|}{\sqrt{3}}=\frac{|E_{CB}|}{\sqrt{3}}=\frac{|E_{AC}|}{\sqrt{3}}=\frac{\Psi_0}{l}\,,\ \text{ですので，}$$

$$E_A=\frac{\Psi_0}{l}\cos(\omega\tau+\frac{\pi}{3})\,, \qquad E_B=\frac{\Psi_0}{l}\cos(\omega\tau+\pi)\,,$$

$$E_C=\frac{\Psi_0}{l}\cos(\omega\tau+\frac{5}{3}\pi)$$

です。$\omega\tau+\frac{\pi}{3}=\theta$ と置きますと，

$$E_A=\frac{\Psi_0}{l}\cos\theta\,, \qquad E_B=\frac{\Psi_0}{l}\cos(\theta+\frac{2}{3}\pi)\,, \qquad E_C=\frac{\Psi_0}{l}\cos(\theta+\frac{4}{3}\pi)$$

The components of electric field of E_x and E_y are ;

$$E_x = \frac{\Psi_0}{\ell}\cos\theta\cos 0 + \frac{\Psi_0}{\ell}\cos\left(\theta+\frac{2}{3}\pi\right)\cos\frac{2}{3}\pi + \frac{\Psi_0}{\ell}\cos\left(\theta+\frac{4}{3}\pi\right)$$
$$\times\cos\frac{4}{3}\pi = \frac{3\Psi_0}{2\ell}\cos\theta,$$
$$E_y = \frac{\Psi_0}{\ell}\cos\theta\sin 0 + \frac{\Psi_0}{\ell}\cos\left(\theta+\frac{2}{3}\pi\right)\sin\frac{2}{3}\pi + \frac{\Psi_0}{\ell}\cos\left(\theta+\frac{4}{3}\pi\right)$$
$$= \frac{3\Psi_0}{2\ell}\sin\theta, \qquad (A-5-3)$$

if we take $x-0-y$ axises as in Fig. 31.

Thus $\boldsymbol{E} = (E_x, E_y)$

forms the angle of φ with x-axis such that :

$$\varphi = \mathrm{Arctan}\frac{E_y}{E_x} = \mathrm{Arctan}\ (\tan\theta) = \theta = \omega\tau + \frac{\pi}{3}, \qquad (A-5-4)$$

which shows that elictric field rotates.

The amplitude of the field is given by

$$|E| = \sqrt{E_x^2 + E_y^2} = \frac{3\Psi_0}{2\ell}\sqrt{\cos^2\theta + \sin^2\theta} = \frac{3\Psi_0}{2\ell}.$$

(A-6) Gyrational Effect of Equation of Gyro

Equation of gyro
[for instance, SEIKE-Kramers Equation (the 4th chapter)]
enjoys gyrational effect when we go over to a new co-ordinate by

$$y' = \alpha y, \qquad (A-6-1)$$

if α is a function of proper time of τ, where y, y' and α are column vectors and a matrix with three rows and as many columns.

Inverse transformation of (A-6-1) gives

$$y = \alpha^{-1}\cdot y' = \beta\cdot y', \qquad (A-6-2)$$

which leads us to

$$\frac{dy}{d\tau} = \frac{d\beta}{d\tau}\cdot y' + \beta\cdot\frac{dy'}{d\tau}, \qquad (A-6-3)$$

if we differentiate (A-6-2). We next obtain

$$\frac{d^{*}y}{d\tau}=\alpha\cdot\frac{d\beta}{d\tau}\cdot y'+\alpha\cdot\beta\cdot\frac{dy'}{d\tau}=(\alpha\cdot\frac{d\beta}{d\tau}+\alpha\cdot\beta\frac{d}{d\tau})\,y', \tag{A-6-5}$$

if $\frac{dy'}{d\tau}$ is related to $\frac{dy}{d\tau}$ by,

$$\frac{dy'}{d\tau}=\alpha\cdot\frac{dy}{d\tau}, \tag{A-6-4}$$

owing to (A-6-3). $\alpha\cdot\beta=1$ holds β is inverse of α. We thirdly derive

$$=(\frac{d}{d\tau}+\alpha\cdot\frac{d\beta}{d\tau})\,y'. \tag{A-6-6}$$

Asterisk shows the differentiation with respect to the new co-ordinate such that

$$\frac{d*}{d\tau}=\frac{d}{d\tau}+\alpha\cdot\frac{d\beta}{d\tau}. \tag{A-6-7}$$

Inverse of the transformation matrix of (4-9) is given by,

$$\beta=\begin{pmatrix}\cos\Omega\tau, & -\sin\Omega\tau, & 0\\ \sin\Omega\tau, & \cos\Omega\tau, & 0\\ 0, & 0, & 1\end{pmatrix},$$

which leads us to

$$\frac{d*}{d\tau}=\frac{d}{d\tau}+\vec{\Omega}\times, \tag{A-6-8}$$

where $\vec{\Omega}=(0,\ 0,\ \Omega)$.

With respect to α_1 of (10-12) we further obtain

$$\frac{d*}{d\tau}=\frac{d}{d\tau}+\vec{\omega}\times, \tag{A-6-9}$$

where $\vec{\omega}=(-\Omega\sin\omega\tau,\ \Omega\cos\omega\tau,\ \omega)$, (A-6-10)

which is the reason why the solution became rather complicated when we solve Kramers Equation to spherically polarized electromagnetic field.

(A-7) Probability of Statistical Thermodynamics

Taking the angles of α, β and Ψ as in Fig. 3 and putting

$$p=\frac{-4\pi\alpha^2\,(Я\times Ж)}{c}$$

The measure along p axis is $\sin\Psi\, d\Psi\, d\alpha$ and the measure around that axis $d\beta$. Putting unit vector in the I direction to be $\bar{I}$, that in the P to be $\bar{P}$ and that in the p to be $\bar{p}$, where

$$I = \alpha\text{Ж} \qquad \text{and} \qquad P = -\alpha\text{Я},$$

we find

$$(\bar{I},\ \bar{P},\ \bar{p}) = \begin{pmatrix} \cos\alpha, & -\sin\alpha, & 0 \\ \sin\alpha, & \cos\alpha, & 0 \\ 0, & 0, & 1 \end{pmatrix} \begin{pmatrix} \cos\Psi, & 0, & -\sin\Psi \\ 0, & 1, & 0 \\ \sin\Psi, & 0, & \cos\Psi \end{pmatrix} \times \begin{pmatrix} \cos\beta, & -\sin\beta, & 0 \\ \sin\beta, & \cos\beta, & 0 \\ 0, & 0, & 1 \end{pmatrix} = \begin{pmatrix} a_{11}, & a_{12}, & a_{13} \\ a_{21}, & a_{22}, & a_{23} \\ a_{31}, & a_{32}, & a_{33} \end{pmatrix}, \qquad (A-7-2)$$

which leads us to

$$\cos\theta = a_{11} = \cos\alpha\cos\beta\cos\Psi - \sin\alpha\sin\beta,$$

$$\cos\varphi = a_{22} = -\sin\alpha\sin\beta\cos\Psi + \cos\alpha\cos\beta,$$

if magnetic field forms the angle θ with I and electric φ with P. Thus, we have a Hamiltonian of,

$$\{ -(|I||H|\cos\alpha\cos\beta - |P||E|\sin\alpha\sin\beta)\cos\Psi + (|I||H|\sin\alpha\sin\beta - |P||E|\cos\alpha\cos\beta) \} / \gamma,$$

where it is given in recourse to (3-13). The probability of this dynamical system in the interval of $[\Psi,\ \Psi + d\Psi]$ is determined by,

$$P d\Psi = \sin\Psi\, d\Psi \int_0^{\pi} d\beta \int_{-\pi}^{\pi} d\alpha\ \exp[(|I||H|\cos\alpha\cos\beta - |P||E|\sin\alpha\sin\beta - |P||E|\sin\alpha\sin\beta)\cos\Psi - (|I||H|\sin\alpha\sin\beta - |P||E|\cos\alpha\times\cos\beta)] / kT\gamma \div \int_0^{\pi} \sin\Psi\, d\Psi \int_{-\pi}^{\pi} d\alpha \int_0^{\pi} d\beta \exp[\quad\ 〃 \quad\ ] \qquad (A-7-4)$$

If we put

$$2\cos\alpha\cos\beta = \cos(\alpha+\beta) + \cos(\alpha-\beta) = \cos u + \cos V,$$

$$2\sin\alpha\sin\beta = -\cos(\alpha+\beta) + \cos(\alpha-\beta) = -\cos u + \cos v$$

Fig. 34

(See the right leaf.)

we further obtain

$$\int_{-\pi}^{\pi} d\alpha \int_{0}^{\pi} d\beta f(\alpha, \beta) = \int_{-\pi}^{\pi} du \int_{-\pi}^{\pi} dv g(u, v)$$

$$d\alpha\, d\beta = \frac{1}{2} du\, dv .$$

We namely have

$$\therefore P d\Psi = \frac{1}{2} \sin\Psi\, d\Psi \int_{-\pi}^{\pi} du \int_{-\pi}^{\pi} dv$$

$$\times \exp \frac{[(|H||I|+|P||E|)(\cos\Psi+1)\cos u + (|H||I|-|P||E|)(\cos\Psi-1)\cos v]}{\gamma kT}$$

$$\div \frac{1}{2} \int_{0}^{\pi} \sin\Psi\, d\Psi \int_{-\pi}^{\pi} du \int_{-\pi}^{\pi} dv \exp \frac{[\quad\prime\prime\quad]}{\gamma kT},$$

while $$\int_{-\pi}^{\pi} \exp(a\cos u)\, du = 2\pi J_0(ia) = 2\pi I_0(a), \qquad (A-7-6)$$

where $J_0(z)$ and $I_0(z)$ stand for Bessel function of the lowest order and modified Bessel, respectively.

In virtue of (A − 7 − 6) we derive

$$= \frac{\frac{4\pi^2}{2} \sin\Psi\, d\Psi\, J_0\left[\frac{i|I||H|}{kT\gamma}(\cos\Psi+1)\right] J_0\left[\frac{i|P||E|(\cos\Psi-1)}{kT\gamma}\right]}{\frac{4\pi^2}{2} \int_{0}^{\pi} J_0\left[\frac{i|H||I|}{kT\gamma}(\cos\Psi+1)\right] J_0\left[\frac{i|P||E|(\cos\Psi-1)}{kT\gamma}\right] \sin\Psi\, d\Psi}$$

$$= \frac{dz\, J_0\left[\frac{|I||H|}{kT\gamma}(z+1)\right] I_0\left[\frac{|P||E|(z-1)}{kT\gamma}\right]}{\int_{-1}^{1} dz\, I_0\left[\frac{|I||H|(z+1)}{kT\gamma}\right] I_0\left[\frac{|P||E|(z-1)}{kT\gamma}\right]}, \qquad (A-7-7)$$

（第３４図）

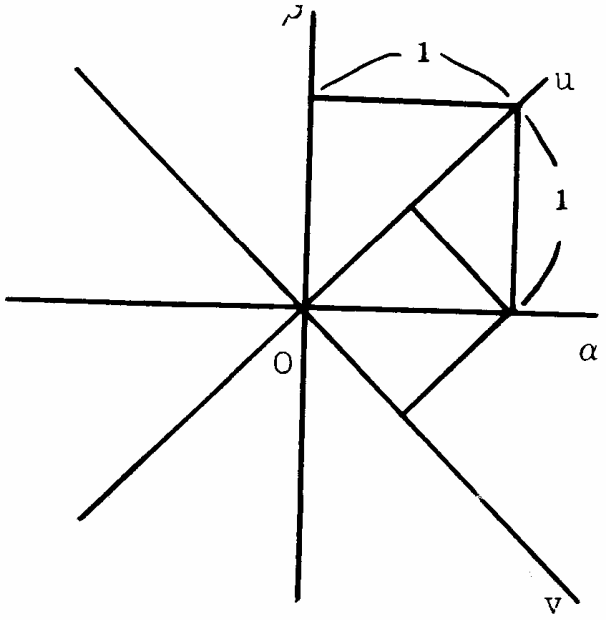

第３４図を参照して，

$$\int_{-\pi}^{\pi} d\alpha \int_{0}^{\pi} d\beta f(\alpha, \beta) = \int_{-\pi}^{\pi} du \int_{-\pi}^{\pi} dv g(u, v),$$

$$d\alpha d\beta = \frac{1}{2} du dv.$$

$$\therefore P d\Psi = \frac{1}{2} \sin\Psi d\Psi \int_{-\pi}^{\pi} du \int_{-\pi}^{\pi} dv$$

$$\exp \frac{\{(|H||I| + |P||E|)(\cos\Psi + 1)\cos u + (|H||I| - |P||E|)(\cos\Psi - 1)\cos v\}}{\gamma kT}$$

$$\div \frac{1}{2} \int_{0}^{\pi} \sin\Psi d\Psi \int_{-\pi}^{\pi} du \int_{-\pi}^{\pi} dv \exp \times \frac{\{\quad 〃 \quad\}}{\gamma kT}$$

となる。一方，

$$\int_{-\pi}^{\pi} \exp(a\cos u)\, du = 2\pi J_0(ia) = 2\pi I_0(a). \qquad (A-7-6)$$

であって，$J_0(z)$ 及び $I_0(z)$ は最低次のベセル関数及び変型ベセル関数である。従って，

$$= \frac{\frac{4\pi^2}{2} \sin\Psi d\Psi\, J_0\left\{\frac{i|I||H|}{kT\gamma}(\cos\Psi + 1)\right\} J_0\left\{\frac{i|P||E|(\cos\Psi - 1)}{kT\gamma}\right\}}{\frac{4\pi^2}{2} \int_{0}^{\pi} J_0\left\{\frac{i|H||I|}{kT\gamma}(\cos\Psi + 1)\right\} J_0\{\quad 〃 \quad\} d\Psi \sin\Psi}$$

which leads us to

$$\{\text{ the mean of } \cos\Psi \}$$

$$= \int_0^{\pi} \cos\Psi \sin\Psi \, I_0\left\{\frac{|H||I|}{kT\gamma}(\cos\Psi+1)\right\} I_0\left\{\frac{|P||E|(\cos\Psi-1)}{kT\gamma}\right\} d\Psi$$
$$\div \int_0^{\pi} I_0\left\{\frac{|I||H|}{kT\gamma}(\cos\Psi+1)\right\} I_0\left\{\frac{|P||E|(\cos\Psi-1)}{kT\gamma}\right\} \sin\Psi\cot\Psi \, d\Psi. \qquad (A-7-8)$$

Taking γ to be unity to the system of internal motion, we finally find

$$= \int_0^{\pi} I_0\{a(\cos\Psi+1)\} I_0\{b(\cos\Psi-1)\} \sin\Psi\cos\Psi \, d\Psi \div \int_0^{\pi} I_0\{a(\cos\Psi+1)\} I_0\{b(\cos\Psi-1)\} \sin\Psi \, d\Psi, \qquad (A-7-9)$$

in which $a = \dfrac{|I||H|}{kT}$ and $b = \dfrac{|P||E|}{kT}$.

Integrating (A − 7 − 6) terms by terms with

$$\exp x = \sum_{n=0}^{\infty} \frac{x^n}{n!},$$

and in recourse to

$$\int_0^{\pi} \cos^n u \, du = \begin{cases} 0 \ ; \ n : \text{odd} \\ \binom{n}{(\frac{n}{2})} \left(\frac{1}{2}\right)^n \pi \ ; \ n : \text{even}, \end{cases}$$

we obtain

$$= \frac{ab\left\{\dfrac{1}{3!} + \dfrac{2(a^2+b^2)}{5!} + \dfrac{3[(a^2+b^2)^2+a^2b^2]}{7!} + \cdots\cdots\right\}}{1 + \dfrac{a^2+b^2}{3!} + \dfrac{(a^2+b^2)^2+2a^2b^2}{5!} + \dfrac{(a^2+b^2)[(a^2+b^2)^2+6a^2b^2]}{7!} + \cdots\cdots} \qquad (A-7-10)$$

convergence radii of $|a+b|$ and $|a-b|$ being $2 \sim 4$.

(A－8) Calculation of Mutual Inductance

Fig. 24

(See the right leaf.)

Mutual inductance L between vertical infinite line and a torus coil is determined by

$$\Psi = -\frac{L}{c^2}\cdot\frac{\partial i}{\partial t} = -\frac{1}{c}\iint_F \frac{\partial H}{\partial t}\cdot dF, \qquad (A-8-2)$$

where the circumference of torus coil is expressed by,

$$(x-R)^2 + y^2 = r^2, \qquad (A-8-1)$$

to R and r in Fig. 9 and taking vertical infinite line to be y-axis (in Fig. 24).

(A－8－2) is nothing but Faraday's induction law in which the interval F of integrand is inside the circle of (A－8－1) with that circumference. (A－8－2) leads to

$$= \frac{\pi}{5c^2}\cdot\frac{\partial i}{\partial t}\iint_F \frac{dxdy}{x}. \qquad (A-8-3)$$

We must perform the integral of,

(A−8) 相互インダクタンスの計算

(第24図)

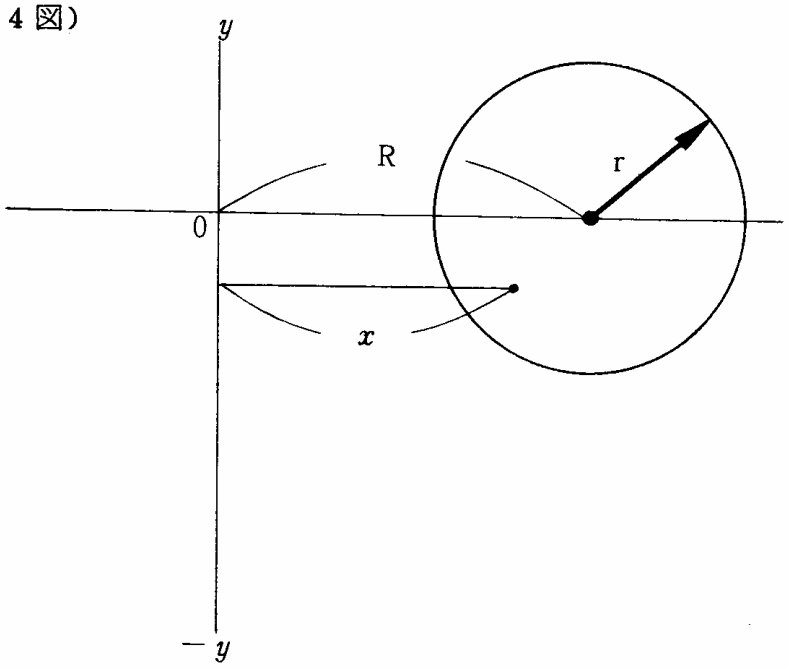

$$(x-R)^2+y^2=r^2$$

$$H=\frac{\pi i}{5cx} \qquad y=\pm\sqrt{r^2-(x-R)^2},$$

$$R-r\leqq x\leqq R+r$$

無限鉛直線とトーラスコイル間の相互インダクタンスLは，第9図の如くR及びrを採ると，無限鉛直線をy軸として，トラスコイルの円周を方程式

$$(x-R)^2+y^2=r^2 \qquad (A-8-1)$$

で示すと(第24図)，

$$\Psi=-\frac{L}{c^2}\cdot\frac{\partial i}{\partial t}=-\frac{1}{c}\iint_F\frac{\partial H}{\partial t}\cdot dF \qquad (A-8-2)$$

である。但し此れはファラデの誘導則であって，面積分の変域Fは，円(A−8−1)の内部及び周上である。

$$=\frac{\pi}{5c^2}\cdot\frac{\partial i}{\partial t}\iint_F\frac{dxdy}{x} \qquad (A-8-3)$$

となるから，積分

$$I = \int_{R-r}^{R+r} \frac{\sqrt{r^2 - (R-x)^2}}{x}\, dx, \qquad (A-8-4)$$

which leads us to

$$I = \lim_{\epsilon \to 0} \int_{R-r+\epsilon i}^{R+r+\epsilon i} \frac{\sqrt{r^2 - (x-R)^2}}{x}\, dx$$

$$= \frac{1}{2} \oint_{c_1} \frac{\sqrt{r^2 - (x-R)^2}}{x}\, dx,$$

c_1 representing a contour in Fig. 23.

Fig. 23

(See the right leaf.)

$$= \frac{1}{2}\left[-i \oint_{|x|=\varepsilon \to \infty} \frac{\sqrt{(x-R)^2 - r^2}}{x}\, dx + i \oint_{|x|=\varepsilon \to 0} \frac{\sqrt{(R-x)^2 - r^2}}{x}\, dx\right].$$

Expanding the first term and taking the branch into consideration,

$$= \frac{1}{2}\left[-i \oint \left(1 - \frac{R}{x} + \cdots\cdots\right) dx + i \oint \frac{\sqrt{(R-x)^2 - r^2}}{x}\, dx\right]$$

$$= \frac{2\pi i}{2}\left[\frac{i}{2\pi i} \oint \left(1 - \frac{R}{x} + \cdots\cdots\right) dx + i \oint \frac{\sqrt{(R-x)^2 - r^2}}{2\pi i x}\, dx\right],$$

$$I=\int_{R-r}^{R+r}\frac{\sqrt{r^2-(R-x)^2}}{x}dx \qquad (A-8-4)$$

が問題である。

$$I=\lim_{\varepsilon\to 0}\int_{R-r+\varepsilon i}^{R+r+\varepsilon i}\frac{\sqrt{r^2-(x-R)^2}}{x}dx$$

$$=\frac{1}{2}\oint_{C1}\frac{\sqrt{r^2-(x-R)^2}}{x}dx$$

であって，C_1 は第２３図の積分路である。

（第２３図）

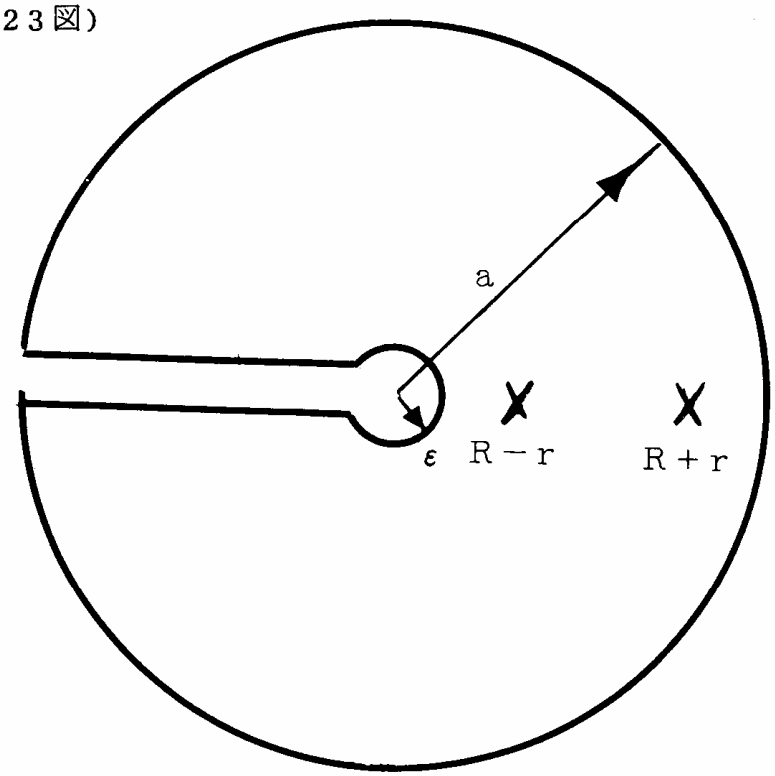

$$=\frac{1}{3}\left(-i\oint_{|x|=\varepsilon\to\infty}\frac{\sqrt{(x-R)^2-r^2}}{x}dx+i\oint_{|x|=\varepsilon\to 0}\frac{\sqrt{(R-x)^2-r^2}}{x}dx\right)$$

第１項を分枝に注意して展開し，

$$=\frac{1}{2}\left(-i\oint\left(1-\frac{R}{x}+\cdots\cdots\right)dy+i\oint\frac{\sqrt{(R-x)^2-r^2}}{x}dx\right)$$

$$=\frac{2\pi i}{2}\left(\frac{1}{2\pi i}\oint\left(1-\frac{R}{x}+\cdots\cdots\right)dx+i\oint\frac{\sqrt{(R-x)^2-r^2}}{2\pi ik}dx\right)$$

コシの留数定理から

which finally reduces to

$$=\pi i\left[i(-R)+i\sqrt{R^2-r^2}\right]=\pi(R-\sqrt{R^2-r^2}). \qquad (A-8-5)$$

Comparing (A−8−3) with the first side of (A−8−2) and taking the factor 10 when we express magnetic field in C. G. S. (gauss), we find

$$L=4\pi(R-\sqrt{R^2-r^2}), \qquad (A-8-6)$$

which reduces to

$$\approx \frac{2\pi r^2}{R} \ (cm) \qquad (A-8-7)$$

when $r \ll R$.

(A−9) Equilibrium Equation of Four Dimensional Stress Tensor

There are four dimensional stress components of f^{41}, f^{32}, f^{43} and f^{44} upon infinitesimal hyper surface element of

$$dF^4 = dx\,dy\,dz.$$

We have known that :

f^{41} = (x component of internal force upon dF^4),
f^{42} = (y component of internal force upon dF^4),
f^{43} = (z component of internal force upon dF^4),
f^{44} = (t component of internal force upon dF^4).

$$dF^4 = dx\,dy\,dz,$$

is called hyper surface, but is essentially a solid element as indicated in the sixth chapter. On the other hand, volumetric force owns four components such that

$$F = (f^1, f^2, f^3, f^4).$$

Equilibrium of

$$f^4 d\tau = f^4 dx\,dy\,dz\,du$$

with internal force is described by,

$$\left(f^{41}+\frac{\partial f^{41}}{\partial x}-f^{41}\right)dF^1+\left(f^{42}+\frac{\partial f^{42}}{\partial y}-f^{42}\right)dF^2+\left(f^{43}+\frac{\partial f^{43}}{\partial z}dz-f^{43}\right)dF^3+\left(f^{44}+\frac{\partial f^{44}}{\partial u}du-f^{44}\right)dF^4=f^4\,dx\,dy\,dz\,du, \qquad (A-9-1)$$

whose details are tabulated as follows :

volume on which stress acts	Direction of Action of Stresses			
	x-direction	y-direction	z-direction	u-direction
dy dz du	$f^{11}+\frac{\partial f^{11}}{\partial x}dx$ $-f^{11}$	$f^{12}+\frac{\partial f^{12}}{\partial y}dx$ $-f^{12}$	$f^{13}+\frac{\partial f^{13}}{\partial z}dz$ $-f^{13}$	$f^{14}+\frac{\partial f^{14}}{\partial u}dx$ $-f^{14}$
dz du dx	$f^{21}+\frac{\partial f^{21}}{\partial x}dy$ $-f^{21}$	$f^{22}+\frac{\partial f^{22}}{\partial y}dy$ $-f^{22}$	$f^{23}+\frac{\partial f^{23}}{\partial z}dy$ $-f^{23}$	$f^{24}+\frac{\partial f^{24}}{\partial u}dy$ $-f^{24}$
du dx dy	$f^{31}+\frac{\partial f^{31}}{\partial x}dz$ $-f^{31}$	$f^{32}+\frac{\partial f^{32}}{\partial y}dz$ $-f^{32}$	$f^{33}+\frac{\partial f^{33}}{\partial z}dz$ $-f^{33}$	$f^{34}+\frac{\partial f^{34}}{\partial u}dz$ $-f^{34}$
dx dy dz	$f^{41}+\frac{\partial f^{41}}{\partial x}du$ $-f^{41}$	$f^{42}+\frac{\partial f^{42}}{\partial y}du$ $-f^{42}$	$f^{43}+\frac{\partial f^{43}}{\partial z}du$ $-f^{43}$	$f^{44}+\frac{\partial f^{44}}{\partial u}du$ $-f^{44}$

TABLE 4

Normal of dF^1 is x-axis, while that of dF^2 y-axis, that of dF^3 z-axis and finally that of dF^4 time-axis, respectively, by which we can understand TABLE 4. (A−9−1) can be derived by thinking of the last row in TABLE 4.

Secondly we shall consider on equilibrium of hyper moment around 0_1 upon infinitesimal surface element of dxdu near the origin of x-u plane as in Fig. 38 which leads us to

Fig. 38
(See the right leaf.)

Equilibrium of Internal Bending Moment around the center of infinitesimal plane element of dxdu.

$$f^{14}\,dy\,dz\,du\cdot\frac{dx}{2}+\left(f^{14}+\frac{\partial f^{14}}{\partial x}dx\right)dy\,dz\,du\cdot\frac{dx}{2}-f^{41}\,dx\,dy\,dz\times\frac{du}{2}-\left(f^{41}+\frac{\partial f^{41}}{\partial u}du\right)dx\,dy\,dz\cdot\frac{du}{2}=0. \qquad (A-9-2)$$

Neglecting higher order of infinitesimal terms we obtain

$$f^{41}=f^{14}. \qquad (A-9-3)$$

The remaining five planes give

$$f^{23}=f^{32},\ f^{12}=f^{21},\ f^{42}=f^{24}\quad\text{and}\quad f^{43}=f^{34},\quad f^{31}=f^{13} \qquad (A-9-4)$$

第　4　表

応力の作用体積	応力の作用方向			
	x 方向	y 方向	z 方向	u 方向
dy dz du	$f^{11}+\frac{\partial f^{11}}{\partial x}dx$ $-f^{11}$	$f^{12}+\frac{\partial f^{12}}{\partial y}dx$ $-f^{12}$	$f^{13}+\frac{\partial f^{13}}{\partial z}dx$ $-f^{13}$	$f^{14}+\frac{\partial f^{14}}{\partial u}dx$ $-f^{14}$
dz du dx	$f^{21}+\frac{\partial f^{21}}{\partial x}dy$ $-f^{21}$	$f^{22}+\frac{\partial f^{22}}{\partial y}dy$ $-f^{22}$	$f^{23}+\frac{\partial f^{23}}{\partial z}dy$ $-f^{23}$	$f^{24}+\frac{\partial f^{24}}{\partial u}dy$ $-f^{24}$
du dx dy	$f^{31}+\frac{\partial f^{31}}{\partial x}dz$ $-f^{31}$	$f^{32}+\frac{\partial f^{32}}{\partial y}dz$ $-f^{32}$	$f^{33}+\frac{\partial f^{33}}{\partial z}dz$ $-f^{33}$	$f^{34}+\frac{\partial f^{34}}{\partial u}dz$ $-f^{34}$
dx dy dz	$f^{41}+\frac{\partial f^{41}}{\partial x}du$ $-f^{41}$	$f^{42}+\frac{\partial f^{42}}{\partial y}du$ $-f^{42}$	$f^{43}+\frac{\partial f^{43}}{\partial z}du$ $-f^{43}$	$f^{44}+\frac{\partial f^{44}}{\partial u}du$ $-f^{44}$

dF^1 の法線はx軸，dF^2 の法線はy軸，dF^3 の法線はz軸で，最後に dF^4 の法線は時間軸である事を考えると，第4表を容易に理解する事が出来ます。第4表の最後の列に就いて考えたのが，（A－9－1）でした。

次に，x－u平面の原点近くで，第38図の如く，超応力の，微小平面dx dyの中心0_1の周りの超モウメントが0である事から，

第38図

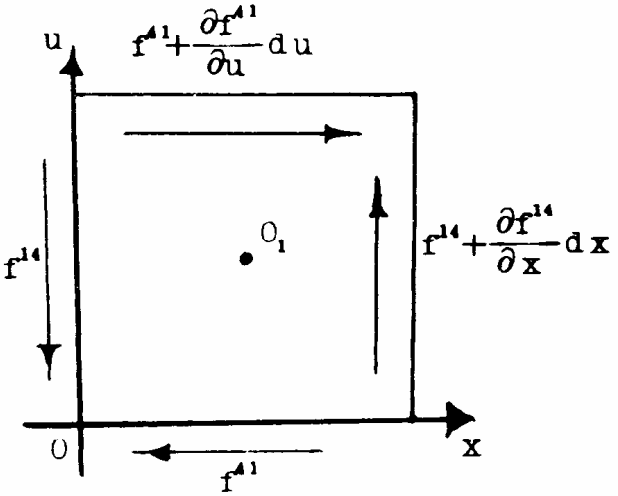

（超モウメントの平衡）

$$f^{14}\,dy\,dz\,du\cdot\frac{dx}{2}+\left(f^{14}+\frac{\partial f^{14}}{\partial x}\times dx\right)\times dy\,dz\,du\cdot\frac{dx}{2}-f^{41}\times dx\,dy\,dz\cdot\frac{du}{2}-\left(f^{41}+\frac{\partial f^{41}}{\partial u}\times du\right)dx\,dy\,dz\cdot\frac{du}{2}=0,\qquad(A-9-2)$$

を得ます。高次の微小項を省略して，

$$f^{41}=f^{14}\qquad(A-9-3)$$

を得ます。

残りの5枚の平面に就いて，

$$f^{23}=f^{32},\quad f^{31}=f^{13},\quad f^{12}=f^{21},\quad f^{42}=f^{24},\quad f^{43}=f^{34},\qquad(A-9-4)$$

which finally leads to

$$f^{jk} = f^{kj} . \qquad (A-9-5)$$

(A−9−1) can be rearranged in

$$\partial_k f^{4k} = f^4 . \qquad (A-9-6)$$

The remaining three directions give

$$\partial_k f^{1k} = f^1 , \quad \partial_k f^{2k} = f^2 , \quad \text{and} \quad \partial_k f^{3k} = f^3 .$$

We namely obtain equilibrium equation of hyper stresses of,

$$\partial_k f^{jk} = f^j \qquad (A-9-7)$$

(contracted over k) .

If no volumetric force is present, (A−9−7) reduces to

$$\partial_k f^{jk} = 0 , \qquad (A-9-8)$$

for which we can take potentials of φ^{jk} such that

$$f^{jk} = \partial_j \partial_k \varphi^{mn} ,$$

$$f^{jj} = -(\partial_k^2 \varphi^{mn} + \partial_m^2 \varphi^{nk} + \partial_n^2 \varphi^{mk}) ,$$

$$(\varphi^{jk} = \varphi^{kj}) , \qquad (A-9-9)$$

so that (A−9−8) may identically be satisfied.

We also know the other conservation Eqn. of energy momentum tensor of,

$$\partial_k T^{jk} = 0 , \qquad (A-9-10)$$

which can be satisfied by taking potentials of,

$$T^{jk} = \partial_j \partial_k \Psi^{mn} ,$$

$$T^{jj} = -(\partial_k^2 \Psi^{mn} + \partial_m^2 \Psi^{nk} + \partial_n^2 \Psi^{km}) . \qquad (A-9-11)$$

If $\quad \Box^4 \varphi^{jk}(X) = 0 , \qquad (A-9-12)$

we obtain $\quad \Box^4 \Psi^{jk}(X) = 0 , \qquad (A-9-13)$

where we have taken the boundary conditions of,

$$\lim_{x\to\infty} f^{jk}(X) = \lim_{y\to\infty} f^{jk}(X) = \lim_{z\to\infty} f^{jk}(X) = \lim_{u\to\infty} f^{jk}(X) = 0 ,$$

for time-dependent solutions, while those of,

$$\lim_{x\to\infty} f^{jk}(X) = \lim_{y\to\infty} f^{jk}(X) = \lim_{z\to\infty} f^{jk}(X) = 0 ,$$

for static field, by which we have annhilated degrees of freedom that arbitrary functions are trailed when integrating (A−9−8) and (A−9−10).

(A-10) Kageyama Model

Kageyama Model which is educational one of rotating electric field on spherical condensers is displayed on the following Fig.

(See the right)

Fig. 64

Clock-wise rotation appears only when

$$R = 10\,M\Omega.$$

Otherwise it enjoys upwards counter clock-wise rotation. This twinkling rotation is that of a morning-glory or any vine.

It continues to enjoy counter clock-wise rotation if one decreases variable resister and vice versa.

Namely, if the initial condition is clock-wise one it leads so and vice versa. Twinkling rotation, of course, becomes rapid when one increases electric potential across delta Neons. This model is called Kageyama One since the inventor is Akira KAGEYAMA.

(A-11) Reversing Reflection upon Mirror

Image upon mirror reverses itself laterally, while it enjoys ordinary orientation longitudinally. It seems quite natural to enjoy longitudinal inversion if laterally so.

(See the right)

Fig. 65

Why? <Above> and <Below> are present because g-field is so. For instance, mirror of EARTH also reverses itself, namely,

（A−10） 影 山 模 型

3相電源を，球型コンデンサーに充放電した時の電場の回転を教育模型的に示すには，次図の回路で示した影山モデルと称されるものがある。

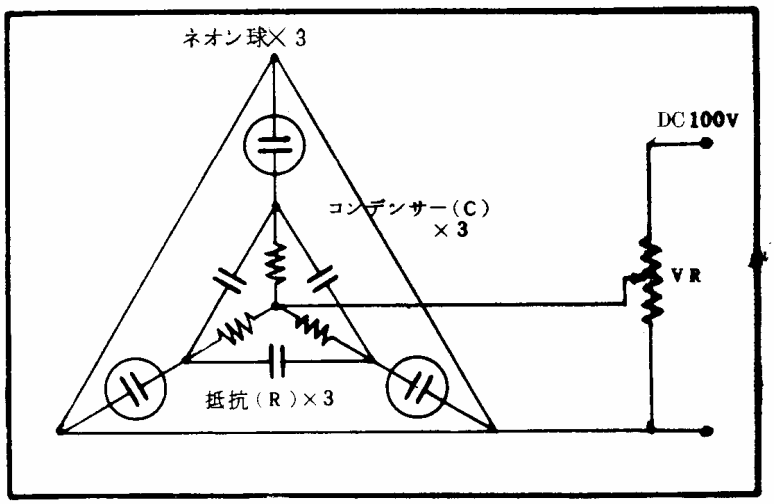

（第64図）

Rに10 MΩの値をとった時にのみ，上から見て時計方向の回転が現われる。他のRの値の時は．反時計方向の回転となる。上方へ向けてz軸をとった時に，朝顔のつるの巻方の回転である（10 MΩを使用した時）。

可変抵抗器を減じていく時，初期条件として時計方向の回転から出発すれば，この回転が連続し，逆ならば逆である。勿論．ネオン球にかかる電圧を上げると，回転速度は大きくなる。影山氏に依って考案されたので，影山モデルと称している。

（A−11） 鏡 の 反 転 性

鏡に映る像は，左右が反転している。一方，上下は反転していない。左右が反転しているならば，上下もそうであってよさそうなものである。

この理由は，何であろうか？上，下があるのは重力場があるからである。そこで，重力場全体からみると——例えば．地球の南極と北極を上，下方向に置いて考えて，南極での上下と，

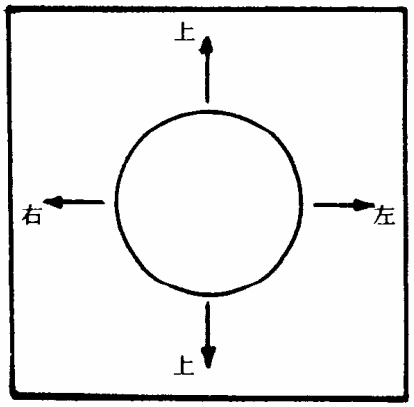

（第65図）

when we treat a whole g-field-we think giant mirror of EARTH.

This conception also holds when we think of microscopic g-field —— for instance, that of electron.

(A-12) Multiplication Theorem and Frequency Modulation

Multiplication Theorem may appear corresponding with addition theorem in trigonometory. In recourse to generalized theorem of De moivre's we have

$$(\cos\beta + i\sin\beta)^{\alpha} = \cos\alpha\beta + i\sin\alpha\beta, \qquad (A-12-1)$$

the right hand side of which leads to

$$= (\cos\beta)^{\alpha}(1 + i\tan\beta)^{\alpha}. \qquad (A-12-2)$$

If

$$\alpha\beta = \theta,$$

takes all the real value, there is no restriction to α, because of which we put

$$0 < \beta < \pi/4 . \qquad (A-12-3)$$

Then,

$$|i\tan\beta| < 1, \qquad (A-12-4)$$

holds. With reference to extended binomial theorem we obtain,

$$\begin{aligned}(1+i\tan\beta)^{\alpha} &= 1 + \alpha i\tan\beta - \frac{\alpha(\alpha-1)}{2!}\tan^2\beta \\ &- \frac{\alpha(\alpha-1)(\alpha-2)}{3!}(i\tan^3\beta) + \cdots\cdots \\ &+ \frac{\alpha(\alpha-1)\cdots(\alpha-n+1)}{n!}(i\tan\beta)^n + \cdots\cdots \\ &= 1 - \frac{\alpha(\alpha-1)}{2!}\tan^2\beta + \frac{\alpha(\alpha-1)(\alpha-2)(\alpha-3)}{4!}\tan^4\beta \cdots\cdots \\ &\cdots + i\left[\alpha\tan\beta - \frac{\alpha(\alpha-1)(\alpha-2)}{3!}\tan^3\beta\right. \\ &\left. + \frac{\alpha(\alpha-1)(\alpha-2)(\alpha-3)}{5!}\tan^5\beta - \cdots\cdots\right] \qquad (A-12-5)\end{aligned}$$

Then, the left hand side is easily found to be,

$$= (\cos\beta)^{\alpha} - \frac{\alpha(\alpha-1)}{2!}\sin^2\beta(\cos\beta)^{\alpha-2}$$

$$+ \frac{\alpha(\alpha-1)(\alpha-2)(\alpha-3)}{4!}\sin^4\beta(\cos\beta)^{\alpha-4} - \cdots\cdots$$

$$+ i\left[\alpha\sin\beta(\cos\beta)^{\alpha-1} - \frac{\alpha(\alpha-1)(\alpha-2)}{3!}\sin^3\beta(\cos\beta)^{\alpha-3} + \cdots\right].$$

We finally obtain,

$$\cos\alpha\beta = (\cos\beta)^{\alpha} - \frac{\alpha(\alpha-1)}{2!}\sin^2\beta(\cos\beta)^{\alpha-2}$$

$$+ \frac{\alpha(\alpha-1)(\alpha-2)(\alpha-3)}{4!}\sin^4\beta(\cos\beta)^{\alpha-4} - \cdots\cdots$$

$$\sin\alpha\beta = \alpha\sin\beta(\cos\beta)^{\alpha-1} - \frac{\alpha(\alpha-1)(\alpha-2)}{3!}\sin^3\beta$$

$$\times(\cos\beta)^{\alpha-3} + \cdots\cdots, \qquad \text{(A-12-6)}$$

comparing real part and imaginary of the left hand side with those of the right hand side, respectively, which is multiplication theorem.

This theorem is applied to frequency modulation expression of,

$$\Psi = \Psi_0\sin(\Omega\sin\omega t)\,t$$

$$= \Psi_0\sin(\sin\omega t)\,\Omega t \qquad \text{(A-12-7)}$$

If we put,

$$\alpha = \sin\omega t, \qquad \beta = \Omega t, \qquad \text{(A-12-8)}$$

(A-12-7) leads us to,

$$\sin(\Omega\sin\omega t)\,t = (\sin\omega t)\sin\Omega t(\cos\Omega t)^{\sin\omega t-1}$$

$$- \frac{\sin\omega t(\sin\omega t-1)(\sin\omega t-2)}{3!}\sin^3\Omega t(\cos\Omega t)^{\sin\omega t-3}$$

$$+ \cdots\cdots\Big]. \qquad \text{(A-12-9)}$$

Physical Constants associated with the present title

Signal Velocity $c = 2.9979 \times 10^{10}$ cm/sec.

Newtonian Gravitation Constant

$k = 6.670 \times 10^{-8}$ dyn · cm^2/g^2,

Unit Year $Y = 365.242$ days

Mass of the Moon $m = 0.0123$ A.U.

Mass of the Earth $M = 1.00$ A.U. $= 5.977 \times 10^{27}$ gr

Mass of the Sun $M' = 332,958$ A.U. $= 1.991 \times 10^{33}$ gr

Distance between the Earth and the Sun

$\ell = 1.00$ A.U. $= 1.49600 \times 10^{8}$ Km

Light Year $\ell' = 9.46 \times 10^{12}$ Km

Mass of our Galaxy $M'' = 2 \times 10^{11} M'$

Rotation Velocity of our Galaxy at the Solar System $v = 250$ Km/sec.

Mass Density of the Universe (near the Solar System)

$\rho = 1.0 \times 10^{-23}$ gr/cm^3

Stress Energy of Gravitation upon the Surface of the Earth

$$w = -\frac{g^2}{8\pi k} = -5.4 \times 10^{11} \text{ gr/cm}^3$$

Horizontal Component of Geomagnetic Field (at Hamamatsu) $H = 30942\ \gamma$

g-Acceleration

Helsinki	981.9152	cm/sec^2.
Roma	980.3617	〃
Johanesburg	978.5495	〃
Shohwa Base	982.5401	〃

Resistivity of Cupper $\rho = 1.72 \times 10^{-6}\ \Omega \cdot cm$ ($T = 293°K$)

Density of Cupper $\rho = 8.93$ gr/cm^3

Density of Barium Strontium Titanate

$\rho = 6.05$ gr/cm^3

〔Unit cell is $(4A°)^3$.〕

Density of Ferroxcube 2 $\rho = 4.4$ gr/cm^3

Coupling Constant of Electron

$$\alpha = -\frac{e}{2mc} = -9.41 \times 10^{6} \text{/gauss} \cdot \text{sec}$$

Physical Constants associated with the present title

(Coupling constant of Frenker-Kramers Equation is twice this constant to most of materials.)

Unit Charge $-e = -4.803 \times 10^{-10}$ esu

Mass of Electron $m = 9.1083 \times 10^{-28}$ gr

Mass of Proton $M = 1836m = 1.00759$ amu $= 1.6729 \times 10^{-24}$ gr

Mass of Neutron $M' = 1839m = 1.00898$ amu

Classical Radius of Electron

$$r_0 = \frac{e^2}{mc^2} = 2.818 \times 10^{-13} \ cm$$

Bohr Radius $a_0 = \dfrac{\hbar^2}{me^2} = 5.292 \times 10^{-9} \ cm$

Wave Length of Visible Ray

$$\lambda = (3 \sim 7) \times 10^{-5} \ cm$$

Period of Electron in Hydrogen Atom

$$\frac{2\pi\hbar^3}{me^4} = 1.520 \times 10^{-16} \text{ sec.}$$

Period of Other Planets

Mercury	0.2409 year
(Earth	1.0000 year)
Mars	1.8809 year
Saturn	29.350 year
Pluto	250.431 year
(The Tenth Planet $\approx$ 775.0)	
Uranus	84.598 year

(The first 21 years are nights of Winter in Northern Hemisphere, while days of Summer in Southern. The following 21 years are periodically days and nights. The third 21 years are days of Summer in Northern Hemisphere, while nights of Winter in Southern. The last 21 years are also periodically days and nights.)

Planck's Constant

$$\hbar = \frac{h}{2\pi} = 1.054 \times 10^{-27} \text{ ergs} \cdot \text{sec.}$$

Boltzmannean Constant $k = 1.380 \times 10^{-16}$ ergs/degree

Unit Electron Volt $1 \text{ eV} = 1.602 \times 10^{-12}$ erg

1 coulomb $= 2.9979 \times 10^{9}$ esu

Physical Constants associated with the present title

Time Reversing Machine (Past Observing Machine) and Geologic Scales

Beginning of Quaternary Period of Cenozoic Era	$t = -10^6$ years
Tertiary Period of Cenozoic Era	$t = -63 \times 10^6$ years
Cretacious Period of Mesozoic Era	$t = -135 \times 10^6$ years
Jurassic Period of Mesozoic Era	$t = -181 \times 10^6$ years
Triassic Period of Mesozoic Era	$t = -230 \times 10^6$ years
Permian Period of Paleozoic Era	$t = -280 \times 10^6$ years
Carboniferous Period of Paleozoic Era	$t = -345 \times 10^6$ years
Devonian Period of Paleozoic Era	$t = -405 \times 10^6$ years
Silurian Period of Paleozoic Era	$t = -425 \times 10^6$ years
Ordovician Period of Paleozoic Era	$t = -500 \times 10^6$ years
Cambrian Period of Paleozoic Era	$t = -600 \times 10^6$ years

(Dreams of Earth vanish far at $t = -600 \times 10^6$ years. Yet time reversing machine owns the possibility in which further past will be searched for.)

Shinichi SEIKE

The Principles of Ultra Relativity

Mailing Adress,

Shinichi SEIKE, G Research Lab, P.O. Box 33

UWAJIMA Ehime (798) JAPAN

Price, USD 55.00 (including air mail postage)

Publisher, G Research Laboratory

Printing Office, Ninomiya Press

The First Edition, on the 1/December, 1969

Revised Edition, on the 1/November, 1970

The Third Edition, on the 20/April, 1972

The Fourth Edition, on the 1/June, 1976

The Fifth Edition, on the 10/September, 1978

The Sixth Edition, on the 1st/April, 1982

The Seventh Edition, on the 1st/July, 1983

The Eightth Edition, on the 20th/April, 1986

The Theory of Antigravity

H. Aspden

Abstract

This paper extends the principles of earlier gravitational theory by which the constant of gravitation G *has been deduced in terms of an electrodynamically based graviton theory. Demonstrable anomalous gravitational effects reproducible in the laboratory, which reveal the prospect of antigravitational action, are discussed. It is shown that the theory does include features which can explain observed antigravitational effects. The action points to vacuum energy fluctuations arising from graviton decay and regeneration. Recently reported weight loss accompanying gyroscopic spin in a nonprecessing mode is also explained.*

Key words: gravitons, antigravity, gyroscopes, vacuum field structure

1. INTRODUCTION

The recent media interest in antigravity devices and their public demonstration has presented a technological problem, which is complicated by the lack of interest of the theoretical physicist. Theory has not yet given us an accepted comprehensive understanding of the true nature of gravitational forces and particularly the field unification with electromagnetism. It is, therefore, rather bewildering to be confronted with the suggestion that there are any laboratory-verifiable anomalies of an antigravitational nature. This is even more disconcerting when we consider that our hopes for resolving the unification problem have come to rely on our imaginary probes into the events when the universe was first created.

The immediate concern, however, is that posed by the weight loss of a flywheel spinning in vacuum about a vertical axis.[1] The report in Ref. 1 claims the extraordinary observation that the flywheel lost weight in a measure directly proportional to the speed of rotation, *but only for rotation in one direction, clockwise as seen from above in a laboratory test performed in the northern hemisphere.*

The fact that this experiment was performed in a university laboratory in Japan reveals the concern on the broader issue of antigravitational effects of gyroscopes, but hitherto the claims of antigravitational effects have related essentially to gyroscopes that are force-precessed. By this is meant the action of causing a gyroscope to precess faster than arises from normal gravitational action on the flywheel.

It is the object of this paper to discuss, in physical terms, why antigravitational effects can occur and then point to the experimental evidence in support. Claims that experiments can breach accepted principles of gravity or basic Newtonian mechanics tend to be discounted in the absence of theoretical support. Equally, theories of antigravity can justifiably be seen as wild speculation in the absence of experimental support.

Apart from the latest Japanese data,[1] the author is relying for such support on a report by a laboratory that has performed a test as part of a commercial investigation plus what he has seen demonstrated by those in possession of antigravitational gyroscopic devices.

Whatever the viewpoint or bias of the reader who is well versed in gravitational theory, there is a need to come to terms with the phenomena that are now in evidence.

2. THE HAYASAKA-TAKEUCHI EXPERIMENT

It is assumed that the reader will not be disposed to accept antigravitational phenomena readily. Therefore, the claim that this experiment[1] reveals a speed-dependent weight reduction by a flywheel in spin must be examined with other force-producing agencies in mind. One that has apparently occurred to the authors of the experiment is that magnetic levitation effects, perhaps involving the geomagnetic field, are involved. They discount such action on the strength of having performed diagnostic tests involving inverting the flywheel and screening the geomagnetic field. Others have already expressed the opinion that experts on general relativity will soon find a way of explaining the antigravity anomaly. That should not, however, deter us from considering an interpretation based on the more likely outcome, which is that the theory of relativity itself has been overtaken by physical realities that cannot be tamed by the abstract techniques of that theory.

The Japanese paper seems to be a very authoritative account and so,

subject to comments presented in the Appendix commentary, it must be presumed that the lift force which they measure as

$$2 \times 10^{-5}\, M\omega r \ \mathrm{g \cdot cm \cdot s^{-2}} \qquad (1)$$

is genuine. Here, M is the mass of the flywheel, r the mean radius of its mass elements, and ω the angular spin velocity of the flywheel in radians per second.

We should take special note that the experiment was performed in a *vacuum* to eliminate aerodynamic lift actions, and it gave the most remarkable result that levitation force effects occurred only for clockwise flywheel rotation.

The fact that the lift force depends upon direction of spin is a clear indicator of an asymmetry arising from charge displacement. The author's theory of the vacuum field in terms of synchronous lattice electrodynamics[2] specifies that there is a preferred spin direction in the vacuum. An action conductive to vacuum spin will displace electric charge radially outwards or inwards according to the orientation of the spin axis relative to the preferred direction. However, such displacement must be balanced by charge displacement in matter, and electrons can flow outwards in a conductive flywheel to sit just outside the vacuum region in spin, but positive ions cannot be so displaced. Accordingly, the coextensive rotation of the vacuum medium within a flywheel can only occur readily for one direction of spin, that which corresponds to the rotation of the Sun and all the planets.

Now, to make sense of this, it has to be understood that the vacuum is really a structured medium somewhat like a fluid crystal. Depending upon field energy criteria, it develops structure centered on individual atomic nuclei, and this structure can extend to interface boundaries located in the proximity of the outer electrons of the atom. At these boundaries whatever constitutes the structure can dissolve as part of a heavy lepton field, and it is this heavy lepton form that can migrate so as to conserve momentum and thereby make the coupling between matter and the vacuum rather tenuous. It would seem that flywheel rotation one way can rapidly establish a spin motion of the vacuum structure which avoids the countermotion of the heavy leptons, whereas rotation in the opposite sense means that the heavy leptons are moving through the structure as part of a countermotion state. In the latter case they constitute pockets of space in which the vacuum structure has dissolved, and this means that there is no gravity action associated with the portion of the flywheel occupying those pockets of space.

To bring this seemingly speculative proposal to a conclusion, it seems best to derive the weight loss formula to show how it agrees with Eq. (1), the result obtained by Hayasaka and Takeuchi.[1]

The vacuum structure comprises virtual lattice particles of mass m_0 which does not increase relativistically because the particles are constrained in a synchronous harmonic system which assures energy exchange keeping the mass constant. The motion is a jitter motion which is dynamically balanced by gravitons relative to which the lattice moves at speed c. This results in the particles each having motion relative to the inertial frame at speed $c/2$ and so a kinetic energy $\frac{1}{2}m_0(c/2)^2$.

Equipartition of energy by interaction of the lepton states means that this jitter energy becomes the kinetic energy of the free heavy lepton nucleated from such a lattice particle. Therefore, τ being the mass of this heavy lepton, this energy is $\frac{1}{2}\tau s^2$, where s is the speed of the heavy lepton. We can therefore deduce that

$$c/s = 2(\tau/m_0)^{1/2}. \qquad (2)$$

If ωr is the speed of the spin motion in the flywheel at radius r and this is shared by vacuum structure in which the main mass of the flywheel is seated, the pockets of heavy leptons in this structure, assuming a uniform virtual mass density, must take up $\omega r/(\omega r + s)$ of the space involved. In other words, this is the fractional loss of weight that we can expect. Assuming that fraction is small, it can be approximated as $\omega r/s$, and so we can write the weight loss as $Mg\,\omega r/s$, where M is the mass of the flywheel and g is the acceleration of gravity. From (2) we know s, so that the weight loss is

$$(2g/c)(\tau/m_0)^{1/2} M\omega r. \qquad (3)$$

Reference 3 shows how the following formula for the fine-structure constant is deduced in terms of m_0:

$$hc/2\pi e^2 = 108\pi(4m_0)^{1/2}, \qquad (4)$$

where m_0 is here in units of electron mass. With this value for the reciprocal of the fine-structure constant as 137.036, we see that m_0 is 1/24.52. The mass of the heavy tau lepton in similar units is 3485 (corresponding to 1.781 GeV). Therefore, if the heavy leptons are exclusively of tau form, expression (3) has a coefficient found to be 1.92×10^{-5} in the units used in (1). This is in good accord with the measured value.

We see from this that there is a case for arguing that weight involves something intermediating with a vacuum structure and that there can be weight loss if that structure is somehow dissolved or decoupled from the mass of the matter present. If the countermotion of heavy leptons can be avoided, as by developing the full vacuum spin condition for the opposite sense of flywheel motion, then there is no weight loss. However, even then there is an antigravitational phenomenon confronting us if the flywheel is forcibly caused to precess. Then that weight loss can be very substantial.

The above-mentioned Japanese experiment was reported after this paper was first submitted. It is of such importance that extensive reference to it has been incorporated at the outset so that the reader can take, as a starting point, the test data showing that a flywheel loses weight and that this occurs without forced vibration effects. Apart from a special Appendix commentary dealing with reviewer criticism, the remainder of this paper assumes no knowledge of the Japanese flywheel experiment, because it was written prior to that disclosure.

3. THE FUNDAMENTAL QUESTION

At the very outset of this discussion it is necessary to distinguish between two schools of thought as to the action involved in antigravity. Most of those researching this field believe that mass retains its full and normal gravitational property, but that the anomalous levitation or propulsion effect comes from an out-of-balance force which somehow is developed by exploiting the absence of centrifugal effects when a spinning flywheel, offset from a separate axis of rotation, is caused to precess. Others, including this author, subscribe to the view that there is a loss of weight by the force-precessed mass in the flywheel and that the underlying energy action in the vacuum field plays a role in this enigmatic behavior. The distinction is most important, because in the first case the action is a dynamic action akin to the effect of an electric or magnetic field that can act across empty space to produce force developing thrust. It should operate to produce horizontally directed thrusts or could act vertically to balance the downward force of gravity. In the second case there is something far more fundamental involved where levitation

effects are an issue, because the suggestion is that the mass property and the weight property can become separated to cause mass to lose weight.

The author believes that there could be a case for both of these anomalous effects to be present together. It is the possibility of this dual circumstance that compounds the mystery and has made it very difficult for scientists listening to the evidence to believe any of it on hearsay. Indeed, only those few scientists who have seen the demonstrations are inclined to believe that the phenomenon is real and even then some look for conventional answers they have yet to find. Certainly, they are not prepared to listen to the somewhat naive theories being advanced by those whose primary claim is that they can demonstrate the pecularities of these machines.

One clear way of distinguishing between the two effects is for those who assert that the observed levitation action is a controlled dynamic effect, not connected with weight loss, to demonstrate that they can produce an equal downward thrust merely by reversing the controlling force. The search for an antigravity machine able to levitate by some mysterious force field captures the imagination, whereas there is little interest in the equally revolutionary scientific accomplishment of causing a downward thrust which enhances the normal gravitational action.

We proceed we explore first the dynamic case and then later the theoretical basis of the antigravity phenomenon on the assumption that an actual loss of weight is involved.

4. THE ENIGMA OF ZERO CENTRIFUGAL FORCE

We begin by considering a spinning top in precession on a smooth surface.

An experiment demonstrated to the author by Eric Laithwaite at the Imperial College of Science and Technology in London reveals that a flywheel spun on a shaft having a pointed end supported on a very smooth, frictionless surface can precess around the point of support without there being any lateral slip. It purports to show that somehow there is no centrifugal action attributable to the precessional motion communicated through to the point of support.

The problem here is that the precessional velocity is normally quite small and so the centrifugal effects could only be of the order of 1 percent of the weight of the flywheel. Therefore, this is not a convincing interpretation. More convincing is the showing by Laithwaite that if, for example, a pencil is held upright and inserted in the path of the shaft of the precessing flywheel, the arrest of the flywheel's precessional motion imparts no force on the pencil. Here is the primary clue to the phenomenon by which a precessing gyroscope can be used to produce a propulsive force which appears to defy Newtonian law.

The author offers the following argument to suggest how a propulsive device wholly contained in a closed compartment can develop a force without apparent reaction on structure outside the compartment.

Suppose the mass of a flywheel describes a circle at a steady speed in a horizontal plane subject to a momentary state of rest after completing each half orbit. If it precesses under gravity over the first half of an orbit, this motion arises from a reorientation of the conserved spin angular momentum of the flywheel. The gravitational drop in potential supplies the orbital kinetic energy and there is no impulsive reaction in the horizontal plane apart from the centrifugal force. Having completed half an orbit, suppose we then lift the flywheel very slightly into a nonprecessing support position. This involves negligible effort because it is aided by the arrest of the orbital motion as the kinetic energy is returned to gravitational potential and angular momentum is conserved about the vertical axis as the flywheel spin is reorientated. Then for the next half orbit, with the flywheel fully supported, we drive it from rest and force it around the orbit at a steady speed until it is arrested after completing that half orbit. This latter phase involves a net balance of impulse forces and centrifugal forces. We are left with a forward propulsion of the vehicle attributable to the centrifugal action during the precessing phase and powered by sustaining the flywheel spin and the restoration of gravitational potential.

In effect, therefore, whilst adhering to the principles governing inertia as expressed in Newton's first and second laws, the principle that action balances reaction as required by the third law is challenged by this argument. In confronting and accepting or disposing of this proposition it seems best to appeal to the experiments that have raised the question. However, what we find here is that those who do the experiments, even in university laboratories, and find anomalies are ridiculed by those who rely on their theoretical training and decline to perform such experiments themselves.

Although many of those experimenting in this field believe that a cyclic dynamic action such as that just discussed is the way forward in the effort to drive or levitate a vehicle by breaching Newtonian principles, there is the other possibility that weight can in fact be reduced with the right technique. This will now be considered. It is relevant because the author has witnessed a demonstration by Laithwaite, which involved effortless lifting of a heavy flywheel in precession. There was no way in which this could have been possible unless the weight of the flywheel was virtually zero, because the supporting shaft itself was quite heavy.

5. THE NATURE OF THE GRAVITY FORCE

If a particle has mass and mass is acted upon by gravity, how can a "manipulated" mass ever lose weight in a gravitational field that acts normally, without loss of weight, on an "unmanipulated" mass in the same position? The expression "manipulated" applies to whatever we do to the particle to cause it to respond in the anomalous antigravitational manner.

The answer to this question has to be that we have recited an impossibility. There is, on the evidence of observation of the phenomenon, something wrong with the way in which we have formulated the question. Let us therefore recite the preamble to the question a little differently.

We now say, "If a particle has mass and this mass affects the local field in such a way that something in that field, normally coupled to the mass, is acted upon by gravity . . . ." Clearly, we can now develop the argument, because we are bringing in the field and any distortion of the space-time lattice or structure that might be said to give rise to the effects we associate with gravitation.

We do not, however, commit ourselves to the Einstein space-time doctrines. We go so far as to say that there is a local lattice in vacuum space which has an affinity to form a local structural association with the structured elementary atomic nuclei constituting the particle.

Readers will now realize that this means that we do have an optional situation. Regard that lattice structure as like the crystalline form that can nucleate in a liquid crystal. The structure can be minimal in extent, broken into local minute crystal units each nucleated on a microscopic element of nuclear matter, or it can spread until the boundaries of these units interface throughout the material system and so embrace also the relatively vast regions of empty space that intervenes between those atomic nuclei. The structure of each atom might well extend no further than the body of the nucleus or might reach some but not all of the satellite electrons.

We take what has just been said as our working hypothesis which gives

us a basis for distinguishing between the abnormal and the normal and guides us concerning the nature of the gravitational action.

We now bring the theory along a track that has already been explored with some success in connection with derivation of G, the universal constant of gravitation, as a function of the properties of so-called "gravitons." The actors in this natural scenario are, therefore, the mass of the particles involved, the space lattices nucleated on those particles, the in-fill lattice of empty space, and the transient gravitons created from the vacuum background in the vicinity of the particles which decay as they transfer their energy and momentum to the lattice system.

In a normal body at rest or one in a steady state of motion, the action of gravitation proceeds by the creation of gravitons of energy Mc^2 adjacent a mass M. These gravitons fall under their mutual gravitational action but are short-lived. Upon decay, after falling a very minute distance possibly commensurate with the Compton wavelength of the electron, which is less than the atomic spacing in solid matter, their energy and momentum are absorbed back into the vacuum energy system and so forces are exerted on the space-time lattice. In the body under consideration this lattice extends a sufficient distance from each nucleating atom in the material of the body, really filling all intervening space in the body, so that all the gravitational force is absorbed by lattice physically locked on to the material of the body. In this roundabout way we can see how the mass of such a body "appears" to be the seat of the gravitational force.

The merit of this scenario, however, is that the gravitons are discrete quanta by which one can build a quantitative theory of gravitation and calculate G in terms of fundamental particle data. This has been the primary thrust of the author's work on gravitation over many years (references to be listed later). The gravitons are created from energy borrowed from the vacuum state, as vacuum energy fluctuations which leave a virtual muon field in deficit. All this means is that we do not "see" the gravitons as mass and only sense them by their gravitational action and by their indirect influence on the observed mass spectrum of fundamental particles normally produced under high energy conditions.

The additional merit of this same scenario is that if we can cause the body to so move that its motion is not steady or not that of simple linear oscillation, we see scope for the lattices centered on each nucleus contracting to become more localized. This means that the graviton momentum is partly absorbed by the in-fill lattice, which might, for example, be coupled to the body Earth. In other words, we have with this theory the quite remarkable possibility that the weight of the body can be partially shifted to act directly on the Earth and across the intervening space in some unseen way. This would mean partial loss of weight by the body in so far as it is not considered as part of the body Earth itself. In other words, the weight of the body has transferred to become part of that of the Earth.

The effect of simple linear oscillation has been excluded because there is evidence to show that Maxwell's equations involve lattice oscillations of this kind and that the vacuum lattice system can respond perfectly to all frequencies up to that at which electron-positron creation occurs. It is as if the lattice is tuned in respect of its linear motion to have, when displaced by an electric field, a restoring force rate that adjusts in compliance with the frequency to give perfect resonant response. Thus the linear oscillation or vibration of a coextensive body will not break down the lattice.

The question then arises as to which kind of motion does break up the lattice units to cause their inward collapse to a more confined form. To approach this we now consider two ways in which we can apply force to regulate the motion of a body. One way is to remove its supports to let the force of gravity drive the body. Another way is to apply mechanical force via the structure in which the body is mounted. We ignore electrical and magnetic forces, but assume that such forces, like mechanical forces, do act via the structure and so act directly on the matter constituting the body. In contrast, the gravitational force acts via the gravitons and their coupling with the matter constituting the body.

There are therefore two basic types of force action. The gravitational force is a distributed force spread over the graviton population, and so the lattice system as a whole is subjected to the driving action of this force. The lattice system is less likely to be ruptured by a distributed force spread throughout its structure than it is by force action communicated via the atomic nuclei on which the lattice is nucleated. Bear in mind that the lattice dimension of this space-time system is commensurate with the size of an atomic nucleus in that the nucleons tend to occupy lattice sites. Thus this dimension between lattice sites is hundreds of times smaller than the interatomic spacing of the substance. What this means is that the applied mechanical force which causes a kind of twisting or nonlinear motion can rupture the lattice into small units, whereas the gravitational force tends to preserve the integrity of the larger lattice form, even though that gravitational force is causing the nonlinear motion.

As an aside it is noted that there is a mystery that cannot be resolved by aeronautical engineering experts familiar with winged flight. The bumble bee has long been recognized as defying what we understand from the physics or aerodynamics of the flight technique. Their wings do not flutter rapidly enough. This makes one wonder whether precessing flywheels are essential and whether that "twisting or nonlinear motion" mentioned above as rupturing the vacuum lattice can be occurring within the body of the bumble bee as it agitates its wings.

6. FORCED OR NATURAL PRECESSION

Reverting to the flywheel problem, precession can be forced or natural, depending upon whether it is caused by applied forces or gravitation. The mechanical system in which this distribution of applied forces is exemplified is provided by the precessing gyroscope which is offset mounted. The toy gyroscope formed by a spinning flywheel on a shaft precessing about a central tower is the most familiar form of this system.

The force couple provided by gravitation via the weight of the flywheel is the force causing the precession and this gives rise to what we term "natural" precession. If, however, we apply a couple which tends to cause the shaft to move at a different angular speed, we have a "forced" precession driven by force applied in the direct mechanical sense. It is in this latter case that the flywheel can tend to lift in a way that does not transfer weight to the support. There is here the loss of weight that we have been discussing, and it is readily seen that the hypothesis we have developed can explain this phenomenon. Conversely, the experimental observation of the phenomenon can be taken as support for the hypothesis and so the graviton theory on which it is based.

A very important question we now face is whether such a device can ever lift more than the weight of the flywheel. Based on the argument used the answer to this would seem to be negative. However, here the graviton theory as developed in the earlier work of the author has something else to offer. It was part of that theory to regard the space-time lattice as being something truly physical rather than an embrionic geometrical notion. As such it was seen as comprising what can be said to be "subelectrons,"

electric charge in its most degenerate particulate form, set in a structured array in a uniform background of degenerate nonparticulate continuum charge of opposite polarity. This means that the lattice itself has mass, and could develop its own graviton population and exhibit gravitational effects. However, such effects are not felt by interaction with matter, because the space-time lattice is universal, and there is no way in which the repositioning of matter in space can alter the gravitational potential available for energy exchange with matter.

The consequence of this proposition has far-reaching implications. We assumed that the in-fill lattice in the case of the force-precessed gyroscope would be coupled to body Earth. Suppose, however, that this is incorrect and that the in-fill lattice is coupled with the Sun or even is free in the sense of being an absolute or preferred universal frame in its own right. Then it becomes possible for some of the weight of the lattice coextensive with the atomic nuclei to be transferred to an action in that frame. In other words, some of the local space-time lattice itself can lose weight in a sea of lattice which is subject to normal weight pressures. Given that the space-time lattice is a uniformly dense system, this can but mean that whatever is coupled to the local lattice units must experience a positive lift force. The flywheel of the force-precessed offset gyroscope can then lift more than its own normal weight.

It follows that if tests confirm this phenomenon, we have a way of measuring the mass properties of space-time itself and can see scope for the levitation of vehicles carrying a payload. Such are the horizons now ahead of us, bearing in mind the experimental facts discussed below.

7. THE EXPERIMENTAL FACTS

To the author, the most significant fact of experiment is presented to anyone who has witnessed Laithwaite lift that heavy spinning flywheel by applying a slight manipulating force to a supporting shaft. The end of the shaft remote from the flywheel is supported in the crook of his little finger on an outstretched arm. The lift force needed is said to be less than 1 kg, whereas the wheel weighed 8 kg and the supporting shaft weighed 2.7 kg. Readers who have difficulty believing this should examine the photograph of this demonstration in Ref. 4, p. 64.

In this experiment there is no vibration and the evidence points to the wheel being able to lift more than its own weight.

This phenomenon appears to have been shrugged off by most scientists who look to others with deeper knowledge of mechanics to give it formal explanation. Since there is no accepted theory for what Laithwaite demonstrates, there has been a tendency to discredit what he has claimed. Yet, how can one discredit what is there to be seen? Those who have performed this simple test, either by lifting Laithwaite's own shaft and spinning flywheel or by lifting their own equivalent device, experience this loss of weight.

Happily Laithwaite's pioneer spirit has captured the imagination of others who have built levitating machines and, it must be said, others have preceded Laithwaite in such work. The phenomenon is one that persists, but Laithwaite is the one who has been bold enough to minimize the mechanical elements involved to a shaft and a wheel and become an operating force-producing part of the machine himself. It is his test which this author sees as so far beyond dispute that the later machines become mere means for formal experimentation in an effort to develop the technology commercially.

It is also this demonstration which shows that whatever energy is needed to lift the heavy flywheel by hand through a distance of some 1.5 m does not come from the forces asserted manually.

A machine test under controlled laboratory conditions with variable flywheel speed and measurement of both speed and input power is needed to trace what is happening in a physical sense.

The machine that has captured media attention is that of Scotsman Sandy Kidd of Dundee, essentially because it was developed by commercial interests and subjected to independent precision laboratory tests to verify the positive lift force.[5] This machine in full levitation has been recorded by Australian television interests and will have been shown by an internationally distributed program before this paper appears in print.

Other machines operative at this time are those built by another Scotsman, Scott Strachan of Edinburgh, one of which was demonstrated at a symposium in Canada in June 1988.[6] It incorporated its own precision balance and operated under remote radio control to show hands-off lift action.

Although government, academic, and commercial interests as well as the media are now all showing interest in this phenomenon, it remains to be seen how the scientific scene will develop. The progress will be slow, because none of those in authority have conceded acceptance of the antigravity phenomenon. What appears certain, however, is that antigravity has now a place in physics which extends beyond that mooted by Massey when he wrote[7]:

> ANTI-GRAVITY? One curious question arises. Particles and antiparticles are produced in pairs. How could matter and anti-matter ever separate? One possibility that cannot be ruled out at the present stage, is that of a repulsive force of gravity between matter and anti-matter. We cannot yet say whether a piece of matter exerts a gravitational attraction or repulsion on a piece of anti-matter – we do not know whether anti-protons tend to fall downwards or upwards! The nature of the force of gravity is still so obscure that no reliable answer can yet be given from theory and it will be some time before any experimental tests will be practicable.

One further aspect of antigravity phenomena is that known as the Hutchinson effect. This peculiar phenomenon, by which electromagnetic influences developed by a peculiar combination of electric power equipment, including Tesla coils, can cause blocks of wood or metal to lose weight, has been captured by video camera.[8] To witness what is shown is quite disconcerting, because it is quite incomprehensible in terms of accepted physics, and yet one cannot just write it off as an unnatural phenomenon. Perhaps what is happening is that there are powerful low frequency electromagnetic field oscillations that are interfering in some way so as to set up electrical vibrations or displacements that are not confined to one steady direction. If this were to break up the lattice units and cause them to contract around their nucleating atoms in the block of wood or metal, then again we see basis for the antigravitational phenomenon revealing itself.

It remains to summarize the key scientific papers and other references from which the author has argued in the above discussion. Concerning the possible imbalance of force in the interaction of matter, and particularly any breach of Newton's third law of motion, the author has written numerous papers on the electrodynamic law of interaction. See, for example, Ref. 9 and, of particular relevance to this antigravity topic, Ref. 10. It is to be noted that the Lorentz force breaches Newton's third law, as is well known by experts on electromagnetism. Also, particle physicists well know that beta decay breaches the laws of linear and angular momentum conservation as well as the law of conservation of energy. This is why the enigmatic neutrino concept was invented, a hypothetical particle having no mass but all the

necessary qualities needed to keep the balance in accord with Newtonian and/or Einsteinian philosophy. In this author's opinion this was merely a way of embracing the vacuum properties, including aspects of vacuum energy fluctuations, into the mathematical logic of a form of physics that seeks to avoid reference to the ether.

Concerning the author's theory of gravitation, based on an ether model having the space lattice structure already mentioned, the book references are 11, 12, and 13. For scientific papers concerning the derivation of G and the graviton properties, see Refs. 14, 15, and 16. It is also to be noted that the same theory has addressed the issue of proton creation and yielded a precise theoretical value for the proton-electron mass ratio.[17] Concerning the tuned lattice response and conformity with Maxwell's equations arising from a study of a nondispersive vacuum property, a key reference is 18, but see, also, 19. Concerning earlier gyroscope experiments revealing anomalous propulsion results, there are many references, particularly in the patent literature. The most informative is that of Di Bella of the Institute of Naval Architecture, University of Genoa, Italy[20] (see, also, the U.S. Patent[21]). The latter experiments, in common with many others, have been ignored because the general assumption is that the vibration involved interacts with nonlinear frictional effects to produce a propulsive effect. For this reason it is imperative either to conduct precision integrated force measurement tests on devices that are immune from external friction but which may vibrate (as applies to the status of the Kidd or Strachan machines) or to focus on experiments that have no vibration at all, such as that of Laithwaite described above. This, therefore, has been the basis on which the argument presented in this paper is founded.

Acknowledgment

The author has not engaged, as yet, in any experimental work bearing upon what is reported above. Concerning the experiments on the force-precessed gyroscopes, the author acknowledges the very helpful discussions he has had with Professor Eric Laithwaite and Messrs. Sandy Kidd and Scott Strachan, as well as other pioneers in this field such as Alex Jones and Fred Scovell. All of these have seen the practical potential of this scientific endeavor and are or have been involved in patent applications on this antigravitational phenomenon. None may succeed in the eventual quest, but science will be better served if the issues they have raised are resolved with certainty by objective research focused on what are claimed to be the anomalies in the hope that there really is something new to be discovered.

APPENDIX: RESPONSE TO REVIEWER COMMENT

A referee report on this paper pointed out that it is "premised on the belief that the Hayasaka and Takeuchi experiment is correct" and declared, "In fact, all recent repetitions of the Japanese experiment with more precise equipment have shown that the original experiment was wrong." The referee gave three references (22, 23, and 24) relating to the authoritative tests performed to check the Japanese claims and observed that this author "is putting forward a theory to explain an effect which does not exist."

Now, this author is not aware of any admission by the Japanese rescinding what they claim, though certainly this author cannot vouch for their findings. However, thanks to the editor of *Physics Essays* allowing response to the referee comment, it seems appropriate to ask the reader to consider the following points.

First, when the author first took an interest in the gyroscope weight loss anomalies, it was pointed out to him by expert aeronautical authority that flywheels spinning in air can experience a lift force that is aerodynamic in origin. This made the Japanese experiment all the more credible besides being rather unique, because in doing the tests *in vacuo* they had made absolutely sure that no such lift action could account for the anomaly they found.

Second, the refuting experiments (22, 23, and 24) were actually published in February and April 1990, within weeks of the publication of the report of the Japanese work and such urgent evaluation is an indication of the importance attached to the task of rejecting what had been claimed and also of the cursory nature of the tests. It meant, presumably, that in repeating the experiment none of the three research teams involved in discrediting the Japanese had gone to the trouble of building a system having the essentially the same vacuum test facility. They were all content to rely on tests in air and that, then, destroys their right to challenge the Japanese findings. The Japanese would presumably not have bothered to use vacuum if what they were researching did, in fact, reveal itself in air.

Third, one must take note of the case put by Faller *et al.*[22] in discussing why they did not use a vacuum. Their reason in their words is, "Since we know of no steady-state effect of internal air currents on the weight of a sealed system, we decided a simple O-ring seal on the cover of our gyro was sufficient." They prejudged the nature of the weight loss by assuming it must relate to lift action due to air and decided that because they were unaware of any anomaly that could depend upon steady-state air current effects, the presence of air was irrelevant in judging what would happen in a vacuum.

They also stated, "In spite of the fact that they [Hayasaka and Takeuchi] observed similar effects for three different gyros, it is still very difficult to think of any fundamental reason for their observed effects."

Now, this author conceived this paper as a discussion of antigravitational phenomena which can occur in air but only with force-precessed gyroscopes. However, the circumstances of the Japanese experiment were special and were satisfied by nonprecessing spin *in vacuo*. The author has derived a formula that fits what Hayasaka and Takeuchi found, not by reference to air currents, but by assuming that electric charge could be radially displaced within the flywheel, its polarity depending upon direction of rotation, so that electrons could escape from the substance of the flywheel but not the heavy positive ions.

The reader must now take a position on the question of whether all physical action in air depends upon "air currents" or whether certain electrical phenomena can occur in air, such as Maxwell-type electric charge displacement. Unless the critics have certain knowledge that the antigravitational action cannot depend upon the microscopic electrical nature of matter as opposed to the macroscopic mechanical properties of matter, then the issue is open. Can, for example, the positive and negative ions that neutralize the vacuum spin charge displacement in the theory presented in this paper have a mobility if comprised by air dragged around by the flywheel which they would not have if they were part of a solid flywheel? If the latter argument cannot be discounted, and it really cannot because air is fluid and its heavy ions can migrate, then that presence of air in those tests reported in Refs. 22, 23, and 24 can preclude the antigravitational actions of the flywheel.

This author feels, therefore, that the tests discrediting the Japanese experiment are not conclusive and hopes that someone will go to the trouble of repeating the tests in the same vacuum conditions as used by the Japanese. If the Japanese tests are confirmed in the vacuum situation, then it would be of interest to check what happens if the flywheel is of insulating dielectric material or of metal coated at its rim with such material.

Received on 15 May 1989.

Résumé

Cet article étend les principes d'une théorie de la gravitation précédente dans laquelle la constante de gravitation G *avait été déduite en terme d'une théorie des gravitons basée sur l'électrodynamique. On y discute des effets gravitationnels anormaux démontrables et reproductible au laboratoire, qui révélent la possibilité d'action anti-gravitationnelle. On montre que la théorie inclut des caractéristiques qui peuvent expliquer les effets anti-gravitationnels observés. L'action conduit à des fluctuations d'énergie du vide produites par la désintegration et la regénération de graviton. La perte de poid qui accompagne la rotation gyroscopique sans précession est aussi expliquée.*

References

1. H. Hayasaka and S. Tackeuchi, Phys. Rev. Lett. **63**, 2701 (1989).
2. H. Aspden, Hadronic J. **10**, 185 (1987).
3. *Idem*, Lett. Nuovo Cimento **40**, 53 (1984).
4. A. Jones, Electron. Wireless World **94**, 64 (1987).
5. R. Thompson, Observer Mag., U.K. (24 July 1988), p. 28.
6. J.S. Strachan, "Demonstration of the Lift Properties of the Precessing Gyroscope," to be published in the *Proceedings of P.A.C.E. Symposium*, Hull, Quebec, June 1988.
7. H. Massey, *The New Age in Physics* (Elek, London, 1966), p. 150.
8. G. Hathaway, "The Hutchinson Effect," to be published in the *Proceedings of P.A.C.E. Symposium* (Hull, Quebec, 1988).
9. H. Aspden, Phys. Lett. A **111**, 22 (1985).
10. *Idem*, Electron. Wireless World **96**, 29 (1989).
11. *Idem*, *The Theory of Gravitation* (Sabberton, P.O. Box 35, Southampton, England, 1966).
12. *Idem*, *Physics without Einstein* (Sabberton, P.O. Box 35, Southampton, England, 1969).
13. *Idem*, *Physics Unified* (Sabberton, P.O. Box 35, Southampton, England, 1980).
14. *Idem*, Spec. Sci. Tech. **1**, 59 (1978).
15. *Idem*, Hadronic J. **9**, 153 (1986).
16. *Idem*, Phys. Essays **2**, 173 (1989).
17. *Idem*, Phys. Essays **1**, 72 (1988).
18. *Idem*, Electron. Wireless World **88**, 37 (1982).
19. *Idem*, Lett. Nuovo Cimento **41**, 252 (1984).
20. A. Di Bella, "On Propulsive Effects of a Rotating Mass," *Seventh Symposium on Naval Hydrodynamics*, (Rome, Italy, 1968) (DR-148 Office of Naval Research Department of the Navy), p. 1373.
21. *Idem*, U.S. Patent No. 3404854 (1968).
22. J.E. Faller, W.J. Hollander, P.G. Nelson, and M.P. McHugh, Phys. Rev. Lett. **64**, 825 (1990).
23. T.J. Quinn and A. Picard, Nature **343**, 732 (1990).
24. J.M. Nitschke and P.A. Wilmarth, Phys. Rev. Lett. **64**, 2115 (1990).

H. Aspden
Department of Electrical Engineering
University of Southampton
Southampton S09 5NH England

ELECTROGRAVITICS SYSTEMS

REPORTS ON A NEW PROPULSION METHODOLOGY

Edited by
Thomas Valone, M.A., P.E.

Foreword by *Elizabeth Rauscher, Ph.D.*

Integrity Research Institute
Washington, DC 20005

for
T. Townsend Brown

Electrogravitics Systems: Reports on a New Propulsion Methodology

Edited by Thomas Valone

First Edition, April, 1994
Second Edition, November, 1995
Third Edition, April 1999
Fourth Edition, January, 2001

"The U.S. Antigravity Squadron"
Copyright © 1993 by Paul A. LaViolette

Cover illustration Copyright © 1993
by Paul A. LaViolette

ISBN 0-9641070-0-7

published by
INTEGRITY RESEARCH INSTITUTE
1220 L Street NW, Suite 100-232
Washington, DC 20005
202-452-7674
800-295-7674
www.integrity-research.org

send for free catalog

CONTENTS

Foreword 4
Elizabeth Rauscher, Ph.D.

Editor's Introduction 6
Thomas Valone, U.A., P.E.

Electrogravitics Systems 11
Aviation Studies, Ltd.

The Gravities Situation 42
Gravity Rand Ltd., Div. of Aviation Studies, Ltd.

Negative Mass As a Gravitational Source of Energy in the Quasi-Stellar Radio Sources 73
Banesh Hoffman

The U.S. Antigravity Squadron 78
Paul LaViolette

Appendix 97
Collection of T. T. Brown's Patents

FOREWORD

by Elizabeth Rauscher, Ph.D., *Professor of Nuclear and Astrophysics, University of Nevada*

Electromagnetism is bipolar, i.e. it attracts and repels. We can shield X-rays, gamma rays, radio waves, etc., but what about gravity? Gravity appears to have only one polarity — attraction! We have balloons, planes, and rockets that overcome gravity but can we build a shield against gravity? Roger Babson, a good friend of Thomas Edison, established the Gravity Research Foundation in 1948 at Edison's suggestion. So what would anti-gravity "look like"? Let us explore these issues:

Standard physical models include *four* fundamental forces in Nature. They are the nuclear force, the electromagnetic force, the weak, nuclear decay force, and gravitational force. The nuclear force and the gravitational force have the similar property of being attractive only. What of anti-matter ~ does it rise in a gravitational field? Such an experiment was attempted at the Stanford Linear

Accelerator Center, Stanford, CA without confirmed results.

In 1971, I published a book and several papers on a ten dimensional geometric model of quantum gravity in which I treated the four major force fields on an "equal footing" in such a manner as to consider them as *bi* or duel polar, having both attraction and repulsion.

T. Townsend Brown, who I met in 1981, led me to replicate his research on some properties of electrostatics, capacitance and anomalous current flows on unique materials. Unlike the current view, electrostatic phenomena are very complex. How does this work relate to the ideas of UFO propulsion (an early interest of T.T. Brown)? Certainly he has presented the scientific community with many questions we need to investigate.

I have also theoretically examined a five and eight dimensional geometry which includes the Kaluza Klein geometry which is an abstract formalism relating electromagnetism to the gravitational field. This model interested Albert Einstein in the 1930's. There is a long path between theoretical concepts, romantic wishes and preliminary experiments to detailed experimental verification and actual designed technology.

Let us re-examine Brown's works and rethink some of the issues which he has suggested to us. Science is an ongoing process, not a fixed set of facts, ever changing and developing.

Prof. Elizabeth A. Rauscher, Ph.D.

Editor's INTRODUCTION

"Newton attempted to explain the force of gravity on two hypotheses: the existence of a medium, or ether, and action at a distance. The first hypothesis he rejected as being physically absurd, the second as contrary to reason. Newton had, therefore, no theory of gravity. However, his long and sustained effort to understand gravity was not without at least one serious consequence. For involvement in the ether theory obscured from Newton the universal character of the inverse-square relation, and delayed for twenty years his final formulation of the law of gravity."*

Many people have had the opportunity to meet and learn from T. Townsend Brown before he passed away about a decade ago. I was fortunate to correspond with him after I returned from the Gravity Field Energy Conference in Germany, 1980, where his name was mentioned a lot. He was a friendly but quiet person who learned some of his magic from Dr. Paul Alfred Biefield, a physicist at the California Institute for Advanced Studies. "In 1923, Biefield discovered that a heavily charged electrical condensor moved toward its positive pole when suspended in a gravitational field. He assigned Brown to study the effect as a research project." *(How to Build a Flying Saucer,* Pawlicki, Prentice-Hall, 1981)

The *Electric Spacecraft Journal* also notes that Brown's effect may have an earlier precedent as well, citing an article by Nipher which appeared in the March, 1918 issue of the *Electrical Experimenter* (p.743). Whoever deserves credit, the question today is the credibility of T. T. Brown and whether his effect is significant for propulsion.

It can be argued that if the two main reports of this anthology are historically valid, Brown may have been debriefed after his release from military consultation service. The interesting fact about the first report is that under the black streak, prominently seen across the original title page, the word "CONFIDENTIAL" actually was written. Dr. Paul LaViolette notes that the *Electrogravitics Systems* report may be obtained from the Wright-Patterson AFB technical library, even though it is not actually listed on their library computer. He found that it is not available from any other library in the U.S. Paul deserves our gratitude for retrieving the first report.

To authenticate the discovery of these two reports, I have included a copy of the 1956 *Gravitics Situation* Order Form at the end of this

* *Evans, American Journal ofPhysics,* 26, 619, 1958

Introduction, as well as copies of the original title pages for *Electrogravitics Systems.* Aviation Studies is also still in business today.

I feel that it is important to mention that even though Talley has, in 1991, attempted a replication of Brown's work, up to 19 kV (and 33 kV with anomalous breakdown effects) for Edwards AFB, we see in these uncovered reports, mention of the "magic number" of 50,000, with a target wattage of 50,000 kW and a dielectric K value of 50,000. Brown is also quoted as recommending heating of the cathode.

Many people have tried low voltage replication (e.g. Dr. Harold Puthoff...!? kV) but these reports indicate that higher voltage is better, up to a maximum effect.

Cravens, also a recent military consultant, gives Brown a high rating for practicality and propulsion (p. 79 of his report).* He also notes that older high voltage supplies most likely had time-varying voltage regulation signals superimposed upon the DC electrostatic field. This fact, along with similar Hutchison and Searl effect signals, may point the way toward an overlooked detail in the race to replicate T.T. Brown.

Also, *Science* magazine notes that Puthoff, Haisch and Rueda present a new theory of inertia which they say raises a "provocative notion that inertia, once understood, might be controlled" (Vol. 263, Feb., 1994). This underscores our return to T.T. Brown and his research because of its simplicity.

I have included an extra article by Dr. Banesh Hoffman, the biographer of Einstein, because he also theorized about negative mass, the concept which Gravity Rand Ltd. believes holds a key to understanding the Biefield-Brown effect.

What can be said about Dr. LaViolette's well-researched sleuth about the B-2 aircraft? It is a provocative thesis that presents a plausible modern application of Brown's research, explaining many of the B-2 characteristics. As more facts are uncovered, we will consider future additions to the Electrogravitics Series.

Thomas Valone, M.A., P.E.
Physicist and Prof. Engineer

* D.L. Cravens, "Electric Propulsion Study," prepared for the: Astronautics Lab (AFSC), Space Systems Division, Edwards AFB, CA 93523, Aug. 1990, AL-TR-89-040, #ADA 227121

AVIATION STUDIES (INTERNATIONAL) LIMITED
Aviation House, 66 Sloane St., London SW. 1. Tel. SLO 0557/8. Cables AVIAREP LONDON

THE GRAVITICS SITUATION

A new report of interest both to management and to engineers will be available in Mid-December. The section for engineers is in three parts: first is an assault on the quantum mechanical approach to the existence of negative mass: this is supported by Mizer's paper, who in turn looks to Schrodinger's time independent equation with the center of mass motion removed. A second approach is electrogravitics, which is Townsend Brown's work, and the report contains a complete specification of Brown's gravitator device and a survey of this branch of activity. Third is an outline of possible ways of finding the link between gravitational fields and nuclear energy which draws on Beaumont's complex spin, Deser, Arnowitt and Sondi. This section is supported by Deser and Arnowitt's proposition, as they expressed it. This part is perhaps the most important of all.

For management there is a section dealing with the impact of various approaches on company policy: this includes a rough estimation of the value of current work. This section also includes a glossary of terms in an attempt to prevent the dictionary running away with the science: together with Gravity Rand observations. (Fee $30: £10)

To: Gravity Rand Ltd.,
Aviation House, 66 Sloane Street,
London, S.W.1. England.

Please send us your report, "THE GRAVITICS SITUTATION

- We enclose $ (£)..... (Payments should be made out to: AVIATION STUDIES (INTERNATIONAL) LIMITED).
- Invoice us later

Address: (to be used for mailing).....

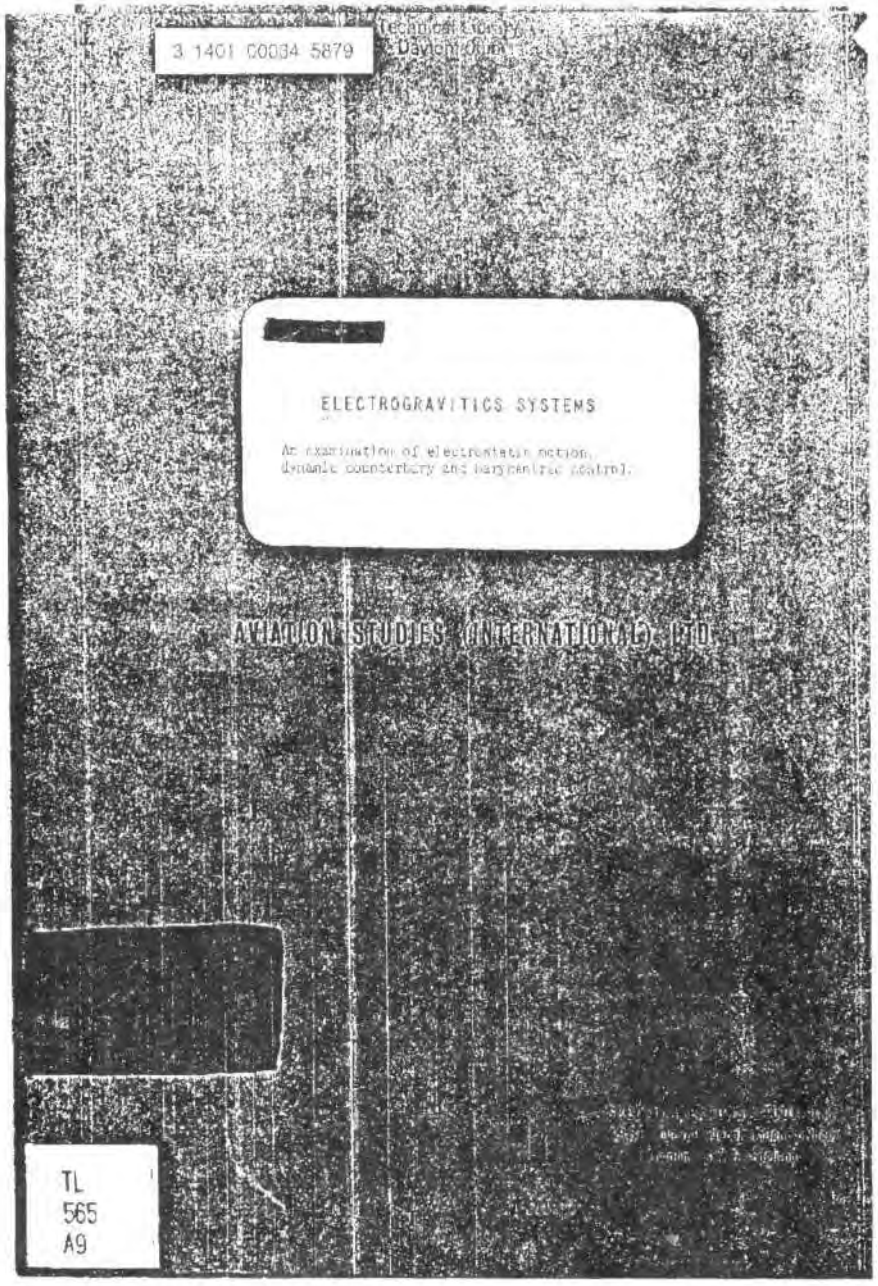
3 1401 00084 5879
ELECTROGRAVITICS SYSTEMS
An examination of electrostatic motion, dynamic counterthrust and barycentric control.
AVIATION STUDIES (INTERNATIONAL) LTD.
TL
565
A9

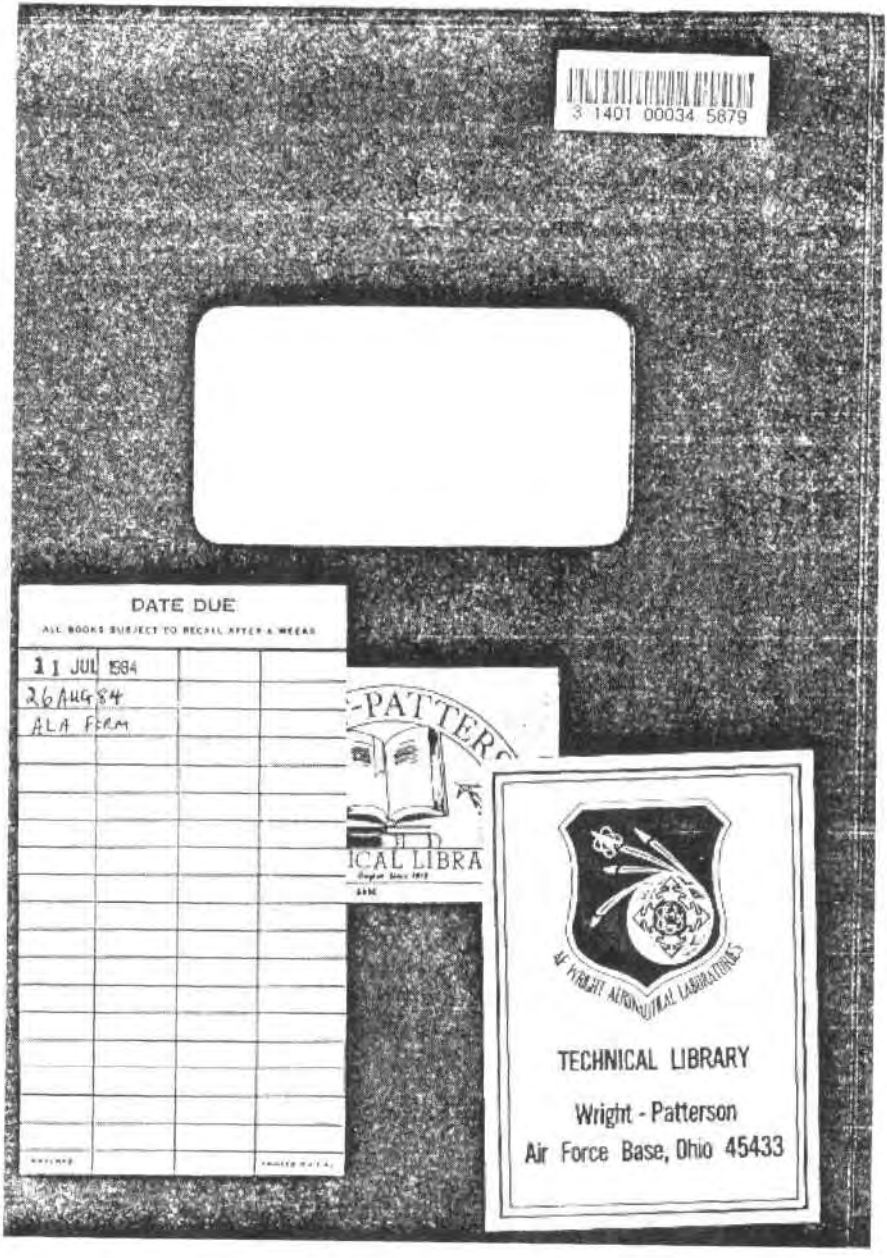
3 1401 00034 5879
DATE DUE
ALL BOOKS SUBJECT TO RECALL AFTER A WEEK
11 JUL 1984
26 AUG 84
ALA Form
-PATTER
ICAL LIBRA
AF WRIGHT AERONAUTICAL LABORATORIES
TECHNICAL LIBRARY
Wright - Patterson
Air Force Base, Ohio 45433

ELECTROGRAVITICS SYSTEMS

An examination of electrostatic motion, dynamic counterbary and barycentric control.

AVIATION STUDIES (INTERNATIONAL) LTD.

Prepared by:
Gravity Research Group
Special Weapons Study Unit
Aviation Studies (International) Limited, London.
29-31 Cheval Place, Knightsbridge
London, S,W,7 England

Report GRG-013/56 February 1956

CONTENTS

Introductory Notes

Discussion

Conclusions

APPENDIX

I - Aviation Report Extracts

II - Electrostatic Patents

ELECTROGRAVITICS SYSTEMS

An examination of electrostatic motion, dynamic counterbary and barycentric control

It has been accepted as axiomatic that the way to offset the effects of gravity is to use a lifting surface and considerable molecular energy to produce a continuously applied force that, for a limited period of time, can remain greater than the effects of gravitational attraction. The original invention of the glider, and evolution of the briefly self-sustaining glider, at the turn of the century led to progressive advances in power and knowledge. This has been directed to refining the classic Wright Brothers' approach. Aircraft design is still fundamentally as the Wrights adumbrated it, with wings, body, tails, moving or flapping controls, landing gear and so forth. The Wright biplane was a powered glider, and all subsequent aircraft, including the supersonic jets of the nineteen-fifties are also powered gliders. Only one fundamentally different flying principle has so far been adopted with varying degrees of success. It is the rotating wing aircraft that has led to the jet lifters and vertical pushers, coleopters, ducted fans and lift induction turbine propulsion systems.

But during these decades there was always the possibility of making efforts to discover the nature of gravity from cosmic or quantum theory, investigation and observation, with a view to discerning the physical properties of aviations' enemy.

It has seemed to Aviation Studies that for some time insufficient attention has been directed to this kind of research. If it were successful such developments would change the concept of sustentation, and confer upon a vehicle qualities that would now be regarded as the ultimate in aviation.

This report summarizes in simple form the work that has been done and is being done in the new field of electrogravitics. It also outlines the various possible lines of research into the nature and constituent matter of gravity, and how it has changed from Newton to Einstein to the modern Hlavaty concept of gravity as an electromagnetic force that may be controlled like a light wave.

The report also contains an outline of opinions on the feasibility of different electrogravitics systems and there is reference to some of the barycentric control and electrostatic rigs in operation.

Also included is a list of references to electrogravitics in successive Aviation Reports since a drive was started by Aviation Studies (International) Limited to suggest to aviation business eighteen months ago that the rewards of success are too far-reaching to be overlooked, especially in view of the hopeful judgement of the most authoritative voices in microphysics. Also listed are some relevant patents on electrostatics and electrostatic generators in the United States, United Kingdom and France.

Gravity Research Group

DISCUSSION

Electrogravitics might be described as a synthesis of electrostatic energy use for propulsion - either vertical propulsion or horizontal or both - and gravitics, or dynamic counterbary, in which energy is also used to set up a local gravitational force independent of the earth's.

Electrostatic energy for propulsion has been predicted as a possible means of propulsion in space when the thrust from a neutron motor or ion motor would be sufficient in a dragless environment to produce astronomical velocities. But the ion motor is not strictly a part of the science of electrogravitics, since barycentric control in an electrogravitics system is envisaged for a vehicle operating within the earth's environment and it is not seen initially for space application. Probably large scales space operations would have to await the full development of electrogravitics to enable large pieces of equipment to be moved out of the region of the earth's strongest gravity effects. So, though electrostatic motors were thought of in 1925, electrogravitics had its birth after the War, when Townsend Brown sought to improve on the various proposals that then existed for electrostatic motors sufficiently to produce some visible manifestation of sustained motion. Whereas earlier electrostatic test were essentially pure research. Brown's rigs were aimed from the outset at producing a flying article. As a private venture he produced evidence of motion using condensers in a couple of saucers suspended by arms rotating round a central tower with input running down the arms. The massive-k situation was summarized subsequently in a report, Project Winterhaven, in 1952. Using the data some conclusions were arrived at that might be expected from ten or more years of intensive development - similar to that, for instance, applied to the turbine engine. Using a number of assumptions as to the nature of gravity, the report postulated a saucer as the basis of a possible interceptor with Mach 3 capability. Creation of a local gravitational system would confer upon the fighter the sharp-edged changes of direction typical of motion in space.

The essence of electrogravitics thrust is the use of a very strong positive charge on one side of the vehicle and a negative on the other. The core of the motor is a condenser and the ability of the condenser to hold its charge (the K-number) is the yardstick of performance. With air as 1, current dielectrical materials can yield 6 and use of barium aluminate can raise this considerable,

barium titanium oxide (a baked ceramic) can offer 6,000 and there is promise of 30,000, which would be sufficient for supersonic speed.

The original Brown rig produced 30 fps on a voltage of around 50,000 and a small amount of current in the milliamp range. There was no detailed explanation of gravity in Project Winterhaven, but it was assumed that particle dualism in the subatomic structure of gravity would coincide in its effect with the issuing stream of electrons from the electrostatic energy source to produce counterbary. The Brown work probably remains a realistic approach to the practical realization of electrostatic propulsion and sustentation. Whatever may be discovered by the Gravity Research Foundation of New Boston a complete understanding and synthetic reproduction of gravity is not essential for limited success. The electrogravitics saucer can perform the function of a classic lifting surface - it produces a pushing effect on the under surface and a suction effect on the upper, but, unlike the airfoil, it does not require a flow of air to produce the effect.

First attempts at electrogravitics are unlikely to produce counterbary, but may lead to development of an electrostatic VTOL vehicle. Even in its developed form this might be an advance on the molecular heat engine in its capabilities. But hopes in the new science depend on an understanding of the close identity of electrostatic motivating forces with the source and matter of gravity. It is fortuitous that lift can be produced in the traditional fashion and if an understanding of gravity remains beyond full practical control, electrostatic lift might be an adjunct of some significance to modern thrust producers. Research into electrostatics could prove bénéficiai to turbine development, and heat engines in general, in view of the usable electron potential round the periphery of any flame. Material for electrogravitics and especially the development of commercial quantities of high-k material is another dividend to be obtained from electrostatic research even if it produces no counterbary. This is a line of development that Aviation Studies' Gravity Research Group is following.

One of the interesting aspects of electrogravitics is that a breakthrough in almost any part of the broad front of general research on the intranuclear processes may be translated into a meaningful advance toward the feasibility of electrogravitics systems. This demands constant monitoring in the most likely areas of the physics of high energy sub-nuclear particles. It is difficult to be overoptimistic about the prospects of gaining so complete a grasp of gravity while the world's physicists are still engaged in a study of fundamental

particles - that is to say those that cannot be broken down any more. Fundamental particles are still being discovered - the most recent was the Segre-Chamberlain-Wiegand attachment to the bevatron, which was used to isolate the missing anti-proton, which must - or should be presumed to - exist according to Dirac's theory of the electron. Much of the accepted mathematics of particles would be wrong if the anti-proton was proved to be non-existent. Earlier Eddington has listed the fundamental particles as:

e. The charge of an electron.

m. The mass of an electron.

M. The mass of proton.

h. Planck's constant

c. The velocity of light.

G. The constant of gravitation, and

lambda. The cosmical constant.

It is generally held that no one of these can be inferred from the others. But electrons may will disappear from among the fundamental particles, though, as Russell says, it is likely that *e* and *m* will survive. The constants are much more established than the interpretation of them and are among the most solid of achievements in modern physics.

* * * *

Gravity may be defined as a small-scale departure from Euclidean space in the general theory of relativity. The gravitational constant is one of four dimensionless constants: first, the mass relation of the nucléon and electron, second is e^2/hc, third, the Compton wavelength of the proton, and fourth is the gravitational constant, which is the ratio of the electrostatic to the gravitational attraction between the electron and the proton.

One of the stumbling blocks in electrogravitics is the absence of any

satisfactory theory linking these four dimensionless quantities. Of the four, moreover, gravity is decidedly the most complex, since any explanation would have to satisfy both cosmic and quantum relations more acceptably and intelligibly even than the unified field theory. A gravitational constant of around 10^{-39} has emerged from quantum research and this has been used as a tool for finding theories that could link the two relations. This work is now in full progress, and developments have to be watched for the aviation angle. Hitherto Dirac, Eddington, Jordan and others have produced differences in theory that are too wide to be accepted as consistent. It means therefore that (i) without a cosmical basis, and (ii) with an imprecise quantum basis and (iii) a vague hypothesis on the interaction, much remains still to be discovered. Indeed some say that a single interacting theory to link up the dimensionless constants is one of three major unresolved basic problems of physics. The other two main problems are the extension of quantum theory and a more detailed knowledge of the fundamental particles.

All this is some distance from Newton, who saw gravity as a force acting on a body from a distance, leading to the tendency of bodies to accelerate towards each other. He allied this assumption with Euclidean geometry, and time was assumed as uniform and acted independently of space. Bodies and particles in space normally moved uniformly in straight lines according to Newton, and to account for the way they sometimes do not do so, he used the idea of a force of gravity acting at a distance, in which particles of matter cause in others an acceleration proportional to their mass, and inversely proportional to the square of the distance between them.

But Einstein showed how the principle of least action, or the so-called cosmic laziness means that particles, on the contrary, follow the easiest path along geodesic lines and as a result they get readily absorbed into space-time. So was born non-linear physics. The classic example of non-linear physics is the experiment in bombarding a screen with two slits. When both slits are open particles going through are not the sum of the two individually but follows a non-linear equation. This leads on to wave-particle dualism and that in turn to the Heisenberg uncertainty principle in which an increase in accuracy in measurement of one physical quantity means decreasing accuracy in measuring the other. If time is measured accurately energy calculations will be in error; the more accurate the position o fa particle is established the less certain the velocity will be; and so on. This basic principle of causality of microphysics affects the study of gravity in the special and general theories of relativity. Lack of pictorial image in the quantum physics of this

interrelationship is a difficulty at the outset for those whose minds remain obstinately Euclidean.

In the special theory of relativity, space-time is seen only as an undefined interval which can be defined in any way that is convenient and the Newtonian idea of persistent particles in motion to explain gravity cannot be accepted. It must be seen rather as a synthesis of forces in a four dimensional continuum, three to establish the position and one the time. The general theory of relativity that followed a decade later was a geometrical explanation of gravitation in which bodies take the geodesic path through space-time. In turn this means that instead of the idea of force acting at a distance it is assumed that space, time, radiation and particles are linked and variations in them from gravity are due rather to the nature of space.

Thus gravity of a body such as the earth, instead of pulling objects towards it as Newton postulated, is adjusting the characteristics of space and, it may be inferred, the quantum mechanics of space in the vicinity of the gravitational force. Electrogravitics aims at correcting this adjustment to put matter, so to speak, 'at rest'.

* * * *

One of the difficulties in 1954 and 1955 was to get aviation to take electrogravitics seriously. The name alone was enough to put people off. However, in the trade much progress has been made and now most major companies in the United States are interested in counterbary. Groups are being organized to study electrostatic and electromagnetic phenomena. Most of industry's leaders have made some reference to it. Douglas has now stated that it has counterbary on its work agenda by does not expect results yet awhile. Hiller has referred to new forms of flying platform, Glenn Martin say gravity control could be achieved in six years, but they add that it would entail a Manhattan District type of effort to bring it about. Sikorsky, one of the pioneers, more or less agrees with the Douglas verdict and says that gravity is tangible and formidable, but there must be a physical carrier for this immense trans-spatial force. This implies that where a physical manifestation exists, a physical device can be developed for creating a similar force moving in the opposite direction to cancel it. Clarke Electronics state they have a rig, and add that in their view the source of gravity's force will be understood sooner than some people think. General Electric is working on the use of electronic

rigs designed to make adjustments to gravity - this line of attack has the advantage of using rigs already in existence for other defence work. Bell also has an experimental rig intended, as the company puts it, to cancel out gravity, and Lawrence Bell has said he is convinced that practical hardware will emerge from current programs. Grover Leoning is certain that what he referred to as an electro-magnetic contra-gravity mechanism will be developed for practical use. Convair is extensively committed to the work with several rigs. Lear Inc., autopilot and electronic engineers have a division of the company working on gravity research and so also has the Sperry division of Sperry-Rand. This list embraces most of the U.S. aircraft industry. The remainder, Curtiss-Wright, Lockheed, Boeing and North American have not yet declared themselves, but all these four are known to be in various stages of study with and without rigs.

In addition, the Massachusetts Institute of Technology is working on gravity, the Gravity Research Foundation of New Boston, the Institute for Advanced Study at Princeton, the CalTech Radiation Laboratory, Princeton University and the University of North Carolina are all active in gravity. Glenn L. Martin is setting up a Research Institute of Advanced Study which has a small staff working on gravity research with the unified field theory and this group is committed to extensive programs of applied research. Many others are also known to be studying gravity, some are known also to be planning a general expansion in this field, such as in the proposed Institute for Pure Physics at the University of North Carolina.

A certain amount of work is also going on in Europe. One of the French nationalized constructors and one company outside the nationalized elements have been making preliminary studies, and a little company money has in one case actually been committed. Some work is also going on in Britain where rigs are now in existence. Most of it is private venture work, such as that being done by Ed Hull a colleague of Townsend Brown who, as much as anybody, introduced Europe to electrogravitics. Aviation Studies' Gravity Research Group is doing some work, mainly on k studies, and is sponsoring dielectric investigations.

One Swedish company and two Canadian companies have been making studies, and quite recently the Germans have woken up to the possibilities. Several of the companies have started digging out some of the early German papers on wave physics. They are almost certain to plan a gravities program. Curiously enough the Germans during the war paid no attention to

electrogravitics. This is one line of advance that they did not pioneer in any way and it was basically a U.S. creation. Townsend Brown in electrogravitics is the equivalent of Frank Whittle in gas turbines. This German overlooking of electrostatics is even more surprising when it is remembered how astonishingly advanced and prescient the Germans were in nuclear research. (The modern theory of making thermonuclear weapons without plutonium fission initiators returns to the original German idea that was dismissed, even ridiculed. The Germans never went very far with fission, indeed they doubted that this chain would ever be made to work.) The German air industry, still in the embryo stage, has included electrogravitics among the subjects it intends to examine when establishing the policy that the individual companies will adopt after the present early stage of foreign license has enabled industry to get abreast of the other countries in aircraft development.

* * * *

It is impossible to read through this summary of the widening efforts being made to understand the nature of matter of gravity without sharing the hope that many groups now have, of major theoretical breakthroughs occurring before very long. Experience in nucleonics has shown that when attempts to win knowledge on this scale are made, advances are soon seen. There are a number of elements in industry, and some managements, who see gravity as a problem for later generations. Many see nothing in it all and they may be right. But as said earlier, if Dr. Vaclav Hlavaty thinks gravity is potentially controllable that surely should be justification enough, and indeed inspiration, for physicists to apply their minds and for management to take a risk. Hlavaty is the only man who thinks he can see a way of doing the mathematics to demonstrate Einstein's unified field theory - something that Einstein himself said was beyond him. Relativity and the unified field theory go to the root of electrogravitics and the shifts in thinking, the hopes and fears, and a measure of progress is to be obtained only in the last resort from men of this stature.

Major theoretical breakthroughs to discover the sources of gravity will be made by the most advanced intellects using the most advanced research tools. Aviations role is therefore to impress upon physicists of this calibre with the urgency of the matter and to aid them with statistical and peripheral investigations that will help to clarify the background to the central mathematical and physical puzzles. Aviation could also assist by recruiting some of these men as advisers. Convair has taken the initiative with its

recently established panel of advisers on nuclear projects, which include Dr. Edward Teller of the University of California. At the same time much can be done in development of laboratory rigs, condenser research and dielectric development, which do not require anything like the same cerebral capacity to get results and make a practical contribution.

As gravity is likely to be linked with the new particles, only the highest powered particle accelerators are likely to be of use in further fundamental knowledge. The country with the biggest tools of this kind is in the best position to examine the characteristics of the particles and from those countries the greatest advances seem most likely.

Though the United States has the biggest of the bevatrons - the Berkeley bevatron is 6.2 bev - the Russians have a 10 bev accelerator in construction which, when it is completed, will be the world's largest. At Brookhaven a 25 bev instrument is in development which, in turn, will be the biggest. Other countries without comparable facilities are of course at a great disadvantage from the outset in the contest to discover the explanation of gravity. Electrogravitics, moreover, unfortunately competes with nuclear studies for its facilities. The clearest thinking brains are bound to be attracted to localities where the most extensive laboratory equipment exists. So, one way and another, results are most likely to come from the major countries with the biggest undertakings. Thus the nuclear facilities have a direct bearing on the scope for electrogravitics work.

The OEEC report in January made the following points:

The U.S. has six to eight entirely different types of reactors in operation and many more under construction. Europe has now two different types in service.

The U.S. has about 30 research reactors plus four in Britain, two in France.

The U.S. has two nuclear-powered marine engines. Europe has none, but the U.K. is building one.

Isotope separation plants for the enrichment of uranium in the U.S. are roughly 11 times larger than the European plant in Britain.

Europe's only heavy water plant (in Norway) produces somewhat less than one-twentieth of American output.

In 1955 the number of technicians employed in nuclear energy work in the U.S. was about 15,000; there are about 5,000 in Britain, 1,800 in France, and about 1,000 in the rest of Europe. But the working party says that pessimistic conclusions should not be drawn from these comparisons. European nuclear energy effort is unevenly divided at the moment, but some countries have notable achievements to their credit and important developments in prospect. The main reason for optimism is that, taken as a whole, iEurope's present nuclear effort falls very short of its industrial potential.î

Though gravity research, such as there has been of it, has been unclassified, new principles and information gained from the nuclear research facilities that have a vehicle application is expected to be withheld.

The heart of the problem to understanding gravity is likely to prove to be the way in which the very high energy sub-nuclear particles convert something, whatever it is, continuously and automatically into the tremendous nuclear and electromagnetic forces. Once this key is understood, attention can later be directed to finding laboratory means of duplicating the process and reversing its force lines in some local environment and returning the energy to itself to produce counterbary. Looking beyond it seems possible that gravitation will be shown to be a part of the universal electro-magnetic processes and controlled in the same way as a light wave or radio wave. This is a synthesis of the Einstein and Hlavaty concepts. Hence it follows that though in its initial form the mechanical processes for countering gravity may initially be massive to deal with the massive forces involved, eventually this could be expected to form some central power generation unit. Barycentric control in some required quantity could be passed over a distance by a form of radio wave. The prime energy source to energize the waves would of course be nuclear in its origins.

It is difficult to say which lines of detailed development being processed in the immediate future is more likely to yield significant results. Perhaps the three most promising are: first, the new attempt by the team of men led by Chamberlain working with the Berkeley bevatron to find the anti-neutron, and to identify more of the characteristics of the anti-proton and each of the string of high energy particles that have been discovered during recent operation at

6.2 bev.*

A second line of approach is the United States National Bureau of Standards program to pin down with greater accuracy the acceleration value of gravity. The presently accepted figure of 32.174 feet per second per second is known to be not comprehensive, though it has been sufficiently accurate for the limited needs of industry hitherto. The NBS program aims at re-determining the strength of gravity to within one part of a million. The present method has been to hold a ball 16 feet up and chart the elapsed time of descent with electronic measuring equipment. The new program is based on the old, but with this exceptional degree of accuracy it is naturally immensely more difficult and is expected to take 3 years.

A third promising line is the new technique of measuring high energy particles in motion that was started by the University of California last year. This involves passing cosmic rays through a chamber containing a mixture of gas, alcohol and water vapor. This creates charged atoms, or positive ions, by knocking electrons off the gas molecules. A sudden expansion of the chamber results in a condensation of water droplets along the track which can be plotted on a photographic plate. This method makes it easier to assess the energy of particles and to distinguish one from the other. It also helps to establish the characteristics of the different types of particle. The relationship between these high energy particles; and their origin and characteristics, have a bearing on electrogravitics in general.

So much of what has to be discovered as a necessary preliminary to gravity is of no practical use by itself. There is no conceivable use, for instance, for the anti-proton, yet its discovery even at a cost of $9-million is essential to check the mathematics of the fundamental components of matter. Similarly it is necessary to check that all the nuclear ghosts that have been postulated theoretically do in fact exist. It is not, moreover, sufficient, as in the past, only to observe the particles by radiation counters. In each instance a mechanical maze has to be devised and attached to a particle accelerator to trap only the particle concerned. Each discovery becomes a wedge for a deeper probe of the nucleus. Many of the particles of very high energy have only a fleeting

*The reaction is as follows: protons are accelerated to 6.2 bev, and directed at a target of copper. When the proton projectile hits a neutron in one of the copper atoms the following emerge: the two original particles (the projectile and the struck neutron) and a new pair of particles, a proton and anti-proton. The anti-proton continues briefly until it hits another proton, then both disappear and decay into mesons.

existence and collisions that give rise to them from bevatron bombardment is a necessary prerequisite to an understanding of gravity. There are no shortcuts to this process.

Most of the major programs for extending human knowledge on gravity are being conducted with instruments already in use for nuclear research and to this extent the cost of work exclusively on gravitational examinations is still not of major proportions. This has made it difficult for aviation to gauge the extent of the work in progress on gravity research.

CONCLUSIONS

1. No attempts to control the magnitude or direction of the earth's gravitational force have yet been successful. But if the explanation of gravity is to be found in the as yet undetermined characteristics of the very high energy particles it is becoming increasingly possible with the bevatron to work with the constituent matter of gravity. It is therefore reasonable to expect that the new bevatron may, before long, be used to demonstrate limited gravitational control.

2. An understanding and identification of these particles is on the frontiers of human knowledge, and a full assessment of them is one of the major unresolved puzzles of the nucleus. An associated problem is to discover a theory to account for the cosmic and quantum relations of gravity, and a theory to link the gravitational constant with the other three dimensionless constants.

3. Though the obstacles to an adequate grasp of microphysics still seem formidable, the transportation rewards that could follow from electrogravitics are as high as can be envisaged. In a weightless environment, movement with sharp-edged changes of direction could offer unique manoeuvrability.

4. Determination of the environment of the anti-proton, discovery of the anti-neutron and closer examination of the other high energy particles are preliminaries to the hypothesis that gravity is one aspect of electromagnetism that may eventually be controlled like a wave. When the structure of the nucleus becomes clearer, the influence of the gravitational force upon the nucleus and the nature of its behavior in space will be more readily understood. This is a great advance on the Newtonian concept of gravity acting at a distance.

5. Aviation's role appears to be to establish facilities to handle many of the peripheral and statistical investigations to help fill in the background on electrostatics.

6. A distinction has to be made between electrostatic energy for propulsion

and counterbary. Counterbary is the manipulation of gravitational force lines; barycentric control is the adjustment to such manipulative capability to produce a stable type of motion suitable for transportation.

7. Electrostatic energy sufficient to produce low speeds (a few thousand dynes) has already been demonstrated. Generation of a region of positive electrostatic energy on one side of a plate and negative on the other sets up the same lift or propulsion effect as the pressure and suction below and above a wing, excepts that in the case of electrostatic application no airflow is necessary.

8. Electrostatic energy sufficient to produce a Mach 3 fighter is possible with megavolt energies and a k of over 10,000.

9. k figures of 6,000 have been obtained from some ceramic materials and there are prospects of 30,000.

10. Apart from electrogravitics there are other rewards from investment in electrostatic equipment. Automation, autonetics and even turbine development use similar laboratory facilities.

11. Progress in electrogravitics probably awaits a new genius in physics who can find a single equation to tie up all the conflicting observations and theory on the structure and arrangement of forces and the part the high energy particles play in the nucleus. This can occur any time, and the chances are improved now that bev. energies are being obtained in controlled laboratory conditions.

APPENDIX I

EXTRACTS FROM AVIATION REPORT

ANTI-GRAVITATION RESEARCH

The basic research and technology behind electro-anti-gravitation is os much in its infancy that this is perhaps one field of development where not only the methods but the ideas are secret. Nothing therefore can be discussed freely at the moment. Very few papers on the subject have been prepared so far, and the only schemes that have seen the light of day are for pure research into rigs designed to make objects float around freely in a box. There are various radio applications, and aviation medicine departments have been looking for something that will enable them to study the physiological effects on the digestion and organs of an environment without gravity. There are however long term aims of a more revolutionary nature that envisage equipment that can defeat gravity.

Aviation Report 20 August 1954

MANAGERIAL POLICY FOR ANTI-GRAVITICS

The prospect of engineers devising gravity-defeating equipment - or perhaps it should be described as the creation of pockets of weightless environments - does suggest that as a long term policy aircraft constructors will be required to place even more emphasis on electro-mechanical industrial plant, than is now required for the transition from manned to unmanned weapons. Anti-gravitics work is therefore likely to go to companies with the biggest electrical laboratories and facilities. It is also apparent that anti-gravitics, like other advanced sciences, will be initially sponsored for its weapon capabilities. There are perhaps two broad ways of using the science - one is to postulate the design of advanced type projectiles on their best inherent capabilities, and the more critical parameters (that now constitutes the design limitation) can be eliminated by anti-gravitics. The other, which is a longer term plan, is to create an entirely new environment with longer term plan, is to create an entirely new environment with devices operating entirely under an anti-gravitic envelope.

Aviation Report 24 August 1954

THE GREATER THE EASIER

Propulsion and atomic energy trends are similar in one respect: the more incredible the long term capabilities are, the easier it is to attain them. It is strange that the greatest of nature's secrets can be harnessed with decreasing industrial effort, but greatly increasing mental effort. The Americans went through the industrial torture to produce tritium for the first thermonuclear experiment, but later both they and the Russians were able to achieve much greater results with the help of lithium 6 hydride.

The same thing is happening in aviation propulsion: the nuclear fuels are promising to be tremendously powerful in their effect, but excessively complicated in their application, unless there can be some means of direct conversion as in the strontium 90 cell. But lying behind and beyond the nuclear fuels is the linking of electricity to gravity, which is an incomparably more powerful way of harnessing energy than the only method known to human intellect at present - electricity and magnetism. Perhaps the magic of barium aluminum oxide will perform the miracle in propulsion that lithium 6 hydride has done in the fusion weapon.

Certainly it is a well-known material in dielectrics, but when one talks of massive-k, one means of course five figures. At this early stage it is difficult to relate k to Mach numbers with any certainty, but realizable k can, with some kinds of arithmetic, produce astounding velocities. They are achievable, moreover, with in terms of engineering, but the most hideous in terms of theory. Einstein's general theory of relativity is, naturally, an important factor, but some of the postulates appear to depend on the unified field theory, which cannot yet be physically checked because nobody knows how to do it. Einstein hopes to find a way of doing so before he dies.

Aviation Report 31 August 1954

GRAVITICS FORMULATIONS

All indications are that there has still been little cognizance of the potentialities of electrostatic propulsion and it will be a major undertaking to re-arrange aircraft plants to conduct large-scale research and development into novel forms of dielectric and to improve condenser efficiencies and to develop the novel type of materials used for fabrication of the primary structure. Some extremely ambitious theoretical programs have been submitted and work

towards realization of a manned vehicle has begun. On the evidence, there are far more definite indications that the incredible claims are realizable than there was, for instance, in supposing that uranium fission would result in a bomb. At least it is known, proof positive, that motion, using surprisingly low k, is possible. The fantastic control that again is feasible, has not yet been demonstrated, but there is no reason to suppose the arithmetic is faulty, especially as it has already led to quite brisk example of actual propulsion. That first movement was indeed an historic occasion, reminiscent of the momentous day at Chicago when the first pile went critical, and the phenomenon was scarcely less weird. It is difficult to imagine just where a well-organized examination into long term gravitics prospects would end. Though a circular planform is electrostatically convenient, it does not necessarily follow that the requirements of control by differential changes would be the same. Perhaps the strangest part of this whole chapter is how the public managed to foresee the concept, though not of course the theoretical principles that gave rise to it, before physical tests confirmed that the mathematics was right. It is interesting also that there is no point of contact between the conventional science of aviation and the New: it is a radical offshoot with no common principles. Aerodynamics, structures, heat engines, flapping controls, and all the rest of aviation is part of what might be called the Wright Brothers era - even the Mach 2.5 thermal barrier piercers are still Wright Brothers concepts, in the sense that they fly and they stall, and they run out of fuel after a short while, and they defy the earth's pull for a short while. Thus this century will be divided into two parts - almost to the day. The first half belonged to the Wright Brothers who foresaw nearly all the basic issues in which gravity was the bitter foe. In part of the second half, gravity will be the great provider. Electrical energy, rather irrelevant for propulsion in the first half becomes a kind of catalyst to motion in the second half of the century.

Aviation Report 7 September 1954

ELECTRO-GRAVITICS PARADOX

Realization of electro-static propulsion seems to depend on two theoretical twists and two practical ones. The two theoretical puzzles are: first, how to make a condenser the center of a propulsion system, and second is how to link the condenser system with the gravitational field. There is a third problem, but it is some way off yet, which is how to manipulate kva for control in all three axes as well as for propulsion and lift. The two practical tricks are first how, with say a Mach 3 weapon in mind, to handle 50,000 kva within the envelope

of a thin pancake of 35 feet in diameter and second how to generate such power from within so small a space. The electrical power in a small aircraft is more than in a fair sized community the analogy being that a single rocketjet can provide as much power as can be obtained from the Hoover Dam. It will naturally take as long to develop electro-static propulsion as it has taken to coax the enormous power outputs from heat engines. True there might be a flame in the electro-gravitic propulsion system, but it would not be a heat engine - the temperature of the flame would be incidental to the function of the chemical burning process.

The curious thing is that though electro-static propulsion is the antithesis of magnetism,* Einstein's unified field theory is an attempt to link gravitation with electro-magnetism. This all-embracing theory goes on logically from the general theory of relativity, that gives an ingenious geometrical interpretation of the concept of force which is mathematically consistent with gravitation but fails in the case of electro-magnetism, while the special theory of relativity is concerned with the relationship between mass and energy. The general theory of relativity fails to account for electro-magnetism because the forces are proportional to the charge and not to the mass. The unified field theory is one of a number of attempts that have been made to bridge this gap, but it is baffling to imagine how it could ever be observed. Einstein himself thinks it is virtually impossible. However Hlavaty claims now to have solved the equations by assuming that gravitation is a manifestation of electro-magnetism.

This being so it is all the more incredible that electro-static propulsion (with kva for convenience fed into the system and not self-generated) has actually been demonstrated. It may be that to apply all this very abstruse physics to aviation it will be necessary to accept that the theory is more important than this or that interpretation of it. This is how the physical constants, which are now regarded as among the most solid of achievements in modem physics, have become workable, and accepted. Certainly all normal instincts would support the Einstein series of postulations, and if this is so it is a matter of conjecture where it will lead in the long term future of the electro-gravitic science.

Aviation Report 10 September 1954

*Though in a sense this is true, it is better expressed in the body of this report than it was here in 1954.

ELECTRO-GRAVITIC PROPULSION SITUATION

Under the terms of Project Winterhaven the proposals to develop electro-gravitics to the point of realizing a Mach 3 combat type disc were not far short of the extensive effort that was planned for the Manhattan District* Indeed the drive to develop the new prime mover is in some respects rather similar to the experiments that led to the release of nuclear energy in the sense that both involve fantastic mathematical capacity and both are sciences so new that other allied sciences cannot be of very much guide. In the past two years since the principle of motion by means of massive-k was first demonstrated on a test rig, progress has been slow. But the indications are now that the Pentagon is ready to sponsor a range of devices to help further knowledge. In effect the new family of TVs would be on the same tremendous scope that was envisaged by the X-l, 2, 3, 4 and 5 and D.558s that were all created for the purpose of destroying the sound barrier - which they effectively did, but it is a process that is taking ten solid years of hard work to complete. (Now after 7 years the X-2 has yet to start its tests and the X-3 is still in performance testing stage). Tentative targets now being set anticipate that the first disc should be complete before 1960 and it would take the whole of the 'sixties to develop it properly, even though some combat things might be available ten years from now.

One thing seems certain at this stage, that the companies likely to dominate the science will be those with the biggest computers to work out the ramifications of the basic theory. Douglas is easily the world's leader in computer capacity, followed by Lockheed and Convair. The frame incidentally is indivisible from the engine. If there is to be any division of responsibility it would be that the engine industry might become responsible for providing the electrostatic energy (by, it is thought, a kind of flame) and the frame maker for the condenser assembly which is the core of the main structure.

Aviation Report 12 October 1954

GRAVITICS STUDY WIDENING

The French are now understood to be pondering the most effective way of entering the field of electro-gravitic propulsion systems. But now least of the

"The proposals, it should be added, were not accepted.

difficulties is to know just where to begin. There are practically no patents so far that throw very much light on the mathematics of the relation between electricity and gravity. There is, of course, a large number of patents on the general subject of motion and force, and some of these may prove to have some application. There is, however, a series of working postulations embodied in the original Project Winterhaven, but no real attempt has been made in the working papers to go into the detailed engineering. All that had actually been achieved up to just under a year ago was a series of fairly accurate extrapolations from the sketchy data that has so far been actually observed. The extrapolation of 50 mph to 1,800 mph, however, (which is what the present hopes and aspirations amount to) is bound to be a rather vague exercise. This explains American private views that nothing can be reasonable expected from the science yet awhile. Meanwhile, the NACA is active, and nearly all the Universities are doing work that borders close to what is involved here, and something fruitful is likely to turn up before very long.

Aviation Report 19 October 1954

GRAVITICS STEPS

Specification writers seem to be still rather stumped to know what to ask for in the very hazy science of electro-gravitic propelled vehicles. They are at present faced with having to plan the first family of things - first of these is the most realistic type of operational test rig, and second the first type of test vehicle. In turn this would lead to sponsoring of a combat disc. The preliminary test rigs which gave only feeble propulsion have been somewhat improved, but of course the speeds reached so far are only those more associated with what is attained on the roads rather than in the air. But propulsion is now known to be possible, so it is a matter of feeding enough KVA into condensers with better k figures. 50,000 is a magic figure for the combat saucer - it is this amount of KVA and this amount of k that can be translated into Mach 3 speeds.

Meanwhile Glenn Martin now feels ready to say in public that they are examining the unified field theory to see what can be done. It would probably be truer to say that Martin and other companies are now looking for men who can make some kind of sense out of Einstein's equations. There's nobody in the air industry at present with the faintest idea of what it is all about. Also, just as necessary, companies have somehow to find administrators who know enough of the mathematics to be able to guess what kind of industrial

investment is likely to be necessary for the company to secure the most rewarding prime contracts in the new science. This again is not so easy since much of the mathematics just cannot be translated into words. You either understand the figures, or you cannot ever have it explained to you. This is rather new because even things like indeterminacy in quantum mechanics can be more or less put into words.

Perhaps the main thing for management to bear in mind in recruiting men is that essentially electro-gravitics is a branch of wave technology and much of it starts with Planck's dimensions of action, energy and time, and some of this is among the most firm and least controversial sections of modern atomic physics.

Aviation Report 19 November 1954

ELECTRO-GRAVITICS PUZZLE

Back in 1948 and 49, the public in the U.S. had a surprisingly clear idea of what a flying saucer should, or could, do. There has never at any time been any realistic explanation of what propulsion agency could make it do those things, but its ability to move within its own gravitation field was presupposed from its manoeuvrability. Yet all this was at least two years before electro-static energy was shown to produce propulsion. It is curious that the public were so ahead of the empiricists on this occasion, and there are two possible explanations. One is that optical illusions or atmospheric phenomena offered a preconceived idea of how the ultimate aviation device ought to work. The other explanation might be that this was a recrudescence of Jung's theory of the Universal Mind which moves up and down in relation to the capabilities of the highest intellects and this may be a case of it reaching a very high peak of perception.

But for the air industries to realize and electro-gravitic aircraft means a return to basic principles in nuclear physics, and a re-examination of much in a wave technology that has hitherto been taken for granted. Anything that goes any way towards proving the unified field theory will have as great a bearing on electro-gravitics efforts as on the furtherance of nuclear power generally. But the aircraft industry might as well face up to the fact that priorities will in the end be competing with the existing nuclear science commitments. The fact that electro-gravitics has important applications other than for a weapon will however strengthen the case for governments to get in on the work going on.

Aviation Report 28 January 1955

MANAGEMENT NOTE FOR ELECTRO-GRAVITICS

The gas turbine engine produced two new companies in the U.S. engine field and they have, between them, at various times offered the traditional primes rather formidable competition. Indeed GE at this moment has, in the view of some, taken the Number Two position. In Britain no new firms managed to get a footing, but one, Metro-Vick, might have done if it had put its whole energies into the business. It is on the whole unfortunate for Britain that no bright newcomer has been able to screw up competition in the engine field as English Electric have done in the airframe business.

Unlike the turbine engine, electro-gravitics is not just a new propulsion system, it is a new made of thought in aviation and communications, and it is something that may become all-embracing. Theoretical studies of the science unfortunately have to extend right down to the mathematics of the meson and there is no escape from that. But the relevant facts wrung from the nature of the nuclear structure will have their impact on the propulsion system, the airframe and also its guidance. The airframe, as such, would not exist, and what is now a complicated stressed structure becomes some convenient form of hard envelope.

New companies therefore who would like to see themselves as major defence prime contractors in ten or fifteen years time are the ones most likely to stimulate development. Several typical companies in Britain and the U.S. come to mind - outfits like AiResearch, Raytheon, Plessey in England, Rotax and others. But the companies have to face a decade of costly research into theoretical physics and it means a great deal of trust. Companies are mostly overloaded already and they cannot afford it, but when they sit down and think about the matter they can scarcely avoid the conclusion that they cannot afford not to be in at the beginning.

Aviation Report 8 February 1955

ELECTRO-GRAVITICS BREAKTHROUGHS

Lawrence Bell said last week he thought that the tempo of development leading to the use of nuclear fuels and anti-gravitational vehicles (he meant presumably ones that create their own gravitational field independently of the earth's) would accelerate. He added that the breakthroughs now feasible will advance their introduction ahead of the time it has taken to develop the turbojet

to its present pitch. Beyond the thermal barrier was a radiation barrier, and he might have added ozone poisoning and meteorite hazards, and beyond that again a time barrier. Time however is not a single calculable entity and Einstein has taught that an absolute barrier to aviation is the environmental barrier in which there are physical limits to any kind of movement from one point in space-time continuum t another. Bell (the company not the man) have a reputation as experimentalists and are not so earthy as some of the other U.S. companies; so while this first judgement on progress with electrogravitics is interesting, further word is awaited from the other major elements of the air business. Most of the companies are now studying several forms of propulsion without heat engines though it is early days yet to determine which method will see the light of day first. Procurement will open out because the capabilities of such aircraft are immeasurably greater than those envisaged with any known form of engine.

Aviation Report 15 July 1955

THERMONUCLEAR-ELECTROGRAVITICS INTERACTION

The point has been made that the most likely way of achieving the comparatively low fusion heat needed - 1,000,000 degrees provided it can be sustained (which it cannot be in fission for more than a microsecond or two of time) - is by use of a linear accelerator. The concentration of energy that may be obtained when accelerators are rigged in certain ways make the production of very high temperatures feasible but whether they could be concentrated enough to avoid a thermal heat problem remains to be seen. It has also been suggested that linear accelerators would be the way to develop the high electrical energies needed for creation of local gravitational systems. It is possible therefore to imagine that the central core of a future air vehicle might be a linear accelerator which would create a local weightless state by use of electrostatic energy and turn heat into energy without chemical processes for propulsion. Eventually - towards the end of this century - the linear accelerator itself would not be required and a ground generating plant would transmit the necessary energy for both purposes by wave propagation.

Aviation Report 30 August 1955

POINT ABOUT THERMONUCLEAR REACTION REACTORS

The 20 year estimate by the AEC last week that lies between present research frontiers and the fusion reactor probably refers to the time it will take to tap fusion heat. But it may be thought that rather than use the molecular and chemical processes of twisting heat into thrust it would be more appropriate to use the new heat source in conjunction with some form of nuclear thrust producer which would be in the form of electrostatic energy. The first two Boeing nuclearjet prototypes now under way are being designed to take either molecular jets or nuclear jets in case the latter are held up for one reason or another. But the change from molecular to direct nuclear thrust production in conjunction with the thermonuclear reactor is likely to make the aircraft designed around the latter a totally different breed of cat. It is also expected to take longer than two decades, though younger executives in trade might expect to live to see a prototype.

Aviation Report 14 October 1955

ELECTROGRAVITICS FEASIBILITY

Opinion on the prospects of using electrostatic energy for propulsion, and eventually for creation of a local gravitational field isolated from the earth's has naturally polarized into the two opposite extremes. There are those who say it is nonsense from start to finish, and those who are satisfied from performance already physically manifest that it is possible and will produce air vehicles with absolute capabilities and no moving parts. The feasibility of a Mach 3 fighter (the present aim in studies) is dependent on a rather large k extrapolation, considering the pair of saucers that have physically demonstrated the principle only an achieved speed of some 30 fps. But, and this is important, they have attained a working velocity using a very inefficient (even by today's knowledge) form of condenser complex. These humble beginnings are surely as hopeful as Whittle's early postulations.

It was, by the way, largely due to the early references in Aviation Report that work is gathering momentum in the U.S. Similar studies are beginning in France, and in England some men are on the job full time.

Aviation Report 15 November 1955

ELECTRO-GRAVITICS EFFORT WIDENING

Companies studying the implications of gravitics are said, in a new statement, to include Glenn Martin, Convair, Sperry-Rand, Sikorsky, Bell, Lear Inc. and Clark Electronics. Other companies who have previously evinced interest include Lockheed, Douglas and Killer. The remainder are not disinterested, but have not given public support to the new science - which is widening all the time. The approach in the U.S. is in a sense more ambitious than might have been expected. The logical approach, which has been suggested by Aviation Studies, is to concentrate on improving the output of electrostatic rigs in existence that are known to be able to provide thrust. The aim would be to concentrate on electrostatics for propulsion first and widen the practical engineering to include establishment of local gravity forcelines, independent of those of the earth's, to provide unfettered vertical movement as and when the mathematics develops.

However, the U.S. approach is rather to put money into fundamental theoretical physics of gravitation in an effort first to create the local gravitation field. Working rigs would follow in the wake of the basic discoveries. Probably the correct course would be to sponsor both approaches, and it is now time that the military stepped in with big funds. The trouble about the idealistic approach to gravity is that the aircraft companies do not have the men to conduct such work. There is every expectation in any case that the companies likely to find the answers lie outside the aviation field. These would emerge as the masters of aviation in its broadest sense.

The feeling is therefore that a company like A.T.& T. is most likely to be first in this field. This giant company (unknown in the air and weapons field) has already revolutionized modern warfare with the development of the junction transistor and is expected to find the final answers to absolute vehicle lévitation. This therefore is where the bulk of the sponsoring money should go.

Aviation Report 9 December 1955

A P P E N D I X I I

ELECTROSTATIC PATENTS

ELECTROSTATIC MOTORS

(a) American patents still in force.

2,413,391	Radio Corp. America	20-6-42/31-12-46	Power Supply System
2,417,452	Ratheon Mfg. Co.	17-1-44/18- 3-47	Electrical System
2,506,472	W.B. Smits	3-7-46Holl/ 2- 5-50	Electrical Ignition Apparatus
2,545,354	G.E.C.	16-3-50/13- 3-51	Generator
(-Engl. P. 676,953)			
2,567,373	Radio Corp. America	10-6-49/11- 9-51	El'static Generator
2,577,446	Chatham Electronics	5-8-50/ 4-12-51	El'static Voltage Generator
2,578,908	US-Atomic Energy C.,	26-5-47/18-12-51	El'static Voltage Generator
2,588,513	Radio Corp. America	10-6-49/11- 3-52	El'static High-Voltage Generator
2,610,994	Chatham Electronics	1-9-50/16- 9-52	El'static Voltage Generator
2,662,191	P. Okey	31-7-52/8 -12-53	El'static Machine
2,667,615	R.G. Brown	30-1-52/26- 1-54	El'static Generator
2,671,177	Consolidated Engg. Corp	4-9-51/2 - 3-54	El'static Charging App's.
2,701,844	H.R. Wasson	8-1260/ 8- 2-55	El'static Generator of Electricty
2,702,353	US-Navy	17-7-52/15- 2-55	Miniature Printed Circuit Electrostatic Generator

(b) British patents still in force.

651,153	Metr.-Vickers Electr. Co.	20-5-48/14- 3-51	Voltage Transformation of electrical energy.
651,295	Ch. P. Warthen sr. (U.S.A.)	6-8-48/14- 3-51	Electrostatic A.C. Generator
731,774	"Licentia" 19-9-52 & 21-11-52Gy/15- 6-55		El'static High-Vcltage Generator

(c) French patents still in force

753,363	H. Chaumat	19-7-32/13-10-33	Moteur électrostatique utilisant l'énergie cinétique d'ions gazeux
749,832	H. Chaumat	24-1-33/29- 7-33	Machine électrostatique à excitation indépendante

The following patents derive from P.Jolivet (Algiers), marked "A" and from N. J. Felici, E.Gartner (Centre National des Recherches Scientifique - CRNS -•) later also by R.Morel, M.Point etc.- (3. A, des Machines Electrostatiques -SAMES-) and of Société' d'Appareils de Contrôle et d'Equipment des Moteurs -SACEM-), marked "G" (because the development was centred at the University Grenoble.

Mark of Applicant	Application Date	England	America	France	Germany	Title
G	8-11-44) 14- 8-45)	637,434	2,486,140	993,017 56,027	860,649	Electrostatic Influence Machine
G	17-11-44	639,653	2,523,688	993,052	815,667	Electrostatic Influence Machine
A	28- 2-45			912,444		Inducteurs de Machines el'static
G	3- 3-45	643,660	2,519,554	995,442	882,586	El'static Machines
A	8- 6-45			915,929		Machines electrostatiques a flasques
A	16- 8-45			918,547		Generatrice el'statique.
G	20- 9-45) 21- 9-45)	643,664	2,523,689	998,397 56,356	837,267	Electrostatic Machines
A	4- 2-46			923,593		Generatrice el'statique
G	17- 7-46	643,579	2,530,193	1002,031	811,595	Generating Machines
G	20- 2-47	671,033	2,590,168			Ignition device
G	21-3 -47	655,474	2,542,494 Re-23,560	944,574	860,650	El'static Machines
G	6- 6-47	645,916	2,522,106	948,409	810,042	El'static Machines
A	16- 6-47			947,921		Generatrice el'statique
G	16-.1-48	669,645	2,540,327	961,210	810,043	El'static Machines
G	21- 1-49	669,454	2,617,976	997,991	815,666	El'static Machines
G	7- 2-49	675,649	2,649,566	1010,924	870,575	El'static Machines
G	15- 4-49	693,914	2,604,502	1011,902	832,634	Commutators for electrical machine
G	0-11-49	680,178	2,656,502	1004,950	850,485	El'static Generate
G	9-10-50) 20- 2-51)	702,494	2,675,516	1030,623		El'static Generate
G	29-11-50) 20- 2-51)	702,421		1028,596		El'static Generate
G	21-11-51	710,687		1051,430	P10421	El'static Machines
G	20- 8-52	731,773	2,702,869		938,198	El'static Machines
G	6-11-52	745,489				El'static Generator
G	12- 2-53	745,783				Rotating El'static Machines
G	8- 1-52	715,010	2,685,654	1047,501		Rotating El'static Machines producing a periodical discharge
G	27- 2-54	Appl'n. No. 5726/55				El'static Machines
G	8- 3-54	6790/55				El'static Machines
G	28- 1-55	2748/56				El'static Machines

NOTE:- ALL THE LISTED PATENTS ARE STILL IN FORCE

THE GRAVITICS SITUATION

December 1956

Gravity Rand Ltd.
66 Sloane Street
London S W l

Theme of the science for 1956-1970:
SERENDIPITY

Einstein's view: "It may not be an unattainable hope that some day a clearer knowledge of the processes of gravitation may be reached; and the extreme generality and detachment of the relativity theory may be illuminated by the particular study of a precise mechanism."

CONTENTS

I - Engineering note on present frontiers of knowledge
II - Management note on the gravitics situation
III - Glossary
IV - References
V - Appendix
- Appendix I: Summary of Townsend Brown's original specification or an apparatus for producing force or motion
- Appendix II: Mozer's quantum mechanical approach to the existence of negative mass and its utilization in the construction of gravitationally neutralized bodies
- Appendix III. Gravity effects (Beams)
- Appendix IV: A link between Gravitation and nuclear energy (Deser and Arnowitt)
- Appendix V: Gravity/Heat interaction (Wickenden)
- Appendix VI: Weight-mass anomaly (Perl)

Thanks to the Gravity Research Foundation for Appendix II to VI

I. Engineering note on present frontiers of knowledge

Gravitics is likely to follow a number of separate lines of development: the best known short term proposition is Townsend Brown's electrostatic propulsion by gravitators (details of which are to be found in the Appendix I). An extreme extrapolation of Brown's later rigs appears to suggest a Mach 3 interceptor type aircraft. Brown called this basically force and motion, but it does not appear to be the road to a gravitational shield or reflector. His is the brute force approach of concentrating high electrostatic charges along the leading edge of the periphery of a disk which yields propulsive effect. Brown originally maintained that his gravitators operate independently of all frames of references and it is motion in the absolute sense relative to the universe as a whole. There is however no evidence to support this. In the absence of any such evidence it is perhaps more convenient to think of Brown's disks as electrostatic propulsion which has its own niche in aviation. Electrostatic disks can provide lift without speed over a flat surface. This could be an important advance over all forms of airfoil which require induced flow; and lift without air flow is a development that deserves to be followed up in its own right, and one that for military purposes is already envisaged by the users as applicable to all three services. This point has been appreciated in the United States and a program in hand may now ensure that development of large sized disks will be continued. This is backed up by the U.S. Government, but it is something that will be perused on a small scale. This acceptance follows Brown's original suggestion embodied in Project Winterhaven. Winterhaven recommended that a major effort be concentrated on electrogravitics based on the principle of his disks. The U.S. Government evaluated the disks wrongly, and misinterpreted the nature of the energy. This incorrect report was filed in an official assessment, and it took some three years to correct the earlier misconception. That brings development up to the fairly recent past, and by that time it was realized that no effort on the lines of Winterhaven was practical, and that more modest aims should be substituted. These were re-written around a new report which is apparently based on newer thoughts and with some later patents not yet published which form the basis of current U.S. policy. It is a matter of some controversy whether this research could be accelerated by more money but the impression in Gravity Rand is that the base of industry is perhaps more than adequately wide. Already companies are specializing in evolution of particular components of an electrogravitics disk. This implies that the science is in the same state as the ICBM namely

that no new breakthroughs are needed, only intensive development engineering. This may be an optimistic reading of the situation, it is true that materials are now available for the condensers giving higher k figures than were postulated in Winterhaven as necessary, and all the ingredients necessary for the disks appear to be available. But industry is still some way from having an adequate power source, and possessing any practical experience of running such equipment.

The long term development of gravity shields, absorbers, and magic metals' appears at the moment however to be a basically different problem, and work in this is not being sponsored (officially, that is), so far as is known. The absorber or shield could be intrinsically a weapon of a great power, the limits of which are difficult to foresee. The power of device to imdermine the electrostatic forces holding the atom together is a destructive by-product of military significance, hi unpublished work Gravity Rand has indicated the possible effect of such a device for demolition. The likelihood of such work being sponsored in small countries outside the U.S. is slight, since there is general lack of money and resources and in all such countries quick returns are essential.

Many people hold that little or no progress can be made until the link in the Einstein unified field theory has been found. This is surely a somewhat defeatist view, because although no all-embracing explanation of the relationship between the extraordinary variety of high energy particles continually being uncovered is yet available much can be done to pin down the general nature of anti-gravity devices.

There are several promising approaches one of them is the search for negative mass, a second is to find a relationship between gravity and heat, and a third is to find the link between gravitation and the coupled particles. Taking the first of these: negative mass, the initial task is to prove the existence of negative mass, and Appendix II outlines how it might be done, this is Mozer's approach which is based on the Schroedinger time independent equation with the center of mass motion removed. As the paper shows this requires some 100 bev. which is beyond the power of existing particle accelerators: however the present Russian and American nuclear program envisage 50 bev. bevatrons within a few years and at the present rate of progress in the nuclear sciences it seems possible that the existence of negamass will be proved by this method of a Bragg analysis of the crystal structure or disproved. If negamass is established the precise part played by

the subnuclear particles could be quickly determined. Working theories have been built up to explain how negative masses would be repelled by positive masses and pairs would accelerate gaining kinetic energy until they reach the speed of light and then assume the role of the high energy particles. It has been suggested by Ferrell that this might explain the role of neutrino, but this seems unlikely without some absence of rest mass or charge of the neutrino makes it especially intriguing. Certainly further study of the neutrino would be relevant to gravitational problems. If therefore the aircraft industry regards antigravity as part of its responsibilities it cannot escape the necessity of monitoring high-energy physics of the neutrino. There are two companies definitely doing this but little or no evidence that most of the others know even what a neutrino is.

The relationship between electrical charges and gravitational forces however will depend on the right deductions being drawn from excessively small abnormalities (see Appendix VI). First clues to such small and hitherto unnoticed effects will come by study of the unified field theory: such effects may be observed in work on the gravithermals, and interacting effects of heat and gravity. This as Beams says (see Appendix III) is due to results from the alignment of the atoms. Gravity tensions applied across the ends of a tube filled with electrolyte can produce heat or be used to furnish power. The logical extension of this is an absorber of gravity in the form of a flat plate and the gravitative flux acting on it (its atomic and molecular structure, its weight density and form are not at this stage clear) would lead to an increase in heat of the mass of its surface and subsurface particles.

The third approach is to aim at discovering a connection between nuclear particles and the gravitational field. This also returns to the need for interpreting microscopic relativistic phenomena at one extreme in terms of microscopic quantum mechanical phenomena at the other. Beaumont in suggesting a solution recalls how early theory established, rough and ready assumptions of the characteristics of electron spin before the whole science of the atomic orbital was worked out. These were based on observation, and they were used with some effect at a time when data was needed. Similar assumptions of complex spin might be used to link the microscopic to the macroscopic. At any rate there are some loose ends and complex spin to be tied up, and these could logically be sponsored with some expectation of results by companies wondering how to make a contribution.

If a real spin or rotation is applied to a planar geoid the gravitational

equipotentials can be made less convex, plane or concave. These have the effect of adjusting the intensity of the gravitational field at will which is a requirement for the gravity absorber. Beaumont seemed doubtful whether external power would have to be applied to achieve this but it seems reasonable to suppose that power could be fed into the system to achieve a bénéficiai adjustment to the gravitational field, and conventional engineering methods could ensure that the weightlessness from the spin inducer. The engineering details of this naturally still in the realms of conjecture but at least it is something that could be worked out with laboratory rigs, and again the starting point is to make more accurate observations of small effects. The technique would be to accept any anomalies in nature, and from them to establish what would be needed to induce a spin artificially.

It has been argued that the scientific community faces a seemingly impossible task in attempting to alter gravity when the force is set up by a body as large as this planet and that to change it might demand a comparable force of similar planetary dimensions. It was scarcely surprising therefore that experience had shown that while it has been possible to observe the effects of gravity it resisted any form of control or manipulation. But the time is fast approaching when for the first time it will be within the capability of engineers with bevatrons to work directly wit particles that, it is increasingly accepted contribute to the source of gravitation, and whilst that in itself may not lead to an absorber of gravity, it will at least throw more light on the sources of the power.

Another task is solution (see Appendix IV) of outstanding equations to convert gravitational phenomena to nuclear energy. The problem, still not yet solved, may support the Bondi-Hoyle theory that expansion of the universe represents energy continually annihilated instead of being carried to the boundaries of the universe. This energy loss manifests itself in the behavior of the heparin and K-particles which would, or might, form the link between the microcosm and macrocosm. Indeed Deser and Arnowitt propose that the new particles are a direct link between gravitationally produced energy and nuclear energy. If this were so it would be the place to begin in the search for practical methods of gravity-manipulation. It would be realistic to assume that the K-particles are such a link. Then a possible approach might be to disregard objections which cannot be explained at this juncture until further unified field links are established. As in the case of the spin and orbital theories, which were naive in the beginning, the technique might have to accept the apparent forces and make theory fit observation

until more is known.

Some people feel that the chances of finding such a unified field theory to link gravity and electrodynamics are high yet think that the finding of a gravity shield is slight because of the size of the energy source, and because the chances of seeing unnoticed effect seem slender. Others feel the opposite and believe that a link between the Einstein general relativistic and Quantum Theory disciplines. Some hope that both discoveries may come together while a few believe that a partial explanation of both may come about the same time, which will afford sufficient knowledge of gravitational fields to perfect an interim type of absorber using field links that are available. This latter seems the more likely since it is already beginning to happen. There is not likely to be any sudden full explanation of the microcosm and macrocosm, but one strand after another joining them will be fashioned as progress is made towards quantizing the Einstein theory.

II. Management Note on the Gravitics Situation

The present anti-gravity situation as one of watching and waiting by the large aircraft prime contractors for lofting inventions or technological breakthroughs. Clarence Birdseye in one of his last utterances thought that an insulator might be discovered by accident by someone working on a quite different problem and in 500 years gravity insulators would be commonplace. One might go further than Birdseye and say that principles of the insulator would, by then, be fundamental to human affairs, it would be as basic to the society as the difference today between the weight of one metal and another. But at same time it would be wrong to infer from Birdseye a remark that a sudden isolated discovery will be the key to the science. The hardware will come at a time when the industry is ready and waiting for it. It will arrive after a long period of getting accustomed to thinking in terms of weightlessness and naturally it will appear after the feasibility of achieving it in one form or another has been established in theory. (But this does not mean that harnessed forces will be necessarily fully understood at the outset.)

The aim of companies at this stage must therefore surely be to monitor the areas of progress in the world of high energy physics which seem likely to lead to establishment of the foundations of anti-gravity. This means keeping a watchful eye on electrogravitics, magnetogravitics, gravitics-isotopes and electrostatics in various forms for propulsion or lévitation. This is not at the present stage a very expensive business, and investment in

laboratory man-hours is necessary only when a certain line of reasoning which may look promising comes to a dead-end for lack of experimental data or only when it might be worth running some laboratory tests to bridge a chase between one part of a theory and another, or in connecting two or more theories together. If this is right, anti-gravity is in a state similar to nuclear propulsion after the NEPA findings, yet before the ANP project got under way. It will be remembered that was the period when the Atomic Energy Commission sponsored odd things here and there that needed doing. But it would be misleading to imply that hardware progress on electrostatic disks is presently so far as nuclear propulsion was in that state represented by ANP. True the NEPA-men came to the conclusion that a nuclear-propelled aircraft of a kind could be built, but it would be only a curiosity. Even at the time of the Lexington and Whitman reports it was still some way from fruition, the aircraft would have been more than a curiosity but not competitive enough to be seriously considered.

It is not in doubt that work on anti-gravity is in the realm of the longer term future. One of the tests of virility of an industry is the extent to which it is so self confident of its position that it can afford to sponsor R&D which cannot promise a quick return. A closing of minds to anything except line of development that will provide a quick return to a sign of either a straitlaced economy or of a pure lack of prescience, (or both).

Another consideration that will play its part in managerial decision is that major turning points in anti-gravity work are likely to prove far removed from the tools of the aircraft engineer. A key instrument for example that may determine the existence of negamass and establish posimass negamass interaction is the super bevatron. It needs some 100 bev gammas on hydrogen to perform a Bragg analysis of the elementary particle structure by selective reflection to prove the existence of negamass. This value is double as much the new Russian bevatron under construction and it is 15 times as powerful as the highest particle accelerations in the Berkeley bevatron so far attained. Many people think that nothing much can be done until negamass has been observed. If industry were to adopt this approach it would have a long wait and a quick answer at the end. But the negamass-posimass theory can be further developed, and, in anticipation of its existence, means of using it in a gravitationally neutralized body could be worked out. This moreover is certainly not the only possible approach a breakthrough may well come in the interaction between gravitative action and heat. Theory at the moment suggests that if gravity could produce heat the effect is limited at the moment

to a narrow range (see Appendix V). But the significant thing would be establishment of a principle.

History may repeat itself thirty years ago, and even as recently as the German attempts to produce nuclear energy in the war, nobody would have guessed that power would be unlocked by an accident at the high end of the atomic table. All prophecies of atomic energy were concerned with how quickly means of fusion could be applied at the low end. In anti-gravity work, and this goes back to Birdseye, it may be an unrelated accident that will be the means of getting into the gravitational age. It is a prime responsibility of management to be aware of possible ways of using theory to accelerate such a process. In other words, serendipity.

It is a common thought in industry to look upon the nuclear experience as a precedent for gravity, and to argue that gravitics will similarly depend on the use of giant tools, beyond the capabilities of the air industry; and that companies will edge into the gravitational age on the coat tails of the Government, as industry has done, or is doing, in nuclear physics. But this over looks the point that the two sciences are likely to be different in their investment. It will not need a place like Hanford or Savannah River to produce a gravity shield or insulator once the know how has been established. As a piece of conceptual engineering the project is probably likely to be much more like a repetition of the turbine engine. It will be simple in its essence, but the detailed componentry will become progressively more complex to interpret in the form of a stable flying platform and even more intricate when it comes to applying the underlying principles to a flexibility of operating altitude ranging from low present flight speeds at one extreme to flight in a vacuum at the other, this latter will be the extreme test of its powers. Again the principle itself will function equally in a vacuum. Townsend Brown's saucers could move in a vacuum readily enough, but the supporting parts must also work in a vacuum. In practice they tend to give trouble, just as gas turbines bits and pieces start giving trouble in proportion to the altitude gained in flight.

But one has to see this rise in complexity with performance and with altitude attainment in perspective; eventually the most advanced capability may be attained with the most extremely simple configurations. As is usual however in physics developments the shortest line of progress is a geodesic, which may in turn lead the propulsion trade into many roundabout paths as being the shortest distance between aims and achievement.

But aviation business is understandably interested in knowing precisely how to recognize early discoveries of significance, and the Gravity Rand report is intended to array and outline some of the more promising lines. One suggestion frequently made is that propulsion and lévitation may be only the last though most important of a series of others, some of which will have varying degrees of gravitic element in their constitution. It may be that the first practical application will be in the greater freedom of communications offered by the change, in wave technique that it implies. A second application is to use the wave technique for anti-submarine detection, either airborne or seaborne. This would combine the width of horizon in search radar with the underwater precision of Magnetic Airborne Detection, and indeed it may have the range of scatter transmissions. Chance discoveries in the development of this equipment may lead to the formulation of new laws which would define the relationship of gravity in terms of usable propulsion symbols. Exactly how this would happen nobody yet knows; and what industry and government can do at this stage is to explore all the possible applications simultaneously, putting pressure where results seem to warrant it.

In a paper of this kind it is not easy to discuss the details of the wave technique in communications, and the following are some of the theories, briefly stated which require no mathematical training to understand, which it would be worth management keeping an eye on. In particular watch should be made of quantitative tests on lofting, and beneficiation of material. Even quite small beneficiation ratios are likely to be significant. There are some lofting claims being made of 20% and more, and the validity of these will have to be weighed carefully. Needless to say much higher ratios than this will have to be attained. New high k techniques and extreme k materials are significant. High speeds in electrostatic propulsion of small discs will be worth keeping track of (by high speed one means hundreds of nrp.h.) and some of these results are beginning to filter through for general evaluation. Weight mass anomalies, new oil-cooled cables, interesting negavolt gimmicks, novel forms of electrostatic augmentation with hydrocarbon and on hydrocarbon fuels are indicative, new patents under the broadest headings of force and motion may have value, new electrostatic generator inventions could tip the scales and unusual ways of turning condensers inside-out, new angular propulsion ideas for barycentric control; and generally certain types of saucer configuration are valuable pointers to ways minds are working.

Then there is the personnel reaction to such developments. Managements are in the hands of their technical men, and they should beware of technical teams who are dogmatic at this stage. To assert electro-gravitics is nonsense is as unreal as to say it is practically extant. Management should be careful of men in their employ with a closed mind or even partially closed mind on the subject.

This is a dangerous age when not only is anything possible, but it is possible quickly a wise Frenchman once said, "You have only to live long enough to see everything and the reverse of everything" and that is true in dealing with very advanced high energy physics of this kind. Scientists are not politicians they can reverse themselves once with acclaim, twice even with impunity. They may have to do so in the long road to attainment of this virtually perfect air vehicle. It is so easy to get bogged down with problems of the present; and whilst policy has to be made essentially with the present in mind, and in aviation a conservative policy always pays, it is management's task and duty to itself to look as far ahead as the best of its technicians in assessing the posture of the industry.

Gravithermals:	alloys which may be heated or cooled by gravity waves. (Lover's definition).
Thermistors: Electrade:	materials capable of being influenced by gravity.
Gravitator:	a plurality of cell units connected in series: negative and positive electrodes with an interposed insulating member (Townsend Brown's definition).
Lofting:	the action of lévitation where gravity's force is more than overcome by electrostatic or other propulsion.
Beneficiation:	the treatment of an alloy or substance to leave it with an improved mass-weight ratio.
Counterbary:	this, apparently, is another name for lofting.
Barycentric control:	the environment for regulation of lofting processes in a vehicle.
Modulation:	the contribution to lofting conferred on a vehicle by treatment of the substance of its construction as distinct from that added to it by outside forces. Lofting is a synthesis of intrinsic and extrinsic agencies.
Absorber; insulator:	these terms, there is no formal distinction between them as yet, are based on an analogy with electromagnetism. This is a questionable assumption since the similarity between electromagnetic and gravitational fields is valid only in some respects such as both having electric and magnetic elements. But the difference in coupling strengths, noted by many experimenters, is fundamental to the science. Gravity moreover may turn out to be the only nonquantized field in nature, which would make it basically unique.

	The borrowing of terms from the field of electromagnetism is therefore only a temporary convenience. Lack of Cartesian representation makes this a baffling science for many people.
Negamass:	proposed mass that inherently has a negative charge.
Posimass:	mass the observed quantity positively charged.
Shield:	a device which not only opposes gravity (such as an absorber) but also furnishes an essential path along which or through which, gravity can act. Thus, whereas absorbers, reflectors and insulators can provide a gravitationally neutralized body, a shield would enable a vehicle or sphere to fall away, in proportion to the quantity of shielding material.
Screening:	gravity screening was implied by Lanczos. It is the result of any combination of electric or magnetic fields in which one or both elements are not subject to varying permeability in matter.
Reflector:	a device consisting of material capable of generating buoyant forces which balance the force of attraction. The denser the material the greater the buoyancy force. When the density of the medium the result will be gravitationally neutralized. A greater density of material assumes a lofting role.
Electrogravitics:	The application of modulating influences in an electrostatic propulsion system.

Magnetogravitics:	the influence of electromagnetic and meson fields in a reflector.
Boson Fields:	these are defined as gravitational electromagnetic and meson fields (Metric tensor).
Fermion Fields:	these are electrons, neutrinos, muons, nucléons and V particles (Spinors).
Gravitator cellular body:	two or more gravitator cells connected in series within a body (Townsend Brown's definition).

IV REFERENCES

Mackenzie **Physical Review,** 2 pp. 321-43.

Eotvos, Pekar and Fekete, **Annalen der Physik** 68. (1922) pp.11-16.

Heyl, Paul R. **Scientific Monthly.** 47. (1938) p. 115.

Austin, Thwing, **Physical Review** 5, (1897), pp. 494-500.

Shaw, **Nature** (April 8, 1922) p. 462. Proc. Roy. Soc. 102, (Oct. 6,1922), p. 46.

Brush, **Physical Review,** 31, p. 1113 (A).

Wold, **Physical Review,** 35, p. 296 (Abstract).

Majorana, **Attidella Reale, Accademie die Lincei,** 28, (1919), pp. 160,221, 313,416,480,29 (1920) pp. 23, 90, 163, 235, Phil Mag. 39. (1920) p. 288.

Schneiderov, **Science,** (May 7, 1943), 97, sup. p. 10.

Brush, **Physical Review** 32, P. 633, (abstract).

Lanczos, **Science,** 74, (Dec. 4,1931) sup. p. 10.

Eddington, **Report on the Relativity Theory of Gravitation** (1920) Fleetway Press, London.

W.D. Fowler et al, **Phys. Rev.** 93, 861, 1954.

R.L. Arnowitt and S. Peser, **Phys. Rev** 92 1061, 1953.

R.L. Amowitt **Bull, APS** 94 798. 1954 S. Deser, **Phys. Rev.** 93, 612, 1954.

N. Schein, D.M. Haskin and R.G. Classer.
Phys.Rev.95,855, 1954.

R.L. Arnowitt and S. Peser, unpublished Univ. of California Radiation Laboratory Report, 1954.

H. Bondi and T. Gold, **Mon.** Not. **R. Astr. Soc.** 108, 252, 1948
F. Hoyle, **Mon. Not. R. Astr. Soc.** 108, 372, 1948.

B. S. De Wirt. New Directions for Research in the Theory of Gravitation, **Essay on Gravity,** 1953.

C.H. Bondi. **Cosmology,** Cambridge University Press, 1952.

F.A.B. Pirani and A. Schild, **Physical Review** 79, 986 (1950)

Bergman, Penfield, Penfield Schiller and Zatzkis, **Phys. Rev.** 80, 81 (1950).

B.S. DeWitt. **Physical Review** 85, 653 (1952).

See, for example D. Boh, **Quantum Theory,**
New York, Prentice-Hall, Inc., (1951) Chapter 22.

A. Pais, **Proceedings of the Lorentz Kamerlingh Onnes Conference,** Leyden, June 1953.

For the treatment of spinors in a unified field theory see W. Pauli. **Annalen der Physik,** 18, 337 (1933) See also B.S. DeWitt and C.M. DeWitt, **Physical Review,** 87, 116 (1952).

Carter, F.L., The Quantum Mechanical Electromagnetic Approach to Gravity, **Essay on Gravity** 1953.

On Negative mass in the Theory of Gravitation Prof. J. M. Luttinger **Essay on Gravity** 1951.

V APPENDIX

APPENDIX

I

SUMMARY OF TOWNSEND BROWN'S ORIGINAL PATENT SPECIFICATION

This invention relates to a method of controlling gravitation and for deriving power therefrom, and to a method of producing linear force or motion. The method is fundamentally electrical.

The invention also relates to machines or apparatus requiring electrical energy that control or influence the gravitational field or the energy of gravitation; also to machines or apparatus requiring electrical energy that exhibit a linear force or motion which is believed to be independent of all frames of reference save that which is at rest relative to the universe taken as a whole, and said linear force or motion is furthermore believed to have no equal and opposite reaction that can be observed by any method commonly known and accepted by the physical science to date.

Such a machine has two major parts A and B. These parts may be composed of any material capable of being charged electrically. Mass A and mass B may be termed electrodes A and B respectively. Electrode A is charged negatively with respect to electrode B, or what is substantially the same, electrode B is charged positively with respect to electrode A, or what is usually the case, electrode A has an excess of electrons while electrode B has an excess of protons.

While charged in this manner the total force of A toward B is the sum of force g (due to the gravitational field), and force e (due to the imposed electrical field) and force x (due to the resultant of the unbalanced gravitational forces caused by the electro-negative charge or by the presence of an excess of electrons of electrode A and by the electro-positive charge or by the presence of an excess of protons on electrode B).

By the cancellation of similar and opposing forces and by the addition of

similar and allied forces the two electrodes taken collectively possess a force 2x in the direction of B. This force 2x, shared by both electrodes, exists as a tendency of these electrodes to move or accelerate in the direction of the force, that is, A toward B and B away from A. Moreover any machine or apparatus possessing electrodes A and B will exhibit such a lateral acceleration or motion if free to move.

In this specification, I have used terms as "gravitator cells" and gravitator cellular body" which are words of my own coining in making reference to the particular type of cell I employ in the present invention. Wherever the construction involves the use of a pair of electrodes, separated by an insulating plate or member, such construction complies with the term gravitator cells, and when two or more gravitator cells are connected in series within a body, such will fall within the meaning of gravitator cellular body.

The electrodes A and B are shown as having placed between them an insulating plate or member C of suitable material, such that the minimum number of electrons or ions may successfully penetrate it. This constitutes a cellular gravitator consisting of one gravitator cell.

It will be understood that, the cells being spaced substantial distance apart, the separation of adjacent positive and negative elements of separate cells is greater than the separation of the positive and negative elements of any cell and the materials of which the cells are formed being the more readily affected by the phenomena underlying my invention than the mere space between adjacent cells, any forces existing between positive and negative elements of adjacent cells can never become of sufficient magnitude to neutralize or balance the force created by the respective cells adjoining said spaces. The uses to which such a motor, wheel, or rotor may be put are practically limitless as can be readily understood without further description. The structure may suitably be called a gravitator motor of cellular type.

In keeping with the purpose of my invention an apparatus may employ the electrodes A and B within a vacuum tube. Electrons, ions, or thermions can migrate readily from A to B. The construction may be appropriately termed an electronic, ionic, or thermionic gravitator as the case may be.

In certain of the last named types of gravitator units, it is desirable or necessary to heat to incandescence the whole or a part of electrode A to obtain better emission of negative thermions or electrons or at least to be able to

control that emission by variation in the temperature of said electrode A. Since such variations also influence the magnitude of the longitudinal force or acceleration exhibited by the tube, it proves to be a very convenient method of varying this effect and of electrically controlling the motion of the tube. The electrode A may be heated to incandescence in any convenient way as by the ordinary methods utilizing electrical resistance or electrical induction.

Moreover, in certain types of the gravitator units, now being considered, it is advantageous or necessary also to conduct away from the anode or positive electrode B excessive heat that may be generated during the operation. Such cooling is effected externally by means of air or water cooled flanges that are in thermo connection with the anode, or it is effected internally by passing a stream of water, air, or other fluid through a hollow anode made specially for that purpose.

The gravitator motors may be supplied with the necessary electrical energy for the operation and resultant motion thereof from sources outside and independent of the motor itself. In such instances they constitute external or independently excited motors. On the other hand the motors when capable of creating sufficient power to generate by any method whatsoever all the electrical energy required therein for the operation of said motors are distinguished by being internal or self-excited. Here, it will be understood that the energy created by the operation of the motor may at times be vastly in excess of the energy required to operate the motor. In some instances the ratio may be even as high as a million to one. Inasmuch as any suitable means for supplying the necessary electrical energy, and suitable conducting means for permitting the energy generated by the motor to exert the expected influences on the same may be readily supplied, it is now deemed necessary to illustrate details herein. In said self-excited motors the energy necessary to overcome the friction or other resistance in the physical structure of the apparatus, and even to accelerate the motors against such resistance, is believed to be derived solely from the gravitational field or the energy of gravitation. Furthermore, said acceleration in the self-excited gravitator motor can be harnessed mechanically so as to produce usable energy or power, said usable energy or power, as aforesaid, being derived from or transferred by the apparatus solely from the energy of gravitation.

The gravitator motors function as a result of the mutual and unidirectional forces exerted by their charged electrodes. The direction of these forces and the resultant motion thereby produced are usually toward to positive electrode.

This movement is practically linear. It is this primary action with which I deal.

As has already been pointed out herein, there are two ways in which this primary action can accomplish mechanical work. First, by operating in a linear path as it does naturally, or second, by operating in a circular path. Since the circle is the most easily applied of all the geometric figures, it follows that the rotary form is the most important.

There are three general rules to follow in the construction of such motors. First, the insulating sheets should be as thin as possible and yet have a relatively high puncture voltage. It is advisable also to use paraffin saturated insulators on account of their high specific resistance. Second, the potential difference between any two metallic plates should be as high as possible and yet be safely under the minimum puncture voltage of the insulator. Third, there should in most cases be as many plates as possible in order that the saturation voltage of the system might be raised well above the highest voltage limit upon which the motor is operated. Reference has previously been made to the fact that in the preferred embodiment of the invention herein disclosed the movement is towards the positive electrode. However, it will be clear that motion may be had in a reverse direction determined by what I have just termed saturation voltage by which is meant the efficiency peak or maximum of action for that particular type of motor: the theory, as I may describe it, being that as the voltage is increased, the force or action increases to a maximum which represent the greatest action in a negative to positive direction. If the voltage were increased beyond that maximum the action would decrease to zero and thence to the positive to negative direction.

The rotary motor comprises broadly speaking, an assembly of a plurality of linear motors fastened to or bent around the circumference of a wheel. In that case the wheel limits the action of the linear motors to a circle, and the wheel rotates in the manner of a fireworks pin wheel.

I declare that what I claim is:

1. A method of producing force or motion which comprises the step of aggregating the predominating gravitational lateral or linear forces of positive and negative charges which are so cooperatively related as to eliminate or practically eliminate the effect of the similar and opposing forces which said charges exert.

2. A method of producing force or motion, in which a mechanical or structural part is associated with at least two electrodes or the like, of which the adjacent electrodes or the like have charges of differing characteristics, the resultant, predominating, unidirectional gravitational force of said electrodes or the like being utilized to produce linear force or motion of said part.

3. A method according to Claim 1 or 2, in which the predominating force of the charges or electrodes is due to the normal gravitational field and the imposed electrical field.

4. A method according to Claim 1, 2 or 3, in which the electrodes or other elements bearing the charges are mounted, preferably rigidly, on a body or support adapted to move or exert force in the general direction of alignment of the electrodes or other charge bearing elements.

5. A machine or apparatus for producing force or motion, which includes at least two electrodes or like elements adapted to be differently charged, so relatively arranged that they produce a combined linear force or motion in the general direction of their alignment.

6. A machine according to Claim 5 in which the electrodes or like elements are mounted, preferably rigidly on a mechanical or structural part, whereby the predominating uni-directional force obtained from the electrodes or the like is adapted to move said part or to oppose forces tending to move it counter to the direction in which it would be moved by the action of the electrodes or the like.

7. A machine according to Claim 5 or 6, in which the energy necessary for charging the electrodes or the like is obtained either from the electrodes themselves or from an independent source.

8. A machine according to Claim 5, 6 or 7, whose force action or motive power depends in part on the gravitational field or energy of gravitation which is controlled or influenced by the motion of the electrodes or the like.

9. A machine according to any of Claim 5 to 8, in the form of a motor including a gravitator cell or a gravitator cellular body, substantially as described.

10. A machine according to Claim 9, in which the gravitator cellular body or

an assembly of the gravitator cells is mounted on a wheel-like support, whereby rotation of the latter may be effected, said cells being of electronic, ionic or thermionic type.

11. A method of controlling or influencing the gravitational field or the energy of gravitation and for deriving energy or power therefrom comprising the use of at least two masses differently electrically charged, whereby the surrounding gravitational field is affected or distorted by the imposed electrical field surrounding said charged masses, resulting in a uni-directional force being exerted on the system of charged masses in the general direction of the alignment of the masses, which system when permitted to move in response to said force in the above mentioned direction derives and accumulates as the result of said movement usable energy or power from the energy of gravitation or the gravitational field which is so controlled, influenced, or distorted.

12. The method of and the machine or apparatus for producing force or motion, by electrically controlling or influencing the gravitational field or energy of gravitation.

APPENDIX II

A Quantum Approach To The Existence of Negative Mass and Its Utilization in the Construction of Gravitationally Neutralized Bodies.

Since the overwhelming majority of electrostatic quantum mechanical effects rely for their existence on an interplay of attractive and repulsive forces arising from two types of charge, few if any fruitful results could come from a quantum mechanical investigation of gravity unless there should be two types of mass. The first type, positive mass (hereafter denoted as posimass) retains all the properties attributed to ordinary mass, while the second type, negative mass (hereafter noted as negamass) differs only in that its mass is an inherently negative quantity.

By considering the quantum mechanical effects of the existence of these two types of mass, a fruitful theory of gravity will be developed. Theory will explain why negamass has never been observed, and will offer a theoretical foundation to experimental methods of detecting the existence of negamass and utilizing it in the production of gravitationally neutralized bodies.

To achieve these results recourse will be made to Schroedinger's time-independent equation with the center of mass motion removed. This equation is:

$$-h^2/2u.V^2\backslash|/ + V\ \backslash|/= E\backslash jf$$

where all the symbols represent the conventional quantum mechanical quantities. Particular attention will be paid to the reduced mass:

$$|H = \frac{jnijrj2}{mi + ni2}$$

where mi and ni2 are the masses of the two interacting bodies.

One can approach the first obstacle that any theory of negamass faces, namely the explanation of why negamass has never been observed, by a consideration of how material bodies would be formed if a region of empty

space were suddenly filled with many posimass and negamass quanta. To proceed along these lines, one must first understand the nature of the various possible quantum mechanical interactions of posimass and negamass.

Inserting the conventional gravitational interaction potential into Schroedinger's equation and solving for the wave function ψ, yields the result that the probability of two posimass quanta being close together is greater than the possibility of their being separated. Hence, there is said to be an attraction between pairs of posimass quanta. By a similar calculation it can be shown that while the potential form is the same, two negamass quanta repel each other. This arises from the fact that the reduced mass term in Schroedinger's equation is negative in this latter case. The type of posimass-negamass interaction is found to depend on the relative sizes of the masses of the interacting posimass and negamass quanta, being repulsive if the mass of the negamass quantum is greater in absolute value than the mass of the posimass quantum, and attractive in the opposite case. If the two masses are equal in absolute value, the reduced mass is infinite and Schroedinger's equation reduces to:

$$(Y - E)\psi = 0$$

Since the solution $\psi = 0$ is uninteresting physically, it must be concluded that $V = E$, and hence there is no kinetic energy of relative motion. Thus, highest energy state. Thus, independent of, and in addition to the attractive posimass-posimass gravitational interaction there is a repulsive quantum mechanical exchange interaction between pairs of posimass quanta, when the system is in state E_{odd}. The result of these two oppositely directed interactions is the two posimass quanta are in stable equilibrium at some separation distance. Since this equilibrium occurs between all posimass pairs in an elementary particle, a necessary consequence of the existence of negamass is that when in the first excited state elementary particles have a partial crystalline structure.

This theoretical conclusion is capable of experimental verification by perforrning a Bragg analysis of the elementary particle structure through shining high energy gamma rays on hydrogen. Part of the gamma ray energy will be utilized in lowering the system from energy E_{even} to E_{odd}, and if selective reflection is observed, it will constitute a string verification of the existence of negamass. An order of magnitude calculation shows that, if the equilibrium distance between pairs of posimass quanta is one one

millionth the radius of an electron, 100 bev gamma rays will be required to perform this experiment.

Having discussed why negamass has never been observed, and having derived an experimental test of its existence, it is next desirable to develop an experimental method utilizing negamass in the production of gravitationally neutralized bodies by further consideration of some ideas previously advanced. It has been pointed out that if a source of negamass is present, a posimass sphere continues to absorb negamass quanta until equilibrium is reached as a result of the reduced mass becoming infinité. Because the sphere thus produced is practically massless, and because the gravitational interaction between two bodies is proportional to the product of their respective masses, it follows that the sphere is practically unaffected by the presence of other bodies. And thus the problem of making gravitationally neutralized bodies is reduced to the problem of procuring a source of negamass quanta. This will be the next problem discussed.

The binding energy of a negamass quantum in a posimass sphere may be obtained as one of the eigenvalue solutions to Schroedinger's Equation. If the negamass quanta in a body are excited to energies in excess of this binding energy by shining sufficient energetic gamma rays on the body, these negamass quanta will be emitted and a negamass source will thus be obtained.

To estimate the gamma ray energy required to free a negamass quantum from a posimass body, certain assumptions must be made concerning the size and mass of a posimass and negamass quanta. Since these quantities are extremely indefinite, and since the whole theory is at best qualitative, attempting to estimate the energy would be a senseless procedure. Suffice it to that because of the intimate sub-elementary nature of the posimass-negamass interaction, it seems reasonable to assume that quite energetic gamma rays will be required to break this strong bond.

To briefly review what has been shown, a quantum mechanical theory of negamass has been developed, based on the assumptions that gravitational interactions obey the laws of quantum mechanics and that all possible interactions of negamass and posimass with themselves and each other follow the well known inverse square law. This theory explains the experimental fact that negamass has never been observed, and outlines plausible experimental methods of determining the existence of negamass

and utilizing it in the construction of gravitationally neutralized bodies. While these experimental methods may perhaps be put on the realm of practicality at the present, there is every reason to hope that they will be performable in the future. At the time, the while there is an interaction potential between the equal mass posimass and negamass quanta, it results in no relative acceleration and thus, no mutual attraction or repulsion. While much could be said about the philosophical implications of the contradiction between this result and Newton's 2nd Law, such discussion is out of the scope of the present paper, and the author shall, instead, return with the above series of derivations to a consideration on the construction of material bodies in a region suddenly filled with many posimass and negamass quanta.

Because of the nature of posimass-posimass and negamass-negamass interactions, the individual posimass quanta soon combine into small posimass spheres, while nothing has, as yet, united any negamass quanta. Since it is reasonable to assume that a posimass sphere weighs more than a negamass quantum in absolute value, it will attract negamass quanta and begin to absorb them. This absorption continues until the attraction between a sphere and the free negamass quanta becomes zero due to the reduced mass becoming infinité. The reduced mass becomes infinité when the sphere absorbs enough posimass and negamass quanta equal to the negative of the mass of the next incoming negamass quantum. Thus, the theory predicts that all material bodies after absorbing as many negamass quanta as they can hold, weigh the same very small amount regardless of size.

Since this prediction is in violent disagreement with experimental fact, one must conclude that the equilibrium arising as a result of the reduced mass becoming infinite has not yet been reached. That is, assuming that negamass exists at all, there are not enough negamass quanta present in the universe to allow posimass spheres to absorb all the negamass they can hold. One is thus able to explain the experimental fact that negamass has never been observed by deriving the above mechanism in which the smaller amounts of negamass that may be present in the universe are strongly absorbed by the greater amounts of posimass, producing bodies composed of both posimass and negamass, but which have a net positive, variable, total mass.

Having thus explained why negamass has never been observed in the

pure state, it is next desirable to derive an experimental test if the existence of negamass through considering the internal quantum mechanical problem of small amounts of negamass in larger posimass spheres. One is able to gain much physical insight into this problem by simplifying it to the qualitatively similar problem of one negamass quantum in the field of two posimass quanta that are fixed distances apart. Further simplification from three dimensions to one dimension and replacement of the posimass quanta potentials by square barriers, yields a solution in which the ground state energy E_0 of the negamass quantum in the field of one posimass quantum, is split into two energy levels in the field of the two posimass quanta. These two levels correspond to even and odd parity solutions of the wave equation where E lies higher and E_{odd} lower than E_o. The magnitudes of the differences E_{even} E_o and E_o E_{odd} depend on the separation distance between the two posimass quanta, being zero for infinite separation and increasing as this separation distance is decreased.

Since the energy of a system involving negamass tends to a maximum in the most stable quantum mechanical configuration, the negamass quantum will normally be in state E_{even}. When the system is excited into state E_{odd} the negamass quantum will favor the situation in which the two posimass quanta are as far apart as possible, since E_{odd} increases with increasing separation distance between the two posimass quanta, and the system tends towards the plausibility of the existence of negamass and the theory behind the construction of gravitationally neutralized bodies from it, will meet their final tests.

SUMMARY PARAGRAPH

A quantum mechanical theory of negative mass is developed based on the assumption that gravitational interactions obey the laws of quantum mechanics, and that all possible interactions of negative and positive mass with themselves and each other follow the well known inverse square law. This theory explains the experimental fact that negative mass has never been observed, and outlines plausible experimental methods of determining the existence of negamass and utilizing it in the construction of gravitationally neutralized bodies.

Prof. F. Mozer

GRAVITY EFFECTS

The order of magnitude of the heat given off by an alloy as a result of the separation by gravity tension can be reliably estimated. Suppose we assume that an alloy of half tin and half lead completely fills a tube 5 meters long and 100 cm cross section which is maintained accurately at a temperature 277°C. At this temperature the alloy is liquid. Suppose next that the tube is raised from a horizontal plane into a vertical position l.c to a position where its length is parallel to the direction of gravity. If then the alloy is free from convection as it would be if it is maintained at uniform temperature and if it is held in this position for several months, the percentage of tin at the bottom of the tube will decrease while the relative amount at the top will increase. A simple calculation shows that the concentration of tin at the top is about one tenth of one percent greater than at the bottom and that approximately one calorie of heat is given oif in the separation progress. If after several months the tube is again placed so that its length is in a horizontal plane, the tin and lead will remix due to the thermal agitation of the atoms and heat is absorbed by the alloy.

Another interesting effect occurs when an electrolyte is subjected to gravity tension. Suppose a five meter glass tube is filled with a water solution of say barium chloride and the electrical potential between its ends is measured first when the length of the tube is parallel to the horizontal and second, when its length is practically zero when the tube is horizontal and approximately eighty five microvolts when it is vertical. This effect was discovered be Des Coudres in 1892. If a resistor is attached across the ends when the tube is vertical, heat of course is produced. If the tube is maintained at constant temperature the voltage decreases with time and eventually vanishes. The effect is believed to result from the fact that the positively charged barium ions settle faster than the lighter negatively charged chlorine ions as a result of gravity tension.

In conclusion we have seen that gravity tension effects an alloy in such a way that it gives off heat. This phenomenon results from the alignment of the atoms and from their separation by the gravitational field, the contribution of the latter being larger than that of the former. Also the gravity tension sets up a potential across the ends of a tube filled with an

electrolyte and this potential when applied across an external circuit may produce heat or drive an electric motor to furnish power. Several other small thermal effects possibly may arise from gravity tension in addition to those discussed above but space is not available to consider them in this essay. Also studies of the effect of gravitational fields and their equivalent centrifugal fields upon matter will no doubt be of great value in the future.

J.W. Beams

A LINK BETWEEN GRAVITATION AND NUCLEAR ENERGY

More quantitatively we propose the following field equations describing the above phenomena:

$$-kT_{\mu\nu} = R_{\mu\nu} + \tfrac{1}{2}Rg_{\mu\nu} + C_{\mu\nu}[\Phi, \Psi]$$

$$\left[\frac{1}{i}\gamma^{\mu}\partial_{j\mu} + m + \lambda\sigma^{\mu\nu}K_{\mu\nu}(x)\right]\Psi = 0$$

with a similar equation for Φ. In the above, Ψ represents the hyperon wave functions, and Φ the K-particle quantized field operators. The first three terms in the first equation are the usual structures in the Einstein General Relativity. The last term, $C_{\mu\nu}$, is the "creation" tensor[8] which is to give us our conversion from gravitational to nuclear energy. It is like $T_{\mu\nu}$ in being an energy-momentum term. In the second equation $\partial j\mu$ represents the covariant derivative while γ^{μ} is a generalized Dirac matrix arranged so that the second equation is indeed covariant under the general group of coordinate transformations. The $\sigma^{\mu\nu}K_{\mu\nu}$ term will automatically include the higher hyperon levels. $C_{\mu\nu}$ is a functional of the hyperon and K-field variables Ψ and Φ. As can be seen these equations are coupled in two ways: first the creation term $C_{\mu\nu}$ depends upon the field variables Ψ and Φ while the gravitational metric tensor $g_{\mu\nu}$ enters through the covariant, derivative, *etc.* λ is a new universal constant giving the scale of the level spacings of the hyperons. Rigorously speaking the field equations should be, of course, second quantized. For purposes of obtaining a workable first approximation it is probably adequate to take expectation values and solve the semi-classical equations. The creation tensor $C_{\mu\nu}$, must be a bilinear integral of the Φ and Ψ fields and may have cross terms as well of the form $\int \Phi\overline{\Psi}\Psi(dx)$. These equations will indeed be difficult to solve, but upon solution will give the distribution of created energy and hence lead eventually to the more practical issues desired.

APPENDIX V

GRAVITY/HEAT INTERACTION

Let us suppose that we have to investigate the question whether gravitative action alone upon some given substance or alloy can produce heat. We do not specify its texture, density nor atomic structure. We assume simply the flux of gravitative action followed by an increase of heat in the alloy.

If we assume a small circular surface on the alloy then the gravitative flux on it may be expressed by Gauss' Theorem and it is 4 *n* M, where M represents the mass of all sub-surface particles. The question is, can this expression be transformed into heat. We will assume it can be. Now recalling the relativity law connecting mass and energy:

$$M = m_o + T/c^2 \qquad \text{(by Einstein)}$$

where: T = kinetic energy
m_o = initial mass
c = velocity of light

we set $4 \pi M = m_o + \frac{m_o v^2}{2c^2}$

But v^2/c^2 is a proper fraction; hence $M = m_o + m_o/2k$

In the boundary case $v = c$, then $M = m_o (1 + 1/k)$.

For all other cases, $4 \pi M = m_o \left(\frac{k+1}{k}\right)$ where $k \neq 0$

Strictly, M should be preceded by a conversion factor 1/k but if inserted, it does not alter the results. Thus if gravity could produce heat, the effect is limited to a narrow range, as this result shows.

It merits stress that in a gravitational field the flow lines of descent are Geodesies.

J. Wickenden

APPENDIX VI

WEIGHT-MASS ANOMALY

There is a great need for a precise experimental determination of the weight to mass ratio of protons or electrons. Since the ratio for a proton plus an electron is known already, the determination of the ratio for either particle is sufficient. The difficulty of a direct determination of the gravitational deflection of a charged particle in an experiment similar to the neutron or neutral atom experiment is due to electrical forces being much greater than gravitational field forces. Thus stray electrons or ions which are always present on the walls of an apparatus can exert sufficient force to completely mask the gravitational force. Even if the surface charges are neglected, image charges of the electron beam itself and self-repulsion in the beam may obscure at the gravitational deflection. An additional problem is the earth's magnetic field. Electrons of even a few volts energy will feel a force due to the earth's field a thousand billion times larger than the gravitational deflection. This last problem is avoided in a static measurement of the ratio such as a weighing of ionized matter. However, this last method has the additional difficulty of requiring a high proportion of ionized to unionized matter in the sample being weighed. Of course all these problems can be resolved to some extent but it is questionable if an experiment of either of the above types can be designed in which all the adverse effects can simultaneously be sufficiently minimized. Probably a completely new type of experiment will have to be devised to measure the weight to mass ratio of the proton or electron. Such a measurement may detect a deviation from the law of constant weight to mass ratio. If such an anomaly can be shown to exist, there is the possibility of finding a material which would be acted upon in an unusual manner in a gravitational field.

Martin L. Perl*

"Editor's Note: Martin L. Perl is the recipient of the 1995 Nobel Prize in physics.

NEGATIVE MASS AS A GRAVITATIONAL SOURCE OF ENERGY IN THE QUASI-STELLAR RADIO SOURCES

Banesh Hoffman

Queens College of the City University of New York

Flushing, N.Y. 11367

Essay Awarded the First Prize
by
Gravity Research Foundation
1964

ABSTRACT

Based on the asymmetry of gravitational radiation with respect to positive and negative mass, a physical process is proposed whereby negative mass could be generated inside certain celestial objects. This process could then account for the prodigious amounts of energy- radiated by the recently discovered quasi-stellar radio sources,* it could provide an alternative to the synchrotron theory of the continuous spectrum of their emitted radiation. It could also account for the existence of cosmic ray showers of extremely high energy.

Negative mass may or may not exist. If it does, the according to both Newtonian mechanics and Einstein's general theory of relativity, it behaves in a most astonishing manner. For example, by the principle of equivalence the ratio of gravitational to inertial mass must be positive for all mass. Therefore, as is well known, positive mass attracts negative as well as positive mass, while negative mass repels both types of mass. Consequently, if a mass is placed near a mass -m, the two move in the same direction with ever-increasing speed, the negative mass chasing the positive. At first this seems to contradict the law of conservation of energy. But the particle of negative mass acquires negative energy as its speed increases, and the total energy- of the two particles remains constant.

So disconcerting is the behavior of negative mass that when Dirac discovered the negative-mass solutions of his relativistic equations of the electron he was dismayed. But by imagining almost all of the negative energy states filled, he was able to treat the occasional vacancies as particles of positive mass and positive charge, thus arriving at the concept of anti-matter. Anti-matter is now treated as having positive mass in its own right rather than as being an absence of negative mass.

We propose here to take the idea of negative mass seriously, a major reason for doing so being the desperate theoretical situation into which physics has been thrust by the anomalous behavior of the recently-discovered

* Now called "quasars" — Editor

quasi-stellar radio sources.[1] The idea of negative mass is extremely natural in the general theory of relativity. Indeed, one can exclude negative mass from Einstein's theory only by an ad hoc assumption extraneous to the theory.

According to Einstein's theory, gravitational waves are theoretically possible. It may well be that they are not generated by bodies in free fall; but if they exist they should be generated when matter is strongly influenced by non-gravitational forces, hi the special cases that have been studied[2], these waves carry away energy and cause a corresponding diminution in the mass of the radiating body. But there is a peculiar asymmetry about the energy transported by the gravitational waves: the energy is positive whether the mass of the source is positive or negative. Since this apparently arises from the Minkowskian signature of space-time it would seem to be of a fundamental nature. It has significant consequences. For unlike electromagnetic waves, which do not transport charge though their source is charge, gravitational waves are produced by mass and transport mass (in the form of energy). So if a body of mass m gives off gravitational waves of energy c^2 Am, its mass is reduced to m - Am, but if the mass of the emitter is -m it becomes -(m + Am), which is a greater amount of negative mass than before.

Let us assume that there is a quantum law, analogous to the law of conservation of baryon number, that prevents particles of positive rest mass from decaying into particles of negative rest mass. And let us assume that under extreme and unusual conditions such as might occur inside the quasi-stellar radio sources, and only under such conditions, the law is violated, so that "forbidden" transitions can occur, these transitions being linked to the weakest known interaction, gravitation, and requiring the emission of gravitational quanta of positive energy.

Consider what might happen near the center of an extremely hot and massive celestial object. The high pressure and temperature will subject particles there to intense nuclear forces which, being nongravitational, could cause strong emission of gravitational radiation. Particles of positive rest mass emitting gravitational quanta of sufficient size will turn into particles of negative rest mass; and further emission by these particles will only increase the amount of their negative rest mass. Some of the gravitational radiation may be reabsorbed by matter of negative rest mass, but much of it will escape to the less central regions of the celestial object where conditions

do not favor such transitions, and there it will undergo "Compton" collisions, giving up energy that will ultimately be converted to electromagnetic and other radiation.

Since negative masses react perversely to all except gravitational forces, they will be less buoyant than positive masses. (I am indebted to Dr. Ivor Robinson for this remark.) But negative mass is self-repelling. So, as it accumulates centrally, it will tend to cause instability, and part of it may ultimately escape from the quasi-stellar objects in eruptions that could be the cause of the characteristic jets associated with some of these objects.

It is precisely because the quasi-stellar object emits amounts of energy so prodigious as to defy conventional explanation that the concept of negative mass deserves to be taken seriously. For when negative mass is reduced within such objects positive energy is made available, and the greater the amount of negative mass created, the greater amount of positive energy released. Nor need positive mass always be used up when such energy is released; for if a particle of negative mass is sufficiently accelerated it can radiate further gravitational quanta, thus sending out more positive energy while falling to a yet lower negative energy state. (Since the inertia increases, the process need not diverge.) The violet shift caused by the negative mass will be negligible compared with the Hubble shift. Moreover, should any negative mass escape, whether in a jet or less spectacularly, the quasi-stellar object will merely be left with greater positive energy than before. Thus the mechanism outlined here could well account for the extraordinary flux of energy from these objects.

The electromagnetic radiation ultimately generated in the charged outer layers by the gravitational radiation would have a wide range of frequencies, and this could account for the remark-able intensity observed in the radio region. (The observed polarization is small, and it neither rules out the proposed mechanism nor confirms that synchrotron radiation is a major component.)

What happens to particles of negative mass that escape? They are unlikely to be present in interstellar space insufficient amounts to affect significantly our estimates of the average density of the universe. Since they repel all matter, they cannot form negative-mass stars. If the universe is such that negative-mass particles can, on balance, "escape to infinity" there will be an effect of continual creation of positive energy in the

observed region.

Since negative mass is not antimatter, a charged particle of rest mass -m meeting a particle of rest mass +m and the same (not opposite) charge could form with it a stable, loosely bound system whose mass would be merely that of the electromagnetic binding energy. Such an entity would acquire enormous speeds in extended intergalactic fields too weak to dissociate it. If it dissociated due to collision near the earth the +m component could cause a cosmic ray shower of enormous energy. The energy of some observed showers is puzzlingly high.

If a charged particle of negative mass were detected in, say, a cloud chamber and mistakenly interpreted as a particle of opposite charge and positive mass, there would be seeming discrepancies in such things as the energy and charge balances of reactions that might occur. It would be interesting to see if corroborative evidence for the existence of particles of negative mass could be found by the cosmic ray experimenters, for such a discovery would have momentous importance.

REFERENCES

1. Proceedings of the International Symposium on Gravitational Collapse, Dallas (to appear).

2. For an account of the work of Bondi, Brill, Weber, and Wheeler, on this point see D.R. Brill, Annals of Physics 7 (1959), p. 466. See also H. Bondi et al, Proc. Roy. Soc. 269A (1962) p. 21.

THE U.S. ANTIGRAVITY SQUADRON

by Paul A. LaViolette, Ph.D.

Abstract

Electrogravitic (antigravity) technology, under development in U.S. Air Force black R&D programs since late 1954, may now have been put to practical use in the B-2 Advanced Technology Bomber to provide an exotic auxiliary mode of propulsion. This inference is based on the recent disclosure that the B-2 charges both its wing leading edge and jet exhaust stream to a high voltage. Positive ions emitted from its wing leading edge would produce a positively charged parabolic ion sheath ahead of the craft, while negative ions injected into its exhaust stream would set up a trailing negative space charge with a potential difference in excess of 15 million volts. According to electrogravitic research carried out by physicist T. Townsend Brown, such a differential space charge would set up an artificial gravity field that would induce a reactionless force on the aircraft in the direction of the positive pole. An electrogravitic drive of this sort could allow the B-2 to function with over-unity propulsion efficiency when cruising at supersonic velocities.

For many years rumors circulated that the U. S. was secretly developing a highly advanced radar-evading aircraft. Rumor turned to reality in November of 1988, when the Air Force unveiled the B-2 Advanced Technology Bomber. Although military spokesmen provided the news media with some information about the craft's outward design and low radar and infrared profile, there was much they were silent about. However, several years later, some key secrets about the B-2 were leaked to the press. On March 9, 1992, *Aviation Week and Space Technology* magazine made the surprising disclosure that the B-2

electrostatically charges its exhaust stream and the leading edges of its wing-like body.(l) Those familiar with the electrogravitics research of American physicist T. Townsend Brown will quickly realize that this is tantamount to stating that the B-2 is able to function as an antigravity aircraft.

Aviation Week obtained their information about the B-2 from a small group of renegade West Coast scientists and engineers who were formerly associated with black research projects. In making these disclosures, these scientists broke a code of silence that rivals the Maria's. They took the risk because they felt that it was important for economic reasons that efforts be made to declassify certain black technologies for commercial use. Two of these individuals said that their civil rights had been blatantly abused (in the name of security) either to keep them quiet or to prevent them from leaving the tightly controlled black R&D community.

Several months after *Aviation Week* published the article, black world security personnel went into high gear. That sector of the black R & D community received very strong warnings and as a result, the group of scientists subsequently broke off contact with the magazine.

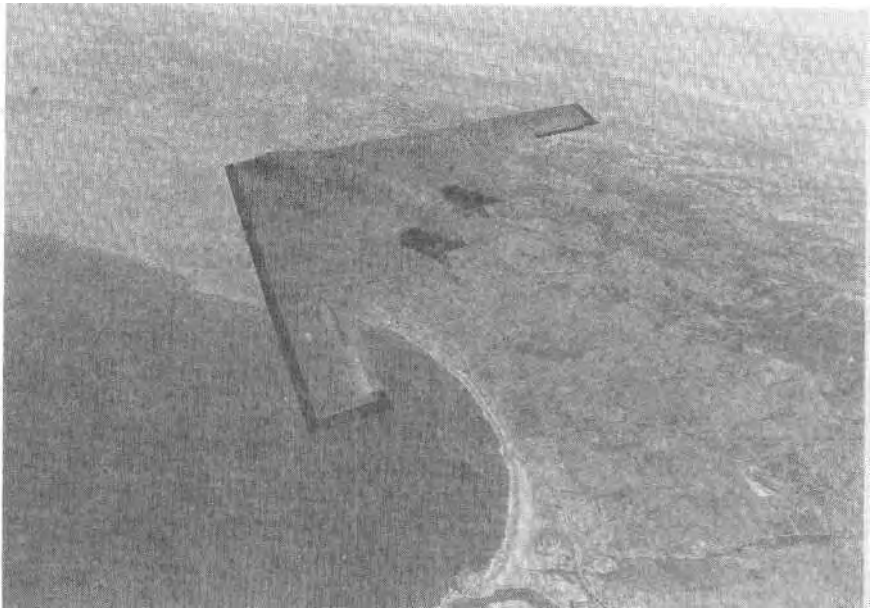

Figure 1. The B-2 Stealth Bomber in flight.
(U. S. Air Force photo)

Clearly, the overseers of black R & D programs were substantially concerned about the information leaks that had come out in that article.

To completely understand the significance of what was said about the B-2, one must first become familiar with Brown's work. Beginning in the mid 1920's, Townsend Brown discovered that it is possible to create an artificial gravity field by charging an electrical capacitor to a high-voltage.(2) He specially built a capacitor which utilized a heavy, high charge-accumulating (high k-factor) dielectric material between its plates and found that when charged with between 75,000 to 300,000 volts,

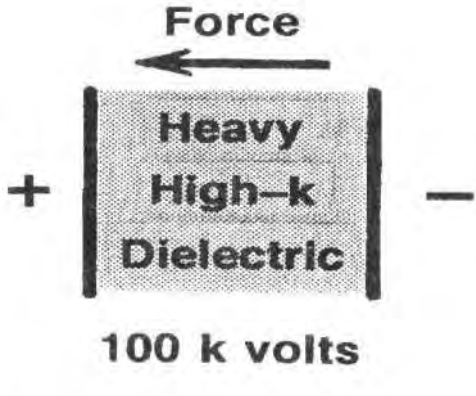

Figure 2. Gravitational force developed by Brown's charged high-voltage capacitor.

it would move in the direction of its positive pole (Figure 2). When oriented with its positive side up, it would proceed to lose about 1 percent of its weight.(3, 4) He attributed this motion to an electrostatically-induced gravity field acting between the capacitor's oppositely charged plates. By 1958, he had succeeded in developing a 15 inch diameter model saucer that could lift over 110 percent of its weight!(5) Brown's experiments had launched a new field of investigation which came to be known as electrogravitics, the technology of controlling gravity through the use of high-voltage electric charge.

As early as 1952, an Air Force major general witnessed a demonstration in which Brown flew a pair of 18-inch disc airfoils suspended from opposite ends of a rotatable arm. When electrified with 50,000 volts, they circuited at a

speed of 12 miles per hour.(6) About a year later, he flew a set of 3 foot diameter saucers for some Air Force officials and representatives from a number of major aircraft companies. When energized with 150,000 volts, the discs sped around the 50-foot diameter course so fast that the subject was immediately classified. *Interavia* magazine later reported that the discs would attain speeds of several hundred miles per hour when charged with several hundred thousand volts.(7)

Brown's discs were charged with a high positive voltage on a wire running along their leading edge and a high negative voltage on a wire running along their trailing edge. As the wires ionized the air around them, a dense cloud of positive ions would form ahead of the craft and corresponding cloud of negative ions would form behind the craft (Figure 3). Brown's research indicated that, like the charged plates of his capacitors, these ion clouds induced a gravitational force directed in the minus to plus direction. As the disc moved forward in response to its self-generated gravity field, it would carry with it its positive and negative ion clouds and their associated electrogravity gradient. Consequently, the discs would ride their advancing gravity wave much like surfers ride an ocean wave.

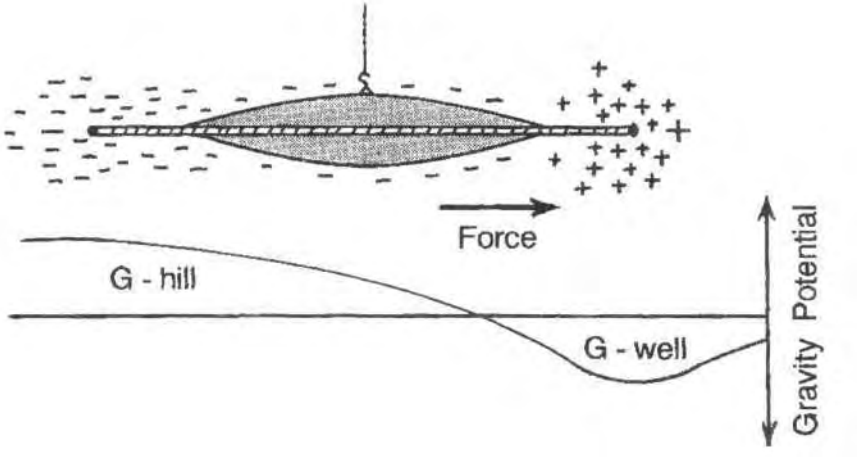

Figure 3. A side view of one of Brown's circular flying discs showing the location of its ion charges and induced gravity field.

Dr. Mason Rose, one of Townsend's colleagues, described the discs' principle of operation as follows:(8)

> The saucers made by Brown have no propellers, no jets, no moving parts at all. They create a modification of the gravitational field around themselves, which is analogous to putting them on the incline of a hill. They act like a surfboard on a wave...The electro-gravitational saucer creates its own "hill," which is a local distortion of the gravitational field, then it takes this "hill" with it in any chosen direction and at any rate.
>
> The occupants of one of [Brown's] saucers would feel no stress at all, no matter how sharp the turn or how great the acceleration. This is because the ship, the occupants and the load are all responding equally to the wavelike distortion of the local gravitational field.

Although skeptics at first thought that the discs were propelled by more mundane effects such as the pressure of negative ions striking the positive electrode, Brown later carried out vacuum chamber tests which proved that a force was present even in the absence of such ion thrust. He did not offer a theory to explain this nonconventional electrogravitic phenomenon; except to say that it was predicted neither by general relativity nor by modern theories of electromagnetism. However, recent advances in theoretical physics provide a rather straightforward explanation of the principle. According to the novel physics of subquantum kinetics, gravity potential can adopt two polarities, instead of one.(9 - 13) Not only can a gravity field exist in the form of a matter-attracting gravity potential well, as standard physics teaches, but it can also exist in the form of a matter-repelling gravity potential hill. Moreover, it predicts that these gravity polarities should be directly matched with electrical polarity: positively charged particles such as protons generating gravity wells and negatively charged particles such as electrons generating gravity hills.*

Consequently, subquantum kinetics predicts that the negative ion cloud behind Brown's disc should form a matter-repelling gravity hill while the positive ion cloud ahead of the disc should form a matter-attracting gravity well. As increasing voltage is applied to the disc, the gravity potential hill and well become increasingly prominent and the gravity potential gradient between them increasingly steep, hi Rose's terminology, the craft would find itself on the incline of a gravitational "hill." Since gravity force is known to increase in accordance with the steepness of such a gravity potential slope, increased voltage would induce an increasingly strong gravity force on the disc and

* Thus contrary to conventional theory, the electron produces a matter-repelling gravity field. Electrically neutral matter remains gravitationally attractive because the proton's G-well marginally dominates the electron's G-hill.

would act in the direction of the positive ion cloud. The disc would behave as if it were being tugged by a very strong gravitational field emanating from an invisible planet-sized mass positioned beyond its positive pole.

Early in 1952, Brown had put together a proposal, code named "Project Winterhaven," which suggested that the military develop an antigravity combat saucer with Mach 3 capability. The 1956 intelligence study entitled *Electrogravitics Systems: An Examination of Electrostatic Motion, Dynamic Counterbary and Barycentric Control,* prepared by the private aviation intelligence firm Aviation Studies (International) Ltd., indicates that as early as November 1954 the Air Force had begun plans to fund research that would accomplish Project Winterhaven's objectives.(14 - 16) The study, originally classified "confidential," mentions the names of more than ten major aircraft companies which were actively involved in electrogravitics research in an attempt to duplicate or extend Brown's seminal work. Additional information is to be found in another aviation intelligence report entitled *The Gravitics Situationen)* Since that time much of the work in electro-antigravity has proceeded in Air Force black projects on a relatively large scale.

One indication that Brown's electrogravitics ideas were being researched by the aerospace industry surfaced in January 1968. At an aerospace sciences meeting held in New York, Northrop officials reported that they were beginning wind tunnel studies to research the aerodynamic effects of applying high-voltage charges to the leading edges of aircraft bodies.(18) They said that they expected that the resulting electrical potential would ionize air molecules upwind of the aircraft and that the resulting repulsive electrical forces would condition the air stream so as to lower drag, reduce heating and soften the supersonic boom."

Although this sonic cushion effect is purely electrostatic, Northrop apparently got the idea for investigating this effect directly from Brown, for his electrokinetic flying disc patent explains that the positively charged, leading-edge electrode would produce just this effect. Brown states:(6)

> By using such a nose form, which at present appears to be the best suited for flying speeds approaching or exceeding the speed of sound, I am able to produce an ionization of the atmosphere in the immediate region of this foremost portion of the mobile vehicle. I believe that this ionization facilitates piercing the sonic barrier and minimizes the abruptness with which the transition takes place in passing from subsonic velocities to

* Although the author ofthat article speculated that Northrop might be negatively charging the aircraft's leading edge, the sonic barrier effects can also be accomplished with a positive charge, as Brown originally suggested.

supersonic velocities.

Also, in his 1952 paper on Brown's saucers, Dr. Rose stated:(8)

> The Townsend Brown experiments indicate that the positive field which is traveling in front of the saucer acts as a buffer wing which starts moving the air out of the way. This...field acts as an entering wedge which softens the supersonic barrier.

Interestingly, in 1981 the Pentagon contracted the Northrop Corporation to work on the highly classified B-2 Advanced Technology Bomber. Northropis past experience in airframe electrostatics must have been a key factor contributing to its winning of this contract, *for Aviation Week* reported that the B-2 uses "electrostatic field-generating techniques" in its wing leading edges to help it minimize aerodynamic turbulence and thereby reduce its radar cross section.(l) The same article mentions that the B-2 also charges its jet engine exhaust stream, which has the effect of rapidly cooling its exhaust and thereby remarkably reducing its thermal signature.

Although these disclosures were framed in the context of enhancing the B-2's radar invisibility, in fact, they are part of the B-2's antigravitic drive capability. With a positively charged, wing leading edge and a negatively charged, exhaust stream (Figure 4), the B-2 would function essentially as an electrogravitic aircraft. Just as in Townsend Brown's flying discs, the positive and negative ion clouds would produce a locally altered gravity field that would cause the B-2 to feel a forward-directed gravitic force.

The design is also very similar to the saucer craft that Brown described in his electrokinetic generator patent (Figure 5).(19) The craft Brown proposed was to be powered by a flame-jet generator, a high-voltage power supply that had the advantage of being both efficient and relatively lightweight (Figure 6). His generator design utilizes a jet engine with an electrified needle mounted in the exhaust nozzle to produce negative ions in the jet's exhaust stream. The negatively ionized exhaust is then discharged through a number of nozzles at the rear of the craft. As the minus charges leave the craft in this manner, an increasingly greater potential difference develops between the jet engine body and the negatively charged exhaust cloud behind the craft. By electrically insulating the engines and *conveying* their positive charges forward to a wire running along the vehicle's leading edge, the required positively charged ion cloud is built up at the front of the vehicle. A metallic surface or wire grid positioned near the exhaust stream exit collects some of the high-voltage

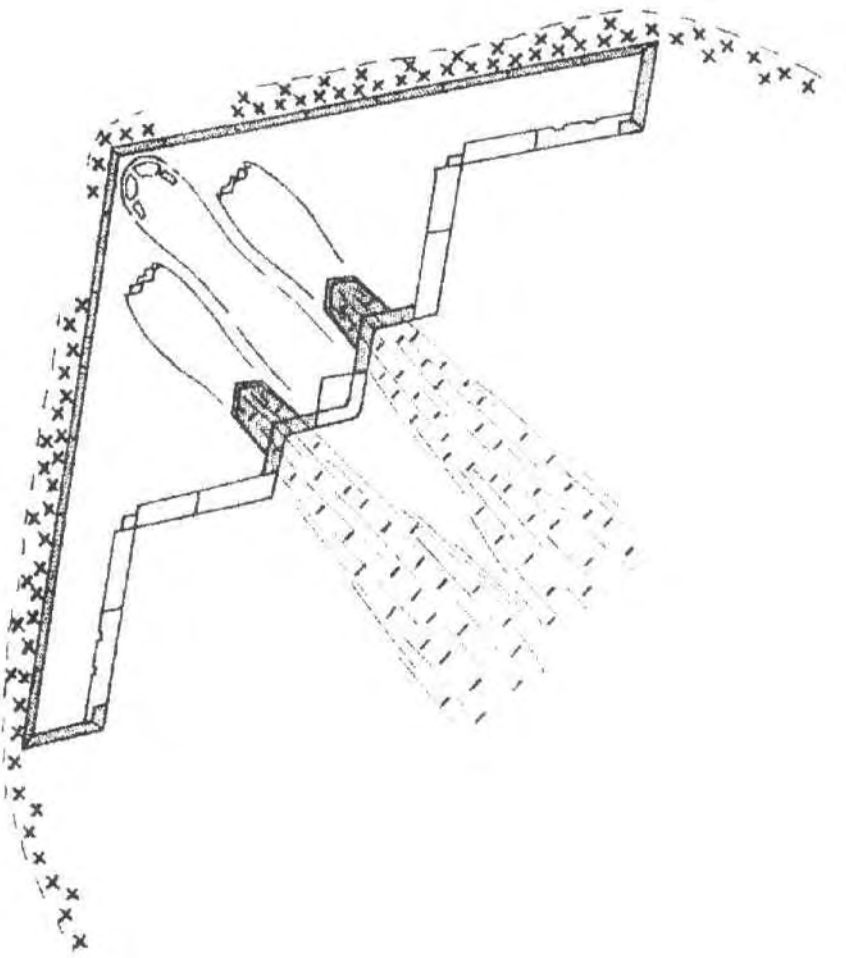

Figure 4. The profile of the B-2 as seen from above. The plane measures 69 feet from front to back and 172 feet from wing tip to wing tip. Cowlings on either side of the cockpit feed large amounts of intake air to the flame-jet high-voltage generators enclosed within its body."

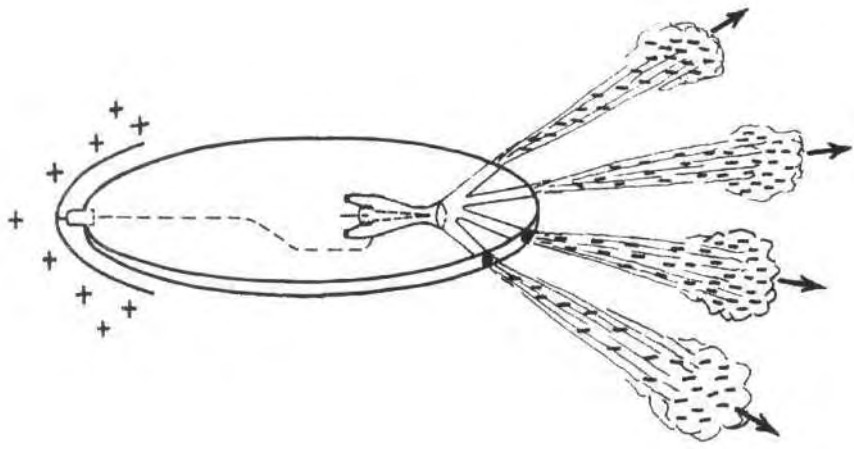

Figure 5. A version of the flying disc design which Brown proposed for development under Project Winterhaven.")

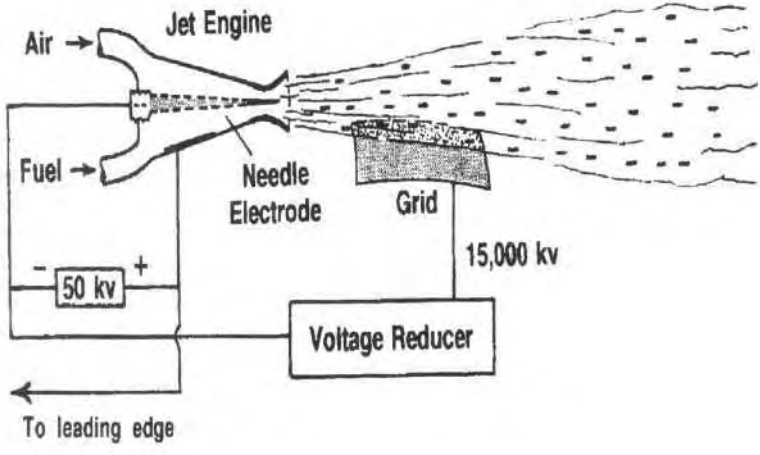

Figure 6. A high-voltage flame-jet generator.

electrons and this recycled power is used to run the exhaust ionizers. Brown estimated that such a generator could produce potentials as high as 15 million volts across his craft.

Rumors circulating among people close to the project allege that the B-2 does utilize antigravity technology. A similar claim was publicly made in 1990 by Bob Oechsler, an ex-NASA mission specialist.(20) So, our conjecture that the B-2 incorporates an electrogravitic drive, appears to be substantially correct. If this is true, the B-2 is the first mass-produced antigravity vehicle to be displayed to the public! It is the final realization of the kind of craft that Brown had proposed in Project Winterhaven, and that the 1956 Aviation Studies report had disclosed was beginning to be developed by the military in late 1954. The secrecy that has so tightly surrounded the B-2 most likely does not as much concern its radar-evading technology, as it does its antigravity propulsion technology, although both are probably closely intertwined. The use of such nonconventional propulsion technology would explain the B-2's high price tag, which has averaged well over a billion dollars per plane.

Although the black world scientists mentioned nothing about electrogravitics in their *Aviation Week* disclosure about the B-2, they did admit to the existence of very "dramatic, classified technologies," applicable to "aircraft control and propulsion." They were especially hesitant to discuss these projects, noting that they are "very black." One of them commented, "Besides, it would take about 20 hours to explain the principles, and very few people would understand them anyway." Apparently, what he meant is that this aircraft control and propulsion technology is based on physics principles that go beyond what is currently known and understood by most academic physicists. Indeed, by all normal standards, electrogravitics is a very exotic propulsion science.

The B-2's body design raises suspicions that the aircraft is indeed an electrogravitic vehicle. A primary design criterion for an electrogravitic craft is that it have a large horizontally disposed surface area so as to permit the development of a sufficiently strong antigravity lift force. As Townsend Brown's experiments demonstrated, such an aircraft need not necessarily be disc-shaped n triangular and square-shaped forms also exhibit antigravity lift when electrified n although disc shapes give the best performance. The triangular platforms used in the B-2 and other advanced stealth aircraft may have been deemed better for reasons of their much lower radar cross section.

Interestingly, one of the central features of the B-2's classified technology is the makeup of its hull's outer surface. Authorities tell us that the hull is composed of a highly classified, radar-absorbing material (RAM). Ceramic

dielectrics are a likely choice for the B-2 since, unlike many "lossy" dielectrics which function as radar wave absorbers, they are lossless, and hence, transparent to radar waves. More importantly, ceramic dielectrics also have the ability to store large amounts of high-voltage charge. Could the B-2's outer RAM layer be fabricated from an advanced, high-k, high-density dielectric ceramic, a material capable of exerting an enormous electrogravitic lift force when charged? Knowing that high-voltage charge is applied to the B-2's surface, the notion that its body surface is designed to function as a giant, high-voltage capacitor does not seem so far fetched. Given that the outer RAM skin is a key component of the B-2's highly secret, electrogravitic propulsion system, it is not surprising that special care would be taken to keep its composition secret.

Evidence that the B-2 might indeed use a high-density ceramic RAM comes from information leaked by the above-mentioned black world scientists, who disclosed information about the development of low-radar-observability, dielectric ceramics made from powdered depleted uranium.(l) The material is said to have approximately 92% of the bulk density of uranium, which would give it a spécifie gravity of about 17.5, as opposed to about 6 for barium titanate dielectrics. Thus, this new material has about three times the density of the high-k ceramics that were being tested in the 1950's, and hence would develop at least three times the electrogravitic pull.

The B-2's positively charged leading edge, another key component of its propulsion technology, was also a matter of special concern to Northrop designers. According to *Aviation Week,* the bomber's leading edges posed a particularly challenging production problem on the first aircraft. The leading-edge ionizer is most probably a conductive strip that runs along the B-2's sharp prow and is electrically charged to upwards of many millions of volts. As the B-2 moves forward, its electrified leading edge deflects the approaching air stream to either side, so that a large fraction of the generated positive ions are carried away from its body surface and are prevented from immediately contacting and neutralizing the negative ions in the B-2's exhaust stream. As a result, the B-2 is able to build up very large space charges ahead of and behind itself, which subject it to a large gravitational potential gradient. This artificially produced gravitational gradient would steepen as the B-2 attains higher speeds and deflects its positive ions outward with increasing force. Hence the B-2's electrogravitic drive would operate more efficiently when the craft was moving at higher speeds.

Best results would be obtained when the B-2 was traveling at supersonic speeds. Positive ions from its leading edge would become entrained in the upwind, sonic shock front and flow away from the craft through that sonic

boundary layer, to later converge on the negatively charged exhaust stream. Although military sources claim that the B-2 is a subsonic vehicle, in all likelihood, it is capable of supersonic flight. Probably, this capability was not disclosed in order to avoid raising curiosity about how the craft generates the required thrust.

Both in subsonic and supersonic flight, the deflected positive ions would form an ellipsoidal sheath as they circuited around the B-2 (Figure 7). The B-2's forward, positive ion sheath would act very much like an extended positively-charged electrode surface. Thus, the electrogravitic force propelling the B-2 would arise not just from the leading-edge electrode, but also from the entire positively-charged forward ion sheath. The positive and negative ion space charge distributions would very much resemble the charge configuration that Brown employed in some of his later electrogravitic experiments. Compare Figure 7, with the arcuate electrogravitic device shown in Figure 8, which is copied from one of Brown's patents.(21) Brown noted that he obtained a greater electrogravitic thrust when the positive electrode was curved and made much larger than his negative electrode. (He also stated that the apparatus produced greater thrust if the dielectric constant of its intervening dielectric rod increased along its length so as to produce a nonuniform electric field relative to the positively charged canopy. This describes precisely the characteristic of the B-2's trailing exhaust stream. At increasing distances from the craft, the negative ions progressively slow down and become more concentrated, thereby creating a nonlinear electrogravitic field along the length of the exhaust stream.) Thus, the B-2's ion sheath is optimally configured as an electrogravitic drive.

As seen in Figure 9, each of the B-2's leading edges is segmented into eight sections separated from one another by ten-centimeter wide struts. Quite possibly, the struts electrically isolate the sections from one another so that they may be individually electrified. In this way, through proper control of the applied voltage, it would be possible to gravitically steer the craft. Brown had suggested a similar idea as a way of steering his saucer craft.

The leading-edge sections positioned in front of the air scoops most likely are sparingly electrified so as to prevent positive ions from entering the engine ducts and neutralizing the negative ions being produced there.

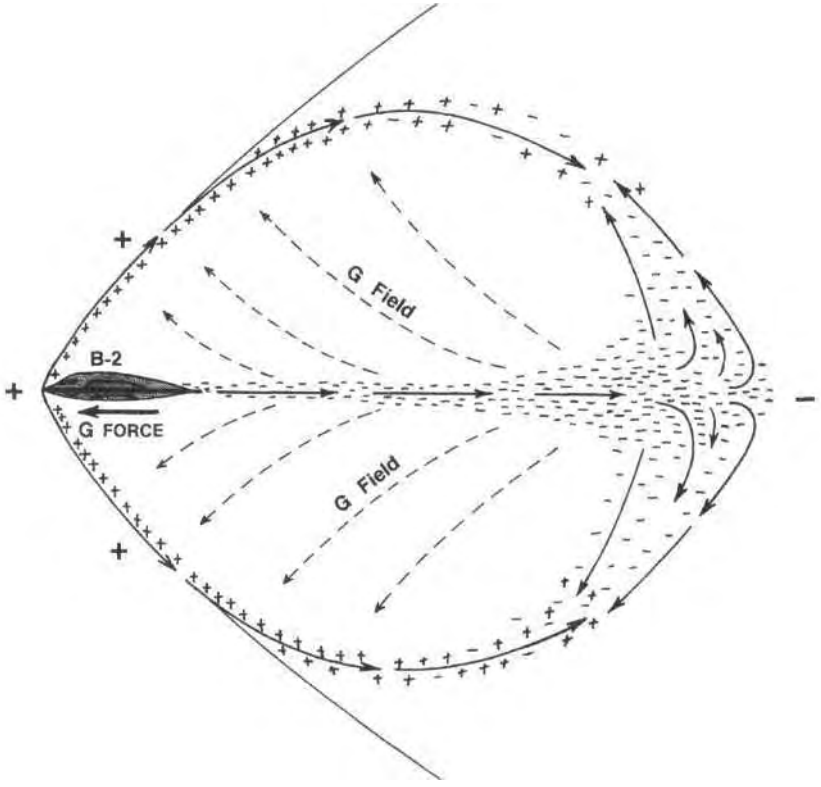

Figure 7. A side view of the B-2 showing the shape of its electrically charged Mach 2 supersonic shock and trailing exhaust stream. Solid arrows show the direction of ion flow; dashed arrows show the direction of the gravity gradient induced around the craft.

These two nonelectrified leading-edge sections would be ideal places to mount forward-looking radar antennae since the ion plasma sheath produced by the other leading-edge sections would form a barrier that would interfere with radar signal transmission. In fact, the B-2's two Hughes Aircraft radar units are mounted precisely in these leading-edge locations: right in front of the air intakes.

The 1956 *Electrogravitics Systems* report suggested that there be a division of responsibility in the program to develop a Mach-3 electrogravitic aircraft, that the "condenser assembly which is the core of the main structure" be developed by an airframe manufacturer and that the flame-jet generator

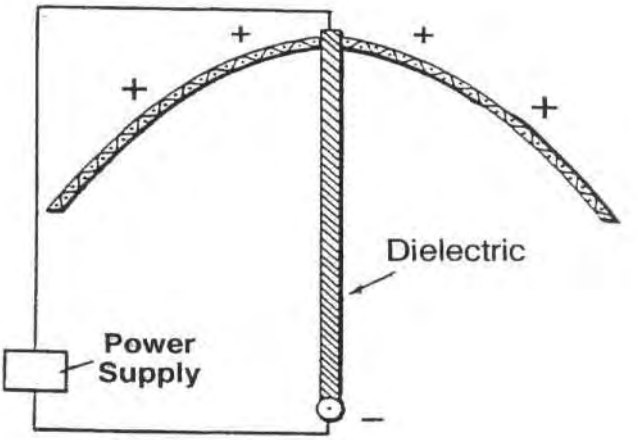

Figure 8. An electrogravitic thrust-producing device described in one of Brown's patents.

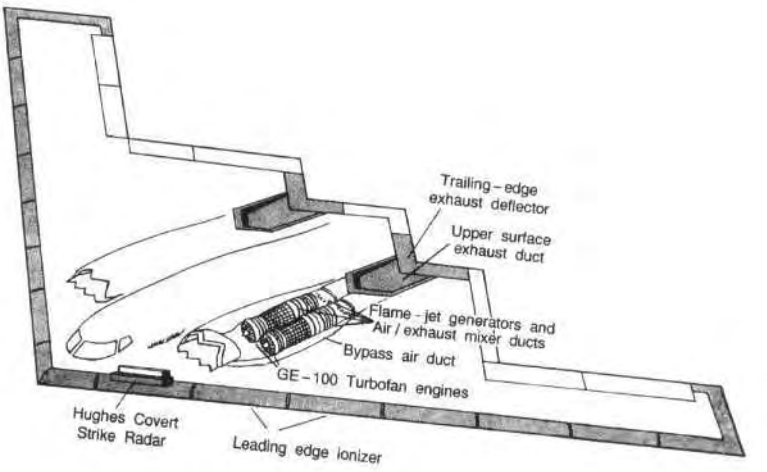

Figure 9. A view of the B-2 with a cutaway showing the arrangement of its flame-jet generators.

which provides the electrostatic energy for the craft be developed by companies specializing in jet engine technology.(22) Consistent with that suggestion, we find that Northrop, a company experienced in aircraft electrostatics, was contracted to develop the B-2's airframe and that General Electric, a company experienced in the development of jet engines and superconducting electrical generators was contracted to develop the B-2's engines. In fact, the report mentions GE as one of the companies involved in early electrogravitics work. Also, it is known that in 1959 Townsend Brown conducted electrogravitics vacuum chamber experiments at the GE Aerospace facilities.

Authorities claim that the Stealth is powered by four General Electric F-l 18-GE-100 jet engines similar to those used in the F-16 fighter. However, the absence of a forceful exhaust thrust from the B-2, especially at take off, leads us to suspect that the B-2 does not operate on a conventional jet-thrust principle. Rather, its engines more likely are designed to function as flame-jet high-voltage generators. The propulsive force lofting the craft then, would come not so much from the jet exhaust thrust, as it would from the electrogravitic force field electrically powered by the jet's generators. Such flame-jet generators also would account for the presence of ions that *Aviation Week* says are present in the B-2's exhaust stream. As in Brown's saucer, the engine body would acquire a high positive charge as it exhausted negative ions. Presumably, the engine is electrically insulated from the aircraft hull and its positive charges are conducted forward to power the leading-edge ionizers.

The B-2's GE engines are reported to each be capable of putting out 19,000 pounds of thrust. Consequently, all four engines together should provide the B-2 with a total output of about 140,000 horsepower which translates into an electric power output of about 25 megawatts, assuming a 30 percent conversion efficiency.* By comparison, the November 1954 *Aviation Report* concluded that a 35-foot diameter electrogravitic combat disc would need to have access to about 50 megawatts of power in order to attain Mach 3 flight speeds.(22) So, it appears that the magnitude of the B-2's power output is in the right ballpark.

When the B-2 was unveiled in 1988, one Air Force official commented that the B-2 uses a system of baffles to mix cool intake air with its hot exhaust gases so as to cool the gases and thereby make them less visible to

* This horsepower estimate is based upon the assumption that the jets would be able to propel the craft to a velocity of about 600 miles per hour (Mach 0.8).

infrared-guided missiles. Although IR invisibility might be one side-benefit, most likely the real purpose for diluting the exhaust is to greatly increase the flow volume and hence the ability of the exhaust stream to eject negative charges from the craft. Much of the air entering the B-2's intake scoops probably bypasses the flame-jet intake and is mixed with the jet's hot ionized exhaust (Figure 9). Additional ions would be injected into the combined airstream by means of additional downstream electrodes. This augmented volume of ionized gases would then discharge through the two rectangular exhaust nozzles positioned near the rear of the B-2's wing. As the exhaust streams leave the nozzles they contact the titanium coated overwing exhaust ducts, portrayed in Figure 9. These open duct sections may function as rear electrical grids that collect million volt electrons from the exhaust streams and recycle them to power the exhaust and wing air ionizers. This would be done in the same fashion as Brown had suggested in his patent (Figure 6).

As the exhaust leaves the craft, it passes over trailing-edge exhaust deflectors, flaps which can be swiveled so as to direct the exhaust stream either up or down for flight control. This accomplishes more than just vectoring of the exhaust thrust; it also changes the direction of the electrogravitic force vector. When the exhaust is deflected downward, negative charges are directed below the craft. As a result, the electrogravitic force on the craft becomes vectored upward as well as forward. When the exhaust stream is deflected upward, its negative ions are directed above the craft, resulting in an electrogravitic force that is directed downward as well as forward. Thus, by controlling these flaps, the B-2 is able to control its field so as to induce either a gain or loss of altitude.

Once the B-2 was going fast enough, it would receive sufficient air flow through its scoops that it could maintain a relatively high flow rate of ionized exhaust even with its engine combustion thrust substantially reduced. Since hot exhaust is not essential to its operation, the high-voltage generator could just as well run on cool intake air with the flame jets entirely shut off. As Brown points out in his electrokinetic generator patent, "It is to be understood that any other fluid stream source might be substituted for the combustion chamber and fuel supply."(19)

In such a "coasting mode," where jet combustion is entirely shut off, the B-2 would be able to fly for an indefinitely long period of time with essentially zero fuel consumption, powering itself primarily with energy tapped from its self-generated gravitational gradient. For example, during coasting, the kinetic energy of the scooped air stream would arise entirely from the craft's own forward motion, this motion, in turn, being due to the pull of the electrogravitic propulsion field. The kinetic energy of this ionized air stream is responsible

for linearly accelerating negative ions down the B-2's exhaust ducts and hence for creating the multi-megavolt potential difference relative to the positively charged engine body. The craft's high-voltage electron collector grids (the overwing exhaust ducts) recover a portion of this power to run the craft's ionizers. Provided that this power drain is not excessive and that the plane's propulsive gravity field can be adequately maintained, the craft would be able to achieve a state of perpetual propulsion. Such perpetual motion behavior is possible in devices having the capability to manipulate their own gravity field.

It should be added here that when the B-2 flies at a sufficiently high velocity, such that the flow rate of its scooped air exceeds many times the exhaust flow rate from its jet turbines, the electrical power output of its mixed exhaust will be comparably larger, perhaps exceeding 100 megawatts.

When the B-2 was first unveiled, critics had suggested that it could not risk flying at high altitudes because it might create vapor trails that would be visible to an enemy. Edward Aldridge Jr., the secretary of the Air Force, was asked whether that problem had been solved. He replied "Yes, but we're not going to disclose how." Clearly, to explain how the B-2 could travel at high altitude with its engines essentially shut off and producing no vapor trail, he would have to disclose the vehicle's nonconventional mode of propulsion. Incidentally, in such a coasting mode, the B-2's waste heat output also would be greatly reduced, hence lessening its chance of being detected with infrared sensors.

The B-2's Emergency Power Units (EPUs) probably play a key role in assisting such high-altitude flight. According to Bill Scott,(23) each EPU consists of a small self-contained gas turbine powered by hydrazine, a liquid that rapidly decomposes into gases when activated by a catalyst. The expanding gases are made to drive a turbine which in turn drives an electrical generator. Public disclosures state that the purpose of the EPU is to supply electric power to the craft should the B-2's four jet engines happen to flame out, or its four electrical generators happen to simultaneously fail. More likely, they were designed to function as auxiliary generators capable of operating at high-altitudes (or even in space) where the air would be too thin to sustain normal jet combustion. At high-altitude the decomposed hydrazine gases would take the place of scooped air as the medium for transporting ions from the craft. That is, after passing through the EPU, these gases would be electrified and expelled from the craft in the same fashion as would the jet exhaust. Townsend Brown noted that his electrogravitic propulsion system could run just as well using a compressed gas source such as carbon dioxide as the ion carrying medium as it could using the exhaust from a jet engine.

Is all this just idle speculation? Or, could the B-2 really be the realization

of one of mankind's greatest dreams ~ an aircraft that has mastered the ability to control gravity.

NOTES

1. Scott, W. B. "Black World engineers, scientists encourage using highly classified technology for civil applications." *Aviation Week & Space Technology,* March 9, 1992, pp. 66-67.

2. Brown, T. T. "How I control gravity." *Science and Invention Magazine,* August 1929. Reprinted in Psychic Observer 37(1) pp. 14-18.

3. Burridge, G. "Another step toward anti-gravity." *The American Mercury* 86(6)(1958):77-82.

4. Moore, W. L., and Berlitz, C. *The Philadelphia Experiment: Project Invisibility.* New York: Fawcett Crest, 1979, Ch. 10.

5. Rho Sigma, *Ether Technology: A Rational Approach to Gravity Control* Lakemont, GA: CSA Printing & Bindery, 1977, p. 44-49, quoting a letter from T. Brown dated February 14,1973.

6. Brown, T. T. "Electrokinetic apparatus." U.S. patent #2,949,550 (filed July 1957, issued August 1960).

7. Intel. "Towards flight without stress or strain...or weight." *Interavia Magazine* 11(5) (1956):373-374.

8. Rose, M. "The flying saucer: The application of the Biefeld-Brown effect to the solution of the problems of space navigation." *University for Social Research,* April 8, 1952.

9. LaViolette, P. A. "An introduction to subquantum kinetics: Part n. An open systems description of particles and fields." In International *Journal of General Systems, Special Issue on Systems Thinking in Physics* 11 (1985):295-328.

10. LaViolette, P. A. *Subquantum Kinetics: The Alchemy of Creation.* Schenectady, NY, 1994.

11. LaViolette, P. A. *Beyond the Big Bang: Ancient Myth and the Science of Continuous Creation.* Rochester, VT: Inner Traditions Intl., 1994.

12. LaViolette, P. A. "A theory of electrogravitics." *Electric Spacecraft Journal,* Issue 8,1993, pp. 33 - 36.

13. LaViolette, P. A. "A Tesla wave physics for a free energy universe." *Proceedings of the 1990 International Tesla Symposium,* Colorado Springs, CO: International Tesla Society, 1991, pp. 5.1 - 5.19.

14. Aviation Studies (International) Ltd. *Electrogravitics Systems: An examination of electrostatic motion, dynamic counterbary and barycentric control* Report GRG 013/56 by Aviation Studies, Special Weapons Study

Unit, London, February 1956. (Library of Congress No. 3,1401,00034,5879; CallNo.TL565.A9).
15. LaViolette, P. "Electrogravitics: Back to the future." *Electric Spacecraft Journal,* Issue 4, 1992, pp. 23-28.
16. LaViolette, P. "Electrogravitics: An energy-efficient means of spacecraft propulsion." *Explore* 3 (1991): 76-79; idea No. 100159 submitted to NASA's 1990 Space Exploration Outreach Program.
17. Aviation Studies (International) Ltd. *The Gravitics Situation,* prepared by Gravity Rand Ltd. _ a division of Aviation Studies, London, December 1956.
18. "Northrop studying sonic boom remedy." *Aviation Week & Space Technology,* Jan. 22, 1968, p 21.
19. Brown, T. T. "Electrokinetic generator." U.S. patent #3,022,430 (filed July 1957, issued February 1962).
20. Rhodes, L. "Ex-NASA expert says Stealth uses parts from UFO." *Arkansas Democrat,* Little Rock, AR, April 9, 1990.
21. Brown, T. T. "Electrokinetic apparatus." U.S. patent #3,187,206 (filed May 1958, issued June 1965).
22. Aviation Studies, *Electrogravitics Systems,* op. cit., pp. 21-27.
23. Scott, W.B. *Inside the Stealth Bomber.* Tab/Aero Books: New York, 1991.

Editor's Note: For those wishing to do more research in electrogravitics, the following are recommended:

The Townsend Brown Electro-Gravity Device. A comprehensive evaluation by the Office of Naval Research, with accompanying documents, issued Sept. 15, 1952. Every page was marked "confidential" until the classification of the report was cancelled by ONR. Detailed report with a surprise at the end. #612 22 pg. $6

T. T. Brown's Electrogravitics Research, by Thomas Valone, P.E. A collection of papers including a one on electrogravitics with diagrams and references, another one with details of the Townsend Brown Notebooks, repeated Brown experiment, and one that summarizes the Bahnson Lab film/video with still photos. #603 28 pg. $5

SubQuantum Kinetics: The Alchemy of Creation, by Dr Paul LaViolette. A masterpiece of theoretical work predicting electrogravitic forces and more with a whole chapter devoted to electrogravitics theory. #605 208 pg. book $15

»»»»TURN TO LAST PAGE OF BOOK FOR ORDERING INFORMATION««

APPENDIX

A collection of electrogravitics patents' cover sheets and relevant articles

Note: complete patents may be ordered for $3 each from:
U. S. Patent Office
Box 9
Washington, DC 20231

Complete patents may also be viewed at www.uspto.gov

Thomas Townsend Brown

[This Drawing is a reproduction of the Original on a reduced scale.]

Fig. 1

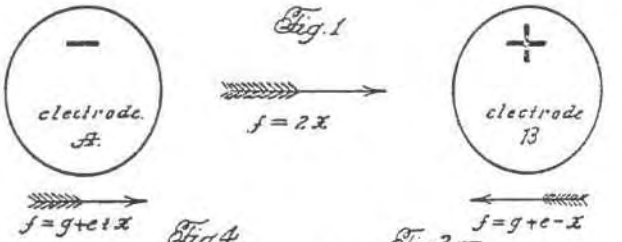

Fig. 4.

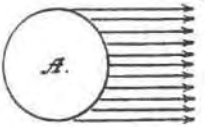

Fig. 2.

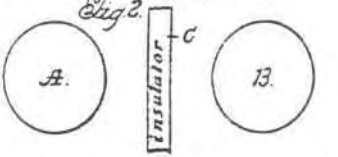

Fig. 5.

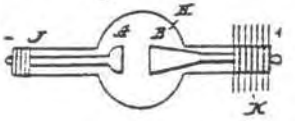

Fig. 5'

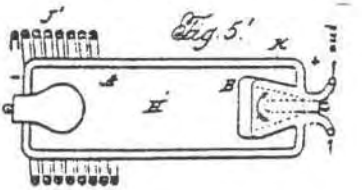

Fig. 3.

Dated this 15th day of August, 1927.

For the Applicant,
HERBERT HADDAN & Co.,
Chartered Patent Agents,
31 and 32, Bedford Street, Strand,
London, W.C. 2.

Redhill: Printed for His Majesty's Stationery Office, by Love & Malcomson, Ltd.—1928.

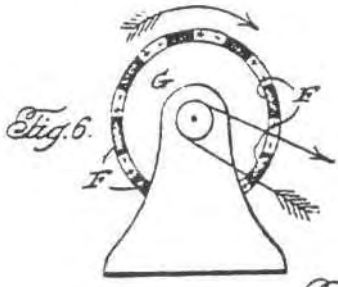

Fig. 6.

Fig. 7.

Fig. 8.

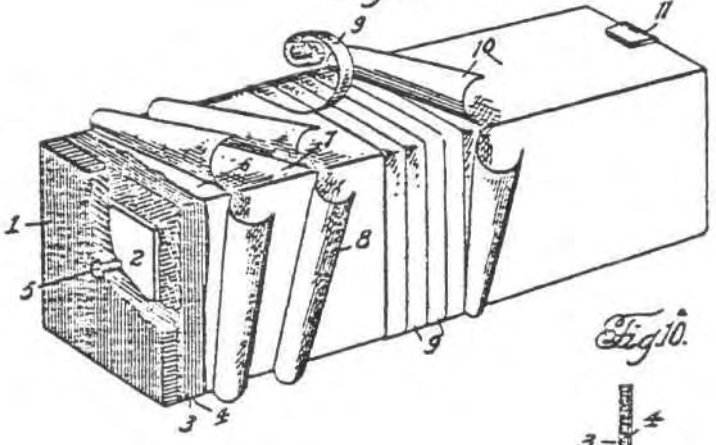

Fig. 10.

Fig. 9.

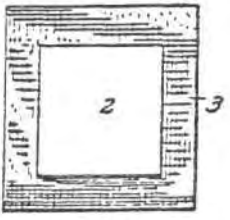

Fig. 10.

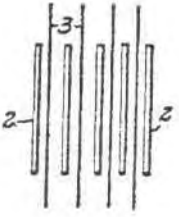

Charles & Read Ltd Photo Litho.

[This Drawing is a reproduction of the Original on a reduced scale]

Fig. 11.

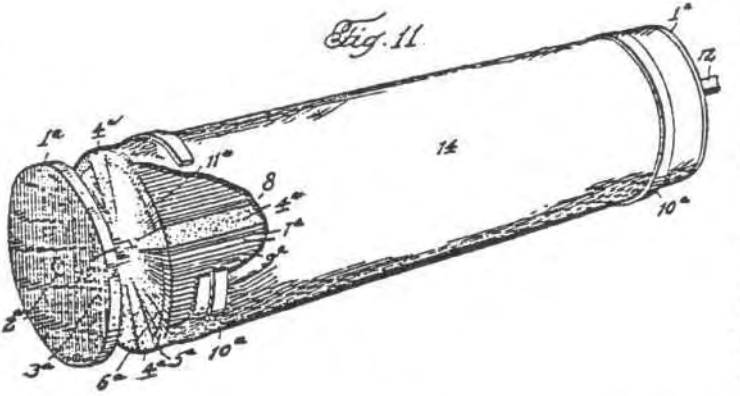

Fig. 12.

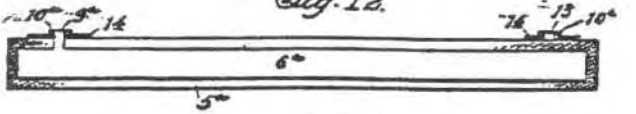

Fig. 13.

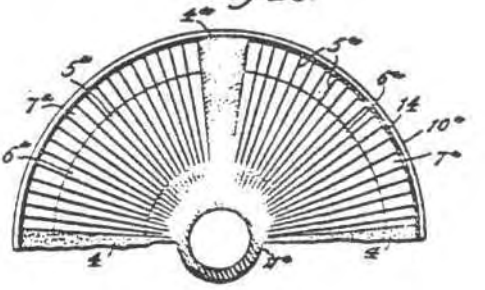

Charles & Read Ltd. Photo Litho.

PATENT SPECIFICATION

Application Date: Aug. 15, 1927. No. 21,452/27. **300,311**

Complete Accepted: N. r. 15, 1928.

COMPLETE SPECIFICATION.

A Method of and an Apparatus or Machine for Producing Force or Motion.

I, THOMAS TOWNSEND BROWN, of 15, Eighth Street, in the City of Zanesville, State of Ohio, United States of America, a citizen of the United States of America, do hereby declare the nature of this invention and in what manner the same is to be performed, to be particularly described and ascertained in and by the following statement:—

This invention relates to a method of controlling gravitation and for deriving power therefrom, and to a method of producing linear force or motion. The method is fundamentally electrical.

The invention also relates to machines or apparatus requiring electrical energy that control or influence the gravitational field or the energy of gravitation; also to machines or apparatus requiring electrical energy that exhibit a linear force or motion which is believed to be independent of all frames of reference save that which is at rest relative to the universe taken as a whole, and said linear force or motion is furthermore believed to have no equal and opposite reaction that can be observed by any method commonly known and accepted by the physical science to date.

The invention further relates to machines or apparatus that depend for their force action or motive power on the gravitational field or energy of gravitation that is being controlled or influenced as above stated; also, to machines or apparatus that depend for their force action or motive power on the linear force or motion exhibited by such machines or apparatus previously mentioned.

The invention further relates to machines and apparatus that derive usable energy or power from the gravitational field or from the energy of gravitation by suitable arrangement, using such machines and apparatus as first above stated as principal agents.

To show the universal adaptability of my novel method, said method is capable of practical performance and use in connection with motors for automobiles, space cars, ships, railway locomotion, prime movers for power installations, aeronautics. Still another field is the use of the method and means enabling the same to function as a gravitator weight changer. Specific embodiments of the invention will be duly disclosed through the medium of the present Specification.

Referring to the accompanying drawings, forming part of this Specification:

Figure 1 is an elevation, with accompanying descriptive data, broadly illustrating the characteristic or essential elements associated with any machine or apparatus in the use of which the gravitational field or the energy of gravitation is utilized and controlled, or in the use of which linear force or motion may be produced.

Figure 2 is a similar view of negative and positive electrodes with an interposed insulating member, constituting an embodiment of the invention.

Figure 3 is a similar view of a cellular gravitator composed of a plurality of cell units connected in series, capable of use in carrying the invention into practice.

Figure 4 is an elevation of positive and negative electrodes diagrammatically depicted to indicate their relation and use when conveniently placed and disposed within a vacuum tube.

Figures 5 and 5¹ are longitudinal sectional views showing my gravitator units embodied in vacuum tube form wherein heating to incandescence is permitted as by electrical resistance or induction at the negative electrode; and also permitting, where desired, the conducting of excessive heat away from the anode or positive electrode by means of air or water cooling devices.

Figure 6 is an elevation of an embodiment of my invention in a rotary or wheel type of motor utilizing the cellular gravitators illustrated in Figure 3.

Figure 7 is a view similar to Figure 6 of another wheel form or rotary type of motor involving the use of the gravitator units illustrated in Figure 5, or Figure 5¹.

Figure 8 is a perspective view partly in section of the cellular gravitator of Figure 3 illustrating the details thereof.

Figures 9, 10 and 10a are detail views of the cellular gravitator.

Figure 11 is a view similar to Figure 8

[*Price* 1/-]

with the same idea incorporated in a rotary motor.

Figures 12 and 13 are detail views thereof.

The general showing in Figure 1 will make clear how my method for controlling or influencing the gravitational field or the energy of gravitation, or for producing linear force or motion, is utilized by any machine or apparatus having the characteristics now to be pointed out.

Such a machine has two major parts A and B. These parts may be composed of any material capable of being charged electrically. Mass A and mass B may be termed electrodes A and B respectively. Electrode A is charged negatively with respect to electrode B, or what is substantially the same, electrode B is charged positively with respect to electrode A, or what is usually the case, electrode A has an excess of electrons while electrode B has an excess of protons.

While charged in this manner the total force of A toward B is the sum of force g (due to the normal gravitational field), and force e (due to the imposed electrical field) and force x (due to the resultant of the unbalanced gravitational forces caused by the electro-negative charge or by the presence of an excess of electrons on electrode A and by the electro-positive charge or by the presence of an excess of protons on electrode B)

Likewise the total force of B toward A is the sum of force g (due to the normal gravitational field), and force e (due to the imposed electrical field), minus force x (due to the resultant of unbalanced gravitational forces caused by the electro-negative charge or by the presence of an excess of electrons on electrode A and by the electro-positive charge or by the presence of an excess of protons on electrode B).

By the cancellation of similar and opposing forces and by the addition of similar and allied forces the two electrodes taken collectively possess a force $2x$ in the direction of B. This force $2x$ shared by both electrodes exists as a tendency of these electrodes to move or accelerate in the direction of the force, that is, A toward B and B away from A. Moreover any machine or apparatus possessing electrodes A and B will exhibit such a lateral acceleration or motion if free to move. Such a motion is believed to be due to the direct control and influence of the energy of gravitation by the electrical energy which exists in the unlike electrical charges present on the affected electrodes. This motion seems to possess no equal or opposite motion that is detectable by the present day mechanics.

It is to be understood that in explaining the theory underlying my invention I am imparting my best understanding of that theory, derived from practical demonstration by the use of appropriate apparatus made in keeping with the teachings of the present Specification. The practice of the method, and apparatus aiding in the performance of the method, have been successful as herein disclosed, and the breadth of my invention and discovery is such as to embrace any corrected or more refined theory that may be found to underlie the phenomena which I believe myself to be the first to discover and put to practical service.

In this Specification I have used terms as "gravitator cells" and "gravitator cellular body" which are words of my own coining in making reference to the particular type of cell I employ in the present invention. Wherever the construction involves the use of a pair of electrodes, separated by an insulating plate or member, such construction complies with the term gravitator cells, and when two or more gravitator cells are connected in series within a body, such will fall within the meaning of gravitator cellular body.

In Figure 2 the electrodes A and B are shown as having placed between them an insulating plate or member C of suitable material, such that the minimum number of electrons or ions may successfully penetrate it. This constitutes a cellular gravitator consisting of one gravitator cell.

A cellular gravitator, consisting of more than one cell, will have the cell units connected in series. This type is illustrated in Figure 3, D being insulating members and E suitable conducting plates. It will be readily appreciated that many different arrangements for cell units, each possessing distinct advantages, may be resorted to.

One arrangement, such as just referred to, is illustrated in Figure 6 of the drawings. Here the cells designated F are grouped in spaced relation and placed evenly around the circumference of a wheel G. Each group of cells F possesses a linear acceleration and the wheel rotates as a result of the combined forces. It will be understood that, the cells being spaced substantial distances apart, the separation of adjacent positive and negative elements of separate cells is greater than the separation of the positive and negative elements of any cell, and the materials of which the cells are formed being the more readily affected by the phenomena underlying my invention than the mere space between adjacent cells, any

forces existing between positive and negative elements of adjacent cells can never become of sufficient magnitude to neutralize or balance the force created by the respective cells adjoining said spaces. The uses to which such a motor, wheel, or rotor may be put are practically limitless, as can be readily understood, without further description. The structure may suitable be called a gravitator motor of cellular type.

In keeping with the purpose of my invention an apparatus may employ the electrodes A and B within a vacuum tube. This aspect of the invention is shown in Figures 4 and 5. In Figure 4 the electrodes A and B are such as are adapted to be placed within a vacuum tube H (Fig. 5), the frame and mounting being well within the province of the skilled artisan. Electrons, ions, or thermions can migrate readily from A to B. The construction may be appropriately termed an electronic, ionic, or thermionic gravitator as the case may be.

In certain of the last named types of gravitator units, it is desirable or necessary to heat to incandescence the whole or a part of electrode A to obtain better emission of negative thermions or electrons or at least to be able to control that emission by variation in the temperature of said electrode A. Since such variations also influence the magnitude of the longitudinal force or acceleration exhibited by the tube, it proves to be a very convenient method of varying this effect and of electrically controlling the motion of the tube. The electrode A may be heated to incandescence in any convenient way as by the ordinary methods utilizing electrical resistance or electrical induction, an instance of the former being shown at J (Fig. 5) and an instance of the latter at J^1 (Fig. 5^1), the vacuum tube in Fig. 5^1 being designated H^1.

Moreover in certain types of the gravitator units, now being considered, it is advantageous or necessary also to conduct away from the anode or positive electrode B excessive heat that may be generated during the operation of tube H or H^1. Such cooling is effected externally by means of air or water cooled flanges that are in thermo connection with the anode, or it is effected internally by passing a stream of water, air, or other fluid through a hollow anode made especially for that purpose. Air cooled flanges are illustrated at K (Fig. 5) and a hollow anode for the reception of a cooling liquid or fluid (as air or water) is shown at K^1 (Fig. 5^1). These electronic, ionic, or thermionic gravitator units may be grouped in any form productive of a desired force action or motion. One such form is the arrangement illustrated in Figure 7 where the particular gravitator units in question are indicated at L, disposed around a wheel or rotary motor similarly to the arrangement of the gravitator motor of cellular type shown in Figure 6, the difference being that in Figure 7, the electronic, ionic, or thermionic gravitator units are utilized. This motor may appropriately be designated as a gravitator motor of the electronic, ionic, or thermionic type, respectively.

The gravitator motors of Figures 6 and 7 may be supplied with the necessary electrical energy for the operation and resultant motion thereof from sources outside and independent of the motor itself. In such instances they constitute external or independently excited motors. On the other hand the motors when capable of creating sufficient power to generate by any method whatsoever all the electrical energy required therein for the operation of said motors are distinguished by being internal or self-excited. Here, it will be understood that the energy created by the operation of the motor may at times be vastly in excess of the energy required to operate the motor. In some instances the ratio may be even as high as a million to one. Inasmuch as any suitable means for supplying the necessary electrical energy, and suitable conducting means for permitting the energy generated by the motor to exert the expected influence on the same may be readily supplied, it is now deemed necessary to illustrate details herein. In said self-excited motors the energy necessary to overcome the friction or other resistance in the physical structure of the apparatus, and even to accelerate the motors against such resistance, is believed to be derived solely from the gravitational field or the energy of gravitation. Furthermore, said acceleration in the self-excited gravitator motor can be harnessed mechanically so as to produce usable energy or power, said usable energy or power, as aforesaid, being derived from or transferred by the apparatus solely from the energy of gravitation.

The gravitator motors function as a result of the mutual and unidirectional forces exerted by their charged electrodes. The direction of these forces and the resultant motion thereby produced are usually toward the positive electrode. This movement is practically linear. It is this primary action with which I deal.

As has already been pointed out herein, there are two ways in which this primary action can accomplish mechanical work. First, by operating in a linear path as it

does naturally, or second, by operating in a curved path. Since the circle is the most easily applied of all the geometric figures, it follows that the rotary form is the important. While other forms may be built it has been considered necessary to explain and illustrate only the linear and rotary forms.

The linear form of cellular gravitator is illustrated in detail in Figures 8, 9 and 10. It is built up of a number of metallic plates alternated or staggered with sheets of insulating material (Fig. 3). Each pair of plates so separated by insulation act as one gravitator cell, and each plate exhibits the desired force laterally. The potential is applied on the end plates and the potential difference is divided equally among the cells. Each metallic plate in the system possesses a force usually toward the positively charged terminus, and the system as a whole moves or tends to move in that direction. It is a linear motor, and the line of its action is parallel to the line of its electrodes.

There are three general rules to follow in the construction of such motors. First, the insulating sheets should be as thin as possible and yet have a relatively high puncture voltage. It is advisable also to use paraffin-saturated insulators on account of their high specific resistance. Second, the potential difference between any two metallic plates should be as high as possible and yet be safely under the minimum puncture voltage of the insulator. Third, there should, in most cases, be as many plates as possible in order that the saturation voltage of the system might be raised well above the highest voltage limit upon which the motor is operated. Reference has previously been made to the fact that in the preferred embodiment of the invention herein disclosed the movement is towards the positive electrode. However, it will be clear that motion may be had in a reverse direction determined by what I have just termed "saturation voltage", by which is meant the efficiency peak or maximum of action for that particular type of motor; the theory, as I may describe it, being that as the voltage is increased the force or action increases to a maximum which represents the greatest action in a negative-to-positive direction. If the voltage were increased beyond that maximum the action would decrease to zero and thence to the positive-to-negative direction.

Referring more specifically to Figs. 8, 9, and 10, red fiber end plates 1 act as supports and end insulators and the first metallic plate 2 (for example aluminium) is connected electrically, through the fiber end plate, with the terminal 5. The second insulating sheet 3 is composed, for example, of varnished cambric sometimes known as "empire cloth". The relative size and arrangement of the metallic plate and insulating sheets are best seen in Figures 9 and 10. A paraffin filler 11 is placed between adjacent insulating sheets and around the edges of the metallic plates (Fig. 10a) and 6 represents a thin paraffin coating over the whole motor proper. 7 and 8 indicate successive layers of "empire cloth" or similar material, and 9 is a binding tape therefor. A thin film of a substance such as black spirit varnish 10 protects and insulates the entire outer surface. A phosphor bronze safety gap element 11 is connected electrically with the terminal (not shown) opposite to the terminal 5. A safety gap element corresponding with the element 11 is electrically connected with the terminal 5, but it has not been shown, in order better to illustrate interior parts. The purpose of the safety gaps is to limit the voltage imposed on the motor to the predetermined maximum and to prevent puncture.

The rotary motor (Figs. 11, 12 and 13), comprises broadly speaking, an assembly of a plurality of linear motors, fastened to or bent around the circumference of a wheel. In that case the wheel limits the action of the linear motors to a circle, and the wheel rotates in the manner of a fireworks pin wheel. The illustrations I have given are typical. The forms of Figures 6 and 7 have been defined. In Figure 11, the insulating end disk 1a has an opening 2a therethrough for an extension of the shaft 12. The disk 1a is secured to a suitable insulating motor shell, by fiber bolts or screws in any convenient manner, there being another of these disks at the opposite end of the shell, in the same manner as the opposite end plates 1 in Figure 8. The cells are built upon an insulating tube 11a disposed about the shaft-space 3a. Thick insulating wedges 4a separate the four linear motors illustrated. These thick insulating wedges, so-called, are substantially greater in body than the aggregate insulating sheets of the units. In some instances, however, dependent upon materials employed for the charged elements and the insulating members, this need not necessarily be the case. In each motor of this circular series of motors, there are the alternate sheets of insulation 5a associated with the alternate metallic plates 6a; paraffin fillers 7a along the edges of the plates 6a and between the insulating sheets 5a being employed similarly to the use of paraffin in Figure 8.

The rotary motor is encircled by metallic (preferably copper) collector rings 10a, which are connected with the end metallic plates of the separate linear motors at 9a and 13 (Fig. 12), one of these connections 9 being shown in detail where the insulating tube is cut away at 8 (Fig. 11).

It is unnecessary herein to illustrate a housing or bearings because any insulated housing and good ball bearings, conveniently supplied, will complete the motor. The potential is applied to the safety gap mounted on the housing and thence is conducted to the collector rings of the motor by means of sliding brushes.

While I have in the foregoing Specification outlined, in connection with the broader aspects of my invention, certain forms and details, I desire it understood that specific details have been referred to for the purpose of imparting a full and clear understanding of the invention, and not for purposes of limitation, because it should be apparent that many changes in construction and arrangement, and many embodiments of the invention, other than those illustrated, are possible without departing from the spirit of the invention or the scope of the appended claims.

Having now particularly described and ascertained the nature of my said invention and in what manner the same is to be performed, I declare that what I claim is:—

1. A method of producing force or motion, which comprises the step of aggregating the predominating gravitational lateral or linear forces of positive and negative charges which are so co-operatively related as to eliminate or practically eliminate the effect of the similar and opposing forces which said charges exert.

2. A method of producing force or motion, in which a mechanical or structural part is associated with at least two electrodes or the like, of which the adjacent electrodes or the like have charges of differing characteristics, the resultant, predominating, uni-directional gravitational force of said electrodes or the like being utilized to produce linear force or motion of said part.

3. A method according to Claim 1 or 2, in which the predominating force of the charges or electrodes is due to the normal gravitational field and the imposed electrical field.

4. A method according to Claim 1, 2 or 3, in which the electrodes or other elements bearing the charges are mounted, preferably rigidly, on a body or support adapted to move or exert force in the general direction of alignment of the electrodes or other charge-bearing elements.

5. A machine or apparatus for producing force or motion, which includes at least two electrodes or like elements adapted to be differently charged, so relatively arranged that they produce a combined linear force or motion in the general direction of their alignment.

6. A machine according to Claim 5, in which the electrodes or like elements are mounted, preferably rigidly, on a mechanical or structural part, whereby the predominating uni-directional force obtained from the electrodes or the like is adapted to move said part or to oppose forces tending to move it counter to the direction in which it would be moved by the action of the electrodes or the like.

7. A machine according to Claim 5 or 6, in which the energy necessary for charging the electrodes or the like is obtained either from the electrodes themselves or from an independent source.

8. A machine according to Claim 5, 6 or 7, whose force action or motive power depends in part on the gravitational field or energy of gravitation which is controlled or influenced by the action of the electrodes or the like.

9. A machine according to any of Claims 5 to 8, in the form of a motor including a gravitator cell or a gravitator cellular body, substantially as described.

10. A machine according to Claim 9, in which the gravitator cellular body or an assembly of the gravitator cells is mounted on a wheel-like support, whereby rotation of the latter may be effected, said cells being of electronic, ionic or thermionic type.

11. A method of controlling or influencing the gravitational field or the energy of gravitation and for deriving energy or power therefrom comprising the use of at least two masses differently electrically charged, whereby the surrounding gravitational field is affected or distorted by the imposed electrical field surrounding said charged masses, resulting in a uni-directional force being exerted on the system of charged masses in the general direction of the alignment of the masses, which system when permitted to move in response to said force in the above mentioned direction derives and accumulates as the result of said movement usable energy or power from the energy of gravitation or the gravitational field which is so controlled, influenced, or distorted.

12. The method of and the machine or apparatus for producing force or motion, by electrically controlling or influencing the gravitational field or energy of gravitation, substantially as hereinbefore described with reference to the accompanying drawings.

Sept. 25, 1934. T. T. BROWN 1,974,483

ELECTROSTATIC MOTOR

Filed Feb. 7, 1930 2 Sheets-Sheet 1

Fig. 1

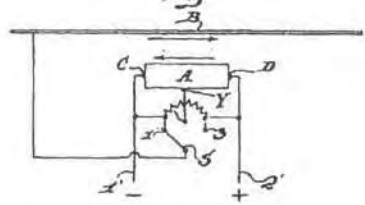

Fig. 2

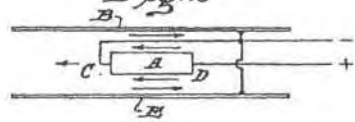

Fig. 3

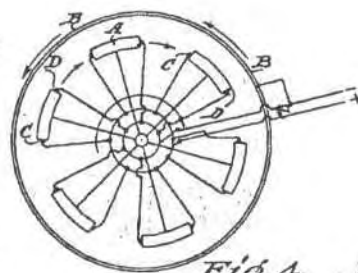

Fig. 6.

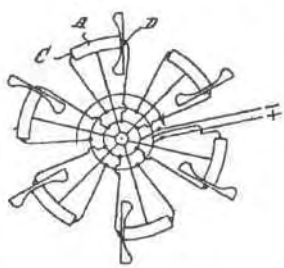

Fig. 4.

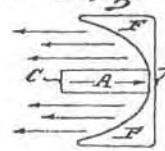

Fig. 5.

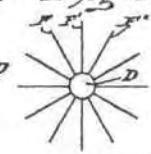

Inventor

Thomas T. Brown

By Milans & Milans

Attorney

Aug. 16, 1960 T. T. BROWN 2,949,550

ELECTROKINETIC APPARATUS

Filed July 3, 1957 2 Sheets-Sheet 1

FIG. 1

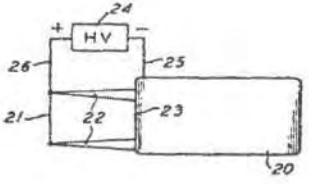

FIG. 2

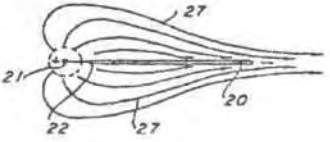

FIG. 3

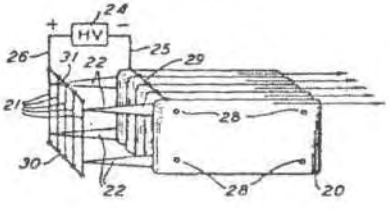

FIG. 4

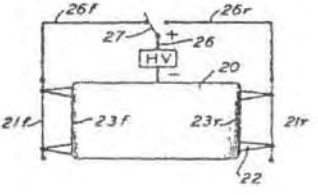

FIG. 5

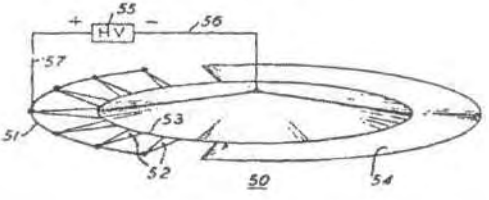

INVENTOR
THOMAS TOWNSEND BROWN
BY
Watson, Cole, Grindle & Watson
ATTORNEYS

Jan. 23, 1962 T. T. BROWN 3,018,394

ELECTROKINETIC TRANSDUCER

Filed July 3, 1957

FIG. 1

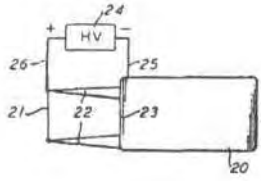

FIG. 2

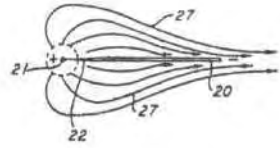

FIG. 3

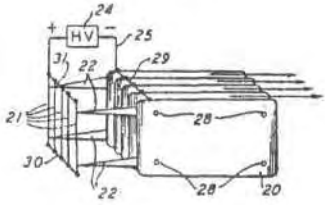

FIG. 4

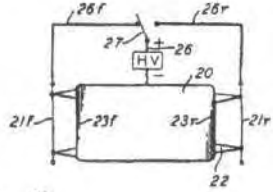

FIG. 5

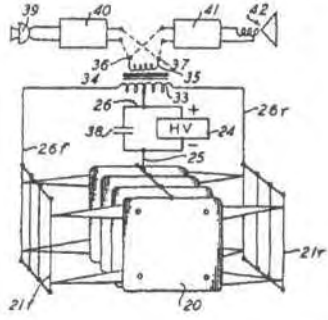

INVENTOR
THOMAS TOWNSEND BROWN
BY
Watson, Cole, Grindle & Watson
ATTORNEYS

Feb. 20, 1962 T. T. BROWN 3,022,430

ELECTROKINETIC GENERATOR

Filed July 3, 1957 2 Sheets-Sheet 1

FIG. 1

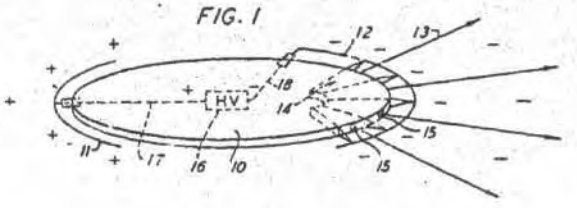

FIG. 2

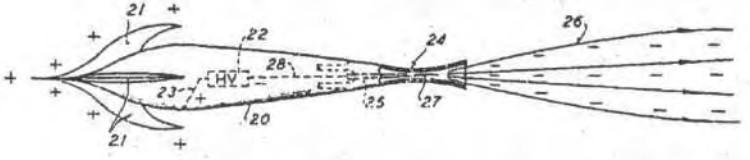

FIG. 3

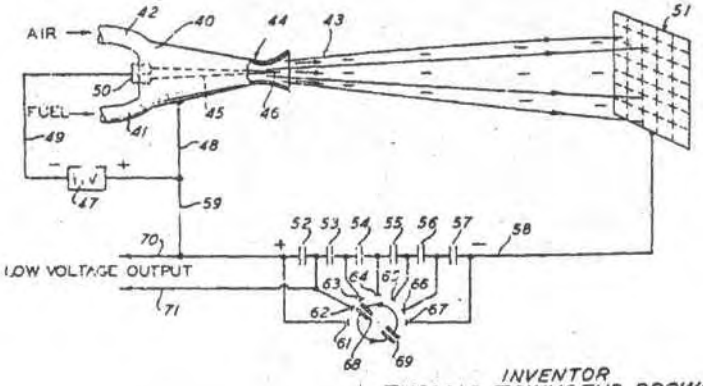

INVENTOR
THOMAS TOWNSEND BROWN
BY
Watson, Cole, Grindle & Watson
ATTORNEYS

June 1, 1965 T. T. BROWN 3,187,206

ELECTROKINETIC APPARATUS

Filed May 9, 1958 2 Sheets-Sheet 1

FIG. 1

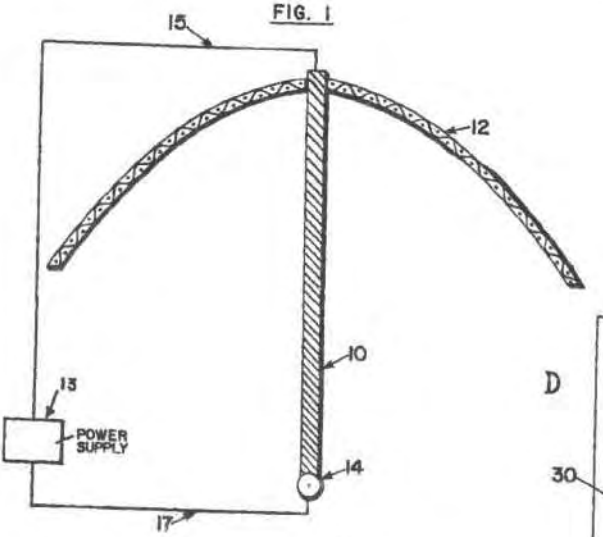

FIG. 3

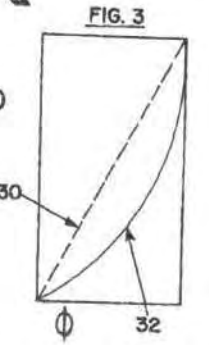

FIG. 2

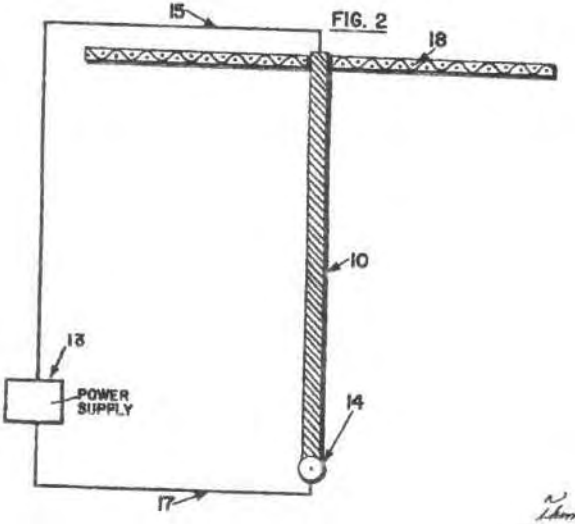

INVENTOR.
Thomas Townsend Brown
BY
Watson, Cole, Grindle & Watson
Attorneys

Jan. 3, 1967 T. T. BROWN 3,296,491

METHOD AND APPARATUS FOR PRODUCING IONS AND ELECTRICALLY-CHARGED AEROSOLS

Filed Sept. 19, 1961 3 Sheets-Sheet 1

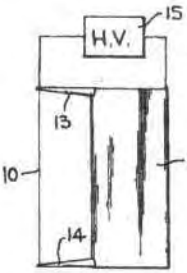

FIG. 1

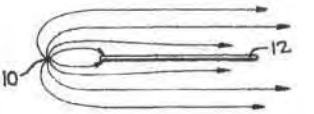

FIG. 2

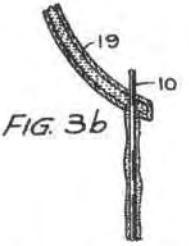

FIG. 3b

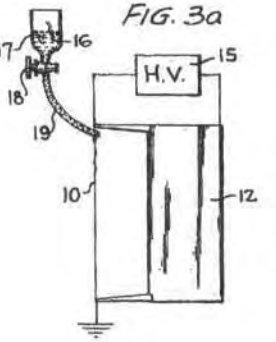

FIG. 3a

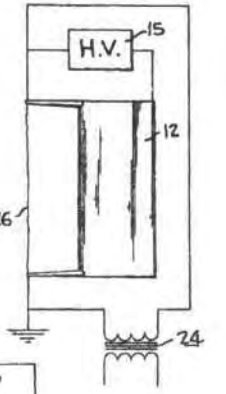

FIG. 5

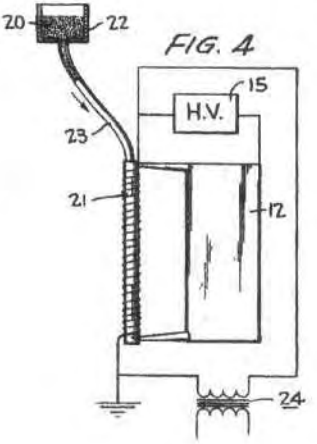

FIG. 4

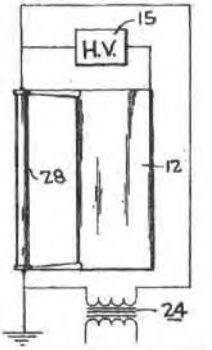

FIG. 6

INVENTOR

THOMAS TOWNSEND BROWN

BY Watson, Cole, Grindle & Watson

ATTORNEYS

June 30, 1970 T. T. BROWN **3,518,462**

FLUID FLOW CONTROL SYSTEM

Filed Aug. 21, 1967 2 Sheets-Sheet 1

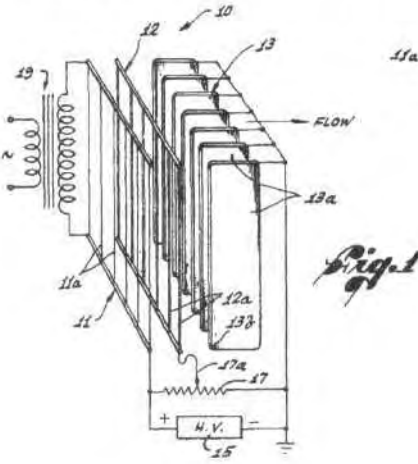

Fig. 1

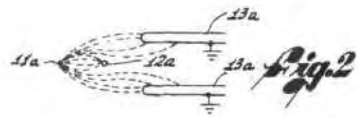

Fig. 2

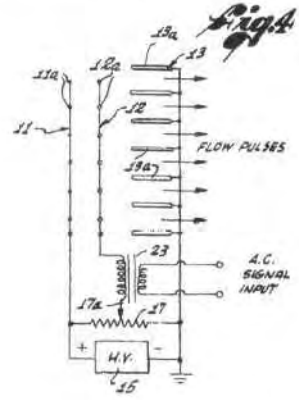

Fig. 4

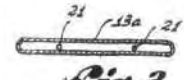

Fig. 3

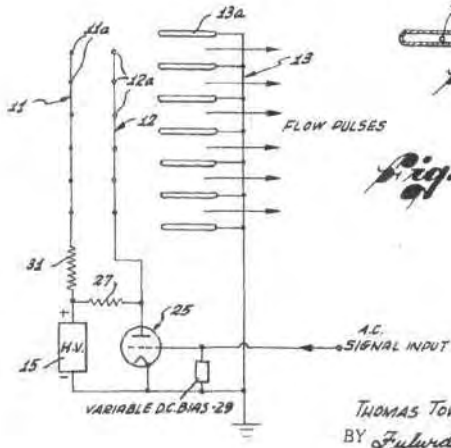

Fig. 5

INVENTOR.
THOMAS TOWNSEND BROWN
BY Fulwider, Patton, Rieber, Lee, and Utecht
ATTORNEY

DATE-EVENT CHART FOR T.T. BROWN

1905 March 18, IT Brown born in Zanesville, Ohio.
1921 TTB discovers motion of the Coolidge X-ray tube caused by high voltage.
1922 Attended Cal-Tech; left school and joined the Navy.
1923 Attended Kenyon College, Ohio.
1924 Attended Dennison University, Gambier, Ohio where he met Prof. Biefeld (Ph.D., Zurich, Switzerland, 1900).

1926 Joined Swazey Observatory in Ohio, directed by Prof. Paul Alfred Biefeld.
1928 Maximum thrust measured on "Gravitor," 1% of total weight.
1929 Wrote article for *Science and Inventions*, "How I Control Gravitation."
1930 Left Swazey Observatory, signed on to Naval Research Lab, Washington, DC.
1932 U.S. Navy Department, staff physicist, International Gravity Expedition to West Indies.
1933 Staff physicist, Johnson-Smithsonian Deep Sea Expedition; joined Naval Reserve; soil engineer for Federal Emergency Relief Administration; joined FCC as an administrator.

1939 Lieutenant in Navy Reserve, moved to Maryland as a materials engineer for Glen L. Martin (Aircraft) Co., called into Navy Bureau of Ships as an officer in magnetic and acoustic mine research and development
1940 May have joined the "Philadelphia Experiment."
1942 Lt. Commander, Commanding Officer of U.S. Navy Radar School at Norfolk, VA.
1943 Collapsed from exhaustion, retired from Navy, 6 months recuperation. Graviter not recognized.
1944 Position with Lockheed-Vega, radar consultant
1945 Went to Hawaii, continued research: (Presented ideas to Admiral Arthur W. Radford, Commander in Chief of U.S. Pacific Fleet, who later became Joint Chief of Staff/Eisenhower, 1953-57. No apparent interest was shown).

1952 Started Winterhaven Project in Cleveland, Ohio.
Set up Townsend Brown Foundation office in Menlo Park, CA and demonstrated "flying saucer-"shaped disks electrically propelled around a "maypole."
1955-56 Presentations in England of his ideas.
1955-57 Leesburg, VA from Oct. 1955 to Feb. 1957; Umatillo, FL, Nov. 1957.
1956 Project work in France with his electrogravitation ideas for SNCASCO. Brown formed UFO study group, NICAP, in Washington, DC.
1957-60 Hired as consultant for Whitehall-Rand Project under auspices of Bahnson Labs (Agnew Bahnson) to do antigravity research and development

1958 Brown formed Rand International, Ltd.
1958-67 Brown indicated he made no notes in his notebooks.
1959 Consultant with GJE. Space Center at King of Prussia, PA.
1960's Physicist for Electro Kinetics at Bala Cynwyd, PA. Also semi-retired.
1967 T.T. Brown Notebook: October 23,1967 in Santa Monica, CA.
1970 T.T, Brown Notebook: May 31,1970 at Stanford University Hospital
1973 T.T Brown Notebook: indicates presence on Catalina Island, March 1973-Sep.l973.

1975 Honolulu, Hawaii working on "rock electricity."
1976-77 Sunnyvale, CA and University of Calif/Berkely: rock electricity work.
1919(7) Consultant at Stanford Research Institute.
1980 University of North Carolina at Chapel Hill, Project Coordinator for XERXES Project
1983 Project XERXES continued at California State University (Los Angeles); Brown residing at Avalon, California, as his health was more troublesome.
1985 Brown died at Avalon.

T. T. Brown Experiment Replicated

Larry Deavenport

Larry Deavenport *is a hobbyist in electronics who attended the Texas State Tech Institute. He spent 20 years in maintenance at a copper refining plant*

The first time I recall hearing T. Townsend Brown's name was in a grade school science class during the early 1960s. At that time, NASA was in the process of developing ion and plasma rockets.

Like Nikola Tesla before him, Brown was a pioneer. At an early age, he was to make a remarkable discovery that would lead to the establishment of a field of research called electrogravitics.

While still a student at Denison University in Granville, Ohio, Brown noticed movement from wires of opposite polarity which would come in close proximity to one another. These wires had a tendency to attract while in the presence of very high voltage. Brown reported his observation to his physics professor, Paul Biefield, who encouraged him to do further experiments. The research that followed led to the Biefield-Brown effect and six U.S. patents for Brown.

In one of his experiments, Brown mounted condenser plates on a rotor. When voltage was applied, the rotor turned in a set direction. If the polarity of the voltage was reversed, the rotor would spin in the opposite direction.

The experiment which resulted in U.S. Patent #2,949,550, is perhaps Brown's most well-known. A large disk-shaped negative plate follows a positively charged wire (electrode) separated by a dielectric insulator. When two of these disks are suspended from a rotor mechanism and high voltage is applied, movement follows which is in the direction of the positive electrode, as illustrated in Figure 1.

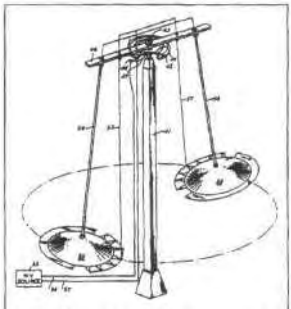

Fig. 1 T.T. Brown's "electrokinetic apparatus." Figure 6 from U.S. Patent #2,949,550, granted Aug. 16, 1960.

The replication

During the summer of 1994,1 decided to replicate Brown's rotor experiment. I machined two 2^{5}/e-inch by Ve-inch thick aluminum disks, with a tapered edge.

Using a 16-inch by 2-inch wide piece of balsa wood, I built a crude, but workable, rotor to suspend the disks. Small pieces of #36 steel wire, separated by insulators, were attached to the rotor as condensers. A strip of ^{3}/e-inch copper was formed into a ring and glued to a 1 '/2-inch by 18-inch tall PVC support for brush contact. The rotor was then suspended on top of the support with a glass door roller used for the bearing. The bearing was later replaced with a needle spindle because the original caused drag problems by creating too much surface area, which prevented the rotor from turning.

The power supply was a 0-15 volt input oscillator with a

To order any of the items mentioned in the article, contact Bob **Ianinni** at *Information Unlimited,* P.O. Box 716, Amherst, NH 03031-0716. Tel 603-673-4730.

The *IU* catalog is $1. The plan is part GRA1, and sells for Î15. The kit is part GRA1K, and sells for Î99.50. The 12V, 3amp power supply is part GRA10, and is made and priced to order.

25kV, 800 microamp output at 25kHz pulsed DC. The circuit diagram is illustrated in Figure 2.

When I applied the voltage, the disks behaved as if they wanted to turn, but they did not. I made several adjustments between the positive and negative electrodes of the disk, but still there was no rotation.

At the same time, I was experimenting with other power supplies. In one of these other trials, a 7000VAC, 5 milliamp transformer with six 10,000V capacitors and six 20,000V, 2 watt diodes were used. The six capacitors and six diodes were soldered together to form a Cockroft-Walton generator. This was set with spark gaps between them, and run in parallel with the original power supply. When the power supplies were turned on, the higher current transformer with the Cockroft-Walton DC ladder began to amplify the action of

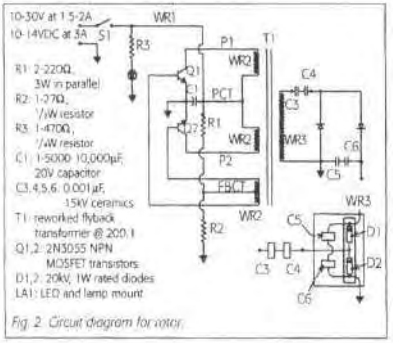

Fig. 2. Circuit diagram for rotor.

the lesser powered 25kV, 25Hz pulsed DC supply. The aluminum disks began to resonate with every aluminum box in the room. The disks behaved as if they wanted to move up and down, but the rotor did not turn.

It was several months before I tried any more experiments. Early this year, I was discussing the Brown experiment and the problems I was having with a friend. I showed him the rotor and mentioned the problem of having too much bearing surface drag from too large a bearing. We agreed that the bearing should be smaller, and decided to try a needle or small spindle. The changes were made, and on the first weekend in February, I started experimenting again. The new setup is shown in figures 3 and 4.

This time, the small rotor turned more freely; however, it needed to be balanced. Bearing surface drag and rotor balance will greatly affect the outcome of the experiment. Also very important is the size of the rotor bearing and how well the unit is balanced in conjunction with the size of the power supply.

The rotor began to turn slowly at first, at about 15 rpm. Several days later, I repeated some experiments with the rotor, and found that a ground connection was loose. When this was corrected, the rotor speed increased to about 35 rpm.

During this time, I contacted Dr. Paul LaViolette who suggested making the center of the disks more blunt instead of tapered. On my new 4-inch disks, shown in Figure 5,1 took this into consideration.

One of the later experiments with the disks used a much larger power supply-0-50 volts DC, 0-15 amp input. The voltage was increased to

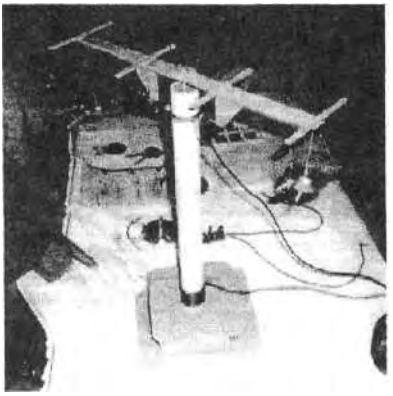
Fig. 3 The author's "maypole" rotor device.

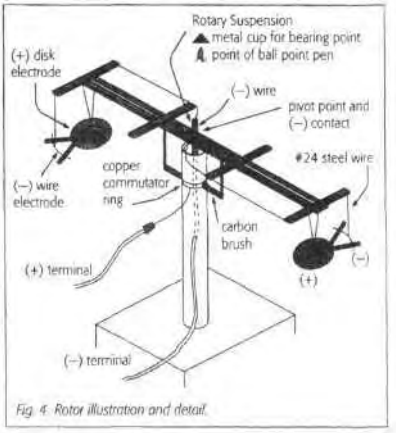

Fig. 4 Rotor illustration and detail.

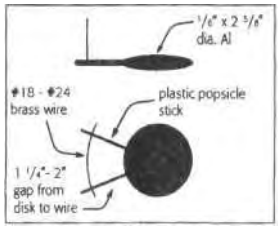

Fig. 4 Enlarged view of the disk electrode.

various levels and special notice was taken as to what happened on the high voltage end. The original power supply or oscillator was rated for 6-15 volts with a 25 kHz DC pulsed output. It was originally purchased about 10 years ago for the Hagen device (U.S. Patent #3,120,363). In this experiment, a platform about 12 inches in diameter is negatively charged, while a smaller circular platform containing very small wires is positively charged. The slow moving mass of air and charged ions are supposed to generate lift. Regardless, this power supply worked well on Brown's experiment.

I also contacted Bob laninni, the owner of Information Unlimited and the manufacturer of this device. He first thought that due to the age of the power supply, a pulsed rippling effect might be generated from the capacitor. Since I do not own an oscilloscope, and have only a linear frequency counter built into my meter, there is no proof that this may have happened. However, after conducting tests using other capacitors (a 63 volt, 100,000 µP and a 63 volt, 15,000 µP) in pkce of the original 20 volt, 10,000 µP capacitor, I ruled out the rippling effect If there had been a pulsed ripple produced from the capacitor, it would not have been present in a larger capacitor.

In the higher voltage experiments, the speed of the rotor increased significantly, from 35 rpm to about 60 rpm. This is after the power supply had reached 24 volts, according to the VOM reading. I checked with an analog meter for verification of input. This would have doubled the output of the high voltage to 50,000 volts and the current to about 1.5 milliamps. The rotor turned at a maximum speed of 60 rpm.

Several factors were responsible for the first breakdown between electrodes on the disks. High voltage power transistors had reached their maximum wattage, causing overheating, and the needle bearing on the rotor prevented the rotor from reaching high speeds.

Another experiment involved adding the Crockroft-Walton voltage ladder to the high voltage terminal of the power supply. This stepped up the voltage, but dropped the microamp rating down. The rotor turned at about half the speed it normally turned, at 25kV. This indicates that voltage and current rise must remain proportional to maintain the effect.

An analysis of Brown's experiments

1 Voltage and amperage must be raised proportionally to maintain the electrogravitic effect.
2 As the voltage and current are raised, dielectric strength (K) or spacing between positive and negative electrodes must be increased.
3 Power or frequency of charging time must be increased proportionally as the size of the area is increased.
4 Changing the size of either electrode will affect the efficiency of ionic flow, if the dielectric and power source remain constant. The ratio in the size of the positive to the negative plate is directly proportional to the amount of voltage and current applied through a dielectric medium. With a smaller, high voltage low microamp power supply, the electrode on the positive side may have to be larger. On a higher voltage milliamps system, the positive electrode may need to be smaller.
5 Geometric configurations of shape may enhance or diminish the efficiency of the electromagnetic effect.
6 The electromagnetic effect increases in proportion to voltage, amperage, dielectric strength (the K factor) and area, when all of these increase together. It is lost when an arcover or breakdown occurs.
7 Some writers have, in the past, insinuated that electronic lévitation is a product of very high frequencies and high voltages. Although a significant power increase may be present in this state, my experiments with the Biefield-Brown effect show that it is determined by the conditions thus described. Certainly, frequency, time lag and phase angle, along with all the formulas dealing with resonance would affect the efficiency of an AC system if it were used, but frequency and high voltage by themselves do not produce this effect.

In conclusion, I believe that the electrogravitic force is ever present, be it at one volt, one amp, one ohm, or 50,000 volts and 1 milliamp with a high dielectric strength. It is simply more noticeable at the high voltage electrostatic state, which is the opposite of the electromagnetic state.

Contact the author, Larry Deavenport, at 1823 Lawson Lane, Amarillo.TX 79106.

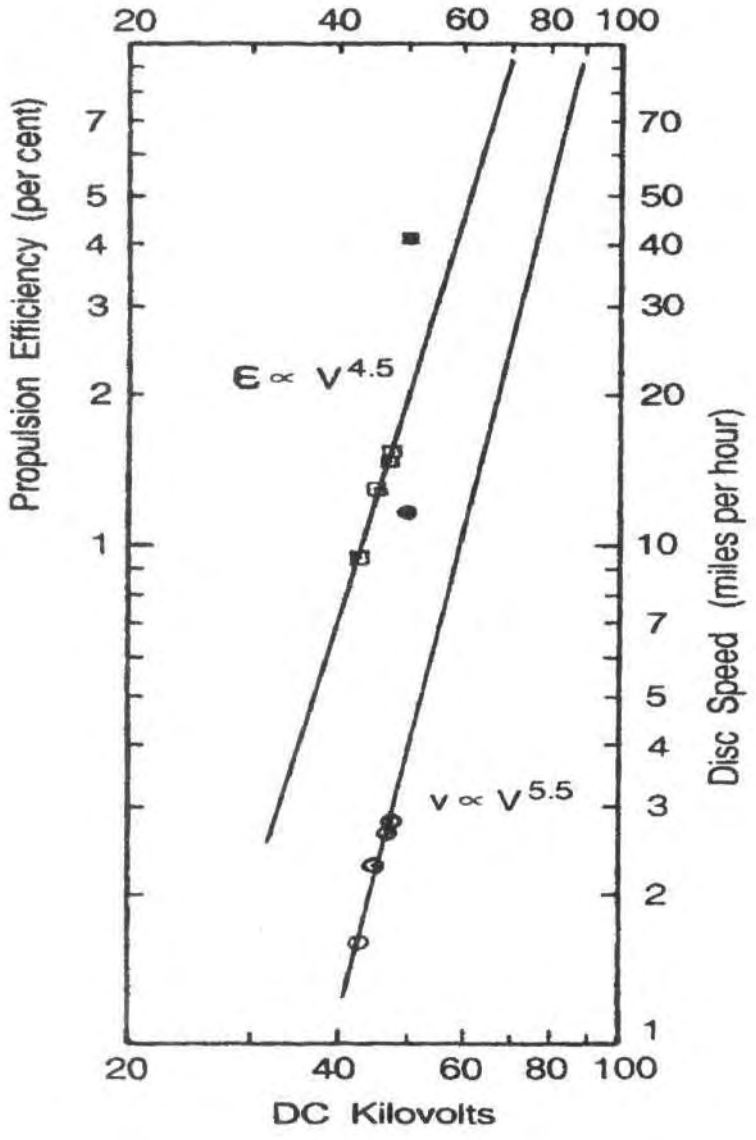

Disc speed v ([]) and propulsion efficiency s (o) as a function of average DC voltage V plotted logritnmically from ONR test data. Filled points are data from a separate test carried out by T. T. Brown. *(Subquantum Kinetics,* LaViolette, p. 173)

The Antigravity Research of T. Townsend Brown

Many readers may recall the name of I. Townsend Brown (mentioned briefly in the previous article) as it was historically associated with UFOs. Brown was the first director of the now-defunct—but once very active—National Investigations Committee on Aerial Phenomena (NICAP), a Washington, D.C.-based lobby group that was very instrumental in the 1960s for getting congressional leaders interested in the UFO mystery. But what the majority may not realize was that Brown was also a very highly acclaimed physicist who held many patterns and worked on a variety of highly classified projects.

It may well have been that Brown served as a very important "link" between the UFOiogica! community and work being done in the 40s and 50s on what in scientific circles is best known as "Electrogravitics Systems." There are even some who suggest that Brown's work in this field may have been assisted by his knowledge of the crash landing of a spaceship near Roswell, New Mexico. Because of his close dealings with the government and many private aerospace firms (both in the United States and aboard) he would have easily had access to knowledge considered to be on the "cutting edge."

According to T^omasValpro, a licensed professional engineer and head of the Integrity Research Institute (1377 K Street, N.W$_V$ Washington, D.C. 20005), some of Brown's early patterns showed designs that look very much like the familiar "flying saucer" seen throughout North America during this time period, in fact, in the group's recently published report titled *Electrogravitics Systems—Reports on a New Propulsion Methodology,* Valone sees a very strong tie between Brown's discoveries and the development of the B-2 Stealth Bomber.

«There is," he says, "substantial evidence that the electrogravitics research of the 1950s actually resulted in the B-2 Stealth Bomber auxiliary propulsion system." In the report, an article by Dr. Paul VaVlolette is summarized further reach these conclusions:

1. The B-2 charges the leading edges of its wing-like body, with high voltage;
2. The B-2 is shaped just like IT. Brown suggested an electrogravitic craft should look, for maximum charge separation;
3. Northrup tested leading-edge charging in 1968;
4. T.T. Brown suggested that the craft should be powered by a flame-jet generator like the

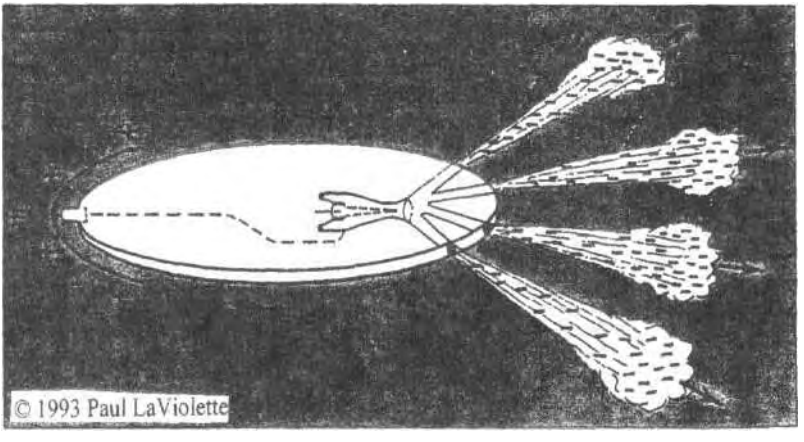

A version of the flying disc design that Brown proposed for development under Project Winterhaven.

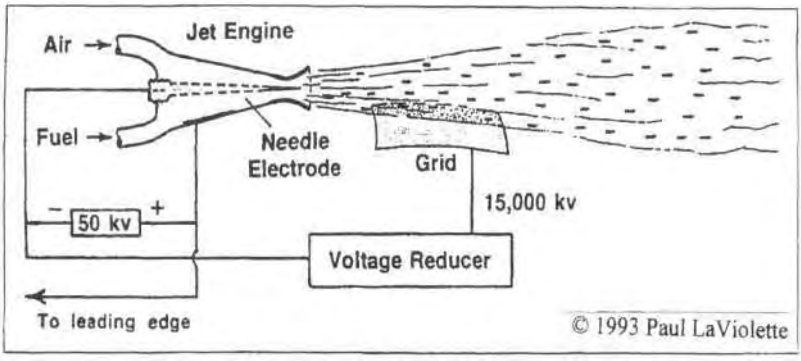

A high-voltage flame-jet generator.

B-2 engine.

5. *Aviation Week* admits the existence of "dramatic, classified technologies" applicable to "aircraft control and propulsion" on the B-2;
6. *Aviation Week* also disclosed that the ceramic RAM on the B-2 outer skin is powdered depleted uranium, which just happens to have a dielectric constant of three times that of the high-K dielectrics tested in the 1950s (barium titanate oxide);
7. The B-2's Emergency Power Units (EPU) can work at high altitudes or even in space, driving an electrical generator;
8. Edward Aldridge, the Secretary of the Air Force, admits that the B-2 creates *no vapor trail* at high altitudes.
9. The decomposed gases from the EPU's an function as the ion-carrying medium, according to T.T. Brown.

From this point it is not hard to reach out even further and safely conclude that a great deal of what is going on inside Area 51 (Nevada's top secret military base) is based upon the work of Brown and others who long ago saw another way to reach the stars besides utilizing rockets that need very heavy fuel payloads.

After reading the available literature, even seasoned scientists have had to agree that Brown's propulsion methods may be our best bet in reaching out to the planets in our solar system that we might possibly be able to visit even now if these discoveries were not being kept under lock and key by those few ho would deem it necessary to utilize this.-valuable knowledge for their own private gain.

John Searl's Work

British engineer John Searl claims to have built over 50 versions of his own "flying saucer," and has been receiving media attention—no matter how limited—for a number of years with his claims of having developed a noiseless, propulsion-free, levity disc that requires no fuel and flies vertically when taking off and landing. Searl even makes the bold claim that one of his craft actually flew around the world several times in the early 1970s,..apparently without detection. It's claimed that "ultra-high voltage electro-static force fields are developed by segmented rings rotating in the disc's periphery. The craft's direction is controlled by varying voltage around the edge, thus producing unbelievable speed and agility."

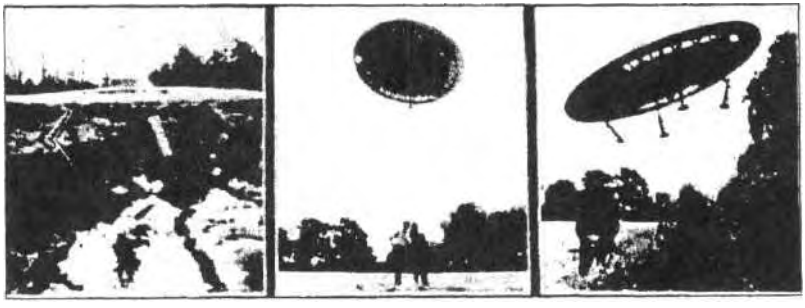

The Searl Levity Disk...a man-made Flying Saucer goes aloft.

Et si le B-2 n'était pas seulement un avion ?

Selon des révélations dans les milieux de la recherche et de la construction aéronautique aux Etats-Unis, le bombardier « furtif » de Northrop expérimenterait des techniques d'« électrogravité».

Si un avion est, par définition, un appareil de navigation aérienne plus lourd que l'air se déplaçant dans l'atmosphère en obeissant aux lois de l'aérodynamique, alors le bombardier stratégique américain B-2A *Spirit* construit par Northrop, vedette furtive du dernier Salon du Bourget, est bien plus qu'un avion. Et n'appartiendrait, dans cette logique, à aucune famille officiellement connue de moyens de transport aérien.

Pour mieux comprendre la nature des révélations qui filtrent actuellement sur les étranges particularités de cette machine volante, un détour par les coulisses de l'histoire s'impose.

Tandis que le B-2 était officiellement présenté au public, en novembre 1988, l'US Air Force déclarait que les technologies développées pour le mettre au point «**allaient révolutionner l'industrie aérospatiale américaine**». Cette phrase prophétique passa inaperçue.

BLACK PROGRAMS

Trois ans plus tard, William B. Scott, rédacteur en chef de l'hebdomadaire *Aviation Week & Space Technology* était approché par un groupe d'ingénieurs travaillant de longue date sur des «programmes noirs» du Pentagone. Décidés à accélérer le processus de déclassification des technologies dont les civils mériteraient, à leurs yeux, de bénéficier, ces «rénégats» lui dévoilerent informellement quelques-uns des plus noirs secrets de la chauve-souris géante. Dont Scott se fit l'écho : le B-2 charge d'électricité positive ses bords d'attaque, un dispositif spécial lui permet d'électriser négativement les gaz brûlés en sortie de tuyère et sa cellule est tapissée d'un matériau diélectrique (non conducteur d'électricité) à base de poudre d'uranium appauvri capable d'absorber les ondes radars.

Le B-2 présente des particularités qui lui valent le surnom de « savonnette volante». (Photo AFP)

Thèse hardie

Alexandre Szames est un jeune journaliste scientifique têru de technologies «exotiques», c'est-à-dire de celles qui deviennent, parfois, la normalité de demain après avoir paru «impossibles» au moment où elles ont commencé à faire parler d'elles. Sa thèse sur le bombardier B-2, fondée sur des études et des révélations anglo-saxonnes, est pour le moins hardie. Une hypothèse prématurée ? Pas étrangère, cependant, à des recherches qui sont effectivement menées sur de nouveaux modes de propulsion. La réponse appartient à l'avenir.

Personne ne fut choqué outre mesure par ces révélations. Et pourtant, ce qui semble être l'un des plus grands secrets technologiques de la guerre froide venait de tomber... dans le domaine public.

Le B-2 est bien plus furtif qu'il n'y paraît. En électrisant ses bords d'attaque, il ionise l'air alentour et crée un «parapluie» de plasma modelé sur sa propre onde de choc. Ce phénomène se matérialise sous forme d'un halo lumineux de couleur rose-orangée. Ses bénéfices sont immédiats : le plasma agit comme un bouclier anti-radar (il emprisonne une bonne partie des ondes électromagnétiques) et rend plus fluide l'atmosphère alentour. Le B-2 devient une véritable savonnette volante.

CANONS À IONS

Les moteurs du bombardier sont tout aussi exotiques. Conçus par General Electric (GE), ils servent effectivement à «pousser» l'appareil. Mais au décollage seulement. En régime de croisière, ils changent de fonction et font plutôt office de... canons à ions négatifs. Pourquoi ? Pour mieux diluer les gaz chauds dans l'atmosphère, c'est-à-dire réduire la signature infra-rouge ? Cette explication semble logique, mais n'est pas forcément la seule valable... «**Bien des aspects du processus de furtivité (du B-2) restent classifiés**», indique l'US Air Force.

En réalité, explique le Dr. Paul LaViolette dans trois études remarquables, la technologie qui permet au B-2 de «voler» repose sur l'**effet Biefeld-Brown**, un phénomène découvert à l'aube des années 20 et défini comme la «**tendance naturelle d'un condensateur placé sous haute tension à se déplacer dans le sens de son électrode positive**». Or, si l'on en croit les révélations d'*Aviation Week*, le B-2 est par nature un condensateur : ses bords d'attaque lui servent d'anode (électrode positive), ses flux de combustion de cathode aérodynamique (électrode négative) et sa cellule de diélectrique.

Si l'effet Biefeld-Brown n'a reçu aucune publicité, c'est parce qu'il dérange. Non content d'invalider les modèles physiques couramment admis, ce phénomène est à l'origine d'une science «nouvelle», l'**électrogravité** (synonyme *apparent* d'antigravité), étudiée avec rage depuis le milieu des années 50 dans la quasi-totalité des établissements de recherche et développement occidentaux. Ce dont témoigne un rapport sur les «Systèmes électrogravifiques», récemment déterré par le Dr. LaViolette et établi en 1955 à l'initiative d'une société de consultance britannique, Aviation Studies.

ARCHIVES SECRÈTES

Si le B-2 ne constitue qu'un maigre aspect des percées technologiques accomplies pendant la guerre froide, un pan entier de l'histoire du XXe siècle reste à découvrir. Peut-être en saurons-nous plus en octobre prochain, lorsque le Pentagone rendra publiques, comme prévu par le décret présidentiel 12958,... 176 millions de pages de documents gardés secrets depuis plus de 25 ans !

Quant au B-2, ce fascinant appareil appartient déjà à la préhistoire. En dévoilant, dans *New World Vistas*, sa dernière étude scientifique, l'US Air Force prévoyait l'arrivée rapide d'avions-caméléons. Electriques, certes... mais totalement invisibles. Y compris à l'œil nu !

Alexandre SZAMES

*Sous-titre et intertitres sont de la rédaction.

L'Alsace, 10 Mars 1996, p 6
Mulhouse, France

Book Review

Electrogravitics Systems:

Reports on a New Propulsion Methodology

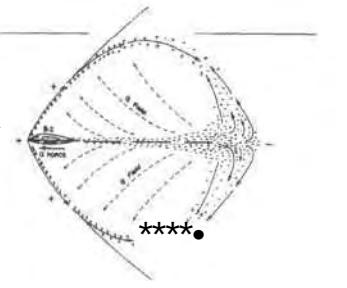

THOMAS VALONE, ED.

REVIEWED BY LESLEE KULBA

The authors who contributed to *Electrogravitics Systems: Reports on a New Propulsion Methodology* assert that electrogravitics is not a dead-end field of research.

The 111-page book presents information indicating that antigravity has been and is being seriously investigated by leading aircraft industries as well as governments. An underlying theme is that T.T. Brown propulsion, once developed, will usher in an age of flight so revolutionary it will make all previous aviation, from the Wright brothers to space shuttles, constitute the Stone Age of flight.

This book can be appreciated by anyone who is interested in electrogravitics. It contains basic information for the neophyte (such as glossaries, patent lists and basics on T.T. Brown research), as well as clippings and information which make a case for the reality of electrogravitics technology.

Structurally, the book consists of four papers: "Electrogravitics Systems," from Aviation Studies, Ltd.; "The Gravitics Situation," from Gravity Rand Ltd., Div. of Aviation Studies, Ltd.; "Negative Mass As a Gravitational Source of Energy in the Quasi-Stellar Radio Sources," by Banesh Hoffman; and "The U.S. Antigravity Squadron," by Paul LaViolette. All papers encourage serious research.

The book is thought-provoking. "What is gravity?" it asks; a question Newton and Einstein did not satisfactorily explain. Experts have told us: "It just is."

Electrogravitics Systems looks beyond, and asks how fast is gravity if not an instantaneous action-at-a-distance. Does it travel in waves? Does gravitational force, like other forces, generate heat? If so, how much?

The book makes some interesting points. For example, gravity may be the only force that is not quantized. It also states that all fundamental forces (e.g., electricity and magnetism) appear to exist in the form of opposites (poles). So, why shouldn't gravity have its opposite—negative gravity? Since gravitational force is dependent only on two or more masses and the absolute value of the distances separating them, the quest for antigravity then takes on the form of a quest for antimatter, not an uncommon task for modern physicists.

Questions are raised throughout the book, and solutions remain distant, though it is pointed out that the most satisfactory theories usually are simplistic in explanation and application.

Having made a theoretical case for electrogravitics, the book also makes a historical one. Hints of electrogravitics in the history of aviation, revealed through developments and statements made by major aircraft industries in articles from *Aviation Report in* the mid-1950s, are reprinted. T.T. Brown's work is described in detail.

With optimism, the book repeatedly states that the breakthroughs in antigravity devices are almost guaranteed to come from big industry which can pour grand sums of money into extensive research and development facilities.

The paper by Paul LaViolette was an intriguing speculation that the B-2 stealth bomber operated on T.T. Brown's principle of propulsion. Statements from government and ex-government workers and officials were shown to fit in nicely with this possibility. LaViolette argues that several disclosed as well as probable technological details of this classified design are consistent with design specifications for a would-be T.T. Brown aircraft.

Electrogravitics Systems was published by the Integrity Research Institute, 1377 K Street NW, Suite 204, Washington, D.C. 20005. It retails for $15.

PUBLICATIONS available from Integrity Research Institute

T. T. Brown's Electrogravitics Research, by Thomas Valone, P.E. A collection of papers including a one on electrogravitics with diagrams and references, another one with details of the Townsend Brown Notebooks, repeated Brown experiment, and one that summarizes the Bahnson Lab film/video with still photos. #603 28 pg. $5

The Townsend Brown Electro-Gravity Device. A comprehensive evaluation by the Office of Naval Research, with accompanying documents, issued Sept. 15, 1952. Every page was marked "confidential" until the classification of the report was cancelled by ONR. Detailed report with a surprise at the end. #612 22 pg. $6

Electrogravitics Radio Interview. Just before the 1994 T. T. Brown Symposium in Philadelphia, 21st Century's Radio Hieronimus & Co. conducted a radio interview with Valone about the speakers. Topics covered are energy, propulsion, electrogravitics and current research in the field. #604 1 hour audiotape $5

Thomas Townsend Brown: Bahnson Lab 1958-1960. This rare find, supplied by Sev Bonnie, a friend of the Bahnson family, is a documentary recorded originally in 8 mm film. Though silent, it is in color and reveals short segments of all of the Brown-Bahnson laboratory experiments. Specially designed craft levitate with electrogravitic propulsion. #606 approx. 1 hour NTSC VMS videotape $20

SubQuantum Kinetics: The Alchemy of Creation, by Dr. Paul LaViolette. A masterpiece of theoretical work predicting electrogravitic forces and more. An entire chapter is devoted to electrogravitics. Topics include the creation of matter, fields, and forces based on systems science. #605 208 pg. book $15

Free Energy and Antigravity Propulsion. Hosted by Tom Valone. Over the past few decades, there has been a considerable production of new and exiting energy and propulsion inventions which are emerging. A multimedia presentation to a conference audience in Mt. Shasta, CA. #607 ΓΛ hour NTSC VMS video $25

Future Energy: Proceedings of the First International Conference on Future Energy. Papers from the 1999 three-day COFE symposium featuring more than 14 scientists, most with visual presentations of their breakthroughs in energy. Also includes invited papers. FREE upon request with #802 purchase; Talking CD-ROM with 20 hours of digital audio lectures (usually $49). #802 250 pg. book $40

Call, write, or email for a complete newsletter/catalog on Future Energy!

ORDERING INFORMATION:
Shipping cost is $2 for U.S. residents. Add $3 for Canada. Add $5 for postage overseas. Send check, money order or charge card number to Integrity Research Institute, 1220 L St. NW Suite 100-232, Washington, DC 20005. Call 800-295-7674 or 202-452-7674 for catalog or to place an order. Email: iri@erols.com Visit: **www.integrity-research.org**

Experimental Research of the Magnetic-Gravity Effects.
Full Size SEG tests.

V. V. Roschin, E-mail: rochtchin@mail.ru
S. M. Godin, E-mail: serjio@glasnet.ru

Institute for High Temperatures, Russian Academy of Science, Izhorskaya 13/19, Moscow 127412, Russia

Abstract

In the present paper the results of the experimental research of magnetic-gravity effects are presented. Anomalous magnetic and thermal changes within a radius of 15 meters from the researched device were measured as well.

PACS: 41.20.-q; 44.60.+k; 76.50.+q

1. Introduction

There has been a great interest in examining non-linear effects in the system of rotating magnetic fields. Such effects have been observed in the device called Searl's generator or the Searl-Effect Generator (SEG) [1-4]. A SEG consists of a series of three concentric rings and rollers that circulate around the rings. All parts of SEG are based on the Law of the Squares [5]. The rollers revolve around the concentric rings, but they do not touch them. There's a primary north-pole and primary south pole on the rollers and a primary north-pole and primary south-pole on the concentric rings. Obviously, the north-pole of the roller is attracted to the south-pole of the concentric rings and vice versa.

The rollers have a layered structure similar to the concentric rings. The external layer is titanium, then iron, nylon and the last internal layer was made from neodymium. John R.R. Searl has supposed that electrons are given off from the central element (neodymium) and travel out through other elements. Dr. Searl contends that if nylon had not been used, the SEG would act like a laser and one pulse would go out and it would stop, build up, and another pulse would go out. The nylon acts as a control gate that yields an even flow of electrons throughout the SEG [4].

In [4] it was shown that in the process of magnetization of the plate and rollers, the combination of constant and variable magnetic fields for creating a special wave (sine wave) pattern on a plate surface and rollers surface was used. The basic effects consist of the rollers self-running around the ring plate with a concurrent reduction of weight and an increasing occurrence of propulsion. These effects come about because of a special geometry of experimental setup. It was shown that the operation of the device in the critical regime is accompanied by biological and real physical phenomena.

Other information where similar effects are be mentioned can be found in the books, *Unconventional Flying Objects* [6] and the *Homopolar Handbook* [7] which includes papers on magnetized dielectrics. In this paper we present the results we have obtained from our experimental device.

2. Description of the Experimental Installation

The basic difficulty arises in choosing the materials and maintaining the necessary pattern imprinting on the plate and roller surfaces. To simplify the technology we decided to use a one-ring design with one-ring plate (stator) and one set of rollers (rotor). It is obvious, that it was necessary to strengthen the roller rotor near the bearings and balance the rollers well. In the suggested design, air bearings were used which provided the minimum losses due to friction.

From the available description [1-4] it was not clear how to build and magnetize a stator with a one meter diameter. In order to make the stator, separate magnetized segments of rare earth magnets with a residual induction of 1Torr were used. The segments were magnetized in a usual way by discharging a capacitor-battery system through a coil. Afterwards, the segments were assembled and glued together in a special iron armature, which reduced the magnetic energy. To manufacture the stator, 110 kg of neodymium magnets were used and 115 kg of neodymium were used to manufacture the rotor. High frequency field magnetization was not applied. It was decided to replace an imprinting technology

described in [1-5] with cross-magnetic inserts having a flux vector directed at 90 degrees to the primary magnetization vector of the stator and rollers.

For the cross inserts, modified rare earth magnets with a residual magnetization of 1.2 T and coercive force a little bit greater than in a base material were used. In Fig.1 and Fig.2 the joint arrangement of stator 1 and rotor, made up of rollers 2, and a way of their mutual gearing or sprocketing by means of cross magnetic inserts 19, is shown. Between the stator and roller surfaces the air gap δ of 1-mm is maintained.

No layered structure was used except a continuous copper foil of 0.8 mm thickness, which wrapped up the stator and rollers. This foil has direct electrical contact to magnets of the stator and rollers. Distance between inserts in the rollers is equal to distance between inserts on the stator. In other words, $t_1 = t_2$ in Fig.2.

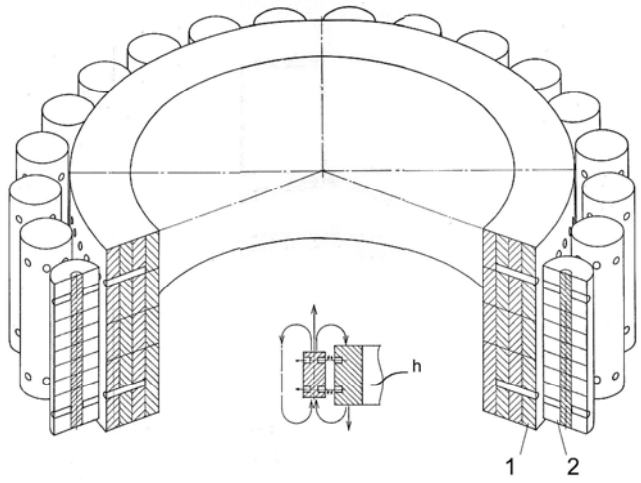

Fig.1. Variant of one-ring converter.

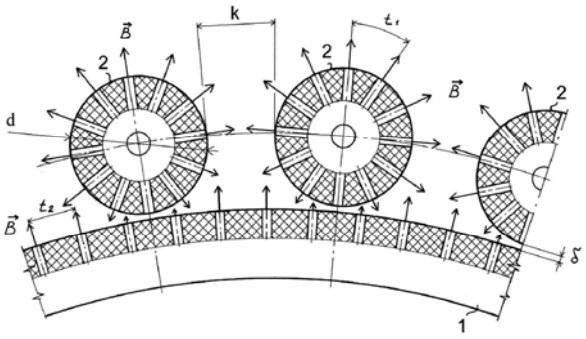

Fig.2. Sprocket effect of magnetic stator and roller inserts.

The ratio of parameters of the stator 1 and the rotor 2 in Fig.2 is chosen so that the relation of stator diameter D to the roller diameter d is an integer equal to or greater than 12. Choosing such a ratio allowed us to achieve a "magnetic spin wave resonant mode" between elements of a working body of the device since the circumferences also maintained the same integer ratio.

The elements of magnetic system were assembled in a uniform design on an aluminium platform. In Fig.3 the general view of the platform with the one-ring converter is displayed. This platform was supplied with springs and shock absorbers with limited ability to move vertically on three supports. The system has a maximum value of displacement of about 10 mm and was measured by the induction displacement meter, **14**. Thus, the instantaneous change of the platform weight was defined during the experiment in real time. Gross weight of the platform with magnetic system in the initial condition was 350 kg.

The stator, **1**, was mounted motionlessly, and the rollers, **2**, were assembled on a mobile common separator, **3**, also regarded as the rotor, connected with the basic shaft, **4**, of the device. The rotary moment was transferred through this shaft. The base of the shaft was connected through a friction clutch, **5**, to a starting motor, **6**, which accelerated the converter up to a mode of self-sustained rotation. The electrodynamics generator, **7**, was connected to the basic shaft as a main loading of the converter. Electromagnetic inductors, **8**, with open cores, **9**, were located adjacent to the rotor.

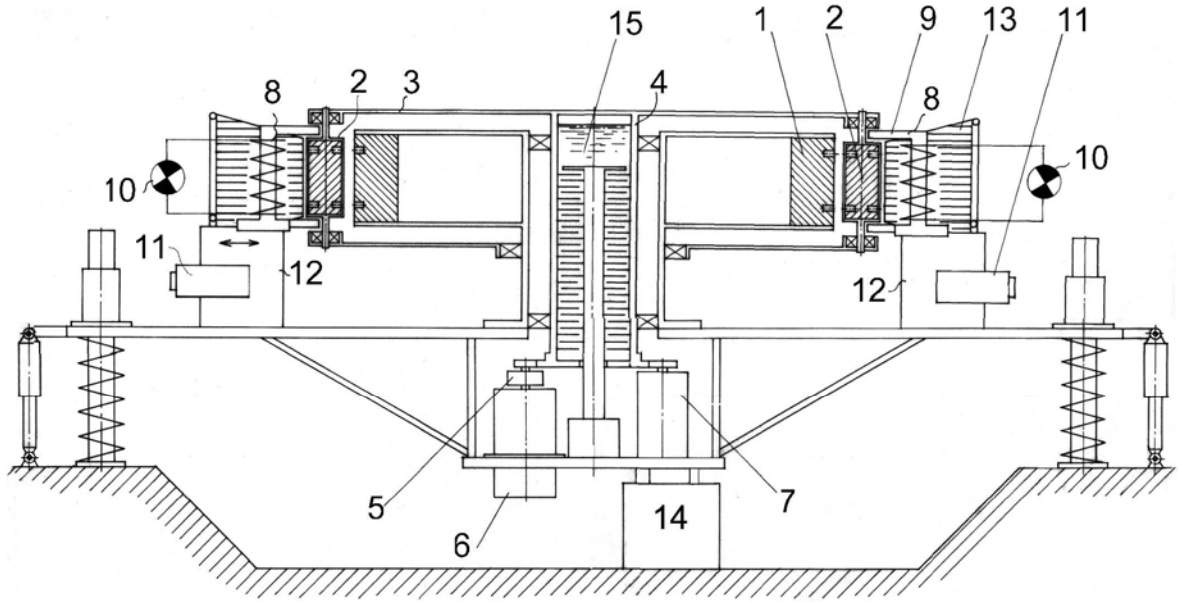

Fig.3. The general view of the one-ring converter and platform.

The magnetic rollers, **2**, crossed the open cores of inductors and closed the magnetic flux circuit through electromagnetic inductors, **8**, inducing an electromotive force ("emf") in them, which acted directly on an active load, **10** (a set of inductive coils and incandescent lamps with a total power load of 1 kW). The electromagnetic inductor coils, **8**, were equipped with an electrical drive, **11**, on supports, **12**. Driven coils for smooth stabilization of the rotor's rpm were used but the speed of the rotor could be adjusted by changing the main loading, **10**.

To study the influence of high voltage on the characteristics of the converter, a system for radial electrical polarization was mounted. On the periphery of the rotor ring, electrodes, **13**, were set between the electromagnetic inductors, **8**, having an air gap of 10 mm with the rollers, **2**. The electrodes are connected to a high-voltage source; the positive potential was connected to the stator, and the negative to the polarization electrodes. The polarizing voltage was adjusted in a range of 0-20 kV. In the experiments, a constant value of 20 kV was used.

In case of emergency braking, a friction disk from the ordinary car braking system was mounted on a basic shaft of the rotor. The electrodynamics generator, **7**, was connected to an ordinary passive resistive load through a set of switches ensuring step connection of the load from 1 kW to 10 kW through a set of ten ordinary electric water heaters.

The converter undergoing testing had in its inner core the oil friction generator of thermal energy, **15**, intended for tapping a superfluous power (more than 10 kW) into the thermo-exchange contour. But since the real output power of the converter in experiment has not exceeded 7 kW, the oil friction thermal generator was not used. The electromagnetic inductors were connected to an additional load, which was a set of incandescent lamps with a total power of 1 kW which facilitated the complete stabilization of the rotor revolutions.

3. Experimental results

The magnetic-gravity converter was built in a laboratory room on three concrete supports at a ground level. The ceiling height the lab room was 3-meters, the common working area of the laboratory was about 100 sq. meters. Besides the presence of the iron-concrete ceiling, in the immediate proximity of the magnetic system there was a generator and and electric motor, which contained some tens of kilograms of iron and which could potentially deform the field's pattern.

The device was initially started by the electric motor that accelerated the rotation of the rotor. The revolutions were smoothly increased up to the moment the ammeter included in a circuit of the electric

motor started to show zero or a negative value of current draw. The negative value indicated a presence of back current. This back current was detected at approximately 550 rpm. The displacement meter, **14**, starts to detect the change in weight of the whole installation at 200 rpm. Afterwards, the electric motor is completely disconnected by the electromagnetic clutch and the ordinary electrodynamics generator is connected to the switchable resistive load. The rotor of the converter continues to self-accelerate and approach the critical mode of 550 rpm where the weight of the device quickly changes.

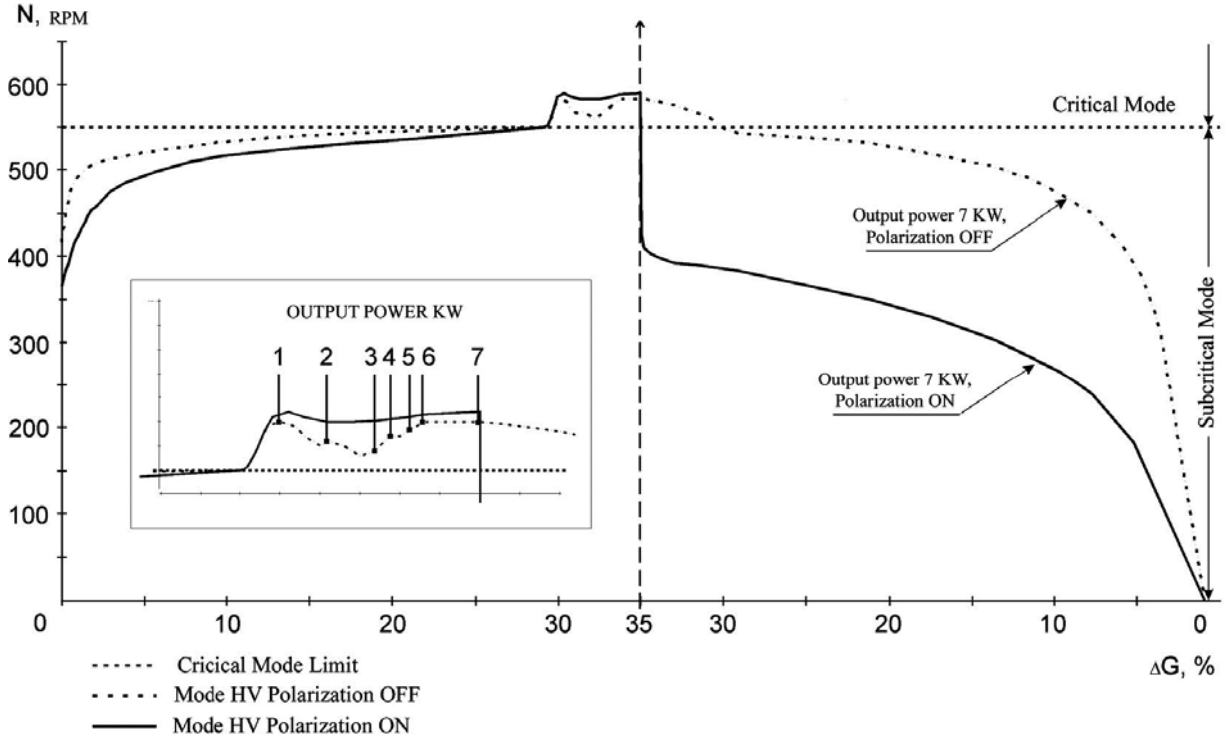

Fig. 4. -G, +G changes in weight of the platform vs. rpm

In addition to the dependence on the speed of rotation, the weight differential depends on the generated power through the load and on the applied polarizing voltage as well. As seen in Fig.4, at the maximum output power equal to 6-7 kW, the change of weight $\Delta\mathbf{G}$ of the whole platform (total weight is about 350 kg), reaches 35 % of the weight in an initial condition $\mathbf{G_i}$. Applying a load of more than 7 kW results in a gradual decrease in rotation speed and an exit from the mode of self-generation, with the rotor coming to a complete stop subsequently.

The net weight $\mathbf{G_n}$ of the platform can be controlled by applying high voltage to polarization ring electrodes located at a distance of 10 mm from external surfaces of the rollers. Under the high 20 kV voltage (electrodes having negative polarity) the increase of tapped power of the basic generator to more than 6 kW does not influence $\Delta\mathbf{G}$ if the rotation speed is kept above 400 rpm. "Tightening" of this effect is observed as well as the effect of hysteresis on $\Delta\mathbf{G}$ (a kind of "residual induction"). The experimental diagrams given on Fig.4 illustrate the +G and –G modes of the converter operations vs. rotor rpm.

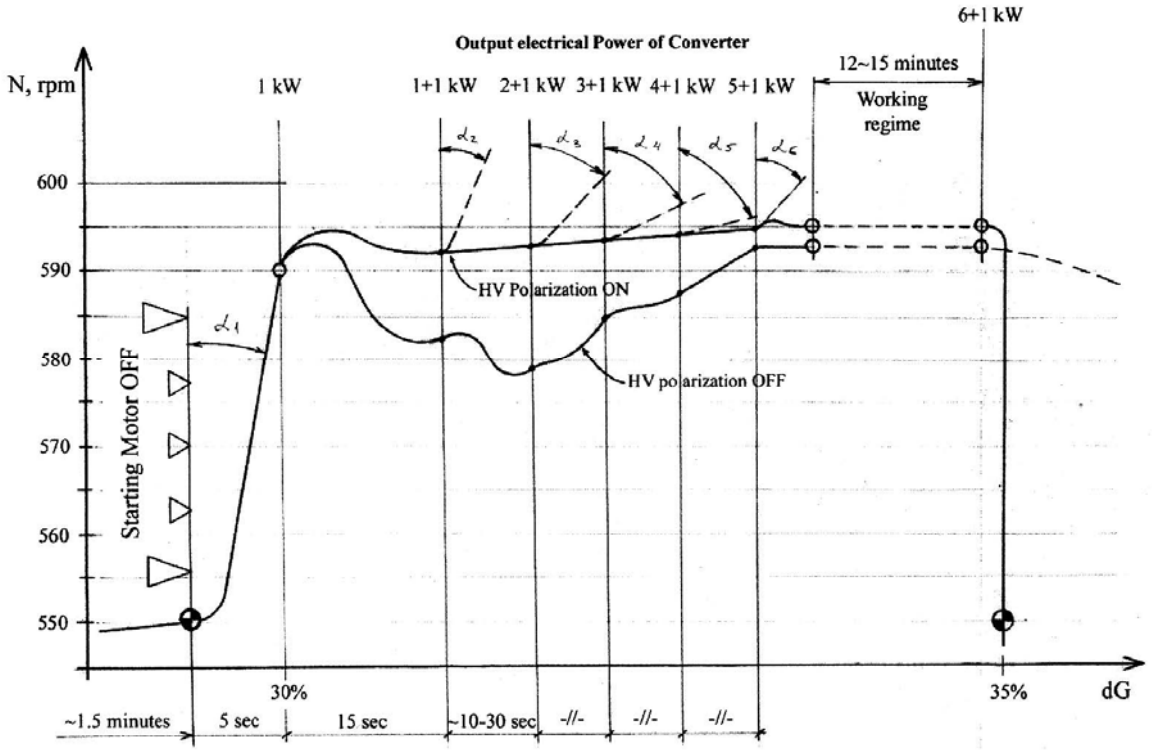

Fig.5 Diagrams of a rotor accelerating and loading of the converter.

The effect of a local change of the platform weight is reversible, relative to the direction of rotor turning, and has the same hysteresis. A clockwise rotation causes the critical mode to occur in the area of 550 rpm and the propulsion force against the direction of gravitation vector is created. Correspondingly, a counter-clockwise rotation causes the critical mode to occur the in area of 600 rpm and a force in the direction of gravitation vector is created. The difference in approach to a critical mode of 50 - 60 rpm was observed. It is necessary to mention that the most interesting region are situated above the critical area of 550 rpm, but due to of a number of circumstances the implementation of such research was not possible. It is necessary to note, that there are probably also other resonant modes appropriate to higher rpm of a rotor and to the significant levels of useful loading and weight changing. Proceeding from the theoretical assumptions, the dependence of tapped mechanical energy from the parameters of magnetic system of the converter and rpm of a rotor has a nonlinear character and the received effects are not optimum. From this point of view, the revealing of the maximal output power, of the maximal change of weight and resource of the converter represents the large practical and scientific interest. In tested sample of the converter the using of higher rpm was inadmissible because of insufficient mechanical durability of the magnetic system, which was built from separate pieces.

In Fig.5 the dependence of weight of a platform and its output power, removed into resistive loading from rpm of a rotor of the converter is explained in detail. The diagrams are constructed for a case of HV polarization ON (top diagram) and HV polarization OFF (bottom diagram). The time from the start moment of the engine up to a mode of self-generation of the converter, using clockwise rotation of the rotor, is approximately 1.5 minutes. (The power of starting engine was about of 2 kW with a reduction on the shaft of the converter is equal 1/10). On achieveing a critical mode (550 rpm.), the change of gross weight of a platform already reaches +/-30% from $\mathbf{G_i}$. At the point of transition to a resonant mode, the revolutions increase rapidly to 590 rpm and the weight changes reaches + /-35% from $\mathbf{G_i}$. At this time, an unpleasant high frequency whistling sound became audible. This point on the diagram begins just after a critical point (inclination of a curve $\boldsymbol{\alpha_1}$). On achieving 590 rpm, the first stage of resistive loading in 1 kW is connected to the electrodynamics generator. The whistling sound stops at once, the revolutions are sharply reduced, and ΔG also changes. As soon as the revolutions begin to increase once more, the second switchable load is connected and the rotor rpm stabilises at 590-595 rpm. ΔG continues to change. The increased switched loading is done in steps of 1 kW up to total load

of 6 kW. All of the time intervals are equal and are approximately 10-30 sec. The following sudden increase in rpm and then the full stabilization of a mode, take a time of 12-15 minutes.

More than 50 test runs of this converter were undertaken with absolute repeatability, during a period of three months. It should be noted that the revolutions will grow with acceleration reflected on the Fig.5 by corners $\alpha_1 \ldots \alpha_5$, if the generator is not switched to the next step of loading, the rpm will continue increasing. Twice as much loading was required to return to a previous rpm mode.

The above discussion concerns a mode with high voltage polarization of 20 kV "plus" on a "grounded" stator. Without the 20 kV polarization voltage (lower curve) the diagram is approximately the same, but indicates the more hard character of loading and faster change of weight of a platform due to decreasing of rpm.

Other interesting effects include the work of the converter in a dark room when corona discharges are observed around the converter's rotor as a blue-pink glowing luminescence and a characteristic ozone smell. In Fig.6 the cloud of ionization covers the area of a stator and a rotor and has accordingly a toroidal form.

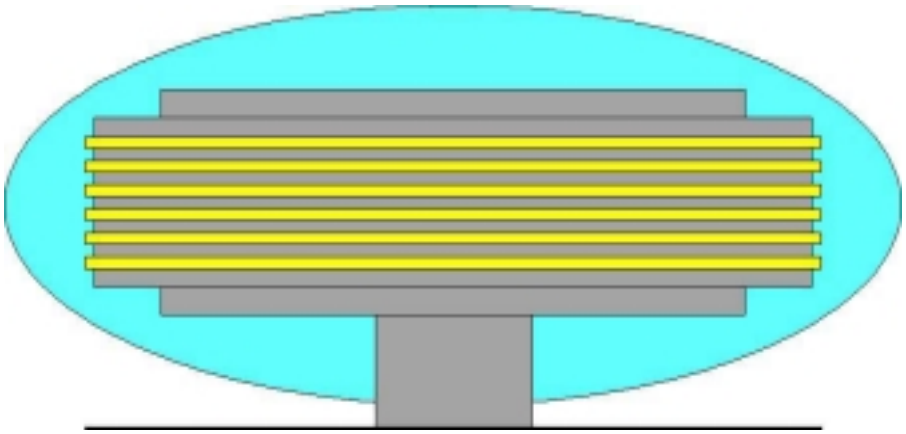

Fig.6. Corona discharges around the converter.

On the background of luminescence glowing on rollers' surfaces, we distinguished a «wave picture.» A number of more vigorous strips of discharges around the rollers were observed. These discharges were of a white-yellow colour but the characteristic sound of arc discharges was not audible. Erosive damage induced by arc discharges were not present on any surfaces of the stator or the rollers.

One other detail not mentioned previously was the vertical concentric magnetic "walls" around the installation. We noticed and measured the abnormal permanent magnetic field around the converter within the radius of 15 meters. For the magnetic field measurement the Russian magnetometer F4354/1 was used. This magnetometer used a Hall-effect sensor placed in the copper shielding.

The zones of an increased intensity of a magnetic flux 0.05 T located concentrically from the centre of the installation were detected. The direction of the magnetic field vector in these walls coincided with the direction of the rollers' field vector. The structure of these zones reminded us of circular ripples on a water surface caused by a thrown stone. Between these zones, this portable magnetometer did not register abnormal magnetic fields. The layers of an increased intensity are distributed practically without losses up to a distance of about 15 meters from the centre of the converter and quickly decrease at the border of this zone. The thickness of each layer is about 5 - 6 cm. The border of each layer has sharp shape, the distance between layers is about 50 - 80 cm where the upper limit is seen when moving from the centre of the converter.

A stable picture of this field was observed as well as at a height of 6 m above the installation (on the second floor above the lab). Above the second floor, measurements were not carried out. The similar picture was observed and outside of a room of laboratory, directly in the street, on the ground. The

concentric walls are strictly vertical and no had appreciable distortions. In Fig.7 the schematic arrangement of the converter in a room of laboratory and arrangement of concentric magnetic fields are shown.

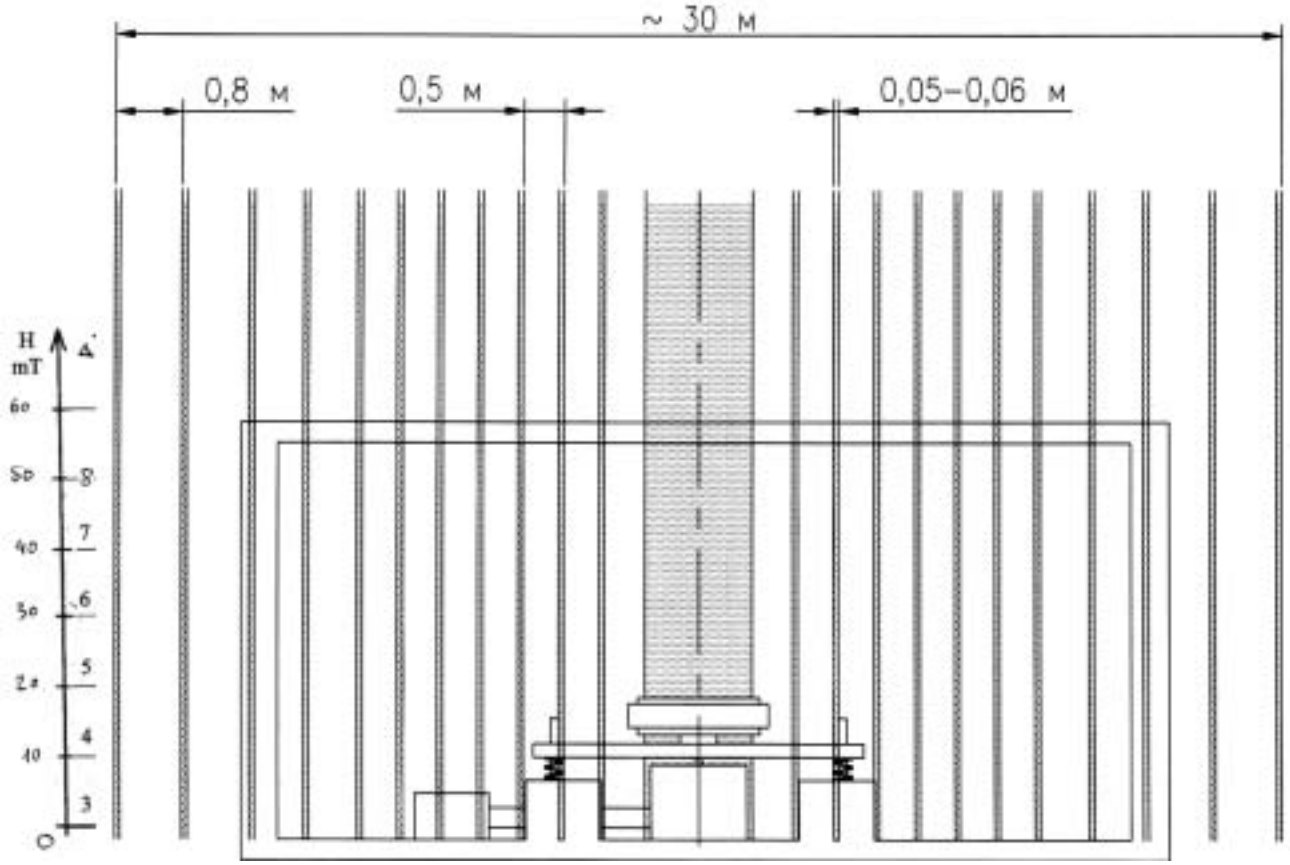

Fig.7. Schematic placing of the converter and pattern of magnetic fields in the lab.

An anomalous decrease temperature in the vicinity of the converter was also found. While the common temperature background in laboratory was + 22°C (±2°C) a fall of temperature equal to 68°C was noticed. The same phenomenon was also observed in the concentric vertical magnetic walls. The measurements of temperature inside the magnetic walls were carried out by an ordinary alcohol thermometer with an inertia of indication about 1.5 min. In the magnetic walls the temperature changes can even be distinctly felt by hand. When placed into this magnetic wall the hand immediately feels very cold. A similar condition was also observed at some height above installation, i.e. on the second floor of the laboratory, despite the ferro-concrete blocking of the ceiling and also in the open air outside the laboratory.

Concentric magnetic walls and the accompanying thermal effects begin to show themselves by an appreciable image beginning approximately from of 200 rpm., and linearly grow with increasing of revolutions up to a critical mode. The measurements above 600 rpm were not made because of fear of destruction of magnetic system.

4. Discussion

All the results we obtained are extremely unusual and require some theoretical explanation. Unfortunately, the interpretation of results within the framework of the conventional physical theory cannot explain all the observed phenomena besides the change of weight. It is possible to interpret the change of weight either as a local change of gravitational force or as an antigravity force repelling its own field. Direct experiment, confirming the presence of a draft force was not performed, but in any case both interpretations of the weight change do not correspond to the modern physics paradigm. A reconsideration of the standard theory of gravitation is possible if we take into consideration space-time

curvature. For example, the Kerr metric usually represents the field exterior to an axially symmetric rotating body and distinguishes between positive and negative spin directions as well as forward and backward time directions [8]. An examination of the physical vacuum as a source of these phenomena may also lend itself to better interpretation since the Maxwell stress-energy tensor in the vicinity of the converter undergoes a complex evolution.

From the modern physics position, electrification and luminescence of the converter's magnetic system in the near zone is not completely clear. The phenomenon of the magnetic and thermal "walls" may be connected with Alphen's magnetic-sound waves raised in near zone in magnetized plasma induced by a variable magnetic field of a rotating rotor [9]. The energy exchange between ambient air molecules and the converter may be occurring. At the present time we can not give an exact description of the interactions mechanism and transformation of energy, but without a relativistic component, we are completely unable to give a physically substantial theory of these phenomena.

In conclusion, we emphasize that issues of the biological influence effects and especially of the variations of real time stream effects, which must be taking place in an operative zone of the converter, were not considered at all. These issues are extremely important and absolutely unexplored; though J.R.R. Searl makes some mention of a healing action caused by the SEG's radiation. Our own experience allows us to make only cautious assumption that the short-term stay (dozen minutes) in a working zone of the converter with the fixed output power of 6 kW remains without observed consequences for those exposed. This paper is only a beginning.

References

1 Schneider, Koeppl, & Ehlers. «Begegnung mit John R.R. Searl.» *Raum und Ziet*, #39, 1989, pp. 75-80.

2 Sandberg, Von S. Gunnar. «Was ist dran am Searl-effect.» *Raum und Ziet*, #40, 1989, pp. 67-75.

3 Schneider & Watt. «Dem Searl-effect auf der spur.» *Raum und Ziet*, # 42, 1989, pp.75-81; #43, pp.73-77.

4 Thomas Jr., John A. «ANTI-GRAVITY: The Dream Made Reality.» *Extraordinary Science*, vol.VI, Issue 2, 1994. (Also *ANTIGRAVITY: The Dream Made Reality*, Direct International Science Consortium, 1993, ISBN 1-898827-99-0)

5 Searl, Prof. John R. R., *The Law of the Squares, Books 1-8*, Direct International Science Consortium, 1993, ISBN 1-898827-00-1

6 Hill, Paul R., *Unconventional Flying Objects*, Hampton Roads, 1995

7 Valone, Thomas, *The Homopolar Handbook, A Definitive Guide to N-Machine and Faraday Disk Technologies*, Integrity Research Institute, 1994

8 Adler, Bazin, and Schiffer. *Introduction to General Relativity*, McGraw Hill, New York, 1965

9 Landau and Lifshitz. *Electrodynamics of continuous media*.- Moscow, Nauka, 1982. (in Russian).

A Practical Guide to 'Free Energy' Devices

Part D21: First issued: 30th August 2007 Last updated: 5th October 2007 Author: Patrick J. Kelly

Free-Energy from Gravity

We are all familiar with the effects of gravity. If you drop something, it falls downwards. Engineers and scientists are usually of the opinion that useful work cannot be performed on a continuous basis from gravity, as, they point out, when a weight falls and converts it's "potential energy" into useful work, you then have to put in just as much work to raise the weight up again to its starting point. While this appears to be a sound analysis of the situation, it is not actually true.

Some people claim that a gravity-powered device is impossible because, they say that it would be a "perpetual motion" machine, and they say, perpetual motion is impossible. In actual fact, perpetual motion is not impossible as the argument on it being impossible is based on calculations which assume that the object in question is part of a "closed" system, while in reality, it is most unlikely that any system in the universe is actually a "closed" system, since everything is immersed in a massive sea of energy called the "zero-point energy field". But that aside, let us examine the actual situation.

Johann Bessler made a fully working gravity wheel in 1712. A 300 pound (136 Kg) wheel which he demonstrated lifting a 70 pound weight through a distance of 80 feet, demonstrating an excess power of 5,600 foot-pounds. Considering the low level of technology at that time, there would appear to be very little scope for that demonstration to be a fake. If it were a fake, then the fake itself would have been a most impressive achievement.

However, Bessler acted in the same way as most inventors, and demanded that somebody would have to pay him a very large amount of money for the secret of how his gravity wheel worked. In common with the present day, there were no takers and Bessler took the details of his design to the grave with him. Not exactly an ideal situation for the rest of us.

However, the main argument against the possibility of a working gravity wheel is the idea that as gravity appears to exert a direct force in the direction of the earth, it therefore cannot be used to perform any useful work, especially since the efficiency of any device will be less than 100%.

While it is certainly agreed that the efficiency of any wheel will be less than 100% as friction will definitely be a factor, it does not necessarily follow that a successful gravity wheel cannot be constructed. Let us apply a little common sense to the problem and see what results.

If we have a see-saw arrangement, where the device is exactly balanced, with the same length of a strong plank on each side of the pivot point, like this:

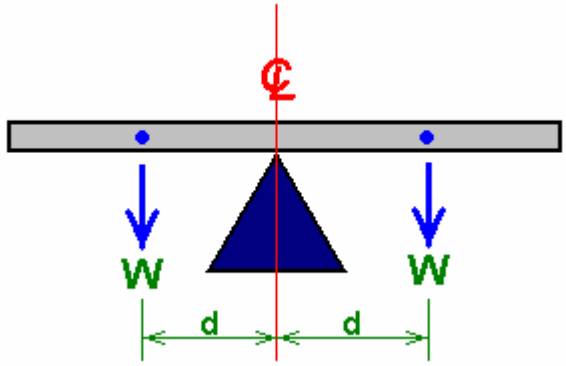

It balances because the weight of the plank ("**W**") to the left of the support point tries to make the plank tip over in a counter-clockwise direction, while exactly the same weight ("**W**") tries to tip it over in a clockwise direction. Both turning forces are d times W and as they match exactly, the plank does not move.

The turning force (d times W) is called the "torque", and if we alter the arrangement by placing unequal weights on the plank, then the beam will tip over in the direction of the heavier side:

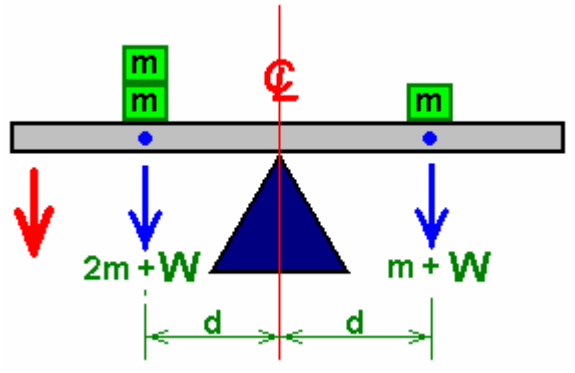

With this unequal loading, the beam will tip down on the left hand side, as indicated by the red arrow. This seems like a very simple thing, but it is a very important fact. Let me point out what happens here. As soon as the weight on one side of the pivot is bigger than the weight on the other side (both weights being an equal distance from the pivot point), then the heavy plank starts to move. Why does it move? Because gravity is pushing the weights downwards.

One other point is that the distance from the pivot point is also important. If the added weights "**m**" are equal but placed at different distances from the pivot point, then the plank will also tip over:

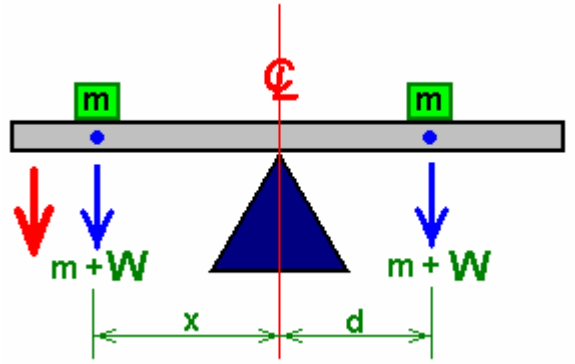

This is because the larger lever arm "**x**" makes the left hand weight "**m**" have more influence than the identical weight "**m**" on the right hand side.

Do you feel that these facts are just too simple for anyone to really bother with? Well, they form the basis of devices which can provide real power to do real work, with no need for electronics or batteries.

The following suggestions for practical systems are put forward for you to consider, and if you are interested enough test out. However, if you decide to attempt to build anything shown here, please understand that you do so entirely at your own risk. In simple terms, if you drop a heavy weight on your toe, while other people may well be sympathetic (and others probably laugh), nobody else is liable or responsible for your injury - you need to be more careful in the future ! Let me stress it again, this document is for information purposes only.

The Dale Simpson Gravity Wheel

The design of gravity-operated machines is an area which has been of considerable interest to a number of people for quite some time now. The design shown here comes from Dale Simpson of the USA. It should be stressed that the following information is published as open-source, gifted to the world and so it cannot be patented by any individual or organisation. Dale's prototype wheel has a diameter of about five feet, utilising weights of a substantial value. The overall strategy is to create excess torque by having the weights slide along metal rods radiating from a central hub somewhat like the spokes of a cart wheel. The objective is to create an asymmetrical situation where the weights are closer to the hub when rising, than they are when falling.

The difficulty with designing a system of this type is to devise a successful and practical mechanism for moving the weights in towards the hub when they are near the lowest point in their elliptical path of movement. Dale's design uses a spring and a latch to assist control the movement of each weight. The key to any mechanical system of this type is the careful choice of components and the precise adjustment of the final mechanism to ensure that operation is exactly as intended. This is a common problem with many free-

energy devices as careless replication attempts frequently result in failure, not because the design is at fault, but because the necessary level of skill and care in construction were not met by the person attempting the replication.

Here is a sketch of Dale's design:

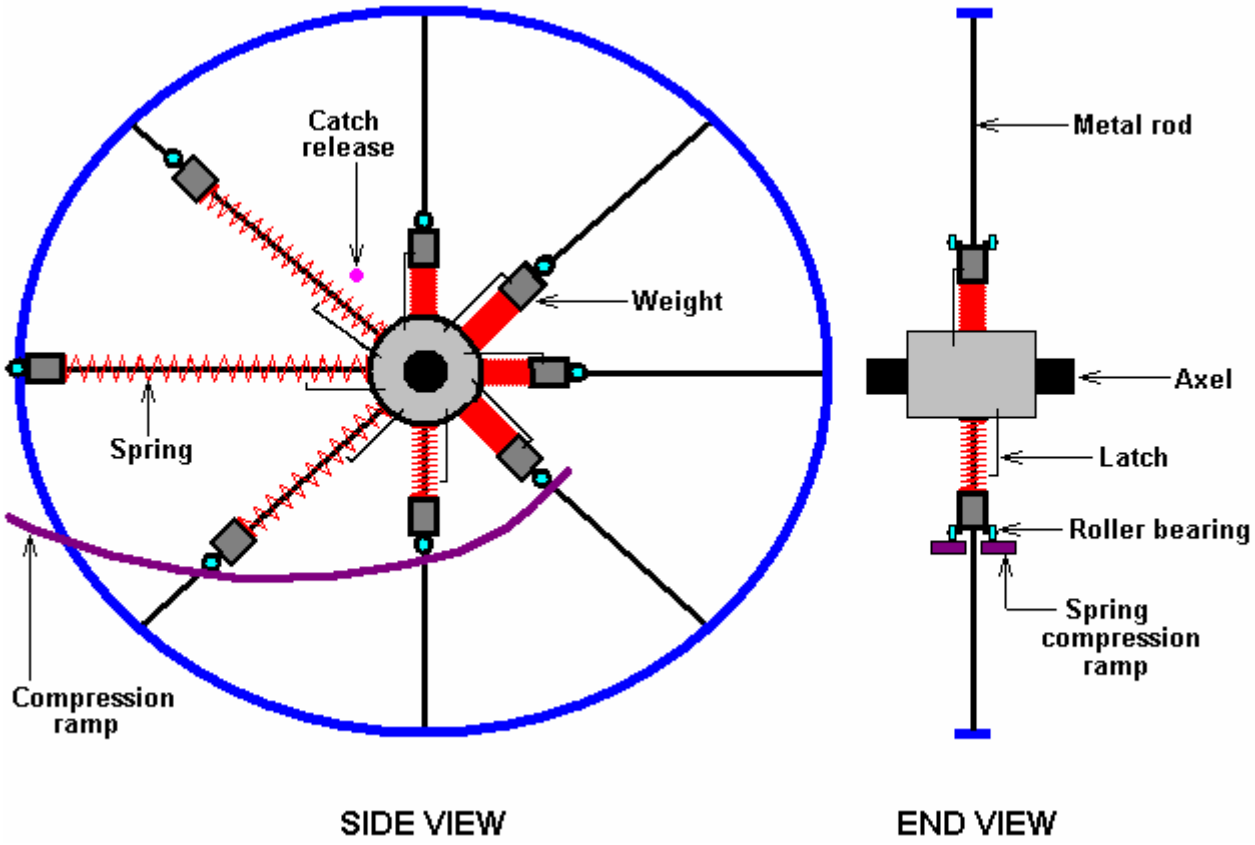

The wheel has an outer rim shown in blue and a central hub shown in grey. Metal spokes shown in black run out radially from the hub to the rim. Eight spokes are shown in this diagram as that number allows greater clarity, but a larger number would probably be beneficial when constructing a wheel of this type.

The wheel as shown, rotates in a counter-clockwise direction. Each weight, shown in dark grey, has a pair of low-friction roller bearings attached to it. There is also a spring, shown in red, between the weight and the hub. When a weight reaches the 8-o'clock position, the roller bearings contact a spring compression ramp, shown in purple. This ramp is formed of two parts, one on each side of the spokes, providing a rolling ramp for each of the two roller bearings. The ramp is formed in a curve which has a constant rate of approach towards the hub of the wheel.

The ramp is positioned so that the spring is fully compressed when the weight has just passed the lowest point in its travel. When the spring is fully compressed, a latch holds it in that position. This holds the weight in close to the hub during its upward movement. The springs are not particularly powerful, and should be just strong enough to be able to push the weight back towards the rim of the wheel when the spoke is at forty five degrees above the horizontal. The "centrifugal force" caused by the rotation assists the spring move the weight outwards at this point. The push from the spring is initiated by the latch being tripped open by the latch release component shown in pink.

The weights have an inward motion towards the hub when they are pushed by the wheel's turning motion which forces the roller bearings upwards along the spring-compression ramp. They have an outward motion along the spokes when the catch holding the spring compressed is released at about the 11-o'clock position. The latch and the release mechanism are both mechanical - no electronics or electrical power supply is needed in this design.

These details are shown in the diagram below:

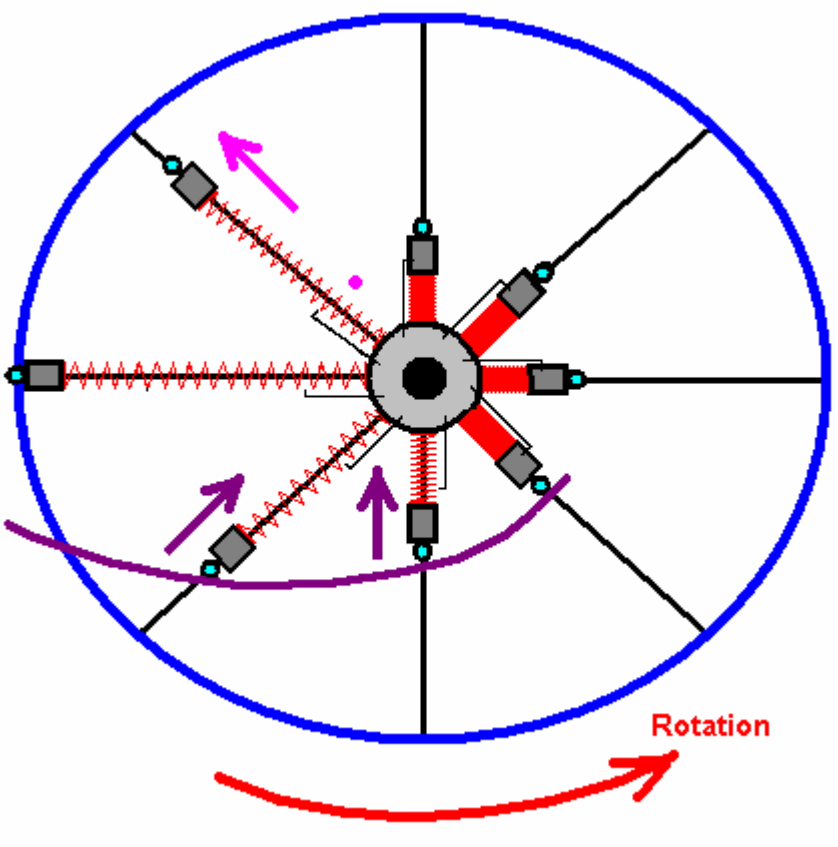

The question, of course is, will there be enough excess power to make the wheel rotate properly? The quality of construction is definitely a factor as things like the friction between the weights and their spokes needs to be very low. Let us consider the forces involved here:

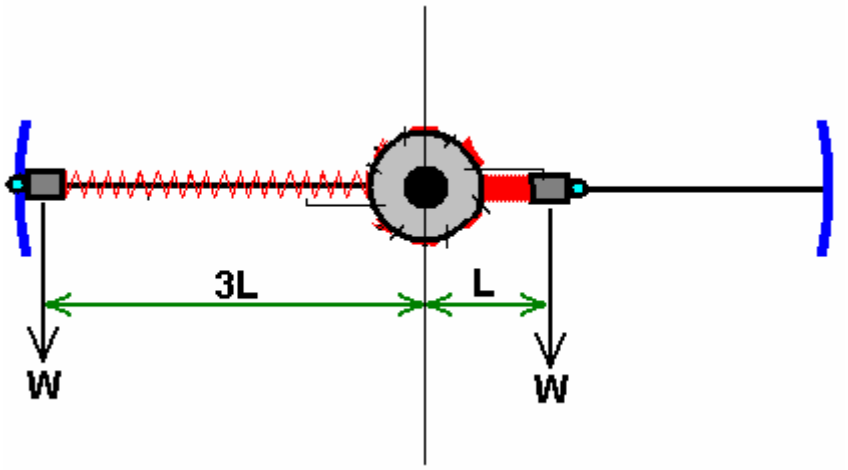

Take any one weight for this calculation. Any excess rotational energy will be created by the difference between the forces attempting to turn the wheel in a clockwise direction and those forces trying to turn the wheel in a counter-clockwise direction. For the purpose of this discussion, let us assume that we have built the wheel so that the compressed-spring position is one third of the spring-uncompressed position.

As the weights are all of the same value “W”, the see-saw turning effect in a clockwise direction is the weight (“W”) multiplied by it’s distance from the centre of the axle (“L”). That is, W x L.

The turning effect in the counter clockwise direction is the weight (“W”) multiplied by it’s distance from the centre of the axle (“3W”). That is, W x 3 x L.

So, with WL pushing it clockwise, and 3WL pushing it counter-clockwise, there is a net force of (3WL - WL), i.e. a net force of 2WL driving the wheel in a counter-clockwise direction. If that force is able to push the weight in towards the hub, compressing the spring and operating the spring latch, then the wheel will be fully

operational. There is actually, some additional turning power provided by the weights on the left hand side of the diagram, both above and below the horizontal, as they are a good deal further out from the axle than those with fully compressed and latched springs.

The only way of determining if this design will work correctly is to build one and test it. It would, of course, be possible to have several of these wheels mounted on a single axle shaft to increase the excess output power available from the drive shaft. This design idea has probably the lowest excess power level of all those in this document. The following designs are higher powered and not particularly difficult to construct.

The Veljko Milkovic Pendulum / Lever System

The concept that it is not possible to have excess power from a purely mechanical device is clearly wrong as has recently been shown by Veljko Milkovic at http://www.veljkomilkovic.com/OscilacijeEng.html where his two-stage pendulum/lever system shows a COP = 12 output of excess energy. COP stands for "Coefficient Of Performance" which is a quantity calculated by diving the output power by the input power **which the operator has to provide** to make the system work. Please note that we are talking about power levels and not efficiency. It is not possible to have a system efficiency greater than 100% and it is almost impossible to achieve that 100% level.

Here is Veljko's diagram of his very successful lever / pendulum system:

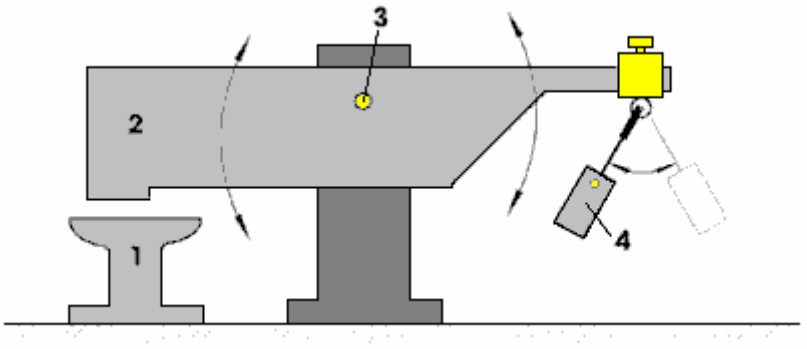

Here, the beam **2** is very much heavier than the pendulum weight **4**. But, when the pendulum is set swinging by a slight push, the beam **2** pounds down on anvil **1** with considerable force, certainly much greater force than was needed to make the pendulum swing.

As there is excess energy, there appears to be no reason why it should not be made self-sustaining by feeding back some of the excess energy to maintain the movement. A very simple modification to do this could be:

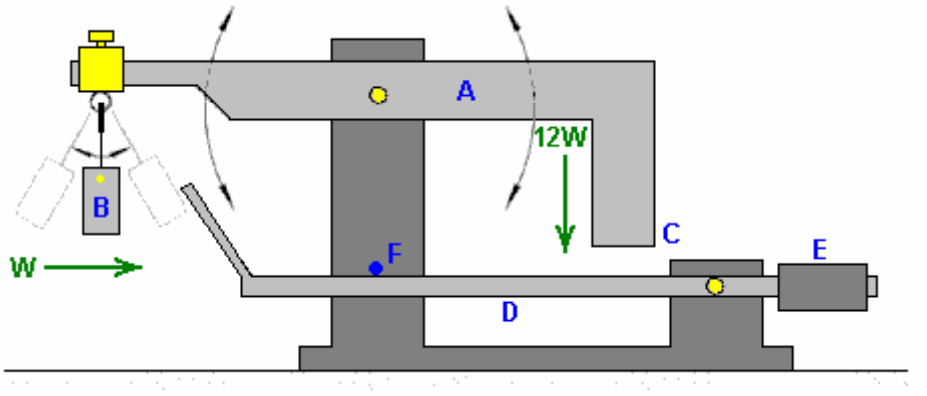

Here, the main beam **A**, is exactly balanced when weight **B** is hanging motionless in it's "at-rest" position. When weight **B** is set swinging, it causes beam **A** to oscillate, providing much greater power at point **C** due to the much greater mass of beam **A**. If an additional, lightweight beam **D** is provided and counterbalanced by weight **E**, so that it has a very light upward pressure on its movement stop **F**, then the operation should be self-sustaining.

For this, the positions are adjusted so that when point **C** moves to its lowest point, it just nudges beam **D** slightly downwards. At this moment in time, weight **B** is at its closest to point **C** and about to start swinging away to the left again. Beam **D** being nudged downwards causes its tip to push weight **B** just enough to maintain its swinging. If weight **B** has a mass of "**W**" then point **C** of beam **A** has a downward thrust of 12**W** on Veljko's working model. As the energy required to move beam **D** slightly is quite small, the majority of the 12**W** thrust remains for doing additional useful work such as operating a pump.

The Dale Simpson Hinged-Plate System

Again, this is an open-source design gifted by Dale to the world and so cannot be patented by any person, organisation or other legal entity. This design is based on the increased lever arm of the weights on the falling side compared to the lesser lever arm on the rising side:

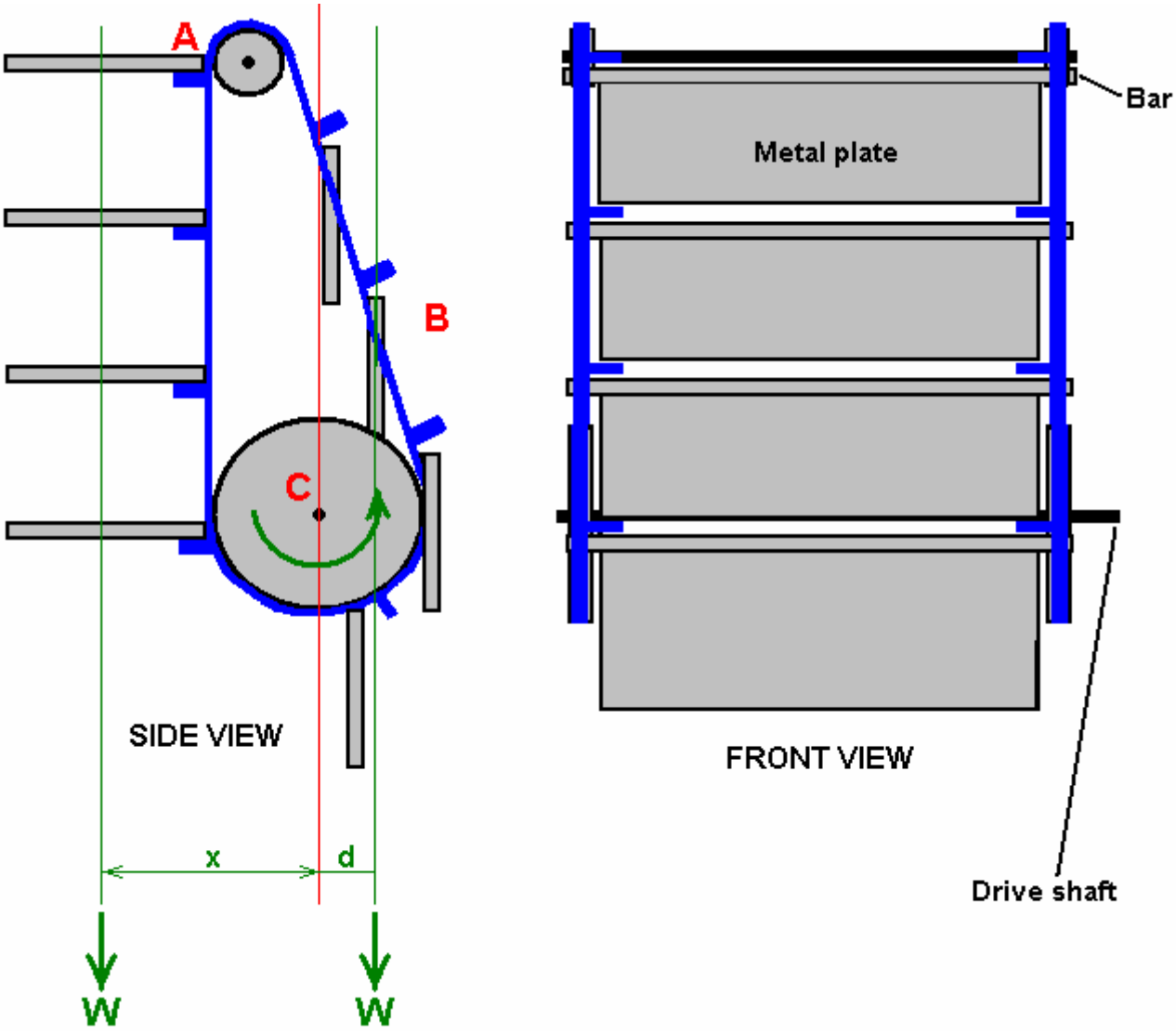

This design uses heavy metal plates which are carried on two drive belts shown in blue in the diagram above. These plates are hinged so that they stand out horizontally on the falling side, resting on a pair of lugs welded to the chain link and hang down vertically on the rising side as they are narrower than the gap between the belts.

This difference in position alters the effective distance of their weights from the pivot point, which in this case is the axle of wheel "**C**". This is exactly the position described above with the see-saw with equal weights placed at different distances from the pivot. Here again, the distance "**x**" is much greater than the distance "**d**" and this causes a continuous turning force on the left hand side which produces a continuous force turning the drive shaft of wheel "**C**" in a counter-clockwise direction as seen in the diagram.

A key point in this design are the robust hinges which anchor the heavy metal plates to the belt. These are designed so that the plates can hang down and lie flat on the rising side (point "**B**") but when the plate passes over the upper wheel to reach point "**A**", and the plate flips over, the hinge construction prevents the plate from moving past the horizontal. The upper wheel at point "**A**" is offset towards the falling side so as to help reduce the length "**d**" and improve the output power of the device. The chain detail below, shows the inside view of one of the right-hand chain plates. The metal plate swings clear of the chain and the sprocket wheels which the chain runs over.

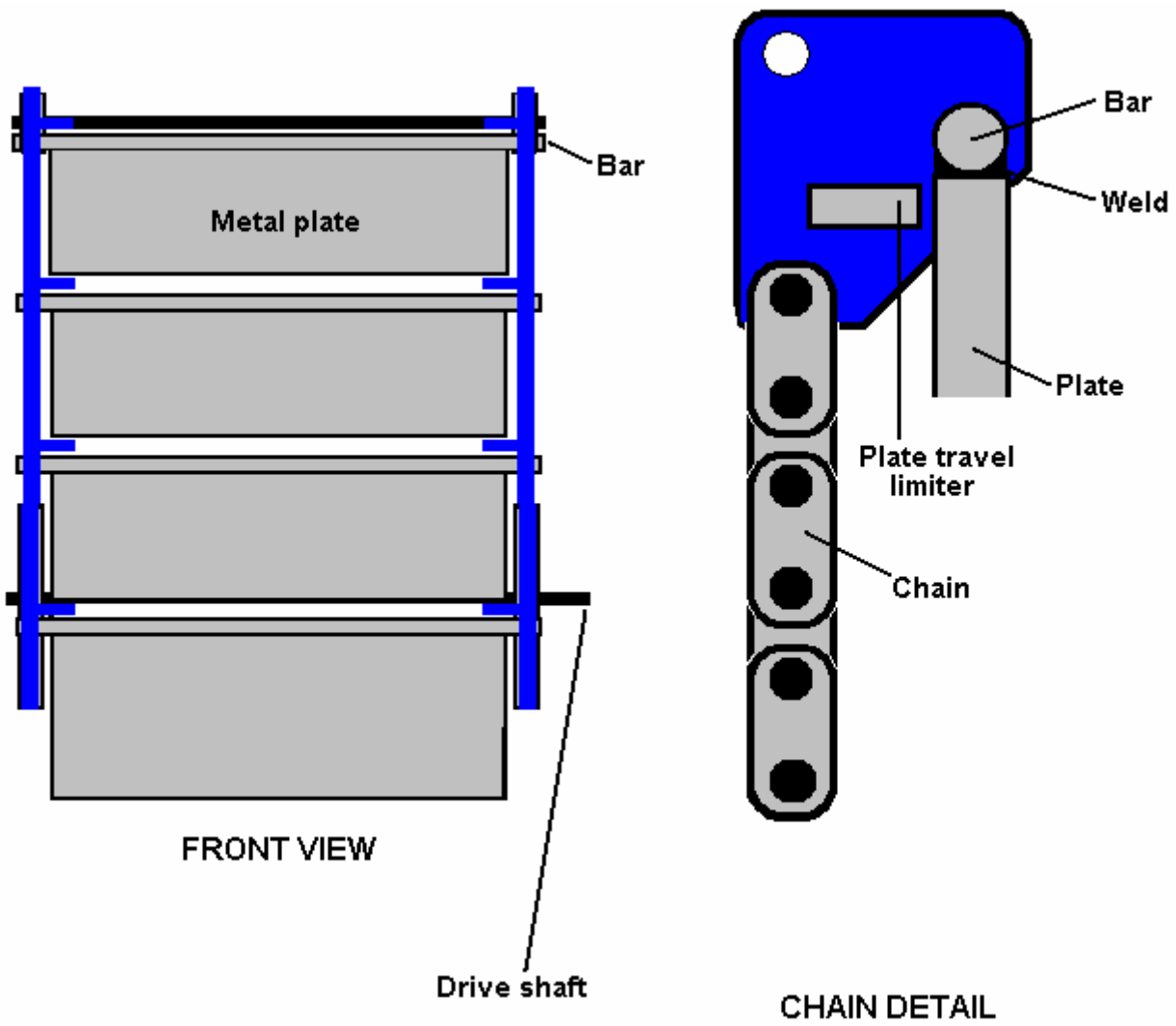

It should be noted that the movement of the lowest edge of the plates as they turn over when moving past the upper wheel at point "**A**", is much faster than anywhere else, and so putting a protective housing around it would definitely be advisable as you don't want anybody getting hit by one of these heavy plates.

It is, of course, possible to make this device to a much smaller scale to demonstrate it's operation or test different chain designs. The plates could be made from chipboard which is fairly heavy for its size and relatively cheap.

The Murilo Luciano Gravity Chain

Murilo Luciano of Brazil, has devised a very clever, gravity-operated power device which he has named the "Avalanche-drive" shown at **Error! Reference source not found.**. Again, this design cannot be patented as Murilo has gifted it to the world as a royalty-free design which anybody can make. This device continuously places more weights on one side of a drive shaft to give an unbalanced arrangement. This is done by placing expandable links between the weights. The links operate in a scissors-like mode which open up when the weights are rising, and contract when the weights are falling:

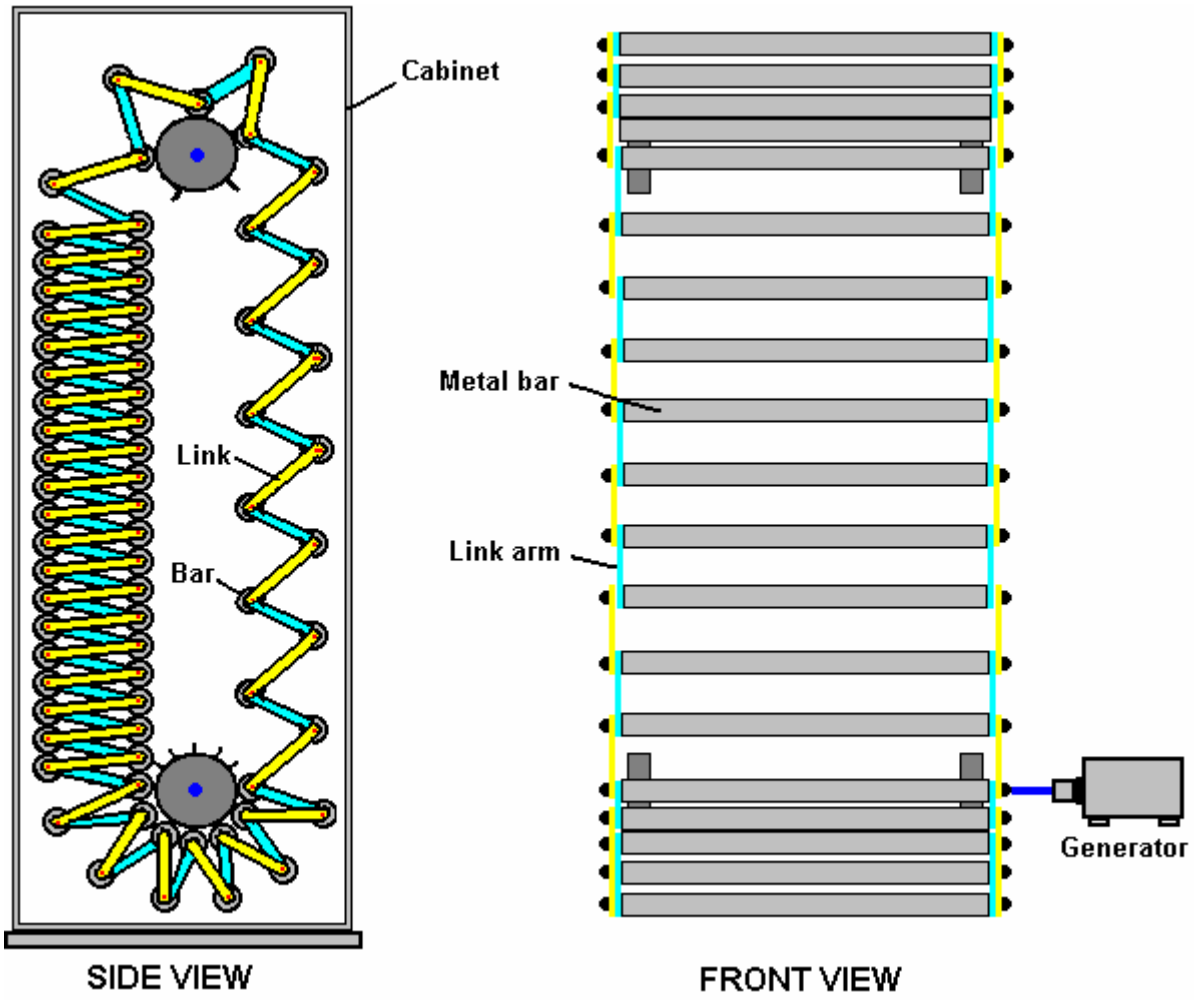

In the arrangement shown here, the weights are shown as steel bars. The design is scaleable in both height, width and the mass and number of weights. In the rough sketch above, the practical details of controlling the position of the bars and co-ordinating the rotation of the two support shafts are not shown in order to clarify the movement. In practice, the two shafts are linked with a pair of toothed sprockets and a chain. Two sets of vertical guides are also needed to control the position of the bars when they are in-between the four sprockets which connect them to the drive shafts, and as they go around the sprocket wheels.

In the sketch, there are 79 bar weights. This arrangement controls these so that there are always 21 on the rising side and 56 on the falling side (two being dead-centre). The resulting weight imbalance is substantial. If we take the situation where each of the linking bars weighs one tenth as much as one of the bar weights, then if we call the weight of one link “W”, the rising side has 252 of these “W” units trying to turn the sprockets in a clockwise direction while 588 of the “W” units are trying to turn the sprockets in an counter-clockwise direction. This is a continuous imbalance of 336 of the “W” units in the counter-clockwise direction, and that is a substantial amount. If an arrangement can be implemented where the links open up fully, then the imbalance would be 558 of the “W” units (a 66% improvement) and the level arm difference would be substantial.

There is one other feature, which has not been taken into account in this calculation, and that is the lever arm at which these weights operate. On the falling side, the centre of the weights is further out from the axis of the drive shafts because the link arms are nearly horizontal. On the rising side, the links are spread out over a lesser horizontal distance, so their centre is not as far out from their supporting sprocket. This difference in distance, increases the turning power of the output shafts. In the sketch above, an electrical generator is shown attached directly to one output shaft. That is to make the diagram easier to understand, as in practice, the generator link is likely to be a geared one so that the generator shaft spins much faster than the output shaft rotates. This is not certain as Murilo envisages that this device will operate so rapidly that some form of braking may be needed. The generator will provide braking, especially when supplying a heavy electrical load.

This diagram shows how the two side of the device have the unbalanced loading which causes a counter-clockwise rotation:

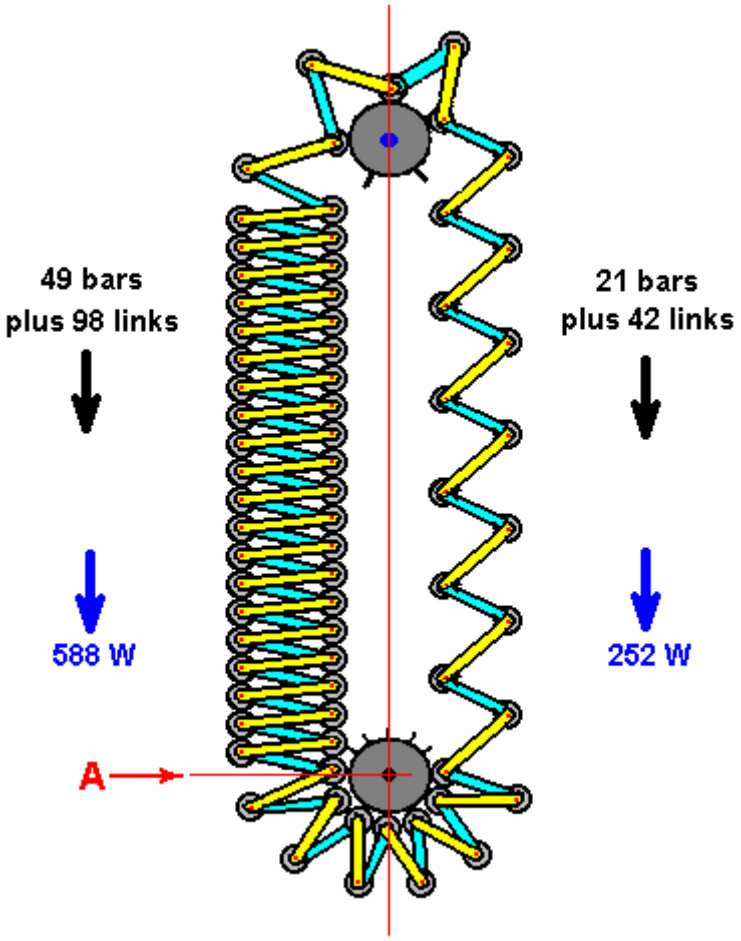

The diagrams shown above are intended to show the principles of how this device operates and so for clarity, the practical control mechanisms have not been shown. There are of course, many different ways of controlling the operation and ensuring that it works as required. One of the easiest building methods is to link the two shafts together using a chain and sprocket wheels. It is essential to have the same number of bar weights passing over the upper sprocket wheels as pass under the lower sprocket wheels. On the upper sprocket wheels, the bars are spread out, say, three times as far apart than they are on the lower sprocket wheels, so the upper sprockets need to rotate three times as fast as the lower ones. This is arranged by using a lower drive-chain sprocket wheel which has three times the diameter of the upper one.

The driving force provided by the weight imbalance of the two columns of rod weights needs to be applied to the lower sprocket wheels at point "**A**" in the diagram above. For this to happen, there has to be a mechanical connection between the stack of bar weights and the sprocket wheel. This can be done in different ways. In the above concept diagrams, this link has been shown as a sprocket tooth or alternatively, a simple pin projection from the sprocket wheel. This is not a good choice as it involves a considerable amount of machining and there would need to be some method to prevent the bar rotating slightly and getting out of alignment with the sprocket wheel. A much better option is to put spacers between the bar weights and have the sprocket teeth insert between the bars so that no bar slots are needed and accurate bar positioning is no longer essential. This arrangement is shown below:

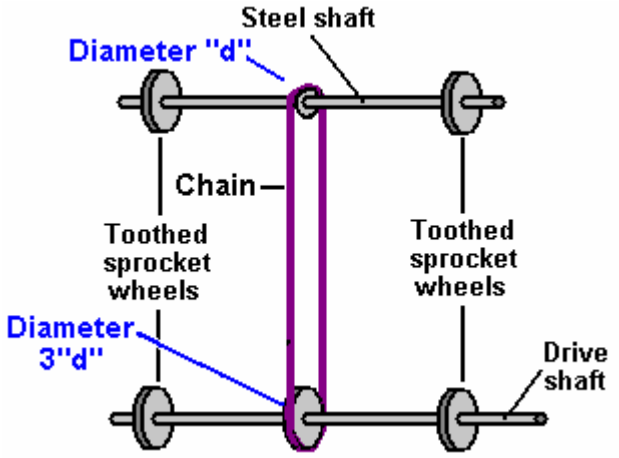

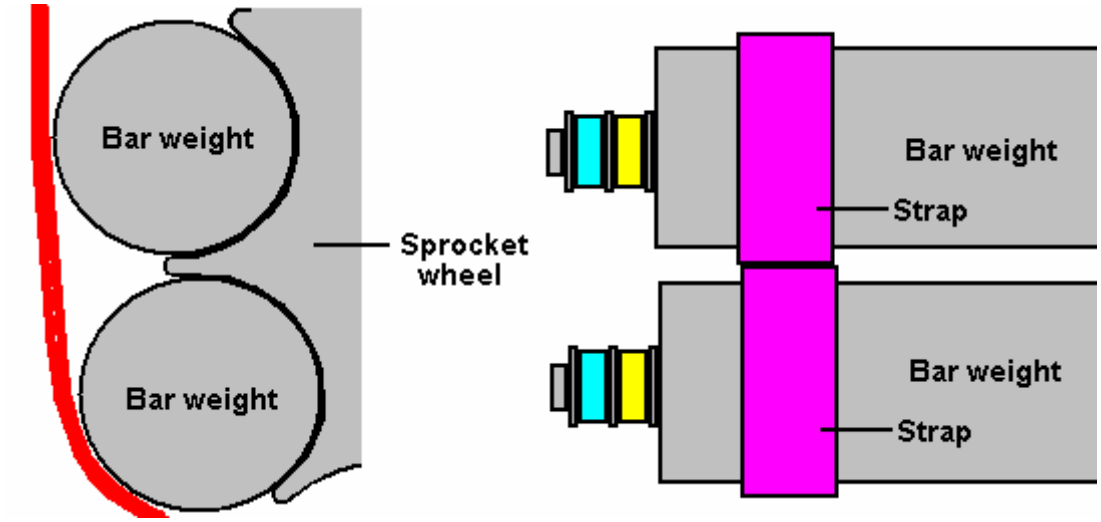

The description up to here has not mentioned the most important practical aspects of the design. It is now time to consider the rising side of the device. To control the expanded section of the chain, and to ensure that it feeds correctly on to the upper sprocket wheels, the gap between successive bar weights must be controlled.

In the example shown here, which is of course, just one option out of hundreds of different implementations, the bars on the rising side are three times as far apart as those on the falling side. This means that on the upper sprocket wheels, only every third tooth will connect with a bar weight. This is shown in the following diagram. However, if the linked weights were left to their own devices, then the rising side bars would hang down in one straight line. While that would be optimum for drive power, Murilo does not envisage that as a practical option, presumably due to the movement of the links as the bar weights move over their highest point. In my opinion, that arrangement is quite possible to implement reliably provided that the length of the links is selected to match the sprocket distance exactly, however, Murilo's method is shown here.

Murilo's method is to use additional restraining links between the weights. The objective here is to make sure that when the weights spread out on their upward journey, that they take up positions exactly three bar widths apart, and so feed correctly on to the teeth of the upper sprocket wheel. These links need to close up on the falling side and open up on the rising side. They could be fabricated from short lengths of chain or from slotted metal strips with a pin sliding along the slot. Whichever method is chosen, it is important that the links stay clear of the bars and do not prevent the bars stacking closely together on the falling side as that would prevent them seating correctly on the teeth of the lower sprocket wheels. The easiest precision option for the home constructor is using chain, where two bar weights are positioned on the upper sprocket wheel to give the exact spacing, and the tensioned chain is welded in position, as shown below. Placing the chain inside a plastic tube causes it to take up an "A" shape standing outwards from the links when they move into their closed position. This keeps the chains from getting between the link bars. In addition, the chains are staggered from one pair of link bars to the next, as shown below, as an additional measure to keep the operation both reliable and quiet..

In the diagram below, only a few of these restraining links are shown in order to keep the diagram as simple as possible. It is not a good choice to make the upper bar sprocket wheels three times larger than the lower sprocket wheels as this would force both the rising and falling sections of chain out of the vertical, which in turn introduces friction against the guides. The central 1:3 gearing is needed to make sure that the chains on the rising side are fully stretched and the spacing of the bar weights matches the upper sprocket spacing exactly.

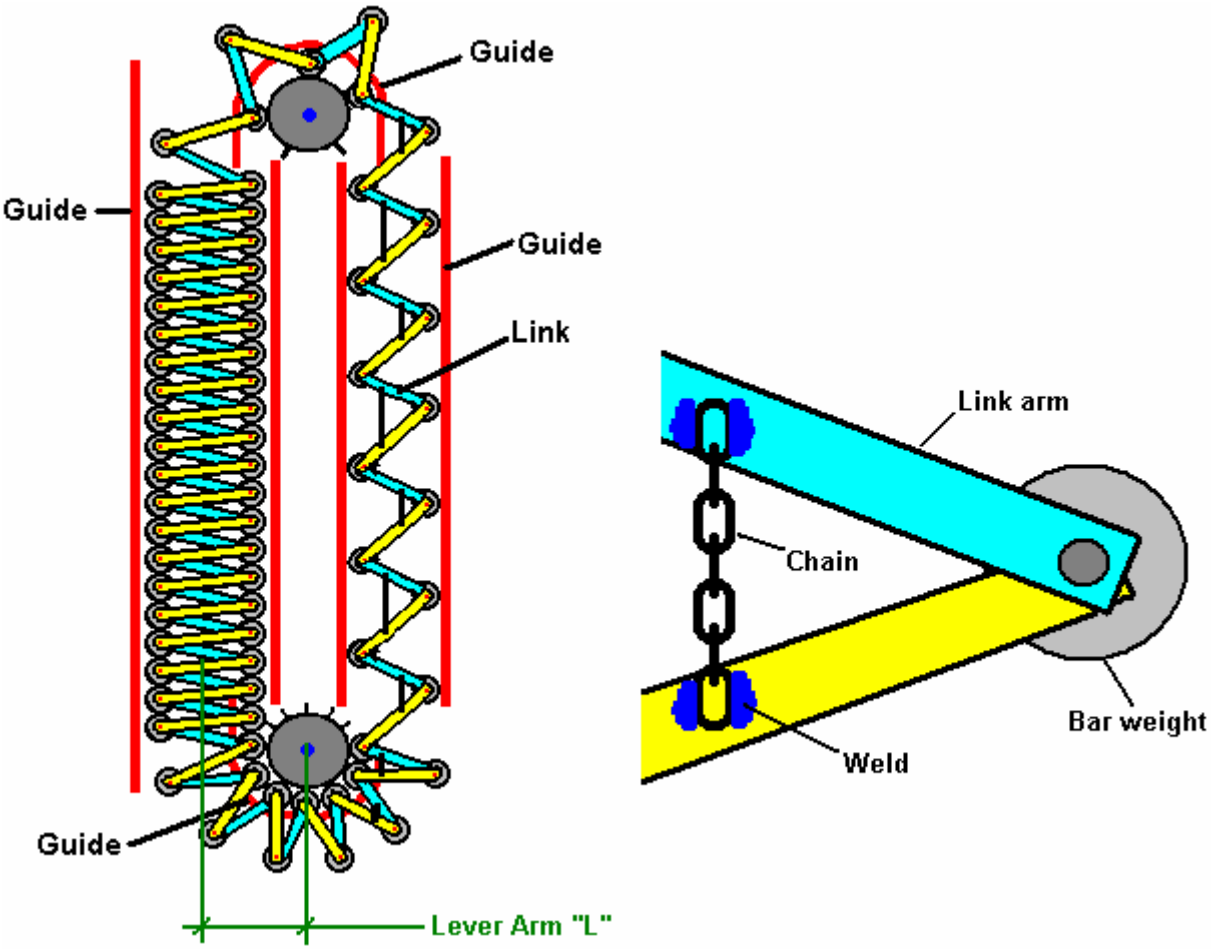

The diagrams have not shown the supporting framework which holds the axles in place and maintains the unit in a vertical position, as this framing is not specialised in any way, and there are many acceptable variations. A sensible precaution is to enclose the device in an upright box cabinet to make sure that there is no chance of anything getting caught in the rapidly moving mechanism. This is an impressive design of Murilo's, who recommends that in the implementation shown above, that the links shown in blue are made 5% longer than those shown in yellow, as this improves the weight distribution and drive of the lower sprocket wheel..

A washing machine has a maximum power requirement of 2.25 kW and in the UK a suitable 3.5 kW alternator costs £225 and needs to be spun at 3,000 rpm for full output.

While the above description covers Murilo's main design, it is possible to advance the design further, raising its efficiency in the process as well as reducing the construction effort needed to build it. For this version, the main components remain the same, with the upper axle geared to the lower axle as before and the upper axle rotating faster than the lower one. The main difference is that on the rising side, the chain opens up completely. This does away with the need for the chain links, moves the rising weights much closer in and reduces the number of rising weights:

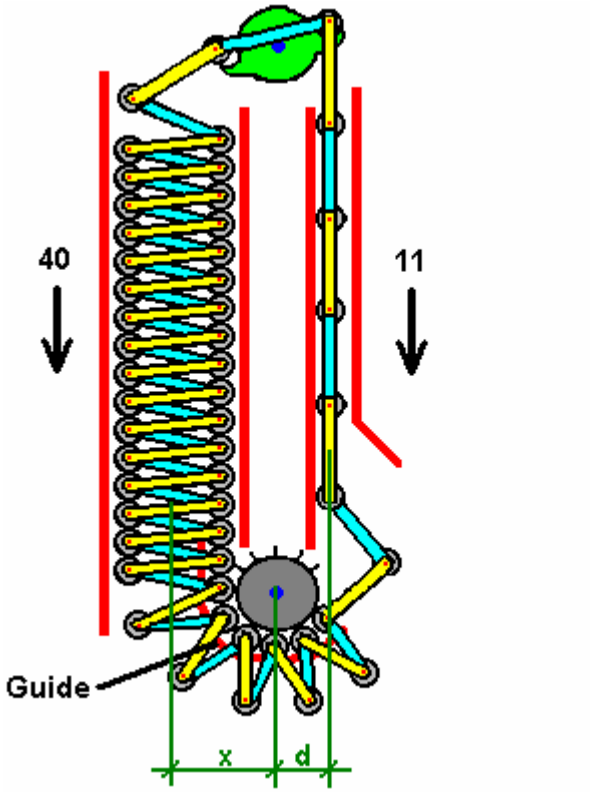

With a reduced number of weights in the diagram above, the weight imbalance is a very substantial 40:11 ratio with the massive advantage of a substantially reduced lever arm "**d**" which is much smaller than the lever arm "**x**" of the falling weights. This is a major imbalance, giving 40x pulling the axle in a counter-clockwise direction and only 11d opposing that movement.

In the description so far, it has been assumed that all components will be made of metal. This is not necessarily the best choice. Firstly, metal moving against metal does make a noise, so guides made robustly of thick plastic or other similar material would be a good choice for the guides for the weights.

The weights themselves could equally well be made from strong plastic piping filled with sand, lead pellets, concrete or any other convenient heavy material. The pipes would then have strong end caps capable of holding the pivots for the links. The sprocket wheels themselves could well be made from thick plastic material which would give a quieter operation and which could be bolted to the power take-off shaft with a bolt placed right through the axle.

Most of the dimensions are not critical. Increasing the diameter of the lower sprocket wheel will increase the power of the output axle but will lower its speed. Adding more weights will increase both the output power and to a lesser degree, the speed, but will increase the overall size of the unit and its overall weight and cost. Making each weight heavier will raise the output power, or reduce the overall size if the weight is contained in fewer weights. Increasing the length of the links means fewer weights on the rising side but will require larger sprocket wheels.

It is not necessary to have all the links the same size. If the lengths are chosen carefully and the indentations in the upper sprocket wheel cover the entire circumference, then every second link can be one indentation shorter which tips the weights into a more compact and effective column on the falling side:

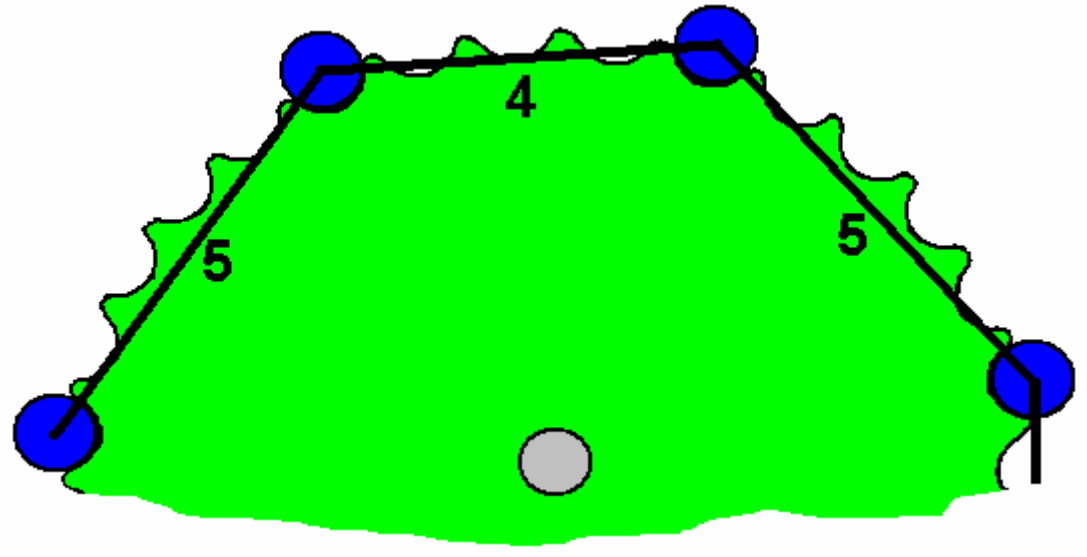

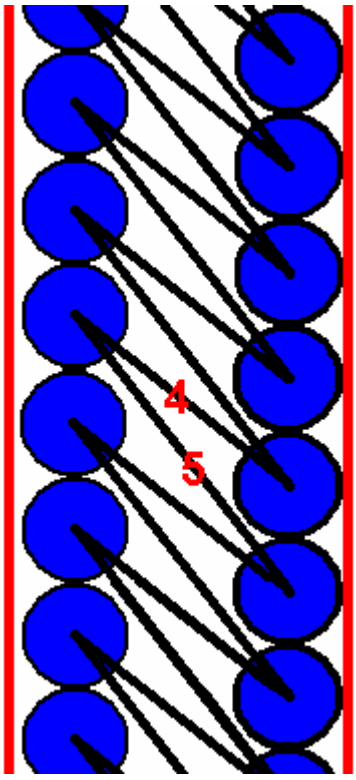

With this arrangement, the outer weights, shown here on the left, press down very firmly on the inside column of weights, making a compact group. If using plastic pipes with concrete then the hinge arrangement for the rods can be very simple, with a bolt set in the concrete as shown below.

The rods, washers and bolt can be supported on a thin, rigid strip placed across the top of the pipe. When the concrete has gone solid, the strip is removed and the gap produced by its removal then allows free movement of the rods. If this technique is used, then the bar weights are cast in two steps, with a tightly fitting disc pushed part way up inside the pipe so that one end can be filled while the other end remains open and ready for the completion of the other end.

One advantage of using plastic pipes is that if the sprocket wheels are made from a tough high-density plastic material, such as is used for food chopping boards, and the weight guides are also made from tough plastic, then there should be no metal-upon-metal noise produced during operation, if the bolt holes in the connecting rods are a good fit for the bolts used.

The concrete or mortar used as a filling can be made wet and pliable, since mechanical strength is not an issue here, and a filling with no voids in it is desirable. Even low quality concrete (caused by more water than absolutely necessary) would be more than adequate for this purpose.

The arrangement at the ends of a concrete-filled plastic pipe bar weight could be constructed like this:

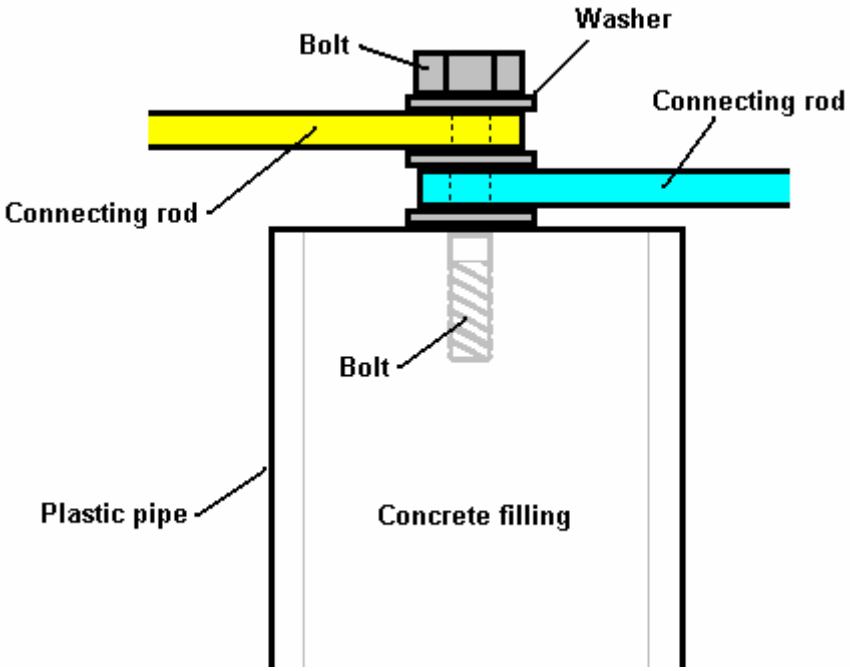

So, having seen these designs, do you still think that the force of gravity can't be used to perform useful work? Well, perhaps it looks that way, perhaps not.

Chas Campbell of Australia has recently shown a gravity wheel of his own design and construction. His observation was that while the wheel rotated satisfactory, it was not possible to draw off any usable power. There is little doubt that if a mechanical system is arranged so that there is greater weight on one side of a pivot point than there is on the other, that rotation will occur. That does not necessarily mean that excess energy can be drawn from the device.

In China, Lawrence Tseung and his colleagues have produced a car which is propelled by a motor powered by gravity, so what is the difference? Mr Tseung has studied the problem for some time now and he has produced a theory on how free-energy can be drawn from the gravitational field. In simple terms, one of the easiest and most successful ways to, as he puts it, "lead-out" the excess energy is through impulses fed to a flywheel. Most interestingly, Mr Tseung is quite excited by a second device produced by Chas Campbell, and that is the Chas Campbell electrical amplification system:

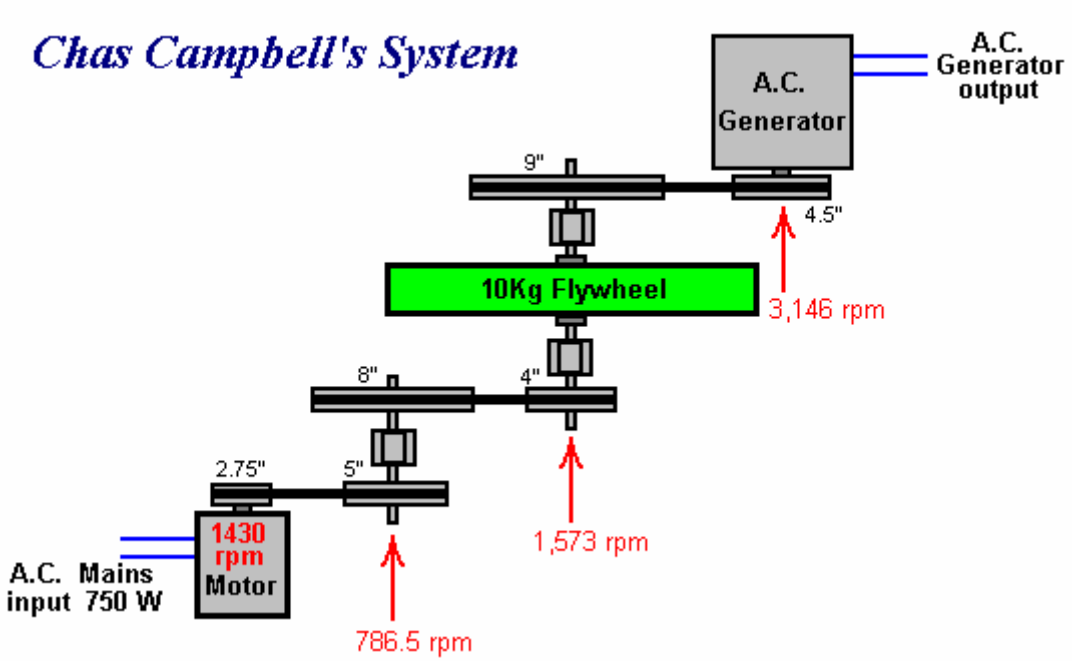

Most people see this as an electrical system, but applying his gravity "lead-out" theory, Mr Tseung see this as a gravitational free-energy system and he is building one just like it in China at the present time as he is so impressed by it.

What the sketch above does not show, is that on the intermediate shafts which appear to be just pivot points for standard gearing, other large discs are mounted. These appear to have no practical effect and are just decorative, but that is not necessarily the case.

Let me explain the overall system. A mains motor of 750 watt capacity (1 horsepower) is used to drive a series of belts and pulleys which form a gear-train which produces over twice the rotational speed at the shaft of an electrical generator. The intriguing thing about this system is that greater electrical power can be drawn from the output generator than appears to be drawn from the input drive to the motor. How can that be? Well, Mr Tseung's gravity theory explains that if a energy pulse is applied to a flywheel, then during the instant of that pulse, excess energy equal to **2mgr** is fed into the flywheel, where "**m**" is the mass (weight) of the flywheel, "**g**" is the gravitational constant and "**r**" is the radius of the centre of mass of the flywheel, that is, the distance from the axle to the point at which the weight of the wheel appears to act. If all of the flywheel weight is at the rim of the wheel, the "r" would be the radius of the wheel itself.

This means that if the flywheel (which is red in the following photographs) is driven smoothly at constant speed, then there is no energy gain. However, if the drive is not smooth, then excess energy is drawn from the gravitational field. That energy increases as the diameter of the flywheel increases. It also increases as the weight of the flywheel increases. It also increases if the flywheel weight is concentrated as far out

towards the rim of the flywheel as is possible. It also increases, the faster the impulses are applied to the system. Now take a look at the construction which Chas has used:

You notice that not only does he have a heavy flywheel of a fair size, but that there are three or four other large diameter discs mounted where they also rotate at the intermediate speeds of rotation. While these discs may well not have been placed there as flywheels, nevertheless, they do act as flywheels, and each one of them will be contributing to the free-energy gain of the system as a whole.

If the drive motor were a DC motor which is deliberately pulsed by a special power supply, then the effect is likely to be even greater. It is not clear if the irregular drive which makes this system work so well is due to the way that the mains motor works, or to slight slippage in the drive belts. The bottom line is that Chas' system produces excess energy, and although it is by no means obvious to everybody, that excess energy is being drawn from gravity.

Ok, so what are the requirements for an effective system? Firstly, there needs to be a suitable flywheel with as large a diameter as is practical, say 4 feet or 1.2 metres. The vast majority of the weight needs to be close to the rim. The construction needs to be robust and secure as ideally, the rate of rotation will be high, and of course, the wheel needs to be exactly at right angles to the axle on which it rotates and exactly centred on the axle:

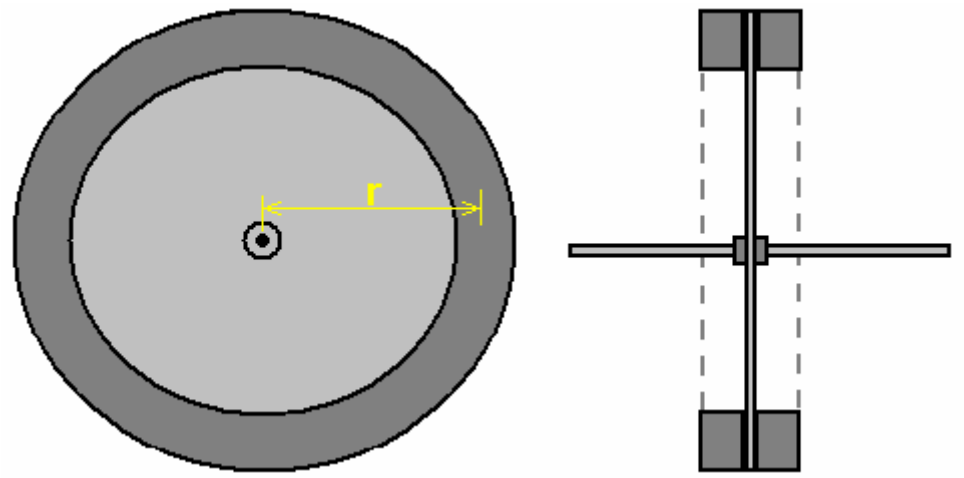

Next, you need a motor drive which gives a rapid pulsed drive to the shaft. This could be one of many different types. For example, the original motor design of Ben Teal where very simple mechanical contacts power simple solenoids which operate a conventional crankshaft with normal connecting rods:

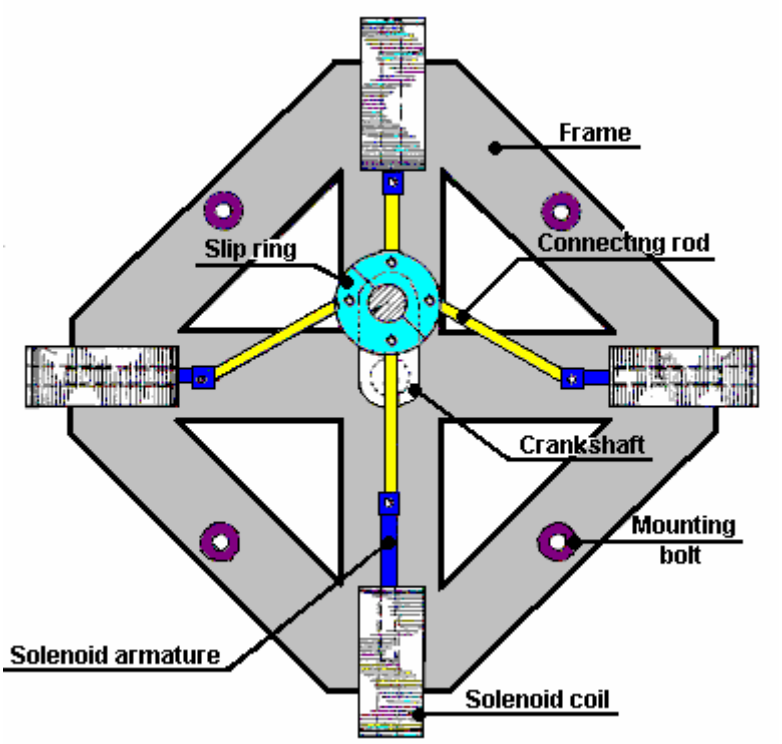

This style of motor is simple to construct and yet very powerful. It also meets the requirement for rapidly repeated impulses to the axle of the flywheel. The motor power can be increased to any level necessary by stacking additional solenoid layers along the length of the crankshaft:

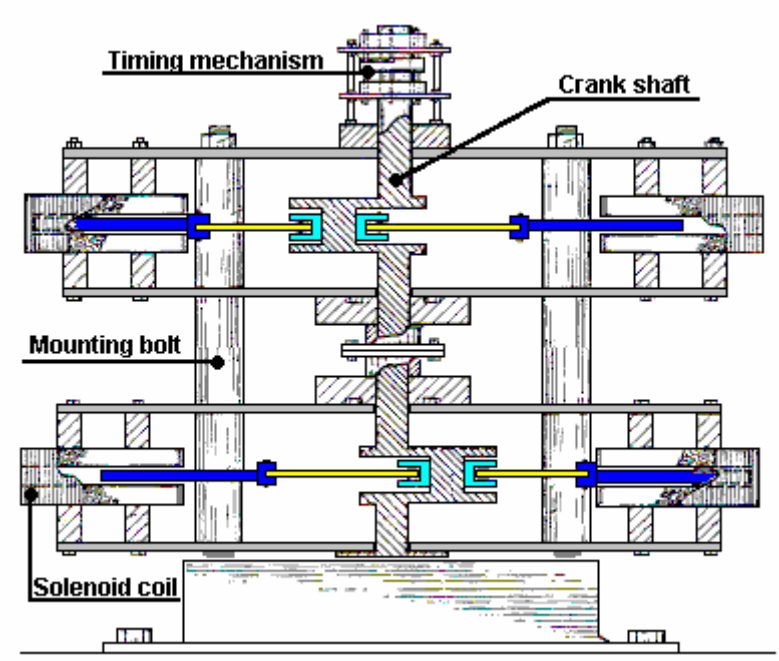

This style of motor looks very simple and its operation is very simple, but it is surprising how powerful the resulting drive is, and it is a very definite contender for a serious free gravitic energy device in spite of its simplicity.

An alternative suitable drive system could be produced by using the same style of permanent magnet and electromagnet drive utilised by the Adams motor, where electromagnets positioned just clear of the edge of the rotor disc are pulsed to provide an impulse to the drive shaft, in the case shown below, every 30 degrees of shaft rotation.

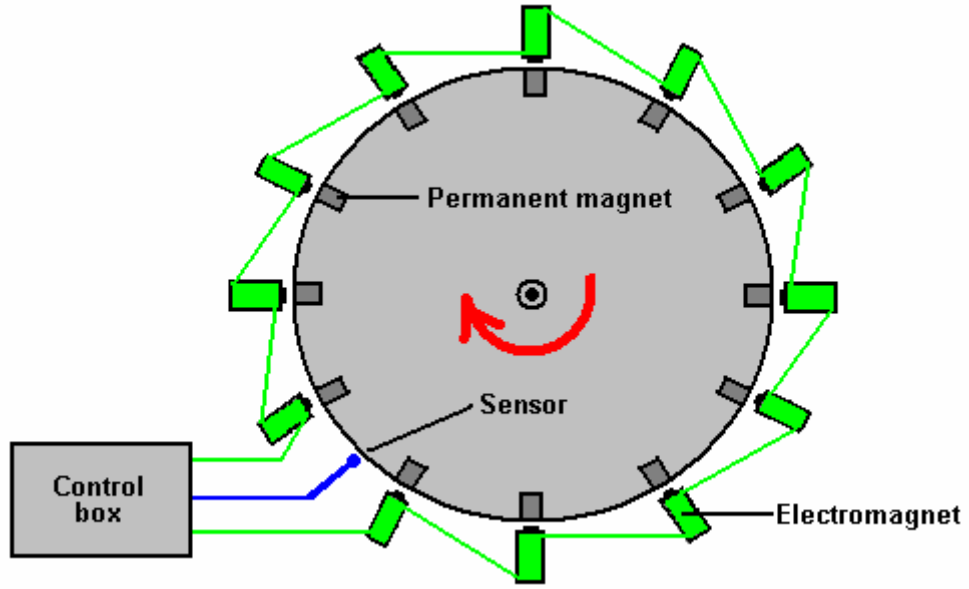

Here, the sensor generates a signal every time that one of the permanent magnets embedded in the rotor passes it. The control box circuitry allows adjustment of the time between the arrival of the sensor signal and the generation of a powerful drive pulse to the electromagnets, pushing the rotor onwards in its rotation. The control box can also provide control over the duration of the pulse as well, so that the operation can be fully controlled and tuned for optimum operation.

Any ordinary DC motor driven by a low-rate DC motor “speed controller” would also work in this situation, as it will generate a stream of impulses which are transmitted to the flywheel. The shaft of the flywheel will, of course, be coupled to an automotive alternator for generation of a low voltage output, or alternatively a mains voltage generator. It should be stressed that having several flywheels as part of the drive gearing, as Chas Campbell does, it a particularly efficient way of leading-out excess gravitational energy. Part of the electrical output can be used to provide a stabilised power supply to operate the drive for the flywheel.

Copyright 1998, Electronics 2000, Raymond Miecznik

Chapter 7

Here I will try to explain to you how **TRANSFORMERS** work. Again, let me stress the importance of knowing the basics in this hobby. A lot of people can't wait to learn the basics and jump right into building things, later they wonder why they fail to work.

TRANSFORMERS use induction to work, something that I covered in Chapter 6, and you can always visit the local library to learn more about them if you like.

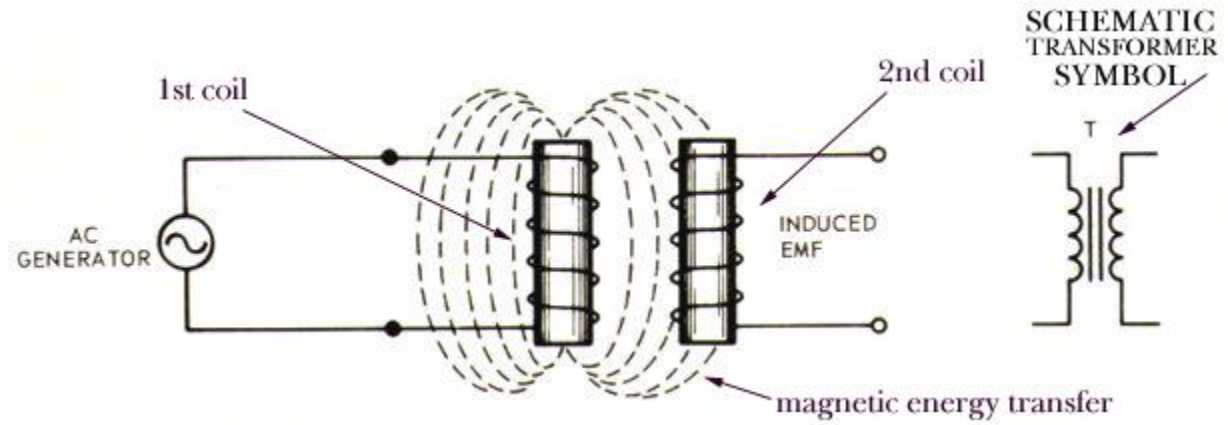

A term that you should be familiar with that plays an important role in understanding transformers is called **MUTUAL INDUCTANCE**. Mutual inductance is when you take two coils as described in Chapter 6, apply current to one coil only, don't matter which one as long as it is A/C current, and then place close together both coils (as long as they don't touch each other) and mutual inductance will take place. This is where the expanding and collapsing flux magnetic fields of the first coil with the current will cut across the winding of the second coil without the current, and voltage will be induced in the second coil.

Energy will be transferred through AIR, these two coils never touch each other and electricity is transformed through INDUCTION through the AIR and the connection between these two coils is made by magnetic field only!

Interesting isn't it ? and if you didn't know what induction is, you might not fully understand this, now could you ?

Ok, so...

The full assembly of these two coils is called a TRANSFORMER.

You might have seen transformers that may have looked like one of these:

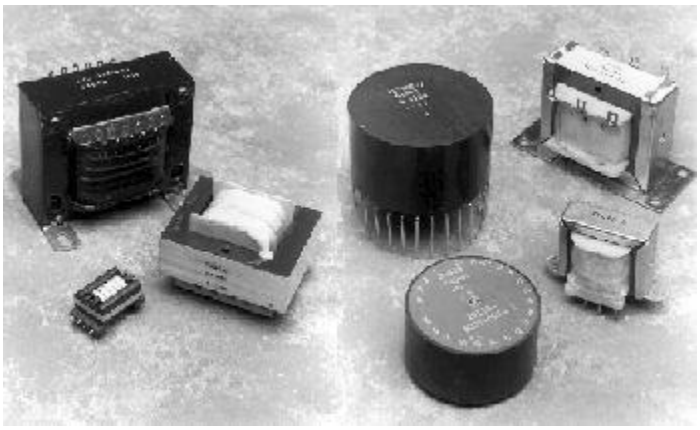

these are POWER Transformers, but have you ever seen ones like these ?

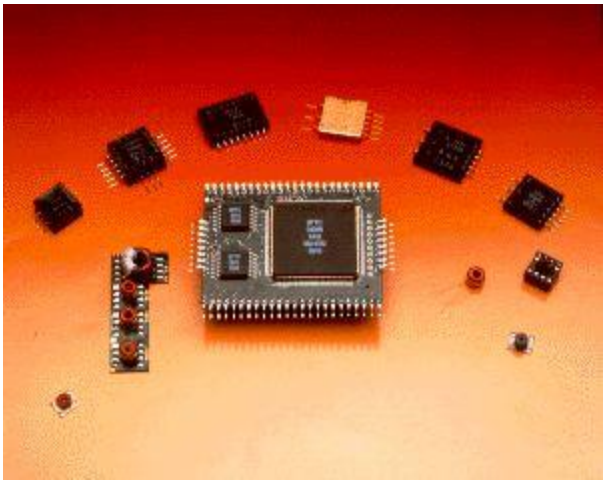

these are surface mount transformers. Do you see the BIG difference ? they can come in many different shapes and sizes.

If you want to get more familiar with different types of transformers that are available and description of each I recommend that you visit this company:

http://www.bttc-beta.com/ they manufacture many different transformers and are experts in this field.

More about transformers:

There are many different types of transformers, some won't even look like transformers, and it takes time to get familiar with the vast majority that are out there. It took me some time to learn many of them and so too it will take you.

Looking at the picture above of a simple transformer here is some more information about it. The simple assembly of the coils goes as follows; The INPUT coil (this means the one where A/C is introduced into the first coil, and on that picture above, this is the one on the left side) is called the **PRIMARY** winding and the output coil is called the **SECONDARY** winding.

A transformers job by what is called the technical definition is to transfer electrical energy from one circuit to another by means of varying the magnetic field and transformer setup.

Don't forget that mutual induction works because of self-induction which I covered in chapter 6. If you don't know what self-induction is of a single coil while connected to a varying power supply, then you won't understand the above.

Anyways, all this conduction stuff is measured in electronics using a standard, and this magic word is called HENRY or measured in **HENRYS**.

It is said that if a primary coil induces a minimum one volt transfer into the secondary coil when the applied current to the primary coil is changing at a rate of ONE AMPERE per second, a mutual inductance of 1 HENRY takes place or inductance is ONE HENRY. The letter M represents Mutual inductance or HENRY. The complete formula is:

$$M\,(\text{in henrys}) = \frac{e}{\triangle i / \triangle t}$$

(SECONDARY voltage)

(ROC or rate of change)

where:

e = how many volts in CEMF.

i = change of current in amperes

t = change of time in seconds

Here is a quick example of how to use this formula. Suppose you are given this information to find out the mutual inductance of a transformer.

The current applied to the primary coil changes at 2 amperes per second and it in turn induces 20 volts in the secondary coil (remember coils do not touch each other, the electricity is transferred through the air only, no electrical connection of any kind is attached between the coils), **What is the mutual induction ?**

You really don't even need to understand this to solve it, it's very simple, if you know the formula, anyone with very basic math skills can do this, it's a matter to fill in the blanks for corresponding info.

the 20 volts goes to = e

the 2 amperes goes to = i

and t gets 1, why 1 ? because we are told that it alternates 2 amperes every 1 second and t stand for time, so t gets a value of 1.

so M = 2/1 = 2 and 20/2 = 10, so the answer is 10 henrys. And what is 10 henrys again ? the answer lies in the question, but to be nice I'll tell you.

If a primary coil induces 20 volts in the secondary coil when the current in the primary coil is changing at the rate of two amperes per second, the mutual induction is 10 HENRYS.

And yet more information, **What is COUPLING ?**

While the word coupling might sound complicated, it is not. Coupling is a unit of measurement that is used in transformer technology to measure the effect of the position of the individual coils and how their position effect induction in the transformer circuit.

Let me give you an example. As you already might know by now, and I hope that you do, transformers work because of induction, and so the induction will be greater if the two coils are positioned closer together, right ? because the many magnetic lines will cut across the secondary coils with a greater force and a greater secondary voltage will be induced.

Yes, the opposite is true, if the coils are spread farther apart from each other, less of the magnetic energy will be transferred and so the induction in the secondary coil will decrease. Understand ? I hope so.

And so the effect of the PRIMARY and SECONDARY coils to each other based on their respective distance position from each other is called COUPLING. That's all coupling is.

If all the lines of the primary coils windings cut exactly perfect across the secondary, it is said that the COUPLING is at 1 or is UNITY COUPLING with a value of 1.

If the two coils are separated so that only half the magnetic energy is transferred from the primary to the secondary, the COUPLING is .5 The decimal point in the .5 indicates the number of flux lines available for mutual induction or the percentage, and in this case 50% and is called the **COEFFICIENT OF COUPLING** and is assigned a letter of ***k.***

Also know what the angle of the two coils and their respective positions, how that will affect their mutual induction. For a maximum mutual induction to take place, the right angles must be used. And right angles means that both coils are parallel to each other. If you turn one coil so that there is an angular different like by 45 or 90 degrees, the mutual induction will be decreased.

Ok, now for another formula. If you know the coupling or the coefficient of coupling and the inductance of each coil, you can find out what the mutual inductance is by following this equation or formula:

$$M = k \sqrt{L_1 \quad L_2} = \text{mutual induction}$$

So here is an example of this formula. **EXAMPLE:** Each of the two coils in the transformer are 8H and have a coupling of .5 **What is their mutual inductance ?**

So the first L1 represents one of the coils in the transformer and the L2 the other, the example says that each coil has 8H, so 8 x 8 = 64 and what is then the square root of 64 ? 8 and then, k = .5, so 8 x .5 = 4 henrys.

How do transformers work in real life ?

One of the best ways to start out my transformer explanation is to introduce you to the power transformer first, because it is the most visible transformer type that you have probably in one time or another already seen even if you don't know how it works.

Basically there are two major types of POWER transformers out there, don't forget that power transformers are designed to work at power frequencies of between 30 to 500 Hz. The two major types are the CORE TYPE and the SHELL type:

The SHELL type which is the more popular model is shown below:

www.electronics2000.com

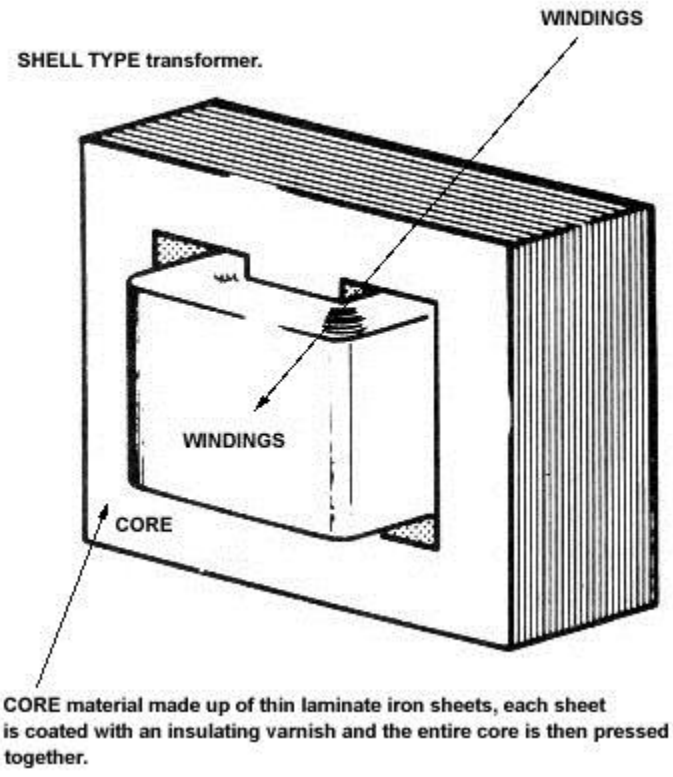

CORE material made up of thin laminate iron sheets, each sheet is coated with an insulating varnish and the entire core is then pressed together.

In the Shell type the windings are wound in layers and fit over the center of the core section.

The CORE type is the next model below:

www.electronics2000.com

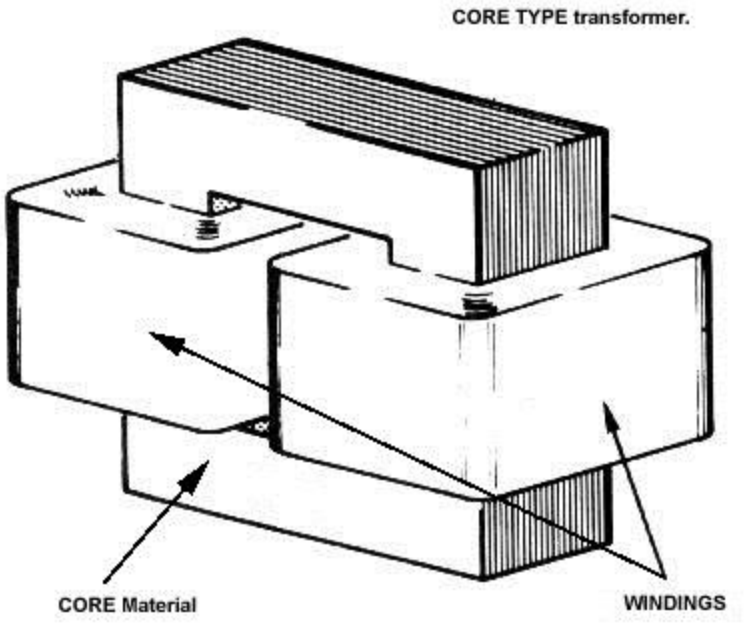

In the Core type the primary and secondary windings are placed on each side of the core.

Many other power transformers exist, and they may have more then one primary or secondary windings.

Power Transformer Theory:

When an A/C current/voltage is introduced to the primary winding of the transformer and the secondary winding is OPEN (that means no A/C current/voltage is applied to it), a magnetic field will be created in the primary coil or winding that will establish the magnetic fields necessary for transformer operation. The magnetized current in the primary coil depends on the A/C current/voltage applied and how many number of turns you wind around the coil. (I x N), I means current, N means number of turns on the winding/coil. The more is applied, the larger magnetic energy can be created in the primary coil/winding.

Now the expanding and collapsing magnetic fields of the primary coil cut across the secondary coil/winding and in turn induce a voltage in the secondary coil. The polarity outcome of the secondary coil will depend on the direction of the secondary coil winding and the external connections. Most of the time transformers invert the magnetic energy in the opposite direction to the secondary coil (see illustration below):

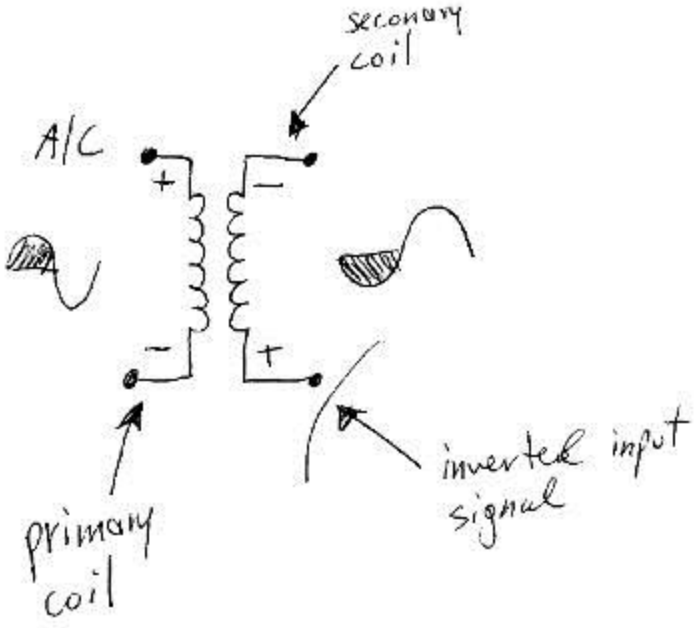

Hopefully you can read my hand writing. Inverted means made opposite, like inverting a picture, from a positive to a negative image. So it means that the + and - terminal location on the secondary side is reversed that from the positive input side.

Many of todays transformers are made in a way, especially the SHELL type transformers, where the unity coupling that exist between the primary and the secondary is at UNITY or very close to a COUPLING of 1. So therefore, since both the cores are wind closely together and the unit yis at almost a perfect 1 and are mounted on a common CORE, the available flux for the secondary coil is almost the same as for the primary.

Anyways, if the number of turns on the secondary coil are more then on the primary, this will increase the secondary voltage as it passes from the primary in the form of magnetic energy, but decrease current or AMPS. The opposite is also true. **THIS IS CALLED a STEP-UP transformer.** If the secondary has less turns in the coil then the primary, the secondary coil's voltage will decrease and the current or AMPS will increase. **This is called a STEP-DOWN transformer.**

Support Free Energy and purchase the bumper sticker

The New Tesla Electromagnetics and the Secrets of Electrical Free Energy

By T.E. Bearden
© 1984

Table of Contents

Foreword

Comments on the New Tesla Electromagnetics:
Part I: Discrepancies in the Present EM Theory
by T. E. Bearden

Comments on the New Tesla Electromagnetics:
Part II: The Secret of Electrical Free Energy
by T. E. Bearden

Overture to a New Age Technology
by Dr. Rolf Schaffranke

REVIEW AND OUTLOOK - The Development of Post-Relativistic Concepts in Physics and Advanced Technology Abroad
by Dr. Rolf Schaffrancke

The Tom Bearden Website

COMMENTS ON THE NEW TESLA ELECTROMAGNETICS

Part I: Discrepancies in Present EM Theory

© T. E. Bearden 1982

There are at least twenty-two major discrepancies presently existing in conventional electromagnetics theory. This paper presents a summary of those flaws, and is a further commentary on my discussion of scalar longitudinal Tesla waves in a previous paper, "Solutions to Tesla's Secrets and the Soviet Tesla Weapons," Tesla Book Company, 1981 and 1982.

I particularly wish to express my deep appreciation to two of my friends and colleagues who at this time, I believe, wish to remain anonymous. One of the two is an experimental genius who can produce items on the bench that do not work by orthodox theory. The second is a master of materials science and electromagnetics theory. I thank them both for their exceptional contributions and stimuli regarding potential shortcomings in present electromagnetics theory, and their forbearance with the many discussions we have held on this and related subjects.

It goes without saying that any errors in this paper are strictly my own, and not the fault of either of my distinguished colleagues.

(1) In present electromagnetics theory, charge and charged mass are falsely made identical. Actually, on a charged particle, the "charge" is the flux of virtual particles on the "bare particle" of observable mass. The charged particle is thus a "system" of true massless charge coupled to a bare chargeless mass. The observable "mass" is static, three-dimensional, and totally spatial. "Charge" is dynamic, four-dimensional or more, virtual and spatiotemporal. Further, the charge and observable mass can be decoupled, contrary to present theory. Decoupled charge -- that is, the absence of mass -- is simply what we presently refer to as "vacuum." Vacuum, spacetime, and massless charge are all identical. Rigorously, we should utilize any of these three as an "ether," as suggested for vacuum by Einstein himself (see

Max Born, Einstein's Theory of Relativity, Revised Edition, Dover Publications, New York, 1965, p. 224). And all three of them are identically anenergy -- not energy, but more fundamental components of energy.

(2) Electrostatic potential is regarded as a purely 3-dimensional spatial stress. Instead, it is the intensity of a many-dimensional (at least four-dimensional) virtual flux and a stress on all four dimensions of spacetime. This is easily seen, once one recognizes that spacetime is identically massless charge. (It is not "filled" with charge; rather, it is charge!) Just as, in a gas under pressure, the accumulation of additional gas further stresses the gas, the accumulation of charge (spacetime) stresses charge (spacetime). Further, if freed from its attachment to mass , charge can flow exclusively in time, exclusively in space, or in any combination of the two. Tesla waves -- which are scalar waves in pure massless charge flux itself -- thus can exhibit extraordinary characteristics that ordinary vector waves do not possess. And Tesla waves have extra dimensional degrees of freedom in which to move, as compared to vector waves. Indeed, one way to visualize a Tesla scalar wave is to regard it as a pure oscillation of time itself.

(3) Voltage and potential are often confused in the electrostatic case, or at least thought of as "composed of the same thing." For that reason, voltage is regarded as "potential drop". This also is not true. Rigorously, the potential is the intensity of the virtual particle flux at a single point -- whether or not there is any mass at the point -- and both the pressure and the point itself are spatiotemporal (4-dimensional), not spatial (3-dimensional) as presently assumed. Voltage represents the spatial intersection of the difference in the potential between two separated spatial points, and always implies at least a miniscule flow of mass current (that is what makes it spatial!). "Voltage" is spatial and depends upon the presence of observable mass flow, while scalar electrostatic potential is spatiotemporal and depends upon the absence of observable mass flow. The two are not even of the same dimensionality.

(4) The charge of vacuum spacetime is assumed to be zero, when in fact it is a very high value. Vacuum has no mass, but it has great massless charge and virtual particle charge flux. For proof that a charged vacuum is the seat of something in motion, see G.M. Graham and D.G. Lahoz, "Observation of static electromagnetic angular momentum in vacuo," Nature, Vol. 285, 15 .May 1980, pp. 154-155. In fact, vacuum IS charge, identically, and it is also "spacetime" and at least four-dimensional.

(5) Contrary to its present usage, zero is dimensional and relative in its context. A three-dimensional spatial hole, for example, exists in time. If we model time as a dimension, then the spatial hole has one dimension in 4-space. So a spatial absence is a spatiotemporal presence. In the vacuum 4-space, a spatial nothing is still a something. The "virtual" concept and the mathematical concept of a derivative are simply two present ways of unconsciously addressing this fundamental problem of the dimensional relativity of zero.

(6) The concepts of "space" and "time" imply that spacetime (vacuum) has been separated into two parts. We can only think of a space as "continuing to exist in time " To separate vacuum spacetime into two pieces, an operation is continually required. The operator that accomplishes this splitting operation is the photon interaction, the interaction of vector electromagnetic energy or waves with mass. I have already strongly pointed out this effect and presented a "raindrop model" of first-order physical change itself in my book, The Excalibur Briefing, Strawberry Hill Press, San Francisco, 1980, pp. 128-130.

(7) "Vector magnetic potential" is assumed to be always an aspect of (and connected to) the magnetic field. In fact it is a separate, fundamental field of nature and it can be entirely disconnected from the magnetic field. See Richard P. Feynman et al, The Feynman Lectures on Physics, Addison-Wesley Publishing Co., New York, 1964, Vol. II, pp. 15-8 to 15-14. Curiously, this fact has been proven for years' yet it has been almost completely ignored in the West. The "Vx" operator, when applied to the A-field, makes B-field. If the Vx operator is not applied, the "freed" A-field possesses much-expanded characteristics from those presently allowed in the "bound" theory. Specifically, it becomes a scalar or "shadow vector" field; it is not a normal vector field. (note: for V read inverted capital Delta)

(8) The speed of light in vacuum is assumed to be a fundamental constant of nature. Instead it is a function of the intensity of the massless charge flux (that is, of the magnitude of the electrostatic potential) of the vacuum in which it moves. (Indeed, since vacuum and massless charge are one and the same, one may say that the speed of light is a function of the intensity of the spatiotemporal vacuum!). The higher the flux intensity (charge) of the vacuum, the faster the speed of light in it. This is an observed fact and already shown by hardcore measurements. For example, distinct differences actually exist in the speed of light in vacuo, when measured on the surface of the earth as compared to measurements in space away from planetary masses. In a vacuum on the surface of the earth, light moves significantly faster. For a discussion and the statistics, see B. N. Belyaev, "On Random Fluctuations of the Velocity of Light in Vacuum," Soviet Physics

Journal, No. 11, Nov. 1980, pp. 37-42 (original in Russian; translation by Plenum Publishing Corporation.) The Russians have used this knowledge for over two decades in their strategic psychotronics (energetics) program; yet hardly a single U.S. scientist is aware of the measured variation of c in vacuo. In fact, most Western scientists simply cannot believe it when it is pointed out to them!

(9) Energy is considered fundamental and equivalent to work. In fact, energy arises from vector processes, and it can be disassembled into more fundamental (anenergy) scalar components, since the vectors can. These scalar components individually can be moved to a distant location without expending work, since one is not moving force vectors. There the scalar components can be joined and reassembled into vectors to provide "free energy" appearing at a distance, with no loss in between the initial and distant points. For proof that a vector field can be replaced by (and considered to be composed of) two scalar fields, see E. T. Whittaker, Proceedings of the London Mathematical Society, Volume 1, 1903, p. 367. By extension, any vector wave can be replaced by two coupled scalar waves.

(10) The classical Poynting vector predicts no longitudinal wave of energy from a time-varying, electrically charged source, In fact, an exact solution of the problem does allow this longitudinal wave. See T. D. Keech and J. F. Corum, "A New Derivation for the Field of a Time-Varying Charge in Einstein's Theory," International Journal of Theoretical Physics, Vol. 20, No, 1, 1981, pp. 63-68 for the proof.

(11) The present concepts of vector and scalar are severely limited, and do not permit the explicit consideration of the internal, finer-grained structures of a vector or a scalar. That is, a fundamental problem exists with the basic assumptions in the vector mathematics itself. The "space" of a vector field, for example, does not have inter-nested sublevels (subspaces) containing finer "shadow vectors" or "virtual vectors," Yet particle physics has already discovered that electrical reality is built that way. Thus one should actually use a "hypernumber" theory after the manner of Charles Musés. A scalar is filled with (and composed of) nested levels of other "spaces" containing vectors, where these sum to "zero" in the ordinary observable frame without an observable vector resultant. In Musés' mathematics, for example, zero has real roots. Real physical devices can be -- and have been -constructed in accordance with Muses' theory. For an introduction to Musés' profound hypernumbers approach, see Charles Musés' foreword to Jerome Rothstein, Communication Organization and Science, The Falcon's Wing Press, Indian Hills, Colorado, 1958. See also Charles Musés, "Applied Hypernumbers: Computational Concepts," Applied Mathematics and

Computation, Vol. 3, 1976. See also Charles Musés, "Hypernumbers II," Applied Mathematics and Computation, January 1978.

(12) With the expanded Tesla electromagnetics, a new conservation of energy law is required. Let us recapitulate for a moment. The oldest law called for the conservation of mass. The present law calls for the conservation of "mass and energy", but not each separately. If mass is regarded as simply another aspect of energy, then the present law calls for the conservation of energy. However, this assumes that energy is a basic, fundamental concept. Since the energy concept is tied to work and the movement of vector forces, it implicitly assumes "vector movement" to be a "most fundamental" and irreducible concept. But as we pointed out, Whittaker showed that vectors can always be further broken down into more fundamental coupled scalar components. Further, Tesla discovered that these "coupled components" of "energy" can be individually separated, transmitted, processed, rejoined, etc. This directly implies that energy per se need not be conserved. The new law therefore calls for the conservation of anenergy, the components of energy. These components may be coupled into energy, and the energy may be further compacted into mass. It is the sum total of the (anenergy) components -- coupled and uncoupled -- that is conserved, not the matter or the energy per se. Further, this conservation of anenergy is not spatial; rather, it is spatiotemporal in a spacetime of at least four or more dimensions.

(13) Relativity is presently regarded as a theory or statement about fundamental physical reality. In fact, it is only a statement about FIRST ORDER reality -- the reality that emerges from the vector interaction of electromagnetic energy with matter. When we break down the vectors into scalars (shadow vectors or hypervectors), we immediately enter a vastly different, far more fundamental reality. In this reality superluminal velocity, multiple universes, travel back and forth in time, higher dimensions, variation of all "fundamental constants" of nature, materialization and dematerialization, and violation of the "conservation of energy" are all involved. Even our present Aristotlean logic -- fitted to the photon interaction by vector light as the fundamental observation mechanism -- is incapable of describing or modeling this more fundamental reality. Using scalar waves and scalar interactions as much subtler, far less limited observation/detection mechanisms, we must have a new "superrelativity" to describe the expanded electromagnetic reality uncovered by Nikola Tesla.

(14) "Charge" is assumed to be quantized, in addition to always occurring with -- and locked to -- mass. Indeed, charge is not necessarily quantized just as it is not necessarily locked to mass.

Ehrenhaft discovered and reported fractional charges for years, in the 30's and 40's, and was ignored. See P.A.11. Dirac, "Development of the Physicist's Conception of Nature," Symposium on the Development of the Physicist's Conception of Nature, ed. Jagdish Merha, D. Reidel, Boston, 1973, pp. 12-14 for a presentation of some of Ehrenhaft's results. Within the last few years Stanford University· researchers also have positively demonstrated the existence of "fractional charge." For a layman's description of their work, see "A Spector Haunting Physics," Science News, Vol. 119, January 31, 1981, pp. 68-69. Indeed, Dirac in his referenced article points out that Millikan himself -- in his original oildrop experiments -- reported one measurement of fractional charge, but discounted it as probably due to error.

(15) Presently, things are always regarded as traveling through normal space. Thus we use or model only the most elementary type of motion -- that performed by vector electromagnetic energy. We do not allow for things to "travel inside the vector flow itself." Yet, actually, there is a second, more subtle flow inside the first, and a third, even more subtle flow inside the second, and so on. We may operate inside, onto, into, and out of energy itself -- and any anenergy component of energy. There are hypervectors and hyperscalars unlimited, within the ordinary vectors and scalars we already know. Further, these "internal flows" can be engineered and utilized, allowing physical reality itself to be directly engineered, almost without limits.

(16) We always assume everything exists in time. Actually, nothing presently measured exists in time, because the physical detection/ measurement process of our present instruments destroys time, ripping it off and tossing it away -- and thereby "collapsing the wave function." Present scientific methodology thus is seriously flawed. It does not yield fundamental (spacetime) truth, but only a partial (spatial) truth. This in turn leads to great scientific oversights. For example, mass does not exist in time, but mass x time (masstime) does. A fundamental constant does not exist in time, but the "constant x time" does. Energy does not exist in time, but energy x time (action) does. Even space itself does not exist in time -- spacetime does. We are almost always one dimension short in every observable we model. Yet we persist in thinking spatially, and we have developed 1nstruments that detect and measure spatially only. Such instruments can never measure and detect the phenomenology of the nested substrata of time. By using scalar technology, however, less limited instruments can indeed be constructed -and they have been. With such new instruments, the phenomenology of the new electromagnetics can be explored and an engineering technology developed.

(17) We do not recognize the connection between nested levels of virtual state (particle physics) and orthogonally rotated frames (hyperspaces). Actually the two are identical, as I showed in the appendix to my book, The Excalibur Briefing, Strawberry Hill Press, San Francisco, 1980, pp. 233-235. A virtual particle in the laboratory frame is an observable particle in a hyperspatial frame rotated more than one orthogonal turn away. This of course implies that the hyperspatial velocity of all virtual particles is greater than the speed of light. The particle physicist is already deeply involved in hyperspaces and hyperspatial charge fluxes without realizing it. In other words, he is using tachyons (particles that move faster than light) without realizing it.

(18) Presently quantum mechanics rigorously states that time is not an observable, and therefore it cannot be measured or detected. According to this assumption, one must always infer time from spatial measurements, because all detections and measurements are spatial. With this assumption, our scientists prejudice themselves against even looking for finer, subquantal measurement methodologies and instrumentation. Actually this present limitation is a result of the type of electromagnetics we presently know, where all instruments (the "measurers") have been interacted with by vector electromagnetic energy (light). Every mass that has temperature (and all masses do!) is continually absorbing and emitting photons, and in the process they are continually connecting to time and disconnecting from time. If time is continually being carried away from the detector itself by its emitted photons, then the detector cannot hold and "detect" that which it has just lost. With Tesla electromagnetics, however, the fundamental limitation of our present instruments need not apply. With finer instruments, we can show there are an infinite number of levels to "time", and it is only the "quantum level time" which is continually being lost by vector light (photon) interaction. By using subquantal scalar waves, instruments can move to deeper levels of time -- in which case the upper levels of time ARE measureable and detectable, in contradistinction to the present assumptions.

(19) In the present physics, time is modeled as, and considered to be, a continuous dimension such as length. This is only a gross approximation. Indeed, time is not like continuous "dimension," but more like a series of "stitches," each of which is individually made and then ripped out before the next stitch appears. "Vector light" photons interact one at a time, and it is this interaction with mass that creates quantum change itself. The absorption of a photon -- which is energy x time -- by a spatial mass converts it to masstime: the time was added by the photon. The emission of a photon tears away the time, leaving behind again a spatial mass. It is not accidental, then, that time flows at

the speed of light, for it is light which contains and carries time. It is also not accidental that the photon IS the individual quantum. Since all our instruments presently are continually absorbing and emitting photons, they are all "quantized," and they accordingly "quantize" their detections. This is true because all detection is totally internal to the detector, and the instruments detect only their own internal changes. Since these detections are on a totally granular quantized background, the detections themselves are quantized. The Minkowski model is fundamentally erroneous in its modeling of time, and for that reason relativity and quantum mechanics continue to resist all attempts to successfully combine them, quantum field theory notwithstanding.

(20) Presently, gravitational field and electrical field are considered mutually exclusive. Actually this is also untrue. In 1974, for example, Santilly proved that electrical field and gravitational field indeed are not mutually exclusive In that case, one is left with two possibilities: (a) they are totally the same thing, or (b) they are partially the same thing. For the proof, see R. M. Santilli, "Partons and Gravitation: Some Puzzling Questions," Annals of Physics, Vol. 83, No. 1, March 1974. With the new Tesla electromagnetics, pure scalar waves in time itself can be produced electrically, and electrostatics (when the charge has been separated from the mass) becomes a "magic" tool capable of directly affecting and altering anything that exists in time--including gravitational field. Antigravity and the inertial drive are immediate and direct consequences of the new electromagnetics.

(21) Presently, mind is considered metaphysical, not a part of physics, an not affected by physical means. Literally, the prevailing belief of Western scientists is that man is a mechanical robot -- even though relativity depends entirely upon the idea of the "observer." Western science today thus has essentially become dogmatic, and in this respect borders on a religion. Since this "religion," so to speak, is now fairly well entrenched in its power in the state, Western science is turning itself into an oligarchy. But mind occupies time, and when we measure and affect time we can directly measure and affect mind itself. In the new electromagnetics, then, man regains his dignity and his humanity by restoring the reality of mind and thought to science. In my book, The Excalibur Briefing, I have already pointed out the reality of mind and a simplified way in which it can be modeled to the first order. With scalar wave instruments, the reality of mind and thought can be measured in the laboratory, and parapsychology becomes a working, engineering, scientific discipline.

(22) Multiple-valued basic dimensional functions are either not permitted or severely discouraged in the present theory For one thing, integrals of multiple valued derivative functions have the annoying

habit of "blowing up" and yielding erroneous answers, or none at all. And we certainly do not allow multiple types of time! This leads to the absurdity of the present interpretation of relativity which permits only a single observer (and a single observation) at a time. So if one believes as "absurd" a thing as the fact that more than one person can observe an apple at the same time, the present physics fails. However, the acceptance of such a simple proposition as multiple simultaneous observation leads to a physics so bizarre and incredible that most Western physicists have been unable to tolerate it, much less examine its consequences. In the physics that emerges from multiple simultaneous observation, all possibilities are real and physical. There are an infinite number of worlds, orthogonal to one another, and each world is continually splitting into additional such "worlds" at a stupendous rate. Nonetheless, this physics was worked out by Everett for his doctoral thesis in 1956, and the thesis was published in 1957. (See Hugh Everett, III, The Many-Worlds Interpretation of Quantum Mechanics: A Fundamental Exposition, with papers by J. A. Wheeler, B.S. DeWitt, L. N. Cooper and D. Van Vechten, and N. Graham; eds. Bryce S. Dewitt and Neill Graham, Princeton Series in Physics, Princeton University Press, 1973.) Even though it is bizarre, Everett's physics is entirely consistent with all the present experimental basis of physics. The present electromagnetic theory is constructed for only a single "world" or universe -- or "level." The expanded theory, on the other hand, contains multiply nested levels of virtual state charge -- and these levels are identically the same as orthogonal universes, or "hyperframes." Multiple kinds -- and values -- of time also exist. The new concept differs from Everett's, however, in that the orthogonal universes intercommunicate in the virtual state. That is, an observable in one universe is always a virtual quantity in each of the other universes. Thus one can have multi-level "continuities" and "discontinuities" simultaneously, without logical conflict. It is precisely these levels of charge -- these levels of scalar vacuum -- that lace together the discontinuous quanta generated by the interaction of vector light with mass.

However, to understand the new electromagnetic reality, one requires a new, expanded logic which contains the old Aristotlean logic as a subset. I have already pointed out the new logic in my paper, "A Conditional Criterion for Identity, Leading to a Fourth Law of Logic," 1979, available from the National Technical Information Center, AD-A071032.

Even as logic is extended, quantum mechanics, quantum electrodynamics, and relativity are drastically changed by the Tesla electromagnetics, as I pointed out in my paper, "Solutions to Tesla's Secrets and the Soviet Tesla Weapons," Tesla Book Company, 1580

Magnolia, Millbrae, California, 94030, 1980.

The present electromagnetics is just a special case of a much more fundamental electromagnetics discovered by Nikola Tesla, just as Newtonian physics is a special case of relativistic physics. But in the electromagnetics case, the differences between the old and the new are far more drastic and profound.

ADDITIONAL REFERENCES

1, Boren, Dr. Lawrence Milton, "Discovery of the Fundamental Magnetic Charge (Arising from the new Conservation of Magnetic Energy)," 1981/82 (private communication). Dr. Boren has a cogent argument that the positron is the fundamental unit of magnetic charge. His theory thus assigns fundamentally different natures to positive charge and negative charge. In support of Dr. Boren, one should point out that the "positive" end of circuits can simply be "less negative" than the "negative" end. In other words, the circuit works simply from higher accumulation of negative charges (the "negative" end) to a lesser accumulation of negative charges (the "positive" end). Nowhere need there be positive charges (protons, positrons, etc.) to make the circuit work. Dr. Boren's theory, though dramatic at first encounter, nonetheless bears close and meticulous examination -- particularly since he has been able to gather experimental data which support his theory and disagree with present theory.

2. Eagle, Albert, "An Alternative Explanation of Relativity Phenomena," Philosophical Magazine and Journal of Science, No. 191, December 1939, pp. 694-701.

3. Ehrenhaft, Felix and Wasser, Emanuel, "Determination of the Size and Weight of Single Submicroscopic Spheres of the Order of Magnitude r = 4 x 10(-5) cm. to 5 x 10(-6) cm., as well as the Production of Real Images of Submicroscopic Particles by means of Ultraviolet Light," Phil. Mag. and Jour. of Sci., Vol. II (Seventh Series), No. 7, July 1926, pp. 30-51.

4. Ehrenhaft, Felix and Wasser, Emanuel, "New Evidence of the Existence of Charges smaller than the Electron - (a) The Micromagnet; (b) The Law of Resistance; (c) The Computation of Errors of the Method," Phil. Mag. and Jour. of Sci., Vol. V (Seventh Series), No. 28, February 1928, pp. 225-241.

5. See also Ehrenhaft's last paper dealing with the electronic charge, in Philosophy of Science, Vol. 8, 1941, p. 403.

6. McGregor, Donald Rait, The Inertia of the Vacuum: A New Foundation for Theoretical Physics, Exposition Press, Smithtown, NY, First Edition, 1981, pp. 15-20.

7. Ignat'ev, Yu. G. and Balakin, A. B., "Nonlinear Gravitational Waves in Plasma," Soviet Physics Journal, Vol. 24, No. 7, July 1981, (U.S. Translation, Consultants Bureau, NY, January 1982), pp. 593-597.

8. Yater, Joseph C., "Relation of the second law of thermodynamics to the power conversion of energy fluctuations," Phys. Review A, Vol. 20, no. 4, October 1979, pp. 1614-1618.

9. DeSantis, Romano M. et al, "On the Analysis of Feedback Systems With a Multipower Open Loop Chain," October 1973, available through the Defense Technical Information Center (AD 773188),

10. Graneau, Peter, "Electromagnetic jet-propulsion in the direction of current flow," Nature, Vol. 295, 28 January 1982, pp, 311-312.

11. "Gravity and acceleration aren't always equivalent," New Scientist, 17 September 1981, p. 723.

12. Gonyaev, V. V , "Experimental Determination of the Free-Fall Acceleration of a Relativistic Charged Particle. II. A Cylindrical Solenoid in a Time-Independent Field of Inertial Forces," Izvestiya VUZ, Fizika, No. 7, 1979, pp. 28-32. English Translation: Soviet Physics Journal, No. 7, 1979, pp. 829-833. If one understands the new, expanded electromagnetics, this Soviet paper indicates a means of generating antigravity and pure inertial fields.

13. R. Schaffranke, "The Development of Post-Relativistic Concepts in Physics and Advanced Technology Abroad," Energy Unlimited, No. 12, Winter 1981, pp. 15-20.

14. F. K. Preikschat, A Critical Look at the Theory of Relativity, Library of Congress Catalogue No. 77-670044. Extensive compilation of measurements of the speed of light. Clearly shows the speed of light is not constant but changes, sometimes even daily.

Return to Table of Contents **Next Page**

COMMENTS ON THE NEW TESLA ELECTROMAGNETICS

Part II: The Secret of Electrical Free Energy

© 1982 T. E. Bearden

Again I wish to express my deep appreciation to two of my friends and colleagues who at this time, I believe, wish to remain anonymous. I thank them both for their exceptional contributions and stimuli, and their forbearance with the many discussions we have held on this and related subjects.

Also, it goes without saying that any errors in this paper are strictly my own, and not the fault of either of my distinguished colleagues.

Present electromagnetic theory is only a special case of the much more fundamental electromagnetism discovered by Nikola Tesla at the turn of the century.

Pure vacuum is pure charge flux, without mass. The vacuum has a very high electrical potential -- something on the order of 200 million volts, with respect to a hypothetical zero charge.

Thus in an ordinary electrical circuit, each point of the "ground" -- which has the same potential as the vacuum -- actually has a non-zero absolute potential. This circuit ground has a value of zero only with respect to something else which has the same absolute electrical potential.

Voltage, which is always associated with a flow of electrical "mass" current (even if only a miniscule flow), is, by definition, a difference dropped in potential when a charge mass moves between two spatially separated points. What we have termed "electrical current" only flows where there is a suitable conducting medium between things which have a difference in absolute potential. Furthermore, between any two points in any material, there is considered to exist a finite resistance -- if we apply a voltage and have a mass current flowing between the two points! The simple statement that V = IR irrevocably ties together voltage drop, mass current, and resistance between two points. Rigorously, to have one of the three is to have them all. To lose one is to lose all three. Immediately we see a major error in present theory: One can have a "difference in scalar potential" between two points without having a "voltage drop" between them. Specifically, if no mass current flows between them, no resistance exists between them, and no voltage drop exists between them.

In the same fashion, one can have a "scalar wave" through the

In the same fashion, one can have a "scalar wave" through the vacuum without a voltage wave. In that case, the wave has no E-field and no H-field. The only reason one has an E-field

Return to Table of Contents **Next Page**

around a statically charged object is because the charged electrons accumulated on the object are actually in violent motion. It is this motion of the charged masses that produces E-field -- as well as H-field whenever that entire E-field ensemble moves through laboratory space.

Now let us reason together in the "approximate" manner utilized in present electromagnetic theory. For example, let us examine a bird sitting on a high tension line.

The bird sits on the high tension line without a flow of mass electricity, because there is no significant difference in potential drop between the bird and the line. Specifically, between the bird's two feet -- each in contact with a different portion of the line -- there exists no potential difference. This is true even though, with respect to the vacuum, each foot is at a potential that would be "100,000 volts higher," were a mass current flowing. And it is true even though the absolute potential of each foot may be some 200.1 million "volts," were a mass current flowing.

Now an interesting thing happens to the bird when he flies through the air to light upon the high tension wire. As he flies toward the wire, he is flying through the massless electrostatic potential field of the wire, for that field extends an infinite distance away from the wire. The electrostatic potential field -- pure ϕ-field -- is actually the spatio-temporal intensity of the massless charge at a point. In other words, as the bird flies to the wire, he flies into an increasing "massless charge" potential, building up to 100,000 "volts" higher than the earth. However, very little (if any) "mass flow" potential difference is experienced upon his body in approaching the wire, and so essentially no "charged mass currents" are induced in his body. Thus the little flier safely navigates into the teeth of a very high electrostatic potential, lights upon the wire, and is not "fried" in the process. When he lights on the wire, his body has reached the electrostatic potential that each foot's contact point has. Again, there is no mass current flow. But his body is immersed in an increased flux of massless charge -- which is what the electrostatic potential represents. And each "virtual particle" flow in that charge potential represents a "massless (scalar)" electrical current.

The point is, one can have any amount of massless charge flow -- "scalar" current -- without any mechanical work being done in the system. All electrical work in a circuit is done against the physical mass of the charged masses that flow. Rigorously, force is defined as the time rate of charge of momentum. Even in the relativistic case where $F = ma + v(dm/dt)$, change of momentum requires mass movement. No mechanical work, and hence no energy, is expended by massless charge flow.

That is why the vacuum massless charge -- which is composed of a very high flux of massless "particles" -- normally does no work

That is why the vacuum massless charge -- which is composed of a very high flux of massless "particles" -- normally does no work on our systems, and expends none of its very high "potential energy." It is exactly the same as the bird which flew into an

Return to Table of Contents Next Page

increasing scalar field as it approached the high tension wire -- no work was done upon the bird by the increasing scalar flux currents encountered by its body.

By existing "in the vacuum," so to speak, we (the whole earth) are as birds sitting on a high tension line! Until we create significant difference in potential, via our present electromagnetic circuits, no current can flow -- anywhere. Even if we produce potential differences, we must have a conductor and charged masses to flow, if we wish to produce mechanical work. Presently our electromagnetic theory allows us to create a difference in potential within different parts of a circuit, but only by moving and shifting charged mass. We therefore have to do work on this electrical mass in moving it around, and we only get back the work we have put into the circuit. In other words, presently all we do is "pump" electrical mass.

Now notice what would happen to the bird on the line if we substantially "pulsed" the potential on the line. Suppose we "pulsed" it such that the bird's physical system -- considered as a circuit containing a capacitance, a resistance, an inductance, and many free electrons -- became resonant to the pulsing frequency. In that case the "bird system" would resonate, and a great deal of electrical mass would surge back and forth in the body of the bird. In the bird's body, voltage would exist, charged mass current would flow, work would be done, and the bird would be electrocuted.

Also, note that, without mass movement, electromagnetic vector fields are not produced (and a portion of the difficulty lies with the actual vector mathematics itself). Scalar (nonvector) waves continually penetrate "space" where there is no mass movement. This means there can exist a "delta-ϕ" without a voltage or an E-field. The present theory does not allow this, because it always uses "q" (charge) to be charged mass. Briefly, without belaboring the point, let us just say that it is the mechanical spin of the individual charged particle -- such as the electron -- which "entangles" or "knits together" or "couples" independent scalar waves into vector waves. A vector wave is simply two coupled scalar waves. The entire force field concept -- such as the E-field and the B-field -- is operationally defined in terms of the force exhibited on a test particle, or test mass. Rigorously, an E-field does not exist as a force field in vacuum, but as two coupled scalar ϕ-fields "tumbling about each other." When these two coupled, tumbling fields meet a spinning electron, e.g., the force emerges on the electron mass. In short, movement of a rotating mass changes delta-ϕ to "voltage", creating the V/I/R triad.

By "accumulating charged mass particles" -- such as electrons -- one certainly can increase the value of ϕ, which represents the charge intensity or "scalar electrostatic potential." However, that is not the only way to increase it. Resonance and rotation of charged masses can also be appropriately employed to vary the vacuum charge potential ϕ, under the proper circumstances.

or charged masses can also be appropriately employed to vary the vacuum charge potential ϕ, under the proper circumstances.

Return to Table of Contents **Next Page**

By the correct application of rotary principles and Tesla electromagnetic theory, it is possible to oscillate -- and change -- the vacuum potential itself, in one part of an electrical system. Thus by correct procedures a part of a system can be electrically altered so that the absolute value of its "ground" (vacuum) potential differs significantly from the normal vacuum-ground potential of the remainder of the circuit. In other words, we shift the vacuum-ground potential of part of the circuit by oscillating the massless vacuum charge itself, and in so doing we gain a substantial, oscillatory electrical potential difference between that part of the circuit and the normal ground potential of the rest of the system. Then we connect the two parts of the system by means of a conductor containing a load in the middle.

In every conductor, a large number of "free electrons" are available. If we oscillate the actual vacuum charge itself, unlimited additional free electrons also become available from the Dirac sea, since partial "unstripping" of the negative energy wells (each containing an electron) occurs. This "unstripping" of the potential of the well is due to vacuum potential oscillation, which oscillates time as well as space. To a negative energy well (positive time), the oscillation of its "time stream" increases the well's negative potential during one half-cycle and decreases its potential for the other half-cycle. Thus during half the oscillatory cycle, negative energy electrons may be lifted from the Dirac sea if the oscillation is sufficiently intense.

Therefore we obtain an attendant voltage and flow of mass current through the load. This voltage and current, by the way, are essentially limitless, and are free for the asking, assuming the proper "vacuum oscillation" is initiated and maintained so that electrons are continually being lifted from the Dirac sea by the time oscillations, and fed into the circuit.

Standard electromagnetic theory assumes that the vacuum potential is zero. It does not recognize the existence of massless charge, separated from charged mass. Therefore, orthodox scientists have never looked for a way to engineer the vacuum, because they have not realized it is composed of pure massless charge. Electrical physics has almost hopelessly confused charge and charged mass, thereby eliminating scalar longitudinal electrostatic waves. Expressed in the bird/high tension line analogy, the present electromagnetic theory restricts us to walking along the high tension line, laboriously carrying small batteries and power units, unaware of the limitless, surging power beneath our very feet.

Electromagnetically, we have been rather like one of the five blind men who touched an elephant. We have only touched one small portion of the electromagnetism "elephant," yet we thought we had grasped the entire beast.

OVERTURE TO A NEW AGE TECHNOLOGY

From an Update by Dr. Rolf Schaffranke

> " ... as there has been a steady erosion in U. S. activity in the basic sciences, there has been an increase in the level of such activity in Western Europe and Japan. If that continues, we are in danger of losing our position of scientific leadership."
>
> Val. L. Fitch, Prof. of Physics at Princeton University, in an interview with *U.S. News & World Report*, June 21, 1982.

West Germany:

The prototype of the first motorcycle equipped with a "flux-motor" (the inventor's designation for a tachion field converter or gravity-field generator) of 2 KW output has completed a test run of approximately 20,000 km without repairs. Principle of operation: The T-converter is constantly recharging the electrical power battery of the vehicle, resulting in an operation which is noiseless, fuelless and polution-free. After completion of all scheduled tests, a public demonstration to the press is planned within a few weeks from the time of this writing. (June 17, 1982) See photo, Pg. 19. A new factory for the production of gravity-energy-field converters in the town of Oldenburg is scheduled to produce individual home heating units. The design of automobile power plants based on the same principle is also in preparation. Reported efficiency factors of several hundred percent are anticipated.

Japan:

Mazda continues research on the "magnetic Wankel engine" (45 HP) for electric automobiles, based on the principle of Kure Tekko. The gravity research of Prof. S. Seike is now sponsored by Hitachi, after millions of Japanese received updated information via popular science magazines. It is interesting to note that Saudi Arabia has decided to invest $100 million in Hitachi stocks.

France:

The "Kromrey" converter has completed tests at the Institute for Magnetostatics, University of Strasbourg. One prototype delivered 700 Watts at 600-1200 RPM, at a fairly uniform rate. However, France, as the No. 1 developer of nuclear energy in Europe, is still reluctant to concentrate her energies on a revolutionary new technology which could result in drastic curtailments of her well-developed nuclear industry and associated exports. See photos, Pg. 22.

Denmark:

Dr. Jensen, physicist at the University of Kopenhagen, reported test results of 300% efficiency with a specially designed, 5-coil transformer in connection

Return to Table of Contents **Next Page**

with a tachion field converter based on the principle of the "N" machine. First reports were presented at the International Conference on Energy Technology in Hannover, Nov., 1980.

England / USA:

A "bullet train" based on the magnetic levitation system of British Prof. Eric Laithwaite is now under consideration for construction between Los Angeles and San Diego. Japan and West Germany are already operating high speed experimental trains, suspended magnetically to reduce friction, that may soon attain speeds of more than 200 miles per hour. The Laithwaite-Eastham method would use electromagnetic forcefields induced over an aluminum-topped concrete track. The project will probably be headed by a Japanese company as the prime contractor.

Return to Table of Contents Next Page

West German gravity-field unit in operation

Return to Index **Next Page**

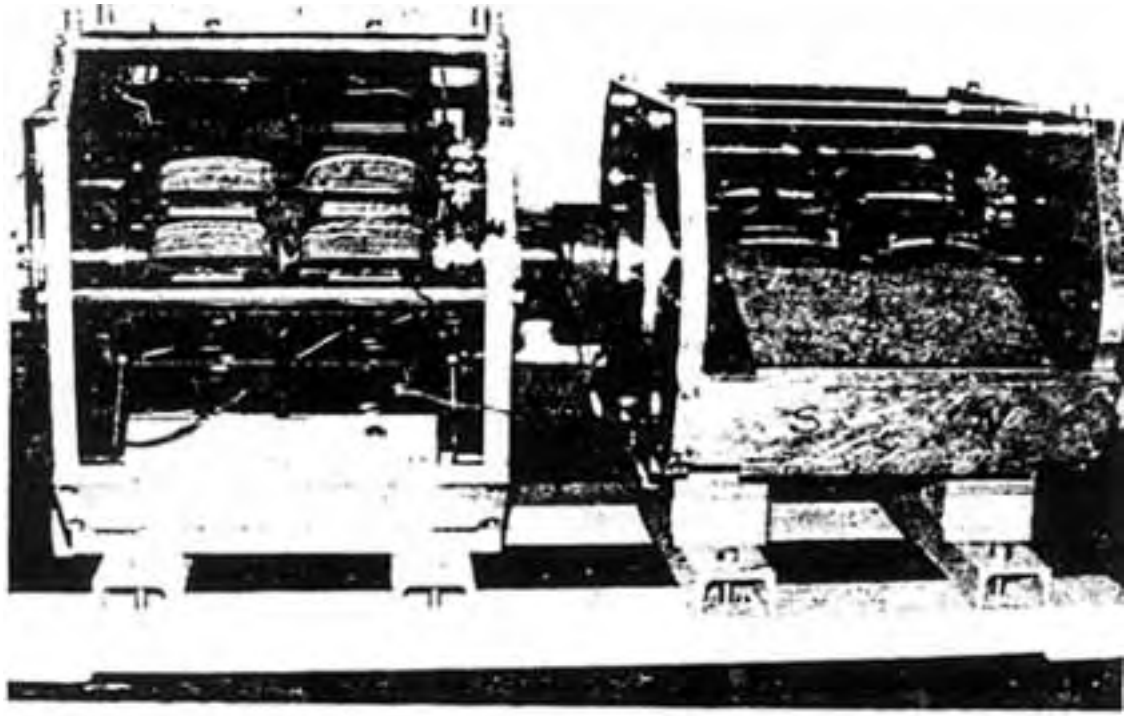

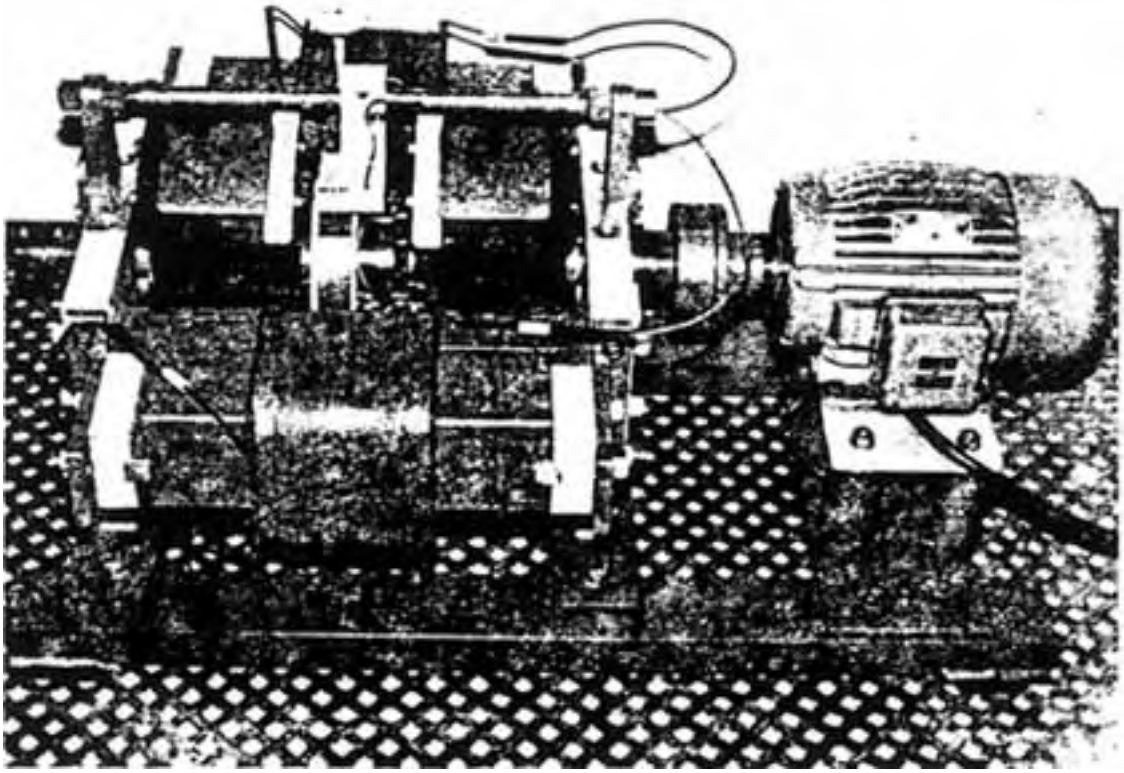

Swiss-French gravity field converter system "Kromrey"

Return to Index **Next Page**

REVIEW AND OUTLOOK

THE DEVELOPMENT OF POST-RELATIVISTIC CONCEPTS IN PHYSICS AND ADVANCED TECHNOLOGY ABROAD

Rolf Schaffranke, Dr. h. c.
Member A.I.A.A.

This paper was presented at The First International Symposium on Non-Conventional Energy Technology, Toronto, Ontario, Canada, Oct. 23-24, 1981. (Reprinted by permission of the author.)

"Far more harm is done to the progress of science by skepticism than by gullibility". (Dr. Robert Wood, Director R & D, McDonnel-Douglas Astronautics Div., Cal.) NASA - Langley Research Center in Hampton, VA is named after Samuel Pierpont Langley (1834-1906), an American astronomer, engineer and architect.

Langley worked out the aerodynamic principles for manned flight. In principal, his calculations were correct; but the structural materials he used for wings and engines were ,insufficient. In December of 1903, the *New York Times* published an editorial complaining about his foolish dream and the associated waste of government money. The editorial predicted that: "man would not fly for a thousand years".

Only 9 days after the editorial was published, the Wright brothers made their first successful powered flight at Kitty Hawk. (Dec. 17, 1903). But, again, as late as 1905, the *Scientific American* suggested the happening was a hoax - two years after the event which changed history. Let's reflect for a moment on the fact that only in a single lifetime, man has journeyed from Kitty Hawk to the surface of the moon!

The analogy to the problem of alternative energies and their development is, of course, obvious. We try to educate the preaching orthodoxies. But orthodox solutions are no longer enough. Our system of education can only give from

the past. The present must operate on inspiration and intuition, or the future will be lost. The past no longer has enough of the answers for arising crises for which there are no precedents. To keep pace with the requirements of the future, we must begin to teach not only what to learn, but how to learn, how to analyze, how to search for the truth. Only then will be able to recognize discrepancies between experiment and dogma and to cope with problems which appear to be just beyond the corner. History has shown again and again that no single individual can rise above the species without being persecuted. The reasons for that are:

Some of the most powerful forces in homo sapiens have always been

Greed, Pride, Ego, Fear and, above all, the Desire to Control Others,

.

A brand new German book titled *Energy in Abundance*, which is evidently creating a considerable impact in the European community, challenges the contemporary high

Return to Table of Contents **Next Page**

priests of science, the "Guardians of the Status Quo" and uncovers an almost incredible narrowmindedness and ignorance in science, politics and economics, "approaching the criminal" as the author puts it. The contemporary waste of genuine intellectual creativity is castigated as a cultural scandal approaching barbarism. The book stresses that a truly promising approach to the so-called energy crisis requires a fundamental and thorough re-evaluation of the theories, dogmas and axioms which form the basis of present day science and the foundation of our technology. As in the past, the formidable inertia of the establishment is not only based on inaccurate, incomplete and outdated information, but also on its reluctance to accept new ideas. The honest search for the truth first requires that we first demythologize generally accepted claims of so-called experts of the past. An excellent introduction to this problem is the article "Resistance by Scientists to Scientific Discovery" by Bernard Barber in *Science*, Vol. 134, pp. 596-602, of Sept. 1961, or the paper by Stephen C. Brush in *Science* of March, 1974, titled "Should the History of Science be Rated 'X'"?, culminating with a statement of Huxley:

> "Authorities", "disciples", and "schools" are the curse of science and do more to interfere with the work of the scientific spirit than all its enemies".

The former astronaut, Capt. Edgar D. Mitchell, one of our famous contemporaries, also stressed the need for an open mind!

> "History has shown time and again that important scientific discoveries generally happen only when someone steps outside the limits of his traditional discipline and looks at something from a fresh point of view. Then what should have been obvious all along comes into focus".

Those of us who are familiar with the pioneering efforts of Dr. Hans Nieper of Hanover will appreciate this statement by an ex-astronaut.

One of the most important cornerstones of today's scientific dogmas dates back to 1905, more than 3/4 of a century ago. Lest we forget, television and radar, jet-planes and cyclotrons, moonrockets and close-up photos of the planets of our solar system were nothing but wild fantasies of science fiction then.

The speed of light was assumed to be constant and the maximum possible speed in the universe; vacuum was to be a total void. In reality, the speed of light as measured in the Michelson-Morley experiments was not at all the same in all directions. The "ether-drift" still amounted to the respectable velocity of about five miles per second, and similar results were obtained by D. C. Miller in a series of experiments extending over twenty-five years, from 1902 to 1926.

Return to Table of Contents **Next Page**

> "Even worse, the measurements showed such marked discrepancies with previous results as to occasion a distress call to the U. S. Coast & Geodetic Survey, whose surveyors repeatedly remeasured the length of the tube and found no error there," reported the *Popular Science Monthly* March 1934 issue. And it continued: "More recently, speed of light observations only emphasized the apparent erratic behavior of the light beam that the scientists were attempting to plot. On some days it seems to travel faster than others by as much as 12 miles a second. Its speed seems to vary with the season, and also in a mysterious shorter cycle lasting about 2 weeks. Finally, the scientists ended by taking an average of all the readings which has just been announced as 186,271 miles per second".

In his paper "A Critical Look At the Theory of Relativity", Library of Congress Cat. No. 77-670044, F. K. Preikschat compiled all known light velocity measurements during the past 300 years or so, from Olaf Roemer in 1676 to the Laser measurements conducted by the National Bureau of Standards (USA) in 1972.

Of the 27 experiments undertaken in this field, 18 of them after the turn of this century, it must be concluded that the velocity of light as measured within the reference system of our earth has changed as much as plus/minus 50 km/sec, during the past century. Preikschat plotted a curve of these deviations and suggests a possible relationship between sunspot activities and changes of the earth magnetic field during the time period in question.

The "universal constancy of light" appears, therefore, as somewhat shaky "empirical evidence" for our cornerstone in physics, especially since Einstein himself has gone on record as saying:

> "If a single one of the conclusions drawn from it (relativity theory) proves to be wrong, it must be given up; to modify it without destroying the whole structure seems to be impossible".

Another modification concerns the definition for the term "vacuum" in physics, as documented by a paper in the *American Scientist*, March-April 1980, titled "Is The Vacuum Really Empty?" by Prof. Walter Greiner, University of Frankfurt, BRD, and Prof. Joseph H. Hamilton, Vanderbilt University, Nashville, Tenn.

The authors conclude that a neutral vacuum is by no means as "empty" as previously claimed in our textbooks, and suggests a new definition as follows:

> "The vacuum is the lowest stable state that a region of space can have while being penetrated by certain fields".

Because of the tremendous time lag in our educational system, many research

Return to Table of Contents **Next Page**

projects and their ensuing experimental data have been withheld from public scrutiny. The scientific community tends to have a vested interest in preserving the system it created and of which it is a part. It responds to new situations through the coloration of this attachment. A case in point are the carefully conducted experiments of T. T. Brown with charged bodies in a high vacuum, as described in my booklet *Ether Technology* (1977). These experiments suggest the actual presence of certain fields in vacuum, whether we call them gravitational field, tachion-field, ether-field, neutrino or Fermi-sea, etc. is of secondary importance at this moment. Although Brown spent, reportedly, more than $200,000 of his own funds over several decades on such experiments, he was nevertheless unable to have the results published in the scientific media of America.

Things are even worse when it comes to experiments conducted abroad, which often tend to confirm disregarded experimental results on this continent, as we shall see shortly. To highlight the wide discrepancies between orthodox (and obsolete) dogmas and actual, physical realities pertaining to the true subatomic structures as we know them to be today, let us briefly review the structure of the matter:

A molecule is the smallest division of a substance. Further division would cause it to cease being a substance. The smallest of true molecules can be illustrated when we use the globe of the earth for our standard. If a single drop of water were magnified until it was as big as the earth, each molecule would be about the size of a TENNIS BALL.

On the next step down, an atom is the unit which makes up the nature of the molecule, consisting of the nucleus and the surrounding electrons to render the atom "stable". An atom of hydrogen contains one proton and one electron to balance or neutralize the proton. Matter then is divisible into electrons and protons. But - and here comes the rub: Between electrons and protons are spaces so vast, in comparison with the masses of each, that, if the proton in the carbon atom were the size of a golf ball hanging from the ceiling of the great hall at Pennsylvania Station in New York, its electrons would be represented by six small wasps winging in a little knot against the four walls of the gigantic structure of the building! In effect, one could claim there is little final solidity of substance to anything: The universe consists of "emptiness", charged with electrical energy! If we translate the above to the measurements and terminology of the physicist and "magnify" the atom mathematically, with all its distances and dimensions kept in proportion so that the orbit of the electron would have a diameter equal to that of the earth about the sun, approximately 184 million miles, the diameter of the electron itself would only be 2,000 miles, and the diameter of the nucleus, where

electron itself would only be 2,000 miles, and the diameter of the nucleus, where

Return to Table of Contents Next Page

mass and weight of the atom are truly concentrated, can be taken as 2 miles only. We thus obtain a picture of a central mass with a diameter of 2 miles (nucleus), another object with a diameter of 2,000 miles (the electron, in the case of the hydrogen atom) at a distance of 92 million miles away from it, orbiting the nucleus. Evidently, there is plenty of room inside this system. And "room" is not a vacuum, it is not nothingness, but space itself, spatial energy, a field which can be identified with the ether of the past - and of the future. Nobel prize winner, Max Planck, during a lecture in Florence, Italy, once made a truly remarkable statement which describes the problem facing the physicist today:

> "As a man who has devoted his whole life to the most clear-headed science, to the study of matter, I can tell you as the result of my research about the atoms this much:
> 'THERE IS NO MATTER AS SUCH!'
> All matter originates and exists only by virtue of a force which brings the particles of an atom to vibration and holds this most minute solar system of the atom together. ... We must assume behind this force the existence of a conscious and intelligent MIND. This mind is the matrix of all matter".

This cosmic matrix is needed if we want to explain "action at a distance", lines of force, stresses, a magnetic field and so on. When the concept of the ether was abandoned, it had to be replaced by the concept of "space" instead. In reality, we merely switched terminology. We used to say that "ether fills all Space". But "filling" is not exactly the descriptive word to use. Perhaps we should rather define it: "Ether is a condition of space in which electrical manifestations for the atomic construction of materials is possible". This primordial energy is "free" or in an uncondensed state. It exists in interstellar space but remains unrecognizable until it begins to coagulate or gets into a vortex pattern. It constitutes the formative field force of nature, an immense reservoir of latent energy.

The claim of our textbooks that the Michelson-Morley experiment "disproved" the existence of the ether is incorrect. It merely disproved the existence of a noticeable ether drift or drag. As an analogy, if somebody would postulate that the absence of wind disproves the existence of the atmosphere around our planet, the fallacy of this postulate would be immediately apparent to all.

"Michelson and Morley centered their attention on the Earth's orbital velocity (30 km per second). They had no knowledge of the existence of galaxies; of motions of galaxies in relation to each other; of the motion of our solar system in our galaxy..... Their negative results are explainable on the basis of pre-1900 classical mechanics, so provide no proof of the absence of ether or Louis de Broglie's

Return to Table of Contents **Next Page**

'subquantic medium'. Thus, the limited information available to Michelson and Einstein is emphasized by recent findings, particularly in astrophysics", writes Dr. H. C. Dudley in the *Bulletin of the Atomic Scientists*, January, 1975, under the title "Michelson's Hunch Was Right". And Dr. Dudley continues: "In fact, 1929 saw Michelson still attempting to experimentally demonstrate the ether, which his intuition and reasoning told him ought to be present".

"Today most persons are largely unaware that the ether concept began to be seriously reexamined by two of physics most notable theoreticians, Paul Dirac in 1951 and de Broglie in 1959, both Nobel laureates. The ether is now being called the "neutrino sea" by astrophysicists, and has been characterized as an energy-rich particulate, subquantic medium. A rather voluminous literature on the subject is accumulating as indicated by a recent review, *The Cosmic Neutrino*, with 665 references covering only the period 1965-1972.....It appears that an open-minded reexamination of this area of physics is long overdue in order to open up new avenues of approach to this pressing problem".

Michelson, Dirac, de Broglie were not the only Nobel prize winners in favor of a reexamination of the ether question. Others were Stark, Arrhenius, A. H. Compton, Lenard, H. Yukawa, and Frederick Soddy, the British scientist who, during the convention of Nobel laureates in Lindau, 1954, described the current dogmas in physics as "an orgy of amateur physics" and "arrogant swindle" - with particular emphasis on the theory of relativity. ("The Wider Aspects of the Discovery of Atomic Disintegration", New World Publications, St. Stephens House, Westminster S.W.I.)

It remained largely unknown, even among physicists, that Einstein himself had serious doubts. In 1949, he wrote to his old friend, Maurice Solovine, who congratulated him on his 70th birthday:

> "Now you think that I am looking back at my life's work with calm satisfaction. But, on closer look, it is quite different. There is not a single concept of which I am convinced that it will stand firm and I am not sure if I was on the right track after all".

And one of my Canadian friends who I believe is present here today stated quite correctly in a letter to me:

> "The myths around Einstein are really not of his making as he himself often questioned his own conclusions and I felt he was quite aware of his own limitations which others were covering up. The physicists protect their members much the same way that the medical profession protects its own."

The purpose of these remarks is not to spark another controversy about the merits of the theories of relativity. Rather, they want to show that so-called

merits of the theories of relativity. Rather, they want to show that so-called

Return to Table of Contents Next Page

"scientific evidence" is a rather elastic term and that "verification" is always a relative affair. Or, as K. R. Popper so aptly put it:

> "Only in our subjective experience of conviction, in our subjective faith, can we be 'absolutely certain'".

This symposium presents an excellent overview of research and experiments reported from English speaking countries, or experiments published in the English language, as for instance from Japan. However, as Dr. Tenhaeff from Holland has formulated the problem,

> "It is important to pay attention to publications of colleagues in other countries. In the Netherlands and Germany, every academically educated man or woman knows at least three foreign languages. English and American authors only pay attention to material in English. In my opinion, this leads to an 'impoverishment' which puts a drag in science. Some seem very chauvinistic and seem to believe that only the researches done in their country are important. I regret this. Science is international, and international cooperation is of the greatest importance in science".

In presenting some brief reports from abroad, I shall attempt to bring corroborative evidence in support of alternative technology developments discussed during our meeting here in Toronto. Let me start with the most sensitive and secretive society, with Russia.

In his German original of the paper "Some Remarks on the Shielding Theory of Gravity", which was published in the Hanover Proceedings in more detail than the English abstract, Dr. Hans Nieper mentioned the Berlin engineer Levetzow, who was one of the first to postulate a combination pressure and shielding theory for the phenomena of gravity. Levetzow was soon overshadowed by the rising star of Albert Einstein, but one of his followers, Horst Pinkell, went to Russia in 1928 as an exchange student - and never returned. Together with Russian scientists, he was asked to prove the actual existence of the cosmic radiations postulated by Levetzow, now designated as neutrino sea or "tachion field". The work was done in Sterlitamak, South of the Ural mountains, and in 1938, sporadic reports reached the West about the discovery of extremely short corpuscular waves by Pinkell and Gorjew. These were the long sought "Hemmstrahlen" or drag waves associated with gravity. Rumors have it that a metal alloy was soon developed which acted as a drag wave polarisor and, in 1947, agents reported experimental Russian aircraft using this discovery. In 1951, a former German Junkers aircraft engineer reported about his activity pertaining to a super-secret project code named COW-7 in Siberia, a disk-shaped craft which could rise vertically and which belonged to the

Siberia, a disk-shaped craft which could rise vertically and which belonged to the

Return to Table of Contents Next Page

secret weapons then developed by the Soviets. Whether it was related to the Canadian AVRO project or something entirely different remained unknown, only the Levetzow gravity theory was assumed in connection with the activity in question.

Japan: My esteemed friend, Prof. Seike, who kept me informed about the research conducted by him and his co-workers, surprised me once with a significant statement, which I feel is important to repeat for the benefit of frustrated researchers on this side of the Pacific: "In the early stage of my studies, physicists could not understand what I was doing, while actors and actresses did so by intuition". It was the private support of about 800 individual artists, etc., in Japan which allowed Seike to work, experiment and publish his findings, and not the support of the Japanese equivalent of a National Science Foundation or a similar bureaucratic institution in that country. Again and again, I was surprised how quickly and eagerly American experiments, as for instance the almost forgotten "Ionocraft" of the late Major de Seversky, were duplicated and explored even in Japanese secondary schools. Admiral Rickover has more than once complained about our intellectual complacency: "As a nation, we seem addicted to 'spectatoritis'. We sit in the bleachers and let the game of life unfold before us".

The results are known: The Japanese have achieved top position in science and technology, and not only with tachion beams melting stones, producing "biased" water with a freezing point of minus 4 degrees Celsius, and a G-power generator obtaining 400 V DC output from a 10 V input driving source. I wish to take this opportunity to thank Prof. Seike for sharing his work with us in this country, and wish him the best of success for the future.

France: The work of SEPED was explained by M. René Louis Valée and some French publications in the area of gravity-research have been translated by the NASA translation service, as for instance the theory of the electromagnetic Magnus-Effect (of Marcel Pagés).

Specific mention must be made of the Raymond Kromrey G-field generator, a French-German-Swiss development which appears very closely related to the American "N" machine principle, the "Sunburst" machine and the "Permanent Magnet-Motor" Patent of Howard Johnson. Utilizing either permanent or electromagnetic modules, the generator output exceeds the input by far. One prototype delivers approximately 700 watts at speeds varying between 600 and 1200 RPM. Models with an output of 100 to 160 kw are presently in the planning stage. Several European patents have been granted against heavy opposition, especially from French industrial circles. The development was about 40 years in the making and the inventor stresses the need for a reinvestigation of electromagnetic and gravitic forces, as well as a reexamination of many cemented dogmas in present-day physics.

...rection of many cemented dogmas in present-day physics.

Return to Table of Contents **Next Page**

Germany: A system of rotating electromagnets and magnetic "stator rings" of the German "Kunel" Generator complement the general trend of the American and French generators mentioned before. The first prototype was reported to have been tested in April, 1980. Here, again, very heavy opposition from the German orthodox science establishment. Of special interest is a comment by Nobel laureate Werner Heisenberg, reported to have been made vis-a-vis the inventor:

> "I think it is possible to utilize magnetism as an energy-source. But we science idiots cannot do that; this has to come from the outside".

More details about French and German developments have been published in the new book already mentioned, *Energy in Abundance* by Hilscher and, hopefully, an English version of this important work will be available by next year. Generators which do interact with surrounding energy fields have been designated as "open systems", in contrast to our present "closed system" technology of gasoline and diesel engines, steam turbines, nuclear power plants and so forth. The theoretical basis for all "open systems" is the realization that there simply is no such thing as "empty space". In reality, space is filled with an extremely energy rich, subatomic and subquantic continuum. In short, a "pre-physical state of matter", which can be tapped, as for instance by the spinning of magnetic systems which extract momentum via a vortex-formation of the universal "tachion field".

Austria: This small heartland of Central Europe is proud of her native pioneers in science, among them Dr. Wilhelm Reich, Viktor Schauberger and Karl Schappeller. But after Dr. Reich died in an American prison in 1957 and Victor Schauberger died only five days after his return from the USA (in 1958), where he received an incredibly unfair treatment from certain industrialists, there is little enthusiasm among Austrians to touch base with correspondents on this continent. Viktor Schauberger's son, Walter, refuses, as a matter of principle, to communicate with Americans, no matter in what language. To illustrate the type of "contract" Viktor Schauberger was forced to sign, it stated:

> that all of his patents would become the property of the "consortium",
> that any future inventions or developments would also become the property of the "consortium",
> that he would refrain from discussing any of it with third parties,
> that he would refrain from publishing,
> that all plans and models would remain with the "consortium" after his departure from America.

There is a favorite saying in that small country which is much to the point:

> "After the Greek philosopher Pythagoras had discovered his famous

Return to Table of Contents Next Page

> theorem, he sacrificed a whole hecatomb of oxen as a thanksgiving to the Gods. Ever since, all the oxen in the world are running scared whenever a new truth has been discovered".

Knowledge of the ideas of Schauberger and Schappeller appears to be essential for an understanding of our changing picture of the physical world. As an example, the former forest ranger Viktor Schauberger had watched numerous times some trout standing, apparently motionless, in the strong currents of Alpine mountain streams. This and many similar observations of nature brought him to the gradual development of his "implosion-theory" and associated hardware (see Jensen paper elsewhere). His son is continuing the work in the "Pythagoras-Kepler" School in Bad Ischl. Another prolific researcher is the Viennese engineer Franz Seidl, known for his studies of the use of magnetic field effects as "trigger energy" for voltage and power multipliers.

Holland: A small country with strongly developed intellectual independence appears to be Holland, where Prof. J.M.J. Kooy developed his "Space Dynamics". His hypothesis of gravitational action is based on the realization that all celestial bodies can be conceived as practically transparent in relation to the size of the elementary particles and their mutual distances in the structure of matter. Gravitons or tachions, coming from all directions of deep space, can pass through a celestial body like water passes through a fishnet, and only a minute fraction of the cosmic gravitons or tachions will be intercepted. Study of the effects of the tachion field or space continuum of the fabric of material substances, magnets and crystal lattices can lead to development of converters and novel production facilities for readily usable, conventional E/M energy. When the American inventor Edwin V. Gray was blocked in his efforts to develop his "Pulsed Capacitor Discharge Electric Engine" for which he had received U. S. Patent #3,890,548, he found open ears and open minds in Holland.

The fact that Gray was named "Inventor of the Year" from the Department of Patent Rights in Los Angeles, California, where Dr. Chalfin of Cal Tech confirmed that:

> There does not exist an even distantly similar engine to this one in the world. Conventional electric engines use up power. In this system energy is used up for only a minute part of a millisecond. It operates without heat loss and there is no energy loss whatsoever with this system",

had more meaning to the people of PHILIPS and others in Holland than to the energy establishment in his native America.

England: There is perhaps no more controversial inventor at this time than

there is perhaps no more controversial inventor at this time than

Return to Table of Contents Next Page

John R. R. Searl and his Levity Disc, powered by the Searl Effect generator. It is claimed that model craft have been demonstrated with flight characteristics showing anti-gravitational and inertia-free properties. Demonstrations have been photographed and videotaped. Searl calls his generator a "Gyro-Flywheel High Energy Density Mechanical Magnetic Device" and claims that the magnets used are not the common type, ordinary magnets. The Australian engineer Athol Park of Melbourne, Australia, who visited Searl a few years ago described it this way:

> "From a briefcase, Mr. Searl takes a bar magnet and two steel rollers. He places the rollers at either end of the magnet. They appear to be attracted to the poles - but, when they are pushed gently around the corners of the magnet, they chase each other round and round.... "

The engineer quotes Searl:

> "The crystals in the magnet are changed by putting it in a magnetic flux oven and by frequency control. The result is motion of a magnetic field - a completely new source of power. Units (modules) based on this principle are what power my levity unit - the motor and generator built as one, fuelless unit".

In one of his numerous newsletters he states further:

> "The power plant is a self-contained, onboard closed system of conversion elements with energy input from a latent storage source".

Because Searl has never divulged all details and his explanations are generally of a non-technical, "unscientific" nature, many investigators have chosen to dismiss him as a swindler and imposter. In sharp contrast to this is the opinion of a well-experienced American engineer who reported after a visit with Searl:

> "I found it refreshing to note the keen sense of moral responsibility which he feels for the use to which his discovery is put... The Searls live in modest circumstances. Luxuries are few. They do not own a car. Mr. Searl bicycles several miles daily to his place of work in Maidenhead. There he is an electrical technician and training supervisor in a bearing factory".

But perhaps most significant was the following observation of the American visitor about Searl:

> "We were also interested to hear him say that many of his ideas came to him while he slept. He would go to sleep with questions, and awake with answers... and refreshed. He seemed to have the

and awake with answers... and refreshed. He seemed to have the

Return to Table of Contents **Next Page**

ability to restore vital powers more quickly than most people".

And the American concluded his report with the statement:

"The impression we gained of Mr. Searl was one of a very sincere and generous person, a dedicated and tireless worker with perfect confidence in the outcome of his efforts, a man of high principle with a keen sense of loyalty to those who are helping him, and of responsibility for the future welfare of our planet and its people".

In view of the very contradictory nature of comments and impressions by those who have met Searl, it might be wise to reserve final judgment on the Searl-Levity-Disc and its inventor at this time.

New Zealand: Some of Searl's keenest supporters and observers of his work are in New Zealand and Australia. And one of the sharpest young physicists in that country (new Zealand), unhampered by calcified ideology, developed the mathematical foundation for a theoretical anti-gravity effect, using the hydrodynamic analogy of the ether. He uses the equivalent of the hydrodynamic Reynolds number, above a certain value of which the laminar flow past a solid surface breaks down and becomes turbulent due to shear rupture of the viscous cohesion of a fluid, together with his deduction that anti-gravity could be obtained by creating a "vacuum: in the ether in such a way as to correspond to the production of turbulence in a magnetic field. Turbulence in a fluid occurs when Reynolds number RE = 1, when the inertial shearing force equals the viscous cohesion force in the fluid in the vicinity of an approximately spherical body immersed in the fluid, resulting in separation of the boundary layer and formation of a wake, i. e. vacuum or free surface around the body. He calculated the threshhold for turbulence in the ether, = a vacuum = an anti-gravity effect, using the refined value of ether kinematic viscosity which he obtained.

His theory would confirm the observations of very high voltage produced in the case of the Searl Levity Disc, and the very high voltage needed in the vacuum experiments with flying disc-shaped bodies of T. T. Brown, the "ionocraft" observations of Major de Seversky, the "Electro-Field Rockets of Prof. Dudley, the observations of Northrop Corp. with "Electro-Aerodynamics in Supersonic Flow" and similar American documentation and patents.

Since the New Zealander is now in the process of attempting to publish his theory in a reputable British magazine, I am not at liberty to divulge his address prematurely. Interest in New Zealand and Australia is running high, and possible breakthroughs in energy technology should not come totally unexpected in these two countries with strong intellectual ties to England.

Return to Table of Contents **Next Page**

Conclusion

There is now overwhelming evidence for the actual existence of a very high density, energy rich space continuum formerly called "ether". This space energy can be concentrated, gathered, focused, magnified and compacted by magnets or magnetic materials, which appear as the new core materials for converters of all kinds, utilizing the cosmic energy for new technology applications.

Crystals are energy-sensing and channeling devices; they can serve as transducers, as for instance in the Moray-Device, or the "rock electricity" of T. T. Brown.

Combinations of crystals and magnetic materials appear to be the mainstay for the development of "hyper-space" - converters and generators of power - utilizing free, cosmic energy in our future.

Unbiased, totally honest and impartial reexamination and reevaluation of all scientific theorems and dogmas, as well as unhampered opportunities for the pioneers of the new technology on the American and European continent appear to be the prerequisite of success.

Those who accept that anything of the nature of ideas or ideology is permanent, use all their strength to hold on to it, and to condemn all who do not agree. The next stage of this spiritual illness of the mind is to build a monument to what they perceive is Truth, and then to build a monument to their own permanence in the world. This, they do by seeking fame or fortune, and authority over others. This is the contemporary, planetary psychology situation, and thus are we losing the gift of perspective and horizon and are no longer able to discern what is important. Skeptics are on record as saying:

> "We are not running out of natural resources or intellectual talent, we are running out of the freedom of innovation that made the countries on the North American continent the most advanced nations on earth".

The future will show whether this freedom, which includes the freedom and the duty of taking risks, can be restored to the degree our Founding Fathers have been striving for. Only then will we know whether the late Wernher von Braun was not too overly optimistic when he stated:

> "The cosmic age will bring a dawn of knowledge not yet envisioned. It will dwarf all our present knowledge and ideas and, through its vastness, may even bring men closer together on their own planet".

Return to Table of Contents

Prodigal Genius

BIOGRAPHY OF NIKOLA TESLA

1994 Brotherhood of Life, Inc.,
110 Dartmouth, SE, Albuquerque,
New Mexico 87106 USA

"SPECTACULAR" is a mild word for describing the strange experiment with life that comprises the story of Nikola Tesla, and "amazing" fails to do adequate justice to the results that burst from his experiences like an exploding rocket. It is the story of the dazzling scintillations of a superman who created a new world; it is a story that condemns woman as an anchor of the flesh which retards the development of man and limits his accomplishment--and, paradoxically, proves that even the most successful life, if it does not include a woman, is a dismal failure.

Even the gods of old, in the wildest imaginings of their worshipers, never undertook such gigantic tasks of world-wide dimension as those which Tesla attempted and accomplished. On the basis of his hopes, his dreams, and his achievements he rated the status of the Olympian gods, and the Greeks would have so enshrined him. Little is the wonder that so-called practical men, with their noses stuck in profit-and-loss statements, did not understand him and thought him strange.

The light of human progress is not a dim glow that gradually becomes more luminous with time. The panorama of human evolution is illumined by sudden bursts of dazzling brilliance in intellectual accomplishments that throw their beams far ahead to give us a glimpse of the distant future, that we may more correctly guide our wavering steps today. Tesla, by virtue of the amazing discoveries and inventions which he showered on the world, becomes one of the most resplendent flashes that has ever brightened the scroll of human advancement.

Tesla created the modern era; he was unquestionably one of the world's greatest geniuses, but he leaves no offspring, no legatees of his brilliant mind, who might aid in administering that world; he created fortunes for multitudes of others but himself died penniless, spurning wealth that might be gained from his discoveries. Even as he walked among the teeming millions of New York he became a fabled individual who seemed to belong to the far-distant

future or to have come to us from the mystical realm of the gods, for he seemed to be an admixture of a Jupiter or a Thor who hurled the shafts of lightning; an Ajax who defied the Jovian bolts; a Prometheus who transmuted energy into electricity to spread over the earth; an Aurora who would light the skies as a terrestrial electric lamp; a Mazda who created a sun in a tube; a Hercules who shook the earth with his mechanical vibrators; a Mercury who bridged the ambient realms of space with his wireless waves--and a Hermes who gave birth to an electrical soul in the earth that set it pulsating from pole to pole.

This spark of intellectual incandescence, in the form of a rare creative genius, shot like a meteor into the midst of human society in the latter decades of the past century; and he lived almost until today. His name became synonymous with magic in the intellectual, scientific, engineering and social worlds, and he was recognized as an inventor and discoverer of unrivaled greatness. He made the electric current his slave. At a time when electricity was considered almost an occult force, and was looked upon with terror-stricken awe and respect, Tesla penetrated deeply into its mysteries and performed so many marvelous feats with it that, to the world, he became a master magician with an unlimited repertoire of scientific legerdemain so spectacular that it made the accomplishments of most of the inventors of his day seem like the work of toy-tinkers.

Tesla was an inventor, but he was much more than a producer of new devices: he was a discoverer of new principles, opening many new empires of knowledge which even today have been only partly explored. In a single mighty burst of invention he created the world of power of today; he brought into being our electrical power era, the rock-bottom foundation on which the industrial system of the entire world is builded; he gave us our mass-production system, for without his motors and currents it could not exist; he created the race of robots, the electrical mechanical men that are replacing human labor; he gave us every essential of modern radio; he invented the radar forty years before its use in World War II; he gave us our modern neon and other forms of gaseous-tube lighting; he gave us our fluorescent lighting; he gave us the high-frequency currents which are performing their electronic wonders throughout the industrial and medical worlds; he gave us remote control by wireless; he helped give us World War II, much against his will--for the misuse of his

superpower system and his robot controls in industry made it possible for politicians to have available a tremendous surplus of power, production facilities, labor and materials, with which to indulge in the most frightful devastating war that the maniacal mind could conceive. And these discoveries are merely the inventions made by the master mind of Tesla which have thus far been utilized--scores of others remain still unused.

Yet Tesla lived and labored to bring peace to the world. He dedicated his life to lifting the burdens from the shoulders of mankind; to bringing a new era of peace, plenty and happiness to the human race. Seeing the coming of World War II, implemented and powered by his discoveries, he sought to prevent it; offered the world a device which he maintained would make any country, no matter how small, safe within its borders--and his offer was rejected.

More important by far, however, than all his stupendously significant electrical discoveries is that supreme invention--Nikola Tesla the Superman--the human instrument which shoved the world forward with an accelerating lunge like an airplane cast into the sky from a catapult. Tesla, the scientist and inventor, was himself an invention, just as much as was his alternating-current system that put the world on a superpower basis.

Tesla was a superman, a self-made superman, invented and designed specifically to perform wonders; and he achieved them in a volume far beyond the capacity of the world to absorb. His life he designed on engineering principles to enable him to serve as an automaton, with utmost efficiency, for the discovery and application of the forces of Nature to human welfare. To this end he sacrificed love and pleasure, seeking satisfaction only in his accomplishments, and limiting his body solely to serving as a tool of his technically creative mind.

With our modern craze for division of labor and specialization of effort to gain efficiency of production in our industrial machine, one hesitates to think of a future in which Tesla's invention of the superman might be applied to the entire human race, with specialization designed for every individual from birth.

The superman that Tesla designed was a scientific saint. The inventions that this scientific martyr produced were designed for the peace, happiness and security of the human race, but they have been applied to create scarcity, depressions and devastating war. Suppose the superman invention were also developed and prostituted to the purposes of war-mongering politicians? Tesla glimpsed the possibilities and suggested the community life of the bee as a threat to our social structure unless the elements of individual and community lives are properly directed and personal freedom protected.

Tesla's superman was a marvelously successful invention--for Tesla--which seemed, as far as the world could observe, to function satisfactorily. He eliminated love from his life; eliminated women even from his thoughts. He went beyond Plato, who conceived of a spiritual companionship between man and woman free from sexual desires; he eliminated even the spiritual companionship. He designed the isolated life into which no woman and no man could enter; the self-suficient individuality from which all sex considerations were completely eliminated; the genius who would live entirely as a thinking and a working machine.

Tesla's superman invention was a producer of marvels, and he thought that he had, by scientific methods, succeeded in eliminating love from his life. That abnormal life makes a fascinating experiment for the consideration of the philosopher and psychologist, for he did not succeed in eliminating love. It manifested itself despite his conscientious efforts at suppression; and when it did so it came in the most fantastic form, providing a romance the like of which is not recorded in the annals of human history.

Tesla's whole life seems unreal, as if he were a fabled creature of some Olympian world. A reporter, after writing a story of his discoveries and inventions, concluded, "His accomplishments seem like the dream of an intoxicated god." It was Tesla's invention of the polyphase alternating-current system that was directly responsible for harnessing Niagara Falls and opened the modern electrical superpower era in which electricity is transported for hundred of miles, to operate the tens of thousands of mass-production factories of industrial systems. Every one of the tall Martian-like towers of the electrical transmission lines that stalk across the earth, and whose wires carry

electricity to distant cities, is a monument to Tesla; every powerhouse, every dynamo and every motor that drives every machine in the country is a monument to him.

Superseding himself, he discovered the secret of transmitting electrical power to the utmost ends of the earth without wires, and demonstrated his system by which useful amounts of power could be drawn from the earth anywhere merely by making a connection to the ground; he set the entire earth in electrical vibration with a generator which spouted lightning that rivaled the fiery artillery of the heavens. It was as a minor portion of this discovery that he created the modern radio system; he planned our broadcasting methods of today, forty years ago when others saw in wireless only the dot-dash messages that might save ships in distress.

He produced lamps of greater brilliance and economy than those in common use today; he invented the tube, fluorescent and wireless lamps which we now consider such up-to-the-minute developments; and he essayed to set the entire atmosphere of the earth aglow with his electric currents, to change our world into a single terrestrial lamp and to make the skies at night shine as does the sun by day.

If other first-magnitude inventors and discoverers may be considered torches of progress, Tesla was a conflagration. He was the vehicle through which the blazing suns of a brighter tomorrow focused their incandescent beams on a world that was not prepared to receive their light. Nor is it remarkable that this radiant personality should have led a strange and isolated life. The value of his contributions to society cannot be overrated. we can now analyze, to some extent, the personality that produced them. He stands as a synthetic genius, a self-made superman, the greatest invention of the greatest inventor of all times. But when we consider Tesla as a human being, apart from his charming and captivating social manners, it is hard to imagine a worse nightmare than a world inhabited entirely by geniuses.

When Nature makes an experiment and achieves an improvement it is necessary that it be accomplished in such a way that the progress will not be lost with the individual but will be passed on to future generations. In man, this requires a utilization of the social values of the race, cooperation

of the individual with his kind, that the improved status may be propagated and become a legacy of all. Tesla intentionally engineered love and women out of his life, and while he achieved gigantic intellectual stature, he failed to achieve its perpetuation either through his own progeny or through disciples. The superman he constructed was not great enough to embrace a wife and continue to exist as such. The love he sought to suppress in his life, and which he thought was associated only with women, is a force which, in its various aspects, links together all members of the human race.

In seeking to suppress this force entirely Tesla severed the bonds which might have brought to him the disciples who would, through other channels, have perpetuated the force of his prodigal genius. As a result, he succeeded in imparting to the world only the smallest fraction of the creative products of his synthetic superman.

The creation of a superman as demonstrated by Tesla was a grand experiment in human evolution, well worthy of the giant intellect that grew out of it, but it did not come up to Nature's standards; and the experiment will have to be made many times more before we learn how to create a super race with the minds of Teslas that can tap the hidden treasury of Nature's store of knowledge, yet endowed too with the vital power of love that will unlock forces, more powerful than any which we now glimpse, for advancing the status of the human race.

There was no evidence whatever that a superman was being born

when the stroke of midnight between July 9 and 10, in the year 1856, brought a son, Nikola, to the home of the Rev. Milutin Tesla and Djouka, his wife, in the hamlet of Smiljan, in the Austro-Hungarian border province of Lika, now a part of Yugoslavia. The father of the new arrival, pastor of the village church, was a former student in an oficers' training school who had rebelled against the restrictions of Army life and turned to the ministry as the field in which he could more satisfactorily express himself. The mother, although totally unable to read or write, was nevertheless an intellectually brilliant woman, who without the help of literal aids became really well educated.

Both father and mother contributed to the child a valuable heritage of culture developed and passed on by ancestral families that had been community leaders for many generations. The father came from a family that contributed sons in equal numbers to the Church and to the Army. The mother was a member of the Mandich family whose sons, for generations without number, had, with very few exceptions, become ministers of the Serbian Orthodox Church, and whose daughters were chosen as wives by ministers.

Djouka, the mother of Nikola Tesla (her given name in English translation would be Georgina), was the eldest daughter in a family of seven children. Her father, like her husband, was a minister of the Serbian Orthodox Church, Her mother, after a period of failing eyesight, had become blind shortly after the seventh child was born; so Djouka, the eldest daughter, at a tender age was compelled to take over the major share of her mother's duties. This not alone prevented her from attending school: her work at home so completely consumed her time that she was unable to acquire even the rudiments of reading and writing through home study. This was a strange situation in the cultured family of which she was a member. Tesla, however, always credited his unlettered mother rather than his erudite father with being the source from which he inherited his inventive ability. She devised many household labor-saving instruments. She was, in addition, a very practical individual, and her well-educated husband wisely left in her hands all business matters involving both the church and his household.

An unusually retentive memory served this remarkable woman as a good substitute for literacy. As the family moved in cultured circles she absorbed by ear much of the cultural riches of the community. She could repeat, without error or omission, thousands of verses of the national poetry of her country--the sagas of the Serbs--and could recite long passages from the Bible. She could narrate from memory the entire poetical- philosophical work Gorski ffenac (Mountain fireath), written by Bishop Petrovich Njegosh. She also possessed artistic talent and a versatile dexterity in her fingers for expressing it. She earned wide fame throughout the countryside for her beautiful needlework. According to Tesla, so great were her dexterity and her patience that she could, when over sixty, using only her fingers, tie three knots in an eyelash.

The remarkable abilities of this clever woman who had no formal education were transmitted to her five children. The elder son, Dane Tesla, born seven years before Nikola, was the family favorite because of the promise of an outstanding career which his youthful cleverness indicated was in store for him. He foreshadowed in his early years the strange manifestations which in his surviving brother were a prelude to greatness.

Tesla's father started his career in the military service, a likely choice for the son of an oficer; but he apparently did not inherit his father's liking for Army life. So slight an incident as criticism for failure to keep his brass buttons brightly polished caused him to leave military school. He was probably more of a poet and philosopher than a soldier. He wrote poetry which was published in contemporary papers. He also wrote articles on current problems which he signed with a pseudonym, "Srbin Pravicich." This, in Serb, means "Man of Justice." He spoke, read and wrote Serbo-Croat, German and Italian. It was probably his interest in poetry and philosophy that caused him to be attracted to Djouka Mandich. She was twenty-five and Milutin was two years older. He married her in 1847. His attraction to the daughter of a pastor probably influenced his next choice of a career, for he then entered the ministry and was soon ordained a priest.

He was made pastor of the church at Senj, an important seaport with facilities for a cultural life. He gave satisfaction, but apparently he achieved success among his parishioners on the basis of a pleasing personality and an understanding of problems rather than by using any great erudition in theological and ecclesiastical matters.

A few years after he was placed in charge of this parish, a new archbishop, elevated to head of the diocese, wished to survey the capabilities of the priests in his charge and offered a prize for the best sermon preached on his oficial visit. The Rev. Milutin Tesla was bubbling over, at the time, with interest in labor as a major factor in social and economic problems. To preach a sermon on this topic was, from the viewpoint of expediency, a totally impractical thing to do. Nobody, however, had ever accused the Rev. Mr. Tesla of being practical, so doing the impractical thing was quite in harmony with his nature. He chose the subject which held his greatest interest; and

when the archbishop arrived, he listened to a sermon on "Labor."

Months later Senj was surprised by an unanticipated visit from the archbishop, who announced that the Rev. Mr. Tesla had preached the best sermon, and awarded him a red sash which he was privileged to wear on all occasions. Shortly afterward he was made pastor at Smiljan, where his parish then embraced forty homes. He was later placed in charge of the much larger parish in the nearby city of Gospic. His first three children, Milka, Dane and Angelina, were born at Senj. Nikola and his younger sister, Marica, were born at Smiljan.

Tesla's early environment, then, was that of an agricultural community in a high plateau region near the eastern shore of the Adriatic Sea in the Velebit Mountains, a part of the Alps, a mountain chain stretching from Switzerland to Greece. He did not see his first steam locomotive until he was in his `teens, so his aptitude for mechanical matters did not grow out of his environment.

Tesla's homeland is today called Yugoslavia, a country whose name means "Land of the Southern Slavs." It embraces several former separate countries, Serbia, Bosnia, Croatia, Montenegro, Dalmatia and also Slovenia. The Tesla and Mandich families originally came from the western part of Serbia near Montenegro. Smiljan, the village where Tesla was born, is in the province of Lika, and at the time of his birth this was a dependent province held by the Austro-Hungarian Empire as part of Croatia and Slovenia.

Tesla's surname dates back more than two and a half centuries. Before that time the family name was Draganic (pronounced as if spelled Drag'-a-nitch). The name Tesla (pronounced as spelled, with equal emphasis on both syllables), in a purely literal sense, is a trade name like Smith, firight or Carpenter. As a common noun it describes a woodworking tool which, in English, is called an adz. This is an axe with a broad cutting blade at right angles to the handle, instead of parallel as in the more familiar form. It is used in cutting large tree trunks into squared timbers. In the Serbo-Croat language, the name of the tool is tesla. There is a tradition in the Draganic family that the members of one branch were given the nickname "Tesla" because of an inherited trait which caused practically all of them to have very large, broad and protruding front

teeth which greatly resembled the triangular blade of the adz.

The name Draganic and derivatives of it appear frequently in other branches of the Tesla family as a given name. When used as a given name it is frequently translated "Charlotte," but as a generic term it holds the meaning "dear" and as a surname is translated "Darling."

The majority of Tesla's ancestors for whom age records are available lived well beyond the average span of life for their times, but no definite record has been found of the ancestor who, Tesla claimed, lived to be one hundred and forty years of age. (His father died at the age of fifty-nine, and his mother at seventy-one.)

Although many of Tesla's ancestors were dark eyed, his eyes were a gray-blue. He claimed his eyes were originally darker, but that as a result of the excessive use of his brain their color changed. His mother's eyes, however, were gray and so are those of some of his nephews. It is probable, therefore, that his gray eyes were inherited, rather than faded by excessive use of the brain.

Tesla grew to be very tall and very slender--tallness was a family and a national trait. When he attained full growth he was exactly two meters, or six feet two and one-quarter inches tall. while his body was slender, it was built within normal proportions. His hands, however, and particularly his thumbs, seemed unusually long.

Nikola's older brother Dane was a brilliant boy and his parents gloried in their good fortune in being blessed with such a fine son. There was, however, a difference of seven years in the two boys' ages, and since the elder brother died as the result of an accident at the age of twelve, when Nikola was but five years old, a fair comparison of the two seems hardly possible. The loss of their first-born son was a great blow to his mother and father; the grief and regrets of the family were manifest in idealizing his talents and predicting possibilities of greatness he might have realized, and this situation was a challenge to Nikola in his youth.

The superman Tesla developed out of the superboy Nikola. Forced to rise above the normal level by an urge to carry on for his dearly beloved departed brother, and also on his

own account to exceed the great accomplishment his brother might have attained had he lived, he unconsciously drew upon strange resources within. The existence of these resources might have remained unsuspected for a lifetime, as happens with the run of individuals, if Nikola had not felt the necessity for creating a larger sphere of life for himself.

He was aware as a boy that he was not like other boys in his thoughts, in his amusements and in his hobbies. He could do the things that other lads his age usually do, and many things that they could not do. It was these latter things that interested him most, and he could find no companions who would share his enthusiasms for them. This situation caused him to isolate himself from contemporaries, and made him aware that he was destined for an unusual place if not great accomplishments in life. His boyish mind was continually exploring realms which his years had not reached, and his boyhood attainments frequently were worthy of men of mature age.

He had, of course, the usual experience of unusual incidents that fall to the lot of a small boy. One of the earliest events which Tesla recalled was a fall into a tank of hot milk that was being scalded in the process used by the natives of that region as a hygienic measure, anticipating the modern process of pasteurizing.

Shortly afterward he was accidentally locked in a remote mountain chapel which was visited only at widely separated intervals. He spent the night in the small building before his absence was discovered and his possible hiding place determined.

Living close to Nature, with ample opportunity for observing the flight of birds, which has ever filled men with envy, he did what many another boy has done with the same results. An umbrella, plus imagination, offered to him a certain solution of the problem of free flight through the air. The roof of a barn was his launching platform. The umbrella was large, but its condition was much the worse for many years of service; it turned inside out before the flight was well started. No bones were broken, but he was badly shaken up and spent the next six weeks in bed. Probably, though, he had better reason for making this experiment than most of the others who have tried it. He revealed that practically all his life he experienced a

peculiar reaction when breathing deeply. When he breathed deeply he was overcome by a feeling of lightness, as if his body had lost all weight; and he should, he concluded, be able to fly through the air merely by his will to do so. He did not learn, in boyhood, that he was unusual in this respect.

One day when he was in his fifth year, one of his chums received a gift of a fishing line, and all the boys in the group planned a fishing trip. On that day he was on the outs with his chums for some unremembered reason. As a result, he was informed he could not join them. He was not permitted even to see the fishing line at close range. He had glimpsed, however, the general idea of a hook on the end of a string. In a short time he had fashioned his own interpretation of a hook. The refinement of a barb had not occurred to him and he also failed to evolve the theory of using bait when he went off on his own fishing expedition. The baitless hook failed to attract any fish but, while dangling in the air, much to Tesla's surprise and satisfaction it snared a frog that leaped at it. He came home with a bag of nearly two dozen frogs. It may have been a day on which the fish were not biting, but at any rate his chums came home from the use of their new hook and line without any fish. His triumph was complete. When he later revealed his technique, all the boys in the neighborhood copied his hook and method, and in a short time the frog population of the region was greatly depleted.

The contents of birds' nests always excited Tesla's curiosity. He rarely disturbed their contents or occupants. On one occasion, however, he climbed a rocky crag to investigate an eagle's nest and took from it a baby eagle which he kept locked in a barn. A bird on the wing he considered fair prey for his sling shot, with which he was a star performer.

About this time he became intrigued with a piece of hollow tube cut from a cane growing in the neighborhood. This he played with until he had evolved a blow gun and later, by making a plunger and plugging one end of the tube with a wad of wet hemp, a pop gun. He then undertook the making of larger pop guns, and contrived one in which the end of the plunger was held against the chest and the tube pulled energetically toward the body. He engaged in the manufacture of this article for his chums, as a five-year-old businessman. When a number of window panes happened to

get broken accidentally by getting in the way of his hemp wad, his inventive proclivities in this field were quickly curbed by the destruction of the pop guns and the administration of the parental rod.

Tesla started his formal education by attending the village school in Smiljan before he reached his fifth birthday. A few years later his father received his appointment as pastor of a church in the nearby city of Gospic, so the family moved there. This was a sad day for young Tesla. He had lived close to Nature, and loved the open country and the high mountains among which he had thus far spent all of his life. The sudden transition to the artificialities of the city was a very definite shock to him. He was out of harmony with his new surroundings.

His advent into the city life of Gospic, at the age of seven, got off to an unfortunate start. As the new minister in town, his father was anxious to have everything move smoothly. Tesla was required to dress in his best clothes and attend the Sunday services. Naturally, he dreaded this ordeal and was very happy when assigned the task of ringing the bell summoning the worshipers to the service and announcing the close of the ceremonies. This gave him an opportunity to remain unseen in the belfry while the parishioners, their daughters and dude sons were arriving and departing.

Thinking he had waited long enough after the close of the service for the church to be cleared on this first Sunday, he came downstairs three steps at a time. A wealthy woman parishioner wearing a skirt with a long train that fashionably dragged along the ground, and who had come to the service with a retinue of servants, remained after the other parishioners to have a talk with the new pastor. She was just making an impressive exit when Tesla's final jump down the stairs landed him on the train, ripping this dignity-preserving appendage from the woman's dress. Her mortification and rage and his father's anger came upon him simultaneously. Parishioners loitering outside rushed back to revel in the spectacle. Thereafter no one dared be pleasant to this youngster who had enraged the wealthy dowager who domineered it over the social community. He was practically ostracized by the parishioners, and continued so until he redeemed himself in a spectacular manner.

Tesla felt strange and defeated in his ignorance of city ways. He met the situation first by avoidance. He did not care to leave his home. The boys of his age were neatly dressed every day. They were dudes and he did not belong. Even as a child Tesla was meticulously careful in dress. At the earliest moment, however, he would slip work clothes over his dress clothes and go wandering in the woods or engage in mechanical work. He could not enjoy life if limited to the activities in which he could engage while dressed up. Tesla, however, possessed ingenuity, and there was rarely a situation in which he was not able to use it. He also possessed knowledge of the ways of Nature. These gave him a distinct superiority over the city boys.

About a year after the family moved to Gospic a new fire company was organized. It was to be supplied with a pump which would replace the useful but inadequate bucket brigade. The members of the new organization obtained brightly colored uniforms and practiced marching for parades. Eventually the new pump arrived. It was a man-power pump to be operated by sixteen men. A parade and demonstration of the new apparatus was arranged. Almost everyone in Gospic turned out for the event and followed to the river front for the pump demonstration. Tesla was among them. He paid no attention to the speeches but was all eyes for the brightly painted apparatus. He did not know how it worked but would have loved to take it apart and investigate the insides.

The time for the demonstration came when the last speaker, finishing his dedicatory address, gave the order to start the pumping operation that would send a stream of water shooting skyward from the nozzle. The eight men regimented on either side of the pump bowed and rose in alternate unison as they raised and lowered the bars that operated the pistons of the pump. But nothing else happened, not a drop of water came from the nozzle!

Oficials of the fire company started feverishly to make adjustments and, after each attempt, set the sixteen men oscillating up and down at the pump handles, but each time without results. The lines of hose between the pump and the nozzle were straightened out, they were disconnected from the pump and connected again. But no water came from the far end of the hose to reward the efforts of the perspiring firemen.

Tesla was among the usual group of urchins that always manages to get inside the lines on such occasions. He tried to see everything that was going on from the closest possible vantage point and undoubtedly got on the nerves of the vexed oficials when their repeated efforts were frustrated by continuous failures. As one of the oficials turned for the tenth time to vent his frustration on the urchins and order them away from his range of action, Tesla grabbed him by the arm.

"I know what to do, Mister," said Tesla. "you keep pumping."

Dashing for the river, Tesla peeled his clothes off quickly and dove into the water. He swam to the suction hose that was supposed to draw the water supply from the river. He found it kinked, so that no water could flow into it, and flattened by the vacuum created by the pumping. When he straightened out the kink, the water rushed into the line. The nozzlemen had stood at their post for a long time, receiving a continuous repetition of warnings to be prepared each time an adjustment was made, but, as nothing happened on these successive occasions, they had gradually relaxed their attention and were giving little thought to the direction in which the nozzle was pointed. When the stream of water did shoot skyward, down it came on the assembled oficials and townspeople. This item of unexpected drama excited the crowd at the other end of the line near the pump, and to give vent to their joy they seized the scantily dressed Tesla, boosted him to the shoulders of a couple of the firemen, and led a procession around the town. The seven-year-old Tesla was the hero of the day.

Later on Tesla, in explaining the incident, said that he had had not the faintest idea of how the pump worked; but as he watched the men struggle with it, he got an intuitive flash of knowledge that told him to go to the hose in the river. On looking back to that event, he said, he knew how Archimedes must have felt when, after discovering the law of the displacement of water by floating objects, he ran naked through the streets of Syracuse shouting "Eureka!

At the age of seven Tesla had tasted the pleasures of public acclaim

for his ingenuity. And further, he had done something which the dudes, the boys of his age in the city, could not do

and which even their fathers could not do. He had found himself. He was now a hero, and it could be forgotten that he had jumped on a woman's skirt and ripped the train off.

Tesla never lost an opportunity to hike through the nearby mountains where he could again enjoy the pleasures of his earlier years spent so close to Nature. On these occasions he would often wonder if there was still operating a crude water wheel which he made and installed, when he was less than five years old, across the mountain brook near his home in Smiljan.

The wheel consisted of a not too well-smoothed disk cut from a tree trunk in some lumbering operations. Through its center he was able to cut a hole and force into it a somewhat straight branch of a tree, the ends of which he rested in two sticks with crotches which he forced into the rock on either bank of the brook. This arrangement permitted the lower part of the disk to dip in the water and the current caused it to rotate. To the lad there was a great deal of originality employed in making this ancient device. The wheel wobbled a bit but to him it was a marvelous piece of construction, and he got no end of pleasure out of watching his water wheel obtain power from the brook.

This experiment undoubtedly made a life-long impression on his young plastic mind and endowed him with the desire, ever afterward manifested in his work, of obtaining power from Nature's sources which are always being dissipated and always being replenished.

In this smooth-disk water wheel we find an early clue to his later invention of the smooth-disk turbine. In his later experience he discovered that all water wheels have paddles--but his little water wheel had operated without paddles.

Tesla's first experiment in original methods of power production was made when he was nine years old. It demonstrated his ingenuity and originality, if nothing else. It was a sixteen-bug-power engine. He took two thin slivers of wood, as thick as a toothpick and several times as long, and glued them together in the form of a cross, so they looked like the arms of a windmill. At the point of intersection they were glued to a spindle made of another thin sliver of wood. On this he slipped a very small pulley

with about the diameter of a pea. A piece of thread acting as a driving belt was slipped over this and also around the circumference of a much larger but light pulley which was also mounted on a thin spindle. The power for this machine was furnished by sixteen May bugs (June bugs in the United States). He had collected a jar full of the insects, which were very much of a pest in the neighborhood. With a little dab of glue four bugs were afixed, heading in the same direction, to each of the four arms of the windmill arrangement. The bugs beat their wings, and if they had been free would have flown away at high speed. They were, however, attached to the cross arms, so instead they pulled them around at high speed. These, being connected by the thread belt to the large pulley, caused the latter to turn at low speed; but it developed, Tesla reports, a surprisingly large torque, or turning power.

Proud of his bug-power motor and its continuous operation--the bugs did not cease flying for hours--he called in one of the boys in the neighborhood to admire it. The lad was a son of an Army oficer. The visitor was amused for a short time by the bug motor, until he spied the jar of still unused May bugs. Without hesitation he opened the jar, fished out the bugs--and ate them. This so nauseated Tesla that he chased the boy out of the house and destroyed the bug motor. For years he could not tolerate the sight of May bugs without a return of this unpleasant reaction.

This event greatly annoyed Tesla because he had planned to add more spindles to the shaft and stick on more fliers until he had more than a one-hundred-bug-power motor.

TESLA'S years in school were more important for the activities in which he engaged in after-school hours than for what he learned in the classroom. At the age of ten, having finished his elementary studies in the Normal School, Tesla entered the college, called the Real Gymnasium, at Gospic. This was not an unusually early age to enter the Real Gymnasium, as that school corresponds more to our grammar school and junior high school than to our college.

One of the requirements, and one to which an unusually large percentage of the class time was devoted throughout the four years, was freehand drawing. Tesla detested the subject almost to the point of open rebellion, and his marks were accordingly very low, but not entirely owing to a lack of ability.

Tesla was left-handed as a boy, but later became ambidextrous. Left-handedness was a definite handicap in the freehand-drawing studies, but he could have done much better work than he actually produced and would have gotten higher marks if it were not for a piece of altruism in which he engaged. A student whom he could excel in drawing was striving hard for a scholarship. Were he to receive the lowest marks in freehand drawing, he would be unable to obtain the scholarship. Tesla sought to help his fellow student by intentionally getting the lowest rating in the small class.

Mathematics was his favorite subject and he distinguished himself in that study. His unusual proficiency in this field was not considered a counterbalancing virtue to make amends for his lack of enthusiasm for freehand drawing. A strange power permitted him to perform unusual feats in mathematics. He possessed it from early boyhood, but had considered it a nuisance and tried to be rid of it because it seemed beyond his control.

If he thought of an object it would appear before him exhibiting the appearance of solidity and massiveness. So greatly did these visions possess the attributes of actual objects that it was usually dificult for him to distinguish between vision and reality. This abnormal faculty functioned in a very useful fashion in his school work with mathematics.

If he was given a problem in arithmetic or algebra, it was immaterial to him whether he went to the blackboard to work it out or whether he remained in his seat. His strange faculty permitted him to see a visioned blackboard on which the problem was written, and there appeared on this blackboard all of the operations and symbols required in working out the solution. Each step appeared much more rapidly than he could work it out by hand on the actual slate. As a result, he could give the solution almost as quickly as the whole problem was stated.

His teachers, at first, had some doubts about his honesty, thinking he had worked out some clever deceit for getting the right answers. In due time their skepticism was dispelled and they accepted him as a student who was unusually apt at mental arithmetic. He would not reveal this power to anyone and would discuss it only with his mother, who in the past had encouraged him in his efforts to banish it. Now that the power had demonstrated some definite usefulness, though, he was not so anxious to be completely rid of it, but desired to bring it under his complete control.

Work that Tesla did outside school hours interested him much more than his school work. He was a rapid reader and had a memory that was retentive to the point, almost, of infallibility. He found it easy to acquire foreign languages. In addition to his native Serbo-Croat language he became proficient in the use of German, French and Italian. This opened to him great stores of knowledge to which other students did not have access, yet this knowledge, apparently, was of little use to him in his school work. He was interested in things mechanical but the school provided no manual training course. Nevertheless, he became proficient in the working of wood and metals with tools and methods of his own contriving.

In the classroom of one of the upper grades of the Real Gymnasium models of water wheels were on exhibition. They were not working models but nevertheless they aroused Tesla's enthusiasm. They recalled to him the crude wheel he had constructed in the hills of Smiljan. He had seen pictures of the magnificent Niagara Falls. Coupling the power possibilities presented by the majestic waterfalls and the intriguing possibilities he saw in the models of the water wheels, he aroused in himself a passion to accomplish a grand achievement. Waxing eloquent on the subject, he told his father, "Some day I am going to America and harness Niagara Falls to produce power." Thirty years later he was to see this prediction fulfilled.

There were many books in his father's library. The knowledge in those books interested him more than that which he received in school and he wished to spend his evenings reading them. As in other matters, he carried this to an extreme, so his father forbade him to read them, fearing that he would ruin his eyes in the poor light of tallow candles then used for illumination. Nikola sought to

circumvent this ruling by taking candles to his room and reading after he was sent to bed, but his violation of orders was soon discovered and the family candle supply was hidden. Next he fashioned a candle mould out of a piece of tin and made his own candles. Then, by plugging the keyhole and the chinks around the door, he was able to spend the night hours reading volumes purloined from his father's bookshelves. Frequently, he said, he would read through the entire night and feel none the worse for the loss of sleep. Eventual discovery, however, brought paternal discipline of a vigorous nature. He was about eleven years old at this time.

Like other boys of his age he played with bows and arrows. He made bigger bows, and better, straighter shooting arrows, and his marksmanship was excellent. He was not willing to stop at that point. He started building arbalists. These could be described as bow-and-arrow guns. The bow is mounted on a frame and the string pulled back and caught on a peg from which it is released by a trigger. The arrow is laid on the midpoint of the bow, its end against the taut string. The bow lies horizontal on the frame whereas in ordinary manual shooting the bow is held in vertical position. For this reason the device is sometimes called the crossbow. In setting an arbalist the beam is placed against the abdomen and the string pulled back with all possible force. Tesla did this so often, he said, that his skin at the point of pressure became calloused until it was more like a crocodile's hide. When shot into the air the arrows from his arbalist were never recovered, for they went far out of sight. At close range they would pass through a pine board an inch thick.

Tesla got a thrill out of archery not experienced by other boys. He was, in imagination, riding those arrows which he shot out of sight into the blue vault of the heavens. That sense of exhilaration he experienced when breathing deeply gave him such a feeling of lightness he convinced himself that in this state it would be relatively easy for him to fly through the air if he only could devise some mechanical aid that would launch him and enable him to overcome what he thought was only a slight remaining weight in his body. His earlier disastrous jump from the barn roof had not disillusioned him. His conclusions were in keeping with his sensations; but a twelve-year-old lad exploring this dificult field alone cannot be condemned too severely for not discovering that our senses sometimes deceive us, or

rather that we sometimes deceive ourselves in interpreting what our senses tell us.

In breathing deeply he was overventilating his lungs, taking out some of the residual carbon dioxide which is chemical "ashes," and largely inert, and replacing it with air containing a mixture of equally inert nitrogen and very active oxygen. The latter being present in more than normal proportions immediately began to upset chemical balances throughout the body. The reaction on the brain produces a result which does not differ greatly from alcohol intoxication. A number of cults use this procedure to induce "mystical" or "occult" experiences. How was a twelve-year-old boy to know all these things? He could see that birds did an excellent job in flying. He was convinced that some day man would fly, and he wanted to produce the machine that would get him off the ground and into the air.

The big idea came to him when he learned about the vacuum--a space within a container from which all air had been exhausted. He learned that every object exposed to the air was under a pressure of about fourteen pounds per square inch, while in a vacuum objects were free of such pressure. He figured that a pressure of fourteen pounds should turn a cylinder at high speed and he could arrange to get advantage of such pressure by surrounding one half of a cylinder with a vacuum and having the remaining half of its surface exposed to air pressure. He carefully built a box of wood. At one end was an opening into which a cylinder was fitted with a very high order of accuracy, so that the box would be airtight; and on one side of the cylinder the edge of the box made a right-angle contact. On the cylinder's other side the box made a tangent, or flat, contact. This arrangement was made because he wanted the air pressure to be exerted at a tangent to the surface of the cylinder--a situation that he knew would be required in order to produce rotation. If he could get that cylinder to rotate, all he would have to do in order to fly would be to attach a propeller to a shaft from the cylinder, strap the box to his body and obtain continuous power from his vacuum box that would lift him through the air. His theory of course was fallacious, but he had no means of knowing that at the time.

The workmanship on this box was undoubtedly of a very high order, considering it was made by a self-instructed twelve-year-old mechanic. When he connected his vacuum pump, an

ordinary air pump with its valves reversed, he found the box was airtight, so he pulled out all the air, watching the cylinder intently while doing so. Nothing happened for many strokes of the pump except that it made his back lame to pull the pump handle upward while he created the most "powerful" possible vacuum. He rested for a moment. He was breathing deeply from exertion, overventilating his lungs, and getting that joyous, dizzy, light-as-air feeling which was a highly satisfactory mental environment for his experiment.

Suddenly the cylinder started to turn--slowly! His experiment was a success! His vacuum-power box was working! He would fly!

Tesla was delirious with joy. He went into a state of ecstasy. There was no one with whom he could share this joy, as he had taken no one into his confidence. It was his secret and he was forced to endure its joys alone. The cylinder continued to turn slowly. It was no hallucination. It was real. It did not speed up, however, and this was disappointing. He had visualized it turning at a tremendous speed but it was actually turning extremely slowly. His idea, at least, he figured, was correct. With a little better workmanship, perhaps he could make the cylinder turn faster. He stood spellbound watching it turn at a snail's pace for less than half a minute--and then the cylinder stopped. That broke the spell and ended for the time his mental air flights.

He hunted for the trouble and quickly located what he was sure was the cause of the dificulty. Since the vacuum, he theorized, is the source of power, then, if the power stops, it must be because the vacuum is gone. His pump, he felt sure, must be leaking air. He pulled up the handle. It came up easily and that meant very definitely he had lost the vacuum in the box. He again pumped out the air--and again when he reached a high vacuum the cylinder started to turn slowly and continued to do so for a fraction of a minute. When it stopped he again pumped a vacuum and again the cylinder turned. This time he continued to operate the pump and the cylinder continued to turn. He could keep it turning as long as he desired by continuing to pump the vacuum.

There was nothing wrong with his theory, as far as he could see. He went over the pump very carefully, making

improvements which would give him a high vacuum, and studied the valve to make that a better guard of the vacuum in the box. He worked on the project for weeks but despite his best efforts he could get no better results than the slow movement of the cylinder.

Finally the truth came to him in a flash--he was losing the vacuum in the box because the air was leaking in around the cylinder on that side where the flat board was tangent to the surface of the cylinder. As the air flowed into the box it pulled the cylinder around with it very slowly. When the air stopped flowing into the box the cylinder stopped turning. He knew now his theory was wrong. He had supposed that even with the vacuum being maintained, and no air leaking in, the air pressure would be exerted at a tangent to the surface of the cylinder and the pressure would produce motion in the same way as pushing on the rim of a wheel will cause it to turn. He discovered later, however, that the air pressure is exerted at right angles to the surface of the cylinder at all points, like the direction of the spokes of a wheel, and therefore it could not be used to produce rotation in the way he planned.

This experiment, nevertheless, was not a total loss, even though it greatly disheartened him. The knowledge that the air leaking into a vacuum had actually produced even a small amount of rotation in a cylinder remained with him and led directly, many years later, to his invention of the "Tesla turbine," the steam engine that broke all records for horsepower developed per pound of weight--what he called "a power house in a hat."

Nature seemed to be constantly engaged in staging spectacular demonstrations for young Tesla, revealing to him samples of the secret of her mighty forces.

Tesla was roaming in the mountains with some chums one winter day after a storm in which the snow fell moist and sticky. A small snowball rolled on the ground quickly gathered more snow to itself and soon became a big one that was not too easy to move. Tiring of making snowmen and snow houses on level stretches of ground, the boys took to throwing snowballs down the sloping ground of the mountain. Most of them were duds--that is, they got stalled in the soft snow before they accumulated additional volume. A few rolled a distance, grew larger and then bogged down and stopped. One, however, found just the right conditions; it

rolled until it was a large ball and then spread out, rolling up the snow at the sides as if it were rolling up a giant carpet, and then suddenly it turned into an avalanche. Soon an irresistible mass of snow was moving down the steep slope. It stripped the mountainside clean of snow, trees, soil and everything else it could carry before it and with it. The great mass landed in the valley below with a thud that shook the mountain. The boys were frightened because there was snow above them on the mountain that might have been shaken into a downward slide, carrying them along buried in it.

This event made a profound impression on Tesla and it dominated a great deal of his thinking in later life. He had witnessed a snowball weighing a few ounces starting an irresistible, devastating movement of thousands of tons of inert matter. It convinced him that there are tremendous forces locked up in Nature that can be released in gigantic amounts, for useful as well as destructive purposes, by the employment of small trigger forces. He was always on the lookout for such triggers in his later experiments.

Tesla even as a boy was an original thinker and he never hesitated to think thoughts on a grand scale, always carrying everything to its largest ultimate dimension as a means of exploring the cosmos. This is demonstrated by another event that took place the following summer. He was wandering alone in the mountains when storm clouds started to fill the sky. There was a flash of lightning and almost immediately a deluge of rain descended on him.

There was implanted in his thirteen-year-old mind on that occasion a thought which he carried with him practically all his life. He saw the lightning flash and then saw the rain come down in torrents, so he reasoned that the lightning flash produced the downpour. The idea become firmly fixed in his mind that electricity controlled the rain, and that if one could produce lightning at will, the weather would be brought under control. Then there would be no dry periods in which crops would be ruined; deserts could be turned into vineyards, the food supply of the world would be greatly increased, and there would be no lack of food anywhere on the globe. why could he not produce lightning?

The observation and the conclusions drawn from it by young Tesla were worthy of a more mature mind, and it would

require a genius among the adults to have evolved the project of controlling the world's weather through such means. There was, however, a flaw in his observation. He saw the lightning come first and the rain afterward. Further investigation would have revealed to him that the order of events was reversed higher in the air. It was the rain that came first and the lightning afterward up in the cloud. The lightning, however, arrived first because it made the trip from the cloud in less than 1/100,000 of a second, while the raindrops required several seconds to fall to the ground.

At this time there was planted in Tesla's mind the seed of a project which matured more than thirty years later when, in the mountains of Colorado, he actually produced bolts of lightning, and planned later to use them to bring rain. He never succeeded in convincing the U.S. Patent Ofice of the practicability of the rain-making plan.

Tesla, as a boy, knew no limits to the universe of his thinking; and as a result he built an intellectual realm suficiently large to provide ample space in which his more mature mind could operate without encountering retarding barriers.

Tesla finished his course at the Real Gymnasium in Gospic in 1870,

at the age of fourteen. He had distinguished himself as a scholar. In one grade, however, his mathematics professor gave him less than a passing mark for his year's work. Tesla felt an injustice had been done him, so he went to the director of the school and demanded that he be given the strictest kind of examination in the subject. This was done in the presence of the director and the professor, and Tesla passed it with an almost perfect mark.

His fine work at school and the recognition by the towns-people that he possessed a broader scope of knowledge than any other youth in town led the trustees of the public library to ask him to classify the books in their possession and make a catalogue. He had already read most of the books in his father's extensive library, so he was pleased to have close access to a still larger collection and undertook the task with considerable enthusiasm. He had scarcely begun work on this project when it was interrupted by a long intermittent illness. When he felt too depressed

to go to the library he had quantities of the books brought to his home, and these he read while confined to his bed. His illness reached a critical stage and physicians gave up hope of saving his life.

Tesla's father knew that he was a delicate child and, having lost his other son, tried to throw every possible safeguard around this one. He was greatly pleased over his son's brilliant accomplishments in almost every activity in which he engaged, but he recognized as a danger to Nikola's health the great intensity with which he tackled projects. Nikola's trend toward engineering was to him a dangerous development, as he thought work in that field would make too heavy demands upon him, not only because of the nature of the work but in the extended years of study in which he would have to engage. If, however, the boy entered the ministry, it would not be necessary for him to extend his studies beyond the Real Gymnasium which he had just completed. For this reason his father favored a career for him in the Church.

Illness threw everything into a somber aspect. When the critical stage of his illness was reached and his strength was at its lowest ebb, Nikola manifested no inclination to help himself get better by developing an enthusiasm for anything. It was in this stage of his illness that he glanced listlessly at one of the library books. It was a volume by Mark Twain. The book held his interest and then aroused his enthusiasm for life, enabling him to pass a crisis, and his health gradually returned to normal. Tesla credited the Mark Twain book with saving his life, and when, years later, he met Twain, they became very close friends.

At the age of fifteen Tesla, in 1870, continued his studies at the Higher Real Gymnasium, corresponding to our college, at Karlovac (Carlstadt) in Croatia. His attendance at this school was made possible by an invitation from a cousin of his father's, married to a Col. Brankovic, whose home was in Karlovac, to come and live with her and her husband, a retired Army oficer, while attending school. His life there was none too happy. Scarcely had he arrived when he contracted malaria from the mosquitoes in the Karlovac lowlands, and he was never free from the malady for years afterward.

Tesla relates that he was hungry all during the three years he spent at Karlovac. There was plenty of deliciously prepared food in the home, but his aunt held the theory that because his health seemed none too rugged he should not eat heavy meals. Her husband, a gruff and rugged individual, when carving a second helping for himself, would sometimes try to slip a healthy slice of meat onto Tesla's plate; but the Colonel was always overruled by his wife, who would take back the slice and carve one to the thinness of a sheet of paper, warning her husband, "Niko is delicate and we must be very careful not to overload his stomach."

His studies at Karlovac interested him, however, and he completed the four-year course in three years, tackling the school work with a dangerous enthusiasm, partly as an escape mechanism to divert his attention from the none too pleasing conditions where he was living. The lasting favorable impression which Tesla carried away from Karlovac concerned his professor of physics, a clever and original experimenter, who amazed him with the feats he performed with laboratory apparatus. He could not get enough of this course. He wanted to devote his whole time henceforth to electrical experimenting. He knew he would not be satisfied in any other field. His mind was made up; he had selected his career.

His father wrote to him shortly before his graduation advising him not to return home when school was closed but to go on a long hunting trip. Tesla, however, was anxious to get home--to surprise his parents with the good news that he had completed his work at the Higher Real Gymnasium a year ahead of schedule, and to announce his decision to make the study of electricity his life work. Greatly worried, his parents, who at that moment were making strenuous efforts to protect his health, were doubly alarmed. first, there was his violation of the instruction sent him not to return to Gospic. The reason for this advice they had not disclosed--an epidemic of cholera was raging. And second, there was his decision to enter on a career which they feared would make dangerous demands on his delicate health. On returning home, he found his plan definitely opposed. This made him very unhappy. In addition, he would shortly have to face a situation which was even more repugnant than entering upon a career in the Church, and that was the compulsory three-years' service in the Army. Those two powerful factors were operating against

him and seeking to thwart him in his burning desire to start immediately unraveling the mystery and harnessing the great power of electricity.

Nothing, he thought, could exceed the dificulty of the predicament in which he found himself. In this, however, he was mistaken, for he was soon to face a much more serious problem. On the very day after his arrival home, while these issues were still red hot, he became ill with cholera. He had come home malnourished because of the inadequate amount of food to which he had been limited and the strain of his intense application to his studies. Besides, he was still suffering from malaria. Then came the cholera. Now all other problems became secondary to the immediate one of maintaining life itself against the deadly scourge. His physical condition made the doctors despair of saving him. Nevertheless, he survived the crisis, but it left him in a thoroughly weakened and run-down condition. For nine months he lay in bed almost a physical wreck. He had frequent sinking spells and from each successive one it seemed harder to rally him.

Life held no incentive for him. If he survived he would be forced to enter the Army and, if nothing happened to prevent him from finishing that term of something worse than slavery, he would be forced to study for the ministry. He did not care whether he survived or not. Left to his own decision, he would not have rallied from earlier sinking spells; but the decision was not left to him. Some force stronger than his own consciousness carried him through, but it had to succeed in spite of him and not because of any assistance he was giving. The sinking spells came on with startling regularity, each one with increasing depth. It seemed a miracle that he had come out of the last one, and now with less reserve strength he was sinking into another and edging rapidly into unconsciousness. His father entered his room and tried desperately to rouse him and stir him to a more cheerful and hopeful attitude in which he could help himself and do more than the doctors could do for him, but without results.

"I could--get well--if you--would let me--study electrical--engineering," said the prostrate young man in a hardly audible whisper. He had scarcely enough energy left for even this effort; and having made the speech, he seemed to be dropping over the edge of nothingness. His father,

bending intently over him and fearing the end had come, seized him.

"Nikola," he commanded, "you cannot go. you must stay. you will be an engineer. Do you hear me? you will go to the best engineering school in the world and you will be a great engineer. Nikola, you must come back, you must come back and become a great engineer."

The eyes of the prostrate figure opened slowly. Now there was a light shining in the eyes where before they presented a death-like glaze. The face moved a little, very little, but the slight change this movement made seemed to be in the direction of a smile. It was a smile, a weak one, and he was able to keep his eyes open although it was very apparently a struggle for him to do so.

"Thank God" said his father. "you heard me, Nikola. you will go to an engineering school and become a great engineer. Do you understand me?"

There was not enough energy for voice but the smile became a little more definite.

Another crisis in which he had escaped death by the narrowest margin had been passed. His rise out of this situation seemed almost miraculous. It seemed to him, Tesla later related, that from that instant he felt as if he were drawing vital energy from his loved ones who surrounded him; and this he used to rally himself out of the shadow.

He was again able to whisper. "I will get well," he said weakly. He breathed deeply, as deep as his frail tired frame would permit, of the oxygen which he had found so stimulating in the past. It was the first time he had done so in the nine months since he became ill. With each breath he felt reinvigorated. He seemed to get stronger by the minute.

In a very short time he was taking nourishment and within a week he was able to sit up. In a few days more he was on his feet. Life now would be glorious. He would be an electrical engineer. Everything he dreamed of would come true. As the days passed he recovered his strength at a remarkably rapid rate and his hearty appetite returned. It was now early summer. He would prepare himself to enter the fall term at an engineering school.

But there was something he had forgotten, everyone in the family had forgotten, in the stress of his months of illness. It was now brought sharply to his and their attention. An Army summons--he must face three years' military servitude! was his remarkable recovery to be ruined by this catastrophe, which seemed all the worse now that his chosen career seemed otherwise nearer? Failure to respond to a military summons meant jail--and after that the service in addition. How would he solve this problem?

There is no record of what took place. This spot in his career Tesla glossed over with the statement that his father considered it advisable for him to go off on a year's hunting expedition to recover his health. At any rate, Nikola disappeared. He left with a hunting outfit and some books and paper. where he spent the year, no one knows--probably at some hideaway in the mountains. In the meantime, he was a fugitive from Army service.

For any ordinary individual this situation would be a most serious one. For Tesla it had all the gravity associated with ordinary cases, plus the complication that his family on his father's side was a traditional military family whose members had won high rank and honors in Army activities, and many of whom were now in the service of Austria-Hungary. For a member of that family to become equivalent to a "draft dodger" and a "conscientious objector," both, was a serious blow to its prestige, and could provoke a scandal if word of the situation got into circulation. Tesla's father used this circumstance and the fact of NikoIa's delicate health as talking points to induce his relatives in Army positions to use their influence to enable his son to escape conscription and avoid punishment for failing to respond to the Army call. In this he was successful, apparently, but required considerable time in which to make the arrangements.

Hiding in the mountains and with a year's time to kill, on this enforced vacation Tesla was able to indulge in working out totally fantastic plans for some gigantic projects. One of the plans was for the construction and operation of an under-ocean tube, connecting Europe and the United States, by which mail could be transported in spherical containers moved through the tube by water pressure. He discovered early in his calculations that the friction of the water on the walls of the tube would require such a tremendous

amount of power to overcome it that it made the project totally impracticable. Since, however, he was working on the project entirely for his own amusement, he eliminated friction from the calculations and was then able to design a very interesting system of high-speed intercontinental mail delivery. The factor which made this interesting project impracticable--the drag of the water on the sides of the tube--Tesla was later to utilize when he invented his novel steam turbine.

The other project with which he amused himself was drawn upon an even larger scale and required a still higher order of imagination. He conceived the project of building a ring around the earth at the Equator, somewhat resembling the rings around the planet Saturn. The earth ring, however, was to be a solid structure whereas Saturn's rings are made up of dust particles.

Tesla loved to work with mathematics, and this project gave him an excellent opportunity to use all of the mathematical techniques available to him. The ring which Tesla planned was to be a rigid structure constructed on a gigantic system of scaffolding extending completely around the earth. Once the ring was complete, the scaffolding was to be removed and the ring would stay suspended in space and rotating at the same speed as the earth.

Some use might be found for the project, Tesla said, if someone could find a means of providing reactionary forces that could make the ring stand still with respect to the earth while the latter whirled underneath it at a speed of 1,000 miles per hour. This would provide a high-speed "moving" platform system of transportation which would make it possible for a person to travel around the earth in a single day.

In this project, he admitted, he encountered the same problem as did Archimedes, who said "Give me a fulcrum and a lever long enough and I will move the earth." "The fulcrum in space on which to rest the lever was no more attainable than was the reactionary force needed to halt the spinning of the hypothetical ring around the earth," said Tesla. There were a number of other factors which he found necessary to ignore in this project, but ignore them he did so that they would not interfere with his mathematical practice and his cosmical engineering plans.

With his health regained, and the danger of punishment by the Army removed, Tesla returned to his home in Gospic to remain a short time before going to Graumltz, where he was to study electrical engineering as his father had promised he could do. This marked the turning point in his life. Finished with boyhood dreams and play, he was now ready to settle down to his serious life work. He had played at being a god, not hesitating to plan refashioning the earth as a planet. His life work was to produce accomplishments hardly less fantastic than his boyhood dreams.

TESLA entered manhood with a definite knowledge that nameless forces were shaping for him an unrevealed destiny. It was a situation he had to feel rather than be able to identify and describe in words. His goal he could not see and the course leading to it he could not discern. He knew very definitely the field in which he intended to spend his life, and using such physical laws as he knew he decided to plan a life which, as an engineering project, would be operated under principles that would yield the highest index of efficiency. He did not, at this time, have a complete plan of life drawn up, but there were certain elements which he knew intuitively he would not include in his operations, so he avoided all activities and interests that would bring them in as complications. It was to be a single-purpose life, devoted entirely to science with no provisions whatever for play or romance.

It was with this philosophy of life that Tesla in 1875, at the age of 19, went to Graumltz, in Austria, to study electrical engineering at the Polytechnic Institute. He intended henceforth to devote all his energies to mastering that strange, almost occult force, electricity, and to harness it for human welfare.

His first effort to put this philosophy to a practical test almost resulted in disaster despite the fact that it worked successfully. Tesla completely eliminated recreation and plunged into his studies with such enthusiastic devotion that he allowed himself only four hours' rest, not all of which he spent in slumber. He would go to bed at eleven o'clock and read himself to sleep. He was up again in the small hours of the morning, tackling his studies.

Under such a schedule he was able to pass, at the end of the first term, his examinations in nine subjects--nearly twice as many as were required. His diligence greatly impressed the members of the faculty. The dean of the technical faculty wrote to Tesla's father, "your son is a star of first rank." The strain, however, was affecting his health. He desired to make a spectacular showing to demonstrate to his father in a practical way his appreciation of the permission he gave to study engineering. When he returned to his home at the end of the school term with the highest marks that could be awarded in all the subjects passed, he expected to be joyfully received by his father and praised for his good work. Instead, his parent showed only the slightest enthusiasm for his accomplishment but a great deal of interest in his health, and criticized Nikola for endangering it after his earlier narrow escape from death. Unknown to Tesla until several years afterward, the professor at the Polytechnic Institute had written to his father early in the term, asking him to take his son out of the school, as he was in danger of killing himself through overwork.

On his return to the Institute for the second year he decided to limit his studies to physics, mechanics and mathematics. This was fortunate because it gave him more time in which to handle a situation that arose later in his studies, and was to lead to his first and perhaps greatest invention.

Early in his second year at the Institute there was received from Paris a piece of electrical equipment, a Gramme machine, that could be used as either a dynamo or motor. If turned by mechanical power it would generate electricity, and if supplied with electricity it would operate as a motor and produce mechanical power. It was a direct-current machine.

When Prof. Poeschl demonstrated the machine, Tesla was greatly impressed by its performance except in one respect--a great deal of sparking took place at the commutator. Tesla stated his objections to this defect.

"It is inherent in the nature of the machine," replied Prof. Poeschl. "It may be reduced to a great extent, but as long as we use commutators it will always be present to some degree. As long as electricity flows in one direction,

and as long as a magnet has two poles each of which acts oppositely on the current, we will have to use a commutator to change, at the right moment, the direction of the current in the rotating armature."

"That is obvious," Tesla countered. "The machine is limited by the current used. I am suggesting that we get rid of the commutator entirely by using alternating current."

Long before the machine was received, Tesla had studied the theory of the dynamo and motor, and he was convinced that the whole system could be simplified in some way. The solution of the problem, however, evaded his grasp, nor was he at all sure the problem could be solved--until Prof. Poeschl gave his demonstration. The assurance then came to him like a commanding flash.

The first sources of current were batteries which produced a small steady flow. When man sought to produce electricity from mechanical power, he sought to make the same kind the batteries produced: a steady flow in one direction. The kind of current a dynamo would produce when coils of wire were whirled in a magnetic field was not this kind of current--it flowed first in one direction and then in the other. The commutator was invented as a clever device for circumventing this seeming handicap of artificial electricity and making the current come out in a one-directional flow.

The flash that came to Tesla was to let the current come out of the dynamo with its alternating directions of flow, thus eliminating the commutator, and feed this kind of current to the motors, thus eliminating the need in them for commutators. Many another scientist had played with that idea long before it occurred to Tesla, but in his case it came to him as such a vivid, illuminating flash of understanding that he knew his visualization contained the correct and practical answer. He saw both the motors and dynamos operating without commutators, and doing so very efficiently. He did not, however, see the extremely important and essential details of how this desirable result could be accomplished, but he felt an overpowering assurance that he could solve the problem. It was for this reason that he stated his objections to the Gramme machine with a great deal of confidence to his professor. what he did not expect was to draw a storm of criticism.

Prof. Poeschl, however, deviated from his set program of lectures and devoted the next one to Tesla's objections. With methodical thoroughness he picked Tesla's proposal apart and, disposing of one point after another, demonstrated its impractical nature so convincingly that he silenced even Tesla. He ended his lecture with the statement: "Mr. Tesla will accomplish great things, but he certainly never will do this. It would be equivalent to converting a steady pulling force like gravity into rotary effort. It is a perpetual motion scheme, an impossible idea."

Tesla, although silenced temporarily, was not convinced. The professor had paid him a nice compliment in devoting a whole lecture to his observation, but, as is so often the case, the compliment was loaded with what was expected by the professor to be a crushing defeat for the one whom he complimented. Tesla was nevertheless greatly impressed by his authority; and for a while he weakened in his belief that he had correctly understood his vision. It was as clear-cut and definite as the visualizations that came to him of the solutions of mathematical problems which he was always able to prove correct. But perhaps, after all, he was in this case a victim of a self-induced hallucination. All other things Prof. Poeschl taught were solidly founded on demonstrable fact, so perhaps his teacher was right in his objections to the alternating-current idea.

Deep down in his innermost being, however, Tesla held firmly to the conviction that his idea was a correct one. Criticism only temporarily submerged it, and soon it came bobbing back to the surface of his thinking. He gradually convinced himself that, contrary to his usual procedure, Prof. Poeschl had in this case demonstrated merely that he did not know how to accomplish a given result, a defficiency which he shared with everyone else in the world, and therefore could not speak with authority on this subject. And, in addition, Tesla reasoned, the closing remark with which Prof. Poeschl believed he had clinched his argument--"It would be equivalent to converting a steady pulling force like gravity into a rotary effort--was contradicted by Nature, for was not the steady pulling force of gravity making the moon revolve around the earth and the earth revolve around the sun?

"I could not demonstrate my belief at that time," said Tesla, "but it came to me through what I might call

instinct, for lack of a better name. But instinct is something which transcends knowledge. we undoubtedly have in our brains some finer fibers which enable us to perceive truths which we could not attain through logical deductions, and which it would be futile to attempt to achieve through any wilful effort of thinking."

His enthusiasm and confidence in himself restored, Tesla tackled the problem with renewed vigor. His power of visualization--the ability to see as solid objects before him the things that he conceived in his mind, and which he had considered such a great annoyance in childhood--now proved to be of great aid to him in trying to unravel this problem. He made an elastic rebound from the intellectual trouncing administered by his Professor and was tackling the problem in methodical fashion.

In his mind he constructed one machine after another, and as he visioned them before him he could trace out with his finger the various circuits through armature and field coils, and follow the course of the rapidly changing currents. But in no case did he produce the desired rotation. Practically all the remainder of the term he spent on this problem. He had passed so many examinations during the first term that he had plenty of time to spend on this problem during the second.

It seemed, however, that he was doomed to fail in this project, for at the term's end he was no nearer the solution than he was when he started. His pride had been injured and he was fighting on the defensive side. He did not know that those seeming failures in his mental and laboratory experiments were to serve later as the raw material out of which yet another vision was to be created.

A radical change had taken place in Tesla's mode of life while at Graumltz. The first year he had acted like an intellectual glutton, overloading his mind and nearly wrecking his health in the process. In the second year he allowed more time for digesting the mental food of which he was partaking, and permitted himself more recreation. About this time Tesla took to card-playing as a means of relaxation. His keen mental processes and highly developed powers of deduction enabled him to win more frequently than he lost. He never retained the money he won but returned it to the losers at the end of the game. When he lost, however, this procedure was not reciprocated by the other

players. He also developed a passion for billiards and chess, in both of which he became remarkably proficient.

The fondness for card-playing which Tesla developed at Graumltz got him into an embarrassing situation. Toward the end of the term his father sent him money to pay for his trip to Prague and for the expenses incident to enrolling as a student at the university. Instead of going directly to Prague, Tesla returned to Gospic for a visit to the family. Sitting in at a card game with some youths of the city, Tesla found his usual luck had deserted him, and he lost the money set aside for his university expenses. He confessed to his mother what he had done. She did not criticize him. Perhaps the fates were using this method for protecting him from overwork that might ruin his health, she reasoned, since he needed rest and relaxation. Losses of money were much easier to handle than loss of health. Borrowing some money from a friend, she gave it to Tesla with the words, "Here you are. Satisfy yourself." Returning to the game, he experienced a change in luck and came out of it not only with the money his mother had given him but practically all of the university expense money he had previously lost. These winnings he did not return to the losers as was his previous custom. He returned home, gave his mother the money she had advanced him, and announced that he would never again indulge in card-playing.

Instead of going to the University of Prague in the fall of 1878 as he had planned, Tesla accepted a lucrative position that was offered him in a technical establishment at Maribor, near Graumltz. He was paid sixty florins a month and a separate bonus for the completed work, a very generous compensation compared with the prevailing wages. During this year Tesla lived very modestly and saved his earnings.

The money he had saved at Maribor enabled him to pay his way through a year at the University of Prague, where he extended his studies in mathematics and physics. He continued experimenting with the one big challenging alternating-current idea that was occupying his mind. He had explored, unsuccessfully, a large number of methods and, though his failures gave support to Prof. Poeschl's contention that he would never succeed, he was unwilling to give up his theory. He still had faith that he would find the solution of his problem. He knew electrical science was young and growing, and felt deep within his consciousness

that he would make the important discovery that would greatly expand the infant science to the powerful giant of the future.

It would have been a pleasure to Tesla to have continued his studies, but it now was necessary for him to make his own living. His father's death, following Tesla's graduation from the University at Prague, made it necessary for him to be self-supporting. Now he needed a job. Europe was extending an enthusiastic reception to Alexander Graham Bell's new American invention, the telephone, and Tesla heard that a central station was to be installed in Budapest. The head of the enterprise was a friend of the family. The situation seemed a promising one.

Without waiting to ascertain the situation in Budapest, Tesla, full of youthful hope and the self-assurance which is typical of the untried graduate, traveled to that city, expecting to walk into an engineering position in the new telephone project. He quickly discovered, on his arrival, that there was no position open; nor could one be created for him, as the project was still in the discussion stage.

It was, however, urgently necessary for financial reasons, that he secure immediately a job of some kind. The best he could obtain was a much more modest one than he had anticipated. The salary was so microscopically small he would never name the amount, but it was suficient to enable him to avoid starvation. He was employed as draftsman by the Hungarian Government in its Central Telegraph Ofice, which included the newly developing telephone in its jurisdiction.

It was not long before Tesla's outstanding ability attracted the attention of the Inspector in Chief. Soon he was transferred to a more responsible position in which he was engaged in designing and in making calculations and estimates in connection with new telephone installations. When the new telephone exchange was finally started in Budapest in 1881, he was placed in charge of it.

Tesla was very happy in his new position. At the age of twenty-five he was in full charge of an engineering enterprise. His inventive faculty was fully occupied and he made many improvements in telephone central-station apparatus. Here he made his first invention, then called a telephone repeater, or amplifier, but which today would be

more descriptively called a loud speaker--an ancestor of the sound producer now so common in the home radio set. This invention was never patented and was never publicly described, but, Tesla later declared, in its originality, design, performance and ingenuity it would make a creditable showing alongside his better-known creations that followed. His chief interest, however, was still the alternating-current motor problem whose solution continued to elude him.

Always an indefatigable worker, always using up his available energy with the greatest number of activities he could crowd into a day, always rebelling because the days had too few hours in them and the hours too few minutes, and the seconds that composed them were of too short duration, and always holding himself down to a five-hour period of rest with only two hours of that devoted to sleep, he continually used up his vital reserves and eventually had to balance accounts with Nature. He was forced finally to discontinue work.

The peculiar malady that now affected him was never diagnosed by the doctors who attended him. It was, however, an experience that nearly cost him his life. To doctors he appeared to be at death's door. The strange manifestations he exhibited attracted the attention of a renowned physician, who declared medical science could do nothing to aid him. One of the symptoms of the illness was an acute sensitivity of all of the sense organs. His senses had always been extremely keen, but this sensitivity was now so tremendously exaggerated that the effects were a form of torture. The ticking of a watch three rooms away sounded like the beat of hammers on an anvil. The vibration of ordinary city trafic, when transmitted through a chair or bench, pounded through his body. It was necessary to place the legs of his bed on rubber pads to eliminate the vibrations. Ordinary speech sounded like thunderous pandemonium. The slightest touch had the mental effect of a tremendous blow. A beam of sunlight shining on him produced the effect of an internal explosion. In the dark he could sense an object at a distance of a dozen feet by a peculiar creepy sensation in his forehead. His whole body was constantly wracked by twitches and tremors. His pulse, he said, would vary from a few feeble throbs per minute to more than one hundred and fifty.

Throughout this mysterious illness he was fighting with powerful desire to recover his normal condition. He had before him a task he must accomplish--he must attain the solution of the alternating-current motor problem. He felt intuitively during his months of torment that the solution was coming ever nearer, and that he must live in order to be there when it crystallized out of his unconscious mind. During this period he was unable to concentrate on this or any other subject.

Once the crisis was past and the symptoms diminished, improvement came rapidly and with it the old urge to tackle problems. He could not give up his big problem. It had become a part of him. working on it was no longer a matter of choice. He knew that if he stopped he would die, and he knew equally well that if he failed he would perish. He was enmeshed in an invisible web of intangible structure that was tightening around him. The feeling that it was bringing the solution nearer to him--just beyond his finger tips--was cause for both regret and rejoicing. That problem when solved would leave a tremendous vacancy in his life, he feared.

yet in spite of his feeling of optimism it was still a tremendous problem without a solution.

When the acute sensitivity reduced to normal, permitting him to resume work, he took a walk in the city park of Budapest with a former classmate, named Szigeti, one late afternoon in February, 1882. while a glorious sunset overspread the sky with a flamboyant splash of throbbing colors, Tesla engaged in one of his favorite hobbies--reciting poetry. As a youth he had memorized many volumes, and he was now pleased to note that the terrific punishment his brain had experienced had not diminished his memory. One of the works which he could recite from beginning to end was Goethe's Faust.

The prismatic panorama which the sinking sun was painting in the sky reminded him of some of Goethe's beautiful lines:

"The glow retreats, done is the day of toil"

"It yonder hastes, new fields of life exploring"

"Ah, that no wing can lift me from the soil"

"Upon its track to follow, follow soaring"

Tesla, tall, lean and gaunt, but with a fire in his eye that matched the flaming clouds of the heavens, waved his arms in the air and swayed his body as he voiced the undulating lines. He faced the color drama of the sky as if addressing the red-glowing orb as it flung its amorphous masses of hue, tint and chrome across the domed vault of heaven.

Suddenly the animated figure of Tesla snapped into a rigid pose as if he had fallen into a trance. Szigeti spoke to him but got no answer. Again his words were ignored. The friend was about to seize the towering motionless figure and shake him into consciousness when instead Tesla spoke.

"Watch me!" said Tesla, blurting out the words like a child bubbling over with emotion: "Watch me reverse it." He was still gazing into the sun as if that incandescent ball had thrown him into a hypnotic trance.

Szigeti recalled the image from Goethe that Tesla had been reciting: "The glow retreats . . . It yonder hastes, new fields of life exploring" a poetic description of the setting sun, and then his next words-- "watch me! watch me reverse it." Did Tesla mean the sun? Did he mean that he could arrest the motion of the sun about to sink below the horizon, reverse its action and start it rising again toward the zenith?

"Let us sit and rest for a while," said Szigeti. He turned him toward a bench, but Tesla was not to be moved.

"Don't you see it?" expostulated the excited Tesla. "See how smoothly it is running? Now I throw this switch--and I reverse it. See! It goes just as smoothly in the opposite direction. watch! I stop it. I start it. There is no sparking. There is nothing on it to spark."

"But I see nothing," said Szigeti. "The sun is not sparking. Are you ill?"

"you do not understand," beamed the still excited Tesla, turning as if to bestow a benediction on his companion. "It is my alternating-current motor I am talking about. I have solved the problem. Can't you see it right here in front of

me, running almost silently? It is the rotating magnetic field that does it. See how the magnetic field rotates and drags the armature around with it? Isn't it beautiful? Isn't it sublime? Isn't it simple? I have solved the problem. Now I can die happy. But I must live, I must return to work and build the motor so I can give it to the world. No more will men be slaves to hard tasks. My motor will set them free, it will do the work of the world."

Szigeti now understood. Tesla had previously told him about his attempt to solve the problem of an alternating-current motor, and he grasped the full meaning of the scientist's words. Tesla had never told him, however, about his ability to visualize objects which he conceived in his mind, so it was necessary to explain the vision he saw, and that the solution had come to him suddenly while they were admiring the sunset.

Tesla was now a little more composed, but he was floating on air in a frenzy of almost religious ecstasy. He had been breathing deeply in his excitement, and the overventilation of his lungs had produced a state of exhilaration.

Picking up a twig, he used it as a scribe to draw a diagram on the dusty surface of the dirt walk. As he explained the technical principles of his discovery, his friend quickly grasped the beauty of his conception, and far into the night they remained together discussing its possibilities.

The conception of a rotating magnetic field was a majestically beautiful one. It introduced to the scientific world a new principle of sublime grandeur whose simplicity and utility opened a vast new empire of useful applications. In it Tesla had achieved the solution which his professor had declared was impossible of attainment.

Alternating-current motors had heretofore presented what seemed an insoluble problem because the magnetic field produced by alternating currents changed as rapidly as the current. Instead of producing a turning force they churned up useless vibration.

Up to this time everyone who tried to make an alternating-current motor used a single circuit, just as was in direct current. As a result the projected motor proved to be like a single-cylinder steam engine, stalled at dead center, at the top or bottom of the stroke.

what Tesla did was to use two circuits, each one carrying the same frequency of alternating-current, but in which the current waves were out of step with each other. This was equivalent to adding to an engine a second cylinder. The pistons in the two cylinders were connected to the shaft so that their cranks were at in angle to each other which caused them to reach the top or bottom of the stroke at different times. The two could never be on dead center at the same time. If one were on dead center, the other would be off and ready to start the engine turning with a power stroke.

This analogy oversimplifies the situation, of course, for Tesla's discovery was much more far-reaching and fundamental. what Tesla had discovered was a means of creating a rotating magnetic field, a magnetic whirlwind in space which possessed fantastically new and intriguing properties. It was an utterly new conception. In direct-current motors a fixed magnetic field was tricked by mechanical means into producing rotation in an armature by connecting successively through a commutator each of a series of coils arranged around the circumference of a cylindrical armature. Tesla produced a field of force which rotated in space at high speed and was able to lock tightly into its embrace an armature which required no electrical connections. The rotating field possessed the property of transferring wirelessly through space, by means of its lines of force, energy to the simple closed circuit coils on the isolated armature which enabled it to build up its own magnetic field that locked itself into the rotating magnetic whirlwind produced by the field coils. The need for a commutator was completely eliminated.

Now that this magnificent solution of his most dificult scientific problem was achieved, Tesla's troubles were not over; they were just beginning; but, during the next two months, he was in a state of ecstatic pleasure playing with his new toy. It was not necessary for him to construct models of copper and iron: in his mental workshop he constructed them in wide variety. A constant stream of new ideas was continuously rushing through his mind. They came so fast, he said, that he could neither utilize nor record them all. In this short period he evolved every type of motor which was later associated with his name.

He worked out the design of dynamos, motors, transformers and all other devices for a complete alternating-current system. He multiplied the effectiveness of the two-phase system by making it operate on three or more alternating currents simultaneously. This was his famous polyphase power system.

The mental constructs were built with meticulous care as concerned size, strength, design and material; and they were tested mentally, he maintained, by having them run for weeks--after which time he would examine them thoroughly for signs of wear. Here was a most unusual mind being utilized in a most unusual way. If he at any time built a "mental machine," his memory ever afterward retained all of the details, even to the finest dimensions.

The state of supreme happiness which Tesla was enjoying was destined soon, however, to end. The telephone central station by which he was employed, and which was controlled by Puskas, that friend of the family, was sold. When Puskas returned to Paris, he recommended Tesla for a job in the Paris establishment with which he was associated, and Tesla gladly followed up his opportunity. Paris, he reasoned, would be a wonderful springboard from which to catapult his great invention on the world.

The budding superman Tesla came to Paris light in baggage but with his head filled to bursting with his wonderful discovery of the rotating magnetic field and scores of significant inventions based on it. If he had been a typical inventor, he would have gone among people wearing a look indicating that he knew something important, but maintaining absolute secrecy concerning the nature of his inventions. He would be fearful that someone would steal his secret. But Tesla's attitude was just the reverse of this. He had something to give to the world and he wanted the world to know about it, the whole fascinating story with all the revealing technical details. He had not then learned, and never did learn, the craft of being shrewd and cunning. His life plan was on a secular basis. He cared less for the advantages of the passing moment, more for the ultimate goal; and he wanted to give his newly discovered polyphase system of alternating-current to the human race that all men could benefit from it. He knew there was a fortune in his invention. How he could extract this fortune he did not know. He knew that there was a higher law of compensation under which he would derive adequate benefits

from the gift to the world of his discovery. The method by which this would work out did not interest him nearly so much as the necessity for getting someone to listen to the details of his fascinating invention.

Six feet two inches tall, slender, quiet of demeanor, meticulously neat in dress, full of self-confidence, he carried himself with an air that shouted, "I defy you to show me an electrical problem I can't solve"--an attitude that was consistent with his twenty-five years, but also matched by his ability.

Through Puskas's letter of recommendation he obtained a position with the Continental Edison Company, a French company organized to make dynamos, motors and install lighting systems under the Edison patents.

He obtained quarters on the Boulevard St. Michel, but in the evenings visited and dined at the best cafes as long as his salary lasted. He made contact with many Americans engaged in electrical enterprises. wherever he could get a patient ear, among those who had an understanding of electrical matters, he described his alternating-current system of dynamos and motors.

Did someone steal his invention? Not the slightest danger. He could not even give it away. No one was even slightly interested. The closest approach to a nibble was when Dr. Cunningham, an American, a foreman in the plant where Tesla was employed, suggested formation of a stock company.

With his great alternating-current-system invention pounding at his brain and demanding some way in which it could be developed, it was a hardship for him to be forced to work all day on direct-current machines. Nowadays, though, his health was robust. He would arise shortly after five o'clock in the morning, walk to the Seine, swim for half an hour, and then walk to Ivry, near the gates of Paris, where he was employed, a trip that required an hour of lively stepping. It was then half-past seven. The next hour he spent in eating a very substantial breakfast which never seemed suficient to keep his appetite from developing into a disturbing factor long before noon.

The work to which he was assigned at the Continental Edison Company factory was of a variegated character, largely that of a junior engineer. In a short time he was given a

traveling assignment as a "trouble shooter" which required him to visit electrical installations in various parts of France and Germany. Tesla did not relish "trouble shooting" but he did a conscientious job and studied intensely the dificulties he encountered at each powerhouse. He was soon able to present a definite plan for improving the dynamos manufactured by his company. He presented his suggestions and received permission to apply them to some machines. When tested they were a complete success. He was then asked to design automatic regulators, for which there was a great need. These too gave an excellent performance.

The company had been placed in an embarrassing position and was threatened with heavy loss through an accident at the railroad station in Strassburg in Alsace, then in Germany, where a powerhouse and electric lights had been installed. At the opening ceremony, at which Emperor fiilliam I was present, a short circuit in the wiring caused an explosion that blew out one of the walls. The German government refused to accept the installation. Tesla was sent, early in 1883, to put the plant in working order and straighten out the situation. The technical problem presented no dificulties but he found it necessary to use a great deal of tact and good judgment in handling the mass of red tape extruded by the German government as precaution against further mishaps.

Once he got the job well under way he gave some time to constructing an actual two-phase alternating-current motor embodying his rotary-magnetic-field discovery. He had constructed so many in his mind since that never-to-be-forgotten day in Budapest when he made his great invention. He had brought materials with him from Paris for this purpose and found a machine shop near the Strassburg station where he could do some of the work. He did not have as much time available as he had expected, and, while he was a clever amateur machinist, nevertheless the work took time. He was very fussy, making every piece of metal exact in dimensions to better than the thousandth of an inch and then carefully polishing it.

Eventually there was a miscellaneous collection of parts in that Strassburg machine shop. They had been constructed without the aid of working drawings. Tesla could project before his eyes a picture, complete in every detail, of every part of the machine. These pictures were more vivid than any blueprint and he remembered exact dimensions which

he had calculated mentally for each item. He did not have to test parts through partial assembly. He knew they would fit.

From these parts Tesla quickly assembled a dynamo, to generate the two-phase alternating current which he needed to operate his alternating-current motor, and finally his new induction motor. There was no difference between the motor he built and the one which he visualized. So real was the visualized one that it had all the appearance of solidity. The one he built in the machine shop presented no elements of novelty to him. It was exactly as he had visualized it a year before. He had mentally experimented with its exact counterpart and with many variations of it during the months that had passed since the great vision came to him while rhapsodizing the sunset sky in Budapest.

The assembly completed, he started up his power generator. The time for the great final test of the validity of his theory had arrived. He would close a switch and if the motor turned his theory would be proven correct. If nothing happened, if the armature of his motor just stood still, but vibrated, his theory was not correct and he had been feeding his mind on hallucinations, based on fantasy not on fact.

He closed the switch. Instantly the armature turned, built up to full speed in a flash and then continued to operate in almost complete silence. He closed the reversing switch and the armature instantly stopped and as quickly started turning in the opposite direction. This was complete vindication of his theory.

In this experiment he had tested only his two-phase system; but he needed no laboratory demonstration to convince him that his three-phase systems for generating electricity and for using this current for transmission and power production would work even better, and that his single-phase system would work almost as well. With this working model he would now be able to convey to the minds of others the visions he had been treasuring for so long.

This test meant much more to Tesla than just the successful completion of an invention; it meant a triumph for his method of discovering new truths through the unique mental processes he used of visualizing constructs long before they were produced from materials. From these results he

drew an unbounded sense of self-confidence; he could think and work his way to any goal he set.

There was good reason for Tesla's self-assurance. He had just passed his twenty-seventh birthday. It seemed to him only yesterday that Prof. Poeschl had seemingly so completely vanquished him for saying that he could operate a motor by alternating current. Now he had demonstrably accomplished what the learned professor said could never be done.

Tesla now had available a completely novel type of electrical system utilizing alternating current, which was much more flexible and vastly more efficient than the direct-current system. But now that he had it, what could he do with it? The executives of the Continental Edison Company by whom he was employed had continually refused to listen to his alternating-current theories. He felt it would be useless to try to interest them in even the working model. He had made many friends during his stay in Strassburg, among them the Mayor of the city, M. Bauzin, who shared his enthusiasm about the commercial possibilities of the new system and hoped it would result in the establishment of a new industry that would bring fame and prosperity to his city.

The Mayor brought together a number of wealthy Strassburgers. To them the new motor was shown in operation, and the new system and its possibilities described, by both Tesla and the Mayor. The demonstration was a success from the technical viewpoint but otherwise a total loss. Not one member of the group showed the slightest interest. Tesla was dejected. It was beyond his comprehension that the greatest invention in electrical science, with unlimited commercial possibilities, should be rejected so completely.

M. Bauzin assured him that he would undoubtedly receive a more satisfactory reception for his invention in Paris. Delays of oficialdom in finally accepting the completed installation at the Strassburg station, however, postponed his return to Paris until the spring of 1884. Meanwhile, Tesla looked forward with pleasurable expectancy to a triumphant return to Paris. He had been promised a substantial compensation if he was successful in handling the Strassburg assignment; also, that he would be similarly compensated for the improvements in design of motors and

dynamos, and for the automatic regulators for dynamos. It was possible that this would supply him with enough cash to build a full-size demonstration set for his polyphase alternating-current system, so that the tremendous advantages of his system over direct current could be shown in operation. Then he would have no trouble raising the needed capital.

When he got back to the company's ofices in Paris and asked for a settlement of his Strassburg and automatic-regulator accounts, he was given what in modern terminology is called the "runaround." To use fictitious names, as Tesla told the story, the executive, Mr. Smith, who gave him the assignments, now told him he had no jurisdiction over financial arrangements; that was all in the hands of the executive, Mr. Brown. Mr. Brown explained that he administered financial matters but had no authority to initiate projects or to make payments other than those directed by the chief executive, Mr. Jones. Mr. Jones explained that such matters were in the hands of his department executives, and that he never interfered with their decisions, so Tesla must see the executive in charge of technical matters, Mr. Smith. Tesla traveled this vicious circle several times with the same result and finally gave up in disgust. He decided not to renew his offer of the alternating-current system nor to show his motor in operation, and resigned his position immediately.

Tesla was undoubtedly entitled to an amount in excess of $25,000 for the regulators he designed and for his services in Strassburg. Had the executives been endowed with even a smattering of horse sense, or the ordinary garden variety of honesty, they would have made an attempt to settle for $5,000, at the least. Tesla, hard pressed for cash, would undoubtedly have accepted such an amount, although with a feeling that he was being cheated in a large way.

Such an offer would probably have held Tesla on the payroll of the company and preserved for it the possession of the world's greatest inventor and one who at the time had definitely demonstrated he was an extremely valuable employee.

For a paltry few thousand dollars they lost not only a man who would have saved them many times that amount every year, but they also lost an opportunity to obtain world

control of the greatest and most profitable electrical invention ever made.

One of the administrators of the company, Mr. Charles Batchellor, Manager of the works, who was a former assistant and close personal friend of Thomas A. Edison, urged Tesla to go to the United States and work with Edison. There he would have a chance to work on improvements to the Edison dynamos and motors. Tesla decided to follow Mr. Batchellor's suggestion. He sold his books and all other personal possessions except a few articles which he expected to take with him. He assembled his very limited financial resources, purchased tickets for his railroad trip and transatlantic journey to New York. His baggage consisted of a small bundle of clothes carried under his arm and some other items stuffed into his pockets.

The final hours were busy ones and, as he was about to board the train, just as it was ready to pull out of the station, he discovered his package of baggage was missing. Reaching quickly for his wallet, which contained his railroad and steamship tickets and all his money, he was horrified to discover that that too was missing. There was some loose change in his pocket, how much he did not know--he did not have time to count it. His train was pulling out. what should he do? If he missed this train, he would also miss the boat--but he could not ride on either without tickets. He ran alongside the moving train, trying to make up his mind. His long legs enabled him to keep up with it without dificulty at first, but now it was gaining speed. He finally decided to jump aboard. The loose change he discovered was suficient to take care of the railroad fare, with a negligible remainder. He explained his situation to the skeptical steamship oficials and, when no one else showed up to claim his reservations on the ship up to the time of sailing, he was permitted to embark.

To one as fastidious as Tesla, a long steamship journey without adequate clothing was a trying experience. He had expected to encounter annoyances when getting along with the minimum amount of clothing which he planned carrying with him, but when even that limited layout was lost the annoyance became hardship. Coupled with this was the memory of disappointment and resentment over his recent experiences.

The ship offered little to interest him. He explored it thoroughly and in doing so made some contacts with members of the ship's company. There was unrest among the crew. There was unrest in Tesla also. He extended sympathy to members of the crew in their claimed unjust treatment. The grievances affecting the crew had built up one of those situations in which a small spark can cause a large explosion. The spark flew somewhere on the ship while Tesla was below decks in the crew's quarters. The captain and oficers got tough and, with some loyal members of the crew, decided to settle the trouble with belaying pins as clubs. It quickly became a battle royal. Tesla found himself in the middle of a fight which when anyone saw a head he hit it.

Had Tesla not been young as well as tall and strong, his useful career might have ended at this point. He had long arms in proportion to his six feet two inches of height. The fist at the end of his arm could reach as far as a club in the hands of an adversary, and his height enabled him to tower over the other fighters so his head was not easy to reach. He struck hard and often, never knowing for or against which side he was fighting. He was on his feet when the fight was over, something which could not be said of a score of the crew members. The oficers had subdued what they called a mutiny, but they too carried indications that they had been through a battle. Tesla was definitely not invited to sit at the captain's table during the voyage.

He spent the remainder of his journey nursing scores of bruises and sitting in meditation at the stern of the ship, which too slowly made its way to New York. Soon he would set foot on the "land of golden promise" and meet the famous Mr. Edison. He was destined to learn that it was really a "land of golden promise"--but also to discover something that would open his eyes about the fulfillment of promises.

when Tesla stepped out of the Immigration Ofice at Castle Garden, Manhattan, in the summer of 1884, his possessions consisted of four cents, a book of his own poems, a couple

of technical articles he had written, calculations for designing a flying machine, and some mathematical work done in an effort to solve an extremely dificult integral. He had Mr. Batchellor's letter introducing him to Mr. Edison, and the address of a friend. In this letter to Edison, Batchellor wrote: "I know two great men and you are one of them; the other is this young man."

Lacking carfare, Tesla had to walk the several miles to his friend's home. The first person he spoke to, seeking traveling directions, was a policeman, a gruff individual. The way he supplied the information suggested to Tesla that he was willing to start a fight on the subject. Although Tesla spoke English very well, all he understood of the policeman's lingo was the direction in which he pointed his club.

while walking in what he believed was the right direction, wondering how he would be able to contrive a meal and lodgings out of four cents should he be unable to locate his friend, he passed a shop in which he could see a man working on an electrical machine that seemed to him familiar. He entered just as the man was about to give up as impossible the task of repairing the device.

"Let me do it," said Tesla, "I will make it operate." And without more ado he tackled the job. It proved to be a dificult task but eventually the machine was working again.

"I need a man like you to handle these blankety-blank foreign machines," said the man. "Do you want a job?"

Tesla thanked him and told him he was on his way to another job, whereupon the man handed him twenty dollars. Tesla had expected no compensation for doing what he considered a slight favor, and said so, but the man insisted his work was worth that much, and he was glad to pay it. Never was Tesla more thankful for a windfall. He was now assured of food and lodgings for the time being. With the aid of walking directions, this time more graciously given, he located his friend and was a guest at his home overnight. The next day he went to Edison's New York headquarters, then on South Fifth Avenue (now West Broadway).

The introduction by Mr. Batchellor gave him ready access to Mr. Edison, who was busily engaged in problems in connection with his new generating station and electric-

light system--the former located in downtown Pearl Street and serving a relatively small radius of territory.

Tesla was favorably impressed by Edison on their first meeting. He marveled that a man so limited in education could accomplish so much in so technical a field as electricity. It caused Tesla to wonder if all the time he had spent in gaining an education of very broad scope had not been wasted. would he have been further ahead if he had started his practical work on the basis of experience, as Edison had done? He definitely decided, however, before many days had passed, that the time and effort he had spent on his education constituted the wisest kind of an investment.

Edison, for his part, was none too favorably impressed by Tesla. Edison was an inventor who got his results by trial-and-error methods. Tesla calculated everything mentally and solved his problems before doing any "work" on them. As a result, the two great men spoke an entirely different technical language. There was one more very important difference. Edison belonged to the direct-current and Tesla to the alternating-current school of thought. The electricians of that day could, and did, become highly emotional over their differences of opinion on this subject. Discussions roused all the fervor of a religious or political debate, and everything unpleasant was associated with the adherents on the other side of the discussion. The least unpleasant thought applied to an opponent was that he was of a low order of mentality. When Tesla enthusiastically described his polyphase system and told Edison he believed alternating-current was the only practical kind of current to use in a power-and-lighting system, Edison laughed. Edison was using direct current in his system. He told Tesla very bluntly he was not interested in alternating-current; there was no future to it and anyone who dabbled in that field was wasting his time; and besides, it was a deadly current whereas direct current was safe. Tesla did not yield any ground in the discussion--nor could he make any progress in his effort to get Edison to listen to a presentation of his polyphase power system. On technical grounds, they were worlds apart.

Nevertheless, because of Batchellor's statement on the valuable work he had done on the Edison direct-current machines in Europe, Tesla was, without much formality, given a job on Edison's staff--doing minor routine work. A

few weeks later he had an opportunity to demonstrate his ability. Edison had installed one of his electric-light plants on the steamship Oregon, the fastest and most up-to-date passenger ship of that time. The installation worked well for many months but finally both dynamos went out of commission. It was impossible to remove the dynamos and install new ones, so it was necessary to repair the old ones in some way--but this, Edison had been told, was impossible without taking them to the shop. The scheduled sailing date of the ship had passed and Edison was being placed in an embarrassing position over the accumulating days of delay caused by his machines.

Edison asked Tesla if he would go to the ship and see what could be done about the situation. This was in the afternoon. Taking such instruments as he thought he would need, Tesla went aboard the Oregon. He found that short circuits had caused some of the armature coils to be burned out; and open circuits had developed elsewhere on the machines.

Calling on members of the crew to assist him, Tesla worked through the night and by 4 am had both machines running as well as they did the day they were newly installed. walking back to the shop on lower Fifth Avenue at 5 am, in the dim early dawn he met a group of men just leaving. In it were Edison, Batchellor, who had returned from Paris in the meantime, and several others who had finished their night's work and were returning to their homes.

"Here is our Parisian running around nights," said Edison.

"Am just coming back from the Oregon," Tesla replied. "Both machines are operating."

Edison, amazed, shook his head and turned away without another word. On rejoining the group he said to Batchellor, loud enough for the keen-eared Tesla to hear him, "Batchellor, this is a damn good man."

Thereafter Tesla's status on the staff was raised several levels and he was given closer contact with design and operating problems. He found the work interesting and applied himself to it more than eighteen hours a day, from 10:30 am until 5 am, every day including Sundays. Edison, observing his industry, told him, "I have had many hard-working assistants but you take the cake." Tesla observed

many ways in which the dynamos could be improved in design to operate more efficiently. He outlined his plan to Edison, and stressed the increased output and lower cost of operating that would result from the changes he suggested. Edison, quick to appreciate the value of increased efficiency, replied, "There's fifty thousand dollars in it for you if you can do it."

Tesla designed twenty-four types of dynamos, eliminating the long-core field magnets then in use and substituting the more efficient short cores, and provided some automatic controls, on which patents were taken out. Months later, when the task was finished, and some of the new machines built and tested and found measuring up to his promises, Tesla asked to be paid the $50,000. Edison replied, "Tesla, you don't understand our American humor." Tesla was shocked to discover that what he thought was a specific promise was being tossed aside merely as a standard practical joke of the day. He received not a penny of compensation from the new designs and inventions, or for the tremendous amount of overtime, beyond the none too generous weekly pay. He resigned his job immediately. This was in the spring of 1885.

In the period of less than a year which he spent with Edison, Tesla had developed a good reputation in electrical circles; so when he was free he was offered an opportunity to capitalize on it. A group of promoters offered to form a company under his name. This looked like a possible chance to bring out his alternating-current system, and he eagerly entered into the project. But when he urged his plan, the promoters informed him they were not interested in alternating-current. what they wanted him to develop was a practical arc light for street and factory illumination. In about a year he developed the desired lamp, took out several patents on his invention, and its manufacture and use were under way.

From a technical point of view the venture was a success, but Tesla himself suffered another painful financial experience in connection with it. He had been paid a comparatively small salary during the period of development. According to the agreement, he was to receive his principal compensation in the form of shares of stock in the company. He received a beautifully engraved stock certificate, and then, by some manipulations he did not understand, he was forced out of the company and aspersions

were cast upon his ability as an engineer and an inventor. When he sought to convert the certificate into cash, he found that the shares of newly organized companies of undemonstrated power to earn dividends possess very slight value. His opinion of financial men in both the Old World and the New was taking on a decidedly uncomplimentary bias.

Now came the most unpleasant experience of Tesla's life. He was without a source of income, and from the spring of 1886 to the spring of 1887 he was forced to work as a day laborer. "I lived," he said, "through a year of terrible heartaches and bitter tears, my suffering being intensified by material want." Business conditions were none too good in the country. Not only did he have difficulty in getting anyone to listen to his alternating-current project, but even in his effort to earn room and board as a laborer he had tremendous competition, and found it none too easy to secure the most menial tasks at almost starvation wages. He would never discuss this period of his life, probably because it was so unpleasant that he banished all thoughts of it from his memory. Some electrical repair work and even ditch digging at $2 a day were among the jobs he tackled. He resented the utter waste of his abilities more than the personal degradation involved. His education, he said, seemed a mockery.

During the winter of early 1887, while engaged in ditch digging, he attracted the attention of the foreman of the gang who, too, was being forced by circumstances to work below his accustomed level. The foreman was impressed by Tesla's story of his inventions and his great hopes for his alternating-current system. Through this foreman, Tesla said, he was introduced to Mr. A. K. Brown of the Western Union Telegraph Company who put up some of his own money and interested a friend in joining him in Tesla's project.

These two gentlemen organized and financed the Tesla Electric Company, and in April, 1887, established a laboratory at 33-35 South Fifth Avenue (now West Broadway), near Bleecker Street, not far from the shop of the Edison Company. Edison had turned down Tesla's alternating-current idea--and now Tesla was his neighbor with a laboratory of his own, starting to develop the competing idea. Within this small area was to be fought the great battle of the electrical industry over the question of whether direct or alternating current should be used. Edison, already famous, was wholeheartedly committed to direct current; his

powerhouses were operating in several cities and, in addition, he had the support of the famous financier, J. P. Morgan. Tesla, on the other hand, was unknown and had only very modest financial support. The direct current was technically simple, whereas alternating-current was technically complex. Tesla knew, however, that in these complexities were unlimited possibilities for usefulness.

Tesla's dark days were over. yet he was soon to discover that the acceptance or rejection of the alternating-current system was not based on technical facts but upon financial considerations, emotional reactions and prejudices, and that human nature was a bigger factor than scientific truths. Nevertheless, in a short time, he would see some of his greatest hopes and dreams realized, and success in large measure reward his efforts.

Once he had achieved something resembling fair conditions under which to carry on his work, the rising star of Tesla's genius shot across the electrical heavens like a meteor. As soon as the newly organized Tesla Electric Company opened its South Fifth Avenue laboratories he started the construction of a variety of pieces of dynamo electric machinery. It was not necessary for him to do any calculating, or work out blueprints. Everything was crystal clear in his mind down to the finest detail of each piece of apparatus. As a result he very quickly produced the working units with which he demonstrated the principles of his polyphase alternating-current system. The single piece of apparatus he had built while in Strassburg, the first model of the induction motor, supplied the physical proof he needed that all the remainder of his calculations were correct.

The apparatuses built in his new laboratory were identical with those which he conceived during the two months in Budapest following the remarkable revelation of the principle of the revolving magnetic field. He did not make the slightest change, he said, in the machines he had mentally constructed at that time. When the machines were physically constructed not one of them failed to operate as he had anticipated. Five years had elapsed since he evolved the designs. In the meantime he had not committed a line to paper--yet he had remembered perfectly every last detail.

Tesla produced as rapidly as the machines could be constructed three complete systems of alternating-current

machinery--for single-phase, two-phase and three-phase currents--and made experiments with four- and six-phase currents. In each of the three principal systems he produced the dynamos for generating the currents, the motors for producing power from them and transformers for raising and reducing the voltages, as well as a variety of devices for automatically controlling the machinery. He not only produced the three systems but provided methods by which they could be interconnected, and modifications providing a variety of means of using each of the systems. A few months after opening the laboratory he submitted his two-phase motor to Prof. fi. A. Anthony, of Cornell University, for testing. Prof. Anthony reported that it had an efficiency equal to that of the best direct-current motors.

Tesla now not only constructed the machines which he visualized but he worked out the basic mathematical theory underlying all of the apparatus. The mathematical theory was so basic that it covered not only the principles applying to machinery for operation at 60 cycles per second, which is the frequency now in standard use, but applied equally well to the whole range of low- and high-frequency currents. With Edison direct current, it had not been found practicable to work with potentials higher than 220 volts on distribution systems; but with alternating-current it was possible to produce and transmit currents of many thousands of volts, thus permitting economical distribution, and these could be reduced to the lower voltages for customer use.

Tesla sought to obtain a single patent covering the entire system and all of its constituent dynamos, transformers, distribution systems and motors. His patent attorneys, Duncan, Curtis&Page, filed the application for this patent October 12, 1887, six months after the laboratory opened and five and a half years after Tesla had made his rotary magnetic-field invention.

The Patent Ofice, however, objected to considering such an "omnibus" application and insisted it be broken down to seven separate inventions, with individual applications filed on each. Two groups of separate applications were filed, on November 30 and December 23 respectively. These inventions were so original and covered such a virgin field of electrical science that they encountered practically no dificulties in the Patent Ofice and within about six months

the patents were issued. (They were numbered 381,968; 381,969; 381,970; 382,279; 382,280; 382,281 and 382,282. These covered his single and polyphase motors, his distribution system and polyphase transformers. In April of the following year, 1888, he applied for and was later granted five more patents, which included the four-and three-wire three-phase systems. These were numbered 390,413; 390,414; 390,415; 390,721; and 390,820. Within the year he applied for and was granted eighteen more: 401,520; 405,858; 405,859; 416,191; 416,192; 416,193; 416,194; 416,195; 418,248; 424,036; 433,700; 433.701; 433,702; 433,703; 445,207; 445,067; 459,772 and 464,666.)

As a succession of fundamental patents started to issue from the Patent Ofice to Tesla, the attention of the electrical engineering profession was drawn to this practically unknown inventor. The significance of his epoch-making discoveries was quickly grasped and he was invited to deliver a lecture before the American Institute of Electrical Engineers on May 16, 1888. This invitation was evidence that he had "arrived." Tesla accepted the invitation and put his whole heart into preparing the lecture which, he felt, would enable him to tell the electrical world the magnificent story of his complete alternating-current system and the tremendous advantages it possessed over direct-current.

This lecture became a classic of the electrical engineering field. In it Tesla presented the theory and practical application of alternating-current to power engineering. This, with his patents, described the foundation, in the matter of circuits, machines and operation, and theory, upon which almost the entire electrical system of the country was established and is still operating today. No new development of anything even slightly approaching comparable magnitude has been made in the field of electrical engineering down to the present time.

Tesla's lecture, and the inventions and discoveries which he included in it, established him before the electrical engineering profession as the father of the whole field of alternating-current power system, and the outstanding inventor in the electrical field.

It is not easy to visualize the tremendous burst of electrical development and progress that came out of Tesla's laboratory in the few months after he established

it. He produced a tidal wave of advancement which carried the electrical world into the opening of the new power age in one grand surge--although it took several years, naturally, for the commercial exploitation to get under way. The world of electrical engineering was amazed, bewildered and mystified by the host of discoveries thrown into its midst in rapid succession from the Tesla laboratory, and was filled with admiration for the prodigious new genius who had flared up within its ranks.

Tesla's power system, employing high voltage for transmission, released electrical powerhouses using direct current from functioning as purely local enterprises, capable of serving an area within a radius of one mile at the very most. His motors used alternating-current that could be economically transmitted hundreds of miles, and he provided an economical two- and three-phase system for transmission lines.

The stupendous changes which the Tesla alternating-current inventions and discoveries brought about in the electrical industry can be realized by considering the handicap under which the direct-current powerhouses of the Edison system had operated up to that time. Electricity was generated in powerhouses by relatively small-size dynamos, and the current then distributed to customers over copper conductors laid in conduits under the streets. Some of the electrical energy fed into these conductors at the powerhouse did not arrive as electricity at the far end of the line but was converted along the route to useless heat by the resistance of the conductors.

Electrical energy is composed of two factors, the current, or amount of electricity, and the voltage, or the pressure under which the current is moved. Resistance losses were undergone by the current regardless of the voltage. One ampere of current experienced a definite loss caused by resistance and this loss was the same whether the pressure was 100, or 1,000 or 100,000 volts. If the current value remained fixed, then the amount of energy transported over a wire varied with the voltage. There is, for example, 100,000 times as much energy transported over a wire carrying a current of one ampere at 100,000 volts as there is when the current is one ampere and the pressure is one volt.

If the amount of current carried by a wire is doubled, the heat losses are increased four fold; if the current is tripled, these losses are increased nine fold, and if the current is increased four fold, the losses rise sixteen fold. This situation put definite limits to the amount of current which could be loaded on to conductors.

In addition there is an accompanying drop in pressure. In a half-mile-long conductor, of the size adopted and under the average currents carried, there would be a drop of about 30 volts. To compensate for this, to some extent, the dynamos were designed to generate 120 volts instead of the standard 110 volts for which lamps were designed. Near the powerhouse the customers would get excess voltage--and a half-mile away their current would be delivered at 90 volts. The early Edison carbon lamps were none too brilliant at 110 volts and gave much less than satisfactory illumination at 90 volts.

As a result of this situation the generation and distribution of direct-electric current became very much of a localized matter. The Edison powerhouse could serve an area less than a mile in diameter. In order to give service to a large city it would be necessary to have a powerhouse in every square mile, or even closer if a uniformly satisfactory current were to be supplied. Outside large cities the situation became even more dificult. This was a severe handicap if electricity was to become the universal power source.

Tesla's alternating-current power system, which Edison so emphatically rejected when it was offered to him, freed electricity from its bondage to local isolation. Not alone were his alternating-current motors more simple and flexible than the direct-current machines, but it was possible by a highly efficient method of using transformers, which consisted of two coils of wire around an iron core, to step up the voltage and simultaneously step down the current in a proportionate amount, or use the process in reverse. The amount of energy involved, however, would remain practically unchanged.

Copper wire entails a heavy investment when it is bought by the mile. The diameter of the wire sets the limit to the amount of current it will carry. With the Edison direct-current system there was no practical way for transforming an electric current. The voltage remained fixed and when

the current was increased to the carrying capacity of the wire no further expansion was possible on that circuit.

With the Tesla system the amount of energy a wire would transport would be increased tremendously by increasing the voltage and letting the current remain fixed below the carrying limit of the circuit. A very small wire could carry a thousand or more times as much electrical energy in the Tesla polyphase alternating system as it could in the Edison direct-current system.

By using Tesla's alternating-current system electricity could be delivered economically at vast distances from the powerhouse. It would be possible, if desired, to burn coal at the mouth of a mine for generating electricity, and deliver the current cheaply at distant cities, or to generate electricity where water power was available and transmit it to distant points where it could be used.

Tesla rescued the electrical giant from the apron strings of the powerhouse and gave it geographical freedom, the opportunity to expand into the wide-open spaces and work its magic. He laid the foundation for our present superpower system. A development of such magnitude was bound to be loaded with dynamite, and action was sure to follow as soon as someone set a match to the fuse.

TESLA'S spectacular lecture and demonstration before the American Institute of Electrical Engineers in New York focused on his work the attention of the electrical fraternity throughout the world. There was no doubt in the mind of the vast majority of electrical engineers that Tesla's discoveries created a new epoch in the electrical industry. But what could be done about it? There were few manufacturers who could take advantage of it. His discoveries were in the same predicament as a ten-pound diamond. No one would question the value of the stone but who would be in a position to purchase it or make any use of it?

Tesla had given no specific thought to commercializing his work at this time. He was in the midst of a program of experimental work which was far from complete and he desired to finish it before engaging in another line of activity. He expected that there would be no alternative to establishing his own company and engaging in the manufacture of his dynamos, motors and transformers. Such a course would take him away from the original experimental work which greatly fascinated him, and which he did not wish to interrupt. Commercializing his inventions, therefore, was a problem that could be postponed, as far as he was concerned, at least as long as the present financing of his work continued.

George Westinghouse, head of the Westinghouse Electric Company in Pittsburgh, was a man of vision. He was already famous as an inventor of numerous electrical devices but principally for his air brake for trains, and had made a fortune out of the exploitation of his own inventions. He recognized the tremendous commercial possibilities presented by Tesla's discoveries and the vast superiority of the alternating- over the direct- current system. He was a practical man of business and was not limited in his choice between the two systems.

Edison, head of the Edison General Electric Company, on the other hand, was under a limitation. Edison's invention was the incandescent electric lamp. Having developed this project, he was faced with finding some way to use it commercially. In order to sell his lamps to the public it was necessary to make the electricity available for lighting them. This necessitated the building of powerhouses and distribution systems. Another kind of electric lamp was already available--the arc lamp--in which he was but slightly interested. The Edison system powerhouses were standardized on low-voltage direct current. At that time direct-current motors were in use, and most technical men believed it was not at all likely there would ever be a practical alternating-current motor. The direct-current system, therefore, offered a number of advantages of a practical nature from Edison's viewpoint.

Westinghouse had no pet project comparable to the incandescent lamp around which he had to throw protecting conditions such as direct-current limitations, so he could look at the Tesla alternating-current discoveries from an unbiased and purely objective point of view. He reached his

decision a month after Tesla's lecture. Having done this, he forwarded a brief note to Tesla, making an engagement to see him in the latter's laboratory.

The two inventors had not previously met but each of them was well acquainted with the other's work. Westinghouse, born in 1846, was ten years older than Tesla. He was a short, stout, bearded, impressive-looking individual, and had a habit of directness in conducting his affairs that amounted almost to bluntness. Tesla, thirty-two years old, was tall, dark, handsome, slender and suave. They made a strongly contrasting pair as they stood in Tesla's laboratory, but they had three things in common: they both were inventors, engineers and loved electricity. Tesla had in his laboratory dynamos, transformers, and motors with which he could demonstrate his discoveries and models in actual operating conditions. Here Westinghouse was right at home and quickly became completely sold on the inventor and his inventions.

So favorably impressed was Westinghouse that he decided to act quickly. The story was related to the author by Tesla.

"I will give you one million dollars cash for your alternating-current patents, plus royalty," Westinghouse blurted at the startled Tesla. This tall, suave gentleman, however, gave no outward sign that he had almost been bowled over by surprise.

"If you will make the royalty one dollar per horsepower, I will accept the offer," Tesla replied.

"A million cash, a dollar a horsepower royalty," Westinghouse repeated.

"That is acceptable," said Tesla.

"Sold," said Westinghouse. "you will receive a check and a contract in a few days."

Here was a case of two great men, each possessed with the power of seeing visions of the future on a gigantic panorama, and each with complete faith in the other, arranging a tremendous transaction with utter disregard of details.

The amount involved was unquestionably a record one, for that time, for an invention. while Tesla liked to think of his complete polyphase system as a single invention, he was, nevertheless, selling about twenty inventions on which patents were already issued, and about as many more still to issue. With a total of forty patents involved in the transaction, most of them strongly basic in nature, he received, therefore, about $25,000 per patent. Westinghouse thereby obtained a record-breaking bargain by buying the patents in wholesale quantities.

Westinghouse arranged with Tesla to come to Pittsburgh "at a high salary" for a year, to act as consultant in the commercial application of his inventions. The generous offer made by the Pittsburgh magnate for the purchase of his patents made it unnecessary for Tesla to have any more worries about having to devote a major portion of his time to exploiting his inventions commercially through his own company. He could afford, therefore, to give this year of his time.

The apparatus which Tesla demonstrated to Westinghouse when the latter visited his laboratory, and which worked so beautifully, was designed for operation with a current of 60 cycles. Tesla's investigation had demonstrated that this was the frequency at which the greatest efficiency of operation could be achieved. At higher frequencies there was a saving in the amount of iron required; but the drop in efficiency, and design dificulties that developed, were not compensated for by the very small saving in cost of metal. At lower frequencies the amount of iron required increased, and the apparatus grew in size faster than increased efficiency justified.

Tesla went to Pittsburgh and expected to clear up all problems in less than a year. Here, though, he encountered engineers who faced the problem of producing a motor with a design that would insure, first, certainty of smooth and reliable operation; second, economy of operation; third, economy in use of materials; fourth, ease of manufacture; as well as other problems. Tesla had these problems in mind but not with the urgency with which the engineers faced them. In addition he was quite adamant in the choice of 60 cycles as the standard frequency for alternating current while engineers, who had experience on 133 cycles, were not so sure that the lower frequency would be best for the Tesla motors. At any rate there was conflict between the

inventor, interested mainly in principles, and engineers interested in practical design problems. Very definite problems were encountered in making the Tesla motor work on a single-phase current in small sizes. In this type of design, artifices had to be incorporated in the motor to achieve some of the characteristics of a two-phase current from the single-phase current that was supplied to operate it.

Tesla was thoroughly disgusted with the situation. He felt his advice concerning his own invention was not being accepted, so he quit Pittsburgh. Westinghouse was sure the situation would work itself out. Seeking to persuade Tesla to remain, he offered him, Tesla revealed many years later, twenty-four thousand dollars a year, one third of the net income of the company and his own laboratory, if he would stay on and direct the development of his system. Tesla, now wealthy and anxious to return to original research, rejected the offer.

Development work proceeded after Tesla left, and soon practical designs were produced for all sizes of motors and dynamos, and their manufacture started. Tesla was happy to note that the 60-cycle standard, his emphatic choice, but which had been questioned on the ground it was less practical in small units, had been adopted as the standard frequency.

On returning to his New York laboratory, Tesla declared that he had not made a single worth-while contribution to electrical science during the year he spent at Pittsburgh. "I was not free at Pittsburgh," he explained; "I was dependent and could not work. To do creative work I must be completely free. When I became free of that situation ideas and inventions rushed through my brain like a Niagara." During the following four years he devoted a large fraction of his time to further developments of his polyphase power system, and applied for, and was granted, forty-five patents. Those granted in foreign countries would bring the total to several times this number.

The ideas of the two giants among inventors--Edison and Tesla--were meeting in head-on battle. Out of the laboratories of the two geniuses, within sight of each other in South Fifth Avenue in New York, had come world-shaking developments.

There had been considerable conflict between Edison, who adhered strictly to direct current, and those who supported the claims for alternating current. The Thomson-Houston Company and the Westinghouse Electric Company had extensively developed this field for series electric lighting and arc lighting before the Tesla power system was developed. Edison had engaged in many tilts at these competitors, attacking alternating-current as unsafe because of the high voltages used. The advent of the Tesla system added fuel to the fire.

It was Tesla's belief that when the New York State Prison authorities adopted high-voltage alternating current for electrocution of condemned prisoners, the Edison interests had engineered the project to discredit alternating current. There is no doubt about the aid the prison authorities' choice gave the direct-current group; but their decision was undoubtedly based on the fact that direct current could not, by any practical means, be produced at the high voltages required, whereas alternating-current potentials could be very easily increased. Direct current is just as deadly, at the same voltage and amperage, as alternating current. In this "war of the currents," however, as in other wars, appeal to the emotions, instead of to simple facts, were the governing influences.

The task of putting the United States on an electrical power basis--which is what George Westinghouse undertook when he began to exploit the Tesla patent--was a gigantic one requiring not only engineering talent but capital. The Westinghouse Electric Company experienced a tremendous expansion in the volume of its business, but the upward surge came at a time when the country was going into a stage of commercial and financial depression; and Westinghouse soon found himself in dificulties.

This was, in addition, an era in which competing giant financial interests were battling for control of the industrial structure of the country through control of capital. It was a time of mergers, a period when the financial interests were building larger units of production by uniting smaller companies in related fields, frequently forcing these combinations without regard to what the owners of the companies desired.

One merger, internally initiated and arranged by mutual consent, brought together the Thomson-Houston Company and the Edison General Electric Company, the two biggest competitors of Westinghouse Electric, to form the present General Electric Company. This was a challenge to competing financial interests.

Westinghouse had expanded his business at a very rapid rate in exploiting the Tesla patents. Because his financial structure thereby lost a certain amount of flexibility, he became vulnerable to financial operators and soon found himself in the toils of a merger that involved uniting several other small companies with his organization. Financial interests that had stepped into the situation demanded that the Westinghouse Electric Company be reorganized as a step toward bringing about a merger with it of the U. S. Electric Company and the Consolidated Electric Light Company, the new unit to be known as the Westinghouse Electric and Manufacturing Company.

Before this reorganization would be consummated the financial advisers, in strategic positions, insisted that Westinghouse jettison some of his plans and projects which they considered inadvisable or a detriment to getting the new company onto a new foundation that would be sounder from a financial point of view.

One of the requirements was that Westinghouse get rid of the contract with Tesla calling for royalty payments of $1 per horsepower on all alternating-current articles sold under his patents. (No documentary evidence exists concerning this contract. The author located two sources of information. One was in complete agreement with the story here related. The other states that the million-dollar payment was advance royalties and Tesla so described it to him, declaring no further royalties were paid.) The financial advisers pointed out that if the business which Westinghouse expected the company would do under the Tesla patents in the ensuing year was anywhere near as great as estimated, the amount to be paid out under this contract would be tremendous, totaling millions of dollars; and this, at the time of reorganization, appeared a dangerous burden, imperiling the stability which they were trying to attain for the new organization.

Westinghouse strenuously objected to the procedure. This patent-royalty payment, he insisted, was in accordance with

usual procedures and would not be a burden on the company, as it was included in costs of production, was paid for by the customers, and did not come out of the company's earnings. Westinghouse, himself an inventor of first magnitude, had a strong sense of justice in his dealings with inventors.

The financial advisers, however, were not to be overruled. They nailed Westinghouse on the spot by insisting that the million dollars he had paid Tesla was more than adequate compensation for an invention, and that by making such an exorbitant payment he had imperiled the financial structure of his company and jeopardized his bankers' interest. Any further imperiling of the reorganization by any effort to retain the royalty contract would, it was argued, result in the withdrawing of support that would save the company.

The situation boiled down to the common "Either-Or" technique.

Westinghouse was required to handle the negotiations with Tesla. No situation could be more embarrassing to him. Nevertheless, Westinghouse was a realist among realists. He never hesitated to face facts squarely and with a blunt directness. "I will give you one million dollars cash for your alternating-current patents, plus royalty": he had been both brief and blunt when he purchased the patents from Tesla. Now he was faced with the problem of undoing the situation into which he had entered with such brevity. Then money talked and he held the money. Now Tesla held the dominant position; he held a perfectly valid contract worth many millions, and he could go to court to force compliance with its terms. Edison's successful suit against infringers of his electric-light patent, bringing disaster to many companies that violated his patent property rights, had caused the whole industrial world to hold a new and wholesome respect for patent rights.

Westinghouse had no reason for believing that Tesla would show the slightest inclination to relinquish his contract or permit its terms to be changed to provide a smaller rate of royalty. He knew that Tesla's pride had been hurt by the disagreement with the Pittsburgh engineers, and that he might not now be in a conciliatory mood. On the other hand, Westinghouse knew that he had succeeded in having Tesla's ideas adopted. His greatest comfort came from the fact that he had entered into the contract with good faith--and with

the same good faith he was trying to handle a much less satisfactory situation. Perhaps he could offer Tesla an executive position in the company in lieu of the contract. There would be mutual advantages in such an arrangement.

There is no means of fixing the definite value of the contract Tesla held. His patents covered every department of the new alternating-current power system, and royalties could be collected on powerhouse equipment and motors. At that time the electric power industry had barely started; no one could look into the future and see the tremendous volume of business that would be developed. (The latest data available indicate that in 1941 there was 162,000,000 horsepower of electrical generating machinery in operation in the United States, practically all of it for alternating current. Assuming a uniform growth from 1891 to 1941, the installed horsepower in 1905, when the first Tesla patents would have expired, would have been about twenty million. This figure is, apparently, too high.

According to a census of central stations in the United States conducted by T. Commerford Martin (Electrical World, March 14, 1914) the horsepower of generators in operation in 1902 was 1,620,000 and in 1907 the figure had risen to 6,900,000. On a pro rata, per-year basis, this would make the figure for 1905, the year when Tesla's first patents expired, 5,000,000. During this period many manufacturers who had been using steam power installed dynamos in their factories and operated isolated plants. These would not be included in the central-station figures and, if added, would bring the total horsepower to perhaps 7,000,000. Tesla would have been entitled to $7,000,000 royalties on this equipment, on the basis of his $1-per-horsepower arrangement. In addition he would have been entitled to royalties on motors that used the power generated by these dynamos. If only three quarters of the current generated were used for power, this would have entitled him to additional royalties of $5,000,000, or a total of $12,000,000.)

It would be a tough job for any executive, no matter how shrewd or clever, to talk a man out of a contract that would net him many millions of dollars, or induce him to accept a reduction in rates amounting to millions.

Westinghouse called on Tesla, meeting him in the same South Fifth Avenue laboratory where he had purchased the patents

four years before. Without preliminaries or apologies Westinghouse explained the situation.

"your decision," said the Pittsburgh magnate, "determines the fate of the Westinghouse Company."

"Suppose I should refuse to give up my contract; what would you do then?" asked Tesla.

"In that event you would have to deal with the bankers, for I would no longer have any power in the situation," Westinghouse replied.

"And if I give up the contract you will save your company and retain control so you can proceed with your plans to give my polyphase system to the world?" Tesla continued.

"I believe your polyphase system is the greatest discovery in the field of electricity," Westinghouse explained. "It was my efforts to give it to the world that brought on the present difficulty, but I intend to continue, no matter what happens, to proceed with my original plans to put the country on an alternating-current basis."

"Mr. Westinghouse," said Tesla, drawing himself up to his full height of six feet two inches and beaming down on the Pittsburgh magnate who was himself a big man, "you have been my friend, you believed in me when others had no faith; you were brave enough to go ahead and pay me a million dollars when others lacked courage; you supported me when even your own engineers lacked vision to see the big things ahead that you and I saw; you have stood by me as a friend. The benefits that will come to civilization from my polyphase system mean more to me than the money involved. Mr. Westinghouse, you will save your company so that you can develop my inventions. Here is your contract and here is my contract--I will tear both of them to pieces and you will no longer have any troubles from my royalties. Is that suficient?"

Matching his actions to his words Tesla tore up the contract and threw it in the waste basket; and Westinghouse, thanks to Tesla's magnificent gesture, was able to return to Pittsburgh and use the facilities of the reorganized company, which became the present Westinghouse Electric and Manufacturing Company, to make good his

promise to Tesla to make his alternating-current system available to the world.

Probably nowhere in history is there recorded so magnificent a sacrifice to friendship as that involved in Tesla's stupendous gift to Westinghouse of $12,000,000 in unpaid royalties, although Westinghouse personally received only indirect benefits from it.

It is also probable that the failure to pay Tesla these royalties resulted in one of the greatest handicaps to scientific and industrial progress which the human race has experienced. A few years later Tesla, still an intellectual giant far from the peak of his greatest growth, still pouring forth a profusion of inventions and discoveries of first magnitude, equal in importance to his first efforts which put the world on an electrical power basis, found himself without funds with which to develop his discoveries, with the result that many of them have been lost.

Nearly fifty years after this majestic relinquishment of wealth on the altar of friendship, during which time Tesla had had opportunity to see the United States and the world as a whole wax wealthy out of the power he had made available, he was called on to respond, with a speech, to honorary citation by the Institute of Immigrant Welfare. Tesla, then about eighty, was unable to appear in person. He had experienced decades of poverty in which he faced ridicule for his failure to develop inventions which he declared he had made, and had been forced to move frequently from hotel to hotel, owing to inability to pay his bills. In spite of these experiences he developed no rancor toward Westinghouse in whose behalf he sacrificed his $12,000,000 in royalties. Instead, he retained his original warm friendship. This is indicated by a statement in the speech he sent to the Institute to be read at its dinner held in the Hotel Biltmore, May 12, 1938:

"George Westinghouse was, in my opinion, the only man on this globe who could take my alternating-current system under the circumstances then existing and win the battle against prejudice and money power. He was a pioneer of imposing stature, one of the world's true noblemen of whom America may well be proud and to whom humanity owes an immense debt of gratitude."

when Tesla left the Westinghouse plant at Pittsburgh in 1889 to return to his laboratory in New York, he entered a new world. The magnificent polyphase system which he had already produced was but a small sample of the greater wonders that still remained to be revealed, and he was anxious to start exploring the new realm.

He was not approaching an entirely unknown realm in which he would have to feel his way in darkness in the hope of stumbling upon something of value, although anyone else at that time would have been in that position. On that fateful afternoon in February in Budapest in 1882, when he was given the vision of the rotating magnetic field, there had come with it an illumination that revealed to him the whole cosmos, in its infinite variations and its myriad of forms of manifestations, as a symphony of alternating currents. For him, the harmonies of the universe were played on a scale of electrical vibrations of a vast range in octaves. In one of the lower octaves was a single note, the 60-cycle-per second alternating current, and in one of the higher octaves was visible light with its frequency of billions of cycles per second.

Tesla had in mind a course of experimentation in which he would explore this region of electrical vibration between his alternating current and light waves. He would increase the frequency of the alternating current through the unknown intervening regions. If one note in a lower octave produced such a magnificent invention as the rotating magnetic field and the polyphase system, who could imagine the glorious possibilities that lay hidden on other notes in higher octaves? And there were thousands of octaves to be explored. He would construct an electrical harmonium by producing electrical vibrations in all frequencies, and study their characteristics. He would then, he hoped, be able to understand the motif of the cosmic symphony of electrical vibrations that pervaded the entire universe.

Tesla, at the age of thirty-three, was now wealthy. He had received $1,000,000 from the Westinghouse Company for his first crop of inventions. Of this, $500,000 went to A. K. Brown and his associate who had financed his experiments. Still greater inventions were to follow. He would never

need money. He would, he then believed, have royalties in the millions from his alternating-current patents. He could spend as freely as he wished, penetrating the secrets of Nature and applying his discoveries to human welfare. It was his responsibility to be so engaged. He knew he was gifted as no other man had been blessed with vision, talent and ability; and he in turn would endow the world with supernal treasures of scientific knowledge which he would extract from the secret recesses of the universe and, through the activities of his mighty mind, transform into agencies to brighten the lives, lighten the labors and increase the happiness of the human race.

was he a superegoist in his attitude? If so, he was not activated by selfish motives. To him it mattered not what he thought, so long as he remained objective in his thinking and his thoughts could be translated into demonstrable facts. what if he did consider himself greater than other men: did not this viewpoint conform to the facts? Suppose he did consider himself a man of destiny. Could he not bring evidence to support the contention? It was not necessary for Tesla actually to see an event occur in order to enjoy its realization. Had he not as a youth declared that he would make a practical alternating-current motor, only to be told by his professor that the goal was impossible of attainment--and had he not already accomplished this "impossibility"? Had he not taken the direct-current dynamos of Edison, whom all the world looked upon as a great genius, and had he not greatly improved their design and operation; and in addition, had he not produced a vastly superior system for producing, distributing and using electricity? To all of these inquiries Tesla could answer in the afirmative without going beyond the bounds of modesty concerning his achievements.

His attitude was not that of an egoist. It was an attitude of supreme faith in himself and in the vision that had been given him. To a man of ability, with such supreme faith in himself, and necessary financial resources to advance his purposes, the world of accomplishments is without limits. This was the picture of Tesla as he returned to his laboratory in lower Fifth Avenue, New York, in the latter part of 1889.

Tesla had studied a wide range of frequencies of alternating current in order to select the frequency at

which his polyphase system would operate most efficiently. His calculations indicated important changes in characteristics and effects as the frequency of the current was increased; and his observations with the electrical machinery he built confirmed his calculations. He noted that ever smaller quantities of iron were required as the frequencies were increased, and he now wished to explore the very high frequencies at which unusual effects should be produced without any iron in the magnetic circuit.

When, back in Budapest following his rotating magnetic-field discovery, he had played with mental calculations of the properties of alternating currents all the way from the very lowest frequency up to that of light, no one had yet explored this region. James Clerk Maxwell, at Cambridge University, England, had, however, nine years before, in 1873, published his beautiful presentation on an electromagnetic theory of light, and his equations indicated that there was a vast range of electro-magnetic vibrations above and below visible light--vibrations of much longer and much shorter wavelengths. while Tesla was engaged in making models of his polyphase system in 1887, too, Professor Heinrich Hertz, in Germany, put the Maxwell theory to test in the range of waves a few meters long. He was able to produce such waves by the spark discharge of an induction coil, and was able to absorb such waves from space and change them back to a small spark at some distance from the coil.

Hertz's work gave support to Tesla's theory that there was an interesting discovery to be made on almost every note of the whole gamut of vibrations between the known ones of the electrical current and those of light. Tesla felt sure that if he could continually increase the frequency of electrical vibrations until they equaled that of light, he would be able to produce light by a direct and highly efficient process instead of the extremely wasteful process used in the Edison incandescent lamp, in which the useful light waves were a very small fraction of the wasted heat waves emitted in the process, and only five per cent of the electrical energy was effectively utilized.

Tesla started his investigations by building rotary alternating-current dynamos with up to 384 magnetic poles, and with these devices he was able to generate currents up to 10,000 cycles per second. He found that these high-frequency currents presented many fascinating possibilities

for even more efficient power transmission than his very practical 60-cycle polyphase system. He therefore carried on a parallel line of research into transformers for raising and lowering the voltage of such currents.

High-frequency alternating-current dynamos, similar to those designed by Tesla in 1890, were subsequently developed by F. W. Alexanderson into the high-power wireless transmitters which put transatlantic wireless transmission, more than two decades later, on such a sound practical basis that the Government would not permit control of it to go to a foreign country and preserved for the United States its predominant position in world wireless.

The high-frequency current transformers which Tesla developed proved to be spectacular performers. They contained not a trace of iron; as a matter of fact, the presence of iron was found to interfere with their operation. They were air-core transformers and consisted merely of concentric primary and secondary coils. The voltages he was able to produce with these transformers, which became known as Tesla coils, were very high. In the early experiments he attained potentials that would spark across a couple of inches of air, but in a short time he made tremendous progress and was producing flaming discharges. In working with these voltages he encountered dificulties in insulating his apparatus, and so he developed the technique that is now in universal use in high-tension apparatus: that of immersing the apparatus in oil and excluding all air from the coils, a discovery of great commercial importance.

There was a limit, however, above which the use of rotary generators of high-frequency currents was not practicable, so Tesla set about the task of developing a different type of generator. There was nothing novel about the basic idea he employed. In rotary dynamos, current is generated by moving a wire in a circle past a number of magnetic poles in succession. The same effect can be attained by moving the wire back and forth with an oscillating motion in front of one magnetic pole. No one, however, had as yet produced a practical reciprocating dynamo. Tesla produced one that was extremely practical for his particular purpose; but otherwise it had little utility, and he later felt that he could have employed much better the time he spent on it. It was an ingenious single-cylinder engine without valves, and

could be operated by compressed air or steam. It was supplied with ports like a small two-cycle marine engine. A rod extended from the piston through the cylinder head at either end, and at each end of the rods was attached a flat coil of wire which, by the reciprocating action of the piston, was caused to move back and forth through the field of an electromagnet. The magnetic field through its cushioning effect served as a flywheel.

Tesla was able to obtain a speed of 20,000 oscillations per minute, and to maintain such a remarkable degree of constancy in operation that he proposed the maintenance of equally constant speed of operation for his 60-cycle polyphase system and the use of synchronous motors, geared down to the proper extent, as clocks which would furnish correct time wherever alternating current was available. This proposal furnished the foundation for our modern electric clocks. As with many another of his practical and useful suggestions, he did not take out a patent on the idea, and gained no financial advantage from it.

In working with his polyphase system, Tesla gained a thorough understanding of the part played by the two factors, capacity and inductance, in alternating-current circuits; the former acting like a spring and the latter like a storage tank. His calculations indicated that with currents of suficiently high frequency it would be possible to produce resonance with relatively small values of inductance and capacity. Producing resonance is tuning a circuit electrically. The mechanical effects analogous to electrical resonance are the causing of a pendulum to swing through a wide arc by giving it a series of very light but equally timed touches, or the destruction of a bridge by soldiers marching in unison over it. Each small vibration re-enforces its predecessors until tremendous effects are built up.

In a tuned electrical circuit a condenser supplies the capacity and a coil of wire supplies the inductance. A condenser ordinarily consists of two parallel metal plates separated from each other a short distance by an insulating material. Each plate is connected to either end of the inductance coil. The size of the condenser and the coil is determined by the frequency of the current. The coil-condenser combination and the current are tuned to each other. The current can be pictured as flowing into the condenser until it is fully charged. It then flows

elastically into the inductance coil, which stores the energy by building up its magnetic field. When the current ceases to flow in the coil, the magnetic field collapses and gives back to the coil the energy previously used in building up the magnetic field, thus causing a current to flow back into the condenser to charge it up to overflowing again, so that it is ready to repeat the process. This flow back and forth between the condenser and coil takes place in step with the periodic reversal of the alternating current which supplies the energy when resonance is established. Each time it takes place, the charging current comes along at the right instant to give it a boost, so that the oscillations build up to tremendous values.

Tesla, in discussing this plan of electrical tuning of circuits in a lecture, given several years later, said:

The first question to answer then is whether pure resonance effects are producible. Theory and experiment show that such is impossible in nature for, as the oscillations become more vigorous, the losses in vibrating bodies and environing media rapidly increase, and necessarily check the vibrations, which would otherwise go on increasing forever. It is a fortunate circumstance that pure resonance is not producible for, if it were, there is no telling what dangers might lie in wait for the innocent experimenter. But, to a certain degree, resonance is producible, the magnitude of the effects being limited by the imperfect conductivity and imperfect elasticity of the media, or, generally stated, frictional losses. The smaller these losses the more striking are the effects.

Tesla applied the electrical tuning principles to his coils and discovered that he was able to produce tremendous resonance effects and build up very high voltages. The tuning principles he developed in 1890 are those which have made our modern radio, and the development of the earlier art, "wireless," possible. He had been working with, and demonstrating, these principles before others who received credit had begun to learn the first lessons in electricity.

Seeking a new source of high-frequency currents, higher than could be produced by any mechanical apparatus, Tesla made use of a discovery that had been made the year in which he was born, by Lord Kelvin, in England, in 1856, and for which no use had thus far been found. Up to the time of Kelvin's discovery it had been believed that when a

condenser was discharged the electricity flowed out of one plate into the other, like water being poured from a glass, thus establishing equilibrium. Kelvin showed that the process was far more interesting and complex; that its action was like the bobbing up and down that takes place when a weighted stretched spring is released. The electricity, he showed, rushes from one plate into the other and then back again, the process continuing until all of the stored up energy is used up in overcoming frictional losses. The back-and-forth surges take place at a tremendously high frequency, hundreds of millions a second.

The combination of condenser discharges and tuned circuits opened a new realm in electrical science as significant and as important as Tesla's polyphase system. He worked out remarkably simple and automatic methods for charging the condensers by low voltage (direct and alternating currents), and discharging them through his new air-core transformers, or Tesla coils, to produce currents of enormously high voltages that oscillated at the tremendously high frequency of the condenser discharge. The properties of these currents were unlike anything that had been seen before. He was again pioneering in an entirely new field, with tremendous possibilities. He labored feverishly in his laboratory; and as he lay in bed at night for his five-hours' rest, which included two hours of sleep, he formulated new experiments.

Tesla announced the heating effect of high-frequency currents on the body in 1890 and proposed their use as a therapeutic device. In this he was a pioneer, but soon had many imitators here and abroad who claimed to be originators. He made no effort to protect his discovery or prevent the pirating of his invention. When the same observation was made thirty-five years later in laboratories using vacuum-tube oscillators as the source of the high-frequency currents, it was hailed as a new discovery and developed as a modern wonder. Tesla's original discovery is, however, the basis of a vast array of very recent electronic applications in which high-frequency currents are used to produce heat for industrial purposes.

When he gave his first lecture on the subject before the American Institute of Electrical Engineers at Columbia College, in May, 1891, he was able to produce spark discharges five inches long, indicating a potential of

about 100,000 volts, but, more important, he was able to produce phenomena which included, electrical sheets of flame, and a variety of new forms of illumination--electric lamps the like of which had never been seen before, nor dreamed of in the wildest imagination of any experimenter.

This lecture produced a sensation in engineering circles. He was already famous in this field for the astounding revelations he had made before the same organization on that earlier occasion when he described his discovery of the polyphase alternating current system. That discovery was an intellectual accomplishment of bewildering brilliance, made impressive by the tremendous commercial importance of the discovery. The experiments with the high-frequency and high-potential currents, however, were spectacular; the crackling of the high-voltage sparks, the flashing of the high-potential sheets of electrical flame; the brilliant bulbs and tubes of electrical fire, the amazing physical effects he produced with the new currents, made a profound emotional appeal to the startled beholders.

The man who could produce these two pioneering developments within two years must be more than a genius! The news of his new accomplishment flashed quickly throughout the world, and Tesla's fame now rested on a double foundation.

The world-wide fame that came to him at this time was unfortunate. Tesla would have been entirely superhuman had he not derived a great deal of satisfaction out of the hero-worshiping adulation that now came to him. It was only five years ago that he had been hungry and penniless in the streets of New York, competing with equally hungry hordes of unemployed for the few existent jobs calling for brute labor, while his head bulged with important inventions which he was anxious to give to the world. No one would listen to him then--and now the intellectual elite of the nation were honoring him as an unrivaled genius.

Tesla was a spectacular figure in New York in 1891. A tall, dark, handsome, well-built individual who had a flair for wearing clothes that gave him an air of magnificence, who spoke perfect English but carried an atmosphere of European culture which was worshiped at that time, he was an outstanding personality to all who beheld him. Hidden behind his quiet, self-effacing demeanor, and an extreme modesty that manifested itself as an exaggerated shyness, was the mind of a genius which had worked electrical

wonders that fired the imagination of all and exceeded the understanding of the vast majority of the population. In addition Tesla was a young man, not yet thirty-five, who had recently received a million dollars and was a bachelor.

A bachelor with a million dollars, culture and fame, could not avoid being a shining mark in New York in the early years of the gay nineties. Many were the designing matrons with marriageable daughters who cast envious eyes in the direction of this eligible young man. The social leaders looked upon him as a fascinating decoration for their salons. The big men of business looked upon him as a good man to know. The intellectuals of the day found his almost unbelievable accomplishments a source of inspiration.

Except at formal dinners Tesla always dined alone, and never under any circumstances would he dine with a woman at a two-some dinner. No matter how much a woman might gush over him or strive to gain his favor, Tesla, in most adamant fashion, maintained a thoroughly impersonal attitude. At the Waldorf-Astoria and at Delmonico's he had particular tables which were always reserved for him. They occupied secluded positions in the dining rooms because when he entered either room he was the cynosure of all eyes and did not enjoy being on exhibition.

In spite of all of the adulation that was heaped upon him, Tesla had but one desire--to continue his laboratory experiments undisturbed by outside distractions. There was a tremendous empire of new knowledge to be explored. He was fired with a potential of enthusiasm for the work that was as high as the voltage of the currents with which he was working, and new ideas were coming to him with almost the rapidity of the cycles in his high-frequency current.

There were three broad fields in which he wished to develop applications which were now clearly outlined in his mind: a system of wireless power transmission that would excel his own polyphase system, a new type of illumination, and the wireless transmission of intelligence. He wished to work on them all simultaneously. They were not separate and isolated subjects but all closely intermeshed, all notes on that vast cosmic scale of vibration represented by his beloved alternating currents. He did not wish to play on one note at a time, as would a violinist; he preferred to play as a pianist, striking many notes at once and weaving them into beautiful chords. Where it possible to occupy the

position of leader and simultaneously play all of the instruments in a great symphony orchestra, he would have been still better pleased. The instruments in his orchestra, however, would be electrical devices oscillating in tune with their energizing currents or with their environment. To the extent that he was unable to realize his most expansive desires, he was under mental pressure that drove him to a working pace which no individual of ordinary strength could withstand without a resulting complete physical breakdown.

The spectacular lecture and demonstration on high-frequency and high-potential currents which he gave before the American Institute of Electrical Engineers in February, 1891, at Columbia College, created as profound a sensation as did his earlier one. Each opened an entirely new realm of scientific investigation and practical discoveries. The discoveries contained in either lecture would have been suficient to stand as the fruit of a lifetime's work and bring lasting fame. Two such events in rapid succession seemed almost unbelievable--yet Tesla seemed to be scarcely well launched on his career, with more important work still to come.

Requests that he give lectures came from learned societies throughout this country and Europe, but he begged to be excused because of the tremendous pressure on his time which his work entailed. Equally insistent were the social demands that were being made upon him. Social groups sought in every way to honor him, and incidentally to shine in his reflected glory. Tesla was not vulnerable to the importunings of the socialites who sought him merely as a scintillating satellite, but the clever "lion hunters" of that day soon discovered his Achilles' heel--an intelligent interest in his accomplishments and a sympathetic ear for his dreams of wonders still to come.

With this technique in successful operation, Tesla was captured and soon completely lionized. He was guest of honor at a continuous round of functions and he met the social obligations involved in them by staging, in return, elaborate dinners at the Waldorf-Astoria followed by demonstration parties at his laboratory on South Fifth Avenue. Tesla never did a halfway job on anything. When he staged a dinner he left nothing to chance in the matter of cuisine, service and decorations. He sought rare fish and fowl, meats of surpassing excellence, and choicest liquors

and exquisite wines of the best vintages. His dinners were the talk of the town and having been a guest at a Tesla dinner was a mark of social distinction, proof of membership in the inner group of the elite within Ward MacAllister's "400." At these dinners Tesla presided as a most meticulous host, or more accurately, as an old-world absolute monarch, for he would sample all food brought to the dining room; and rarely did an event pass without the grandiose host sending back some sauce or wine of unquestioned excellence as unworthy of his guests.

Following each of these meals Tesla would escort his guests to his laboratory below Washington Square; and here his demonstrations were even more spectacular than his dinners. He had a flair for the dramatic; and the strange-looking devices with which his laboratory was furnished provided a grotesque and bizarre background for the fantastic displays of seemingly unearthly forces that with invisible fingers set objects whirling, caused globes and tubes of various shapes to glow resplendently in unfamiliar colors as if a section of a distant sun were suddenly transplanted into the darkened room, and crackling of fire and hissing sheets of flame to issue from monster coils to the accompaniment of sulfurous fumes of ozone produced by the electrical discharges that suggested this magician's chamber was connected directly with the seething vaults of hell. Nor was this illusion dispelled when Tesla would permit hundreds of thousands of volts of electricity to pass through his body and light a lamp or melt a wire which he held.

The amazing feat of harmlessly passing through his body currents of tremendously high voltage and high frequency was one which Tesla evolved by his mental experiments long before he had an opportunity to test them in his laboratory. The low-frequency alternating currents, such as are now used on home-lighting circuits, would, he knew from unpleasant experiences, produce a painful shock if passed through the body. When light waves impinged on the body, however, no such painful sensation was produced. The only difference between the electric currents and light waves, he reasoned, was a matter of frequency, the electric currents oscillating at the rate of 60 per second and the light waves at billions per second.

Somewhere between these two extremes the shock-producing property of electromagnetic vibrations must disappear; and

he surmised the point would be near the lower end of the gap. Damage done to the body by electric shock he divided into two factors, one--the destruction of tissues by the heating effect which increased or diminished as the amperage of the current was raised or lowered; and two--the sensation of acute pain which varied with the number of alternations of the current, each alternation producing a single stimulus which was transmitted by the nerves as a pain.

Nerves, he knew, could respond to stimuli up to a rate of about 700 per second, but were unable to transmit impulses received at a more rapid rate. In this respect they acted very much like the ear, which is unable to hear air vibrations above a frequency of about 15,000 per second, and the eye, which is blind to color vibrations of a frequency higher than that in violet light.

When he constructed his high-frequency alternating-current dynamos, he had frequencies up to 20,000 per second with which to test his theory; and by finger tests across the terminals he was able to demonstrate that the nerves were unable to perceive the individual vibrations at this rapid rate. The amperage, which carried the tissue-destroying power, was still too high in the output of these machines to pass safely through his body, even though the sensation of pain was lacking.

By passing these currents through his newly invented air-core transformers, he could increase their voltage ten-thousand fold and reduce the amperage proportionately. The current density would thereby be reduced below the point at which it would injure tissues. He would then have a current which would not produce sensation and would not harm the tissues. He cautiously tested the theory by passing the currents through two fingers, then his arm, next from hand to hand through his body and finally from his head to his feet. If a spark jumped to or from his body, there was a pin-prick sensation at the point of contact, but this could be eliminated by holding a piece of metal to and from which the spark could jump while the current passed through the tissues without producing any sensation.

The energy content of these currents, which is proportionate to the current multiplied by the voltage, could be very high and produce spectacular effects such as melting metal rods, exploding lead disks, and lighting

incandescent or vacuum-tube lamps after passing painlessly through his body.

The European scientific societies were persistent in their efforts to induce Tesla to accept their invitations to lecture before them, and finally he acceded. He set extravagantly high standards for the contents of his lectures, and their preparation entailed a tremendous amount of labor. All of the material had to be entirely new. He would never repeat an experiment previously presented. Every technical statement had to be tested at least twenty times to insure complete accuracy. His lectures would last two or three hours; and every minute of the time was crowded with new and awe-inspiring demonstrations of his constant stream of discoveries. He used a great array of devices fashioned by himself and built in his own laboratories to illustrate his talks. A Tesla lecture, therefore, was an extremely important event in the scientific world and a most impressive occasion to those who were fortunate enough to be able to attend.

Tesla arranged to give a lecture before the Institution of Electrical Engineers in London on February 3, 1892, and one before the International Society of Engineers in Paris on February nineteenth. His decision to give the European lectures was influenced to some extent by the fact that they would afford him an opportunity to visit his home in Gospic, for recent letters had indicated that his mother's health was failing.

The lecture before the Institution of Electrical Engineers was a great success. English engineering journals, as will be seen, had been niggardly in extending recognition to Tesla for priority in the discovery of the rotating magnetic field, and had belittled the practical value of his polyphase alternating-current system, but in this attitude they were not representative of the great body of engineers, who were most generous in their praise and enthusiasm; and the attitude of the engineers was shared by the English scientists.

When Tesla arrived in London he was entertained at many places by famous men. At the Royal Institution, where the immortal Michael Faraday had carried on his fundamental researches in magnetism and electricity, Sir James Dewar, and a committee of equally famous scientists, sought to prevail upon Tesla to repeat his lecture before that

organization. Tesla could be plain stubborn in sticking to his plans, and in this case was exhibiting his usual firmness. The famous Scottish scientist matched Tesla's stubbornness with an equal persuasive persistence. He escorted Tesla to Faraday's chair, an almost sacred relic to English science, seated him in this throne, and then brought out an almost equally precious heirloom, a portion of a bottle of whiskey, the remainder of Faraday's personal supply, untouched for nearly a quarter of a century. Out of this he poured a generous half glass for Tesla. Sir James won. Tesla relented and gave the lecture the following evening.

Lord Rayleigh, the eminent English physicist, was chairman of the meeting at the Royal Institution, which was attended by the elite of the scientific world and a generous representation of the nobility of the realm. Rayleigh, after witnessing the performance of Tesla's experiments, which were none the less awe inspiring to scientists than to laymen, showered words of praise on the inventor.

Rayleigh declared that Tesla possessed a great gift for the discovery of fundamental scientific principles, and urged that he concentrate his efforts on some one big idea.

Tesla, in his conversation after the meeting, disclaimed ability as a great discoverer; but in this he was merely being modest, for he knew that he was unique among men in his ability to discover fundamental truths. He did, however, give very serious consideration to Rayleigh's suggestion that he concentrate on some one big idea. It is doubtful, however, whether Rayleigh's suggestion was good advice. Tesla's mind had a range that was cosmic in magnitude and adjusted to broad slashing advances through unknown regions. Rayleigh's advice was like suggesting to an explorer who had unique ability for penetrating an unknown continent and opening it to civilization that he settle down and cultivate a homestead, since that would give more definite and specific returns for efforts expended.

Two weeks later Tesla gave his scheduled lecture before the Physical Society in Paris and repeated it before the International Society of Electrical Engineers. This was his second visit to Paris since he had quit his job with the Continental Edison Company in that city eight years before. Immediately after leaving the Westinghouse Company in the

autumn of 1889--at which time, too, he completed his U.S. citizenship requirements--he had made a brief visit to Paris to attend the International Exposition. In the meantime, the fame of his polyphase system had spread to Europe; and to this was added the glory for his spectacular work with the new high-frequency currents. He was given a hero's reception in Paris, as well as in London.

It would be interesting to know what thoughts passed through the minds of the executives of the Continental Edison Company as they observed the tremendous contributions to science and industry by the engineer whose services they had lost through their penny-wise tactics when they were offered in 1883, and could undoubtedly have purchased for a relatively small amount, the polyphase system for which Westinghouse paid Tesla $1,000,000 five years later.

A tesla lecture was an avalanche of new and fascinating electrical knowledge. He completely overwhelmed his listeners with a wealth of spectacular original experiments, and as a result almost every individual contribution lost its identity in the dazzling concentration of the whole galaxy of startling developments.

In the 1892 lectures, entitled "Experiments with Alternating Currents of High Potential and High Frequency," Tesla described many of his discoveries which are only coming into general use today and are being hailed as modern inventions. Among these are the "neon" and other gas-filled lamps, and phosphorescent lamps. Many of the discoveries described are still unutilized, including, as will be seen, the carbon or metallic-button incandescent lamp, requiring but a single wire connection; and still others, which he later discovered, were rich producers of the mysterious X-rays.

The transcript of these lectures runs to 40,000 words. Scores of pieces of apparatus were used and usually several experiments were performed with each. He described "wireless" lamps, glowing glass tubes that required no wire connection for their operation. He described motors which operated on one wire, and "wireless" or "no wire" motors. But perhaps the most important development he described was the sensitive electronic tube--the original of all our modern radio and other electronic tubes--which, he

predicted, was the device that would permit receiving wireless telegraph messages across the Atlantic. Of all these discoveries we shall presently have more to say in detail.

It had been Tesla's intention to make a short visit to his early home in Gospic when his lectures were out of the way, but circumstances forced him to make the trip sooner than he expected. Returning to his hotel after delivering the second Paris lecture, he received word that his mother was gravely ill. He rushed to the railroad station, arriving in time to board a train just about to pull out. He telegraphed ahead for special transportation facilities to shorten his trip, and succeeded in reaching Gospic in time to see his mother alive. He arrived in the afternoon and she died that night.

The great anxiety from which Tesla suffered during his sleepless rush from Paris to Gospic caused a patch of hair on the right side of his head to turn white over night. Within a month its jet black color was restored naturally.

Almost immediately after his mother's death, Tesla contracted an illness which incapacitated him for many weeks. When he recovered, he visited his sister Marica, in Plaski, for two weeks. From there he went to Belgrade, the capital of Serbia, where he arrived in May and was received as a national hero.

During the weeks of enforced physical inactivity imposed on him by his illness, Tesla took stock of himself and became thoroughly dissatisfied with the manner in which he had been conducting his life. No human being could feel anything but a pleasurable reaction in response to the adulation that had been heaped upon him during the past two years. Tesla, however, prided himself upon his wisdom in having so designed his life that he would not become a victim of human frailties, but would function far above the normal human level of physical limitations and intellectual activities. Now Tesla saw, in retrospect, that insofar as he had adhered to his superman plan of life, he had succeeded in achieving his goal of producing the works of a superman at a rate which astounded the world. When, however, he submitted to the first blandishments of the lion hunters after his New York lecture in May, 1891, he observed, social activities had cut into his available time and had interfered with his creative activities. He had let

the "man magnificent" supersede his "superman," and two years of valuable time had been largely lost. In addition, he had spent that totally unproductive year at the Westinghouse plant. At the close of that period, he had vowed he would never again work for anyone. He now vowed that he would put an end to the vacuous social activities into which he had been inveigled.

It was not easy for Tesla to live up to his good resolutions, for his European trip had greatly enhanced his fame and triumphant celebrations were scheduled on his reappearance in New York. Nevertheless, he rejected all invitations. He returned to the Hotel Gerlach, where he lived a solitary existence. With a pent-up reserve of physical energy owing to his long abstinence from his heavy daily routine of work, he plunged with great vigor into his new program which was to open up new and enchanting realms of scientific wonders.

THE first public application of Tesla's polyphase alternating-current system was made at the Chicago World's Fair, the Columbian Exposition, which opened in 1893 to celebrate the four-hundredth anniversary of the discovery of America. This was the first world's fair for which electric lighting was a possibility, and the architects availed themselves of the opportunities it afforded for obtaining spectacular effects in illuminating the grounds and buildings at night, as well as for interior lighting during the day. The Westinghouse Electric Company secured the contract for installing all power and lighting equipment at the Fair, and took full advantage of this opportunity to use the Tesla system and demonstrate its great versatility. It supplied all the current used for lighting and power.

while the Chicago World's Fair was in reality a monument to Tesla, he had, in addition, a personal exhibition in which he demonstrated his most recent inventions. One of his exhibits was a spinning egg, made of metal. The egg was shown lying on top of a small velvet-covered circular platform. When Tesla closed a switch the egg stood on its small end and rotated at a high speed as if by magic. The "magic" phase of this feat appealed to a public which, however, grasped little of the explanation that it

illustrated the principle of the rotating magnetic field produced by the polyphase alternating currents. In other of his exhibits, glass tubes suspended in space or held in his hands lighted up in an equally "magical" fashion.

But his most spectacular feat was to let 1,000,000 volts pass through his body. This was alternating current of very high frequency as well as high voltage. He had discovered means of producing such currents. Eight years had passed since Edison, attacking high-voltage alternating current as deadly, had refused to become interested in Tesla's polyphase system. Now the Tesla system was providing the electricity for the great world's fair and the Edison direct-current system was ignored. The final gesture of victory was for Tesla to answer Edison's charge that alternating current was deadly by passing the highest voltage of it ever produced through his own body for many minutes without the slightest sign of harm. This bit of showmanship endeared Tesla to the public and brought him a tremendous burst of world-wide fame. Unfortunately, however, it obscured his more important work with polyphase currents.

The next great achievement to be attained by his polyphase system was the harnessing of Niagara Falls. (Before this was done, and even before the opening of the Chicago fair, the practicability of his system was demonstrated in Europe; but this had been undertaken without his knowledge. A practical test of the transmission of polyphase alternating current at 30,000 volts was made between a hydroelectric station at Lauffen and the City of Frankfurt, the current being used to furnish electricity at a fair held at the latter city. This installation was built in 1891. The current was used to light incandescent and arc lamps and also to operate a Tesla motor.) In 1886 a charter had been granted for developing power at the Falls. The project made slow progress and was taken over by a New York group which organized the Cataract Construction Company, of which Edward Dean Adams was made president. Mr. Adams' company desired to develop power on the largest scale possible. The total energy supply available in the Falls had been variously estimated from 4,000,000 to 9,000,000 horsepower. Mr. Adams organized the International Niagara Commission for the purpose of ascertaining the best means of harnessing the Falls, and made Lord Kelvin, the famous English scientist, its chairman. A prize of $3,000 was offered for the most practical plan submitted.

Tesla had predicted nearly thirty years before, as a boy, that he would someday harness Niagara Falls. Here was the opportunity. In the meantime, he had made it possible to fulfil his boyhood boast by completing the series of inventions which made it possible to change the hydraulic power of the Falls into electrical energy.

The prize-offer plan adopted by Mr. Adams did not, however, set well with Mr. Westinghouse when he was urged to submit a proposal. He replied, "These people are trying to get one hundred thousand dollars' worth of information for three thousand dollars. When they are ready to talk business we will submit our plans." This adamant attitude of Westinghouse was one handicap for the Tesla alternating-current plan. The second big handicap was the fact that Lord Kelvin had declared himself in favor of the use of direct current.

About twenty plans were submitted in the contest but none of them was accepted by the commission, and no prize was awarded. The big electrical companies, Westinghouse, Edison General Electric and Thomson-Houston, did not submit plans. This took place in 1890.

Original developers of the Falls planned to use locally the mechanical power provided by water wheels; but the only practical plan was, clearly, the generation of electricity by dynamos driven by water wheels, and the distribution of the current throughout the district. There was a good additional market for it at Buffalo, a large industrial city about twenty-two miles distant. There was always the hope, too, that the current could be transmitted to New York City and serve the rich intervening territory. If direct current were used, its transmission twenty-two miles to Buffalo was totally unfeasible. The Tesla alternating-current system, however, made the transmission to Buffalo extremely practicable and the delivery of the current to New York City a possibility.

In due time the Cataract Construction Company decided that the hydroelectric system was the only feasible one, and proposals and bids were asked on a power system consisting of three generating units, each of 5,000 horsepower, from the Westinghouse Electric Company and the General Electric Company. Each one submitted a proposal to install a Tesla polyphase generating system. The General Electric Company,

successor to the Edison General Electric Company, having in the meantime secured a license to use the Tesla patents, proposed to install a three-phase system, and Westinghouse a two-phase system. The first proposal concerned the building of the powerhouse. A second proposal on which bids were asked concerned the transmission line between Niagara Falls and Buffalo and a distribution system in the latter city.

Bids were asked for early in 1893, and in October of that year Mr. Adams announced that the Westinghouse plan for the powerhouse and the General Electric plan for the transmission line were accepted. The latter included a transformation of the two-phase current from the generators into three-phase current to be transmitted to Buffalo. This change indicated the flexibility of the Tesla polyphase system.

Westinghouse completed the powerhouse and in 1895 it stood ready to deliver 15,000 horsepower; the most gigantic piece of electrical engineering conceived or accomplished up to that time. In 1896 General Electric completed the transmission and distribution system, and electrical power extracted from Niagara Falls, without in any way impairing the beauty of the spectacle they presented, was delivered to industries through the Falls and Buffalo areas. So successful was this installation that the Westinghouse Company installed seven additional generating units, bringing the output to 50,000 horsepower. A second equivalent powerhouse, also using alternating current, was later built by the General Electric Company. Today, the powerhouses at Niagara Falls are linked directly with the electric power system in New York City, all using the Tesla system.

Dr. Charles F. Scott, Professor Emeritus of Electrical Engineering at wale University, and former president of the American Institute of Electrical Engineers, who was a Westinghouse engineer when that company was developing the Tesla system, in a memorial review of Tesla's accomplishments, (Published in Electrical Engineering, August 1943, pp. 351-555.) describes the Niagara development and its results:

The simultaneous development of the Niagara project and the Tesla system was a fortuitous coincidence. No adequate method of handling large power was available in 1890; but

while the hydraulic tunnel was under construction, the development of polyphase apparatus justified the oficial decision of May 6, 1893, five years and five days after the issuing of Tesla's patents, to use his system. The Polyphase method brought success to the Niagara project; and reciprocally Niagara brought immediate prestige to the new electric system.

Power was delivered in August 1895 to the first customer, the Pittsburgh Reduction Company (now Aluminum Company of America) for producing aluminum by the Hall process, patented in the eventful year 1886. . . .

In 1896 transmission from Niagara Falls to Buffalo, 22 miles, was inaugurated. Compare this gigantic and universal system capable of uniting many power sources in a superpower system, with the multiplicity of Lilliputian "systems" which previously supplied electrical service. As Mr. Adams aptly explained: "Formerly the various kinds of current required by different kinds of lamps and motors were generated locally; by the Niagara-Tesla system only one kind of current is generated, to be transmitted to places of use and then changed to the desired form."

The Niagara demonstration of current for all purposes from large generators led immediately to similar power systems in New York City--for the elevated and street railways and for the subway; for steam railway electrification; and for the Edison systems, either by operating substations for converting alternating current to direct current or by changing completely to A.C. service.

The culminating year 1896 inaugurated two far reaching developments for the extension of polyphase power, one commercial and one engineering. By exchange of patent rights, the General Electric Company obtained license rights under Tesla patents, later made impregnable by nearly a score of court decisions. Also the Parsons turbine, accompanied by its foremost engineer, was transplanted to America and enabled George Westinghouse to bring to fruition by a new method the ideal of his first patent, a "rotary steam engine." The acme of the reciprocating engine came in the early 1900's; a century's development produced the great engines that drove 5,000 to 7,500 kilowatt alternators for New York's elevated and subway. But the rapidly growing steam turbine of different types soon doomed the engine to obsolescence; single units

with the capacity of a score of the largest engines are now supplying power to the metropolis. Single powerhouses now supply more power than all of the thousands of central stations and isolated plants of 1890.

Prof. Scott concludes: "The evolution of electric power from the discovery of Faraday in 1831 to the initial great installation of the Tesla polyphase system in 1896 is undoubtedly the most tremendous event in all engineering history."

Lord Kelvin, who had originally favored direct current for Niagara, later conceded, but only after the system was in operation, that alternating current had many more advantages for long-distance distribution systems, and declared, "Tesla has contributed more to electrical science than any man up to his time."

There should never have been the slightest shadow of doubt concerning the credit due to Tesla not only for discovering the rotating magnetic field but also for inventing the first practical alternating-current motor, the polyphase system of alternating currents, dynamos for generating them, a variety of motors for converting the currents into power, a system of polyphase transformers for raising and lowering voltages, and economical methods for transmitting electrical power for long distances. Nevertheless, credit for priority has unjustly been given to and taken by others. Tesla succeeded in establishing his claims; but in the meantime, however, damage was done by raising these unfair claims, and to this day the electrical engineering profession, and public service and major electrical industries, have never extended to Tesla the credit to which he is entitled. If they had done so, the name of Tesla would carry at least as much fame as the names Edison and Westinghouse.

Tesla, as we have seen, made his rotating magnetic field invention in 1882, and within two months evolved the complete power system, including all the apparatus which he later patented. In 1883 he described his invention to oficials of the Continental Edison Company. In 1884 he demonstrated his motor to the mayor of Strassburg and others. In this same year he described the invention to Thomas A. Edison. In 1885 he sought to have the promoters of the Tesla Arc Light Company develop his system. In 1887 he secured financial backing and built a series of the

dynamos and motors which were tested by Prof. Anthony of Cornell University. On October 12, 1887, the first patent applications covering his basic inventions were revealed to the Patent Ofice. The patents were granted on various dates in the early months of 1888. On May 16, 1888, he presented a demonstration and description of his basic inventions before the American Institute of Electrical Engineers in New York. So much for the record.

The first complication arose when Prof. Galileo Ferraris, a physicist in the University of Turin, presented a paper on "Rotazioni elettrodynamiche" (Electrodynamic Rotation) before the Turin Academy in March, 1888. This was six years after Tesla made his discovery, five years after he demonstrated his motor and six months after he had applied for patents on his system. Prof. Ferraris had been carrying on researches in the field of optics. The problem that particularly interested him was polarized light. In this period it was considered necessary to build mechanical models to demonstrate all scientific principles. It was not very dificult to devise models to demonstrate the nature of plane-polarized light, but circularly polarized light presented a more dificult problem.

Prof. Ferraris gave some thought to this problem in 1885, but made no progress until 1888 when he turned to alternating currents for a solution. In that period light was erroneously thought of as a continuously undulating wave in the ether. Prof. Ferraris took the continuously alternating current as an analogue of the plane-polarized light wave. For a mechanical analogue of the circularly polarized light wave he visualized a second train of waves 90 degrees out of step with the first, giving a right-angle vector to the component that should manifest itself by rotation. This paralleled the solution at which Tesla had arrived six years earlier.

In arranging a laboratory demonstration Prof. Ferraris used a copper cylinder suspended on a thread to represent the light waves, and caused two magnetic fields to operate on it at right angles to each other. When the currents were turned on, the cylinder rotated, wound up the thread on which it was suspended and raised itself. This was an excellent model of rotary polarized light waves. The model bore no resemblance to a motor, nor did the Turin scientist have any intention that it should be so considered. It was

a laboratory demonstration in optics, using an electrical analogy.

Prof. Ferraris' next experiment mounted the copper cylinder on a shaft and divided each of his two coils into two parts, placing one on either side of the copper cylinder. The device worked up to a speed of 900 revolutions per minute--and beyond this point lost power so rapidly it ceased to operate entirely. He tried iron cylinders but they did not work nearly so well as the copper ones. Prof. Ferraris predicted no future for the device as a power source, but he did predict it would find usefulness as the operating principle for a meter for measuring current.

Prof. Ferraris thus demonstrated that he failed by a wide margin to grasp the principle which Tesla developed. The Italian scientist found that the use of the magnetic iron cylinder interfered with the operations of his device, whereas Tesla, following the correct theory, utilized iron cores for the magnetic field of his motor, used an iron armature, and obtained an efficiency of about 95 per cent in his first motor, which had a rating of about a quarter horsepower. The efficiency of Ferraris' device was less than 25 per cent.

It was Prof. Ferraris' belief that he had performed an important service to science by demonstrating that the rotating magnetic field could not be used on any practical basis for producing mechanical power from alternating current. He never deviated from this conclusion, nor did he ever claim that he had anticipated Tesla's discovery of a practical means for utilizing the rotating field for producing power. Knowing that his process was entirely different from Tesla's, he never advanced a claim to independent discovery of the alternating-current motor. He even conceded that Tesla had arrived at his discovery of the rotating magnetic field entirely independently of him, and that Tesla could not in any way have known of his work before publication.

A description of Prof. Ferraris' experiments, however, was published in The Electrician, in London, May 25, 1888 (page 86). This was accompanied by the statement:

Whether the apparatus devised by Prof. Ferraris will lead to the discovery of an alternating current motor is a question we do not pretend to prophesy, but as the

principle involved may also have other applications, notably in the construction of meters for measuring the supply of electricity . . .

A year before this time Prof. Anthony had already tested Tesla's alternating-current motors in the United States and reported that they attained an order of efficiency equal to that of direct-current motors; and Tesla's U.S. patents had been publicly announced several months previously.

It was obvious that the editors of this London publication were not keeping up to date on developments in the United States.

Tesla responded quickly, informing the editors of their oversight and submitting an article describing his motors and the results obtained with them.

No great enthusiasm was exhibited by the editors of The Electrician. They receded to only the least possible extent from their stand in favor of Ferraris by publishing an editorial note:

Our issue of the 25th of May contained an abstract of a paper by Prof. Galileo Ferraris describing a method of producing a revolving resultant magnetic field by means of a pair of coils with the axes at right angles and traversed by alternating currents, and we drew attention to the possibility that the principle of the apparatus might be applied to the construction of an alternating current motor. The paper by Mr. Nikola Tesla, which appears in our columns this week, contains a description of such a motor, founded on exactly the same principle. (VoI. XX, p. 165, June 15, 1888.)

No attention was drawn to the fact that Ferraris had reached the conclusion that the principle could never be used for making a practical motor, whereas Tesla had produced such a motor.

This attitude toward the American development did not disappear from the London engineering journals. Later the Electrical Review (London: Vol. XXVIII, p. 291, March 6, 1891) published an editorial which opened with the statement:

For several years past, from the days of Prof. Ferraris' investigations, which were followed by those of Tesla and Zipernowski and a host of imitators, we have periodically heard of the question of alternating current motors being solved.

At this time the Westinghouse Company was already commercially exploiting the successful and practical Tesla polyphase system in the United States. Not one word of credit to Tesla appeared in the London engineering press.

A letter of protest dated March 17, 1891, was forwarded by Tesla, and this was published some weeks later (p. 446) by the Review. He said in part:

In all civilized countries patents have been obtained almost without a single reference to anything which would have in the least degree rendered questionable the novelty of the invention. The first published essay--an account of some laboratory experiments by Prof. Ferraris--was published in Italy six or seven months after the date of filing my application for the foundation patents. . . . yet in your issue of March 6, I read: "For several years past, from the days of Prof. Ferraris' investigations, which were followed by those of Tesla and Zipernowski and a host of imitators, we have periodically heard of the question of alternating current motors being solved.

No one can say that I have not been free in acknowledging the merit of Prof. Ferraris, and I hope that my statement of facts will not be misinterpreted. Even if Prof. Ferraris' essay would have anticipated the date of filing of my application, yet, in the opinion of all fair minded men, I would have been entitled to the credit of having been the first to produce a practical motor; for Prof. Ferraris denies in his essay the value of the invention for the transmission of power. . . .

Thus in the most essential features of the system--the generators with two or three currents of differing phase, the three wire system, the closed coil armature, the motors with direct current in the field, etc.,--I would stand alone, even had Prof. Ferraris' essay been published many years ago. . . .

Most of these facts, if not all, are perfectly well known in England; yet according to some papers, one of the

leading English electricians does not hesitate to say that I have worked in the direction indicated by Prof. Ferraris, and in your issue above referred to it seems I am called an imitator.

Now, I ask you where is that well known English fairness. I am a pioneer and I am called an imitator. I am not an imitator. I produce original work or none at all.

This letter was published; but the Electrical Review neither expressed regret for the misstatement nor extended recognition to Tesla.

Charles Proteus Steinmetz, later to achieve fame as the electrical wizard of the General Electric Company, came to the support of Tesla. In a paper presented before the American Institute of Electrical Engineers, he said: "Ferraris built only a little toy, and his magnetic circuits, so far as I know, were completed in air, not in iron, though that hardly makes any difference."(Transactions, A.I.E.E., VoI. VIII, p. 591, 1891.)

Other American engineers likewise rallied to Tesla's support.

An industrial exposition, as already mentioned, was held at Frankfurt, Germany, in 1891. The United States Navy sent Carl Hering, an electrical engineer who had done much writing for technical journals, as observer to report on any developments that would be of interest to the Navy. Hering, unfortunately, had not informed himself of the inventions embodied in the Tesla patents before going abroad.

The outstanding new development at the Frankfurt exposition was the first public application of Tesla's system. The grounds and building were lighted by electricity brought to the city by a long-distance transmission line over which electricity was carried from the hydroelectric station at Lauffen by three-phase alternating current carried at 30,000 volts. There was exhibited a two-horsepower motor operated by the three-phase current.

Hering recognized the significance of the new development, and sent back enthusiastic reports describing it as of German origin. In his article in the Electrical World

(N.Y.), he waxed enthusiastic about the work of Dolivo Dobrowolsky in designing the three-phase motor and its associated system, hailing it as an outstanding scientific discovery and of tremendous commercial importance. The impression was given that all other inventors had missed the main point, and that Dobrowolsky had achieved the grand broad accomplishment that would set the pace for future power developments. Nor was Hering the only one to whom this impression was communicated.

Ludwig Gutman, an American electrical engineer, a delegate to the Frankfurt Electrical Congress, in a paper on "The Inventor of the Rotary field System," delivered before that body, slammed back at Dobrowolsky. He stated:

As we have enjoyed in America several years' experience with this system represented by the Tesla motors I must oppose the assertion lately made by Herr von Dobrowolsky at a meeting of the Electrotechnische Zesellschaft held here in Frankfurt. The gentleman said: "I believe I am able to assert that the motor problem for large and small works has been by this completely solved." This assertion goes most likely too far. The problem was already solved, theoretically and electrically, in 1889. (Electrical World, N.Y.: Oct. 17, 1891)

Dobrowolsky, in a paper published in the Electrotechnische Zeitschrift (p. 149-150; 1891), reduced his claim to that of having produced the first practical alternating-current motor; and he asserted that in the Tesla two-phase motor there were field pulsations amounting to 40 per cent, while in his three-phase motor, in operation at the Frankfurt exposition, these were greatly reduced.

Even this reduced claim of Dobrowolsky's was quickly smashed. It drew fire from an American and an English source, and also from the chief engineer of the project of which his motor was a part.

Dr. Michael I. Pupin, of the Department of Engineering, Columbia University, analyzing Dobrowolsky's claim, (Ibid., Dec. 26, 1891) demonstrated that he had failed to comprehend the basic principles of the Tesla system, and that the three-phase system which he claimed as his own was included in Tesla's inventions.

C. E. L. Brown, the engineer in charge of the pioneering Lauffen-Frankfurt 30,000-volt transmission system and its three-phase generating system, including the Dobrowolsky motor, settled definitely and completely the question of credit for the whole system. In a letter published in the Electrical World (Nov. 7, 1891), he concluded with the statement: "The three phase current as applied at Frankfurt is due to the labors of Mr. Tesla and will be found clearly specified in his patents."

Mr. Brown wrote letters to other technical publications to this same effect, and in them criticized Mr. Hering for failing to give Tesla his due credit, and for diverting it to Dobrowolsky.

These criticisms finally brought a response from Mr. Hering. This appeared in the Electrical World, Feb. 6, 1892:

As Mr. C. E. L. Brown, in communications to the Electrical World and other journals, seems determined to insist that I have neglected the work of Mr. Tesla on rotary current I wish to state there is no one more willing than myself to give Mr. Tesla due credit for his work, and I have always considered him to be an original inventor of the rotary field system and first to reduce it to practice, and I believe I so stated in my articles. If I have at any time failed to give him credit for the extent to which he developed it, it has been because Mr. Tesla has been too modest (or perhaps prudent) to let the world know what he has accomplished. When the articles which have caused this discussion were being written Mr. Tesla's patents were not accessible to me. Just where Mr. Dobrowolsky's improvements begin I have not been able to ascertain. . . .

Dobrowolsky, though he may have been an independent inventor, admits Tesla's work is prior to his . . . The modesty of both of these gentlemen would, I feel sure, lead to a clear understanding. Regarding the subject of priority it may be of interest here to say that in a conversation with Prof. Ferraris last summer that gentleman told me with very becoming modesty that, although he had experimented with the rotary field several years before Tesla's work was published he did not think it was possible that Tesla could have known of his work and he therefore believed Tesla invented it entirely independently. He also stated that Tesla developed it much further than he (Ferraris) did.

Thus the scientists and engineers in the United States, Germany and Italy gave Tesla clear and unquestioned credit for being the sole inventor of the magnificent polyphase electrical system in all of its details. French and British journals then fell in line.

Thus, by 1892, there was universal acclaim for Tesla as the unquestioned inventor of the alternating-current motor and the polyphase system in engineering circles. There was none, therefore, to dispute his claim or to seek to rob him of credit when his fame reached the public through the operation of his system at the World's Fair in Chicago in 1893, and later when his system made possible the harnessing of Niagara Falls.

In due time, however, there came many who claimed to have made improvements on Tesla's inventions; and widespread efforts were made to exploit these "improvements." The Westinghouse Company, now owners of the Tesla patents, undertook to defend the patents and to prosecute infringers. As a result about twenty suits were carried to the courts, and, in every one of them, decisions gave a decisive victory to Tesla.

A sample of the sweeping decisions that were handed down is that of Judge Townsend in the United States Circuit Court of Connecticut in September, 1900, when, passing judgment on the first group of basic patents, he said in part:

It remained to the genius of Tesla to capture the unruly, unrestrained and hitherto opposing elements in the field of nature and art and to harness them to draw the machines of man. It was he who first showed how to transform the toy of Arago into an engine of power; the "laboratory experiment" of Bailey into a practically successful motor; the indicator into a driver; he first conceived the idea that the very impediments of reversal in direction, the contra-indications of alternations might be transformed into power-producing rotations, a whirling field of force.

what others looked upon as only invincible barriers, impassable currents and contradictory forces he seized, and by harmonizing their directions utilized in practical motors in distant cities the power of Niagara.

The resentments and antagonisms engendered by the unvarying series of successful decisions caused individuals who were adversely affected to vent their antagonisms on Tesla although he had not in ten years held any personal interests in the patents.

The situation that developed is well described by B. A. Behrend, later vice-president of the American Institute of Electrical Engineers:

It is a peculiar trait of ignorant men to go always from one extreme to another, and those who were once the blind admirers of Mr. Tesla, exalting him to an extent which can be likened only to the infatuated praise bestowed on victims of popular admiration, are now eagerly engaged in his derision. There is something deeply melancholy in the prospect, and I can never think of Nikola Tesla without warming up to my subject and condemning the injustice and ingratitude which he has received alike at the hands of the public and of the engineering profession. (Western Electrician, Sept., 1907)

With the scientific and engineering worlds, and the courts, extending to him a clear title to the honor of being the great pioneer discoverer and inventor of the principles and machines that created the modern electrical system, Tesla stands without a rival as the genius who gave the world the electrical power age that made our mass-production industrial system possible. The name Tesla should, therefore, in all right and justice, be the most famous name in the engineering world today.

RETURNING to his laboratory in March, 1893, after his European and American lectures, Tesla banished all social activities from his life program, and, bursting with energy, pitched headlong into experimental work in connection with his wireless system. He made repeated experiments in working out the refinement of his principle of tuning circuits to resonance with each other. He built more than one hundred coils covering a wide range of electrical tuning characteristics. He also built numerous oscillators for producing high-frequency currents, and condensers and inductances for tuning both sending and receiving coils to any desired frequency or wavelength.

He demonstrated that he could cause any one of hundreds of coils to respond selectively and powerfully to its particular wavelength emitted by an oscillator while all others remained inert; but he discovered that tuned electrical coils have, to a further extent, the same properties as tuned musical string, in that they vibrate not only to the fundamental note but also to a wide range of upper, and particularly lower, harmonics. This characteristic could be usefully employed in connection with the design of sending- and receiving-station antennas, but it militated against the sharp, exclusive response tuning of coils. At close range, and with the powerful currents Tesla used in his laboratory, the harmonics were a handicap--when greater distance separated sending and receiving coils, this trouble became a minor one.

It became obvious to Tesla that it was going to be dificult to arrange an early demonstration of his worldwide system of intelligence and of power, so he planned a compromise system in which he would use a smaller central transmitter and smaller relay stations at certain distances.

In an interview with Arthur Brisbane, the famous editor, Tesla announced in The world of July 22, 1894, the certainty of his plans. He said:

you would think me a dreamer and very far gone if I should tell you what I really hope for. But I can tell you that I look forward with absolute confidence to sending messages through the earth without any wires. I have also great hopes of transmitting electric force in the same way without waste. Concerning the transmission of messages through the earth I have no hesitation in predicting success. I must first ascertain exactly how many vibrations to the second are caused by disturbing the mass of electricity which the earth contains. My machine for transmitting must vibrate as often to put itself in accord with the electricity in the earth.

During the following winter he designed and built his transmitting station and a receiving station for this purpose. It worked well within the close range of the laboratory and between points in the city. Like the artist who is never willing to declare a picture finished but must continue to apply an unending series of slight improvements, Tesla continued to add refinements so that he would be assured of a perfect test in the spring, when he

planned to take his receiving set up the Hudson River on a small boat to test its response at extended distances.

with Tesla, as with Caesar, though, came tragedy on the Ides of March. For Tesla it was the unlucky 13th of March, 1895, when fire broke out during the night in the lower part of the building in which his laboratory was located and swept through the entire structure. The two floors on which his equipment was located dropped to the basement, their entire contents destroyed. Not a single article was saved. The major portion of Tesla's fortune was invested in the apparatus in that building. He carried no insurance on it. The loss was total.

The monetary loss was the least important factor in the shock which Tesla sustained. The apparatus and the countless experiments in scores of subjects with which they were associated were part of Tesla's self. His work of a lifetime was swept away. All of his records, papers, mementos, his famous world's Fair exhibit were gone. His laboratory, in which he had demonstrated his wonders to the elite and intelligentsia of New York, to the most famous men and women of the country and the world, was no more. And this tragedy had come just when he was ready to make his first distance demonstration of his wireless system.

Tesla was in a tough spot financially. The laboratory was the property of the Tesla Electric Company, owned by Tesla and A. K. Brown who had, with an associate, put up the funds to finance Tesla's demonstration of his polyphase alternating-current system prior to its sale to Westinghouse for $1,000,000. Some of that money was divided as cash among the associates, as stated; and the remainder had gone into the laboratory for further developments. The resources of the company were now wiped out and Tesla's individual resources were almost at the vanishing point. He was receiving some patent royalties from Germany on his polyphase motors and dynamos. This income would be adequate to take care of his living expenses but not suficient to enable him to maintain an experimental laboratory.

Mr. Adams, active head of the Morgan group that had developed the hydroelectric station at Niagara Falls, using Tesla's polyphase system, now came to the inventor's rescue. He proposed and arranged for the formation of a new company which would finance the continuation of Tesla's experiments, and he offered to subscribe one hundred

thousand dollars of the proposed half-million dollars of capital stock of the company.

with this support Tesla proceeded to set up a new laboratory. He secured quarters at 46 East Houston Street, and started operations there in July, 1895, four months after his South Fifth Avenue laboratory had been destroyed.

Adams paid forty thousand dollars as the first installment of his subscription. He took an active personal interest in Tesla's work, and spent a great deal of time in the laboratory. Knowing from the successful operation of the Niagara Falls plant that Tesla, technically, was extremely practical, Adams was deeply impressed by the plans for wireless transmission of intelligence and of power. He declared he was willing to go still further than his original plan of financial support, and he proposed that the plan include the taking in of his son as an active partner in Tesla's work.

Such an arrangement would amount to an alliance for Tesla with the powerful Morgan financial group. It was the support of J. P. Morgan that gave financial guidance to the formation of the General Electric Company and made possible the building of the fiaterside Station, the first big Edison powerhouse in New York, and it was a Morgan group that, by making possible the development of Niagara, had given the Tesla system a tremendous boost. The prestige that would come from a Morgan association would probably be even more potent than the actual monetary aid involved. with this alliance Tesla's financial future was assured. There would come to his aid, through it, the support of the world's greatest organizational genius and practical promotion powers. The tragedy of the fire that brought about this situation could yet prove a great blessing.

Tesla made his decision. what influenced him to reach the determination that guided him, no one ever learned. He rejected Mr. Adams' offer. From a practical point of view there is no way of explaining his action. But no one could ever successfully demonstrate that Tesla was practical in a commercial and financial sense.

with the forty thousand dollars that Adams subscribed, Tesla was able to keep actively engaged in research for about three years. He probably could have secured subscriptions of many times that amount if he had been

willing to put forth even a slight effort in that direction, but he was interested mainly in getting his experiments well under way rather than worrying about future financial needs. He had full faith that the future would bring him many millions of dollars as a token of the many billions of value he would give it through his inventions.

It took Tesla about a year to get his laboratory equipped and to build an array of experimental apparatus. Almost nothing that he used could be purchased in the market; everything had to be specially made by his workmen under his direction. In the spring of 1897 he was ready to make, on his wireless transmitter and receiver, the distance tests which had been interrupted by the fire two years before.

The success of these tests were announced by Tesla in an interview with a representative of the Electrical Review which was published in the issue of July 9, 1897, of that journal. It stated:

Nearly every telegraphic inventor has for years dreamed in his waking hours of the possibility of communicating without wires. From time to time there has appeared in the technical journals a reference to the experiments showing the almost universal belief among electricians that, some day, wires will be done away with. Experiments have been made attempting to prove the possibilities, but it has remained for Mr. Nikola Tesla to advance a theory, and experimentally prove it, that wireless communication is a possibility and by no means a distant possibility. Indeed, after six years of careful and conscientious work, Mr. Tesla has arrived at a stage where some insight into the future is possible.

A representative of the Electrical Review receives the assurance personally from Mr. Tesla who, by the way, is nothing if not conservative, that electrical communication without wires is an accomplished fact and that the method employed and the principles involved have nothing in them to prevent messages being transmitted and intelligibly received between distant points. Already he has constructed both a transmitting apparatus and an electrical receiver which at distant points is sensitive to the signals of the transmitter, regardless of earth currents or points of the

compass. And this has been done with a surprisingly small expenditure of energy.

Naturally, Mr. Tesla is averse to explaining all details of his invention, but allows it to be understood that he avails himself of what, for the present, may be termed the electrostatic equilibrium; that if this be disturbed at any point on the earth the disturbance can with proper apparatus be distinguished at a distant point and thus the means of signalling and reading signals becomes practicable once the concrete instruments are available. Mr. Tesla announced his belief in the possibilities, but he did so after having satisfied himself by actual test of apparatus designed by him. Much work has yet to be done, and he has since then given close attention and study to the problem.

Details are not yet available, for obvious reasons, and we now merely chronicle Mr. Tesla's statement that he has really accomplished wireless communication over reasonably long distances with small expenditure of energy and has only to perfect apparatus to go to any extent. Morse's 40 mile experiment in the old days was on a far less certain basis than the wireless possibilities of today.

Tesla's work with high frequency and high potential currents has been notable. As long ago as 1891 he foretold the present results, both as to vacuum tube lighting and intercommunication without wires. The former has in his hands assumed a condition capable of a public demonstration of the phenomena of the electrostatic molecular forces. Numberless experiments were carried out, and from what then was a startling frequency of 10,000 per second Mr. Tesla has advanced to what now is a moderate rate at 2,000,000 oscillations per second

This announcement recorded the birth of modern radio--radio as it is in use today--born on a boat traveling up the Hudson River, carrying the receiving set twenty-five miles from the Houston Street laboratory, a distance which was a small fraction of the range of the set but enough to demonstrate its capabilities. Such an accomplishment was worthy of a flamboyant smash announcement instead of Tesla's very modest statement and the even more conservative manner in which the Electrical Review treated the news. Tesla had to protect not only his patent rights, which would be jeopardized by premature disclosure, but also had to be on guard against invention invaders and

patent pirates, with whom he had previously had unpleasant experiences. The Electrical Review, naturally enough, was fearful of the consequences of "sticking its neck out" by too enthusiastic a reception before full details were available.

The fundamental patents on Tesla's system were issued on September 2, 1897, just two months after his announcement. They are numbered 645,576 and 649,621. In these patents he describes all the fundamental features of the radio broadcasting and receiving circuits in use today. Once patent protection was secured, Tesla did not long delay in letting the public in on his discoveries. His presentation took the form of a spectacular demonstration at Madison Square Garden.

wireless transmission of intelligence is a modern satisfaction of one of the oldest cravings of man, who has always sought the annihilation of distance by communication through space without material linkage over the intervening expanse. Early experimenters with the telephone, particularly, were enthusiastic seekers of a method of wireless electrical communication that would convey the voice through space in the manner in which the air conducted sound. David Edward Hughes had noted, in 1879, that when an electric spark was produced anywhere in his house he heard a noise in his telephone receiver. He traced the effect to the action of the carbon granules in contact with a metal disk in his telephone transmitter which acted as a detector of the space waves by sticking together slightly, reducing the resistance of the mass, and producing a click in the receiver.

Prof. A. E. Dolbear, of Tufts College, amplified this observation and set up, in 1882, a demonstration set using the principle but eliminating the telephone set. He used a spark coil for creating waves and a mass of carbon granules for detecting them. This is exactly the "wireless" system which Marconi "discovered" fourteen years later.

Edison, engaged by the Western Union Telegraph Company to break the monopoly which Bell held by his invention of the telephone, had succeeded, in 1885, in sending a message from a moving train by "wireless." A wire strung on the train paralleling a telegraph wire strung on poles along the track made it possible to bridge the intervening few feet by an inductive effect--the same effect which causes

annoyance by creating "cross talk," or a mixing of conversations over two telephone circuits located close to each other. fi. M. Preece, in England, made a similar experiment about the same time. The extremely short distances over which such systems worked prevented them from having any practical usefulness.

An entirely different type of wireless communication had been developed by Alexander Graham Bell in 1880 and 1881. This was given the name radiophone, but Bell insisted on calling it the photophone. The photophone transmitted the voice over a beam of light. The transmitter consisted of a very thin glass or mica mirror, which could be vibrated by the voice. This reflected a beam of light, usually sunlight, to a distant receiving device. The simple receiver consisted of a chemist's test tube, into which a selected material was placed. The top of the tube was closed by a cork through which two small rubber tubes were inserted, the other ends being placed in the ears. A very great variety of materials could be placed in the test tube as detectors. when the beam of light, vibrated by the voice, impinged on the material in the tube, an absorption of heat took place which set the air in the tube in vibration, thus reproducing the voice that was carried by the light beam. Bell also used selenium as a detector. It responded to the visible rays and produced an electrical effect. The experiments, obviously, were of little practical value as the basis for a system of wireless communication.

Michael Faraday, in London, had described in 1845 his theory of the relationship between light and the electromagnetic lines of force; and in 1862 James Clerk Maxwell published an analysis of Faraday's work which gave a mathematical basis for the theory that light waves were electromagnetic in nature, and that it was possible for such waves to exist very much shorter and very much longer than the known wavelength of visible light. This was a challenge to scientists to prove the existence of such waves.

Prof. Heinrich Hertz, at Bonn, Germany, from 1886 to 1888, undertook the search for the waves longer than light or heat. He produced them by the spark discharge of an induction coil and recaptured them from space, at short distances, in the form of a tiny spark that jumped the gap in a slotted ring of wire. Sir Oliver Lodge, in England,

was simultaneously seeking to measure equally small electrical waves in wire circuits.

This, then, had been the situation in the scientific world when Tesla began his work in 1889. The plan for wireless communication which he presented in 1892 and 1893, as will be described in a moment, shows how his magnificent concept and tremendously advanced knowledge towered mountain high over all contemporaries.

when Tesla left the Westinghouse plant in the fall of 1889, he had immediately turned to the next phase of his development of the alternating-current Weld--a new system of distributing energy by means of high-frequency alternating currents which would be a far more magnificent discovery than his polyphase system. within the next two years he had explored the principles by which energy could be distributed broadcast without the use of wires, and these he had demonstrated with powerful coils in his laboratory. The distribution of intelligence, later called "wireless," was but a single phase of the larger project.

Tesla described, in 1892, the first electronic tube designed for use as a detector in a radio system, and demonstrated its characteristics in his lectures in London and Paris in February and March of that year. (The tube, however, had been developed in 1890.) He described in February and March of the following year, 1893, his system of radio broadcasting, presenting its principles in detail, in lectures before the Franklin Institute in Philadelphia and at the convention of the National Electric Light Association held in St. Louis.

Tesla's electronic tube, his 1890 invention, was the ancestor of the detecting and amplifying tubes in use today. His demonstration of this tube is a matter of record in the archives of four societies before which he exhibited it in February and March of 1892--the Institute of Electrical Engineers and the Royal Society of London and the Physical Society of France and the International Society of Electrical Engineers in Paris. He stated in these lectures:

If there is any motion which is measurable going on in space, such a brush ought to reveal it. It is, so to speak, a beam of light, frictionless, devoid of inertia.

I think it may find practical applications in telegraphy. with such a brush it would be possible to send dispatches across the Atlantic, for instance, with any speed, since its sensitiveness may be so great the slightest changes will affect it.

The "brush" in Tesla's tube was a beam of electrons. The electron, however, had not yet been discovered. Nevertheless, Tesla gave an accurate description of its nature, demonstrating the remarkable accuracy of his interpretation of strange phenomena. So sensitive was this electronic beam that a small horseshoe magnet an inch wide at a distance of six feet caused movement of the electron beam in either direction, depending on the position in which the magnet was held.

If anyone approached the tube from a distance of many feet the beam, or brush, would swing to the opposite side of the tube. If one walked around the tube even at a distance of ten feet, the beam would move likewise, keeping its center end always pointed at the moving object. The slightest movement of a finger, or even the tensing of muscle, would bring a swinging response from the beam.

In the same 1892 lecture in which he described this first electronic tube, Tesla demonstrated lamps which were lighted without wire connections (wireless light) and also a motor which operated without wire connections to the energizing coils (wireless power); and he had again presented these developments at his exhibition at the Chicago Columbian Exposition early in 1893.

It was with all this experience behind him, giving him full assurance that his system was entirely practical and operative, that Tesla presented at the Franklin Institute and at the convention of the National Electric Light Association in February and March, 1893, a very cautious and conservative statement concerning his plan. Even at these 1893 lectures, Tesla could have staged a demonstration of wireless transmission of intelligence by placing one of his resonant coils, surmounted by one of his electronic "brush" tubes, or one of his low-pressure air lamps, in the lecture hall and causing it to respond to signals sent out by an energized coil of similar wavelength but located at a considerable distance from the building. The experiment was a standard procedure in his laboratory.

This, however, would be a purely local effect, whereas his radio transmission system was one planned on a world-wide basis requiring much more powerful apparatus than he had thus far built. To pass off a purely local effect as a demonstration of a world-wide system, even though the observed results would have been identical, would have been a case of intellectual dishonesty to which Tesla would not stoop; yet this demonstration of wireless would have been more spectacular and powerful than any staged by any other inventor in more than a half-dozen years following.

Describing his world-wide system at the 1893 National Electric Light Association meeting, he said:

In connection with resonance effects and the problems of transmission of energy over a single conductor, which was previously considered, I would say a few words on a subject which constantly fills my thoughts, and which concerns the welfare of all. I mean the transmission of intelligible signals, or, perhaps, even power, to any distance without the use of wires. I am becoming more convinced of the practicability of the scheme; and though I know full well that the great majority of scientific men will not believe that such results can be practically and immediately realized, yet I think that all consider the developments in recent years by a number of workers to have been such as to encourage thought and experiment in this direction. My conviction has grown so strong that I no longer look upon the plan of energy or intelligence transmission as a mere theoretical possibility, but as a serious problem in electrical engineering, which must be carried out some day.

The idea of transmitting intelligence without wires is the natural outcome of the most recent results of electrical investigations. Some enthusiasts have expressed their belief that telephony to any distance by induction through air is possible. I cannot stretch my imagination so far, but I do firmly believe that it is practical to disturb, by means of powerful machines, the electrostatic conditions of the earth, and thus transmit intelligible signals, and, perhaps, power. In fact, what is there against carrying out such a scheme?

We now know that electrical vibrations may be transmitted through a single conductor. why then not try to avail ourselves of the earth for this purpose? We need not be frightened by the idea of distance. To the weary wanderer

counting the mileposts, the earth may appear very large; but to the happiest of all men, the astronomer, who gazes at the heavens, and by their standards judges the magnitude of our globe, it appears very small. And so I think it must seem to the electrician; for when he considers the speed with which an electrical disturbance is propagated through the earth, all his ideas of distance must completely vanish.

A point of great importance would be first to know what is the capacity of the earth, and what charge does it contain if electrified. Though we have no positive evidence of a charged body existing in space without other oppositely electrified bodies being near, there is a fair probability that the earth is such a body, for by whatever process it was separated--and this is the accepted view of its origin--it must have retained a charge, as occurs in all processes of mechanical separation. . . .

If we can ever ascertain at what period the earth's charge, when disturbed, oscillates, with respect to an oppositely charged system or known circuit, we shall know a fact possibly of the greatest importance to the welfare of the human race. I propose to seek for the period by means of an electrical oscillator or a source of alternating currents.

One of the terminals of this source would be connected to the earth, as, for instance, to the city water mains, the other to an insulated body of large surface. It is possible that the outer conducting air strata or free space contains an opposite charge, and that, together with the earth, they form a condenser of large capacity. In such case the period of vibration may be very low and an alternating dynamo machine might serve for the purpose of the experiment. I would then transform the current to a potential as high as it would be found possible, and connect the ends of the high tension secondary to the ground and to the insulated body. By varying the frequency of the currents and carefully observing the potential of the insulated body, and watching for the disturbance at various neighboring points of the earth's surface, resonance might be detected.

Should, as the majority of scientific men in all probability believe, the period be extremely small, then a dynamo machine would not do, and a proper electrical oscillator would have to be produced, and perhaps it might not be possible to obtain such rapid vibrations. But

whether this be possible or not, and whether the earth contains a charge or not, and whatever may be its period of vibration, it is certainly possible--for of this we have daily evidence--to produce some electrical disturbance suficiently powerful to be perceptible by suitable instruments at any point on the earth's surface. . . .

Theoretically, then, it could not require a great amount of energy to produce a disturbance perceptible at a great distance, or even all over the surface of the globe. Now, it is quite certain that at any point within a certain radius of the sources, a properly adjusted self induction and capacity device can be set in action by resonance. But not only this can be done, but another source, s 1, similar to s, or any number of such sources, can be set to work in synchronism with the latter, and the vibration thus intensified and spread over a large area, or a flow of electricity produced to or from source s 1, if the same or of opposite phase to the source s.

I think that, beyond doubt, it is possible to operate electrical devices in a city, through the ground or pipe system, by resonance from an electrical oscillator located at a central point. But the practical solution of this problem would be of incomparably smaller benefit to man than the realization of the scheme of transmitting intelligence, or, perhaps, power, to any distance through the earth or environing medium. If this is at all possible, distance does not mean anything. Proper apparatus must first be produced, by means of which the problem can be attacked, and I have devoted much thought to this subject. I am firmly convinced it can be done, and I hope we shall live to see it done.

The lecture before the Franklin Institute contained a similar statement. An additional paragraph from it can be quoted:

If by means of powerful machinery, rapid variations of the earth's potential were produced, a grounded wire reaching up to some height would be traversed by a current which could be increased by connecting the free end of the wire to a body of some size. . . . The experiment, which would be of great scientific interest, would probably best succeed on a ship at sea. In this manner, even if it were not possible to operate machinery, intelligence might be transmitted quite certainly.

Tesla thus presented in these lectures the principles which he had learned in his laboratory experiments, during the previous three years, were necessary for successful wireless communication.

Several fundamental requirements were presented which will be understood by any non-technical person who has had even slight experience with radio receiving sets: 1. An antenna, or &aerial wire; 2. A ground connection; 3. An &aerial-ground circuit containing inductance and capacity; 4. Adjustable inductance and capacity (for tuning); 5. Sending and receiving sets tuned to resonance with each other; and 6. Electronic tube detectors. He had still earlier invented a loud speaker.

These embody the fundamental principles of radio, and are used in every sending and receiving set today.

Radio as it exists today is, therefore, the product of the genius of Nikola Tesla. He is the original inventor of the system as a whole and of all the principal electrical components. The man who, next to Tesla, is entitled to the greatest amount of credit is Sir Oliver Lodge, the great English scientist. Even Lodge, however, failed to grasp the fundamental picture that Tesla presented.

Lodge, early in 1894, had put a Hertz spark gap in a copper cylinder open at one end; and in this way he produced a beam of ultra-short-wave oscillations which could be transmitted in any direction. He did the same for the receiving set. Since the incoming waves could be received from only one direction, this receiving set was able to locate the direction from which the transmitted waves came. with this set he completely anticipated Marconi by two years. In the summer of that year, in a demonstration before the British Association for the Advancement of Science at Oxford, he sent Morse signals, with an improved set, between two buildings separated by several hundred feet.

It is little wonder, then, that Marconi, who started his studies of wireless in 1895, created no stir in the scientific circles in England when he came from Italy to London in 1896 with a wireless set that in every essential feature was the same as that demonstrated by Lodge in 1894. He used a parabolic reflector, so his set was little more

than an electrical searchlight. He did, however, bring an alternative feature to replace the parabolic beam reflector. This was a ground connection and antenna, or &aerial wire, for both sending and receiving set. This was exactly what Tesla had described in his plan published three years before.

when Hertz made his experiments to demonstrate the identical nature of light and longer electromagnetic waves, he intentionally sought to use the shortest waves it was practicable to produce. They were measured in inches--much less than a yard long. They were entirely satisfactory for his experiment. when the wireless experimenters copied his methods they took over the short-wave plan without ever asking a question as to what wavelength should be used for wireless communication; the thought seems not to have dawned on them that there were other wavelengths that could be produced and used--all except Tesla.

Tesla took the trouble, with the spirit of a real scientist to repeat exactly the experiments of Hertz; and he published his results, stating that he found a number of important differences and calling attention to the inadequacies of Hertz's experimental methods.

Having experimented with a wide gamut of wavelengths of high-frequency currents and studied the properties of each section of the spectrum, he knew that the short wavelengths were totally unsuitable for communication purposes. He knew that the useful wavelengths ranged from 100 meters to many thousands of meters. He knew that the combination of induction coil and Hertz ball-type spark-gap oscillator could never have any practical usefulness in producing the kind of electrical pulsations required. Even with the highly efficient apparatus available today, scientists have been unable to use in communication (except for special purposes) the ultra-short waves which Tesla in his wisdom condemned and Marconi, owing to his inexperience, tried to use.

The history of the succeeding years in wireless is the story of the failure of the short waves of Lodge and Marconi and their followers, and the shifting over to the longer waves described by Tesla; and the dropping of their crash method of signaling and its replacement by the refined and highly efficient method of tuning to each other the sending and receiving stations by the methods

discovered by Tesla; and adoption of Tesla's continuous waves.

In addition, these groping workers saw in wireless only a point-to-point or station-to-station method of signaling. None of them foresaw the broadcasting system which Tesla described in 1893. The system invented and discovered by Tesla is the one in use today; but who ever heard anyone giving Tesla the slightest credit?

NINE

TESLA was prolific in opening up vast new empires of knowledge. He showered his discoveries on the world at such a rapid rate and in such a nonchalant manner that he seems to have benumbed the minds of the scientists of his age. He was too busy to spend time developing the technical or commercial applications of each new discovery--there were too many other new and important revelations within his vision that must be brought to light. Discoveries were not happenstance events to him. He visualized them far in advance of their unfolding in the laboratory. He had a definite program of pioneering research in virgin fields of investigation; and when this was accomplished he would, he felt, have a long lifetime still ahead of him in which he could return to the practical utilization of those already revealed.

Meanwhile, he had found a whole new world of interesting effects in the discharges produced by his coils when energized with the currents of extremely high frequency. He built larger and larger coils and experimented with a variety of shapes as constructions. From the common cylindrical type of coil he developed the cone-shaped coil, and this development he carried still further by designing the flat helix, or pancake-shaped coil.

The extremely high-frequency currents furnished a mathematical paradise in which Tesla could develop his equations to his heart's content. Through his mathematical abilities and his strange power of visualization he could frequently make, very quickly, whole series of discoveries that it took a long time to catch up with in actual laboratory constructions. This was true of the phenomena of resonance, or tuned circuits.

Because of their relatively short wavelength, it was comparatively easy to build condensers for tuning the circuits. when a circuit is tuned the electric current that flows in it oscillates rhythmically, just as does a musical string which, when struck or plucked, vibrates and builds up loops of even lengths with motionless points between them. There may be only one of these loops, or there can be many.

Tesla did not invent the idea of electrical resonance. It was inherent in the mathematical description of the condenser discharge as developed by Lord Kelvin, and in the physical nature of alternating currents; but Tesla changed it from a buried mathematical equation to sparking physical reality. It is the analogy of acoustical resonance which is a natural property of matter. However, there were no practical circuits in which resonance could manifest itself until Tesla developed alternating currents, particularly the high-frequency currents. He put the master's touch to the research in this field by developing the principle of resonance in individual circuits through adjustment of capacity and inductance; the amplification of effects by inductive coupling of two tuned circuits, and the peculiar manifestations of resonance in a circuit tuned to a quarter of the wavelength of the energizing current. This latter development was a stroke of pure genius.

In the vibrating string, two loops measure a complete wavelength and one loop measures half a wavelength, since one of the loops is up when the other is down. Between the two loops is a nodal point which does not move. From the nodal point to the top of a loop is a quarter wavelength. Taking the quarter wavelength as a unit, one end is motionless and the other end swings through the greatest amplitude of vibration.

By tuning his coils to quarter wavelengths, one end of the coil, Tesla found, would be entirely inactive while the other end would swing through tremendous electrical activity. Here was a unique situation, one end of a small coil inert and the other end spouting a flood of sparks of hundreds of thousands or even millions of volts. In a physical analogy it seemed like the Niagara River reaching the edge of the precipice--and then its waters shooting mountain high in a gigantic fountain instead of falling into the chasm.

The quarter-wavelength coil is the electrical counterpart of the vibrating tine of the tuning fork, the ordinary clock pendulum, or the vibrating reed. Once accomplished, it was a simple thing--but its discovery was a work of genius. It was a development that could have come with certainty to a master mind working on broad principles, as Tesla was doing all his life, and only by the most improbable chance to those who without illumination were tinkering with gadgets and hoping to stumble on something out of which they could make a fortune.

A high-voltage coil with one dead end greatly simplified many problems. One of Tesla's big problems had been the finding of means to insulate the high-voltage secondary coil of transformers from the low-voltage primary which energized it. Tesla's discovery eliminated the voltage entirely from one end of the secondary so it could be connected directly to the primary or to the ground, while the other end continued to spout its lightning. It was for utilizing this situation that he developed the conical and pancake-shaped coils.

Tesla's laboratory was filled with a variety of coils. He discovered early in his researches that while operating a coil of a given wavelength, other coils in the laboratory, tuned either to this wavelength or one of its harmonics, would respond sympathetically by spouting a crown of sparks although not connected in any way to the operating coil.

Here was an example of transmission of energy to a distance through space. It was not necessary for Tesla to make a series of experiments to understand the implications of this situation. He was never lost in a new territory which he opened. His mind rose to such heights of understanding that he could survey a revealed world in a glance.

Tesla planned a spectacular demonstration of the new principle. He had his workmen string a wire on insulating supports on all four walls near the ceiling of the largest room in his laboratory. The wire was connected to one of his oscillators.

It was late at night when the installation was ready for the experiment. In order to make the test, Tesla prepared two tubes of glass about three feet long and a half-inch in

diameter. He sealed one end of each, slightly evacuated the air from the tubes and then sealed the other ends.

Tesla told the workmen he wanted the room completely darkened for the test, all lights out; and when he gave the signal he wanted the switch of his oscillator closed. "If my theory is correct," he explained, "when you close the switch these tubes will become swords of fire."

walking to the middle of the room Tesla gave orders to turn out all lights. The laboratory was in pitch darkness. A workman stood with his hand on the switch of the oscillator.

"Now!" shouted Tesla.

Instantly the great room was flooded with brilliant but weird blue-white light and the workmen beheld the tall, slim figure of Tesla in the middle of the room waving vigorously what looked like two flaming swords. The two glass tubes glowed with an unearthly radiance, and he would parry and thrust with them as if he were in a double fencing match.

To the workmen in the laboratory, it was a common experience for Tesla to perform spectacular feats; but this went beyond all limits. He had previously lighted his electric vacuum lamps but they were always connected to coils that supplied them with electricity. Now they lighted without being connected to any source of electricity.

This demonstration, made in 1890, led to Tesla's adopting the technique as the permanent method of lighting his laboratories. The loop around the ceiling was always energized; and if anyone wished a light at any position, it was only necessary to take a glass tube and place it in any convenient location.

when tesla undertook the development of a new kind of electric light, he went to the sun for his model. He saw in the photo- sphere, or outer gaseous layer of the sun, light being created by the vibration of molecules. That was the theory then prevalent; and he sought to use the same method.

In the tremendous burst of revelation which he received in the park at Budapest as he gazed into the flaming orb of

the setting sun, there had flashed into his mind, as we have seen, not only the marvelous invention of the rotary magnetic field and the many uses of multiple alternating currents, but also the grand generalization that everything in Nature operated on the principle of vibrations that corresponded to alternating currents. The host of inventions and discoveries which he made in all succeeding years had their roots, too, in that sublime experience.

In the sun, it was believed, light was created when the molecules were vibrated by heat. Tesla sought to improve on this method by vibrating the molecules by electrical forces. The sparks and electrical flames created by his high-voltage coils were associated, he believed, with molecular vibrations in the air. If he could bottle the gases of the air and set them in vibration electrically, they should produce light without heat, since the energy was supplied by cold electric currents.

Sir fiilliam Crookes, who, long before Edison, produced an incandescent electric light by sealing an electrically heated wire in a vacuum tube, had carried out an extended series of experiments in conducting electricity through the gases in glass vessels under a variety of conditions ranging from atmospheric pressure to the highest vacuum obtainable, and had produced some strange effects. Crookes used the high-voltage current produced by the old-fashioned induction coil.

Tesla expected that when he bottled the strange effects he had observed with his currents of extremely high frequency, he would produce manifestations radically different from those found by Crookes, or Geissler, who also worked in this field. In this he was not disappointed.

Four types of an entirely new kind of electric light were produced by Tesla, using electrically activated molecules of gas: 1. Tubes in which a solid body was rendered incandescent; 2. Tubes in which phosphorescent and fluorescent materials were caused to luminesce; 3. Tubes in which rarefied gases became luminous, and 4. Tubes in which luminosity was produced in gases at ordinary pressures.

Like Crookes, Tesla passed his high-frequency currents through gases at all pressures, from lowest-pressure vacuum to normal atmospheric pressure, and obtained brilliant luminous effects exceeding anything previously attained. He

substituted for air in his tubes other gases, including mercury vapor, and observed the peculiar color and other effects they yielded.

Noting the variety of colors the various gases, and even air, showed under different pressures, Tesla suspected that not all of the energy radiated was given off as visible light, but that some of it emanated as black light. Testing this hypothesis, he placed sulphide of zinc and other phosphorescent and fluorescent materials in his tubes and caused them to glow. In these experiments (they were made in 1889) Tesla laid the foundation for our most recently developed type of highly efficient lamps used in fluorescent lighting which are generally believed to have been invented in recent years. This system of utilizing the wasted ultra-violet or invisible black light by changing it to visible light by means of phosphorescent substances is Tesla's invention. Roentgen was using similar tubes, but of plain glass and the fluorescent substance on a table in his laboratory when, a half-dozen years later, he discovered X-rays. Tesla invented, also, the neon-tube type of lamp, and even bent his tubes to form letters and geometrical shapes, as is done in neon-tube signs. This is true in spite of some antecedent and concurrent laboratory experiments by Crookes and J. J. Thompson, neither of whom developed any lamps or practical applications.

Tesla had discovered early in 1890 that his high-frequency currents had properties so different from the ordinary induction-coil, or spark-coil, currents, that he was able to light his tubes just as well, and sometimes even better, with only one wire connecting them with the high-tension transformer, the return circuit being effected wirelessly through space.

In working with types of lamps consisting of tubes in the center of which there was a conducting wire, and with the tube filled with air under a partial vacuum, Tesla discovered that the gas would serve as a better conductor of the high-frequency current than the wire. From this observation he was able to develop many spectacular experiments which appeared to violate the most fundamental laws of electricity. He was able to short circuit lamps and other apparatus with heavy bars of metal which, with ordinary currents, would completely deprive the devices of electricity so they would be unable to operate. However, with his high-frequency currents, the lamps would light and

the devices operate just as if the short-circuiting bar were not present.

One of his startling experiments consisted of placing a long glass tube partially evacuated of its air inside a slightly longer copper tube with a closed end. A slit was cut in the copper tube in its central section so the tube inside would be seen. when the copper tube was connected in the high-frequency circuit, the air in the tube was brilliantly illuminated; but no evidence could be found of any current flowing through the short-circuiting copper shell. The electricity preferred to pass through the glass tube, by induction, to the enclosed partially evacuated air, pass through the low-pressure air for the full length of the tube, and then pass out the other end by induction, rather than traverse the complete metal path in the surrounding metal tube.

we have then, [said Tesla], as far as we can now see, in the gas a conductor which is capable of transmitting electric impulses of any frequency which we may be able to produce. Could the frequency be brought high enough, then a queer system of distribution, which would be likely to interest gas companies, might be realized; metal pipes filled with gas--the metal being the insulator and the gas the conductor--supplying phosphorescent bulbs, or perhaps devices not yet invented.

This remarkable conductivity of gases, including the air, at low pressures, later led Tesla to suggest, in a published statement in 1914, a system of lighting on a terrestrial scale in which he proposed to treat the whole earth, with its surrounding atmosphere, as if it were a single lamp.

The atmosphere is under the greatest pressure at the surface of the earth, owing to the weight of the overlying air. As we go higher in the air there are increasing amounts below us and less above, so, the greater the elevation, the lower is the pressure of the air.

At higher altitudes the gases in the atmosphere are in the same condition as the air in the partially evacuated tubes he prepared in his laboratory, Tesla explained, and therefore it would serve as an excellent conductor of high-frequency currents. The aurora borealis is a natural example of the effect Tesla sought, and it is produced by

Nature as Tesla planned; but this was not known when he evolved his idea.

The flow of a suficient amount of the electricity in the right form through the upper regions of the atmosphere would cause the air to become luminous. The whole earth would be transformed into a giant lamp, with the night sky completely illuminated. It would be unnecessary, he pointed out, to use any lamps along streets, roads or other outdoor areas, except during periods in which storms or low clouds prevailed. Ocean travel would be made safer and more pleasant, for the sky over the whole ocean would be illuminated, making the night as bright as day.

The methods by which Tesla intended to conduct his high-frequency currents to the upper air have not been published. when he outlined the project, he stated that the plan did not present any dificulties that could not be handled in a practical way. This meant that he had definite means for accomplishing his purpose.

The air, he stated, possesses a high degree of conductivity for high-frequency currents at an altitude of 35,000 feet, but could be used effectively at lower altitudes. The accuracy of Tesla's prediction with respect to the conductivity of the upper air is attested by one of the problems encountered today in the operation of airplanes at altitudes even lower than 25,000 feet. The ignition system, carrying high-voltage currents to the spark plugs in the airplane engines, which explodes the gas in the cylinders, has been giving trouble at the higher altitudes because the electricity escapes with a great deal of freedom into the surrounding air. At lower altitudes the air is an excellent insulator, especially for direct current and low-frequency currents, but, as Tesla discovered, at the higher altitudes where low pressures prevail it becomes an excellent conductor for the high-frequency currents. The wires leading to spark plugs become surrounded by a corona, or electrical halo, which indicates the escape of the current. This interferes with the efficiency, if it does not entirely prevent the operation, of devices employing high-frequency or high-potential currents, such as radio apparatus. (Since Tesla discovered that metal wires and rods which act as excellent conductors for direct and low-frequency currents can act as excellent insulators for his high-frequency currents, it is obvious that the common suggestion made for delivering a current to the upper air

by means of metal cables suspended from balloons is entirely impractical.)

This proposal by Tesla to transform the earth into a giant lamp was again referred to by him in the twenties. At this time he was without funds for carrying on experimental work, and, as he never announced details until after he had tested them in practice, he withheld a disclosure of his methods. He was hopeful, however, that he would soon secure money enough to permit him to test his plan.

The author bombarded Tesla with questions in an effort to learn the general plan he had in mind. Tesla was adamant.

"If I should answer three more of your questions you would know as much about my plan as I do," he replied.

"Nevertheless, Dr. Tesla," I replied, "I am going to outline in my article the only plan that appears to me to be feasible under our known physical laws, and you can deny or afirm it. your molecular bombardment tubes are prolific producers of ultra-violet and X-rays and could produce a powerful beam of this radiation which would ionize the air through great distances. when these rays pass through the air they ionize it, making it a good conductor of electricity of all kinds at suficiently high voltages. By producing such a beam on a high mountain and directing it upward this would provide a conducting path through the air to any height desired. you could then send your high-frequency currents to the upper air without leaving the ground."

"If you publish that," said Tesla, "it must appear as your plan, not mine."

The article was published with the foregoing speculation in it; but neither afirmation nor denial was forthcoming from the inventor, and nothing more can be said in its favor. Tesla may have had a simpler and more practical plan in mind. (Since completing this volume the author has learned that Tesla planned to install a bank of powerful ultra-violet lamps on top of his tower at wardencliff (cf. p. 207), and had the upper Platform designed to receive them.)

There was one other plan which Tesla discussed on a number of occasions when considering terrestrial electrical conditions, and which he may have had in mind in this

connection. He pointed out that the earth is a good conductor of electricity and the upper air is also a good conductor, while the intervening lower stratum of air is an insulator for many kinds of current. This combination provides what is known as a condenser, a device which will store and discharge electricity. By charging the earth, the upper air would become charged by induction. when our spinning earth was so transformed into a terrestrial Leyden jar, it could be alternately charged and discharged, so that a current would flow both in the upper air and in the ground, producing the electrical flow which would cause the upper air to become self-luminous. Tesla, however, never became quite so specific in applying the condenser plan to this problem as the preceding sentence indicates. His plan may still exist in his papers, which, at the present writing, are sealed against inspection except by Government oficials.

Out of the almost empty space in a six-inch vacuum tube Tesla succeeded in extracting at least five epoch-making discoveries. Tesla's lamp was more prolific in producing wonders than the Aladdin's lamp of the Arabian Nights. He gave his "magic" lamp to science fifty years ago. This magic talisman was Tesla's carbon-button lamp which, apart from the other discoveries that came of it, was in itself, just as a lamp, a brilliant scientific discovery--and still remains unused. Edison developed the practical incandescent filament electric lamp and was entitled to, and receives, a tremendous amount of credit for his accomplishment. Tesla invented an absolutely original type of lamp, the incandescent-button lamp, which gives twenty times as much light for the same amount of current consumed; and his contribution remains practically unknown.

The carbon-button type of lamp was described by Tesla in his lecture before the American Institute of Engineers in New York in May, 1891, and further developments were presented in the lectures which he gave in England and France in February and March, 1892. In his New York lecture he said:

Electrostatic effects are in many ways available for the production of light. For instance, we may place a body of some refractory material in a closed, and preferably in a more or less air exhausted, globe, connect it to a source of high, rapidly alternating potential, causing the molecules of the gas to strike it many times a second at

enormous speeds, and in this way, with trillions of invisible hammers, pound it until it gets incandescent. Or we may place a body in a very highly exhausted globe, and by employing very high frequencies and potentials maintain it at any desired degree of incandescence.

He made a vast number of experiments with this carbon-button lamp and gave a description of the most significant ones in his lecture before the English and French scientific societies in the spring of 1892. It was, however, only one of the many new types of lamps and other important developments which he included in this spectacular presentation of his work.

The carbon-button lamps were of very simple construction. Basically they consisted of a spherical glass globe three to six inches in diameter, in the center of which was a piece of solid refractory material mounted on the end of a wire which protruded through the globe and served as a single-wire connection with the source of high-frequency currents. The globe contained rarefied air.

when the high-frequency current was connected with the lamp, molecules of the air in the globe, coming in contact with the central button, became charged and were repelled at high velocity to the glass globe where they lost their charge and were then repelled back at equally high velocity, striking the button. Millions of millions of such processes each second caused the button to become heated to incandescence.

In these simple glass globes Tesla was able to produce extremely high temperatures, the upper limit of which seemed to be determined by the amount of current used. He was able to vaporize carbon directly into a gas, observing that the liquid state was so unstable it could not exist. Zirconia, the most heat-resistant substance known, could be melted instantly. He tried diamonds and rubies as buttons--and they too were vaporized. when using the device as a lamp it was not his desire to melt the substances; but he always carried experiments to their upper and lower limits. Carborundum, he observed, was so refractory that it was possible when using buttons made of this material (calcium carbide) to run the lamps at higher current densities than was possible with other substances. Carborundum did not vaporize so readily, nor did it make deposits on the inside of the globe.

Tesla thus evolved a technique in operating the lamps whereby the incandescent button transferred its heat energy to the molecules of the very small amount of gas in the tube so that they became a source of light, thus causing the lamps to function like the sun, the button being the massive body of the sun and the surrounding gas like the photosphere, or atmospheric light-emitting layer, of that body.

Tesla had a keen sense of dramatic values, but quite apart from this he undoubtedly enjoyed a unique satisfaction when he was able to light this miniature sun in the currents that he passed through his body--high-frequency currents of hundreds of thousands of volts. with one hand grasping a terminal of his high-frequency transformer and the other holding aloft this bulb containing an incandescent miniature sun which he had created--posing like the Statue of Liberty--he was able to make his new lamp radiate its brilliant illumination. Here, you might say, was the superman manifesting his ultramundane accomplishments. In addition, there was a satisfaction which was associated purely with the plane of ordinary mortals. Edison had laughed at his plan for developing the alternating-current system, and had declared that these currents were not only useless but deadly. Surely, this was an adequate answer; Tesla would let Nature make his replies.

Observing this working model of the incandescent sun which he could hold in his hand, Tesla was quick to see many of the implications of its phenomena. Every electrical wave that surged through the tiny central bead caused a shower of particles to radiate from it at tremendous velocity and strike the surrounding glass globe, only to be reflected back to the bead. The sun, Tesla reasoned, is an incandescent body that carries a high electrical charge and it, too, will emit vast showers of tiny particles, each carrying great energy because of its extremely high velocity. In the case of the sun, and other stars like it, there was no glass globe to act as a barrier, so the showers of particles continued out into the vast realms of surrounding space.

All space was filled with these particles and they were continually bombarding the earth, blasting matter wherever they struck, just as they did in his globes. He had seen this process take place in his globes, where the most

refractory carbon beads could be shattered into atomic dust by the bombardment of the electrified particles.

He sought to detect these particles striking the earth: one of the manifestations of this bombardment, he declared, was the aurora borealis. The records of the experimental methods by which he detected these rays are not available; but he published an announcement that he had detected them, measured their energy, and found that they moved with tremendously high velocities imparted to them by the hundreds of millions of volts potential of the sun.

Neither the scientists nor the general public in the early nineties were in a mood for such fantastic figures, or for any claim that the earth was bombarded by such destructive rays. It would be describing the situation in very conservative fashion to state that Tesla's report was not taken seriously.

when, however, the French physicist, Henri Becquerel, in 1896, discovered the mysterious rays emitted by uranium, and subsequent investigations, culminating with the discovery by Pierre and Marie Curie, in Paris, of radium, whose atoms were exploding spontaneously without apparent cause, Tesla was able to point to his cosmic rays as the simple cause of the radioactivity of radium, thorium, uranium and other substances. And he predicted that other substances would also be found to be made radioactive by bombardment with these rays. The victory for Tesla, however, was only temporary, for the scientific world did not accept his theory. Nevertheless, Tesla was a better prophet than he knew, or anyone else suspected.

Thirty years later Dr. Robert A. Millikan rediscovered these rays, believing them to be vibratory in character like light, and was followed by Dr. Arthur H. Compton, who proved the existence of cosmic rays consisting of high-velocity particles of matter, just as Tesla described them. They started by finding energies of ten million volts; and today the energies are far up in the billions and even trillions of electron volts. And these and other investigators describe these rays as shattering atoms of matter producing showers of debris--just as Tesla predicted.

In 1934, Frederick Joliot, son-in-law of the Curies, discovered that artificial radioactivity was produced in

ordinary materials by bombarding them with particles in just the manner which Tesla described. Joliot received the Nobel Prize for his discovery; no one gives any credit to Tesla.

Tesla's molecular-bombardment lamp was the ancestor of another very modern development--the atom-smashing cyclotron. The cyclotron, developed by E. O. Lawrence, of the University of California, during the past twenty years, is a device in which electrified particles are whirled in a magnetic field in a circular chamber until they reach a very high velocity, and are then led out of the chamber in a narrow stream. The giant machine, with a magnet as high as a house, partially completed at present writing, will emit so powerful a beam of charged particles that, according to Prof. Lawrence, if allowed to impinge on a building brick they will totally disintegrate it. The smaller models were used to bombard a variety of substances to render them radioactive, to disintegrate them or transmute their atoms into those of other elements.

The small glass globe, six inches or less in diameter, holding Tesla's molecular-bombardment lamp produced exactly this same disintegrating effect on solid matter, probably with a more intensified effect than any atom-smashing cyclotron now in existence despite their tremendous size. (Even small ones weigh twenty tons.)

In describing one of the experiments with his lamp, one in which a ruby was mounted in a carbon button, Tesla said:

It was found, among other things, that in such cases, no matter where the bombardment began, just as soon as a high temperature was reached there was generally one of the bodies which seemed to take most of the bombardment upon itself, the other, or others, being thereby relieved. This quality appeared to depend principally on the point of fusion, and on the facility with which the body was "evaporated," or, generally speaking, disintegrated--meaning by the latter term not only the throwing off of atoms, but likewise of larger lumps. The observation made was in accordance with generally accepted notions. In a highly exhausted bulb electricity is carried off from the electrode by independent carriers, which are partly atoms, or molecules, of the residual atmosphere, and partly the atoms, molecules, or lumps thrown off from the electrode. If the electrode is composed of bodies of different

character, and if one of these is more easily disintegrated than the others, most of the electricity supplied is carried off from that body, which is then brought to a higher temperature than the others, and this the more, as upon an increase of the temperature the body is still more easily disintegrated.

Substances which resisted melting in temperatures attainable in laboratory furnaces of that day were easily disintegrated in Tesla's simple-lamp disintegrator, which provided a powerful beam of disintegrating particles by having them concentrated from all directions by a spherical reflector (the globe of his lamp), a kind a three-dimension burning glass, but operating with electrified particles instead of heat rays. It accomplished the same effect as the heavy atom disintegrators of today, but much more efficiently in a globe so light in weight it almost floated off in air. Its simplicity and efficiency is further increased by the fact that it causes the substance that is being disintegrated to supply the particles by which the disintegration is effected.

There is one more very modern discovery of great importance embodied in Tesla's molecular-bombardment lamp--the point electron miscroscope, which provides magnifications of a million diameters, or ten to twenty times more powerful than the better known electron microscope which in turn is capable of magnifications up to fifty times greater than the optical microscope.

In the point electron microscope, electrified particles shoot out in straight lines from a tiny active spot on a piece of substance kept at a high potential, and reproduce on the spherical surface of a glass globe the pattern of the microscopically small area from which the particles are issuing. The size of the glass sphere furnishes the only limit to the degree of magnification that can be obtained; the greater the radius, the greater the magnification. Since electrons are smaller than light waves, objects too small to be seen by light waves can be tremendously enlarged by the patterns produced by the emitted electrons.

Tesla produced on the surface of the spherical globe of his lamp phosphorescent images of what was taking place on the disintegrating button when he used extremely high vacuum. He described this effect in his lectures in the spring of 1892, and his description will stand with hardly a change

in a word for a description of the million-magnification point electron microscope. Quoting from his lecture:

To the eye the electrode appears uniformly brilliant, but there are upon it points constantly shifting and wandering about, of a temperature far above the mean, and this materially hastens the process of deterioration. . . . Exhaust a bulb to a very high degree, so that with a fairly high potential the discharge cannot pass--that is, not a luminous one, for a weak invisible discharge occurs always, in all probability. Now raise slowly and carefully the potential, leaving the primary current no more than for an instant. At a certain point, two, three or half a dozen phosphorescent spots will appear on the globe. These places of the glass are evidently more violently bombarded than the others, this being due to the unevenly distributed electric density, necessitated, of course, by sharp projections, or, generally speaking, irregularities of the electrode. But the luminous patches are constantly changing in position, which is especially well observed if one manages to produce very few, and this indicates that the configuration of the electrode is rapidly changing.

It would be an act of simple justice if in the future scientists would extend credit to Tesla for being the one who discovered the electron microscope. There is no reduction in the glory due him because he did not specifically describe the electron, then unknown, in its operations, but assumed the effect was due to electrically charged atoms.

when Tesla studied the performance of various models of this and his other gaseous lamps, he observed that the output of visible light changed under various operating conditions. He knew they gave off both visible and invisible rays. He used a variety of phosphorescent and fluorescent substances for detecting the ultra-violet or black light. Usually, the changes in the visible and ultra-violet light about balanced each other; as one increased the other decreased, with the remainder of the energy accounted for by heat losses. In his molecular-bombardment lamp he found, he reported in his 1892 lectures, "visible black light and a very special radiation." He was experimenting with this radiation which, he reported, produced shadowgraph pictures on plates in metal containers, in his laboratory when it was destroyed by fire in March, 1895.

This "very special radiation" was not further described at that time in published articles; but when Prof. fiilhelm Konrad Roentgen, in Germany, in December, 1895, announced the discovery of X-rays, Tesla was able immediately to reproduce the same results by means of his "very special radiation," indicating that these and X-rays had very similar properties although produced in somewhat different ways. Immediately upon reading Roentgen's announcement, Tesla forwarded to the German scientist shadowgraph pictures produced by his "very special radiation." Roentgen replied: "The pictures are very interesting. If you would only be so kind as to disclose the manner in which you obtained them."

Tesla did not consider that this situation gave him any priority in the discovery of X-rays, nor did he ever advance any claims; but he immediately started an extensive series of investigations into their nature. while others were trying to coax out of the type of tube used by Roentgen enough X-rays to take shadow photographs through such thin structures as the hands and feet held very close to the bulb, Tesla was taking photographs through the skull at a distance of forty feet from the tube. He elsewhere described at this time an unidentified type of radiation coming from a spark gap, when a heavy current was passed, that was not a transverse wave like light, or Hertzian waves, and could not be stopped by interposing metal plates.

Tesla, thus, in one lecture reporting his investigations covering a period of two years, offered to the world--in addition to his new electric vacuum lamps, his highly efficient incandescent lamp, and his high-frequency and high-potential currents and apparatus--at least five outstanding scientific discoveries: 1. Cosmic rays; 2. Artificial radioactivity; 3. Disintegrating beam of electrified particles, or atom smasher; 4. Electron microscope; and 5. "Very special radiation" (X-rays).

At least four of these innovations, when "rediscovered" up to forty years later, won Nobel Prizes for others; and Tesla's name is never mentioned in connection with them.

Yet Tesla's lifetime work was hardly well started!

TEN

TESLA had a remarkable ability for carrying on simultaneously a number of widely different lines of scientific research. while pursuing his studies of high-frequency electrical oscillations with all of their ramifications from vacuum lamps to radio, he was also investigating mechanical vibrations; and he had a rare foresight into the many useful applications to which they could be put, and which have since been realized.

Tesla never did things by halves. Almost everything he attempted went off like a flash of lightning with a very satisfactory resounding clap of thunder following. Even when he did not so plan events, they appeared to fashion themselves into spectacular climaxes. In 1896 while his fame was still on the ascendant he planned a nice quiet little vibration experiment in his Houston Street laboratory. Since he had moved into these quarters in 1895, the place had established a reputation for itself because of the peculiar noises and lights that emanated from it at all hours of the day and night, and because it was constantly being visited by the most famous people in the country.

The quiet little vibration experiment produced an earthquake, a real earthquake in which people and buildings and everything in them got a more tremendous shaking than they did in any of the natural earthquakes that have visited the metropolis. In an area of a dozen square city blocks, occupied by hundreds of buildings housing tens of thousands of persons, there was a sudden roaring and shaking, shattering of panes of glass, breaking of steam, gas and water pipes. Pandemonium reigned as small objects danced around rooms, plaster descended from walls and ceilings, and pieces of machinery weighing tons were moved from their bolted anchorages and shifted to awkward spots in factory lofts.

"It was all caused, quite unexpectedly, by a little piece of apparatus you could slip in your pocket," said Tesla.

The device that precipitated the sudden crisis had been used for a long time by Tesla as a toy to amuse his

friends. It was a mechanical oscillator, and was used to produce vibrations. The motor-driven device that the barber straps on his hand to give a patron an "electric massage" is a descendant of Tesla's mechanical oscillator. There is, of course, nothing electric about an "electric massage" except the power used to produce vibrations which are transmitted through the barber's fingers to the scalp.

Tesla developed in the early nineties a mechanical-electrical oscillator for the generation of high-frequency alternating currents. The driving engine produced on a shaft simple reciprocating motion that was not changed to rotary motion. Mounted on either end of the shaft was a coil of many turns of wire that moved back and forth with high frequency between the poles of electromagnets, and in this way generated high-frequency alternating currents.

The engine was claimed by Tesla to have a very high efficiency compared to the common type of engine, which changed reciprocating to rotary motion by means of a crank shaft. It had no valves or other moving parts, except the reciprocating piston with its attached shaft and coils, so that mechanical losses were very low. It maintained such an extremely high order of constancy of speed, he stated, that the alternating current generated by the oscillator could be used to drive clocks, without any pendulum or balance-wheel control mechanisms, and they would keep time more accurately than the sun.

This engine may have had industrial possibilities but Tesla was not interested in them. To him it was just a convenient way of producing a high-frequency alternating current constant in frequency and voltage, or mechanical vibrations, if used without the electrical parts. He operated the engine on compressed air and also by steam at 320 pounds and also at 80 pounds pressure.

while perfecting this device, he had opportunity to observe interesting effects produced by vibration. These were objectionable in the engine when it was used as a dynamo, so he adopted suitable measures to eliminate or suppress them. The vibrations as such, however, interested him. Although they were detrimental to the machine, he found their physiological effects were, at times, quite pleasant. Later he built a small mechanical oscillator driven by compressed air which was designed for no other purpose than to produce vibrations. He built a platform insulated from

the floor by rubber and cork. He then mounted the oscillator on the under side of the platform. The purpose of the rubber and cork under the platform was to keep the vibrations from leaking into the building and thereby reducing the effect on the platform. Visitors found this vibrating platform one of the most interesting of the great array of fascinating and fantastic exhibits with which he dazzled the society folk who flocked to his laboratory.

Great hopes were entertained by Tesla of applying these vibrations for therapeutic and health-improving effects. He had opportunity to observe, through his own experience and that of his employees, that they produce some very definite physiological actions.

Samuel Clemens, better known to the public as "Mark Twain," and Tesla were close friends. Clemens was a frequent visitor to the Tesla laboratory. Tesla had been playing with his vibratory mechanism for some time, and had learned a good deal about the results that followed from varying doses of vibration, when one evening Clemens dropped in.

Clemens, on learning about the new mechanism, wanted to experience its vitalizing vibrations. He stood on the platform while the oscillator set it into operation. He was thrilled by the new experience. He was full of adjectives. "This gives you vigor and vitality," he exclaimed. After he had been on the platform for a while Tesla advised him: "you have had enough, Mr. Clemens. you had better come down now."

"Not by a jugfull," replied Clemens. "I am enjoying myself."

"But you had better come down, Mr. Clemens. It is best that you do so," insisted Tesla.

"you couldn't get me off this with a derrick," laughed Clemens.

"Remember, I am advising you, Mr. Clemens."

"I'm having the time of my life. I'm going to stay right up here and enjoy myself. Look here, Tesla, you don't appreciate what a wonderful device you have here to give a lift to tired humanity. . . . Clemens continued along this line for several minutes. Suddenly he stopped talking, bit

his lower lip, straightened his body and stalked stiffy but suddenly from the platform.

"Quick, Tesla! Where is it?" snapped Clemens, half begging, half demanding.

"Right over here, through that little door in the corner," said Tesla. "And remember, Mr. Clemens, I advised you to come down some time ago," he called after the rapidly moving figure.

The laxative effect of the vibrator was an old story to the members of the laboratory staff.

Tesla pursued his studies of mechanical vibrations in many directions. This was almost a virgin field for scientific research. Scarcely any fundamental research had been done in the field since Pythagoras, twenty-five hundred years before, had established the science of music through his study of vibrating strings; and many of the wonders with which Tesla had startled the world in the field of high-frequency and high-potential currents had grown out of his simple secret for tuning electrical circuits so that the electricity vibrated in resonance with its circuit. He now visualized mechanical vibrations building up resonance conditions in the same way, to produce effects of tremendous magnitude on physical objects.

In order to carry out what he expected to be some minor and very small-scale experiments, he screwed the base of one of his small mechanical oscillators to an iron supporting pillar in the middle of his laboratory and set it into oscillation. It had been his observation that it took some time to build up its maximum speed of vibration. The longer it operated the faster the tempo it attained. He had noticed that all objects did not respond in the same way to vibrations. One of the many objects around the laboratory would suddenly go into violent vibration as it came into resonance with the fundamental vibration of the oscillator or some harmonic of it. As the period of the oscillator changed, the first object would stop and some other object in resonance with the new rate would start vibrating. The reason for this selective response was very clear to Tesla, but he had never previously had the opportunity to observe the phenomenon on a really large scale.

Tesla's laboratory was on an upper floor of a loft building. It was on the north side of Houston Street, and the second house east of Mulberry Street. About three hundred feet south of Houston Street on the east side of Mulberry Street was the long, four-story red-brick building famous as Police Headquarters. Throughout the neighborhood there were many loft buildings ranging from five to ten stories in height, occupied by factories of all kinds. Sandwiched between them were the small narrow tenement houses of a densely packed Italian population. A few blocks to the south was Chinatown, a few blocks to the west was the garment-trades area, a short distance to the east was a densely crowded tenement-house district.

It was in this highly variegated neighborhood that Tesla unexpectedly staged a spectacular demonstration of the properties of sustained powerful vibrations. The surrounding population knew about Tesla's laboratory, knew that it was a place where strange, magical, mysterious events took place and where an equally strange man was doing fearful and wonderful things with that tremendously dangerous secret agent known as electricity. Tesla, they knew, was a man who was to be both venerated and feared, and they did a much better job of fearing than of venerating him.

Quite unmindful of what anyone thought about him, Tesla carried on his vibration and all other experiments. Just what experiment he had in mind on this particular morning will never be known. He busied himself with preparations for it while his oscillator on the supporting iron pillar of the structure kept building up an ever higher frequency of vibrations. He noted that every now and then some heavy piece of apparatus would vibrate sharply, the floor under him would rumble for a second or two--that a window pane would sing audibly, and other similar transient events would happen--all of which was quite familiar to him. These observations told him that his oscillator was tuning up nicely, and he probably wondered why he had not tried it firmly attached to a solid building support before.

Things were not going so well in the neighborhood, however. Down in Police Headquarters in Mulberry Street the "cops" were quite familiar with strange sounds and lights coming from the Tesla laboratory. They could hear clearly the sharp snapping of the lightnings created by his coils. If

anything queer was happening in the neighborhood, they knew that Tesla was in back of it in some way or other.

On this particular morning the cops were surprised to feel the building rumbling under their feet. Chairs moved across floors with no one near them. Objects on the oficers' desks danced about and the desks themselves moved. It must be an earthquake! It grew stronger. Chunks of plaster fell from the ceilings. A flood of water ran down one of the stairs from a broken pipe. The windows started to vibrate with a shrill note that grew more intense. Some of the windows shattered.

"That isn't an earthquake," shouted one of the oficers, "it's that blankety-blank Tesla. Get up there quickly," he called to a squad of men, "and stop him. Use force if you have to, but stop him. He'll wreck the city."

The officers started on a run for the building around the corner. Pouring into the streets were many scores of people excitedly leaving near-by tenement and factory buildings, believing an earthquake had caused the smashing of windows, breaking of pipes, moving of furniture and the strange vibrations.

without waiting for the slow-pokey elevator, the cops rushed up the stairs--and as they did so they felt the building vibrate even more strongly than did police headquarters. There was a sense of impending doom--that the whole building would disintegrate--and their fears were not relieved by the sound of smashing glass and the queer roars and screams that came from the walls and floors.

Could they reach Tesla's laboratory in time to stop him? Or would the building tumble down on their heads and everyone in it be buried in the ruins, and probably every building in the neighborhood? Maybe he was making the whole earth shake in this way! would this madman be destroying the world? It was destroyed once before by water. Maybe this time it would be destroyed by that agent of the devil that they call electricity!

Just as the cops rushed into Tesla's laboratory to tackle--they knew not what--the vibrations stopped and they beheld a strange sight. They arrived just in time to see the tall gaunt figure of the inventor swing a heavy sledge hammer and shatter a small iron contraption mounted on the post in

the middle of the room. Pandemonium gave way to a deep, heavy silence.

Tesla was the first to break the silence. Resting his sledge hammer against the pillar, he turned his tall, lean, coatless figure to the cops. He was always selfpossessed, always a commanding presence--an effect that could in no way be attributed to his slender build, but seemed more to emanate from his eyes. Bowing from the waist in his courtly manner, he addressed the policemen, who were too out of breath to speak, and probably overawed into silence by their fantastic experience.

"Gentlemen," he said, "I am sorry, but you are just a trifle too late to witness my experiment. I found it necessary to stop it suddenly and unexpectedly and in an unusual way just as you entered. If you will come around this evening I will have another oscillator attached to this platform and each of you can stand on it. you will, I am sure, find it a most interesting and pleasurable experience. Now you must leave, for I have many things to do. Good day, gentlemen."

George Scherff, Tesla's secretary, was standing nearby when Tesla so dramatically smashed his earthquake maker. Tesla never told the story beyond this point, and Mr. Scherff declares he does not recall what the response of the cops was. Imagination must finish the finale to the story.

At the moment, though, Tesla was quite sincere in his attitude. He had no idea of what had happened elsewhere in the neighborhood as a result of his experiment, but the effect on his own laboratory had been sufficiently threatening to cause him to halt it suddenly. when he learned the details, however, he was convinced that he was correct in his belief that the field of mechanical vibrations was rich with opportunities for scientific investigation. we have no records available of any further major experiments with vibration in that laboratory. Perhaps the Police and Building Departments had offered some emphatic suggestions to him concerning experiments of this nature.

Tesla's observations in this experiment were limited to what took place on the floor of the building in which his laboratory was located, but apparently very little happened there until a great deal had happened elsewhere. The

oscillator was firmly fixed to a supporting column and there were similar supporting columns directly under it on each floor down to the foundations. The vibrations were transmitted through the columns to the ground. This section of the city is built on deep sand that extends down some hundreds of feet before bed rock is reached. It is well known to seismologists that earthquake vibrations are transmitted by sand with much greater intensity than they are by rock. The ground under the building and around it was, therefore, an excellent transmitter of mechanical vibrations, which spread out in all directions. They may have reached a mile or more. They were more intense, of course, near their source and became weaker as the distance increased. However, even weak vibrations that are sustained can build up surprisingly large effects when they are absorbed by an object with which they are in resonance. A distant object in resonance can be thrown into strong vibration whereas a much nearer object not in resonance will be left unaffected.

It was this selective resonance that was, apparently, operating in Tesla's experiment. Buildings other than his own came into resonance with the increasing tempo of his oscillator long before his own building was affected. After the pandemonium was under way for some time elsewhere and the higher frequencies were reached, his immediate surroundings started to come into resonance.

when resonance is reached the effects follow instantly and powerfully. Tesla knew this, so when he observed dangerous resonance effects developing in his building he realized he had to act fast. The oscillator was being operated by compressed air supplied by a motor-driven compressor that fed the air into a tank, where it was stored under pressure. Even if the motor were shut off, there was plenty of air in the tank to keep the oscillator going for many minutes--and in that time the building could be completely wrecked and reduced to a pile of debris. with the vibrations reaching this dangerous amplitude, there was no time to try to disconnect the vibrator from the air line or to do anything about releasing the air from the tank. There was time for only one thing, and Tesla did that. He grabbed the near-by sledge hammer and took a mighty swing at the oscillator in hopes of putting it out of operation. He succeeded in his first attempt.

The device was made of cast iron and was of rugged construction. There were no delicate parts that could be easily damaged. Tesla has never published a description of the device, but its construction was principally that of a piston which moved back and forth inside a cast-iron cylinder. The only way to stop it from operating was to smash the outer cylinder. Fortunately, that is what happened from the first blow.

As Tesla turned around after delivering this lucky blow and beheld the visiting policemen, he could not understand the reason for their visit. The dangerous vibrations had developed in his building only within the preceding minute, and the policemen would not have had time to plan a visit in connection with them, he figured, so they must have come for some other less critical purpose, and therefore he proposed to dismiss them until a more opportune moment.

Tesla related this experience to me when I asked the inventor's opinion of a plan that I had suggested some time previously to Elmer Sperry, Jr., son of the famous inventor of many gyroscope devices. when a heavy gyroscope, such as is used in stabilizing ships, is forced to turn on its axis, it transmits a powerful downward thrust through the bearings in which the supporting gimbal is mounted. If a battery of such gyroscopes were mounted in regions where severe earthquakes take place it would transmit thrusts to the ground at equally timed intervals and build up resonance vibrations in the strata of the earth that would cause earthquake strains to be released while they were of small magnitude, thus producing very small earthquakes instead of letting the strains build up to large magnitudes which, when they let go, would cause devastating earthquakes.

The idea made a strong appeal to Tesla; and in his discussion, after telling me of the experience here related, he further declared that he had so far developed his study of vibrations that he could establish a new science of "telegeodynamics" which would deal not only with the transmission of powerful impulses through the earth to distant points to produce effects of large magnitude--in addition, he could use the same principles to detect distant objects. In the later thirties, before the outbreak of the war, he declared that he could apply these principles for the detection of submarines or other ships

at a distance, even though they were lying at anchor and no engines operating on them.

His system of telegeodynamics, using mechanical vibrations, Tesla declared, would make it possible to determine the physical constant of the earth and to locate ore deposits far beneath the surface. This latter prediction has since been fulfilled, for many oil fields have been discovered by studying the vibrations reflected from sub-surface strata.

"So powerful are the effects of the telegeodynamic oscillator," said Tesla in reviewing the subject in the thirties, "that I could now go over to the Empire State Building and reduce it to a tangled mass of wreckage in a very short time. I could accomplish this result with utmost certainty and without any dificulty whatever. I would use a small mechanical vibrating device, an engine so small you could slip it in your pocket. I could attach it to any part of the building, start it in operation, allow it twelve to thirteen minutes to come to full resonance. The building would first respond with gentle tremors, and the vibrations would then become so powerful that the whole structure would go into resonant oscillations of such great amplitude and power that rivets in the steel beams would be loosened and sheared. The outer stone coating would be thrown off and then the skeleton steel structure would collapse in all its parts. It would take about 2.5 (This figure may have been .25 or 2.5 horsepower. The notes are old and somewhat indistinct. Memory favors the latter figure.) horsepower to drive the oscillator to produce this effect"

Tesla developed his inventions to the point at which they were spectacular performers before they were demonstrated to the public. when presented, the performance always greatly exceeded the promise. This was the case with his first public demonstration of "wireless," but he complicated the situation by coupling with his radio invention another new idea--the robot.

Tesla staged his demonstration in the great auditorium of Madison Square Garden, then on the north side of Madison Square, in September, 1898, as part of the first annual Electrical Exhibition. He had a large tank built in the center of the arena and in this he placed an iron-hulled boat a few feet long, shaped like an ark, which he operated by remote control by means of his wireless system.

Extending upward from the center of the roof of the boat was a slender metal rod a few feet high which served as an antenna, or &aerial, for receiving the wireless wave. Near the bow and stern were two small metal tubes about a foot high surmounted by small electric lamps. The interior of the hull was packed with a radio receiving set and a variety of motor-driven mechanisms which put into effect the operating orders sent to the boat by wireless waves. There was a motor for propelling the boat and another motor for operating the servo-mechanism, or mechanical brain, that interpreted the orders coming from the wireless receiving set and translated them into mechanical motions, which included steering the boat in any direction, making it stop, start, go forward or backward, or light either lamp. The boat could thus be put through the most complicated maneuvers.

Anyone attending the exhibition could call the maneuver for the boat, and Tesla, with a few touches on a telegraph key, would cause the boat to respond. His control point was at the far end of the great arena.

The demonstration created a sensation and Tesla again was the popular hero. It was a front-page story in the newspapers. Everyone knew the accomplishment was a wonderful one, but few grasped the significance of the event or the importance of the fundamental discovery which it demonstrated. The basic aspects of the invention were obscured by the glamor of the demonstration.

The Spanish American war was under way. The success of the U.S. Navy in destroying the Spanish fleets was the leading topic of conversation. There was resentment over the blowing up of the U.S.S. Maine in Havana Harbor. Tesla's demonstration fired the imagination of everyone because of its possibilities as a weapon in naval warfare.

waldemar Kaempffert, then a student in City College and now Science Editor of the New York Times, discussed its use as a weapon with Tesla.

"I see," said Kaempffert, "how you could load an even larger boat with a cargo of dynamite, cause it to ride submerged, and explode the dynamite whenever you wished by pressing the key just as easily as you can cause the light on the bow to shine, and blow up from a distance by wireless even the largest of battleships." (Edison had

earlier designed an electric torpedo which received its power by a cable that remained connected with the mother ship.)

Tesla was patriotic, and was proud of his status, which he had acquired in 1889, as a citizen of the United States. He had offered his invention to the Government as a naval weapon, but at heart he was opposed to war.

"you do not see there a wireless torpedo," snapped back Tesla with fire flashing in his eyes, "you see there the first of a race of robots, mechanical men which will do the laborious work of the human race.

The "race of robots" was another of Tesla's original and important contributions to human welfare. It was one of the items of his colossal project for increasing human energy and improving the efficiency of its utilization. He visualized the application of the robot idea to warfare as well as to peaceful pursuits; and out of the broad principles enunciated, he developed an accurate picture of warfare as it is being carried on today with the use of giant machines as weapons--the robots he described.

"This evolution," he stated in an article in the Century Magazine of June, 1900, "will bring more and more into prominence a machine or mechanism with the fewest individuals as an element of warfare. . . . Greatest possible speed and maximum rate of energy delivery by the war apparatus will be the main object. The loss of life will become smaller. . . ."

Outlining the experiences that led him to design the robots, or automatons, as he called them, Tesla stated:

I have by every thought and act of mine, demonstrated, and do so daily, to my absolute satisfaction that I am an automaton endowed with power of movement, which merely responds to external stimuli beating upon my sense organs, and thinks and moves accordingly. . . .

with these experiences it was only natural that, long ago, I conceived the idea of constructing an automaton which would mechanically represent me, and which would respond, as I do myself, but, of course, in a much more primitive manner, to external influences. Such an automaton evidently had to have motive power, organs for locomotion, directive

organs, and one or more sensitive organs so adapted as to be excited by external stimuli.

This machine would, I reasoned, perform its movements in the manner of a living being, for it would have all of the chief elements of the same. There was still the capacity for growth, propagation, and, above all, the mind which would be wanting to make the model complete. But growth was not necessary in this case since a machine could be manufactured full-grown, so to speak. As to capacity for propagation, it could likewise be left out of consideration, for in the mechanical model it merely signified a process of manufacture.

whether the automaton be of flesh and bone, or of wood and steel, mattered little, provided it could perform all the duties required of it like an intelligent being. To do so it would have to have an element corresponding to the mind, which would effect the control of its movements and operations, and cause it to act, in any unforeseen case that might present itself, with knowledge, reason, judgement and experience. But this element I could easily embody in it by conveying to it my own intelligence, my own understanding. So this invention was evolved, and so a new art came into existence, for which the name "telautomatics" has been suggested, which means the art of controlling the movements and operations of distant automatons.

In order to give the automaton an individual identity it would be provided with a particular electrical tuning, Tesla explained, to which it alone would respond when waves of that particular frequency were sent from a control transmitting station; and other automatons would remain inactive until their frequency was transmitted. This was Tesla's fundamental radio tuning invention, the need for which other radio inventors had not yet glimpsed although Tesla had described it publicly a half-dozen years earlier.

Tesla not only used in the control of his automaton the long waves now used in broadcasting--which are very different from the short waves used by Marconi and all others; for those could be interfered with by the imposition of an intervening object--but he was explaining the use, through his system of tuning, of the spectrum of allocations for individual stations that now appears on the dials of radio receiving sets. He continued:

By the simple means described the knowledge, experience, judgement--the mind, so to speak--of the distant operator were embodied in that machine, which was thus enabled to move and perform all of its operations with reason and intelligence. It behaved just like a blindfolded person obeying directions received through the ear.

The automatons so far constructed had "borrowed minds," so to speak, as each formed merely part of the distant operator who conveyed to it his intelligent orders; but this art is only in the beginning.

I purpose to show that, however impossible it may now seem, an automaton may be contrived which will have its "own mind," and by this I mean that it will be able, independently of any operator, left entirely to itself, to perform, in response to external influences affecting its sensitive organs, a great variety of acts and operations as if it had intelligence.

It will be able to follow a course laid out or to obey orders given far in advance; it will be capable of distinguishing between what it ought and ought not to do, and of making experiences or, otherwise stated, of recording impressions which will deffinitely affect its subsequent actions. In fact I have already conceived such a plan.

Although I evolved this invention many years ago and explained it to my visitors very frequently in my laboratory demonstrations, it was not until much later, long after I had perfected it, that it became known, when, naturally enough, it gave rise to much discussion and to sensational reports.

But the true significance of this new art was not grasped by the majority, nor was the great force of the underlying principle recognized. As nearly as I could judge from the numerous comments which then appeared, the results I had obtained were considered as entirely impossible. Even the few who were disposed to admit the practicability of the invention saw in it merely an automobile torpedo, which was to be used for the purpose of blowing up battleships, with doubtful success. . . .

But the art I have evolved does not contemplate merely the change of direction of a moving vessel; it affords means of

absolutely controlling in every respect, all the innumerable translatory movements, as well as the operations of all the internal organs, no matter how many, of an individualized automaton.

Tesla, in an unpublished statement, prepared fifteen years later, recorded his experience in developing automata, and his unsuccessful effort to interest the war Department, and likewise commercial concerns, in his wirelessly controlled devices.

The idea of constructing an automaton, to bear out my theory, presented itself to me early but I did not begin active work until 1893, when I started my wireless investigations. During the succeeding two or three years, a number of automatic mechanisms, actuated from a distance by wireless control, were constructed by me and exhibited to visitors in my laboratory.

In 1896, however, I designed a complete machine capable of a multitude of operations, but the consummation of my labors was delayed until later in 1897. This machine was illustrated and described in my article in the Century Magazine of June 1900, and other periodicals of that time and, when first shown in the beginning of 1898, it created a sensation such as no other invention of mine has ever produced.

In November 1898, a basic patent on the novel art was granted to me, but only after the Examiner-in-Chief had come to New York and witnessed the performance, for what I claimed seemed unbelievable. I remember that when later I called on an oficial in Washington, with a view of offering the invention to the Government, he burst out in laughter upon my telling him what I had accomplished. Nobody thought then that there was the faintest prospect of perfecting such a device.

It is unfortunate that in this patent, following the advice of my attorneys, I indicated the control as being effected through the medium of a single circuit and a well-known form of detector, for the reason that I had not yet secured protection on my methods and apparatus for individualization. As a matter of fact, my boats were controlled through the joint action of several circuits and interference of every kind was excluded. Most generally I employed receiving circuits in the form of loops, including

condensers, because the discharges of my high tension transmitter ionized the air in the hall so that even a very small &aerial would draw electricity from the surrounding atmosphere for hours.

Just to give an idea, I found, for instance, that a bulb 12" in diamater, highly exhausted, and with one single terminal to which a short wire was attached, would deliver well on to one thousand successive flashes before all charge of the air in the laboratory was neutralized. The loop form of receiver was not sensitive to such a disturbance and it is curious to note that it is becoming popular at this late date. In reality it collects much less energy than the aerials or a long grounded wire, but it so happens that it does away with a number of defects inherent to the present wireless devices.

In demonstrating my invention before audiences, the visitors were requested to ask any questions, however involved, and the automaton could answer them by signs. This was considered magic at that time but was extremely simple, for it was myself who gave the replies by means of the device.

At the same period another larger telautomatic boat was constructed. It was controlled by loops having several turns placed in the hull, which was made entirely water tight and capable of submergence. The apparatus was similar to that used in the first with the exception of certain special features I introduced as, for example, incandescent lamps which afforded a visible evidence of the proper functioning of the machine and served for other purposes.

These automata, controlled within the range of vision of the operator, were, however, the first and rather crude steps in the evolution of the Art of Telautomatics as I had conceived it. The next logical improvement was its application to automatic mechanisms beyond the limits of vision and at great distances from the center of control, and I have ever since advocated their employments as instruments of warfare in preference to guns. The importance of this now seems to be recognized, if I am to judge from casual announcements through the press of achievements which are said to be extraordinary but contain no merit of novelty whatever.

In an imperfect manner it is practicable, with the existing wireless plants, to launch an aeroplane, have it follow a certain approximate course, and perform some operation at a distance of many hundreds of miles. A machine of this kind can also be mechanically controlled in several ways and I have no doubt that it may prove of some usefulness in war. But there are, to my best knowledge, no instrumentalities in existence today with which such an object could be accomplished in a precise manner. I have devoted years of study to this matter and have evolved means, making such and greater wonders easily realizable.

As stated on a previous occasion, when I was a student at college I conceived a flying machine quite unlike the present ones. The underlying principle was sound but could not be carried into practice for want of a prime-mover of suficiently great activity. In recent years I have successfully solved this problem and am now planning aerial machines devoid of sustaining planes, ailerons, propellers and other external attachments, which will be capable of immense speeds and are very likely to furnish powerful arguments for peace in the near future. Such a machine, sustained and propelled entirely by reaction, can be controlled either mechanically or by wireless energy. By installing proper plants it will be practicable to project a missile of this kind into the air and drop it almost on the very spot designated which may be thousands of miles away. But we are not going to stop at this.

Tesla is here describing--nearly fifty years ago--the radio-controlled rocket, which is still a confidential development of world war II, and the rocket bombs used by the Germans to attack England. The rocket-type airship is a secret which probably died with Tesla, unless it is contained in his papers sealed by the Government at the time of his death. This, however, is unlikely, as Tesla, in order to protect his secrets, did not commit his major inventions to paper, but depended on an almost infallible memory for their preservation.

"Telautomata," he concluded, "will be ultimately produced, capable of acting as if possessed of their own intelligence and their advent will create a revolution. As early as 1898 I proposed to representatives of a large manufacturing concern the construction and public exhibition of an automobile carriage which, left to itself, would perform a great variety of operations involving something akin to

judgment. But my proposal was deemed chimerical at that time and nothing came from it."

Tesla, at the Madison Square Garden demonstration in 1898 which lasted for a week, presented to the world, then, two stupendous developments, either of which alone would have been too gigantic to have been satisfactorily assimilated by the public in a single presentation. Either one of the ideas dimmed the glory of the other.

This first public demonstration of wireless, the forerunner of modern radio, in the amazing stage of development to which Tesla carried it, at this early date, was too tremendous a project to be encompassed within a single dramatization. In the hands of a competent public-relations councillor, or publicity man, as he was called in those days (but the employment of one was utterly abhorrent to Tesla), this demonstration would have been limited to the wireless aspect alone, and would have included just a simple two-way sending-and-receiving set for the transmission of messages by the Morse dots and dashes. Suitably dramatized, this would have been a suficient thrill for one show. At a subsequent show he could have brought in the tuning demonstration which would have shown the selective response of each of a series of coils, indicated by his strange-looking vacuum-tube lamps. The whole story of just the tuning of wireless circuits and stations to each other was too big for any one demonstration. An indication of its possibilities was all the public could absorb.

The robot, or automaton, idea was a new and an equally stupendous concept, the possibilities of which were not lost, however, on clever inventors; for it brought in the era of the modern labor-saving device--the mechanization of industry on a mass-production basis.

Using the Tesla principles, John Hays Hammond, Jr. developed an electric dog, on wheels, that followed him like a live pup. It was motor operated and controlled by a light beam through selenium cells placed behind lenses used for eyes. He also operated a yacht, entirely without a crew, which was sent out to sea from Boston harbor and brought back to its wharf by wireless control.

A manless airplane was developed toward the close of the First world war. It rose from the ground, flew one hundred

miles to a selected target, dropped its bombs, and returned to its home airport, all by wireless control. It was also developed so that on a signal from a distant radio station the plane would rise into the air, choose the proper direction, fly to a city hundreds of miles away and set itself down in the airport at that city. This Tesla-type robot was developed in the plant of the Sperry Gyroscope Company, where Elmer Sperry invented a host of amazing mechanical robots controlled by gyroscopes, such as the automatic pilots for airplanes and for ships.

All of the modern control devices using electronic tubes and electric eyes that make machines seem almost human and enable them to perform with superhuman activity, dependability, accuracy and low cost, are children of Tesla's robot, or automaton. The most recent development, in personalized form, was the mechanical man, a metal human monster giant, that walked, talked, smoked a cigarette, and obeyed spoken orders, in the exhibit of the Westinghouse Electric and Manufacturing Company at the New York world's Fair. Robots have been used, as well, to operate hydroelectric powerhouses and isolated substations of powerhouses.

In presenting this superabundance of scientific discovery in a single demonstration, Tesla was manifesting the superman in an additional role that pleased him greatly--that of the man magnificent. He would astound the world with a superlative demonstration not only of the profundity of the accomplishments of the superman, but, in addition, of the prolific nature of the mind of the man magnificent who could shower on the world a superabundance of scientific discoveries.

ELEVEN

TESLA was now ready for new worlds to conquer. After presenting to the public his discoveries relating to wireless signaling or the transmission of intelligence, as he called it, Tesla was anxious to get busy on the power phase: his projected world-wide distribution of power by wireless methods.

Again Tesla was faced with a financial problem or, to state the matter simply, he was broke. The $40,000 which was paid for the stock of the Nikola Tesla Company by Adams had been spent. The company had no cash on hand; but it held patents worth many millions if they had been handled in a practical way. A gift of $10,000 from John Hays Hammond, the famous mining engineer, had financed the work leading up to the Madison Square Garden wireless and robot demonstration.

Tesla had built ever larger and more powerful oscillators in his Houston Street laboratory. when he constructed one that produced 4,000,000 volts he reached beyond the limits in which high voltage could be handled within a city building. The sparks jumped to the walls, floors and ceilings. He needed a larger open space. He wanted to build vastly larger coils. He dreamed of a tremendous structure he would like to build somewhere in the open country spaces. He felt certain his wireless patents would prove tremendously valuable in a short time, and he would then have all the money he needed to build his laboratory. But he had already progressed to the point at which further advancement demanded the use of such a building--and he was broke. A loan of $10,000 offered by his friend Crawford, of the dry goods firm of Simpson and Crawford, took care of immediate needs.

Leonard E. Curtis, of the Colorado Springs Electric Company, a great admirer of Tesla, when he heard of Tesla's plan to conduct experiments on a gigantic scale, invited him to locate his laboratory at Colorado Springs, where he would provide him with the necessary land and all the electric power he needed for his work.

Col. John Jacob Astor, owner of the waldorf-Astoria, held his famous dining-room guest in the highest esteem as a personal friend, and kept in close touch with the progress of his investigations. when he heard that his researches were being halted through lack of funds, he made available to Tesla the $30,000 he needed in order to take advantage of Curtis' offer and build a temporary plant at Colorado Springs. Tesla arrived in Colorado in May, 1899, bringing with him some of his laboratory workers, and accompanied by an engineering associate, Fritz Lowenstein.

while Tesla was making experiments on natural lightning and other subjects in his mountain laboratory, the construction work on his high-power transmitting apparatus was being

rushed. He gave his personal supervision to even the finest details of every piece of apparatus. He was working in a virgin field. None had gone before him to pave the way or gain experience that would be helpful to him in designing his experiments or his machines. He was entirely on his own, working without human guidance of any kind, exploring a field of knowledge far beyond that which anyone else had reached. He had previously astonished the world in developing a system of power transmission in which pressures of tens of thousands of volts were used; now he was working with millions of volts, and no one knew what would happen when such tremendous potentials were produced. He believed, however, that he would make his own magnificent polyphase system obsolete by creating a better one.

In about three months after his arrival at Colorado Springs the building with its fantastic shapes, towers and masts was completed, and the giant oscillator with which the principal experiment was to be made was ready for operation.

The wild, rugged, mountainous terrain of Colorado, in which Tesla set up his laboratory, is a natural generator of tremendous electrical activity, producing lightning discharges of a magnitude and intensity probably not equaled anywhere else on earth. Overwhelming bolts from both earth and sky flashed with frightening frequency during the almost daily lightning storms. Tesla made a very detailed study of natural lightning while his apparatus, which would imitate it, was being constructed. He learned a great deal about the characteristics of the various kinds of discharges.

The gods of the natural lightning may have become a bit jealous of this individual who was undertaking to steal their thunder, as Prometheus had stolen fire, and sought to punish him by wrecking his fantastic looking structure. It was badly damaged, and narrowly escaped destruction, by a bolt of lightning, not one that made a direct hit but one that struck ten miles away.

The blast hit the laboratory at the exact time, to the split second, that Tesla predicted it would. It was caused by a tidal wave of air coming from a particular type of lightning discharge. Tesla tells the story in an unpublished report. He stated:

I have had many opportunities for checking this value by observation of explosions and lightning discharges. An ideal case of this kind presented itself at Colorado Springs in July 1899 while I was carrying on tests with my broadcasting power station which was the only wireless plant in existence at that time.

A heavy cloud had gathered over Pikes Peak range and suddenly lightning struck at a point just ten miles away. I timed the flash instantly and upon making a quick computation told my assistants that the tidal wave would arrive in 48.5 seconds. Exactly with the lapse of this time interval a terrific blow struck the building which might have been thrown off the foundation had it not been strongly braced. All the windows on one side and a door were demolished and much damage done in the interior.

Taking into account the energy of the electric discharge and its duration, as well as that of an explosion, I estimated that the concussion was about equivalent to that which might have been produced at that distance by the ignition of twelve tons of dynamite.

The experimental station which Tesla erected was an almost square barnlike structure nearly one hundred feet on each side. The sides were twenty-five feet high, and from them the roof sloped upward toward the center. From the middle of the roof rose a skeleton pyramidal tower made of wood. The top of this tower was nearly eighty feet above the ground. Extensions of the slanting roof beams extended outward to the ground to serve as flying buttresses to reinforce the tower. Through the center of the tower extended a mast nearly two hundred feet high, at the top of which was mounted a copper ball about three feet in diameter. The mast carried a heavy wire connecting the ball with the apparatus in the laboratory. The mast was arranged in sections so that it could be disjointed and lowered.

There were many pieces of apparatus in the building, and many forms and sizes of his Tesla coils, or high-frequency current transformers. The principal device was his "magnifying transmitter." This was merely a very large Tesla coil. A circular fence-like wall seventy-five feet in diameter was built in the large central room of the structure, and on this were wound the turns of the giant primary coil of the magnifying transmitter. The secondary

was a coil about ten feet in diameter, of about seventy-five turns of wire wound on a cylindrical skeletonized framework of wood. It had a vertical length of about ten feet and was mounted in the center of the room several feet above the floor. In the center of this coil was the bottom part of the mast. The roof above this portion of the room could be slid outward in two sections, so that no material came within a long distance of the mast and its wire conductor within the lower third of the distance above the ground.

One of the first problems Tesla sought to solve when he began his researches in the mountains of Colorado was whether the earth was an electrically charged body. Nature is usually very generous in her response when scientists ask her, in their experiments, questions of first magnitude. Tesla not only received a very satisfactory answer to his question but in addition a revelation of tremendous importance, an unveiling of a secret of Nature's operations which places in the hands of man a means of manipulating electrical forces on a terrestrial scale.

It was desirable for Tesla to learn whether the earth was electrically charged for the same reason that a violinist would want to know whether the strings of his instrument lay loose and inert across the bridge or whether they were tense and taut so that they would produce a musical note if plucked, or a football player would want to know if the pigskin were inflated or limp.

If the earth were uncharged, it would act as a vast sink into which electricity would have to be flowed in tremendous amounts to bring it to the state in which it could be made to vibrate electrically. An uncharged earth would somewhat complicate Tesla's plans. He quickly discovered that the earth is charged to an extremely high potential and is provided with some kind of a mechanism for maintaining its voltage. It was while determining this fact that he made his second big discovery.

Tesla made the first announcement of his discovery shortly after his return to New York in an amazing article in the Century of June, 1900, but the story is best told by Tesla in an article in the Electrical world and Engineer, May 5, 1904:

In the middle of June, while preparations for other work were going on, I arranged one of my receiving transformers with the view of determining in a novel manner, experimentally, the electrical potential of the globe and studying its periodic and casual fluctuations. This formed part of a plan carefully mapped out in advance

A highly sensitive, self restorative device, controlling a recording instrument, was included in the secondary circuit, while the primary was connected to the ground and the secondary to an elevated terminal of adjustable capacity. The variations of electrical potential gave rise to electrical surgings in the primary; these generated secondary currents, which in turn affected the sensitive device and recorder in proportion to their intensity.

The earth was found to be, literally, alive with electrical vibrations, and soon I was deeply absorbed in this interesting investigation. No better opportunity for such observations as I intended to make could be found anywhere.

Colorado is a country famous for the natural displays of electric force. In that dry and rarefied atmosphere the sun's rays beat on objects with fierce intensity. I raised steam to a dangerous pressure, in barrels filled with concentrated salt solution and the tinfoil coating of some of my elevated terminals shrivelled in the fiery blaze. An experimental high tension transformer, carelessly exposed to the rays of the setting sun, had most of its insulating compound melted and was rendered useless.

Aided by the dryness and rarefaction of the air, the water evaporates as in a boiler, and static electricity is generated in abundance. Lightning discharges are, accordingly, very frequent and sometimes of inconceivable violence. On one occasion approximately 12,000 discharges occurred within two hours, and all in the radius of certainly less than 50 kilometers [about 30 miles] from the laboratory. Many of them resembled gigantic trees of fire with the trunks up or down. I never saw fireballs, but as a compensation for my disappointment I succeeded later in determining the mode of their formation and producing them artificially.

In the latter part of the same month I noticed several times that my instruments were affected stronger by discharges taking place at great distances than by those

near by. This puzzled me very much. what was the cause? A number of observations proved that it could not be due to differences in the intensity of individual discharges and I readily ascertained that the phenomenon was not the result of a varying relation between the periods of my receiving circuits and those of the terrestrial disturbances.

One night as I was walking home with an assistant, meditating over these experiences, I was suddenly staggered by a thought. Years ago when I wrote a chapter of my lecture before the Franklin Institute and the National Electric Light Association, it had presented itself to me, but I dismissed it as absurd and impossible. I banished it again. Nevertheless, my instinct was aroused and somehow I felt that I was nearing a great revelation.

It was on the 3rd of July [1899]--the date I shall never forget--when I obtained the first decisive experimental evidence of a truth of overwhelming importance for the advancement of humanity.

A dense mass of strongly charged clouds gathered in the west and toward evening a violent storm broke loose which, after spending much of its fury in the mountains, was driven away with great velocity over the plains. Heavy and long persistent arcs formed almost in regular time intervals. My observations were now greatly facilitated and rendered more accurate by the experiences already gained. I was able to handle my instruments quickly and I was prepared. The recording apparatus being properly adjusted, its indications became fainter and fainter with increasing distance of the storm, until they ceased altogether.

I was watching in eager expectation. Surely enough, in a little while the indications again began, grew stronger and stronger, and, after passing through a maximum, gradually decreased and ceased once more. Many times, in regularly recurring intervals, the same actions were repeated until the storm which, as evident from simple computations, was moving with nearly constant speed, had retreated to a distance of about 300 kilometers [about 180 miles]. Nor did these strange actions stop then, but continued to manifest themselves with undiminished force.

Subsequently similar observations were also made by my assistant, Mr. Fritz Lowenstein, and shortly afterward several admirable opportunities presented themselves which

brought out, still more forcibly and unmistakably, the true nature of the wonderful phenomenon. No doubt whatever remained: I was observing stationary waves.

As the source of the disturbances moved away the receiving circuit came successively upon their nodes and loops. Impossible as it seemed, this planet, despite its vast extent, behaved like a conductor of limited dimensions. The tremendous significance of this fact in the transmission of energy by my system had already become quite clear to me.

Not only was it practicable to send telegraphic messages to any distance without wires, as I recognized long ago, but also to impress upon the entire globe the faint modulations of the human voice, far more still, to transmit power, in unlimited amounts to any terrestrial distance and almost without loss.

To get a more familiar picture of the problem that Tesla tackled in seeking to determine if the earth were charged and if it could be set into electrical vibration, one can visualize the difference between a bath tub that is empty and one that contains water. The uncharged earth would be like an empty tub; the charged earth like one containing water. It is easy to produce waves in the tub containing the water. By placing one's hand in the water and moving it back and forth, lengthwise, a short distance at the right rhythm, the water is soon rushing back and forth in a wave whose amplitude grows at a tremendously rapid rate until, if the hand motion is continued, the water may splash as high as the ceiling.

The earth can be visualized as an extremely large container holding a fluid; and in the center is a small plunger arrangement which can be moved tip and down a short distance in the proper rhythm. The waves travel to the edge of the container and are reflected back to the center, from which they again go outward re-enforced by the movement of the plunger.

The reaction between the outgoing and incoming waves, both in resonance with the medium in which they are traveling, causes stationary waves to be produced on the water, the surface having the appearance of a single series of waves frozen in a fixed position.

In Tesla's experiments the lightning discharges that played the part of the plunger causing the waves were moving rapidly to the eastward, and they carried the whole series of fixed, or stationary, waves with them. The measuring device remained fixed so the wave series, with its loops and nodes, moved past it, causing the measured potentials to rise and fall.

The experiment not only demonstrated that the earth was filled with electricity, but that this electricity could be disturbed so that rhythmic vibrations could be struck, resonance could be produced, causing effects of tremendous magnitude. Soldiers marching in unison across a bridge and wrecking it by the resulting vibration would again be a case in point.

Tesla produced the spectacular effects of extremely high potentials and high frequency by producing electrical resonance in his circuits--by tuning the electricity--and now he had discovered that he would be able to produce, easily, the same effect in the earth as if it were a single condenser and coil combined, a pure electrical resonating unit, by charging and discharging it rhythmically with his high-frequency, high-potential oscillations.

In this magnificent experiment Tesla the superman was at his best; the boldness of his undertaking fired the imagination, and the success he achieved should have earned for him undying fame.

Eventually, the giant coils with their banks of condensers and other apparatus in, the Colorado laboratory were ready for use in full-scale experiments. Every piece of equipment was thoroughly inspected and tested by Tesla and the moment had finally arrived for the critical test of the highest voltage experiment that had ever been made. He expected to top his own earlier records one hundred times over, and to produce tens of thousands of times higher voltages than ever had been produced in the high-voltage transmission lines at Niagara Falls.

There was not the faintest shadow of doubt in Tesla's mind as to whether his giant oscillator would work. He knew it would work, but he also knew that he was going to produce millions of volts and tremendously heavy currents; and neither he nor anyone else knew how these terrific explosions of electrical energy would act. He knew that he

had planned the experiment so that the first bolts of man-made lightning ever created would shoot from the top of the 200-foot-tall mast.

Tesla asked Kolman Czito, who had worked with him for many years in his laboratories in New York, to preside at the switch-board through which current was brought into the laboratory from the powerhouse of the Colorado Springs Electric Company by an overhead transmission line two miles long.

"when I give you the word," said Tesla to Czito, "you close the switch for one second--not longer."

The inventor took a position near the door of the laboratory from which he could view the giant coil in the center of the great barnlike room--but not too close to it, for a stray bolt of his own lightning might inflict a painful burn. From the point where he stood he could look upward toward the open roof and see the three-foot copper ball on top of the slender 200-foot mast that had its base in the center of the cagelike secondary coil. A quick visual survey of the situation, and Tesla gave the signal--"Now."

Czito jammed home the switch and as quickly pulled it out. In that brief interval the secondary coil was crowned with a mass of hairlike electrical fire, there was a crackling sound in various parts of the room and a sharp snap far overhead.

"Fine," said Tesla, "the experiment is working beautifully. we will try it again in exactly the same way. Now!"

Again Czito jammed home the switch for a second and opened it. Again the plumes of electrical fire came from the coil, minor sparks crackled in all parts of the laboratory and the very sharp snap came through the open roof from far overhead.

"This time," said Tesla, "I am going to watch the top of the mast from the outside. when I give you the signal I want you to close the switch and leave it closed until I give you the signal to open it." So saying, he started for the near-by open door.

Reaching a point outside from which he could see the copper ball on top of the needlelike mast, Tesla called through the door, "Czito, close the switch--Now!"

Czito again jammed the switch closed and jumped back--but held his arm extended to yank open the blades quickly should he receive an emergency signal. Nothing much had happened on the quick-contact closing, but now the apparatus would be given an opportunity to build up its full strength and no one knew what to expect. He knew that the apparatus would draw a very heavy current through a primary coil that looked like a "short circuit," and he knew that short circuits could be very destructive if the current was allowed to continue to flow. The switchboard could become a scene of interesting activity if any thing let go. Czito expected the quick flash and explosive blast of a short circuit a second or two after the switch was closed. Several seconds passed with no short circuit.

As soon as the switch was closed there came again the same crackling sound, the same snap high in the air that he had heard before. Now it was followed by a tremendous upsurge of sound. The crackling from the coil swelled into a crescendo of vicious snaps. From above the roof the original staccato snap was followed by a sharper one--and by another that was like the report of a rifle. The next was still louder. They came closer together like the rattle of a machine gun. The bang high in the air became tremendously louder; it was now the roar of a cannon, with the discharges rapidly following each other as if a gigantic artillery battle was taking place over the building. The sound was terrifying and the thunder shook the building in most threatening fashion.

There was a strange ghostly blue light in the great barnlike structure. The coils were flaming with masses of fiery hair. Everything in the building was spouting needles of flame, and the place filled with the sulphurous odor of ozone, fumes of the sparks, which was all that was needed to complete the conviction that hell was breaking loose and belching into the building.

As Czito stood near the switch he could feel and see the sparks jump from his fingers, each pricking like a needle stuck into his flesh. He wondered if he would be able to reach for the switch and turn off the power that was creating this electrical pandemonium--would the sparks

become longer and more powerful if he approached the switch? Must this head-splitting racket go on forever? It's getting worse, that tremendous ear-wrecking bang, bang, bang overhead. why doesn't Tesla stop it before it shakes down the building? Should he open the switch of his own accord? Maybe Tesla has been hit, perhaps killed, and can't give orders to open the switch!

It seemed to Czito that the demonstration had been going on for an hour but as a matter of fact it had lasted thus far for only a minute; nevertheless, a tremendous amount of activity had been crowded into that short space of time.

Outside stood Tesla, properly attired in cutaway coat and black derby hat for the auspicious occasion, his slender six-foot-two figure bearing signs of close relationship to the mastlike rod sticking out of his bizarre barnlike structure. His height was increased by a one-inch-thick layer of rubber on the soles and heels of his shoes, used as electrical insulation.

As he gave the switch-closing "Now" signal to Czito, he turned his eyes heavenward to the ball on top of the mast. He had hardly spoken when he saw a short hairlike spark dart from the ball. It was only about ten feet long, and thin. Before he had time to be pleased, there was a second and a third and a fourth spark, each longer, brighter and bluer than its predecessor.

"Ah!" ejaculated Tesla, forgetting to close his mouth that was widely opened for a shout. He clenched his hands for joy and raised them skyward toward the top of the mast.

More sparks! Longer and longer! Ten, twenty, thirty, forty, fifty, sixty, seventy, eighty feet. Brighter and bluer! Not thread-like sparks now but fingers of fire. Wriggling rods of flame that lashed viciously into the heavens. The sparks were now as thick as his arm as they left the ball.

Tesla's eyes almost popped out of his head as he saw full-fledged bolts of lightning darting into the air, accompanied by a barrage of tremendous crashes of thunder. Those lightning bolts were now half again the length of the building, more than 135 feet long, and the thunder was being heard in Cripple Creek fifteen miles away.

Suddenly--silence!

Tesla rushed into the building.

"Czito! Czito! Czito! why did you do that? I did not tell you to open the switch. Close it again quickly!"

Czito pointed at the switch. It was still closed. He then pointed at the voltmeter and ammeter on the switchboard. The needles of both of them registered zero.

Tesla sized up the situation instantly. The incoming wires carrying power to the laboratory were "dead."

"Czito," he snapped, "call up the powerhouse quickly. They must not do that. They have cut off my power".

The telephone call was put through to the powerhouse. Tesla grabbed the phone and shouted into it:

"This is Nikola Tesla. you have cut off my power! you must give me back power immediately! you must not cut off my power."

"Cut off your power, nothing," came the gruff reply from the other end of the line. "you've thrown a short circuit on our line with your blankety-blank-blank experiments and wrecked our station. you've knocked our generator off the line and she's now on fire. you won't get any more power!"

Tesla had built his apparatus substantially, so that it would be able to carry the tremendously heavy currents he expected to draw off the line. while his own equipment was able to stand what amounted to a heavy short circuit, he had overloaded the generator at the Colorado Springs Electric Company powerhouse, which tried manfully to carry the added burden--but the heavy surge of current was too much for the dynamo that was not designed to stand such heavy overloads. Its wires became hotter and hotter, and finally the insulation took fire and the copper wire in the armature coils melted like wax, opening its circuits so that it ceased to generate electricity.

The powerhouse had a second, standby, generator which was started up in a short time. Tesla was insistent that he be supplied with current from this machine as soon as it was running, but his demand was refused. In the future, he was told, he would be supplied with current from a dynamo

operated independently from the one supplying the Company's regular customers. The independent dynamo, he was told, would be the one that was already burned out--and he would get no service until it was repaired. Tesla offered to pay the cost of an extra-special rush job on the repairs if he were permitted to handle the work. Alternating-current dynamos were no mystery to him. Taking his workers from the laboratory to the powerhouse he soon had the repair job under way, and in less than a week the dynamo was again operating.

A lightning stroke produces its spectacular pyrotechnics and earthvibrating effects with less than a nickel's worth of electricity--at a five-cent-a-kilowatt hour rate, which is somewhat less than the average household rate for current. It consists of tremendously heavy currents, many thousands of amperes at millions of volts, but it lasts only a few millionths of a second. If supplied with this "nickel's worth" of current continuously, the lightning flash would last indefinitely.

Tesla, in his Colorado Springs laboratory, was pumping a steady flow of current worth, at the above rate, about $15.00 an hour into the earth. In an hour he charged the earth with several hundred times as much electrical energy as is contained in a single lightning stroke. Owing to resonance phenomena, he could build up electrical effects in the earth greatly exceeding those of lightning since it was only necessary, once resonance was established, to supply energy equal to frictional losses, in order to maintain this condition.

In describing his work with the giant oscillator, Tesla, using conservative estimates of his results, stated in his article in the Century Magazine of June, 1900:

However extraordinary the results shown may appear, they are but trifling compared with those attainable by apparatus designed on these same principles. I have produced electrical discharges the actual path of which, from end to end, was probably more than 100 feet long; but it would not be dificult to reach lengths 100 times as great.

I have produced electrical movements occurring at the rate of approximately 100,000 horsepower, but rates of one, five or ten million horsepower are easily practicable. In these

experiments effects were developed incomparably greater than ever produced by any human agencies, and yet these results are but an embryo of what is to be.

The method used by Tesla to set the earth in electrical oscillation is the electrical counterpart of the mechanical device previously described, the plunger bobbing up and down at the right rhythm that created the stationary waves in the water.

Tesla used a stream of electrons which were pumped into and drawn out of the earth at a rapid rhythmic rate. At the time the experiments were made, the electron still was not known to be the fundamental atom of electricity, so the operation was spoken of simply as the flow of electricity.

The pumping operation was carried on at a rate of 150,000 oscillations per second. These would produce electrical pulsations with a wavelength of 2,000 meters (about 6,600 feet).

when the moving waves expanded outward from Colorado Springs, they traveled in all directions in ever increasing circles until they passed over the bulge of the earth, and then in ever smaller circles and with increasing intensity converged on the diametrically opposite point of the earth, a trifle to the west of the two French Islands, Amsterdam and St. Paul, in the area between the Indian and Antarctic Oceans midway between the southern tip of Africa and the southwest corner of Australia. Here a tremendous electrical south pole was built up, marked by a wave of great amplitude that rose and fell in unison with Tesla's apparatus at its north pole in Colorado Springs. As this wave fell, it sent back an electrical echo which produced the same effect at Colorado Springs. Just as it arrived back at Colorado Springs, the oscillator was working to build up a wave that would re-enforce it and send it back more powerfully than before to the antipode to repeat the performance.

If there were no losses in this operation--if the earth were a perfect electrical conductor, and there were no other sources of resistance--this resonance phenomenon would build up to a destructive action of gigantic proportions, even with the charging source of only about 300 horsepower which Tesla used. Voltages of gigantic magnitudes would be built up. Charged particles of matter

would be hurled outward from the earth with vast energies, and eventually even the solid matter of the earth would be affected and the whole planet disintegrated. Pure resonance, however, is not attainable. Tesla frequently stressed the fortunate nature of this fact; for otherwise disastrous results could be produced by small amounts of energy. The electrical resistance of the globe would prevent the attainment of pure resonance; but practical resonance can be attained with safety by supplying continuously the amount of energy lost in resistance--and this supplies perfect control of the situation.

with the earth set in electrical oscillation, a source of energy is provided at all spots on the earth. This could be drawn off and made available for use by a suitable simple apparatus which would contain the same elements as the tuning unit in a radio set, but larger (a coil and a condenser), a ground connection and metal rod as high as a cottage. Such a combination would absorb, at any point on the earth's surface, energy from the waves rushing back and forth between the electrical north and south poles created by the Tesla oscillators. No other equipment would be needed to supply light to the home, provided with Tesla's simple vacuum-tube lamps, or to produce heating effects. (For the operation of ordinary-type motors, a frequency changer would be needed. Tesla, indeed, developed ironless motors that would operate on high-frequency currents, but they could not compete in efficiency with motors operated on low-frequency currents. Frequency transformation, however, is now a very practical operation.)

The apparatus that Tesla used to charge the earth is very simple in principle. In its elementary form it consists of a circuit containing a large coil and condenser of the correct electrical dimensions to give it the desired frequency of oscillation, a source of electric current for energizing the circuit, and a step-up transformer, also tuned, for increasing the voltage.

The current of a few hundred volts obtained from the powerhouse was stepped up by an ordinary iron box transformer to more than 30,000 volts and at this potential was fed into a condenser which, when filled, discharged into the coil connected across its terminals. The rate of the back-and-forth surge of current from condenser into coil and coil back to condenser, in endless repetition, is determined by the capacity of the condenser for holding

current and the length, or inductance, of the coil through which the discharge must travel. An arc between the joint terminals of condenser and coil completed the free oscillating path of the high-frequency current.

In an oscillating circuit the current is at zero value at the start of each cycle, rises to a high value and drops to zero again at the end of each half cycle. The voltage does the same. Both build up to high values at the midpoint of each half cycle.

The coil through which the current flows is surrounded by a magnetic field produced by the current. with heavy current flows, these fields can become very extensive and of high intensity, particularly at the midpoint in each half cycle.

The primary coil, or energizing circuit of Tesla's oscillator, consisted of a number of turns of heavy wire mounted on a circular fence eighty feet in diameter in the great hall of his laboratory. In the space within this fenced enclosure the magnetic field built up to a crescendo of intensity with each half cycle of the current in the primary coil. As the magnetic circles of force moved to the center of the enclosure, they became more concentrated and built up a high density of energy in space in this region.

Centered in this area was another coil perfectly tuned to vibrate electrically in resonance with the crescendo of energy in which it was immersed 300,000 times per second. This coil--about ten feet in diameter, consisting of nearly one hundred turns on a cagelike frame about ten feet high--in responding resonantly, built up potentials with maximum values of more than 100,000,000 volts. No scientist has ever succeeded in building up currents with even one tenth of this potential since that time.

when the first surge of magnetic energy crashed into this coil, it caused a downward avalanche of electrons from the coil into the earth, thereby inflating the earth electrically and raising its potential. The next surge of magnetic energy was of the opposite polarity and caused a tidal wave of electrons from the earth to rush through the coil and upward to the terminal of the coil, which was the metal ball mounted on the mast 200 feet high.

The downward flood of electrons was spread over the wide area of the earth but the return upward flood was

concentrated on a small metal ball on top of the mast, upon which tremendously high potentials developed. The electrons on the ball were under explosive electrical pressure and were forced to escape. They made a spearpoint of attack on the surrounding air, broke a small opening, and through this rushed uncounted billions of billions of electrons, their mad stampede rendering their path through the air incandescent for a distance of scores of feet--in other words, producing a flash of lightning.

Having thus succeeded in making the earth oscillate as if it were a piece of laboratory apparatus, Tesla would now proceed to test the practical applications of his unique method of worldwide power transmission. (In describing the mode of transmission of his oscillating currents through the earth, Tesla claimed the path of the discharge was from his station directly through the center of the earth and in a straight line to the antipode, the return being by the same route, and that the current on this straight-line path traveled at its normal velocity--the speed of light. This flow, he declared, produced an accompanying surface flow of current, which was in step at the starting point and when they rejoined at the antipode; and this necessitated higher velocities in flowing over the surface of the earth. The surface velocities would be infinite at each of the antipodes, and would decrease rapidly until at the equatorial region of this axis it would travel at the normal velocity of the currents.)

The full story of Tesla's accomplishments at Colorado Springs has never been told and never will be told. He carried the records, engraved on his almost infallible memory, with him when he died. Fritz Lowenstein, a competent electrical engineer, interested in high-frequency currents, was his assistant at Colorado Springs. Tesla, however, took neither Lowenstein nor anyone else into his confidence.

It was not necessary for Tesla to write the detailed records of experiments which scientists and engineers make, as routine, of their laboratory tests. He possessed a most remarkable memory, supplemented by his strange power of visualizing again, in their full aspects of reality, any past events. He needed no reference books, for he could quickly derive any desired formula from basic concepts; and he even carried a table of logarithms in his head. For these reasons there is a great lack of written records on

his experiments, and what is recorded is mostly of a minor nature.

Fundamental facts of great importance that he intended to develop later in a practical manner were stored in the archives of his mind to await the time when he would be able to present a practical working model of the inventions based on his discoveries. He had no fear that he would be anticipated by others because he was so far in advance of his contemporaries that he could safely bide his time for developing his ideas.

It was Tesla's intention to make the development of his discoveries a one-man job. He was completely confident, at this time, of his ability to live a century and a quarter, and to be actively engaged in creative experimental work up to at least his one-hundredth birthday, at which time he would give serious thought to the task of writing his biography and a complete record of his experimental work. Up to almost his eightieth year he adhered to this plan without doubt as to its ultimate consummation.

As a result of this most unfortunate design, technical details are lacking concerning the principal discoveries made at Colorado Springs. By piecing together the fragmentary material published in a number of publications, however, it appears evident that Tesla, in addition to experiments with his gigantic current movements, as a means of establishing world-wide broadcasts and making a number of detectors for such use, tested his power transmission system at a distance of twenty-six miles from his laboratory and was able to light two hundred incandescent lamps, of the Edison type, with electrical energy extracted from the earth while his oscillator was operating. These lamps consumed about fifty watts each; and if two hundred were used in the test bank, the energy consumed would be 10,000 watts, or approximately thirteen horsepower.

Transmission of thirteen horsepower wirelessly through the earth for a distance of twenty-six miles can be accepted as a very adequate demonstration of the practicability of Tesla's plan. He claimed an efficiency of higher than 95 per cent for this method of energy transmission; so he could, undoubtedly, with a 300 horsepower oscillator, operate more than a dozen such test demonstrations simultaneously anywhere on the globe. with respect to the latter point he stated, "In this new system it matters

little--in fact, almost nothing--whether the transmission is effected at a distance of a few miles, or of a few thousand miles."

"while I have not as yet," he stated in the Century article of June, 1900, "actually effected a transmission of a considerable amount of energy, such as would be of industrial importance, to a great distance by this new method, I have operated several model plants under exactly the same conditions which will exist in a large plant of this kind, and the practicability of the system is thoroughly demonstrated."

Tesla was insistent, in his latter decades, on the existence, the actuality, the importance and availability of many undisclosed discoveries which he made at Colorado Springs. The author urged upon Tesla two or three times the desirability of making a disclosure, against the ever present danger of an accident that might cause them to be lost to the world; and when the inventor was unimpressed by this possibility, he was asked to permit the author to do something that would bring about their practical development. Tesla was courteously appreciative of the interest manifested, but he was very emphatic in his insistence that he would handle his own affairs as he saw fit, and that he expected shortly to have adequate funds to develop his inventions.

Tesla returned to New York, in the fall of 1899, broke once more, but with the knowledge that his efforts had greatly enriched humanity with important scientific discoveries. yet even more important was the new attitude his work had made possible: man had achieved a method through which he could control his gigantic planet, could look upon this heavenly body from the godlike vantage point in which he could view it as a piece of laboratory apparatus to be manipulated as he willed.

The pictures which Tesla brought back to New York showing the gigantic electrical discharges from his oscillator, and the stories he related of his experiences, created a tremendous impression in his circle of friends. It was then that Robert Underwood Johnson, one of the editors of the Century Magazine, at whose home in Madison Avenue, in the exclusive Murray Hill section, Tesla was a frequent and informal visitor, requested the inventor to write an article telling of his accomplishments.

when the article was written, Johnson returned it, telling Tesla he had served a mess of cold philosophical stones instead of a dish of hot throbbing facts. The inventor had made but scant reference to his recent astounding accomplishments, but developed instead a philosophical system in which the progress of humanity was viewed as purely a mechanical process, activated by the sources of energy available. Three times the article went back to Tesla and was as many times rewritten, despite the high literary quality of the work on each occasion.

The article, which carried the title "The Problem of Increasing Human Energy," created a sensation. Among those whose interest it aroused was J. Pierpont Morgan--a most fortunate circumstance for Tesla. The great financier had a soft spot for geniuses, and Tesla was a perfect example of the species.

Morgan the financier was famous, but Morgan the philanthropist, a greater personality, was to the general public non-existent, so carefully guarded against publicity were his benefactions. In this he was not always completely successful for there are, of necessity, two parties to a benefficence, the giver and the receiver; and the pride and gratitude of the latter can develop into a weak spot in the shell of secrecy.

Tesla was invited to Morgan's home and quickly became a favorite with the family. His record of accomplishment which promised still greater achievements in the future, his pleasant personality, his high moral standards of conduct, his celibate manner of life and his manner of subordinating himself to his work, his boylike enthusiasm, were factors that caused him to be admired not only by Morgan but by all others who knew him well.

Morgan made inquiries of Tesla concerning his financial structure. There were, in those days, a limited number of strong financial groups who were playing a terrestrial game of chess with the world's economic resources; the discoveries of a genius like Tesla might well have a profound effect on the destinies of one or more of these groups, and it would be well for an operator in this field to know more of the inventor's commitments. Undoubtedly, it was a source of surprise and satisfaction to Morgan when he

learned that Tesla was a lone operator and now entirely without funds needed to carry on his researches.

Morgan knew well the inestimable value of Tesla's polyphase alternating-current system. The Niagara development was a Morgan enterprise, and gigantic plans were being builded on its already proven success. The man who laid the scientific and engineering foundation for this new and profitable industrial electrical era was broke and engaged in developing a new source of power distribution. He had supplanted Edison's half-mile power pygmy with a giant having a thousand-mile range, and now he was working on a system which experiments had shown could distribute power wirelessly to the ends of the earth with but a small fraction of the losses of the Edison system in distributing power by wire for half a mile, and could even send current around the earth cheaper than his own alternating-current system could distribute it at a distance of one hundred miles. The economic implications of this development staggered the imagination. what effect would it have on the chess game being played by the world's financial groups?

would the new wireless-distribution-of-power system fit into the existing economic and financial structure? Could it be usefully applied without derangements of greater magnitude than the benefits it would produce? If it were adopted for development, who would be best suited to control it? Could it be controlled in a practical way when any spot on earth would be an outlet for an unlimited reservoir of power for anyone who cared to tap it with a simple device? How could compensation be collected for the service rendered?

These were some of the most obvious aspects of Tesla's world power system that would instantly present themselves to the practical mind of Morgan. In addition, Tesla was proposing a world-wide broadcasting system for distributing news, entertainment, knowledge, and a host of other interesting items. Morgan could well understand the practical aspects of wireless communication in which a charge could be made for transmitting messages from point to point, which was a part of the Tesla system--but, to the inventor's way of thinking, only a minor part compared to the more important broadcasting and power-distribution systems.

A Morgan would understand that ingenious minds could work out some method for placing such world-wide services on a practical profit-paying basis; but this whole new Tesla development had a fantastical aspect that was upsetting to so-called "practical" minds not accustomed to thinking first-magnitude thoughts. The new system might prove more important than the polyphase system which went as a record-breaking bargain to Westinghouse for $1,000,000. Westinghouse was then the most powerful competitor of the Edison system which Morgan had backed, and particularly of the General Electric Company whose financing Morgan had arranged. Although Westinghouse secured a monopoly, means were found for causing him to share it, by a license agreement, with the General Electric Company, so the Morgan company had equal opportunities to exploit the rich market.

History might now be repeating itself with the same inventor, who now had a hypersuperpower system to supplant his own superpower system. In this case Morgan could place himself in a position to seize the monopoly of world power.

The group holding a monopoly control over such a system could develop it, or not develop it, as it saw fit; it could be developed to produce a profit by supplanting or supplementing the satisfactory wire distribution system, or it could be put on the shelf to prevent it from interfering with the existing system. A monopoly of it could prevent any other group from securing it and using it as a club to force concessions from those controlling existing enterprises. Ownership of the Tesla world-power and world-broadcasting patents might well prove an extremely profitable investment even if a very high price were paid for them.

But there was also a more subtle viewpoint. without a strong backing by a powerful source of capital, a world-wide system such as Tesla proposed could never be brought into operating existence. If a powerful group had an opportunity to get in on the ground floor and secure monopoly control and failed to do so, and let it become apparent that this was done intentionally, the effect of such a decision could easily result in scaring off any other groups and effectually preventing anyone from ever backing the system.

Morgan, however, in his contacts with Tesla, brought no commercial or practical aspects into the situation. His

interest was entirely that of a patron seeking to aid a genius to express his creative talents. He made gifts to Tesla to which there were no strings attached. The inventor could use the money as he saw fit. No definite information is available as to the amount of those contributions, but an authoritative source, close to Tesla, fixes the amount which he received within a very short period at $150,000. Later contributions, spread over a long period of years, are believed to have brought the total to double this amount.

Tesla made no secret of Morgan's support. He stated, in the article in the Electrical world and Engineer, published March 5, 1904, describing his wireless power work up to that time:

"For a large part of the work which I have done so far I am indebted to the noble generosity of Mr. J. Pierpont Morgan, which was all the more welcome and stimulating, as it was extended at a time when those, who have since promised most, were the greatest of doubters."

when Morgan made his first contribution, the rumor got into circulation that he was financially interested in the enterprise upon which Tesla now embarked. The resulting situation contained some elements of usefulness for Tesla because of the tremendous prestige of the financier. when, however, Tesla later found himself critically in need of funds, and it became apparent that Morgan was not financially involved in the project and apparently was not coming to the rescue of the inventor, then the reaction set in and the situation became distinctly and definitely unsatisfactory.

In 1900, however, Tesla had $150,000 on hand and a gigantic idea to be put into operation. The world-shaking superman, riding his tidal wave of fame and popularity, set to work.

THE year 1900 marked to Tesla not only the opening of a new century but also the beginning of the world-superpower and radio-broadcasting era. With the encouragement of J. P. Morgan to spur him on--if he could accommodate any more spurring than his own inner drive furnished--and with $150,000 in cash from the same source, he was set to embark

upon a gigantic venture, the building of a world wireless-power and a world broadcasting station.

The cash on hand would be totally inadequate to finance the project to completion, but this did not deter him from making a start. He needed a laboratory both to replace the Houston Street establishment, which had become entirely inadequate, and to include equipment of the type employed at Colorado Springs, but designed for use in the actual world-broadcasting process. The location was determined as the result of an arrangement he made with James S. Warden, manager and director of the Suffolk County Land Company, a lawyer and banker from the West who had acquired two thousand acres of land at Shoreham, in Suffolk County, Long Island, about sixty miles from New York. The land was made the basis of a real-estate development under the name Wardencliff.

Tesla visualized a power-and-broadcasting station which would employ thousands of persons. He undertook the establishment, eventually, of a Radio City, something far more ambitious than the enterprise in Rockefeller Center in New York which bears this name today. Tesla planned to have all wavelength channels broadcast from a single station, a project which would have given him a complete monopoly of the radio-broadcasting business. What an opportunity near-sighted businessmen of his day overlooked in not getting in on his project! But in that day Tesla was about the only one who visualized modern broadcasting. Everyone else visualized wireless as being useful only for sending telegraphic communications between ship and shore and across the ocean.

Mr. Warden saw possibilities of a sort in Tesla's plan, however, and offered him a tract of two hundred acres, of which twenty acres were cleared, for his power station, with the expectation that the two thousand men who would shortly be employed in the station would build homes on convenient sites in the remainder of the 2,000-acre tract. Tesla accepted.

Stanford White, the famous designer of many churches and other architectural monuments throughout the country, was one of Tesla's friends. He now disclosed to the famous architect his vision of an industrial "city beautiful" and sought his co-operation in realizing his dream. Mr. White was enthusiastic about the idea and, as his contribution to

Tesla's work, offered to underwrite the cost of designing the strange tower the inventor sketched, and all of the architectural work involved in the general plan for the city. The actual work was done by W. D. Crow, of East Orange, N. J., one of Mr. White's associates, who later became famous as a designer of hospitals and other institutional buildings.

It was a fantastic-looking tower, with strange structural limitations, which Mr. Crow found himself designing. Tesla required a tower, about 154 feet high, to support at its peak a giant copper electrode 100 feet in diameter and shaped like a gargantuan doughnut with a tubular diameter of twenty feet. (This was later changed to a hemispherical electrode.)

The tower would have to be a skeletonized structure, built almost entirely of wood, metal to be reduced to an utter minimum and any metal fixtures employed to be of copper. No engineering data were available on wood structures of this height and type.

The structure Tesla required had a large amount of "sail area," or surface exposed to wind, concentrated at the top, creating stresses that had to be provided for in a tower that itself possessed only limited stability. Mr. Crow solved the engineering problems and then the equally diffcult task of incorporating esthetic qualities in such an edifice.

When the design was completed another diffculty was encountered. None of the well-known builders could be induced to undertake the task of erecting the tower. A competent framer, associated with Norcross Bros., who were a large contracting firm in those days, finally took over the contract, although he, too, expressed fears that the winter gales might overturn the structure. (It stood, however, for a dozen years. When the Government, for military reasons decided it was necessary to remove this conspicuous landmark during the First World War, heavy charges of dynamite were necessary in order to topple it, and even then it remained intact on the ground like a fallen Martian invader out of Wells' War of the Worlds.) The tower was completed in 1902, and with it a large low brick building more than 100 feet square which would provide quarters for the powerhouse and laboratory. While the structures were being built, Tesla commuted every day

from the Waldorf-Astoria to Wardencliff, arriving at the near-by Shoreham station shortly after eleven am and remaining until three-thirty. He was always accompanied by a man servant, a Serbian, who carried a heavy hamper filled with food. When the laboratory transferred from Houston Street was in full operation at Wardencliff, Tesla rented the Bailey cottage near the Long Island Sound shore and there made his home for a year.

The heavy equipment, the dynamos and motors, that Tesla desired for his plant were of an unusual design not produced by manufacturers, and he encountered many vexatious delays in securing such material. He was able to carry on a wide range of high-frequency current and other experiments in his new laboratory, but the principal project, that of setting up the worldwide broadcasting station, lagged. Meanwhile, he had a number of glass blowers making tubes for use in transmitting and receiving his broadcast programs. This was a dozen years before De Forest invented the form of radio tube now in general use. The secret of Tesla's tubes died with him.

Tesla seemed to be entirely fearless of his high-frequency currents of millions of volts. He had, nevertheless, the greatest respect for the electric current in all forms, and was extremely careful in working on his apparatus. When working on circuits that might come "alive," he always worked with one hand in his pocket, using the other to manipulate tools. He insisted that all of his workers do likewise when working on the 60-cycle low-frequency alternating-current circuits, whether the potential was 50,000 or 110 volts. This safeguard reduced the possibility of a dangerous current finding a circuit through the arms across the body, where there was chance that it might stop the action of the heart.

In spite of the great care which he manifested in all of his experimental work, he had a narrow escape from losing his life at the Wardencliff plant. He was making experiments on the properties of small-diameter jets of water moving at high velocity and under very high pressures, of the order of 10,000 pounds per square inch. Such a stream could be struck by a heavy iron bar without the stream being disrupted. The impinging bar would bounce back as if it had struck another solid iron bar--a strange property for a mechanically weak substance like water. The cylinder holding the water under high pressure was a heavy

one made of wrought iron. Tesla was unable to secure a wrought-iron cap for the upper surface, so he used a heavier one of cast iron, a more brittle metal. One day when he raised the pressure to a point higher than he had previously used, the cylinder exploded. The cast-iron cap broke and a large fragment shot within a few inches of his face as it went on a slanting path upward and finally crashed through the roof. The high-pressure stream of water had peculiar destructive effects on anything with which it came in contact, even tough, strong metals. Tesla never revealed the purpose or the results of these high-pressure experiments.

Tesla's insistence on the utmost neatness in his laboratory almost resulted in a tragedy through a case of thoughtlessness on the part of an assistant. Arrangements were being made for installing a heavy piece of machinery which was to be lag bolted to the thick concrete floor. Holes had been drilled in the concrete. The plan called for pouring molten lead into these holes and screwing the heavy bolts into the metal when it cooled. As soon as the holes were drilled, a young assistant starting cleaning up the debris. He not only swept up the stone chips and dust: he got a mop and thoroughly washed that area of the floor, thoughtlessly letting some of the water get into the holes. He then dried the floor. In the meantime Tesla and George Scherff, who was his financial secretary but also served in any way in which he could be helpful, were melting the lead which would hold the lag screws in the holes in the floor. Scherff took the first large ladleful of lead from the furnace and started across the laboratory to where the holes had been drilled, followed shortly by Tesla bearing another ladle.

Scherff bent down--and as he poured the hot liquid metal into one of the holes an explosion followed instantly. The molten lead was blown upward into his face in a shower of searing hot drops of liquid metal. The water which the assistant used to swab the floor had settled into the holes and, when the melted lead come in contact with it, it was changed to steam which shot the lead out of the hole like a bullet out of the barrel of a rifle. Both men were showered with drops of hot metal and dropped their ladles. Tesla, being several feet away, was only slightly injured; but Scherff was very seriously burned about the face and hands. Drops of the metal had struck his eyes and so severely

burned them that it was feared for a while that his sight could not be saved.

However, despite the almost unlimited possibilities for accidents in connection with the vast variety of experiments which Tesla conducted in totally unexplored fields, using high voltages, high amperages, high pressures, high velocities and high temperatures, he went through his entire career with only one accident in which he suffered injury. In that a sharp instrument slipped, entered his palm and penetrated through the hand. The accident to Scherff was the only one in which a member of his staff was injured, with the exception of a young assistant who developed X-ray burns. He had probably been exposed to the rays from one of Tesla's tubes which, unknown to Tesla and everyone else, had been producing them even before Roentgen announced their discovery. Tesla had given them another name and had not fully investigated their properties. This was probably the first case of X-ray burns on record.

Tesla was an indefatigable worker, and it was hard for him to understand why others were incapable of such feats of endurance as he was able to accomplish. He was willing to pay unusually high wages to workers who were willing to stick with him on protracted tasks but never demanded that anyone work beyond a reasonable day's labor. On one occasion a piece of long-awaited equipment arrived and Tesla was anxious to get it installed and operating as quickly as possible. The electricians worked through twenty-four hours, stopping only for meals, and then for another twenty-four hours. The workers then dropped out, one by one, picking out nooks in the building in which to sleep. While they took from eight to twelve hours' sleep, Tesla continued to work; and when they came back to the job Tesla was still going strong and worked with them through his third sleepless twenty-four-hour period. The men were then given several days off in which to rest up; but Tesla, apparently none the worse for his seventy-two hours of toil, went through his next day of experiments, accomplishing a total of eighty-four hours without sleep or rest.

The plant at Wardencliff was intended primarily for demonstrating the radio-broadcasting phase of his "World System"; the power-distribution station was to be built at Niagara Falls.

Tesla at this time published a brochure on his "World System" which indicates the remarkable state of advancement he had projected in the wireless art, now called radio, while other experimenters were struggling to acquire familiarity with rudimentary devices. At that time, however, his promises seemed fantastic. The brochure contained the following description of his system and his objectives:

The World System has resulted from a combination of several original discoveries made by the inventor in the course of long continued research and experimentation. It makes possible not only the instantaneous and precise wireless transmission of any kind of signals, messages or characters, to all parts of the world, but also the interconnection of the existing telegraph, telephone, and other signal stations without any change in their present equipment. By its means, for instance, a telephone subscriber here many call up any other subscriber on the Globe. An inexpensive receiver, not bigger than a watch, will enable him to listen anywhere, on land or sea, to a speech delivered, or music played in some other place, however distant. These examples are cited merely to give an idea of the possibilities of this great scientific advance, which annihilates distance and makes that perfect conductor, the Earth, available for all the innumerable purposes which human ingenuity has found for a line wire. One far reaching result of this is that any device capable of being operated through one or more wires (at a distance obviously restricted) can likewise be actuated, without artificial conductors and with the same facility and accuracy, at distances to which there are no limits other than those imposed by the physical dimensions of the Globe. Thus, not only will entirely new fields for commercial exploitation be opened up by this ideal method of transmission, but the old ones vastly extended.

The World System is based on the application of the following important inventions and discoveries:

1. The Tesla Transformer. This apparatus is, in the production of electrical vibrations, as revolutionary as gunpowder was in warfare. Currents many times stronger than any ever generated in the usual ways, and sparks over 100 feet long have been produced by the inventor with an instrument of this kind.

2. The Magnifying Transmitter. This is Tesla's best invention--a peculiar transformer specially adapted to excite the Earth, which is in the transmission of electrical energy what the telescope is in astronomical observation. By the use of this marvelous device he has already set up electrical movements of greater intensity than those of lightning and passed a current, suffcient to light more than 200 incandescent lamps, around the Globe.

3. The Tesla Wireless System. This system comprises a number of improvements and is the only means known for transmitting economically electrical energy to a distance without wires. Careful tests and measurements in connection with an experimental station of great activity, erected by the inventor in Colorado, have demonstrated that power in any desired amount can be conveyed clear across the Globe if necessary, with a loss not exceeding a few per cent.

4. The Art of Individualization. This invention of Tesla is to primitive tuning what refined language is to unarticulated expression. It makes possible the transmission of signals or messages absolutely secret and exclusive both in active and passive aspect, that is, non-interfering as well as non-interferable. Each signal is like an individual of unmistakable identity and there is virtually no limit to the number of stations or instruments that can be simultaneously operated without the slightest mutual disturbance.

5. The Terrestrial Stationary Waves. This wonderful discovery, popularly explained, means that the Earth is responsive to electrical vibrations of definite pitch just as a tuning fork to certain waves of sound. These particular electrical vibrations, capable of powerfully exciting the Globe, lend themselves to innumerable uses of great importance commercially and in many other respects.

The first World System power plant can be put in operation in nine months. With this power plant it will be practical to attain electrical activities up to ten million horsepower and it is designed to serve for as many technical achievements as are possible without undue expense. Among these the following may be mentioned:

1. Interconnection of the existing telegraph exchanges of offces all over the World;

2. Establishment of a secret and non-interferable government telegraph service;

3. Interconnection of all the present telephone exchanges or offces all over the Globe;

4. Universal distribution of general news, by telegraph or telephone, in connection with the Press;

5. Establishment of a World System of intelligence transmission for exclusive private use;

6. Interconnection and operation of all stock tickers of the world;

7. Establishment of a world system of musical distribution, etc.;

8. Universal registration of time by cheap clocks indicating the time with astronomical precision and requiring no attention whatever;

9. Facsimile transmission of typed or handwritten characters, letters, checks, etc.;

10. Establishment of a universal marine service enabling navigators of all ships to steer perfectly without compass, to determine the exact location, hour and speed, to prevent collisions and disasters, etc.;

11. Inauguration of a system of world printing on land and sea;

12. Reproduction anywhere in the world of photographic pictures and all kinds of drawings or records.

Thus, more than forty years ago, Tesla planned to inaugurate every feature of modern radio, and several facilities which have not yet been developed. He was to continue, for another twenty years, to be the only "wireless" inventor who had yet visualized a broadcasting service.

While at work on his Wardencliff radio-broadcasting plant, Tesla was also evolving plans for establishing his world power station at Niagara Falls. So sure was he of the

successful outcome of his efforts that he stated in a newspaper interview in 1903 that he would light the lamps of the coming international exposition in Paris with power wirelessly transmitted from the Falls. Circumstances, however, prevented him from making good this promise. His diffculties and his plans were outlined in a statement published in the Electrical World and Engineer, March 5, 1904:

The first of these central plants would have been already completed had it not been for unforeseen delays which, fortunately, have nothing to do with its purely technical features. But this loss of time, while vexatious, may, after all, prove to be a blessing in disguise. The best design of which I know has been adopted, and the transmitter will emit a wave complex of a total maximum activity of 10,000,000 horsepower, one percent of which is amply suffcient to "girdle the globe." This enormous rate of energy delivery, approximately twice that of the combined falls of Niagara, is obtainable only by the use of certain artifices, which I shall make known in due course.

For a large part of the work which I have done so far I am indebted to the noble generosity of Mr. J. Pierpont Morgan, which was all the more welcome and stimulating, as it was extended at a time when those, who have since promised most, were the greatest of doubters. I have also to thank my friend Stanford White, for much unselfish and valuable assistance. This work is now far advanced, and though the results may be tardy, they are sure to come.

Meanwhile, the transmission of energy on an industrial scale is not being neglected. The Canadian Niagara Power Company have offered me a splendid inducement, and next to achieving success for the sake of the art, it will give me the greatest satisfaction to make their concession financially profitable to them. In this first power plant, which I have been designing for a long time, I propose to distribute 10,000 horsepower under a tension of 10,000,000 volts, which I am now able to produce and handle with safety.

This energy will be collected all over the globe preferably in small amounts, ranging from a fraction of one to a few horsepower. One of the chief uses will be the illumination of isolated homes. It takes very little power to light a dwelling with vacuum tubes operated by high frequency

currents and in each instance a terminal a little above the roof will be suffcient. Another valuable application will be the driving of clocks and other such apparatus. These clocks will be exceedingly simple, will require absolutely no attention and will indicate rigorously correct time. The idea of impressing upon the earth American time is fascinating and very likely to become popular. There are innumerable devices of all kinds which are either now employed or can be supplied and by operating them in this manner I may be able to offer a great convenience to the whole world with a plant of no more than 10,000 horsepower. The introduction of this system will give opportunities for invention and manufacture such as have never presented themselves before.

Knowing the far reaching importance of this first attempt and its effect upon future development, I shall proceed slowly and carefully. Experience has taught me not to assign a term to enterprises the consummation of which is not wholly dependent on my own abilities and exertions. But I am hopeful that these great realizations are not far off and I know that when this first work is completed they will follow with mathematical certitude.

When the great truth accidentally revealed and experimentally confirmed is fully recognized, that this planet, with all its appalling immensity, is to electric current virtually no more than a small metal ball and that by this fact many possibilities, each baffling the imagination and of incalculable consequence, are rendered absolutely sure of accomplishment; when the first plant is inaugurated, and it is shown that a telegraphic message, almost as secret and non-interferable as a thought, can be transmitted to any terrestrial distance, the sound of the human voice, with all its intonations and inflections, faithfully and instantly reproduced at any point of the globe, the energy of a waterfall made available for supplying light, heat or motive power, anywhere on sea, or land, or high in the air--humanity will be like an ant heap stirred up with a stick: See the excitement coming.

The Niagara Falls plant was never built; and diffculties, soon enough, were encountered at the Wardencliff plant not only in securing desired equipment but also finances.

Tesla's greatest oversight was that he neglected to invent, so to speak, a device for making the unlimited quantities

of money that were necessary to develop his other inventions. As we have seen, he was utterly lacking in the phase of personality that made possible the securing of financial returns directly from his inventions. An individual with his ability could have made millions out of each of a number of Tesla's minor inventions. If he had taken the trouble, for example, to collect annual royalties on twenty or more different kinds of devices put out by as many manufacturers employing his Tesla coil for medical treatments, he would have had ample income to finance his World Wireless System.

His mind, however, was too fully occupied with fascinating scientific problems. He had, at times, nearly a score of highly skilled workmen constantly employed in his laboratory developing the electrical inventions he was continuing to make at a rapid rate. Armed guards were always stationed around the laboratory to prevent spying on his inventions. His payroll was heavy, his bank balance became dangerously low, but he was so immersed in his experimental work that he continuously put off the task of making an effort to repair his finances. He soon found himself facing judgments obtained by creditors on accounts upon which he could not make payments. He was forced, in 1905, to close the Wardencliff laboratory.

The fantastic tower in front of the laboratory was never completed. The doughnut-shaped copper electrode was never built because Tesla changed his mind and decided to have a copper hemisphere 100 feet in diameter and 50 feet high built on top of the 154-foot cone-shaped tower. A skeleton framework for holding the hemispherical plates was built, but the copper sheeting was never applied to it. The 300-horsepower dynamos and the apparatus for operating the broadcasting station were left intact, but they were eventually removed by the engineering firm that installed them and had not been paid.

Tesla opened an offce at 165 Broadway, in New York, where for a while he tried to contrive some means for reviving his project. Thomas Fortune Ryan, the well-known financier, and H. O. Havemeyer, the leading sugar refiner, aided him with contributions of $10,000 and $5,000 respectively. Instead of using these to open another laboratory, he applied them to paying off the debts on his now defunct World Wireless System. He paid off every penny due to every creditor.

When it became apparent that Tesla was in financial diffculties, many who had assumed that Morgan was financially involved as an investor in his project were disillusioned. When specific inquiries revealed that the great financier held no interest whatever in the enterprise, the rumor got into circulation that Morgan had withdrawn his support; and when no reason for such action could be learned the rumor expanded to carry the story that Tesla's system was impracticable. As a matter of fact, Morgan continued to make generous personal contributions to Tesla almost up to the time of his own death; and his son did so to a lesser extent for a short time.

Tesla made no effort to combat the growing rumors.

If Tesla could have tolerated a business manager, and had placed the development of his patents in the hands of a businessman, he could have established as early as 1896 a practical ship-to-shore, and probably a trans-oceanic wireless service; and these would have given him a monopoly in this field. He was asked to rig up a wireless set on a boat to report the progress of the international yacht race for Lloyds of London in 1896, but he refused the offer, which was a lucrative one, on the grounds that he would not demonstrate his system publicly on less than a world-wide basis because it could be confused with the amateurish efforts being made by other experimenters. If he had accepted this offer--and he could have met the requirements without the least technical diffculty--he undoubtedly would have found his interests diverted to some extent into a profitable commercial channel that might have made a vast, and favorable, change in the second half of his life.

Tesla, however, could not be bothered with minor, even though profitable projects. The superman, the man magnificent, was too strong in him. The man who had put industry on an electrical power basis, the man who had set the whole earth in vibration, could not fill a minor role of carrying messages for hire. He would function in his major capacity or not at all; he would be a Jupiter, never a Mercury.

George Scherff, who was engaged by Tesla as bookkeeper and secretary when he opened his Houston Street laboratory, was a practical individual. He managed, as far as was humanly possible, to keep the inventor disentangled in his contacts

with the business world. The more he knew Tesla, the better he liked him; and the more respect he had for his genius and his ability as an inventor, the more he became conscious of the fact that this genius was totally lacking in business ability.

Scherff was understandably distressed by a situation in which an enterprise was continuously spending money but never receiving any. He sought to protect as far as possible the $40,000 which Tesla received from Adams as an investment in the enterprise; and it was stretched to cover more than three years of great activity. Scherff wanted Tesla to work out plans for deriving an income from his inventions. Each new development which Tesla produced was studied by Scherff and made the basis for a plan for manufacture and sale of a device. Tesla uniformly rejected all the suggestions. "This is all small-time stuff," he would reply. "I cannot be bothered with it."

Even when it was pointed out to him that many manufacturers were using his Tesla coils, selling great numbers of them and making plenty of money out of them, his interest could not be aroused to enter this profitable field, nor to permit Scherff to arrange to have a sideline set-up which could be conducted without interfering with his research work. Nor could he be induced to bring suits to protect his invention and seek to make the manufacturers pay him royalties. He admitted, however, "If the manufacturers paid me twenty-five cents on each coil they sold I would be a wealthy man."

When Lloyds of London made their request that he set up a wireless outfit on a boat and report the international yacht races of 1896, by his new wireless system, and offered a generous honorarium, Scherff became insistent that the offer be accepted; and he urged Tesla to drop all other work temporarily and use the publicity he would get from the exploit as a means of floating a commercial company for transmitting wireless messages between ship and shore and across the ocean, pointing out that money would be made both in manufacturing the apparatus and in transmitting messages. The company, Scherff suggested, could be operated by managers to produce an income and Tesla could return to his work of making inventions and always have plenty of money to pay for the cost of his researches.

Scherff can look back today, as he sits on the porch of his Westchester home, and decide, through a retrospect of fifty years, that his plan was basically sound, with the Radio Corporation of America, its extensive manufacturing facilities and its worldwide communication system, its tremendous capital system and earnings, as evidence in support of the claim.

Tesla's reply to the proposal was, as usual, "Mr. Scherff, that is small-time stuff. I cannot be bothered with it. Just wait until you see the magnificent inventions I am going to produce, and then we will all make millions."

Tesla's millions never came. Scherff remained with him until the Wardencliff laboratory closed, owing to the lack of income, which he had been trying to circumvent. Scherff then established a lucrative connection with the Union Sulphur Co. but he still continued, without taking compensation, to give Tesla one day a week of his time and keep his business affairs disentangled as far as possible. Tesla was meticulously careful about paying everyone who performed any service for him, but this was counterbalanced by an active faculty for contracting bills without waiting to see if he had funds on hand to meet them. Money was an annoying anchor that always seemed to be dragging and hindering his research activities--something that was too mundane to merit the time and attention he should be giving to more important things.

Scherff, tight-lipped and businesslike, cannot be induced to talk of Tesla's affairs. If he were, instead, a loquacious philosopher, he might be induced to smile over the frailties of human nature, and the strange pranks which fate can play on individuals, as he thinks of Tesla, who, on the basis of a single invention, might have become an individual Radio Corporation of America and failed to do so, and who passed up equal chances on two hundred other inventions, any one of which could have produced a fortune. And for contrast, he can recall occasions in recent decades when it was necessary to make modest loans to the great Tesla to permit him to meet the need for current personal necessities. But Scherff refuses to permit any close questions or discussion about these incidents.

THIRTEEN

WHEN his World Wireless System project crashed, Tesla turned again to a project to which he had given considerable thought at the time he was developing his polyphase alternating-current system: that of developing a rotary engine which would be as far in advance of existing steam engines as his alternating-current system was ahead of the direct-current system, and which could be used for driving his dynamos.

All of the steam engines in use in powerhouses at that time were of the reciprocating type; essentially the same as those developed by Newcomer and Watt, but larger in size, better in construction and more effcient in operation.

Tesla's engine was of a different type--a turbine in which jets of steam injected between a series of disks produced rotary motion at high velocity in the cylinder on which these disks were mounted. The steam entered at the outer edge of the disks, pursued a spiral path of a dozen or more convolutions, and left the engine near the central shaft.

When Tesla informed a friend in 1902 that he was working on an engine project, he declared he would produce an engine so small, simple and powerful that it would be a "powerhouse in a hat." The first model, which he made about 1906, fulfilled this promise. It was small enough to fit into the dome of a derby hat, measured a little more than six inches in its largest dimension, and developed thirty horsepower. The power-producing performance of this little engine vastly exceeded that of every known kind of prime mover in use at that time. The engine weighed a little less than ten pounds. Its output was therefore three horsepower per pound. The rotor weighed only a pound and a half, and its light weight and high power yield gave Tesla a slogan which he used on his letterheads and envelopes--"Twenty horsepower per pound."

There was nothing new, of course, in the basic idea of obtaining circular motion directly from a stream of moving fluid. Windmills and water wheels, devices as old as history, performed this feat. Hero, the Alexandrian writer, about 200 bc, described, but he did not invent, the first turbine. It consisted of a hollow sphere of metal mounted on an axle, with two tubes sticking out of the sphere at a tangent to its surface. When water was placed in the sphere

and the device was suspended in a fire, the reaction of the steam coming out of the tubes caused the device to rotate.

Tesla's ingenious and original development of the turbine idea probably had its origin in that amusing and unsuccessful experiment he made when, as a boy, he tried to build a vacuum motor and observed its wooden cylinder turn slightly by the drag of the air leaking into the vacuum chamber. Later, too, when as a youth he fled to the mountains to escape military service and played with the idea of transporting mail across the ocean through an underwater tube, through which a hollow sphere was to be carried by a rapidly moving stream of water, he had discovered that the friction of the water on the walls of the tube made the idea impracticable. The friction would slow down the velocity of the stream of water so that excessive amounts of power would be required to move the water at a desired speed and pressure. Conversely, if the water moved at this speed, the friction caused it to try to drag the enclosing tube along with it.

It was this friction which Tesla now utilized in his turbine. A jet of steam rushing at high velocity between disks with a very small distance separating them was slowed down by the friction--but the disks, being capable of rotation, moved with increasing velocity until it was almost equal to that of the steam. In addition to the friction factor, there exists a peculiar attraction between gases and metal surfaces; and this made it possible for the moving steam to grip the metal of the disks more effectively and drag them around at high velocities. The first model which Tesla made in 1906 had twelve disks five inches in diameter. It was operated by compressed air, instead of steam, and attained a speed of 20,000 revolutions per minute. It was Tesla's intention eventually to use oil as fuel, burning it in a nozzle and taking advantage of the tremendous increase in volume, in the change from a liquid to burned highly expanded gases, to turn the rotor. This would eliminate the use of boilers for generating steam and give the direct process proportional increased effciency.

Had Tesla proceeded with the development of his turbine in 1889 when he returned from the Westinghouse plant, his turbine might perhaps have been the one eventually developed to replace the slow, big, lumbering reciprocating engines then in use. The fifteen years, however, which he

devoted to the development of currents of high potential and high frequency, had entailed a delay which gave opportunity for developers of other turbine ideas to advance their work to a stage which now was effective in putting Tesla in the status of a very late starter. In the meantime, turbines had been developed which were virtually windmills in a box. They consisted of rotors with small buckets or vanes around the circumference which were struck by the incoming steam jet. They lacked the simplicity of the Tesla turbine; but by the time Tesla introduced his type, the others were well entrenched in the development stage.

Tesla's first tiny motor was built in 1906 by Julius C. Czito, who operated at Astoria, Long Island, a machine shop for making inventor's models. He also built the subsequent 1911 and 1925 models of the turbine, and many other devices on which Tesla worked up to 1929. Mr. Czito's father had been a member of Tesla's staff in the Houston Street laboratories, from 1892 to 1899, and at Colorado Springs.

Mr. Czito's description of the first model is as follows:

The rotor consisted of a stack of very thin disks six inches in diameter, made of German silver. The disks were one thirty-second of an inch thick and were separated by spacers of the same metal and same thickness but of much smaller diameter which were cut in the form of a cross with a circular center section. The extended arms served as ribs to brace the disks.

There were eight disks and the edgewise face of the stack was only one-half inch across. They were mounted on the center of a shaft about six inches long. The shaft was nearly an inch in diameter in the mid section and was tapered in steps to less than half an inch at the ends. The rotor was set in a casing made in four parts bolted together.

The circular chamber where the rotor turned was accurately machined to allow a clearance of one sixty-fourth of an inch between the casing and the face of the rotor. Mr. Tesla desired an almost touching fit between the rotor face and the casing when the latter was turning. The large clearance was necessary because the rotor attained tremendously high speeds, averaging 35,000 revolutions per minute. At this speed the centrifugal force generated by

the turning movement was so great it appreciably stretched the metal in the rotating disks. Their diameter when turning at top speed was one thirty-second of an inch greater than when they were standing still.

A larger model was built by Tesla in 1910. It had disks twelve inches in diameter, and with a speed of 10,000 revolutions per minute it developed 100 horsepower, indicating a greatly improved effciency over the first model. It developed more than three times as much power at half the speed.

During the following year, 1911, still further improvements were made. The disks were reduced to a diameter of 9.75 inches and the speed of operation was cut down by ten per cent, to 9,000 revolutions per minute--and the power output increased by ten per cent, to 110 horsepower!

Following this test, Tesla issued a statement in which he declared:

I have developed 110 horsepower with disks nine and three quarter inches in diameter and making a thickness of about two inches. Under proper conditions the performance might have been as much as 1,000 horsepower. In fact there is almost no limit to the mechanical performance of such a machine. This engine will work with gas, as in the usual type of explosion engine used in automobiles and airplanes, even better than it did with steam. Tests which I have conducted have shown that the rotary effort with gas is greater than with steam.

Enthusiastic over the success of his smaller models of the turbine, operated on compressed air, and to a more limited extent by direct combustion of gasoline, Tesla designed and built a larger, double unit, which he planned to test with steam in the Waterside Station, the main powerhouse of the New York Edison Company.

This was a station which had originally been designed to operate on the direct-current system developed by Edison--but it was now operating throughout on Tesla's polyphase alternating-current system.

Now Tesla, invading the Edison sanctum to test a new type of turbine which he hoped would replace the types in use, was definitely in enemy territory. The fact that he had

Morgan backing, and that the Edison Company was a "Morgan company," had no nullifying effect on the Edison-Tesla feud.

This situation was not softened in any way by Tesla's method of carrying on his tests. Tesla was a confirmed "sun dodger"; he preferred to work at night rather than in the daytime. Powerhouses, not from choice but from necessity, have their heaviest demands for current after sunset. The day load would be relatively light; but as darkness approached, the dynamos started to groan under the increasing night load. The services of the workers at the Waterside Station were made available to Tesla for the setting up and tests of his turbine with the expectation that the work would be done during the day when the tasks of the workers were easiest.

Tesla, however, would rarely show up until five o'clock in the afternoon, or later, and would turn a deaf ear to the pleas of workers that he arrive earlier. He insisted that certain of the workers whom he favored remain after their five-o'clock quitting time on the day shift to work with him on an overtime basis. Nor did he maintain a conciliatory attitude toward the engineering staff or the offcials of the company. The attitudes, naturally, were mutual.

The turbine Tesla built for this test had a rotor 18 inches in diameter which turned at a speed of 9,000 revolutions per minute. It developed 200 horsepower. The overall dimensions of the engine were--three feet long, two feet wide and two feet high. It weighed 400 pounds.

Two such turbines were built and installed in a line on a single base. The shafts of both were connected to a torque rod. Steam was fed to both engines so that, if they were free to rotate, they would turn in opposite directions. The power developed was measured by the torque rod connected to the two opposing shafts.

At a formal test, to which Tesla invited a great many guests, he issued a statement in which he said, as reported, in part:

It should be noted that although the experimental plant develops 200 horsepower with 125 pounds at the supply pipe and free exhaust it could show an output of 300 horsepower

with full pressure of the supply circuit. If the turbine were compounded and the exhaust were led to a low pressure unit carrying about three times the number of disks contained in the high pressure element, with connection to a condenser affording 28.5 to 29.0 inches of vacuum the results obtained in the present high pressure machine indicate that the compounded unit would give an output of 600 horsepower without great increase of dimensions. This estimate is very conservative.

Tests have shown that when the turbine is running at 9,000 revolutions per minute under an inlet pressure of 125 pounds to the square inch and with free exhaust 200 brake horsepower are developed. The consumption under these conditions of maximum output is 38 pounds of saturated steam per horsepower per hour, a very high effciency when we consider that the heat drop, measured by thermometers, is only 130 B.T.U. and that the energy transformation is effected in one stage. Since three times the number of heat units are available in a modern plant with superheat and high vacuum the utilization of these facilities would mean a consumption of less than 12 pounds per horsepower hour in such turbines adapted to take the full drop.

Under certain conditions very high thermal effciencies have been obtained which demonstrate that in large machines based on this principle steam consumption will be much lower and should approximate the theoretical minimum thus resulting in the nearly frictionless turbine transmitting almost the entire expansive energy of the steam to the shaft.

It should be kept in mind that all of the turbines which Tesla built and tested were single-stage engines, using about one-third of the energy of the steam. In practical use, they were intended to be installed with a second stage which would employ the remaining energy and increase the power output about two or three fold. (The two types of turbines in common use each have a dozen and more stages within a single shell.)

Some of the Edison electric camp, observing the torque-rod tests and apparently not understanding that in such a test the two rotors remain stationary--their opposed pressures staging a tug of war measured as torque--circulated the story that the turbine was a complete failure; that this turbine would not be practical if its effciency had been

increased a thousand fold. It was stories such as these that contributed to the imputation that Tesla was an impractical visionary. The Tesla turbine, however, used as a single-stage engine, functioning as a pygmy power producer, in the form in which it was actually tested, anticipated by more than twenty-five years a type of turbine which has been installed in recent years in the Waterside Station. This is a very small engine, with blades on its rotor, known as a "topping turbine," which is inserted in the steam line between the boilers and the ordinary turbines. Steam of increased pressure is supplied, and the topping turbine skims this "cream" from the steam and exhausts steam that runs the other turbines in their normal way.

The General Electric Company was developing the Curtis turbine at that time, and the Westinghouse Electric and Manufacturing Company was developing the Parsons turbine; and neither company showed the slightest interest in Tesla's demonstration.

Further development of his turbine on a larger scale would have required a large amount of money--and Tesla did not possess even a small amount.

Finally he succeeded in interesting the Allis Chalmers Manufac-

turing Company of Milwaukee, builders of reciprocating engines and turbines, and other heavy machinery. In typical Tesla fashion, though, he manifested in his negotiations such a lack of diplomacy and insight into human nature that he would have been better off if he had completely failed to make any arrangements for exploiting the turbine.

Tesla, an engineer, ignored the engineers on the Allis Chalmers staff and went directly to the president. While an engineering report was being prepared on his proposal, he went to the Board of Directors and "sold" that body on his project before the engineers had a chance to be heard. Three turbines were built. Two of them had twenty disks eighteen inches in diameter and were tested with steam at eighty pounds pressure. They developed at speeds of 12,000 and 10,000 revolutions per minute, respectively, 200 horsepower. This was exactly the same power output as had been achieved by Tesla's 1911 model, which had disks of half this diameter and was operated at 9,000 revolutions

under 125 pounds pressure. A much larger engine was tackled next. It had fifteen disks sixty inches in diameter, was designed to operate at 3,600 revolutions per minute, and was rated at 500 kilowatts capacity, or about 675 horsepower.

Hans Dahlstrand, Consulting Engineer of the Steam Turbine Department, reports, in part:

We also built a 500 kw steam turbine to operate at 3,600 revolutions. The turbine rotor consisted of fifteen disks 60 inches in diameter and one eighth inch thick. The disks were placed approximately one eighth inch apart. The unit was tested by connecting to a generator. The maximum mechanical effciency obtained on this unit was approximately 38 per cent when operating at steam pressure of approximately 80 pounds absolute and a back pressure of approximately 3 pounds absolute and 100 degrees F superheat at the inlet.

When the steam pressure was increased above that given the mechanical effciency dropped, consequently the design of these turbines was of such a nature that in order to obtain maximum effciency at high pressure, it would have been necessary to have more than one turbine in series.

The effciency of the small turbine units compares with the effciency obtainable on small impulse turbines running at speeds where they can be directly connected to pumps and other machinery. It is obvious, therefore, that the small unit in order to obtain the same effciency had to operate at from 10,000 to 12,000 revolutions and it would have been necessary to provide reduction gears between the steam turbine and the driven unit.

Furthermore, the design of the Tesla turbine could not compete as far as manufacturing costs with the smaller type of impulse units. It is also questionable whether the rotor disks, because of light construction and high stress, would have lasted any length of time if operating continuously.

The above remarks apply equally to the large turbine running at 3,600 revolutions. It was found when this unit was dismantled that the disks had distorted to a great extent and the opinion was that these disks would ultimately have failed if the unit had been operated for any length of time.

The gas turbine was never constructed for the reason that the company was unable to obtain suffcient engineering information from Mr. Tesla indicating even an approximate design that he had in mind.

Tesla appears to have walked out on the tests at this stage. In Milwaukee, however, there was no George Westinghouse to save the situation. Later, during the twenties, the author asked Tesla why he had terminated his work with the Allis Chalmers Company. He replied: "They would not build the turbines as I wished"; and he would not amplify the statement further.

The Allis Chalmers Company later became the pioneer manufacturers of another type of gas turbine that has been in successful operation for years.

While the Dahlstrand report may appear to be severely critical of the Tesla turbine and to reveal fundamental weaknesses in it not found in other turbines, such is not the case. The report is, in general, a fair presentation of the results; and the description of apparent weaknesses merely offers from another viewpoint the facts which Tesla himself stated about the turbine in his earlier test--that when employed as a single-stage engine it uses only about a third of the energy of the steam, and that to utilize the remainder, it would have to be compounded with a second turbine.

The reference to a centrifugal force of 70,000 pounds resulting from the high speed of rotation of the rotor, causing damage to the disks, refers to a common experience with all types of turbines. This is made clear in a booklet on "The Story of the Turbine," issued during the past year by the General Electric Company, in which it is stated:

It [the turbine] had to wait until engineers and scientists could develop materials to withstand these pressures and speeds. For example, a single bucket in a modern turbine travelling at 600 miles per hour has a centrifugal force of 90,000 pounds trying to pull it from its attachment on the bucket wheel and shaft. . . .

In this raging inferno the high pressure buckets at one end of the turbine run red hot while a few feet away the large buckets in the last stages run at 600 miles per hour

through a storm of tepid rain--so fast that the drops of condensed steam cut like a sand blast.

Dahlstrand reported that diffculties were encountered in the Tesla turbine from vibration, making it necessary to re-enforce the disks. That this diffculty is common to all turbines is further indicated by the General Electric booklet, which states:

Vibration cracked buckets and wheels and wrecked turbines, sometimes within a few hours and sometimes after years of operation. This vibration was caused by taking such terrific amounts of power from relatively light machinery--it some cases as much as 400 horsepower out of a bucket weighing but a pound or two. . . .

The major problems of the turbine are four--high temperatures, high pressures, high speeds and internal vibration. And their solution lies in engineering, research and manufacturing skill.

These problems are still awaiting their final solution, even with the manufacturers who have been building turbines for forty years; and the fact that they were encountered in the Tesla turbine, and so reported, is not a final criticism of Tesla's invention in the earliest stages of its development.

There have been whisperings in engineering circles during the past year or two to indicate a revival of interest in the Tesla turbine and the possibility that the makers of the Curtis and Parsons types may extend their lines to include the Tesla type for joint operation with the others. The development of new alloys, which can now almost be made to order with desired qualities of mechanical stability under conditions of high temperature and great stresses, is largely responsible for this turn of events.

It is a possibility that if the Tesla turbine were constructed with the benefft of two or more stages, thus giving it the full operating range of either the Curtis or the Parsons turbine, and were built with the same beneffts of engineering skill and modern metallurgical developments as have been lavished on these two turbines, the vastly greater simplicity of the Tesla turbine would enable it to manifest greater effciencies of operation and economies of construction.

FOURTEEN

THE highest honor which the world can confer upon its scholars is the Nobel Prize founded by Alfred B. Nobel, the Swedish scientist who gained his wealth through the invention of dynamite. Five awards are made annually, and each carries an honorarium of about $40,000 in normal times.

An announcement came from Sweden, in 1912, that Nikola Tesla and Thomas A. Edison had been chosen to share the 1912 award in physics. The awards, however, were never made; and the prize went instead to Gustav Dalen, a Swedish scientist.

The full story of what took place is not known. The correspondence on the subject is not available. It is definitely established that Tesla refused to accept the award. Tesla was very much in need of money at this time and the $20,000, which would have been his share of the divided award, would have aided him to continue his work. Other factors, however, had a more potent influence.

Tesla made a very definite distinction between the inventor of useful appliances and the discoverer of new principles. The discoverer of new principles, he stated in conversation with the author, is a pioneer who opens up new fields of knowledge into which thousands of inventors flock to make commercial applications of the newly revealed information. Tesla declared himself a discoverer and Edison an inventor; and he held the view that placing the two in the same category would completely destroy all sense of the relative value of the two accomplishments.

It is quite probable that Tesla was also influenced by the fact that the Nobel Prize in physics had been awarded to Marconi three years earlier, a situation that greatly disappointed him. To have the award go first to Marconi, and then to be asked to share the award with Edison, was too great a derogation of the relative value of his work to the world for Tesla to bear without rebelling.

Tesla was the first, and probably the only, scientist to refuse this famous prize.

One of the highest honors in the engineering world, too, is the Edison Medal, founded by unnamed friends of Thomas A. Edison, and awarded each year by the American Institute of Electrical Engineers, at its annual convention, for outstanding contribution to electrical art and science. Usually, the recipients are very happy to receive the award; but in 1917, when the committee voted to present the medal to Tesla, a different situation developed.

The chairman of the Edison Medal committee was B. A. Behrend, who had been one of the first electrical engineers to grasp the tremendous significance of Tesla's alternating-current discoveries and their far-reaching importance to every department of the electrical industry. A few outstanding engineers were able, at the beginning, to understand the intricacies of new alternating-current procedures which Tesla's discoveries made of immediate practical importance; but it was Behrend who developed a beautiful, simple mathematical technique, known as the "circle diagram," which made it possible to work out problems of designing alternating-current machinery with great ease, and also to understand the complex phenomena that were taking place within such devices. He published innumerable articles on the subject in the technical journals and wrote the standard textbook on the subject, The Induction Motor. Fame and fortune came to Behrend. He achieved recognition as one of the outstanding electrical engineers, and was later elected vice-president of the American Institute of Electrical Engineers. So important was his work to the commercial world that he was considered a probable recipient of the Edison Medal.

Behrend had started publishing articles on his circle diagram discovery in 1896 but he did not meet Tesla until 1901, when Tesla required a particular type of motor for his World Wireless plant being built at Wardencliff, L. I., and the task of designing it was assigned to the engineering department of a manufacturing company of which Behrend was in charge. After Tesla and Behrend met, a very close personal friendship developed between the two men. Behrend was one of the few who thoroughly understood Tesla's work; and the inventor, lonely in the absence of individuals with minds of his own caliber, greatly appreciated Behrend's friendship.

Behrend believed, therefore, that he was rendering Tesla a token of his highest appreciation when he managed to maneuver the award of the Edison Medal to him; and he was quite happy to carry out the mission of bearing the good news to the inventor. The announcement, however, did not make Tesla happy. He did not want the Edison Medal, he would not receive it!

Behrend, greatly surprised at Tesla's rebuff, asked him if he would not explain the situation that caused it.

"Let us forget the whole matter, Mr. Behrend. I appreciate your good will and your friendship but I desire you to return to the committee and request it to make another selection for a recipient. It is nearly thirty years since I announced my rotating magnetic field and alternating-current system before the Institute. I do not need its honors and someone else may find them useful."

It would have been impossible for Behrend to deny that the Institute had indeed failed, over this long period, to honor the man whose discoveries were responsible for creating the jobs held by probably more than three quarters of the members of the Institute, while honors had been distributed to many others for relatively minor accomplishments. Still, using the privilege of friendship, Behrend pressed for a further explanation.

"You propose," Tesla replied, "to honor me with a medal which I could pin upon my coat and strut for a vain hour before the members and guests of your Institute. You would bestow an outward semblance of honoring me but you would decorate my body and continue to let starve, for failure to supply recognition, my mind and its creative products which have supplied the foundation upon which the major portion of your Institute exists. And when you would go through the vacuous pantomime of honoring Tesla you would not be honoring Tesla but Edison who has previously shared unearned glory from every previous recipient of this medal."

Behrend, however, after several visits, finally prevailed upon Tesla to accept the medal.

Custom requires that the recipient of a medal deliver a formal address. On the occasions, a quarter of a century

earlier, when Tesla was invited to address the Institute, he had had ample laboratory facilities, and had invested a great deal of time, effort, thought and money in the preparation of his lectures. For them, however, he was awarded no honors. Now he was without laboratory facilities and without adequate financial resources, although his more mature mind was as filled with ideas and unborn inventions as it had ever been. He was not required to present a demonstration lecture. In this matter, however, Tesla was a victim of his own past performances; and there was an expectancy that he would emerge from the comparative oblivion which had enshrouded him for more than a decade, and come, like a master magician, bearing some wondrous new gifts of invention to the world.

Tesla attended some of the meetings of the convention, and Behrend, none too certain about what the medalist might do, took him in tow following the afternoon session and escorted him to the Hotel St. Regis, where Tesla now made his home, and where both donned their formal dress for the evening's ceremonies.

The first event on the evening's program was a private dinner at the Engineers' Club, tendered by the Institute to the medalist, who was the guest of honor, and attended by previous recipients of the Edison Medal, as well as members of the committee and the offcers of the Institute. It was a gala occasion and represented an unusual concentration of the world's greatest electrical engineering talent. Tesla could be relied upon to lend brilliance to any such occasion, but, while his sparkling conversation added to the gayety of the group, he was distinctly ill at ease.

The Engineers' Club, on the south side of 40th Street, between Fifth and Sixth Avenues, faces Bryant Park, the eastern third of which is occupied by the classical building of the New York Public Library, facing Fifth Avenue from 40th to 42nd Streets. The United Engineering Societies Building, an imposing structure on the north side of 39th, stands almost back-to-back with the Engineers' Club. By stepping a few feet across an alley, it is possible to go from one building to the other.

Following the dinner in the Engineers' Club, the brilliant group at the medalist's dinner made their way across the alley and proceeded through the crowded lobby of the Engineering Societies Building, which was abuzz with the

multitudinous activities associated with a convention. The party entered the elevators which carried them to the large auditorium on the fifth floor where the medal presentations were to take place.

The auditorium was crowded with an audience that had come largely from formal dinners held as part of the convention program. The floor and gallery were filled to capacity. The buzz of animated conversation died down as there filed onto the stage the outstanding figures of the electrical world, in "tails" and white ties, who were to serve as the "wax works" of the ceremonies and to take some part in the presentation.

As the wax works took their previously assigned chairs, the stage was set for the opening of the ceremonies. But the opening did not take place according to schedule. There was consternation in the group as it was discovered that the chair reserved for the chief participant in the event was empty.

Tesla was missing!

The side hall, leading off the stage, and the anterooms were searched, but there was no sign of him. Members of the committee slipped out to retrace their steps through the lobby and back to the Club dining room. A man as tall as Tesla could not be hidden in any group, yet there was not a sign of him in either building.

The delay in opening the meeting in the auditorium was embarrassing--but the ceremonies could not be started without Tesla, and where was he?

It seemed hardly possible that an imposing figure like Tesla, his height exaggerated by the streamlined contours of his swallow-tailed formal evening dress, and in the almost worshipful custody of a score of outstanding intellects, could vanish without any of them observing his going.

Behrend rushed back from the Club to the auditorium, hopeful that Tesla had preceded him; but he found that such was not the case. All the washrooms in both buildings had been searched; he was concealed in none of them. No one could offer a theory to account for his disappearance.

None but Behrend knew of Tesla's aversion to accepting the Edison Medal, yet even he had not the slightest knowledge of what had become of the famous inventor. He recalled noting the shadowy walks of Bryant Park opposite the Club as he and Tesla stepped from the taxicab earlier in the evening, and he wondered if Tesla had retreated there for some quiet meditation before the ceremony. He hurried out of the Club.

As Behrend stepped into Bryant Park, the last faint glimmerings of dusk were visible in the high sky; but in the park the shades of night were gathering and here and there could be heard the faint twitterings of birds. The twittering of the birds brought, like a flash, to Behrend's mind the scene he had observed in Tesla's apartment at the Hotel St. Regis. In the room which Tesla had arranged as a reading room and offce was a roll-top desk, and on top of this were four neat circular baskets, in two of which pigeons were nestled. Before they left the apartment Tesla went to the window, which was kept open at all times, whistled softly, and two more pigeons quickly flew into the room. Just before leaving for the dinner Tesla fed the pigeons, and having done so slipped a paper bag filled with something into his pocket. The possible significance of this latter act did not occur to Behrend until he heard the twittering of the birds in the park.

With all possible speed Behrend rushed out of the park, down 40th Street toward Fifth Avenue, and up the steps to the plaza of the Library. Here he beheld a sight that amazed him almost beyond belief in what his eyes told him. Here was the missing man. He had recalled that Tesla regularly visited the Library, St. Patrick's Cathedral, or other places to feed the pigeons.

In the center of a large thin circle of observers stood the imposing figure of Tesla, wearing a crown of two pigeons on his head, his shoulders and arms festooned with a dozen more, their white or pale-blue bodies making strong contrast with his black suit and black hair, even in the dusk. On either of his outstretched hands was another bird, while seemingly hundreds more made a living carpet on the ground in front of him, hopping about and pecking at the bird seed he had been scattering.

It was Behrend's impulse to rush in, shoo the birds away and, seizing the missing man, rush him back to the

auditorium. Something caused him to halt. Such an abrupt action seemed almost sacrilegious. As he hesitated momentarily, Tesla caught sight of him and slowly shifted the position of one hand to raise a warning finger. As he did so, however, he moved slowly toward Behrend; and as he came close, some of the birds flew from Tesla's shoulders to Behrend's. Apparently sensing a disturbing situation, though, all the birds flew to the ground.

Appealing to Tesla not to let him down, nor to embarrass those who were waiting at the meeting, Behrend prevailed upon the inventor to return to the auditorium. Little did Behrend know how much more the pigeons meant to Tesla than did the Edison Medal; and little could anyone have suspected the fantastic secret in Tesla's life, of which the outer manifestation was his faithful feeding of his feathered friends. To Behrend it was just another, and in this case very embarrassing, manifestation of the nonconformity of genius. Of this, more later.

Returning to the auditorium, Behrend explained in a quick aside to the president that Tesla had been temporarily ill, but that his condition was now quite satisfactory. The opening of the meeting had been delayed about twenty minutes.

In his presentation speech, Behrend pointed out that by an extraordinary coincidence, it was exactly 29 years ago, to the very day and hour, that Nikola Tesla presented his original description of his polyphase alternating-current system. He added:

Not since the appearance of Faraday's "Experimental Researches in Electricity" has a great experimental truth been voiced so simply and so clearly as this description of Mr. Tesla's great discovery of the generation and utilization of polyphase alternating currents. He left nothing to be done by those who followed him. His paper contained the skeleton even of the mathematical theory.

Three years later, in 1891, there was given the first great demonstration, by Swiss engineers, of the transmission of power at 30,000 volts from Lauffen to Frankfort by means of Mr. Tesla's system. A few years later this was followed by the development of the Cataract Construction Company, under the presidency of our member, Mr. Edward D. Adams, and with the aid of the engineers of the Westinghouse Company. It is

interesting to recall here tonight that in Lord Kelvin's support to Mr. Adams, Lord Kelvin recommended the use of direct current for the development of power at Niagara Falls and for its transmission to Buffalo.

The due appreciation or even enumeration of the results of Mr. Tesla's invention is neither practicable nor desirable at this moment. There is a time for all things. Suffce it to say that, were we to seize and eliminate from our industrial world the results of Mr. Tesla's work, the wheels of industry would cease to turn, our electric cars and trains would stop, our towns would be dark, our mills would be dead and idle. Yes, so far reaching is this work, that it has become the warp and woof of industry. . . . His name marks an epoch in the advance of electrical science. From that work has sprung a revolution in the electrical art.

We asked Mr. Tesla to accept this medal. We did not do this for the mere sake of conferring a distinction, or of perpetuating a name; for so long as men occupy themselves with our industry, his work will be incorporated in the common thought of our art, and the name of Tesla runs no more risk of oblivion than does that of Faraday, or that of Edison.

Nor indeed does this Institute give this medal as evidence that Mr. Tesla's work has its offcial sanction. His work stands in no need of such sanction.

No, Mr. Tesla, we beg you to cherish this medal as a symbol of our gratitude for a new creative thought, the powerful impetus, akin to revolution, which you have given to our art and to our science. You have lived to see the work of your genius established. What shall a man desire more than this? There rings out to us a paraphrase of Pope's lines on Newton:

"Nature and Nature's laws lay hid in night:

"God said, Let Tesla be, and all was light."

No record remains of Tesla's acceptance speech. He did not prepare a formal address. He had intended to make but a brief response, but instead he became involved in anecdotal narration and a preview of the future of electrical science

which, in the absence of the limiting influence of a written copy, became quite lengthy.

It is doubtful if anyone in the audience, or on the stage, grasped the full significance of Behrend's words when he said, "We asked Mr. Tesla to accept this medal." And fewer still were the members of the Institute who had any conception of the extent or importance of Tesla's contribution to their science. His major inventions had been announced thirty years before. The majority of the engineers present belonged to the younger generation; and they had been taught from textbooks that almost completely omitted mention of Tesla's work.

FIFTEEN

THE announcement by Tesla in his latter years that attracted the greatest amount of attention concerned his discovery of what has briefly, but not too accurately, been termed a death ray. Earlier reports had come from Europe of the invention of death rays, beams of radiation that would cause airships on which they impinged to burst into flame, the steel bodies of tanks to melt and the machinery of ships to stop operating, but all gave indications of being part of the game of diplomatic buncombe.

The prelude to Tesla's death-ray announcement came several years in advance, in the form of a declaration that he had made discoveries concerning a new form of power generation which, when applied, would make the largest existing turbine-dynamo units in the powerhouses look like pygmies. He made this announcement in interviews with the press in 1933, and declared that he was also working on a new kind of generator for the production of radiation of all kinds and in the greatest intensities. He made similar announcements the following year.

Both of these announcements were entitled to receive the most serious consideration, even though they were not accompanied by experimental evidence, and revealed no technical details.

When Tesla was talking as a scientist he was opposed to wars on moral, economic and all practical and theoretical grounds. But, like most scientists, when he stopped thinking as a scientist and let his emotions rule his thoughts, he found exceptions in which he felt some wars and situations were justifiable. As a scientist he was unwilling to have the discoveries of scientists applied to the purposes of war makers, but when the emotional phase of his nature took the ruling position he was willing to apply his genius to devising measures that would prevent wars by supplying protective devices.

This attitude is exemplified in the following statement, which he had prepared in the twenties but did not publish:

At present many of the ablest minds are trying to devise expedients for preventing a repetition of the awful conflict which is only theoretically ended and the duration and main issues of which I correctly predicted in an article printed in the Sun of December 20, 1914. The League is not a remedy but, on the contrary, in the opinion of a number of competent men, may bring about results just the opposite. It is particularly regrettable that a punitive policy was adopted in framing the terms of peace because a few years hence it will be possible for nations to fight without armies, ships or guns, by weapons far more terrible, to the destructive action and range of which there is virtually no limit. Any city at any distance whatever from the enemy can be destroyed by him and no power on earth can stop him from doing so. If we want to avert an impending calamity and a state of things which may transform this globe into an inferno, we should push the development of flying machines and wireless transmission of energy without an instant's delay and with all the power and resources of the nation.

Tesla saw preventive possibilities in his new invention which embodied "death-ray" characteristics, and which was made several years after the foregoing statement was written. He saw it providing a curtain of protection which any country, no matter how small, could use as a defense against invasion. While he might offer it as a defensive weapon, however, there would be nothing to stop military men from using it as a weapon of offense.

Tesla never gave the slightest hint concerning the principles under which his device operated.

There are indications, at any rate, that Tesla was working on a high-potential direct-current system for generating and transmitting electricity to long distances. Direct current at very high voltages can be transmitted much more effciently than alternating current. There has been no practical way of generating direct current at high voltages. It was because of this that Tesla's polyphase alternating-current system was adopted for our present nationwide superpower system, since it made the use of high voltages practicable. But, despite its effciencies, it entailed certain losses which could be eliminated if direct current of suffciently high voltage could be obtained. Such a system would supersede his alternating-current system but not displace it.

Direct current, perhaps at several million volts potential, would be used to transmit current for long distances, perhaps clear across the continent, providing a kind of express transmission system, to which the existing alternating-current system would be tied for local distribution. In addition to the direct-current transmission system, he appears to have worked out a high-voltage direct-current generator and a new type of direct-current motor which would operate without a commutator.

The inventions were starting to dam up in Tesla's mind like water in a reservoir to which there was no outlet.

Just as he developed his alternating-current system into the high-frequency, high-potential field of power distribution by wireless, which he demonstrated at Colorado Springs, so he appears to have carried his direct-current system forward and linked it with his alternating-current wireless distribution system, so that he could use both in a super-interlocking system. As this remained unapplied, he further evolved it and produced a plan for operating with it what appears to be a beam system of wireless transmission of energy which might involve the use of a stream of particles such as are used in the atom-smashing cyclotron.

As time passed from the latter twenties, through the latter thirties, the hints which Tesla would drop about his work became more complicated, and so ambiguous that they aroused skepticism rather than respect. He would not reveal the nature of his discoveries until he had secured patents, and

he would not apply for patents until he had made actual working models, and he could not make the working models because he had no money. Samuel Insull, the public utilities magnate, had for many years made frequent and generous contributions to Tesla. They were usually applied to outstanding debts and were not large enough to enable him to engage in laboratory research work.

Tesla, however, never exhibited the slightest outward sign of bitterness over the situation. Instead, he always appeared in the rle of confirmed optimist, always maintaining a spirit of hopefulness that he would achieve by his own efforts the money he needed to carry out his elaborated plans. This is indicated in a letter he wrote to B. A. Behrend, who had induced him to accept the Edison Medal, and who was probably in his confidence to a greater extent than anyone else:

"I am hard at work on those discoveries of mine, I told you about, from which I hope to derive a sum in eight figures (not counting the cents, of course) enabling me to erect that wireless power plant at my own expense. And what I shall accomplish by that other invention I came specially to see you about, I do not dare to tell you. This is stated in all seriousness."

The invention about which he dared not speak was probably his direct-current generating and transmitting system.

In an interview given in 1933, he said his power generator was of the simplest kind--just a big mass of steel, copper and aluminum, comprising a stationary and a rotating part, peculiarly assembled. He was planning, he said, to generate electricity and transmit it to a distance by his alternating system; but the direct-current system could also be employed if the heretofore insuperable diffculties of insulating the transmission line could be overcome.

A year later he had developed the beam-transmission plan; and he made an ambiguous statement concerning it which was reported in the press as news of a "death ray" since the description seemed to fit into the same mold as those wild and improbable statements that had come out of Europe some years before. A writer in the New York World-Telegram described Tesla's plan as "nebulous." This drew a reply from Tesla July 24, 1934) in which the following paragraphs appeared:

Still another item which has interested me is a report from Washington in the World Telegram of July 13, 1934, to the effect that scientists doubt the death ray effects. I am quite in agreement with these doubters and probably more pessimistic in this respect than anybody else, for I speak from long experience.

Rays of the requisite energy cannot be produced, and, then again, their intensity diminishes with the square of the distance. Not so the agent I employ, which will enable us to transmit to a distant point more energy than is possible by any other kind of ray.

We are all fallible, but as I examine the subject in the light of my present theoretical and experimental knowledge I am filled with deep convictions that I am giving to the world something far beyond the wildest dreams of inventors of all time.

This is the first written statement by Tesla in which he mentions his "ray"; but I had, as already noted, obtained some confidential statements from him, during the preceding year or so, concerning results he hoped to achieve through his new discovery, the nature of which he kept as a well-protected secret. Three years later, in 1937, Tesla permitted me to write a news story for the New York Herald Tribune on his new power-and-ray discovery. In it I stressed the usefulness of the discovery for delivering power to ships for travel across the ocean, thus eliminating the need for carrying fuel supplies, rather than its use as a weapon for defense or offense.

On this occasion I tried to get him to reveal some technical details, but he successfully parried every question and gave no information beyond the statement that the transmitting plant on shore was one which he would be able to erect at a cost of about $2,000,000, and the energy would be transmitted by a ray or beam of infinitesimally small cross section, one hundred thousandth of a centimeter in diameter. To other newspapers which copied my story he gave the figure as one millionth of a square centimeter.

Later, I wrote a somewhat critical review of his plan and sought to draw him out by reviewing the properties of electro-magnetic radiation in all parts of the spectrum. Finding none that possessed any known characteristics

needed to make his ray practical, I also reviewed the properties of all known particles of matter, and stated that none of these would serve his purpose with the possible exception of the unelectrified particle, the neutron. He made no revealing response to the article.

At his birthday dinner in 1938, at the Hotel New Yorker, Tesla described briefly his combination wireless-power transmission and death ray, adding little to what has already been stated; and in a later part of his speech he declared that he had developed a method for interplanetary communication, in which he would be able to transmit not only communication signals of small strength but energies involving thousands of horsepower.

On this occasion I asked him if he would be specific concerning the effects produced, and whether they would be visible from the earth; for example--could he produce an effect on the moon suffciently large to be seen by an astronomer watching the moon through a high-power telescope? To this he replied that he would be able to produce in the dark region of the thin crescent new moon an incandescent spot that would glow like a bright star so that it could be seen without the aid of a telescope.

It would appear probable that Tesla proposed to use for this purpose the beam he described in connection with his wirelesspower "death ray." The limitation of the destructive effects of the beam, which he visualized as two hundred miles, was due to the fact that the beam had a straight-line trajectory. Tesla stated that the curvature of the earth set a limit on the distance of operation, so the two-hundred-mile span of operation gave an indication of the greatest practical height of a tower from which the beam could be directed. He expected to use potentials of about 50,000,000 volts in his system, but whether of direct or alternating current is unknown.

The only written statement by Tesla on this subject is in his manuscript of the talk which was delivered, in absentia, some months later before the Institute of Immigrant Welfare in response to its honorary citation. In this was included the following paragraph:

"To go to another subject: I have devoted much of my time during the year past to perfecting of a new small and compact apparatus by which energy in considerable amounts

can now be flashed through interstellar space to any distance without the slightest dispersion. I had in mind to confer with my friend, George E. Hale, the great astronomer and solar expert, regarding the possible use of this invention in connection with his own researches. In the meantime, however, I am expecting to put before the Institute of France an accurate description of the device with data and calculations and claim the Pierre Gutzman Prize of 100,000 francs for means of communication with other worlds, feeling perfectly sure that it will be awarded to me. The money, of course, is a trifling consideration, but for the great historical honor of being the first to achieve this miracle I would be almost willing to give my life."

SELF-MADE SUPERMAN

SIXTEEN

IT WAS during a period when he was most busily occupied with his experiments with high-frequency and high-potential currents, from 1892 to 1894, that Tesla had found time to give serious thought to yet another type of problem, matter and energy; and from it he derived what he described as a new physical principle. This he developed to the point at which he was able to propound a new dynamic theory of gravity.

While this principle guided much of his thinking, he did not make any announcements concerning it until close to the end of his life. Such disclosures as have been made, however, leave this much obvious: Tesla considered his theory wholly inconsistent with the theory of relativity, and with the modern theory concerning the structure of the atom and the mutual interconversion of matter and energy. Tesla continuously attacked the validity of Einstein's work; and until two or three years before his death, he ridiculed the belief that energy could be obtained from matter.

These antagonisms were most unfortunate, as they placed Tesla in conflict with modern experimental physics. This was totally unnecessary, for Tesla could undoubtedly have adhered to his principle and interpreted it so that it was

not inconsistent with the modern theories. The antagonism was probably attributable to psychological factors rather than scientific inconsistencies.

The only statement Tesla has made concerning his principle and his theory is that contained in the lecture he prepared for delivery before the Institute of Immigrant Welfare (May 12, 1938). In this he stated:

During the succeeding two years [1893 and 1894] of intense concentration I was fortunate enough to make two far reaching discoveries. The first was a dynamic theory of gravity, which I have worked out in all details and hope to give to the world very soon. It explains the causes of this force and the motions of heavenly bodies under its influence so satisfactorily that it will put an end to idle speculation and false conceptions, as that of curved space. . . .

Only the existence of a field of force can account for the motions of the bodies as observed, and its assumption dispenses with space curvature. All literature on this subject is futile and destined to oblivion. So are all attempts to explain the workings of the universe without recognizing the existence of the ether and the indispensable function it plays in the phenomena.

My second discovery was of a physical truth of the greatest importance. As I have searched the entire scientific records in more than a half dozen languages for a long time without finding the least anticipation, I consider myself the original discoverer of this truth, which can be expressed by the statement: There is no energy in matter other than that received from the environment.

On my 79th birthday I made a brief reference to it, but its meaning and significance have become clearer to me since then. It applies rigorously to molecules and atoms as well as to the largest heavenly bodies, and to all matter in the universe in any phase of its existence from its very formation to its ultimate disintegration

Tesla's mind was inflexible in the matter of his attitude toward relativity and the modern theories. Had he published his principle and theory of gravity at the beginning of the century it would, without doubt, have then received very serious consideration and perhaps general acceptance,

although it is diffcult to make an intelligent surmise without knowledge of his postulates. If published, it might have had some influence on Einstein's thinking. The field of force which Tesla mentions as being necessary to explain the movements of the planets might have been his contribution to eliminating the need for the ether which was accomplished by Einstein's theory. The two theories might have been merged, in which case there probably would have resulted a harmonious development of the thinking of the two geniuses.

In this latter case Tesla could very well have shaped his thinking to see a consistency between his theory that there is no energy in matter other than that received from its environment, and the modern viewpoint that all matter consists of energy into which it is convertible; for when matter is converted to energy, the energy returns to the environment from whence it came when the particles were formed.

There appears to be a frustration involved in Tesla's attitude which could have been resolved by early publication of his theory. If this had taken place, Tesla's powerful intellect and his strange ability to solve problems would have been brought to bear on the problems of atomic physics and he, in turn, would have received tremendous benefits from the application of the newer knowledge in the fields in which he was supreme.

Tesla's ability to generate tremendously high voltages would have been of great assistance in the task of "smashing the atom." Other scientists, even today, are struggling to produce currents with a potential of 5,000,000 volts, whereas Tesla, forty years ago, had generated potentials of 135,000,000 volts.

The inconsistency between Tesla's principle and the picture of the atom consisting of a small complex nucleus surrounded by planetary electrons--which inconsistency was more existent in Tesla's mind than in Nature--caused him to develop an antagonism to all scientific developments which called for a picture that differed from the billiard-ball type of atom in vogue in the eighteen-eighties. To him, a smashed atom was like a smashed billiard ball.

The electron, however, had a real existence to Tesla. He accepted it as a kind of sub-atom, a fourth state of

matter, as described by Sir William Crookes, who discovered it. Tesla visualized it as associated with but not a part of the atom. The electric charge it carried was entirely distinct from the electron. Electricity, to him, was a fluid much more highly attenuated than any known form of matter, and with highly specific properties of its own for which it was not dependent upon matter. The charge on the electron was due to a surface layer of electricity covering it, and it could receive many layers, giving it multiple charges, all of which could be dissipated. These statements were similar to those which he had published a half-century before.

According to the modern theory, on the other hand, the electrical nature of the electron, described as its charge, is a characteristic inherent in the nature of the energy crystallized about a point which gives the electron its existence, and the electron is one of the particles, or units of energy, of which the atom is composed.

In discussing articles by scientists in the field of atomic physics, Tesla would register his protests that their theories were untenable and the claims unfounded; and he was particularly emphatic when experiments in which energy emissions from atoms were recorded.

"Atomic power is an illusion," he frequently declared. He furnished several written statements in which he said that with his currents of several million volts he had, countless times, smashed uncounted billions of atoms--and he knew that no emission of energy accompanied the process.

On one occasion Tesla took me to task rather severely for my failure to publish his statements. I replied: "I withheld them in order to protect your reputation. You are making too great a virtue of consistency. It is not necessary that you adhere to the theories you held as a youth, and I am convinced that deep down in your heart you hold newer theories that are in harmony with scientific developments in other fields, but because you have disagreed with, and attacked some modern theories, you feel you must be consistent and attack them all. I am convinced that in the development of your death-ray device your thinking was along the lines of the modern theory of the structure of the atom and the nature of matter and energy."

Tesla thereupon let me know in no uncertain terms that he held very definite ideas concerning efforts on the part of others to do his thinking for him. This conversation took place about 1935; and I did not hear from him for many months. I observed, however, that in his later conversations he was much less dogmatic concerning modern theories, and a few years later he stated that he was planning an apparatus which would make possible a definite testing of the modern theory of atomic structure, with the expectation that his new power system and energy beam would release atomic energy more effectively than any device then in use by physicists.

Having endorsed, finally, the belief that man will be able to smash, transmute, create or destroy atoms, and control vast amounts of energy, he waxed poetic on the subject. He extended man's control over atoms and energy to a cosmic scale, and saw him shaping the universe according to our desires. In an unpublished article, entitled "Man's Greatest Achievement," he wrote:

There manifests itself in the fully developed being--Man--a desire mysterious, inscrutable and irresistible: to imitate nature, to create, to work himself the wonders he perceives. Inspired to this task he searches, discovers and invents, designs and constructs, and covers with monuments of beauty, grandeur and awe, the star of his birth. He descends into the bowels of the globe to bring forth its hidden treasures and to unlock its immense imprisoned energies for his use. He invades the dark depths of the ocean and the azure regions of the sky. He peers into the innermost nooks and recesses of molecular structure and lays bare to his gaze worlds infinitely remote. He subdues and puts to his service the Werce, devastating spark of Prometheus, the titanic forces of the waterfall, the wind and the tide. He tames the thundering bolt of Jove and annihilates time and space. He makes the great Sun itself his obedient toiling slave. Such is his power and might that the heavens reverberate and the whole earth trembles by the mere sound of his voice.

What has the future in store for this strange being, born of a breath, of perishable tissue, yet immortal, with his powers fearful and divine? What magic will be wrought by him in the end? What is to be his greatest deed, his crowning achievement?

Long ago he recognized that all perceptible matter comes from a primary substance, or a tenuity beyond conception, filling all space, the Akasa or luminiferous ether, which is acted upon by the life-giving Prana or creative force, calling into existence, in never ending cycles, all things and phenomena. The primary substance, thrown into infinitesimal whirls of prodigious velocity, becomes gross matter; the force subsiding, the motion ceases and matter disappears, reverting to the primary substance.

Can Man control this grandest, most awe-inspiring of all processes in nature? Can he harness her inexhaustible energies to perform all their functions at his bidding, more still cause them to operate simply by the force of his will?

If he could do this, he would have powers almost unlimited and supernatural. At his command, with but a slight effort on his part, old worlds would disappear and new ones of his planning would spring into being. He could fix, solidify and preserve the ethereal shapes of his imagining, the fleeting visions of his dreams. He could express all the creations of his mind on any scale, in forms concrete and imperishable. He could alter the size of this planet, control its seasons, guide it along any path he might choose through the depths of the Universe. He could cause planets to collide and produce his suns and stars, his heat and light. He could originate and develop life in all its infinite forms.

To create and to annihilate material substance, cause it to aggregate in forms according to his desire, would be the supreme manifestation of the power of Man's mind, his most complete triumph over the physical world, his crowning achievement, which would place him beside his Creator, make him fulfill his ultimate destiny.

Tesla, in his eighties, was still manifesting the superman complex, and on even more elaborate a scale than when in his twenties. In his earlier dreams his visions were terrestrial, but in later life they were extended to embrace the entire universe.

Even on the cosmic scale, however, Tesla spoke in terms of matter and energy. These two entities, according to his reasoning, were suffcient to explain all observed

phenomena, a situation which militated against the discovery of any new agencies.

The civilizations of the ancient world knew nothing of electricity and magnetism; the controlled manifestations of these two phases of a single force-entity have provided us with a new civilization and a new cultural outlook on life, as well as broadened horizons within the life sphere. There is no reason why we should not look forward to the discovery of new forces which are as different from electricity as electricity is from the winds of the air and the waves of the ocean. If inadequate explanations of vital phenomena are accepted as satisfactory, embracing extravagant extensions of known forces, the way is closed to the discovery of unknown forces and the opening of any new realms of knowledge. This was the limitation which the science of the last quarter of the past century placed upon itself; and Tesla's philosophy was a product of that period. It was diffcult for him to reshape it in his later years.

The memory departments of most individuals' brains are like offce filing systems, an excellent dumping ground for everything that comes along--but try to find a filed item later. Tesla's powers of memorizing were prodigious. A quick reading of a page gave him a permanent record of it; he could always recall before his eyes a photographic record of it to be read, and could study at his convenience. Study, for Tesla, was a far different process than for the average person. He had no need for a reference library; he could consult in his mind any page of any textbook he had read, any formula, equation, or item in a table of logarithms, and it would flash before his eyes. He could recite scores of books, complete from memory. The saving in time which this made possible in research work was tremendous.

This strange faculty of vision was supernormal but entirely natural and was due, probably, to a structural characteristic in his brain which provided a direct channel between the memory and the visual areas of his cerebral hemispheres. It provided him with a very useful new sense.

The human brain is made up of two sections, the right and left sides, each of which, in some of its phases, is a complete brain; and both halves function together as a single unit. There are many layers in the brain parallel

with its surface, each connected to the others by complex nerve fibers, like threads sewing together the layers of an onion. The outer layer seems to be directly associated with our consciousness. The surface is divided into specialized areas, There is a band across the mid-section of each hemisphere from ear to ear over the top of the brain, devoted to the senses, and here are separate areas for the sensory faculties--sight, hearing, taste, smell--while near by are regions for the motor or muscular activities of the various parts of the body. The back lobe of the brain appears to be the home of the memory and the front lobe of some higher faculties of integration, the nature of which we do not as yet understand.

In normal processes of seeing, the eye forms a picture of an object on the retina, a screen on the back of the eyeball. The retina is supplied with thousands of nerve endings all packed together like stalks of asparagus in a bunch. The tip ends are provided with photosensitive processes, and when light strikes any one of them it transmits over the optic nerve a signal to the brain which is recorded as a visual response in the sight area of each half of the brain. By cooperation of all the nerve endings, the complete picture seen is transmitted. The actual seeing, then, is done in the brain and not in the eye. When an object is seen by the brain, a record of that visual experience is transmitted from the sight area of the brain to the memory center in the back part of the brain; and similar records are sent by all other sensory centers. Ordinarily this is a one-way process, the stimuli going in the direction of the memory and nothing coming back to the sensory area. If this were not so, our sense areas of the brain would be continuously reenacting old experiences and mixing them with the new, incoming experiences, causing annoying confusion.

The memory area contains a complete record of all sensory experiences we have had. In our thinking processes we use some little-understood mechanism for connecting together items stored in the memory area to produce useful combinations or relationships, or, in other words, new ideas. The memory appears to function on a subconscious level but we seem to be able to activate fibers that reach down to the desired strata at the right point to connect the memory level with the consciousness level. In this way we can recall experiences, but this experience of memory is

far different from the original experience of sight out of which the original memory record was made.

If, however, in this process of recollection, the nerve fiber linking the sight area of the brain and the memory area were to be activated, then we would see again by the sharp processes of vision the object which caused the memory record we are trying to recollect.

The act of creative thinking seems to consist of assembling two or more memory records of sensory experiences into a combination which possesses entirely new characteristics that were not apparent in the component parts. If the nerve linkage just referred to were to operate in a two-way process with the visual area, then we would be able to see the new creation as if it were a really existing object seen by the eye, although the whole operation was limited to the brain.

This process is hypothetically the one which took place in Tesla's brain and gave him tremendously greater powers of creative work than are possible to the ordinary individual. Was this conceivably a new in-vention made by Mother Nature and tried out by her on Tesla?

Tesla himself never understood the neurological, or physiological, processes underlying this strange faculty. To him it was an absolutely real experience to see in front of him as solid objects the subjects of his creative thoughts. He believed that the image of the thing he saw was sent back from the brain along the optic nerve to the eye, and that it existed as a picture on the retina where, by some suitable means, it could be seen by others--or that by means of adequate amplifying devices, such as are used in television, it could be projected on a screen. He even proposed such devices. (The apparent flaw in his reasoning followed on his mistake in thinking that he was doing this supernormal seeing with his eye, whereas the process was confined to his brain; and the reflex action from the memory centers stopped at the visual centers instead of, as he believed, being continued forward through the optical nerve to the retina.)

Tesla described his experience with this strange faculty in an interview with M. K. Wisehart, published under the title "Making Your Imagination Work for You" in the American Magazine, April, 1921. He stated:

During my boyhood I had suffered from a peculiar affliction due to the appearance of images, which were often accompanied by strong flashes of light. When a word was spoken, the image of the object designated would present itself so vividly to my vision that I could not tell whether what I saw was real or not. . . . Even though I reached out and passed my hand through it, the image would remain fixed in space.

In trying to free myself from these tormenting appearances, I tried to concentrate my thoughts on some peaceful, quieting scene I had witnessed. This would give me momentary relief; but when I had done it two or three times the remedy would begin to lose its force. Then I began to take mental excursions beyond the small world of my actual knowledge. Day and night, in imagination, I went on journeys--saw new places, cities, countries, and all the time I tried hard to make these imaginary things very sharp and clear in my mind. I imagined myself living in countries I had never seen, and I made imaginary friends, who were very dear to me and really seemed alive.

This I did constantly until I was seventeen, when my thoughts turned seriously to invention. Then, to my delight, I found I could visualize with the greatest facility. I needed no models, drawings, or experiments. I could picture them all in my mind. . . .

By that faculty of visualizing, which I learned in my boyish efforts to rid myself of annoying images, I have evolved what is, I believe, a new method of materializing inventive ideas and conceptions. It is a method which may be of great usefulness to any imaginative man, whether he is an inventor, businessman or artist.

Some people, the moment they have a device to construct or any piece of work to perform, rush at it without adequate preparation, and immediately become engrossed in details, instead of the central idea. They may get results, but they sacrifice quality.

Here, in brief, is my own method: After experiencing a desire to invent a particular thing, I may go on for months or years with the idea in the back of my head. Whenever I feel like it, I roam around in my imagination and think

about the problem without any deliberate concentration. This is a period of incubation.

Then follows a period of direct effort. I choose carefully the possible solutions of the problem. I am considering, and gradually center my mind on a narrowed field of investigation. Now, when I am deliberately thinking of the problem in its specific features, I may begin to feel that I am going to get the solution. And the wonderful thing is, that if I do feel this way, then I know I have really solved the problem and shall get what I am after.

The feeling is as convincing to me as though I already had solved it. I have come to the conclusion that at this stage the actual solution is in my mind subconsciously, though it may be a long time before I am aware of it consciously.

Before I put a sketch on paper, the whole idea is worked out mentally. In my mind I change the construction, make improvements, and even operate the device. Without ever having drawn a sketch I can give the measurements of all parts to workmen, and when completed all these parts will fit, just as certainly as though I had made the actual drawings. It is immaterial to me whether I run my machine in my mind or test it in my shop.

The inventions I have conceived in this way have always worked. In thirty years there has not been a single exception. My first electric motor, the vacuum tube wireless light, my turbine engine and many other devices have all been developed in exactly this way.

That Tesla believed his mental visualizations brought images from his brain to the back of his eye is indicated by some statements he made in his famous lecture before the National Electric Light Association convention at St. Louis, in March, 1893, when announcing his discovery of radio. These statements about vision had no relationship to the subject of the lecture, and the fact that he interjected them indicated that his experiences with this strange power had a powerful influence on his inventive thinking. He said:

It can be taken as a fact, which the theory of the action of the eye implies, that for each external impression, that is for each image produced on the retina, the ends of the visual nerves, concerned in the conveyance of the

impressions to the mind, must be under a peculiar stress or in a vibratory state. It now does not seem improbable that, when by the power of thought an image is evoked, a distinct reflex action, no matter how weak, is exerted upon certain ends of the visual nerves, and therefore upon the retina. Will it ever be within human power to analyze the condition of the retina, when disturbed by thought or reflex action, by the help of some optical or other means of such sensitiveness that a clear idea of its state might be obtained? If this were possible, then the problem of reading one's thoughts with precision, like the characters of an open book, might be much easier to solve than many problems belonging to the domain of positive physical science, in the solution of which many, if not the majority, of scientific men implicitly believe.

Helmholtz has shown that the fundi of the eye are themselves luminous, and he was able to see in total darkness the movements of his arm by the light of his own eyes. This is one of the most remarkable experiments recorded in the history of science, and probably only a few men could satisfactorily repeat it, for it is very likely that the luminosity of the eyes is associated with uncommon activity of the brain and great imaginative power. It is fluorescence of brain action, as it were.

Another fact having a bearing on this subject, which has probably been noted by many, since it is stated in popular expressions, but which I cannot recollect to have found chronicled as a positive result of observation is that, at times, when a sudden idea or image presents itself to the intellect, there is a painful sensation of luminosity produced in the eye observed even in broad daylight.

Forty years later Tesla was still interested in the possibility of capturing a photographic record of thoughts. He stated in interviews that if his theory were correct--that thoughts are recorded on the retina--it should be possible to photograph what is revealed on this screen in the eye, and project enlarged images of it.

There is nothing illogical about Tesla's reasoning concerning his strange faculty of visualizing and the possibility of finding a corresponding image on the retina. There is a bare possibility that in an extreme case, as was his, a reflex arc may have extended from the brain to the retina; but the probability that it did not is stronger. If

he had possessed the ability to take others into his confidence in his experiments, he would have been able to stage some simple tests in the laboratory of an ophthalmologist which would have given him some definite experimental evidence to support or dispose of his theories, as far as photographic thought images were concerned.

About 1920 tesla had prepared, although he never published, an announcement of what he declared was "An Astounding Discovery." It involved factors which he called "cosmic"; but it likewise presented situations which the practicers of voodoo in Haiti, and other intellectually unveneered portions of the human race, would receive with perfect understanding. Since Tesla, one of the most highly civilized individuals, could evolve this conception, it is probable that other supercultured individuals or groups could find it in harmony with their ideas and experiences.

It involves, however, a situation in which the soulless "matter and energy" automaton (to which status we have seen Tesla relegate human beings) is able to judge ethical values, and, like a pontiff presiding over a court of morals, inflict punishment for transgressions.

Here is Tesla's description of his "astounding discovery":

While I have failed to obtain any evidence in support of the contentions of psychologists and spiritualists, I have proved to my complete satisfaction the automatism of life, not only through continuous observation of individual actions, but even more conclusively, through certain generalizations. These amount to a discovery which I consider of the greatest moment to human society and on which I shall briefly dwell.

I got the first inkling of this astounding truth when I was still a very young man, but for many years I interpreted what I noted simply as coincidences. Namely, whenever either myself or a person to whom I was attached, or a cause to which I was devoted, was hurt by others in a particular way, which might be best popularly characterized as the most unfair imaginable, I experienced a singular and undefinable pain which, for want of a better term, I have qualified as "cosmic," and shortly thereafter, and invariably, those who have inflicted it came to grief. After many such cases I confided this to a number of

friends, who had the opportunity to convince themselves of the truth of the theory which I have gradually formulated and which may be stated in the following words.

Our bodies are of similar construction and exposed to the same external influences. This results in likeness of response and concordance of the general activities on which all our social and other rules and laws are based. We are automata entirely controlled by the forces of the medium, being tossed about like corks on the surface of the water, but mistaking the resultant of the impulses from the outside for free will.

The movements and other actions we perform are always life-preservative and though seemingly quite independent from one another, we are connected by invisible links. So long as the organism is in perfect order it responds accurately to the agents that prompt it, but the moment there is some derangement in any individual, his self-preservative power is impaired.

Everybody understands, of course, that if one becomes deaf, has his eyesight weakened, or his limbs injured, the chances for his continued existence are lessened. But this is also true, and perhaps more so, of certain defects in the brain which deprive the automaton, more or less, of that vital quality and cause it to rush into destruction.

A very sensitive and observant being, with his highly developed mechanism all intact, and acting with precision in obedience to the changing conditions of the environment, is endowed with a transcending mechanical sense, enabling him to evade perils too subtle to be directly perceived. When he comes in contact with others whose controlling organs are radically faulty, the sense asserts itself and he feels the "cosmic" pain.

The truth of this has been borne out in hundreds of instances and I am inviting other students of nature to devote attention to this subject, believing that, through combined and systematic effort, results of incalculable value to the world will be attained.

Tesla's uncommunicative nature concerning his own intimate experiences has undoubtedly deprived the world of many interesting stories. He was unquestionably an abnormal individual, and of a type that does have what are known as

"psychic experiences." He was emphatic in his denial that he ever had experiences of that sort; yet he has related incidents that clearly belong in the psychic category. He seemed to be fearful that an admission of psychic experiences would cause him to be misunderstood as supporting spiritualism, or theories that something operates in life other than matter and energy.

Whenever he was asked for his philosophy of life, he would elaborate a theory that the human body is a meat machine which responds to external forces.

One evening in New York, as Tesla and the author sat in the lobby of the Hotel Governor Clinton, the inventor discussed his meat-machine theory. It was a materialistic philosophy typical of the Victorian era. We are, he held, composed of only those things which are identified in the test tube and weighed in the balance. We have only those properties which we receive from the atoms of which our bodies are constructed. Our experiences, which we call life, are a complex mixture of the responses of our component atoms to the external forces of our environment.

Such a philosophy has the virtue of simplicity and brevity of presentation; and it lends itself readily to being propounded with a positiveness that reacts on the propounder, and transforms his attitude into one of dogmatism in which emphatically expressed opinion is often confused with and substituted for factual evidence.

"I don't believe a word of your theory," I replied to Tesla's exposition, "and, thank God, I am convinced you don't believe a word of it either. The strongest proof I have that your theory is totally inadequate is that Tesla exists. Under your theory we could not have a Tesla. Tesla possesses a creative mind and, in his accomplishments, stands high above all other men. If your theory were correct, we would either all be geniuses like Tesla or we would all be mental mediocrities living in these meat machines you describe, all responding in the same way to the uniform, inanimate and uncreative external forces."

"But we are all meat machines," replied Tesla, "and it happens that I am a much more sensitive machine than other people and I receive impressions to which they are inert, and I can both understand and interpret these impressions. I am simply a finer automaton than others," he insisted.

"This difference, which you admit between yourself and others, Dr. Tesla, completely disproves your theory, from my viewpoint," I responded. "Your sensitiveness would be a purely random incident. In the integration of this randomness, with respect to all individuals, all of us would probably once, possibly very much more frequently, rise to the height of manifesting genius as you have done all your life. Even though the strokes of genius would manifest intermittently, all such individuals would receive the permanent rating as geniuses. Genius does not manifest, even intermittently, in all of us, so your meat-machine theory appears, to me, untenable, If you were really frank with me, you would tell me of many experiences you have had, strange experiences, that you could not explain, that do not fit into your meat-machine theory, and which you have been afraid to discuss with anyone for fear they would misunderstand you and perhaps ridicule you. I, however, will not find these experiences strange and beyond understanding, and one of these days you will open up and tell me about them."

As happened whenever I disagreed with him, after that evening I did not see Tesla for a while. In due time, however, I had a great many telephone conversations with him. Our discussion seemed to have brought about a change in his attitude toward me; and the next time I saw him he confided, "Mr. O'Neill, you understand me better than anyone else in the world." I mention this to indicate the correctness of my belief that there was another Tesla hidden within that synthetic individual, the superman, which Tesla sought to pass off on the public as his real self.

I did not, at this time, know about Tesla's "astounding discovery," or of some of his experiences about which I later learned. Had I known of these, my discussion with him could have been more specific.

SEVENTEEN

ALTHOUGH Tesla thoroughly disbelieved in psychical phenomena, as previously indicated, he had many experiences which belong in this category; and he neither discredited nor disavowed their reality. Such paradoxes were common in all matters concerning him.

Tesla, for example, completely rejected telepathy as a phase of psychical phenomena, but he was firmly convinced that mind could communicate directly with mind. When asked about his belief in telepathy by a newspaper reporter in the early nineties, Tesla replied: "What is usually taken as evidence of the existence of telepathy is mere coincidence. But the working of the human mind through observation and reason interests and amazes me. And then he added the paradoxical statement: "Suppose I make up my mind to murder you. In an instant you would know it. Now, isn't that wonderful enough? By what process does the mind get at all this?"

Reduced to its simplest terms, this interview states: Psychical telepathy does not exist as a reality; but the transmission of thought from mind directly to mind is a wonderful phenomenon, worthy of scientific study.

The paradox here is due to the fact that, at the period in which Tesla was speaking, all psychical phenomena were supposed to be mediated by the intervention of spirits, or souls of the departed. Such a theory had no place in Tesla's philosophy, since he did not believe in immortality and felt that he could explain all phenomena in terms of matter and energy; and the spirit was supposed to lie beyond both of these categories. Thinking, however, was, according to Tesla's theories, something which resulted from the interaction of matter and energy in the brain; and as this process probably produced waves in the ether, there was no reason why the waves sent out by one mind should not be received by another, with resulting transfer of thought.

Tesla would not discuss anything bordering on psychical experiences outside the circle of his relatives, however. On one occasion, though, he probably saved the lives of three of his friends through a premonition; and he related the incident to his nephew, Sava N. Kosanovich, who thus retells it:

"I heard from Tesla that he had premonitions. He explained his in a mechanical way, saying he was a sensitive receiver

that registers any disturbance. He declared that each man is like an automaton which reacts to external impressions.

"He told me of one instance in which he had held a big party here in New York for some of his friends who planned to take a certain train for Philadelphia. He felt a powerful urge not to let the friends depart as planned and forcibly detained them so that they missed the train on which they had planned to travel. This train met with an accident in which there were a large number of casualties. This happened sometime in the 90's.

"When his sister Angelina was ill, and died, he sent a telegram in which he said: "I had a vision that Angelina was arising and disappearing. I sensed all is not well."

Tesla himself tells a most remarkable story of two supernormal events, in an unpublished manuscript. It records a situation in which, owing to overwork, his strange phenomenon of visualization disappeared, or died, and was reborn. In coming back, it grew up quickly by repeating the visualization of events of earliest childhood and successively re-enacting later events, until it brought him to the actual moment and capped the climax by then presenting a visualization of an event that had not yet taken place.

The story of this experience, as told by Tesla:

I will tell of an extraordinary experience which may be of interest to students of psychology. I had produced a striking phenomenon with my grounded transmitter and was endeavoring to ascertain its true significance in relation to the currents propagated through the earth. It seemed a hopeless undertaking and for more than a year I worked unremittingly but in vain. This profound study so entirely absorbed me that I became forgetful of everything else, even of my undermined health. At last, as I was on the point of breaking down, nature applied the preservative, inducing lethal sleep.

Regaining my senses, I realized with consternation that I was unable to visualize scenes from my life except those of infancy, the very first ones that had entered my consciousness. Curiously enough, these appeared before my vision with startling distinctness and afforded me welcome relief. Night after night, when retiring, I would think of

them and more and more of my previous existence was revealed. The image of my mother was always the principal figure in the spectacle that slowly unfolded, and a consuming desire to see her again gradually took possession of me.

This feeling grew so strong that I resolved to drop all work and satisfy my longing. But I found it too hard to break away from the laboratory and several months elapsed during which I succeeded in reviving all the impressions of my past life up to the spring of 1892.

In the next picture that came out of the mist of oblivion, I saw myself at the Hotel de la Paix in Paris just coming to from one of my peculiar sleeping spells caused by prolonged exertion of the brain. Imagine the pain and distress I felt when it flashed upon my mind that a dispatch was handed to me at that very moment bearing the sad news that my mother was dying.

It was especially remarkable that all during this period of partially obliterated memory I was fully alive to everything touching on the subject of my research. I could recall the smallest details and the least insignificant observations in my experiments and even recite pages of texts and complex mathematical formulae.

This was a prevision of the event which took place immediately after his Paris lecture, as described in an earlier chapter, in which he rushed home in time to see his mother just before she died.

The second incident also concerns the death of his mother, and is told in another connection in the same manuscript. He states:

For many years I have endeavored to solve the enigma of death and watched eagerly for every kind of spiritual indication. But only once in the course of my existence have I had an experience which, momentarily, impressed me as supernatural. It was at the time of my mother's death.

I had become completely exhausted by pain and long vigilance and one night was carried to a building about two blocks from our home. As I lay helpless there, I thought that if my mother died while I was away from her bedside she would surely give me a sign.

Two or three months before I was in London in company with my late friend, Sir William Crookes, when spiritualism was discussed and I was under full sway of these thoughts. I might not have paid attention to other men but was susceptible to his arguments as it was his epochal work on radiant matter, which I had read as a student, that made me embrace the electrical career.

I reflected that the conditions for a look into the beyond were most favorable, for my mother was a woman of genius and particularly excelling in the powers of intuition. During the whole night every fiber of my brain was strained in expectancy, but nothing happened until early in the morning when I fell into a sleep or perhaps a swoon, and saw a cloud carrying angelic figures of marvelous beauty, one of whom gazed upon me lovingly and gradually assumed the features of my mother. The apparition slowly floated across the room and vanished and I was awakened by an indescribably sweet song of many voices. In that instant a certitude, which no words can express, came upon me that my mother had just died. And that was true.

I was unable to understand the tremendous weight of the painful knowledge I received in advance and wrote a letter to Sir William Crookes while still under the domination of these impressions and in poor bodily health.

When I recovered I sought for a long time the external cause of this strange manifestation and to my great relief, I succeeded after many months of fruitless effort. I had seen the painting of a celebrated artist, representing allegorically one of the seasons in the form of a cloud with a group of angels which seem to actually float in the air, and this had struck me forcibly. It was exactly the same that appeared in my dream with the exception of my mother's likeness. The music came from the choir in the church nearby at the early mass of Easter morning, explaining everything satisfactorily in conformity to scientific facts.

This "scientific" explanation by Tesla is, of course, totally unscientific. It ignores the three principal facts: one, that he had what he identified at the time as a supernormal experience that brought with it a certitude that words could not describe; two, that this experience conveyed a revelation of his mother's death, which he

understood as such; and, three, that the event took place at the exact time of her death. The mechanism by which the phenomenon was produced utilized the memories stored in Tesla's mind (of the painting, for example) as the vehicle by which the information could be presented to him in understandable, though symbolic, form. In addition, there was the premonition given several months previously as the climax of an extended phenomenon involving his mother.

Tesla's efforts to explain away "scientifically" everything of a psychical or spiritual nature, and the inadequate explanations which were satisfactory to him for this purpose, are an indication of a conflict that was taking place within him in an effort to reconcile the purely materialistic "matter and energy" superman, into which he fashioned himself, with the underlying individual into which was born a great capacity for manifesting a deep spiritual insight into life, but which he suppressed.

One of the strangest luncheon parties Tesla ever staged was that given by him to a prize fighter, Fritzie Zivic. It was served in one of the private dining rooms of the Hotel New Yorker in 1940. Fritzie Zivic was scheduled to take part in a prize fight at Madison Square Garden for the welterweight championship, and the luncheon was held at noon on the day of the battle.

Fritzie was one of six brothers, all of whom were either professional prize fighters or wrestlers. They lived at Pittsburgh where their father conducted a beer saloon. They were all born in Pittsburgh, but were the sons of parents, natives of Yugoslavia, whose diffcult-to-pronounce Slavonic name was shortened to Zivic by the brothers for their professional activities.

Tesla had all six of the brothers as his guests. The only other guests were William L. Laurence, science writer of the New York Times, and the author.

Three very different types of individuals were gathered around the table. The six fighting brothers were all fine physical specimens. They averaged medium height but their powerful, chunky bodies, deep chests and broad shoulders made them seem rather short. All were clear eyed, had clear complexions and clean-cut features, were conservatively dressed in sack suits, and wore white linen collars. The two newspapermen presented an appearance in strong contrast

with the fighters, and in contrast with all the others was Tesla. Laurence, with his great mop of jet black hair combed straight back, looked more like a musician.

Tesla was seated at the head of the table. At his right sat Fritzie and next to him ranged three of his brothers. Opposite them sat two other brothers and Mr. Laurence. The author sat at the far end of the table.

Tesla did not arrange one of his famous duck dinners for this occasion--he had other plans. As soon as the party was seated, Tesla stood up. The broad, stocky Fritzie looked like a pygmy by comparison. Tesla was attired in a light-weight, tight-fitting, black, single-breasted sack suit which made him look more slender than usual. He had lost considerable weight in the preceding year, and this accentuated the sharp, bony contour which his face had taken on in his latter years. His face, of the ascetic type, now was crowned with thinning locks of silvery white hair. His long slender hands, delicately shaped, started to wave over the seated prize fighter, who smiled up at the strange figure towering above him.

"I am ordering for you a nice thick beefsteak, two inches thick, so that you will have plenty of strength tonight to win the championship by a . . . "

The fighter had both hands up, trying to interrupt the gesticulating figure of the scientist.

"No," protested Fritzie, "I am in training and I cannot eat a steak today."

"You listen to me," shouted the insistent voice of Tesla, whose swinging arms and swaying body made him appear to be going through the antics of a cheer leader at a football game. "I'll tell you how to train. You will train on beefsteak. I am going to get you a beefsteak two inches thick and dripping with blood so that you will be able to . . ."

The five brothers now joined Fritzie in his protest.

"He can't eat beefsteak today. He would lose the fight, Dr. Tesla," they chorused.

"No, he won't lose the fight," shot back Tesla. "You must think of the heroes of our national Serbian poetry. They were redblooded men and mighty fighters. You too must fight for the glory of Serbia, and you need beefsteak dripping in blood to do it!"

Tesla had worked himself into a fine frenzy and was waving his arms and punching his palms as if he were at the ringside at an exciting moment in the battle. His frenzy was lost on Fritzie and his brother pugilists. They were unmoved. Fritzie replied:

"I will win, Dr. Tesla. I will fight for the glory of Yugoslavia and when the referee gives me the decision and I speak into the microphone I will also say I fought for Dr. Tesla--but no beefsteak today, Dr. Tesla, please."

"All right, Fritzie, you can have whatever you want," Tesla agreed, "but your brothers will have their beefsteak."

"No, Dr. Tesla," replied the eldest brother, "if Fritzie cannot have beefsteak neither will we. We will eat whatever he eats."

Fritzie ordered scrambled eggs on toast, with bacon, and a glass of milk. The five brothers gave duplicate orders and the two newspapermen did likewise.

Tesla laughed heartily. "So that is what you do your fighting on today," he said between chuckles.

For himself, the blood-thirsty 83-year-old scientist ordered "A dish of hot milk"; and on this diet he managed to summon a tremendous amount of energy during the meal which he directed toward urging Fritzie to give his opponent "everything you've got" and "make it a knockout in the first round."

It was a strange dinner. Despite the greatly outnumbering pugilists with their hard set faces and chunky powerful bodies, the thin, bony faced, sharp featured, almost emaciated scientist with his sunken eyes, and his thin, silky silver hair, easily dominated the scene. Everyone was at ease despite the brothers' anticipation of Fritzie's impending battle and Tesla's enthusiasm. Yet, in spite of the fact that everyone was relaxed, there was an eerie kind of tenseness linking the peculiar assemblage. Once I became

conscious of the situation, I watched developments with interest. I had experienced such conditions previously but never under such circumstances as these.

Mr. Laurence, of the Times, was seated at my right. He began to act a bit restless while only halfway through the meal. Several times he looked under the table. He in turn rubbed his ankle, his knee, his calf. He shifted his position. He rubbed his elbow and later his forearm. I managed to catch his eye.

"Anything bothering you, Bill?" I asked, knowing full well what was happening.

"There is something strange going on here," he replied.

A couple of minutes later he again reached, and looked under the table.

"Feel anything?" I asked.

"Yes," he replied, seemingly a bit worried. "Something hot is touching me at different spots. I can feel the heat but I can't see anything that is doing it. Do you feel it, too?" he asked.

"Don't worry about it," I assured him. "I know what it is, and will tell you all about it later. Just make as close observations as you can now."

The phenomenon continued until the party broke up. On our way back to our offces, I explained to Mr. Laurence.

"You have often laughed at me for my gullibility in accepting the reality of the so-called psychic experiences," I said. "Now you have had one. As soon as that luncheon got well under way, after Dr. Tesla's fiery outburst had quieted down, I sensed a peculiar tenseness in the air around me. At times the atmosphere seemed webby to my face and hands, so I suspected something unusual might happen.

"That gathering was a perfect set-up for a psychic seance, and if it was held in the dark there is no telling what we might have observed. Here were six powerfully built men, closely in rapport with each other, all filled to the bursting point with vital energy waiting for an event that

would release an emotional outburst. In addition, we had Dr. Tesla staging an emotional outburst the like of which he probably never before exhibited throughout his life. He was supercharged with a different kind of vital energy. Just visualize Dr. Tesla as a medium acting as a co-ordinator, in some unknown way, to release these pent-up stores of vital energy which, again in an unknown manner, organized channels of conduction through which this energy was transferred from levels of high potential to levels of lower potential.

"In this case we were the levels of lower potential, for I had exactly the same experiences you had, with these energy-transfer channels in space making contact with various parts of my body and producing areas in which I, too, experienced a sensation of intense heat.

"You have read reports of seances in which the sitters reported that they experienced cool breezes. In these situations the action is the reverse of what we experienced, for in the seances energy was being drawn from the sitters to be organized by the so-called medium for the production of phenomena.

"Some kind of highly attenuated energy-bearing fluid was, in our experience today, drawn from the bodies of the fighters and fed into our bodies--and in the seances it is drawn from the bodies of the sitters and fed into that of the medium, or to a central collecting point. In a report which I have written on my seance observations, I have called this substance psynovial fluid, which is merely a convenient abbreviation for new psychic fluid.

"Now that you have had today's experience, you will understand why a few years ago I risked having Dr. Tesla figuratively massacre me when I told him he was using his meat-machine philosophy of human life to cover up a lot of strange experiences he has had, and about which he was afraid to talk. . . ."

Another strange supernormal experience came to Tesla a few days before he died, but he was probably totally unaware that the situation had any unusual aspects.

Early one morning he called his favorite messenger boy, Kerrigan, gave him a sealed envelope, and ordered him to

deliver it as quickly as possible. It was addressed to "Mr. Samuel Clemens, 35 South Fifth Ave., New York City."

Kerrigan returned in a short time with the statement that he could not deliver the message because the address was incorrect. There is no such street as South Fifth Ave., the boy reported; and in the neighborhood of that number on Fifth Ave. no one by the name of Clemens could be located.

Tesla became annoyed. He told Kerrigan: "Mr. Clemens is a very famous author who writes under the name Mark Twain, and you should have no trouble locating him at the address I gave you. He lives there."

Kerrigan reported to the manager of his office and told him of his diffculty. The manager told him: "Of course you couldn't find South Fifth Avenue. Its name was changed to West Broadway years ago, and you won't be able to deliver a message to Mark Twain because he has been dead for twenty-five years."

Armed with this information, Kerrigan returned to Tesla, and the reception accorded his announcements left him still further confused.

"Don't you dare to tell me that Mark Twain is dead," said Tesla. "He was in my room, here, last night. He sat in that chair and talked to me for an hour. He is having financial diffculties and needs my help. So you go right back to that address and deliver that envelope--and don't come back until you have done so." (The address to which he sent the messenger was that of Tesla's first laboratory!)

Kerrigan returned to his offce. The envelope, not too well sealed, was opened in the hope it would give some clue as to how the message could be delivered, The envelope contained a blank sheet of paper wrapped around twenty $5 bills! When Kerrigan tried to return the money, Tesla told him, with great annoyance, either to deliver the money or keep it.

The last two decades of Tesla's life were filled with many embarrassing situations concerning unpaid hotel bills, and it would seem that by some process of transference this situation was shifted to his perception of Mark Twain.

In view of Tesla's highly intensified abilities to see the subjects of his thoughts as materialized objects, the simpler theory would be that by his usual process he had summoned the vision of Mark Twain, Tesla and Mark Twain were very good friends, and the inventor had every reason for knowing that the heavy-thinking humorist was dead, Such being the case, how was he able to forget his death? An objective theory can be offered which may, or may not, contain the correct explanation.

Tesla's memory was filled with many recollections of Mark Twain, dating back to his early youth when he credited the reading of one of the humorist's books with having brought him out of a critical illness. Twenty years later, when Tesla related this incident, the humorist was so deeply affected he wept. A close friendship followed, filled with many pleasant incidents. Every incident concerning Mark Twain was laid down in Tesla's memory. How these records are filed in the brain we do not know, but we might assume, for the moment, that the arrangement is orderly enough, with the system based on a time sequence in which each successive incident is filed on an earlier one, the latest ones being on top. When Tesla started the process of visualizing Mark Twain in his room (and it probably operated on a subconscious level), he penetrated through the stack of memory records until he reached one that was satisfactory, and then concentrated so heavy a flow of vital energy in carrying this to the visualization center of his brain that it burned out, and destroyed, or narcotized, all later memory records that lay above it. As a result, after the visualization process was over, there was no record in Tesla's memory files of anything that happened in his relations with Mark Twain, following the pleasant record he had so strangely relived. All subsequent memory records were wiped out, including his memory of Mark Twain's death. It would then be perfectly logical for him to reach the conclusion that Mark Twain was still alive!

Several versions of this story are in circulation. They all have in common Tesla's belief that Mark Twain was still alive; that he himself had very recently been in communication with him, and sought to send him money to meet a diffcult situation.

Pirated, lied about, ignored, (Dr. W. H. Eccles concludes an obituary memorial, in Nature (London), February 13, 1943:--"Throughout his long life of 85 years Tesla seldom

directed attention to his own successes, never wrote up again his old work, and rarely claimed priority though continually pirated. Such reserve is particularly striking in a mind so rich in creative thought, so competent in practical achievement.") Tesla carried on his work during the latter decades, always hoping that he would be able to arrange matters so that he would be able to finance all the inventions he was treasuring in his mind. His pride would not permit him to admit financial embarrassment. He was forced frequently to leave hotels because of unpaid bills. His friend, B. A. Behrend, author of the book, The Induction Motor, which had clarified Tesla's theory for engineers, when visiting New York and finding the inventor moved from the hotel where he last found him, in each instance paid his bills, and caused Tesla's held baggage to be forwarded to him.

In the early thirties, when it seemed as if financial discouragements would "have him down," Tesla, however, appeared as optimistic as ever. He declared: "It is impossible for anyone to gain any idea of the inspiration I gain from my applied inventions which have become a matter of history, and of the force it supplies to urge me forward to greater achievements. I continually experience an inexpressible satisfaction from the knowledge that my polyphase system is used throughout the world to lighten the burdens of mankind and increase comfort and happiness, and that my wireless system, in all of its essential features, is employed to render a service to and bring pleasure to people in all parts of the earth."

When his wireless-power system was mentioned, he exhibited no sign of resentment over the collapse of his project but replied philosophically: "Perhaps I was a little premature. We can get along without it as long as my polyphase system continues to meet our needs. Just as soon as the need arises, however, I have the system ready to be used with complete success."

On his eightieth birthday he was asked if he expected actually to construct and operate his recently announced inventions, and in reply he quoted, in German, a stanza from Goethe's Faust:

"The God that in my bosom lives"

"Can move my deepest inmost soul,"

"Power to all my thought he gives"

"But outside he has no control."

It had been Tesla's intention to write his autobiography. He desired to have the story of his work recorded with a most meticulous regard for accuracy; and this, he felt, no one but himself could bring to it. He declared that he had no intention of starting work on this project until he had accomplished the application of all of his major discoveries. Several persons who proposed writing his biography received only a refusal of the requested co-operation. Kenneth Swezey, a writer on scientific subjects, maintained close contact with Tesla for a number of years, and it was expected that Tesla would co-operate with him in such a project. Swezey assembled seventy letters from leading scientists and engineers in all parts of the world as a surprise for Tesla on his seventy-fifth birthday, at which time the letters, bound in a memorial volume, were presented to him. These letters, reprinted in Yugoslavia, led to the establishment of the Tesla Institute in that country. Swezey was engaged in war work and expected, at the time of Tesla's death, to enter the Navy; otherwise he might have undertaken the task of writing Tesla's biography. Tesla, even up to his eighty-fourth year, expected to recover more robust health and to live beyond the century mark. It is probable, therefore, that he had not started work on his autobiography. Whether or not any parts of it have been written is impossible to ascertain at the present time. All Tesla's records were sealed by the Custodian of Alien Property, although Tesla was a citizen of the United States.

During the last half-dozen years of his life, Tesla, happily, was supplied with enough money to meet his immediate needs, thanks to the payment to him of an honorarium of $7,200 a year, by the Yugoslav government, as patron of the Tesla Institute, established in Belgrade. (The Society for the Foundation of the Tesla Institute at Belgrade was organized as Tesla neared his eightieth year. It enlisted support from the scholars, the government, commercial interests and the people as a whole. From the government and private sources an endowment was subscribed which was adequate to erect and equip a research laboratory and maintain it in operation as an institute. The Institute was opened in 1936, in commemoration of Tesla's eightieth

anniversary. A week of observance was held throughout Yugoslavia and formal celebrations were held at Belgrade on May 26, 27 and 28, at Zagreb on May 30, and at his native village, Smiljan, on June 2 and also on July 12.) Even with this income, however, and with a very limited range of activity (being confined largely to his room), during the last two years Tesla still managed to fall behind in his hotel bill. This was owing to his unlimited generosity. He was very generous in bestowing tips on all who performed the slightest service for him, and in responding to the slightest suggestion that anyone was in need of assistance.

During the latter part of 1942 he spent most of the time in bed, mentally active but physically weak. He permitted no visitors to come to his room, not even close associates of earlier years. He insisted to hotel employees that he was not ill and refused to listen to questions that he have a doctor visit him. He gave orders that even hotel employees were not to enter his room unless he summoned them.

On January 5, Tuesday morning, he permitted the maid to come to his room, and then gave orders to guard his room closely so that he would not be disturbed. This was done. It was not unusual for Tesla to give orders that he was not to be disturbed for protracted periods. Early Friday morning (January 8) a maid with a premonition, risking his displeasure, entered Tesla's room and found him dead. He looked peaceful, as if resting, with a suggestion of a smile on his gaunt bony face. The superman died as he had lived--alone.

The police were notified that Tesla had died alone and without medical attendance. The coroner declared his death due to natural causes incident to senility; and that he had died on the night of Thursday, January 7, 1943, some hours before the maid entered the room. Operatives from the Federal Bureau of Investigation came and opened the safe in his room and took the papers it contained, to examine them for a reported important secret invention of possible use in the war. The body was removed to Campbell's Funeral Parlors at Madison Avenue and 81st Street.

Funeral services were held at the Cathedral of St. John the Divine, on Tuesday, January 12, at 4 pm. Bishop Manning offered the opening sentences of the Burial Offce and Final Prayer. Following the services, the body was removed to

Ferncliff Cemetery at Ardsley, N. Y., and was later cremated.

AFTERGLOW

EIGHTEEN

DESPITE his celibate life, and his almost hermitlike existence in his own intellectual sphere, Tesla was, in his social contacts, a charming individual. The year he had spent digging ditches and doing hard manual labor, when he could get a job of any kind, and his experience during that time of sleeping in any shelter he could obtain and eating any kind of food he could manage to secure, undoubtedly made a tremendous and lasting, impression on him. The fact that he could never be induced to discuss this period would so indicate. Yet it probably softened him in a beneffcial way--by a going-through-the-mill process. But it had been a grievous insult to his personality to be valued only for the brute strength in his muscles; and this rankled ever after.

Once he had obtained funds through the founding of his laboratory and the sale of his patents to Westinghouse, he thereafter maintained an almost princely status. He knew how to wear clothes to increase the impressiveness of his appearance; his tallness gave him something of an advantage over others; his obvious physical strength brought him a respect that forbade any invasion of his attitude; his excellent English and the care he exercised to use the language correctly, and his command of a half-dozen other languages, established him as a scholar; and the first batch of his alternating-current inventions created for him in the mind of the public a reputation for outstanding scientific accomplishment. The fact that he always spoke of the value of his inventions to the world, and not of the greatness of his own accomplishment, endeared him to all who met him.

When Tesla was riding a tidal wave of popularity during the nineties, he was averse to publicity; but frequently well-known writers for the newspapers were able to break through the barriers and secure "feature" articles. An excellent description of him, keyed to the manner of the period, is contained in an article written by Franklin Chester, in the

Citizen of August 22, 1897. The portion referring to his personal appearance and activities follows:

So far as personal appearance goes no one can look upon him without feeling his force. He is more than six feet tall and very slender. Yet he possesses great physical power. His hands are large, his thumbs abnormally long, and this is a sign of great intelligence. His hair is black and straight, a deep shining black. He brushes it sharply from over his ears, so that it makes a ridge with serrated edges.

His cheekbones are high and prominent, the mark of the Slav: his skin is like marble that age has given the first searing of yellow. His eyes are blue, deeply set, and they burn like balls of fire. Those weird flashes of light he makes with his instruments seem also to shoot from them. His head is wedge shaped. His chin is almost a point.

Never was a human being filled with loftier ideals. Never did a man labor so unceasingly, so earnestly, so unselfishly for the benefft of the race. Tesla is not rich. He does not trouble himself about money. Had he chosen to follow in the footsteps of Edison he could be, perhaps, the richest man in the world, and Tesla is just 40 years old.

Tesla is, above all things, a serious man, undoubtedly the most serious man in New York. Yet he has a keen sense of humor and the most beautiful manners. He is the most genuinely modest of men. He knows no jealousy. He has never decried the accomplishments of another, never refused credit.

When he talks you listen. You do not know what he is saying, but it enthralls you. You feel the importance without understanding the meaning. He speaks the perfect English of a highly educated foreigner, without accent and with precision. He speaks eight languages equally well.

The daily life of this man has been the same, practically, ever since he has been in New York. He lives in the Gerlach, a very quiet family hotel, in 27th street, between Broadway and Sixth avenue. He starts for his laboratory before 9 o'clock in the morning, all day long he lives in his weird, uncanny world, reaching forth to capture new power to gain fresh knowledge.

No stranger ever sees him at his work. No one knows of his assistants. At rare intervals he presents some experiments in his laboratory, and there is no sacrifice that thousands of people would not make to gain admission to these.

Usually he works until 6 o'clock, but he may stay later. The absence of natural light does not trouble him. Tesla makes sunlight in his workshop.

At exactly 8 o'clock he enters the Waldorf. He is attired in irreproachable evening clothes. In the winter time he never wears an evening jacket, but always the coat with tails.

He finishes his dinner at exactly 10 o'clock, and leaves his hotel, either to go to his rooms to study or to return to his laboratory to work through the night.

Arthur Brisbane, who later became Hearst's famous editor, interviewed Tesla and published in The World, August 22, 1894, the longest story he had written on a famous person. He declared Tesla "Our Foremost Electrician--Greater Even than Edison," and included the following description of him:

He has eyes set very far back in his head. They are rather light. I asked him how he could have such light eyes and be a Slav. He told me that his eyes were once much darker, but that using his mind a great deal had made them many shades lighter. I have often heard it said that using the brain makes the eyes lighter in color. Tesla's confirmation of the theory through his personal experience is important.

He is very thin, is more than six feet tall, and weighs less than a hundred and forty pounds. He has very big hands. His thumbs are remarkably big, even for such big hands. They are extraordinarily big. This is a good sign. The thumb is the intellectual part of the hand. The apes have very small thumbs. Study them and you will notice this.

Nikola Tesla has a head that spreads out at the top like a fan. His head is shaped like a wedge. His chin is as pointed as an ice-pick. His mouth is too small. His chin, though not weak, is not strong enough. His face cannot be studied and judged like the faces of other men, for he is not a worker in practical fields. He lives his life up in

the top of his head, where ideas are born, and up there he has plenty of room. His hair is jet black and curly. He stoops--most men do when they have no peacock blood in them. He lives inside of himself. He takes a profound interest in his own work. He has that supply of self-love and self-confidence which usually goes with success. And he differs from most of the men who are written and talked about in the fact that he has something to tell.

Tesla had, to be sure, a sense of humor and enjoyed putting over a subtle joke. Before the period in which he became a regular diner at the Waldorf-Astoria, he dined nightly at Delmonico's, then the smartest hostelry in the city, and a gathering place for "The 400." Tesla was the most famous and spectacular figure among the famous patrons of the famous place, but he always dined alone. He could never be induced to join other groups and never had a guest of his own. After dining he would always return to work at his laboratory.

One evening some of his friends, believing that he was working too hard and should get some relaxation, induced him to join them in a game of billiards. They assumed he had neglected to learn how to play games, so, on arriving at the billiard room, they explained to him how to hold the cue, strike the balls, and other elements of the game. Tesla had not played billiards in a dozen years; but during his second year at Graumltz, when he was a year ahead in his studies and spent his evenings in the cafe's, he had become an expert billiardist. When the experts at Delmonico's gave him preparatory instruction, he asked some "dumb" questions, and made some intentional miscues. Taking on one of the players and still asking silly questions, he tried the most diffcult way of making shots--to demonstrate his purely amateur status--and made them, to the amazement of the experts. Several of them took him on that evening, and he defeated all of them with badly unbalanced scores. He declared the new game give him a wonderful opportunity to practice very abstract mathematical theories; and the experts at Delmonico's spread stories about the wonderful accomplishment of Scientist Tesla in mastering the game in a single evening and defeating the best players in the city. The story got into the newspapers. Tesla refused to play any more, declaring he was in danger of becoming so enthusiastic over the game that it would interfere with his researches.

This same man magnificent who graced the Waldorf-Astoria and Delmonico's was not averse, however, to visiting the Bowery, which was but a block away from his Houston Street laboratory. He repaired to a thirst-quenching emporium on that thoroughfare one afternoon shortly after a denizen of the Bowery, Steve Brodie, had achieved fame by jumping, or at least claiming to have jumped, off the Brooklyn Bridge. As Tesla raised his glass of whiskey he said to the bartender: "You know what Steve said as he was about to jump off the bridge--`Down he goes"'; and with that he downed his liquor in a gulp.

A near-by drinker, a little the worse for several, misunderstood Tesla's remark and got the impression he had heard Steve Brodie telling the final episode of his feat. He rushed up to Tesla to buy him a drink, and was joined by his friends. Tesla with a laugh shook them off and dashed out of the bar, while the misguided drinker started after him yelling, "Stop him, that's Steve." On the street the pedestrians misunderstood the thick-tongued drinker's shout and joined him in the chase, calling "Stop, thief!" Tesla's long legs rendered him a valuable service and he got a lead on the crowd, dashed into an alley, over a fence and climbed a fire escape on the back of his own building, reached his laboratory through a window, quickly donned a blacksmith's apron and started hammering a bar of metal. His pursuers, however, failed to trace him.

Tesla was idolized by the Serbians in New York. A great many of them could claim to be distant relatives through either the Tesla or Mandich side of the family, and those who could not claim this distinction revered him none the less, despite the fact he never accepted invitations to take part in their social or other functions.

One day an excited Serbian, a laborer, came to his apartment at the Waldorf-Astoria to beg his aid. He had gotten into a fight and pummeled a fellow Serbian, who had sworn out a warrant for his arrest. The visitor did not have any money but wanted to go to Chicago to escape arrest. Would Tesla please lend him the money for his railroad fare?

"So you assaulted a man and now want to run away to escape punishment," said Tesla. "You may run away from the law but you are not going to escape punishment; you are going to get it right now!" Seizing a cane and grasping the man by

the back of the neck, he ran him around the room, beating the dust out of the seat of his trousers until the man cried for mercy.

"Do you think you can be a better man in Chicago and keep out of fights?" Tesla asked him. The man was sure he could. He received the money for his railroad fare and a few dollars more.

So great was Tesla's popularity in the nineties that many persons came to dine in the Palm Room at the Waldorf just to catch a glimpse of the famous inventor. He arranged to leave his offce at six, but just before leaving he would telephone the order for his dinner to the headwaiter, always insisting that none less could serve him. The meal was required to be ready at eight o'clock. In the meantime he would go to his room and array himself in formal evening attire--white tie and tails. He dined alone, except on the rare occasions when he would give a dinner to a group to meet his social obligations.

Money was always a nuisance detail to Tesla. For about fifteen years, following 1888, he always had all he needed to meet his obligations; and he lived well. After about 1902 his financial road became quite rocky--but his fame was greater than ever, and likewise the need for maintaining his standard of living if he was to recoup his fortune. He continued to stage frequent large dinners at the Waldorf to repay his social obligations, and had diffculty in accustoming himself to a money deffciency. On one occasion, when a large party was assembled in a private dining room, the headwaiter whispered to him that a most excellent dinner was prepared and ready to serve as he had ordered it, but that the credit department insisted it could not be served until he paid for it in advance. "Get Mr. Morgan on the telephone in the manager's offce and I will be down there immediately," Tesla fumed. In a short time a more-than-adequate check was delivered to Tesla by a messenger. Many such occasions are reported to have arisen, but were always straightened out in the manager's offce, usually without any outside intervention.

The closest approach to home life which Tesla enjoyed came to him through Robert Underwood Johnson diplomat and poet, and one of the editors of the Century Magazine, whose home was in Madison Avenue in the fashionable Murray Hill district. Tesla and Johnson were very close friends. A love

of poetry was one of the several interests they had in common. Johnson wrote, and published in the Century, in April, 1895, a short poem on his visit to Tesla's laboratory. This led to a cooperative enterprise in which he paraphrased many pieces of Serbian poetry from literal translations made by Tesla, who could recite many thousands of lines of such material from memory. About forty pages of these translations, with an introductory note by Tesla, appeared in the next edition of Poems by Johnson.

Persons famous in all fields of activity were frequent guests in the Johnson home, and formal dinners were constantly being held for brilliant assemblages of personalities. Tesla was present as frequently as he could be induced to come, but he preferred to avoid all formal dinners as much as possible. He was, however, a very frequent informal visitor, arriving unexpected, and often at most unusual hours. It was not uncommon for Tesla to arrive at the Johnson home after midnight, after the family had retired, and for "Bob" and "Nick" to sit up for hours reveling in the exchange of a magnificent array of ideas. (Johnson and "Willie" K. Vanderbilt, were, as has been noted, the only individuals who rated the exchange of first names with Tesla.)

Tesla's visits to the Johnson home were always many hours long. He would arrive in a hansom cab, which he always required to wait for him to return to his hotel only a few blocks distant. The Johnson children learned to take advantage of this, and when he arrived early in the evening they would get his permission to use the cab for a drive through Central Park while he chatted at home.

Tesla enjoyed the opera and at one time attended the performances quite frequently. William K. Vanderbilt's box was always available to him, as likewise were those of many other patrons of the Metropolitan. He occasionally attended the theatre. His favorite actress was Elsie Ferguson who, he declared, knew how to dress and was the most graceful woman he had ever seen on the stage. He gradually dropped both the theatre and opera in favor of the movies, but was an infrequent attendant even at those. He would not witness a tragedy but enjoyed comedy and the lighter aspects of entertainment.

One of his close friends was Rear Admiral Richmond Pearson Hobson, the Spanish American War hero. In later years,

Hobson was the only person who was able to cajole Tesla into breaking a long vigil at his intellectual pursuits for a session at the movies.

Tesla did not subscribe to any religion. Early in life he severed his relations with the Church and did not accept its doctrines. At his seventy-fifth birthday dinner he declared that that which is called the soul is merely one of the functions of the body, and that when the activities of the body cease, the soul ceases to exist.

It is difficult for a man to appear as a hero to his secretary, but to Miss Dorothy F. Skerritt, who served Tesla in this capacity for many years until he closed his offce when he was seventy, he remained a saintly superman. Her description of Tesla, at this age, records him as possessing the same magnetic personality that so impressed writers thirty years earlier. She wrote:

As one approached Mr. Tesla he beheld a tall, gaunt man. He appeared to be an almost divine being. When about 70 he stood erect, his extremely thin body immaculately and simply attired in clothing of a subdued coloring. Neither scarf pin nor ring adorned him. His bushy black hair was parted in the middle and brushed back briskly from his high broad forehead, deeply lined by his close concentration on scientific problems that stimulated and fascinated him. From under protruding eyebrows his deepset, steel gray, soft, yet piercing eyes, seemed to read your innermost thoughts. As he waxed enthusiastic about fields to conquer and achievements to attain his face glowed with almost ethereal radiance, and his listeners were transported from the commonplaces of today to imaginative realms of the future. His genial smile and nobility of bearing always denoted the gentlemanly characteristics that were so ingrained in his soul.

Until the last, Tesla was meticulously careful about his clothes. He knew how to dress well and did so. He declared to a secretary, in 1910, that he was the best-dressed man on Fifth Avenue and intended to maintain that standard. This was not because of personal vanity. Neatness and fastidiousness in clothes were entirely in harmony with every other phase of his personality. He did not maintain a large wardrobe and he wore no jewelry of any kind. Good clothes fitted in very nicely with his courtly bearing. He observed, however, that in the matter of clothes the world

takes a man at his own valuation, as expressed in his appearance, and frequently eases his way to his objective through small courtesies not extended to less prepossessing individuals.

He was partial to the waisted coat. No matter what he wore, however, it carried an air of quiet elegance. The only type of hat he wore was the black derby. He carried a cane and wore, usually, gray suede gloves.

Tesla paid $2.50 a pair for his gloves, wore them for a week and then discarded them even though they still appeared as fresh as when they came from the maker. He standardized his style of ties and always wore the four-in-hand. The design motive was of minor importance but the colors were limited to a combination of red and black. He purchased a new tie every week, paying always one dollar.

Silk shirts, plain white, were the only kind Tesla would wear. As with other articles of his clothing, such as pajamas, his initials were always embroidered on the left chest.

Handkerchiefs he purchased in large numbers because he never sent them to the laundry. After their first use they were discarded. He liked a good quality of linen and purchased a standard package brand. His collars were never laundered, either. He never wore one more than once.

Tesla always wore high-laced shoes, except on formal occasions. He required a long narrow shoe and insisted on a last that had a neatly tapered square-toe effect. His shoes were undoubtedly made to order, for the tops extended halfway up his calf, a style that could not be purchased in merchant shoe stores. His tallness in all probability made this additional support at the ankles desirable.

The single use of articles, such as handkerchiefs and collars, extended to napkins. Tesla had a germ phobia, and it acted like so much sand in the social machinery of his life. He required that the table he used in the dining room of his hotel be not used by others. A fresh table cloth was required for every meal. He also required that a stack of two dozen napkins be placed on the left side of the table. As each item of silverware and each dish was brought to him--and he required that they be sterilized by heat before leaving the kitchen--he would pick each one up, interposing

a napkin between his hand and the utensil, and use another napkin to clean it. He could then drop both napkins on the floor. Even for a simple meal, he usually ran through the full stock of napkins. Flies were his pet abomination. A fly alighting on his table was adequate cause for removing everything from the table and making an entirely new start with the meal.

Tesla was fortunate in that the headwaiter at the Waldorf-Astoria, during the period he was living there, Mr. Peterson, was afterward headwaiter at the Hotel Pennsylvania, where he later lived for several years. A story was in circulation to the effect that both at the Waldorf and at the Pennsylvania a special chef was employed to prepare Tesla's meals, but Mr. Peterson states that this story was untrue.

In his earlier years, for dinner, he greatly enjoyed fine thick steaks, preferably the filet mignon, and it was not unusual for him to consume two or three at a sitting. Later his preference turned to lamb, and he would frequently order a roast saddle of it. While the saddle was usually large enough to serve a party of several persons, as a rule he ate of it only the central portion of the tenderloin. A crown of baby lamb chops was another favorite dish. He also relished roast squab with nut stuffng. In fowl, however, his choice was roast duck. He required that it be roasted under a smothering of celery stalks. This method of preparing the duck was of his own devising. He very often made it the central motif around which a dinner was designed when entertaining friends, and on such occasions he would go to the kitchen to superintend its preparation. Duck so prepared was nevertheless delicious. Of the duck he ate only the meat on either side of the breast bone.

With the passing decades, Tesla shifted away from a meat diet. He substituted fish, always boiled, and finally eliminated the meat entirely. He later almost entirely eliminated the fish and lived on a vegetarian diet. Milk was his main standby, and toward the end of his life it was the principal item of diet, served warm.

As a youth he drank a great deal of coffee, and, while he gradually became aware that he suffered unfavorable influences from it, he found it a diffcult habit to break. When he finally made the decision to drink no more of it, he adhered to his good intentions but was forced to

recognize the fact that the desire for it remained. He combated this by ordering with each meal a pot of his favorite coffee, and having a cup of it poured so that he would get the aroma. It required ten years for the aroma of the coffee to transform itself into a nuisance so that he felt secure in no longer having it served. Tea and cocoa he also considered injurious.

He was a heavy smoker in his youth, mostly of cigars. A sister who seemed fatally ill, when he was in his early twenties, said she would try to get better if he would give up smoking. He did so immediately. His sister recovered, and he never smoked again.

Tesla drank whiskey, for this he considered a very beneffcial source of energy and an invaluable means for prolonging life. It was responsible, he believed, for the longevity enjoyed by many of his ancestors. It would enable him, he declared early in the century, to live to one hundred and fifty. When prohibition came along with the First World War, he denounced it as an intolerable interference with the rights of citizens. Nevertheless, he promptly gave up the use of whiskey and all other beverages except milk and water. He declared, however, that the elimination of whiskey would reduce his expectation of life to one hundred and thirty years.

Stimulants were not necessary to help him to think, Tesla said. A brisk walk he found much better as an aid for concentration. He seemed to be in a dream when walking. Even one whom he knew very well he would pass at close range and not see, though he might appear to be looking directly at him. His thoughts were usually miles away from where he was. It was this practice, apparently, which was responsible for the accident, in 1937, when he was struck and severely injured by a taxicab. As a matter of fact, he had stated in an interview two years earlier that he would probably be killed by a truck or taxicab while jaywalking.

Tesla's weight, stripped, was 142 pounds, and, except during brief periods of illness, hardly varied a pound from 1888 to about 1926, when he intentionally reduced his weight five pounds.

One of Tesla's indulgences, over many years, was scalp massages. He would visit a barbershop three times a week and have the barber rub his scalp for half an hour. He was

insistent upon the barber placing a clean towel on his chair but, strangely enough, he did not object to the use of the common shaving mug and brush.

Tesla always claimed that he never slept more than two hours a night. His retiring time, he said, was five am, and he would arise at ten am after spending only two hours in sleep, three hours being too much. Once a year, he admitted, he would sleep for five hours--and that would result in building up a tremendous reserve of energy. He never stopped working, he claimed,--even when asleep. Tesla laughed at Edison's claim that he slept only four hours a night. It was a regular practice with Edison, he said, to sit down in his laboratory and doze off into a three-hour nap about twice a day. It is possible that Tesla, too, obtained some sleep in a similar fashion, perhaps without being conscious of the fact. Hotel employees have related that it was quite common to see Tesla standing transfixed in his room for hours at a time, so oblivious to his surroundings that they were able to work around his room without his being, apparently, aware of their presence.

Tesla always provided his offce with a separate washroom which no one but himself was permitted to use. He would wash his hands on the slightest pretext. When he did so, he required that his secretary hand him a freshly laundered towel each time to dry them.

He went to extremes to avoid shaking hands. He usually placed his hands behind his back when anyone approached who he feared might make an effort to shake hands, and this frequently led to embarrassing moments. If by chance a visitor to his offce should catch him off guard and shake his hand, Tesla was so upset that he would be unable to pay attention to the visitor's mission and frequently would dismiss him before it was completely stated; and immediately he would rush to the washroom and scour his hands. Workmen eating their lunch with dirty hands almost nauseated him.

Pearls, too, were one of Tesla's phobias. If a woman guest at a dinner party to which he was invited wore pearls, he was unable to eat. Smooth round surfaces, in general, were an abomination to him; it had even taken him a long time to learn to tolerate billiard balls.

Tesla never knew the experience of having a headache. In spite of a number of cases of serious illness, in his independent years he was never attended by a doctor.

There were reasons for practically all of Tesla's phobias, not all of them generally known. His germ phobia can be traced back to his two serious illnesses early in life, both of which were probably cholera, a disease constantly prevalent in his native land, caused by a germ transmitted by impure drinking water and by contact between individuals.

Tesla was not oblivious of his idiosyncrasies; he was quite aware of them and of the friction which they caused in his daily life. They were an essential part of him, however, and he could no more have dispensed with them than he could his right arm. They were probably one of the consequences of his solitary mode of life or, possibly, a contributing cause of it.

6NINETEEN

Tesla's mind always seemed to be under an explosive pressure. An avalanche of ideas was forever straining for release. He seemed to be unable to keep up with the flood of his own thoughts. He never had suffcient facilities to keep his accomplishments equal to his projects. If he had an army of adequately trained assistants, he would still be insuffciently equipped. As a result, those associated with him always experienced a sense of "drive"; yet he was a most generous employer both in the matter of wages paid and the number of hours of work required. He frequently demanded overtime work but always paid generously for it.

Nevertheless, Tesla was not an easy man to work for. He was most meticulously neat in his personal affairs and required all workers to be the same. He was an excellent mechanic and set extremely high standards, by his own accomplishments, for all work done in his shops. He greatly admired cleverness in his assistants, frequently rewarding them with extra compensation for diffcult jobs well done,

but was extremely impatient with stupidity and carelessness.

Although Tesla maintained a staff of draughtsmen, he never used them in his own design work on machines, and tolerated them only because of unavoidable contacts with other organizations. When having machines constructed for his own use, he would give individual instruction on each part. The workman scheduled to do the machinework would be summoned to Tesla's desk, where the inventor would make an almost microscopically small sketch in the middle of a large sheet of paper. No matter how detailed the piece of work, or its size, the sketch was always less than one inch in its largest dimensions. If Tesla made the slightest slip of the pencil in drawing the sketch, he would not make an erasure but would start over on another sheet of paper. All dimensions were given verbally. When the drawing was finished, the workman was not permitted to take it with him to the shop to guide him in his work. Tesla would destroy the drawing and require the machinist to work from memory. Tesla depended entirely on his memory for all details, he never reduced his mentally completed plans to paper for guidance in construction--and he believed others could achieve this ability if they would make suffcient effort. So he sought to force them to try by insisting on their working without drawings.

All those who worked with Tesla greatly admired him for his remarkable ability to keep track of a vast number of finest details concerning every phase of the many projects he had under way simultaneously. No employee was ever given any more information than was absolutely essential for completing a project. No one was ever told the purposes for which a machine or article was to be used. Tesla claimed that Edison received more ideas from his associates than he contributed, so he himself bent over backward to avoid this situation. He felt that he was the richest man in the world in the matter of ideas and needed none from anyone else; and he intended to prevent all from contributing any.

Tesla was probably very unfair to Edison in this respect. The two men were entirely different and distinct types. Tesla was totally lacking in the university type of mind; that is, the mind which is adapted to cooperate with others in acquiring knowledge and conducting research. He could neither give nor receive, but was entirely adequate to his own requirements. Edison had more of the cooperative, or

executive, type of mind. He was able to attract brilliant associates and to delegate to them major portions of his inventive research projects. He had the ability to act as a catalyzer, to stimulate them to creative mental activities, and thus multiply his own creative abilities. If Tesla had possessed this ability, his record of accomplishment would have been tremendously magnified.

The inability to work with others, the inability to share his plans, was the greatest handicap from which Tesla suffered. It completely isolated him from the rest of the intellectual structure of his time and caused the world to lose a vast amount of creative thought which he was unable to translate into complete inventions. It is a duty of a master to train pupils who will carry on after him--but Tesla refused to accept this responsibility. Had Tesla, in his most active period, associated with him a half-dozen brilliant young scientists, they would have been in a position to link him with the engineering and scientific worlds from which, despite his eminence and his outstanding accomplishments, he was to a great extent isolated because of his unusual personal characteristics. His fame was so secure that the success of his assistants could not have detracted from it; but the master would have shone more brightly in the brilliant accomplishments of his pupils. He might well have attracted some practical young men who could have aided him by assuming the burden of making practical application of some of the minor but important inventions from which he could have earned suffcient profit to pay the cost of maintaining his laboratories. Many scores of important inventions have undoubtedly been lost to the world because of Tesla's intellectual hermit characteristics. Undoubtedly, he indirectly inspired many young men to become inventors.

Tesla responded powerfully to personal idiosyncrasies in individuals with whom he worked. When his reaction was unfavorable, he was unable to tolerate the presence of the person within eyeshot. When carrying on his experimental work at the Allis Chalmers plant in Milwaukee, for example, he did not increase his popularity by insisting that certain workers be dropped from the crew working on the turbine because he did not like their looks. Since, as noted earlier, he had already antagonized the engineers in that plant by going over their heads to the president and board of directors, the turbine job went forward in something less than a cooperative atmosphere.

Tesla was thoroughly impractical throughout, too, in handling money matters. When he was working on the Union Sulphur Company turbine project, a ship was made available for his use, free, during the day; but if he worked after six pm it would cost him $20 per hour. He never showed up at the ship until six o'clock. Every night, in addition, he had to hand out $10 for suppers for the crew. In the course of a year these costs totaled about $12,000, which must have cut heavily into the retainer he received. Nor were these his only additional expenses. Almost every night he handed a $5 tip to his principal assistants among the crew, and once a week to all members of the crew. These manifestations of generosity were not, of course, a total loss to Tesla; they might rather be classed as necessities, for he was very dictatorial in directing his assistants.

Inquiries among the employees at hotels where he lived revealed that he had a reputation for acting in a most cavalier manner toward the servants. He was almost cruel in the manner in which he ordered them around, but would make immediate compensation by the generous tips he bestowed.

He was always, however, very considerate of women, and even men, on his offce staff. If any one of them did an unusually fine piece of work, everyone on the staff was informed of it. Criticism was always delivered privately to the individual involved.

Tesla had a standing rule that every messenger boy who came to his offce was to receive a tip of twenty-five cents, and he set aside a fund of $10 a week for this purpose.

If necessity required that he keep his staff of young women secretaries and typists working overtime for several hours, he would provide them with a dinner at Delmonico's. He would hire a cab for the girls and would follow them in another cab. After making arrangements to pay the bill, and paying the tip in advance, he would leave.

Tesla timed his arrival at the offce so that he entered at the stroke of noon. He required that his secretary should be standing immediately inside the door to receive him and take his hat, cane and gloves. His offces were opened by nine o'clock each morning, so all routine matters would be handled before his arrival. Before Tesla arrived, all the shades in the offce had to be drawn so that no outdoor

light was admitted and night conditions were simulated. The inventor, as remarked, was a "sun dodger." He appeared to be at his best at night and at some kind of disadvantage in daylight; at any rate, he preferred the night for work and what he called his recreation.

The only time Tesla would permit the shades of his offce to be raised was when a lightning storm was raging. The various offces he leased faced on open spaces. The 8 West 40th Street offce was on the south side of Bryant Park, in the east end of which was the low-roofed structure that housed the New York Public Library. From his windows on the twentieth floor, he could look beyond the city roof scape below him and obtain a broad view of the sky.

When the rumbles of distant thunder announced that the fireworks of the sky would presently be flashing, it was not only permissible to raise the shades--it was obligatory. Tesla loved to watch lightning flash. The black mohair couch would be drawn close to the windows so that he could lie on it, completely relaxed, while his vision commanded a full view of the northern or the western sky. He was always talking to himself, but during a lightning storm he would become eloquent. His conversation on such occasions was never recorded. He wished to be a lone observer of this gorgeous spectacle, and his secretaries were quite willing that he should be so accommodated. By finger measurements and counting seconds he was able to calculate the distance, length and voltage of each flash.

How thrilled Tesla must have been by these tremendous sparks, many times longer than he had been able to produce in his Colorado Springs laboratory! He had successfully imitated Nature's electrical fireworks, but he had not as yet exceeded her performance.

The ancient Romans sublimated their frustrations by the forces of Nature by creating the mental concept of their mightiest god, Jupiter, as one endowed with the power of creating lightning and hurling his bolts at earth. Tesla had refused to accept frustration; but, like the ancient Romans, he too set up a mental concept, a superman not inferior to the Romans' ruling god, who would control the forces of Nature. Yes, Tesla thoroughly enjoyed a lightning storm. From his mohair couch, he used to applaud the lightning; he approved of it. He may even have been a little bit jealous.

Tesla never married; no woman, with the exception of his mother and his sisters, ever shared the smallest fraction of his life. He idolized his mother and admired his sisters for their intellectual accomplishments. One of his sisters, Marica, exhibited unusual ability as a mathematician and had greater ability than his own for memorizing long passages from books. He attributed to his mother most of his abilities as an inventor, and he continuously spoke in praise of her ability to contrive useful gadgets for the household, often regretting that she had not been born into an environment in which she would have been able to manifest to a larger world her many creative talents. He was not unaware of the values which a woman could bring into a man's life, for he had ever before him the vast contributions which his mother made to his father's welfare and happiness. However, he lived instead a blueprint life, one which he had planned in his early youth, one designed along engineering lines, with all of the time and energies available to be directed to invention and none to be dissipated on emotional projects.

From the romantic point of view, Tesla as a young man was not unattractive. He was too tall and slender to pose as the physical Adonis, but his other qualifications more than compensated for this possible defect. He was handsome of face, had a magnetic personality, but was quiet, almost shy; he was soft spoken, well educated and wore clothes well in spite of inadequate funds with which to keep up a wardrobe. However, he avoided romantic encounters, or any situations that would lead up to them, just as assiduously as other young men sought them. He would not permit his thoughts to wander into romantic channels, and with thoughts successfully controlled, action control became a problem of vanishing magnitude. He did not develop an antagonism to women; he solved the problem, instead, by idealizing them.

A typical instance of how he avoided romance is furnished by an incident that occurred in Paris when he returned to that city to give a lecture on his alternating-current system after he had become world famous. His wonderful discoveries were the principal topic of conversation of the day, and he was the cynosure of all eyes wherever he went. The situation was entirely pleasant to Tesla. Less than ten years before, the executives the Continental Edison Company, in that city, had not alone rejected the

alternating-current system he had offered them but had cheated him of his just earnings. Now he was returning to that city after receiving recognition and wealth in the United States and fame throughout the world. He was in Paris as a returned hero and the world was at his feet.

As he sat in an outdoor cafe; with a young male friend, amidst a chattering, fashionably dressed crowd, a graceful, gorgeously gowned young woman, with a stylishly coiffured crown of red hair, whom he instantly recognized as Sarah Bernhardt, the famous French actress--the "divine Sarah"--swung close to his table and when a few feet away very auspiciously dropped a tiny lace handkerchief.

Tesla was on his feet in an instant. He recovered the handkerchief, and with his hat in his other hand, bowing low from the waist, he handed the wisp of lace to the beautiful tragedienne, saying: "Mademoiselle, your handkerchief." Without even an upward glance at her graciously smiling face, he returned to his chair and resumed his conversation about his experiments on a world wireless system of power transmission.

When a newspaper reporter once asked Tesla why he had not married, his reply, as contained in the published interview was:

I have planned to devote my whole life to my work and for that reason I am denied the love and companionship of a good woman; and more, too.

I believe that a writer or a musician should marry. They gain inspiration that leads to finer achievement.

But an inventor has so intense a nature, with so much in it of wild, passionate quality that, in giving himself to a woman, he would give up everything, and so take everything from his chosen field: It is a pity, too; sometimes we feel so lonely.

In my student days I have known what it was to pass forty-eight hours at a stretch at a gaming table, undergoing intense emotion, that which most people believe is the strongest that can be known, but it is tame and insipid compared with that sublime moment when you see the labor of weeks fructify in a successful experiment that proves your theories. . . .

"Many times has Nikola Tesla known that supreme happiness," said the interviewer, "and he is likely to know it often again. It is impossible that his life work can be finished at forty. It would seem that his powers are only reaching their maturity."

Tesla was not unappreciative of the activities of the many women who showed a sincere interest in his welfare, and who tried to make life tolerable and pleasant for an obviously none-too-well-adjusted scientist projected into a social world from which he would have been only too willing to escape. He spoke glowingly of the first Mrs. Clarence Mackay (e Duer), Mrs. Jordan L. Mott, and of the beauty of Lady Ribblesdale (the former Mrs. John Jacob Astor). He admired the energetic idealism of Miss Anne Morgan; but never was the situation brightened by a single tint of romance.

He was impressed by the tall, graceful and charming Miss Marguerite Merington, a talented pianist and writer on musical subjects, who was a frequent dinner guest at the Johnson home.

"Why do you not wear diamonds and jewelry like other women?" Tesla undiplomatically asked Miss Merington, one evening.

"It is not a matter of choice with me," she replied, "but if I had enough money to load myself with diamonds I could think of better ways of spending it."

"What would you do with money if you had it?" the inventor continued.

"I would prefer to purchase a home in the country, except that I would not enjoy commuting to the suburbs," Miss Merington replied.

"Ah! Miss Merington, when I start getting my millions I will solve that problem. I will buy a square block here in New York and build a villa for you in the center and plant trees all around it. Then you will have your country home and will not have to leave the city."

Tesla was most generous in the distribution of his always still-to-be-gotten millions; none of his friends would ever

have lacked anything they desired if he had had suffcient funds with which to satisfy their wishes. His promises, however, were always to be fulfilled--"When I start getting my millions."

Tesla had, as might be expected, very definite ideas about how women should dress. He also had clear-cut ideas about the feminine figure. He disliked the big "hefty" type and utterly detested fat women. The super-upholstered type, flashily dressed and heavily jeweled, that wasted time in hotel lobbies, were his pet abomination. He liked women trim, slim, graceful and agile.

One of his secretaries, well proportioned and a graceful blonde, wore to the offce one day a dress that was in the very latest style. It was a summer dress made from a pretty print. The prevailing style called for an extremely low waist line, well down on the hips, several inches below its natural location. This gave a relatively short skirt and from the neck to the hips the dress was almost a plain cylinder. The style was very new, and was enjoying an intense but brief wave of popularity. The secretary was an excellent seamstress and had made the dress herself, an accomplishment of which she was justly proud.

Tesla summoned the secretary. She breezed into his sanctum not expecting, but hoping, that he would say something nice about her new dress.

"Miss," he said, "what is that you are wearing? You cannot wear that on this errand on which I wish you to go. I wished to have you take a note to a very important banker down town, and what would he think if someone from my offce should come to him wearing such a monstrosity of a gown? How can you be such a slave to fashion? Whatever the fashion designers say is the style you buy and wear. Miss, you have good sense and good taste, so why did you let the saleslady in the store force a dress like this on you? Now if you were also very clever like my sister who makes all her own dresses you would not be forced to wear any such abominable style as this, then you too could make your own clothes and you could wear sensible gowns. You should always follow nature in the design of your clothes. Do not let a style designer deform nature for you, for then you become hideous instead of attractive. Now, Miss, you get into a cab, so not many people will see you, and go to your

home and get into a sensible dress and return as soon as you can so you can take this letter down town for me."

Tesla never addressed any of his woman employees by either their Christian names or surnames. The only form of address he used to them was "Miss." As he spoke it, it sounded like "Meese," and he could make it very expressive. When he addressed the secretary wearing the gown of which he disapproved, it sounded like "Meeeeeeesssse." It could also be an abrupt, abbreviated expletive.

When a young woman on his office staff left his employ to get married, Tesla preached this sermonette to the remaining members:

"Do not marry too young. When you marry too young, men marry you mostly for your beauty and ten years later when your beauty is gone, they tire of you and become interested in someone else."

Tesla's attitude toward woman was paradoxical; he idealized woman--put her up on a pedestal--and yet he also viewed women in a purely objective and materialistic way, as if no spiritual concepts were involved in their make-up. This was undoubtedly an outward expression of the conflict that was taking place within his own life, between the normal healthy attitude toward female companionship, and the coldly objective planning of his life under which he refused to share the smallest fraction of his life with any woman.

Only the finest type of women could approach within friendship distance of Tesla, and such individuals were idealized by him without the least diffculty; he could desex them mentally so that the vector or emotional attraction was eliminated. To the remainder he did not bother to apply this process. They had no attraction for him.

Out of the welter of human affairs, however, he visioned the rising of a superior breed of human beings, few in number but of vastly elevated intellectual status, while the remainder of the race leveled itself on a merely productive and reproductive plane, which, however, could represent a considerable improvement over existing conditions. He sought to fashion an idealism out of purely materialistic concepts of human nature. This was a hold-

over from the materialistic, agnostic views which were fashionable and prevalent among scientists in the formative period of his youth. This phase of his attitude was not particularly hard to break down in his latter years; but the phase which represented an engineering approach to the solution of problems of the human race was more firmly held, although he was willing to admit that spiritual factors had a real existence and should be considered in such planning.

His views concerning women received their only expression in published form in the article written for Collier's, in 1924, by John B. Kennedy, from an interview with Tesla. On this occasion, he said:

The struggle of the human female toward sex equality will end up in a new sex order, with the females superior. The modern woman, who anticipates in merely superficial phenomenon the advancement of her sex, is but a surface symptom of something deeper and more potent fomenting in the bosom of the race.

It is not in the shallow physical imitation of the men that women will assert first their equality and later their superiority, but in the awakening of the intellect of women.

But the female mind has demonstrated a capacity for all the mental acquirements and achievements of men, and as generations ensue that capacity will be expanded; the average woman will be as well educated as the average man, and then better educated, for the dormant faculties of her brain will be stimulated into an activity that will be all the more intense because of centuries of repose

Women will ignore precedent and startle civilization with their progress.

The acquisition of new fields of endeavor by women, their gradual usurpation of leadership, will dull and finally dissipate feminine sensibilities, will choke the maternal instinct so that marriage and motherhood may become abhorrent and human civilization draw closer and closer to the perfect civilization of the bee.

The significance of this lies in the principle dominating the economy of the bee--the most highly organized and

intelligently coordinated system of any form of non-rational animal life--the all governing supremacy of the instinct for immortality which makes divinity out of motherhood.

The center of all bee life is the queen. She dominates the hive, not through hereditary right, for any egg may be hatched into a reigning queen, but because she is the womb of the insect race.

There are vast desexualized armies of workers whose sole aim and business in life is hard work. It is the perfection of communism, of socialized, cooperative life wherein all things, including the young, are the common property of all.

Then there are the virgin bees, the princess bees, the females which are selected from the eggs of the queen when they are hatched and preserved in case an unfruitful queen should bring disappointment to the hive. And there are the male bees, few in number, unclean in habit, tolerated only because they are necessary to mate with the queen. . . .

The queen returns to the hive, impregnated, carrying with her tens of thousands of eggs--a future city of bees, and then begins the cycle of reproduction, the concentration of the teeming life of the hive in unceasing work for the birth of the new generation.

Imagination falters at the prospect of a human analogy to this mysterious and superbly dedicated civilization of the bee; but when we consider how the human instinct for race perpetuation dominates life in all its normal and exaggerated and perverse manifestations, there is ironic justice in the possibility that this instinct, with the intellectual advance of women, may be finally expressed after the manner of the bee, though it will take centuries to break down the habits and customs of peoples that bar the way to such a simply and scientifically ordered civilization.

If Tesla had been even half as well informed in the biological sciences as he was in the physical sciences, he probably would not have seen a possible solution of human problems in the social structure adapted to the limitations of an insect species which can never hope to utilize tools, and draw upon natural forces vastly exceeding their own

energy sources, to work out their destiny. And more important is the fact that the bees can never hope to use advanced intellectual powers to improve their biological status, as can the human race. With a better knowledge of biological sciences he might have discovered that the physiological processes that control perpetuation of the individual are indissolubly linked to the processes that control the perpetuation of the race, and that by utilizing as much biological knowledge and spiritual insight, in designing a superman, as he utilized materialistic engineering principles, he might have designed himself as a more complete and potent superman, better adjusted to merging his intellectual creations into the current life of the race through a better understanding of human affairs.

Tesla tried to convince the world that he had succeeded in eliminating love and romance from his life; but he did not succeed. That failure (or perhaps from another aspect it was a success), is the story of the secret chapter of Tesla's life.

TWENTY

THE most obvious outward characteristic of Tesla's life was his proclivity for feeding pigeons in public places. His friends knew he did it but never knew why. To the pedestrians on Fifth Avenue he was a familiar figure on the plazas of the Public Library at 42nd Street and St. Patrick's Cathedral at 50th Street. When he appeared and sounded a low whistle, the blue- and brown- and white-feathered flocks would appear from all directions, carpet the walks in front of him and even perch upon him while he scattered bird seed or permitted them to feed from his hand.

During the last three decades of his life, it is probable that not one out of tens of thousands who saw him knew who he was. His fame had died down and the generation that knew him well had passed on. Even when the newspapers, once a year, would break out in headlines about Tesla and his latest predictions concerning scientific wonders to come, no one associated that name with the excessively tall, very lean man, wearing clothes of a bygone era, who almost daily appeared to feed his feathered friends. He was just one of the strange individuals of whom it takes a great many of varying types to make up a complete population of a great metropolis.

When he started the practice, and no one knows just when that was, he was always dressed in the height of fashion and some of the world's most famous figures could frequently be seen in his company and joining him in scattering the bird seed, but there came a time when he paid less attention to his clothes, and those he wore became more and more old fashioned.

Fifth Avenue after midnight is a far different thoroughfare than the busy artery of human and vehicular traffic it is during the day. It is deserted. One can walk for blocks and meet no one except a policeman. On several occasions the author, by chance, met Tesla on an after-midnight walk up Fifth Avenue, going toward the library. Usually Tesla was quite willing to have one walk with him and chat upon a street encounter during the day, but on these after-midnight occasions he was definite about his desire to be left alone. "You will leave me now," he would say, bringing an abrupt end to a conversation hardly begun. The natural assumption was that Tesla was engaged on a definite line of thought and did not wish his mind to be diverted from its concentration on some knotty scientific problem. How far this was from the truth! And, as I learned much later, what a sacred significance these midnight pilgrimages to feed the pigeons--which would come to his call, even from their nocturnal roost--had for him!

It was hard for almost everyone to understand why Tesla, engaged in momentous scientific developments, working twice as many hours as the average individual, could see his way clear to spend time scattering bird seed. The Herald Tribune, in an editorial, once stated: "He would leave his experiments for a time and feed the silly and inconsequential pigeons in Herald Square."

It was a routine procedure in Tesla's offce, however, for one of his secretaries to go down town on a given day each week and purchase three pounds each of rape, hemp and canary seed. This was mixed in his offce, and each day he took a small paper bag filled with the seed and started on his rounds.

If, on any day, he was unable to make his pigeon-feeding rounds, he would call a Western Union messenger boy, pay him his fee, plus a dollar tip, and send him to feed the birds.

In addition to feeding the birds in the streets, Tesla took care of pigeons in his rooms in the various hotels in which he made his home. He usually had basket nests for from one to four pigeons in his room and kept a cask of seed on hand to feed them. The window to the room in which he kept these nests was never closed.

Tesla became quite ill in his 40th Street offce, one day in 1921. He was unable to work and lay upon his couch. As the symptoms became more alarming and there was a possibility that he might not be able to return to his room in the Hotel St. Regis, he summoned his secretary to give her an "important" message. As he spoke the important message, he required the secretary to repeat each phrase after him to make sure that no errors would be made. This required repetition was a usual procedure with him; but in this case he was so ill, practically prostrate, that he seemed hardly to have energy enough to speak the message a single time.

"Miss," he whispered, "Call Hotel St. Regis--"

"Yes sir," she responded, "Call Hotel St. Regis--"

"Get the housekeeper on the fourteenth floor--"

"Get the housekeeper on the fourteenth floor--"

"Tell her to go to Mr. Tesla's room--"

"Tell her to go to Mr. Tesla's room--"

"And feed the pigeon today--"

"And feed the pigeon today--"

"The white female with touches of light gray in its wings--"

"The white female with touches of light gray in its wings--"

"And to continue doing this--"

"And to continue doing this--"

"Until she receives further orders from me--"

"Until she receives further orders from me--"

"There is plenty of feed in Mr. Tesla's room."

"There is plenty of feed in Mr. Tesla's room."

"Miss," he pleaded, "this is very important. Will you repeat the whole message to me so I can be sure you have it correct."

"Call Hotel St. Regis; get the housekeeper on the fourteenth floor. Tell her to go to Mr. Tesla's room and feed the pigeon today, the white female with touches of light gray on its wings, and continue doing this until she receives further orders from me. There is plenty of feed in Mr. Tesla's room."

"Ah, yes," said Tesla, his eyes brightening as he spoke, "the white one with touches of light gray in its wings. And if I am not here tomorrow, you will repeat that message then and every day until you get my further orders. Do it now, Miss--it is very important."

Tesla's orders were always carried out to the letter and this one particularly, since he had placed such unusual emphasis on it. His secretary and the members of his staff felt that his illness must be more serious than it seemed to be, since at a time when he had a great many very serious problems on his hands and he appeared to be on the verge of a siege of illness, the more pressing situations were completely forgotten and his only thought was of a pigeon. He must be delirious, so they thought.

Some months later Tesla failed one day to show up at his offce, and when his secretary telephoned to his hotel, the inventor informed her that he was all right, but that his pigeon was ill and he dared not leave the room for fear she would need him. He remained in his room for several days.

About a year later Tesla came to his offce earlier than usual one day, and apparently very much disturbed. He carried a small bundle in a tender manner on his bent arm. He telephoned to Julius Czito, a machinist on whom he frequently depended to perform unusual tasks, and asked him to come to the offce. Czito lived in the suburbs. He told him briefly that the bundle contained a pigeon that had

died in his room at the hotel, and that he desired to have it properly buried on Czito's property where the grave could be cared for. Czito, in relating the incident years afterward, said he was tempted, on leaving the offce, to drop the package in the first garbage can he found; but something caused him to desist and he took it to his home. Before he could perform the burial, Tesla telephoned to his home and asked him to return the package the next morning. How Tesla disposed of it is not known.

In 1924 Tesla's financial condition fell to a very low level. He was completely broke. He was unable to pay his rent and there were some judgments against him for other unpaid bills. A deputy sheriff appeared at his offce one afternoon to seize everything in the offce to satisfy a judgment. Tesla managed to talk the sheriff into delaying seizure. When the offcial had gone he took stock of his situation. He had not paid his secretaries' wages for two weeks and he now owed them for another fraction of a week. He was entirely without funds in the bank. A search of his safe disclosed that the only object of negotiable value was the heavy gold Edison Medal presented to him by the American Institute of Electrical Engineers in 1917.

"Miss, and Miss," he said, addressing the secretaries. "This medal contains about one hundred dollars' worth of gold. I will have it cut in half and give each of you one-half, or one of you can take all of it and I will later pay the other."

The two young women, Miss Dorothy F. Skerritt and Miss Muriel Arbus, refused to permit him either to damage or part with the medal, and offered instead to aid him with the meager amounts of cash they had in their purses, which offer he refused with thanks. (A few weeks later the girls received their back salaries, at $35 per week, and an additional two weeks' salary.)

A search of the cash drawer revealed a little over $5.00--all the money he possessed.

"Ah! Miss," he said, "that will be enough to buy the bird seed. I am all out of seed, so will you go down town in the morning and purchase some and deliver it to my hotel."

Again calling his trusted aide, Czito (whom he was forced to leave unpaid to the extent of $1,000), he put up to him

the problem of vacating the offce immediately. Within a few hours the entire contents of the offces were stored in a near-by offce building.

A short time later he was forced to leave his apartment in the Hotel St. Regis. His bill had been unpaid for some time, but the immediate cause was associated with pigeons. He had been spending more time in his hotel room, which also became his offce, and devoted more time to feeding pigeons. Great flocks of them would come to his windows and into the rooms, and their dirt on the outside of the building became a problem to the management and on the inside to the maids. He sought to solve the problem by putting the birds in a hamper and having George Scherff take them to his Westchester home. Three weeks later, when first given their freedom, they returned, one making the trip in half an hour. Tesla was given his choice of ceasing to feed the pigeons or leaving the hotel. He left.

He next made his home at the Hotel Pennsylvania. He remained there a few years and the same situation, both as to bills and pigeons, developed. He moved to the Hotel Governor Clinton--and in about a year went through the same experience. He next moved to the Hotel New Yorker, in 1933, where he spent the final ten years of his life.

After midnight one night in the fall of 1937, Tesla started out from the Hotel New Yorker to make his regular pilgrimage to the Cathedral and the Library to feed the pigeons. In crossing a street a couple of blocks from the hotel an accident happened, how is unknown. In spite of his agility, he was unable to avoid contact with a moving taxicab, and was thrown heavily to the ground. He raised no question as to who was at fault, refused medical aid, and asked merely to be taken to his hotel in another cab.

Arriving at the hotel, he went to bed and had scarcely got under the covers when he telephoned for his favorite messenger boy, Kerrigan, from a near-by Western Union offce, gave him the package of bird seed and directed him to complete the task which he had started and the accident interrupted.

The next day, when it was apparent that he would be unable to take his usual daily walks for some time to come, he hired the messenger for six months to feed the pigeons every day. Tesla's back had been severely wrenched in the

accident, and three ribs broken, but the full extent of his injuries will never be known for, in keeping with his almost lifelong custom, he refused to consult a doctor. Pneumonia developed but for this he also refused medical aid. He was bedridden for some months, and was unable to carry on his practice of feeding pigeons from his window; and soon they failed to come.

In the spring of 1938 he was able to get up. He at once resumed his pigeon-feeding walks on a much more limited scale, but frequently had a messenger act for him.

This devotion to his pigeon-feeding task seemed to everyone who knew him like nothing more than the hobby of an eccentric scientist, but if they could have looked into Tesla's heart, or read his mind, they would have discovered that they were witnessing the world's most fantastic, yet tender and pathetic love affair.

Tesla, as a self-made superman, suffered from the limitations of his maker. Endowed with an intelligence above the average in both quality and quantity, and with some supernormal faculties, he was able to erect a superman higher in stature than himself; but the greater height was attained by sacrificing other dimensions, and in this diminution of breadth and thickness existed a deffciency.

When he was a youth and his mind was in its most plastic and formative stage, he adopted, as we have seen, the then prevalent agnostic and materialistic view of life. Today science has emancipated itself from slavery to either an antagonistic mysticism or materialism, and is willing to consider both as harmonious parts of a comprehensive approach to the understanding of Nature, but is conscious that it has not yet learned how to manipulate or control the more intangible factors upon which the mystics have builded their structures of knowledge. Vast realms of human experience have been rejected in all ages by scientists, of whatever name, who failed to fit them in logical arrangement in their inadequate and too simplified natural philosophies. By rejecting the phenomena that lay beyond their intellectual abilities, the scientists and philosophers did not eliminate them nor prevent their manifestations. The phenomena so rejected, however, were given an academic home by the ecclesiasts, who accepted them without understanding, or hope of understanding, and thus incarcerated them in the foundation of the religious

mysteries where they served a useful purpose, for upon an unknown it is possible to build a greater unknown.

The mystical experiences of the saints, of whatever faith, are demonstrations of forces which are natural functions of the phenomenon of life, expressed in varying degree in step with the expanding unfoldment of the individual toward an advanced state of evolution.

Tesla was an individual in an advanced state of development, and there came to him experiences which he refused to accept as experiments; accepting the benefits which came to him but which transported them. This was true, for example, in the case of the burst of revelation which came to him revealing scores of tremendously valuable inventions--while he strolled in the park at Budapest, and which differed only in degree and type, but not in fundamental nature, from the blinding light which came to Saul on the road to Damascus, and to others to whom illumination has come by similar processes.

His materialistic concepts made him intellectually blind to the strange phenomenon by which revelation, or illumination, had come to him, but made him more keenly appreciative of the value of that which was revealed. It must not be understood that this revelation was a happenstance phenomenon of the moment, for Tesla, endowed by Nature with an intellect capable of vast unfoldment, had exerted almost superhuman efforts to achieve that which was revealed to him, and the effort was not unassociated with the result.

In a contrary direction, Tesla suppressed a tremendously large or important realm of his life by the planned elimination of love and romance from his thoughts and experience. Just as his efforts to discover the physical secrets of Nature built up forces that penetrated to the plane of revelation, so did his equally tremendous effort to suppress love and romance build up forces, beyond his control, that were operating to express themselves. There was a parallel situation in his philosophy of natural phenomena, in that he suppressed all spiritual aspects of Nature and confined himself to the purely materialistic aspects.

Two forces, one of love and romance in his personal nature, and the other the spiritual aspects of Nature in his

philosophy, as applied to his work, were incarcerated in a limbo of his personality, seeking an outlet into the paradise of expression and manifestation. And they obtained that outlet, expressing their nature by the form of the manifestation; but Tesla failed to recognize them. Tesla, rejecting the love of woman and thinking that he had engineered a complete elimination of the problem of love, failed to excise from his nature the capacity to love, and when this capacity expressed itself, it did so by directing its energies through a channel he left unguarded in planning the self-made superman.

The manifestation of these united forces of love and spirituality resulted in a fantastic situation, probably without parallel in human annals. Tesla told me the story; but if I did not have a witness who assured me that he heard exactly what I heard, I would have convinced myself that I had had nothing more tangible than a dream experience. It was the love story of Tesla's life. In the story of his strange romance, I saw instantly the reason for those unremitting daily journeys to feed the pigeons, and those midnight pilgrimages when he wished to be alone. I recalled those occasions when I had happened to meet him on deserted Fifth Avenue and, when I spoke to him, he replied, "You will now leave me." He told his story simply, briefly and without embellishments, but there was still a surging of emotion in his voice.

"I have been feeding pigeons, thousands of them, for years; thousands of them, for who can tell--

"But there was one pigeon, a beautiful bird, pure white with light gray tips on its wings; that one was different. It was a female. I would know that pigeon anywhere.

"No matter where I was that pigeon would find me; when I wanted her I had only to wish and call her and she would come flying to me. She understood me and I understood her.

"I loved that pigeon.

"Yes," he replied to an unasked question. "Yes, I loved that pigeon, I loved her as a man loves a woman, and she loved me. When she was ill I knew, and understood; she came to my room and I stayed beside her for days. I nursed her back to health. That pigeon was the joy of my life. If she

needed me, nothing else mattered. As long as I had her, there was a purpose in my life.

"Then one night as I was lying in my bed in the dark, solving problems, as usual, she flew in through the open window and stood on my desk. I knew she wanted me; she wanted to tell me something important so I got up and went to her.

"As I looked at her I knew she wanted to tell me--she was dying. And then, as I got her message, there came a light from her eyes--powerful beams of light.

"Yes," he continued, again answering an unasked question, "it was a real light, a powerful, dazzling, blinding light, a light more intense than I had ever produced by the most powerful lamps in my laboratory.

"When that pigeon died, something went out of my life. Up to that time I knew with a certainty that I would complete my work, no matter how ambitious my program, but when that something went out of my life I knew my life's work was finished.

"Yes, I have fed pigeons for years; I continue to feed them, thousands of them, for after all, who can tell--"

There was nothing more to say. We parted in silence. The talk took place in a corner of the mezzanine in the Hotel New Yorker. I was accompanied by William L. Laurence, science writer of the New York Times. We walked several blocks on Seventh Avenue before we spoke.

No longer was there any mystery to the midnight pilgrimages when he called the pigeons from their niches in the Gothic tracery of the Cathedral, or from under the eaves of the Greek temple that houses the Library--pursuing, among the thousands of them . . . "For after all, who can tell . . .?"

It is out of phenomena such as Tesla experienced when the dove flew out of the midnight darkness and into the blackness of his room and flooded it with blinding light, and the revelation that came to him out of the dazzling sun in the park at Budapest, that the mysteries of religion are built. But he comprehended them not; for, if he had not suppressed the rich mystical inheritance of his ancestors

that would have brought enlightenment, he would have understood the symbolism of the Dove.

ACKNOWLEDGMENTS

MUCH valuable aid has been received from many sources in the preparation of this volume. For this helpful co-operation my thanks are due to:

Sava N. Kosanovic, Minister of State of Yugoslavia, and Tesla's nephew, for making available books, family records, transcripts of records, pictures, and for correcting the manuscript of many chapters; and to his secretary, Miss Charlotte Muzar;

Miss Dorothy Skerritt and Miss Muriel Arbus, Tesla's secretaries; and George Scherff and Julius C. Czito, business associates;

Mrs. Margaret C. Behrend, for the privilege of reading correspondence between her husband and Tesla; and to Dr. W. B. Earle, Dean of Engineering, Clemson Agricultural College, for pictures and other material from the Behrend Collection in the college library;

Mrs. Agnes Holden, daughter of the late Robert Underwood Johnson, ambassador, and editor of the Century Magazine; Miss Marguerite Merington; Mrs. Grizelda M. Hobson, widow of the late Rear Admiral Hobson; Waldemar Kaempffert, Science Editor of the New York Times; Professor Emeritus Charles F. Scott, Department of Electrical Engineering, Yale University; Hans Dahlstrand, of the Allis Chalmers Manufacturing Co.; Leo Maloney, Manager of the Hotel New Yorker; and W. D. Crow, architect of the Tesla tower, for reminiscences, data, or helpful conversations concerning their contacts with Tesla;

Florence S. Hellman, Chief of the Bibliographic Division, Library of Congress; Olive E. Kennedy, Research Librarian of the Public Information Center, National Electric Manufacturers Association; A. P. Peck, Managing Editor of

the Scientific American; Myrta L. Mason, and Charles F. Pflaging, for bibliographic aid;

G. Edward Pendray and his associates in the Westinghouse Electric and Manufacturing Co., and C. D. Wagoner and his associates in the General Electric Co., for correcting, or reading and making helpful suggestions in connection with many chapters;

William L. Laurence, science writer of the New York Times, and Bloyce Fitzgerald, for exchange of data;

Randall Warden; William Spencer Bowen, President of the Bowen Research Corp.; G. H. Clark, of the Radio Corporation of America; Kenneth M. Swezey, of Popular Science; Mrs. Mabel Fleischer and Carl Payne Tobey, who have aided in a variety of ways;

Colliers--The National Weekly; The American Magazine; the New York World-Telegram and the General Electric Co., for permission to quote copyrighted material, for which credit is given where quoted; and

Peggy O'Neill Grayson, my daughter, for extended secretarial service.

To all the foregoing I extend my sincere thanks.

John J. O'Neill

Freeport, L. I.

New York

July 15, 1944

My New Capacitors. I spent several weeks thinking about this before I finally decided to build it. All of the capacitor plans I have seen look hard to build that why I have refused to build one. I came up with my own design that seem easy to build. Also with other plans I have seen you can not use the new capacitor for several months until all the air has had a chance to escape. With my design you do not have to wait to use the new capacitor.

I bought a roll of .010 aluminum flashing 10" wide at the lumber yard. I cut the cap plates 9' long with a 12" long tab that is 1.5" wide. The total length with the tab is 10'. I used a paper punch to make a hole in the tab so I could bolt is down. I folded the tabs over 90 degrees so it will stick out on the side of the plate and stick out the end of the caps after it is rolled up.

I bought a roll of .006 mill clear polyethylene at the lumber yard. The roll was 10' by 100'. I cut it into strips 14" wide by 222" long by rolling the plastic around a pipe first then cutting around the pipe with a razor knife. I laided the strips out on the carpet floor in the house. I put 9 layers of poly in a stack. Then I laid the aluminum plate on the stack of poly and folded the poly over the top of the aluminum plate. Now there is 9 layers of .006 poly on both sides of the plate. Its made like a sandwitch with poly on both sides and the aluminum plate in the middle. The poly hangs over each side of the plate 2" and hangs over the tab end 3".

I made 2 poly and aluminum sandwitches and placed one on top of the other making sure that one tab sticks out on the left side and the other tab sticks out on the right side. The tabs are on the open end of the poly not the end where the poly folds around the plate.

I bought a piece of 1" PVC pipe to use as a center for rolling the plates up tight. The 1" pipe measures 1.25" outside diameter. I cut a piece of 1" pipe 15" long for the center. I placed the 1" pipe on the end of the poly that folds around the plates not the tab end of the plate and started rolling. I rolled it up as tight as I could. The sheet of poly tried to get out of line a little on both sides but with a 2" hang over this is not a problem. I put a piece of masking tape around the rolled cap to hold it in place until I could insert it into the 6" PVC pipe. After rolling both plates together there are 18 layers of .006 mil polyethylene between each plate. d=.108 A=1080 K=2 C=.00896 uf 40,000 volt rating. Formula C=[(.224 times K times A) divided by d] times 2.

I cut a piece of 6" PVC pipe 16" long and slid the rolled capacitor into the pipe. It was a very tight fit. I had to spin the capacitor in the direction of the roll after I removed the tape to get it to go into the pipe all the way.

I drilled a # 7 hole in the PVC end caps and tapped the plastic for 1/4" by 20 threads. I made 2 threaded studs 2" long from 1/4" threaded rod and screwed the stud into the threaded hole of the end cap. Then I put a 1/4" hex nut on each end of the stud and tightened it against the plastic end caps. I put a small amount of lock tight on the threaded rod and nuts to hold them in place. I used the hot melt glue gun to seal around the hex nuts where they touch the end caps. I drill and tap a 1/8" NPT pipe thread in only one end cap. I made sure there was 1/2" of thread sticking out on the outside of the cap for wire connections and a nut.

Next is put the aluminum tabs from cap on the 1/4" threaded rods and put on a lock washer and a nut to hold it in place. Then I glued the end caps to the 6" PVC pipe with lots of glue and used a rubber hammer to make sure they were on all the way.

While the glue was drying on the PVC I drove to the power company and bought 5 gallons of transformer oil for $2.00 a gallon. When I returned home about an hour later I connected the vacuum pump to the 1/8" pipe threads on the end cap of the capacitor and pumped a vacuum. The vacuum guage was reading 30. I held the vacuum for a few minutes then closed the valve to the pump and opened the valve to the container of oil and back filled the capacitor. It took a few minutes for the cap to fill with oil. Then I removed the vacuum hose and plugged the hole with a socket set screw pipe plug.

Construction time and cost of
1 rolled capacitors .008 uf.

2 aluminum plates	25 minutes $6.00.
18 polyethylene sheet 14" by 222"	45 minutes $9.20.
2 PVC end caps 6" dia drill and tap.	5 min $20.46.
1 PVC pipe 6" dia by 16"	5 min $3.18.
Misc, nuts, washer, stud, pipe plug.	5 min $1.00.
1 gallon of transformer oil	10 minutes $2.00.
1 PVC pipe 1" dia by 15" long	2 min $0.30.
TOTAL construction time =	87 min each cap $42.14 each cap.

I spent more time driving around town buying the materials than I did building the capacitors. I probably spent 5 or 6 hours driving around town getting the stuff together to make these capacitors.

After I had finished both capacitors I took them both to Fox Brothers electric motor repair to have them tested. They both tested .008 uf just exactly as I had calculated they should be. There meter did not read 4 places. The actual value of the finished cap could be .0080 to .0089.

Then I took the capacitors both to Desco an electrical contractor supply company so I could use there meter to test it again. Again the meter read .008 uf. There meter did not read 4 places either.

I returned home and didn't waste any time removing the glass plate capacitor from the TC and put on 1 of the new poly caps. It has been about 2 hours sence I finished them both. The output of the secondary was 13" with the glass plate capacitor and now its 32" with one rolled capacitor. With 2 rolled capacitors in parallel the output is 44".

Gary Weaver

Bright Skies - Part V

Top-Secret Weapons Testing?

Extracted from Nexus Magazine, Volume 5, #1 (Dec 1997-Jan 1998).
PO Box 30, Mapleton Qld 4560 Australia.
Telephone: +61 (0)7 5442 9280; Fax: +61 (0)7 5442 9381.
From our web page at: http://www.peg.apc.org/~nexus

© 1997 All Rights Reserved by Harry Mason, B.Sc., M.Sc.
1313 Armstrong Road, Jarrahdale WA 6203, Australia.
Phone: +61 (0)9 525 5999, Fax: +61 (0)9 525 5944

Note: Any person seeing, or having seen, exotic "meteor fireballs", or knowing anything about same or exotic EM weapons systems, is invited to contribute to this research project by telephoning the author on +61 (0)9 525 5999 (after 10.00 am WA time = gmt + 8 hours), faxing on +61 (0)9 525 5944, or e-mailing on E-mail: orbitx@ois.com.au.

Earthquake-Inducing Electromagnetic Weapons Used at Kobe?

On 17 January 1995, the Japanese city of Kobe was struck be a massive earthquake that devastated much of the city, killing over 5,500 people and injuring many thousands more. Shoko Asahara, the leader of the Japanese Aum Supreme Truth (Aum Shinrikyo) sect, has surprisingly predicted, in a Tokyo radio broadcast on 8 January 1995, that a major quake would soon occur at Kobe. Asahara went even further and stated that this quake would be initiateed by a "foreign power" utilising an electromagnetic (EM) weapons system.

Aum's Science Minister Hideo Murai later stated at the Foreign Press Correspondents' Club on 7 April 1995 that, "There is a possibility that the great Hanshin [Kobe] earthquake was activated by electromagnetic power or some device that exerts energy into the ground."

Although Asahara would undoubtedly have preferred his great predictive powers to be thought of as due to a highly developed and superior spiritual ability to examine the future time-track (thus attracting more gullible followers after this quake event, it is far more likely that he was fed warning intelligence re Kobe by Aum's Science Minister Murai, and/or Japanese Intelligence operatives who themselves weree forewarned by Russian KGB officials.

In his pre-Aum days, Hideo Murai had worked on highly advanced microwave and gamma/cosmic-ray physics applications for cold moulding of steel at the Kobe Steel laboratories. This laboratory complex was located at the near-exact epicentre of the great Kobe earthquake. Japanese investigative journalists believe that this Kobe laboratory was one of several research facilities (located at Osaka, Tsukuba and Tokyo universities) engaged in top-secret research and development of EM weapons technology - under the cover of Kobe Steel industrial research and/or environmental "desert-greening: studies.

The Aum's deputy leader, Kiyohide Hayakawa, in his pre-Aum days studied at Osaka University in the Landscape Engineering section of the Environmental Engineering department. His thesis is highly confidential and not available to the public, but allegedly contains only landscape engineering designs.

For several days prior to the great Kobe earthquake there were reports of glowing orange-red and pink lights and spherical forms hovering over and along the Kobe fault line. Such Earth stress lights have been observed over major quakes in many parts of the globe since the 19th century, but the number and intensity of those that developed in the January 1995 pre-Kobe quake days appear to be highly anomalous.

The existance of geophysical weapons capable of creating or triggering earthquakes in highly stressed crustal regions has been discussed provately by geophysicists for a decade or more. Rumours have abounded over certain huge earthquakes of the 1970s and 1980s in the Central Asian republics of the former USSR. Some writers have suggested that these caused by Israeli, French or American EM weapon systems used in retaliation for Soviet EM weapon strikes on the West. US scientist Tom Bearden contends that the Soviets brought into service an intercontinental-range Tesla EM weapon in 1963 during the Khrushchev era.

The evidence that Kobe was not a natural earthquake is slender and based primarily upon Asahara's prediction about actual cause, and quite possibly I am totally incorrect in suggesting this even could have been caused by a sentiently controlled and directed EM energy

weapon. There would appear to be some supporting evidence of an indirect nature involving political considerations and other more recent events. However, taking into consideration the entire Kobe and Aum Tokyo scenarios together with the earlier, possibly Aum-related, fireball-explosion-earthquake of 28 May 1993 at Banjawarn, Western Australia, one is left with a very strong impression of a serious fire underlying the visible "dark plume of smoke" that rose over Kobe.

But what motive could there possible be for such a major city-busting weapon strike? Why choose an exotic EM weapon system?

It is quite possible that the EM strike was directed at the secret Kobe Steel EM weapons research laboratory and that the motive was in part to destroy this facility and cause such a resounding blow to the civilian population, similar in scale to the nuclear bombings of Hiroshima and Nagasaki, that the Japanese oligarchic powers behind the scenes would think long and hard before attempting to continue their EM weapons project.

If the USA (or covert international power group based therein) were the belligerent party that struck down Kobe, then the motive would most likely have included a "big stick" warning to the Japanese powers to do what they were told with regard to the New World (economic) Order, or face the consequences.

It would appear from subsequent events that the Japanese oligarchy did not grovel uner this attack but in fact, after some further provocation, went on the offensive with its own (or a friend's) EM weapon system.

Factions at War?

During 1995 and 1996 the following major events were literally blasted onto the world stage:

1. 17 January 1995: The great Kobe "earthquake";
2. 29 March 1995: Tokyo subway gas attack;
3. 17 April 1995: Oklahoma City "terrorist bombing";
4. 1 May 1995: Perth "fireball-explosion";
5. 17 July 1996: Destruction of TWA Flight 800 off New York City and Long Island.

With the exception of the Tokyo subway gas attack, each of the above events can be proven to contain evidence for the apparent involvement of highly advanced exotic EM weapons systems. The Tokyo subway gas attack appeared to involve the Japanese Aum Supreme Truth sect and possibly several other players previously "fingered" in the EM weapons game. For some reason the 17th day of a number of event months appears to be significant; this may reflect payback timing based on the first major event on 17 January 1995.

Taken as a whole, these events appear to represent an escalating exchange of fire between opposing (but unidentified) factions. The nature of this ongoing war and the identities of the opponents and their leaders appear to have been very deliberately kept secret from the planetary population, whilst elaborate webs of lies have been erected in the world press and Japanese and US courts to nominate patsies as the perpetrators of these shocking events.

The development of apparently magical EM weapons capable of initiating earthquakes or nuclear-force-level explosions over or within targets located at a great intercontinental distance by transmission of scalar or Tesla EM ray-waves from two o three transmitter sites - or EM weapons able to strike target sites from an orbiting sattelite, spacecraft or aircraft - or ground-based EM beam-pulse weapons capable of taking out orbital or airborne targets, has for the first time in our planetary history allows the use of "deniable" massive-force weapons in terrorist acts directed against the general population.

These EM weapons effects are "deniable" in that they can be blamed upon natual earthquakes, meteor air-burst explostion or bolide ground-imapcts, or can be set up as terrorist-bomb, ground-to-air missile or even alien UFO scenarios. The ability to cause apparently magical-force events implies an enormous advantage to certain individual power groups who appear to have stolen these weapons (from the states that originally developed them) to use solely for their own advantage.

Such weapons in the hands of secret power groups who are willing to use them without mercy against the innocent citizens of planet Earth, represents a horrifying future prospect in the power struggles of this planet. Defence against such weapons and the curs who control them must now be our primary objective. The nuclear terror has been replaced by something far worse: a usable high-energy weapon.

Behind the Tokyo Subway Gas Attack

The Tokyo subway gas attack on 20 March 1995 killed 11 people and injured thousands. The Aum Supreme Truth sect was soon implicated by the Tokyo Police and the world Press.

The Aum was reported as initiating the gas attack as a prelude to a revolutionary "right-wing" takeover of Japan. Aum members were shown on film by the BBC being trained and armed by the Russians. Allegedly the Aum smuggled thousands of automatic rifles and other weapons into Japan from Russia. Apparently the Aum intended to use Russian helicopters and *Spetnaz* troops landed on the coast as aids to allow Aum forces to take control of Japanese Government ministries during a serios of major diversionary terrorist nerve-gas attacks on key population and government centres across Japan. The Tokyo subway gas attack was allegedly a preliminary operational test prior to the full-scale action.

In Australia, ABC TV soon ran a prime-time news story with video showing a shed full of large chemical drums (found at Banjawarn by the new post-Aum owners) and trenches full of hundreds of dead sheep. The report also discussed Federal Police reports concerning sarin-gas-derivative chemicals found in the dead sheep, and interviews with the Aum's Australian sheep station manager. All of this was supposed to demonstrate that the Aum purchased Banjawarn station to carry out tests with homemade sarin nerve gas on sheep, as a precursor field trial to the Tokyo subway gas attack.

Problems soon surfaced with regard to this official Australian press scenario. The present owners of Banjawarn reported to this author that the ABC TV story was "a pack of lies", for the shed of chemicals shown on the 7.00 pm news was not on Banjawarn stations; in fact, they had never seen it, and did not know where this video had come from. They insisted that they had only reported finding two relatively small bottles marked "HCl" (hydrochloric acid) in the old station building, which was previously used by the Aum sect in September 1993 as a mining field laboratory.

The ABC news footage showing hundreds of dead sheep was actually stock video recorded the previous year when sheep were being shot on farms near Esperance, WA, due to extremely low market prices. Only a few tens of dead sheep were found by police on Banjawarn, and these had been put down by hammer blows to the head by the Aum's *real*manager - appointed by the WA Pastoral Board because the Aum's novice manager had failed to tend the station's windmills, thus causing a shortage of water for the flocks, which resulted in maney severly dehydrated sheep having to be put down.

In Japan, European chemical and nerve-gas experts who examined the Aum's chemical complex laughed at the notion that sarin or any other nerve gas had been made there, pointing out that the equipment and facilities would have leaked like a sieve, killing the operators and local villagers. They did find plently of residual evidence in the plant that demonstrated that large quantities of designer drugs such as ecstasy had been manufactured there, right up ti the time of the Tokyo subway gas attack.

Small samples of sarin and other nerve gases as well as other lethal gas and chemical types were found in the Aum complex, along with a few automatic rifles kits of Russian origin and equipment for duplicating further arms. However, Aum members were apparently deliberately warned about a week in advance that a police raid was coming - thus allowing them to remove any other stocks of arms, gases and drugs in advance.

It appears that deputy leader Hayakawa used the sect as cover for a range of foreign weapons purchases and weapons-related research - apparently for the "right-wing" oligarchic power behind the Japanese government. It is quite obvious that at least parts of the Aum organisation were not staffed with "good guys" and that they were involved woth some quite crazy and antisocial activities such as the manufacture of massive quantities of drugs.

Japanese investigative journalists belive that the drugs were being distributed worldwide by Yakuza, poossibly through a rogue CIA operation. Thus, in time-honoured secret-service fashion, a "right-wing" Japanese oligarchic intelligence operation was being funded by illicit drugs.

These same Japanese journalists (see their web site: www.pelago.com) have suggested that the Aum sect was a cover for Japanese Intelligence operations involving covert re-arming of the Japan Self-Defence Forces with new Russian weapon systems. Recent Japanese Defence Agency press releases tend to support this view by revelaing large, new purchases by Japan of modern frontline Russuan jet fighters and bombers, as well as joint communications exercises between the two countries' defence forces. There is plently of evidence concerning the Aum's activities in Russian, such as training with Russian troops and managing the joint Japan-Rissia University in Moscow - a cover for a Russian-Japanese redevelopment of the first-generation Russian EM weapons systems mated to Japanese computer power.

As early as mid-1993, in his visa applications to enter Australia, Asahara complained of gas and laser attacks on his person and against Aum facilities. He continued to complain of such attacks in further correspondence with Australian Immigration in mid-1994. If taken at face value, this data and much else of the press web re the Aum suggest that the Aum (and hence their backers?) has been the victim of a knockout blow delivered by a very influential foreign secret service. The Aum was set up as the perpetrators of the Tokyo subway gas attack - the patsy, if you like.

It may be highly significant that over 50 percent of the Japanese LDP Cabinet allegedly flew covertly to North Korea for one week's negotiations, the day after the gas attack. The Aum Science Minister Hideo Murai was murdered by a North Korean hitman's knife soon after the Tokyo subway gas attack. Someone was very afraid that he was going to talk. Apparently Murai's last words in the ambulance were the equivalent of "The Jews got me!", although other interpretations of his final mumblings have also been advanced.

Hayakawa left his early "landscape engineering" studies and joined the Moonies, whereupon he was equipped with the deeds of several Tokyo buildings and vast sums of cash so as to buy his wayt to the top of the Aum sect. The Reverend Moon was a close friend of the North Korean "Great Leader". Reportedly the Moonies still have exceptional ties to North Korea and, nore recently, to ex-US President George Bush, involving business ventures in South America.

Several previously reliable Japanese sources believe that the CIA planned and executed the Tokyo subway gas attack to destabilise the LDP government and/or force it to co-operate with US policy requirements. The exact nature of their evidence is unknown to me, but similar claims have been made by Debra von Trapp, an ex-NSA/CIA agent involved with bugging the Clinton White House for a George Bush-controlled faction of the CIA on behalf of certain Japanese industrial companies during key USA/Japan trade talks.

The strange ABC TV deception of its viewers, by implanting the Aum = sarin nerve gas = Banjawarn station testing = Tokyo subway gas attack imagery across Australia, suggests an intelligence action in support of United States interests.

Oklahoma City "Bombing"

On 17 April 1995, at a few minutes after 9.00 am, Oklahoma City was blasted by the "terrorist bombing" of the Alfred P. Murrah Federal Building. One hundred and sixty eight men, women and children were killed, and hundred more were maimed and injured in this callous attack. The building was nearly totally destroyed by the explosion, whilst severe damage was inflicted on adjacent buldings, petering out at about a one-mile radius from ground zero.

This event was soon blamed upon a "right-wing militia group" composed of ex-Gulf War veterans utilising an ANFO bomb composed of from two to fove tonnes of ammonium nitrate and Diesel fuel-oil set up in a hire truck parked in front of the target building. A robotic Timothy McVeigh was recently convicted of the OKC "bombing", and his alleged accomplice Terry Nichols awaits his trial (which is about to commence as this article goes to press).

On the day of the event, I, like many others, watched the CNN TV feed of the Oklahoma scene. Intriguingly, there was early reports of missiles being seen coming down vertically into the building, but these reports never resurfaced. A survivor with blood all over his face was interviewed about one hour into the rescue effort. He described how his life had been saved in his previous domicile in California. When the Murrah Building began to shake violently he recognised an earthquake, just like thise he had experienced in California, so he dived under his fifth-floor desk. Some five-to-ten seconds later, a huge explosion demolished the bulding around him, but the desk saved his life.

Then came reports that more bombs had been found, and a utility truck with a small armoured bomb box in its tray was shown, whilst the FBI's radio delivered a conversation alleging large drums of mercury fulminate explosive had been found attached to building support pillars next to the lift shaft.

I became agitated, since I had never heard of an earthquake-type effects hitting a building *before* a bomb went off, and I knew mercury fulminate to be an extremely unstable explosive and very unlikely to have survived a major explosion. Also, the size of the explosive drum reported them and later photographed would have been far too large to fit in the armoured bomb box that reportedly drove away with these dangerous prizes.

Explosives experts in Australia, the UK and USA (e.g., the General Partin report) began to question the nature of the damage at OKC. The gist of their theses is that low-velocity explosives like ANFO cannot have demolished so many support pillars in the strange pattern seen at OKC, since the blast pressure falls off according to the inverse-cube distance law - yet some near-bomb pillars were still standing, whilst some further away from the bomb were demolished by the blast. Their reportes generall invoke a need for very-high-velocity explosives and individual charges attached to certain pillars inside the building - requiring hours of work to fit out. Personal friends with experiences in mining explosives and Belfast IRA ANFO terrorist-bomb damage have confirmed these points to me and have noted that the crater that developed at OKC does not fit with the truck bomb explanation or the truck's alleged parking lot position.

Another possible weapons candidate soon surfaced: the "A-Neutronic" bomb. In this scenario, a mad criminal scientist (the infamous Michael Riconoscuito, currently serving time in a US prison), developed for the US Government a new super-weapon that involved blowing a cloud of chemicals into the air, charging the cloud with a large excess of electrostatic energy by means of a small rocket-carried "wire", and then detonating the resultant "fuel-air" mix to create a small nucear-type explosion.

I began to collect eyewitness reports and evidence from official source publications and Internet sites relating to the OKC event. Then, in late 1996, I visited Oklahoma City and with the help if local author David Hoffman examined the "bombing" site and interviewed local witnesses. The outpouraing of grief and anguish present, with messages and wreaths oof the victims' relatives and friends on the targeted buildin site's protective fences, made me resolve to give this event my very best analysis to try to deduce the true nature of this explosive event and thereby help indicate the *real* culprits.

Seismic evidence recorded by local seismometes demonstrated a double-pronged explosive energy event with two nearly idential three-to-five second, low-amplitude, multiple wave trains seperated by a null field, occuring over a nine second interval. USGS geophysicists argued that these two wave-packets were due to an initial ground "surface" wave arriving before a secondary wave that had travelled via deeper reflecting Earth layers, i.e., via the local basement. Other geophysicists argued that there were two wave-packets, representing the explosion followed by the building debris impacting with the ground.

These hypothesis were blown apart by the US Government's explosive demolition action on the Alfred P. Murrah Building remains, which failed completely to demostrate a two-pronged seismic response that was in any way similar to the original event recordings. The original and best seismic recordings have been confiscated by the FBI, along with many other items of evidence such as the City video-surveillance tapes. Hardly surprisingly, none of this evidence surfaced in the McVeigh trial.

Along with the evidence of seismic action shaking the building some five-to-ten seconds *prior* to any explosion or blast wave hitting the building, there were several other mysterious*pre-explosion* events. A policeman working at his computer noticed electrical sparks and streamers in the wiring under the table several seconds *before* the explosion brought the building down around him. A woman on the upper floor noted a string ionising electrical sensation and hot-air flow enetering the windows several seconds *prior* to the explosion which blew the same windows in on her. The lights in the building went out some five seconds *before* the explosion. A dictation tape recording made across the street from the "bombed" building recorded a loud click a few seconds *before* it recorded the sound of a huge explosion. This "click" was probably a local electromagnetic wave spike of considerable intensity.

An eyewitness located in a car a couple of hundred metres from ground zero observed a silver-white light flash or beam coming out of the top of the building, followed by an orange-red light flash or beam that shot out from the top of the building. These electrical and light effects took some five seconds and *preceded* the actual explosion. (Reports of missiles may have been mistaken identification of these pre-explosion energy beams.) They were followed immediately by two explosive shock waves, one trailing the other, that progated out and away from the base of the building, These waves lifted the ground and buildings violently upwards. The witness called this the "lid effect".

Several cars located on the above-ground carpark had electronic ignition computers completely burnt out by the event. Two cars had factory-fitted digital magnetic compasses that here later found to be thrown out by 180 and 45 degrees respectively. Many nearby office computers went down with burnt-out circuit boards. These facts point strongly to a major EM pulse having struck the area associated with the explosion.

The local area damage from the OKC event was huge. I cannot emphasise enough how devastated the area was. I was quite amazed when I visited the site. Entire blocks of damaged office buildings has been knocked down due to their shattered state, some nearly a mile away from ground zero. Large open spaces were surrounded by boarded up buildings with no windows, no roofs, and intensely shattered internal concrete beams and supporting pillars. I saw the intense damage inside the nearby newspaper building where internal dividing walls had been smashed asunder and horizontal three-foot square reinforced concrete beams sagged everywhere. This building had been built to very high 1930s standards to withstand tornados, yet it was wrecked. Many buildings had entire windowsills forced back in with their front brick walls sagging inwards. Nearer to ground zero, large, one-foot-wide, floor-and-wall reinforcing steel H-girders were twisted like spagetti into grotesque shapes amidst the ruins of entire floors blown away to dust and rubble.

I showed a suite of local damage photos to retired SAS trooper friends, with experience in IRA ANFO bomb damage. There were as amazed as I was, and stated categorically that this was no ANFO damage. They said it would not have mattered how large an ANFO bomb had been detonated, it could not have caused the damage seen in to the photos and/or described in the US literature.

Funnily, the FBI released film of ANFO car-bomb test explosions that show significal fireball or fiery effects from such explosives. Yet no witnesses have described any fiery explosion or flames - just strange, pre-explosion light flashes or beams followed by pure energy waves, with very high plasma-type heat effects noted on nearby car paint.

It is my contention that the OKC event was the result of a double-pronged EM weapon strike that caused the Earth's dielectric field to erupt through the building. The building shook first becuase of harmonic reaction to the first EM wave packet which also blew the building's electrical supply and created the various computer, digital compass and ionising hot-air effects. Having rocked the building suffuciently, the EM weapons mode was advanced in a second strike to initiate atomic-bond rupture and literally blow the building apart.

No conventional or nuclear explosion, including a so-call "A-Neutronic" bomb, can cause seismic shaking and electrical light-energy effects in a structure, seconds *before* the explosion blast-wave hits.

Oblique aerial photos of the Murrah Building show two nearly vertical, tubelike damage forms running through the building. These represent slightly displaced near-vertical but divergent beam-pulse orientations, suggesting an orbital platform was involved in the action.

Any bomb or militia-terrorist character to this event was set in train by those who hit the building, to ensure that the true nature of the weapon system and its technology was hidden from public and possibly other US Government personnel.

This implies that a faction from within the US Government was responsible. Either that, or the US Government was warned well in advance that this particular building would be hit that day by an advanced weapon over which there was no defence - so it quickly found a patsy and built up a cover story.

"Need-to-know" secrecy policy suggests that there then enetered a cock-up of horrific dimensions. Lower-level personnel had been searching for a bomb earlier that morning, having been told that the building was targeted for bombing by terrorists, but, in failing to find it, they then did not proceed to evacuate the building. Higher government levels, having decided to hide the horrible truth from even their own operatives, had to have a plausible McVeigh militia-type event. The Alcohol, Tobacco and Firearms personnel were better served, as were the Judges in the adjacent court house: they were warned to stay away that day.

Secret Service personnel engaged in anti-drug operations were in their offices which lay in the centre of the damage and were wiped out by this OKC event. Interestingly, similar terrorist-bombing events in the past were apparently aimed at the same anti-drug Secret Service in both the downing of the Lockerbie Pan Am jumbo and the "bombing" of the New Yowk World Trade Center. Indeed it is possible that this entire series of events if being fought over a drugs empire.

Perth's Early Morning Wake-Up Call

In the early hours of 1 May 1995, a major fireball flew in a noth-notheasterly direction toward Perth, WA, and detonated above the eastern side of the city at approximately 2.00 am in a huge explosion. Limited Australian press coverage of this event defined it as a meteor fireball. Unfortunately, too many such fireballs fly around our night skies, exhibiting exotic flight behaviour and a preference for the first of May each year.

This Perth event has been described in more detail in Part 1 of this "Bright Skies" series (see NEXUS 4/03, April-May 1997), where I present evidence for the non-natural origin of this event and suggest that it represents an EM weapons incident of probably Russian origin, or possibly off-planet alien origin.

The megatonne-force level of this explosion woke up over half a million people and demonstrated that Perth could have been obliterated at the flick of a switch. This was the message in the wake-up call made that early morning to the people of Perth.

I strongly suspect it was pointing out that WA hosts a huge US-controlled EM weapons system at Exmouth in the northwestern part of WA, and that we should *wake up* and bring order to our own house - or face the consequences.

The trajectory of this fireball suggests an origin in Enderby Land, Antarctica, where a number of Japanese and Russian bases are located. The fireball flew on towards the Kamchatka Peninsula where a huge Russian (former Soviet Union) EM weapons complex/transmitter (Tx) site lies.

The seismographic record of this Perth meteor event is surprisingly similar to one of the two low-order wave-packet arrivals seen on the record of the OKC "bomb" events.

On the premise that such a fireball represent no mass object but is purely a slug of "infolded" EM energy created by a Russian-type Tesla weapon system, I contend that this incident fits well with the other exotic events of 1995 and represents yet another stage in an escalating ooligarchic war for control of our planet.

Some evidence in this study points strongly at a mainly Earth-based series of actions involving those who line by the profits of drugs, fighting against other oligarchic power-mad men - with both sides utilising very technologically advanced EM weapons systems. However, some evidence points to a battle between secret Earth-based power groups and off-planet aliens - possibly the little Greys or the greenish Reptilians (see Part 4, NEXUS 4/06). Perhaps we are involved in both scenarios, with two Earth-based oligarchic factions with separate off-planet allies fighting with horrific new weapons for control of Planet Earth.

Rumours abound about all of these scenarios - but then again, it is quite possible that none is correct and we are just dealing with strange, exotic, natural events that have been mistakenly identified.

Even so, these events have been, and continue to be, extremely dangerous to human life; thus, whatever is going on requires immediate attention by the people of this planet - as the next incident involving the fateful TWA Flight 800 amply demonstrates.

The Downing of TWA Flight 800

TWA Flight 800 was destroyed on the evening of 17 July 1996, and, with her, some 230 men, women and children perished.

I had been researching strange orange-red fireballs and other exotic light-energy beams observed around Australia when I was surprised by reports coming out of the USA about events surrounding the downing of TWA 800. I fly quite a lot on jumbo jets, and the thought of a bunch of nutters killing off hundreds of ordinary people made (and makes) my blood boil.

Reports started coming in, one from a New York Air National Guard helicopter pilot who, on patrol that Wednesday night, was an eyewitness to the explosion of TWA Flight 800.

"I know the strike of a missile. What I saw didn't look at all like a missile," said Commander Fritz Meyer of the 106th Rescue Wing of the New York Air National Guard. "Our three-man crew saw the same thing: a flash of red-orange light, characteristic of a shooting star," he said. "Then we saw a small explosion followed by a large explosion, and a ball of fire fell into the sea."

I telephoned the Pentagon in Washington and was put through to the pilot's air base, but after leaving messages I got no reply - until about a week later when I reached the base control-tower. By accident this man was in the tower, having been grounded due to the very same news item and a very upset FBI and New York Mayor who had ordered him gagged. I spoke with this pilot fir a few minutes and felt that he was an honest man and, like all military pilots, a damn good observer who was very perplexed at what he had seen that night. He reiterated that he knew missiles from his Vietnam tours and it definitely wasn't one of those. He said he really would like to know what it was and would love to chat to me further, but I had better get the okay for us to talk from the public relations officer at his base.

A fax exchange later, I was reading that FBI investigators wanted *no one* to talk to this man until they had determined the cause of the "crash". He and I are still waiting for that chat.

Over the next few months, several sirline pilots saw similar orange-red and green-blue mini-fireballs with tails flying at jumbo-jet height through this area. A TWA pilot returned to Kennedy Airport rather than proceed, after seeing one such meteor-like object fly past his wingtip. In all, about 10 separate reports came in of strange fireballs or meteors in the New York and Long Island air space vicinity.

Meanwhile, allegedly after demands from the French Government which lost several Secret Service men on TWA Flight 800, the US authorities assembled a team of divers who recovered the wreckage from the sea for a crash investigation. The flight recorder was recovered but it was electrically dead due to burnt-out circuits and gave no clues to the events of that night. I had earlier predicted in e-mails to the FBI the likelihood of just such a fact by analogy with evidence from Australia that our orange-red lights and fireballs were EM field effects, possibly due to the testing of scalar EM weapon systems. The FBI did not reply.

Theories began to executore a "do-loop" in the world's press. These revolved around a meteorite impact, a terrorist bomb, a terrorist missile, a US Navy missile or drone impave, a bird impact, a mechanical failure of some kind, and an explosion in the near-empty central fuel tank. Recently the crash investigation team has come out with evidence for an electrical overvoltage spark in a valve located within the central fuel tank, and has suggested that this was the cause of the explosion and that Boeing should redesign this part.

Obviously their finding should also include considerations on what caused the overvoltage jump; for instance, was in an EM weapon pulse or an electrostatically charged meteor? Trouble is, meteors do not keep returning to the same piece of Earth every few days - as has been the experience around New York.

Interestingly, there were many UFO reports from Long Island over the preceding two months, and a local UFO researcher was arrested under cloudy circumstances just five weeks before the TWA 800 event.

In late 1996 a leading British psychic, who often works with Scotland Yard and MI5, was approached by the CIA and asked to remote-view the TWA 800 incident. She reported seeing to beams flash down from high altitude; where they intersected they created a third orange-red beam which shot out, hitting the jumbo jet and causing the secondary major explosion. This was fascinating stuff,

since her description was almost the verbatim equivalent of the actual eyewitness evident from the 1987 DC-8 crash near Gander in Newfoundland, northeast Canada, that killed hundred of US Army personnel. She did not know of this event, and had seen only British news about the TWA 800 explosion - and nothing about beams.

However, the overall evidence pattern here links the destruction of TWA 800 to an EM-type event that strongly resembles certain of the Australian fireball-event types. We are left with yet another strong impression that this event - on the 17th day of the month, again - involves Secret Service agents (French ones this time) and advanced EM weaponry that has been responsible for the death of hundreds of innocent people.

Then again, as in many other incidents around October 1997 in New Mexico, Queensland and New South Wales, there are elements of the picture that suggest an ongoing war with alien, off-planet UFOs. Perhaps a UFO really did knock down TWA Flight 800, and Triffid meteor showers or some modern derivatives have made us blind to the new reality in our patch. Or maybe some strange, EM-style natural event, such as an electrostatically charged bolide, caused the demise of this plane and its passengers.

I, for one, think it's high time we found out the truth. Our lives, and quite possibly the future of our race, could depend on it.

About the Author

Harry Mason, BSc, MSc, MAIMM, MIMM, FGS., is a UK-born geologist/geophysicist, resident in Perth, Western Australia. His 30-year career in mineral exploration has had him stationed all over the world, including Alaska, India, Norway, Mexico, Morocco, Sudan and UK. He has extensive field experience in geo-recce, geological mapping, geophysics/geochemistry, prospecting, remote-sensing/computer imaging technologies, and seismic and electromagnetic studies. He specialises in the geology and resource exploration of WA's Eastern Goldfields. Lately he has been devoting his time and expertise to researching mysterious Australian outback phenomena of natural and man-made origins.

Bright Skies - Part IV

Top-Secret Weapons Testing?

Extracted from Nexus Magazine, Volume 4, #6 (Oct-Nov 1997).
PO Box 30, Mapleton Qld 4560 Australia.
Telephone: +61 (0)7 5442 9280; Fax: +61 (0)7 5442 9381.
From our web page at: http://www.peg.apc.org/~nexus

© 1997 All Rights Reserved by Harry Mason, B.Sc., M.Sc.
1313 Armstrong Road, Jarrahdale WA 6203, Australia.
Phone: +61 (0)9 525 5999, Fax: +61 (0)9 525 5944

Note: Any person seeing, or having seen, exotic "meteor fireballs", or knowing anything about same or exotic EM weapons systems, is invited to contribute to this research project by telephoning the author on +61 (0)9 525 5999 (after 10.00 am WA time = gmt + 8 hours), faxing on +61 (0)9 525 5944, or e-mailing on E-mail: orbitx@ois.com.au.

Reports of fireballs and EM light-energy events are on the rise, not just in the Australian outback. Are these events tests of "Tesla weapons", and is there a "secret war" going on?

Readers of previous episodes of this "Bright Skies" series might be forgiven for believing that exotic fireball, light emission, electrical, electromagnetic and coupled explosive and/or seismic events have been observed in recent years solely within the continent of Australia.

Although sightings "down under" have been prolific and strongly suggest that we are being utilised as a major testing ground for someone, there have also been a significant number of similar events in other countries during the same time frame (say, 1985-1997), as the following randomly chosen examples (provided to the author by NEXUS readers and reproduced below in their original, but abridged, format) amply demonstrate.

Mansfield Incident, England, UK, 1987

Ashley Rye e-mailed Skywatch (an Internet UFO news server) with the following report concerning an event that occurred in the early hours of 12 November 1987 at Mansfield, Nottinghamshire, England, UK:
On the night of November 12, 1987, a freak storm, or freak "thunderbolt", damaged a number of properties in the Kirkby area, including one house that was almost destroyed. Mike West, who dealt with many of the insurance claims, will verify that this was no ordinary meteorological phenomenon. He told local residents, "This just doesn't make any sense. Every claim that I've dealt with in the last 26 years has been logical and reasonable... but this defies reason. It did not even travel ina straight line (as you would expect with a thunderbolt, following the line of least resistance). It zigzagged across the sky, and people even saw it dive down over the hills... It's as if the whole area was blanketed with electromagnetic radiation." Effects were felt over a wide area. Mansfield residents were rudely awoken at 1.30 am by a sound "like an explosion".

Appropriately perhaps, a few were immersed at the time in an old war movie, "The Battle of Britain," on TV, which by bizarre coincidence had just reached the point where German bombers were dropping their payload on a British aerodrome. During the explosion, lights reportedly switched on by themselves, while others which were already on exploded. Some TV aerials split in two. Forty insurance claims were made in one street for video and TV equipment damaged by the "thunderbolt".

A local video and TV repairman working late at home that evening reported that the lights suddenly dimmed and light bulbs started to pop in the house; furthermore, the electrical trip-switch blew. Next day he was inundated with phone calls from individuals whose equipment had been damaged.

Some suggested ball lightning was the cause of all this, but one old lady saw it flying straight towards her house, looping, double-looping and performing other manoeuvres. Another man watching from a distance described how the sky suddenly became bright red. The explosion was heard and felt over an area of seven to eight square miles, throwing some people out of bed-somewhat more energy than is required for a standard manifestation of ball lightning, one is tempted to conclude.

Residents witnessed an object zigzagging very slowly over Mansfield, making a whining noise as if it were in trouble. Two more objects were subsequently observed coming down near Blidworth, close to Sherwood Forest. According to the insurance claims, objects came from three different directions and collided in mid-air just south of Mansfield. The UFOs were reportedly heading towards Kirkby when one of them seemed to encounter difficulty, apparently losing power and coming down in a large wood near Blidworth. It appeared to "bounce" on impact, releasing a tremendous shockwave. One report suggested that one object was a craft in trouble and the other two could have been missiles.

Numerous persons reported structural damage to their property. Powerlines collapsed. Curiously, meteorological reports confirmed that there was no cloud, wind, rain or lightning active that night, resulting in a number of property damage claims not being met, in spite of investigation. Other witnesses spoke of a still and cloudless night.

Eyewitnesses described a number of balls of white light streaking to the UFO as it descended near Annesley Hall, which stands on private grounds, hampering attempts to obtain further information. At 2.15 am seven military helicopters, including what appeared to be troop-carrying Chinook surrounded by Gazelles and Lynxes, flew in at low speed, scanning the area with search lights over Normanton, Sutton-in-Ashfield and Kirkby. The police subsequently cordoned off the impact site and erected road blocks that remained for several days.

Trees at the site are still badly incinerated and many are marked for removal. The army remained at the impact site for three to four days. The first impact of the object, before it bounced, caused a raging conflagration which burned some trees down and caused others to burn on the opposite side of their trunks from the fire. Damage left in the wood was calculated to have been made by an object approximately 60 feet across, confirmed visually by one witness. The trees were oddly bent from the base to a height of six feet and further. In microwave-like fashion, pine cones were burnt from the inside out.

The day after the incident, heavy military lorries arrived at the site. Armed guards were posted to prevent access; government officials and spotter planes were seen. At the first impact site, topsoil was found to have been removed down to a level of about nine inches. This was replaced with clay and covered with new topsoil; pines and silver birch were planted.

This report is extremely interesting from a number of angles, especially as it involves intense electrical activity and night-time light-emission phenomena. The sightings of actual objects need to be treated with caution as, in common with most night-time observations, it is highly likely that only light emission was actually observed, and thus the object or mass was assumed to be present behind the visible light-and this may or may not be the true situation.

This Mansfield event may have been a secret military test of an advanced propulsion system gone horribly wrong, or a similar night-time flight of three such operational craft, or a true alien UFO accident scenario; or perhaps it consisted of three separate Tesla ray/wave plasma electromagnetic (EM) slugs (objects coming from three different directions and colliding) being transmitted to one target point where mutual interference released an EM pulse (similar in character to a nuclear EMP blast).

"A number of balls of white light streaking to the object as it descended" could be describing an EMP effect-similar to those seen in several early film records of nuclear blasts where a multitude of white lights streak upwards from ground level and curve around the nuke's central fireball plasma looking like hundreds of small rockets, but actually consisting of many small, induced-EM energy slugs, derived from the Earth's own "ground" EM field by the sudden creation of a massive new EM field density within the nuclear blast's plasma fireball. It is this mechanism that actually creates the nuclear blast's EM pulse (EMP) and causes widespread regional damage to unshielded electrical systems.

If the postulated cause is correct, then this incident is a perfect example of a defocused EM weapon strike-perhaps a British test or, more likely, a Russian test designed to ascertain if UK authorities would recognise the technology and react (it being quite probable that they would not know what had actually taken place).

The subsequent high-level British military activity at the Mansfield site demonstrates a very strong interest in this type of event. So someone at least was on the ball-in sharp contrast to our Australian authorities who appear to be adopting an ostrich-type approach.

Such zigzagging or angular sine-wave-type fireball/lights have been quite commonly observed in the skies over the Kimberley region of northwestern Australia in recent years. These events appear to be mega-scale examples of oscilloscope-type action, with the moving EM energy light slug being controlled by electrostatic wave grids in the atmosphere/ionosphere.

Eureka Event, California, USA, 1994

The following report, quite typical of the genre, was written by Christine Gates of Blue Lake, California, USA, and recently e-mailed to this author:

Whilst driving (alone) from San Jose, California, north to my home in Eureka, California, on September 24, 1994 at 9.32 pm, I saw a blue fireball with a gold tail race by me.

These are my best guesses about distance and speed. It was not too far from me, maybe a half mile or so. It was traveling between me and the mountains near Highway 101. It was approximately 100-200 feet off the ground, traveling from south to north at about 200 mph. I slowed the car down a little to watch this beautiful "thing". It then continued north over another mountain and then a huge flash of blue-white light lit up the night sky as though it were daytime!

The flash came from where the fireball went over the horizon and radiated from that point out to the entire sky. I was about 25 minutes south of my home in Eureka. Oh, my God! I thought it was a missile that had targeted the Eureka area. My husband and my two-year-old daughter were home waiting for me! Would they be there when I arrived? Should I turn around? Are we at war? I nearly stopped on the highway because I was struck with terror! There was a California Highway Patrol Officer and another car on the road with me. None of us actually stopped but we all slowed down and then sped towards the city.

When I got home, Eureka was still there, just as I had left it the day before. I was really confused. I ran into the house and asked my husband if he saw the flash of light. He looked at me funny and said, "Yes, I saw it while I was sitting in the living room watching TV. What was it?"

The next day, I asked everyone I knew and every stranger that I passed if they had seen the flash of light and/or the fireball. If I remember correctly, about 80% of everyone asked saw the flash. Most of them were inside their houses at the time. People inland reported that they also heard a very loud rumbling noise just before the flash. No one on the coast said they heard the rumbling. I don't think that anyone that I asked saw the fireball. I even called people up and down the west coast to see how far north and south it was seen. I, personally, spoke to people as far south at San Jose, as far east as Redding, CA, and as far north as Portland, Oregon, who saw the flash.

The day after, September 25, 1994, there were two local TV stories, two local newspaper stories, and the large San Francisco Chronicle newspaper story about this bizarre occurrence. They were all asking, "What was it?" The media made promises to let the people know.

The next day, September 26, there was no more coverage. And not another word after that! The local TV station called me on September 25 to tell me that they were working on it, but the only official statement they could get was that it was "Magnetic Interference in the Ionosphere". End of story. The TV station said they checked with the airports, the police, the national weather station here in Eureka - nobody saw anything and there was nothing on any radar that night. The TV reporter that I had been talking with was very suspicious. We both wondered what it could have been.

Even if it was as simple as a meteorite glancing past our planet, why was there so much silence about it by 6 pm, September 25, 1994? There was never another report about it by the media after that.

This report from Eureka, California, is identical to hundreds of Australian reports as regards the fireball's appearance and flight style, its performance and the power of the explosion, as well as the initial media reaction followed by total media silence. The lack of follow-up stories may be purely due to ignorance followed by disinterest-or due to an official clamp-down.

It is interesting to note that several identical types of fireball reports were made in the Kununurra and Tom Price regions of northern and northwestern Australia during October 1994, just days and weeks after this fireball event in California-suggesting that these fireball events are planet-wide in their scale of operation.

Postulated Physics Of Fireball EM Weapons

Sixty-five per cent of all reported Australian fireballs have loud, pulsed, roaring Diesel freight train noises accompanying their flight. The remainder make no noise, and none is reported to give off a sonic boom. Hence I suspect none of these fireballs has mass attached (this being necessary to create a sonic boom or shock wave). I postulate that they probably consist of concentrated slugs of infolded Tesla ray-wave EM energy, emitting light (photons) as a by-product of interaction with air molecules to provide a hologram-like spatial form.

The transverse vibrational waves reported as shaking houses under their flight paths may be caused by the rapidly vibrating Tesla longitudinal scalar wave EM energy slug initiating harmonic wave-coupling within the interatomic bonding of either (1) the nearby air molecules, or (2) the house construction material's crystal lattice, and/or (3) the ground rock crystal lattice.

Severe high-energy harmonic coupling would occur at the instance of the weapon's microsecond wave release of a concentrated EM energy pulse, and this would probably cause an explosive splitting apart of the interatomic-level bonding of the targeted material, e.g., below-ground rock, above-ground building structures, or in the gases of the "air". This would create a huge explosion and a "regular" earthquake, probably quite indistinguishable from a "normal" quake; or, in the air, an "air quake" would result.

Such an explosion would probably be quite similar to a low-level nuclear fission blast and would involve essentially similar but EM-initiated interatomic processes that affect the atomic nucleus and its bonding with neighbouring atomic nuclei. It would probably create some minor residual radioactivity as a by-product of the process, due to the production of a number of exotic isotopes.

This mechanism is probably the reason for Russian use of the code-word "Ellipton bomb" whilst referring to these types of EM weapons. ("Right-wing KGB presidential candidate" Vladimir Zhirinovsky was quoted using this term whilst apparently threatening Bosnian Muslims with annihilation.) Rapid on-off alternating electrostatic EM field coupling would cause a Mohr stress ellipsoid oscillation in any material by effects on interatomic bonding. If powerful enough, this energy input would ultimately lead to very fast explosive material rupture of the interatomic bonds-i.e., a major explosion of nuclear-force levels and/or the creation of an apparently normal-looking earthquake.

Recent Australian Fireball Events

Whilst this series of "Bright Skies" articles (Parts 1 to 3) has been in progress during 1997, we have continued to experience many significant fireball events here in Australia, the following major events being particularly worthy of mention:

1) Central New South Wales, 1 May 1997, late evening

Massive blue-white rippled lights flashed through the night skies of central and eastern New South Wales late on the evening of 1 May 1997. These were reported in phone calls to the author and to the Melbourne-based National UFO Hotline.

The following day Channel 10 TV ran a story picked up from the Sydney Reuters wire concerning many reports to the police and to astronomical observatories of a huge fireball that flew at low level across central NSW with a loud, roaring noise. This "object" appeared to arc down to the ground on the horizon where it detonated with a loud explosion and an associated fireworks light display. A related ground tremor was reported from Cobar and Broken Hill. Observers considered that there must have been an Earth bolide impact somewhere in western-central NSW, northeast of Broken Hill.

The events are believed by astronomers and the media to have been yet another meteorite fireball impact in Australia. However, since this initial media discussion, no reports of any impact crater discovery have been forthcoming. In fact, all news on this fireball went silent within one day of the event.

2) Central Victoria, 24 June 1997, 6.15 pm EST

This dramatic fireball was reported by hundreds of observers in Victoria and Tasmania as it flew over the Tasman Sea, then via the Mornington Peninsula to north of Melbourne, over the town of Ballarat and towards the town of Ararat in Victoria.

The observers reported that in its parallel-to-the-Earth, low-altitude overland flight path, the fireball caused overvoltage explosive blow-outs of house light-globes (240 volts AC), dimmed out car headlights by reducing vehicle DC voltage, and also discharged car batteries as it passed by at very high speed.

(Afterwards, the car headlights and batteries returned to normal strength. Note that these effects upon 12-volt DC battery systems are very significant indicators of Tesla-style scalar electrostatic waves warping local space-time.)

During its flight, the fireball also created shock or blast waves, felt by observers as air pressure waves. Penetrative vibrational waves shook houses quite violently as it went past. These propagated at right angles to its direction of travel and seemed to be severe due to the low altitude of the fireball.

The fireball was reported variously as a huge, bright, orange-red-white-green-blue illumination (the exact colour appears in this case to depend upon the distance of the observer from the fireball). The fireball was commonly reported as the size of the full moon. It apparently was preceded by three bright blue illuminations. It made a very loud, pulsed roaring noise in flight.

I am uncertain at this time if these blue lights were huge blue light flashes in the upper atmosphere-as I suspect, and as previously reported by observers in many other Australian fireball events and in many isolated, non-fireball, upper atmospheric or ionospheric bright-flash cases-or if they were blue lights moving in front of the main fireball.

Night was turned briefly into day by the very bright light radiating from the fireball. It had a longish vapour or cloud-type trail. No sound-barrier blasts were reported, but it was very, very fast-thus suggesting that no mass was present, or else sonic booms would undoubtedly have been produced at its low flight altitude.

The Victorian fireball was on a course that points directly at the Exmouth Peninsula Tx site in northwestern Australia, possibly originating on a great circle track from New Zealand or from further afield, e.g., the Tucano Tx site in Argentina.

This recent Victorian fireball would appear to be another prime candidate for a Tesla longitudinal EM ray-wave plasma ball energy-slug weapon test-but perhaps it was just another exotic meteorite! Trouble is, lately we seem to be getting far too many of these monsters crossing our skies, and for some reason they just love flying on 1st May (see Part 1, NEXUS 4/03, re Perth event of 1 May 1995). Now who celebrates that date every year?

Fireball Explosions and Other Considerations

Apparently this recent Victorian fireball exploded spectacularly over western Victoria like a huge fireworks display. I say "apparently", since it is very common for observers to see a vivid fireworks light-energy explosion after the fireball gets down to their horizon. I suspect that this is only an ionospheric EM coupling effect, in view of the evidence from multiple witnesses along several different fireball flight paths.

Commonly, each observer (spread along, say, 2,000 km of flight path) sees a fireball fly overhead, go down towards the horizon, disappear in a huge, massive fireworks display explosion; then the next observer (positioned, say, 200 km further along the flight path) sees exactly the same effect, and so on along the line of observers. It could be that the fireball (EM energy slug) is reacting with the atmosphere and/or ionosphere (á la Tesla thesis) to give a brilliant but pulsed display of light energy every 200 km or so. Or perhaps the EM fireball hologram is pulsing on-off at low frequency, and at the "off" there is a field collapse, giving rise to the apparent explosion. Or, more likely, at the "on" scalar EM field pulse there is a Tesla field transmission coupling from the Tx site to the atmosphere/ionosphere, via local dielectric-field ground, to give the apparent explosive fireworks display.

The timing of the last two major fireball/explosion events was about 10.00 pm for the central NSW event of 1 May 1997, and just after 6.00 pm for the event of 24 June 1997 near Ararat, western Victoria. This does not suggest that any attempts to hide these possible "weapons tests" are going on; rather, the opposite appears to be the case, i.e., people were meant to see these things. I find this interesting. Perhaps they are threat messages to our military-from, say, Russian-Japanese or from little grey aliens-or a new class of natural electrical event, or exotic meteors???

Of course there is every possibility that we are dealing with a series of highly electrically charged meteorites that have very odd flight characteristics-preferring to fly over Australia in ever-increasing numbers in recent years.

With all of these fireballs running wild over our skies - and some getting pretty close to Canberra - you would think that someone in authority would get agitated enough to do something! At least some official comments would be in order, but all we get is silence.

Yes, there have been historical meteor fireball events recorded on planet Earth over many centuries, but not with the present high periodicity, unique appearance and flight style, nor with the commonly associated explosive and seismic effects.

These recent fireball and other electrical events are highly anomalous and appear to pose a considerable danger to the population of not only Australia but much of the entire planet. Certainly, just one of the associated explosion/earthquakes could completely flatten a town the size of Broken Hill, Kalgoorlie, Mt Isa, Alice Springs or Canberra - with enormous loss of life. It would approximate a nuclear blast in intensity and "spoil the inhabitants' whole day".

Determination of whether I am correct or not about the source or origin of these fireballs-i.e., EM weapons "tests", alien UFOs, natural electrostatic meteors or other evolving natural electrical phenomena-is quite irrelevant to this problem and should not cloud the discussion.

Our governments must initiate open, public, wide-ranging and honest scientific studies on the nature of these events - or they would appear at best to be unfit to represent us, and at worst to be committing treason against the general population.

I cannot believe that any government would be so irresponsible as to allow the testing of potentially highly dangerous, scalar EM energy-slug weapons around and over us when they involve such enormous energies and so many unknowns regarding reliability of control and possible side-effects of Tx waves on the general population's health.

However, similar irresponsible behaviour was often exhibited by the Australian, British and American governments during the nuclear testing era of the 1950s. By all accounts the Soviet government was even more careless of its citizens' health during this time. Therefore I suppose it is quite possible that new weapon "toys" would be similarly unleashed into the public domain.

Exmouth Tx Fireball Weapons and Orbital UFOs

There is of course another possible scenario that could be contributing to government silence.

Richard Hoagland, ex-NASA employee and space archaeologist media personality, released some spectacular NASA video footage that was shot from an American space shuttle mission in September 1991. This video was downlinked by radio from the shuttle to a NASA ground station in the US and was accidentally intercepted en route by a ham radio operator in the US.

Subsequent to this intercept and its public distribution by the radio ham, NASA initially encrypted and then totally ceased further shuttle video transmissions.

The shuttle was said by Hoagland to be in orbit over Indonesia, heading south towards Western Australia. Subsequent research by Australian and New Zealand UFO groups demonstrates that the shuttle was in fact over Lake Carnegie in central Western Australia, heading south-southeast. [See report in NEXUS 3/03.]

The video shows a small white-light UFO that appears over the Earth's horizon to the east of Australia and flies north at a speed of some 54,000 mph (this and subsequent data are according to Hoagland's calculations). Suddenly the upper atmosphere or ionosphere below the shuttle flashes with an intense white light. The UFO appears to sense this flash and immediately executes a 180-degree, 14,000-g-force turn, accelerating out of orbit and away from the planet at some 200,000 mph.

All of the above manoeuvres occur in a second or so, and are immediately followed in a microsecond by two very-high-speed, bright-light energy pulses riding straight (but fainter) light beams from the planet's surface below the shuttle, projected up to a spot where the UFO would have been had it not reacted so violently to the initial upper atmospheric light flash.

The Australian and New Zealand UFO research teams claim that beam pulse number one came from Exmouth in northwestern WA, and beam pulse number two came from around Alice Springs, NT, near the Joint Defence Space Research Facility at Pine Gap.

Hoagland believes this video demonstrates a US test of the Brilliant Pebbles particle-beam weapon system, aimed at a super-secret US antigravity-drive spacecraft/drone. The same video shows a few other orbital lights that are presumably also UFOs.

Recently I was contacted by an Onslow, WA, resident who had read the first two parts of this "Bright Skies" series. He reported that his son had been totally spooked in late 1991 whilst out roo-shooting one night south of Onslow on the Crow Plains, some 80 km southeast of the Exmouth Tx site. The son and another shooter had observed huge blue-green-white fireballs form at ground level and fire off into space along a light beam at a steep angle and at an ever-accelerating velocity.

The fireballs were seen at ground level to the northwest, and a reconstruction places them exactly in line with the Exmouth Tx site. They almost certainly originated from the VLF Tx site at the Harold E. Holt Naval Communications Station at the Exmouth base. Fireballs were seen on several nights and had previously been reported by the owner of the sheep station in this area.

The ground eyewitness reports couple well with the Hoagland space shuttle video and the antipodean UFO research teams' findings. The data collectively demonstrate that the Exmouth base is indeed a deployment site of a major EM weapon system that can at the very least create and fire EM plasma energy pulses into space. The data also explain the strange upper-atmospheric light flashes seen as large-area events over WA and other parts of Australia.

It was this type of event occurring below the space shuttle that appeared to cause the UFO to turn and run. I postulate that this event was a Tesla Energy Magnifying Transmitter "warming up" and energising the ionosphere-to-Earth ground-space cavity as a prelude to EM weapon pulse firing. The EM fireball plasma energy pulse was presumably shot skywards along an improved Grindell H. Mathews ultraviolet laser beam that "cleared" the way, creating a conducting path through the atmosphere for propagation of the Tesla EM energy slug. Unfortunately for the Exmouth weapons team, the UFO was a slight technological jump ahead of their pulse weapon.

I remain unconvinced by Hoagland's explanations of the action in this NASA video being a weapon test against an American UFO spacecraft/drone. The UFO demonstrates some very advanced abilities, and although I can accept that the USA is technologically advanced, I really have to wonder if this UFO is truly of US origin or whether it is more likely to be of alien, off-planet design and manufacture.

The origin of this particular UFO is of great importance since this Hoagland/NASA video could indicate that a state of war exists between the USA (and, by default, Australia) and an off-planet alien power. Such an alien state of affairs could well explain (but not condone) the government and media silence on recent fireball and exotic light-emission events.

However, other data and intelligence point more towards an exchange of fire with advanced technology craft operated by other Earthbound powers in a secret oligarchic war that has been evolving around us for several years.

One thing is totally certain: the Hoagland video does not show a series of ice particles flying past the shuttle, as NASA would have us believe. My own research conclusions about fireballs, explosions and seismic events are genuine, honest attempts to understand their causes. If more resources were thrown into the work, my conclusions could eventually turn out to be incorrect. But they pale into insignificance alongside NASA's eloquent but obvious fairy stories.

... Continued in the next issue of NEXUS.

This is by no means the end of Harry Mason's series; in fact, it has evolved in the writing as more and more data and reports from NEXUS readers have come his way. Stay tuned for his analysis of recent events where EM weapons may have been used in terrorist attacks against the general population.

About the Author

Harry Mason, BSc, MSc, MAIMM, MIMM, FGS., is a UK-born geologist/geophysicist, resident in Perth, Western Australia. His 30-year career in mineral exploration has had him stationed all over the world, including Alaska, India, Norway, Mexico, Morocco, Sudan and UK. He has extensive field experience in geo-recce, geological mapping, geophysics/geochemistry, prospecting, remote-sensing/computer imaging technologies, and seismic and electromagnetic studies. He specialises in the geology and resource exploration of WA's Eastern Goldfields. Lately he has been devoting his time and expertise to researching mysterious Australian outback phenomena of natural and man-made origins.

EXPERIMENTS WITH ALTERNATE CURRENTS OF HIGH POTENTIAL AND HIGH FREQUENCY

by Nikola Tesla

Previous Article Next Article

Delivered before the Institution of Electrical Engineers, London, February 1892.

I cannot find words to express how deeply I feel the honor of addressing some of the foremost thinkers of the present time, and so many able scientific men, engineers and electricians, of the country greatest in scientific achievements.

The results which I have the honor to present before such a gathering I cannot call my own. There are among you not a few who can lay better claim than myself on any feature of merit which this work may contain. I need not mention many names which are world-known—names of those among you who are recognized as the leaders in this enchanting science; but one, at least, I must mention—a name which could not be omitted in a demonstration of this kind. It is a name associated with the most beautiful invention ever made: it is Crookes!

When I was at college, a good time ago; I read, in a translation (for then I was not familiar with you magnificent language), the description of his experiments on radiant matter. I read it only once in my life—that time—yet every detail about that charming work I can remember this day. Few are the books, let me say, which can make such an impression upon the mind of a student.

But if, on the present occasion, I mention this name as one of many your institution can boast of, it is because I have more than one reason to do so. For what I have to tell you and to show you this evening concerns, in a large measure, that same vague world which Professor Crookes has so ably explored; and, more than this, when I trace back the mental process which led me to these advances—which even by myself cannot be considered trifling, since they are so appreciated by you—I believe that their real origin, that which started me to work in this direction, and brought me to them, after a long period of constant thought, was that fascinating little book which I read many years ago.

And now that I have made a feeble effort to express my homage and acknowledge my indebtedness to him and others among you, I will make a second effort, which I hope you will not find so feeble as the first, to entertain you.

Give me leave to introduce the subject in a few words.

A short time ago I had the honor to bring before our American Institute of Electrical Engineers some results then arrived at by me in a novel line of work. I need not assure you that the many evidences which I have received that English scientific men and engineers were interested in this work have been for me a great reward and encouragement. I will not dwell upon the experiments already described, except with the view of completing, or more clearly expressing, some ideas advanced by me before, and also with the view of rendering the study here presented self-contained, and my remarks on the subject of this evening's lecture consistent.

This investigation, then, it goes without saying, deals with alternating currents, and, to be more precise, with alternating currents of high potential and high frequency. Just in how much a very high frequency is essential for the production of the results presented is a question which, even with my present experience, would embarrass me to answer. Some of the experiments may be performed with low frequencies; but very high frequencies are desirable, not only on account of the many effects secured by their use, but also as a convenient means of obtaining, in the induction apparatus employed, the high potentials, which in their turn are necessary to the demonstration of most of the experiments here contemplated.

Of the various branches of electrical investigation, perhaps the most interesting and immediately the most promising is that dealing with alternating currents. The progress in this branch of applied science has been so great in recent years that it justifies the most sanguine hopes. Hardly have we become familiar with one fact, when novel experiences are met with and new avenues of research are opened. Even at this hour possibilities not dreamed of before are, by the use of these currents, partly realized. As In nature all is ebb and tide, all is wave motion, so it seems that in all branches of industry alternating currents—electric wave motion—will have the sway.

One reason, perhaps, why this brand of science is being so rapidly developed is to be found in the interest which is attached to its experimental study. We wind a simple ring of iron with coils; we establish the connections to the generator, and with wonder and delight we note the effects of strange forces which we bring into play, which allow us to transform, to transmit and direct energy at will. We arrange the circuits properly, and we see the mass of iron and wires behave as though it were endowed with life, spinning a heavy armature, through invisible connections, with great speed and power with the energy possibly conveyed from a great distance. We observe how the energy of an alternating current traversing the wire manifests itself—not so much in the wire as in

the surrounding space—in the most surprising manner, taking the forms of heat, light, mechanical energy, and, most surprising of all, even chemical affinity. All these observations fascinate us, and fill us with an intense desire to know more about the nature of these phenomena. Each day we go to our work in the hope of discovering—in the hope that some one, no matter who, may find a solution of one of the pending great problems,—and each succeeding day we return to our task with renewed ardor; and even if we *are* unsuccessful, our work has not been in vain, for in these strivings, in these efforts, we have hours of untold pleasure, and we have directed our energies to the benefit of mankind.

We may take—at random, if you choose—any of the many experiments which may be performed with alternating currents; a few of which only, and by no means the mast striking, form the subject of this evening's demonstration; they are all equally interesting, equally inciting to thought.

Here is a simple glass tube from which the air has been partially exhausted. I take hold of it; I bring my body in contact with a wire conveying alternating currents of high potential, and the tube in my hand is brilliantly lighted. In whatever position I may put it, wherever I may move it in space, as far as I can reach, its soft, pleasing light persists with undiminished brightness.

Here is an exhausted bulb suspended from a single wire. Standing on an insulated support, I grasp it, and a platinum button mounted in it is brought to vivid incandescence.

Here, attached to a leading wire is another bulb, which, as I touch its metallic socket, is filled with magnificent colors of phosphorescent light.

Here still another, which by my fingers' touch casts a shadow—the Crookes shadow, of the stem inside of it.

Here, again, insulated as I stand on this platform, I bring my body in contact with one of the terminals of the secondary of this induction coil—with the end of a wire many miles long—and you see streams of light break forth from its distant end, which is set in violent vibration.

Here, once more, attach these two plates of wire gauze to the terminals of the coil, I set them a distance apart, and I set the coil to work. You may see a small spark pass between the plates. I insert a thick plate of one of the best dielectrics between them, and instead of rendering altogether impossible, as we are used to expect, I *aid* the passage of the discharge, which, as I insert the plate, merely changes in appearance and assumes the form of luminous streams.

Is there, I ask, can there be, a more interesting study than that of alternating currents?

In all these investigations, in all these experiments, which are so very, very interesting, for many years past—ever since the greatest experimenter who lectured in this hall discovered its principle—we have had a steady companion, an appliance familiar to every one, a plaything once, a thing of momentous importance now—the induction coil. There is no dearer appliance to the electrician. From the ablest among you, I dare say, down to the inexperienced student, to your lecturer, we all have passed many delightful hours in experimenting with the induction coil. We have watched its play, and thought and pondered over the beautiful phenomena which it disclosed to our ravished eyes. So well known is this apparatus, so familiar are these phenomena to every one, that my courage nearly fails me when I think that I have ventured to address so able an audience, that I have ventured to entertain you with that same old subject. Here in reality is the same apparatus, and here are the same phenomena, only the apparatus is operated somewhat differently, the phenomena are presented in a different aspect. Some of the results we find as expected, others surprise us, but all captivate our attention, for in scientific investigation each novel result achieved may be the centre of a new departure, each novel fact learned may lead to important developments.

Usually in operating an induction foil we have set up a vibration of moderate frequency in the primary, either by means of an interrupter or break, or by the use of an alternator. Earlier English investigators, to mention only Spottiswoode and J. E. H. Gordon, have used a rapid break in connection with the coil. Our knowledge and experience of to-day enables us to see clearly why these coils under the conditions of the tests did not disclose any remarkable phenomena, and why able experimenters failed to perceive many of the curious effects which have since been observed.

In the experiments such as performed this evening, we operate the coil either from a specially constructed alternator capable of giving many thousands of reversals of current per second, or, by disruptively discharging a condenser through the primary, we set up a vibration in the secondary circuit of a frequency of many hundred thousand or millions per second, if we so desire; and in using either of these means we enter a field as yet unexplored.

It is impossible to pursue an investigation in any novel line without finally making some interesting observation or learning some useful fact. That this statement is applicable to the subject of this lecture the many curious and unexpected phenomena which we observe afford a convincing proof. By way of illustration, take for instance the most obvious phenomena, those of the discharge of the induction coil.

Here is a coil which is operated by currents vibrating with extreme rapidity, obtained by disruptively discharging a Leyden jar. It would not surprise a student were the lecturer to say that the secondary of this coil consists of a small length of comparatively stout wire; it would not surprise him were the lecturer to state that, in spite of this, the coil is capable of giving any potential which the best insulation of the turns is able to withstand; but although he may be prepared, and even be indifferent as to the anticipated result, yet the aspect of the discharge of the coil will surprise and interest him. Every one is familiar with the discharge of an ordinary coil; it need not be reproduced here. But, by way of contrast, here is a form of discharge of a coil, the primary current of which is vibrating several hundred thousand times per second. The discharge of an ordinary coil appears as a simple line or band of light. The discharge of this coil appears in the form of powerful brushes and luminous streams issuing from all points of the two straight wires attached to the terminals of the secondary (Fig. 1.)

Now compare this phenomenon which you have just witnessed with the discharge of a Holtz or Wimshurst machine—that other interesting appliance, so dear to the experimenter. What a difference there is between these phenomena! And yet, had I made the necessary arrangements—which could have been made easily, were it not that they would interfere with other experiments—I could have produced with this coil sparks which, had I the coil hidden from your view and only two knobs exposed, even the keenest observer among you would find it difficult, if not impossible, to distinguish from those of an influence or friction machine. This may be done in many ways—for instance, by operating the induction coil which charges the condenser from an alternating-current machine of very low frequency, and preferably adjusting the discharge circuit so that there are no oscillations set up in it. We then obtain in the secondary circuit, if the knobs are of the required size and properly set, a more or less rapid succession of sparks of great intensity and small quantity, which possess the same brilliancy, and are accompanied by the same sharp crackling sound, as those obtained from a friction or influence machine.

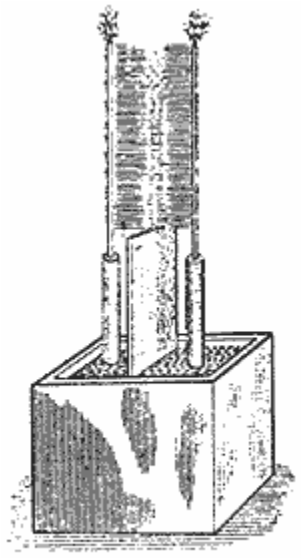

Fig. 1.

Another way is to pass through two primary circuits, having a common secondary, two currents of a slightly different period, which produce in the secondary circuit sparks occurring at comparatively long intervals. But, even with the means at hand this evening, I may succeed in imitating the spark of a Holtz machine. For this purpose I establish between the terminals of the coil which charges the condenser a long, unsteady arc, which is periodically interrupted by the upward current of air produced by it. To increase the current of air I place on each side of the arc, and close to it, a large plate of mica. The condenser charged from this coil discharge into the primary circuit of a second coil through a small air gap, which is necessary to produce a sudden rush of current through the primary. The scheme of connections in the present experiment is indicated in Fig. 2.

G is an ordinarily constructed alternator, supplying the primary *P* of an induction coil, the secondary *S* of which charges the condensers or jars *C C*. The terminals of the secondary are connected to the inside coatings of the jars, the outer coatings being connected to the ends of the primary *p p* of a second induction coil. This primary *p p* has a small air gap *a b*.

The secondary *s* of this coil is provided with knobs or spheres *K K* of the proper size and set at a distance suitable for the

experiment.

A long arc is established between the terminals *A B* of the first induction coil. *M M* are the mica plates.

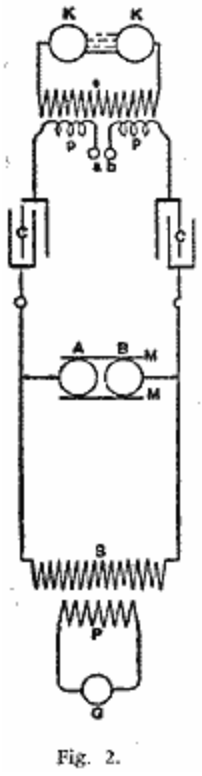

Fig. 2.

Each time the arc is broken between *A* and *B* the jars are quickly charged and discharged through the primary *p p*, producing a snapping spark between the knobs *K K*. Upon the arc forming between *A* and *B* the potential falls, and the jars cannot be charged to such high potential as to break through the air gap *a b* until the arc is again broken by the draught.

In this manner sudden impulses, at long intervals, are produced in the primary *P P*, which in the secondary *s* give a corresponding number of impulses of great intensity. If the secondary knobs or spheres *K K* are of the proper size, the sparks show much resemblance to those of a Holtz machine. But these two effects, which to the eye appear so very different, are only two of the many discharge phenomena. We only need to change the conditions of the test, and again we make other observations of interest.

When, instead of operating the induction coil as in the last two experiments, we operate it from a high frequency alternator, as in the next experiment, a systematic study of the phenomena is rendered much more easy. In such case, in varying the strength and frequency of the currents through the primary, we may observe five distinct forms of discharge, which I have described in my former paper on the subject before the American Institute of Electrical Engineers, May 20, 1891 [Experiments With Alternate Currents of Very High Frequency and Their Application to Methods of Artificial Illumination] (*see* The Electrical World, July 11, 1891).

It would take too much time, and it would lead us too far from the subject presented this evening, to reproduce all these forms, but it seems to me desirable to show you one of them. It is a brush discharge, which is interesting in more than one respect. Viewed from a near position it resembles much a jet of gas escaping under great pressure. We know that the phenomenon is due to the agitation of the molecules near the terminal, and we anticipate that some heat must be developed by the impact of the molecules against the terminal or against each other. Indeed, we find that the brush is hot, and only a little thought leads us to the conclusion that, could we but reach sufficiently high frequencies, we could produce a brush which would give intense light and heat, and which would resemble in every particular an ordinary flame, save, perhaps, that both phenomena might not be due to the same agent—save, perhaps, that chemical affinity might not be *electrical* in its nature.

As the production of heat and light is here due to the impact of the molecules, or atoms of air, or something else besides, and, as we can augment the energy simply by raising the potential, we might, even with frequencies obtained from a dynamo machine, intensify the action to such a degree as to bring the terminal to melting heat. But with such low frequencies we would have to deal always with something of the nature of an electric current. If I approach a conducting object to the brush, a thin little spark passes, yet, even with the frequencies used this evening, the tendency to spark is not very great. So, for instance, if I hold a metallic sphere

at some distance above the terminal you may see the whole space between the terminal and sphere illuminated by the streams without the spark passing; and with the much higher frequencies obtainable by the disruptive discharge of a condenser, were it not for the sudden impulses, which are comparatively few in number, sparking would not occur even at very small distances. However, with incomparably higher frequencies, which we may yet find means to produce efficiently, and provided that electric impulses of such high frequencies could be transmitted through a conductor, the electrical characteristics of the brush discharge would completely vanish—no spark would pass, no shock would be felt—yet we would still have to deal with an *electric* phenomenon, but in the broad, modern interpretation of the word. In my first paper before referred to I have pointed out the curious properties of the brush, and described the best manner of producing it, but I have thought it worth while to endeavor to express myself more clearly in regard to this phenomenon, because of its absorbing interest.

When a coil is operated with currents of very high frequency, beautiful brush effects may be produced, even if the coil be of comparatively small dimensions. The experimenter may vary them in many ways, and, if it were nothing else, they afford a pleasing sight. What adds to their interest is that they may be produced with one single terminal as well as with two—in fact, often better with one than with two.

But of all the discharge phenomena observed, the most pleasing to the eye, and the most instructive, are those observed with a coil which is operated by means of the disruptive discharge of a condenser. The power of the brushes, the abundance of the sparks, when the conditions are patiently adjusted, is often amazing. With even a very small coil, if it be so well insulated as to stand a difference of potential of several thousand volts per turn, the sparks may be so abundant that the whole coil may appear a complete mass of fire.

Curiously enough the sparks, when the terminals of the coil are set at a considerable distance, seem to dart in every possible direction as though the terminals were perfectly independent of each other. As the sparks would soon destroy the insulation it is necessary to prevent them. This is best done by immersing the coil in a good liquid insulator, such as boiled-out oil. Immersion in a liquid may be considered almost an absolute necessity for the continued and successful working of such a coil.

It is, of course, out of the question, in an experimental lecture, with only a few minutes at disposal for the performance of each experiment, to show these discharge phenomena to advantage, as to produce each phenomenon at its best a very careful adjustment is required. But even if imperfectly produced, as they are likely to be this evening, they are sufficiently striking to interest an intelligent audience.

Before showing some of these curious effects I must, for the sake of completeness, give a short description of the coil and other apparatus used in the experiments with the disruptive discharge this evening.

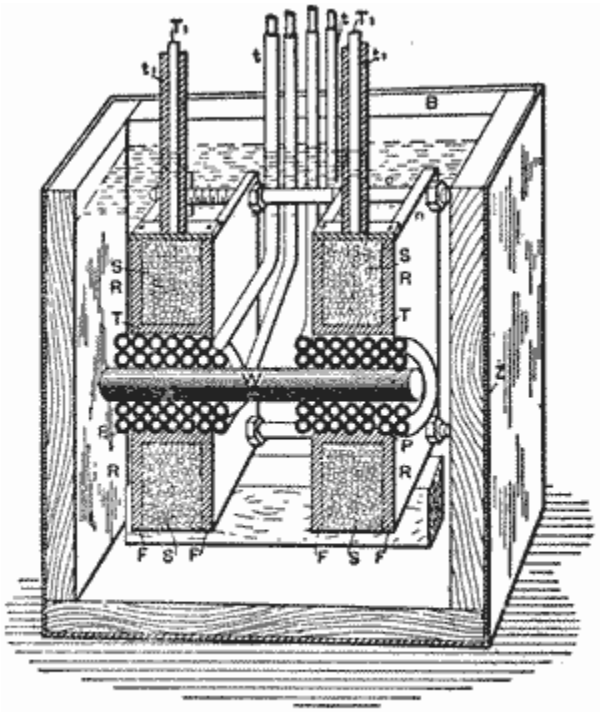

Fig. 3.

It is contained in a box *B* (Fig. 3) of thick boards of hard wood, coveted on the outside with zinc sheet *Z*, which is carefully soldered all around. It might be advisable, in a strictly scientific investigation, when accuracy is of great importance, to do away with the metal covet, as it might introduce many errors, principally on account of its complex action upon the coil, as a condenser of very small capacity and as an electrostatic and electromagnetic screen. When the coil is used for such experiments as are here contemplated, the employment of the metal cover offers some practical advantages, but these are not of sufficient importance to be dwelt upon.

The coil should be placed symmetrically to the metal cover, and the space between should, of course, not be too small, certainly not less than, say, five centimeters, but much more if possible; especially the two sides of the zinc box, which are at right angles to the axis of the coil, should be sufficiently remote from the latter, as otherwise they might impair its action and be a source of loss.

The coil consists of two spools of hard rubber *R R* held apart at a distance of 10 centimetres by bolts *c* and nuts *n*, likewise of hard rubber. Each spool comprises a tube *T* of approximately 8 centimetres inside diameter, and 3 millimetres thick, upon which are screwed two flanges F F, 24 centimetres square, the space between the flanges being about 3 centimetres. The secondary, *S S*, of the best gutta percha-covered wire, has 26 layers, 10 turns in each, giving for each half a total of 260 turns. The two halves are wound oppositely and connected in series, the connection between both being made over the primary. This disposition besides being convenient, has the advantage that when the coil is well balanced—that is, when both of its terminals T_1 T_1 are connected to bodies or devices of equal capacity—there is not much danger of breaking through to the primary, and the insulation between the primary and the secondary need not be thick. In using the coil it is advisable to attach to *both* terminals devices of nearly equal capacity, as, when the capacity of the terminals is not equal, sparks will be apt to pass to the primary. To avoid this, the middle point of the secondary may be connected to the primary, but this is not always practicable.

The primary *P P* is wound in two parts, and oppositely, upon a wooden spool *W*, and the four ends are led out of the oil through hard rubber tubes *t t*. The ends of the secondary T_1 T_1 are also led out of the oil through rubber tubes t_1 t_1 of great thickness. The primary and secondary layers are insulated by cotton cloth, the thickness of the insulation, of course, bearing some proportion to the difference of potential between the turns of the different layers. Each half of the primary has four layers, 24 turns in each, this giving a total of 96 turns. When both the parts are connected in series, this gives a ratio of conversion of about 1:2.7, and with the primaries in multiple, 1:5.4 but in operating with very rapidly alternating currents this ratio does not convey even an approximate idea of the ratio of the E.M.Fs. in the primary and secondary circuits. The coil is held in position in the oil on wooden supports, there being about 5 centimetres thickness of oil all round. Where the oil is not specially needed, the space is filled with pieces of wood, and for this purpose principally the wooden box B surrounding the whole is used.

The construction here shown is, of course, not the best on general principles, but I believe it is a good and convenient one for the production of effects in which are excessive potential and a very small current are needed.

In connection with the coil I use either the ordinary form of discharger or a modified form. In the former I have introduced two changes which secure some advantages, and which are obvious. If they are mentioned, it is only in the hope that some experimenter may find them of use.

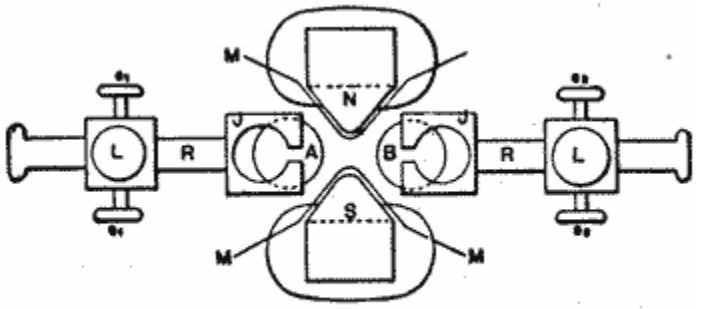

Fig. 4.

One of the changes is that the adjustable knobs *A* and *B* (Fig. 4), of the discharger are held in jaws of brass, *J J*, by spring pressure, this allowing of turning them successively into different positions, and so doing away with the tedious process or frequent polishing up.

The other change consists in the employment of a strong electromagnet *N S*, which is placed with its axis at right angles to the line joining the knobs *A* and *B*, and produces a strong magnetic field between them. The pole pieces of the magnet are movable and properly formed so as to protrude between the brass knobs, in order to make the field as intense as possible; but to prevent the discharge from jumping to the magnet the pole pieces are protected by a layer of mica, *M M*, of sufficient

thickness, s_1 s_1 and s_2 s_2 are screws for fastening the wires. On each side one of the screws is for large and the other for small wires. *L L* are screws for fixing in position the rods *R R*, which support the knobs.

In another arrangement with the magnet I take the discharge between the rounded pole pieces themselves, which in such case are insulated and preferably provided with polished brass caps.

The employment of an intense magnetic field is of advantage principally when the induction coil or transformer which charges the condenser is operated by currents of very low frequency. In such a case the number of the fundamental discharges between the knobs may be so small as to render the currents produced in the secondary unsuitable for many experiments. The intense magnetic field than serves to blow out the arc between the knobs as soon as it is formed, and the fundamental discharges occur in quicker succession.

Instead of the magnet, a draught or blast of air may be employed with some advantage. In this case the arc is preferably established between the knobs *A B*, in Fig. 2 (the knobs *a b* being generally joined, or entirely done away with), as in this disposition the arc is long and unsteady, and is easily affected by the draught.

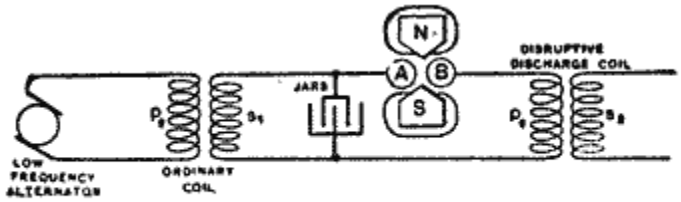

Fig. 5.

When a magnet is employed to break the arc, it is better to choose the connection indicated diagrammatically in Fig 5, as in this case the currents forming the arc are much more powerful, and the magnetic field exercises a greater influence. The use of the magnet permits, however, of the arc being replaced by a vacuum tube, but I have encountered great difficulties in working with an exhausted tube.

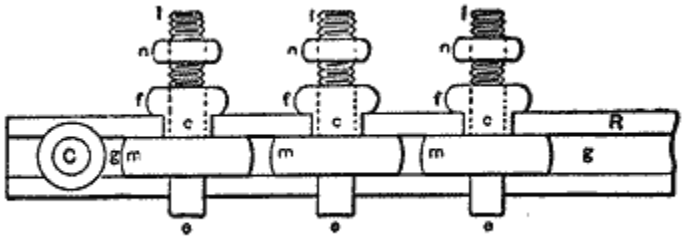

Fig. 6.

The other form of discharger used in these and similar experiments is indicated in Figs. 6 and 7. It consists of a number of brass pieces *c c* (Fig. 6), each of which comprises a spherical middle portion m with an extension e below—which is merely used to fasten the piece in a lathe when polishing up the discharging surface—and a column above, which consists of a knurled flange f surmounted by a threaded stem I carrying a nut *n*, by means of which a wire is fastened to the column. The flange *f* conveniently serves for holding the brass piece when fastening the wire, and also for turning it in any position when it becomes necessary to present a fresh discharging surface. Two stout strips of hard rubber *R R*, with planed grooves *g g* (Fig. 7) to fit the middle portion of the pieces *c c*, serve to clamp the latter and hold them firmly in position by means of two bolts *C C* (of which only one is shown) passing through the ends of the strips.

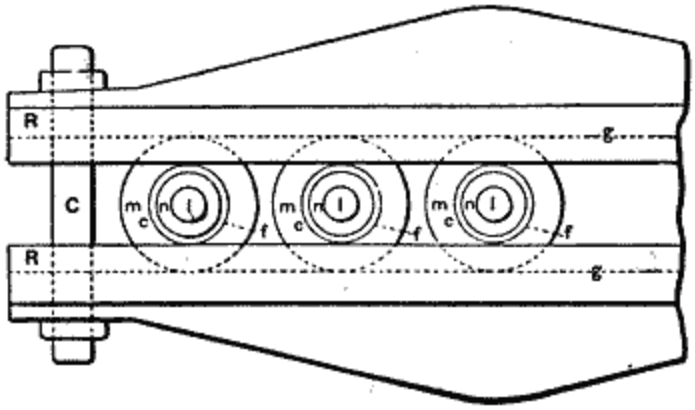

Fig. 7.

In the use of this kind of discharger I have found three principal advantages over the ordinary form. First, the dielectric strength of a given total width of air space is greater when a great many small air gaps are used instead of one, which permits of working with a smaller length of air gap, and that means smaller loss and less deterioration of the metal; secondly by reason of splitting the arc up into smaller arcs, the Polished surfaces are made to last much longer; and, thirdly, the apparatus affords some gauge in the experiments. I usually set the pieces by putting between them sheets of uniform thickness at a certain very small distance which is known from the experiments of Sir William Thomson to require a certain electromotive force to be bridged by the spark.

It should, of course, be remembered that the sparking distance is much diminished as the frequency is increased. By taking any number of spaces the experimenter has a rough idea of the electromotive force, and he finds it easier to repeat an experiment, as he has not the trouble of setting the knobs again and again. With this kind of discharger I have been able to maintain an oscillating motion without any spark being visible with the naked eye between the knobs, and they would not show a very appreciable rise in temperature. This form of discharge also lends itself to many arrangements of condensers and circuits which are often very convenient and timesaving. I have used it preferably in a disposition similar to that indicated in Fig. 2, when the currents forming the arcs are small.

I may here mention that I have also used dischargers with single or multiple air gaps, in which the discharge surfaces were rotated with great speed. No particular advantage was, however, gained by this method, except in cases where the currents from the condenser were large and the keeping cool of the surfaces was necessary, and in cases when, the discharge not being oscillating of itself, the arc as soon as established was broken by the air current, thus starting the vibration at intervals in rapid succession. I have also used mechanical interrupters in many ways. To avoid the difficulties with frictional contacts, the preferred plan adopted was to establish the arc and rotate through it at great speed a rim of mica provided with many holes and fastened to a steel plate.

It is understood, of course, that the employment of a magnet, air current, or other interrupter, produces an effect worth noticing, unless the self-induction, capacity and resistance are so related that there are oscillations set up upon each interruption.

I will now endeavor to show you some of the most noteworthy of these discharge phenomena.

I have stretched across the room two ordinary cotton covered wires, each about 7 metres in length. They are supported on insulating cords at a distance of about 30 centimetres. I attach now to each of the terminals of the coil one of the wires and set the coil in action. Upon turning the lights off in the room you see the wires strongly illuminated by the streams issuing abundantly from their whole surface in spite of the cotton covering, which may even be very thick. When the experiment is performed under good conditions, the light from the wires is sufficiently intense to allow distinguishing the objects in a room. To produce the best result it is, of course, necessary to adjust carefully the capacity of the jars, the arc between the knobs and the length of the wires. My experience is that calculation of the length of the wires leads, in such case, to no result whatever. The experimenter will do best to take the wires at the start very long, and then adjust by cutting off first long pieces, and then smaller and smaller ones as he approaches the right length.

A convenient way is to use an oil condenser of very small capacity, consisting of two small adjustable metal plates, in connection with this and similar experiments. In such case I take wires rather short and set at the beginning the condenser plates at maximum distance. If the streams for the wires increase by approach of the plates, the length of the wires is about right; if they diminish the wires are too long for that frequency and potential. When a condenser is used in connection with experiments with such a coil, it should be an oil condenser by all means, as in using an air condenser considerable energy might be wasted. The wires leading to the plates in the oil should be very thin, heavily coated with some insulating compound, and provided with a conducting covering—this preferably extending under the surface of the oil. The conducting cover should not be too near the terminals, or ends, of the wire, as

a spark would be apt to jump from the wire to it. The conducting coating is used to diminish the air losses, in virtue of its action as an electrostatic screen. As to the size of the vessel containing the oil and the site of the plates, the experimenter gains at once an idea from a rough trial. The size of the plates *in oil* is, however, calculable, as the dielectric losses are very small.

In the preceding experiment it is of considerable interest to know what relation the quantity of the light emitted bears to the frequency and potential of the electric impulses. My opinion is that the heat as well as light effects produced should be proportionate, under otherwise equal conditions of test, to the product of frequency and square of potential, but the experimental verification of the law, whatever it may be, would be exceedingly difficult. One thing is certain, at any rate, and that is, that in augmenting the potential and frequency we rapidly intensify the streams; and, though it may be very sanguine, it is surely not altogether hopeless to expect that we may succeed in producing a practical illuminant on these lines. We would then be simply using burners or flames, in which there would be no chemical process, no consumption of material, but merely a transfer of energy, and which would, in all probability emit more light and less heat than ordinary flames.

The luminous intensity of the streams is, of course, considerably increased when they are focused upon a small surface. This may be shown by the following experiment:

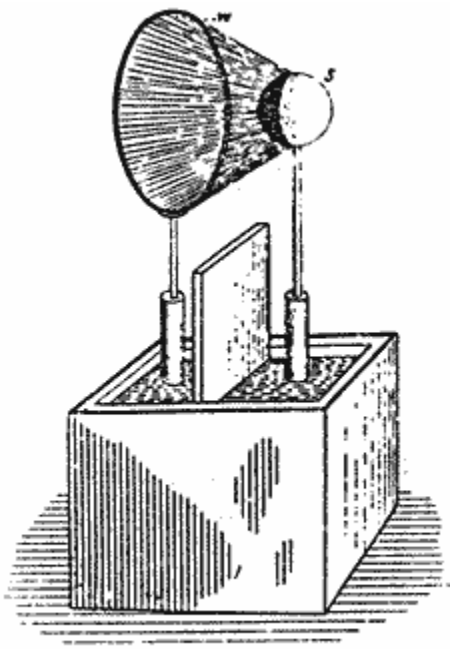

Fig. 8.

I attach to one of the terminals of the coil a wire w (Fig. 8), bent in a circle of about 30 centimetres in diameter, and to the other terminal I fasten a small brass sphere *s*, the surface of the wire being preferably equal to the surface of the sphere, and the centre of the latter being in a line at right angles to the plane of the wire circle and passing through its centre. When the discharge is established under proper conditions, a luminous hollow cone is formed, and in the dark one-half of the brass sphere is strongly illuminated, as shown in the cut.

By some artifice or other, it is easy to concentrate the streams upon small surfaces and to produce very strong light effects. Two thin wires may thus be rendered intensely luminous. In order to intensify the streams, the wires should be very thin and short; but as in this case their capacity would be generally too small for the coil—at least, for such a one as the present—it is necessary to augment the capacity to the required value, while, al the same time, the surface of the wires remains very small. This may be done in many ways.

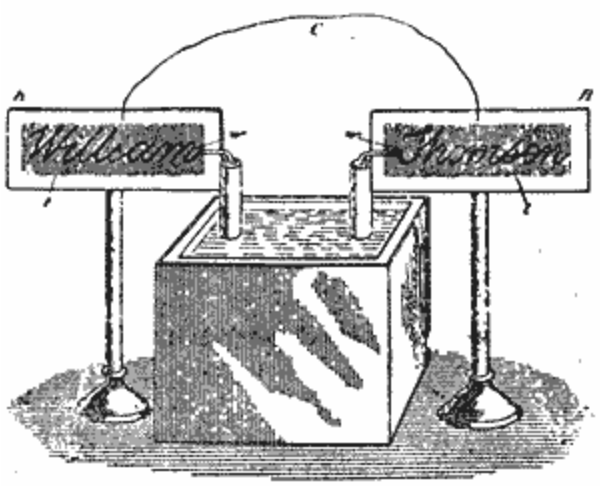

Fig. 9.

Here, for instance, I have two plates *R R*, of hard rubber (Fig. 9), upon which I have glued two very thin wires *w w*, so as to form a name. The wires may be bare or covered with the best insulation—it is immaterial for the success of the experiment. Well-insulated wires, if anything, are preferable. On the back of each plate, indicated by the shaded portion, is a tinfoil coating *t t*. The plates are placed in line at a sufficient distance to prevent a spark passing from one to the other wire. The two tinfoil coatings I have joined by a conductor *C*, and the two wires I presently connect to the terminals of the coil. It is now easy, by varying the strength and frequency of the currents through the primary, to find a point at which the capacity of the system is best suited to the conditions, and the wires become so strongly luminous that, when the light in the room is turned off the name formed by them appears in brilliant letters.

It is perhaps preferable to perform this experiment with a coil operated from an alternator of high frequency, as then, owing to the harmonic rise and fall, the streams are very uniform, though they are less abundant than when produced with such a coil as the present. This experiment, however, may be performed with low frequencies, but much less satisfactorily.

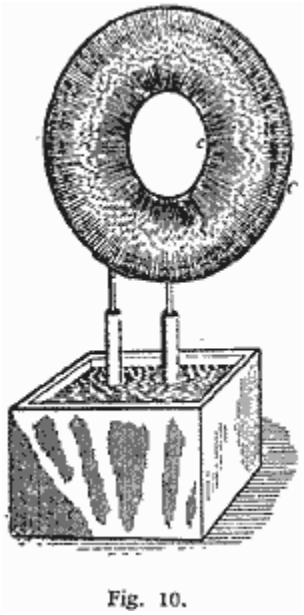

Fig. 10.

When two wires, attached to the terminals of the coil, are set at the proper distance, the streams between them may be so intense as to produce a continuous luminous sheet. To show this phenomenon I have here two circles, C and *c* (Fig. 10), of rather stout wire, one being about 80 centimetres and the other 30 centimetres in diameter. To each of the terminals of the coil I attach one of the circles. The supporting wires are so bent that the circles may be placed in the same plane, coinciding as nearly as possible. When the light in the room is turned off and the coil set to work, you see the whole space between the wires uniformly filled with streams, forming a luminous disc, which could be seen from a considerable distance, such is the intensity of the streams. The outer circle could have been much larger than the present one; in fact, with this coil I have used much larger circles, and I have been able to produce a strongly luminous sheet, covering an area of more than one square metre, which is a remarkable effect with this very

small coil. To avoid uncertainty, the circle has been taken smaller, and the area is now about 0.43 square metre.

The frequency of the vibration, and the quickness of succession of the sparks between the knobs, affect to a marked degree the appearance of the streams. When the frequency is very low, the air gives way in more or less the same manner, as by a steady difference of potential, and the streams consist of distinct threads, generally mingled with thin sparks, which probably correspond to the successive discharges occurring between the knobs. But when the frequency is extremely high, and the arc of the discharge produces a very *loud* but *smooth* sound—showing both that oscillation takes place and that the sparks succeed each other with great rapidity—then the luminous streams formed are perfectly uniform. To reach this result very small coils and jars of small capacity should be used. I take two tubes of thick Bohemian glass, about 5 centimetres in diameter and 20 centimetres long. In each of the tubes I slip a primary of very thick copper wire. On the top of each tube I wind a secondary of much thinner gutta-percha covered wire. The two secondaries I connect in series, the primaries preferably in multiple arc. The tubes are then placed in a large glass vessel, at a distance of l0 to 15 centimetres from each other, on insulating supports, and the vessel is filled with boiled out oil, the oil reaching about an inch above the tubes. The free ends of the secondary are lifted out of the oil and placed parallel to each other at a distance of about 10 centimetres. The ends which are scraped should be dipped in the oil. Two four-pint jars joined in series may be used to discharge through the primary. When the necessary adjustments in the length and distance of the wires above the oil and in the arc of discharge are made, a luminous sheet is produced between the wires, which is perfectly smooth and textureless, like the ordinary discharge through a moderately exhausted tube.

I have purposely dwelt upon this apparently insignificant experiment. In trials of this kind the experimenter arrives at the startling conclusion that, to pass ordinary luminous discharges through gases, no particular degree of exhaustion is needed, but that the gas may be at ordinary or even greater pressure. To accomplish this, a very high frequency is essential; a high potential is likewise required, but this is a merely incidental necessity. These experiments teach us that, in endeavoring to discover novel methods of producing light by the agitation of atoms, or molecules, of a gas, we need not limit our research to the vacuum tube, but may look forward quite seriously to the possibility of obtaining the light effects without the use of any vessel whatever, with air at ordinary pressure.

Such discharges of very high frequency, which render luminous the air at ordinary pressures, we have probably often occasion to witness in Nature. I have no doubt that if, as many believe, the aurora borealis is produced by sudden cosmic disturbances, such as eruptions at the sun's surface, which set the electrostatic charge of the earth in an extremely rapid vibration the red glow observed is not confined to the upper rarefied strata of the air, but the discharge traverses, by reason of its very high frequency, also the dense atmosphere in the form of a *glow*, such as we ordinarily produce in a slightly exhausted tube. If the frequency were very low or even more so, if the charge were not at all vibrating, the dense air would break down as in a lightning discharge. Indications of such breaking down of the lower dense strata of the air have been repeatedly observed at the occurrence of this marvelous phenomenon; but if it does occur; it can only be attributed to the fundamental disturbances, which are few in number, for the vibration produced by them would be far too rapid to allow a disruptive break. It is the original and irregular impulses which affect the instruments; the superimposed vibrations probably pass unnoticed.

When an ordinary low frequency discharge is passed through moderately rarefied air, the air assumes a purplish hue. If by some means or other we increase the intensity of the molecular, or atomic, vibration, the gas changes to a white color. A similar change occurs at ordinary pressures with electric impulses of very high frequency. If the molecules of the air around a wire are moderately agitated, the brush formed is reddish or violet; if the vibration is rendered sufficiently intense, the streams become white. We may accomplish this in various ways. In the experiment before shown with the two wires across the room, I have endeavored to secure the result by pushing to a high value both the frequency and potential; in the experiment with the thin wires glued on the rubber plate I have concentrated the action upon a very small surface—in other words, I have worked with a great electric density.

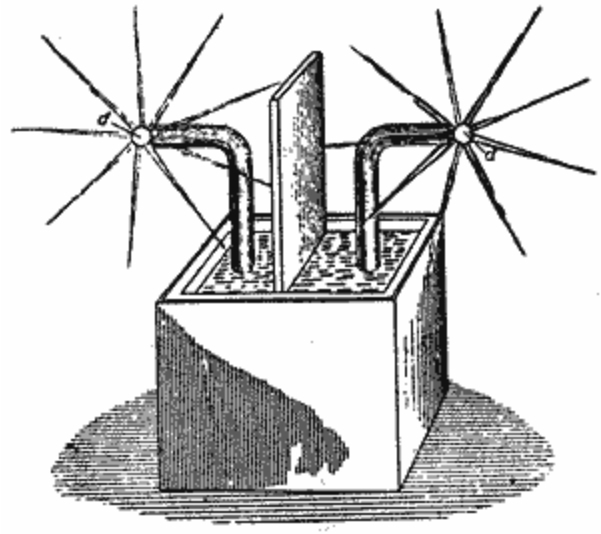

Fig. 11.

A most curious form of discharge is observed with such a coil when the frequency and potential are pushed to the extreme limit. To perform the experiment, every part of the coil should be heavily insulated, and only two small spheres—or, better still, two sharp-edged metal discs (*d d*, Fig. 11) of no more than a few centimetres in diameter—should be exposed to the air. The coil here used immersed in oil, and the ends of the secondary reaching out of the oil are covered with an airtight cover of hard rubber of great thickness. All cracks, if there are any, should be carefully stopped up, so that the brush discharge cannot form anywhere except on the small spheres or plates which are exposed to the air. In this case, since there are no large plates or other bodies of capacity attached to the terminals, the coil is capable of an extremely rapid vibration. The potential may be raised by increasing, as far as the experimenter judges proper, the rate of change of the primary current. With a coil not widely differing from the present, it is best to connect the two primaries in multiple arc; but if the secondary should have a much greater number of turns the primaries should preferably be used in series, as otherwise the vibration might be too fast for the secondary. It occurs under these conditions that misty white streams break forth from the edges of the discs and spread out phantom-like into space. With this coil, when fairly well produced, they are about 25 to 30 centimetres long. When the hand is held against them no sensation is produced, and a spark, causing a shock, jumps from the terminal only upon the hand being brought much nearer. If the oscillation of the primary current is rendered intermittent by some means or other, there is a corresponding throbbing of the streams, and now the hand or other conducting object may be brought in still greater proximity to the terminal without a spark being caused to jump.

Among the many beautiful phenomena which may be produced with such a coil I have here selected only those which appear to possess some features of novelty, and lead us to some conclusions of interest. One will not find it at all difficult to produce in the laboratory, by means of it, many other phenomena which appeal to the eye even more than these here shown, but present no particular feature of novelty.

Early experimenters describe the display of sparks produced by an ordinary large induction coil upon an insulating plate separating the terminals. Quite recently Siemens performed some experiments in which fine effects were obtained, which were seen by many with interest. No doubt large coils, even if operated with currents of low frequencies, are capable of producing beautiful effects. But the largest coil ever made could not, by far, equal the magnificent display of streams and sparks obtained from such a disruptive discharge coil when properly adjusted. To give an idea, a coil such as the present one will cover easily a plate of 1 metre in diameter completely with the streams. The best way to perform such experiments is to take a very thin rubber or a glass plate and glue on one side of it a narrow ring of tinfoil of very large diameter, and on the other a circular washer, the centre of the latter coinciding with that of the ring, and the surfaces of both being preferably equal, so as to keep the coil well balanced. The washer and ring should be connected to the terminals by heavily insulated thin wires. It is easy in observing the effect of the capacity to produce a sheet of uniform streams, or a fine network of thin silvery threads, or a mass of loud brilliant sparks, which completely cover the plate.

Since I have advanced the idea of the conversion by means of the disruptive discharge, in my paper before the American Institute of Electrical Engineers at the beginning of the past year, the interest excited in it has been considerable. It affords us a means for producing any potentials by the aid of inexpensive coils operated from ordinary systems of distribution, and—what is perhaps more appreciated—it enables us to convert currents of any frequency into currents of any other lower or higher frequency. But its chief value will perhaps be found in the help which it will afford us in the investigations of the phenomena of phosphorescence, which a disruptive discharge coil is capable of exciting in innumerable cases where ordinary coils, even the largest, would utterly fail.

Considering its probable uses for many practical purposes, and its possible introduction into laboratories for scientific research, a few additional remarks as to the construction of such a coil will perhaps not be found superfluous.

It is, of course, absolutely necessary to employ in such a coil wires provided with the best insulation.

Good coils may be produced by employing wires covered with several layers of cotton, boiling the coil a long time in pure wax, and cooling under moderate pressure. The advantage of such a coil is that it can be easily handled, but it cannot probably give as satisfactory results as a coil immersed in pure oil. Besides, it seems that the presence of a large body of wax affects the coil disadvantageously, whereas this does not seem to be the case with oil. Perhaps it is because the dielectric losses in the liquid are smaller.

I have tried at first silk and cotton covered wires with oil immersion; but I have been gradually led to use gutta-percha covered wires, which proved most satisfactory. Gutta-percha insulation adds, of course, to the capacity of the coil, and this, especially if the coil be large, is a great disadvantage when extreme frequencies are desired; but, on the other hand, gutta-percha will withstand much more than an equal thickness of oil, and this advantage should be secured at any price. Once the coil has been immersed, it should never be taken out of the oil for more than a few hours, else the gutta-percha will crack up and the coil will not be worth half as much as before. Gutta-percha is probably slowly attacked by the oil, but after an immersion of eight to nine months I have found no ill effects.

I have obtained in commerce two kinds of gutta-percha wire: in one the insulation sticks tightly to the metal, in the other it does not. Unless a special method is followed to expel all air, it is much safer to use the first kind. I wind the coil within an oil tank so that all interstices are filled up with the oil. Between the layers I use cloth boiled out thoroughly in oil, calculating the thickness according to the difference of potential between the turns. There seems not to be a very great difference whatever kind of oil is used; I use paraffin or linseed oil.

To exclude more perfectly the air, an excellent way to proceed, and easily practicable with small coils, is the following: Construct a box of hard wood of very thick boards which have been for a long time boiled in oil. The boards should be so joined as to safely withstand the external air pressure. The coil being placed and fastened in position within the box, the latter is closed with a strong lid, and covered with closely fitting metal sheets, the joints of which are soldered very carefully. On the top two small holes are drilled, passing through the metal sheet and the wood, and in these holes two small glass tubes are inserted and the joints made air-tight. One of the tubes is connected to a vacuum pump and the other with a vessel containing a sufficient quantity of boiled-out oil. The latter tube has a very small hole at the bottom, and is provided with a stopcock. When a fairly good vacuum has been obtained, the stopcock is opened and the oil slowly fed in. Proceeding in this manner, it is impossible that any big bubbles, which are the principal danger, should remain between the turns. The air is most completely excluded, probably better than by boiling out, which, however, when gutta-percha coated wires are used, is not practicable.

For the primaries I use ordinary line wire with thick cotton coating. Strands of very thin insulated wires properly interlaced would, of course, be the best to employ for the primaries, but they are not to be had.

In an experimental coil the size of the wires is not of great importance. In the coil here used the primary is No, 12 and the secondary No. 24 Brown & Sharpe gauge wire; but the sections maybe varied considerably. I would only imply different adjustments; the results aimed at would not be materially affected.

I have dwelt at some length upon the various forms of brush discharge because, in studying them, we not only observe phenomena which please our eye, but also afford us food for thought, and lead us to conclusions of practical importance. In the use of alternating currents of very high tension, too much precaution cannot be taken to prevent the brush discharge. In a main conveying such currents, in an induction coil or transformer, or in a condenser, the brush discharge is a source of great danger to the insulation. In a condenser especially the gaseous matter must be most carefully expelled, for in it the charged surfaces are near each other, and if the potentials are high, just as sure as a weight will fall if let go, so the insulation will give way if a single gaseous bubble of some site be present, whereas, if all gaseous matter were carefully excluded, the condenser would safely withstand a much higher difference of potential. A main conveying alternating currents of very high tension may be injured merely by a blowhole or small crack in the insulation, the more so as a blowhole is apt to contain gas at low pressure; and as it appears almost impossible to completely obviate such little imperfections, I am led to believe that in our future distribution of electrical energy by currents of very high tension liquid insulation will be used. The cost is a great drawback, but if we employ an oil as an insulator the distribution of electrical energy with something like 100,000 volts, and even more, become, at least with higher frequencies, so easy that they could be hardly called engineering feats. With oil insulation and alternate current motors transmissions of power can be effected with safety and upon an industrial basis at distances of as much as a thousand miles.

A peculiar property of oils, and liquid insulation in general, when subjected to rapidly changing electric stresses, is to disperse any gaseous bubbles which may be present, and diffuse them through its mass, generally long before any injurious break can

occur. This feature may be easily observed with an ordinary induction coil by taking the primary out, plugging up the end of the tube upon which the secondary is wound, and fining it with some fairly transparent insulator, such as paraffin oil. A primary of s diameter something like six millimetres smaller than the inside of the tube may be inserted in the oil. When the coil is set to work one may see, looking from the top through the oil, many luminous points—air bubbles which are caught by inserting the primary, and which ate rendered luminous in consequence of the violent bombardment. The occluded air, by its impact against the oil, beats it; the oil begins to circulate, carrying some of the air along with it, until the bubbles are dispersed and the luminous points disappear. In this manner, unless large bubbles are occluded in such way that circulation is rendered impossible, a damaging break is averted, the only effect being a moderate warming up of the oil. If, instead of the liquid, a solid insulation, no matter how thick, were used, a breaking through and injury of the apparatus would be inevitable.

The exclusion of gaseous matter from any apparatus in which the dielectric is subjected to more or less rapidly changing electric forces is, however, not only desirable in order to avoid a possible injury of the apparatus, but also on account of economy. In a condenser, for instance, as long as only a solid or only a liquid dielectric is used, the loss is small; but if a gas under ordinary or small pressure be present the loss may be very great. Whatever the nature of the force acting in the dielectric may be, it seems that in a solid or liquid the molecular displacement produced by the force is small: hence the product of force and displacement is insignificant, unless the force be very great; but in a gas the displacement, and, therefore, this product is considerable; the molecules are free to move, they reach high speeds, and the energy of their impact is lost in heat or otherwise. If the gas be strongly compressed, the displacement due to the force is made smaller, and the losses are reduced.

In most of the succeeding experiments I prefer, chiefly on account of the regular and positive action, to employ the alternator before referred to. This is one of the several machines constructed by me for the purposes of these investigations. It has 384 pole projections, and is capable of giving currents of a frequency of about 10,000 per second. This machine has been illustrated and briefly described in my first paper before the American Institute of Electrical Engineers, May 20, 1831, to which I have already referred. A more detailed description, sufficient to enable any engineer to build a similar machine, will be found in several electrical journals of that period.

The induction coils operated from the machine are rather small, containing from 5,000 to 15,000 turns in the secondary. They are immersed in boiled-out linseed oil, contained in wooden boxes covered with zinc sheet.

I have found it advantageous to reverse the usual position of the wires, and to wind, in these coils, the primaries on the top; this allowing the use of a much bigger primary, which, of course, reduces the danger of overheating and increases the output of the coil. I make the primary on each side at least one centimetre shorter than the secondary, to prevent the breaking through on the ends, which would surely occur unless the insulation on the top of the secondary be very thick, and this, of course, would be disadvantageous.

When the primary is made movable, which is necessary in some experiments, and many times convenient for the purposes of adjustment, I cover the secondary with wax, and turn it off in a lathe to a diameter slightly smaller than the inside of the primary coil. The latter I provide with a handle reaching out of the oil, which serves to shift it in any position along the secondary.

I will now venture to make, in regard to the general manipulation of induction coils, a few observations bearing upon points which have not been fully appreciated in earlier experiments with such coils, and are even now often overlooked.

The secondary of the coil possesses usually such a high self-induction that the current through the wire is inappreciable, and may be so even when the terminals ate joined by a conductor of small resistance. If capacity is added to the terminals, the self-induction is counteracted, and a stronger current is made to flow through the secondary, though its terminals are insulated from each other. To one entirely unacquainted with the properties of alternating currents nothing will look more puzzling. This feature was illustrated in the experiment performed at the beginning with the top plates of wire gauze attached to the terminals and the rubber plate. When the plates of wire gauze were close together, and a small arc passed between them, the arc*prevented* a strong current from passing through the secondary, because it did away with the capacity on the terminals; when the rubber plate was inserted between, the capacity of the condenser formed counteracted the self-induction of the secondary, a stronger current passed now, the coil performed more work, and the discharge was by far more powerful.

The first thing, then, in operating the induction coil is to combine capacity with the secondary to overcome the self-induction. If the frequencies and potentials are very high gaseous matter should be carefully kept away from the charged surfaces. If Leyden jars are used, they should be immersed in oil, as otherwise considerable dissipation may occur if the jars are greatly strained. When high frequencies are used, it is of equal importance to combine a condenser with the primary. One may use a condenser connected to the ends of the primary or to the terminals of the alternator, but the latter is not to be recommended, as the machine might be injured. The best way is undoubtedly to use the condenser in series with the primary and with the alternator, and to adjust its capacity so as to annul the self-induction of both the latter. The condenser should be adjustable by very small steps, and for a finer

adjustment a small oil condenser with movable plates may be used conveniently.

I think it best at this juncture to bring before you a phenomenon, observed by me some time ago, which to the purely scientific investigator may perhaps appear more interesting than any of the results which I have the privilege to present to you this evening.

It may be quite properly ranked among the brush phenomena—in fact, it is a brush, formed at, or near, a single terminal in high vacuum.

In bulbs provided with a conducting terminal, though it be of aluminium, the brush has but an ephemeral existence, and cannot, unfortunately, be indefinitely preserved in its most sensitive state, even in a bulb devoid of any conducting electrode. In studying one phenomenon, by all means a bulb having no leading-in wire should be used. I have found it best to use bulbs constructed as indicated in Figs. 12 and 13.

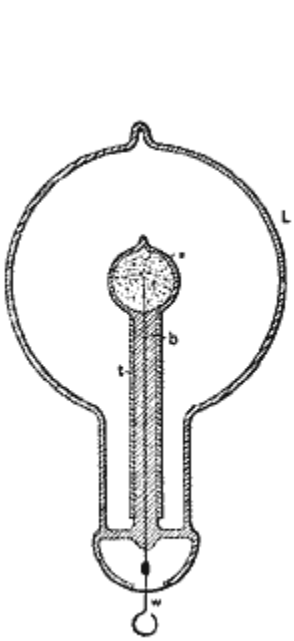

Fig. 12.

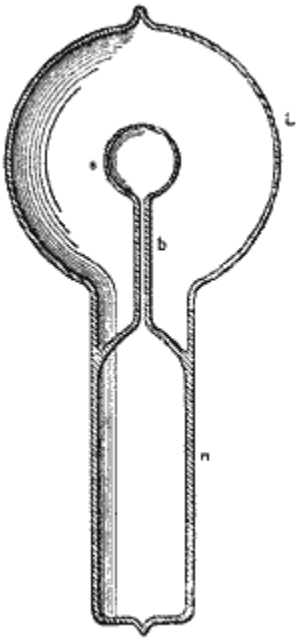

Fig. 13.

In Fig. 12 the bulb comprises an incandescent lamp globe *L*, in the neck of which is sealed a barometer tube *b*, the end of which is blown out to form a small sphere *s*. This sphere should be sealed as closely as possible in the centre of the large globe. Before sealing, a thin tube *t*, of aluminium sheet, may be slipped in the barometer tube, but it is not important to employ it.

The small hollow sphere *s* is filled with some conducting powder, and a wire *w* is cemented in the neck for the purpose of connecting the conducting powder with the generator.

The construction shown in Fig. 13 was chosen in order to remove from the brush any conducting body which might possibly affect it. The bulb consists in this case of a lamp globe *L*, which has a neck *n*, provided with a tube *b* and small sphere *s*, sealed to it, so that two entirely independent compartments are formed, as indicated in the drawing. When the bulb is in use, the neck *n* is provided with a tinfoil coating, which is connected to the generator and acts inductively upon the moderately rarefied and highly conducting gas enclosed in the neck. From there the current passes through the tube *b* into the small sphere *s*, to act by induction upon the gas contained in the globe *L*.

It is of advantage to make the tube *t* very thick, the hole through it very small, and to blow the sphere *s* very thin. It is of the greatest importance that the sphere *s* be placed in the centre of the globe *L*.

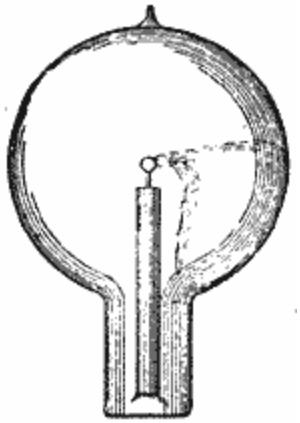

Fig. 14.

Figs. 14, 15 and 16 indicate different forms, or stages, of the brush. Fig. 14 shows the brush as it first appears in a bulb provided with a conducting terminal: but, as in such a bulb it very soon disappears—often after a few minutes—I will confine myself to the description of the phenomenon as seen in a bulb without conducting electrode. It is observed under the following conditions:

When the globe *L* (Figs. 12 and 13) is exhausted to a very high degree, generally the bulb is not excited upon connecting the wire *w* (Fig. 12) or the tinfoil coating of the bulb (Fig. 13) to the terminal of the induction coil. To excite it, it is usually sufficient to grasp the globe *L* with the hand. An intense phosphorescence then spreads at first over the globe, but soon gives place to a white, misty light. Shortly afterward one may notice that the luminosity is unevenly distributed in the globe, and after passing the current for some time the bulb appears as in Fig. 15. From this stage the phenomenon will gradually pass to that indicated in Fig. 16, after some minutes, hours, days or weeks, according as the bulb is worked. Warming the bulb or increasing the potential hastens the transit.

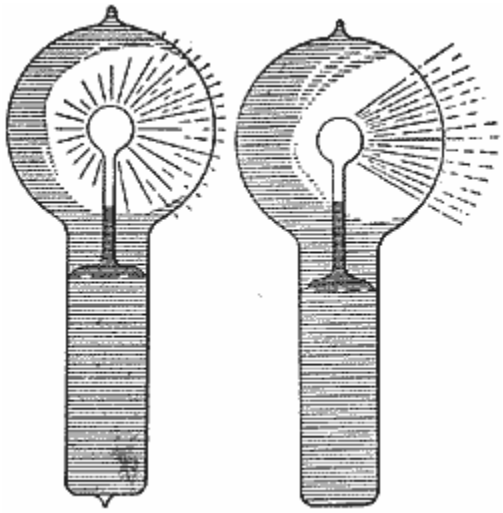

Fig. 15. Fig. 16.

When the brush assumes the form indicated in Fig. 16, it may be brought to a state of extreme sensitiveness to electrostatic and magnetic influence. The bulb hanging straight down from a wire, and all objects being remote from it, the approach of the observer at a few paces from the bulb will cause the brush to fly to the opposite side, and if he walks around the bulb it will always keep on the opposite side. It may begin to spin around the terminal long before it reaches that sensitive stage. When it begins to turn around principally, but also before, it is affected by a magnet and at a certain stage it is susceptible to magnetic influence to an astonishing degree. A small permanent magnet, with its poles at a distance of no more than two centimetres, will affect it visibly at a distance of two metres, slowing down or accelerating the rotation according to how it is held relatively to the brush. I think I have observed that at the stage when it is most sensitive to magnetic, it is not most sensitive to electrostatic, influence. My explanation is, that the electrostatic attraction between the brush and the glass of the bulb, which retards the rotation, grows much quicker than the magnetic influence when the intensity of the stream is increased.

When the bulb hangs with the globe *L* down, the rotation is always clockwise. In the southern hemisphere it would occur in the opposite direction and on the equator the brush should not turn at all. The rotation may be reversed by a magnet kept at some

distance. The brush rotates best, seemingly, when it is at right angles to the lines of force of the earth. It very likely rotates, when at its maximum speed, in synchronism with the alternations, say 10,000 times a second. The rotation can be slowed down or accelerated by the approach or receding of the observer or any conducting body, but it cannot be reversed by putting the bulb in any position. When it is in the state of the highest sensitiveness and the potential or frequency be varied the sensitiveness is rapidly diminished. Changing either of these but little will generally stop the rotation. The sensitiveness is likewise affected by the variations of temperature. To attain great sensitiveness it is necessary to have the small sphere s in the centre of the globe *L*, as otherwise the electrostatic action of the glass of the globe will tend to stop the rotation. The sphere *s*should be small and of uniform thickness; any dissymmetry of course has the effect to diminish the sensitiveness.

The fact that the brush rotates in a definite direction in a permanent magnetic field seems to show that in alternating currents of very high frequency the positive and negative impulses are not equal, but that one always preponderates over the other.

Of course, this rotation in one direction may be due to the action of two elements of the same current upon each other, or to the action of the field produced by one of the elements upon the other, as in a series motor, without necessarily one impulse being stronger than the other. The fact that the brush turns, as far as I could observe, in any position, would speak for this view. In such case it would turn at any point of the earth's surface. But, on the other hand, it is then hard to explain why a permanent magnet should reverse the rotation, and one must assume the preponderance of impulses of one kind.

As to the causes of the formation of the brush or stream, I think it is due to the electrostatic action of the globe and the dissymmetry of the parts. If the small bulb s and the globe *L* were perfect concentric spheres, and the glass throughout of the same thickness and quality, I think the brush would not form, as the tendency to pass would be equal on all sides. That the formation of the stream is due to an irregularity is apparent from the fact that it has the tendency to remain in one position, and rotation occurs most generally only when it is brought out of this position by electrostatic or magnetic influence. When in an extremely sensitive state it rests in one position, most curious experiments may be performed with it. For instance, the experimenter may, try selecting a proper position, approach the hand at a certain considerable distance to the bulb, and he may cause the brush to pass off by merely stiffening the muscles of the arm. When it begins to rotate slowly, and the hands are held at a proper distance, it is impossible to make even the slightest motion without producing a visible effect upon the brush. A metal plate connected to the other terminal of the coil affects it at a great distance, slowing down the rotation often to one turn a second.

I am firmly convinced that such a brush, when we learn how to produce it properly, will prove a valuable aid in the investigation' of the nature of the forces acting in an electrostatic or magnetic field. If there is any motion which is measurable going on in the space, such a brush ought to reveal it. It is, so to speak, a beam of light, frictionless, devoid of inertia.

I think that it may find practical applications in telegraphy. With such a brush it would be possible to send dispatches across the Atlantic, for instance, with any speed, since its sensitiveness may be so great that the slightest changes will affect it. If it were possible to make the stream more intense and very narrow, its deflections could be easily photographed.

I have been interested to find whether there is a rotation of the stream itself, or whether there is simply a stress traveling around in the bulb. For this purpose I mounted a light mica fan so that its vanes were in the path of the brush. If the stream itself was rotating the fan would be spun around. I could produce no distinct rotation of the fan, although I tried the experiment repeatedly; but as the fan exerted a noticeable influence on the stream, and the apparent rotation of the latter was, in this case, never quite satisfactory, the experiment did not appear to be conclusive.

I have been unable to produce the phenomenon with the disruptive discharge coil, although every other of these phenomena can be tell produced by it—many, in fact, much better than with coils operated from an alternator.

It may be possible to produce the brush by impulses of one direction, or even by a steady potential, in which case it would be still more sensitive to magnetic influence.

In operating an induction coil with rapidly alternating currents, we realize with astonishment, for the first time, the great importance of the relation of capacity, self-induction and frequency as regards the general result. The effects of capacity are the most striking, for in these experiments, since the self-induction and frequency both are high, the critical capacity is very small, and need be but slightly varied to produce a very considerable change. The experimenter may bring his body in contact with the terminals of the secondary of the coil, or attach to one or both terminals insulated bodies of very small bulk, such as bulbs, and he may produce a considerable rise or fall of potential, and greatly affect the flow of the current through the primary. In the experiment before shown, in which a brush appears at a wire attached to one terminal, and the wire is vibrated when the experimenter brings his insulated body in contact with the other terminal of the coil, the sudden rise of potential was made evident.

I may show you the behavior of the coil in another manner which possesses a feature of some interest. I have here a little light fan

of aluminium sheet, fastened to a needle and arranged to rotate freely in a metal piece screwed to one of the terminals of the coil. When the coil is set to work, the molecules of the air are rhythmically attracted and repelled. As the force with which they are repelled is greater than that with which they are attracted, it results that there is repulsion exerted on the surfaces of the fan. If the fan were made simply of a metal sheet, the repulsion would be equal on the opposite sides, and would produce no effect. But if one of the opposite surfaces is screened, or if, generally speaking, the bombardment on this side is weakened in some wag or other, there remains the repulsion exerted upon the other, and the fan is set in rotation. The screening is best effected by fastening upon one of the opposing sides of the fan insulated conducting coatings, or, if the fan is made in the shape of an ordinary propeller screw, by fastening on one side, and close to it, an insulated metal plate. The static screen may however, be omitted and simply a thickness of insulating material fastened to one of the sides of the fan.

To show the behavior of the coil, the fan may be placed upon the terminal and it will readily rotate when the coil is operated by currents of very high frequency. With a steady potential, of course, and even with alternating currents of very low frequency, it would not turn, because of the very slow exchange of air and, consequently, smaller bombardment; but in the latter case it might turn if the potential were excessive. With a pin wheel, quite the opposite rule holds good; it rotates best with a steady potential, and the effort is the smaller the higher the frequency. Now, it is very easy to adjust the conditions so that the potential is normally not sufficient to turn the fan, but that by connecting the other terminal of the coil with an insulated body it rises to a much greater value, so as to rotate the fan, and it is likewise possible to stop the rotation by connecting to the terminal a body of different size, thereby diminishing the potential.

Instead of using the fan in this experiment, we may use the "electric" radiometer with similar effect. But in this case it will be found that the vanes will rotate only at high exhaustion or at ordinary pressures; they will not rotate at moderate pressures, when the air is highly conducting. This curious observation was made conjointly by Professor Crookes and myself. I attribute the result to the high conductivity of the air, the molecules of which then do not act as independent carriers of electric charges, but act all together as a single conducting body. In such case, of course, if there is any repulsion at all of the molecules from the vanes, it must be very small. It is possible, however, that the result is in part due to the fact that the greater part of the discharge passes from the leading-in wire through the highly conducting gas, instead of passing off from the conducting vanes.

In trying the preceding experiment with the electric radiometer the potential should not exceed a certain limit, as then the electrostatic attraction between the vanes and the glass of the bulb may be so great as to stop the rotation.

A most curious feature of alternate currents of high frequencies and potentials is that they enable us to perform many experiments by the use of one wire only. In many respects this feature is of great interest.

In a type of alternate current motor invented by me some years ago I produced rotation by inducing, by means of a single alternating current passed through a motor circuit, in the mass or other circuits of the motor, secondary currents, which, jointly with the primary or inducing current, created n moving field of force. A simple but crude form of such a motor is obtained by winding upon an iron core a primary, and close to it a secondary coil, joining the ends of the latter and placing a freely movable metal disc within the influence of the field produced by both. The iron core is employed for obvious reasons, but it is not essential to the operation. To improve the motor, the iron core is made to encircle the armature. Again to improve, the secondary coil is made to overlap partly the primary, so that it cannot free itself from a strong inductive action of the latter, repel its lines as it may. Once more to improve, the proper difference of phase is obtained between the primary and secondary currents by a condenser, self-induction, resistance or equivalent windings.

I had discovered, however, that rotation is produced by means of a single coil and cote; my explanation of the phenomenon, and leading thought in trying the experiment, being that there must be a true time lag in the magnetization of the core. I remember the pleasure I had when, in the writings of Professor Ayrton, which came later to my hand, I found the idea of the time lag advocated. Whether there is a true time lag, whether the retardation is due to eddy currents circulating in minute paths, must remain an open question, but the fact is that a coil wound upon an iron core and traversed by an alternating current creates a moving field of force, capable of setting an armature: in rotation- It is of some interest, in conjunction with the historical Arago experiment, to mention that in lag or phase motors I have produced rotation in the opposite direction to the moving field, which means that in that experiment the magnet may not rotate, or may even rotate in the opposite direction to the moving disc. Here, then, is a motor (diagrammatically illustrated in Fig. 17), comprising a coil and iron core, and a freely movable copper disc in proximity to the latter.

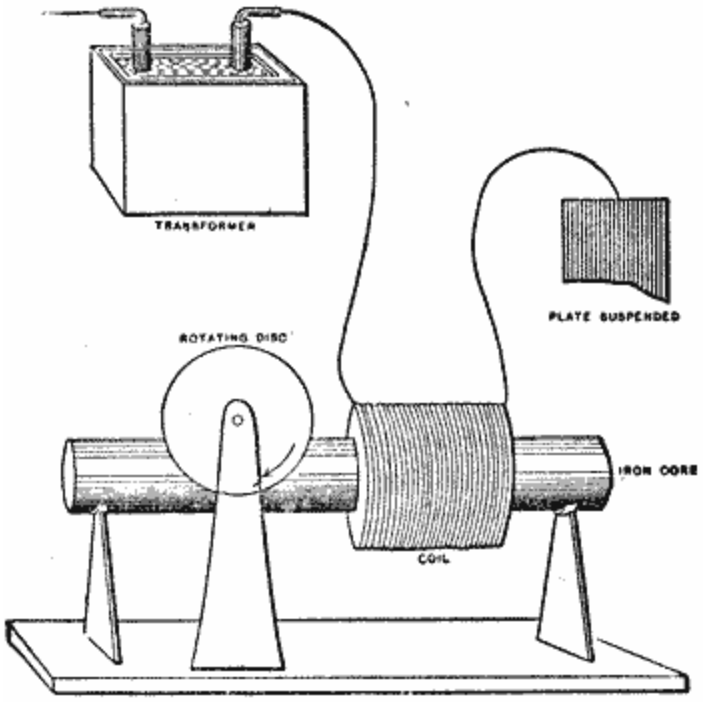

Fig. 17.

To demonstrate a novel and interesting feature, I have, for a reason which I will explain, selected this type of motor. When the ends of the coil are connected to the terminals of an alternator the disc is set in rotation. But it is not this experiment, now well known, which I desire to perform. What I wish to show you is that this motor rotates with *one single* connection between it and the generator; that is to say, one terminal of the motor is connected to one terminal of the generator—in this case the secondary of a high-tension induction coil—the other terminals of motor and generator being insulated in space. To produce rotation it is generally (but not absolutely) necessary to connect the free end of the motor coil to an insulated body of some size. The experimenter's body is more than sufficient. If he touches the free terminal with an object held in the hand, a current passes through the coil and the copper disc is set in rotation. If an exhausted tube is put in series with the coil, the tube lights brilliantly, showing the passage of a strong current. Instead of the experimenter's body, a small metal sheet suspended on a cord may be used with the same result. In this case the plate acts as a condenser in series with the coil. It counteracts the self-induction of the latter and allows a strong current to pass. In such a combination, the greater the self-induction of the coil the smaller need be the plate, and this means that a lower frequency, or eventually a lower potential, is required to operate the motor. A single coil wound upon a core has a high self-induction; for this reason principally, this type of motor was chosen to perform the experiment. Were a secondary closed coil wound upon the core, it would tend to diminish the self-induction, and then it would be necessary to employ a much higher frequency and potential. Neither would be advisable, for a higher potential would endanger the insulation of the small primary coil, and a higher frequency would result in a materially diminished torque.

It should be remarked that when such a motor with a closed secondary is used, it is not at all easy to obtain rotation with excessive frequencies, as the secondary cuts off almost completely the lines of the primary—and this, of course, the more, the higher the frequency—and allows the passage of but a minute current. In such a case, unless the secondary is closed through a condenser, it is almost essential, in order to produce rotation, to make the primary and secondary coils overlap each other more or less.

But there is an additional feature of interest about this motor, namely, it is not necessary to have even a single connection between the motor and generator, except, perhaps, through the ground; for not only is an insulated plate capable of giving off energy into space, but it likewise capable of deriving it from an alternating electrostatic field, though in the latter case the available energy is much smaller. In this instance one of the motor terminals is connected to the insulated plate or body located within the alternating electrostatic field, and the other terminal preferably to the ground.

It is quite possible, however, that such "no-wire" motors, as they might be called, could be operated by conduction through the rarefied air at considerable distances. Alternate currents, especially of high frequencies, pass with astonishing freedom through even slightly rarefied gases. The upper strata of the air are rarefied. To reach a number of miles out into space requires the overcoming of difficulties of a merely mechanical nature. There is no doubt that with the enormous potentials obtainable by the Use of high frequencies and oil insulation luminous discharges might be passed through many miles of rarefied air, and that, by thus directing the energy of many hundreds or thousands of horse-power, motors or lamps might be operated at considerable distances from stationary sources. But such schemes are mentioned merely as possibilities. We shall have no need

to *transmit* power at all. Ere many generations pass, our machinery will be driven by a power obtainable at any point of the universe. This idea is not novel. Men have been led to it long ago by instinct or reason; it has been expressed in many ways, and in many places, in the history of old and new. We find it in the delightful myth of Antheus, who derives power from the earth; we find it among the subtle speculations of one of your splendid mathematicians and in many hints and statements of thinkers of the present time. Throughout space there is energy. Is this energy static or kinetic! If static our hopes are in vain; if kinetic—and this we know it is, for certain—then it is a mere question of time when men will succeed in attaching their machinery to the very wheelwork of nature. Of all, living or dead, Crookes came nearest to doing it. His radiometer will turn in the light of day and in the darkness of the night; it will turn everywhere where there is heat, and heat is everywhere. But, unfortunately, this beautiful little machine, while it goes down to posterity as the most interesting, must likewise be put on record as the most inefficient machine ever invented!

The preceding experiment is only one of many equally interesting experiments which may be performed by the use of only one wire with alternate currents of high potential and frequency. We may connect an insulated line to a source of such currents, we may pass an inappreciable current over the line, and on any point of the same we are able to obtain a heavy current, capable of fusing a thick copper wire. Or we may, by the help of some artifice, decompose a solution in any electrolytic cell by connecting only one pole of the cell to the line or source of energy. Or we may, by attaching to the line, or only bringing into its vicinity, light up an incandescent lamp, an exhausted tube, or a phosphorescent bulb.

However impracticable this plan of working may appear in many cases, it certainly seems practicable, and even recommendable, in the production of light. A perfected lamp would require but little energy, and if wires were used at all we ought to be able to supply that energy without a return wire.

It is now a fact that a body may be rendered incandescent or phosphorescent b) bringing it either in single contact or merely in the vicinity of a source of electric impulses of the proper character, and that in this manner a quantity of light sufficient to afford a practical illuminant may be produced. It is, therefore, to say the least, worth while to attempt to determine the best conditions and to invent the best appliances for attaining this object.

Some experiences have already been gained in this direction, and I will dwell on them briefly, in the hope that they might prove useful.

The heating of a conducting body inclosed in a bulb, and connected to a source of rapidly alternating electric impulses, is dependent on so many things of a different nature, that it would be difficult to give a generally applicable rule under which this maximum heating occurs. As regards the size of the vessel, I have lately found that at ordinary or only slightly differing atmospheric pressures, when air is a good insulator, and hence practically the same amount of energy by a certain potential and frequency is given off from the body, whether the bulb be small or large, the body is brought to a higher temperature if inclosed in a small bulb, because of the better confinement of heat in this case.

At lower pressures, when air becomes more or less conducting, or if the air be sufficiently warmed as to become conducting, the body is rendered more intensely incandescent in a large bulb, obviously because, under otherwise equal conditions of test, more energy may be given off from the body when the bulb is large.

At very high degrees of exhaustion, when the matter in the bulb becomes "radiant," a large bulb has still an advantage, but a comparatively slight one, over the small bulb. Finally, at excessively high degrees of exhaustion, which cannot be reached except by the employment of special means, there seems to be, beyond a certain and rather small size of vessel, no perceptible difference in the heating.

These observations were the result of a number of experiments, of which one, showing the effect of the size of the bulb at a high degree of exhaustion may be described and shown here, as it presents a feature of interest. Three spherical bulbs of 2 inches, 3 inches and 4 inches diameter were taken, and in the centre of each was mounted an equal length of an ordinary incandescent lamp filament of uniform thickness. In each bulb the piece of filament was fastened to the leading-in wire of platinum, contained in a glass stem sealed in the bulb; care being taken, of course, to make everything as nearly alike as possible. On each glass stem in the inside of the bulb was slipped a highly polished tube made of aluminium sheet, which fitted the stem and was held on it by spring pressure. The function of this aluminium tube will be explained subsequently. In each bulb an equal length of filament protruded above the metal tube. It is sufficient to say now that under these conditions equal lengths of filament of the same thickness—in other words, bodies of equal bulk—were brought to incandescence. The three bulbs were sealed to a glass tube, which was connected to a Sprengel pump. When a high vacuum had been reached, the glass tube carrying the bulbs was sealed off. A current was then turned on successively on each bulb, and it was found that the filaments came to about the same brightness, and, if anything, the smallest bulb, which was placed midway between the two larger ones, may have been slightly brighter. This result was expected, for when either of the bulbs was connected to the coil the luminosity spread through the other two, hence the three bulbs constituted really one vessel. When all the three bulbs were connected in multiple arc to the coil, in the largest of them the

filament glowed brightest, in the next smaller it was a little less bright, and in the smallest it only came to redness. The bulbs were then sealed off and separately tried. The brightness of the filaments was now such as mould have been expected on the supposition that the energy given off was proportionate to the surface of the bulb, this surface in each case representing one of the coatings of a condenser. Accordingly, there was less difference between the largest and the middle sited than between the latter and the smallest bulb.

An interesting observation was made in this experiment. The three bulbs were suspended from a straight bare wire connected to a terminal of the coil, the largest bulb being placed at the end of the wire, at some distance from it the smallest bulb, and an equal distance from the latter the middle-sized one. The carbons glowed then to both the larger bulbs about as expected, but the smallest did not get its share by far. This observation led me to exchange the position of the bulbs, and I then observed that whichever of the bulbs was in the middle it was by far less bright than it was in any other position. This mystifying result was, of course, found to be due to the electrostatic action between the bulbs. When they were placed at a considerable distance, or when they were attached to the corners of an equilateral triangle of copper wire, they glowed about in the order determined by their surfaces.

As to the shape of the vessel, it is also of some importance, especially at high degrees of exhaustion. Of all the possible constructions, it seems that a spherical globe with the refractory body mounted in its centre is the best to employ. In experience it has been demonstrated that in such a globe a refractory body of a given bulk is more easily brought to incandescence than when otherwise shaped bulbs are used. There is also an advantage in giving to the incandescent body the shape of a sphere, for self-evident reasons. In any case the body should be mounted in the centre, where the atoms rebounding from the glass collide. This object is best attained in the spherical bulb; but it is also attained in a cylindrical vessel with one or two straight filaments coinciding with its axis, and possibly also in parabolical or spherical bulbs with the refractory body or bodies placed in the focus or foci of the same; though the latter is not probable, as the electrified atoms should in all cases rebound normally from the surface they strike, unless the speed were excessive, in which case they *would* probably follow the general law of reflection. No matter what shape the vessel may have, if the exhaustion be low, a filament mounted in the globe is brought to the same degree of incandescence in all parts; but if the exhaustion be high and the bulb be spherical or pear-shaped, as usual, focal points form and the filament is heated to a higher degree at or near such points.

To illustrate the effect, I have here two small bulbs which are alike, only one is exhausted to a low and the other to a very high degree. When connected to the coil, the filament in the former glows uniformly throughout all its length; whereas in the latter, that portion of the filament which is in the centre of the bulb glows far more intensely than the rest. A curious point is that the phenomenon occurs even if two filament: are mounted in a bulb, each being connected to one terminal of the coil, and, what is still more curious, if they be very near together, provided the vacuum be very high. I noted in experiments with such bulbs that the filaments would give way usually at a certain point, and in the first trials I attributed it to a defect in the carbon. But when that phenomenon occurred many times in succession I recognized its real cause.

In order to bring a refractory body inclosed in a bulb to incandescence, it is desirable, on account of economy, that all the energy supplied to the bulb from the source should reach without lass the body to be heated; from there, and from nowhere else, it should be radiated. It is, of course, out of the question to reach this theoretical result, but it is possible by a proper construction of the illuminating device to approximate it more or less.

For many reasons, the refractory body is placed in the centre of the bulb and it is usually supported on a glass stem containing the leading-in wire. As the potential of this wire is alternated, the rarefied gas surrounding the stem is acted upon inductively, and the glass stem is violently bombarded and heated. In this manner by far the greater portion of the energy supplied to the bulb—especially when exceedingly high frequencies are used—may be lost for the purpose contemplated. To obviate this loss, or at least to reduce it to a minimum, I usually screen the rarefied gas surrounding the stem from the inductive action of the leading-in wire by providing; the stem with a tube or coating of conducting material. It seems beyond doubt that the best among metals to employ for this purpose is aluminium, on account of its many remarkable properties. Its only fault is that it is easily fusible and, therefore, its distance from the incandescing: body should be properly estimated. Usually, a thin tube, of a diameter somewhat smaller than that of the glass stem, is made of the finest aluminium sheet, and slipped on the stem. The tube is conveniently prepared by wrapping around a rod fastened in a lathe a piece of aluminium sheet of the proper size, grasping the sheet firmly with clean chamois leather or blotting paper, and spinning the rod very fast. The sheet is wound tightly around the rod, and a highly polished tube of one or three layers of the sheet is obtained. When slipped on the stem, the pressure is generally sufficient to prevent it from slipping off, but, for safety, the lower edge of the sheet may be turned inside. The upper inside corner of the sheet—that is, the one which is nearest to the refractory incandescent body—should be cut out diagonally, as it often happens that, in consequence of the intense heat, this corner turns toward the inside and comes very near to, or in contact with, the wire, or filament, supporting the refractory body. The greater part of the energy supplied to the bulb is then used up in heating the metal tube, and the bulb is rendered useless for the purpose. The aluminium sheet should project above the glass stem more or less—one inch or so—or else, if the glass be too close to the incandescing body, it may be strongly heated and become more or less conducting, whereupon it may be ruptured, or may, by its conductivity, establish a good electrical connection between the metal tube and the leadinq-in wire, in which case, again, most of the energy will be lost in heating the former. Perhaps the best way is to make the top of the glass tube for about an inch, of a much smaller diameter. To still further reduce the danger arising from the heating of the glass stem, and also with the

view of preventing an electrical connection between the metal tube and the electrode, I preferably wrap; the stem with several layers of thin mica which extends at least as far as the metal tube. In some bulbs I have also used an outside insulating cover.

The preceding remarks are only made to aid the experimenter in the first trials, for the difficulties which he encounters he may soon find means to overcome in his own way.

To illustrate the effect of the screen, and the advantage of using it, I have here two bulbs of the same size, with their stems, leading-in wires and incandescent lamp filaments tied to the latter, as nearly alike as possible. The stem of one bulb is provided with an aluminium tube, the stem of the other has none. Originally the two bulbs were joined by a tube which was connected to a Sprengel pump. When a high vacuum had been reached, first the connecting tube, and then the bulbs, were sealed off; they are therefore of the same degree of exhaustion. When they are separately connected to the coil giving a certain potential, the carbon filament in the bulb provided with the aluminium screen in rendered highly incandescent, while the filament in the other bulb may, with the same potential, not even come to redness, although in reality the latter bulb takes generally more energy than the former. When they are both connected together to the terminal, the difference is even more apparent, showing the importance of the screening. The metal tube placed in the stem containing the leading-in wire performs really two distinct functions: First, it acts more or less as an electrostatic screen, thus economizing the energy supplied to the bulb; and, second, to whatever extent it may fail to act electrostatically, it acts mechanically, preventing the bombardment, and consequently intense heating and possible deterioration of the slender support of the refractory incandescent body, or of the glass stem containing the leading-in wire. I say *slender* support, for it is evident that in order to confine the heat more completely to the incandescing body its support should be very thin, so as to carry away the smallest possible amount of heat by conduction. Of all the supports used I have found an ordinary incandescent lamp filament to be the best, principally because among conductors it can withstand the highest degrees of heat.

The effectiveness of the metal tube as an electrostatic screen depends largely on the degree of exhaustion.

At excessively high degrees of exhaustion—which are reached by using great care and special means in connection with the Sprengel pump—when the matter in the globe is in the ultra-radiant state, it acts most perfectly. The shadow of the upper edge of the tube is then sharply defined upon the bulb.

At a somewhat lower degree of exhaustion, which is about the ordinary "non-striking" vacuum, and generally as long as the matter moves predominantly in straight lines, the screen still does well. In elucidation of the preceding remark it is necessary to state that what is a "non-striking" vacuum for a coil operated, as ordinarily, by impulses, or currents, of low frequency, is not, by far, so when the coil is operated by currents of very high frequency. In such case the discharge may pass with great freedom through the rarefied gas through which a low-frequency discharge may not pass, even though the potential be much higher. At ordinary atmospheric pressures just the reverse rule holds good: the higher the frequency, the less the spark discharge is able to jump between the terminals, especially if they are knobs or spheres of some site. Finally, at very low degrees of exhaustion, when the gas is well conducting, the metal tube not only does not act as an electrostatic screen, but even is a drawback, aiding to a considerable extent the dissipation of the energy laterally from the leading-in wire. This, of course, is to be expected. In this case, namely, the metal tube is in good electrical connection with -the leading-in wire, and most of the bombardment is directed upon the tube. As long as the electrical connection is not good, the conducting tube is always of some advantage for although it may not greatly economize energy, still it protects the support of the refractory button, and is a means for concentrating more energy upon the same.

To whatever extent the aluminium tube performs the function of a screen, its usefulness is therefore limited to very high degrees of exhaustion when it is insulated from the electrode—that is, when the gas as a whole is non-conducting, and the molecules, or atoms, act as independent carriers of electric charges.

In addition to acting as a more or less effective screen, in the true meaning of the word, the conducting tube or coating may also act, by reason of its conductivity, as a sort of equalizer or dampener of the bombardment against the stem. To be explicit, I assume the action as follows: Suppose a rhythmical bombardment to occur against the conducting tube by reason of its imperfect action as a screen, it certainly must happen that some molecules, or atoms, strike the tube sooner than others. Those which come first in contact with it give up their superfluous charge, and the tube is electrified, the electrification instantly spreading over its surface. But this must diminish, the energy lost in the bombardment for two reasons: first, the charge given up by the atoms spreads over a great area, and hence the electric density at any point is small, and the atoms are rebelled with less energy than they would be if they would strike against a good insulator; secondly, as the tube is electrified by the atoms which first come in contact with it, the progress of the following atoms against the tube is more or less checked by, the repulsion which the electrified tube must exert upon the similarly electrified atoms. This repulsion may perhaps be sufficient to prevent a large portion of the atoms from striking the tube, but at any rate it must diminish the energy of their impact. It is clear that when the exhaustion is very low, and the rarefied gas well conducting, neither of the above effects can occur, and, on the other hand, the fewer the atoms, with the greater freedom they move; in other words, the higher the degree of exhaustion, up to a limit, the more telling will be both the effects:

What I have just said may afford an explanation of the phenomenon observed by Prof. Crookes, namely, that a discharge through a

bulb is established with much greater facility when an insulator than when a conductor is present in the same. In my opinion, the conductor acts as a dampener of the motion of the atoms in the two ways pointed out; hence, to cause a visible discharge to pass through the bulb, a much higher potential is needed if a conductor, especially of many surfaces, be present.

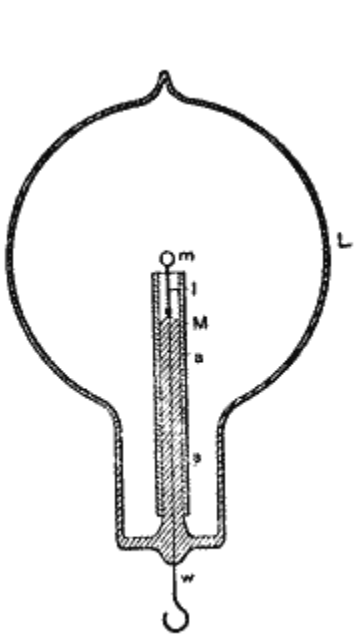

Fig. 18.

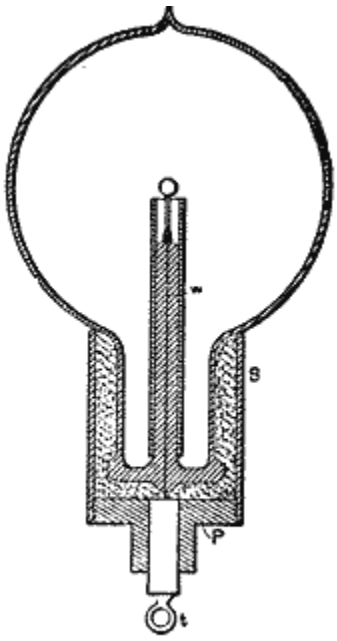

Fig. 19.

For the sake of clearness of some of the remarks before made, I must now refer to Figs. 18, 19, and 20, which illustrate various arrangements with a type of bulb most generally used.

Fig. 18 is a section though a spherical bulb L, with the glass stem *s*, containing the leading-in wire *w*, which has a lamp filament *l* fastened to it, serving to support the refractory button *m* in the centre. M is a sheet of thin mica wound in several layers around the stem *s*, and *a* is the aluminium tube.

Fig. 19 illustrates such a bulb in a somewhat more advanced stage of perfection. A metallic tube S is fastened by means of some cement to the neck of the tube. In the tube is screwed a plug P, of insulating material, in the centre of which is fastened a metallic terminal *t*, for the connection to the lead-in wire *w*. This terminal must be well insulated from the metal tube S, therefore, if the cement used is conducting and most generally it is sufficiently so—the space between the plug P and the neck of the bulb should be filled with some good insulating material, as mica powder.

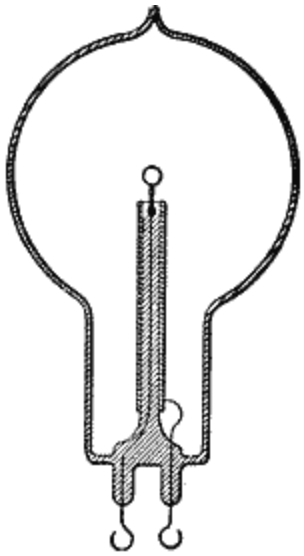

Fig. 20.

Fig. 20 shows a bulb made for experimental purposes. In this bulb the aluminium tube is provided with an external connection, which serves to investigate the effect of the tube under various conditions. It is referred to chiefly to suggest a line of experiment followed.

Since the bombardment against the stem containing the leading-in wire is due to the inductive action of the latter upon the rarefied gas, it is of advantage to reduce this action as far as practicable by employing a very thin wire, surrounded by a very thick insulation of glass or other material, and by making the wire passing through the rarefied gas as short as practicable. To combine these features I employ a large tube T (Fig. 21), which protrudes into the bulb to some distance, and carries on the top a very short glass stem *s*, into which is sealed the leading-in wire *w*, and I protect the top of the glass stem against the heat by a small, aluminium tube *a* and a layer of mica underneath the same, as usual. The wire *w*, passing through the large tube to the outside of the bulb, should be well insulated—with a glass tube, for instance—and the space between ought to be filled out with some excellent insulator. Among many insulating powders I have tried, I have found that mica powder is the best to employ. If this precaution is not taken, the tube T, protruding into the bulb, will surely be cracked in consequence of the heating by the brushes which are apt to form in the upper part of the tube, near the exhausted globe, especially if the vacuum be excellent, and therefore the potential necessary to operate the lamp be very high.

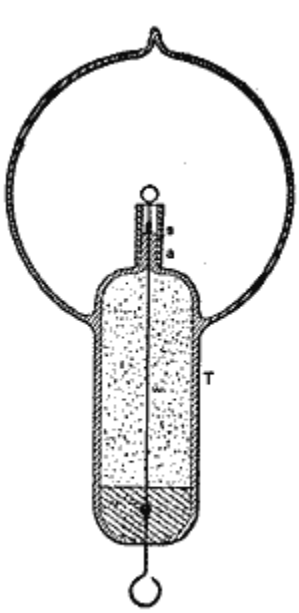

Fig. 21.

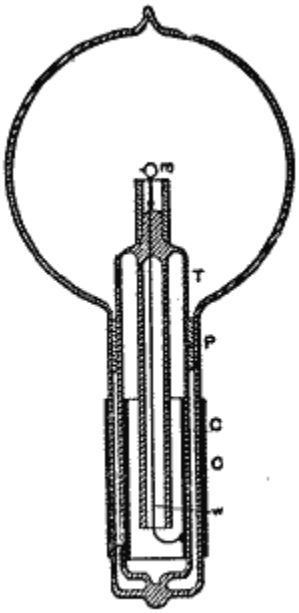

Fig. 22.

Fig. 22 illustrates a similar arrangement, with a large tube T protruding into the part of the bulb containing the refractory button *m*. In this case the wire leading from the outside into the bulb is omitted, the energy required being supplied through condenser

coatings C C. The insulating packing P should in this construction be tightly fitting to the glass, and rather wide, or otherwise the discharge might avoid passing through the wire *w*, which connects the inside condenser coating to the incandescent button *m*.

The molecular bombardment against the glass stem in the bulb is a source of great trouble. As illustration I will cite a phenomenon only too frequently and unwillingly observed. A bulb, preferably a large one, may be taken, and a good conducting body, such as a piece of carbon, may be mounted in it upon a platinum wire sealed in the glass stem. The bulb may be exhausted to a fairly high degree, nearly to the point when phosphorescence begins to appear. When the bulb is connected with the coil, the piece of carbon, if small, may become highly incandescent at first, but its brightness immediately diminishes, and then the discharge may break through the glass somewhere in the middle of the stem, in the form of bright sparks, in spite of the fact that the platinum wire is in good electrical connection with the rarefied gas through the piece of carbon or metal at the top. The first sparks are singularly bright, recalling those drawn from a clear surface of mercury. But, as they heat the glass rapidly, they, of course, lose their brightness, and cease when the glass at the ruptured place becomes incandescent, or generally sufficiently hot to conduct. When observed for the first time the phenomenon must appear very curious, and shows in a striking manner how radically different alternate currents, or impulses, of high frequency behave, as compared with steady currents, or currents of low frequency. With such currents—namely, the latter—the phenomenon would of course not occur. When frequencies such as are obtained by mechanical means are used, I think that the rupture of the glass is more or less the consequence of the bombardment, which warms it up and impairs its insulating power; but with frequencies obtainable with condensers I have no doubt that the glass may give way without previous heating. Although this appears most singular at first, it is in reality what we might expect to occur. The energy supplied to the wire leading into the bulb is given off partly by direct action through the carbon button, and party by inductive action through the glass surrounding the wire. The case is thus analogous to that in which a condenser shunted by a conductor of low resistance is connected to a source of alternating currents. As long as the frequencies are low, the conductor gets the most, and the condenser is perfectly safe; but when the frequency becomes excessive, the *role* of the conductor may become quite insignificant. In the latter case the difference of potential at the terminals of the condenser may become so great as to rupture the dielectric, notwithstanding the fact that the terminals are joined by a conductor of low resistance.

It is, of course, not necessary, when it is desired to produce the incandescence of a body inclosed in a bulb by means of these currents, that the body should be a conductor, for even a perfect non-conductor may be quite as readily heated. For this purpose it is sufficient to surround a conducting electrode with a non-conducting material, as, for instance, in the bulb described before in Fig. 21, in which a thin incandescent lamp filament is coated with a non-conductor, and supports a button of the same material on the top. At the start the bombardment goes on by inductive action through the non-conductor, until the same is sufficiently heated to become conducting, then the bombardment continues in the ordinary way.

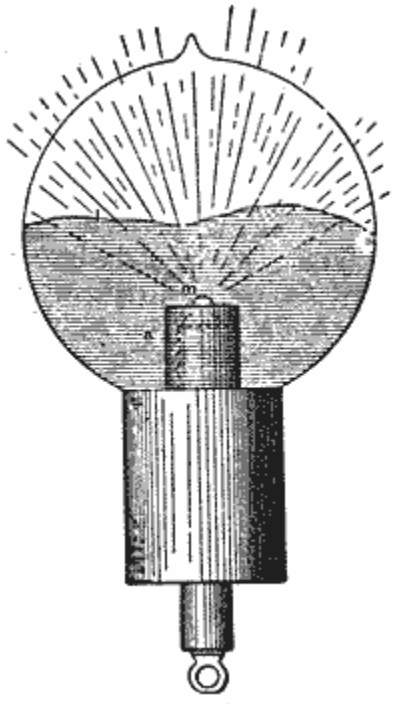

Fig. 23.

A different arrangement used in some of the bulbs constructed is illustrated in Fig. 23. In this instance a non-conductor *m* is mounted in a piece of common arc light carbon so as to project some small distance above the latter. The carbon piece is connected to the leading-in wire passing through a glass stem, which is wrapped with several layers of mica. An aluminium tube a is employed as usual for screening. It is so arranged that it reaches very nearly as high as the carbon and only the non-conductor m

projects a little above it. The bombardment goes at first against the upper surface of carbon, the lower parts being protected by the aluminium tube. As soon, however, as the non-conductor m is heated it is rendered good conducting, and then it becomes the centre of the bombardment, being most exposed to the same.

I have also constructed during these experiments many such single-wire bulbs with or without internal electrode, in which the radiant matter was projected against, or focused upon, the body to be rendered incandescent. Fig. 24 illustrates one of the bulbs used. It consists of a spherical globe L, provided with a long neck *n*, on the top, for increasing the action in some cases by the application of an external conducting coating. The globe L is blown out on the bottom into a very small bulb *b*, which serves to hold it firmly in a socket S of insulating material into which it is cemented. A fine lamp filament *f*, supported on a wire *w*, passes through the centre of filament is rendered incandescent In the middle portion, where the bombardment proceeding from the lower inside surface of the globe is most intense. The lower portion of the globe, as far as the socket S reaches, is rendered conducting, either by g tinfoil coating or otherwise, and the external electrode is connected to a terminal of the coil.

The arrangement diagrammatically indicated in Fig. 24 was found to be an inferior one when it was desired to render incandescent a filament or button supported in the centre of the globe, but it was convenient when the object was to excite phosphorescence.

In many experiments in which bodies of a different kind were mounted in the bulb as, for instance, indicated in Fig. 23, some observations of interest were made.

It was found, among other things, that in such cases, no matter where the bombardment began, just as soon as a high temperature was reached there was generally one of the bodies which seemed to take most of the bombardment upon itself, the other, or others, being thereby relieved. This quality appeared to depend principally on the point of fusion, and on the facility with which the body was "evaporated," or, generally speaking, disintegrated—meaning by the latter term not only the throwing off of atoms, but likewise of larger lumps. The observation made was in accordance with generally accepted notions. In a highly exhausted bulb electricity is carried off from the electrode by independent carriers, which are partly the atoms, or molecules, of the residual atmosphere, and partly the atoms, molecules, or lumps thrown off from the electrode. If the electrode is composed of bodies of different character, and if one of these is more easily disintegrated than the others, most of the electricity supplied is carried off from that body, which is then brought to a higher temperature than the others, and this the more, as upon an increase of the temperature the body is still more easily disintegrated.

It seems to me quite probable that a similar process takes place in the bulb even with a homogenous electrode, and I think it to be the principal cause of the disintegration. There is bound to be some irregularity, even if the surface is highly polished, which, of course, is impossible with most of the refractory bodies employed as electrodes. Assume that a point of the electrode gets hotter, instantly most of the discharge passes through that point, and a minute patch is probably fused and evaporated. It is now possible that in consequence of the violent disintegration the spot attacked sinks in temperature, or that a counter force is created, as in an arc; at any rate, the local tearing off meets with the limitations incident to the experiment, where upon the same process occurs on another place. To the eye the electrode appears uniformly brilliant, but there are upon it points constantly shifting and wandering around, of a temperature far above the mean, and this materially hastens the process of deterioration. That some such thing occurs, at least when the electrode is at a lower temperature, sufficient experimental evidence can be obtained in the following manner: Exhaust a bulb to a very high degree, so that with a fairly high potential the discharge cannot pass—that is, not a *luminous*one, for a weak invisible discharge occurs always, in all probability. Now raise slowly and carefully the potential, leaving the primary current on no mote than for an instant. At a certain point, two, three, or half a dozen phosphorescent spots mill appear on the globe. These places of the glass are evidently more violently bombarded than others, this being due to the unevenly distributed electric density, necessitated, of course, by sharp projections, or, generally speaking, irregularities of the electrode. But the luminous patches are constantly changing in position, which is especially well observable if one manages to produce very few, and this indicates that the configuration of the electrode is rapidly changing.

From experiences of this kind I am led to infer that, in order to be most durable, the refractory button in the bulb should be in the form of a sphere with a highly polished surface. Such a small sphere could be manufactured from a diamond or some other crystal, but a better way would be to fuse, by the employment of extreme degrees of temperature, some oxide—as, for instance, zirconia—into a small drop, and then keep it in the bulb at a temperature somewhat below its point of fusion.

Interesting and useful results can no doubt be reached in the direction of extreme degrees of heat. How can such high temperatures be arrived at? How are the highest degrees of heat reached in nature? By the impact of stars, by high speeds and collisions. In a collision any rate of heat generation may be attained. In a chemical process we are limited. When oxygen and hydrogen combine, they fall, metaphorically speaking, from a definite height. We cannot go very far with a blast, nor by confining heat in a furnace, but in an exhausted bulb we can concentrate any amount of energy upon a minute button. Leaving practicability out of consideration, this, then, would be the means which, in my opinion, would enable us to reach the highest temperature. But a great difficulty when proceeding in this way is encountered, namely, in most cases the body is carried off before it can fuse and form a drop. This difficulty exists principally with an oxide such as zirconia, because it cannot be compressed in so hard a cake that it

would not be carried off quickly. I endeavored repeatedly to fuse zirconia, placing it in a cup or arc light carbon as indicated in Fig. 23. It glowed with a most intense light, and the stream of the particles projected out of the carbon cup was of a vivid white; but whether it was compressed in a cake or made into a paste with carbon, it was carried off before it could be fused. The carbon cup containing the zirconia had to be mounted very low in the neck of a large bulb, as the heating of the glass by the projected particles of the oxide was so rapid that in the first trial the bulb was cracked almost in an instant when the current was turned on. The heating of the glass by the projected particles was found to be always greater when the carbon cup contained a body which was rapidly carried off—I presume because in such cases, with the same potential, higher speeds were reached, and also because, per unit of time, more matter was projected—that is, more particles would strike the glass.

The before mentioned difficulty did not exist, however, when the body mounted in the carbon cup offered great resistance to deterioration. For instance, when an oxide was first fused in an oxygen blast and then mounted in the bulb, it melted very readily into a drop.

Generally during the process of fusion magnificent light effects were noted, of which it would be difficult to give an adequate idea. Fig. 23 is intended to illustrate the effect observed with a ruby drop. At first one may see a narrow funnel of white light projected against the top of the globe, where it produces an irregularly outlined phosphorescent patch. When the point of the ruby fuses the phosphorescence becomes very powerful; but as the atoms are projected with much greater speed from the surface of the drop, soon the glass gets hot and "tired," and now only the outer edge of the patch glows. In this manner an intensely phosphorescent, sharply defined line, corresponding to the outline of the drop, is produced, which spreads slowly: over the globe as the drop gets larger. When the mass begins to boil, small bubbles and cavities are formed, which cause dark colored spots to sweep across the globe. The bulb may be turned downward without fear of the drop falling off, as the mass possesses considerable viscosity.

I may mention here another feature of some interest, which I believe to have noted in the course of these experiments, though the observations do not amount to a certitude. It *appeared* that under the molecular impact caused by the rapidly alternating potential the body was fused and maintained in that state at a lower temperature in a highly exhausted bulb than was the case at normal pressure and application of heat in the ordinary way—that is, at least, judging from the quantity of the light emitted. One of the experiments performed may be mentioned here by way of illustration. A small piece of pumice stone was stuck on a platinum wire, and first melted to it in a gas burner. The wire was next placed between two pieces of charcoal and a burner applied so as to produce an intense heat, sufficient to melt down the pumice stone into a small glass-like button. The platinum wire had to be taken of sufficient thickness to prevent its melting in the fire. While in the charcoal fire, or when held in a burner to get a better idea of the degree of heat, the button glowed with great brilliancy. The wire with the button was then mounted in a bulb, and upon exhausting the same to a high degree, the current was turned on slowly so as to prevent the cracking of the button. The button was heated to the point of fusion, and when it melted it did not, apparently, glow with the same brilliancy as before, and this would indicate a lower temperature. Leaving out of consideration the observer's possible, and even probable, error, the question is, can a body under these conditions be brought from a solid to a liquid state with evolution of *less* light?

When the potential of a body is rapidly alternated it is certain that the structure is jarred. When the potential is very high, although the vibrations may be few—say 20,000 per second—the effect upon the structure may be considerable. Suppose, for example, that a ruby is melted into a drop by a steady application of energy. When it forms a drop it will emit visible and invisible waves, which will be in a definite ratio, and to the eye the drop will appear to be of a certain brilliancy. Next, suppose we diminish to any degree we choose the energy steadily supplied, and, instead, supply energy which rises and falls according to a certain law. Now, when the drop is formed, there will be emitted from it three different kinds of vibrations—the ordinary visible, and two kinds of invisible waves: that is, the ordinary dark waves of all lengths, and, in addition, waves of a well-defined character. The latter would not exist by a steady supply of the energy; still they help to jar and loosen the structure. If this really be the case, then the ruby drop will emit relatively less visible and more invisible waves than before. Thus it would seem that when a platinum wire, for instance, is fused by currents alternating with extreme rapidity, it emits at the point of fusion less light and more invisible radiation than it does when melted by a steady current, though the total energy used up in the process of fusion is the same in both cases, Or, to cite another example, a lamp filament is not capable of withstanding as long with currents of extreme frequency as it does with steady currents, assuming that it be worked at the same luminous intensity. This means that for rapidly alternating currents the filament should be shorter and thicker. The higher the frequency—that is, the greater the departure from the steady flow—the worse it would be for the filament. But if the truth of this remark were demonstrated, it would be erroneous to conclude that such a refractory button as used in these bulbs would be deteriorated quicker by currents of extremely high frequency than by steady or low frequency currents. From experience I may say that just the opposite holds good: the button withstands the bombardment better with currents of very high frequency. But this is due to the fact that a high frequency discharge passes through a rarefied gas with much greater freedom than a steady or low frequency discharge, and this will say that with the former we can work with a lower potential or with a less violent impact. As long, then, as the gas is of no consequence, a steady or low frequency current is better; but as soon as the action of the gas is desired and important, high frequencies are preferable.

In the course of these experiments a great many trials were made with all kinds of carbon buttons. Electrodes made of ordinary carbon buttons were decidedly more durable when the buttons were obtained by the application of enormous pressure. Electrodes

prepared by depositing carbon in well known ways did not show up well; they blackened the globe very quickly. From many experiences I conclude that lamp filaments obtained in this manner can be advantageously used only with low potentials and low frequency currents. Some kinds of carbon withstand so well that, in order to bring them to the point of fusion, it is necessary to employ very small buttons. In this case the observation is rendered very difficult on account of the intense heat produced. Nevertheless there can be no doubt that all kinds of carbon are fused under the molecular bombardment, but the liquid state must be one of great instability. Of all the bodies tried there were two which withstood best—diamond and carborundum. These two showed up about equally, but the latter was preferable, for many reasons. As it is more than likely that this body is not yet generally known, I will venture to call your attention to it.

It has been recently produced by Mr. E. G. Acheson, of Monongahela City, Pa., U. S. A. It is intended to replace ordinary diamond powder for polishing precious stones, etc., and I have been informed that it accomplishes this object quite successfully. I do not know why the name "carborundum" has been given to it, unless there is something in the process of its manufacture which justifies this selection. Through the kindness of the inventor, I obtained a short while ago some samples which I desired to test in regard to their qualities of phosphorescence and capability of withstanding high degrees of heat.

Carborundum can be obtained in two forms—in the form of "crystals" and of powder. The former appear to the naked eye dark colored, but are very brilliant; the latter is of nearly the same color as ordinary diamond powder, but very much finer. When viewed under a microscope the samples of crystals given to me did not appear to have any definite form, but rather resembled pieces of broken up egg coal of fine quality. The majority were opaque, but there were some which were transparent and colored. The crystals are a kind of carbon containing some impurities; they are extremely hard, and withstand for a long time even an oxygen blast. When the blast is directed against them they at first form a cake of some compactness, probably in consequence of the fusion of impurities they contain. The mass withstands for a very long time the blast without further fusion; but a slow carrying off, or burning, occurs, and, finally, a small quantity of a glass-like residue is left, which, I suppose, is melted alumina. When compressed strongly they conduct very well, but not as well as ordinary carbon. The powder, which is obtained from the crystals in some way, is practically non-conducting. It affords a magnificent polishing material for stones.

The time has been too short to make a satisfactory study of the properties of this product, but enough experience has been gained in a few weeks I have experimented upon it to say that it does possess some remarkable properties in many respects. It withstands excessively high degrees of heat, it is little deteriorated by molecular bombardment, and it does not blacken the globe as ordinary carbon does. The only difficulty which I have found in its use in connection with these experiments was to find some binding material which would resist the heat and the effect of the bombardment as successfully as carborundum itself does.

I have here a number of bulbs which I have provided with buttons of carborundum. To make such a button of carborundum crystals I proceed in the following manner: I take an ordinary lamp filament and dip its point in tar, or some other thick substance or paint which may be readily carbonized. I next pass the point of the filament through the crystals, and then hold it vertically over a hot plate. The tar softens and forms a drop on the point of the filament, the crystals adhering to the surface of the drop. By regulating the distance from the plate the tar is slowly dried out and the button becomes solid. I then once more dip the button in tar and hold it again over a plate until the tar is evaporated, leaving only a hard mass which firmly binds the crystals. When a larger button is required I repeat the process several times, and I generally also cover the filament a certain distance below the button with crystals. The button being mounted in a bulb, when a good vacuum has been reached, first a weak and then a strong discharge is passed through the bulb to carbonize the tar and expel all gases, and later it is brought to a very intense incandescence.

When the powder is used I have found it best to proceed as follows: I make a thick paint of carborundum and tar, and pass a lamp filament through the paint. Taking then most of the paint off by rubbing the filament against a piece of chamois leather, I hold it over a hot plate until the tar evaporates and the coating becomes firm. I repeat this process as many times as it is necessary to obtain a certain thickness of coating. On the point of the coated filament I form a button in the same manner.

There is no doubt that such a button—properly prepared under great pressure—of carborundum, especially of powder of the best quality, will withstand the effect of the bombardment fully as well as anything we know. The difficulty is that the binding material gives way, and the carborundum is slowly thrown off after some time. As it does not seem to blacken the globe in the least, it might be found useful for coating the filaments of ordinary Incandescent lamps, and I think that it is even possible to produce thin threads or sticks of carborundum which will replace the ordinary filaments in an incandescent lamp. A carborundum coating seems to be more durable than other coatings, not only because the carborundum can withstand high degrees of heat, but also because it seems to unite with the carbon better than any other material I have tried. A coating of zirconia or any other oxide, for instance, is far more quickly destroyed. I prepared buttons of diamond dust in the same manner as of carborundum, and these came in durability nearest to those prepared of carborundum, but the binding paste gave way much more quickly in the diamond buttons: this, however, I attributed to the site and irregularity of the grains of the diamond.

It was of interest to find whether carborundum possesses the quality of phosphorescence. One is, of course, prepared to encounter two difficulties: first, as regards the rough product, the "crystals," they are good conducting, and it is a fact that conductors do not

phosphoresce; second, the powder, being exceedingly fine, would not be apt to exhibit very prominently this quality, since we know that when crystals, even such as diamond or ruby, are finely powdered, they lose the property of phosphorescence to a considerable degree.

The question presents itself here, can a conductor phosphoresce? What is there in such a body as a metal, for instance, that would deprive it of the quality of phosphorescence, unless it is that property which characterizes it as a conductor? For it is a fact that most of the phosphorescent bodies lose that quality when they are sufficiently heated to become more or less conducting. Then, if a metal be in a large measure, or perhaps entirely deprived of that property, it should be capable of phosphorescence. Therefore it is quite possible that at some extremely high frequency, when behaving practically as a non-conductor, a metal of any other conductor might exhibit the quality of phosphorescence, even though it be entirely incapable of phosphorescing under the impact of a low-frequency discharge. There is, however, another possible way how a conductor might at least *appear* to phosphoresce.

Considerable doubt still exists as to what really is phosphorescence, and as to whether the various phenomena comprised under this head are due to the same causes. Suppose that in an exhausted bulb, under the molecular impact, the surface of a piece of metal or other conductor is rendered strongly luminous, but at the same time it is found that it remains comparatively cool, would not this luminosity be called phosphorescence? Now such a result, theoretically at least, is possible, for it is a mere question of potential of speed. Assume the potential of the electrode, and consequently the speed of the projected atoms, to be sufficiently high, the surface of the metal piece against which the atoms are projected would be rendered highly incandescent, since the process of heat generation would be incompatibly faster than that of radiating or conducting away from the surface of the collision. In the eye of the observer a single impact of the atoms would cause an instantaneous flash, but if the impact were repeated with sufficient rapidity they would produce a continuous impression upon his retina. To him then the surface of the metal would appear continuously incandescent and of constant luminous intensity, while in reality the light would be either intermittent or at least changing periodically in intensity. The metal piece would rise in temperature until equilibrium was attained—that is, until the energy continuously radiated would equal that intermittently supplied. But the supplied energy might under such conditions not be sufficient to bring the body to any more than a very moderate mean temperature, especially if the frequency of the atomic impacts be very low—just enough that the fluctuation of the intensity of the light emitted could not be detected by the eye. The body would now, owing to the manner in which the energy is supplied, emit a strong light, and yet be at a comparatively very low mean temperature. How could the observer call the luminosity thus produced? Even if the analysis of the light would teach him something definite, still he would probably rank it under the phenomena of phosphorescence. It is conceivable that in such a way both conducting and nonconducting bodies may be maintained at a certain-luminous intensity, but the energy required would very greatly vary with the nature and properties of the bodies.

These and some foregoing remarks of a speculative nature were made merely to bring out curious features of alternate currents or electric impulses. By their help we may cause a body to emit *more* light, while at a certain mean temperature, than it would emit if brought to that temperature by a steady supply; and, again, we may bring a body to the point of fusion, and cause it to emit *less* light than when fused by the application of energy in ordinary ways. It all depends on how we supply the energy, and what kind of vibrations we set up: in one case the vibrations are more, in the other less, adapted to affect our sense of vision.

Some effects, which I had not observed before, obtained with carborundum in the first trials, I attributed to phosphorescence, but in subsequent experiments it appeared that it was devoid of that quality. The crystals possess a noteworthy feature. In a bulb provided with a single electrode in the shape of a small circular metal disc, for instance, at a certain degree of exhaustion the electrode is covered with a milky film, which is separated by a dark space from the glow filling the bulb. When the metal disc is covered with carborundum crystals, the film is far more intense, and snow-white. This I found later to be merely an effect of the bright surface of the crystals, for when an aluminium electrode was highly polished it exhibited more or less the same phenomenon. I made a number of experiments with the samples of crystals obtained, principally because it would have been of special interest to find that they are capable of phosphorescence, on account of their being conducting. I could not produce phosphorescence distinctly, but I must remark that a decisive opinion cannot be formed until other experimenters have gone over the same ground.

The powder behaved in some experiments as though it contained alumina, but it did not exhibit with sufficient distinctness the red of the latter. Its dead color brightens considerably under the molecular impact, but I am now convinced it does not phosphoresce. Still, the tests with the powder are not conducive, because powdered carborundum probably does not behave like a phosphorescent sulphide, for example, which could be finely powdered without impairing the phosphorescence, but rather like powdered ruby or diamond, and therefore it would be necessary, in order to make a decisive test, to obtain it in a large lump and polish up the surface.

If the carborundum proves useful in connection with these and similar experiments, its chief value will be found in the production of coatings, thin conductors, buttons, or other electrodes capable of withstanding extremely high degrees of heat.

The production of a small electrode capable of withstanding enormous temperatures I regard as of the greatest importance in the manufacture of light. It would enable us to obtain, by means of currents of very high frequencies, certainly 20 times, if not more,

the quantity of light which is obtained in the present incandescent lamp by the same expenditure of energy. This estimate may appeal- to many exaggerated, but in reality I think it is far from being so. As this statement might be misunderstood I think it necessary to expose clearly the problem with which in this line of work we are confronted, and the manner in which, in my opinion, a solution will be arrived at.

Any one who begins a study of the problem will be apt to think that what is wanted in a lamp with an electrode is a very high degree of incandescence of the electrode. There he will be mistaken. The high incandescence of the button is a necessary evil, but what is really wanted is the high incandescence of the gas surrounding thee button. In other words, the problem in such a lamp is to bring a mass of gas to the highest possible incandescence. The higher the incandescence, the quicker the mean vibration, the greater is the economy of the light production. But to maintain a mass of gas at a high degree of incandescence in a glass vessel, it will always be necessary to keep the incandescent mass away from the glass; that is, to confine it as much as possible to the central portion of the globe.

In one of the experiments this evening a brush was produced at the end of a wire. This brush was a flame, a source of heat and light. It did not emit much perceptible heat, nor did it glow with an intense light; but is it the less a flame because it does not scorch my hand? Is it the less a flame because it does not hurt my eye by its brilliancy? The problem is precisely to produce in the bulb such a flame, much smaller in site, but incomparably more powerful. Were there means at hand for producing electric impulses of a sufficiently high frequency, and for transmitting them, the bulb could be done away with, unless it were used to protect the electrode, or to economize the energy by confining the heat. But as such means are not at disposal, it becomes necessary to place The terminal in a bulb and rarefy the air in the same. This is done merely to enable the apparatus to perform the work which it is not capable of performing at ordinary air pressure. In the bulb we are able to intensify the action to any degree—so far that the brush emits a powerful light.

The intensity of the light emitted depends principally on the frequency and potential of the impulses, and on the electric density on the surface of the electrode. It is of the greatest importance to employ the smallest possible button, in order to push the density very far. Under the violent impact of the molecules of the gas surrounding it, the small electrode is of course brought to an extremely high temperature, but around it is a mass of highly incandescent gas, a flame photosphere, many hundred times the volume of the electrode. With a diamond, carborundum or zircon button the photosphere can be as much as one thousand times the volume of the button. Without much reflecting one would think that in pushing so far the incandescence of the electrode it would be instantly volatilized. But after a careful consideration he would find that, theoretically, it should not occur, and in this fact—which, however, is experimentally demonstrated—lies principally the future value of such a lamp.

At first, when the bombardment begins, most of the work is performed on the surface of the button, but when a highly conducting photosphere is formed the button is comparatively relieved. The higher the incandescence of the photosphere the more it approaches in conductivity to that of the electrode, and the more, therefore, the solid and the gas form one conducting body. The consequence is that the further is forced the incandescence the more work, comparatively, is performed on the gas, and the less on the electrode. The formation of a powerful photosphere is consequently the very means for protecting the electrode. This protection, of course, is a relative one, and it should not be thought that by pushing the incandescence higher the electrode is actually less deteriorated. Still, theoretically, with extreme frequencies, this result must be reached, but probably at a temperature too high for most of the refractory bodies known. Given, then, an electrode which can withstand to a very high limit the effect of the bombardment and outward strain, it would be safe no matter how much it is forced beyond that limit. In an incandescent lamp quite different considerations apply. There the gas is not at all concerned: the whole of the work is performed on the filament; and the life of the lamp diminishes so rapidly with the increase of the degree of incandescence the economical reasons compel us to work it at a low incandescence. But if an incandescent lamp is operated with currents of very high frequency, the action of the gas cannot be neglected, and the rules for the most economical working must be considerably modified.

In order to bring such a lamp with one or two electrodes to a great perfection, it is necessary to employ impulses of very high frequency. The high frequency secures, among others, two chief advantages, which have a most important bearing upon the economy of the light production. First, the deterioration of the electrode is reduced by reason of the fact that we employ a great many small impacts, instead of a few violent ones, which shatter quickly the structure; secondly, the formation of a large photosphere is facilitated.

In order to reduce the deterioration of the electrode to the minimum, it is desirable that the vibration be harmonic, for any suddenness hastens the process of destruction. An electrode lasts much longer when kept at incandescence by currents, or impulses, obtained from a high-frequency alternator, which rise and fall more or less harmonically, than by impulses obtained from a disruptive discharge coil. In the latter case there is no doubt that most of the damage is done by the fundamental sudden discharges.

One of the elements of loss in such a lamp is the bombardment of the globe. As the potential is very high, the molecules are projected with great speed; they strike the glass, and usually excite a strong phosphorescence. The effect produced is very pretty but for economical reasons it would be perhaps preferable to prevent, or at least reduce to the minimum, the bombardment against

the globe, as in such case it is, as a result, not the object to excite phosphorescence, and as some loss of energy results from the bombardment. This loss in the bulb is principally dependent on the potential of the impulses and on the electric density on the surface of the electrode. In employing very high frequencies the loss of energy by the bombardment is greatly reduced, for, first, the potential needed to perform a given amount of work is much smaller; and, secondly, by producing a highly conducting photosphere around the electrode, the same result is obtained as though the electrode were much larger, which is equivalent to a smaller electric density. But be it by the diminution of the maximum potential or of the density, the gain is effected in the same manner, namely, by avoiding violent shocks, which strain the glass much beyond its limit of elasticity. If the frequency could be brought high enough, the loss due to the imperfect elasticity of the glass would be entirely negligible. The loss due to bombardment of the globe may, however, be reduced by using two electrodes instead of one. In such case each of the electrodes may be connected to one of the terminals; or else, if it is preferable to use only one wire, one electrode may be connected to one terminal and the other to the ground or to an insulated body of some surface, as, for instance, a shade on the lamp. In the latter case, unless some judgment is used, one of the electrodes might glow more intensely than the other.

But on the whole I find it preferable when using such high frequencies to employ only one electrode and one connecting wire. I am convinced that the illuminating device of the near future will not require for its operation more than one lead, and, at any rate, it will have no leading-in wire, since the energy required can be as well transmitted through the glass. In experimental bulbs the leading-in wire is most generally used on account of convenience, as in employing condenser coatings in the manner indicated in Fig. 22, for example, there is some difficulty in fitting the parts, but these difficulties would not exist if a great many bulbs were manufactured; otherwise the energy can be conveyed through the glass as well as through a wire, and with these high frequencies the losses are very small. Such illuminating deices will necessarily involve the use of very high potentials, and this, in the eyes of practical men, might be an objectionable feature. Yet, in reality, high potentials are not objectionable—certainly not in the least as far as the safety of the devices is concerned.

There are two ways of rendering an electric appliance safe. One is to use low potentials, the other is to determine the dimensions of the apparatus so that it is safe no matter how high a potential is used. Of the two the latter seems to me the better way, for then the safety is absolute, unaffected by any possible combination of circumstances which might render even a low-potential appliance dangerous to life and property. But the practical conditions require not only the judicious determination of the dimensions of the apparatus; they likewise necessitate the employment of energy of the proper kind. It is easy, for instance, to construct a transformer capable of giving, when operated from an ordinary alternate current machine of low tension, say 50,000 volts, which might be required to light a highly exhausted phosphorescent tube, so that, in spite of the high potential, it is perfectly safe, the shock from it producing no inconvenience. Still, such a transformer would be expensive, and in itself inefficient; and, besides, what energy was obtained from it would not be economically used for the production of light. The economy demands the employment of energy in the form of extremely rapid vibrations. The problem of producing light has been likened to that of maintaining a certain high-pitch note by means of a bell. It should be said a *barely audible* note; and even these words would not express it, so wonderful is the sensitiveness of the eye. We may deliver powerful blows at long intervals, waste a good deal of energy, and still not get what we want; or we may keep up the note by delivering frequent gentle taps, and get nearer to the object sought by the expenditure of mud•1 less energy. In the production of light, as far as the illuminating device is concerned, there can be only one rule—that is, to use as high frequencies as can be obtained; but the means for the production and conveyance of impulses of such character impose, at present at least, great limitations. Once it is decided to use very high frequencies, the return wire becomes unnecessary, and all the appliances are simplified. By the use of obvious means the same result is obtained as though the return wire were used. It is sufficient for this purpose to bring in contact with the bulb, or merely in the vicinity of the same, an insulated body of some surface. The surface need, of course, be the smaller, the higher the frequency and potential used, and necessarily, also, the higher the economy of the lamp or other device.

This plan of working has been resorted to on several occasions this evening. So, for instance, when the incandescence of a button was produced by grasping the bulb with the hand, the body of the experimenter merely served to intensify the action. The bulb used was similar to that illustrated in Fig. 19, and the coil was excited to a small potential, not sufficient to bring the button to incandescence when the bulb was hanging from the wire; and incidentally, in order to perform the experiment in a more suitable manner, the button was taken so large that a perceptible time had to elapse before, upon grasping the bulb, it could be rendered incandescent. The contact with the bulb was, of course, quite unnecessary. It is easy, by using a rather large bulb with an exceedingly small electrode, to adjust the conditions so that the latter is brought to bright incandescence by the mere approach of the experimenter within a few feet of the bulb, and that the incandescence subsides upon his receding.

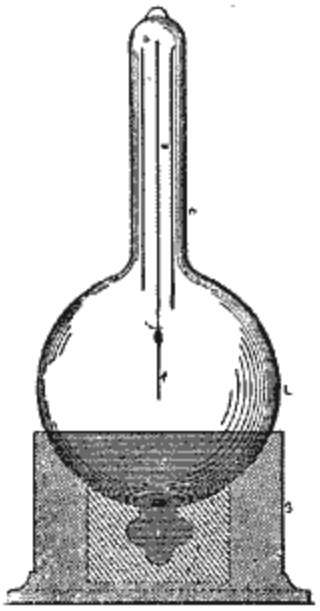

Fig. 24.

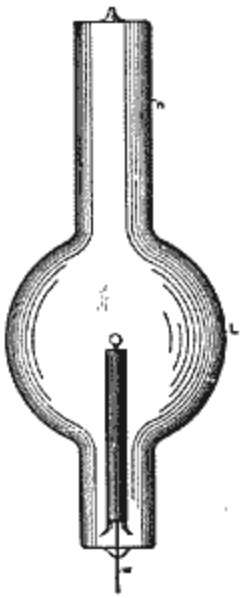

Fig. 25.

In another experiment, when phosphorescence was excited, a similar bulb was used. Here again, originally, the potential was not sufficient to excite phosphorescence until the action was intensified—in this case, however, to present a different feature, by touching the socket with a metallic object held in the hand. The electrode in the bulb was a carbon button so large that it could not be brought to incandescence, and thereby spoil the effect produced by phosphorescence.

Again, in another of the early experiments, a bulb was used as illustrated in Fig. 12. In this instance, by touching the bulb with one or two fingers, one or two shadows of the stem inside were projected against the glass, the touch of the finger producing the same result as the application of an external negative electrode under ordinary circumstances.

In all these experiments the action was intensified by augmenting the capacity at the end of the lead connected to the terminal. As a rule, it is not necessary to resort to such means, and would be quite unnecessary with still higher frequencies; but when it is desired, the bulb, or tube, can be easily adapted to the purpose.

In Fig. 24, for example, an experimental bulb *L* is shown, which is provided with a neck *n* on the top for the application of an external tinfoil coating, which may be connected to a body of larger surface. Sum a lamp as illustrated in Fig. 25 may also be lighted by connecting the tinfoil coating on the neck *n* to the terminal, and the leading-in wire *w* to an insulated plate. If the bulb stands in a socket upright, as shown in the cut, a shade of conducting material may be slipped in the neck *n*, and the action thus magnified.

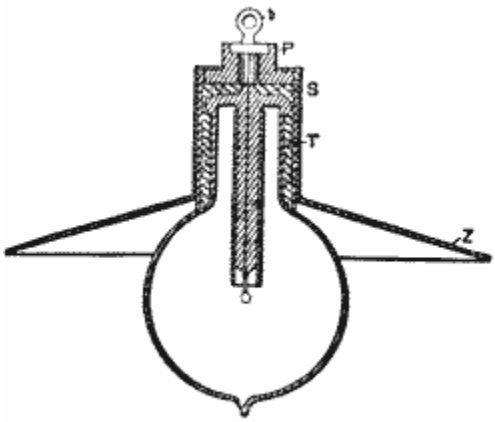

Fig. 26.

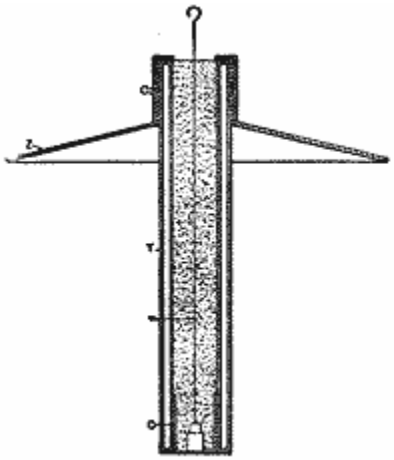

Fig. 27.

A more perfected arrangement used in some of these bulbs is illustrated in Fig. 26. In this case the construction of the bulb is as shown and described before, where reference was made to Fig. 19. A zinc sheet *Z*, with a tubular extension *T*, is slipped over the metallic socket *S*. The bulb hangs downward from the terminal *t*, the zinc sheet *Z*, performing the double office of intensifier and

reflector. The reflector is separated from the terminal *t* by an extension of the insulating plug *P*.

A similar disposition with a phosphorescent tube is illustrated in Fig. 27. The tube *T* is prepared from two short tubes of a different diameter, which are sealed on the ends. On the lower end is placed an outside conducting coating *C*, which connects to the wire *w*. The wire has a hook on the upper end for suspension, and passes through the centre of the inside tube, which is filled with some good and tightly packed insulator. On the outside of the upper end of the tube, *T*, is another conducting coating C_1, upon which is slipped a metallic reflector *Z*, which should be separated by a thick insulation from the end of wire *w*.

The economical use of such a reflector or intensifier would require that all energy supplied to an air condenser should be recoverable, or, in other words, that there should not be any losses, neither in the gaseous medium nor through its action elsewhere. This is far from being so, but, fortunately, the losses may be reduced to anything desired. A few remarks are necessary on this subject, in order to make the experiences gathered in the course of these investigations perfectly clear.

Suppose a small helix with many well insulated turns, as in experiment Fig. 17, had one of its ends connected to one of the terminals of the induction coil, and the other to a metal plate, or, for the sake of simplicity, a sphere, insulated in space. When the coil is set to work, the potential of the sphere is alternated, and the small helix now behaves as though its free end were connected to the other terminal of the induction coil. If an iron can be held within the small helix it is quickly brought to a high temperature, indicating the passage of a strong current through the helix. How does the insulated sphere act in this case? It can be a condenser, storing and returning the energy supplied to it, or it can be a mere sink of energy, and the conditions of the experiment determine whether it is more one or the other. The sphere being charged to a high potential, it acts inductively upon the surrounding air, or whatever gaseous medium there might be. The molecules, or atoms, which are near the sphere are of course more attracted, and move through a greater distance than the farther ones. When the nearest molecules strike the sphere they are repelled, and collisions occur at all distances within the inductive action of the sphere. It is now clear that, if the potential be steady, but little loss of energy can be caused in this way, for the molecules which are nearest to the sphere, having had an additional charge imparted to them by contact, are not Attracted until they have parted, if not with all, at least with most of the additional charge, which can be accomplished only after a great many collisions. From the fact that with a steady potential there is but little loss in dry air, one must come to such a conclusion. When the potential of the sphere, instead of being steady, is alternating, the conditions are entirely different. In this case a rhythmical bombardment occurs, no matter whether the molecules after coming in contact with the sphere lose the imparted charge or not; what is more, if the charge is not lost, the impacts are only the more violent. Still if the frequency of the impulses be very small, the loss caused hg the impacts and collisions would not be serious unless the potential were excessive. But when extremely high frequencies and more or less high potentials are used, the loss may be very great. The total energy lost per unit of time is proportionate to the product of the number of impacts per second, or the frequency and the energy lost in each impact. But the energy of an impact must be proportionate to the square of the electric density of the sphere, since the charge imparted to the molecule is proportionate to that density. I conclude from this that the total energy lost must be proportionate to the product of the frequency and the square of the electric density; but this law needs experimental confirmation. Assuming the preceding considerations to be true, then, by rapidly alternating the potential of a body immersed in an insulating gaseous medium, any amount of energy may be dissipated into space. Most of that energy then, I believe, is not dissipated in the form of long ether waves, propagated to considerable distance, as is thought most generally, but is consumed—in the case of an insulated sphere, for example—in impact and collisional losses—that is, heat vibrations—on the surface and in the vicinity of the sphere. To reduce the dissipation it is necessary to work with a small electric density the smaller the higher the frequency.

But since, on the assumption before made, the loss is diminished with the square of the density, and since currents of very high frequencies involve considerable waste when transmitted through conductors, it follows that, on the whole, it is better to employ one wire than two. Therefore, if motors, lamps, or devices of any kind are perfected, capable of being advantageously operated by currents of extremely high frequency, economical reasons will make it advisable to use only one wire, especially if the distances are great.

When energy is absorbed in a condenser the same behaves as though its capacity were increased. Absorption always exists more or less, but generally it is small and of no consequence as long as the frequencies are not very great. In using extremely high frequencies, and, necessarily in such case, also high potentials, the absorption—or, what is here meant more particularly by this term, the loss of energy due to the presence of a gaseous medium—is an important factor to be considered, as the energy absorbed it the air condenser may be any fraction of the supplied energy. This would seem to make it very difficult to tell from the measured or computed capacity of an air condenser its actual capacity or vibration period, especially if the condenser is of very small surface and is charged to a very high potential. As many important results are dependent upon the correctness of the estimation of the vibration period, this subject demands the most careful scrutiny of other investigators. To reduce the probable error as much as possible in experiments of the kind alluded to, it is advisable to use spheres or plates of large surface, so as to make the density exceedingly small. Otherwise, when it is practicable, an oil condenser should be used in preference. In oil or other liquid dielectrics there are seemingly no such losses as in gaseous media. It being impossible to exclude entirely the gas in condensers with solid dielectrics, such condensers should be immersed in oil, for economical reasons if nothing else; they can then be strained to the utmost and will remain cool. In Leyden jars the loss due to air is comparatively small, as the tinfoil coatings are large, close

together, and the charged surfaces not directly exposed; but when the potentials are very high, the loss may be more or less considerable at, or near, the upper edge of the foil, where the air is principally acted upon. If the jar be immersed in boiled-out oil, it will be capable of performing four times the amount of work which it can for any length of time when used in the ordinary way, and the loss will be inappreciable.

It should not be thought that the loss in heat in an air condenser is necessarily associated with the formation of *visible* streams or brushes. If a small electrode, inclosed in an unexhausted bulb, is connected to one of the terminals of the coil, streams can be seen to issue from the electrode and the air in the bulb is heated; if, instead of a small electrode, a large sphere is inclosed in the bulb, no streams are observed, still the air is heated.

Nor should it be thought that the temperature of an air condenser would give even an approximate idea of the loss in heat incurred, as in such case heat must be given off much more quickly, since there is, in addition to the ordinary radiation, a very active carrying away of heat by independent carriers going on, and since not only the apparatus, but the air at some distance from it is heated in consequence of the collisions which must occur.

Owing to this, in experiments with such a coil, a rise of temperature can be distinctly observed only when the body connected to the coil is very small. But with apparatus on a larger scale, even a body of considerable bulk would be heated, as, for instance, the body of a person; and I think that skilled physicians might make observations of utility in such experiments, which, if the apparatus were judiciously designed, would not present the slightest danger.

A question of some interest, principally to meteorologists, presents itself here. How does the earth behave? The earth is an air condenser, but is it a perfect or a very imperfect one—a mere sink of energy? There can be little doubt that to such small disturbance as might be caused in an experiment the earth behaves as an almost perfect condenser. But it might be different when its charge is set in vibration by some sudden disturbance occurring in the heavens. In such case, as before stated, probably only little of the energy of the vibrations set up would be lost into space in the form of long ether radiations, but most of the energy, I think, would spend itself in molecular impacts and collisions, and pass off into space in the form of short heat, and possibly light, waves. As both the frequency of the vibrations of the charge and the potential are in all probability excessive, the energy converted into heat may be considerable. Since the density must be unevenly distributed, either in consequence of the irregularity of the earth's surface, or on account of the condition of the atmosphere in various places, the effect produced would accordingly vary from place to place. Considerable variations in the temperature and pressure of the atmosphere may in this manner be caused at any point of the surface of the earth. The variations may be gradual or very sudden, according to the nature of the general disturbance, and may produce rain and storms, or locally modify the weather in any way.

From the remarks before made one may see what an important factor of loss the air in the neighborhood of a charged surface becomes when the electric density is great and the frequency of the impulses excessive. But the action as explained implies that the air is insulating—that is, that it is composed of independent carriers immersed in an insulating medium. This is the case only when the air is at something like ordinary or greater, or at extremely small, pressure. When the air is slightly rarefied and conducting, then true conduction losses occur also. In such case, of course, considerable energy may be dissipated into space even with a steady potential, or with impulses of low frequency, if the density is very great.

When the gas is at very low pressure, an electrode is heated more because higher speeds can be reached. If the gas around the electrode is strongly compressed, the displacements, and consequently the speeds, are very small, and the heating is insignificant. But if in such case the frequency could be sufficiently increased, the electrode would be brought to a high temperature as well as if the gas were at very low pressure; in fact, exhausting the bulb is only necessary because we cannot produce (and possibly not convey) currents of the required frequency.

Returning to the subject of electrode lamps, it is obviously of advantage in such a lamp to confine as much as possible the heat to the electrode by preventing the circulation of the gas in the bulb. If a very small bulb be taken, it would confine the heat better than a large one, but it might not be of sufficient capacity to be operated from the coil, or, if so, the glass might get too hot. A simple way to improve in this direction is to employ a globe of the required size, but to place a small bulb, the diameter of which is properly estimated, over the refractory button contained in the globe. This arrangement is illustrated in Fig. 28.

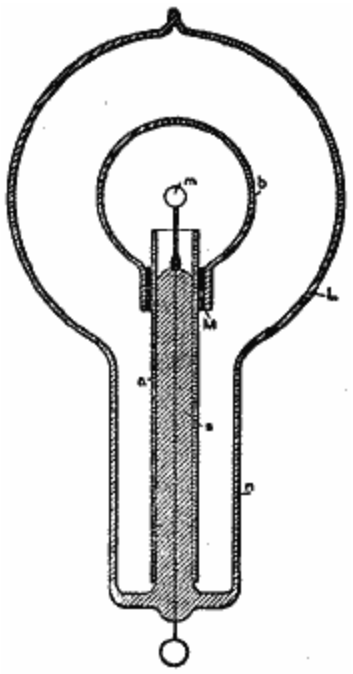

Fig. 28.

The globe L has in this case a large neck *n*, allowing the small bulb *b* to slip through. Otherwise the construction is the same as shown in Fig. 18, for example. The small bulb is conveniently supported upon the stem *s*, carrying the refractory button *m*. In tube a by several layers of mica *M*, in order to prevent the cracking of the neck by the rapid heating of the aluminium tube upon a sudden turning on of the current. The inside bulb should be as small as possible when it is desired to obtain light only by incandescence of the electrode. If it is desired to produce phosphorescence, the bulb should be larger, else it would be apt to get too hot, and the phosphorescence would cease. In this arrangement usually only the small bulb shows phosphorescence, as there is practically no bombardment against the outer globe. In some of these bulbs constructed as illustrated in Fig. 28 the small tube was coated with phosphorescent paint, and beautiful effects were obtained. Instead of making the inside bulb large, in order to avoid undue heating, it answers the purpose to make the electrode *m* larger. In this case the bombardment is weakened by reason of the smaller electric density.

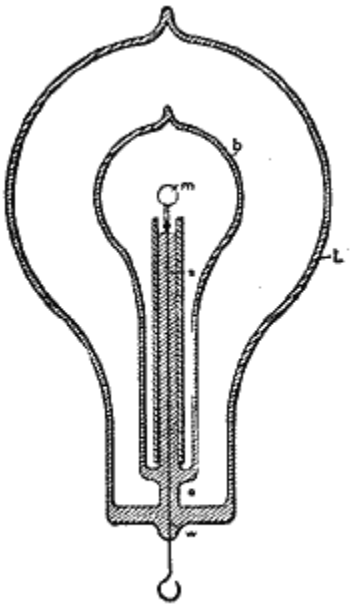

Fig. 29

Many bulbs were constructed on the plan illustrated in Fig. 29. Here a small bulb *b*, containing the refractory button *m*, upon being exhausted to a very high degree was sealed in a large globe L, which was then moderately exhausted and sealed off. The principal advantage of this construction was that it allowed of reaching extremely high vacua, and, at the same time use a large bulb. It was found, in the course of experiences with bulbs such as illustrated in Fig. 29, that it was well to make the stem *s* near the seal

at *c* very thick, and the leading-in wire *w* thin, as it occurred sometimes that the stem at *e* was heated and the bulb was cracked. Often the outer globe L was exhausted only just enough to allow the discharge to pass through, and the space between the bulbs appeared crimson, producing a curious effect. In some cases, when the exhaustion in globe L was very low, and the air good conducting, it was found necessary, in order to bring the button *m* to high incandescence, to place, preferably on the upper part of the neck of the globe, a tinfoil coating which was connected to an insulated body, to the ground, or to the other terminal of the coil, as the highly conducting air weakened the effect somewhat, probably by being acted upon inductively from the wire *w*, where it entered the bulb at *e*. Another difficulty—which, however, is always present when the refractory button is mounted in a very small bulb—existed in the construction illustrated in Fig. 29, namely, the vacuum in the bulb *b*would be impaired in a comparatively short time.

The chief idea in the two last described constructions was to confine the heat to the central portion of the globe by preventing the exchange of air. An advantage is secured, but owing to the heating of the inside bulb and slow evaporation of the glass the vacuum is hard to maintain, even if the construction illustrated in Fig. 28 be chosen, in which both bulbs communicate.

But by far the better way—the ideal way—would be to reach sufficiently high frequencies. The higher the frequency the slower would be the exchange of the air, and I think that a frequency may be reached at which there would be no exchange whatever of the air molecules around the terminal. We would then produce a flame in which there would be no carrying away of material, and a queer flame it would be, for it would be rigid! With such high frequencies the inertia of the particles, would come into play. As the brush, or flame, would gain rigidity in virtue of the inertia of the particles, the exchange of the latter would be prevented. This would necessarily occur, for, the number ~f the impulses being augmented, the potential energy of each would diminish, so that finally only atomic vibrations could be set up, and the motion of translation through measurable space would cease. Thus an ordinary gas burner connected to a source of rapidly alternating potential might have its efficiency augmented to a certain limit, and this for two reasons—because of the additional vibration imparted, and because of a slowing down of the process of carrying off. But the renewal being rendered difficult, and renewal being necessary to maintain the *burner*, a continued increase of the frequency of the impulses, assuming they could be transmitted to and impressed upon the flame, would result in the "extinction" of the latter, meaning by this term only the cessation of the chemical process.

I think, however, that in the case of an electrode immersed in a fluid insulating medium, and surrounded by independent carriers of electric charges, which can be acted upon inductively, a sufficiently high frequency of the impulses would probably result in a gravitation of the gas all around toward the electrode. For this it would be only necessary to assume that the independent bodies are irregularly shaped; they would then turn toward the electrode their side of the greatest electric density, and this would be a position in which the fluid resistance to approach would be smaller than that offered to the receding.

The general opinion, I do not doubt, is that it is out of the question to reach any such frequencies as might—assuming some of the views before expressed to be true produce any of the results which I have pointed out as mere possibilities. This may be so, but in the course of these investigations, from the observation of many phenomena I have gained the conviction that these frequencies would be much lower than one is apt to estimate at first. In a flame we set up light vibrations by causing molecules, of atoms, to collide. But what is the ratio of the frequency of the collisions and that of the vibrations set up? Certainly it must be incomparably smaller than that of the knocks of the bell and the sound vibrations, or that of the discharges and the oscillations of the condenser. We may cause the molecules of the gas to collide by the use of alternate electric impulses of high frequency, and so we may imitate the process in a flame; and from experiments with frequencies which we are now able to obtain, I think that the result is producible with impulses which are transmissible through a conductor.

In connection with thoughts of a similar nature, it appeared to me of great interest to demonstrate the rigidity of a vibrating gaseous column. Although with such low frequencies as, say 10,000 per second, which I was able to obtain without difficulty from a specially constructed alternator, the task looked discouraging at first, I made a series of experiments. The trials with air at ordinary pressure led to no result, but with air moderately rarefied I obtain what I think to be an unmistakable experimental evidence of the property sought for. As a result of this kind might lead able investigators to conclusions of importance I will describe one of the experiments performed.

It is well known that when a tube is slightly exhausted the discharge may be passed through it in the form of a thin luminous thread. When produced with currents of low frequency, obtained from a coil operated as usual, this thread is inert. If a magnet be approached to it, the part near the same is attracted or repelled, according to the direction of the lines of force of the magnet. It occurred to me that if such a thread would be produced with currents of very high frequency, it should be more or less rigid, and as it was visible it could be easily studied. Accordingly I prepared a tube about 1 inch in diameter and 1 metre long, with outside coating at each end. The tube was exhausted to a point at which, by a little working the thread discharge could be obtained. It must be remarked here that the general aspect of the tube, and the degree of exhaustion, are quite different than when ordinary low frequency currents are used. As it was found preferable to work with one terminal, the tube prepared was suspended from the end of a wire connected to the terminal, the tinfoil coating being connected to the wire, and to the lower coating sometimes a small insulated plate was attached. When the thread was formed it extended through the upper part of the tube and lost itself in the lower

end. If it possessed rigidity it resembled, not exactly an elastic cord stretched tight between two supports, but a cord suspended from a height with a small weight attached at the end. When the finger or a magnet was approached to the upper end of the luminous thread, it could be brought locally out of position by electrostatic or magnetic action; and when the disturbing object was very quickly removed, an analogous result was produced, as though a suspended cord would be displaced and quickly released near the point of suspension. In doing this the luminous thread was set in vibration, and two very sharply marked nodes, and a third indistinct one, were formed. The vibration, once set up, continued for fully eight minutes, dying gradually out. The speed of the vibration often varied perceptibly, and it could be observed that the electrostatic attraction of the glass affected the vibrating thread; but it was clear that the electrostatic action was not the cause of the vibration, for the thread was most generally stationary, and could always be set in vibration by passing the finger quickly near the upper part of the tube. With a magnet the thread could be split in two and both parts vibrated. By approaching the hand to the lower coating of the tube, or insulated plate if attached, the vibration was quickened; also, as far as I could see, by raising the potential of frequency. Thus, either increasing the frequency or passing a stronger discharge of the same frequency corresponded to a tightening of the cord. I did not obtain any experimental evidence with condenser discharges. A luminous band excited in a bulb by repeated discharges of a Leyden jar must possess rigidity, and if deformed and suddenly released should vibrate. But probably the amount of vibrating matter is so small that in spite of the extreme speed the inertia cannot prominently assert itself. Besides, the observation in such a case is rendered extremely difficult on account of the fundamental vibration.

The demonstration of the fact—which still needs better experimental confirmation—that a vibrating gaseous column possesses rigidity, might greatly modify the views of thinkers. When with low frequencies and insignificant potentials indications of that property may be noted, how must a gaseous medium behave under the influence of enormous electrostatic stresses which may be active in the interstellar space, and which may alternate with inconceivable rapidity! The existence of such an electrostatic, rhythmically throbbing force—of a vibrating electrostatic field—would show a possible way how solids might have formed from the ultra-gaseous uterus, and how transverse and all kinds of vibrations may be transmitted through a gaseous medium filling all space. Then, ether might be a true fluid, devoid of rigidity, and at rest, it being merely necessary as a connecting link to enable interaction. What determines the rigidity of a body? It must be the speed and the amount of moving matter. In a gas the speed may be considerable, but the density is exceedingly small; in a liquid the speed would be likely to be small, though the density may be considerable; and in both cases the inertia resistance offered to displacement is practically *nil*. But place a gaseous (or liquid) column in an intense, rapidly alternating electrostatic field, set the particles vibrating with enormous speeds, then the inertia resistance asserts itself. A body might move with more or less freedom through the vibrating mass, but as a whole it would be rigid.

There is a subject which I must mention in connection with these experiments: it is that of high vacua. This is a subject the study of which is not only interesting, but useful, for it may lead to results of great practical importance. In commercial apparatus such as incandescent lamps, operated from ordinary systems of distribution, a much higher vacuum than obtained at present would not secure a very great advantage. In such a case the work is performed on the filament and the gas is little concerned; the improvement, therefore, would be but trifling. But when we begin to use very high frequencies and potentials, the action of the gas becomes all important, and the degree of exhaustion materially modifies the results. As long as ordinary coils, even very large ones, were used, the study of the subject was limited, because just at a point when it became most interesting it had to be interrupted on account of the "non-striking" vacuum being reached. But presently we are able to obtain from a small disruptive discharge coil potentials much higher than even the largest coil was capable of giving, and, what is more, we can make the potential alternate with great rapidity. Both of these results enable us now to pass a luminous discharge through almost any vacua obtainable, and the field of our investigations is greatly extended. Think we as we may, of all the possible directions to develop a practical illuminant, the line of high vacua seems to be the most promising at present. But to reach extreme vacua the appliances must be much mote improved, and ultimate perfection will not be attained until we shall have discarded the mechanical and perfected an *electrical*vacuum pump. Molecules and atoms can be thrown out of a bulb under the action of an enormous potential: *this* will be the principle of the vacuum pump of the future. For the present, we must secure the best results we can with mechanical appliances. In this respect, it might not be out of the way to say a few words about the method of, and apparatus for, producing excessively high degrees of exhaustion of which I have availed myself in the course of these investigations. It is very probable that other experimenters have used similar arrangements; but as it is possible that there may be an item of interest in their description, a few remarks, which will render this investigation more complete, might be permitted.

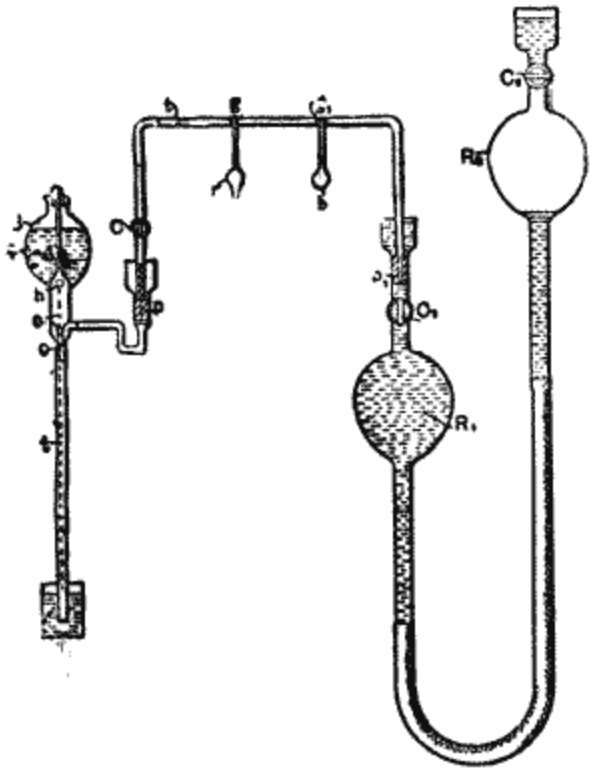

Fig. 30.

The apparatus is illustrated in a drawing shown in Fig. 30. S represents a Sprengel pump, which has been specially constructed to better suit the work required. The stopcock which is usually employed has been omitted, and instead of it a hollow stopper has been fitted in the neck of the reservoir R. This stopper has a small hole *h*, through which the mercury descends; the size of the outlet *o* being properly determined with respect to the section of the fall tube *t*, which is sealed to the reservoir instead of being connected to it in the usual manner. This arrangement overcomes the imperfections and troubles, which often arise from the use of the stopcock on the reservoir and the connection of the latter with the fall tube.

The pump is connected through a **U**-shaped tube *t* to a very large reservoir R_1. Especial care was taken in fitting the grinding surfaces of the stoppers *p* and p_1 and both of these and the mercury caps above them were made exceptionally long. After the **U**-shaped tube was fitted and put in place, it was heated, so as to soften and take off the strain resulting from imperfect fitting. The **U**-shaped tube was provided with a stopcock C, and two ground connections *g* and g_1—one for a small bulb *b*, usually containing caustic potash, and the other for the receiver *r*, to be exhausted.

The reservoir R_1 was connected by means of a rubber tube to a slightly larger reservoir R_2, each of the two reservoirs being provided with a stopcock C_1 and C_2 respectively. The reservoir R_2could be raised and lowered by a wheel and rack, and the range of its motion was so determined that when it was filled with mercury and the stopcock *C*, closed, so as to form a Torricellian vacuum in it when raised, it could be lifted so high that the mercury in reservoir R_1 would stand a little above stopcock C_1: and when this stopcock was closed and the reservoir R_2descended, so as to form a Torricellian vacuum in reservoir R_1, it could be lowered so far as to completely empty the latter, the mercury filling the reservoir R_2 up to a little above stopcockC_2.

The capacity of the pump and of the connections was taken as small as possible relatively to the volume of reservoir, R_1, since, of course, the degree of exhaustion depended upon the ratio of these quantities.

With this apparatus I combined the usual means indicated by former experiments for the production of very high vacua. In most of the experiments it was convenient to use caustic potash. I may venture to say, in regard to its use, that much time is saved and a more perfect action of the pump insured by fusing and boiling the potash *w* soon as, or even before, the pump settles down. If this course is not followed the sticks, as ordinarily employed, may give moisture off at a certain very slow rate, and the pump may work for many hours without reaching a very high vacuum. The potash was heated either by a spirit lamp or by passing a discharge through it, or by passing a current through a wire contained in it. The advantage in the latter case was that the heating could be more rapidly repeated.

Generally the process of exhaustion was the following:—at the start, the stopcocks *C* and C_1 being open, and all other connections closed, the reservoir R_2 was raised so far that the mercury filled the reservoir R_1 and a part: of the narrow connecting **U**-shaped

tube. When the pump was set to work, the mercury would, of course, quickly rise in the tube, and reservoir $R_2$was lowered, the experimenter keeping the mercury at about the same level. The reservoir R_2 was balanced by a long spring which facilitated the operation, and the friction of the parts was generally sufficient to keep it almost in any position. When the Sprengel pump had done its work, the reservoir R_2 was further lowered and the mercury descended in R_1 and filled R_2, whereupon stopcock C_2 was closed. The air adhering to the walls of *R*, and that absorbed by the mercury was carried off, and to free the mercury of all air the reservoir R_2 was for a long time worked up and down. During this process some air, which would gather below stopcock C_2, was expelled from R_2 by lowering it far enough and opening the stopcock, closing the latter again before raising the reservoir. When all the air had been expelled from the mercury, and no air would gather in R_2 when it was lowered, the caustic potash was resorted to. The reservoir $R_2$was now again raised until the mercury in R_1 stood above stopcock C_1. The caustic potash was fused and boiled, and the moisture partly carried off by the pump and partly re-absorbed; and this process of heating and cooling was repeated many times, and each time, upon the moisture being absorbed or carried off, the reservoir R_2 was for a long time raised and lowered. In this manner all the moisture was carried off from the mercury, and both the reservoirs were in proper condition to be used. The reservoir R_2 was then again raised to the top, and the pump was kept working for a long time. When the highest vacuum obtainable with the pump had been reached the potash bulb was usually wrapped with cotton which was sprinkled with ether so as to keep the potash at a very low temperature, then the reservoir R_2 was lowered, and again reservoir R_1 being emptied the receiver *r* was quickly sealed up.

When a new bulb was put on, the mercury was always raised above stopcock C_1, which was closed, so as to always keep the mercury and both the reservoirs in fine condition, and the mercury was never withdrawn from R_1 except when the pump had reached the highest degree of exhaustion. It is necessary to observe this rule if it is desired to use the apparatus to advantage.

By means of this arrangement I was able to proceed very quickly, and when the apparatus was in perfect order it was possible to reach the phosphorescent stage in a small bulb in less than fifteen minutes, which is certainly very quick work for a small laboratory arrangement requiring all in all about 100 pounds of mercury. With ordinary small bulbs the ratio of the capacity of the pump, receiver, and connections, and that of reservoir *R* was about 1 to 20, and the degrees of exhaustion reached were necessarily very high, though I am unable to make a precise and reliable statement how far the exhaustion was carried.

What impresses the investigator most in the course of these experiences is the behavior of gases when subjected to great rapidly alternating electrostatic stresses. But he must remain in doubt as to whether the effects observed are due wholly to the molecules, or atoms, of the gas which chemical analysis discloses to us, or whether there enters into play another medium of a gaseous nature, comprising atoms, or molecules, immersed in a fluid pervading the space. Such a medium, surely must exist, and I am convinced that, for instance, even if air were absent, the surface and neighborhood of a body in space would be heated by rapidly alternating the potential of the body; but no such heating of the surface or neighborhood could occur if all free atoms were removed and only a homogeneous, incompressible, and elastic fluid—such as ether is supposed to be—would remain, for then there would be no impacts, no collisions. In such a case, as far as the body itself is concerned, only frictional losses in the inside could occur.

It is a striking fact that the discharge through a gas is established with ever increasing freedom as the frequency of the impulses is augmented. It behaves in this respect quite contrarily to a metallic conductor. In the latter the impedance enters prominently into play as the frequency is increased, but the gas acts much as a series of condensers would: the facility with which the discharge passes through seems to depend on the rate of change of potential. If it act so, then in a vacuum tube even of great length, and no matter how strong the current, self-induction could not assert itself: to any appreciable degree. We have, then, as far as we can now see, in the gas a conductor which is capable of transmitting electric impulses of any frequency which we may be able to produce. Could the frequency be brought high enough, then a queer system of electric distribution, which would be likely to interest gas companies, might be realized : metal pipes filled with gas—the metal being the insulator, the gas the conductor—supplying phosphorescent bulbs, or perhaps devices as yet uninvented. It is certainly possible to take a hollow core of copper, rarefy the gas in the same, and by passing impulses of sufficiently high frequency through a circuit around it, bring the gas inside to a high degree of incandescence; but as to the nature of the forces there would be considerable uncertainty, for it would be doubtful whether with such impulses the copper core would act as a static screen. Such paradoxes and apparent impossibilities we encounter at every step in this line of work, and therein lies, to a great extent, the charm of the study.

I have here a short and wide tube which is exhausted to a high degree and covered with a substantial coating of bronze, the coating allowing barely the light to shine through. A metallic clasp, with a hook for suspending the tube, is fastened around the middle portion of the latter, the clasp being in contact with the bronze coating. I now want to light the gas inside by suspending the tube on a wire connected to the coil. Any one who would try the experiment for the first time, not having any previous experience, would probably take care to be quite alone when making the trial, for fear that he might become the joke of his assistants. Still, the bulb lights in spite of the metal coating, and the light can be distinctly perceived through the latter. A long tube covered with aluminium bronze lights when held in one hand—the other touching the terminal of the coil—quite powerfully. It might be objected that the coatings arc not sufficiently conducting; still, even if they were highly resistant, they ought to screen the gas. They certainly screen it perfectly in a condition of rest, but not by far perfectly when the charge is surging in the coating. But the loss of energy which occurs within the tube, notwithstanding the screen, is occasioned principally by the presence of the gas. Were we to take a large hollow metallic sphere and fill it with a perfect incompressible fluid dielectric, there would be no loss inside of the sphere, and

consequently the inside might be considered as perfectly screened, though the potential be very rapidly alternating. Even were the sphere filled with oil, the loss would be incomparably smaller than when the fluid is replaced by a gas, for in the latter case the force produces displacements; that means impact and collisions in the inside.

No matter what the pressure of the gas may be, it becomes an important factor in the bearing of a conductor when the electric density is great and the frequency very high. That in the heating of conductors by lightning discharges air is an element of great importance, is almost as certain as an experimental fact. I may illustrate the action of the air by the following experiment: I take a short tube which is exhausted to a moderate degree and has a platinum wire running through the middle from one end to the other. I pass a steady or low frequency current through the wire, and it is heated uniformly in all parts. The heating here is due to conduction, or frictional losses, and the gas around the wire has—as far as we can see—no function to perform. But now let me pass sudden discharges, or a high frequency current, through the wire. Again the wire is heated, this time principally on the ends and least in the middle portion; and if the frequency of the impulses, or the rate of change, is high enough, the wire might as well be cut in the middle as not, for practically all the heating is due to the rarefied gas: Here the gas might only act as a conductor of no impedance diverting the current from the wire as the impedance of the latter is enormously increased, and merely heating the ends of the wire by reason of their resistance to the passage of the discharge. But it is not at all necessary that the gas in the tube should be conducting; it might be at an extremely low pressure, still the ends of the wire would be heated—as, however, is ascertained by experience -only the two ends would in such case not be electrically connected through the gaseous medium. Now what with these frequencies and potentials occurs in an exhausted tube occurs in the lightning discharges at ordinary pressure. We only need to remember one of the facts arrived at in the course of these investigations, namely, that to impulses of very high frequency the gas at ordinary pressure behaves much in the same manner as though it were at moderately low pressure. I think that in lightning discharges frequently wires or conducting objects are volatilized merely because air is present, and that, were the conductor immersed in an insulating liquid, it would be safe, for then the energy would have to spend itself somewhere else. From the behavior of gases to sudden impulses of high potential I am led to conclude that there can be no surer way of diverting a lightning discharge than by affording it a passage through a volume of gas, if such a thing can be done in a practical manner.

There are two more features upon which I think it necessary to dwell in connection with these experiments—the "radiant state" and the non-striking vacuum."

Any one who has studied Crookes work must have received the impression that the "radiant state" is a property of the gas inseparably connected with an extremely high degree of exhaustion. But it should be remembered that the phenomena observed in an exhausted vessel are limited to the character and capacity of the apparatus which is made use of. I think that in a bulb a molecule, or atom, does not precisely move in a straight line because it meets no obstacle, but because the velocity imparted to it is sufficient to propel it in a sensibly straight line. The mean free path is one thing, but the velocity—the energy associated with the moving body—is another, and under ordinary circumstances I believe that it is mere question of potential or speed. A disruptive discharge coil, when the potential is pushed very far, excites phosphorescence and projects shadows, at comparatively low degrees of exhaustion. In a lightning discharge, matter moves in straight lines at ordinary pressure when the mean free path is exceedingly small, and frequently images of wires or other metallic objects have been produced by the particles thrown off in straight lines.

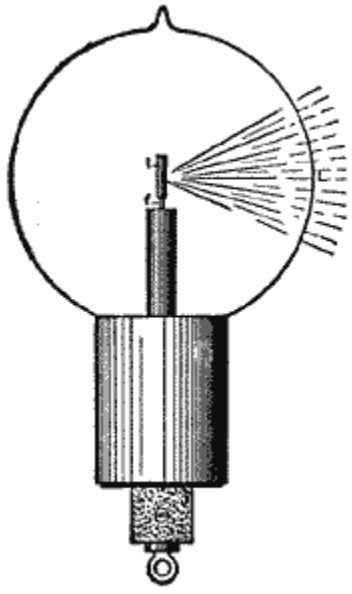

Fig. 31.

I have prepared a bulb to illustrate by an experiment the correctness of these assertions. In a globe L (Fig. 31), I have mounted

upon a lamp filaments of a piece of lime *l*. The lamp filament is connected with a wire which leads into the bulb, and the general construction of the latter is as indicated in Fig. 19, before described. The bulb being suspended from a wire connected to the terminal of the coil, and the latter being set to work, the lime piece *l* and the projecting parts of the filament *f* are bombarded. The degree of exhaustion is just such that with the potential the coil is capable of giving phosphorescence of the glass is produced, but disappears as soon as the vacuum is impaired. The lime containing moisture, and moisture being given off as soon as heating occurs, the phosphorescence lasts only for a few moments. When the lime has been sufficiently heated, enough moisture has been given off to impair materially the vacuum of the bulb. As the bombardment goes on, one point of the lime piece is more heated than other points, and the results is that finally practically all the discharge passes through that point which is intensely heated, and a white stream of lime particles (Fig. 31) then breaks forth from that point. This stream is composed of "radiant" matter, yet the degree of exhaustion is low. But the particles move in straight lines because the velocity imparted to them is great, and this is due to three causes—to the great electric density, the high temperature of the small point, and the fact that the particles of the lime are easily torn and thrown off—far more easily than those of carbon. With frequencies such as we are able to obtain, the particles are bodily thrown off and projected to a considerable distance, but with sufficiently high frequencies no such thing would occur: in such case only a stress would spread or a vibration would be propagated through the bulb. It would be out of the question to reach any such frequency on the assumption that the atoms move with the speed of light; but I believe that such a thing is impossible; for this an enormous potential would be required. With potentials which we are able to obtain, even with a disruptive discharge coil, the speed must be quite insignificant.

As to the "non-striking vacuum," the point to be noted is that it can occur only with low frequency impulses, and it is necessitated by the impossibility of carrying off enough energy with such impulses in high vacuum since the few atoms which are around the terminal upon coming in contact with the same are repelled and kept at a distance for a comparatively long period of time, and not enough work can be performed to render the effect perceptible to the eye. If the difference of potential between the terminals is raised, the dielectric breaks down. But with very high frequency impulses there is no necessity for such breaking down, since any amount of work can be performed by continually agitating the atoms in the exhausted vessel, provided the frequency is high enough. It is easy to reach—even with frequencies obtained from an alternator as here used—a stage at which the discharge does not pass between two electrodes in a narrow tube, each of these being connected to one of the terminals of the coil, but it is difficult to reach a point at which a luminous discharge would not occur around each electrode.

A thought which naturally presents itself in connection with high frequency currents, is to make use of their powerful electro-dynamic inductive action to product: light effects in a sealed glass globe. The leading-in wire is one of the defects of the present incandescent lamp, and if no other improvement were made, that imperfection at least should be done away with. Following this thought, I have carried on experiments in various directions, of which some were indicated in my former paper. I may here mention one or two more lines of experiment which have been followed up.

Many bulbs were constructed as shown in Fig. 32 and Fig. 33.

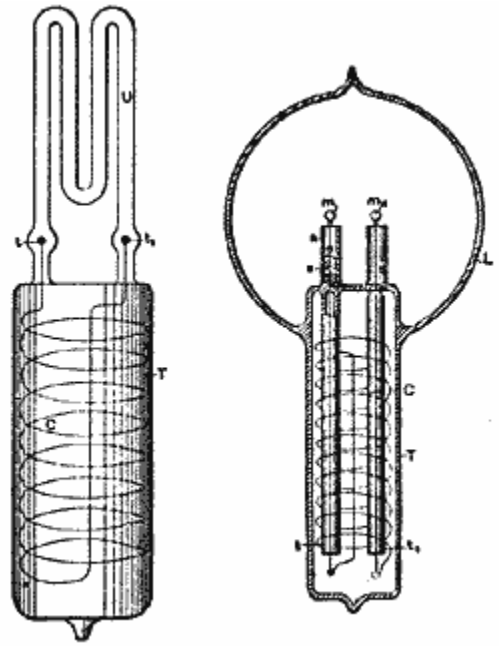

Fig. 32. Fig. 33.

In Fig. 32 a wide tube *T* was sealed to a smaller **W**-shaped tube U, of phosphorescent glass. In the tube *T* was placed a coil *C* of

aluminium wire, the ends of which were provided with small spheres *t* and t_1 of aluminium, and reached into the U tube. The tube *T* was slipped into a socket containing a primary coil through which usually the discharges of Leyden jars were directed, and the rarefied gas in the small **U** tube was excited to strong luminosity by the high-tension currents induced in the coil *C*. When Leyden jar discharges were used to induce currents in the coil *C*, it was found necessary to pack the tube *T* tightly with insulating powder, as a discharge would occur frequently between the turns of the coil, especially when the primary was thick and the air gap, through which the jars discharged, large, and no little trouble was experienced in this way.

In Fig. 33 is illustrated another form of the bulb constructed. In this case a tube *T* is sealed to a globe *L*. The tube contains a coil *C*, the ends of which pass through two small glass tubes *t*and t_1, which are sealed to the tube T. Two refractory buttons *m* and m_1 are mounted on lamp filaments which are fastened to the ends of the wires passing through the glass tubes *t* and t_1. Generally in bulbs made on this plan the globe *L* communicated with the tube *T*. For this purpose the ends of the small tubes *t* and t_1 were just a trifle heated in the burner, merely to hold the wires, but not to interfere with the communication. The tube *T*, with the small tubes, wires through the same, and the refractory buttons *m* and m_1 was first prepared, and then sealed to globe *L*, whereupon the coil *C* was slipped in and the connections made to its ends. The tube was then packed with insulating powder, jamming the latter as tight as possible up to very nearly the end, then it was closed and only a small hole left through which the remainder of the powder was introduced, and finally the end of the tube was closed. Usually in bulbs constructed as shown in Fig. 33 an aluminium tube *a* was fastened to the upper end *s* of each of the tubes *t* and t_1, in order to protect that end against the heat. The buttons *m* and m_1 could be brought to any degree of incandescence by passing the discharges of Leyden jars around the coil *C*. In such bulbs with two buttons a very curious effect is produced by the formation of the shadows of each of the two buttons.

Another line of experiment, which has been assiduously followed, was to induce by electro-dynamic induction a current or luminous discharge in an exhausted tube or bulb. This matter has received such able treatment at the hands of Prof. J. J. Thomson that I could add but little to what he has made known, even had I made it the special subject of this lecture. Still, since experiences in this line have gradually led me to the present views and results, a few words must be devoted here to this subject.

It has occurred, no doubt, to many that as a vacuum tube is made longer the electromotive force per unit length of the tube, necessary to pass a luminous discharge through the latter, gets continually smaller; therefore, if the exhausted tube be made long enough, even with low frequencies a luminous discharge could be induced in such a tube closed upon itself. Such a tube might be placed around a hall or on a ceiling, and at once a simple appliance capable of giving considerable light would be obtained. But this would be an appliance hard to manufacture and extremely unmanageable. It would not do to make the tube up of small lengths, because there would be with ordinary frequencies considerable loss in the coatings, and besides, if coatings were used, it would be better to supply the current directly to the tube by connecting the coatings to a transformer. But even if all objections of such nature were removed, still, with low frequencies the light conversion itself would be inefficient, as I have before stated. In using extremely high frequencies the length of the secondary—in other words, the site of the vessel—can be reduced as far as desired, and the efficiency of the light conversion is increased; provided that means are invented for efficiently obtaining such high frequencies. Thus one is led, from theoretical and practical considerations, to the use of high frequencies, and this means high electromotive forces and small currents in the primary. When he works with condenser charges—and they are the only means up to the present known for reaching these extreme frequencies—one gets to electromotive forces of several thousands of volts per turn of the primary. He cannot multiply the electro-dynamic inductive effect by taking more turns in the primary, for he arrives at the conclusion that the best way is to work with one single turn—though we must sometimes depart from this rule—and we must get along with whatever inductive effect we can obtain with one turn. But before he has long experimented with the extreme frequencies required to set up in a small bulb an electromotive force of several thousands of volts he realizes the great importance of electrostatic effects, and these effects grow relatively to the electro-dynamic in significance as the frequency is increased.

Now, if anything is desirable in this case, it is to increase the frequency, and this would make it still worse for the electro-dynamic effects. On the other hand, it is easy to exalt the electrostatic action as far as one likes by taking more turns on the secondary, or combining self-induction and capacity to raise the potential. It should also be remembered that, in reducing the current to the smallest value and increasing the potential, the electric impulses of high frequency can be more easily transmitted through a conductor.

These and similar thoughts determined me to devote more attention to the electrostatic phenomena, and to endeavor to produce potentials as high as possible, and alternating as fast as they could be made to alternate. I then found that I could excite vacuum tubes at considerable distance from a conductor connected to a properly constructed coil, and that I could, by converting the oscillatory current of a condenser to a higher potential, establish electrostatic alternating fields which acted through the whole extent of a room, lighting up a tube no matter where it was held in space. I thought I recognized that I had made a step in advance, and I have persevered in this line; but I wish to say that I share with all lovers of science and progress the one and only desire—to reach a result of utility to men in any direction to which thought or experiment may lead me. I think that this departure is the right one, for I cannot see, from the observation of the phenomena which manifest themselves as the frequency is increased, what there would remain to act between two circuits conveying, for instance, impulses of several hundred millions per second, except electrostatic forces. Even with such stifling frequencies the energy would be practically all potential, and my conviction has grown strong that, to whatever kind of motion light may be due, it is produced by tremendous electrostatic stresses vibrating with extreme

rapidity.

Of all these phenomena observed with currents, or electric impulses, of high frequency, the most fascinating for an audience are certainly those which are noted in an electrostatic field acting through considerable distance, and the best an unskilled lecturer can do is to begin and finish with the exhibition of these singular effects. I take a tube in the hand and move it about, and it is lighted wherever I may hold it; throughout space the invisible forces act. But I may take another tube and it might not light, the vacuum being very high. I excite it by means of a disruptive discharge coil, and now it will light in the electrostatic field. I may put it away for a few weeks or months, still it retains the faculty of being excited. What change have I produced in the tube in the act of exciting it? If a motion imparted to the atoms, it is difficult to perceive how it can persist so long without being arrested by frictional losses; and if a strain exerted in the dielectric, such as a simple electrification would produce, it is easy to see how it may persist indefinitely but very difficult to understand why such a condition should aid the excitation when we have to deal with potentials which are rapidly alternating.

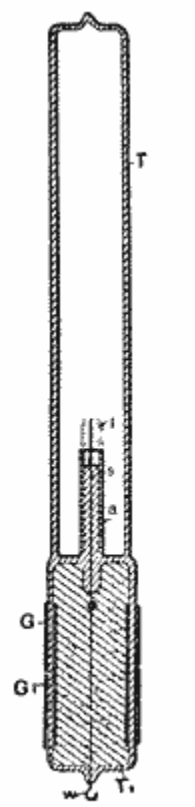

Fig. 34.

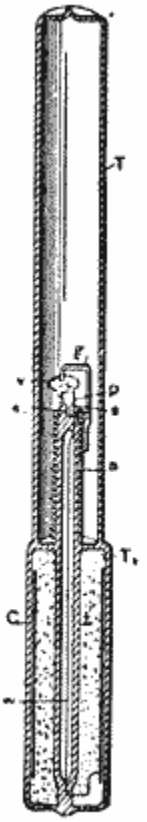

Fig. 35.

Since I have exhibited these phenomena for the first time, I have obtained some other interesting effects. For instance, I have produced the incandescence of a button, filament, or wire enclosed in a tube. To get to this result it was necessary to economize the energy which is obtained from the field and direct most of it on the small body to be rendered incandescent. At the beginning the task appeared difficult, but the experiences gathered permitted me to teach the result easily. In Fig. 34 and Fig. 35 two such tubes are illustrated which are prepared for the occasion. In Fig. 34 a short tube T_1, sealed to another long tube *T*, is provided with a stem *s*, with a platinum wire sealed in the latter. A very thin lamp filament *I* is fastened to this wire, and connection to the outside is made through a thin copper wire *w*. The tube is provided with outside and inside coatings, *C* and C_1 respectively, and is filled as far as the coatings reach with conducting, and the space above with insulating powder. These coatings are merely used to enable me to perform two experiments with the tube—namely, to produce the effect desired either by direct connection of the body of the experimenter or of another body to the wire *w*, or by acting inductively through the glass. The stem *s* is provided with an aluminium tube a for purposes before explained, and only a small part of the filament reaches out of this tube. By holding the tube T_1 anywhere in the electrostatic field the filament is rendered incandescent.

A more interesting piece of apparatus is illustrated in Fig. 35. The construction is the same as before, only instead of the lamp filament a small platinum wire *p*, sealed in a stem *s*, and bent above it in a circle, is connected to the copper wire *w*, which is joined to an inside coating *C*. A small stem s_1 is provided with a needle, on the point of which is arranged to rotate very freely a very light fan of mica *v*. To prevent the fan from falling out, a thin stem of glass *g* is bent properly and fastened to the aluminium tube. When the glass tube is held anywhere in the electrostatic field the platinum wire becomes incandescent, and the mica vanes are rotated

very fast.

Intense phosphorescence may be excited in a bulb by merely connecting it to a plate within the field, and the plate need not be any larger than an ordinary lamp shade. The phosphorescence excited with these currents is incomparably more powerful than with ordinary apparatus. A small phosphorescent bulb, when attached to a wire connected to a coil, emits sufficient light to allow reading ordinary print at a distance of five to six paces. It was of interest to see how some of the phosphorescent bulbs of Professor Crookes would behave with these currents, and he has had the kindness to lend me a few for the occasion. The effects produced are magnificent, especially by the sulphide of calcium and sulphide of zinc. From the disruptive discharge coil they glow intensely merely by holding them in the hand and connecting the body to the terminal of the coil.

To whatever results investigations of this kind may lead, their chief interest lies for the present in the possibilities they offer for the production of an efficient illuminating device. In no branch of electric industry is an advance more desired than in the manufacture of light. Every thinker, when considering the barbarous methods employed, the deplorable losses incurred in our best systems of light production, must have asked himself, What is likely to be the light of the future? Is it to be an incandescent solid, as in the present lamp, or an incandescent gas, or a phosphorescent body, or something like a burner, but incomparably more efficient?

There is little chance to perfect a gas burner; not, perhaps, because human ingenuity has been bent upon that problem for centuries without a radical departure having been made—though this argument is not devoid of force—but because in a burner the higher vibrations can never be reached except by passing through all the low ones. For how is a flame produced unless by a fall of lifted weights? Such process cannot be maintained without renewal, and renewal is repeated passing from low to high vibrations. One way only seems to be open to improve a burner, and that is by trying to reach higher degrees of incandescence. Higher incandescence is equivalent to a quicker vibration; that means more light from the same material, and that, again, means more economy. In this direction some improvements have been made, but the progress is hampered by many limitations. Discarding, then, the burner, there remain the three ways first mentioned, which are essentially electrical.

Suppose the light of the immediate future to be a solid rendered incandescent by electricity. Would it not seem that it is better to employ a small button than a frail filament? From many considerations it certainly must be concluded that a button is capable of a higher economy, assuming, of course, the difficulties connected with the operation of such a lamp to be effectively overcome. But to light such a lamp we require a high potential; and to get this economically we must use high frequencies.

Such considerations apply even more to the production of light by the incandescence of a gas, or by phosphorescence. In all cases we require high frequencies and high potentials. These thoughts occurred to me a long time ago.

Incidentally we gain, by the use of very high frequencies, many advantages, such as a higher economy in the light production, the possibility of working with one lead, the possibility of doing away with the leading-in wire, etc.

The question is, how far can we go with frequencies? Ordinary conductors rapidly lose the facility of transmitting electric impulses when the frequency is greatly increased. Assume the means for the production of impulses of very great frequency brought to the utmost perfection, every one will naturally ask how to transmit them when the necessity arises. In transmitting such impulses through conductors we must remember that we have to deal with *pressure* and *flow*, in the ordinary interpretation of these terms. Let the pressure increase to an enormous value, and let the flow correspondingly diminish, then such impulses—variations merely of pressure, as it were—can no doubt be transmitted through a wire even if their frequency be many hundreds of millions per second. It would, of course, be out of question to transmit such impulses through a wire immersed in a gaseous medium, even if the wire were provided with a thick and excellent insulation for most of the energy would be lost in molecular bombardment and consequent heating. The end of the wire connected to the source would be heated, and the remote end would receive but a trifling part of the energy supplied. The prime necessity, then, if such electric impulses are to be used, is to find means to reduce as much as possible the dissipation.

The first thought is, employ the thinnest possible wire surrounded by the thickest practicable insulation. The next thought is to employ electrostatic screens. The insulation of the wire may be covered with a thin conducting coating and the latter connected to the ground. But this would not do, as then all the energy would pass through the conducting coating to the ground and nothing would get to the end of the wire. If a ground connection is made it can only be made through a conductor offering an enormous impedance, or through a condenser of extremely small capacity. This, however, does not do away with other difficulties.

If the wave length of the impulses is much smaller than the length of the wire, then corresponding short waves will be sent up in the conducting coating, and it will be more or less the same as though the coating were directly connected to earth. It is therefore necessary to cut up the coating in sections much shorter than the wave length. Such an arrangement does not still afford a perfect screen, but it is ten thousand times better than none. I think it preferable to cut up the conducting coating in small sections, even if

the current waves be much longer than the coating.

If a wire were provided with a perfect electrostatic screen, it would be the same as though all objects were removed from it at infinite distance. The capacity would then be reduced to the capacity of the wire itself, which would be very small. It would then be possible to send over the wire current vibrations of very high frequencies at enormous distance without affecting greatly the character of the vibrations. A perfect screen is of course out of the question, but I believe that with a screen such as I have just described telephony could be rendered practicable across the Atlantic. According to my ideas, the gutta-percha covered wire should be provided with a third conducting coating subdivided in sections. On the top of this should be again placed a layer of gutta-percha and other insulation, and on the top of the whole the armor. But such cables will not be constructed, for ere long intelligence—transmitted without wires will throb through the earth like a pulse through a living organism. The wonder is that, with the present state of knowledge and the experiences gained, no attempt is being made to disturb the electrostatic or magnetic condition of the earth, and transmit, if nothing else, intelligence.

It has been my chief aim in presenting these results to point out phenomena or features of novelty, and to advance ideas which I am hopeful will serve as starting points of new departures. It has been my chief desire this evening to entertain you with some novel experiments. Your applause, so frequently and generously accorded has told me that I have succeeded.

In conclusion, let me thank you most heartily for your kindness and attention, and assure you that the honor I have had in addressing such a distinguished audience, the pleasure I have had in presenting these results to a gathering of so many able men and among them also some of those in whose work for many years past I have found enlightenment and constant pleasure—I shall never forget.

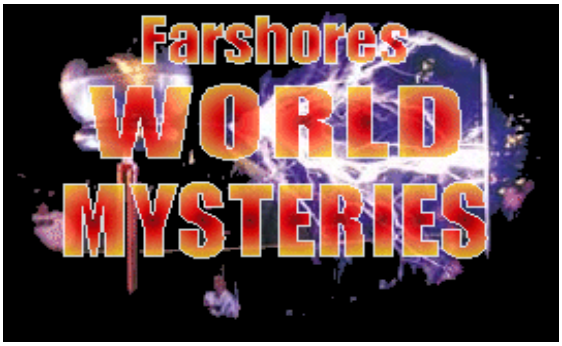

FarShores Note: This is a new and more complete version of the unknown 'Tesla' manuscript, transcribed and translated into English by Mikhail using computer software. It replaces the original copy consisting only of Part 1. Editing has been kept to a absolute minimum in order to improve ease of reading in some sections only.

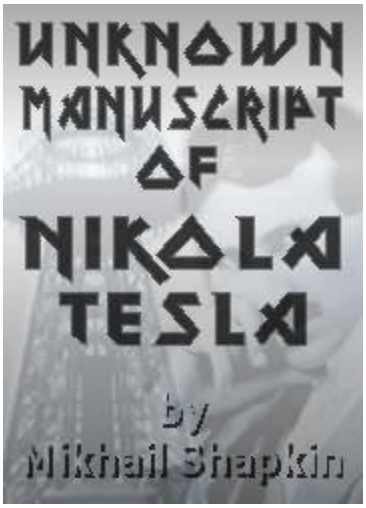

Introduction

This manuscript has been loaned to me by my acquaintance. During his stay in the USA he bought an old fire-helmet, which was on sale in the streets of New York. There was an old writing book inside this helmet, apparently used as a lining. The writing book had thin and partially burned covers producing the smell of mould. All its yellowing sheets were full of notes written in ink faded under the influence of time. In parts the ink has lost its color to such a degree that some of the letters can only be guessed at on the yellowed paper. In other places, large parts of the text have been completely spoiled by water, having been transformed into white ink stains. In addition, all the sheets have been burned on the edges and as a result some words are irretrievably lost.

I own a computer and therefore it was not difficult to translate this manuscript. Right after it was translated I understood that it belonged to famous inventor, Nikola Tesla, who lived and worked in the USA. There has been a lot of work done to put the translated text into final form. Those who have dealt with computer translation software will understand me entirely. I had many problems arising from the lost words and sentences. I could never understand many minor but probably very important details of the manuscript. I hope, however, this manuscript will open some mysteries of history and the universe.....

Part 1. You are wrong, Mr. Einstein – ether does exist!

They say much about the Einstein's theory now. According to Einstein the ether does not exist and many people agree with him. But it is a mistake in my opinion. Ether's opponents refer to the experiments of Maykelson – Morli who made attempts to detect the Earth's movement relative to the fixed-bed ether. These experiments failed, however it didn't mean the ether's non-existence. I always based as fact the existence of mechanical ether in my works and therefore I could achieve positive success.

What is the ether and why is it so difficult to detect it? I reflected on this matter for a seriously long time and here are the outcomes I have been led to: I think that all the contradictions about whether the ether exists or not are the result of wrong interpretation of ether's properties. The ether has always been presented as an aeroform environment. That was the essential mistake. The ether has a very strong density. It is known that of more dense a substance, the higher is the speed of wave propagation within it. When comparing acoustic speed in the air and the light speed I have drawn a conclusion that ether density is several thousand times higher than air density. It is not the ether that is aeroform but the material world is an aeroform to the ether! But as the ether is electrically neutral it very poorly interacts with the material world. Notwithstanding that poor interaction we still can feel the ether's existence.

A good example for such an interaction becomes apparent in gravitation, which should rather be named universal compression. I think the material bodies do not gravitate between each other but it is the ether that makes one material body to press to another. We wrongly call this phenomena gravitation. We can also feel ether's reaction when sudden acceleration or braking. The stars, planets and all the universe appeared from the ether when some part of it, due to certain reasons, became less dense. It can be compared with formation of blebs in boiling water although such a comparison is only rough. The ether tries to return itself to its initial state by compressing our world, but intrinsic electric charge within material the world substance obstructs this. It is similar to that when the water compresses blebs filled with hot water steam. Until the steam does get cold the water is unable to compress the bleb. With time, having lost the intrinsic electric charge, our world will be compressed with the ether and is going to turn into ether. Having come out of the ether once - so it will go back into the ether.

Density of substance of material world strongly differs from the density and physical properties of the ether. Therefore, the ether cannot remain in a fixed-bed state around material bodies and under certain circumstances there will be an ether whirlwind appearing around material bodies. Hence, we can explain the reason for failure of the Maykelson – Morli experiment.

In order to understand it let's carry the experiment over to a water environment. Try to imagine that our boat is twirled within a huge whirlpool. We will try to detect water motion relatively to the boat. We will not find any movement as the speed of the boat will be equal to the rate of water movement. In our imagination let's replace the boat with the Earth, and the whirlpool – by ether whirlwind, which revolves around the Sun. The example shows clearly that when on the Earth one can not detect the Earth's movement relatively to the ether as the rate of Earth's movement will be equal to the rate of ether movement. In my researches I always adhere the principle that all nature's phenomena show themselves equally whichever physical environment they would happen in. The waves exist in the water, air, ... and radio–waves and the light is the waves in the ether.

Einstein's assertion of non-existence of the ether is erroneous. It is difficult to imagine radio-wave and light transmission without ether. Einstein says that there is no ether and at the same time, practically he proves its existence. For example, let's consider the speed of the passage of light. Einstein states that the velocity of light does not depend on the rate of movement of the light source. It's correct. But this principle can exist only when the light source is in a certain physical environment (ether), which cuts down velocity of light due to its properties. Ether's substance cuts down the velocity of light in the same way as air substance cuts down the acoustic speed. If the ether did not exist then velocity of light would strongly depend on the rate of movement of the light source.

Having clarified what is the ether is I began to compare phenomena occurring in the water, air and ether. And here an opportunity occurred to help me in my researches. Once I saw to a sailor who was smoking a pipe. He was exhaling smoke in the form of little rings. Smoke rings flew pretty far away before they got broken. Then I investigated this phenomena in the water. I took a metal jar and carved out a small vent on one side and pulled on thin leather on another side. I poured some ink into the jar and lowered it onto a pool. When harshly hit the leather ink-rings flew out of the jar crossing over the pool and got broken having bumped into its wall, producing substantial motions of water at the pool's wall. At the same time, the water in the pool kept being quiet. - "This method can be used to transfer energy", …-

I understand what is ball lightning and how to transfer energy long range without using wires. Einstein tries to explain light movement when no ether environment by Plank quantum hypothesis. Will Einstein be able to explain ball lightning phenomena when without the existence of ether? There is no possibility of explaining ball lightning phenomena without ether!

Based on these investigations I have constructed a generator, which could generate ether vortical [vortice? G-fs] rings, which I called ether vortical objects. It was my achievement. I was in euphoria. It seemed to me like I could do everything. I promised the world not having completely studied this phenomena and took severe punishment for that. I was not financed any more but what the most unpleasant thing was that I was not trusted anymore. TheeEuphoria has changed to deep depression. And I dared to start my crazy experiment then.

Part 2. I will keep the secret of my invention until I die

After my failures I became more self-restrained in making promises… During my work with ether vortical objects I understood that they behave not in the manner I thought before. It turned out that when vortical objects passed near metal objects they lost their energy and collapsed, sometimes exploding. Deep Earth layers have absorbed their energy as strongly as the metal did. So, I could transmit energy only within small distances. I paid attention to the Moon then. If ether vortical objects are sent to the Moon, they will return back to the Earth very far from the transmitter, having been reflected from electrostatic field. As the hade[?] is equal to the angle of reflection, then energy could be transmitted over very long distances, even to other parts of the Earth.

I carried out several experiments transmitting energy towards the Moon. Through these experiments I discovered that the Earth is surrounded by an electric field. This field kept destroying faint ether vortical objects. Ether vortical objects possessing big energy, burst through electric field of the Earth and extended into interplanetary space. And right here, the idea came to my mind that if I can create a resonance system between the Earth and the Moon, then power of the transmitter may be very small while the energy derived out of this system could be considerable. Having made the calculations on how much energy can be derived I was surprised at it. The calculations showed that the energy derived from this system is enough to fully destroy a big city. For the first time at that moment I realized that my system could represent a danger for the mankind. However, I still greatly wanted to carry out my experiment.

Secretly, from everyone, I began to thoroughly prepare my crazy experiment. First of all, I needed to select the place for my experiment. The Arctic Zone did the best location for it. There were no people there and I would injure no-one. But the calculation showed that with the Moon being at its present position, the ether vortical object could strike Siberia, but people live there. I went to the library and began to study the information concerning Siberia. The information was very small but, however, I saw that there are almost no people in Siberia. I should keep my experiment a deep secret, otherwise the consequences could prove to be very unpleasant for me and for all mankind. I always worry about one question: 'Will my discoveries be for the good of the people?' Because it had been known for a long time that the people used all inventions to extirpate the similar ones. The fact that much of my equipment in my laboratory has been dismantled to that moment considerably contributed to keeping my secret. However, I could save the equipment I required for my experiment.

I alone assembled a new transmitter out of this equipment and connected it up to the emitter. The experiment with such a big quantity of energy could be very dangerous. If I made a mistake in my calculations the energy of ether vortical object would strike astern. That's why I was not in the laboratory but two miles outside it. The work of my installation had been operating by clockwork. The principle of the experiment was rather simple. In order to better understand its principle it is necessary to grasp first what are the ether vortical object and ball lightning. Basically, they are the same. The only difference is that the ball lightning is a visible ether object. Visibility of ball lightning is provided by fluorescence of charged air particles. It could be compared with ink coloring of water vortical particles in my experiment in the pool.

In order to create a resonant Earth – Moon system it was necessary to create a concentration of charged particles between the Earth and the Moon. For that, I used a property of ether vortical objects to capture and transfer charged particles. The generator has emanated the ether vortical objects towards the Moon. When passing through the electric field of the Earth, ether vortical objects have captured charged particles within it. As an electrostatic field of the Moon has the same polarity as an electric field of the Earth, the ether vortical objects have been reflected from it and this time, again returned to the Earth at another angle. After returning to the Earth the ether vortical objects have been reflected again by electric field of the Earth back to the Moon… That was the way, by which the Earth – Moon resonant system has been occupied by charged particles. When the required concentration of charge particles in resonant Earth – Moon system was achieved it has been energized itself at its own resonant frequency. The energy million times assisted by resonance properties of the system was being changed into ether vortical object of a huge power within the electric field of the Earth. However, it was only my guesswork, and I didn't know how it would be in reality.

I remember very well the day of experiment. The estimated time came near. Minutes dragged on so slowly and seemed as if they were years. I thought I would go crazy of this waiting. At last, the estimated time came and … nothing happened! Another five minutes passed but nothing unusual took place. Various theories came into my head: maybe the clockwork hasn't worked, or the system hasn't snapped into action, and maybe nothing must happen at all. I was on the verge of insanity. And suddenly … It seemed to me that the light has grown dark for a moment and a strange feeling was being sensed throughout all my body - as if thousands of needles were piercing my body. Soon everything was over but there was an unpleasant metallic after-taste left in my mouth. All my muscles had become relaxed and there was a buzzing in my head. I felt totally worn out.

When I returned to my laboratory I found that it was practically intact, just there was a strong smell of burning in the air... And again, agonizing suspense had seized me, as I didn't know the results of my experiment. And only later on, having read about unusual phenomena in the newspapers, did I realize what a dreadful arm I have created. Of course, I expected that it would be a very heavy explosion. But, it has not been even an explosion - it has been a catastrophe!

After that experiment I determined that I would keep the secret of my invention until I die. Of course, I knew that someone else could easily repeat this crazy experiment. But this would require the acknowledgement that the ether exists but our scientific world moves further and further away from the truth. I am even grateful to Einstein and others because through their erroneous theories they lead mankind away from that dangerous path I followed. And, probably, this is their only merit. Perhaps, in about one hundred years, when reason prevails over the brute, my invention will serve for welfare of people.

Part 3. Flying machine

My hypothesis that gravitation is a compression of material bodies by ether has recently been confirmed experimentally. When working with the generator of ether vortical objects I observed one very odd phenomena. When it's turned on I could feel a wind blowing towards the generator. I decided to investigate this phenomena. I rolled up several newspapers before igniting and immediately extinguishing them. There was a thick smoke coming from newspapers. With these reeky newspapers I went around the generator. The smoke came to the generator from any spot of the laboratory. And the smoke disappeared near to the generator. At first, I thought the reason relates to electrostatics. But having considered this phenomena I concluded: electrostatics could not be able to cause these phenomena at such a long distance from the generator. Then I supposed: - the Generator lessens the compression of ether through impact to the ether (gravity) !

I constructed big scales to make sure of it. One side of the scales was positioned over the generator. In order to exclude any electromagnetic influence of the generator the scales were made out of highly dried wood. In order to protect against electrostatic field of the generator the scales were worked up by graphite powder. After I accurately balanced the scales I turned on the generator. The side of scales that was over the generator began rapidly to go up. I turned on the generator. The scales went down. I turned off the generator. The scales went down and began to swing until it was fully balanced out. I loaded the scales with the ballast and changed its capacity and operating mode striving for its balance. After these experiments I planned to build a flying machine, which could fly not only in the air but within interplanetary space.

The principle of operation of the flying machine is as follows: towards the flight direction, compression of the ether is to become weaker by the generator installed in the flying machine. As the ether keeps pressing with prior intensity from all other sides, then the flying machine began moving. Being within this flying machine you will not feel its speeding-up as the ether is not to hamper your movement. I had to abandon my plans to create the flying machine. There were two reasons for it: first, I have no money to work in

secret. But the main reason is that the great war began in Europe and I wouldn't like my inventions used to kill! When on earth will these madmen stop?

Postscript.
You read a brief version of the manuscript of Nicola Tesla. This manuscript version is aimed at a broad audience, therefore there are no details in it understandable only to the specialists. You shouldn't search for any style similarity of Tesla's entry with his other known documents in this manuscript version. You shouldn't forget that this manuscript has been translated by computer, and besides that the condition of the notebook was very bad. However, I tried to convey the main point of Tesla's notes with the utmost accuracy. Unfortunately, there was a great deal of damage through water effect of that manuscript passage where the generator of ether vortical objects was described. But, nevertheless, from these scraps of data I could understand the principle of work of this generator. However, there is a shortage of several details to have an entire representation.

In Tesla's manuscript there is information about the biological impact of metal rings to animate nature. There is a way of processing metal wire by alternative current provided in this part of the manuscript. After such processing the metal wire is stranded into a circle designed to kill microbes and protect people against diseases. I tried this method myself. As a result, I didn't get ill with flu during the last two winters, although I had a flu very often before.

In the unknown manuscript of Nicola Tesla there is the following phrase: - The light moves in straight lines, the ether – around the circle so the leaps arise hereby. – Apparently, by using this phrase, Tesla tried to explain why the light moves by leaps. In modern physics this phenomena is called a quantum leap. Further in the manuscript there is an explanation of this phenomena but it is a little fuzzy. So I will present my reconstruction of the explanation of this phenomena out of conserved words and sentences.

In order to better understand the reason of leap light movement let's imagine the boat spinning within a huge whirlpool. We will install the generator in this boat. As the rate of movement of external and internal areas of the whirlpool is different then the waves from the generator will move by leaps when passing these areas. The same phenomena we can observe with the light when it passes ether whirlwind. There is a description of the principle of getting energy using ether vortical objects in the manuscript. But it also was greatly damaged by the water. That's why I will present my own reconstruction of the text. This reconstruction is based on separate words and phrases of the unknown manuscript, as well as in other publications of Nicola Tesla. Therefore, I cannot guarantee exact coincidence of the manuscript text reconstruction to the original.

To understand the method of receiving energy with use of ether vortical objects let's imagine a huge bleb swimming in the water. This bleb is very stable as it is squeezed by the water from every quarter and it is influenced by the force of radial compression. How can we extract the energy out of this bleb? For this we have to break its stability. It can be done by water whirlwind or if the bleb's side will be hit by water vortical ring. If using ether vortical object we carry out the same thing with any material body and the result is we will get huge surge of energy. I will present an example: when ball lightning touches any object the result is a huge energy liberation and sometimes an explosion.

Mikhail Shapkin

Tashkent, Uzbekistan

700125 p/o 3146

E-mail: mikesh@albatros.uz

DESCRIPTION OF FOLLOWING FILE MATERIAL

NIKOLA TESLA

100-2277	156	pages
REFERENCES	96	pages
	252	TOTAL PAGES

XXXXXXX
XXXXXXX
XXXXXXX

XXXXXXXXXXXXXXXXXXXX
X NO DUPLICATION FEE X
X FOR THIS PAGE X
XXXXXXXXXXXXXXXXXXXX

MAIN INVESTIGATIVE FILE

156 pages

[redacted] 9/24/40

Department of Justice,

Attn. Mr. G. Edgar Hoover,

Washington, D. C.

ALL INFORMATION CONTAINED
HEREIN IS UNCLASSIFIED
DATE 7-2-80 BY SP4 [illegible]

Dear Mr. Hoover:

The appended article was printed in the New York Times issue of Su September 22, 1940 and if based on proven facts, should be of vital importance to t War Department as well as to that of other nations now controlled by insane dictato

If, as the auther states, the teleforce has been perfected by Nikola Tesla, i would be a measure of foresightedness to insure his constant guarding against his b molested, possibly kidnapped and tortured, by alien enemies for the purpose of seizi the secret of such an invaluable instrument of war and/or defense

The foregoing is offered just in case the article and its inferences have no been called to your attention.

Very truly yours

[redacted]

1 ENCL

RECORDED & INDEXED

Mark 10/1/40 [redacted]
100-2237-1
FEDERAL BUREAU OF INVESTIGATION
2 SEP 26 1940
U.S. DEPARTMENT OF JUSTICE

3

NY Times 9/22/40

"Death Ray" for Planes

Nikola Tesla, one of the truly great inventors who celebrated his eighty-fourth birthday on July 10, tells the writer that he stands ready to divulge to the United States Government the secret of his "teleforce," with which, he said, airplane motors would be melted at a distance of 250 miles, so that an invisible Chinese Wall of Defense would be built around the country against any attempted attack by an enemy air force, no matter how large.

This "teleforce," he said, is based on an entirely new principle of physics that "no one has ever dreamed about," different from the principle embodied in his inventions relating to the transmission of electrical power from a distance, for which he has received a number of basic patents. This new type of force, Mr. Tesla said, would operate through a beam one one-hundred-millionth of a square centimeter in diameter, and could be generated from a special plant that would cost no more than $2,000,000 and would take only about three months to construct.

A dozen such plants, located at strategic points along the coast, according to Mr. Tesla, would be enough to defend the country against all possible aerial attack. The beam would melt any engine, whether Diesel or gasoline-driven, and would also ignite the explosives aboard any bomber. No possible defense against it could be devised, he asserts, as the beam would be all-penetrating.

High Vacuum Eliminated

The beam, he states, involves four new inventions, two of which already have been tested. One of these is a method and apparatus [illegible] producing rays [illegible] manifestations of [illegible] air, eliminating the [illegible] high vacuum; a second is a method and process for producing "very great electrical force"; the third is a method for amplifying this force, and the fourth is a new method for producing "a tremendous electrical repelling force." This would be the projector, or gun, of the system. The voltage for propelling the beam to its objective, according to the inventor, will attain a potential of 50,000,000 volts.

With this enormous voltage, he said, microscopic electrical particles of matter will be catapulted on their mission of defensive destruction. He has been working on this invention, he added, for many years and has recently made a number of improvements in it.

Mr. Tesla makes one important stipulation. Should the government decide to take up his offer he would go to work at once, but they would have to trust him. He would suffer "no interference from experts."

In ordinary times such a condition would very likely interpose an insuperable obstacle. But times being what they are, and with the nation getting ready to spend billions for national defense, at the same time taking in consideration the reputation of Mr. Tesla as an inventor who always was many years ahead of his time, the question arises whether it may not be advisable to take Mr. Tesla at his word and commission him to go ahead with the construction of his teleforce plant.

Such a Device "Invaluable"

After all, $2,000,000 would be relatively a very small sum compared with what is at stake. If Mr. Tesla really fulfills his promise the result achieved would be truly staggering. Not only would it save billions now planned for air defense, by making the country absolutely impregnable against any air attack, but it would also save many more billions in property that would otherwise be surely destroyed no matter how strong the defenses are as witness current events in England.

Take, for example, the Panama Canal. No matter how strong the defenses, a suicide squadron of dive bombers, according to some experts, might succeed in getting through and cause such damage that would make the Canal unusable, in which case our Navy might find itself bottled up.

Considering the probabilities in the case even if the chances were 100,000 to 1 against Mr. Tesla the odds would still be largely in favor of taking a chance on spending $2,000,000. In the opinion of the writer, who has known Mr. Tesla for many years and can testify that he still retains full intellectual vigor, the authorities in charge of building the national defense should at once look into the matter. The sum is insignificant compared with the magnitude of the stake.

ALL INFORMATION CONTAINED
HEREIN IS UNCLASSIFIED
DATE 7-19-92 BY [illegible]

100-2237-1

RECORDED & INDEXED

[redacted] 100-2237-1

October 1, 1940

[redacted]

(b)(7)(C)

Dear [redacted]

I wish to acknowledge receipt of your letter dated September 24, 1940, together with its enclosure.

Your courtesy and interest in bringing this information to my attention are indeed appreciated, and you may be assured your letter will receive appropriate consideration.

Sincerely yours,

John Edgar Hoover
Director

ALL INFORMATION CONTAINED
HEREIN IS UNCLASSIFIED
DATE 7-2-80 BY SP4 Jan/rtc

Mr. Tolson
Mr. Clegg
Mr. E. A. Tamm
Mr. Foxworth
Mr. Nathan
Mr. Ladd
Mr. Egan
Mr. Glavin
Mr. Nichols
Mr. Gandon
Mr. Rosen
Mr. Tracy
Miss Gandy

COMMUNICATIONS SECTION
MAILED
★ OCT 1 1940 ★
P.M.
FEDERAL BUREAU OF INVESTIGATION
U.S. DEPARTMENT OF JUSTICE

[redacted] (b)(7)(C)

5

[redacted]

NOT FOIA REDACTIONS

U. S. DEPARTMENT OF JUSTICE

JAN 12 1943

TELETYPE

[redacted]

Mr. Toleo
Mr. E. A.
Mr. Cl...
Mr. ...
Mr. ...
Mr. Nichol
Mr. ...
Mr. Tracy
Mr. Carson
Mr. ...
Mr. ...
Mr. McGuire
Mr. ...
Mr. Quinn
Mr. Nease
Mr. Gandy

FBI NYC 1-12-43 11-06 PM WHS
DIRECTOR
VEST

UNSUBS --- EQUIPMENT, EXPERIMENTS AND RESEARCH OF NIKOLA TESLA, DECEASED, [redacted] ESPIONAGE - M. RETEL UNDER ABOVE HEADING TO THE BUREAU FROM THIS OFFICE DATED JAN NINE LAST. INQUIRY DEVELOPS THAT TESLA DIE JAN EIGHT, RATHER THAN THURSDAY, JAN SEVEN, AS [redacted] STATED IN REFERENCE TELETYPE. ON THE NIGHT OF JAN EIGHT, SAVA KOSANOVICH, GEORG CLARK, AND KENNETH SWEEZEY VISITED TESLA-S HOTEL WITH A REPRESENTATIVE OF SHAW WALKER CO. IN ORDER TO OPEN THE SAFE IN THE ROOM OF TESLA. KOSANOVICH LATER REPORTED TO WALTER GORSUCH, OFFICE OF ALIEN PROPERTY CUSTODIAN, NYC, THAT HE WENT INTO THE ROOM IN ORDER TO SEARCH FOR A WILL OF TESLA. KOSANOVICH AND THE OTHERS MADE THE SEARCH OF THE SAFE IN THE PRESENCE OF THREE ASST MANAGERS OF HOTEL NEW YORKER AS WELL AS REPRESENTATIVES OF THE YUGOSLAVIAN CONSULATE, IDENTITIES OF LATTER NOT YET KNOWN. AFTER THE SAFE WAS OPENED, SWEEZEY, TOOK FROM THE SAFE A BOOK CONTAINING TESTIMONIALS SENT TO TESLA ON THE OCCASION OF HIS SEVE TY FIFTH BIRTHDAY. THIS BOOK WAS ARRANGED FOR TESLA BY SWEEZEY. KOSANOVICH TOOK FROM THE ROOM THREE PICTURES OF TESLA, TWO BEING EN-LARGED NEWSPAPER PICTUREX. ACCORDING TO MANAGERS OF HOTEL AND KOSANO-VICH HIMSELF, NOTHING ELSE WAS REMOVED FROM THE ROOM OR SAFE. THE SAFE WAS THEN CLOSED UNDER A NEW COMBINATION, WHICH COMBINATION IS NOW IN POSSESSION O[redacted] KOSANOVICH. ON SATURDAY AFTERNOON, JAN NINE, GORSUCH AND [redacted] FTIZGERALD OF ALIEN PROPERTY CONTROL WENT TO HOTEL AND SEIZED ALL THE PROPERTY OF TESLA, CONSISTING OF ABOUT TWO TRUCKLOANDS OF MATERIAL, SEALED ALL ARTICLES AND TRANSFERRED THEM TO THE MANHATTAN STORAGE AND WAREHOUSE CO. NY, WHERE THEY ARE NOW LOCATED AT THAT [redacted] TIME THERE WERE ALSO IN THIS WAREHOUSE APPROXIMATELY THIRTY BARRELS AND BUNDLES BELONGING TO TESLA WHICH HAD BEEN THERE SIN ABOUT NINETEEN THIRTY FOUR. THESE HAVE ALSO [redacted] BEEN SEALED AND ARE NOW UNDER ORDERS OF ALIEN PROPERTY CUSTODIAN. IN VIEW OF FACT TESL IS A US NATURALIZED CITIZEN, ALIEN PROPERTY CUSTODIAN FEELS THAT ITS JURISDICTION OVER PROPERTY IS DOUBTFUL BUT [redacted] FEELS THAT NO OTHER AGENCY WILL BE ABLE TO GET [redacted] TO THIS PROPERTY FOR AT LEAST TWO DAYS

COPIES DESTROYED 3/10/58 #4

ALL INFORMATION CONTAINED HEREIN IS UNCLASSIFIED DATE 7.13.82 INDEX

Rec'd 12 15 am 1-13-43

100-2237-2

NOT FOIA REDACTION

16 JAN 13 1943

COPY IN FILE

77 FEB 5 1943

[redacted]

REDACTIONS ON THIS PAGE ARE NOT FOIA DELETIONS

6

PAGE TWO
AFTER THAT TIME IT IS POSSIBLE THAT A PUBLIC ADMINISTRATOR WILL BE APPOINTED FOR THE PROPERTY WHO MAY TAKE THE PROPERTY INTO HIS CUSTODY. TESLA ALSO HAD SOME PROPERTY, [redacted] ALLEGED BY INFORMANT FITZGERALD IN THIS CASE, TO BE A WORKING MODEL OF AN INVENTION IN A SAFE DEPOSIT BOX IN GOVERNOR CLINTON HOTEL IN NY. INQUIRY SHOWS THAT THIS WAS PLACED HERE BY TESLA IN NINETEEN THIRTY TWO AS SECURITY FOR FOUR HUNDRED DOLLARS OWED HOTEL. THIS BILL IS STILL OWED AND HOTEL APPEARS UNWILLING TO RELEASE THIS PROPERTY TO ANYONE AT LEAST UNTIL [redacted] DEBT IS PAID, BUT THIS OFFICE WILL BE ADVISED IF ANYONE ATTEMPTS TO PAY BILL AND OBTAIN PROPERTY. CONCERNING TESLA HOTEL MANAGERS REPORT HE WAS [redacted] VERY ECCENTRIC IF NOT [redacted] MENTALLY DERANGED DURING PAST TEN YEARS AND IT IS DOUBTFUL IF HE HAS CREATED ANYTHING OF VALUE DURING THAT TIME, ALTHOPRIOR TO THAT HE PROBABLY WAS A VERY BRILLIANT INVENTOR. THEREFORE, ANY NOTES OF VALUE WERE PROBABLY THOSE MADE PRIOR TO THAT TIME. KOSANOVICH IS A NEPHEW OF TESLA WHO DESCRIBED HIMSELF AS FORMERLY QUOTE YUGOSLAV MINISTER OF STATE UNQUOTE AND NOW QUOTE [redacted] PRESIDENT OF EASTERN AND CENTRAL PLANNING BOARD REPRESENTING YUGOSLOVIA, CZECHOSLOVAKIA, POLAND AND GREECE, UNQUOTE. SWEEZEY IS A WRITER FOR POPULAR MECHANICS AND OTHER PUBLICATIONS WHO IS [redacted] DESIROUS OF PUBLISHING A BIOGRAPHY OF TESLA AND THERFORE WOULD LIKE TO OBTAIN CONTROL OF HIS NOTES FOR THIS WORK. CLARK IS EMPLOYED BY RCA AND WOULD ALSO PROVIDE STORAGE ROOM FOR TESLAS EFFECTS IN ORDER TO USE THEM IN WRITING A BIOGRAPHY. TESLA AT ONE TIME REPORTED TO BE WORKING ON EXPERIMENTS FOR YUGOSLAVIAN GOVERNMENT IN EXILE. IT IS DESIRED THAT BUREAU ADVISE IMMEDIATELY WHETHER IT IS INTERESTED FURTHER IN THIS PROPERTY FOR PURPOSES OF TAKING CONTROL OF IT. SUGGEST THAT, IN VIEW OF FACT THAT THE NOTES AND OTHER MATERIAL WOULD BE HIGHLY TECHNICAL IN CHARACTER AND FOR THAT REASON [redacted] COULD NOT BE REVIEWED [redacted] EXCEPT BY A TRAINED PERSON THE OFFICE OF SCIENTIFIC RESEARCH DEVEL-

OPMENT MIGHT BE INTERESTED.
FOXWORTH
END NYC S2 WHS
HOLD WA R 2 RSG

[redacted]

REDACTIONS ON THIS PAGE ARE NOT FOIA DELETIONS

[illegible] IS UNCLASSIFIED
DATE 7-13-82 [illegible]

Mr. [illegible]
Mr. [illegible]
Mr. [illegible]
Mr. Glavin
Mr. Ladd
Mr. Nichols
Mr. Bason
Mr. Tracy
Mr. Carson
Mr. Coffey
Mr. Hendon
Mr. McGuire
Mr. Mumf[illegible]
Mr. Quinn Tamm
Mr. N[illegible]
Miss Gandy

Little

FBI NYC 1-9-43 11-30 PM D[illegible]
DIRECTOR
COAT
UNKNOWN SUBJECTS. E[redacted] EXPERIMENTS AN[illegible] OF NIKOLA TESLA, DECEASED. ESPIONAGE - M. NIKOLA TESLA, ON[illegible] STANDING SCIENTISTS IN THE ELECTRICAL FIELD, DIED [illegible] TEEN FORTY THREE AT THE HOTEL NEW YORKER, NEW YORK [illegible] LIFETIME, HE CONDUCTED MANY EXPERIMENTS IN CONNECT[illegible] TRANSMISSION OF ELECTRICAL POWER AND [redacted] WHAT [illegible] THE DEATH RAY. ACCORDING TO INFORMATION FURNISHED [illegible] THREE SIX FIFTH AVENUE, NEW YORK CITY, THE NOTES A[illegible] EXPERIMENTS AND FORMULAE TOGETHER WITH DESIGNS OF [illegible] VITALIZE THEM ARE AMONG TESLAS PERSONAL EFFECTS, A[illegible] TAKEN TO PRESERVE THEM OR TO KEEP THEM FROM FALLIN[illegible] [redacted] UNFRIENDLY TO THE WAR EFFORT OF THE UN[illegible] ING TO SPANEL, A DISTANT RELATIVE OF TESLA, NAMED S[illegible] WAS INTENSELY DISLIKED BY TESLA, IS TAKING STEPS T[illegible] THESE IMPORTANT DOCUMNTS AND PLANS. SPANEL BELIEV[illegible] STRONG LIKELIHOOD THAT KOSANOVICH WILL MAKE THIS MATERIAL AVAILABLE TO TO THE ENEMY. SPANEL ADVISED G TWO HEADQUARTERS IN WASHINGTON, AS WELL AS MR MORKIN OF THE DEPARTMENT OF JUSTICE IN WASHINGTON, CONCERING THE ABOVE. SPANEL WAS ALSO INTELEPHONIC COMMUNICATION WITH [redacted] DR D LOZADO, ONE OF THE ADVISORS TO VICE PRESIDENT WALLACE CONCERNING THIS MATTER, AND LOZADO TOLD SPANEL [redacted] THAT THE GOVERNMENT WAS VITALLY INTERESTED IN THE EFFECTS OF TESLA AND REQUESTED SPANEL TO LOSE NO TIME IN DOING ALL HE COULD TO PRESERVE [redacted] THEM. BLOYCE FITZGERALD, AN ELECTRICAL ENGINEER WHO HAD BEEN QUITE CLOSE TO TESLA DURING HIS LIFE TIME, ADVISED THE NEW YORK OFFICE THAT ON JANUARY SEVENTH, NINETEEN FORTY THREE, SAVA KOSANOVICH, GEORGE CLARK, WHO IS IN CHARGE OF THE MUSEUM AND LABORATORY FOR RCA, AND KENNETH SWEZEY OF ONE SIX THREE MILTON STREET, BROOLKYN, NY, WENT TO TESLAS ROOMS IN THE NEW YORKER, AND WITH THE ASSISTANCE OF A [redacted] LOCKSMITH BROKE INTO A SAFE WHICH TESLA HAD INHIS ROOMS IN WHICH HE KEPT SOME OF HIS VALUABLE PAPERS, INCLUDING IMPORTANT [redacted] ELECTRICAL FORMULAE, DESIGNS, ET CETERA. WITHIN THE PAST MONTH, TESLA TOLD FITZGERALS THAT HIS EXPERIMENTS IN CONNECTION WITH THE WIRELESS TRANSMISSION OF ELECTRICAL POWER HAD BEEN COMPLETED AND PERFECTED.

Memo Mr. Ladd 1/11/43 JBL
Memo to Director 1/11/43 JBL.

RECORDED

100-2237-3

ENCLOSURE

F B

17 JAN 18 1943

FIVE

NOT FOIA REDACTIONS

Best Copy Available

8

PAGE TWO

FITZGERALD ALSO KNOWS THATTESLA HAS CONCEIVED AND [redacted] A REVOLUTIONARY TYPE OF TORPEDO WHICH IS NOT PRESENTLY IN USE [redacted] THE NATIONS. IT IS FITZGERALDS BELIEF THAT THIS DESIGN HAS NOT [redacted] AVAILABLE TO ANY NATION UP TO THE PRESENT TIME. FROM STATEME[redacted] TO FITZGEARLD BY TESLA , HE KNOWS THAT THE COMPLETE PLANS [redacted]CATIONS AND EXPLANATION OF THE BASIC THEORIES OF THESE THIN[redacted]OME PLACE IN THE PERSONAL EFFECTS OF TESLA. HE ALSO KNOWS THAT [redacted] A WORKING MODEL OF TESLAS WHICH COST MORE THAN TEN THOUSAND D[redacted]O BUILD IN A SAFETY [redacted] DEPOSIT BOX BELONGING TO TESLA[redacted]GOVERNOR CLINTON H[redacted]X HOTEL, AND [redacted]X FITZGEARLD [redacted] THIS MODEL HAS TO DO WITH THE SO CALLEDE DEATH RAY OR THE WIRE[redacted]NSMISSION OF ELECTRICAL CURRENT. TESLA HAS ALSO TOLD FITZGEARLE[redacted] CONVERSATIONS THAT HE HAS SOME [redacted]X EIGHTY [redacted] TRUNKS INDIFFERE[redacted]ES CONTAINING TRANSCRIPTS AND PLANS HAVING TO DO WITH EXPERIMENTS [redacted]ED BY HIM. BUREAU IS REQUESTED TO ADVISE IMMEDIATELY WHAT, IF [redacted]ION SHOULD BE TAKEN CONCERNING THIS MATTER BY THE NEW YORK FIEL[redacted]ION.

FOXWORTH

CORRECTION- THROUGHOUT THE ENTIRE TELETYPE THE NAME THAT SHOULD APPEAR IS FITZGEARLD [redacted] NOT FITZGERALD [redacted] AS IT SOMETIMES IS SPELLED

HOLD

NOT FOIA REDACTIONS

Best Copy Available

JOHN EDGAR HOOVER
DIRECTOR

C-287

Mr. Tolson
Mr. E.A. Tamm
Mr. Clegg
Mr. Glavin
Mr. Ladd
Mr. Nichols
Mr. Rosen
Mr. Tracy
Mr. Carson
Mr. Coffey
Mr. Hendon
Mr. Kramer
Mr. McGuire
Mr. Harbo
Mr. Quinn Tamm
Tele. Room
Mr. Nease
Miss Beahm
Miss Gandy

Federal Bureau of Investiga[redacted]
United States Department of [redacted]
Washington, D. C.

JBL:ed

January 11, 1943

ALL INFORMATION CONTAINED HEREIN IS UNCLASSIFIED DATE 2-2-80 BY SP4 Jmpte

MEMORANDUM FOR [redacted]

RE: UNKNOWN SUBJEC[redacted]
EXPERIMENTS A[redacted]
OF NIKOLA TESL[redacted]
ESPIONAGE - [redacted]

Nikola Tesla, one of the world's outsta[redacted] in the electrical field, died at his residence in the [redacted] New York City, on January 7, 1943. In the course of [redacted]ucted many experiments with respect to the transmission [redacted] by means of radio and what is commonly called the "Death Ray" [redacted] with respect to the wireless transmission of electrical [redacted] were [redacted] to have been completed and perfected, and Tesla had also co[redacted]ed and [redacted] a revolutionary type of torpedo which is not in use b[redacted]tio[redacted] present time. The specifications, explanations of the basi[redacted]ies, [redacted]rking models of Tesla's scientific endeavors are reported to be [redacted] his effects. Tesla is reported to have some 80 trunks in different places containing transcripts and plans having to do with his experiments as well as a working model of one of his developments in the safety deposit box at the Governor Clinton Hotel.

Information concerning Tesla's experiment[redacted]n reported to the New York Office by A. N. Spanel and Bloyce Fitzgerald, the latter an electrical engineer who had been quite close to Tesla. Both of these individuals have indicated that no steps have been taken to preserve Tesla's records and models or to keep them from falling into the hands of individuals sympathetic to the Axis powers.

1 ENCLO

Tesla has a distant relative by the name of Sava Kosanovich, whom he intensely disliked. Kosanovich is reported to be taking steps to get possession of these important documents and plans, and Spanel believes there is a strong likelihood that Kosanovich will make such information available to the enemy. On January 7, 1943, Kosanovich, accompanied by George Clark, in charge of the Museum and Laboratory for RCA, and Kenneth Swezey of Brooklyn, New York, entered Tesla's rooms at the Hotel New Yorker where, with the aid of a locksmith, they broke into a safe in which Tesla kept some of his valuable papers, including important electrical formulae, designs, et cetera.

RECORDED & INDEXED

D63

100-2237-3

Mr. Spanel, in addition to reporting these developments to the Bureau, has also advised the headquarters of the Military Intelligence Division, a Mr. Workin of the Department of Justice in Washington, and Dr. Lozado, one of the advisors to Vice President Wallace. Lozado advised Spanel that the Government was vitally interested in the effects of Tesla and requested that Spanel loose no time in doing all he could to preserve them.

1 JAN 18 1943

COPIES DESTROYED

55 JAN 26 1943

1-12-43

10

Best Copy Available

The New York Office was instructed to disc[illegible]ke the matter up with the State's Attorney in New York City with the [illegible] possibly taking Kosanovich into custody on a burglary charge and obt[illegible] the various papers which Kosanovich is reported to have taken from Tes[illegible]. It was pointed out that any activities pursued by the State's Attor[illegible]d be handled in a most secret fashion in order to avoid any publici[illegible]ect to Tesla's inventions. The New York Office was also instructe[illegible] the Surrogate Court in order that stops could be placed against t[illegible] of Tesla both in his hotel and any other points, in particular, the [illegible] boxes that he ma have in order that no one may enter them without a [illegible]tative being present and every precaution taken to preserve the secrecy [illegible]la's inventions. The New York Office is to keep the Bureau advised of all de[illegible]ents.

Respectfully,

D. M. Ladd

D. M. Ladd

L.M.C Smith is handlin this with alien Property Custodian so there appear to be no need for us to mess around in it.

EW

11

Best Copy Available

JOHN EDGAR HOOVER
DIRECTOR

7

Mr. Tolson
Mr. E. A. Tam
Mr. Clegg
Mr. Glavin
Mr. Ladd
Mr. Nichols
Mr. Rosen
Mr. Tracy
Mr. Carson
Mr. Coffey
Mr. Hendon
Mr. Kramer
Mr. McGuire
Mr. Harbo
Mr. Quinn Tam
Tele. Room
Mr. Nease
Miss Beahm
Miss Gandy

Federal Bureau of Investigation
United States Department of Justice
Washington, D. C.

EAT:DS

January 12, 1943

MEMORANDUM FOR MR. LADD

On Friday, January 8th, Mr. L. M. C. Smith called me in connection with the death of Nikola Tesla. He advised me that he was concerned about the possibility of enemy agents confiscating some of the trunks of Tesla, who had died on January 7th. He understood that the War Department was interested in this matter and that apparently the Alien Property Custodian's office was taking some action. He desired to know whether the Bureau would take some steps to refrain relatives of Tesla from taking the contents of his trunks and whether the Bureau would seize possession of the trunks. Mr. Smith indicated that he was talking to the Alien Property Custodian along the same lines. I told him that in view of the fact he was going to handle the matter with the Alien Property Custodian's office, there did not appear to be any action which the Bureau could or should take.

INFORMATION CONTAINED
IS UNCLASSIFIED
7-2-80 BY

I ENCLO. 1

Very truly yours,

Edw. A. Tamm

12 30 from 1/13/43
Called Donegan
& instructed no
further action

advise field

RECORDED

100-2237-3

B
1 JAN 13 1943

FOR VICTORY
BUY
UNITED STATES DEFENSE BONDS AND STAMPS

53 JAN 22 1943

12

[redacted]

(b)
(7)
(c)

April 16, 1948

ALL INFORMATION CONTAINED
HEREIN IS UNCLASSIFIED
DATE 2-3-88 BY SP4 JRM/RTC

Mr. J. E. Hoover
Federal Bureau of Investigation
Washington D.C.

Dear Mr. Hoover,

I am a student at the Milwaukee School of Engineering, studying Electrical Engineering. I am also interested in the life and work of Nickola Tesla. I understand that at the time of his death, your department took his manuscripts and experiment data for national security. I am preparing a paper to be presented before the student branch of the American Institute of Electrical Engineers on Tesla.

RECORDED & INDEXED 14 SEP 10
100-2237-3X

If it is possible I would appreciate material bearing on Tesla's [redacted] and methods of experiment.

FBI
APR 28 1948

13

This information would help me in a better presentation of this paper and consequently a far greater appreciation of his work in the field of science.

I know that a part of the experiments and theory have a secret classification, and I do not expect any of it.

I am intrested in "Ground Current Transmission" as the basis of my thesis for graduation. If it is possible to obtain this information, I would be very grateful.

Yours very truly,

[redacted] (6)(7)(c)

100-2237-3X April [illegible], 1948

RECORDED 65-47953-18

[redacted]

(b)
(7)
(C)

INFORMATION CONTAINED HEREIN IS UNCLASSIFIED DATE 7-3-[illegible] BY SP4

Dear [redacted]

Your letter of April [illegible], 1948, has been received and I want to express my appreciation to you for having written me as you did. The effects of Nickola Tesla were handled by the Office of Alien Property, and not by this Bureau. It is suggested you may desire to communicate with the Office of Alien Property, United States Department of Justice, 101 Indiana Avenue, Washington, D. C.

Sincerely yours,

John Edgar Hoover
Director

NOTE: This individual requests information relative to the work of Nickola Tesla relative to electrical experiments he was conducting, which Swain understands were taken by this Bureau and held for security reasons. Bureau file [illegible] reflects that the effects of Tesla were handled by the Office of Alien Property.

VWPrjec

Mr. Tolson
Mr. E. A. Tamm
Mr. Clegg
Mr. Glavin
Mr. Ladd
Mr. Nichols
Mr. Rosen
Mr. Tracy
Mr. Egan
Mr. Gurnea
Mr. Harbo
Mr. Pohr
Mr. Pennington
Mr. Quinn Tamm
Tele. Room
Mr. Nease
Miss Gandy

COMMUNICATIONS SECTION
MAILED 8
☆ APR 2[illegible] 1948 P.M.
FEDERAL BUREAU OF INVESTIGATION
U. S. DEPARTMENT OF JUSTICE

6 0 MAY 10 1948

RECEIVED READING ROOM
APR 7 00 PM '48

15

April 3, 1950

ALL INFORMATION CONTAINED
HEREIN IS UNCLASSIFIED
DATE 7-2-80 BY SP4 [illegible]

[redacted]

(b)
(7)
(C)

[redacted]:

Reference is made to your inquiry by telephone on March 29, 1950, concerning certain technical papers which belonged to the late Nikola Tesla.

From an examination of our files, we have been able to determine that this Bureau has never been in possession, as had been indicated to you, of a copy of Dr. Tesla's papers.

Very sincerely yours,

J. Edgar Hoover

100-2237-3X1

~~65-47953-26~~

RECORDED - 53

APR 7 1950

80

67C

[redacted]

EX-115

U.S. DEPT. OF JUSTICE
RECEIVED READING ROOM
FBI
APR 3 5 19 PM '50

(b)
(7)
(C)

APR 4 11 20 AM '50
RECEIVED
U S DEPT
[redacted]

[redacted]

Tolson
Ladd
Clegg
Glavin
Nichols
Rosen
Tracy
Carbo
Ohr
Tele. Room
Case
Andy

MAILED 4
APR 4 1950
COMM - FBI

16

Director, FBI

SAC, New York

April 17, 1950

(b)
(7)
(C)

[redacted]

Rebulet dated April 3 last.

On April 7, 1950 agents of this office interviewed Mr. J.V. POTTS, Vice President of the Manhattan Warehouse and Storage Company, 52nd Street & 7th Avenue, New York City, and at that time Mr. POTTS advised that the rules of his firm required that all persons gaining access to goods stored by Manhattan first had to fill out an appropriate form setting forth their names, date of visit, and reason for requesting access to the goods.

In a review of the file pertaining to the storage of the effects of NIKOLA TESLA, MR. POTTS revealed that only one such visit had been made by persons outside of the management of Manhattan Storage itself. This one occassion took place on January 26 and 27, 1943, at which time representatives of the Alien Property Custodian made a thorough review of the entire effects of the TESLA estate.

NIKOLA TESLA

The TESLA effects are stored in rooms 5J and 5L of Manhattan Storage's warehouse at 52nd Street & 7th Avenue, New York City. MR. MICHAEL KING, who stated he had been Floor Supervisor for approximately 10 years on the floor in question, stated that he could recall only the one occassion in early 1943 when an examination was made of the TESLA effects. He stated that at that time numerous photographs were taken by the examiners. His description of the equipment used would tend to show that a microfilm reproduction was made of some of the papers of the deceased scientist. MR. KING added that several of the group making the examination wore U.S. Navy uniforms, and during the two days required to complete the examination the civilian assistants in the group were identified to him only as "FEDERAL AUTHORITIES". According to MR. KING, no other instance of microfilming of the records of the TESLA estate has taken place since that time.

It should be noted that the Bureau was informed of the examination mentioned above by New York letter (with attachments) dated October 17, 1945, entitled UNKNOWN SUBJECT; SAVA NOSANOVICH; Experiments & Research of NIKOLA TESLA (Deceased), Espionage-M.

cc: 65-12290

ALL INFORMATION CONTAINED HEREIN IS UNCLASSIFIED DATE 7-3-80 BY SP4 Jrm/rtc

100-2237-
NOT RECORDED
148 APR 28

EHH:JJC
105-1391

17

MR. POTTS stated that no inquiry had been received by Manhattan from SAVA N. KOSANOVICH, nor had Manhattan informed him, in any way, that an examination of the TESLA effects had been made by anyone. In fact, added MR. POTTS, the only correspondence relating to the TESLA estate has been in the form of bills for storage.

MR. POTTS stated that any personal inquires regarding the estate would of necessity be directed to him, and to date no such inquiries have been made.

Interviewing agents explained to MR. POTTS that the examination made, as mentioned above, was not instigated by the Bureau, nor had the Bureau taken part in that examination.

Unless advised to the contrary, this investigation is being placed in a closed status, and no further investigative action is contemplated by this office. CLOSED.

[redacted]

(b)
(7)
(C)

[redacted]

August 18, 1952

Federal Bureau of Investigation
Department of Records
Washington, D. C.

ALL INFORMATION CONTAINED
HEREIN IS UNCLASSIFIED
DATE 2-2-80 BY SP4 Jam/jr

Gentlemen:

In a manner of introduction, I wish to state that I am working toward a degree in Electrical Engineering at the Institute of Technology of the University of Minnesota.

For several years, I have been engaged in a study of extensive compass and detail concerning the researches and writings of the late, world renowned scientist, Dr. Nikola Tesla. At considerable expense, I have acquired an extensive collection of materials relating to Dr. Tesla and his works which include:

1) Personal letters written by Tesla to his close friend.

2) Numerous periodicals, some of which are to be found in only a few libraries throughout the United States.

3) A few rare books which have now become "collector's items".

4) A collection of issued patents.

Although the items listed are considerable in number, the specific information desired is lacking.

As I understand it, because of the nature of Dr. Tesla's role in scientific developments, all research papers, patent applications, etc., were secured by the Federal Bureau of Investigation at the time of Dr. Tesla's death in January of 1943.

The purpose of this seizure, as described in numerous articles, was to determine whether these papers contained suggestions leading toward advancements in the field of science.

100 2237-4

RECORDED - 68

Reply
8-26-52

[redacted]

W - 28

(b)
(7)
(C)

[redacted]

19

Now it seems that sufficient time has elapsed for an investigation of this kind. If Dr. Tesla's Estate has been released by the department in charge, any records that can be made available for examination will be welcomed.

A letter from Harold I. Baynton, Assistant Attorney General, Director, Office of Alien Property, informed me that the Library of Congress listed certain works, writings and research studies prepared by the late Dr. Tesla. However, a letter addressed to the Library failed to bring results as the Library "has no files on the researches of Tesla".

A similar result was obtained from the Bureau of Naval Research and the Department of Commerce.

I am especially interested in the research work in which Tesla was engaged in his later years. There are various unpublished works, such as a 10-page typewritten statement presented in 1937 at a meeting of several well-known editors outlining his discoveries and giving a resume' of his work in the fields of gravity and cosmic ray research, etc. Also, Tesla prepared various papers, one of which was in effort to secure the Pierre Gutzman Prize from the Institute of France. My inquiry is in effort to determine whether any of these documents, as well as others, are at this time available.

I will greatly appreciate any information in regard to any records which you may have.

Very truly yours,

(6)
(7)
(C)

[redacted]

August 26, 1952

EX. - 28

[redacted]

INDEXED 68
RECORDED - 68

100-2237-4

(b)(7)(c)

ALL INFORMATION CONTAINED HEREIN IS UNCLASSIFIED DATE 7-2-80 BY SP4 Jmfrte

Dear [redacted]

With reference to your letter of August 18, 1952, our files disclose that the effects of Nikola Tesla were taken into custody at the time of his death by the Office of Alien Property, and not by this Bureau. Consequently, you may wish to communicate further with that agency, which may be addressed as follows: (65-47953)

Assistant Attorney General
Rowland F. Kirks
Director, Office of Alien Property
United States Department of Justice
101 Indiana Avenue, N. W.
Washington 25, D. C.

Sincerely yours,

John Edgar Hoover
Director

cc - 1 - Assistant Attorney General (with copy of incoming)
Rowland F. Kirks
Director, Office of Alien Property
United States Department of Justice
101 Indiana Avenue, N. W.
Washington 25, D. C.

MAILED 10
AUG 27 1952
COMM-FBI

[redacted]

(b)
(7)
(c)

100-2237

NOTE: No reference Bureau files on correspondent in Minnesota.. 8-22-52...per [redacted]

60 SEP 10 1952

21

STANDARD FORM NO. 64

Office Memorandum • UNITED STATES GOVERNMENT

TO : MR. A. H. BELMONT

DATE: May 5, 1953

FROM : MR. L. L. LAUGHLIN

SUBJECT: NIKOLA TESLA (Deceased)
INFORMATION CONCERNING

[redacted] INFORMATION CONTAINED HEREIN IS UNCLASSIFIED DATE 2-22-80 BY SP4 Smith

[redacted] called on the afternoon of May 4, 1953.

[redacted] stated that he had been reading a book entitled, "The Prodigal Genius - The Life of Nikola Tesla" by John J. O'Neill, whom [redacted] described as a science writer for a New York newspaper (publisher - Ives Washburn). [redacted] noted in this book that Bureau Agents went to Tesla's room following his death on January 7, 1943, opened his safe, examined his papers, and took over his personal files. [redacted] said this appeared on page 277. [redacted] stated that Tesla is the father of modern power engineering, being responsible for the invention of the A. C. generator, motor transmission, and other electrical engineering feats. He inquired (1) if the papers and works of Tesla were in the possession of the Bureau, and (2) if so, were they available for review in view of their scientific importance.

I told [redacted] that the statement concerning the Bureau's taking Tesla's files did not seem very logical but that I would check on the matter. (b) (7) (C)

The Bureau's files reflect that shortly after the death of Tesla in his hotel room in New York City on January 7, 1943, Sava Kosanovich, a distant relative, and other individuals entered his room and opened the safe, examining certain materials which he possessed. On January 8, 1943, Mr. L. M. C. Smith of the Department advised Mr. Tamm that he was concerned about the possibility of enemy agents confiscating some of the trunks of Tesla and apparently the Office of Alien Property Custodian was taking some action regarding these effects. Since the matter was being handled by the Office of Alien Property Custodian, the Bureau did not make any inquiries into this situation. (65-47953-6)

It is noted also that the Bureau received a letter dated April 16, 1948, from [redacted] explaining that he was studying electrical engineering at the Milwaukee School of Engineering and

100-2237-4X

[redacted]

RECORDED-66
INDEXED-66 MAY 6 1953

65-47953

1 - Mr. Nichols

[redacted] (b) (7) (C)

22

was interested in the life and works of Tesla. [redacted] stated that he understood at the time of Tesla's death the Bureau took his manuscripts and experiment data for national security. The Bureau on April 22, 1948, advised [redacted] that the effects of Tesla were handled by the Office of Alien Property and not by the FBI.(65-47953-18)

I called [redacted] this morning and told him that it was the office of Alien Property and not the FBI which took over the effects of Tesla following his death. Accordingly, I suggested that [redacted] might wish to communicate with the office of Alien Property for further information concerning this matter.

The book "Prodigal Genius - The Life of Nikola Tesla" is not in the Bureau Library. A copy is being obtained from the Library of Congress. It will be examined to determine specifically the reference made to the Bureau's taking these papers. At that time a determination can be made as to what further action should be taken.

(b)
(7)
(C

ADDENDUM: LLL:mer 5-14-53

Page 277 of the "Prodigal Genius - The Life of Nikola Tesla," describing Tesla's death, contains the following statement: "Operatives from the Federal Bureau of Investigation came and opened the safe in his room and took the papers it contained, to examine them for a reported important secret invention of possible use in the war."

Since this work was published in 1944, it is not felt that any particular purpose would be served by raising an objection with the publishers at this time. [redacted] the individual who raised the question, has been set straight and, therefore, no further action is being taken.

STANDARD FORM NO. 64

Office Memorandum • UNITED STATES GOVERNMENT

TO : Director, FBI

DATE: 2/19/54

FROM : SAC, New York (6[illegible])

INDEXED

SUBJECT: LELAND I. [illegible]
[illegible]

INFORMATION CONTAINED
IN IS UNCLASSIFIED
[illegible] 7-2-80 [illegible]

Mr. GEORGE H. SCHERFF, JR., 149 [illegible]ord Road, [illegible] Rochelle, New York, advised that he received two letters from LELAND [illegible], 127 Seymour Avenue Southeast, Minneapolis, Minnesota, photostat[illegible] of which are being furnished the Bureau and Minneapolis.

Mr. SCHERFF stated that he was an associate [illegible] NIKOLA TESLA in 1914 and that for many years his father had been Dr. [illegible] private secretary. Mr. SCHERFF said that he never heard of LELAND I. A[illegible] did he ever hear of any of the names mentioned in ANDERSON'S letter.

Mr. SCHERFF stated that he has quite a bit of [illegible]'S writings in his possession and he didn't know whether or not they would be of value to a foreign government.

[redacted] (6)(7)(C)

No further action is being taken by the N.Y. Office, UACB.

Encs. (29)
1 - Minneapolis (3 Encs.)

EXP. PROC.

memo: New York
[redacted]: aaa
3-10-54

100-2237-4X1
~~100-0-4973~~

RECORDED - 15
MAR 1 1954
3-11

INDEXED - 15
EX-129

67C

[redacted]

no action

[redacted]

(6)
(7)
(C)

24

Leland I. Anderson
127 Seymour Avenue Southeast
Minneapolis 14, Minnesota

February 3, 1954

Mr. George H. Scherff, Jr.
149 Seacord Road
Westchester, NEW YORK

Dear Mr. Scherff:

re.: The Life and Work of Dr. Nikola Tesla.

Recently, I have founded an organization in name and honor of Dr. Tesla in cooperation with several people who were intimately associated with Tesla during his lifetime, and with others who are interested in Dr. Tesla and his achievements from a scientific and historical standpoint. (See enclosed brochure.) I have had some difficulty locating a few of Tesla's associates, and, the name of George Scherff is among them. Therefore, it is my sincere hope that you, Mr. Scherff, are the person I seek as having been associated with Tesla.

I have personally studied the works of Tesla for a number of years, being particularly interested in elaborating upon his researches regarding high-tension radiant beams. Through some travel and other efforts, I have been fortunate to locate many original collections of Tesla's correspondence and manuscripts, and in a few cases obtained a number of interesting items.

I was in New York a short time ago on business, and while there I visited Mr. Kenneth M. Swezey. He intends to undertake some significant work on behalf of Tesla in the near future, and since he knew Tesla for so many years during his later life, it will be handled with great understanding.

I hope that you may have some interest in the work which I have initiated on behalf of Dr. Tesla. There are many matters that I wish to discuss with you, provided of course, that you are the Mr. Scherff related to the Tesla story. I would be most happy to hear from you at your earliest convenience, and will send you all publications of the organization if you wish to receive them.

Very truly yours,

Leland I. Anderson

25

TESLA-INTERNATIONAL

University Station, Box [illegible]
MINNEAPOLIS · 14 · MINNESOTA

To Those Who Are Interested in the Life and Work of
DR. NIKOLA TESLA

Following the death of Dr. Nikola Tesla on the 7th of [illegible], Mr. John J. O'Neill, former Science Editor of the New York Herald Tribune, presented the biography

PRODIGAL GENIUS
The Life of Nikola Tesla

- a memorable tribute to one of the most outstanding figures in the entire field of electrical science. Many reading this biography learned of Nikola Tesla for the first time despite his monumentous achievements with which he has won world-wide acclaim in scientific circles. Even those closely associated with the fields of science and engineering discovered a remarkable story not generally known of the brilliant genius Tesla whose sensitive personality and seclusion kept his fame in a shadow.

The TESLA-INTERNATIONAL organization is being established in the United States in name and honor of Dr. Nikola Tesla by those sharing a mutual interest in his life and works. The organization has as its objective the promulgation of the truth about Nikola Tesla; that a full recognition be made for his unparalleled research work on the effects of currents of high frequency and high potential, and for his achievements in the realms of polyphase power transmission and telecommunication. It would be the duty of the organization to do all in its power that the name of Tesla win in the eyes of the nation the fame deserving of a truly great American for his contributions to science, industry, and to this country.

A journal of the TESLA-INTERNATIONAL organization was issued beginning the month of November, [illegible]. In addition to items of recent and historical interest related to Tesla, the journal will include:

1) A formal roster of all [illegible] have an interest in the Tesla organization and wish to engage in its activities.

2) An opportunity of [illegible] of the organization through the medium of the journal.

3) A comprehensive bibliography [illegible] listing of all available items concerning Tesla, which would include a cataloging of the various collections of Teslians not generally known. Such a listing will be of particular importance to scholars in the research field.

4) A presentation of hitherto unpublished writings and analyses of Tesla's technical research studies as they become available.

The journal of the TESLA-INTERNATIONAL organization will be forthcoming at intervals of 1½ - 2 months. Subscription rate is $1.00 for 10 issues. Membership in the TESLA-INTERNATIONAL organization is concurrent with subscription to the journal.

Leland I. Anderson
127 Seymour Ave. S. E.
Minneapolis 14, Minnesota

REGISTERED

VIA AIR MAIL

Mr. George H. Scherff, Jr.
149 Seacord Road
Westchester, NEW YORK

MINNEAPOLIS FEB 1954

NEW ROCHELLE FEB 1954

FEB 1954

MINNEAPOLIS MINN. FEB 1954 NO. 35

Leland I. Anderson
127 Seymour Avenue Southeast
Minneapolis 14, Minnesota

February 12, 1953

Dear Mr. Scherff,

It was so very rewarding to receive your reply concerning Dr. Nikola Tesla... I have initiated an undertaking on behalf of Tesla because I feel that in all right and justice something should be done to perpetuate the name of Tesla and see to it that his name becomes a part of the heritage of this nation. A great task perhaps, but as time goes on I believe the name of Tesla will become more significant in scientific developments. I hope that you may have an interest in the organization which I have proposed and established, and I will be honored to have you as a member. The organization is presently set up on the basis of those having a mutual interest in Tesla, with a free exchange of information between members. The first two issues of the journal of the organization are being sent to you under separate cover, and should reach you in a day or two.

Some other members which may be of interest to you are; Muriel Arbus, Dorothy Skerritt, Kenneth Swezey and W. W. Wilhelm. The recent deaths of John O'Neill and Edwin Armstrong were very unexpected, and it is with a great sadness that I received the news and loss of these two members.

Do you know if Mr. Lowenstien had a daughter? The reason I ask is that a woman visited Mr. O'Neill before his death and told him that she inherited a great amount of Teslaiana from her father - whom I presume to be Mr. Lowenstien. This woman was afraid of disclosing the information by reason of her mistaken notion and fear that she would rudely be raided by the army. You see Mr. O'Neill related to me that a few army officials visited his home with insistent requests for information. Of course all this sort of government interest was aroused by Tesla's "Death-Ray" rumors, played up by enterprising journalists. Well, the result of all this is that she refused to give Mr. O'Neill her married name - only that she married a Siamese prince no less, and moved to some mid-western city. If this woman has the amount of material that Mr. O'Neill intimated, it would certainly be important to locate her.

I believe that one of the valuable efforts of the Tesla organization would be to catalog every piece of information concerning Tesla. I have made a beginning effort along this line, and I hope that before too long all collections of Teslaiana may be located, cataloged, and reproduced for fear of eventual loss. Through Mary A. Benjamin (of Walter R. Benjamin Autographs in New York) I have obtained a number of significant items of correspondence between Tesla and Robert U. Johnson. The entire collection of correspondence with Mr. Johnson numbers in excess of 70 pieces. I share this collection with Mrs.

Leland I. Anderson
127 Seymour Avenue Southeast
Minneapolis 14, Minnesota

James W. McChesney of Long Island. The period of this correspondence runs from 1894-1930. Mrs. McChesney has another group of correspondence between Tesla and George Sylvester Viereck which is very interesting in that it is from a period later in Tesla's life. (If you wish to receive any photostatic copies from these collections I will be happy to send them to you.)

I am interested to learn whether you have collected any mementoes, correspondence, writings, etc. of Tesla. For a long while I have been trying to locate a copy of the brochure which Tesla issued the first week of February, 1904. It came in a large square envelope bearing a large red wax seal with the initials "N.T." stamped thereon. Quite a number of them were distributed throughout New York and elsewhere by the Tesla enterprise in an effort to secure financial backing for the tower and power plant erected at Wardenclyffe, Long Island. You no doubt know of the brochure of which I speak. I thought it would be interesting to reproduce this brochure and distribute it among the members of the Tesla organization as a memento. Although I have written and inquired about this brochure extensively, I have not been able to locate a copy. Did you ever have one?

I have hopes that in 1956 (The Tesla Centenary) some significant observance may be organized here in the United States in honor of Tesla. The Tesla Museum in Yugoslavia has obtained the Tesla inheritance, which amounts to 9 tons of apparatus, writings, etc. It is the intention (so stated) of the Museum to publish the entire writings of Tesla, including those in the inheritance, on the Tesla Centenary. I don't know what sort of political propaganda might be injected in this publication, but it occured to me that it may be appropriate to arrange an advance publication in this country [illegible] unpublished works. Unfortunately, there is not much to work on as yet. While the Tesla estate remained in this country, photostats of nearly every important paper in the estate were made under order of Wright Field Development Center in Ohio. If these photostats could be located there would be much material for a publication. However, in working with the Library of Congress in preparation of a file on Tesla, these photostats have escaped the most extensive search thus far.

Hoping that you may be interested in the efforts of the TESLA-INTERNATIONAL on behalf of Tesla and wish to associate yourself with it, I am,

Yours faithfully,

Leland I. Anderson

TESLA INTERNATIONAL

[illegible] Station B [illegible]

[illegible] 14 [illegible] MINNESOTA

IMPORTANT ANNOUNCEMENT

To Members of the TESLA INTERNATIONAL organization
and those interested in the works of
Dr Nikola Tesla

[illegible]

"[illegible] Writings of Nikola Tesla"

by

[illegible] Martin

[illegible] it is with great pleasure that the [illegible] organization announces the reprinting of [illegible] literature

[illegible] and significant work [illegible] a great demand for this [illegible] IS STRICTLY [illegible] will not be repeated when the [illegible] desiring a copy of the book are [illegible]

Cost of this book [illegible] printing rate is only $4.00 [illegible] United States to members and friends [illegible] organization

Leland I. Anderson
127 Seymour Avenue S. E.
Minneapolis 14, Minnesota
3 CENTS 3
3 CENTS 3
SPECIAL DELIVERY
VIA AIR MAI
Mr. George Scherff
149 Seacord Road
New Rochelle, New York
SPECIAL DELIVERY

SAC, New York

March 10, 1954

RECORDED - 15

~~105-0-4973~~

EX-129

Director, FBI

100-2237-4X1

[redacted]

NOT AN FOIA REDACTION

LELAND I. ANDERSON
MISCELLANEOUS; INTERNAL SECURITY - YU

Reurlet 2-19-54 concerning the above-captioned individual. Relet forwarded to the Bureau two Photostats of two letters from Anderson which were received and made available to your office by George H. Scherff, Jr.

There is returned herewith one set of the Photostats received by the Bureau as enclosures with your letter inasmuch as it appears this set was intended for retention in your office file.

Attachment

[redacted]

(b)
(7)
(C)

ALL INFORMATION CONTAINED
HEREIN IS UNCLASSIFIED
DATE 7-2-80 BY SP4 Jrm/rtc

(b)
(7)
(C)

[redacted]

Tolson
Ladd
Nichols
Belmont
Clegg
Glavin
Harbo
Rosen
Tracy
Gearty
Mohr
Winterrowd
Tele. Room
Holloman
Miss Gandy

MAILED 16
MAR 10 1954
COMM - FBI

32

KENNETH M. SWEZEY

ALL INFORMATION CONTAINED HEREIN IS UNCLASSIFIED DATE 7-2-80 BY SP4 [illegible]

163 Milton Street
Brooklyn 22, N.Y.
June 25, 1955

Mr. Tolson
Mr. Boardman
Mr. [illegible]
Mr. Belmont
Mr. Harbo
Mr. Mohr
Mr. Parsons
Mr. Rosen
Mr. Tamm
Mr. Sizoo
Mr. Winterrowd
Tele. Room
Mr. Holloman
Miss Gandy

[redacted]

Mr. J. Edgar Hoover
Federal Bureau of Investigation
Washington, D.C.

Dear Mr. Hoover:

Back in 1943, the local Alien Property Custodian searched through the belongings of the late electrical inventor, Nikola Tesla, stored in the Manhattan Storage Warehouse in New York City. Tesla had been a naturalized American for more than fifty years, so I believe that the search was made on the grounds that the property was to be sent to Yugoslavia, through Tesla's nephew and heir, Mr. Sava Kosanović (Mr. Kosanović had been Minister of State under the King's government, later became Ambassador to the United States from the present government, and is now a Minister serving in Belgrade).

According to the attorney who handled the Tesla estate, Mr. Philip Wittenberg, the Alien Property Custodian assured him that nothing had been held. I have a letter from the Office of Alien Property, dated March 15, 1955, which confirms this statement.

In gathering material to help in a nation-wide commemoration of Tesla's hundredth birthday next year---which will be participated in by leading scientific and engineering societies, museums, and universities---I have just discovered, however, that Tesla's solid gold Edison Medal somehow vanished during that search.

As a friend who had known Tesla well during his last twenty years, I was with Mr. Kosanović in Tesla's room in the Hotel New Yorker on the day he died. A safe expert was called in to unlock Tesla's safe. Among its contents were several honorary degrees, a volume of greetings which I had gathered for him on his seventy-fifth birthday, a bunch of keys, and the Edison Medal. We kept out the book of greetings (I mentioned this at the time to the assistant manager of the hotel and later to a Mr. Gorsuch of the Alien Property Custodian's office), but everything else, including the medal and the keys, was replaced and the safe was locked.

RECORDED - 82 / 60-2237-5
INDEXED - 82

Except when it was inspected by the Alien Property Custodian, the safe was never reopened until it

Memo Belmont - Boardman 6/29/55. Let ack. [redacted] 6/29/55 390

6 JUL 11 1955

EXP. PROC.

JUN 27 1955

33

arrived in Belgrade (where Tesla's property was to be installed in a special Tesla Museum) and was there opened by Mr. Kosanovic. According to his former secretary, both the bunch of keys and the medal were missing. The keys were later found in a tin box outside the safe; the medal was never found.

I learned of the disappearance of the medal only by accident. Mr. Kosanovic had asked his former secretary to get permission from the American Institute of Electrical Engineers (who gave Tesla the Medal) to have it duplicated. This was given, but the cost, it turned out, would be about four hundred dollars. In the meantime, the Tesla Museum, in Yugoslavia, is quietly trying to raise the money to pay for it.

The irony of this situation is more disturbing than the money involved. By giving us a system which made electric power universally available, Tesla---probably more than any other one man---helped put America on top of the world. At the time he died, his gold Edison Medal was the only material evidence left of this country's appreciation. That this last token should have disappeared ---to have to be replaced by his materially poor countrymen overseas for whom he had done nothing---seems a tragic denouement.

John O'Neill, in his biography of Tesla, states that the FBI broke into Tesla's safe on the day he died, and an article in the current (June) Coronet repeats this. I know this isn't true. I did hear, however, that the FBI somehow lent a hand to the Alien Property Custodian during the latter's search in the warehouse.

If that is so, I thought that perhaps some of your men might remember the conditions under which the search was made and therefore might have a suggestion as to what could have happened to the medal. After this long time, I have no hope that the medal can actually be restored, and I am already trying to interest Americans in making a replacement. But future biographers might be spared a lot of wild guessing and wrong blaming if some hint could be obtained as to whether the original got lost, strayed, or stolen---and who might have been responsible.

With best regards and sincere appreciation for any help you can give,

Sincerely,

Kenneth M. Swezey

Kenneth M. Swezey

P.S.: I am enclosing an editorial from last month's POWER magazine which outlines Tesla's contribution to the electric power industry.

K.M.S.

LOUIS N ROWLEY, EDITOR · MAY 1955 · ESTABLISHED 1882 **Power**

Strange Genius

ASK ANY GROUP of power men to name those who laid the foundation for today's electrical generation and distribution. You'll wind up with an impressive list—Edison, Brush, Thomson, Westinghouse, many others. But there is almost sure to be a significant omission.

Yet this forgotten man conceived the polyphase ac motor—still basic—and devised a suitable system of generation and distribution for applying it. To grasp the magnitude of this contribution, we must turn back to the 1880's when the electrical era was being born, and the "battle of the systems" held sway.

Arc lights and motors were being operated on constant-current series systems. Edison's Pearl Street generating station had opened in 1882, supplying incandescent lamps and, later, dc motors on a constant-potential system. Under the leadership of Westinghouse and Stanley, the advantages of ac distribution were demonstrated. But there was no successful ac motor.

In May, 1888, a young Yugo-Slav engineer, but four years in the United States, read a paper before the American Institute of Electrical Engineers. In it he described a new ac system. Its heart was the induction motor with its basic and beautiful concept of the rotating magnetic field. The man was Nikola Tesla, the system he described was destined to sweep the field.

With characteristic vision, George Westinghouse realized the fundamental importance of the polyphase ac system and acquired the basic patents. Its first impact on the general public was at the Chicago World's Fair of 1893. There a 2-phase generator supplied motors and lamps, and, through rotary converters and motor-generators, a variety of dc equipment.

But it remained for the Niagara Falls power project to demonstrate in the most dramatic way possible that polyphase ac was the system of the future. Since 1886 when a charter to develop its power had been granted, the eyes of the world had been on Niagara. An international commission, headed by Lord Kelvin, had reviewed 17 proposals, found none acceptable. Later, just five years after Tesla's AIEE paper, it was officially decided to use the polyphase system.

In August, 1895, Niagara power was delivered to the first industrial customer and in 1896 ac transmission to Buffalo, 22 miles away, was begun. By that time, the steam turbine had been introduced in America and the modern age of electric power had truly opened.

For Nikola Tesla, these far-reaching inventions were but a beginning. Still to come was brilliant work in high frequencies, thinking basic to much of today's radio art. Yet by the time of his death in 1943, both he and his work had begun to slip into obscurity. Why?

A man of flashing insights and enormous brilliance, Tesla was largely indifferent to the development of his ideas. This he left to others while he followed the lure of new challenges. In later years, his projects became more grandiose, his ways more mysterious, his pronouncements more Olympian. And working alone, as he did, he formed none of the institutional ties that help to perpetuate a record of accomplishment.

Next year—July 10, 1956—will be the 100th anniversary of Nikola Tesla's birth. It would be fitting for our engineering societies to commemorate this occasion, to acknowledge our debt to this strange and lonely genius who changed our world for the better.

ALL INFORMATION CONTAINED
HEREIN IS UNCLASSIFIED
DATE 7-14-82 BY [illegible]

100-2237-5

(REPRINTED BY PERMISSION)

35

АМЕРИКАНСКИ
СРБОБРАН
THE AMERICAN SRBOBRAN
Second Class Mail Privileges Authorized at Pittsburgh, Pa.

THE LARGEST AND OLDEST SERBIAN DAILY NEWSPAPER IN AMERICA
Published Daily Except Sat's, Sundays and Holidays by SERB NATIONAL FEDERATION
3414 Fifth Avenue Telephone MAyflower 1-6600 Pittsburgh 13, Pa.

MOMCHILO SOKICH, Editor — JOVAN BRATICH, Ass't. Editor
MILAN M. KARLO, Editor English Section

ПРЕТПЛАТА НА ЛИСТ

За Сједињене Државе: на годину $8.00; шест месеци $4.00. За Канаду: на годину $9.00; шест месеци $4.50. За стране земље: на годину $10.00; шест месеци $5.00. За град Питебург: на годину $9.00; шест месеци $4.50. — Један број 5ц. Претплата за енглеско издање $4.00 годишње.

SUBSCRIPTION RATES

For United States of America: For One Year $8; Six Months $4. For Canada: One Year $9; Six Months $4.50; Foreign Countries: One Year $10; Six Months $5. For Pittsburgh: One Year $9; Six Months $4.50.—Single copy 5c. Subscription for the English Section only is $4.00 per Year.

Рукописи се не враћају никоме. — Огласи се плаћају унапред.

RECOGNITION FOR TESLA

Largely thru a young American engineer's efforts, the world today is re-scanning the record and achievements of our inventive genius, Nikola Tesla. Of late, even the big-time magazines have devoted space to the amazing career and fascinating character of the pioneering electrical wizard.

The man behind this belated recognition for the one-time Serbian immigrant boy who made millions but died almost a pauper is Leland P. Anderson, head of the **Tesla Society**, which has headquarters at the University of Minnesota.

Thru travels, correspondence and detailed research, Mr. Anderson has dug up many friends of the late genius and induced them to join in his noble work. A good many of these are American-Serbians. They serve Mr. Anderson and he serves them, with information issued thru his TESLIAN publication. This is, at present, a mimeographed publication issued monthly which casts new light on the known life and record of the late Dr. Tesla.

The latest issue (March-June) informs of progress plans to honor Dr. Tesla even more. It also presents an account of a fascinating editorial, "Strange Genius", by the POWER magazine of the powerful McGraw-Hill publishing line. This editorial traces the introduction of Dr. Tesla's polyphase system, described by Mr. Anderson, as the **"most tremendous event in all engineering history."**

Editorialist Louis M. Bowler, according to the TESLIAN, answers the perplexing question why, in view of Tesla's important discoveries, he fell short of the comparative popularity won by Edison and Bell. Then in closing, he suggests: "It would be fitting for our engineering societies, in commemoration of the 100th anniversary of Nikola Tesla's birth (July 10, 1956), to acknowledge our debt to this strange and lonely genius who changed our world for the better."

This appears to be just what Mr. Anderson was waiting for. For now, in the same issue of his TESLIAN, he has prepared a form to petition Postmaster General Arthur E. Summerfield to issue a Tesla commemorative stamp next year.

[redacted] this form in duplicate in this issue and [redacted] Send [redacted] petition.

ION CONTAINED
CLASSIFIED
BY SP4 Jones

INDEXED-59
100 2237 A
NOT RECORDED
138 JUL 11 1955

ICAN SRBOBRAN
29, 1955
sburgh, Pennsylvania

Office Memorandum • UNITED STATES GOVERNMENT

TO : L. V. BOARDMAN

DATE: June 29, 1955

FROM : A. H. BELMONT

ALL INFORMATION CONTAINED HEREIN IS UNCLASSIFIED DATE 7-2-80 BY SP4 JM/rtc

SUBJECT: NIKOLA TESLA
MISCELLANEOUS - INFORMATION CONCERNING (ESPIONAGE)

Tolson
Boardman
Nichols
Belmont
Harbo
Mohr
Parsons
Rosen
Tamm
Sizoo
Winterrowd
Tele. Room
Holloman
Gandy

Nikola Tesla, a native of Yugoslavia, was a famous electric inventor who died in New York City in 1943 where he had lived for many years. In attached letter to Bureau dated 6-25-55 Kenneth M. Swezey, Brooklyn, New York, advises he is gathering material to help in a nation-wide commemoration of Tesla's hundredth birth anniversary in 1956. Swezey relates he was present when Tesla's safe was opened by friends after his death and advises the contents were thereafter replaced and then impounded by the United States Alien Property Custodian. Later the safe was removed to Belgrade, Yugoslavia, to be installed in a Tesla Museum. Missing from Tesla's effects is a gold Edison medal he had been awarded. Swezey is seeking to locate the medal and has been advised by the Office of Alien Property (OAP) that OAP held none of Tesla's property. Swezey states he has heard the FBI assisted OAP in handling Tesla's effects while in storage, and accordingly, he asks whether Bureau could assist him in locating the Edison medal. Re FBI's assistance to OAP Swezey mentions that in the Tesla biography ("The Prodigal Genius" - 1944) by John O'Neill it was stated FBI broke into Tesla's safe the day he died (1-8-43 to protect contents from enemy hands). Swezey notes this same comment appears in article ("The Genius Who Walked Alone") by Alfred H. Sinks in the June, 1955, "Coronet." Swezey says he knows FBI did not do this [redacted] Bureau did not enter into Tesla safe matter upon Department's advice it was being handled by OAP. Bureau previously aware of comment in O'Neill's book.

(b)(7)(C)

[redacted]

In 1945 Sinks requested for his use as author data re Bureau's microfilm procedure. Was advised no such data available for publicati

Enclosure Letr 6-30-55
100-2237
cc - 1 - 65-47953
Ticklers - Mr. Bird
Mr. Belmont
Mr. Boardman
ETB:jaa
(5)

RECORDED - 97 100-2237-6

EX-104

6 JUL 7 1955

6 JUL 11 1955

37

Memorandum For Mr. Boardman

RECOMMENDATION:

That the attached letter be sent to Swezey advising Bureau did not participate in the handling of Tesla's effects and that the matter was handled by OAP. Therefore, Bureau unable to be of assistance; that no action be taken relative to Sinks' comment in "Coronet" article.

Tickler - M. Bird
Mr. Belmont
Mr. Boardman

June 30, 1955

RA
RA

ALL INFORMATION CONTAINED
HEREIN IS UNCLASSIFIED
DATE 2-2-80 BY SP4 Jrm/R

Mr. Kenneth M. Swezey
163 Milton Street
Brooklyn 23, New York

(Original)

Dear Mr. Swezey:

With reference to your letter of June 25, 1955, our files disclose the effects of Nikola Tesla were taken into custody after his death by the Office of Alien Property and not by this Bureau.

Since we did not participate in the handling of Mr. Tesla's effects, we are unable to supply the information you requested.

Sincerely yours,

J. Edgar Hoover

John Edgar Hoover
Director

COMM — FBI
JUN 30 1955
MAILED 25

100-2237-6X

RECORDED - 26
INDEXED - 26

EX-113

~~65-47153~~

64 JUL 1 1955

NOTE:

A cover memorandum from Belmont to Boardman was prepared by ETB:jaa on 6-29-55 in connection with this outgoing mail.

Bufiles contain no derogatory data re correspondent; reflect only that he was close friend and admirer of Tesla.

Tolson
Boardman
Nichols
Belmont
Harbo
Mohr
Parsons
Rosen
Tamm
Sizoo
Winterrowd
Tele. Room
Holloman
Gandy

[redacted]

64 JUL 8 1955

39

[redacted] (b)

August 1, 1955.

Mr. J. Edgar Hoover,
Federal Bureau of Investigation,
Washington, D.C.

Dear Mr. Hoover:

In his book, "Prodigal Genius", The Life of Nikola Tesla, Mr. Jo[illegible] J O'Neil says, on page 277, that the F.B.I. went to Tesla's hotel room, opened his steel safe and removed from it, the papers it contained.

Was there ever any publication of what these papers contained? I[illegible] so, could you inform me where I might obtain a copy of such publication?

If there was no publication of the Safe's content, after more tha[illegible] 12 years, would it be improper to publish them?

If there was no publication of the safe's content, but there were no particular secrets found there in, could you inform me where I might learn what the safe contained?

Any information on this matter will be appreciated.

Thank you for your trouble.

Sincerely,

[redacted]

(b)
(7)
(c)

ALL INFORMATION CONTAINED
HEREIN IS UNCLASSIFIED
DATE 7-2-83 BY SP4 Jam/rtc

EX-104

100-2237-6X1

~~65-47~~

RECORDED - 77

INDEXED - 77

2 AUG 12 1955

(b)
(7)
(c)

40

100-2237-6X1

~~65-47953-34~~

August 11, 1955

[redacted]

EX-104

[redacted]

ALL INFORMATION CONTAINED HEREIN IS UNCLASSIFIED DATE 7-2-80 BY [signature]

Dear [redacted]:

Your letter dated August 1, 1955, has been received, and in response to your inquiry, I would like to advise that our files reflect that the effects of Nikola Tesla were taken into custody after his death by the Office of Alien Property and not by this Bureau.

Since we did not participate in the handling of Mr. Tesla's effects, we are unable to supply the information you requested.

Sincerely yours,

John Edgar Hoover
Director

COMM-FBI AUG 11 1955 MAILED 19

NOTE: Bufiles reflect no record on correspondent. This type of reply utilized by Internal Security Division in answering similar inquiries on 6/30/55. (65-47953-33) Cover memo from Mr. Belmont to Mr. Boardman dated 6/29/55 set out background of this matter which concerned the death of Tesla, a famous electrical inventor. Bureau was not involved in this matter, and the opening of the safe mentioned was done by the Office of Alien Property.

Mr. Tolson
Mr. Boardman
Mr. Nichols
Mr. Belmont
Mr. Harbo
Mr. Mohr
Mr. Parsons
Mr. Rosen
Mr. Tamm
Miss Gandy

[redacted]

63 SEP 28 1955

[redacted]

AUG 18 1955

41

[redacted] (5

September 10., 1955.

Mr. John Edgar Hoover,
Federal Bureau Of Investigation,
Washington 25, D.C.

Dear Mr. Hoover:

Refering to my letter to you August first, 4x1 this year - your letter to me, August 11th., reletive to the matter of the papers of Mr. Nikola Tesla.

On August 26, I wrote the office of Alien Property regarding this matter, indicating that I had received the information from you that it was their department which had taken the Tesla Property into custody - not yours..

I have a letter from Mr. Henry G. Hilken - that Department - File Number HGH:N SM:elk 017-3566, in which I am told that office "never had custody, nor has vested, any property of Nikola Tesla".

As I began this matter with you - because it was stated in Mr. O'Neill's book that it was your department who opened Tesla's safe I am wondering if you have any further suggestions along lines I might follow to obtain some information in this regard?

Thank you for your time and trouble.

Sincerely,

[redacted] (b) (7) (c)

ALL INFORMATION CONTAINED
HEREIN IS UNCLASSIFIED
DATE 7-2-80 BY SP4 Jrm/rte

EX-PROC
SEP 19 1955

RECORDED-12 100-2237-6X2

EX-107 (b) (7) (c)

17 SEP 20

[redacted]

42

RECORDED
INDEXED-12

100-2237-6X2

EX-107

September 20, 1955

(b)(7)(C)

ALL INFORMATION CONTAINED
HEREIN IS UNCLASSIFIED
DATE 7-2-80 BY SP4 jem/rtc

Dear [redacted]:

I have received your letter dated September 10, 1955.

As you were advised by my letter of August 11, 1955, this Bureau was not connected in any respect with the acquisition or custody of the effects of Nikola Tesla, and it is therefore not possible to furnish you any additional information.

Sincerely yours,

John Edgar Hoover
Director

(b)(7)(C)

NOTE: By letter 8-11-55, we referred [redacted] to the Office of Alien Property, which Office was reported to have assumed custody of Tesla's effects subsequent to his dea (65-47953-6)

(3)

(b)(7)(C)

COMM - FBI
SEP 20 1955
MAILED 30

SEP 28 1955

43

L INFORMATION CONTAINED
HEREIN IS UNCLASSIFIED
DATE 7-3-80 BY SP4 Jan/etc

RECOGNITION FOR TESLA

(Please fill out this form and mail to the address appearing below.)

THE TESLA SOCIETY
University Station, Box 135
Minneapolis 14, Minnesota

(date)

(city & state)

Hon. Arthur E. Summerfield
Postmaster General, Postoffice Dept.
Washington, D. C.

Dear Sir:

Nikola Tesla's contributions to science, industry, and to his adopted country have greatly inspired engineering progress. His electrical systems helped create an American conomy of world pre-eminence.

We respectfully request issuance of a 1956 commemorative stamp to be issued on the centennial of Tesla's birth (1856-1943).

(signed) _____

AMERICAN SRBOBRAN
June 29, 1955
Pittsburgh, Pennsylvani

Ex. - 10€
INDEXED-59

100 2237-A
NOT RECORDED
138 JUL 11 1955

6C JUL 13 1955

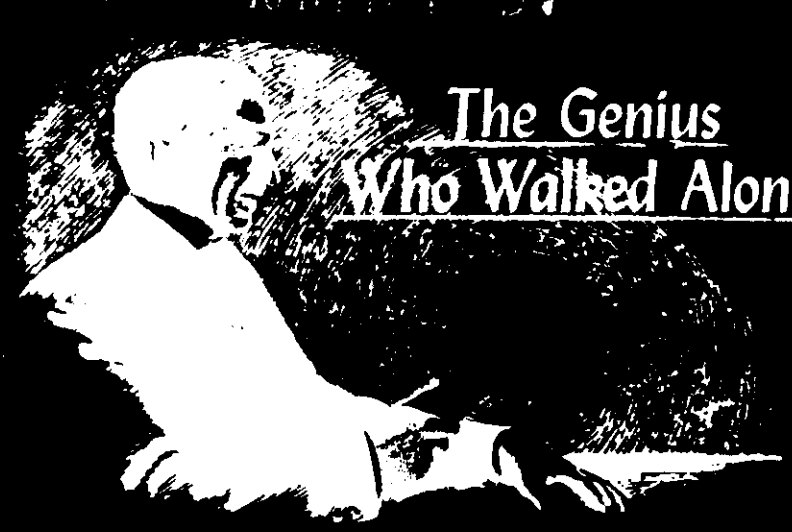

The Genius Who Walked Alone

by ALFRED H. SINKS

Nikola Tesla was a great inventor—and also a prophet without honor

COUNTER-ESPIONAGE WHEELS started turning early on the morning of January 8, 1943. Anxious FBI agents slipped into a room in the Hotel New Yorker where, late the night before, a chambermaid had discovered the body of Nikola Tesla, dead at 86, regarded by many as the greatest scientific genius of his time.

For years, Tesla had been making scientific predictions so fantastic as to be literally out of this world. Of late he had been working—or so he said—on revolutionary new weapons powerful enough to annihilate armies at a single blow.

There was only one Tesla, and the story might—incredible as it sounded—be true. The old man's safe might hold these secrets, and the Government could not risk the chance of enemy spies getting there first.

Half hoping to find something which would bring a sudden and decisive end to World War II, the G-men broke open the dead man's strong box. If anything of importance was discovered, it has never been revealed.

Yet, their quick action was justified, for you could never be sure about Tesla, one of the strangest men who ever lived. Most people took him with a grain of salt, yet no serious scientist dared shrug away his claims as nonsense. Not after Thomas Edison tried it and Tesla proved him wrong.

The world's leading physicists and electrical engineers had to eat crow back in the 1880s when Tesla solved a problem they had thought impossible. That one accomplishment—the invention of a practical alternating-current motor and gen-

45

[redacted]

Mr. Felt
Mr. Baker
Mr. Callahan
Mr. Cleveland
Mr. Conrad
Mr. Gebhardt
Mr. Jenkins
Mr. Marshall
Mr. Miller E.S.
Mr. Sovars
Mr. Thompson
Mr. Walters
Tele. Room
Mr. Boise
Mr. Bowers
Mr. Fenwick
Mr. Herrington
Mr. Conroy
Mr. Mintz
Mr. Eardley
Mrs. Hogan

(b)
(7)
(C)

United States Senate

June 26, 1973

Respectfully referred to:

Congressional Liaison
Federal Bureau of Investigation
Department of Justice
Washington, D. C. 20530

Because of the desire of this office to be responsive to all inquiries and communications, your consideration of the attached is requested. Your findings and views, in duplicate form, along with return of the enclosure, will be appreciated by

Senator [redacted]

ATTN: U.S.S[redacted]

(b)
(7)
(C)

Form #2

ST-105

100-2237-24

7 JUN 29 1973

ENCLOSURE

[redacted]

(b)
(7)
(C)

CORR[redacted]ENCE

46

[redacted]

20 June 1973

(b)(7)(C)

Dear Senator [redacted]

Though in Alaska temporarily working on a military contract, I still consider myself an [redacted] resident, hence it is to you that I write.

During my days at [redacted] College, I became interested in a fascinating Czech physicist, Nicolai Tesla. Proffessor Tesla emmigrated to this country in the twenties, I believe, and did some of his most original work here. Tesla had a peculiar bent of mind, in his younger days he was often called a mad scientist, and did not publish extensively when he came to the US. Most of the extant primary material is in untranslated Czech. Tesla was, however, an extensive note taker. It thought it strange that upon his death, none of his notes from his American period ever appeared. Upon discussing this with a friend, I was informed that all of Mr. Tesla's notes were confiscated by the FBI. I cannot conceive how these notes on physics and electricity can in any way endanger the national safety. It seems that Mr. Hoover in his zeal, had confiscated material whose only sin was a radical approach to science. There is indication that much of Professor Tesla's later work concerned a very novel approach to time theory. Needless to say, it has been radical approaches to physics that have been our greatest scientific advances in modern times, viz. Einstein, Heisenberg, et al.

I was wondering if your office might be able to determine if these papers are still extant, and if so, see to it that the public has access to them. It would be a shame to see all of Nicolai Teslas work to have been in vain.

Please excuse my typing, in all the thousands of words I typed trying to get a liberal education, I never did master the typewriter.

Sincerely yours,

[redacted]

(b)(7)(C)

100-2237-24

ENCLOSURE

47

July 5, 1973

ST-105

REC-15

100-2237-24

ALL INFORMATION CONTAINED HEREIN IS UNCLASSIFIED DATE 7-8-80 BY SP2 jmp/ste

Honorable [redacted]
United States Senate
Washington, D. C. 20510

(b)(7)(C)

Dear Senator [redacted]:

This is to acknowledge receipt of your communication dated June 26th enclosing a letter from your constituent, [redacted] who is temporarily employed in Alaska.

In response to [redacted] inquiry, central files of the Federal Bureau of Investigation indicate that the effects of Dr. Nikola Tesla were impounded after his death by the Office of Alien Property of the Department of Justice and not by the FBI. Since we did not participate in the handling of Dr. Tesla's belongings, I am unable to furnish the information you desire.

I am returning your enclosure as you requested.

Sincerely yours,

William D. Ruckelshaus

William D. Ruckelshaus
Acting Director

MAILED 24
JUL 5 - 1973
FBI

Enclosure

1 - Portland - Enclosures (2)
1 - Congressional Services Office - Enclosures (2)
NOTE: Bufiles reveal prior cordial correspondence with Senator [redacted] is not identifiable in Bufile [redacted] Bufile 100-2237 reflects that Dr. Tesla was a world-famous electrical inventor, and at the time of his death, all of his personal papers and effects were believed dangerous to the count security if they fell into unauthorized hands. The book, "Prodig Genius," by John J. O'Neill, alleged that the FBI took over a ce safe and opened it, appropriating his property. Bufiles clearl indicate that it was the Office of Alien Property of the Depar which did so, and the above reply is forwarded in answer to re inquiries.

(6)(7)

Mr. Felt
Mr. Baker
Mr. Callahan
Mr. Cleveland
Mr. Conrad
Mr. Gebhardt
Mr. Jenkins
Mr. Marshall
Mr. Miller, E.S.
Mr. Soyars
Mr. Thompson
Mr. Walters
Tele. Room
Mr. Baise
Mr. Barnes
Mr. Bowers
Mr. Herington
Mr. Conmy
Mr. Mintz
Mr. Eardley
Mrs. Hogan

54 JUL 13 1973

[redacted] TELETYPE UNIT

(b)(7)(C)

48

(b) (7) (c) [redacted]

FEDERAL BUREAU OF INVESTIGATION
Washington, D.C.

12 July 1973

ALL INFORMATION CONTAINED
HEREIN IS UNCLASSIFIED
DATE 7-3-80 BY SP4 Jam/rtc

Dear Sirs,

It has come to my attention that upon the death of Mr. Nikola Tesla, the founder of modern A.C. power systems, and the original inventor of radio, and innumerable other devices, operatives of the F.B.I. opened his safe and removed his papers on 7 January 1943, within a few hours of his demise. Also, all records of his work have been siezed and held by our government since his death. I would like to know WHY, and also to be informed as to who was, and is responsible for keeping the lid on these records. I would also like to know where they are now.

I do hope you enjoy a good laugh over the aparent naievity of such a request as this, but it is a rather strange situation to exist in a country like this, that a man of such genius and achievement could be systematically cut out of history books, and that the facts about his works could be concealed to the degree they have been. I wish to obtain access to all these old records which have been concealed for thirty years. I would appreciate your kind consideration and attention to this matter and any assistence you may care to give.

EX-105

100-2237-25

9 JUL 20 1973

C-60

[redacted]

[redacted]

(b) (7) (c)

ack 7-19-73

CORRESPO

49

July 19, 1973

REC-60/100-2237-25

[redacted]

(b)(7)(c)

EX-105

ALL INFORMATION CONTAINED HEREIN IS UNCLASSIFIED DATE 7-3-80 BY SP4 Jm/rt

Dear [redacted]

Your letter was received on July 16th. In response to your inquiry, the effects of Dr. Nikola Tesla were impounded, after his death, by the Office of Alien Property of the Department of Justice and not by the FBI. Since we did not participate in the handling of Dr. Tesla's belongings, I am unable to furnish the information you desire. A copy of your communication and of this reply have been referred to the Department of Justice.

MAILED 4
JUL 19 1973
FBI

Sincerely yours,

C. M. Kelley

Clarence M. Kelley
Director

NOTE: Bufiles contain no record of correspondent. (Bufile 100-223 reflects that Dr. Tesla was a world-famous electrical inventor, and at the time of his death, all of his personal papers and effects were believed dangerous to the country's security if they fell into unauthorized hands. The book, "Prodigal Genius," by John J. O'Neil alleged that the FBI took over a certain safe and opened it, appropriating his property. Bufiles clearly indicate that it was the Office of Alien Property of the Department which did so, and the above reply is forwarded in answer to related inquiries. Copy of letter referred to the Assistant Attorney General, Civil Divisio of the Department.)

Assoc. Dir. ____
Asst. Dir.:
Admin. ____
Comp. Syst. ____
Files & Com. ____
Gen. Inv. ____
Ident. ____
Inspection ____
Intell. ____
Laboratory ____
Plan. & Eval. ____
Spec. Inv. ____
Training ____
Legal Coun. ____
Cong. Serv. ____
Corr. & Crm. Research ____
Press Off. ____
Telephone Rm. ____
Director Sec'y ____

[redacted]

MAIL ROOM ☐ TELETYPE UNIT ☐

(6)
(7)
(c)

50

[redacted]

Clarence M. Kelley
Director
Federal Bureau of Investigation
Washington D.C. 20535

ALL INFORMATION CONTAINED
HEREIN IS UNCLASSIFIED
DATE 7-3-80 BY SP4 Jam/rtc

Dear Mr. Kelley,

Thank you for your letter of the 19th of July. I appreciate the information about the Office of Alien Property and its connection with the impounding of the effects of Dr. Nikola Tesla. In my letter of the 16th I did not mean to imply the FBI had impounded his effects, as I was aware of the O.A.P.s general part in the affair. The fact remains that to the best of my knowledge, it WAS agents of the FBI who did in fact break into his safe only hours after his death, and did remove the papers therein. Now, in so far as the Bureau was connected, I wish to understand that extent. I do appreciate your refering my communication to the appropriate persons in the Justice Department, but perhaps you could see that the above mentioned connection of the Bureau could be further looked into. I am curious as to who asked the Bureau to perform such an act, whether is was a person in the O.A.P. or what, and on what grounds they were carried out, and to whom they were responsible. Also, to what person were the perloined papers delivered? Names of the agents involved would be appreciated. As to what happened to any other effects of his, that is probably a question more ably answered by the O.A.P., yet if Bureau agents participated once they may have done so on other occasions. If the persons who did open the safe were NOT FBI agents, then we are faced with the fact that persons aparently posed as Bureau operatives, an even more interesting situation. Perhaps this whets your own curiosity a[redacted]

ST 108
REC 68 100-2237-26
AUG 1973

Da

iml
ack 8-2-73
[redacted]

CORRE[redacted]CE

51

this affair, [redacted] interest. Are you aware that before the year 1900 he was able to transmit thousands of watts of electric power to any point on the globe WITHOUT WIRES. This and other feats would make him a prime target for vested interest groups, notably the J.P.Morgan combine with whom he had connections. I am aware of the well earned tradition of the Bureau of NOT serving any master but the common good, so again we have a curious point if indeed strings were pulled. Quite frankly, it looks as if someone went to a lot of trouble to see that his ideas were not broadly available to ensure the stability of their own electric technological apple cart financially, at the expense of unguessable benefits to to humanity as a whole. How would you like to be able to draw unlimited power out of the air to run say a lightbulb with ONE wire? He did it, and much more. My sincere thanks for your thought and attentions to these matters.

Very best wishes,

(b)
(7)
(C)

REC 68 / 00-2237-26

August 2, 1973

ST-102

[redacted]

(b)(7)(C)

ALL INFORMATION CONTAINED HEREIN IS UNCLASSIFIED DATE 2-3-80 BY SP4 Jpm/rte

Dear [redacted]:

Your letter, which was received on July 30th, has been reviewed and I would like to point out that FBI Agents were not involved in removal of papers from the safe of Dr. Nikola Tesla, nor did we at any time have custody of his property.

I realize there have been some written accounts that our Agents acquired Dr. Tesla's belongings; however, these accounts are simply not true. You can be assured we were absolutely not responsible and there was no impersonation involved.

Sincerely yours,

C. M. Kelley

Clarence M. Kelley
Director

NOTE: Correspondent had written in mid-July and asked about the effects of Dr. Tesla and he was advised that the Office of Alien Property had participated in removing his effects from his hotel room. A copy of his communication was referred to the Department of Justice. Bufiles indicate clearly that after Dr. Tesla's death some relatives opened the safe in his hotel room with the help of a locksmith and, thereafter, the Office of Alien Property confiscated all of his belongings. Bufile 100-2237 mentions that the FBI was advised of the existence of this property; however, inasmuch as the Office of Alien Property was handling Dr. Tesla's effects, the Bureau had absolutely no hand in the entire matter.

AUG 2 - 1973

Assoc. Dir. ____
Asst. Dir.:
Admin. ____
Comp. Syst. ____
Files & Com. ____
Gen. Inv. ____
Ident. ____
Inspection ____
Intell. ____
Laboratory ____
Plan. & Eval. ____
Spec. Inv. ____
Training ____
Legal Coun. ____
Cong. Serv. ____
Corr. & Crm. Research ____
Press Off. ____
Telephone Rm. ____
Director Sec'y ____

[redacted] (3)

(b)(7)(C)

MAIL ROOM ☐ TELETYPE UNIT ☐

AUG 10 1973

53

June 9, 1975

Federal Bureau of Investigation
U.S. Department of Justice
Washington D.C. 20535

Sirs:

We recently contacted the San Francisco FBI office and a review of their files revealed information concerning the scientist Nikola Tesla or his papers which we understand to have been impounded.

If you could make a thorough investigation of all files and materials available to you, we would greatly appreciate the correspondence of any information that might be discovered.

Thank you,

ALL INFORMATION CONTAINED HEREIN IS UNCLASSIFIED DATE 7-3-8 BY SP4 Jam/rtc

[redacted]

100-2237-26X

REC-36

(b)
(7)
(c)

[redacted]

54

July 7, 1975

~~62-115530-4553~~

100-2237-26X

ALL INFORMATION CONTAINED HEREIN IS UNCLASSIFIED DATE 2-3-80 BY [illegible]

[redacted] (C)

[redacted] (b)(7)(C)

Dear [redacted]

This will acknowledge your letter of June 9th.

In response to your inquiry, the papers of Dr. Nikola Tesla were impounded, after his death, by the Office of Alien Property of the Department of Justice.

Sincerely yours,

C. M. Kelley

Clarence M. Kelley
Director

~~1 - The Deputy Attorney General - Enclosure~~
~~Attention: Susan M. Hauser~~

NOTE: Bufile 100-2237 indicates that Dr. Tesla was a world famous electrical inventor, and at the time of his death his personal papers and effects were impounded by Office of Alien Property for national security reasons. Since Tesla's death in 1943 the Bureau has received numerous inquiries about the disposition of his technical papers. The above reply is forwarded in answer to these inquiries. Bufiles contain no information identifiable with requesters.

Assoc. Dir. ____
Dep. AD Adm. ____
Dep. AD Inv. ____
Asst. Dir.:
Admin. ____
Comp. Syst. ____
Ext. Affairs ____
Files & Com. ____
Gen. Inv. ____
Ident. ____
Inspection ____
Intell. ____
Laboratory ____
Plan. & Evol. ____
Spec. Inv. ____
Training ____
Legal Coun. ____
Rm. ____

[redacted] (4)

[redacted] (b)(7)(E)

MAILED 7
JUL 7 1975
FBI

55

GPO 954-5

[redacted] (b)(7)(C)

13 November 1975

Mr. Clarence Kelley
Director
F.B.I.
Washington, D.C. 20535

ALL INFORMATION CONTAINED HEREIN IS UNCLASSIFIED DATE 2-3-80 BY SP4 Jm/rte

Dear Mr. Kelley:

In reply to the letter of 10 November from your office:

I restate that I was not asking about the existence or non-existence of any investigative information on Nikola Tesla, but on his technical papers seized on his death in 1943 and reported in the papers of that time.

The reason given in the reply from your office, the second paragraph, as to why I cannot get any information on Tesla's papers makes no sense in itself or in reply to my inquiry. The third paragraph stating the conditions under which a search will be made is a clear bureaucratic circumvention of the Freedom of Information Act and an excuse on the part of the individual handling my request for doing any work beyond the drafting of a letter. Will it be the decision of your office to let the situation stand like this?

As I stated in my first letter, I am following up the Tesla data for a magazine article. I am tempted to have your reply of the 10th printed and run nationally as an example of how bureaucratic manoeuvring is used to get around the FOIA. Does the bureau need more of this type of publicity?

It is disheartening to see an agency entrusted to uphold the law using its resources to mock the law.

Sincerely,

[redacted] (b)(7)(C)

a.k. 11-26-75

[redacted]

21 NOV 1

[redacted]

56

REC-57 EX 103
100-2237-27

November 26, 1975

[redacted]

(6)
(7)
(C)

ALL INFORMATION CONTAINED
HEREIN IS UNCLASSIFIED
DATE 2-3-00 BY SP4 Jm/rtc

Dear [redacted]:

This will acknowledge receipt of your letter to the Bureau on November 14th.

In response to your inquiry, the papers of Dr. Nikola Tesla were impounded, after his death, by the Office of Alien Property of the Department of Justice.

Sincerely yours,

C. M. Kelley

Clarence M. Kelley
Director

1 - The Deputy Attorney General - Enclosure
Attention: Susan M. Hauser

NOTE: Bufile 100-2237 indicates that Dr. Tesla was a World famous electrical inventor, and at the time of his death his personal papers and effects were impounded by Office of Alien Property for National Security reasons. Since Tesla's death in 1943 the Bureau has received numerous inquiries about the disposition of his technical papers. The above reply is forwarded in answer to these inquiries.

[redacted] (5)

(6)
(7)
(C)

Assoc. Dir. ____
Dep. AD Adm. ____
Dep. AD Inv. ____
Asst. Dir.:
Admin. ____
Comp. Syst. ____
Ext. Affairs ____
Files & Com. ____
Gen. Inv. ____
Ident. ____
Inspection ____
Intell. ____
Laboratory ____
Plan. & Eval. ____
Spec. Inv. ____
Training ____
Legal Coun. ____
Telephone Rm. ____
Director Sec'y ____

MAIL ROOM ☐ TELETYPE UNIT ☐

DEC 24 1975

[redacted]

GPO : 1975 O - 569-920

57

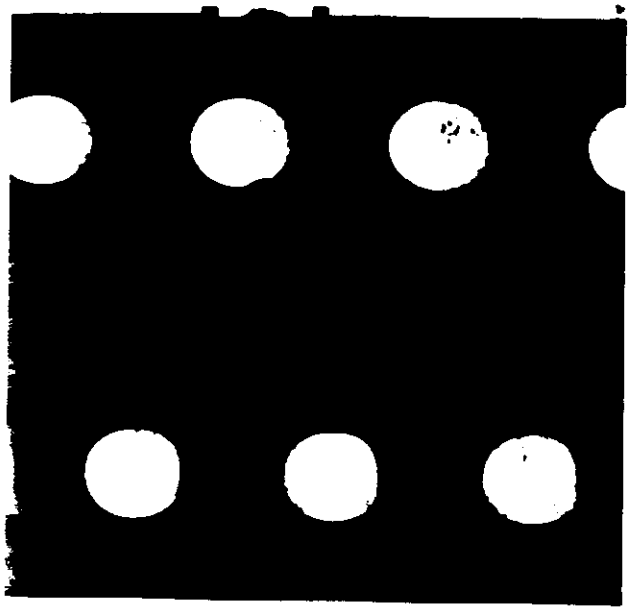

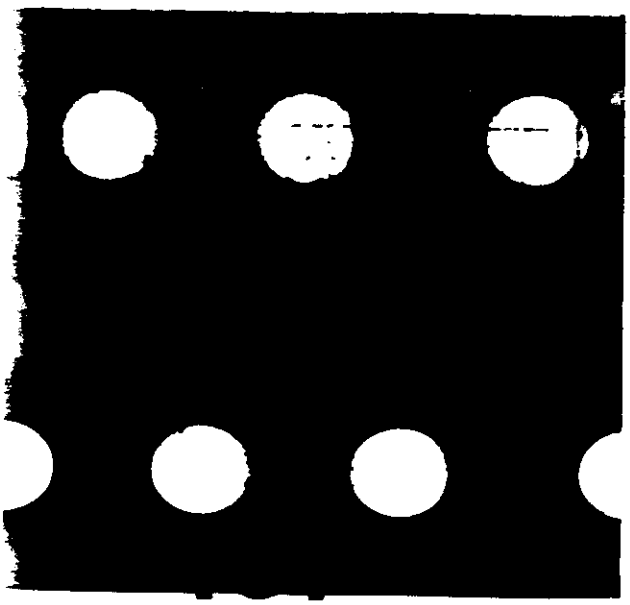

ROUTING AND TRANSMITTAL SLIP

1 TO (Name, office symbol or location) Alan McCreight Rm. 5435 - JEH	INITIALS DATE	ACTION CIRCULATE COORDINATION
2	INITIALS DATE	FILE INFORMATION
3	INITIALS DATE	NOTE AND RETURN PER CONVERSATION
4	INITIALS DATE	SEE ME SIGNATURE

REMARKS

FOIA - [redacted] (b)(7)(c)

Do NOT use this form as a RECORD of approvals, concurrences, disapprovals, clearances, and similar actions

FROM (Name, office symbol or location) Susan M. Hauser	DATE 10/21/75 PHONE 2145

OPTIONAL FORM 41
AUGUST 1967
GSA FPMR (41CFR) 100-11.206

+48—16—81894-1 552-103 GPO 5041-101

58

[redacted]

17 October 1975

Freedom of Information Act Request

Deputy Attorney General
U.S. Department of Justice
Washington, D.C. 20535

[redacted]

Gentlemen:

I am writing an article for a magazine on early twentieth century inventors and want to obtain information on some papers of Nikola Tesla that were seized by the FBI on his death in 1943.

Tesla invented a number of electrical devices and because of the war and because Tesla was born a Yugoslavian national, it was probably considered a measure of preventitive safety to hold in safekeeping papers that might have any bearing on national security.

I would like to find out: 1) if the FBI still has the papers; 2) if they do have the papers, what must be done to see them; 3) if they do not have the papers, who does have them or what happened to them?

100-2237-28

I would be very grateful for your help with this.

REC-2

5 OCT 24 1975

Sincerely,

[redacted]

(6)
(7)
(C)

[redacted]

ALL INFORMATION CONTAINED
HEREIN IS UNCLASSIFIED
DATE 1-3-80 BY SP4 Jmplete

[redacted]

59

erator put Tesla's name among the world's top scientists.

From his invention sprang the industrial age we live in. For without his alternating current, there would be no mass production of automobiles, aircraft, refrigerators; no great water-power dams and generating plants, no Diesel-electric trains; we could not have developed radio, television or atomic power.

The *direct* current that Edison worked with—a feeble force at best—could be sent no more than a couple of miles over wires because its power leaked away rapidly into the surrounding atmosphere. Lights near the power station might burn brightly and steadily, but those near the end of the line would be dim and fluttering.

Tesla sold his basic alternating-current patents in 1888, for a million dollars down. By 1895, the first great power station at Niagara Falls had been built, and by the end of 1896, two more Tesla generators had been installed. Within a few years, the pace of life over half the earth had changed from a crawl to a fast gallop—and it has been gathering speed ever since.

THE MAN who, by his brilliant idea of a "rotating magnetic field," changed the face of the earth and the living habits of the human race was a Croat, born in 1857 in Smiljan, a village in what is now Yugoslavia, but was then part of the old Austro-Hungarian Empire.

When he was about six, Nikola Tesla's father, the village priest, was transferred to a larger parish in the city of Gospic. There, the lad grew up and perfected his earliest "inventions." Of these, his favorite was an "engine" powered by 16 June bugs, harnessed in sets of four to spokes which radiated from the drive shaft.

Nikola was a frail lad, often ill; and he nearly went blind from too much reading. He read everything he could get his hands on, not only science but also religion, philosophy, history, literature. By the time he finished high school, he was fluent in French, German and Italian, as well as his native Serbo-Croat.

He got his schooling—the best his doting family could afford—at Gospic, Carlstadt, Gratz, the University of Prague and, finally, at Budapest. At the University, he saw his first electric motor, a new type direct-current affair whose brushes and commutators sent out showers of crackling blue sparks.

"If we got rid of those brushes and commutators, with all that noise and loss of energy, we'd have a much better motor," Nikola told his professor. "Perhaps it might be done with an alternating current."

"Nonsense!" barked the professor. "An alternating current would never run anything. You're not the brilliant student I thought you were. Forget it!"

But Tesla could not forget. The teacher's ridicule only stamped the idea indelibly on his brain. It became an obsession, a passion—how to make an alternating current drive a motor. In every idle moment, wherever he went, he wrestled with this problem.

Tesla's mind had an unusual twist. Almost from infancy, he had been able to see things in his mind's eye so vividly—and in such minute detail—that often he had trouble telling the real from the imaginary.

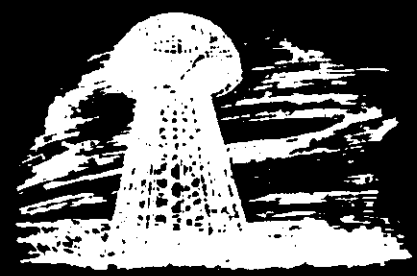

Where the average engineer or inventor would reach instinctively for drawing board, paper and pencil, Tesla would simply switch on that uncanny magic lantern inside his brain. He would fix a mental image there. Then he would alter this detail or that, discard one plan, try another, without ever putting a line on paper.

Years later - from these mental images alone - he could give his workmen exact instructions on how to build each part of a new device, though it was unlike anything ever seen before.

Thus, needing no drafting room and few laboratory conveniences to work on an idea, Tesla could use every spare minute that he had to test and revise his theory of alternating current.

His first real job was manager of a newly organized telephone company in Budapest. But telephone circuits were dull stuff compared with the challenge of that one big idea. He moved to Paris where he became a kind of general trouble-shooter for the Continental Edison Company.

His brain was still chipping away at his big problem, but the trouble was, he couldn't share it with trained men who might have helped him work it out. For whenever he mentioned alternating current to an electrical engineer, the man would look at him as though he were crazy.

But then came the moment when he knew he had solved it. He was walking with a friend in the Bois de Boulogne. Suddenly, he stopped short and began jabbing with his cane at some invisible object in the air.

"See, it works!" he shouted. "It is the rotating magnetic field which causes the armature to turn. It pulls the magnets around with it, causing the shaft to revolve. As I oscillate this switch, causing the current to flow first in one direction, then the other . . ."

Never mind what his friend thought. Tesla had the answer.

At the office, his colleagues scoffed or looked blank. But the manager, listening to the outpourings of scientific jargon, suddenly thought of his boss back in the United States. If there *were* some truth in what the Croat said, surely the famous electrical wizard would be smart enough to see it.

So he gave Tesla a letter of introduction to Thomas Edison and urged him to try his luck in America. Thus, Tesla, now 27, arrived in New York. He was handsome, over six-feet-two, with a distinguished head and deep-set blue eyes. His Slavic face was broad across the cheekbones, his dark hair thick, his chin sharply pointed. Of worldly goods, he had the clothes on his back, four cents in cash, the letter to Edison, and the idea which was to change the world.

Edison thought less than nothing of the idea. It seemed so preposterous that he wouldn't even listen

61

and, of course, Tesla had no drawings with which to try to convince him. But Edison gave him a job, for he had excellent training as an engineer and Edison needed trained men.

Busy with routine electrical work, Tesla waited nearly three years for a chance to turn his mental image into an actual motor he could show to others. In 1887, he was able to borrow enough money to start his own laboratory, and the following year the alternating-current motor and generator were practical realities on a laboratory scale though much practical engineering would still be needed to fit them to commercial use.

George Westinghouse, another inventor, was the first to see their value. He bought the patents and gave Tesla a job as engineer in his Pittsburgh factory.

But Tesla couldn't get along with the other Westinghouse engineers. From his standpoint, the alternating-current job was done. Even "schoolboys" could now iron out the few remaining kinks. Meantime, his brain had started to hatch even bigger dreams. He went back to his laboratory in New York.

"Be alone," he once told a science writer. "That's the secret of invention. Be alone—that's where great ideas are born."

AND HE WAS. In the years that followed, Tesla had many admiring acquaintances, but seldom a friend. After his mother, no woman ever entered his personal life.

His manner toward others was cordial but reserved, distant. His words were as if uttered by some god, sitting on an Olympus high above the rest of humanity. Backed by his fame, those words made a tremendous impression.

He lectured at every scientific center in this country and in all the important capitals abroad. Things which, as yet, existed only inside that amazing brain of his were so real to him, he made them real to his listeners.

He described radar and radio broadcasting and even television. He advocated electro-therapy. He foresaw a day when man would control nature in every respect—even the weather—when machines of all kinds, and the power to run them, would be so cheap that poverty would vanish from the world.

Without wanting to be, Tesla was a superb actor. After listening to him and seeing his wonders, audiences were ready to believe nearly anything.

Tesla reasoned that you could sell electric power cheap if you could do away with the millions of poles and insulators, the millions of tons of copper wire used to transmit it from place to place. He thought he knew how to do it—and J. P. Morgan backed him with $300,000.

On Long Island, Tesla built a huge power plant with a 154-foot steel-ribbed tower topped by an enormous mushroom-shaped copper dome. From this dome he planned to bombard the earth's crust with millions of volts of electric energy. The power so added to the earth's permanent charge could be drained off at some other point—*any* point—on the earth's surface. Thus, it would be possible for electric power to be sent anywhere without conduits, poles or wires. Or so he thought, until he tried it.

62

In November 1928, Tesla announced that he could abolish war.

The inventor had designed a small, inexpensive, radio-controlled boat which, through its supposed ability to destroy the biggest battleships, would make great navies useless. Not many years later, he was talking of another super-weapon: a "death ray" which would annihilate whole armies.

Yet Tesla never suspected that the real super-weapon of the future would come from atomic fission. For Einstein's basic notion which led to smashing the atom, he had only ridicule. Alone in his middle age, he had fallen out of step with the world's great thinker.

Not all Tesla's later inventions were fantastic. Some, like his induction coils and oscillators, and pioneer work on "tuned" electrical circuits, were highly important.

Though he never succeeded in transmitting power without wires on a big scale, he *did* prove that a single wire is enough. And some of his brilliant prophecies inspired the more plodding scientists to work out the practical problems of induction heating, radio-telephone, radar and many other electronic marvels of today.

But as he grew older, he withdrew further and further within himself. His strange prophecies sounded like a voice from another planet. For companionship now, the old man had only his dreams, and they grew stranger with the years. Completely alone at last, a stooped, gaunt figure with thin, silvery hair, he used to slip from his hotel room, buy a bag of birdseed and trudge slowly over to a park where hundreds of pigeons awaited him. These were his friends. They needed him, though the world did not.

When he grew too ill to go out, each day he sent a Western Union messenger to the park. After feeding the birds, the boy was instructed to see if any of them seemed sick. If so, he was to bring them back to Tesla's room where the inventor would nurse them gently back to health.

Perhaps this sad little labor of love showed that the man who changed the world had, at last, discovered a great truth. Perhaps he knew now that the greatest power for good lies not in lonely thought but in a human heart pulsating like his own "tuned circuits"—in tune with the hearts of his fellowmen. Or did he ever know? You could never be sure about Tesla.

Winnie Wit

IN THE EARLY 1920s, when Winston Churchill had offended both his own supporters and the political opposition, the late George Bernard Shaw wrote him: "I enclose two vouchers for the première of my new play, for yourself and a friend—if any."

Back to the playwright promptly came the theater checks with this note from "Winnie": "I regret I am unable to attend the première of your new play. Please send me two vouchers for the second performance—if any."

—[illegible]

RECOGNITION FOR TESLA

At long last Serbians—American and Canadian—have acted to honor the memory and achievements of one of Serbia's greatest sons.

For the world-wide Centennial celebration of Dr. Nikola Tesla's birth next year, Serbs on this Continent plan to erect a bust statue of the electrical genius to stand before the entrance of the Monastery at Libertyville, Ill.

Steps looking towards that end were taken at the recent SNF convention following the reading of a letter by President Mike Radakovich from His Grace, Bishop Nicolai. As the universally-renowned churchman stated, erection of a suitable monument, by Serbians, would forever remind other Serbs of the honor and glory of Dr. Nikola Tesla . . . . And that he was a SERBIAN, son of a SERBIAN ORTHODOX clergyman, born in the SERBIAN SELO of Smiljan in Lika.

Further, His Grace urged that the undertaking be a joint one and representative of ALL the Serbian organizations in the United States and Canada. He naturally looked to the SNF for leadership, and the greatest monetary contribution. But he also besought the help of the Serbian Nat'l Defense and the Jedinstvo beneficial society.

The Convention voted $1000 for the project and a hand collection was taken up among the delegates and guests, kinsmen Milos Konjevich of Joliet, Ill., giving $200. It is probable that the balance of the needed $3000 will be raised thru public good-will offerings and via cash gifts of the other two organizations mentioned.

And after a suitable bust has been erected for Dr. Tesla, Bishop Nicolai suggested a similar-like monument honor the memory of Dr. Mihailo Pupin, also a world-renowned scientist, author and educator.

This is a subject near and dear to all good Serbian hearts

ALL INFORMATION CONTAINED
HEREIN IS UNCLASSIFIED
DATE 7-3-80 BY [illegible]

INDEXED - 36
100 2237 A
NOT RECORDED
12 OCT 7 1955

"AMERICAN SRBOBRAN"
September 28, 1955
Pittsburgh, Pa.

EX-113
7531
60 OCT 7 1955
100-2237
64

INFORMATION CONTAINED
UNCLASSIFIED
DATE 7-3-80 BY SP4 Jm/rtc

100-2237

SNF Opens Drive for Tesla Memorial at Libertyville—

$2000 PUBLIC AID SOUGHT

PITTSBURGH, PA. — The Serb Nat'l Federation Executive Board has acted quickly to implement a Convention decision to honor the memory of the illustrious Dr. Nikola Tesla.

At its first meeting of October 8, the Board drafted a resolution calling on all SNF members and good Serbians to help finance a memorial project for the late scientist-inventor genius.

This would stand before the entrance of the Monastery in Libertyville, Ill.

Cost of the contemplated project, which would clarion to the world that Dr. Tesla was a Serbian, is estimated at $3000. The Convention voted $1000 to the cause and a hand collection among 122 delegates yielded several hundred dollars more.

Kinsman Milos Konjevich of Joliet, Ill., gave $200.

Public Aid Sought

Balance of the needed sum is now being sought thru good-will offerings of the general Serbian populace in the United States and Canada.

A fund, similar to the one being conducted to help defray mortgage expenses on Shadeland, has been established.

It is hoped to raise the necessary monies and complete the project in time for the worldwide Centennial celebration for the genius next year.

Spearheading the movement for recognition, especially among American elements, is the TESLA SOCIETY, founded by scientist-engineer Leland Anderson, a fanatical admirer of the late Dr. Nikola Tesla.

Mr. Anderson right now is conducting a search for a famous portrait of the Serbian electrical wizard done at the turn of the century in New York.

Seek Missing Portrait

In his current TESLAIAN publication, Mr. Anderson revealed the work, by Princess Vilma Lwoff-Parlaghy, is missing.

Reviewing developments, Mr. Anderson wrote:

"On March 1, 1916, the Princess gave a reception in her new studio in New York especially to exhibit her latest protrait of Nikola Tesla. An article in the NEW YORK TIMES for March 2, 1916, stated—

" 'It was one of the beliefs of Mr. Tesla that there was something unlucky about posing for a picture and he never sat to any before he entered the studio of the Princess. The room which she had chosen did not have a skylight in it and the much desired North exposure was missing.

" 'At the suggestion of Mr. Tesla, a cluster of powerful incandescents was put up in the corner of the apartment and the rays, filtered thru blue glass, were just the right quality. The portrait was shown under the same illumination.

At Ease for Sitting

" 'Mr. Tesla, having solved the problem of the artifical sun, fell to thinking about other parts of the universe, and there he sat oblivious to his surroundings.

" 'The painter was able to produce a likeness in which there is no evidence that the subject was conscious that anybody was watching him, much less studying his features from the other side of the easel.

" 'Among those who attended the reception were Mrs. C. B. Alexander, Henry P. Davison, the Countless de Rittenburg and Mrs. E. T. Isham.' "

After the Princess died, in 1923, her studio and all objects of art, was sold at auction.

The Telsa portrait, 53x48 inches, appeared on the cover of TIME magazine (July 20, 1931) and in the ELECTRICAL EXPERIMENTER (January 1919), Mr. Anderson says.

Its location is not now known.

INDEXED - 14

100-2237-A

NOT RECORDED
129 NOV 4 1955

AMERICAN SRBOBRAN
October 26, 1955
Pittsburgh, Pa.

EX-1

65

279
68 NOV 9 1955

100-2237

[redacted]AF $1580

Half of $3000 Costs For Statue Pledged

Cadiz, O., Serb Gives $100 For Bust Image of Inventor To Be Placed at Monastery

Pittsburgh, Pa.—Half of the $3000 fund goal for a statue memorial of the late Dr. Nikola Tesla has been realized, the SNF announced today.

In fact, total contributions counted so far come to $1580.

The Fund is an outgrowth of a plea by Bishop Nicolai for Serbians to do honor for the memory of the noted electrical wizard during the world-wide Centennial celebration planned for the genius next year.

In the wake of the plea, voiced at the recent 7th Convention at Niagara Falls, Canada, the delegates approved a $1000 gift from the SNF and decided to raise, by public grant, the balance of $2000.

A hand collection among the 122 grass-roots leaders of the Society raised another $450. Then, at its first meeting October 5, the newly-elected Executive Board of the SNF appealed to the membership at large to fulfill the balance required.

First Contribution $100

A scant 24 hours after the appeal was published in the Society's "Srbobran" organ last Wednesday, Sime Zelich of Cadiz, O., gave $100.

The proposed memorial, a statue image, would be placed before the entrance of the St. Sava Serbian Monastery in Libertyville, Ill.

historians, writers, educators, scientists, etc., would not be misled, Bishop Nicolai believes.

Be that as it may, the SNF's goal is to amass the needed monies in time to erect and dedicate the memorial before the Tesla Centennial celebration ends.

Donors and the amounts of their donations are as follows:

SNF	$ 1000.00
Delegate M. Konjevich	200.00
" Todor Dragich	50.00
" Petar Borovich	25.00
SNF Counsel N. Stone	25.00
Delegate N. Stepanovich	20.00
" Maxim Jakovac	20.00
" Ilija Janjanin	20.00
" Lou Balta	10.00
" Jovan Vukcevich	10.00
" Milan Kajganovich	10.00
" Stevan Rogulja	10.00
" Bogdan Dragicich	5.00
" Milan Tomich	5.00
" Todor Vuicich	5.00
" Djuro Lukich	5.00
" G. Stoisavljevich	5.00
" R. Vukadinovich	5.00
" Janko Mrmich	5.00
" Petar Maravich	5.00
" Mirko Baranin	5.00

INFORMATION CONTAINED IS UNCLASSIFIED DATE 2-3-80 BY [redacted]

3 NOV 14

ıtion at Niagara Falls, Can-
a, the delegates approved a
000 gift from the SNF and
cided to raise, by public
ant, the balance of $2000.

hand collection among the
grass-roots leaders of the So-
raised another $450. Then,
first meeting October 5, the
ly-elected Executive Board of
SNF appealed to the mem-
ship at large to fulfill the bal-
e required.

First Contribution $100

A scant 24 hours after the ap-
l was published in the Society's
bobran" organ last Wednes-
, Sime Zelich of Cadiz, O.,
e $100.

The proposed memorial, a
tue image, would be placed be-
e the entrance of the St. Sava
bian Monastery in Libertyville,

"There it would proclaim to
ns of thousands of Serbian
sitors annually that Nikola
esla was of Serbian immigrant
ock and son of a Serbian
rthodox clergyman," Bishop
icolai declared.

For half a century and more,
general American public has
en misled anent the nationality
the man who foretold the com-
of atomic energy power.

Only recently, a prominent
American magazine listed him,
ncorrectly, as of Croatian
tock. The mistake was subse-
uently publicly corrected with
pologies by the publication.

But lacking an image reference,
th historical statistics, similar
ors are likely in the future.

Old References Poor

The magazine publication, for
stance, explained it obtained its
ference material from an anti-
ated guide book.

Since the misleading matter
re was never challenged by
rbians and other interested
rties before, the magazine logi-
ly assumed it was factual.

Erection of a bust statue,
lso listing Dr. Tesla's date of
irth, birthplace, parents, etc.,
ould counter the old myths
nd make certain that future

Centennial celebration ends.

Donors and the amounts of their donations are as follows:

SNF	$ 1000.00
Delegate M. Konjevich	200.00
" Todor Dragich	50.00
" Petar Borovich	25.00
SNF Counsel N. Stolac	25.00
Delegate N. Stepanovich	20.00
" Maxim Jakovac	20.00
" Ilija Janjanin	20.00
" Lou Balta	10.00
" Jovan Vukcevich	10.00
" Milan Kajganovich	10.00
" Stevan Rogulja	10.00
" Bogdan Dragisich	5.00
" Milan Tomich	5.00
" Todor Vuicich	5.00
" Djuro Lukich	5.00
" G. Stoisavljevich	5.00
" R. Vukadinovich	5.00
" Janko Mrmich	5.00
" Petar Maravich	5.00
" Mirko Baranin	5.00
" Stanko Jelich	5.00
★ ★ ★	
Prof. Anthony Tomovich (Edmonton, Alberta, Can.)	10.00
Teta Andia Mamula (Pittsburgh)	5.00
Martha Mamula Bjelosh (Pittsburgh)	10.00
Sime Zelich (Cadiz, O.)	100.00
Milinko Alexich, war invalid (Omaha, Nebr.)	
Total	$ 1,[illegible]

—the honoring, forever, of two of Serbia's best-known immigrant sons who contributed so greatly to the welfare and prosperity of their adopted America.

We hope to report developments as soon as they take place, remembering Bishop Nikolai's concluding remarks:

"Nikola Tesla, in the field of science, brought the Serbian name great glory—just as did the greatest Serbian knights on the field of battle."

23 June 56

Federal Bureau of Investigation
Washington 25, D.C.

Gentlemen:

[redacted]

During my senior year at Georgetown University I read J.J.O'Niel's Biography of Nikoli Tesla; the book, entitled "Prodigal Genius", described quite a few of Tesla's experiments, most of which I tried myself in the physics lab. I am interested in reviewing Tesla's experiments in wireless electric power transmission.

Unfortunately, Tesla died in 1945 just at the time he supposedly had developed a system of wireless power transmission. Since World War II was then in progress his papers were seized and sealed by the F.B.I. I suppose that by now Tesla's papers have been released for publication, but a call to the Library of Congress produced no results. Therefore, I have two questions:

1) Does the F.B.I. now have Tesla's scientific papers?

2) If so, are they available for public inspection? If they were released, who has them?

I will certainly appreciate any help you can give me along these lines. Tesla published very little of his findings; this, coupled with the fact that wireless power is connected by most people with "Death Rays" and crack-pots has made it nearly impossible for me to find anything on the subject.

Yours very truly,

[redacted]

[redacted] (b) (7) (C)

RECORDED - 86 100-2237-7

JUL 3 1956

[redacted] (b) (7) (C)

INFORMATION CONTAINED HEREIN IS UNCLASSIFIED 2-3-80 BY SP4 Jmp/etc

[redacted] (b) (7) (C)

68

100-2237-7
RECORDED - 86
INDEXED - 86

EX-122

15

L INFORMATION CONTAINED
EREIN IS UNCLASSIFIED
DATE 7-3-80 BY SP4 Jmfrte

June 29, 1956

[redacted]

(6)(7)(C)

Dear [redacted]

Nikoli Tesla

Your letter dated June 23, 1956, has been received, and in response to your inquiry, I would like to advise that our files reflect that the effects of Nikola Tesla were taken into custody after his death by the Office of Alien Property and not by this Bureau.

Since we did not participate in the handling of Mr. Tesla's effects, we are unable to supply the information you requested.

Sincerely yours,

John Edgar Hoover
Director

COMM — FBI
JUN 29 1956
MAILED 24

NOTE: Bufiles reflect no record on correspondent and reveal the correct spelling of Tesla's name as "Nikola." Bufiles reflect this type of reply h been utilized by the Domestic Intelligence Division in answering similar inquiries. (65-47953; 100-2237) Cover memo from Mr. Belmont to Boardman 6-29-55, set out background of this matter which concerned the death of Tesla, a famous electrical inventor. Bureau was not involved in this matter, and the opening of the safe containing his effects was done by the Office of Alien Property.

Tolson
Boardman
Nichols
Belmont
Harbo
Mohr
Parsons
Rosen
Tamm
Sizoo
Winterrowd
Tele. Room
Holloman
Gandy

EBI
HOOVER

[redacted]

(3)

(6)(7)(C)

JUL 17 1956

F-350

[redacted]

69

STANDARD FORM NO. 64

Office Memorandum • UNITED STATES GOVERNMENT

TO : DIRECTOR, FBI

DATE: 7/25/57

FROM : SAC, NEW YORK (65-12290)

SUBJECT: NIKOLA TESLA (Deceased)
IS -YU

INFORMATION CONTAINED HEREIN IS UNCLASSIFIED DATE 7-3-80 BY SP4 Jrmfr

[redacted] Street, New York 24, New York, a United States citizen of Yugoslav extraction, who on occasion, voluntarily furnishes the New York Office with information he considers to be in the interests of the Security of the United States Government, furnished Special Agent NICHOLAS J.MASTROVICH the following information on July 3, 1957: (b)(7)(D)

MR & MRS. JOHN STORM

[redacted] stated that a certain woman named Mrs. MARGARET STORM who lives with her husband, JOHN, at the Colonial Hotel, 51 West 81st Street, New York 24, New York, has been issuing newsletters which contain information pertaining to flying saucers and interplanetary matters. (b)(7)(D)

SECTION NEWSLETTER NEWSLE

[redacted] stated that in his opinion Mr. and Mrs. STORM are exploiting the reputation and genius of NIKOLA TESLA, deceased, inventor of Yugoslav extraction who achieved world wide fame as a result of his inventions in the United States. (b)(7)(D)

TESLA was born in Smiljan, Yugoslavia in July, 1859 and came to the United States in 1894 and became a naturalized United States citizen. In 1886 TESLA designed the arc-lighting system and two years later he invented the Tesla motor and designed a plan for the transmission of alternating current. In subsequent years, TESLA's discoveries and inventions included such fields and appliances as wireless communication, electrical oscillation, radiant power and radio active matter. After 1900, communications and wireless power transmission occupied most of his research.

2 - Bureau (RM) (Encs.2)
1 - Los Angeles (Info) (Encl.1) (RM)
1 - New York (65-12290)

NJM:mcd
(4)

SE 43 100-2237-

RECORDED-56

INDEXED-56

14 JUL 29 1957

0 1957

70

TESLA's only military invention was a method to which he once eluded but never fully described. This invention was a means whereby an inpenetrable "wall of force" can be erected around the United States' borders which would render helpless any military attack. TESLA disclosed the existence of his plan in 1934 and stated he intended to present it to the Geneva Conference but seldom referred to it afterward.

The "New York Times" dated 9/22/40, carried an article setting forth NICOLA TESLA's plan for a "Death Ray". This article included information to the effect that TESLA, on his 84th birthday, July 10, 1940, advised New York Times reporter WILLIAM L. LAWRENCE that he was ready to divulge to the United States Government the secret of his "teleforce", with which he said airplane motors would be melted at a distance of 250 miles so that an invisible Chinese wall of defense would be built around the country against any attempted attack by an enemy airforce no matter how large. According to TESLA, this "teleforce" was based on an entirely new principle of Physics that "no one has ever dreamed about" and was different from the principle embodied in his inventions relating to the transmission of electrical power from a distance, for which he received a number of basic patents.

TESLA stated that this new type of force would operate through a beam one hundredth millionth of a square centimeter in diameter and could be generated from a special plant that would cost no more than two million dollars and would take only about three months to construct. TESLA stated that a dzen such plants located at strategic points along the coast, according to TESLA, would be enough to defend the United States against all possible aerial attacks. TESLA stated that this beam would melt any engine and would also ignite explosives aboard any bomber. TESLA stated that no possible defense against it could be devised and he asserted that the beam would be all penetrating.

TESLA stated to Mr. LAWRENCE that he makes one important stipulation before he would divulge this secret to the United States Government and that was that should the United States Government decide to take up his offer, he would go to work at once but that the United States Government would have to trust him. TESLA stated that he would suffer "no interference from experts."

In this "New York Times" article Mr. LAWRENCE commented that with conditions as they were in 1940, and with the United States getting ready to spend millions of dollars for National Defense, Mr. TESLA's great reputation as an inventor, who always was many years ahead of his time, should be given careful consideration. Mr. LAWRENCE stated, in his opinion, the United States Government should take Mr. TESLA at his word and commission him to go ahead with the construction of his "teleforce" plant.

The New York file of Mr. TESLA bears no indication that any additional developments were carried on in connection with TESLA's invention and whether or not TESLA fully divulged his new plan to the United States Government.

TESLA died at the age of 85 on January 7, 1943.

Mr. [redacted] provided a two page copy of the above mentioned newsletter which Mr. and Mrs. STORM have been distributing in connection with the alleged invention by TESLA, which, according to Mr. and Mrs. STORM, consists of a radio type machine known as the Tesla Set which was invented by Mr. TESLA in 1938 for interplanetary communication. Mr. and Mrs. STORM claim that TESLA's engineers did not complete the Tesla Set until after TESLA's death in 1943. Mr. and Mrs. STORM claim that this Set was placed in operation in 1950 and since that time TESLA engineers have been in close touch with space ships. etc. (X)(D)

The Newsletter furnished by Mr. [redacted] included (6)(7)(D) the following names:

MARGARET STORM
JOHN STORM
GEORGE VAN TASSEL, Yucca Valley, California NY
DAN FRY NY - NMEX
GEORGE KING, London, England

The files of the New York Office contained no pertinent information regarding any of the above mentioned individuals. ARMAHO NY

Two photostatic copies of this newsletter are being sent to the Bureau for purposes of information while one copy is being submitted to the Los Angeles Office for information purposes.

[redacted] (b) (7) (C)

Mr. J. Edgar Hoover

L INFORMATION CONTAINED
EIN IS UNCLASSIFIED
7-3-80 BY SP4 Jam/rtc

Dear Sir:

I an hopeful that you can help me obtain certain information on records and data, which belonged to Dr. Nikola Tesla. He was an Electrical Engineer and prolific inventor.

He was born in Yugoslavia in 1856 and died in the United States, New York City, January 7th, 1943. He was a naturalized citizen of this country.

The only information I could find of his records was a report that the F.B.I. removed his papers for examination, and that the records were sealed by the custodian of alien property.

I have been doing some theoretical research of my own, which I believe may be along the same lines he followed in certain of his experiments. I also believe the development of his ideas would be in the interest of our country regardless of who developes them.

If it is at all possible for me to have access to at least some of his experimental work, I would certainly appreciate it. I am not able, by reason of the vast finances, which would be required, to conduct such experiments myself, so the data he made and collected would be invaluable.

Of course, it is possible that his records do not contain material pertinent to his electronics work, because from what I understand from reading about him, he kept most of his records in his head and wrote down very little of his data.

It is also possible that some of his ideas are impractical, but I feel sure that certain of his ideas will be of immense value to our country within the next several decades or even before, if they are developed at a rapid rate.

I would appreciate hearing from you on the subject, if you have any information pertaining to it, which you could make available to me.

100-2237-9

REC-1

Sincerely,
16 MAR 18 1958

[redacted]

Ack 3/14/58 [redacted]

[redacted]

(b) (7) (C)

[redacted]

74

March 14, 1958

REC-1

100-2237-

[redacted]

(b)(7)(c)

ALL INFORMATION CONTAINED HEREIN IS UNCLASSIFIED DATE 7-3-80 [illegible]

Dear [redacted]:

Your letter postmarked March 7, 1958, has been received.

In response to your inquiry, I would like to advise that our files reflect that the effects of Dr. Nikola Tesla were taken into custody after his death by the Office of Alien Property in the Department of Justice and not by the FBI.

Since we did not participate in the handling of Dr. Tesla's effects, we are unable to supply the information you requested.

Sincerely yours,

John Edgar Hoover
Director

NOTE: Buffiles reflect no record on correspondent. Buffiles reflect above type of reply has been utilized in the past in answering similar inquiries. (100-2237-7) Cover Memorandum from Belmont to Boardman 6/29/55 set forth background of this matter which concerned the death of Tesla, [illegible] electrical inventor. Bureau was not involved in this matter, and [illegible] of the [illegible] containing his effects was done by the Office of Alien Property.

Tolson
Nichols
Boardman
Belmont
Mohr
Parsons
Rosen
Tamm
Trotter
Nease
Tele. Room
Holloman
Gandy

MAIL ROOM

[redacted] also (b)(7)(c)

COMM - FBI
MAR 14 1958
MAILED 19

68 MAR 21 1958

FBI - JUSTICE
REC'D BY [illegible]

[redacted]

(b)(7)(c)

75

June 24, 1957

Federal Bureau of Investigation
Washington 25, D.C.

ALL INFORMATION CONTAINED
HEREIN IS UNCLASSIFIED
DATE 7-3-80 BY SP4 Jan/rtc

Dear Sirs,

I am doing a research study on the life of Dr. Nikola Tesla of New York City (1856 - 1943), and desire information which you may have. It was reported in the book "Prodigal Genius" that Dr. Tesla's papers were seized from his New York hotel room upon his death in 1943 by the F.B.I. I am very interested in getting copies of his papers for my study and would like to know if this report is true and where I might obtain further information about them or if you are holding them.

REC-91 100-2237

EX 101

Sincerely ~~yours~~,

[redacted]

(b)
(7)
(C)

[redacted]

CRIME REC

EX 101

REC- 91

July 2, 1959

Ink 100-2237-10

[redacted]

(b)(7)(c)

L INFORMATION CONTAINED
EIN IS UNCLASSIFIED
DATE 7-3-80 BY SP4 Jamfite

Dear [redacted]

Your letter dated June 24, 1959, has been received.

In response to your inquiry, I wish to advise that our files reflect that the effects of Dr. Nikola Tesla were impounded, after his death, by the Office of Alien Property of the Department of Justice and not by the FBI. Since we did not participate in the handling of Dr. Tesla's effects, we are unable to supply the information you desire.

Sincerely yours,

MAILED 5
JUL 2 1959
COMM-FBI

John Edgar Hoover
Director

NOTE: Bufile 100-2237 reflects that Dr. Tesla was a world-famous electrical inventor, and at the time of his death, all of his personal papers and effects were believed dangerous to the country's security if they fell into unauthorized hands. The book, "Prodigal Genius," by John J. O'Neil, alleges that the FBI took over a certain safe and opened it, appropriating his property. Bufiles clearly indicate that it was the Office of Alien Property of the Department who did so, and the above reply is forwarded in answer to related inquiries.

Tolson
Belmont
DeLoach
McGuire
Mohr
Parsons
Rosen
Tamm
Trotter
W.C. Sullivan
Tele. Room
Holloman
Gandy

[redacted]
(3)

FBI

57 JUL 9 1959

MAIL ROOM ☐ TELETYPE UNIT ☐

[redacted]

(b)(7)(c)

[redacted]

77

OPTIONAL FORM NO. 10

UNITED STATES GOVERNMENT

Memorandum

Tolson
Mohr
Parsons
Belmont
Callahan
Conrad
Malone
McGuire
Rosen
Tamm
Trotter
W.C. Sullivan
Tele. Room
Ingram
Gandy

TO : MR. TROTTER

DATE: 12-6-60

FROM : A. K. Bowles

SUBJECT: NIKOLA TESLA (DECEASED)
INFORMATION CONCERNING

ALL INFORMATION CONTAINED HEREIN IS UNCLASSIFIED DATE 7-3-80 BY

(b)(7)(C)

[redacted] telephoned December 5 and was referred to Ident by switchboard because he wanted to talk with someone in charge of records of deceased. [redacted] said he is making a research study for U. S. Air Force on subject of geophysics. His deadline is ten days from now. [redacted] said he just discovered a sentence in a book by John J. O'Neill entitled "The Prodigal Genius -- The Life of Nikola Tesla," which states the FBI took custody of papers from Tesla's safe after his death in New York City in 1943. Tesla was a world-famous Yugoslav scientist and inventor in the electrical field who died January 7, 1943, in New York City. [redacted] requested immediate access to Tesla's scientific works which may shed light on [redacted] research study. I told [redacted] we would have somebody from our Boston Office contact him immediately.

(b)(7)(C)

Bureau file 100-2237 shows no investigation of Tesla has been conducted by Bureau. Since erroneous statement concerning FBI's taking custody of papers from Tesla's safe after his death appeared in O'Neill's book published in 1944, Bureau has received numerous inquiries from scientists desiring to review Tesla's writings. Each inquiry has been answered by stating FBI did not participate in handling Tesla's effects, but information has come to our attention that Office of Alien Property of Department of Justice may have examined Tesla's effects. (File indicates that representatives of Office of Alien Property did actually review Tesla's possessions, including his writings, but file does not show what final disposition was made of Tesla's possessions.)

A teletype to Boston Division was prepared, but before it was sent [redacted] telephoned again to furnish me the exact page in O'Neill's book in which he refers to the FBI. At that time I told [redacted] the statement in the book was untrue -- that the FBI had not examined or taken custody of Tesla's papers. I suggested to [redacted] that he might contact Office of Alien Property. (Therefore, teletype to Boston was not necessary.) 100-2237-11

ACTION:

For record.

AKB:ks

EX-113 REC-38 5 DEC 8 1960

51 DEC 13 1960

(5)

Bu file 100-2237
1- Mr. Belmont

78

[redacted]
(b)
(7)
(c)

February 14, 1961

Federal Bureau of Investigation
Department of Information
Washington 25, D. C.

[redacted] INFORMATION CONTAINED
HEREIN IS UNCLASSIFIED
DATE 7-3-80 BY SP4 jm/rtc

Dear Sir:

I am a college student who is doing a research paper on Nikola Tesla. As I was collecting the material for my paper, I discovered that at the time of Tesla's death, the department of the F.B.I. confiscated the data and papers that Tesla had collected from his research in the field of electricity. This confiscation of his material was stated in the PRODIGAL GENIUS by J.J. O'Neil, published in 1944 at New York city by Washburn Inc.

I have developed an interest in the discoveries and accomplishments of Tesla that is presently limited by the shortage of factual material. If in your files, you have any information concerning Nikola Tesla that you are permitted to release, I will sincerly appreciate your co-operation in helping me give the proper recognition to this great scientist and American. Below I have listed the facts that may be helpful to you;

REC- 55 100-22137-18
FEB 28 1961
EX.-102

1. Born in 1856 at Smiljan, Crotia, now Yugoslavia
2. Came to America in 1884 and was employed for a short time with the Edison Co. at Orange, N.J.
3. Died on January 7, 1943 at New York city

Thanking you for your time and co-operation that I have taken, I remain,

Sincerly Yours,

[redacted]
(b)
(7)
(c)

[redacted]

79

esd 100-2237-12

REC- 55

EX-76

February 23, 1961

[redacted]

(6)(c)

ALL INFORMATION CONTAINED HEREIN IS UNCLASSIFIED DATE 7-3-80 BY [illegible]

Dear [redacted]:

Your letter of February 14, 1961, has been received, and the interest which prompted you to write is appreciated.

In response to your inquiry, I wish to advise that our files reflect that the effects of Dr. Nikola Tesla were impounded, after his death, by the Office of Alien Property of the Department of Justice and not by the FBI. Since we did not participate in the handling of Dr. Tesla's effects, we are unable to supply the information you desire.

MAILED 10
FEB 23 1961
COMM-FBI

Sincerely yours, (b)(7)(c)

John Edgar Hoover
Director

NOTE: No record could be located in Bufiles identifiable with correspondent. Bufile 100-2237 reflects that Dr. Tesla was a world-famous electrical inventor, and at the time of his death, all of his personal papers and effects were believed dangerous to the country's security if they fell into unauthorized hands. The book, "Prodigal Genius," by John J. O'Neill, alleges that the FBI took over a certain safe and opened it, appropriating his property. Bufiles clearly indicate that it was the Office of Alien Property of the Department who did so, and the above reply is forwarded in answer to related inquiries.

Tolson
Parsons
Mohr
Belmont
Callahan
Conrad
DeLoach
Evans
Malone
Rosen
Tavel
Trotter
W.C. Sullivan
Tele. Room
Ingram
Gandy

(3)
50 MAR 6 1961
MAIL ROOM TELETYPE UNIT

[redacted] (b)(7)(c)

80

November 21, 1962

Federal Bureau of Investigation

Washington 25, D.C.

Gentlemen:

I am making a study, motivated out of personal curiosity, into the life and works of Nikola Tesla. Mr. Tesla died on January 7, 1943 in the Hotel New Yorker. Since F.B.I. Operatives opened his safe and took his papers for examination, I wonder if these papers are available for perusal? If they are available, where would they be located, and are copies available to the public?

I am a citizen of the United States, and have been cleared for security--- the latest one being for work on [redacted]

Thank you very much for any information or help you may be able to give me in this matter!!

Respectfully yours,

[redacted]

(6)
(7)
(C)

ALL INFORMATION CONTAINED HEREIN IS UNCLASSIFIED DATE 7-3-80 BY SP4 [illegible]

EX-114

REC-39 100-2237 1B

5 NOV 28 1962

[redacted] 11-27-62

81

RA-114

REC-39 100-2237-13

November 27, 1962

[redacted]

(b) (7) (c) ALL INFORMATION CONTAINED HEREIN IS UNCLASSIFIED DATE 7-3-80 BY SP4 Jam/rtc

REC'D-READING ROOM FBI NOV 27 4 53 PM '62

Dear [redacted]

Your letter of November 21st has been received.

In response to your inquiry, I would like to point out that the effects of Dr. Nikola Tesla were impounded, after his death, by the Office of Alien Property of the Department of Justice and not by the FBI. Since this Bureau did not participate in the handling of Dr. Tesla's effects, I am unable to supply the information you desire.

Sincerely yours,

J. Edgar Hoover

John Edgar Hoover
Director

[redacted] (b) (7) (c)

MAILED 8 NOV 2 1962 COMM-FBI

NOTE: Bufiles contain no record identifiable with correspondent. Bufile 100-2237 shows that Dr. Tesla was one of the world's outstanding scientists in the electrical field, and at the time of his death, all of his personal papers and effects were believed dangerous to the country's security if they fell into unauthorized hands. The book, "Prodigal Genius," by John J. O'Neil, alleges that the FBI took over a certain safe and opened it, appropriating Dr. Tesla's property. Bufiles clearly indicate that it was the Office of Alien Property of the Department which did so, and the above reply has been forwarded in answer to related inquiries. Dr. Tesla was born in Yugoslavia and died in New York City 1-7-43.

Tolson
Belmont
Mohr
Casper
Callahan
Conrad
DeLoach
Evans
Gale
Rosen
Sullivan
Tavel
Trotter
Tele. Room
Holmes
Gandy

[redacted] (3) (b) (7) (c)

RECEIVED DIRECTOR

140

53 DEC 3 1962

[redacted]

MAIL ROOM ☐ TELETYPE UNIT ☐

[redacted]

82

[redacted] (b)(7)(c)

10 March 1964.

Federal Bureau of Investigation,
Washington 25, D.C.

ALL INFORMATION CONTAINED
HEREIN IS UNCLASSIFIED
DATE 7-14-82 BY [illegible]

Dear Sirs,

For some time, have been wondering about the matter of what was reported on the late Nikola Tesla, the inventor. He died during early January 1943, while in residence at the Hotel New Yorker, New York City. Accounts have it that his belongings (papers, etc.) were studied. Would appreciate learning if anything can be learned about this.

Am hoping to be on leave, and in Washington, along the third week of April. This is mentioned, in case it is possible to view anything relating to the question.

Sincerely,

[redacted]

ITC 3-17-64
ack 3-18-64
[redacted]

(b)(7)(c)

[redacted]

83

TRUE COPY

(b)(7)(c) [redacted] 10 March 1964.

Federal Bureau of Investigation
Washington 25, D. C.

Dear Sirs,

For some time, have been wondering about the matter of what was reported on the late Nikola Tesla, the inventor. He died during early January 1943, while in residence at the Hotel New Yorker, New York City. Accounts have it that his belongings (papers, etc.) were studied. Would appreciate learning if anything can be learned about this.

Am hoping to be on leave, and in Washington, along the third week of April. This is mentioned, in case it is possible to view anything relating to the question.

Sincerely,

[redacted] (b)(7)(c)

ALL INFORMATION CONTAINED HEREIN IS UNCLASSIFIED DATE 7-3-80 BY SP4 Jm/rtc

100-2237-14

10 MAR 13 1964

(b)(7)(c)

84

REC-130

100-2237-14

March 18, 1964

INFORMATION CONTAINED
HEREIN IS UNCLASSIFIED
DATE 7-3-80 BY SP4 Jan/rtc

[redacted] (b) (7) (c)

Dear [redacted]

Your letter of March 10th has been received.

In response to your inquiry, I would like to point out that the effects of Dr. Nikola Tesla were impounded, after his death, by the Office of Alien Property of the Department of Justice and not the FBI. Since we did not participate in the handling of Dr. Tesla's effects, I am unable to supply the information you desire.

Sincerely yours,

J. Edgar Hoover

John Edgar Hoover
Director

MAR 18 4 11 PM '64
REC'D-READING ROOM
FBI

MAILED 19
MAR 18 1964
COMM-FBI

NOTE: No record could be located in Bufiles identifiable with correspondent. Bufile 100-2237 reflects that Dr. Tesla was a world-famous electrical inventor and at the time of his death, all of his personal papers and effects were believe dangerous to the country's security if they fell into unauthorized hands. The book, "Prodigal Genius," by John J. O'Neil, alleges that the FBI took over a certain safe and opened it, appropriating his property. Bufiles clearly indicate that it was the Office of Alien Property of the Department which did so, and the above reply is forwarded in answer to related inquiries.

[redacted] (3) [redacted] (b) (7) (c) [redacted]

Tolson
Belmont
Mohr
Casper
Callahan
Conrad
DeLoach
Evans
Gale
Rosen
Sullivan
Tavel
Trotter
Tele. Room
Holmes
Gandy

57 MAR 2 ...

MAIL ROOM ☐ TELETYPE UNIT ☐

85

TRUE COPY

Sir,

According to "Prodical Genius, Nikola Tesla" Tesla
by J. J. O'Neil (a book) some papers were taken from the safe of Mr. Festa about 1945 yr. Is this true. If so are the papers declasified yet? If so may I obtain a copy?

[redacted] (b)(7)(C)

Sir,

According to "Prodical Genius, Nikola Tesla" by J. J. O'Neil (a book) some papers were taken from the safe of Mr. Tesla about 1945 yr. Is this true. If so are the papers declasified yet? If so may I obtain a copy?

REC-15
EX-10
100-2237-15
JUN 23 1964

[redacted] b(7)(c)

[redacted]

ALL INFORMATION CONTAINED
HEREIN IS UNCLASSIFIED
DATE 7-3-80 BY SP4 Jones/rtc

96

June 22, 1964

REC- 15

100 2237 15

[redacted] (b)(7)(c)

ALL INFORMATION CONTAINED HEREIN IS UNCLASSIFIED DATE 7-3-80 BY SP4 Jmfrte

REC'D-READING ROOM FBI JUN 22 3 30 PM '64

Dear [redacted]

Your card of June 16th has been received.

In response to your inquiry, I would like to point out that the effects of Dr. Nikola Tesla were impounded, after his death, by the Office of Alien Property of the Department of Justice and not by the FBI. Since we did not participate in the handling of Dr. Tesla's effects, I am unable to furnish the information you desire.

MAILED 20 JUN 22 1964 COMM...

Sincerely yours,

J. Edgar Hoover

NOTE: No record could be located in Bufiles identifiable with correspondent. Bufile 100-2237 reflects that Dr. Tesla was a world-famous electrical invent and at the time of his death, all of his personal papers and effects were believed dangerous to the country's security if they fell into unauthorized han The book, "Prodigal Genius," by John J. O'Neil, alleges that the FBI took ov a certain safe and opened it, appropriating his property. Bufiles clearly indicate that it was the Office of Alien Property of the Department which did s and the above reply is forwarded in answer to related inquiries.

[redacted] (3)

[redacted]

(b)(7)(c)

Tol[redacted]
Belm[redacted]
Mohr
Casper
Callahan
Conrad
DeLoach
Evans
Gale
Rosen
Sullivan
Tavel
Trot[redacted]
Tel[redacted]
[redacted]dy

RECEIVED DIRECTOR

64 JUN 26 1964

MAIL ROOM ☐ TELETYPE UNIT ☐

87

OREGON STATE UNIVERSITY
CORVALLIS, OREGON 97331
SCHOOL OF SCIENCE
Reply to: DEPARTMENT OF GENERAL SCIENCE

March 28, 1967

FEDERAL BUREAU OF INVESTIGATION
Department of Information
9th Street & Pennsylvania Aven, N.W.
Washington 25, D. C. 20535

ALL INFORMATION CONTAINED
HEREIN IS UNCLASSIFIED
DATE 2-3-80 BY SP4 jrm/pte

Dear Sirs:

I am a student of the history of science at Oregon State University, and I am attempting to write a research paper on a very eccentric scientist who died in 1943. His name was Nikola Tesla, a naturalized American of Serbian extraction, and he died in his hotel room in New York City on January 8, 1943.

During the years leading up to World War II, Nikola Tesla supposedly invented a "Death Ray" which could destroy several hundred aircraft. Mr. Tesla was a very prolific and creative genius during his early years but gradually became something of a crackpot in his old age. As a student of the history of science, it is important to determine whether or not Tesla had any valid ideas in the plans for his death ray. Tesla invented the fluorescent light and also was one of the first scientists to discover X-Rays--hence there may be some possibility that his death ray might actually have been some crude type of laser.

In Tesla's biography, "Prodigal Genius", by John J. O'Neill, the author states on page 277:

> "Operatives from the F.B.I. came to Tesla's hotel room shortly after his death and opened the safe in his room. They took the papers that it contained in order to examine them for a reported secret invention of possible use in the war..."

I am trying to locate Tesla's secret and unpublished writings concerning his death ray. I have searched the literature quite thoroughly and have found nothing. Does the F.B.I. still have these papers or can you tell where I might be able to obtain these writings for examination? Any assistance or information that you may lend me will be very much appreciated.

100-2237-16

Sincerely yours,

[redacted]

REC 49
12 APR 4 1967

(6)
(7)
(C)

4/3/67

CORRESPONDENCE 88

April 3, 1967

REC 49 100-2237-16

[redacted]

ALL INFORMATION CONTAINED HEREIN IS UNCLASSIFIED DATE 7-3-80 BY SP4 Jam/rtc

(b)
(7)
(c)

Dear [redacted]

Your letter of March 28th has been received.

In response to your inquiry, the effects of Dr. Nikola Tesla were impounded, after his death, by the Office of Alien Property of the Department of Justice and not by the FBI. Since we did not participate in the handling of Dr. Tesla's effects, I am unable to furnish the information you desire.

Sincerely yours,

J. Edgar Hoover

John Edgar Hoover
Director

MAILED 30
APR 3 1967
COMM-FBI

NOTE: No record could be located in Bufiles identifiable with correspondent. Bufile 100-2237 reflects that Dr. Tesla was a world-famous electrical inventor, and at the time of his death, all of his personal papers and effects were believed dangerous to the country's security if they fell into unauthorized hands. The book, "Prodigal Genius," by John J. O'Neil, alleges that the FBI took over a certain safe and opened it, appropriating his property. Bufiles clearly indicate that it was the Office of Alien Property of the Department which did so, and the above reply is forwarded in answer to related inquiries.

[redacted] (3)

Tolson
DeLoach
Mohr
Wick
Casper
Callahan
Conrad
Felt
Gale
Rosen
Sullivan
Tavel
Trotter
Tele Room
Holmes
Gandy

54 APR 11 1967

MAIL ROOM ☐ TELETYPE UNIT ☐

(b)
(7)
(c)

89

J. Edgar Hoover
Federal Bureau of Investigation
Washington D. C.

TRUE COPY

[redacted]

Feb. 25, 1969

Dear Mr. Hoover,

HEREIN IS UNCLASSIFIED
DATE 2-3-80 BY SP4 Jam/etc

In the year 1943 the F.B.I. confiscated all of the papers and maybe some of the machines of physicist, Nikola Tesla. These papers were his experiments and ideas at the time of his death. According to the books I've read, these papers were confiscated on the grounds of the enemy getting ahold of his ideas and apply them to war machines.

I have studied all of the material on this man and have found him to be more intelligent than the great "Brain" of his time, Thomas Edison.

Why without Nikola Tesla there would be Westinghouse Company as we know today. This is the man who harnessed Niagara Falls, and was the one and only man who could see the possibilities of Alternating Current when men like Edison said "it would never work."

What I am wondering is, maybe these papers could be reclassified from whatever "Top Secret" classification they now have and be made available for study by the people who understand and can gain knowledge from them.

I would be willing to pay for reproductions of his experiments if nothing else. He still has a great many ideas that have never been tried.

It disturbs me to think that everyone has forgotten about the ideas of this man when he was so advanced for his time.

I can say with assurance that no man alive can say that he knows all of Tesla's ideas. And studying other men's ideas is the way to advance in science faster.

100-2237-12

I hope something can be done to get these papers released.

Thank You,

[redacted] (b)(7)(c)

/s/ [redacted]

100-2237-

90

Feb. 25, 1969

Dear Mr. Hoover,

In the year 1943 the F.B.I. confiscated all of the papers and maybe some of the machines of physicist, Nikola Tesla. These papers were his experiments and ideas at the time of his death. According to the books I've read, these papers were confiscated on the grounds of the enemy getting ahold of his ideas and apply them to war machines.

I have studied all of the material on this man and have found him to be more intelligent than the great "Brain" of his time, Thomas Edison.

Why without Nikola Tesla there would be Westinghouse Company as we know today. This is the man who harnessed Niagara Falls, and was the one and only man who could see the possibilities of Alternating Current when men like Edison said "it would never work".

What I am wondering is, maybe these papers could be reclassified from whatever "Top Secret" classification they now have and be made available for study by the people who understand and can gain knowledge from them. (b)(7)(c)

ALL INFORMATION CONTAINED HEREIN IS UNCLASSIFIED DATE 1-14-82 BY [illegible]

CO[redacted]NDENCE

91

I would be willing to pay for reproductions of his experiments if nothing else. He still has a great many ideas that have never been tried.

It disturbs me to think that everyone has forgotten about the ideas of this man when he was so advanced for his time.

I can say with assurance that no man alive can say that he knows all of Tesla's ideas. And studying other men's ideas is the way to advance in science faster.

I hope something can be done to get these papers released.

Thank You,

[redacted] (b)(7)(c)

March 4, 1969

100-2237-17

[redacted]

(b)(7)(c)

Dear [redacted]

Your letter of February 25th has been received.

In response to your inquiry, the effects of Dr. Nikola Tesla were impounded, after his death, by the Office of Alien Property of the Department of Justice and not by the FBI. Since we did not participate in the handling of Dr. Tesla's belongings, I am unable to furnish the information you desire. A copy of your communication has been referred to the Department of Justice.

Sincerely yours,

J. Edgar Hoover

MAILED 10
MAR 4 - 1969
COMM-FBI

NOTE: Bufiles contain no record of correspondent. Bufile 100-2237 reflects that Dr. Tesla was a world-famous electrical inventor, and at the time of his death, all of his personal papers and effects were believed dangerous to the country's security if they fell into unauthorized hands. The book, "Prodigal Genius," by John J. O'Neil, alleges that the FBI took over a certain safe and opened it, appropriating his property. Bufiles clearly indicate that it was the Office of Alien Property of the Department which did so, and the above reply is forwarded in answer to related inquiries. Copy of letter referred to Assistant Attorney General, Civil Division of the Department.

[redacted] (3)

[redacted]

54 MAR 13 1969

Tolson
DeLoach
Mohr
Bishop
Casper
Callahan
Conrad
Felt
Gale
Rosen
Sullivan
Tavel
Trotter
Tele. Room
Holmes
Gandy

MAIL ROOM ☐ TELETYPE UNIT ☐

[redacted]

(b)(7)(c)

93

(b)(7)(c)

[redacted]

April 8, 1970

Federal Bureau of Investigation
Director of Central Records
Washington, D.C.

Dear Sir:

I am doing a research paper on Nickola Tesla and would appreciate it if you could please provide me with the following information.

That information being why did your Bureau impound his personal effects immediately after his death on January 7, 1943. Secondly, could you provide a list of those effects, and lastly, when were they released and to whom were they given.

Thanking you for the information

[redacted] (b)(7)(c)

P

ALL INFORMATION CONTAINED
HEREIN IS UNCLASSIFIED
DATE 7-3-80 BY SP4 Jmp/stc

REC 44 100-2237-18

APR 15 1970

[redacted]

4/14/70

[redacted]

(b)(7)(c)

CORRES[redacted]

94

REC 44 100 2237-18

April 14, 1970

46

ALL INFORMATION CONTAINED HEREIN IS UNCLASSIFIED DATE 7-3-80 BY SP4 Jrmprte

[redacted]

(b) (7) (c)

Dear [redacted]:

In reply to your inquiry of April 8th, the effects of Dr. Nikola Tesla were impounded, after his death, by the Office of Alien Property of the Department of Justice and not by the FBI. Since we did not participate in the handling of Dr. Tesla's belongings, I am unable to furnish the information you desire. A copy of your communication has been referred to the Department of Justice for any help it may be able to offer.

Sincerely yours,

Edgar Hoover

John Edgar Hoover
Director

[redacted]

(b) (7) (c)

MAILED 9
APR 14 1970
COMM-FBI

NOTE: Bufiles contain no information identifiable with correspondent. Bufile 100-2237 reflects that Dr. Tesla was a world-famous electrical inventor, and at the time of his death, all of his personal papers and effects were believed dangerous to the country's security if they fell into unauthorized hands. The book, "Prodigal Genius," by John J. O'Neil, alleges that the FBI took over a certain safe and opened it, appropriating his property. Bufiles clearly indicate that it was the Office of Alien Property of the Department which did so, and the above reply is forwarded in answer to related inquiries. Copy of letter referred to Assistant Attorney General, Civil Division of the Department.

Tolson
DeLoach
Walters
Mohr
Bishop
Casper
Callahan
Conrad
Felt
Gale
Rosen
Sullivan
Tavel
Soyars
Tele. R
Holmes
Gandy

59 APR 20 1970

MAIL ROOM TELETYPE UNIT

[redacted] (3) [redacted] [redacted] [redacted]

(b) (7) (c) 95

July 15, 1970

REC-3 100-2237-19

[redacted] (6)(7)(C)

ALL INFORMATION CONTAINED HEREIN IS UNCLASSIFIED DATE 7-3-80 BY [signature]

Dear [redacted]:

Your letter was received on July 13th and the interest which prompted you to write to me is appreciated. With respect to your inquiry, the effects of Dr. Nikola Tesla were impounded, after his death, by the Office of Alien Property of the Department of Justice and the FBI did not participate in the handling of Dr. Tesla's belongings. In addition, this Bureau is strictly an investigative agency of the Federal Government and matters such as you mentioned do not come within the scope of this Bureau's authority.

Sincerely yours,

J. Edgar Hoover

[redacted] (6)(7)(C)

John Edgar Hoover
Director

MAILED 8
JUL 15 1970
COMM-FBI

NOTE: Bufiles contain no record of correspondent. Bufile 100-2237 reflects that Dr. Tesla was a world-famous electrical inventor, and, at the time of his death, all of his personal papers and effects were believed dangerous to the country's security if they fell into unauthorized hands. Bufiles indicate that the Office of Alien Property of the Department appropriated his property and replies similar to the above have been used to answer related inquiries.

Tolson
DeLoach
Walters
Mohr
Bishop
Casper
Callahan
Conrad
Felt
Gale
Rosen
Sullivan
Tavel
Soyars
Tele. Room
Holmes
Gandy

54 JUL 23 1970

[redacted] (2)

MAIL ROOM [ ] TELETYPE UNIT [ ]

[redacted] (6)(7)(C)

96

(b)(7)(c)

[redacted]

INFORMATION CONTAINED
HEREIN IS UNCLASSIFIED
DATE 7-3-80 BY SP4 Jmfete

July 8, 1970.

Mr. J. Edgar Hoover,
Director,
Federal Bureau of Investigation,
Washington D. C.

N.I.K. - Tesla

Dear Sir,

I am writing this to you as I believe that most of the government is infiltrated with foreign agents, and there is a very good chance this could be of extreme importance for the defense of our nation.

I met a man a number of years ago that was raised on Long Island in the neighborhood where Mr. Tesla, inventor of the Tesla Coil, had his lab. He told me of Mr. Tesla's notes blowing down the street when the junk men were dismantling his equipment. It would be a wonderful thing is some of these notes were salvaged and could be found.

Mr. Tesla was at least a century ahead of his time. He sent radio signals around the world seventeen years prior to Mr. Marconi, who received the credit, and pioneered many fields. He was so far advanced that he had to invent a special math to keep up with his work.

He, on several accasions talked before the scientists of the world and became very angry at their inability to understand him, and due to this was violently disliked and didnot receive acknowledgement for his discoveries. One of the notes read by this man told of the radio transmission of electricity being brought to a high degree of effiency.

Now here is the thing that should be investigated throughly. During my High School education, in the winter of either 19-25-26 or 1926-27, I made a currant events report on an article appearing in a small publication of that name that was received weekly at the Troy Highschool, Troy Montana. It stated in this article that Mr. Tesla had made an offer to the Congress of the United States that if they would install radio transmission towers at every 150 miles around the border of this country, that he would install equipment that would broadcast a vertical plane of energy beyond the atmosphere through which no material object could pass as it would shatter or lose it's monecular coohesion. It was refused.

There is a good chance that this data is in the files of congress. What a defence, and boy do we need it. EX-117 REC-3 100-2237-19

I have had some results along this line with structured vortices of magnetic fields, but do not have the technical equipment or knowledge to carry out further experiments. The theory is quite simple and deals with particle acceleration, and it works to the best of my knowledge.

9 JUL 16 1970

Sincerely

[redacted]

(b)(6)(c)

[redacted]

97

[redacted] (b)(7)(c)

6 DECEMBER 1971

FEDERAL BUREAU OF INVESTIGATION

WASHINGTON, D.C.

Dear Sir:

I have recently begun a collection and reading file of all matters pertaining to Nikola Tesla. In so doing I was amazed to find that upon his death; January 7, 1943, in NYC, your bureau confined his papers. May I ask if you still "have them in jail". I am extremely interested in his work(s) and am trying to establish my own "Tesla" library. Your assistance would be greatly appreciated.

Very truly yours,

[redacted]

[redacted] (b)(7)(C)

[redacted]

REC- 39 100-2237-20

16 DEC 15 1971

[redacted]

[redacted]

INFORMATION CONTAINED HEREIN IS UNCLASSIFIED DATE 7-3-80 BY [redacted] (b)(7)(C)

[redacted]

98

December 14, 1971

REC- 28 100-2237-20

[redacted] (b)(7)(C)

ALL INFORMATION CONTAINED HEREIN IS UNCLASSIFIED DATE 7-3-80 BY [redacted]

(b)(7)(C)

Dear [redacted]:

Your letter of December 6th has been received.

In response to your inquiry, the effects of Dr. Nikola Tesla were impounded, after his death, by the Office of Alien Property of the Department of Justice and not by the FBI. We did not participate in the handling of Dr. Tesla's belongings in any way. Copies of your communication and my reply have been referred to the Department of Justice.

Sincerely yours,

J. Edgar Hoover

John Edgar Hoover
Director

[redacted] (b)(7)(C)

NOTE: Bufiles contain no record correspondent. Dr. Tesla was world-famous electrical inventor, and at death, his effects believed dangerous to country's security. "Prodigal Genius," by John J. O'Neil, alleges FBI took safe and appropriated his property. Above reply previously given to same inquiries. (100-2237) Material sent to the Assistant Attorney, Civil Division, of the Department.

[redacted] (4)

Tolson
Felt
Rosen
Mohr
Bishop
Miller, E.S.
Callahan
Casper
Conrad
Dalbey
Cleveland
Ponder
Bates
Tavel
Walters
Soyars
Tele. Room
Holmes
Gandy

MAILED 8
FBI

[redacted] (b)(7)(C)

58 DEC 21 1971

MAIL ROOM ☐ TELETYPE UNIT ☐

99

Federal Bureau Of Investigation
Ninth Street and Pennsylvania
Northeast Washington D. C. 20535

Dear Sirs,

Upon rea ding a biography on Nikola Tesla, I found the urge to read more on him and his works. At the end of the book it was stated that the F.B.I. went to his hotel room gathered up his papers and locked them in a vault. The thing I would like to know is the real reason they were locked up and if it would be possible to see some of these records and any other works of his.

I can think of only one possible reason as to cause of his records being locked up and that is because he was too far advanced for his time. This seems to be the only logical solution, but, with technology much more advanced now than in his time it would seem likely that scientists take over where he left off.

Please let me know If I can look at the records and if you can please answer my question of the real reason his records were locked up.

Thank You,

[redacted]

ALL INFORMATION CONTAINED
HEREIN IS UNCLASSIFIED
DATE 7-3-80 BY SP4 Jam/rtc

ST-113

(b)
(7)
(C)

REC-48

100-2237-21

[redacted]

Ack
10-31-72
[redacted]

100

ST-113

REC-48

October 31, 1972

100-2237-21

[redacted]

ALL INFORMATION CONTAINED HEREIN IS UNCLASSIFIED DATE 7-3-80 BY [signature]

(b)(7)(c)

Dear [redacted]:

Your letter was received on October 26th.

In response to your inquiry, the effects of Dr. Nikola Tesla were impounded, after his death, by the Office of Alien Property of the Department of Justice and not by the FBI. Since we did not participate in the handling of Dr. Tesla's belongings, I am unable to furnish the information you desire. I am forwarding a copy of your communication and of this reply to the Department of Justice.

Sincerely yours,

L. Patrick Gray III

L. Patrick Gray, III
Acting Director

MAILED 8
OCT 31 1972
FBI

NOTE: Correspondent is not identifiable in Bufiles. Bufile 100-2237 reflects that Dr. Tesla was a world-famous electrical inventor, and at the time of his death, all of his personal papers and effects were believed dangerous to the country's security if they fell into unauthorized hands. The book, "Prodigal Genius," by John J. O'Neil, alleges that the FBI took over a certain safe and opened it, appropriating his property. Bufiles clearly indicate that it was the Office of Alien Property of the Department which did so, and the above reply is forwarded in answer to related inquiries. Copy of letter referred to Assistant Attorney General, Civil Division of the Department.

Felt
Baker
Bates
Bishop
Callahan
Cleveland
Conrad
Dalbey
Jenkins
Marshall
Miller, E.S.
Ponder
Soyars
Walters
Tele. Room
Mr. Kinley
Mr. Armstrong
Ms. He[illegible]
Mrs. N[illegible]

[redacted]

57 NOV 6 1972

MAIL ROOM ☐ TELETYPE UNIT ☐

(b)(7)(c)

[redacted]

101

[redacted]

April 3, 973

(b)
(2)
[redacted]

Federal Bureau of Investigation
Washington
District of Columbia

1 ex
Zip Co
dir
gen

ALL INFORMATION CONTAINED
HEREIN IS UNCLASSIFIED
DATE 7-2-80 BY SP4 Jm/rtc

Dear sirs:

During my research on Nikola Tesla, I found that the F.B.I. had confiscated his records pertaining to his experiments. I would like to know if such information is available and if so how copies might be obtained.

t

I am an engineering student and hope possibly to resume where Tesla left off.

I have the honor to remain,

(b)
(7)
(c)

EX-111 REC-36 [redacted] 100-2237-22

10 APR 11 1973

[redacted]

CORRES

102

O
Nikola Tesla

EX-111

REC-36

100-2237-22

April 11, 1973

[redacted]

(b) ALL INFORMATION CONTAINED
(7) HEREIN IS UNCLASSIFIED
(c) DATE 7-3-80 BY SP4 Jim/rte

Dear [redacted]:

Your letter was received on April 9th.

In response to your inquiry, the effects of Dr. Nikola Tesla were impounded, after his death, by the Office of Alien Property of the Department of Justice and not by the FBI. Since we did not participate in the handling of Dr. Tesla's belongings, I am unable to furnish the information you desire. A copy of your communication and of this reply have been referred to the Department of Justice.

Sincerely yours,

L. Patrick Gray, III
Acting Director

NOTE: Bufiles contain no record of correspondent. (Bufile 100-2237 reflects that Dr. Tesla was a world-famous electrical inventor, and at the time of his death, all of his personal papers and effects were believed dangerous to the country's security if they fell into unauthorized hands. The book, "Prodigal Genius," by John J. O'Neill, alleged that the FBI took over a certain safe and opened it, appropriating his property. Bufiles clearly indicate that it was the Office of Alien Property of the Department which did so, and the above reply is forwarded in answer to related inquiries. Copy of letter referred to the Assistant Attorney General, Civil Division of the Department.)

[redacted] (4)

Mr. Felt
Mr. Baker
Mr. Callahan
Mr. Cleveland
Mr. Conrad
Mr. Gebhardt
Mr. Jenkins
Mr. Marshall
Mr. Miller, E.S.
Mr. Soyars
Mr. Thompson
Mr. Walters
Tele. Room
Mr. Kinley
Mr. Armstrong
Mr. Bowers
Mr. Herington
Ms. Herwig
Mr. Mintz
Mrs. Neenan

54 APR 2 [redacted]

MAIL ROOM ☐ TELETYPE UNIT ☐

(b)
(7)
(c) [redacted]

103

[redacted] (b)(7)(c)

June 20, 1973

Federal Bureau of Investigation
Department of Justice
Washington, D. C.

INFORMATION CONTAINED
HEREIN IS UNCLASSIFIED
DATE 7-3-80 BY SP4 Jm/rte

Gentlemen:

I would like to know if any microfilm or other reproductions of Nikola Tesla's notes and papers exist at your office. Tesla was a famous scientist who died in New York City. The Federal Bureau of Investigation entered his safe shortly after this to remove his papers for examination for the war effort. After the war the papers were offered to any group that would start a museum to house them. No one accepted and the papers were finally sent to the Tesla Museum in Belgrade, Yugoslavia, sometime in the early 1950's, possibly just before 1954. Tesla was the inventor of all ac motors and the polyphase system, as well as all flourescent and neon lamps. He was a major pioneer in the early days of radio and discovered many of the early principles of radar. He declined nomination of a Nobel Prize. He was a naturalized citizen of America and said he valued his citizenship papers above all his awards and possessions. Despite this, all his papers were sent to another nation.

I would like to examine some of his papers from 1899 and later without having to fly to Yugoslavia. I have only seen a condesnsed copy of his research from Colorado Springs, but am unable to obtain copies. The principles and equipment are rather out-of-date and well-known, but still useful in my research. [redacted]

I would greatly appreciate help in this matter.

Sincerely, REC-26 100-2237-23

[redacted] (b)(7)(c)

JUN 29 1973

P.S. Tesla died in January of 1943 and shortly after ~~this~~ the papers were removed from his safe. The original copies of these papers were sent abroad prior to 1954, as I believe it was in that year the Yugoslavs founded the Tesla Museum (not to be confused with the Tesla Institute). [redacted]

(b)(7)(c)

104

EX-109

June 27, 1973

REC-26 100-2237-23

[redacted] (b)(7)(C)

ALL INFORMATION CONTAINED HEREIN IS UNCLASSIFIED DATE 2-3-80 BY [illegible]

Dear [redacted]:

Your letter was received on June 25th.

In response to your inquiry, the effects of Dr. Nikola Tesla were impounded, after his death, by the Office of Alien Property of the Department of Justice and not by the FBI. Since we did not participate in the handling of Dr. Tesla's belongings, I am unable to furnish the information you desire. A copy of your communication and of this reply have been referred to the Department of Justice.

Sincerely yours,

William D. Ruckelshaus

William D. Ruckelshaus
Acting Director

[redacted] (b)(7)(C)

MAILED 24 FBI

NOTE: Bufiles indicate one letter to correspondent dated 4-15-66 in reply to his inquiry regarding the Air Force's Project Blue Book and UFO sightings. Bufile 100-2237 reflects that Dr. Tesla was a world-famous electrical inventor, and at the time of his death, all of his personal papers and effects were believed dangerous to the country's security if they fell into unauthorized hands. The book, "Prodigal Genius," by John J. O'Neill, alleged that the FBI took over a certain safe and opened it, appropriating his property. Bufiles clearly indicate that it was the Office of Alien Property of the Department that did so, and the above reply is forwarded in answer to related inquiries. Copy of letter referred to the Assistant Attorney General, Civil Division of the Department.)

[redacted] (4)

[redacted] (b)(7)(C)

Felt
Baker
Callahan
Cleveland
Conrad
Gebhardt
Jenkins
Marshall
Miller, E.S.
Soyars
Thompson
Walters
Room
Kaise
James
Powers
Herrington
Conmy
Mintz
Wardley
Logan

54 JUL 8 1973

MAIL ROOM ☑ TELETYPE UNIT ☐

105

100-2237-28

November 10, 1975

[redacted]

(b) (7) (c) ALL INFORMATION CONTAINED HEREIN IS UNCLASSIFIED DATE 7-3-80 BY SP4 Jpm/rtc

Dear [redacted]:

This is to acknowledge receipt of your Freedom of Information-Privacy Acts (FOIPA) request forwarded to the FBI by the Department of Justice on October 22nd.

In response to your request for files pertaining to Nikola Tesla, please be advised that in order to preserve the privacy of an individual who may be the subject of a similar inquiry, it has been necessary for the FBI to maintain the practice of not indicating whether we do or do not have such information in our files.

If you can provide notarized authorization from Mr. Tesla's next of kin directing us to release to you any information our files may contain concerning him, we shall thereafter search our files and advise you accordingly.

Since we have not conducted a search of our files, please do not infer that we do or do not have the information you requested.

Sincerely yours,

C. M. Kelley

Clarence M. Kelley
Director

MAILED 6
NOV 10 1975
-FBI

1 - The Deputy Attorney General - Enclosure
Attention: Susan M. Hauser

[redacted] (5)

(b) (7) (c)

Assoc. Dir. ___
Dep. AD Adm. ___
Dep. AD Inv. ___
Asst. Dir.:
Admin. ___
Comp. Syst. ___
Ext. Affairs ___
Files & Com. ___
Gen. Inv. ___
Ident. ___
Inspection ___
Intell. ___
Laboratory ___
Plan. & Eval. ___
Spec. Inv. ___
Training ___
Legal Coun. ___
Telephone Rm. ___
Director Sec'y ___

MAIL ROOM ☐ TELETYPE UNIT ☐

62 DEC 30 1975 F 303

[redacted]

GPO : 1975 O - 569-920

106

[redacted] (6)(7)(c)

April 20, 1976

Mr. Clarence Kelly
Director
F.B.I.
Washington, DC

ALL INFORMATION CONTAINED HEREIN IS UNCLASSIFIED DATE 7-3-80 BY [illegible]

Dear Mr. Kelly:

Mr. Allen and Mr. Ruchlehaus, former acting Director of the FBI, contacted me in 1973 regarding the unavailability of American microfilm records of Nikola Tesla's unpublished diary (now in the Belgrade museum, arranged by month per folder).

At the time I discounted the possibility that these unpublished discoveries had military significance. But because of experiments now under way at Hill AFB, I now suspect such military applications exist and feel it imperative that you be notified, particularly in view of the fact that the Soviets have primary access to the entire collection.

Two photos of each page exist.

After Tesla's death, scientists from the Navy and OSS performed a cursory examination of the diary and notes, which if my memory serves me correctly, was one month long, hardly enough time to decipher Tesla's torturous handwriting. Though Tesla wrote in English, his penmanship was small, blurred, and as difficult to translate as a foreign language.

According to the museum director (1971), the Soviets had made copies of some portions, but not the Colorado Springs diary, which numbers 500 pages, 20 that directly pertain to ball lightning, and 20 or so relevant to the equipment construction. (We copied the most significant portions, but feel more exists)

FX-115 REC-52 100-2237-29

[redacted] an article [redacted] magazine, EDN (an electrical engineering magazine), but only with the very recent receipt of an unpublished manuscript from John J. O'Neill's book (PRODIGAL GENIUS) did I place credence on Tesla's later claim to military applications. Incidentally, some of O'Neill's descriptions were inaccurate and exagerated, as we have exceeded Tesla's results and are familiar with the experiments. At any rate, there are three possible military applications.

(b)(7)(c)

4 MAY 3 1976

[redacted]

107

First, Tesla claimed that the lightning balls (which destroyed his equipment) could be used to destroy aircraft. I have talked to AF personnel --such as [redacted] who saw one inside his plane in flight--and found AF personnel fear these "rf balls," as they call them.

Second, it is a suspicion of mine that ball lightning, if injected with lithium, could produce a cheap fusion bomb.

Third--and this may be no more than a suspicion--the propulsion mode of ball lightning involves electro-gravitic interaction, by which means air vehicles of revolutionary configuration may be constructed. There are no presently-known laws of physics that can account for the propulsion (400 mph or so when following an airliner). Other hitherto unsuspected applications may exist.

(b)(7)(C)

None of these applications were the goal of Project Tesla, which centered on producing ball lightning as Tesla did and studying it as a plasma confinement technique for fusion reactors. Incidentally, Tesla's claim to setting up standing waves on the earth's surface (wireless power) was erroneous and involved techniques similar to Project Sanguine, that is, using the earth's atmosphere as a waveguide ([redacted] is aware of our research).

Cordially,

[redacted]

P.S. By a copy of this letter, along with the enclosures, I am notifying the C.I.A.

Enclosures: 2

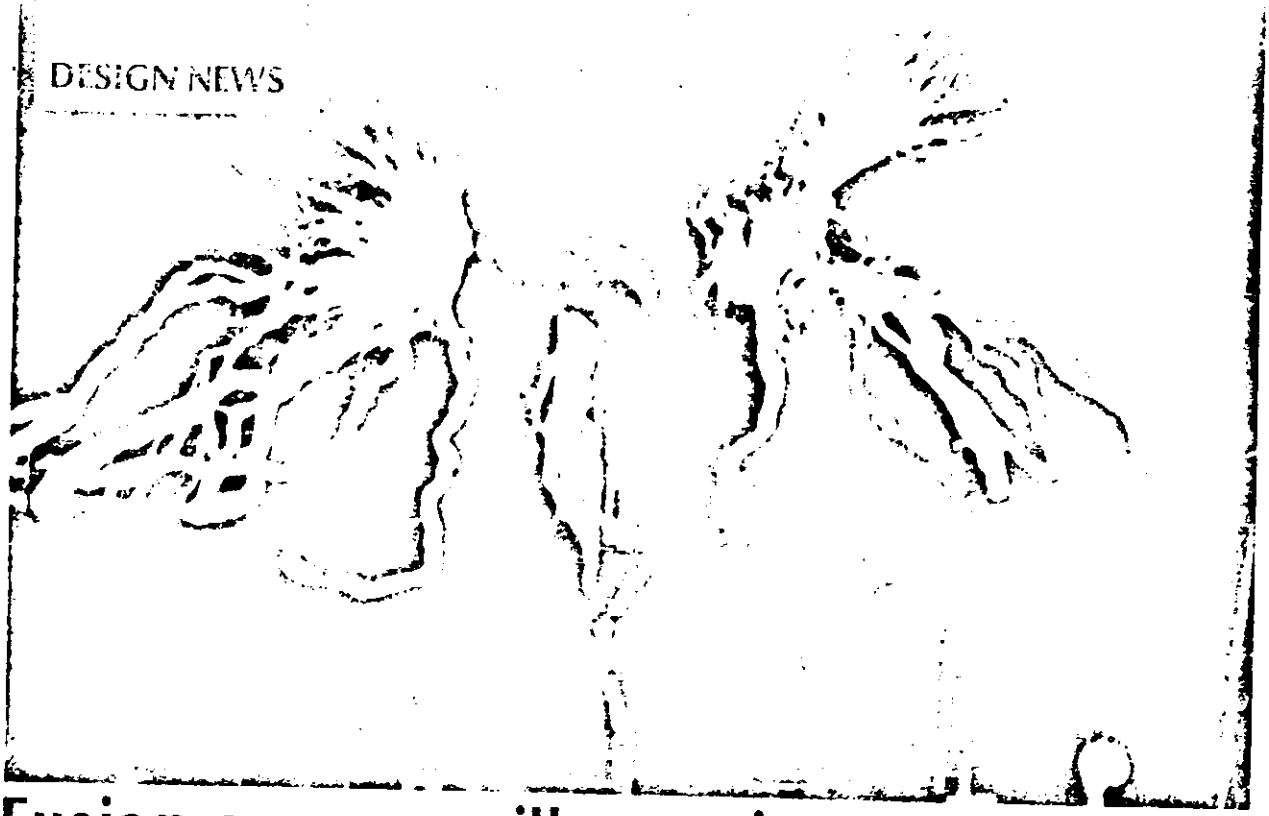

Fusion energy: will experiments in ball lightning provide the key?

Paul Snigier, Associate Editor

In the vast and empty hangar where the first atomic bomb was assembled, a man-made lightning storm is now being unleashed. The voltages of these lightning bolts—20 million volts—are the highest discharge voltages ever produced by man.

Project Tesla, headed by Robert K. Golka and Dr. Robert W. Bass, is an attempt to artificially duplicate one of nature's rarest and most terrifying phenomena—ball lightning. The experiments are based upon the unpublished notes of Nikola Tesla, who, in 1899 at his Colorado Springs laboratory, used a secret *magnifying transmitter* to produce 1.5-in. lightning balls that floated for 30 sec.

The energy surplus

Many physicists, including the eminent Dr. James Tuck, founder of the U.S. fusion program, believe that the lightning ball holds the key to a fantastic, cheap and endless energy source—fusion power, or the energy source used by the stars and sun. The fuel is deuterium, or heavy water, that can be inexpensively extracted from ocean water to provide mankind

Highest voltage continuously oscillating damped-wave lightning generator (ever produced by mankind) creates a current of 1100A at 12.5 MV! Subsequent improvements raised this to a peak current of 2200A at 20 MV. Further improvements could conceivably produce bolts that exceed natural lightning (100 MV)!

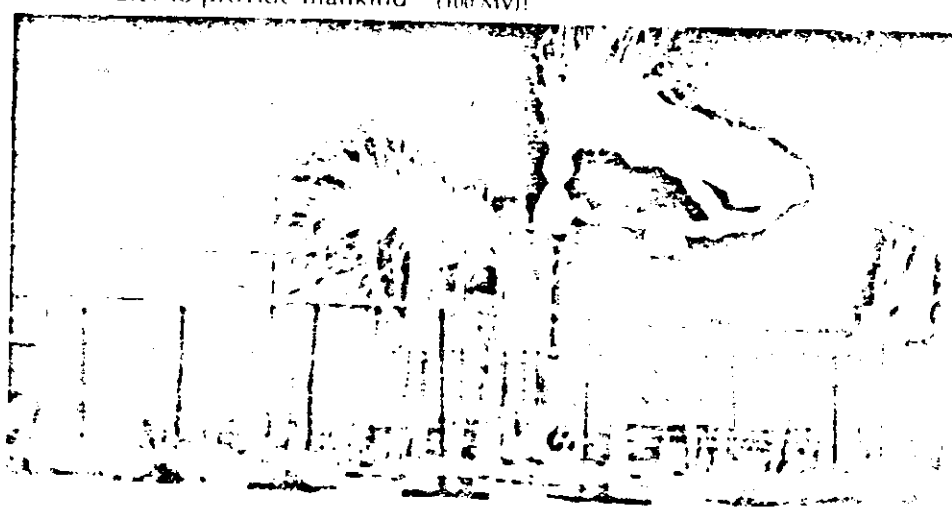

100-2237-29

DISCLOSURE

with millions of years of [illegible]. Unfortunately, progress in fusion research, which has centered on magnetic confinement and laser implosions, has been frustratingly slow and full of unpleasant surprises; and scientists warn that success could be as far off as four decades! But if these promising experiments under way at Wendover, UT, are successful, a new unexpected confinement technique could unleash this energy source.

In search of nature's secrets...

Ball lightning, a glowing sphere of red, orange or yellow plasma, often materializes during lightning storms and floats about, often against a strong wind. The ball may bounce along the floor and, on occasion, the sphere will "slip" through glass without breaking it. (The author recently investigated one such case in a hospital, in which the lights were damaged.) At times it materializes inside or even outside aircraft in flight, seemingly impervious to deformation from the wind force.

Witnesses of ball lightning have included such notables as Niels Bohr and Victor Weisskopf, the Director of the MIT Physics Department. Another witness was Secretary of State Dean Acheson, who reported seeing it cross the breakfast table aboard the presidential plane.

The accidental formation of ball lightning has been observed about once per year for the past decade inside building 985 at Hill AF Missile Radiographic Facility, UT. The volleyball-size fireballs drop out of the space adjacent to the high voltage supply of the 25 Mev linear accelerator.

The ball of blue fire floats down to the floor, rolls around randomly and then rises again to the power-supply area where it dissipates without detectable damage. Despite troubleshooting, no explanation can be found for this occurrence.

On one occasion, lightning struck the building—a large concrete structure with a 60-ft. ceiling inside—and, simultaneously, an intense sphere of fire the size of a tennis ball formed above the conduit on the wall at [illegible]ly shoulder level. It moved along the wall for a distance of some 30 ft., floated out and around the neck and shoulders of a person standing near the wall, moved back to the wall and continued along for several feet until it intercepted a duplex outlet on the conduit. At this the ball exploded, causing electrical damage throughout.

A new state of matter?

No presently known laws of physics can account for the stability and bouncing of fireballs unless it includes surface tension. This hitherto unobserved state of matter is a new concept, since plasmas have never previously exhibited such strong surface tension. Also, presently known laws cannot account for the propulsion.

Project Tesla has developed a rigorous mathematical model of the lightning ball's absolute, asymptotic, fluid-dynamical stability. Initial computer studies indicated a density range of 10^{15}-10^{17} cm^{-3}, with a temperature of 10^{5}-10^{6} °K—or seven times hotter than the sun! □

Chapter 34

TESLA TRIES TO PREVENT WORLD WAR II

When Tesla was talking as a scientist he was opposed to wars on moral, economic and all practical and theoretical grounds. But, like most scientists, when he stopped thinking as a scientist, and let his emotions rule his thoughts, he found exceptions in which he felt some wars and situations were justifiable. As a scientist he was unwilling to have the discoveries of scientists applied to the pruposes of war makers, but when the emotional phase of his nature took the ruling position he was then willing to apply his genius to devising measures that would prevent wars by supplying protective devices.

This attitude is exemplified in the following statement which he prepared in the twenties but did not publish:

"At present many of the ablest minds are trying to devise expedients for preventing a repetition of the awful conflict which is only theoretically ended and the duration and main issues of which I correctly predicted in an article printed in the Sun of December 20, 1914. The League is not a remedy but, on the contrary, in the opinion of a number of competent men, may bring about results just the opposite. It is particularly regrettable that a punitive policy was adopted in framing the terms of peace because a few years hence it will be possible for nations to fight without armies, ships or guns, by weapons far more terrible, to the destructive action and range of which there is virtually no limit. Any city at any distance whatsoever from the enemy can be destroyed by him and no power on earth can stop him from doing so. If we want to avert an impending calamity and a state of things which may transorm this globe into an inferno, we should push the development of flying machines and wireless transmission of energy without an instant's delay and with all the power and resources of the nation."

Tesla saw preventative possibilities in his new invention which embodied "death ray" characteristics and which was made several years after the foregoing statement was written. He saw it providing a curtain of protection which any country, no matter how small, could use as a protection against invasion. While he might offer it as a defensive weapon, however, there would be nothing to stop military men from using it as a weapon of offense.

While I did not know the nature of Tesla's plan I was convinced that it did embody many discoveries that would be of commercial value, and these were the angles he should seek to develop. I felt that if he could be induced to develop some minor phase of his work that would have immediate commercial use he could derive an income from it which would enable him to proceed with his more elaborate plans. To this end I sought to gain some insight into his thoughts, that would enable me to get a practical plan in operation. This was no secret to Tesla and he successfully parried every thrust I made.

The clearest conception I got, and that was largely from scattered remarks, and by making deductions from them, concerned a possible manner in which one phase of his curtain of protection might operate. This was a "war" angle and as such it did not interest

100-2237-01

me, but since it involved "lightning balls," or "fire balls," I was very curious. Fi[illegible]lls had always fascina[illegible]o, and I had read everything I could lay my hands on about them.

A fire ball is a strange phenomenon associated with lightning. Some of the energy of the lightning stroke appears to become locked into a ball shaped structure which may be of any size from a couple of inches to a foot in diameter. It looks like a perfect sphere, brightly incandescent and floats like a bubble, being easily carried by air currents. They may last for a short time, from a fraction of a second to many seconds. In this interval, during which they stay fairly close to the ground, they may come close to many objects without damaging them or being damaged by them. Suddenly, for no known reason, the ball explodes doing as much damage as a bomb, if close to structures, and no damage if in the open.

The fire ball looked to me like a gigantically enlarged model of the tiny electron, one of the building blocks of matter, which acts as if it were just a spherical area of space in which an amount of energy was crystallized to give it structure. I felt that if it were possible to discover how a large amount of energy was stored in this fairy bubble structure of a fire ball a new insight might be gained into the structure of the electron and other fundamental particles of matter. Also this method of storing energy could be applied to a thousand useful purposes.

When I approached Tesla with pleas along this line to develop this possible phase of his discovery he would evade direct reply by indulging in a, not always, tolerant lecture on my gullability in believing theories about the complex structure of the atom. While he had in earlier years discussed some of his experiences with fire balls in his laboratory at Colorado Springs and explained his theory of their formation, he would not in the later years permit himself to be drawn into a discussion of them as a possible part of his system. This, of course, made me suspicious that the clue was "hot" but I could be completely wrong in my conclusions. Tesla was very quick in detecting my technique when I sought to narrow down a field by trying to get him to deny statements when he was adamant to direct questions.

Tesla became familiar with the destructive characteristics of fire balls in his experiments at Colorado Springs in 1899. He produced them quite by accident and saw them, more than once, explode and shatter his tall mast and also destroy apparatus within his laboratory. The destructive action accompanying the disintegration of a fire ball, he declared, takes place with inconceivabel violence.

He studied the process by which they were produced, not because he wanted to produce them but in order to eliminate the conditions in which they were created. It is not pleasant, he related, to have a fire ball explode in your vicinity for they will destroy anything they come in contact with.

It will be necessary to reconstruct his statements from very fragmentary notes and a long distance memory.

"Parasite oscillations, or circuits, within the main circuit were a source of danger from this cause. Points of resistance in the main circuit could result in minor oscillating circuits between terminals or between two points of resistance and these minor circuits would have a very much higher period of oscillation than the main circuit and could be set into oscillation by the main current of lower frequency.

"Even when the principal oscillating circuit was adjusted for the greatest efficiency of operation by the dimination of all sources of losses the fire balls continued to occur but these were due to stray high frequency charges from random earth currents.

"From these experiences it became apparent that the fire balls resulted from the interaction of two frequencies, a stray higher frequency wave imposed on the lower frequency free oscillation of the main circuit.

"As the free oscillation of the circuit builds up from the zero point to the quarter wave length node it passes through various rates of change. In a current of shorter wavelength the rates of change will be steeper. When the two currents react on each other the resultant complex will contain a wave in which there is an extremely steep rate of change, and for the briefest instant currents may move at a tremendous rate, at the rate of millions of horsepower.

"This condition acts as a trigger which may cause the total energy of the powerful longer wave to be discharged in an infinitesmally small interval of time and at a proportionately tremendously great rate of energy movement which cannot confine itself to the metal circuit and is released into surrounding space with inconceivable violence."

It is but a step, from learning how a high frequency current can explosively discharge a lower frequency current, to using the principle to design a system in which these explosions can be produced by intent. The following process appears a possible one but no evidence is available that it is the one Tesla evolved: An oscillator, such as he used to send power wirelessly around the earth at Colorado Springs, is set in operation at a frequency to which a given warship is resonant. The complex structure of a ship would provide a great number of spots in which electrical oscillations will be set up of a much higher frequency than those coursing through the ship as a whole. These parasite currents will react on the main current causing the production of fireballs which by their explosions will destroy the ship, even more effectively than the explosion of the magazine which would also take place. A second oscillator may be used to transmit the shorter wavelength current.

Somewhat later I learned the reason for Tesla's reticence to discuss details. This came shortly after Stanley Baldwin replaced Neville Chamberlin as Prime Minister of Great Britain.

Tesla revealed that he had carried on negotiations with Prime Minister Chamberlin for the sale of his ray system to Great Britain for $30,000,000 on the basis of his presentation that the device would provide complete protection for the British Isles against any enemy approaching by sea or air, and would provide an

offensive weapon to which there was no defense. He was convinced, he declared, of the sincerity of Mr. Chamberlain and his intent to adopt the device as it would have prevented the outbreak of the then threatening war, and would have made possible the continuation- under the duress which this weapon would make possible - of the working agreement involving France, Germany and Britain to maintain the status quo in Europe. When Chamberlin failed, at the Munich conference, to retain this state of European equilibrium it was necessary to get rid of Chamberlin and install a new Prime Minister who could make the effort to shift one corner of the triangle from Germany to Russia. Baldwin found no virtue in Tesla's plan and preemptorially ended the negotiations.

Tesla was greatly disappointed by the collapse of his negotiations with the British Government. With it there collapsed his hopes of providing a demonstration of his most recent, and, what he considered, his most important discoveries. He did not, however, dwell on the jubject; beyond the single conversation he did not mention the matter again. He did not get another chance to finance the demonstration of these discoveries.

During the period in which the negotiations were being carried on, Tesla declared, efforts had been made to steal the invention. His room had been entered and his papers examined but the thieves, or spies, left empty handed. There was no danger, he said, that his invention could be stolen for he had at no time committed any part of it to paper. He could trust his memory to preserve every fine detail of his investigations. This was true, he said, of all of his later major discoveries.

The nature of his system makes little difference now; he has gone and has taken it with him. Perhaps, if there is any communication from beyond the veil that separates this life from whatever exists hereafter, Tesla may look down upon earth's struggling mortals and find some way of dropping a hint concerning what he accomplished; but, if the situation is such that this cannot take place, then we must await until the human race produces another Tesla.

ooo

ALL INFORMATION CONTAINED
HEREIN IS UNCLASSIFIED
DATE 7-3-80 BY SP4 Jam/rtc

April 30, 1976

[redacted]

EX-115

REC-47

100-2237-29

[redacted]

(b)(7)(c)

Dear [redacted]:

Thank you for your letter of April 20th, with enclosures. It was certainly most thoughtful of you to furnish us this information, and your interest and courtesy are indeed appreciated.

MAILED 6
APR 30 1976
FBI

Sincerely yours,

C. M. Kelley

Clarence M. Kelley
Director

NOTE: Bufiles indicate limited correspondence with [redacted], last outgoing 6-27-73, in reply to his request concerning papers of Dr. Nikola Tesla. Dr. Tesla was a world-famous electrical inventor, and at the time of his death in 1943, all of his personal papers and effects were believed dangerous to the country's security if they fell into unauthorized hands. The book, "Prodigal Genius," by John J. O'Neill, alleged that the FBI took over a certain safe and opened it, appropriating his property. Bufiles indicated the Office of Alien Property of the Department of Justice did so. Bufile 100-2237-23.

Assoc. Dir. ___
Dep. AD Adm. ___
Dep. AD Inv. ___
Asst. Dir.:
Admin. ___
Comp. Syst. ___
Ext. Affairs ___
Files & Com. ___
Gen. Inv. ___
Ident. ___
Inspe[redacted]
Intel[redacted]
[redacted]
Legal C[redacted]
Plan. & Eval. ___
Spec. Inv. ___
Training ___
Telephone Rm. ___
Director [redacted]

[redacted] (3)

(b)(7)(c)

[redacted]

MAIL ROOM ☐ TELETYPE UNIT ☐

~~58 MAY 21 1976~~
31 JUN 21 1976

GPO : 1975 O - 594-120

115

Assoc. Dir. ___
Dep. AD Adm. ___
Dep. AD Inv. ___
Asst. Dir.:
Adm. Serv. ___
Ext. Affairs ___
Fin. & Pers. ___
Gen. Inv. ___
Ident. ___
Inspection ___
Intell. ___
Laboratory ___
Legal Coun. ___
Plan. & Eval. ___
Rec. Mgnt. ___
Spec. Inv. ___
Training ___
Telephone Rm. ___
Director Sec'y ___
FBI/DOJ

JUN 16

United States Senate

To ensure proper handling please return all correspondence TO THE ATTENTION OF:

[redacted]

Respectfully referred to:

FBI

Please respond to the attached inquiry in duplicate and return the enclosure. Thank you for your cooperation.

(b)(7)(C)

[redacted] U.S.S.

EXP PROC

REC-34 100-2237

JUN 17 1976

[redacted]

ENCLOSURE

116

Case

[redacted]

(b)(7)(c)

New Senate Office Bldg
Room 5241, Washington DC 2510

Dear Sir.

I am a substitute in the Milwaukee Public School System. I do scientific experiments in high voltage electricity. I have studied all the available writings of the dead genius Nikola Tesla (1861 - January 7, 1943)

When Nicola Tesla died the Federal Bureau of Investigation came and opened the ~~[illegible]~~ safe in his room and took the papers it contained, to examine ~~[illegible]~~ them

117

ENCLOSURE

for a reported secret invention of
possible use in II W.W..

As a citizen & a
Scientist I would like to
study these unpublished papers
with hope of findings new
ideas for producing an alternate
source of energy. Something
that Nikola Tesla knew about
and because of his unfortunate
financial status, was not able
to develop into a working model
Please help. -

With love in The Lo

[redacted]

(b)(7)(c)

[redacted]

REC-34

100-2237-30

June 23, 1976

Honorable [redacted]
United States Senate
Washington, D. C. 20510

ALL INFORMATION CONTAINED HEREIN IS UNCLASSIFIED DATE 2-3-80 BY SP4 Jrm/rtc (b) (7) (c)

Dear Senator [redacted]:

This will respond to your communication of June 16th enclosing the letter of [redacted]

The effects of Dr. Nikola Tesla were impounded, after his death, by the Office of Alien Property of the Department of Justice and not by the FBI. Since we did not participate in the handling of Dr. Tesla's belongings, I am unable to furnish the information you desire.

A copy of your communication and of this reply are being referred to the Department of Justice and the enclosure to your communication is being returned as requested.

Sincerely yours,

C. M. Kelley

Clarence M. Kelley
Director

Enclosure
1 - Assistant Attorney General - Enclosures (2)
Civil Division
1 - Milwaukee - Enclosures (2)
1 - Office of Congressional Affairs - Enclosures (2)
NOTE: This response is consistent with past responses to inquiries of a similar nature. Bufile 100-2237 reflects that the Office of Alien Property took possession of Dr. Tesla's papers following his death.

[redacted] (7)

Assoc. Dir. ___
Dep. AD Adm. ___
Dep. AD Inv. ___
Asst. Dir.:
Adm. Serv. ___
Ext. Affairs ___
Fin. & Pers. ___
Gen. Inv. ___
Ident. ___
Inspection ___
Intell. ___
Laboratory ___
Legal Coun. ___
Plan. & Eval. ___
Rec. Mgnt. ___
Spec. Inv. ___
Training ___
Telephone Rm. ___
Director Sec'y ___

MAILED 10
JUN 23 1976
FBI

(b) (7) (c)

[redacted]

56 JUL 14 1976

MAIL ROOM ☐ TELETYPE UNIT ☐

[redacted]

119

FBI/DOJ

July 26, 1979

Dear Mr. Webster:

ALL INFORMATION CONTAINED HEREIN IS UNCLASSIFIED DATE 7-14-81 BY [illegible]

OUTSIDE SOURCE

I am writing this letter in regard to some papers you have in your possession by Nikola Tesla.

I have for some time now been studying the works of Mr. Tesla and I am involved in the research and further developement of his efforts. I have in my possession a copy of almost everything that was ever written by him.

However I have read that on the day following his death (he died the night of January 7th, 1943, so probably January 8th, 1943) the Federal Bureau of Investigation went to where Mr. Tesla had been staying - the Hotel New Yorker, New York City, New York and collected all notes and papers that he had with him there.

REC 79 100-22237-[illegible]

2 AUG 7 1979

To further my studies and hopefully complete them it would be deeply appreciated if you would send me a copy of all the notes, papers, books, drawings etc. that were found there.

ack 8-4-79

[redacted]

(b) Thank you,

(7)

(c)

[redacted]

120

UNITED STATES GOVERNMENT — UNITED STATES DEPARTMENT OF JUSTICE
FEDERAL BUREAU OF INVESTIGATION

Memorandum

Assoc. Dir. ___
Dep. AD Adm. ___
Dep. AD Inv. ___
Asst. Dir.:
Adm. Servs. ___
Crim. Inv. ___
Ident. ___
Intell. ___
Laboratory ___
Legal Coun. ___
Plan. & Insp. ___
Rec. Mgmt. ___
Tech. Servs. ___
Training ___
Public Affs. Off. ___
Telephone Rm. ___
Director's Sec'y ___

TO : Mr. Bresson

DATE: 2/25/80

FROM : [redacted] (b)(7)(c)

SUBJECT: FREEDOM OF INFORMATION ACT DISCLOSURE REGARDING DR. NIKOLA TESLA

ALL INFORMATION CONTAINED HEREIN IS UNCLASSIFIED DATE 7-3-80 BY SP4 Jrm/r

PURPOSE:

To reduce time spent on handling of requests for information on captioned subject and to promote uniformity of disclosure.

DETAILS:

A search of FBIHQ central records indices reflects that Dr. Nikola Tesla is carried as the subject of Bufile 100-2237. Virtually all information in this file is inquiry-type correspondence. For purposes of FOIA releases, copies of this material have not been made and requesters have been so advised. Copies of the remaining material in the file totalling 29 pages, however, has been processed for disclosure. Numerous requesters have sought information relating to Dr. Tesla under the FOIA. Therefore, it is recommended that the disclosure documents maintained in Bufile 190-16504-4 be considered the preprocessed release appropriate for responses by the Initial Processing Unit for any further requests for information on this subject.

RECOMMENDATION:

That the Initial Processing Unit, FOIPA Branch, Records Management Division, add captioned case to their list of preprocessed cases and handle any future requests for such information. 100-2237-

1 - [redacted]
1 - [redacted]

XEROX

MAR 27 1980

100-2237 190
190-16504 1980

(b)(7)(c)

[redacted]

[redacted] (7)

121

Buy U.S. Savings Bonds Regularly on the Payroll Savings Plan

August 6, 1979

OUTSIDE SOURCE

[redacted] (b)(1)(c)

ALL INFORMATION CONTAINED HEREIN IS UNCLASSIFIED DATE 2-3-80 BY SP4 Jenkins

Dear [redacted]:

Your recent letter requesting information concerning Dr. Nikola Tesla has been received.

The effects of Dr. Tesla were impounded, after his death, by the Office of Alien Property of the Department of Justice and not by the FBI. We have no preprinted material available for public distribution regarding Dr. Tesla. However, under the provisions of the Freedom of Information Act (Title 5, United States Code, Section 552), requests have been made in the past regarding your topic and there may be documents available to you under Title 28--Code of Federal Regulations.

If you are interested in seeking such documents under the Freedom of Information Act, you should make a separate inquiry, clearly marking the envelope and letter as a Freedom of Information Act request, and direct it to the Director, Federal Bureau of Investigation, 9th Street and Pennsylvania Avenue, N.W., Washington, D. C. 20535. In the letter you must request documents regarding the specific topic of interest to you.

REC-79
EX-137
100-2237-32

Sincerely yours,

DE-79

William L. Bailey
Assistant Director

MAILED 11
AUG 6 1979
FBI

2 AUG 7 1979

Assoc. Dir. 1
Dep. AD Adm.
Dep. AD Inv.
Asst. Dir.:
Adm. Servs.
Crim. Inv.
Ident.
Intell.
Laboratory
Legal Coun.
Plan. & Insp.
Rec. Mgnt.
Tech. Servs.
Training
Public Affs. Off.
Telephone Rm.

[redacted] - Enclosure
Room 6958
(This correspondence response may engender a future FOIA inquiry.)

NOTE: Based upon available information, correspondent is not identifiable in Bufiles.

[redacted]lch (4)

(b)(7)(c)

122

[redacted]

FBI/DC

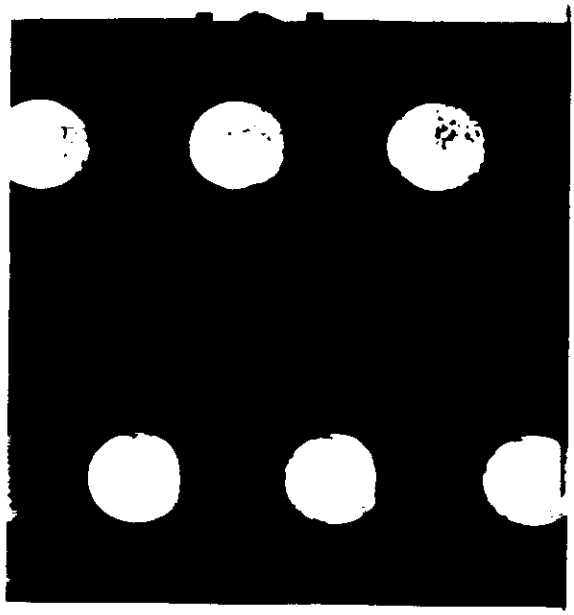

(Rev. 10/10/79)

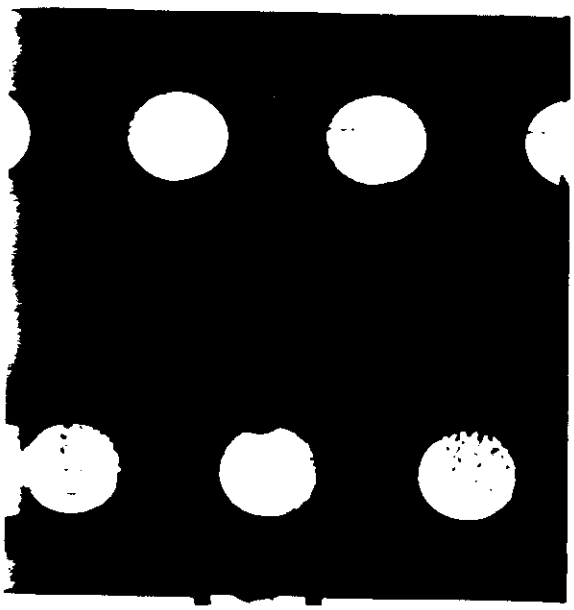

DEPARTMENT OF JUSTICE
FEDERAL BUREAU OF INVESTIGATION
INTERNAL ROUTING/ACTION SLIP

TO	BLDG.	ROOM	NAME/TITLE/ORGANIZATION	
	JEH	7142	Mr. Colwell	235
	JEH	7110	Mr. Boynton	235
	JEH	7110	Mr. Moore	235
	JEH	5829	Mr. Bailey/Rogers	211
	JEH	5829	Mr. O'Brien/Lass	211
	JEH	6296	Mr. Flanders/Woleslagle	314
			OPERATIONS SECTION	
	JEH	6992	Mr. Ervin/Poston	314
	JEH	6993	Mr. Tierney/Poston	314
	JEH	6280	CHIEF, TAR/Secretary	314
			SA:	
			Attn:	
	JEH	6587	CHIEF, FIELD COOR.	314
			SA:	
			Attn:	
	JEH	6958	CHIEF, IPU/Secretary	314
			SA:	
			Attn:	
	JEH	6363	File Duplication	314
	JEH	6268	Tickler/Index Group	314
	JEH	6992	Leave Clerk	314
	JEH	6348	Word Processing Center	314
	JEH	6380	DCRU	314
			Attn:	

BLDG	ROOM	NAME/TITLE/ORGANIZATION	
		DISCLOSURE SECTION	
JEH	6995	Mr. Bresson/Nemmensen	314
JEH	6994	Mr. Lewis/Nemmensen	314
JEH	6927	CHIEF, UNIT A/Secretary	314
		SA: Team	
		RA: Team	
JEH	6959	CHIEF, [redacted]	314
		SA: Team	
		RA: Team	
JEH	6975	CHIEF, UNIT C/Secretary	314
		SA: Team	
		RA: Team	
JEH	6986	CHIEF, UNIT D	314
		SA: Team	
		RA: Team	
JEH	6786	CHIEF, UNIT E	314
		SA: Team	
		RA: Team	
JEH	6387	CHIEF, UNIT F/Secretary	314
		SA: Team	
		RA: Team	

(2)

ALL INFORMATION CONTAINED HEREIN IS UNCLASSIFIED DATE 2-14-82 BY [illegible]

I would prefer IPU being alerted that any request for Tesla file be referred directly to [redacted] whereupon she would see that appropriate release is made

☐ RECOMMENDATION/COMMENT
☐ SEE REMARKS ON REVERSE
☐ MAKE COPIES (NO.)
☐ RETURN (BY)
☐ LOG
☐ FILE
☐ SEE ME
☐ CALL ME
☐ NECESSARY ACTION
☐ COORDINATE
☐ PER INQUIRY
☐ INFORMATION

FROM Freedom of Information-Privacy Acts Branch

THOMAS H. BRESSON SECTION CHIEF

BLDG. | ROOM

PHONE | DATE

[redacted]

FORM DOJ-359A
8-1-74

(b)
(7)
(C)

123

CONFIDENTIAL

OFFICE OF THE UNDER SECRETARY OF DEFENSE

WASHINGTON, D.C. 20301

RESEARCH AND ENGINEERING

FEDERAL GOVERNMENT

9 FEB 1981

B11

MEMORANDUM FOR THE DIRECTOR, FEDERAL BUREAU OF INVESTIGATION

SUBJECT: Papers Recovered on the Death of Nicola Tesla (U)

(U) We understand that the FBI may have possession of a number of papers found after the death of Nicola Tesla in 1943. Nicola Tesla was a brilliant electrical engineer (i.e. the Tesla Coil) who was a pioneer in various aspects of electrical transmission phenomena.

(C) We believe that certain of Tesla's papers may contain basic principles which would be of considerable value to certain ongoing research within the DoD. It would be very helpful to have access to his papers.

(U) Since we have really no idea of the possible volume of these papers, we would be happy to provide a researcher who could assist you in reducing the magnitude of the search. If there are further questions, I am the point of contact within the DoD and can be reached at 695-6364 or 695-7417.

Allan J. MacLaren

Allan J. MacLaren
LtColonel, USAF
Military Assistant
Strategic and Space Systems

REGISTERED
1059638

FBI
ALL INFORMATION CONTAINED
HEREIN IS UNCLASSIFIED
DATE 4-8-93 BY 9803 [redacted] b7C
FOIPA No. 356,608
362,001

100-2237-33

Per DOD letter dated 3-29-93
with Enclosures 1 and 2
All DOD info is unclassified
DOD referenced FOI/PA #'s 356,608 and
362,001
4/8/93 9803 [redacted] b7C

ALL INFORMATION CONTAINED
HEREIN IS UNCLASSIFIED
DATE 7-14-93 BY SP1DSK/MK

2 MAR 12 1981

b7C

Classifed by: DUSDRE/S&SS
Declassify on: February 1987

DECLASSIFIED BY 1048 [redacted]
ON 1-27-93
Per Army letter 5-25-89
291860

CORRESPONDENCE

50 MAR 30 1981

CONFIDENTIAL

124

March 10, 1981

Lt. Col. Allan J. MacLaren, USAF
Military Assistant
Strategic and Space Systems
Office of the Under Secretary
of Defense
Washington, D. C. 20301

FEDERAL GOVERNMENT

ALL INFORMATION CONTAINED
HEREIN IS UNCLASSIFIED
DATE 7-14-92 BY SP1 ASK/MKE

Dear Colonel MacLaren:

Your memorandum of February 9 requesting access to the scientific papers of Dr. Nikola Tesla which might be in our files has been referred to my office for reply.

A preliminary review of our files indicates that the FBI did not participate in the handling of Dr. Tesla's belongings following his death in New York City in January, 1943. His papers were examined by representatives of the Office of Alien Property, the Navy Department and the Office of Scientific Research and Development. In February, 1943, the papers apparently were released to Mr. Sava N. Kosanovic, Dr. Tesla's nephew and the administrator of his estate. Mr. Kosanovic's address at that time was 11 Central Park South, New York, New York.

A complete search of our indices is being made to determine if we have any information that might be useful to you. You will be notified of the results of this search at the earliest possible date.

DE-110/100-2237-34

MAILED 3
MAR 10 1981
FBI

Sincerely,

MAR 12 1981

Roger S. Young
Assistant Director in Charge
Office of Congressional
and Public Affairs

1 - [redacted] (FOIPA) - Enc.
1 - Mr. Young - Enc.
1 - [redacted] - Enc.

(b)(7)(c)

NOTE: Reply discussed with [redacted] FOIPA, RMD, who has handled similar requests for information in our files concerning Dr. Tesla. In numerous previous responses we have said that the Office of Alien Property the Department of Justice impounded Dr. Tesla's papers after his death. However, the Office of Foreign Litigation, Civil Division, indicated that Dr. Tesla's papers are not in their possession.

Exec AD Inv. ___
Exec AD Adm. ___
Exec AD LES ___
Asst. Dir.:
Adm. Servs. ___
Crim. Inv. ___
Ident. ___
Intell. ___
Laboratory ___
Legal Coun. ___
Plan. & Insp. ___
Rec. Mgnt. ___
Tech. Servs. ___
Training ___
Public Affs. Off. ___
Telephone Rm. ___
Director's Sec'y ___

[redacted] (c)

60 MAR 30 1981

139

(b)
(7)
(c)

MAIL ROOM ☑

125

March 20, 1961

Lt. Col. A. J. MacLaren
Military Assistant
Strategic and Space Systems
Office of the Under Secretary
of Defense
Washington, D. C. 20301

FEDERAL GOVERNMENT

ALL INFORMATION CONTAINED
HEREIN IS UNCLASSIFIED
DATE 7-14-92 BY [illegible]

Dear Colonel MacLaren:

A complete search of our retrievable files concerning Dr. Nikola Tesla shows that all notes and material in his immediate possession at the time of his death on January 7, 1943, were placed in the custody of the Alien Property Custodian under seal by the United States Government. These materials have never been in the care or custody of the FBI.

On January 26 and 27, 1943, Federal authorities made a thorough review of the effects of Dr. Tesla to determine if any ideas of significant value to the United States war effort could be found. His effects were examined at the Manhattan Warehouse and Storage Company at 52nd and 7th Avenue, New York, New York, where they apparently were taken after his death. Participating in this examination were representatives from the New York and Washington Offices of the Alien Property Custodian, the Office of Scientific Research and Development at the Massachusetts Institute of Technology, the Office of Naval Intelligence, and United States Naval Research. The FBI did not participate in this examination. (65-47953 section 1)

It was the considered opinion of a spokesman of those examiners "that there exist among Dr. Tesla's papers and possessions no scientific notes, descriptions of hitherto unrevealed methods or devices, or actual apparatus which could be of significant value to this country or which would constitute a hazard in unfriendly hands." There was thought to be no technical or military reason why further custody of the property should be retained. However, our files indicate that certain papers, which were regarded as typical of Nikola Tesla's writings and thoughts in the period of 1925 to 1942, were removed for the purpose of record to the Office of the Alien Property Custodian. (65-47953 section 1)

MAILED 6
MAR 23 1961
FBI

Exec AD Inv. ___
Exec AD Adm. ___
Exec AD LES ___
Asst. Dir.:
Adm. Servs. ___
Crim. Inv. ___
Ident. ___
Intell. ___
Laboratory ___
Legal Coun. ___
Plan. & Insp. ___
Rec. Mgnt. ___
Tech. Servs. ___
Training ___
Public Affs. Off. ___
Telephone Rm. ___
Director's Sec'y ___

1 - Mr. Young
1 - [redacted]
1 - [redacted]

MAIL ROOM [redacted]

V-38 DE-113 100-2237-25 MAR 25 1961

BE

(SEE NOTE PAGE THREE)

[redacted]

126

. Col. A. J. MacLaran

A memo dated October 17, 1945, from our New York Office said that at that time Dr. Tesla's effects remained at the Manhattan Storage Warehouse in some 75 packing boxes and trunks under seal by the New York Department of Taxation. The rental for this storage, approximately $15 per month, was being paid by Charlotte Muzar, 134 East 63rd Street, New York, New York, who was listed as an agent for Sava Kosanovich, Dr. Tesla's nephew and administrator of his estate. (65-47953-14)

On October 26, 1945, [redacted] a young scientist who had been Tesla's protege, called in person at our New York Field Office. With him were [redacted] and [redacted] from a research development unit at Wright Field, Dayton, Ohio. These men carried a letter signed by [redacted] requesting that the FBI allow the bearers of the letter access to the effects of Nikola Tesla. (65-47953-15)

It was explained to [redacted] that the FBI had no jurisdiction over Tesla's effects, and they were referred to the Office of the Alien Property Custodian. Bureau files do not indicate whether the men ever examined Tesla's belongings. (65-47953-15)

The Tesla effects remained in rooms 5J and 5L of the Manhattan Storage Company. In the 1950s, FBI Agents were told by company management that the only recorded visit had been made by "Federal authorities" in January, 1943. [redacted] recalled that the men had taken numerous photographs. His description of the equipment used would tend to show that a microfilm reproduction was made of the papers of the deceased. (65-47953-27)

Our files do not reflect any pertinent information on the Tesla materials since that date. Their current whereabouts or condition are not reflected in our files.

For further information regarding this matter, you may wish to contact the Office of the Alien Property Custodian and the other Federal agencies mentioned above.

I hope that we have been of assistance to you.

Sincerely,

Roger S. Young
Assistant Director in Charge
Office of Congressional
and Public Affairs

(CONTINUED - OVER)

127

Lt. Col. A. J. MacLaran

NOTE: On February 9, 1981, Col. MacLaran wrote to us inquiring about the scientific papers of Dr. Nikola Tesla. In a return letter of March 9, we informed him that a thorough review of our files would be made in search of the information he requested. This was done and he is being informed of the results. Tesla's papers have been the subject of numerous inquiries by various individuals and organizations since his death. FBI received over 20 FOIA requests on this matter during the period 1973-1980. Matter coordinated with FOIA Section, RMD.

OFFICE OF THE UNDER SECRETARY OF DEFENSE

WASHINGTON, D.C. 20301

RESEARCH AND
ENGINEERING

1 APR 1981

FEDERAL GOVERNMENT

Mr. Roger S. Young
Assistant Director in Charge
Office of Congressional and Public Affairs
Federal Bureau of Investigation
Washington, D.C. 20535

both letters addressed to Lt Col. A.J MacLaren

Dear Mr. Young,

Thank you very much for your letters of March 10 and March 20, 1981, in response to our request re Dr. Tesla. We very much appreciate the effort that must have gone into this. On behalf of the Deputy Under Secretary (Strategic and Space Systems), Dr. S. L. Zeiberg, I would like to thank you and the people who spent their time searching out the relevant data.

Sincerely,

ALL INFORMATION CONTAINED
HEREIN IS UNCLASSIFIED
DATE [illegible] BY [illegible]

Allan J. MacLaren

Allan J. MacLaren
Colonel, USAF
Military Assistant
Strategic and Space Systems

DE-110 100-2237-36

16 APR 10 1981

Per DoD letter dated 3/29/93
With Enclosures 1 and 2
ALL DoD info is unclassified.
DoD referenced FOI/PA #s 356,608 and 362,001
4/8/93 9803 [redacted] b7C

V-11

No acknowledgement necessary

10 French

Vines

FBI
ALL INFORMATION CONTAINED
HEREIN IS UNCLASSIFIED
DATE 4-8-93 BY 9803 [redacted] ICE
FOIPA No. 356,608
362,001

b7C

Off. of Cong. and Pub. Aff.

129

21 July 1981 [redacted] (b)(7)(C)

Director of the FBI
Washington, D.C.

[redacted]

Dear Sir:

While attending college, I came across an article about the electrical genius, Nicolai Tesla. Mr. Tesla was an electrical genius with such peers as EDISON and WESTINGHOUSE. Tesla designed the basic generator and was the first man to introduce alternating current to the people. The article, written in an underground SanFrancisco newspaper, stated that Tesla also worked with electromagnetic waves and supposedly built a plant that could harness the electromagnetic waves out of the earth's atmosphere sufficiently enough to use them as a source of electricity. The article stated that Tesla built such a plant and lit up a city street 150 miles away by sending the electromagnetism via radio waves. This method is presently being used in electronic warfare. After that, the article stated that the FBI confiscated his plans and buried them in your archives. Their reasoning was that such a free form of energy would knock out a big chunk of the oil, coal, and nuclear forms of energy and their contributions to the economy(money for research and employment). All I want to know is if there is any truth to this story and if so what was the FBI's reasons and when are the archives opened again so that Tesla's work could come to light again. Now bear in mind that this man was an electrical genius and even had a unit of electrical measure named after him. If he did figure out a way to utilize the earth's electromagnetic waves then I believe that we are ready to gradually phase out our dependence on oil, ease the volatile tension in the Middle East and put all that money presently going to the Arabs into

[redacted]

100-2237-37

17 AUG 11 1981

(b)(7)(C)

130

space research, joint international research and deep-sea research to help solve our population problem. I am talking about huge sums of money being released that could speed up the experts present projected times of producing significant gains in these still relatively new fields.

You could at least take the time to check out what I am saying and judge for yourself whether or not the archives should be opened now to put the world back on a more secure heading.

Sincerely,

[redacted]

(b)(7)(C)

[redacted]

August 7, 1981

ALL INFORMATION CONTAINED
HEREIN IS UNCLASSIFIED
DATE 7-14-82 BY [illegible]

OUTSIDE SOURCE

[redacted] (b)(7)(c)

Dear [redacted]:

Judge Webster has referred your letter of July 21st to me for a reply. A check of our files indicates Dr. Nikola Tesla's effects were impounded after his death by the Office of Alien Property of the Department of Justice and not by the FBI. While your interest is indeed appreciated, the FBI is unable to answer your questions as we did not participate in the handling or have anything to do with the storage of Dr. Tesla's belongings.

To be as helpful as possible, I am forwarding a copy of this communication to the Department of Justice.

Sincerely,

S

Roger S. Young
Assistant Director in Charge
Office of Congressional
and Public Affairs

MAILED 9
AUG 10 1981
FBI

1 - Acting Assistant Attorney General [illegible]closure
Civil Division

NOTE: [redacted] is not identifiable in Bufiles. Dr. Tesla died on 1/7/43 and we have received much correspondence regarding his belongings which were impounded by the Office of Alien Property of the Department of Justice.

[redacted] (4)

100-2237-38

Exec AD Inv. ___
Exec AD Adm. ___
Exec AD LES ___
Asst. Dir.:
Adm. Servs. ___
Crim. Inv. ___
Ident. ___
Intell. ___
Laboratory ___
Legal Coun. ___
Plan. & Insp. ___
Rec. Mgmt. ___
Tech. Servs. ___
Training ___
Public Affs. Off. ___
Telephone Rm. ___
Director's Sec'y ___

MAIL ROOM ☑

(b)(7)(c)

132

FD-36 (Rev. 8-26-82)

FBI

TRANSMIT VIA:
☐ Teletype
☐ Facsimile
☒ AIRTEL

PRECEDENCE:
☐ Immediate
☐ Priority
☐ Routine

CLASSIFICATION:
☐ TOP SECRET
☐ SECRET
☐ CONFIDENTIAL
☐ UNCLAS E F T O
☐ UNCLAS

SECRET

Date 8/18/83

TO: DIRECTOR, FBI
ATTN: INTD, SUPERVISOR [redacted]

SECRET

FROM: SAC, CINCINNATI [redacted] (P)

NIKOLA TESLA
[redacted]
(OO: CI)

This communication is classified "Secret" in its entirety.

Re telephone call of SA [redacted], Cincinnati Division, to Supervisor [redacted] FBIHQ, on 8/11/83.

Enclosed for the Bureau and New York is one copy each of pertinent pages from the 1981 book titled "Tesla: Man Out of Time" by Margaret Cheney, with important passages underlined.

For information of Bureau and New York, [redacted] at Wright-Patterson Air Force Base (WPAFB) and [redacted] also at WPAFB, have both been in contact with SA [redacted] at the Dayton, Ohio RA regarding possible FBI

SECRET

Classified by: 8262
Declassify on: OADR

Classified by [redacted]
Declassify on: OADR

ENCLOSURE

2 - Bureau (Enc. 1)
2 - New York (Enc. 1)
2 - Cincinnati
[redacted]
(6)

ALL INFORMATION CONTAINED HEREIN IS UNCLASSIFIED EXCEPT WHERE SHOWN OTHERWISE

17 AUG 22 1983

Approved: [redacted] Transmitted _____ (Number) _____ (Time) Per [redacted]

53 NOV [illegible] 1983

133

DESCRIPTION OF FOLLOWING FILE MATERIAL

NIKOLA TESLA

100-2277	156	pages
REFERENCES	96	pages
	252	TOTAL PAGES

XXXXXXX
XXXXXXX
XXXXXXX

XXXXXXXXXXXXXXXXXXXX
X NO DUPLICATION FEE X
X FOR THIS PAGE X
XXXXXXXXXXXXXXXXXXXX

MAIN INVESTIGATIVE FILE

156 pages

[redacted] 9/24/40

Department of Justice,

Attn. Mr. G. Edgar Hoover,

Washington, D. C.

ALL INFORMATION CONTAINED
HEREIN IS UNCLASSIFIED
DATE 7-2-80 BY SP4 [illegible]

Dear Mr. Hoover:

The appended article was printed in the New York Times issue of Su September 22, 1940 and if based on proven facts, should be of vital importance to t War Department as well as to that of other nations now controlled by insane dictato

If, as the auther states, the teleforce has been perfected by Nikola Tesla, i would be a measure of foresightedness to insure his constant guarding against his b molested, possibly kidnapped and tortured, by alien enemies for the purpose of seizi the secret of such an invaluable instrument of war and/or defense

The foregoing is offered just in case the article and its inferences have no been called to your attention.

Very truly yours

[redacted]

1 ENCL

RECORDED & INDEXED

Mark 10/1/40 [redacted]
100-2237-1
FEDERAL BUREAU OF INVESTIGATION
2 SEP 26 1940
U.S. DEPARTMENT OF JUSTICE

3

NY Times 9/22/40

"Death Ray" for Planes

Nikola Tesla, one of the truly great inventors who celebrated his eighty-fourth birthday on July 10, tells the writer that he stands ready to divulge to the United States Government the secret of his "teleforce," with which, he said, airplane motors would be melted at a distance of 250 miles, so that an invisible Chinese Wall of Defense would be built around the country against any attempted attack by an enemy air force, no matter how large.

This "teleforce," he said, is based on an entirely new principle of physics that "no one has ever dreamed about," different from the principle embodied in his inventions relating to the transmission of electrical power from a distance, for which he has received a number of basic patents. This new type of force, Mr. Tesla said, would operate through a beam one one-hundred-millionth of a square centimeter in diameter, and could be generated from a special plant that would cost no more than $2,000,000 and would take only about three months to construct.

A dozen such plants, located at strategic points along the coast, according to Mr. Tesla, would be enough to defend the country against all possible aerial attack. The beam would melt any engine, whether Diesel or gasoline-driven, and would also ignite the explosives aboard any bomber. No possible defense against it could be devised, he asserts, as the beam would be all-penetrating.

High Vacuum Eliminated

The beam, he states, involves four new inventions, two of which already have been tested. One of these is a method and apparatus [illegible] producing rays [illegible] manifestations of [illegible] air, eliminating the [illegible] high vacuum; a second is a method and process for producing "very great electrical force"; the third is a method for amplifying this force, and the fourth is a new method for producing "a tremendous electrical repelling force." This would be the projector, or gun, of the system. The voltage for propelling the beam to its objective, according to the inventor, will attain a potential of 50,000,000 volts.

With this enormous voltage, he said, microscopic electrical particles of matter will be catapulted on their mission of defensive destruction. He has been working on this invention, he added, for many years and has recently made a number of improvements in it.

Mr. Tesla makes one important stipulation. Should the government decide to take up his offer he would go to work at once, but they would have to trust him. He would suffer "no interference from experts."

In ordinary times such a condition would very likely interpose an insuperable obstacle. But times being what they are, and with the nation getting ready to spend billions for national defense, at the same time taking in consideration the reputation of Mr. Tesla as an inventor who always was many years ahead of his time, the question arises whether it may not be advisable to take Mr. Tesla at his word and commission him to go ahead with the construction of his teleforce plant.

Such a Device "Invaluable"

After all, $2,000,000 would be relatively a very small sum compared with what is at stake. If Mr. Tesla really fulfills his promise the result achieved would be truly staggering. Not only would it save billions now planned for air defense, by making the country absolutely impregnable against any air attack, but it would also save many more billions in property that would otherwise be surely destroyed no matter how strong the defenses are as witness current events in England.

Take, for example, the Panama Canal. No matter how strong the defenses, a suicide squadron of dive bombers, according to some experts, might succeed in getting through and cause such damage that would make the Canal unusable, in which case our Navy might find itself bottled up.

Considering the probabilities in the case even if the chances were 100,000 to 1 against Mr. Tesla the odds would still be largely in favor of taking a chance on spending $2,000,000. In the opinion of the writer, who has known Mr. Tesla for many years and can testify that he still retains full intellectual vigor, the authorities in charge of building the national defense should at once look into the matter. The sum is insignificant compared with the magnitude of the stake.

ALL INFORMATION CONTAINED
HEREIN IS UNCLASSIFIED
DATE 7-19-92 BY [illegible]

100-2237-1

RECORDED & INDEXED

[redacted] 100-2237-1

October 1, 1940

[redacted]

(b)(7)(C)

Dear [redacted]

I wish to acknowledge receipt of your letter dated September 24, 1940, together with its enclosure.

Your courtesy and interest in bringing this information to my attention are indeed appreciated, and you may be assured your letter will receive appropriate consideration.

Sincerely yours,

John Edgar Hoover
Director

ALL INFORMATION CONTAINED
HEREIN IS UNCLASSIFIED
DATE 7-2-80 BY SP4 Jan/rtc

Mr. Tolson
Mr. Clegg
Mr. E. A. Tamm
Mr. Foxworth
Mr. Nathan
Mr. Ladd
Mr. Egan
Mr. Glavin
Mr. Nichols
Mr. Gandon
Mr. Rosen
Mr. Tracy
Miss Gandy

COMMUNICATIONS SECTION
MAILED
★ OCT 1 1940 ★
P.M.
FEDERAL BUREAU OF INVESTIGATION
U.S. DEPARTMENT OF JUSTICE

[redacted] (b)(7)(C)

5

[redacted]

NOT FOIA REDACTIONS

U. S. DEPARTMENT OF JUSTICE

JAN 12 1943

TELETYPE

[redacted]

Mr. Toleo
Mr. E. A.
Mr. Cl...
Mr. ...
Mr. ...
Mr. Nichol
Mr. ...
Mr. Tracy
Mr. Carson
Mr. ...
Mr. ...
Mr. McGuire
Mr. ...
Mr. Quinn
Mr. Nease
Mr. Gandy

FBI NYC 1-12-43 11-06 PM WHS
DIRECTOR
VEST

UNSUBS --- EQUIPMENT, EXPERIMENTS AND RESEARCH OF NIKOLA TESLA, DECEASED, [redacted] ESPIONAGE - M. RETEL UNDER ABOVE HEADING TO THE BUREAU FROM THIS OFFICE DATED JAN NINE LAST. INQUIRY DEVELOPS THAT TESLA DIE JAN EIGHT, RATHER THAN THURSDAY, JAN SEVEN, AS [redacted] STATED IN REFERENCE TELETYPE. ON THE NIGHT OF JAN EIGHT, SAVA KOSANOVICH, GEORG CLARK, AND KENNETH SWEEZEY VISITED TESLA-S HOTEL WITH A REPRESENTATIVE OF SHAW WALKER CO. IN ORDER TO OPEN THE SAFE IN THE ROOM OF TESLA. KOSANOVICH LATER REPORTED TO WALTER GORSUCH, OFFICE OF ALIEN PROPERTY CUSTODIAN, NYC, THAT HE WENT INTO THE ROOM IN ORDER TO SEARCH FOR A WILL OF TESLA. KOSANOVICH AND THE OTHERS MADE THE SEARCH OF THE SAFE IN THE PRESENCE OF THREE ASST MANAGERS OF HOTEL NEW YORKER AS WELL AS REPRESENTATIVES OF THE YUGOSLAVIAN CONSULATE, IDENTITIES OF LATTER NOT YET KNOWN. AFTER THE SAFE WAS OPENED, SWEEZEY, TOOK FROM THE SAFE A BOOK CONTAINING TESTIMONIALS SENT TO TESLA ON THE OCCASION OF HIS SEVE TY FIFTH BIRTHDAY. THIS BOOK WAS ARRANGED FOR TESLA BY SWEEZEY. KOSANOVICH TOOK FROM THE ROOM THREE PICTURES OF TESLA, TWO BEING EN-LARGED NEWSPAPER PICTUREX. ACCORDING TO MANAGERS OF HOTEL AND KOSANO-VICH HIMSELF, NOTHING ELSE WAS REMOVED FROM THE ROOM OR SAFE. THE SAFE WAS THEN CLOSED UNDER A NEW COMBINATION, WHICH COMBINATION IS NOW IN POSSESSION O[redacted] KOSANOVICH. ON SATURDAY AFTERNOON, JAN NINE, GORSUCH AND [redacted] FTIZGERALD OF ALIEN PROPERTY CONTROL WENT TO HOTEL AND SEIZED ALL THE PROPERTY OF TESLA, CONSISTING OF ABOUT TWO TRUCKLOANDS OF MATERIAL, SEALED ALL ARTICLES AND TRANSFERRED THEM TO THE MANHATTAN STORAGE AND WAREHOUSE CO. NY, WHERE THEY ARE NOW LOCATED AT THAT [redacted] TIME THERE WERE ALSO IN THIS WAREHOUSE APPROXIMATELY THIRTY BARRELS AND BUNDLES BELONGING TO TESLA WHICH HAD BEEN THERE SIN ABOUT NINETEEN THIRTY FOUR. THESE HAVE ALSO [redacted] BEEN SEALED AND ARE NOW UNDER ORDERS OF ALIEN PROPERTY CUSTODIAN. IN VIEW OF FACT TESL IS A US NATURALIZED CITIZEN, ALIEN PROPERTY CUSTODIAN FEELS THAT ITS JURISDICTION OVER PROPERTY IS DOUBTFUL BUT [redacted] FEELS THAT NO OTHER AGENCY WILL BE ABLE TO GET [redacted] TO THIS PROPERTY FOR AT LEAST TWO DAYS

COPIES DESTROYED 3/10/58 #4

ALL INFORMATION CONTAINED HEREIN IS UNCLASSIFIED DATE 7.13.82 INDEX

Rec'd 12 15 am 1-13-43

100-2237-2

NOT FOIA REDACTION

16 JAN 13 1943

COPY IN FILE

77 FEB 5 1943

[redacted]

REDACTIONS ON THIS PAGE ARE NOT FOIA DELETIONS

6

PAGE TWO
AFTER THAT TIME IT IS POSSIBLE THAT A PUBLIC ADMINISTRATOR WILL BE APPOINTED FOR THE PROPERTY WHO MAY TAKE THE PROPERTY INTO HIS CUSTODY. TESLA ALSO HAD SOME PROPERTY, [redacted] ALLEGED BY INFORMANT FITZGERALD IN THIS CASE, TO BE A WORKING MODEL OF AN INVENTION IN A SAFE DEPOSIT BOX IN GOVERNOR CLINTON HOTEL IN NY. INQUIRY SHOWS THAT THIS WAS PLACED HERE BY TESLA IN NINETEEN THIRTY TWO AS SECURITY FOR FOUR HUNDRED DOLLARS OWED HOTEL. THIS BILL IS STILL OWED AND HOTEL APPEARS UNWILLING TO RELEASE THIS PROPERTY TO ANYONE AT LEAST UNTIL [redacted] DEBT IS PAID, BUT THIS OFFICE WILL BE ADVISED IF ANYONE ATTEMPTS TO PAY BILL AND OBTAIN PROPERTY. CONCERNING TESLA HOTEL MANAGERS REPORT HE WAS [redacted] VERY ECCENTRIC IF NOT [redacted] MENTALLY DERANGED DURING PAST TEN YEARS AND IT IS DOUBTFUL IF HE HAS CREATED ANYTHING OF VALUE DURING THAT TIME, ALTHOPRIOR TO THAT HE PROBABLY WAS A VERY BRILLIANT INVENTOR. THEREFORE, ANY NOTES OF VALUE WERE PROBABLY THOSE MADE PRIOR TO THAT TIME. KOSANOVICH IS A NEPHEW OF TESLA WHO DESCRIBED HIMSELF AS FORMERLY QUOTE YUGOSLAV MINISTER OF STATE UNQUOTE AND NOW QUOTE [redacted] PRESIDENT OF EASTERN AND CENTRAL PLANNING BOARD REPRESENTING YUGOSLOVIA, CZECHOSLOVAKIA, POLAND AND GREECE, UNQUOTE. SWEEZEY IS A WRITER FOR POPULAR MECHANICS AND OTHER PUBLICATIONS WHO IS [redacted] DESIROUS OF PUBLISHING A BIOGRAPHY OF TESLA AND THERFORE WOULD LIKE TO OBTAIN CONTROL OF HIS NOTES FOR THIS WORK. CLARK IS EMPLOYED BY RCA AND WOULD ALSO PROVIDE STORAGE ROOM FOR TESLAS EFFECTS IN ORDER TO USE THEM IN WRITING A BIOGRAPHY. TESLA AT ONE TIME REPORTED TO BE WORKING ON EXPERIMENTS FOR YUGOSLAVIAN GOVERNMENT IN EXILE. IT IS DESIRED THAT BUREAU ADVISE IMMEDIATELY WHETHER IT IS INTERESTED FURTHER IN THIS PROPERTY FOR PURPOSES OF TAKING CONTROL OF IT. SUGGEST THAT, IN VIEW OF FACT THAT THE NOTES AND OTHER MATERIAL WOULD BE HIGHLY TECHNICAL IN CHARACTER AND FOR THAT REASON [redacted] COULD NOT BE REVIEWED [redacted] EXCEPT BY A TRAINED PERSON THE OFFICE OF SCIENTIFIC RESEARCH DEVEL-

OPMENT MIGHT BE INTERESTED.
FOXWORTH
END NYC S2 WHS
HOLD WA R 2 RSG

[redacted]

REDACTIONS ON THIS PAGE ARE NOT FOIA DELETIONS

[illegible] IS UNCLASSIFIED
DATE 7-13-82 [illegible]

Mr. [illegible]
Mr. [illegible]
Mr. [illegible]
Mr. Glavin
Mr. Ladd
Mr. Nichols
Mr. Bason
Mr. Tracy
Mr. Carson
Mr. Coffey
Mr. Hendon
Mr. McGuire
Mr. Mumf[illegible]
Mr. Quinn Tamm
Mr. N[illegible]
Miss Gandy

Little

FBI NYC 1-9-43 11-30 PM D[illegible]
DIRECTOR
COAT
UNKNOWN SUBJECTS. E[redacted] EXPERIMENTS AN[illegible] OF NIKOLA TESLA, DECEASED. ESPIONAGE - M. NIKOLA TESLA, ON[illegible] STANDING SCIENTISTS IN THE ELECTRICAL FIELD, DIED [illegible] TEEN FORTY THREE AT THE HOTEL NEW YORKER, NEW YORK [illegible] LIFETIME, HE CONDUCTED MANY EXPERIMENTS IN CONNECT[illegible] TRANSMISSION OF ELECTRICAL POWER AND [redacted] WHAT [illegible] THE DEATH RAY. ACCORDING TO INFORMATION FURNISHED [illegible] THREE SIX FIFTH AVENUE, NEW YORK CITY, THE NOTES A[illegible] EXPERIMENTS AND FORMULAE TOGETHER WITH DESIGNS OF [illegible] VITALIZE THEM ARE AMONG TESLAS PERSONAL EFFECTS, A[illegible] TAKEN TO PRESERVE THEM OR TO KEEP THEM FROM FALLIN[illegible] [redacted] UNFRIENDLY TO THE WAR EFFORT OF THE UN[illegible] ING TO SPANEL, A DISTANT RELATIVE OF TESLA, NAMED S[illegible] WAS INTENSELY DISLIKED BY TESLA, IS TAKING STEPS T[illegible] THESE IMPORTANT DOCUMNTS AND PLANS. SPANEL BELIEV[illegible] STRONG LIKELIHOOD THAT KOSANOVICH WILL MAKE THIS MATERIAL AVAILABLE TO TO THE ENEMY. SPANEL ADVISED G TWO HEADQUARTERS IN WASHINGTON, AS WELL AS MR MORKIN OF THE DEPARTMENT OF JUSTICE IN WASHINGTON, CONCERING THE ABOVE. SPANEL WAS ALSO INTELEPHONIC COMMUNICATION WITH [redacted] DR D LOZADO, ONE OF THE ADVISORS TO VICE PRESIDENT WALLACE CONCERNING THIS MATTER, AND LOZADO TOLD SPANEL [redacted] THAT THE GOVERNMENT WAS VITALLY INTERESTED IN THE EFFECTS OF TESLA AND REQUESTED SPANEL TO LOSE NO TIME IN DOING ALL HE COULD TO PRESERVE [redacted] THEM. BLOYCE FITZGERALD, AN ELECTRICAL ENGINEER WHO HAD BEEN QUITE CLOSE TO TESLA DURING HIS LIFE TIME, ADVISED THE NEW YORK OFFICE THAT ON JANUARY SEVENTH, NINETEEN FORTY THREE, SAVA KOSANOVICH, GEORGE CLARK, WHO IS IN CHARGE OF THE MUSEUM AND LABORATORY FOR RCA, AND KENNETH SWEZEY OF ONE SIX THREE MILTON STREET, BROOLKYN, NY, WENT TO TESLAS ROOMS IN THE NEW YORKER, AND WITH THE ASSISTANCE OF A [redacted] LOCKSMITH BROKE INTO A SAFE WHICH TESLA HAD INHIS ROOMS IN WHICH HE KEPT SOME OF HIS VALUABLE PAPERS, INCLUDING IMPORTANT [redacted] ELECTRICAL FORMULAE, DESIGNS, ET CETERA. WITHIN THE PAST MONTH, TESLA TOLD FITZGERALS THAT HIS EXPERIMENTS IN CONNECTION WITH THE WIRELESS TRANSMISSION OF ELECTRICAL POWER HAD BEEN COMPLETED AND PERFECTED.

Memo Mr. Ladd 1/11/43 JBL
Memo to Director 1/11/43 JBL.

RECORDED

100-2237-3

ENCLOSURE

F B

17 JAN 18 1943

FIVE

NOT FOIA REDACTIONS

Best Copy Available

8

PAGE TWO

FITZGERALD ALSO KNOWS THATTESLA HAS CONCEIVED AND [redacted] A REVOLUTIONARY TYPE OF TORPEDO WHICH IS NOT PRESENTLY IN USE [redacted] THE NATIONS. IT IS FITZGERALDS BELIEF THAT THIS DESIGN HAS NOT [redacted] AVAILABLE TO ANY NATION UP TO THE PRESENT TIME. FROM STATEME[redacted] TO FITZGEARLD BY TESLA , HE KNOWS THAT THE COMPLETE PLANS [redacted]CATIONS AND EXPLANATION OF THE BASIC THEORIES OF THESE THIN[redacted]OME PLACE IN THE PERSONAL EFFECTS OF TESLA. HE ALSO KNOWS THAT [redacted] A WORKING MODEL OF TESLAS WHICH COST MORE THAN TEN THOUSAND D[redacted]O BUILD IN A SAFETY [redacted] DEPOSIT BOX BELONGING TO TESLA[redacted]GOVERNOR CLINTON H[redacted]X HOTEL, AND [redacted]X FITZGEARLD [redacted] THIS MODEL HAS TO DO WITH THE SO CALLEDE DEATH RAY OR THE WIRE[redacted]NSMISSION OF ELECTRICAL CURRENT. TESLA HAS ALSO TOLD FITZGEARLE[redacted] CONVERSATIONS THAT HE HAS SOME [redacted]X EIGHTY [redacted] TRUNKS INDIFFERE[redacted]ES CONTAINING TRANSCRIPTS AND PLANS HAVING TO DO WITH EXPERIMENTS [redacted]ED BY HIM. BUREAU IS REQUESTED TO ADVISE IMMEDIATELY WHAT, IF [redacted]ION SHOULD BE TAKEN CONCERNING THIS MATTER BY THE NEW YORK FIEL[redacted]ION.

FOXWORTH

CORRECTION- THROUGHOUT THE ENTIRE TELETYPE THE NAME THAT SHOULD APPEAR IS FITZGEARLD [redacted] NOT FITZGERALD [redacted] AS IT SOMETIMES IS SPELLED

HOLD

NOT FOIA REDACTIONS

Best Copy Available

JOHN EDGAR HOOVER
DIRECTOR

C-287

Mr. Tolson
Mr. E.A. Tamm
Mr. Clegg
Mr. Glavin
Mr. Ladd
Mr. Nichols
Mr. Rosen
Mr. Tracy
Mr. Carson
Mr. Coffey
Mr. Hendon
Mr. Kramer
Mr. McGuire
Mr. Harbo
Mr. Quinn Tamm
Tele. Room
Mr. Nease
Miss Beahm
Miss Gandy

Federal Bureau of Investiga[redacted]
United States Department of [redacted]
Washington, D. C.

JBL:ed

January 11, 1943

ALL INFORMATION CONTAINED HEREIN IS UNCLASSIFIED DATE 2-2-80 BY SP4 Jmpte

MEMORANDUM FOR [redacted]

RE: UNKNOWN SUBJEC[redacted]
EXPERIMENTS A[redacted]
OF NIKOLA TESL[redacted]
ESPIONAGE - [redacted]

Nikola Tesla, one of the world's outsta[redacted] in the electrical field, died at his residence in the [redacted] New York City, on January 7, 1943. In the course of [redacted]ucted many experiments with respect to the transmission [redacted] by means of radio and what is commonly called the "Death Ray" [redacted] with respect to the wireless transmission of electrical [redacted] were [redacted] to have been completed and perfected, and Tesla had also co[redacted]ed and [redacted] a revolutionary type of torpedo which is not in use b[redacted]tio[redacted] present time. The specifications, explanations of the basi[redacted]ies, [redacted]rking models of Tesla's scientific endeavors are reported to be [redacted] his effects. Tesla is reported to have some 80 trunks in different places containing transcripts and plans having to do with his experiments as well as a working model of one of his developments in the safety deposit box at the Governor Clinton Hotel.

Information concerning Tesla's experiment[redacted]n reported to the New York Office by A. N. Spanel and Bloyce Fitzgerald, the latter an electrical engineer who had been quite close to Tesla. Both of these individuals have indicated that no steps have been taken to preserve Tesla's records and models or to keep them from falling into the hands of individuals sympathetic to the Axis powers.

1 ENCLO

Tesla has a distant relative by the name of Sava Kosanovich, whom he intensely disliked. Kosanovich is reported to be taking steps to get possession of these important documents and plans, and Spanel believes there is a strong likelihood that Kosanovich will make such information available to the enemy. On January 7, 1943, Kosanovich, accompanied by George Clark, in charge of the Museum and Laboratory for RCA, and Kenneth Swezey of Brooklyn, New York, entered Tesla's rooms at the Hotel New Yorker where, with the aid of a locksmith, they broke into a safe in which Tesla kept some of his valuable papers, including important electrical formulae, designs, et cetera.

RECORDED & INDEXED

D63

100-2237-3

Mr. Spanel, in addition to reporting these developments to the Bureau, has also advised the headquarters of the Military Intelligence Division, a Mr. Workin of the Department of Justice in Washington, and Dr. Lozado, one of the advisors to Vice President Wallace. Lozado advised Spanel that the Government was vitally interested in the effects of Tesla and requested that Spanel loose no time in doing all he could to preserve them.

1 JAN 18 1943

COPIES DESTROYED

FOR VICTORY BUY UNITED STATES SAVINGS BONDS AND STAMPS

55 JAN 26 1943

1-12-43

10

Best Copy Available

The New York Office was instructed to disc[illegible]ke the matter up with the State's Attorney in New York City with the [illegible] possibly taking Kosanovich into custody on a burglary charge and obt[illegible] the various papers which Kosanovich is reported to have taken from Tes[illegible]. It was pointed out that any activities pursued by the State's Attor[illegible]d be handled in a most secret fashion in order to avoid any publici[illegible]ect to Tesla's inventions. The New York Office was also instructe[illegible] the Surrogate Court in order that stops could be placed against t[illegible] of Tesla both in his hotel and any other points, in particular, the [illegible] boxes that he ma have in order that no one may enter them without a [illegible]tative being present and every precaution taken to preserve the secrecy [illegible]la's inventions. The New York Office is to keep the Bureau advised of all de[illegible]ents.

Respectfully,

D. M. Ladd

D. M. Ladd

L.M.C Smith is handlin this with alien Property Custodian so there appear to be no need for us to mess around in it.

EW

11

Best Copy Available

JOHN EDGAR HOOVER
DIRECTOR

7

Mr. Tolson
Mr. E. A. Tam
Mr. Clegg
Mr. Glavin
Mr. Ladd
Mr. Nichols
Mr. Rosen
Mr. Tracy
Mr. Carson
Mr. Coffey
Mr. Hendon
Mr. Kramer
Mr. McGuire
Mr. Harbo
Mr. Quinn Tam
Tele. Room
Mr. Nease
Miss Beahm
Miss Gandy

Federal Bureau of Investigation
United States Department of Justice
Washington, D. C.

EAT:DS

January 12, 1943

MEMORANDUM FOR MR. LADD

On Friday, January 8th, Mr. L. M. C. Smith called me in connection with the death of Nikola Tesla. He advised me that he was concerned about the possibility of enemy agents confiscating some of the trunks of Tesla, who had died on January 7th. He understood that the War Department was interested in this matter and that apparently the Alien Property Custodian's office was taking some action. He desired to know whether the Bureau would take some steps to refrain relatives of Tesla from taking the contents of his trunks and whether the Bureau would seize possession of the trunks. Mr. Smith indicated that he was talking to the Alien Property Custodian along the same lines. I told him that in view of the fact he was going to handle the matter with the Alien Property Custodian's office, there did not appear to be any action which the Bureau could or should take.

INFORMATION CONTAINED
IS UNCLASSIFIED
7-2-80 BY

I ENCLO. 1

Very truly yours,

Edw. A. Tamm

12 30 from 1/13/43
Called Donegan
& instructed no
further action

advise field

RECORDED

100-2237-3

B
1 JAN 13 1943

FOR VICTORY
BUY
UNITED STATES DEFENSE BONDS AND STAMPS

53 JAN 22 1943

12

[redacted]

(b)
(7)
(c)

April 16, 1948

ALL INFORMATION CONTAINED
HEREIN IS UNCLASSIFIED
DATE 2-3-88 BY SP4 JRM/RTC

Mr. J. E. Hoover
Federal Bureau of Investigation
Washington D.C.

Dear Mr. Hoover,

I am a student at the Milwaukee School of Engineering, studying Electrical Engineering. I am also interested in the life and work of Nickola Tesla. I understand that at the time of his death, your department took his manuscripts and experiment data for national security. I am preparing a paper to be presented before the student branch of the American Institute of Electrical Engineers on Tesla.

RECORDED & INDEXED 14 SEP 10
100-2237-3X

If it is possible I would appreciate material bearing on Tesla's [redacted] and methods of experiment.

FBI
APR 28 1948

13

This information would help me in a better presentation of this paper and consequently a far greater appreciation of his work in the field of science.

I know that a part of the experiments and theory have a secret classification, and I do not expect any of it.

I am intrested in "Ground Current Transmission" as the basis of my thesis for graduation. If it is possible to obtain this information, I would be very grateful.

Yours very truly,

[redacted] (6)(7)(c)

100-2237-3X April [illegible], 1948

RECORDED 65-47953-18

[redacted]

(b)
(7)
(C)

INFORMATION CONTAINED HEREIN IS UNCLASSIFIED DATE 7-3-[illegible] BY SP4

Dear [redacted]

Your letter of April [illegible], 1948, has been received and I want to express my appreciation to you for having written me as you did. The effects of Nickola Tesla were handled by the Office of Alien Property, and not by this Bureau. It is suggested you may desire to communicate with the Office of Alien Property, United States Department of Justice, 101 Indiana Avenue, Washington, D. C.

Sincerely yours,

John Edgar Hoover
Director

NOTE: This individual requests information relative to the work of Nickola Tesla relative to electrical experiments he was conducting, which Swain understands were taken by this Bureau and held for security reasons. Bureau file [illegible] reflects that the effects of Tesla were handled by the Office of Alien Property.

VWPrjec

Mr. Tolson
Mr. E. A. Tamm
Mr. Clegg
Mr. Glavin
Mr. Ladd
Mr. Nichols
Mr. Rosen
Mr. Tracy
Mr. Egan
Mr. Gurnea
Mr. Harbo
Mr. Pohr
Mr. Pennington
Mr. Quinn Tamm
Tele. Room
Mr. Nease
Miss Gandy

COMMUNICATIONS SECTION
MAILED 8
☆ APR 2[illegible] 1948 P.M.
FEDERAL BUREAU OF INVESTIGATION
U. S. DEPARTMENT OF JUSTICE

6 0 MAY 10 1948

RECEIVED READING ROOM
APR 7 00 PM '48

15

April 3, 1950

ALL INFORMATION CONTAINED
HEREIN IS UNCLASSIFIED
DATE 7-2-80 BY SP4 [illegible]

[redacted]

(b)
(7)
(C)

[redacted]:

Reference is made to your inquiry by telephone on March 29, 1950, concerning certain technical papers which belonged to the late Nikola Tesla.

From an examination of our files, we have been able to determine that this Bureau has never been in possession, as had been indicated to you, of a copy of Dr. Tesla's papers.

Very sincerely yours,

J. Edgar Hoover

100-2237-3X1

~~65-47953-26~~

RECORDED - 53

APR 7 1950

80

67C

[redacted]

EX-115

U.S. DEPT. OF JUSTICE
RECEIVED READING ROOM
FBI
APR 3 5 19 PM '50

(b)
(7)
(C)

APR 4 11 20 AM '50
RECEIVED
U S DEPT
[redacted]

[redacted]

Tolson
Ladd
Clegg
Glavin
Nichols
Rosen
Tracy
Carbo
Ohr
Tele. Room
Case
Andy

MAILED 4
APR 4 1950
COMM - FBI

16

Director, FBI

SAC, New York

April 17, 1950

(b)
(7)
(C)

[redacted]

Rebulet dated April 3 last.

On April 7, 1950 agents of this office interviewed Mr. J.V. POTTS, Vice President of the Manhattan Warehouse and Storage Company, 52nd Street & 7th Avenue, New York City, and at that time Mr. POTTS advised that the rules of his firm required that all persons gaining access to goods stored by Manhattan first had to fill out an appropriate form setting forth their names, date of visit, and reason for requesting access to the goods.

In a review of the file pertaining to the storage of the effects of NIKOLA TESLA, MR. POTTS revealed that only one such visit had been made by persons outside of the management of Manhattan Storage itself. This one occassion took place on January 26 and 27, 1943, at which time representatives of the Alien Property Custodian made a thorough review of the entire effects of the TESLA estate.

NIKOLA TESLA

The TESLA effects are stored in rooms 5J and 5L of Manhattan Storage's warehouse at 52nd Street & 7th Avenue, New York City. MR. MICHAEL KING, who stated he had been Floor Supervisor for approximately 10 years on the floor in question, stated that he could recall only the one occassion in early 1943 when an examination was made of the TESLA effects. He stated that at that time numerous photographs were taken by the examiners. His description of the equipment used would tend to show that a microfilm reproduction was made of some of the papers of the deceased scientist. MR. KING added that several of the group making the examination wore U.S. Navy uniforms, and during the two days required to complete the examination the civilian assistants in the group were identified to him only as "FEDERAL AUTHORITIES". According to MR. KING, no other instance of microfilming of the records of the TESLA estate has taken place since that time.

It should be noted that the Bureau was informed of the examination mentioned above by New York letter (with attachments) dated October 17, 1945, entitled UNKNOWN SUBJECT; SAVA NOSANOVICH; Experiments & Research of NIKOLA TESLA (Deceased), Espionage-M.

cc: 65-12290

ALL INFORMATION CONTAINED HEREIN IS UNCLASSIFIED DATE 7-3-80 BY SP4 Jrm/rtc

100-2237-
NOT RECORDED
148 APR 28

EHH:JJC
105-1391

17

MR. POTTS stated that no inquiry had been received by Manhattan from SAVA N. KOSANOVICH, nor had Manhattan informed him, in any way, that an examination of the TESLA effects had been made by anyone. In fact, added MR. POTTS, the only correspondence relating to the TESLA estate has been in the form of bills for storage.

MR. POTTS stated that any personal inquires regarding the estate would of necessity be directed to him, and to date no such inquiries have been made.

Interviewing agents explained to MR. POTTS that the examination made, as mentioned above, was not instigated by the Bureau, nor had the Bureau taken part in that examination.

Unless advised to the contrary, this investigation is being placed in a closed status, and no further investigative action is contemplated by this office. CLOSED.

[redacted]

(b)
(7)
(C)

[redacted]

August 18, 1952

Federal Bureau of Investigation
Department of Records
Washington, D. C.

ALL INFORMATION CONTAINED
HEREIN IS UNCLASSIFIED
DATE 2-2-80 BY SP4 Jam/jr

Gentlemen:

In a manner of introduction, I wish to state that I am working toward a degree in Electrical Engineering at the Institute of Technology of the University of Minnesota.

For several years, I have been engaged in a study of extensive compass and detail concerning the researches and writings of the late, world renowned scientist, Dr. Nikola Tesla. At considerable expense, I have acquired an extensive collection of materials relating to Dr. Tesla and his works which include:

1) Personal letters written by Tesla to his close friend.

2) Numerous periodicals, some of which are to be found in only a few libraries throughout the United States.

3) A few rare books which have now become "collector's items".

4) A collection of issued patents.

Although the items listed are considerable in number, the specific information desired is lacking.

As I understand it, because of the nature of Dr. Tesla's role in scientific developments, all research papers, patent applications, etc., were secured by the Federal Bureau of Investigation at the time of Dr. Tesla's death in January of 1943.

The purpose of this seizure, as described in numerous articles, was to determine whether these papers contained suggestions leading toward advancements in the field of science.

100 2237-4

RECORDED - 68

Reply
8-26-52

[redacted]

W - 28

(b)
(7)
(C)

[redacted]

19

Now it seems that sufficient time has elapsed for an investigation of this kind. If Dr. Tesla's Estate has been released by the department in charge, any records that can be made available for examination will be welcomed.

A letter from Harold I. Baynton, Assistant Attorney General, Director, Office of Alien Property, informed me that the Library of Congress listed certain works, writings and research studies prepared by the late Dr. Tesla. However, a letter addressed to the Library failed to bring results as the Library "has no files on the researches of Tesla".

A similar result was obtained from the Bureau of Naval Research and the Department of Commerce.

I am especially interested in the research work in which Tesla was engaged in his later years. There are various unpublished works, such as a 10-page typewritten statement presented in 1937 at a meeting of several well-known editors outlining his discoveries and giving a resume' of his work in the fields of gravity and cosmic ray research, etc. Also, Tesla prepared various papers, one of which was in effort to secure the Pierre Gutzman Prize from the Institute of France. My inquiry is in effort to determine whether any of these documents, as well as others, are at this time available.

I will greatly appreciate any information in regard to any records which you may have.

Very truly yours,

(6)
(7)
(C)

[redacted]

August 26, 1952

EX. - 28

[redacted]

INDEXED 68
RECORDED - 68

100-2237-4

(b)(7)(c)

ALL INFORMATION CONTAINED HEREIN IS UNCLASSIFIED DATE 7-2-80 BY SP4 Jmfrte

Dear [redacted]

With reference to your letter of August 18, 1952, our files disclose that the effects of Nikola Tesla were taken into custody at the time of his death by the Office of Alien Property, and not by this Bureau. Consequently, you may wish to communicate further with that agency, which may be addressed as follows: (65-47953)

Assistant Attorney General
Rowland F. Kirks
Director, Office of Alien Property
United States Department of Justice
101 Indiana Avenue, N. W.
Washington 25, D. C.

Sincerely yours,

John Edgar Hoover
Director

cc - 1 - Assistant Attorney General (with copy of incoming)
Rowland F. Kirks
Director, Office of Alien Property
United States Department of Justice
101 Indiana Avenue, N. W.
Washington 25, D. C.

MAILED 10
AUG 27 1952
COMM-FBI

[redacted]

(b)
(7)
(c)

100-2237

NOTE: No reference Bureau files on correspondent in Minnesota.. 8-22-52...per [redacted]

60 SEP 10 1952

21

STANDARD FORM NO. 64

Office Memorandum • UNITED STATES GOVERNMENT

TO : MR. A. H. BELMONT

DATE: May 5, 1953

FROM : MR. L. L. LAUGHLIN

SUBJECT: NIKOLA TESLA (Deceased)
INFORMATION CONCERNING

[redacted] INFORMATION CONTAINED HEREIN IS UNCLASSIFIED DATE 2-22-80 BY SP4 Smith

[redacted] called on the afternoon of May 4, 1953.

[redacted] stated that he had been reading a book entitled, "The Prodigal Genius - The Life of Nikola Tesla" by John J. O'Neill, whom [redacted] described as a science writer for a New York newspaper (publisher - Ives Washburn). [redacted] noted in this book that Bureau Agents went to Tesla's room following his death on January 7, 1943, opened his safe, examined his papers, and took over his personal files. [redacted] said this appeared on page 277. [redacted] stated that Tesla is the father of modern power engineering, being responsible for the invention of the A. C. generator, motor transmission, and other electrical engineering feats. He inquired (1) if the papers and works of Tesla were in the possession of the Bureau, and (2) if so, were they available for review in view of their scientific importance.

I told [redacted] that the statement concerning the Bureau's taking Tesla's files did not seem very logical but that I would check on the matter. (b) (7) (C)

The Bureau's files reflect that shortly after the death of Tesla in his hotel room in New York City on January 7, 1943, Sava Kosanovich, a distant relative, and other individuals entered his room and opened the safe, examining certain materials which he possessed. On January 8, 1943, Mr. L. M. C. Smith of the Department advised Mr. Tamm that he was concerned about the possibility of enemy agents confiscating some of the trunks of Tesla and apparently the Office of Alien Property Custodian was taking some action regarding these effects. Since the matter was being handled by the Office of Alien Property Custodian, the Bureau did not make any inquiries into this situation. (65-47953-6)

It is noted also that the Bureau received a letter dated April 16, 1948, from [redacted] explaining that he was studying electrical engineering at the Milwaukee School of Engineering and

100-2237-4X

[redacted]

RECORDED-66
INDEXED-66 MAY 6 1953

65-47953

1 - Mr. Nichols

[redacted] (b) (7) (C)

22

was interested in the life and works of Tesla. [redacted] stated that he understood at the time of Tesla's death the Bureau took his manuscripts and experiment data for national security. The Bureau on April 22, 1948, advised [redacted] that the effects of Tesla were handled by the Office of Alien Property and not by the FBI.(65-47953-18)

I called [redacted] this morning and told him that it was the office of Alien Property and not the FBI which took over the effects of Tesla following his death. Accordingly, I suggested that [redacted] might wish to communicate with the office of Alien Property for further information concerning this matter.

The book "Prodigal Genius - The Life of Nikola Tesla" is not in the Bureau Library. A copy is being obtained from the Library of Congress. It will be examined to determine specifically the reference made to the Bureau's taking these papers. At that time a determination can be made as to what further action should be taken.

(b)
(7)
(C

ADDENDUM: LLL:mer 5-14-53

Page 277 of the "Prodigal Genius - The Life of Nikola Tesla," describing Tesla's death, contains the following statement: "Operatives from the Federal Bureau of Investigation came and opened the safe in his room and took the papers it contained, to examine them for a reported important secret invention of possible use in the war."

Since this work was published in 1944, it is not felt that any particular purpose would be served by raising an objection with the publishers at this time. [redacted] the individual who raised the question, has been set straight and, therefore, no further action is being taken.

STANDARD FORM NO. 64

Office Memorandum • UNITED STATES GOVERNMENT

TO : Director, FBI

DATE: 2/19/54

FROM : SAC, New York (6[illegible])

INDEXED

SUBJECT: LELAND I. [illegible]
[illegible]

INFORMATION CONTAINED
IN IS UNCLASSIFIED
[illegible] 7-2-80 [illegible]

Mr. GEORGE H. SCHERFF, JR., 149 [illegible]ord Road, [illegible] Rochelle, New York, advised that he received two letters from LELAND [illegible], 127 Seymour Avenue Southeast, Minneapolis, Minnesota, photostat[illegible] of which are being furnished the Bureau and Minneapolis.

Mr. SCHERFF stated that he was an associate [illegible] NIKOLA TESLA in 1914 and that for many years his father had been Dr. [illegible] private secretary. Mr. SCHERFF said that he never heard of LELAND I. A[illegible] did he ever hear of any of the names mentioned in ANDERSON'S letter.

Mr. SCHERFF stated that he has quite a bit of [illegible]'S writings in his possession and he didn't know whether or not they would be of value to a foreign government.

[redacted] (6)(7)(C)

No further action is being taken by the N.Y. Office, UACB.

Encs. (29)
1 - Minneapolis (3 Encs.)

EXP. PROC.

memo: New York
[redacted]: aaa
3-10-54

100-2237-4X1
~~100-0-4973~~

RECORDED - 15
MAR 1 1954
3-11

INDEXED - 15
EX-129

67C

[redacted]

no action

[redacted]

(6)
(7)
(C)

24

Leland I. Anderson
127 Seymour Avenue Southeast
Minneapolis 14, Minnesota

February 3, 1954

Mr. George H. Scherff, Jr.
149 Seacord Road
Westchester, NEW YORK

Dear Mr. Scherff:

re.: The Life and Work of Dr. Nikola Tesla.

Recently, I have founded an organization in name and honor of Dr. Tesla in cooperation with several people who were intimately associated with Tesla during his lifetime, and with others who are interested in Dr. Tesla and his achievements from a scientific and historical standpoint. (See enclosed brochure.) I have had some difficulty locating a few of Tesla's associates, and, the name of George Scherff is among them. Therefore, it is my sincere hope that you, Mr. Scherff, are the person I seek as having been associated with Tesla.

I have personally studied the works of Tesla for a number of years, being particularly interested in elaborating upon his researches regarding high-tension radiant beams. Through some travel and other efforts, I have been fortunate to locate many original collections of Tesla's correspondence and manuscripts, and in a few cases obtained a number of interesting items.

I was in New York a short time ago on business, and while there I visited Mr. Kenneth M. Swezey. He intends to undertake some significant work on behalf of Tesla in the near future, and since he knew Tesla for so many years during his later life, it will be handled with great understanding.

I hope that you may have some interest in the work which I have initiated on behalf of Dr. Tesla. There are many matters that I wish to discuss with you, provided of course, that you are the Mr. Scherff related to the Tesla story. I would be most happy to hear from you at your earliest convenience, and will send you all publications of the organization if you wish to receive them.

Very truly yours,

Leland I. Anderson

25

TESLA-INTERNATIONAL

University Station, Box [illegible]
MINNEAPOLIS · 14 · MINNESOTA

To Those Who Are Interested in the Life and Work of
DR. NIKOLA TESLA

Following the death of Dr. Nikola Tesla on the 7th of [illegible], Mr. John J. O'Neill, former Science Editor of the New York Herald Tribune, presented the biography

PRODIGAL GENIUS
The Life of Nikola Tesla

- a memorable tribute to one of the most outstanding figures in the entire field of electrical science. Many reading this biography learned of Nikola Tesla for the first time despite his monumentous achievements with which he has won world-wide acclaim in scientific circles. Even those closely associated with the fields of science and engineering discovered a remarkable story not generally known of the brilliant genius Tesla whose sensitive personality and seclusion kept his fame in a shadow.

The TESLA-INTERNATIONAL organization is being established in the United States in name and honor of Dr. Nikola Tesla by those sharing a mutual interest in his life and works. The organization has as its objective the promulgation of the truth about Nikola Tesla; that a full recognition be made for his unparalleled research work on the effects of currents of high frequency and high potential, and for his achievements in the realms of polyphase power transmission and telecommunication. It would be the duty of the organization to do all in its power that the name of Tesla win in the eyes of the nation the fame deserving of a truly great American for his contributions to science, industry, and to this country.

A journal of the TESLA-INTERNATIONAL organization was issued beginning the month of November, [illegible]. In addition to items of recent and historical interest related to Tesla, the journal will include:

1) A formal roster of all [illegible] have an interest in the Tesla organization and wish to engage in its activities.

2) An opportunity of [illegible] of the organization through the medium of the journal.

3) A comprehensive bibliography [illegible] listing of all available items concerning Tesla, which would include a cataloging of the various collections of Teslians not generally known. Such a listing will be of particular importance to scholars in the research field.

4) A presentation of hitherto unpublished writings and analyses of Tesla's technical research studies as they become available.

The journal of the TESLA-INTERNATIONAL organization will be forthcoming at intervals of 1½ - 2 months. Subscription rate is $1.00 for 10 issues. Membership in the TESLA-INTERNATIONAL organization is concurrent with subscription to the journal.

Leland I. Anderson
127 Seymour Ave. S. E.
Minneapolis 14, Minnesota

REGISTERED

VIA AIR MAIL

Mr. George H. Scherff, Jr.
149 Seacord Road
Westchester, NEW YORK

MINNEAPOLIS FEB 1954

NEW ROCHELLE FEB 1954

FEB 1954

MINNEAPOLIS MINN. FEB 1954 NO. 35

Leland I. Anderson
127 Seymour Avenue Southeast
Minneapolis 14, Minnesota

February 12, 1953

Dear Mr. Scherff,

It was so very rewarding to receive your reply concerning Dr. Nikola Tesla... I have initiated an undertaking on behalf of Tesla because I feel that in all right and justice something should be done to perpetuate the name of Tesla and see to it that his name becomes a part of the heritage of this nation. A great task perhaps, but as time goes on I believe the name of Tesla will become more significant in scientific developments. I hope that you may have an interest in the organization which I have proposed and established, and I will be honored to have you as a member. The organization is presently set up on the basis of those having a mutual interest in Tesla, with a free exchange of information between members. The first two issues of the journal of the organization are being sent to you under separate cover, and should reach you in a day or two.

Some other members which may be of interest to you are; Muriel Arbus, Dorothy Skerritt, Kenneth Swezey and W. W. Wilhelm. The recent deaths of John O'Neill and Edwin Armstrong were very unexpected, and it is with a great sadness that I received the news and loss of these two members.

Do you know if Mr. Lowenstien had a daughter? The reason I ask is that a woman visited Mr. O'Neill before his death and told him that she inherited a great amount of Teslaiana from her father - whom I presume to be Mr. Lowenstien. This woman was afraid of disclosing the information by reason of her mistaken notion and fear that she would rudely be raided by the army. You see Mr. O'Neill related to me that a few army officials visited his home with insistent requests for information. Of course all this sort of government interest was aroused by Tesla's "Death-Ray" rumors, played up by enterprising journalists. Well, the result of all this is that she refused to give Mr. O'Neill her married name - only that she married a Siamese prince no less, and moved to some mid-western city. If this woman has the amount of material that Mr. O'Neill intimated, it would certainly be important to locate her.

I believe that one of the valuable efforts of the Tesla organization would be to catalog every piece of information concerning Tesla. I have made a beginning effort along this line, and I hope that before too long all collections of Teslaiana may be located, cataloged, and reproduced for fear of eventual loss. Through Mary A. Benjamin (of Walter R. Benjamin Autographs in New York) I have obtained a number of significant items of correspondence between Tesla and Robert U. Johnson. The entire collection of correspondence with Mr. Johnson numbers in excess of 70 pieces. I share this collection with Mrs.

Leland I. Anderson
127 Seymour Avenue Southeast
Minneapolis 14, Minnesota

James W. McChesney of Long Island. The period of this correspondence runs from 1894-1930. Mrs. McChesney has another group of correspondence between Tesla and George Sylvester Viereck which is very interesting in that it is from a period later in Tesla's life. (If you wish to receive any photostatic copies from these collections I will be happy to send them to you.)

I am interested to learn whether you have collected any mementoes, correspondence, writings, etc. of Tesla. For a long while I have been trying to locate a copy of the brochure which Tesla issued the first week of February, 1904. It came in a large square envelope bearing a large red wax seal with the initials "N.T." stamped thereon. Quite a number of them were distributed throughout New York and elsewhere by the Tesla enterprise in an effort to secure financial backing for the tower and power plant erected at Wardenclyffe, Long Island. You no doubt know of the brochure of which I speak. I thought it would be interesting to reproduce this brochure and distribute it among the members of the Tesla organization as a memento. Although I have written and inquired about this brochure extensively, I have not been able to locate a copy. Did you ever have one?

I have hopes that in 1956 (The Tesla Centenary) some significant observance may be organized here in the United States in honor of Tesla. The Tesla Museum in Yugoslavia has obtained the Tesla inheritance, which amounts to 9 tons of apparatus, writings, etc. It is the intention (so stated) of the Museum to publish the entire writings of Tesla, including those in the inheritance, on the Tesla Centenary. I don't know what sort of political propaganda might be injected in this publication, but it occured to me that it may be appropriate to arrange an advance publication in this country [illegible] unpublished works. Unfortunately, there is not much to work on as yet. While the Tesla estate remained in this country, photostats of nearly every important paper in the estate were made under order of Wright Field Development Center in Ohio. If these photostats could be located there would be much material for a publication. However, in working with the Library of Congress in preparation of a file on Tesla, these photostats have escaped the most extensive search thus far.

Hoping that you may be interested in the efforts of the TESLA-INTERNATIONAL on behalf of Tesla and wish to associate yourself with it, I am,

Yours faithfully,

Leland I. Anderson

TESLA INTERNATIONAL

[illegible] Station B [illegible]

[illegible] 14 [illegible] MINNESOTA

IMPORTANT ANNOUNCEMENT

To Members of the TESLA INTERNATIONAL organization
and those interested in the works of
Dr Nikola Tesla

[illegible]

"[illegible] Writings of Nikola Tesla"

by

[illegible] Martin

[illegible] it is with great pleasure that [illegible] organization announces the reprinting [illegible] literature

[illegible] and significant work [illegible] a great demand for this [illegible] IS STRICTLY [illegible] will not be repeated when the [illegible] desiring a copy of the book are [illegible]

Cost of [illegible] rate is only $4.00 [illegible] United States to members and friends [illegible] organization

30

Leland I. Anderson
127 Seymour Avenue S. E.
Minneapolis 14, Minnesota
3 CENTS 3
3 CENTS 3
SPECIAL DELIVERY
VIA AIR MAI
Mr. George Scherff
149 Seacord Road
New Rochelle, New York
SPECIAL DELIVERY

SAC, New York

March 10, 1954

RECORDED - 15

~~105-0-4973~~

EX-129

Director, FBI

100-2237-4X1

[redacted]

NOT AN FOIA REDACTION

LELAND I. ANDERSON
MISCELLANEOUS; INTERNAL SECURITY - YU

Reurlet 2-19-54 concerning the above-captioned individual. Relet forwarded to the Bureau two Photostats of two letters from Anderson which were received and made available to your office by George H. Scherff, Jr.

There is returned herewith one set of the Photostats received by the Bureau as enclosures with your letter inasmuch as it appears this set was intended for retention in your office file.

Attachment

[redacted]

(b)
(7)
(C)

ALL INFORMATION CONTAINED
HEREIN IS UNCLASSIFIED
DATE 7-2-80 BY SP4 Jrm/rtc

(b)
(7)
(C)

[redacted]

Tolson
Ladd
Nichols
Belmont
Clegg
Glavin
Harbo
Rosen
Tracy
Gearty
Mohr
Winterrowd
Tele. Room
Holloman
Miss Gandy

MAILED 16
MAR 10 1954
COMM - FBI

32

KENNETH M. SWEZEY

ALL INFORMATION CONTAINED HEREIN IS UNCLASSIFIED DATE 7-2-80 BY SP4 [illegible]

163 Milton Street
Brooklyn 22, N.Y.
June 25, 1955

Mr. Tolson
Mr. Boardman
Mr. [illegible]
Mr. Belmont
Mr. Harbo
Mr. Mohr
Mr. Parsons
Mr. Rosen
Mr. Tamm
Mr. Sizoo
Mr. Winterrowd
Tele. Room
Mr. Holloman
Miss Gandy

[redacted]

Mr. J. Edgar Hoover
Federal Bureau of Investigation
Washington, D.C.

Dear Mr. Hoover:

Back in 1943, the local Alien Property Custodian searched through the belongings of the late electrical inventor, Nikola Tesla, stored in the Manhattan Storage Warehouse in New York City. Tesla had been a naturalized American for more than fifty years, so I believe that the search was made on the grounds that the property was to be sent to Yugoslavia, through Tesla's nephew and heir, Mr. Sava Kosanović (Mr. Kosanović had been Minister of State under the King's government, later became Ambassador to the United States from the present government, and is now a Minister serving in Belgrade).

According to the attorney who handled the Tesla estate, Mr. Philip Wittenberg, the Alien Property Custodian assured him that nothing had been held. I have a letter from the Office of Alien Property, dated March 15, 1955, which confirms this statement.

In gathering material to help in a nation-wide commemoration of Tesla's hundredth birthday next year---which will be participated in by leading scientific and engineering societies, museums, and universities---I have just discovered, however, that Tesla's solid gold Edison Medal somehow vanished during that search.

As a friend who had known Tesla well during his last twenty years, I was with Mr. Kosanović in Tesla's room in the Hotel New Yorker on the day he died. A safe expert was called in to unlock Tesla's safe. Among its contents were several honorary degrees, a volume of greetings which I had gathered for him on his seventy-fifth birthday, a bunch of keys, and the Edison Medal. We kept out the book of greetings (I mentioned this at the time to the assistant manager of the hotel and later to a Mr. Gorsuch of the Alien Property Custodian's office), but everything else, including the medal and the keys, was replaced and the safe was locked.

RECORDED - 82 / 60-2237-5
INDEXED - 82

Except when it was inspected by the Alien Property Custodian, the safe was never reopened until it

Memo Belmont - Boardman 6/29/55. Let ack. [redacted] 6/29/55 390

6 JUL 11 1955

EXP. PROC.

JUN 27 1955

33

arrived in Belgrade (where Tesla's property was to be installed in a special Tesla Museum) and was there opened by Mr. Kosanovic. According to his former secretary, both the bunch of keys and the medal were missing. The keys were later found in a tin box outside the safe; the medal was never found.

I learned of the disappearance of the medal only by accident. Mr. Kosanovic had asked his former secretary to get permission from the American Institute of Electrical Engineers (who gave Tesla the Medal) to have it duplicated. This was given, but the cost, it turned out, would be about four hundred dollars. In the meantime, the Tesla Museum, in Yugoslavia, is quietly trying to raise the money to pay for it.

The irony of this situation is more disturbing than the money involved. By giving us a system which made electric power universally available, Tesla---probably more than any other one man---helped put America on top of the world. At the time he died, his gold Edison Medal was the only material evidence left of this country's appreciation. That this last token should have disappeared ---to have to be replaced by his materially poor countrymen overseas for whom he had done nothing---seems a tragic denouement.

John O'Neill, in his biography of Tesla, states that the FBI broke into Tesla's safe on the day he died, and an article in the current (June) Coronet repeats this. I know this isn't true. I did hear, however, that the FBI somehow lent a hand to the Alien Property Custodian during the latter's search in the warehouse.

If that is so, I thought that perhaps some of your men might remember the conditions under which the search was made and therefore might have a suggestion as to what could have happened to the medal. After this long time, I have no hope that the medal can actually be restored, and I am already trying to interest Americans in making a replacement. But future biographers might be spared a lot of wild guessing and wrong blaming if some hint could be obtained as to whether the original got lost, strayed, or stolen---and who might have been responsible.

With best regards and sincere appreciation for any help you can give,

Sincerely,

Kenneth M. Swezey

Kenneth M. Swezey

P.S.: I am enclosing an editorial from last month's POWER magazine which outlines Tesla's contribution to the electric power industry.

K.M.S.

LOUIS N ROWLEY, EDITOR · MAY 1955 · ESTABLISHED 1882 **Power**

Strange Genius

ASK ANY GROUP of power men to name those who laid the foundation for today's electrical generation and distribution. You'll wind up with an impressive list—Edison, Brush, Thomson, Westinghouse, many others. But there is almost sure to be a significant omission.

Yet this forgotten man conceived the polyphase ac motor—still basic—and devised a suitable system of generation and distribution for applying it. To grasp the magnitude of this contribution, we must turn back to the 1880's when the electrical era was being born, and the "battle of the systems" held sway.

Arc lights and motors were being operated on constant-current series systems. Edison's Pearl Street generating station had opened in 1882, supplying incandescent lamps and, later, dc motors on a constant-potential system. Under the leadership of Westinghouse and Stanley, the advantages of ac distribution were demonstrated. But there was no successful ac motor.

In May, 1888, a young Yugo-Slav engineer, but four years in the United States, read a paper before the American Institute of Electrical Engineers. In it he described a new ac system. Its heart was the induction motor with its basic and beautiful concept of the rotating magnetic field. The man was Nikola Tesla, the system he described was destined to sweep the field.

With characteristic vision, George Westinghouse realized the fundamental importance of the polyphase ac system and acquired the basic patents. Its first impact on the general public was at the Chicago World's Fair of 1893. There a 2-phase generator supplied motors and lamps, and, through rotary converters and motor-generators, a variety of dc equipment.

But it remained for the Niagara Falls power project to demonstrate in the most dramatic way possible that polyphase ac was the system of the future. Since 1886 when a charter to develop its power had been granted, the eyes of the world had been on Niagara. An international commission, headed by Lord Kelvin, had reviewed 17 proposals, found none acceptable. Later, just five years after Tesla's AIEE paper, it was officially decided to use the polyphase system.

In August, 1895, Niagara power was delivered to the first industrial customer and in 1896 ac transmission to Buffalo, 22 miles away, was begun. By that time, the steam turbine had been introduced in America and the modern age of electric power had truly opened.

For Nikola Tesla, these far-reaching inventions were but a beginning. Still to come was brilliant work in high frequencies, thinking basic to much of today's radio art. Yet by the time of his death in 1943, both he and his work had begun to slip into obscurity. Why?

A man of flashing insights and enormous brilliance, Tesla was largely indifferent to the development of his ideas. This he left to others while he followed the lure of new challenges. In later years, his projects became more grandiose, his ways more mysterious, his pronouncements more Olympian. And working alone, as he did, he formed none of the institutional ties that help to perpetuate a record of accomplishment.

Next year—July 10, 1956—will be the 100th anniversary of Nikola Tesla's birth. It would be fitting for our engineering societies to commemorate this occasion, to acknowledge our debt to this strange and lonely genius who changed our world for the better.

ALL INFORMATION CONTAINED
HEREIN IS UNCLASSIFIED
DATE 7-14-82 BY [illegible]

100-2237-5

(REPRINTED BY PERMISSION)

35

АМЕРИКАНСКИ
СРБОБРАН
THE AMERICAN SRBOBRAN
Second Class Mail Privileges Authorized at Pittsburgh, Pa.

THE LARGEST AND OLDEST SERBIAN DAILY NEWSPAPER IN AMERICA
Published Daily Except Sat's, Sundays and Holidays by SERB NATIONAL FEDERATION
3414 Fifth Avenue Telephone MAyflower 1-6600 Pittsburgh 13, Pa.

MOMCHILO SOKICH, Editor — JOVAN BRATICH, Ass't. Editor
MILAN M. KARLO, Editor English Section

ПРЕТПЛАТА НА ЛИСТ

За Сједињене Државе: на годину $8.00; шест месеци $4.00. За Канаду: на годину $9.00; шест месеци $4.50. За стране земље: на годину $10.00; шест месеци $5.00. За град Питебург: на годину $9.00; шест месеци $4.50. — Један број 5ц. Претплата за енглеско издање $4.00 годишње.

SUBSCRIPTION RATES

For United States of America: For One Year $8; Six Months $4. For Canada: One Year $9; Six Months $4.50; Foreign Countries: One Year $10; Six Months $5. For Pittsburgh: One Year $9; Six Months $4.50.—Single copy 5c. Subscription for the English Section only is $4.00 per Year.

Рукописи се не враћају никоме. — Огласи се плаћају унапред.

RECOGNITION FOR TESLA

Largely thru a young American engineer's efforts, the world today is re-scanning the record and achievements of our inventive genius, Nikola Tesla. Of late, even the big-time magazines have devoted space to the amazing career and fascinating character of the pioneering electrical wizard.

The man behind this belated recognition for the one-time Serbian immigrant boy who made millions but died almost a pauper is Leland P. Anderson, head of the **Tesla Society**, which has headquarters at the University of Minnesota.

Thru travels, correspondence and detailed research, Mr. Anderson has dug up many friends of the late genius and induced them to join in his noble work. A good many of these are American-Serbians. They serve Mr. Anderson and he serves them, with information issued thru his TESLIAN publication. This is, at present, a mimeographed publication issued monthly which casts new light on the known life and record of the late Dr. Tesla.

The latest issue (March-June) informs of progress plans to honor Dr. Tesla even more. It also presents an account of a fascinating editorial, "Strange Genius", by the POWER magazine of the powerful McGraw-Hill publishing line. This editorial traces the introduction of Dr. Tesla's polyphase system, described by Mr. Anderson, as the **"most tremendous event in all engineering history."**

Editorialist Louis M. Bowler, according to the TESLIAN, answers the perplexing question why, in view of Tesla's important discoveries, he fell short of the comparative popularity won by Edison and Bell. Then in closing, he suggests: "It would be fitting for our engineering societies, in commemoration of the 100th anniversary of Nikola Tesla's birth (July 10, 1956), to acknowledge our debt to this strange and lonely genius who changed our world for the better."

This appears to be just what Mr. Anderson was waiting for. For now, in the same issue of his TESLIAN, he has prepared a form to petition Postmaster General Arthur E. Summerfield to issue a Tesla commemorative stamp next year.

[redacted] this form in duplicate in this issue and [redacted] Send [redacted] petition.

ION CONTAINED
CLASSIFIED
BY SP4 Jones

INDEXED-59
100 2237 A
NOT RECORDED
138 JUL 11 1955

ICAN SRBOBRAN
29, 1955
sburgh, Pennsylvania

Office Memorandum • UNITED STATES GOVERNMENT

TO : L. V. BOARDMAN

DATE: June 29, 1955

FROM : A. H. BELMONT

ALL INFORMATION CONTAINED HEREIN IS UNCLASSIFIED DATE 7-2-80 BY SP4 JM/rtc

SUBJECT: NIKOLA TESLA
MISCELLANEOUS - INFORMATION CONCERNING (ESPIONAGE)

Tolson
Boardman
Nichols
Belmont
Harbo
Mohr
Parsons
Rosen
Tamm
Sizoo
Winterrowd
Tele. Room
Holloman
Gandy

Nikola Tesla, a native of Yugoslavia, was a famous electric inventor who died in New York City in 1943 where he had lived for many years. In attached letter to Bureau dated 6-25-55 Kenneth M. Swezey, Brooklyn, New York, advises he is gathering material to help in a nation-wide commemoration of Tesla's hundredth birth anniversary in 1956. Swezey relates he was present when Tesla's safe was opened by friends after his death and advises the contents were thereafter replaced and then impounded by the United States Alien Property Custodian. Later the safe was removed to Belgrade, Yugoslavia, to be installed in a Tesla Museum. Missing from Tesla's effects is a gold Edison medal he had been awarded. Swezey is seeking to locate the medal and has been advised by the Office of Alien Property (OAP) that OAP held none of Tesla's property. Swezey states he has heard the FBI assisted OAP in handling Tesla's effects while in storage, and accordingly, he asks whether Bureau could assist him in locating the Edison medal. Re FBI's assistance to OAP Swezey mentions that in the Tesla biography ("The Prodigal Genius" - 1944) by John O'Neill it was stated FBI broke into Tesla's safe the day he died (1-8-43 to protect contents from enemy hands). Swezey notes this same comment appears in article ("The Genius Who Walked Alone") by Alfred H. Sinks in the June, 1955, "Coronet." Swezey says he knows FBI did not do this [redacted] Bureau did not enter into Tesla safe matter upon Department's advice it was being handled by OAP. Bureau previously aware of comment in O'Neill's book.

(b)(7)(C)

[redacted]

In 1945 Sinks requested for his use as author data re Bureau's microfilm procedure. Was advised no such data available for publicati

Enclosure Letr 6-30-55
100-2237
cc - 1 - 65-47953
Ticklers - Mr. Bird
Mr. Belmont
Mr. Boardman
ETB:jaa
(5)

RECORDED - 97 100-2237-6

EX-104

6 JUL 7 1955

6 JUL 11 1955

37

Memorandum For Mr. Boardman

RECOMMENDATION:

That the attached letter be sent to Swezey advising Bureau did not participate in the handling of Tesla's effects and that the matter was handled by OAP. Therefore, Bureau unable to be of assistance; that no action be taken relative to Sinks' comment in "Coronet" article.

Tickler - M. Bird
Mr. Belmont
Mr. Boardman

June 30, 1955

RA
RA

ALL INFORMATION CONTAINED
HEREIN IS UNCLASSIFIED
DATE 2-2-80 BY SP4 Jrm/R

Mr. Kenneth M. Swezey
163 Milton Street
Brooklyn 23, New York

(Original)

Dear Mr. Swezey:

With reference to your letter of June 25, 1955, our files disclose the effects of Nikola Tesla were taken into custody after his death by the Office of Alien Property and not by this Bureau.

Since we did not participate in the handling of Mr. Tesla's effects, we are unable to supply the information you requested.

Sincerely yours,

J. Edgar Hoover

John Edgar Hoover
Director

COMM — FBI
JUN 30 1955
MAILED 25

100-2237-6X

RECORDED - 26
INDEXED - 26

EX-113

~~65-47153~~

64 JUL 1 1955

NOTE:

A cover memorandum from Belmont to Boardman was prepared by ETB:jaa on 6-29-55 in connection with this outgoing mail.

Bufiles contain no derogatory data re correspondent; reflect only that he was close friend and admirer of Tesla.

Tolson
Boardman
Nichols
Belmont
Harbo
Mohr
Parsons
Rosen
Tamm
Sizoo
Winterrowd
Tele. Room
Holloman
Gandy

[redacted]

64 JUL 8 1955

39

[redacted] (b)

August 1, 1955.

Mr. J. Edgar Hoover,
Federal Bureau of Investigation,
Washington, D.C.

Dear Mr. Hoover:

In his book, "Prodigal Genius", The Life of Nikola Tesla, Mr. Jo[illegible] J O'Neil says, on page 277, that the F.B.I. went to Tesla's hotel room, opened his steel safe and removed from it, the papers it contained.

Was there ever any publication of what these papers contained? I[illegible] so, could you inform me where I might obtain a copy of such publication?

If there was no publication of the Safe's content, after more tha[illegible] 12 years, would it be improper to publish them?

If there was no publication of the safe's content, but there were no particular secrets found there in, could you inform me where I might learn what the safe contained?

Any information on this matter will be appreciated.

Thank you for your trouble.

Sincerely,

[redacted]

(b)
(7)
(c)

ALL INFORMATION CONTAINED
HEREIN IS UNCLASSIFIED
DATE 7-2-83 BY SP4 Jam/rtc

EX-104

100-2237-6X1

~~65-47~~

RECORDED - 77

INDEXED - 77

2 AUG 12 1955

(b)
(7)
(c)

40

100-2237-6X1

~~65-47953-34~~

August 11, 1955

[redacted]

EX-104

[redacted]

ALL INFORMATION CONTAINED HEREIN IS UNCLASSIFIED DATE 7-2-80 BY [signature]

Dear [redacted]:

Your letter dated August 1, 1955, has been received, and in response to your inquiry, I would like to advise that our files reflect that the effects of Nikola Tesla were taken into custody after his death by the Office of Alien Property and not by this Bureau.

Since we did not participate in the handling of Mr. Tesla's effects, we are unable to supply the information you requested.

Sincerely yours,

John Edgar Hoover
Director

COMM-FBI AUG 11 1955 MAILED 19

NOTE: Bufiles reflect no record on correspondent. This type of reply utilized by Internal Security Division in answering similar inquiries on 6/30/55. (65-47953-33) Cover memo from Mr. Belmont to Mr. Boardman dated 6/29/55 set out background of this matter which concerned the death of Tesla, a famous electrical inventor. Bureau was not involved in this matter, and the opening of the safe mentioned was done by the Office of Alien Property.

Mr. Tolson
Mr. Boardman
Mr. Nichols
Mr. Belmont
Mr. Harbo
Mr. Mohr
Mr. Parsons
Mr. Rosen
Mr. Tamm
Miss Gandy

[redacted]

63 SEP 28 1955

[redacted]

AUG 18 1955

41

[redacted] (5

September 10., 1955.

Mr. John Edgar Hoover,
Federal Bureau Of Investigation,
Washington 25, D.C.

Dear Mr. Hoover:

Refering to my letter to you August first, 4 x 1 this year - your letter to me, August 11th., reletive to the matter of the papers of Mr. Nikola Tesla.

On August 26, I wrote the office of Alien Property regarding this matter, indicating that I had received the information from you that it was their department which had taken the Tesla Property into custody - not yours..

I have a letter from Mr. Henry G. Hilken - that Department - File Number HGH:N SM:elk 017-3566, in which I am told that office "never had custody, nor has vested, any property of Nikola Tesla".

As I began this matter with you - because it was stated in Mr. O'Neill's book that it was your department who opened Tesla's safe I am wondering if you have any further suggestions along lines I might follow to obtain some information in this regard?

Thank you for your time and trouble.

Sincerely,

[redacted] (b) (7) (c)

ALL INFORMATION CONTAINED
HEREIN IS UNCLASSIFIED
DATE 7-2-80 BY SP4 Jrm/rte

EX-PROC
SEP 19 1955

RECORDED-12 100-2237-6X2

EX-107 (b) (7) (c)

17 SEP 20

[redacted]

42

RECORDED
INDEXED-12

100-2237-6X2

EX-107

September 20, 1955

(b)(7)(C)

ALL INFORMATION CONTAINED
HEREIN IS UNCLASSIFIED
DATE 7-2-80 BY SP4 jem/rtc

Dear [redacted]:

I have received your letter dated September 10, 1955.

As you were advised by my letter of August 11, 1955, this Bureau was not connected in any respect with the acquisition or custody of the effects of Nikola Tesla, and it is therefore not possible to furnish you any additional information.

Sincerely yours,

John Edgar Hoover
Director

(b)(7)(C)

NOTE: By letter 8-11-55, we referred [redacted] to the Office of Alien Property, which Office was reported to have assumed custody of Tesla's effects subsequent to his dea (65-47953-6)

(3)

(b)(7)(C)

COMM - FBI
SEP 20 1955
MAILED 30

SEP 28 1955

43

L INFORMATION CONTAINED
HEREIN IS UNCLASSIFIED
DATE 7-3-80 BY SP4 Jan/etc

RECOGNITION FOR TESLA

(Please fill out this form and mail to the address appearing below.)

THE TESLA SOCIETY
University Station, Box 135
Minneapolis 14, Minnesota

(date)

(city & state)

Hon. Arthur E. Summerfield
Postmaster General, Postoffice Dept.
Washington, D. C.

Dear Sir:

Nikola Tesla's contributions to science, industry, and to his adopted country have greatly inspired engineering progress. His electrical systems helped create an American conomy of world pre-eminence.

We respectfully request issuance of a 1956 commemorative stamp to be issued on the centennial of Tesla's birth (1856-1943).

(signed) _____

AMERICAN SRBOBRAN
June 29, 1955
Pittsburgh, Pennsylvani

Ex. - 10€
INDEXED-59

100 2237-A
NOT RECORDED
138 JUL 11 1955

6C JUL 13 1955

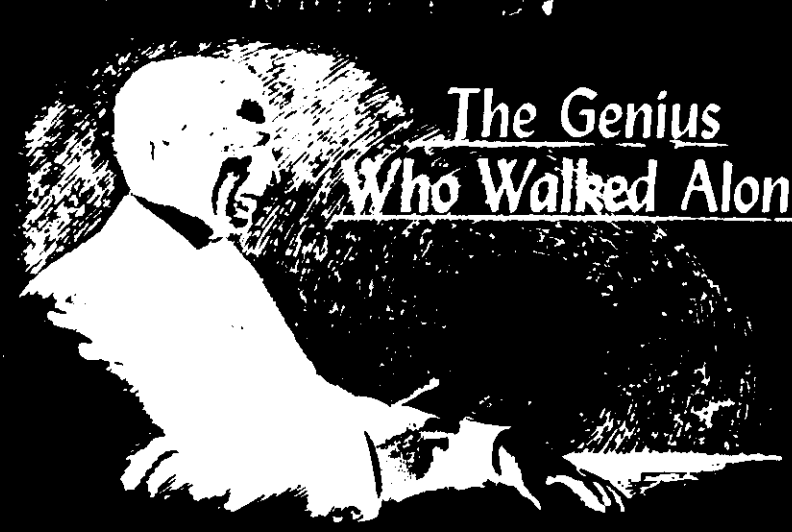

The Genius Who Walked Alone

by ALFRED H. SINKS

Nikola Tesla was a great inventor—and also a prophet without honor

COUNTER-ESPIONAGE WHEELS started turning early on the morning of January 8, 1943. Anxious FBI agents slipped into a room in the Hotel New Yorker where, late the night before, a chambermaid had discovered the body of Nikola Tesla, dead at 86, regarded by many as the greatest scientific genius of his time.

For years, Tesla had been making scientific predictions so fantastic as to be literally out of this world. Of late he had been working—or so he said—on revolutionary new weapons powerful enough to annihilate armies at a single blow.

There was only one Tesla, and the story might—incredible as it sounded—be true. The old man's safe might hold these secrets, and the Government could not risk the chance of enemy spies getting there first.

Half hoping to find something which would bring a sudden and decisive end to World War II, the G-men broke open the dead man's strong box. If anything of importance was discovered, it has never been revealed.

Yet, their quick action was justified, for you could never be sure about Tesla, one of the strangest men who ever lived. Most people took him with a grain of salt, yet no serious scientist dared shrug away his claims as nonsense. Not after Thomas Edison tried it and Tesla proved him wrong.

The world's leading physicists and electrical engineers had to eat crow back in the 1880s when Tesla solved a problem they had thought impossible. That one accomplishment—the invention of a practical alternating-current motor and gen-

45

[redacted]

Mr. Felt
Mr. Baker
Mr. Callahan
Mr. Cleveland
Mr. Conrad
Mr. Gebhardt
Mr. Jenkins
Mr. Marshall
Mr. Miller E.S.
Mr. Sovars
Mr. Thompson
Mr. Walters
Tele. Room
Mr. Boise
Mr. Bowers
Mr. Fenwick
Mr. Herrington
Mr. Conroy
Mr. Mintz
Mr. Eardley
Mrs. Hogan

(b)
(7)
(C)

United States Senate

June 26, 1973

Respectfully referred to:

Congressional Liaison
Federal Bureau of Investigation
Department of Justice
Washington, D. C. 20530

Because of the desire of this office to be responsive to all inquiries and communications, your consideration of the attached is requested. Your findings and views, in duplicate form, along with return of the enclosure, will be appreciated by

Senator [redacted]

ATTN: U.S.S[redacted]

(b)
(7)
(C)

Form #2

ST-105

100-2237-24

7 JUN 29 1973

ENCLOSURE

[redacted]

(b)
(7)
(C)

CORR[redacted]ENCE

46

[redacted]

20 June 1973

(b)(7)(C)

Dear Senator [redacted]

Though in Alaska temporarily working on a military contract, I still consider myself an [redacted] resident, hence it is to you that I write.

During my days at [redacted] College, I became interested in a fascinating Czech physicist, Nicolai Tesla. Proffessor Tesla emmigrated to this country in the twenties, I believe, and did some of his most original work here. Tesla had a peculiar bent of mind, in his younger days he was often called a mad scientist, and did not publish extensively when he came to the US. Most of the extant primary material is in untranslated Czech. Tesla was, however, an extensive note taker. It thought it strange that upon his death, none of his notes from his American period ever appeared. Upon discussing this with a friend, I was informed that all of Mr. Tesla's notes were confiscated by the FBI. I cannot conceive how these notes on physics and electricity can in any way endanger the national safety. It seems that Mr. Hoover in his zeal, had confiscated material whose only sin was a radical approach to science. There is indication that much of Professor Tesla's later work concerned a very novel approach to time theory. Needless to say, it has been radical approaches to physics that have been our greatest scientific advances in modern times, viz. Einstein, Heisenberg, et al.

I was wondering if your office might be able to determine if these papers are still extant, and if so, see to it that the public has access to them. It would be a shame to see all of Nicolai Teslas work to have been in vain.

Please excuse my typing, in all the thousands of words I typed trying to get a liberal education, I never did master the typewriter.

Sincerely yours,

[redacted]

(b)(7)(C)

100-2237-24

ENCLOSURE

47

July 5, 1973

ST-105

REC-15

100-2237-24

ALL INFORMATION CONTAINED HEREIN IS UNCLASSIFIED DATE 7-8-80 BY SP2 jmp/ste

Honorable [redacted]
United States Senate
Washington, D. C. 20510

(b)(7)(C)

Dear Senator [redacted]:

This is to acknowledge receipt of your communication dated June 26th enclosing a letter from your constituent, [redacted] who is temporarily employed in Alaska.

In response to [redacted] inquiry, central files of the Federal Bureau of Investigation indicate that the effects of Dr. Nikola Tesla were impounded after his death by the Office of Alien Property of the Department of Justice and not by the FBI. Since we did not participate in the handling of Dr. Tesla's belongings, I am unable to furnish the information you desire.

I am returning your enclosure as you requested.

Sincerely yours,

William D. Ruckelshaus

William D. Ruckelshaus
Acting Director

MAILED 24
JUL 5 - 1973
FBI

Enclosure

1 - Portland - Enclosures (2)
1 - Congressional Services Office - Enclosures (2)
NOTE: Bufiles reveal prior cordial correspondence with Senator [redacted] is not identifiable in Bufile [redacted] Bufile 100-2237 reflects that Dr. Tesla was a world-famous electrical inventor, and at the time of his death, all of his personal papers and effects were believed dangerous to the count security if they fell into unauthorized hands. The book, "Prodig Genius," by John J. O'Neill, alleged that the FBI took over a ce safe and opened it, appropriating his property. Bufiles clearl indicate that it was the Office of Alien Property of the Depar which did so, and the above reply is forwarded in answer to re inquiries.

(6)(7)

Mr. Felt
Mr. Baker
Mr. Callahan
Mr. Cleveland
Mr. Conrad
Mr. Gebhardt
Mr. Jenkins
Mr. Marshall
Mr. Miller, E.S.
Mr. Soyars
Mr. Thompson
Mr. Walters
Tele. Room
Mr. Baise
Mr. Barnes
Mr. Bowers
Mr. Herington
Mr. Conmy
Mr. Mintz
Mr. Eardley
Mrs. Hogan

54 JUL 13 1973

[redacted] TELETYPE UNIT

(b)(7)(C)

48

(b) (7) (c) [redacted]

FEDERAL BUREAU OF INVESTIGATION
Washington, D.C.

12 July 1973

ALL INFORMATION CONTAINED
HEREIN IS UNCLASSIFIED
DATE 7-3-80 BY SP4 Jam/rtc

Dear Sirs,

It has come to my attention that upon the death of Mr. Nikola Tesla, the founder of modern A.C. power systems, and the original inventor of radio, and innumerable other devices, operatives of the F.B.I. opened his safe and removed his papers on 7 January 1943, within a few hours of his demise. Also, all records of his work have been siezed and held by our government since his death. I would like to know WHY, and also to be informed as to who was, and is responsible for keeping the lid on these records. I would also like to know where they are now.

I do hope you enjoy a good laugh over the aparent naievity of such a request as this, but it is a rather strange situation to exist in a country like this, that a man of such genius and achievement could be systematically cut out of history books, and that the facts about his works could be concealed to the degree they have been. I wish to obtain access to all these old records which have been concealed for thirty years. I would appreciate your kind consideration and attention to this matter and any assistence you may care to give.

EX-105

100-2237-25

9 JUL 20 1973

C-60

[redacted]

[redacted]

(b) (7) (c)

ack 7-19-73

CORRESPO

49

July 19, 1973

REC-60/100-2237-25

[redacted]

(b)(7)(c)

EX-105

ALL INFORMATION CONTAINED HEREIN IS UNCLASSIFIED DATE 7-3-80 BY SP4 Jm/rt

Dear [redacted]

Your letter was received on July 16th. In response to your inquiry, the effects of Dr. Nikola Tesla were impounded, after his death, by the Office of Alien Property of the Department of Justice and not by the FBI. Since we did not participate in the handling of Dr. Tesla's belongings, I am unable to furnish the information you desire. A copy of your communication and of this reply have been referred to the Department of Justice.

MAILED 4
JUL 19 1973
FBI

Sincerely yours,

C. M. Kelley

Clarence M. Kelley
Director

NOTE: Bufiles contain no record of correspondent. (Bufile 100-223 reflects that Dr. Tesla was a world-famous electrical inventor, and at the time of his death, all of his personal papers and effects were believed dangerous to the country's security if they fell into unauthorized hands. The book, "Prodigal Genius," by John J. O'Neil alleged that the FBI took over a certain safe and opened it, appropriating his property. Bufiles clearly indicate that it was the Office of Alien Property of the Department which did so, and the above reply is forwarded in answer to related inquiries. Copy of letter referred to the Assistant Attorney General, Civil Divisio of the Department.)

Assoc. Dir. ____
Asst. Dir.:
Admin. ____
Comp. Syst. ____
Files & Com. ____
Gen. Inv. ____
Ident. ____
Inspection ____
Intell. ____
Laboratory ____
Plan. & Eval. ____
Spec. Inv. ____
Training ____
Legal Coun. ____
Cong. Serv. ____
Corr. & Crm. Research ____
Press Off. ____
Telephone Rm. ____
Director Sec'y ____

[redacted]

MAIL ROOM ☐ TELETYPE UNIT ☐

(6)
(7)
(c)

50

[redacted]

Clarence M. Kelley
Director
Federal Bureau of Investigation
Washington D.C. 20535

ALL INFORMATION CONTAINED
HEREIN IS UNCLASSIFIED
DATE 7-3-80 BY SP4 Jam/rtc

Dear Mr. Kelley,

Thank you for your letter of the 19th of July. I appreciate the information about the Office of Alien Property and its connection with the impounding of the effects of Dr. Nikola Tesla. In my letter of the 16th I did not mean to imply the FBI had impounded his effects, as I was aware of the O.A.P.s general part in the affair. The fact remains that to the best of my knowledge, it WAS agents of the FBI who did in fact break into his safe only hours after his death, and did remove the papers therein. Now, in so far as the Bureau was connected, I wish to understand that extent. I do appreciate your refering my communication to the appropriate persons in the Justice Department, but perhaps you could see that the above mentioned connection of the Bureau could be further looked into. I am curious as to who asked the Bureau to perform such an act, whether is was a person in the O.A.P. or what, and on what grounds they were carried out, and to whom they were responsible. Also, to what person were the perloined papers delivered? Names of the agents involved would be appreciated. As to what happened to any other effects of his, that is probably a question more ably answered by the O.A.P., yet if Bureau agents participated once they may have done so on other occasions. If the persons who did open the safe were NOT FBI agents, then we are faced with the fact that persons aparently posed as Bureau operatives, an even more interesting situation. Perhaps this whets your own curiosity a[redacted]

ST 108
REC 68 100-2237-26
AUG 1973

Da

iml
ack 8-2-73
[redacted]

CORRE[redacted]CE

51

this affair, [redacted] interest. Are you aware that before the year 1900 he was able to transmit thousands of watts of electric power to any point on the globe WITHOUT WIRES. This and other feats would make him a prime target for vested interest groups, notably the J.P.Morgan combine with whom he had connections. I am aware of the well earned tradition of the Bureau of NOT serving any master but the common good, so again we have a curious point if indeed strings were pulled. Quite frankly, it looks as if someone went to a lot of trouble to see that his ideas were not broadly available to ensure the stability of their own electric technological apple cart financially, at the expense of unguessable benefits to to humanity as a whole. How would you like to be able to draw unlimited power out of the air to run say a lightbulb with ONE wire? He did it, and much more. My sincere thanks for your thought and attentions to these matters.

Very best wishes,

(b)
(7)
(C)

REC 68 / 00-2237-26

August 2, 1973

ST-102

[redacted]

(b)(7)(C)

ALL INFORMATION CONTAINED HEREIN IS UNCLASSIFIED DATE 2-3-80 BY SP4 Jpm/rte

Dear [redacted]:

Your letter, which was received on July 30th, has been reviewed and I would like to point out that FBI Agents were not involved in removal of papers from the safe of Dr. Nikola Tesla, nor did we at any time have custody of his property.

I realize there have been some written accounts that our Agents acquired Dr. Tesla's belongings; however, these accounts are simply not true. You can be assured we were absolutely not responsible and there was no impersonation involved.

Sincerely yours,

C. M. Kelley

Clarence M. Kelley
Director

NOTE: Correspondent had written in mid-July and asked about the effects of Dr. Tesla and he was advised that the Office of Alien Property had participated in removing his effects from his hotel room. A copy of his communication was referred to the Department of Justice. Bufiles indicate clearly that after Dr. Tesla's death some relatives opened the safe in his hotel room with the help of a locksmith and, thereafter, the Office of Alien Property confiscated all of his belongings. Bufile 100-2237 mentions that the FBI was advised of the existence of this property; however, inasmuch as the Office of Alien Property was handling Dr. Tesla's effects, the Bureau had absolutely no hand in the entire matter.

AUG 2 - 1973

Assoc. Dir. ____
Asst. Dir.:
Admin. ____
Comp. Syst. ____
Files & Com. ____
Gen. Inv. ____
Ident. ____
Inspection ____
Intell. ____
Laboratory ____
Plan. & Eval. ____
Spec. Inv. ____
Training ____
Legal Coun. ____
Cong. Serv. ____
Corr. & Crm. Research ____
Press Off. ____
Telephone Rm. ____
Director Sec'y ____

[redacted] (3)

(b)(7)(C)

MAIL ROOM ☐ TELETYPE UNIT ☐

AUG 10 1973

53

June 9, 1975

Federal Bureau of Investigation
U.S. Department of Justice
Washington D.C. 20535

Sirs:

We recently contacted the San Francisco FBI office and a review of their files revealed information concerning the scientist Nikola Tesla or his papers which we understand to have been impounded.

If you could make a thorough investigation of all files and materials available to you, we would greatly appreciate the correspondence of any information that might be discovered.

Thank you,

ALL INFORMATION CONTAINED HEREIN IS UNCLASSIFIED DATE 7-3-8 BY SP4 Jam/rtc

[redacted]

100-2237-26X

REC-36

(b)
(7)
(c)

[redacted]

54

July 7, 1975

~~62-115530-4553~~

100-2237-26X

ALL INFORMATION CONTAINED HEREIN IS UNCLASSIFIED DATE 2-3-80 BY [illegible]

[redacted] (C)

[redacted] (b)(7)(C)

Dear [redacted]

This will acknowledge your letter of June 9th.

In response to your inquiry, the papers of Dr. Nikola Tesla were impounded, after his death, by the Office of Alien Property of the Department of Justice.

Sincerely yours,

C. M. Kelley

Clarence M. Kelley
Director

~~1 - The Deputy Attorney General - Enclosure~~
~~Attention: Susan M. Hauser~~

NOTE: Bufile 100-2237 indicates that Dr. Tesla was a world famous electrical inventor, and at the time of his death his personal papers and effects were impounded by Office of Alien Property for national security reasons. Since Tesla's death in 1943 the Bureau has received numerous inquiries about the disposition of his technical papers. The above reply is forwarded in answer to these inquiries. Bufiles contain no information identifiable with requesters.

Assoc. Dir. ____
Dep. AD Adm. ____
Dep. AD Inv. ____
Asst. Dir.:
Admin. ____
Comp. Syst. ____
Ext. Affairs ____
Files & Com. ____
Gen. Inv. ____
Ident. ____
Inspection ____
Intell. ____
Laboratory ____
Plan. & Evol. ____
Spec. Inv. ____
Training ____
Legal Coun. ____
Rm. ____

[redacted] (4)

[redacted] (b)(7)(E)

MAILED 7
JUL 7 1975
FBI

55

GPO 954-5

[redacted] (b)(7)(C)

13 November 1975

Mr. Clarence Kelley
Director
F.B.I.
Washington, D.C. 20535

ALL INFORMATION CONTAINED HEREIN IS UNCLASSIFIED DATE 2-3-80 BY SP4 Jm/rte

Dear Mr. Kelley:

In reply to the letter of 10 November from your office:

I restate that I was not asking about the existence or non-existence of any investigative information on Nikola Tesla, but on his technical papers seized on his death in 1943 and reported in the papers of that time.

The reason given in the reply from your office, the second paragraph, as to why I cannot get any information on Tesla's papers makes no sense in itself or in reply to my inquiry. The third paragraph stating the conditions under which a search will be made is a clear bureaucratic circumvention of the Freedom of Information Act and an excuse on the part of the individual handling my request for doing any work beyond the drafting of a letter. Will it be the decision of your office to let the situation stand like this?

As I stated in my first letter, I am following up the Tesla data for a magazine article. I am tempted to have your reply of the 10th printed and run nationally as an example of how bureaucratic manoeuvring is used to get around the FOIA. Does the bureau need more of this type of publicity?

It is disheartening to see an agency entrusted to uphold the law using its resources to mock the law.

Sincerely,

[redacted] (b)(7)(C)

a.k. 11-26-75

[redacted]

21 NOV 1

[redacted]

56

REC-57 EX 103
100-2237-27

November 26, 1975

[redacted]

(6)
(7)
(C)

ALL INFORMATION CONTAINED
HEREIN IS UNCLASSIFIED
DATE 2-3-00 BY SP4 Jm/rtc

Dear [redacted]:

This will acknowledge receipt of your letter to the Bureau on November 14th.

In response to your inquiry, the papers of Dr. Nikola Tesla were impounded, after his death, by the Office of Alien Property of the Department of Justice.

Sincerely yours,

C. M. Kelley

Clarence M. Kelley
Director

1 - The Deputy Attorney General - Enclosure
Attention: Susan M. Hauser

NOTE: Bufile 100-2237 indicates that Dr. Tesla was a World famous electrical inventor, and at the time of his death his personal papers and effects were impounded by Office of Alien Property for National Security reasons. Since Tesla's death in 1943 the Bureau has received numerous inquiries about the disposition of his technical papers. The above reply is forwarded in answer to these inquiries.

[redacted] (5)

(6)
(7)
(C)

Assoc. Dir. ____
Dep. AD Adm. ____
Dep. AD Inv. ____
Asst. Dir.:
Admin. ____
Comp. Syst. ____
Ext. Affairs ____
Files & Com. ____
Gen. Inv. ____
Ident. ____
Inspection ____
Intell. ____
Laboratory ____
Plan. & Eval. ____
Spec. Inv. ____
Training ____
Legal Coun. ____
Telephone Rm. ____
Director Sec'y ____

MAIL ROOM ☐ TELETYPE UNIT ☐

DEC 24 1975

[redacted]

GPO : 1975 O - 569-920

57

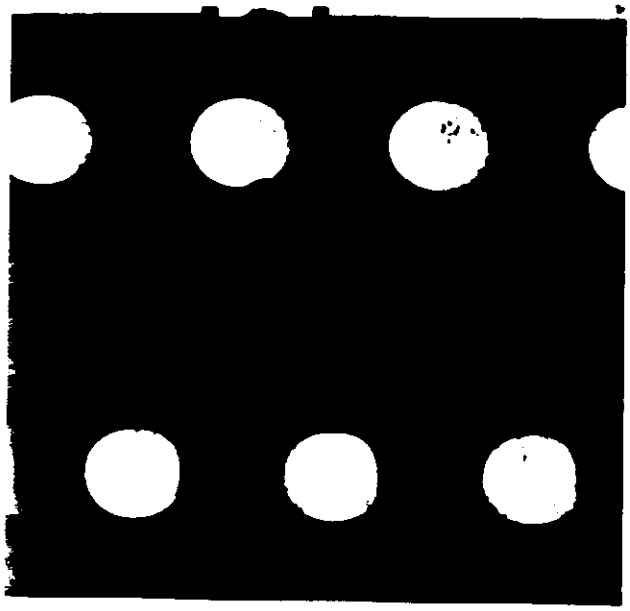

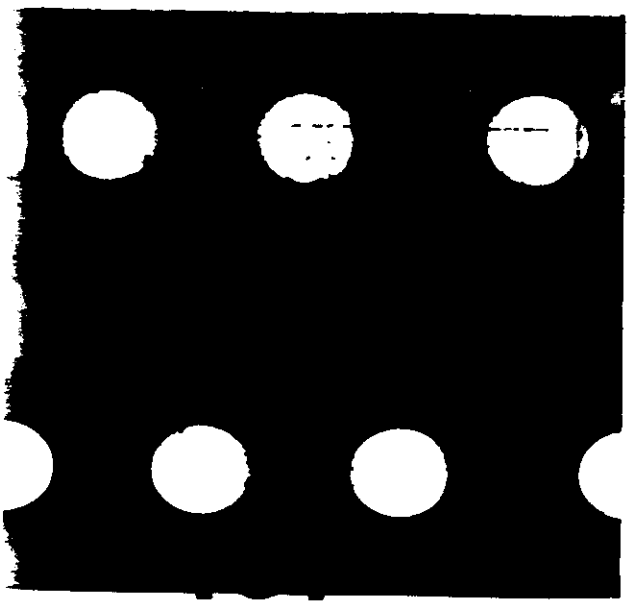

ROUTING AND TRANSMITTAL SLIP

1 TO (Name, office symbol or location) Alan McCreight Rm. 5435 - JEH	INITIALS DATE	ACTION CIRCULATE COORDINATION
2	INITIALS DATE	FILE INFORMATION
3	INITIALS DATE	NOTE AND RETURN PER CONVERSATION
4	INITIALS DATE	SEE ME SIGNATURE

REMARKS

FOIA - [redacted] (b)(7)(c)

Do NOT use this form as a RECORD of approvals, concurrences, disapprovals, clearances, and similar actions

FROM (Name, office symbol or location) Susan M. Hauser	DATE 10/21/75 PHONE 2145

OPTIONAL FORM 41
AUGUST 1967
GSA FPMR (41CFR) 100-11.206

+48—16—81894-1 552-103 GPO 5041-101

58

[redacted]

17 October 1975

Freedom of Information Act Request

Deputy Attorney General
U.S. Department of Justice
Washington, D.C. 20535

[redacted]

Gentlemen:

I am writing an article for a magazine on early twentieth century inventors and want to obtain information on some papers of Nikola Tesla that were seized by the FBI on his death in 1943.

Tesla invented a number of electrical devices and because of the war and because Tesla was born a Yugoslavian national, it was probably considered a measure of preventitive safety to hold in safekeeping papers that might have any bearing on national security.

I would like to find out: 1) if the FBI still has the papers; 2) if they do have the papers, what must be done to see them; 3) if they do not have the papers, who does have them or what happened to them?

100-2237-28

I would be very grateful for your help with this.

REC-2

5 OCT 24 1975

Sincerely,

[redacted]

(6)
(7)
(C)

[redacted]

ALL INFORMATION CONTAINED
HEREIN IS UNCLASSIFIED
DATE 1-3-80 BY SP4 Jmplete

[redacted]

59

erator put Tesla's name among the world's top scientists.

From his invention sprang the industrial age we live in. For without his alternating current, there would be no mass production of automobiles, aircraft, refrigerators; no great water-power dams and generating plants, no Diesel-electric trains; we could not have developed radio, television or atomic power.

The *direct* current that Edison worked with—a feeble force at best—could be sent no more than a couple of miles over wires because its power leaked away rapidly into the surrounding atmosphere. Lights near the power station might burn brightly and steadily, but those near the end of the line would be dim and fluttering.

Tesla sold his basic alternating-current patents in 1888, for a million dollars down. By 1895, the first great power station at Niagara Falls had been built, and by the end of 1896, two more Tesla generators had been installed. Within a few years, the pace of life over half the earth had changed from a crawl to a fast gallop—and it has been gathering speed ever since.

THE MAN who, by his brilliant idea of a "rotating magnetic field," changed the face of the earth and the living habits of the human race was a Croat, born in 1857 in Smiljan, a village in what is now Yugoslavia, but was then part of the old Austro-Hungarian Empire.

When he was about six, Nikola Tesla's father, the village priest, was transferred to a larger parish in the city of Gospic. There, the lad grew up and perfected his earliest "inventions." Of these, his favorite was an "engine" powered by 16 June bugs, harnessed in sets of four to spokes which radiated from the drive shaft.

Nikola was a frail lad, often ill; and he nearly went blind from too much reading. He read everything he could get his hands on, not only science but also religion, philosophy, history, literature. By the time he finished high school, he was fluent in French, German and Italian, as well as his native Serbo-Croat.

He got his schooling—the best his doting family could afford—at Gospic, Carlstadt, Gratz, the University of Prague and, finally, at Budapest. At the University, he saw his first electric motor, a new type direct-current affair whose brushes and commutators sent out showers of crackling blue sparks.

"If we got rid of those brushes and commutators, with all that noise and loss of energy, we'd have a much better motor," Nikola told his professor. "Perhaps it might be done with an alternating current."

"Nonsense!" barked the professor. "An alternating current would never run anything. You're not the brilliant student I thought you were. Forget it!"

But Tesla could not forget. The teacher's ridicule only stamped the idea indelibly on his brain. It became an obsession, a passion—how to make an alternating current drive a motor. In every idle moment, wherever he went, he wrestled with this problem.

Tesla's mind had an unusual twist. Almost from infancy, he had been able to see things in his mind's eye so vividly—and in such minute detail—that often he had trouble telling the real from the imaginary.

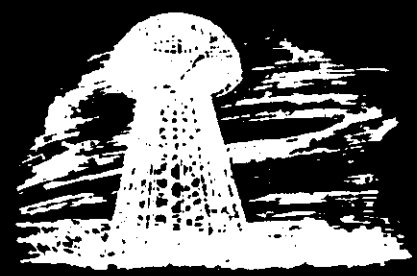

Where the average engineer or inventor would reach instinctively for drawing board, paper and pencil, Tesla would simply switch on that uncanny magic lantern inside his brain. He would fix a mental image there. Then he would alter this detail or that, discard one plan, try another, without ever putting a line on paper.

Years later - from these mental images alone - he could give his workmen exact instructions on how to build each part of a new device, though it was unlike anything ever seen before.

Thus, needing no drafting room and few laboratory conveniences to work on an idea, Tesla could use every spare minute that he had to test and revise his theory of alternating current.

His first real job was manager of a newly organized telephone company in Budapest. But telephone circuits were dull stuff compared with the challenge of that one big idea. He moved to Paris where he became a kind of general trouble-shooter for the Continental Edison Company.

His brain was still chipping away at his big problem, but the trouble was, he couldn't share it with trained men who might have helped him work it out. For whenever he mentioned alternating current to an electrical engineer, the man would look at him as though he were crazy.

But then came the moment when he knew he had solved it. He was walking with a friend in the Bois de Boulogne. Suddenly, he stopped short and began jabbing with his cane at some invisible object in the air.

"See, it works!" he shouted. "It is the rotating magnetic field which causes the armature to turn. It pulls the magnets around with it, causing the shaft to revolve. As I oscillate this switch, causing the current to flow first in one direction, then the other . . ."

Never mind what his friend thought. Tesla had the answer.

At the office, his colleagues scoffed or looked blank. But the manager, listening to the outpourings of scientific jargon, suddenly thought of his boss back in the United States. If there *were* some truth in what the Croat said, surely the famous electrical wizard would be smart enough to see it.

So he gave Tesla a letter of introduction to Thomas Edison and urged him to try his luck in America. Thus, Tesla, now 27, arrived in New York. He was handsome, over six-feet-two, with a distinguished head and deep-set blue eyes. His Slavic face was broad across the cheekbones, his dark hair thick, his chin sharply pointed. Of worldly goods, he had the clothes on his back, four cents in cash, the letter to Edison, and the idea which was to change the world.

Edison thought less than nothing of the idea. It seemed so preposterous that he wouldn't even listen

61

and, of course, Tesla had no drawings with which to try to convince him. But Edison gave him a job, for he had excellent training as an engineer and Edison needed trained men.

Busy with routine electrical work, Tesla waited nearly three years for a chance to turn his mental image into an actual motor he could show to others. In 1887, he was able to borrow enough money to start his own laboratory, and the following year the alternating-current motor and generator were practical realities on a laboratory scale though much practical engineering would still be needed to fit them to commercial use.

George Westinghouse, another inventor, was the first to see their value. He bought the patents and gave Tesla a job as engineer in his Pittsburgh factory.

But Tesla couldn't get along with the other Westinghouse engineers. From his standpoint, the alternating-current job was done. Even "schoolboys" could now iron out the few remaining kinks. Meantime, his brain had started to hatch even bigger dreams. He went back to his laboratory in New York.

"Be alone," he once told a science writer. "That's the secret of invention. Be alone—that's where great ideas are born."

AND HE WAS. In the years that followed, Tesla had many admiring acquaintances, but seldom a friend. After his mother, no woman ever entered his personal life.

His manner toward others was cordial but reserved, distant. His words were as if uttered by some god, sitting on an Olympus high above the rest of humanity. Backed by his fame, those words made a tremendous impression.

He lectured at every scientific center in this country and in all the important capitals abroad. Things which, as yet, existed only inside that amazing brain of his were so real to him, he made them real to his listeners.

He described radar and radio broadcasting and even television. He advocated electro-therapy. He foresaw a day when man would control nature in every respect—even the weather—when machines of all kinds, and the power to run them, would be so cheap that poverty would vanish from the world.

Without wanting to be, Tesla was a superb actor. After listening to him and seeing his wonders, audiences were ready to believe nearly anything.

Tesla reasoned that you could sell electric power cheap if you could do away with the millions of poles and insulators, the millions of tons of copper wire used to transmit it from place to place. He thought he knew how to do it—and J. P. Morgan backed him with $300,000.

On Long Island, Tesla built a huge power plant with a 154-foot steel-ribbed tower topped by an enormous mushroom-shaped copper dome. From this dome he planned to bombard the earth's crust with millions of volts of electric energy. The power so added to the earth's permanent charge could be drained off at some other point—*any* point—on the earth's surface. Thus, it would be possible for electric power to be sent anywhere without conduits, poles or wires. Or so he thought, until he tried it.

62

In November 1928, Tesla announced that he could abolish war.

The inventor had designed a small, inexpensive, radio-controlled boat which, through its supposed ability to destroy the biggest battleships, would make great navies useless. Not many years later, he was talking of another super-weapon: a "death ray" which would annihilate whole armies.

Yet Tesla never suspected that the real super-weapon of the future would come from atomic fission. For Einstein's basic notion which led to smashing the atom, he had only ridicule. Alone in his middle age, he had fallen out of step with the world's great thinker.

Not all Tesla's later inventions were fantastic. Some, like his induction coils and oscillators, and pioneer work on "tuned" electrical circuits, were highly important.

Though he never succeeded in transmitting power without wires on a big scale, he *did* prove that a single wire is enough. And some of his brilliant prophecies inspired the more plodding scientists to work out the practical problems of induction heating, radio-telephone, radar and many other electronic marvels of today.

But as he grew older, he withdrew further and further within himself. His strange prophecies sounded like a voice from another planet. For companionship now, the old man had only his dreams, and they grew stranger with the years. Completely alone at last, a stooped, gaunt figure with thin, silvery hair, he used to slip from his hotel room, buy a bag of birdseed and trudge slowly over to a park where hundreds of pigeons awaited him. These were his friends. They needed him, though the world did not.

When he grew too ill to go out, each day he sent a Western Union messenger to the park. After feeding the birds, the boy was instructed to see if any of them seemed sick. If so, he was to bring them back to Tesla's room where the inventor would nurse them gently back to health.

Perhaps this sad little labor of love showed that the man who changed the world had, at last, discovered a great truth. Perhaps he knew now that the greatest power for good lies not in lonely thought but in a human heart pulsating like his own "tuned circuits"—in tune with the hearts of his fellowmen. Or did he ever know? You could never be sure about Tesla.

Winnie Wit

IN THE EARLY 1920s, when Winston Churchill had offended both his own supporters and the political opposition, the late George Bernard Shaw wrote him: "I enclose two vouchers for the première of my new play, for yourself and a friend—if any."

Back to the playwright promptly came the theater checks with this note from "Winnie": "I regret I am unable to attend the première of your new play. Please send me two vouchers for the second performance—if any."

—[illegible]

RECOGNITION FOR TESLA

At long last Serbians—American and Canadian—have acted to honor the memory and achievements of one of Serbia's greatest sons.

For the world-wide Centennial celebration of Dr. Nikola Tesla's birth next year, Serbs on this Continent plan to erect a bust statue of the electrical genius to stand before the entrance of the Monastery at Libertyville, Ill.

Steps looking towards that end were taken at the recent SNF convention following the reading of a letter by President Mike Radakovich from His Grace, Bishop Nicolai. As the universally-renowned churchman stated, erection of a suitable monument, by Serbians, would forever remind other Serbs of the honor and glory of Dr. Nikola Tesla . . . . And that he was a SERBIAN, son of a SERBIAN ORTHODOX clergyman, born in the SERBIAN SELO of Smiljan in Lika.

Further, His Grace urged that the undertaking be a joint one and representative of ALL the Serbian organizations in the United States and Canada. He naturally looked to the SNF for leadership, and the greatest monetary contribution. But he also besought the help of the Serbian Nat'l Defense and the Jedinstvo beneficial society.

The Convention voted $1000 for the project and a hand collection was taken up among the delegates and guests, kinsmen Milos Konjevich of Joliet, Ill., giving $200. It is probable that the balance of the needed $3000 will be raised thru public good-will offerings and via cash gifts of the other two organizations mentioned.

And after a suitable bust has been erected for Dr. Tesla, Bishop Nicolai suggested a similar-like monument honor the memory of Dr. Mihailo Pupin, also a world-renowned scientist, author and educator.

This is a subject near and dear to all good Serbian hearts

ALL INFORMATION CONTAINED
HEREIN IS UNCLASSIFIED
DATE 7-3-80 BY [illegible]

INDEXED - 36
100 2237 A
NOT RECORDED
12 OCT 7 1955

"AMERICAN SRBOBRAN"
September 28, 1955
Pittsburgh, Pa.

EX-113
7531
60 OCT 7 1955
100-2237
64

INFORMATION CONTAINED
UNCLASSIFIED
DATE 7-3-80 BY SP4 Jm/rtc

100-2237

SNF Opens Drive for Tesla Memorial at Libertyville—

$2000 PUBLIC AID SOUGHT

PITTSBURGH, PA. — The Serb Nat'l Federation Executive Board has acted quickly to implement a Convention decision to honor the memory of the illustrious Dr. Nikola Tesla.

At its first meeting of October 8, the Board drafted a resolution calling on all SNF members and good Serbians to help finance a memorial project for the late scientist-inventor genius.

This would stand before the entrance of the Monastery in Libertyville, Ill.

Cost of the contemplated project, which would clarion to the world that Dr. Tesla was a Serbian, is estimated at $3000. The Convention voted $1000 to the cause and a hand collection among 122 delegates yielded several hundred dollars more.

Kinsman Milos Konjevich of Joliet, Ill., gave $200.

Public Aid Sought

Balance of the needed sum is now being sought thru good-will offerings of the general Serbian populace in the United States and Canada.

A fund, similar to the one being conducted to help defray mortgage expenses on Shadeland, has been established.

It is hoped to raise the necessary monies and complete the project in time for the worldwide Centennial celebration for the genius next year.

Spearheading the movement for recognition, especially among American elements, is the TESLA SOCIETY, founded by scientist-engineer Leland Anderson, a fanatical admirer of the late Dr. Nikola Tesla.

Mr. Anderson right now is conducting a search for a famous portrait of the Serbian electrical wizard done at the turn of the century in New York.

Seek Missing Portrait

In his current TESLAIAN publication, Mr. Anderson revealed the work, by Princess Vilma Lwoff-Parlaghy, is missing.

Reviewing developments, Mr. Anderson wrote:

"On March 1, 1916, the Princess gave a reception in her new studio in New York especially to exhibit her latest protrait of Nikola Tesla. An article in the NEW YORK TIMES for March 2, 1916, stated—

" 'It was one of the beliefs of Mr. Tesla that there was something unlucky about posing for a picture and he never sat to any before he entered the studio of the Princess. The room which she had chosen did not have a skylight in it and the much desired North exposure was missing.

" 'At the suggestion of Mr. Tesla, a cluster of powerful incandescents was put up in the corner of the apartment and the rays, filtered thru blue glass, were just the right quality. The portrait was shown under the same illumination.

At Ease for Sitting

" 'Mr. Tesla, having solved the problem of the artifical sun, fell to thinking about other parts of the universe, and there he sat oblivious to his surroundings.

" 'The painter was able to produce a likeness in which there is no evidence that the subject was conscious that anybody was watching him, much less studying his features from the other side of the easel.

" 'Among those who attended the reception were Mrs. C. B. Alexander, Henry P. Davison, the Countless de Rittenburg and Mrs. E. T. Isham.' "

After the Princess died, in 1923, her studio and all objects of art, was sold at auction.

The Telsa portrait, 53x48 inches, appeared on the cover of TIME magazine (July 20, 1931) and in the ELECTRICAL EXPERIMENTER (January 1919), Mr. Anderson says.

Its location is not now known.

INDEXED - 14

100-2237-A

NOT RECORDED
129 NOV 4 1955

AMERICAN SRBOBRAN
October 26, 1955
Pittsburgh, Pa.

EX-1

65

279
68 NOV 9 1955

100-2237

[redacted]AF $1580

Half of $3000 Costs For Statue Pledged

Cadiz, O., Serb Gives $100 For Bust Image of Inventor To Be Placed at Monastery

Pittsburgh, Pa.—Half of the $3000 fund goal for a statue memorial of the late Dr. Nikola Tesla has been realized, the SNF announced today.

In fact, total contributions counted so far come to $1580.

The Fund is an outgrowth of a plea by Bishop Nicolai for Serbians to do honor for the memory of the noted electrical wizard during the world-wide Centennial celebration planned for the genius next year.

In the wake of the plea, voiced at the recent 7th Convention at Niagara Falls, Canada, the delegates approved a $1000 gift from the SNF and decided to raise, by public grant, the balance of $2000.

A hand collection among the 122 grass-roots leaders of the Society raised another $450. Then, at its first meeting October 5, the newly-elected Executive Board of the SNF appealed to the membership at large to fulfill the balance required.

First Contribution $100

A scant 24 hours after the appeal was published in the Society's "Srbobran" organ last Wednesday, Sime Zelich of Cadiz, O., gave $100.

The proposed memorial, a statue image, would be placed before the entrance of the St. Sava Serbian Monastery in Libertyville, Ill.

historians, writers, educators, scientists, etc., would not be misled, Bishop Nicolai believes.

Be that as it may, the SNF's goal is to amass the needed monies in time to erect and dedicate the memorial before the Tesla Centennial celebration ends.

Donors and the amounts of their donations are as follows:

SNF	$ 1000.00
Delegate M. Konjevich	200.00
" Todor Dragich	50.00
" Petar Borovich	25.00
SNF Counsel N. Stone	25.00
Delegate N. Stepanovich	20.00
" Maxim Jakovac	20.00
" Ilija Janjanin	20.00
" Lou Balta	10.00
" Jovan Vukcevich	10.00
" Milan Kajganovich	10.00
" Stevan Rogulja	10.00
" Bogdan Dragicich	5.00
" Milan Tomich	5.00
" Todor Vuicich	5.00
" Djuro Lukich	5.00
" G. Stoisavljevich	5.00
" R. Vukadinovich	5.00
" Janko Mrmich	5.00
" Petar Maravich	5.00
" Mirko Baranin	5.00

INFORMATION CONTAINED IS UNCLASSIFIED DATE 2-3-80 BY [redacted]

3 NOV 14

ıtion at Niagara Falls, Can-
a, the delegates approved a
000 gift from the SNF and
cided to raise, by public
ant, the balance of $2000.

hand collection among the
grass-roots leaders of the So-
raised another $450. Then,
first meeting October 5, the
ly-elected Executive Board of
SNF appealed to the mem-
ship at large to fulfill the bal-
e required.

First Contribution $100

A scant 24 hours after the ap-
l was published in the Society's
bobran" organ last Wednes-
, Sime Zelich of Cadiz, O.,
e $100.

The proposed memorial, a
tue image, would be placed be-
e the entrance of the St. Sava
bian Monastery in Libertyville,

"There it would proclaim to
ns of thousands of Serbian
sitors annually that Nikola
esla was of Serbian immigrant
ock and son of a Serbian
rthodox clergyman," Bishop
icolai declared.

For half a century and more,
general American public has
en misled anent the nationality
the man who foretold the com-
of atomic energy power.

Only recently, a prominent
American magazine listed him,
ncorrectly, as of Croatian
tock. The mistake was subse-
uently publicly corrected with
pologies by the publication.

But lacking an image reference,
th historical statistics, similar
ors are likely in the future.

Old References Poor

The magazine publication, for
stance, explained it obtained its
ference material from an anti-
ated guide book.

Since the misleading matter
re was never challenged by
rbians and other interested
rties before, the magazine logi-
ly assumed it was factual.

Erection of a bust statue,
lso listing Dr. Tesla's date of
irth, birthplace, parents, etc.,
ould counter the old myths
nd make certain that future

Centennial celebration ends.

Donors and the amounts of their donations are as follows:

SNF	$ 1000.00
Delegate M. Konjevich	200.00
" Todor Dragich	50.00
" Petar Borovich	25.00
SNF Counsel N. Stolac	25.00
Delegate N. Stepanovich	20.00
" Maxim Jakovac	20.00
" Ilija Janjanin	20.00
" Lou Balta	10.00
" Jovan Vukcevich	10.00
" Milan Kajganovich	10.00
" Stevan Rogulja	10.00
" Bogdan Dragisich	5.00
" Milan Tomich	5.00
" Todor Vuicich	5.00
" Djuro Lukich	5.00
" G. Stoisavljevich	5.00
" R. Vukadinovich	5.00
" Janko Mrmich	5.00
" Petar Maravich	5.00
" Mirko Baranin	5.00
" Stanko Jelich	5.00
★ ★ ★	
Prof. Anthony Tomovich (Edmonton, Alberta, Can.)	10.00
Teta Andia Mamula (Pittsburgh)	5.00
Martha Mamula Bjelosh (Pittsburgh)	10.00
Sime Zelich (Cadiz, O.)	100.00
Milinko Alexich, war invalid (Omaha, Nebr.)	
Total	$ 1,[illegible]

—the honoring, forever, of two of Serbia's best-known immigrant sons who contributed so greatly to the welfare and prosperity of their adopted America.

We hope to report developments as soon as they take place, remembering Bishop Nikolai's concluding remarks:

"Nikola Tesla, in the field of science, brought the Serbian name great glory—just as did the greatest Serbian knights on the field of battle."

23 June 56

Federal Bureau of Investigation
Washington 25, D.C.

Gentlemen:

[redacted]

During my senior year at Georgetown University I read J.J.O'Niel's Biography of Nikoli Tesla; the book, entitled "Prodigal Genius", described quite a few of Tesla's experiments, most of which I tried myself in the physics lab. I am interested in reviewing Tesla's experiments in wireless electric power transmission.

Unfortunately, Tesla died in 1945 just at the time he supposedly had developed a system of wireless power transmission. Since World War II was then in progress his papers were seized and sealed by the F.B.I. I suppose that by now Tesla's papers have been released for publication, but a call to the Library of Congress produced no results. Therefore, I have two questions:

1) Does the F.B.I. now have Tesla's scientific papers?

2) If so, are they available for public inspection? If they were released, who has them?

I will certainly appreciate any help you can give me along these lines. Tesla published very little of his findings; this, coupled with the fact that wireless power is connected by most people with "Death Rays" and crack-pots has made it nearly impossible for me to find anything on the subject.

Yours very truly,

[redacted]

[redacted] (b) (7) (C)

RECORDED - 86 100-2237-7

JUL 3 1956

[redacted] (b) (7) (C)

INFORMATION CONTAINED HEREIN IS UNCLASSIFIED 2-3-80 BY SP4 Jmp/etc

[redacted] (b) (7) (C)

68

100-2237-7
RECORDED - 86
INDEXED - 86

EX-122

15

L INFORMATION CONTAINED
EREIN IS UNCLASSIFIED
DATE 7-3-80 BY SP4 Jmfrte

June 29, 1956

[redacted]

(6)(7)(C)

Dear [redacted]

Nikoli Tesla

Your letter dated June 23, 1956, has been received, and in response to your inquiry, I would like to advise that our files reflect that the effects of Nikola Tesla were taken into custody after his death by the Office of Alien Property and not by this Bureau.

Since we did not participate in the handling of Mr. Tesla's effects, we are unable to supply the information you requested.

Sincerely yours,

John Edgar Hoover
Director

COMM — FBI
JUN 29 1956
MAILED 24

NOTE: Bufiles reflect no record on correspondent and reveal the correct spelling of Tesla's name as "Nikola." Bufiles reflect this type of reply h been utilized by the Domestic Intelligence Division in answering similar inquiries. (65-47953; 100-2237) Cover memo from Mr. Belmont to Boardman 6-29-55, set out background of this matter which concerned the death of Tesla, a famous electrical inventor. Bureau was not involved in this matter, and the opening of the safe containing his effects was done by the Office of Alien Property.

Tolson
Boardman
Nichols
Belmont
Harbo
Mohr
Parsons
Rosen
Tamm
Sizoo
Winterrowd
Tele. Room
Holloman
Gandy

FBI
JUL 17 1956

[redacted]

(3)

(6)(7)(C)

[redacted]

69

STANDARD FORM NO. 64

Office Memorandum • UNITED STATES GOVERNMENT

TO : DIRECTOR, FBI

DATE: 7/25/57

FROM : SAC, NEW YORK (65-12290)

SUBJECT: NIKOLA TESLA (Deceased)
IS -YU

INFORMATION CONTAINED HEREIN IS UNCLASSIFIED DATE 7-3-80 BY SP4 Jrmfr

[redacted] Street, New York 24, New York, a United States citizen of Yugoslav extraction, who on occasion, voluntarily furnishes the New York Office with information he considers to be in the interests of the Security of the United States Government, furnished Special Agent NICHOLAS J.MASTROVICH the following information on July 3, 1957: (b)(7)(D)

MR & MRS. JOHN STORM

[redacted] stated that a certain woman named Mrs. MARGARET STORM who lives with her husband, JOHN, at the Colonial Hotel, 51 West 81st Street, New York 24, New York, has been issuing newsletters which contain information pertaining to flying saucers and interplanetary matters. (b)(7)(D)

SECTION NEWSLETTER NEWSLE

[redacted] stated that in his opinion Mr. and Mrs. STORM are exploiting the reputation and genius of NIKOLA TESLA, deceased, inventor of Yugoslav extraction who achieved world wide fame as a result of his inventions in the United States. (b)(7)(D)

TESLA was born in Smiljan, Yugoslavia in July, 1859 and came to the United States in 1894 and became a naturalized United States citizen. In 1886 TESLA designed the arc-lighting system and two years later he invented the Tesla motor and designed a plan for the transmission of alternating current. In subsequent years, TESLA's discoveries and inventions included such fields and appliances as wireless communication, electrical oscillation, radiant power and radio active matter. After 1900, communications and wireless power transmission occupied most of his research.

2 - Bureau (RM) (Encs.2)
1 - Los Angeles (Info) (Encl.1) (RM)
1 - New York (65-12290)

NJM:mcd
(4)

SE 43 100-2237-

RECORDED-56

INDEXED-56

14 JUL 29 1957

0 1957

70

TESLA's only military invention was a method to which he once eluded but never fully described. This invention was a means whereby an inpenetrable "wall of force" can be erected around the United States' borders which would render helpless any military attack. TESLA disclosed the existence of his plan in 1934 and stated he intended to present it to the Geneva Conference but seldom referred to it afterward.

The "New York Times" dated 9/22/40, carried an article setting forth NICOLA TESLA's plan for a "Death Ray". This article included information to the effect that TESLA, on his 84th birthday, July 10, 1940, advised New York Times reporter WILLIAM L. LAWRENCE that he was ready to divulge to the United States Government the secret of his "teleforce", with which he said airplane motors would be melted at a distance of 250 miles so that an invisible Chinese wall of defense would be built around the country against any attempted attack by an enemy airforce no matter how large. According to TESLA, this "teleforce" was based on an entirely new principle of Physics that "no one has ever dreamed about" and was different from the principle embodied in his inventions relating to the transmission of electrical power from a distance, for which he received a number of basic patents.

TESLA stated that this new type of force would operate through a beam one hundredth millionth of a square centimeter in diameter and could be generated from a special plant that would cost no more than two million dollars and would take only about three months to construct. TESLA stated that a dzen such plants located at strategic points along the coast, according to TESLA, would be enough to defend the United States against all possible aerial attacks. TESLA stated that this beam would melt any engine and would also ignite explosives aboard any bomber. TESLA stated that no possible defense against it could be devised and he asserted that the beam would be all penetrating.

TESLA stated to Mr. LAWRENCE that he makes one important stipulation before he would divulge this secret to the United States Government and that was that should the United States Government decide to take up his offer, he would go to work at once but that the United States Government would have to trust him. TESLA stated that he would suffer "no interference from experts."

In this "New York Times" article Mr. LAWRENCE commented that with conditions as they were in 1940, and with the United States getting ready to spend millions of dollars for National Defense, Mr. TESLA's great reputation as an inventor, who always was many years ahead of his time, should be given careful consideration. Mr. LAWRENCE stated, in his opinion, the United States Government should take Mr. TESLA at his word and commission him to go ahead with the construction of his "teleforce" plant.

The New York file of Mr. TESLA bears no indication that any additional developments were carried on in connection with TESLA's invention and whether or not TESLA fully divulged his new plan to the United States Government.

TESLA died at the age of 85 on January 7, 1943.

Mr. [redacted] provided a two page copy of the above mentioned newsletter which Mr. and Mrs. STORM have been distributing in connection with the alleged invention by TESLA, which, according to Mr. and Mrs. STORM, consists of a radio type machine known as the Tesla Set which was invented by Mr. TESLA in 1938 for interplanetary communication. Mr. and Mrs. STORM claim that TESLA's engineers did not complete the Tesla Set until after TESLA's death in 1943. Mr. and Mrs. STORM claim that this Set was placed in operation in 1950 and since that time TESLA engineers have been in close touch with space ships. etc. (X)(D)

The Newsletter furnished by Mr. [redacted] included (6)(7)(D) the following names:

MARGARET STORM
JOHN STORM
GEORGE VAN TASSEL, Yucca Valley, California NY
DAN FRY NY - NMEX
GEORGE KING, London, England

The files of the New York Office contained no pertinent information regarding any of the above mentioned individuals. ARMAHO NY

Two photostatic copies of this newsletter are being sent to the Bureau for purposes of information while one copy is being submitted to the Los Angeles Office for information purposes.

[redacted] (b) (7) (C)

Mr. J. Edgar Hoover

L INFORMATION CONTAINED
EIN IS UNCLASSIFIED
7-3-80 BY SP4 Jam/rtc

Dear Sir:

I an hopeful that you can help me obtain certain information on records and data, which belonged to Dr. Nikola Tesla. He was an Electrical Engineer and prolific inventor.

He was born in Yugoslavia in 1856 and died in the United States, New York City, January 7th, 1943. He was a naturalized citizen of this country.

The only information I could find of his records was a report that the F.B.I. removed his papers for examination, and that the records were sealed by the custodian of alien property.

I have been doing some theoretical research of my own, which I believe may be along the same lines he followed in certain of his experiments. I also believe the development of his ideas would be in the interest of our country regardless of who developes them.

If it is at all possible for me to have access to at least some of his experimental work, I would certainly appreciate it. I am not able, by reason of the vast finances, which would be required, to conduct such experiments myself, so the data he made and collected would be invaluable.

Of course, it is possible that his records do not contain material pertinent to his electronics work, because from what I understand from reading about him, he kept most of his records in his head and wrote down very little of his data.

It is also possible that some of his ideas are impractical, but I feel sure that certain of his ideas will be of immense value to our country within the next several decades or even before, if they are developed at a rapid rate.

I would appreciate hearing from you on the subject, if you have any information pertaining to it, which you could make available to me.

100-2237-9

REC-1

Sincerely,
16 MAR 18 1958

[redacted]

Ack 3/14/58 [redacted]

[redacted]

(b) (7) (C)

[redacted]

74

March 14, 1958

REC-1

100-2237-

[redacted]

(b)(7)(c)

ALL INFORMATION CONTAINED HEREIN IS UNCLASSIFIED DATE 7-3-80 [illegible]

Dear [redacted]:

Your letter postmarked March 7, 1958, has been received.

In response to your inquiry, I would like to advise that our files reflect that the effects of Dr. Nikola Tesla were taken into custody after his death by the Office of Alien Property in the Department of Justice and not by the FBI.

Since we did not participate in the handling of Dr. Tesla's effects, we are unable to supply the information you requested.

Sincerely yours,

John Edgar Hoover
Director

NOTE: Buffiles reflect no record on correspondent. Buffiles reflect above type of reply has been utilized in the past in answering similar inquiries. (100-2237-7) Cover Memorandum from Belmont to Boardman 6/29/55 set forth background of this matter which concerned the death of Tesla, [illegible] electrical inventor. Bureau was not involved in this matter, and [illegible] of the safe containing his effects was done by the Office of Alien Property.

Tolson
Nichols
Boardman
Belmont
Mohr
Parsons
Rosen
Tamm
Trotter
Nease
Tele. Room
Holloman
Gandy

MAIL ROOM

[redacted] also (b)(7)(c)

COMM - FBI
MAR 14 1958
MAILED 19

68 MAR 21 1958

FBI - JUSTICE
REC'D BY [illegible]

[redacted]

(b)(7)(c)

75

June 24, 1957

Federal Bureau of Investigation
Washington 25, D.C.

ALL INFORMATION CONTAINED
HEREIN IS UNCLASSIFIED
DATE 7-3-80 BY SP4 Jan/rtc

Dear Sirs,

I am doing a research study on the life of Dr. Nikola Tesla of New York City (1856 - 1943), and desire information which you may have. It was reported in the book "Prodigal Genius" that Dr. Tesla's papers were seized from his New York hotel room upon his death in 1943 by the F.B.I. I am very interested in getting copies of his papers for my study and would like to know if this report is true and where I might obtain further information about them or if you are holding them.

REC-91 100-2237

EX 101

Sincerely ~~yours~~,

[redacted]

(b)
(7)
(C)

[redacted]

CRIME REC

EX 101

REC- 91

July 2, 1959

Ink 100-2237-10

[redacted]

(b)(7)(c)

L INFORMATION CONTAINED
EIN IS UNCLASSIFIED
DATE 7-3-80 BY SP4 Jamfite

Dear [redacted]

Your letter dated June 24, 1959, has been received.

In response to your inquiry, I wish to advise that our files reflect that the effects of Dr. Nikola Tesla were impounded, after his death, by the Office of Alien Property of the Department of Justice and not by the FBI. Since we did not participate in the handling of Dr. Tesla's effects, we are unable to supply the information you desire.

Sincerely yours,

MAILED 5
JUL 2 1959
COMM-FBI

John Edgar Hoover
Director

NOTE: Bufile 100-2237 reflects that Dr. Tesla was a world-famous electrical inventor, and at the time of his death, all of his personal papers and effects were believed dangerous to the country's security if they fell into unauthorized hands. The book, "Prodigal Genius," by John J. O'Neil, alleges that the FBI took over a certain safe and opened it, appropriating his property. Bufiles clearly indicate that it was the Office of Alien Property of the Department who did so, and the above reply is forwarded in answer to related inquiries.

Tolson
Belmont
DeLoach
McGuire
Mohr
Parsons
Rosen
Tamm
Trotter
W.C. Sullivan
Tele. Room
Holloman
Gandy

[redacted]
(3)

FBI

57 JUL 9 1959

MAIL ROOM ☐ TELETYPE UNIT ☐

[redacted]

(b)(7)(c)

[redacted]

77

OPTIONAL FORM NO. 10

UNITED STATES GOVERNMENT

Memorandum

Tolson
Mohr
Parsons
Belmont
Callahan
Conrad
Malone
McGuire
Rosen
Tamm
Trotter
W.C. Sullivan
Tele. Room
Ingram
Gandy

TO : MR. TROTTER

DATE: 12-6-60

FROM : A. K. Bowles

SUBJECT: NIKOLA TESLA (DECEASED)
INFORMATION CONCERNING

ALL INFORMATION CONTAINED HEREIN IS UNCLASSIFIED DATE 7-3-80 BY

(b)(7)(C)

[redacted] telephoned December 5 and was referred to Ident by switchboard because he wanted to talk with someone in charge of records of deceased. [redacted] said he is making a research study for U. S. Air Force on subject of geophysics. His deadline is ten days from now. [redacted] said he just discovered a sentence in a book by John J. O'Neill entitled "The Prodigal Genius -- The Life of Nikola Tesla," which states the FBI took custody of papers from Tesla's safe after his death in New York City in 1943. Tesla was a world-famous Yugoslav scientist and inventor in the electrical field who died January 7, 1943, in New York City. [redacted] requested immediate access to Tesla's scientific works which may shed light on [redacted] research study. I told [redacted] we would have somebody from our Boston Office contact him immediately.

(b)(7)(C)

Bureau file 100-2237 shows no investigation of Tesla has been conducted by Bureau. Since erroneous statement concerning FBI's taking custody of papers from Tesla's safe after his death appeared in O'Neill's book published in 1944, Bureau has received numerous inquiries from scientists desiring to review Tesla's writings. Each inquiry has been answered by stating FBI did not participate in handling Tesla's effects, but information has come to our attention that Office of Alien Property of Department of Justice may have examined Tesla's effects. (File indicates that representatives of Office of Alien Property did actually review Tesla's possessions, including his writings, but file does not show what final disposition was made of Tesla's possessions.)

A teletype to Boston Division was prepared, but before it was sent [redacted] telephoned again to furnish me the exact page in O'Neill's book in which he refers to the FBI. At that time I told [redacted] the statement in the book was untrue -- that the FBI had not examined or taken custody of Tesla's papers. I suggested to [redacted] that he might contact Office of Alien Property. (Therefore, teletype to Boston was not necessary.) 100-2237-11

ACTION:

For record.

AKB:ks

EX-113 REC-38 5 DEC 8 1960

51 DEC 13 1960

(5)

Bu file 100-2237
1- Mr. Belmont

78

[redacted]
(b)
(7)
(c)

February 14, 1961

Federal Bureau of Investigation
Department of Information
Washington 25, D. C.

[redacted] INFORMATION CONTAINED
HEREIN IS UNCLASSIFIED
DATE 7-3-80 BY SP4 jm/rtc

Dear Sir:

I am a college student who is doing a research paper on Nikola Tesla. As I was collecting the material for my paper, I discovered that at the time of Tesla's death, the department of the F.B.I. confiscated the data and papers that Tesla had collected from his research in the field of electricity. This confiscation of his material was stated in the PRODIGAL GENIUS by J.J. O'Neil, published in 1944 at New York city by Washburn Inc.

I have developed an interest in the discoveries and accomplishments of Tesla that is presently limited by the shortage of factual material. If in your files, you have any information concerning Nikola Tesla that you are permitted to release, I will sincerly appreciate your co-operation in helping me give the proper recognition to this great scientist and American. Below I have listed the facts that may be helpful to you;

REC- 55 100-22137-18
FEB 28 1961
EX.-102

1. Born in 1856 at Smiljan, Crotia, now Yugoslavia
2. Came to America in 1884 and was employed for a short time with the Edison Co. at Orange, N.J.
3. Died on January 7, 1943 at New York city

Thanking you for your time and co-operation that I have taken, I remain,

Sincerly Yours,

[redacted]
(b)
(7)
(c)

[redacted]

79

esd 100-2237-12

REC- 55

EX-76

February 23, 1961

[redacted]

(6)(c)

ALL INFORMATION CONTAINED HEREIN IS UNCLASSIFIED DATE 7-3-80 BY [illegible]

Dear [redacted]:

Your letter of February 14, 1961, has been received, and the interest which prompted you to write is appreciated.

In response to your inquiry, I wish to advise that our files reflect that the effects of Dr. Nikola Tesla were impounded, after his death, by the Office of Alien Property of the Department of Justice and not by the FBI. Since we did not participate in the handling of Dr. Tesla's effects, we are unable to supply the information you desire.

MAILED 10
FEB 23 1961
COMM-FBI

Sincerely yours, (b)(7)(c)

John Edgar Hoover
Director

NOTE: No record could be located in Bufiles identifiable with correspondent. Bufile 100-2237 reflects that Dr. Tesla was a world-famous electrical inventor, and at the time of his death, all of his personal papers and effects were believed dangerous to the country's security if they fell into unauthorized hands. The book, "Prodigal Genius," by John J. O'Neill, alleges that the FBI took over a certain safe and opened it, appropriating his property. Bufiles clearly indicate that it was the Office of Alien Property of the Department who did so, and the above reply is forwarded in answer to related inquiries.

Tolson
Parsons
Mohr
Belmont
Callahan
Conrad
DeLoach
Evans
Malone
Rosen
Tavel
Trotter
W.C. Sullivan
Tele. Room
Ingram
Gandy

(3)
50 MAR 6 1961
MAIL ROOM TELETYPE UNIT

[redacted] (b)(7)(c)

80

November 21, 1962

Federal Bureau of Investigation

Washington 25, D.C.

Gentlemen:

I am making a study, motivated out of personal curiosity, into the life and works of Nikola Tesla. Mr. Tesla died on January 7, 1943 in the Hotel New Yorker. Since F.B.I. Operatives opened his safe and took his papers for examination, I wonder if these papers are available for perusal? If they are available, where would they be located, and are copies available to the public?

I am a citizen of the United States, and have been cleared for security--- the latest one being for work on [redacted]

Thank you very much for any information or help you may be able to give me in this matter!!

Respectfully yours,

[redacted]

(6)
(7)
(C)

ALL INFORMATION CONTAINED HEREIN IS UNCLASSIFIED DATE 7-3-80 BY SP4 [illegible]

EX-114

REC-39 100-2237 1B

5 NOV 28 1962

[redacted] 11-27-62

81

RA-114

REC-39 100-2237-13

November 27, 1962

[redacted]

(b) (7) (c) ALL INFORMATION CONTAINED HEREIN IS UNCLASSIFIED DATE 7-3-80 BY SP4 Jam/rtc

REC'D-READING ROOM FBI NOV 27 4 53 PM '62

Dear [redacted]

Your letter of November 21st has been received.

In response to your inquiry, I would like to point out that the effects of Dr. Nikola Tesla were impounded, after his death, by the Office of Alien Property of the Department of Justice and not by the FBI. Since this Bureau did not participate in the handling of Dr. Tesla's effects, I am unable to supply the information you desire.

Sincerely yours,

J. Edgar Hoover

John Edgar Hoover
Director

[redacted] (b) (7) (c)

MAILED 8 NOV 2 1962 COMM-FBI

NOTE: Bufiles contain no record identifiable with correspondent. Bufile 100-2237 shows that Dr. Tesla was one of the world's outstanding scientists in the electrical field, and at the time of his death, all of his personal papers and effects were believed dangerous to the country's security if they fell into unauthorized hands. The book, "Prodigal Genius," by John J. O'Neil, alleges that the FBI took over a certain safe and opened it, appropriating Dr. Tesla's property. Bufiles clearly indicate that it was the Office of Alien Property of the Department which did so, and the above reply has been forwarded in answer to related inquiries. Dr. Tesla was born in Yugoslavia and died in New York City 1-7-43.

Tolson
Belmont
Mohr
Casper
Callahan
Conrad
DeLoach
Evans
Gale
Rosen
Sullivan
Tavel
Trotter
Tele. Room
Holmes
Gandy

[redacted] (3) (b) (7) (c)

RECEIVED DIRECTOR

140

53 DEC 3 1962

[redacted]

MAIL ROOM ☐ TELETYPE UNIT ☐

[redacted]

82

[redacted] (b)(7)(c)

10 March 1964.

Federal Bureau of Investigation,
Washington 25, D.C.

ALL INFORMATION CONTAINED
HEREIN IS UNCLASSIFIED
DATE 7-14-82 BY SP/JSK/MKE

Dear Sirs,

For some time, have been wondering about the matter of what was reported on the late Nikola Tesla, the inventor. He died during early January 1943, while in residence at the Hotel New Yorker, New York City. Accounts have it that his belongings (papers, etc.) were studied. Would appreciate learning if anything can be learned about this.

Am hoping to be on leave, and in Washington, along the third week of April. This is mentioned, in case it is possible to view anything relating to the question.

Sincerely,

[redacted]

ITC 3-17-64
ack 3-18-64

[redacted]

(b)(7)(c)

[redacted]

83

TRUE COPY

(b)(7)(c) [redacted] 10 March 1964.

Federal Bureau of Investigation
Washington 25, D. C.

Dear Sirs,

For some time, have been wondering about the matter of what was reported on the late Nikola Tesla, the inventor. He died during early January 1943, while in residence at the Hotel New Yorker, New York City. Accounts have it that his belongings (papers, etc.) were studied. Would appreciate learning if anything can be learned about this.

Am hoping to be on leave, and in Washington, along the third week of April. This is mentioned, in case it is possible to view anything relating to the question.

Sincerely,

[redacted] (b)(7)(c)

ALL INFORMATION CONTAINED HEREIN IS UNCLASSIFIED DATE 7-3-80 BY SP4 Jm/rtc

100-2237-14

10 MAR 13 1964

(b)(7)(c)

84

REC-130

100-2237-14

March 18, 1964

INFORMATION CONTAINED
HEREIN IS UNCLASSIFIED
DATE 7-3-80 BY SP4 Jan/rtc

[redacted] (b) (7) (c)

Dear [redacted]

Your letter of March 10th has been received.

In response to your inquiry, I would like to point out that the effects of Dr. Nikola Tesla were impounded, after his death, by the Office of Alien Property of the Department of Justice and not the FBI. Since we did not participate in the handling of Dr. Tesla's effects, I am unable to supply the information you desire.

Sincerely yours,

J. Edgar Hoover

John Edgar Hoover
Director

MAR 18 4 11 PM '64
REC'D-READING ROOM
FBI

MAILED 19
MAR 18 1964
COMM-FBI

NOTE: No record could be located in Bufiles identifiable with correspondent. Bufile 100-2237 reflects that Dr. Tesla was a world-famous electrical inventor and at the time of his death, all of his personal papers and effects were believe dangerous to the country's security if they fell into unauthorized hands. The book, "Prodigal Genius," by John J. O'Neil, alleges that the FBI took over a certain safe and opened it, appropriating his property. Bufiles clearly indicate that it was the Office of Alien Property of the Department which did so, and the above reply is forwarded in answer to related inquiries.

[redacted] (3) [redacted] (b) (7) (c) [redacted]

Tolson
Belmont
Mohr
Casper
Callahan
Conrad
DeLoach
Evans
Gale
Rosen
Sullivan
Tavel
Trotter
Tele. Room
Holmes
Gandy

57 MAR 2 ...

MAIL ROOM ☐ TELETYPE UNIT ☐

85

TRUE COPY

Sir,

According to "Prodical Genius, Nikola Tesla" Tesla
by J. J. O'Neil (a book) some papers were taken from the safe of Mr. Festa about 1945 yr. Is this true. If so are the papers declasified yet? If so may I obtain a copy?

[redacted] (b)(7)(C)

Sir,

According to "Prodical Genius, Nikola Tesla" by J. J. O'Neil (a book) some papers were taken from the safe of Mr. Tesla about 1945 yr. Is this true. If so are the papers declasified yet? If so may I obtain a copy?

REC-15
EX-10
100-2237-15
JUN 23 1964

[redacted] b(7)(c)

[redacted]

ALL INFORMATION CONTAINED
HEREIN IS UNCLASSIFIED
DATE 7-3-80 BY SP4 Jones/rtc

96

June 22, 1964

REC- 15

100 2237 15

[redacted] (b)(7)(c)

ALL INFORMATION CONTAINED HEREIN IS UNCLASSIFIED DATE 7-3-80 BY SP4 Jmfrte

REC'D-READING ROOM FBI JUN 22 3 30 PM '64

Dear [redacted]

Your card of June 16th has been received.

In response to your inquiry, I would like to point out that the effects of Dr. Nikola Tesla were impounded, after his death, by the Office of Alien Property of the Department of Justice and not by the FBI. Since we did not participate in the handling of Dr. Tesla's effects, I am unable to furnish the information you desire.

MAILED 20 JUN 22 1964 COMM...

Sincerely yours,

J. Edgar Hoover

NOTE: No record could be located in Bufiles identifiable with correspondent. Bufile 100-2237 reflects that Dr. Tesla was a world-famous electrical invent and at the time of his death, all of his personal papers and effects were believed dangerous to the country's security if they fell into unauthorized han The book, "Prodigal Genius," by John J. O'Neil, alleges that the FBI took ov a certain safe and opened it, appropriating his property. Bufiles clearly indicate that it was the Office of Alien Property of the Department which did s and the above reply is forwarded in answer to related inquiries.

[redacted] (3)

[redacted]

(b)(7)(c)

Tol[redacted]
Belm[redacted]
Mohr
Casper
Callahan
Conrad
DeLoach
Evans
Gale
Rosen
Sullivan
Tavel
Trot[redacted]
Tel[redacted]
[redacted]dy

RECEIVED DIRECTOR

64 JUN 26 1964

MAIL ROOM ☐ TELETYPE UNIT ☐

87

OREGON STATE UNIVERSITY
CORVALLIS, OREGON 97331
SCHOOL OF SCIENCE
Reply to: DEPARTMENT OF GENERAL SCIENCE

March 28, 1967

FEDERAL BUREAU OF INVESTIGATION
Department of Information
9th Street & Pennsylvania Aven, N.W.
Washington 25, D. C. 20535

ALL INFORMATION CONTAINED
HEREIN IS UNCLASSIFIED
DATE 2-3-80 BY SP4 jrm/pte

Dear Sirs:

I am a student of the history of science at Oregon State University, and I am attempting to write a research paper on a very eccentric scientist who died in 1943. His name was Nikola Tesla, a naturalized American of Serbian extraction, and he died in his hotel room in New York City on January 8, 1943.

During the years leading up to World War II, Nikola Tesla supposedly invented a "Death Ray" which could destroy several hundred aircraft. Mr. Tesla was a very prolific and creative genius during his early years but gradually became something of a crackpot in his old age. As a student of the history of science, it is important to determine whether or not Tesla had any valid ideas in the plans for his death ray. Tesla invented the fluorescent light and also was one of the first scientists to discover X-Rays--hence there may be some possibility that his death ray might actually have been some crude type of laser.

In Tesla's biography, "Prodigal Genius", by John J. O'Neill, the author states on page 277:

> "Operatives from the F.B.I. came to Tesla's hotel room shortly after his death and opened the safe in his room. They took the papers that it contained in order to examine them for a reported secret invention of possible use in the war..."

I am trying to locate Tesla's secret and unpublished writings concerning his death ray. I have searched the literature quite thoroughly and have found nothing. Does the F.B.I. still have these papers or can you tell where I might be able to obtain these writings for examination? Any assistance or information that you may lend me will be very much appreciated.

100-2237-16

Sincerely yours,

[redacted]

REC 49
12 APR 4 1967

(6)
(7)
(C)

4/3/67

CORRESPONDENCE 88

April 3, 1967

REC 49 100-2237-16

[redacted]

ALL INFORMATION CONTAINED HEREIN IS UNCLASSIFIED DATE 7-3-80 BY SP4 Jam/rtc

(b)
(7)
(c)

Dear [redacted]

Your letter of March 28th has been received.

In response to your inquiry, the effects of Dr. Nikola Tesla were impounded, after his death, by the Office of Alien Property of the Department of Justice and not by the FBI. Since we did not participate in the handling of Dr. Tesla's effects, I am unable to furnish the information you desire.

Sincerely yours,

J. Edgar Hoover

John Edgar Hoover
Director

MAILED 30
APR 3 1967
COMM-FBI

NOTE: No record could be located in Bufiles identifiable with correspondent. Bufile 100-2237 reflects that Dr. Tesla was a world-famous electrical inventor, and at the time of his death, all of his personal papers and effects were believed dangerous to the country's security if they fell into unauthorized hands. The book, "Prodigal Genius," by John J. O'Neil, alleges that the FBI took over a certain safe and opened it, appropriating his property. Bufiles clearly indicate that it was the Office of Alien Property of the Department which did so, and the above reply is forwarded in answer to related inquiries.

[redacted] (3)

Tolson
DeLoach
Mohr
Wick
Casper
Callahan
Conrad
Felt
Gale
Rosen
Sullivan
Tavel
Trotter
Tele Room
Holmes
Gandy

54 APR 11 1967

MAIL ROOM ☐ TELETYPE UNIT ☐

(b)
(7)
(c)

89

J. Edgar Hoover
Federal Bureau of Investigation
Washington D. C.

TRUE COPY

[redacted]

Feb. 25, 1969

Dear Mr. Hoover,

HEREIN IS UNCLASSIFIED
DATE 2-3-80 BY SP4 Jam/etc

In the year 1943 the F.B.I. confiscated all of the papers and maybe some of the machines of physicist, Nikola Tesla. These papers were his experiments and ideas at the time of his death. According to the books I've read, these papers were confiscated on the grounds of the enemy getting ahold of his ideas and apply them to war machines.

I have studied all of the material on this man and have found him to be more intelligent than the great "Brain" of his time, Thomas Edison.

Why without Nikola Tesla there would be Westinghouse Company as we know today. This is the man who harnessed Niagara Falls, and was the one and only man who could see the possibilities of Alternating Current when men like Edison said "it would never work."

What I am wondering is, maybe these papers could be reclassified from whatever "Top Secret" classification they now have and be made available for study by the people who understand and can gain knowledge from them.

I would be willing to pay for reproductions of his experiments if nothing else. He still has a great many ideas that have never been tried.

It disturbs me to think that everyone has forgotten about the ideas of this man when he was so advanced for his time.

I can say with assurance that no man alive can say that he knows all of Tesla's ideas. And studying other men's ideas is the way to advance in science faster.

100-2237-12

I hope something can be done to get these papers released.

Thank You,

[redacted] (b)(7)(c)

/s/ [redacted]

100-2237-

90

Feb. 25, 1969

Dear Mr. Hoover,

In the year 1943 the F.B.I. confiscated all of the papers and maybe some of the machines of physicist, Nikola Tesla. These papers were his experiments and ideas at the time of his death. According to the books I've read, these papers were confiscated on the grounds of the enemy getting ahold of his ideas and apply them to war machines.

I have studied all of the material on this man and have found him to be more intelligent than the great "Brain" of his time, Thomas Edison.

Why without Nikola Tesla there would be Westinghouse Company as we know today. This is the man who harnessed Niagara Falls, and was the one and only man who could see the possibilities of Alternating Current when men like Edison said "it would never work".

What I am wondering is, maybe these papers could be reclassified from whatever "Top Secret" classification they now have and be made available for study by the people who understand and can gain knowledge from them. (b)(7)(c)

ALL INFORMATION CONTAINED HEREIN IS UNCLASSIFIED DATE 1-14-82 BY [illegible]

CO[redacted]NDENCE

91

I would be willing to pay for reproductions of his experiments if nothing else. He still has a great many ideas that have never been tried.

It disturbs me to think that everyone has forgotten about the ideas of this man when he was so advanced for his time.

I can say with assurance that no man alive can say that he knows all of Tesla's ideas. And studying other men's ideas is the way to advance in science faster.

I hope something can be done to get these papers released.

Thank You,

[redacted] (b)(7)(c)

March 4, 1969

100-2237-17

[redacted]

(b)(7)(c)

Dear [redacted]

Your letter of February 25th has been received.

In response to your inquiry, the effects of Dr. Nikola Tesla were impounded, after his death, by the Office of Alien Property of the Department of Justice and not by the FBI. Since we did not participate in the handling of Dr. Tesla's belongings, I am unable to furnish the information you desire. A copy of your communication has been referred to the Department of Justice.

Sincerely yours,

J. Edgar Hoover

MAILED 10
MAR 4 - 1969
COMM-FBI

NOTE: Bufiles contain no record of correspondent. Bufile 100-2237 reflects that Dr. Tesla was a world-famous electrical inventor, and at the time of his death, all of his personal papers and effects were believed dangerous to the country's security if they fell into unauthorized hands. The book, "Prodigal Genius," by John J. O'Neil, alleges that the FBI took over a certain safe and opened it, appropriating his property. Bufiles clearly indicate that it was the Office of Alien Property of the Department which did so, and the above reply is forwarded in answer to related inquiries. Copy of letter referred to Assistant Attorney General, Civil Division of the Department.

[redacted] (3)

[redacted]

54 MAR 13 1969

Tolson
DeLoach
Mohr
Bishop
Casper
Callahan
Conrad
Felt
Gale
Rosen
Sullivan
Tavel
Trotter
Tele. Room
Holmes
Gandy

MAIL ROOM ☐ TELETYPE UNIT ☐

[redacted]

(b)(7)(c)

93

(b)(7)(c)

[redacted]

April 8, 1970

Federal Bureau of Investigation
Director of Central Records
Washington, D.C.

Dear Sir:

I am doing a research paper on Nickola Tesla and would appreciate it if you could please provide me with the following information.

That information being why did your Bureau impound his personal effects immediately after his death on January 7, 1943. Secondly, could you provide a list of those effects, and lastly, when were they released and to whom were they given.

Thanking you for the information

[redacted] (b)(7)(c)

P

ALL INFORMATION CONTAINED
HEREIN IS UNCLASSIFIED
DATE 7-3-80 BY SP4 Jmp/stc

REC 44 100-2237-18

APR 15 1970

[redacted]

4/14/70

[redacted]

(b)(7)(c)

CORRES[redacted]

94

REC 44 100 2237-18

April 14, 1970

46

ALL INFORMATION CONTAINED HEREIN IS UNCLASSIFIED DATE 7-3-80 BY SP4 Jrmprte

[redacted]

(b) (7) (c)

Dear [redacted]:

In reply to your inquiry of April 8th, the effects of Dr. Nikola Tesla were impounded, after his death, by the Office of Alien Property of the Department of Justice and not by the FBI. Since we did not participate in the handling of Dr. Tesla's belongings, I am unable to furnish the information you desire. A copy of your communication has been referred to the Department of Justice for any help it may be able to offer.

Sincerely yours,

Edgar Hoover

John Edgar Hoover
Director

[redacted]

(b) (7) (c)

MAILED 9
APR 14 1970
COMM-FBI

NOTE: Bufiles contain no information identifiable with correspondent. Bufile 100-2237 reflects that Dr. Tesla was a world-famous electrical inventor, and at the time of his death, all of his personal papers and effects were believed dangerous to the country's security if they fell into unauthorized hands. The book, "Prodigal Genius," by John J. O'Neil, alleges that the FBI took over a certain safe and opened it, appropriating his property. Bufiles clearly indicate that it was the Office of Alien Property of the Department which did so, and the above reply is forwarded in answer to related inquiries. Copy of letter referred to Assistant Attorney General, Civil Division of the Department.

Tolson
DeLoach
Walters
Mohr
Bishop
Casper
Callahan
Conrad
Felt
Gale
Rosen
Sullivan
Tavel
Soyars
Tele. R
Holmes
Gandy

59 APR 20 1970

MAIL ROOM TELETYPE UNIT

[redacted] (3) [redacted] [redacted] [redacted]

(b) (7) (c) 95

July 15, 1970

REC-3 100-2237-19

[redacted] (6)(7)(C)

ALL INFORMATION CONTAINED HEREIN IS UNCLASSIFIED DATE 7-3-80 BY [signature]

Dear [redacted]:

Your letter was received on July 13th and the interest which prompted you to write to me is appreciated. With respect to your inquiry, the effects of Dr. Nikola Tesla were impounded, after his death, by the Office of Alien Property of the Department of Justice and the FBI did not participate in the handling of Dr. Tesla's belongings. In addition, this Bureau is strictly an investigative agency of the Federal Government and matters such as you mentioned do not come within the scope of this Bureau's authority.

Sincerely yours,

J. Edgar Hoover

[redacted] (6)(7)(C)

John Edgar Hoover
Director

MAILED 8
JUL 15 1970
COMM-FBI

NOTE: Bufiles contain no record of correspondent. Bufile 100-2237 reflects that Dr. Tesla was a world-famous electrical inventor, and, at the time of his death, all of his personal papers and effects were believed dangerous to the country's security if they fell into unauthorized hands. Bufiles indicate that the Office of Alien Property of the Department appropriated his property and replies similar to the above have been used to answer related inquiries.

Tolson
DeLoach
Walters
Mohr
Bishop
Casper
Callahan
Conrad
Felt
Gale
Rosen
Sullivan
Tavel
Soyars
Tele. Room
Holmes
Gandy

54 JUL 23 1970

[redacted] (2)

MAIL ROOM [ ] TELETYPE UNIT [ ]

[redacted] (6)(7)(C)

96

(b)(7)(c)

[redacted]

INFORMATION CONTAINED
HEREIN IS UNCLASSIFIED
DATE 7-3-80 BY SP4 Jmfete

July 8, 1970.

Mr. J. Edgar Hoover,
Director,
Federal Bureau of Investigation,
Washington D. C.

N.I.K. - Tesla

Dear Sir,

I am writing this to you as I believe that most of the government is infiltrated with foreign agents, and there is a very good chance this could be of extreme importance for the defense of our nation.

I met a man a number of years ago that was raised on Long Island in the neighborhood where Mr. Tesla, inventor of the Tesla Coil, had his lab. He told me of Mr. Tesla's notes blowing down the street when the junk men were dismantling his equipment. It would be a wonderful thing is some of these notes were salvaged and could be found.

Mr. Tesla was at least a century ahead of his time. He sent radio signals around the world seventeen years prior to Mr. Marconi, who received the credit, and pioneered many fields. He was so far advanced that he had to invent a special math to keep up with his work.

He, on several accasions talked before the scientists of the world and became very angry at their inability to understand him, and due to this was violently disliked and didnot receive acknowledgement for his discoveries. One of the notes read by this man told of the radio transmission of electricity being brought to a high degree of effiency.

Now here is the thing that should be investigated throughly. During my High School education, in the winter of either 19-25-26 or 1926-27, I made a currant events report on an article appearing in a small publication of that name that was received weekly at the Troy Highschool, Troy Montana. It stated in this article that Mr. Tesla had made an offer to the Congress of the United States that if they would install radio transmission towers at every 150 miles around the border of this country, that he would install equipment that would broadcast a vertical plane of energy beyond the atmosphere through which no material object could pass as it would shatter or lose it's monecular coohesion. It was refused.

There is a good chance that this data is in the files of congress. What a defence, and boy do we need it. EX-117 REC-3 100-2237-19

I have had some results along this line with structured vortices of magnetic fields, but do not have the technical equipment or knowledge to carry out further experiments. The theory is quite simple and deals with particle acceleration, and it works to the best of my knowledge.

9 JUL 16 1970

Sincerely

[redacted]

(b)(6)(c)

[redacted]

97

[redacted] (b)(7)(c)

6 DECEMBER 1971

FEDERAL BUREAU OF INVESTIGATION

WASHINGTON, D.C.

Dear Sir:

I have recently begun a collection and reading file of all matters pertaining to Nikola Tesla. In so doing I was amazed to find that upon his death; January 7, 1943, in NYC, your bureau confined his papers. May I ask if you still "have them in jail". I am extremely interested in his work(s) and am trying to establish my own "Tesla" library. Your assistance would be greatly appreciated.

Very truly yours,

[redacted]

[redacted] (b)(7)(C)

[redacted]

REC- 39 100-2237-20

16 DEC 15 1971

[redacted]

[redacted]

INFORMATION CONTAINED HEREIN IS UNCLASSIFIED DATE 7-3-80 BY [redacted] (b)(7)(C)

[redacted]

98

December 14, 1971

REC- 28 100-2237-20

[redacted] (b)(7)(C)

ALL INFORMATION CONTAINED HEREIN IS UNCLASSIFIED DATE 7-3-80 BY [redacted]

(b)(7)(C)

Dear [redacted]:

Your letter of December 6th has been received.

In response to your inquiry, the effects of Dr. Nikola Tesla were impounded, after his death, by the Office of Alien Property of the Department of Justice and not by the FBI. We did not participate in the handling of Dr. Tesla's belongings in any way. Copies of your communication and my reply have been referred to the Department of Justice.

Sincerely yours,

J. Edgar Hoover

John Edgar Hoover
Director

[redacted] (b)(7)(C)

NOTE: Bufiles contain no record correspondent. Dr. Tesla was world-famous electrical inventor, and at death, his effects believed dangerous to country's security. "Prodigal Genius," by John J. O'Neil, alleges FBI took safe and appropriated his property. Above reply previously given to same inquiries. (100-2237) Material sent to the Assistant Attorney, Civil Division, of the Department.

[redacted] (4)

Tolson
Felt
Rosen
Mohr
Bishop
Miller, E.S.
Callahan
Casper
Conrad
Dalbey
Cleveland
Ponder
Bates
Tavel
Walters
Soyars
Tele. Room
Holmes
Gandy

MAILED 8
FBI

[redacted] (b)(7)(C)

58 DEC 21 1971

MAIL ROOM ☐ TELETYPE UNIT ☐

99

Federal Bureau Of Investigation
Ninth Street and Pennsylvania
Northeast Washington D. C. 20535

Dear Sirs,

Upon rea ding a biography on Nikola Tesla, I found the urge to read more on him and his works. At the end of the book it was stated that the F.B.I. went to his hotel room gathered up his papers and locked them in a vault. The thing I would like to know is the real reason they were locked up and if it would be possible to see some of these records and any other works of his.

I can think of only one possible reason as to cause of his records being locked up and that is because he was too far advanced for his time. This seems to be the only logical solution, but, with technology much more advanced now than in his time it would seem likely that scientists take over where he left off.

Please let me know If I can look at the records and if you can please answer my question of the real reason his records were locked up.

Thank You,

[redacted]

ALL INFORMATION CONTAINED
HEREIN IS UNCLASSIFIED
DATE 7-3-80 BY SP4 Jam/rtc

ST-113

(b)
(7)
(C)

REC-48

100-2237-21

[redacted]

Ack
10-31-72
[redacted]

100

ST-113

REC-48

October 31, 1972

100-2237-21

[redacted]

ALL INFORMATION CONTAINED HEREIN IS UNCLASSIFIED DATE 7-3-80 BY [signature]

(b)(7)(c)

Dear [redacted]:

Your letter was received on October 26th.

In response to your inquiry, the effects of Dr. Nikola Tesla were impounded, after his death, by the Office of Alien Property of the Department of Justice and not by the FBI. Since we did not participate in the handling of Dr. Tesla's belongings, I am unable to furnish the information you desire. I am forwarding a copy of your communication and of this reply to the Department of Justice.

Sincerely yours,

L. Patrick Gray III

L. Patrick Gray, III
Acting Director

MAILED 8
OCT 31 1972
FBI

NOTE: Correspondent is not identifiable in Bufiles. Bufile 100-2237 reflects that Dr. Tesla was a world-famous electrical inventor, and at the time of his death, all of his personal papers and effects were believed dangerous to the country's security if they fell into unauthorized hands. The book, "Prodigal Genius," by John J. O'Neil, alleges that the FBI took over a certain safe and opened it, appropriating his property. Bufiles clearly indicate that it was the Office of Alien Property of the Department which did so, and the above reply is forwarded in answer to related inquiries. Copy of letter referred to Assistant Attorney General, Civil Division of the Department.

Felt
Baker
Bates
Bishop
Callahan
Cleveland
Conrad
Dalbey
Jenkins
Marshall
Miller, E.S.
Ponder
Soyars
Walters
Tele. Room
Mr. Kinley
Mr. Armstrong
Ms. He[illegible]
Mrs. N[illegible]

[redacted]

57 NOV 6 1972

MAIL ROOM ☐ TELETYPE UNIT ☐

(b)(7)(c)

[redacted]

101

[redacted]

April 3, 973

(b)
(7)
(c)

[redacted]

Federal Bureau of Investigation
Washington
District of Columbia

1 ex
Zip Co
dir
gen

ALL INFORMATION CONTAINED
HEREIN IS UNCLASSIFIED
DATE 7-2-80 BY SP4 Jm/rtc

Dear sirs:

During my research on Nikola Tesla, I found that the F.B.I. had confiscated his records pertaining to his experiments. I would like to know if such information is available and if so how copies might be obtained.

t

I am an engineering student and hope possibly to resume where Tesla left off.

I have the honor to remain,

(b)
(7)
(c)

EX-111 REC-36 [redacted] 100-2237-22

10 APR 11 1973

[redacted]

CORRES

102

O
Nikola Tesla

EX-111

REC-36

100-2237-22

April 11, 1973

[redacted]

(b) ALL INFORMATION CONTAINED
(7) HEREIN IS UNCLASSIFIED
(c) DATE 7-3-80 BY SP4 Jim/rte

Dear [redacted]:

Your letter was received on April 9th.

In response to your inquiry, the effects of Dr. Nikola Tesla were impounded, after his death, by the Office of Alien Property of the Department of Justice and not by the FBI. Since we did not participate in the handling of Dr. Tesla's belongings, I am unable to furnish the information you desire. A copy of your communication and of this reply have been referred to the Department of Justice.

Sincerely yours,

L. Patrick Gray, III
Acting Director

NOTE: Bufiles contain no record of correspondent. (Bufile 100-2237 reflects that Dr. Tesla was a world-famous electrical inventor, and at the time of his death, all of his personal papers and effects were believed dangerous to the country's security if they fell into unauthorized hands. The book, "Prodigal Genius," by John J. O'Neill, alleged that the FBI took over a certain safe and opened it, appropriating his property. Bufiles clearly indicate that it was the Office of Alien Property of the Department which did so, and the above reply is forwarded in answer to related inquiries. Copy of letter referred to the Assistant Attorney General, Civil Division of the Department.)

[redacted] (4)

Mr. Felt
Mr. Baker
Mr. Callahan
Mr. Cleveland
Mr. Conrad
Mr. Gebhardt
Mr. Jenkins
Mr. Marshall
Mr. Miller, E.S.
Mr. Soyars
Mr. Thompson
Mr. Walters
Tele. Room
Mr. Kinley
Mr. Armstrong
Mr. Bowers
Mr. Herington
Ms. Herwig
Mr. Mintz
Mrs. Neenan

54 APR 2 [redacted]

MAIL ROOM ☐ TELETYPE UNIT ☐

(b)
(7)
(c) [redacted]

103

[redacted] (b)(7)(c)

June 20, 1973

Federal Bureau of Investigation
Department of Justice
Washington, D. C.

INFORMATION CONTAINED
HEREIN IS UNCLASSIFIED
DATE 7-3-80 BY SP4 Jm/rte

Gentlemen:

I would like to know if any microfilm or other reproductions of Nikola Tesla's notes and papers exist at your office. Tesla was a famous scientist who died in New York City. The Federal Bureau of Investigation entered his safe shortly after this to remove his papers for examination for the war effort. After the war the papers were offered to any group that would start a museum to house them. No one accepted and the papers were finally sent to the Tesla Museum in Belgrade, Yugoslavia, sometime in the early 1950's, possibly just before 1954. Tesla was the inventor of all ac motors and the polyphase system, as well as all flourescent and neon lamps. He was a major pioneer in the early days of radio and discovered many of the early principles of radar. He declined nomination of a Nobel Prize. He was a naturalized citizen of America and said he valued his citizenship papers above all his awards and possessions. Despite this, all his papers were sent to another nation.

I would like to examine some of his papers from 1899 and later without having to fly to Yugoslavia. I have only seen a condesnsed copy of his research from Colorado Springs, but am unable to obtain copies. The principles and equipment are rather out-of-date and well-known, but still useful in my research. [redacted]

I would greatly appreciate help in this matter.

Sincerely, REC-26 100-2237-23

[redacted] (b)(7)(c)

JUN 29 1973

P.S. Tesla died in January of 1943 and shortly after ~~this~~ the papers were removed from his safe. The original copies of these papers were sent abroad prior to 1954, as I believe it was in that year the Yugoslavs founded the Tesla Museum (not to be confused with the Tesla Institute). [redacted]

(b)(7)(c)

104

EX-109

June 27, 1973

REC-26 100-2237-23

[redacted] (b)(7)(C)

ALL INFORMATION CONTAINED HEREIN IS UNCLASSIFIED DATE 2-3-80 BY [illegible]

Dear [redacted]:

Your letter was received on June 25th.

In response to your inquiry, the effects of Dr. Nikola Tesla were impounded, after his death, by the Office of Alien Property of the Department of Justice and not by the FBI. Since we did not participate in the handling of Dr. Tesla's belongings, I am unable to furnish the information you desire. A copy of your communication and of this reply have been referred to the Department of Justice.

Sincerely yours,

William D. Ruckelshaus

William D. Ruckelshaus
Acting Director

[redacted] (b)(7)(C)

MAILED 24 FBI

NOTE: Bufiles indicate one letter to correspondent dated 4-15-66 in reply to his inquiry regarding the Air Force's Project Blue Book and UFO sightings. Bufile 100-2237 reflects that Dr. Tesla was a world-famous electrical inventor, and at the time of his death, all of his personal papers and effects were believed dangerous to the country's security if they fell into unauthorized hands. The book, "Prodigal Genius," by John J. O'Neill, alleged that the FBI took over a certain safe and opened it, appropriating his property. Bufiles clearly indicate that it was the Office of Alien Property of the Department that did so, and the above reply is forwarded in answer to related inquiries. Copy of letter referred to the Assistant Attorney General, Civil Division of the Department.)

[redacted] (4)

[redacted] (b)(7)(C)

Felt
Baker
Callahan
Cleveland
Conrad
Gebhardt
Jenkins
Marshall
Miller, E.S.
Soyars
Thompson
Walters
Room
Kaise
James
Powers
Herrington
Conmy
Mintz
Wardley
Logan

54 JUL 8 1973

MAIL ROOM ☑ TELETYPE UNIT ☐

105

100-2237-28

November 10, 1975

[redacted]

(b) (7) (c) ALL INFORMATION CONTAINED HEREIN IS UNCLASSIFIED DATE 7-3-80 BY SP4 Jpm/rtc

Dear [redacted]:

This is to acknowledge receipt of your Freedom of Information-Privacy Acts (FOIPA) request forwarded to the FBI by the Department of Justice on October 22nd.

In response to your request for files pertaining to Nikola Tesla, please be advised that in order to preserve the privacy of an individual who may be the subject of a similar inquiry, it has been necessary for the FBI to maintain the practice of not indicating whether we do or do not have such information in our files.

If you can provide notarized authorization from Mr. Tesla's next of kin directing us to release to you any information our files may contain concerning him, we shall thereafter search our files and advise you accordingly.

Since we have not conducted a search of our files, please do not infer that we do or do not have the information you requested.

Sincerely yours,

C. M. Kelley

Clarence M. Kelley
Director

MAILED 6
NOV 10 1975
-FBI

1 - The Deputy Attorney General - Enclosure
Attention: Susan M. Hauser

[redacted] (5)

(b) (7) (c)

Assoc. Dir. ___
Dep. AD Adm. ___
Dep. AD Inv. ___
Asst. Dir.:
Admin. ___
Comp. Syst. ___
Ext. Affairs ___
Files & Com. ___
Gen. Inv. ___
Ident. ___
Inspection ___
Intell. ___
Laboratory ___
Plan. & Eval. ___
Spec. Inv. ___
Training ___
Legal Coun. ___
Telephone Rm. ___
Director Sec'y ___

MAIL ROOM ☐ TELETYPE UNIT ☐

62 DEC 30 1975 F 303

[redacted]

GPO : 1975 O - 569-920

106

[redacted] (6)(7)(c)

April 20, 1976

Mr. Clarence Kelly
Director
F.B.I.
Washington, DC

ALL INFORMATION CONTAINED HEREIN IS UNCLASSIFIED DATE 7-3-80 BY [illegible]

Dear Mr. Kelly:

Mr. Allen and Mr. Ruchlehaus, former acting Director of the FBI, contacted me in 1973 regarding the unavailability of American microfilm records of Nikola Tesla's unpublished diary (now in the Belgrade museum, arranged by month per folder).

At the time I discounted the possibility that these unpublished discoveries had military significance. But because of experiments now under way at Hill AFB, I now suspect such military applications exist and feel it imperative that you be notified, particularly in view of the fact that the Soviets have primary access to the entire collection.

Two photos of each page exist.

After Tesla's death, scientists from the Navy and OSS performed a cursory examination of the diary and notes, which if my memory serves me correctly, was one month long, hardly enough time to decipher Tesla's torturous handwriting. Though Tesla wrote in English, his penmanship was small, blurred, and as difficult to translate as a foreign language.

According to the museum director (1971), the Soviets had made copies of some portions, but not the Colorado Springs diary, which numbers 500 pages, 20 that directly pertain to ball lightning, and 20 or so relevant to the equipment construction. (We copied the most significant portions, but feel more exists)

FX-115 REC-52 100-2237-29

[redacted] an article [redacted] magazine, EDN (an electrical engineering magazine), but only with the very recent receipt of an unpublished manuscript from John J. O'Neill's book (PRODIGAL GENIUS) did I place credence on Tesla's later claim to military applications. Incidentally, some of O'Neill's descriptions were inaccurate and exagerated, as we have exceeded Tesla's results and are familiar with the experiments. At any rate, there are three possible military applications.

(b)(7)(c)

4 MAY 3 1976

[redacted]

107

First, Tesla claimed that the lightning balls (which destroyed his equipment) could be used to destroy aircraft. I have talked to AF personnel --such as [redacted] who saw one inside his plane in flight--and found AF personnel fear these "rf balls," as they call them.

Second, it is a suspicion of mine that ball lightning, if injected with lithium, could produce a cheap fusion bomb.

Third--and this may be no more than a suspicion--the propulsion mode of ball lightning involves electro-gravitic interaction, by which means air vehicles of revolutionary configuration may be constructed. There are no presently-known laws of physics that can account for the propulsion (400 mph or so when following an airliner). Other hitherto unsuspected applications may exist.

(b)(7)(C)

None of these applications were the goal of Project Tesla, which centered on producing ball lightning as Tesla did and studying it as a plasma confinement technique for fusion reactors. Incidentally, Tesla's claim to setting up standing waves on the earth's surface (wireless power) was erroneous and involved techniques similar to Project Sanguine, that is, using the earth's atmosphere as a waveguide ([redacted] is aware of our research).

Cordially,

[redacted]

P.S. By a copy of this letter, along with the enclosures, I am notifying the C.I.A.

Enclosures: 2

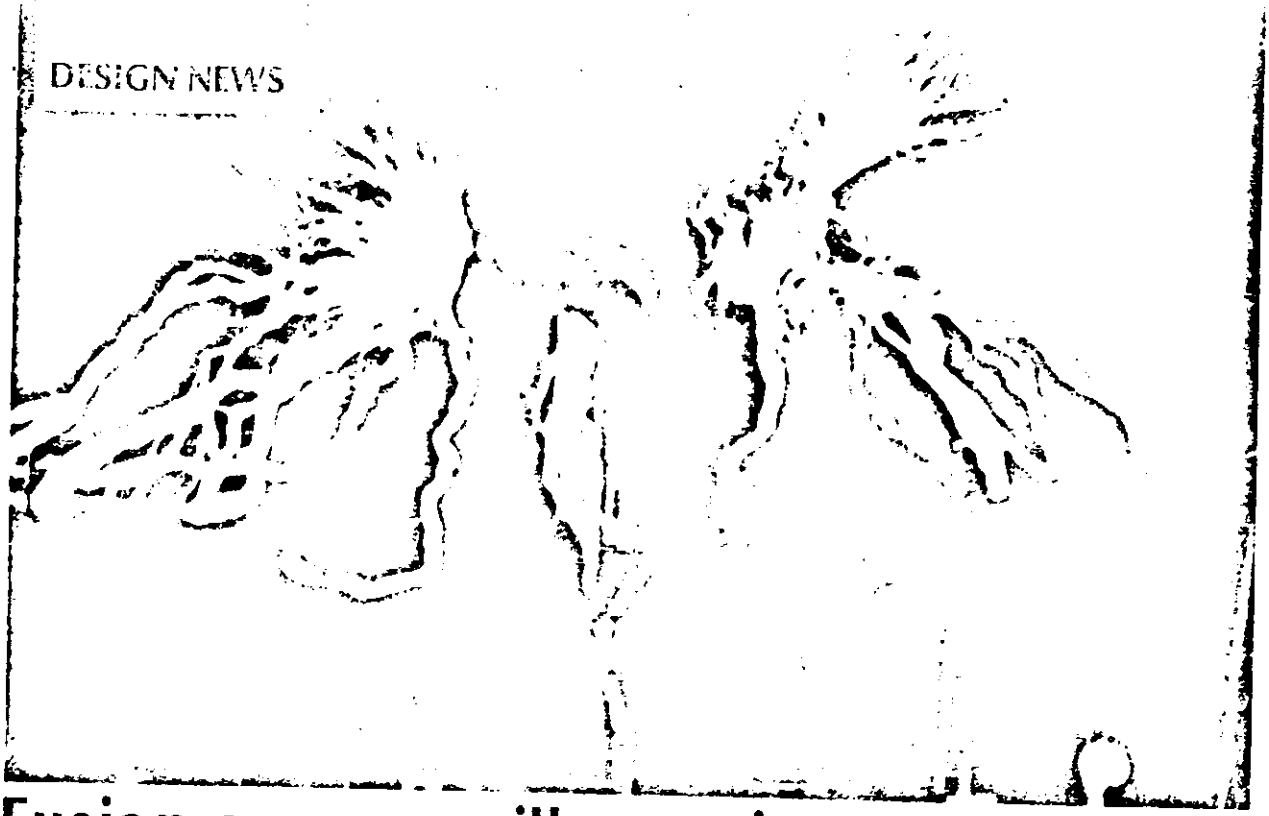

Fusion energy: will experiments in ball lightning provide the key?

Paul Snigier, Associate Editor

In the vast and empty hangar where the first atomic bomb was assembled, a man-made lightning storm is now being unleashed. The voltages of these lightning bolts—20 million volts—are the highest discharge voltages ever produced by man.

Project Tesla, headed by Robert K. Golka and Dr. Robert W. Bass, is an attempt to artificially duplicate one of nature's rarest and most terrifying phenomena—ball lightning. The experiments are based upon the unpublished notes of Nikola Tesla, who, in 1899 at his Colorado Springs laboratory, used a secret *magnifying transmitter* to produce 1.5-in. lightning balls that floated for 30 sec.

The energy surplus

Many physicists, including the eminent Dr. James Tuck, founder of the U.S. fusion program, believe that the lightning ball holds the key to a fantastic, cheap and endless energy source—fusion power, or the energy source used by the stars and sun. The fuel is deuterium, or heavy water, that can be inexpensively extracted from ocean water to provide mankind

Highest voltage continuously oscillating damped-wave lightning generator (ever produced by mankind) creates a current of 1100A at 12.5 MV! Subsequent improvements raised this to a peak current of 2200A at 20 MV. Further improvements could conceivably produce bolts that exceed natural lightning (100 MV)!

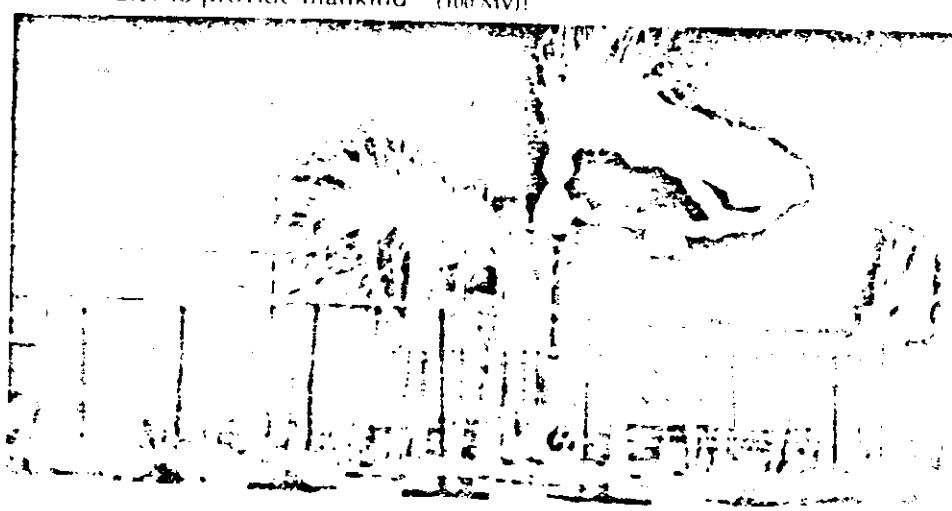

100-2237-29

DISCLOSURE

109

with millions of years of [illegible]. Unfortunately, progress in fusion research, which has centered on magnetic confinement and laser implosions, has been frustratingly slow and full of unpleasant surprises; and scientists warn that success could be as far off as four decades! But if these promising experiments under way at Wendover, UT, are successful, a new unexpected confinement technique could unleash this energy source.

In search of nature's secrets...

Ball lightning, a glowing sphere of red, orange or yellow plasma, often materializes during lightning storms and floats about, often against a strong wind. The ball may bounce along the floor and, on occasion, the sphere will "slip" through glass without breaking it. (The author recently investigated one such case in a hospital, in which the lights were damaged.) At times it materializes inside or even outside aircraft in flight, seemingly impervious to deformation from the wind force.

Witnesses of ball lightning have included such notables as Niels Bohr and Victor Weisskopf, the Director of the MIT Physics Department. Another witness was Secretary of State Dean Acheson, who reported seeing it cross the breakfast table aboard the presidential plane.

The accidental formation of ball lightning has been observed about once per year for the past decade inside building 985 at Hill AF Missile Radiographic Facility, UT. The volleyball-size fireballs drop out of the space adjacent to the high voltage supply of the 25 Mev linear accelerator.

The ball of blue fire floats down to the floor, rolls around randomly and then rises again to the power-supply area where it dissipates without detectable damage. Despite troubleshooting, no explanation can be found for this occurrence.

On one occasion, lightning struck the building—a large concrete structure with a 60-ft. ceiling inside—and, simultaneously, an intense sphere of fire the size of a tennis ball formed above the conduit on the wall at [illegible]ly shoulder level. It moved along the wall for a distance of some 30 ft., floated out and around the neck and shoulders of a person standing near the wall, moved back to the wall and continued along for several feet until it intercepted a duplex outlet on the conduit. At this the ball exploded, causing electrical damage throughout.

A new state of matter?

No presently known laws of physics can account for the stability and bouncing of fireballs unless it includes surface tension. This hitherto unobserved state of matter is a new concept, since plasmas have never previously exhibited such strong surface tension. Also, presently known laws cannot account for the propulsion.

Project Tesla has developed a rigorous mathematical model of the lightning ball's absolute, asymptotic, fluid-dynamical stability. Initial computer studies indicated a density range of 10^{15}-10^{17} cm^{-3}, with a temperature of 10^{5}-10^{6} °K—or seven times hotter than the sun! □

Chapter 34

TESLA TRIES TO PREVENT WORLD WAR II

When Tesla was talking as a scientist he was opposed to wars on moral, economic and all practical and theoretical grounds. But, like most scientists, when he stopped thinking as a scientist, and let his emotions rule his thoughts, he found exceptions in which he felt some wars and situations were justifiable. As a scientist he was unwilling to have the discoveries of scientists applied to the pruposes of war makers, but when the emotional phase of his nature took the ruling position he was then willing to apply his genius to devising measures that would prevent wars by supplying protective devices.

This attitude is exemplified in the following statement which he prepared in the twenties but did not publish:

"At present many of the ablest minds are trying to devise expedients for preventing a repetition of the awful conflict which is only theoretically ended and the duration and main issues of which I correctly predicted in an article printed in the Sun of December 20, 1914. The League is not a remedy but, on the contrary, in the opinion of a number of competent men, may bring about results just the opposite. It is particularly regrettable that a punitive policy was adopted in framing the terms of peace because a few years hence it will be possible for nations to fight without armies, ships or guns, by weapons far more terrible, to the destructive action and range of which there is virtually no limit. Any city at any distance whatsoever from the enemy can be destroyed by him and no power on earth can stop him from doing so. If we want to avert an impending calamity and a state of things which may transorm this globe into an inferno, we should push the development of flying machines and wireless transmission of energy without an instant's delay and with all the power and resources of the nation."

Tesla saw preventative possibilities in his new invention which embodied "death ray" characteristics and which was made several years after the foregoing statement was written. He saw it providing a curtain of protection which any country, no matter how small, could use as a protection against invasion. While he might offer it as a defensive weapon, however, there would be nothing to stop military men from using it as a weapon of offense.

While I did not know the nature of Tesla's plan I was convinced that it did embody many discoveries that would be of commercial value, and these were the angles he should seek to develop. I felt that if he could be induced to develop some minor phase of his work that would have immediate commercial use he could derive an income from it which would enable him to proceed with his more elaborate plans. To this end I sought to gain some insight into his thoughts, that would enable me to get a practical plan in operation. This was no secret to Tesla and he successfully parried every thrust I made.

The clearest conception I got, and that was largely from scattered remarks, and by making deductions from them, concerned a possible manner in which one phase of his curtain of protection might operate. This was a "war" angle and as such it did not interest

100-2237-01

me, but since it involved "lightning balls," or "fire balls," I was very curious. Fi[illegible]lls had always fascina[illegible]o, and I had read everything I could lay my hands on about them.

A fire ball is a strange phenomenon associated with lightning. Some of the energy of the lightning stroke appears to become locked into a ball shaped structure which may be of any size from a couple of inches to a foot in diameter. It looks like a perfect sphere, brightly incandescent and floats like a bubble, being easily carried by air currents. They may last for a short time, from a fraction of a second to many seconds. In this interval, during which they stay fairly close to the ground, they may come close to many objects without damaging them or being damaged by them. Suddenly, for no known reason, the ball explodes doing as much damage as a bomb, if close to structures, and no damage if in the open.

The fire ball looked to me like a gigantically enlarged model of the tiny electron, one of the building blocks of matter, which acts as if it were just a spherical area of space in which an amount of energy was crystallized to give it structure. I felt that if it were possible to discover how a large amount of energy was stored in this fairy bubble structure of a fire ball a new insight might be gained into the structure of the electron and other fundamental particles of matter. Also this method of storing energy could be applied to a thousand useful purposes.

When I approached Tesla with pleas along this line to develop this possible phase of his discovery he would evade direct reply by indulging in a, not always, tolerant lecture on my gullability in believing theories about the complex structure of the atom. While he had in earlier years discussed some of his experiences with fire balls in his laboratory at Colorado Springs and explained his theory of their formation, he would not in the later years permit himself to be drawn into a discussion of them as a possible part of his system. This, of course, made me suspicious that the clue was "hot" but I could be completely wrong in my conclusions. Tesla was very quick in detecting my technique when I sought to narrow down a field by trying to get him to deny statements when he was adamant to direct questions.

Tesla became familiar with the destructive characteristics of fire balls in his experiments at Colorado Springs in 1899. He produced them quite by accident and saw them, more than once, explode and shatter his tall mast and also destroy apparatus within his laboratory. The destructive action accompanying the disintegration of a fire ball, he declared, takes place with inconceivabel violence.

He studied the process by which they were produced, not because he wanted to produce them but in order to eliminate the conditions in which they were created. It is not pleasant, he related, to have a fire ball explode in your vicinity for they will destroy anything they come in contact with.

It will be necessary to reconstruct his statements from very fragmentary notes and a long distance memory.

"Parasite oscillations, or circuits, within the main circuit were a source of danger from this cause. Points of resistance in the main circuit could result in minor oscillating circuits between terminals or between two points of resistance and these minor circuits would have a very much higher period of oscillation than the main circuit and could be set into oscillation by the main current of lower frequency.

"Even when the principal oscillating circuit was adjusted for the greatest efficiency of operation by the dimination of all sources of losses the fire balls continued to occur but these were due to stray high frequency charges from random earth currents.

"From these experiences it became apparent that the fire balls resulted from the interaction of two frequencies, a stray higher frequency wave imposed on the lower frequency free oscillation of the main circuit.

"As the free oscillation of the circuit builds up from the zero point to the quarter wave length node it passes through various rates of change. In a current of shorter wavelength the rates of change will be steeper. When the two currents react on each other the resultant complex will contain a wave in which there is an extremely steep rate of change, and for the briefest instant currents may move at a tremendous rate, at the rate of millions of horsepower.

"This condition acts as a trigger which may cause the total energy of the powerful longer wave to be discharged in an infinitesmally small interval of time and at a proportionately tremendously great rate of energy movement which cannot confine itself to the metal circuit and is released into surrounding space with inconceivable violence."

It is but a step, from learning how a high frequency current can explosively discharge a lower frequency current, to using the principle to design a system in which these explosions can be produced by intent. The following process appears a possible one but no evidence is available that it is the one Tesla evolved: An oscillator, such as he used to send power wirelessly around the earth at Colorado Springs, is set in operation at a frequency to which a given warship is resonant. The complex structure of a ship would provide a great number of spots in which electrical oscillations will be set up of a much higher frequency than those coursing through the ship as a whole. These parasite currents will react on the main current causing the production of fireballs which by their explosions will destroy the ship, even more effectively than the explosion of the magazine which would also take place. A second oscillator may be used to transmit the shorter wavelength current.

Somewhat later I learned the reason for Tesla's reticence to discuss details. This came shortly after Stanley Baldwin replaced Neville Chamberlin as Prime Minister of Great Britain.

Tesla revealed that he had carried on negotiations with Prime Minister Chamberlin for the sale of his ray system to Great Britain for $30,000,000 on the basis of his presentation that the device would provide complete protection for the British Isles against any enemy approaching by sea or air, and would provide an

offensive weapon to which there was no defense. He was convinced, he declared, of the sincerity of Mr. Chamberlain and his intent to adopt the device as it would have prevented the outbreak of the then threatening war, and would have made possible the continuation- under the duress which this weapon would make possible - of the working agreement involving France, Germany and Britain to maintain the status quo in Europe. When Chamberlin failed, at the Munich conference, to retain this state of European equilibrium it was necessary to get rid of Chamberlin and install a new Prime Minister who could make the effort to shift one corner of the triangle from Germany to Russia. Baldwin found no virtue in Tesla's plan and preemptorially ended the negotiations.

Tesla was greatly disappointed by the collapse of his negotiations with the British Government. With it there collapsed his hopes of providing a demonstration of his most recent, and, what he considered, his most important discoveries. He did not, however, dwell on the jubject; beyond the single conversation he did not mention the matter again. He did not get another chance to finance the demonstration of these discoveries.

During the period in which the negotiations were being carried on, Tesla declared, efforts had been made to steal the invention. His room had been entered and his papers examined but the thieves, or spies, left empty handed. There was no danger, he said, that his invention could be stolen for he had at no time committed any part of it to paper. He could trust his memory to preserve every fine detail of his investigations. This was true, he said, of all of his later major discoveries.

The nature of his system makes little difference now; he has gone and has taken it with him. Perhaps, if there is any communication from beyond the veil that separates this life from whatever exists hereafter, Tesla may look down upon earth's struggling mortals and find some way of dropping a hint concerning what he accomplished; but, if the situation is such that this cannot take place, then we must await until the human race produces another Tesla.

ooo

ALL INFORMATION CONTAINED
HEREIN IS UNCLASSIFIED
DATE 7-3-80 BY SP4 Jam/rtc

April 30, 1976 [redacted]

EX-115

REC-47

100-2237-29

[redacted]

(b)(7)(c)

Dear [redacted]:

Thank you for your letter of April 20th, with enclosures. It was certainly most thoughtful of you to furnish us this information, and your interest and courtesy are indeed appreciated.

MAILED 6
APR 30 1976
FBI

Sincerely yours,

C. M. Kelley

Clarence M. Kelley
Director

NOTE: Bufiles indicate limited correspondence with [redacted], last outgoing 6-27-73, in reply to his request concerning papers of Dr. Nikola Tesla. Dr. Tesla was a world-famous electrical inventor, and at the time of his death in 1943, all of his personal papers and effects were believed dangerous to the country's security if they fell into unauthorized hands. The book, "Prodigal Genius," by John J. O'Neill, alleged that the FBI took over a certain safe and opened it, appropriating his property. Bufiles indicated the Office of Alien Property of the Department of Justice did so. Bufile 100-2237-23.

[redacted] (3)

Assoc. Dir. ___
Dep. AD Adm. ___
Dep. AD Inv. ___
Asst. Dir.:
Admin. ___
Comp. Syst. ___
Ext. Affairs ___
Files & Com. ___
Gen. Inv. ___
Ident. ___
Inspe[redacted]
Intel[redacted]
[redacted]
Legal C[redacted]
Plan. & Eval. ___
Spec. Inv. ___
Training ___
Telephone Rm. ___
Director [redacted]

(b)(7)(c)

[redacted]

MAIL ROOM ☐ TELETYPE UNIT ☐

~~58 MAY 21 1976~~
31 JUN 21 1976

GPO : 1975 O - 594-120

115

Assoc. Dir. ___
Dep. AD Adm. ___
Dep. AD Inv. ___
Asst. Dir.:
Adm. Serv. ___
Ext. Affairs ___
Fin. & Pers. ___
Gen. Inv. ___
Ident. ___
Inspection ___
Intell. ___
Laboratory ___
Legal Coun. ___
Plan. & Eval. ___
Rec. Mgnt. ___
Spec. Inv. ___
Training ___
Telephone Rm. ___
Director Sec'y ___
FBI/DOJ

JUN 16

United States Senate

To ensure proper handling please return all correspondence TO THE ATTENTION OF:

[redacted]

Respectfully referred to:

FBI

Please respond to the attached inquiry in duplicate and return the enclosure. Thank you for your cooperation.

(b)(7)(C)

[redacted] U.S.S.

EXP PROC

REC-34 100-2237

JUN 17 1976

[redacted]

ENCLOSURE

116

Case

[redacted]

(b)(7)(c)

New Senate Office Bldg
Room 5241, Washington DC 2510

Dear Sir.

I am a substitute in the Milwaukee Public School System. I do scientific experiments in high voltage electricity. I have studied all the available writings of the dead genius Nikola Tesla (1861 - January 7, 1943)

When Nicola Tesla died the Federal Bureau of Investigation came and opened the ~~[illegible]~~ safe in his room and took the papers it contained, to examine ~~[illegible]~~ them

117

ENCLOSURE

for a reported secret invention of
possible use in II W.W..

As a citizen & a
Scientist I would like to
study these unpublished papers
with hope of findings new
ideas for producing an alternate
source of energy. Something
that Nikola Tesla knew about
and because of his unfortunate
financial status, was not able
to develop into a working model
Please help. -

With love in The Lo

[redacted]

(b)(7)(c)

[redacted]

REC-34

100-2237-30

June 23, 1976

Honorable [redacted]
United States Senate
Washington, D. C. 20510

ALL INFORMATION CONTAINED HEREIN IS UNCLASSIFIED DATE 2-3-80 BY SP4 Jrm/rtc (b) (7) (c)

Dear Senator [redacted]:

This will respond to your communication of June 16th enclosing the letter of [redacted]

The effects of Dr. Nikola Tesla were impounded, after his death, by the Office of Alien Property of the Department of Justice and not by the FBI. Since we did not participate in the handling of Dr. Tesla's belongings, I am unable to furnish the information you desire.

A copy of your communication and of this reply are being referred to the Department of Justice and the enclosure to your communication is being returned as requested.

Sincerely yours,

C. M. Kelley

Clarence M. Kelley
Director

Enclosure
1 - Assistant Attorney General - Enclosures (2)
Civil Division
1 - Milwaukee - Enclosures (2)
1 - Office of Congressional Affairs - Enclosures (2)
NOTE: This response is consistent with past responses to inquiries of a similar nature. Bufile 100-2237 reflects that the Office of Alien Property took possession of Dr. Tesla's papers following his death.

[redacted] (7)

Assoc. Dir. ___
Dep. AD Adm. ___
Dep. AD Inv. ___
Asst. Dir.:
Adm. Serv. ___
Ext. Affairs ___
Fin. & Pers. ___
Gen. Inv. ___
Ident. ___
Inspection ___
Intell. ___
Laboratory ___
Legal Coun. ___
Plan. & Eval. ___
Rec. Mgnt. ___
Spec. Inv. ___
Training ___
Telephone Rm. ___
Director Sec'y ___

MAILED 10
JUN 23 1976
FBI

(b) (7) (c)

[redacted]

56 JUL 14 1976

MAIL ROOM ☐ TELETYPE UNIT ☐

[redacted]

119

FBI/DOJ

July 26, 1979

Dear Mr. Webster:

ALL INFORMATION CONTAINED HEREIN IS UNCLASSIFIED DATE 7-14-81 BY [illegible]

OUTSIDE SOURCE

I am writing this letter in regard to some papers you have in your possession by Nikola Tesla.

I have for some time now been studying the works of Mr. Tesla and I am involved in the research and further developement of his efforts. I have in my possession a copy of almost everything that was ever written by him.

However I have read that on the day following his death (he died the night of January 7th, 1943, so probably January 8th, 1943) the Federal Bureau of Investigation went to where Mr. Tesla had been staying - the Hotel New Yorker, New York City, New York and collected all notes and papers that he had with him there.

REC 79 100-22237-[illegible]

2 AUG 7 1979

To further my studies and hopefully complete them it would be deeply appreciated if you would send me a copy of all the notes, papers, books, drawings etc. that were found there.

ack 8-4-79

[redacted]

(b) Thank you,

(7)

(c)

[redacted]

120

UNITED STATES GOVERNMENT — UNITED STATES DEPARTMENT OF JUSTICE
FEDERAL BUREAU OF INVESTIGATION

Memorandum

Assoc. Dir. ___
Dep. AD Adm. ___
Dep. AD Inv. ___
Asst. Dir.:
Adm. Servs. ___
Crim. Inv. ___
Ident. ___
Intell. ___
Laboratory ___
Legal Coun. ___
Plan. & Insp. ___
Rec. Mgmt. ___
Tech. Servs. ___
Training ___
Public Affs. Off. ___
Telephone Rm. ___
Director's Sec'y ___

TO : Mr. Bresson

DATE: 2/25/80

FROM : [redacted] (b)(7)(c)

SUBJECT: FREEDOM OF INFORMATION ACT DISCLOSURE REGARDING DR. NIKOLA TESLA

ALL INFORMATION CONTAINED HEREIN IS UNCLASSIFIED DATE 7-3-80 BY SP4 Jrm/r

PURPOSE:

To reduce time spent on handling of requests for information on captioned subject and to promote uniformity of disclosure.

DETAILS:

A search of FBIHQ central records indices reflects that Dr. Nikola Tesla is carried as the subject of Bufile 100-2237. Virtually all information in this file is inquiry-type correspondence. For purposes of FOIA releases, copies of this material have not been made and requesters have been so advised. Copies of the remaining material in the file totalling 29 pages, however, has been processed for disclosure. Numerous requesters have sought information relating to Dr. Tesla under the FOIA. Therefore, it is recommended that the disclosure documents maintained in Bufile 190-16504-4 be considered the preprocessed release appropriate for responses by the Initial Processing Unit for any further requests for information on this subject.

RECOMMENDATION:

That the Initial Processing Unit, FOIPA Branch, Records Management Division, add captioned case to their list of preprocessed cases and handle any future requests for such information. 100-2237-

1 - [redacted]
1 - [redacted]

XEROX

MAR 27 1980

100-2237 190
190-16504 1980

(b)(7)(c)

[redacted]

[redacted] (7)

121

Buy U.S. Savings Bonds Regularly on the Payroll Savings Plan

August 6, 1979

OUTSIDE SOURCE

[redacted] (b)(1)(c)

ALL INFORMATION CONTAINED HEREIN IS UNCLASSIFIED DATE 2-3-80 BY SP4 Jenkins

Dear [redacted]:

Your recent letter requesting information concerning Dr. Nikola Tesla has been received.

The effects of Dr. Tesla were impounded, after his death, by the Office of Alien Property of the Department of Justice and not by the FBI. We have no preprinted material available for public distribution regarding Dr. Tesla. However, under the provisions of the Freedom of Information Act (Title 5, United States Code, Section 552), requests have been made in the past regarding your topic and there may be documents available to you under Title 28--Code of Federal Regulations.

If you are interested in seeking such documents under the Freedom of Information Act, you should make a separate inquiry, clearly marking the envelope and letter as a Freedom of Information Act request, and direct it to the Director, Federal Bureau of Investigation, 9th Street and Pennsylvania Avenue, N.W., Washington, D. C. 20535. In the letter you must request documents regarding the specific topic of interest to you.

REC-79
EX-137
100-2237-32

Sincerely yours,

DE-79

William L. Bailey
Assistant Director

MAILED 11
AUG 6 1979
FBI

2 AUG 7 1979

Assoc. Dir. 1
Dep. AD Adm.
Dep. AD Inv.
Asst. Dir.:
Adm. Servs.
Crim. Inv.
Ident.
Intell.
Laboratory
Legal Coun.
Plan. & Insp.
Rec. Mgnt.
Tech. Servs.
Training
Public Affs. Off.
Telephone Rm.

[redacted] - Enclosure
Room 6958
(This correspondence response may engender a future FOIA inquiry.)

NOTE: Based upon available information, correspondent is not identifiable in Bufiles.

[redacted]lch (4)

(b)(7)(c)

122

[redacted]

FBI/DC

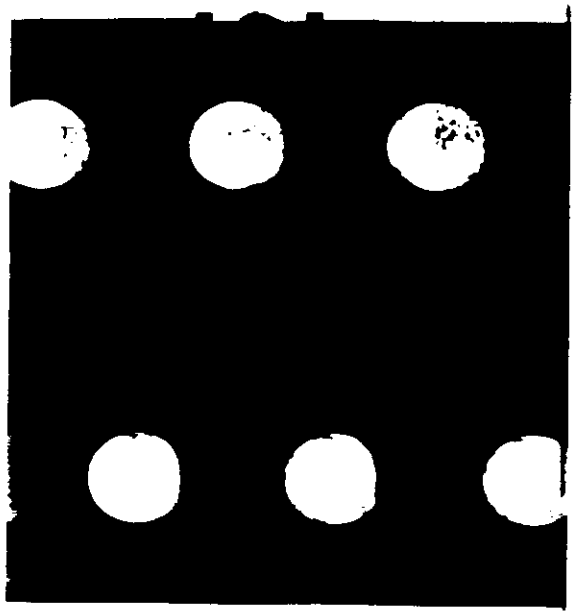

(Rev. 10/10/79)

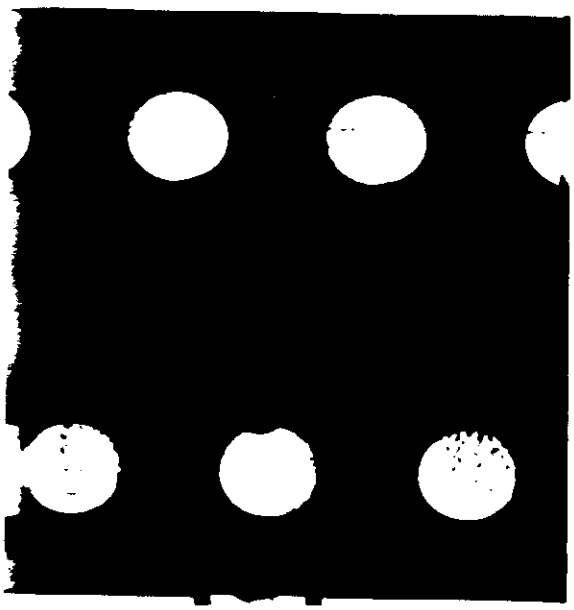

DEPARTMENT OF JUSTICE
FEDERAL BUREAU OF INVESTIGATION
INTERNAL ROUTING/ACTION SLIP

TO	BLDG.	ROOM	NAME/TITLE/ORGANIZATION	
	JEH	7142	Mr. Colwell	235
	JEH	7110	Mr. Boynton	235
	JEH	7110	Mr. Moore	235
	JEH	5829	Mr. Bailey/Rogers	211
	JEH	5829	Mr. O'Brien/Lass	211
	JEH	6296	Mr. Flanders/Woleslagle	314
			OPERATIONS SECTION	
	JEH	6992	Mr. Ervin/Poston	314
	JEH	6993	Mr. Tierney/Poston	314
	JEH	6280	CHIEF, TAR/Secretary	314
			SA:	
			Attn:	
	JEH	6587	CHIEF, FIELD COOR.	314
			SA:	
			Attn:	
	JEH	6958	CHIEF, IPU/Secretary	314
			SA:	
			Attn:	
	JEH	6363	File Duplication	314
	JEH	6268	Tickler/Index Group	314
	JEH	6992	Leave Clerk	314
	JEH	6348	Word Processing Center	314
	JEH	6380	DCRU	314
			Attn:	

BLDG	ROOM	NAME/TITLE/ORGANIZATION	
		DISCLOSURE SECTION	
JEH	6995	Mr. Bresson/Nemmensen	314
JEH	6994	Mr. Lewis/Nemmensen	314
JEH	6927	CHIEF, UNIT A/Secretary	314
		SA: Team	
		RA: Team	
JEH	6959	CHIEF, [redacted]	314
		SA: Team	
		RA: Team	
JEH	6975	CHIEF, UNIT C/Secretary	314
		SA: Team	
		RA: Team	
JEH	6986	CHIEF, UNIT D	314
		SA: Team	
		RA: Team	
JEH	6786	CHIEF, UNIT E	314
		SA: Team	
		RA: Team	
JEH	6387	CHIEF, UNIT F/Secretary	314
		SA: Team	
		RA: Team	

(2)

ALL INFORMATION CONTAINED HEREIN IS UNCLASSIFIED DATE 2-14-82 BY [illegible]

I would prefer IPU being alerted that any request for Tesla file be referred directly to [redacted] whereupon she would see that appropriate release is made

☐ RECOMMENDATION/COMMENT
☐ SEE REMARKS ON REVERSE
☐ MAKE COPIES (NO.)
☐ RETURN (BY)
☐ LOG
☐ FILE
☐ SEE ME
☐ CALL ME
☐ NECESSARY ACTION
☐ COORDINATE
☐ PER INQUIRY
☐ INFORMATION

FROM Freedom of Information-Privacy Acts Branch

THOMAS H. BRESSON SECTION CHIEF

BLDG. | ROOM

PHONE | DATE

[redacted]

FORM DOJ-359A
8-1-74

(b)
(7)
(C)

123

CONFIDENTIAL

OFFICE OF THE UNDER SECRETARY OF DEFENSE

WASHINGTON, D.C. 20301

RESEARCH AND ENGINEERING

FEDERAL GOVERNMENT

9 FEB 1981

B11

MEMORANDUM FOR THE DIRECTOR, FEDERAL BUREAU OF INVESTIGATION

SUBJECT: Papers Recovered on the Death of Nicola Tesla (U)

(U) We understand that the FBI may have possession of a number of papers found after the death of Nicola Tesla in 1943. Nicola Tesla was a brilliant electrical engineer (i.e. the Tesla Coil) who was a pioneer in various aspects of electrical transmission phenomena.

(C) We believe that certain of Tesla's papers may contain basic principles which would be of considerable value to certain ongoing research within the DoD. It would be very helpful to have access to his papers.

(U) Since we have really no idea of the possible volume of these papers, we would be happy to provide a researcher who could assist you in reducing the magnitude of the search. If there are further questions, I am the point of contact within the DoD and can be reached at 695-6364 or 695-7417.

Allan J. MacLaren

Allan J. MacLaren
LtColonel, USAF
Military Assistant
Strategic and Space Systems

REGISTERED
1059638

FBI
ALL INFORMATION CONTAINED
HEREIN IS UNCLASSIFIED
DATE 4-8-93 BY 9803 [redacted] b7C
FOIPA No. 356,608
362,001

100-2237-33

Per DOD letter dated 3-29-93
with Enclosures 1 and 2
All DOD info is unclassified
DOD referenced FOI/PA #'s 356,608 and
362,001
4/8/93 9803 [redacted] b7C

ALL INFORMATION CONTAINED
HEREIN IS UNCLASSIFIED
DATE 7-14-93 BY SP1DSK/MK

2 MAR 12 1981

b7C

Classifed by: DUSDRE/S&SS
Declassify on: February 1987

DECLASSIFIED BY 1048 [redacted]
ON 1-27-93
Per Army letter 5-25-89
291860

CORRESPONDENCE

50 MAR 30 1981

CONFIDENTIAL

124

March 10, 1981

Lt. Col. Allan J. MacLaren, USAF
Military Assistant
Strategic and Space Systems
Office of the Under Secretary
of Defense
Washington, D. C. 20301

FEDERAL GOVERNMENT

ALL INFORMATION CONTAINED
HEREIN IS UNCLASSIFIED
DATE 7-14-92 BY SP1 ASK/MKE

Dear Colonel MacLaren:

Your memorandum of February 9 requesting access to the scientific papers of Dr. Nikola Tesla which might be in our files has been referred to my office for reply.

A preliminary review of our files indicates that the FBI did not participate in the handling of Dr. Tesla's belongings following his death in New York City in January, 1943. His papers were examined by representatives of the Office of Alien Property, the Navy Department and the Office of Scientific Research and Development. In February, 1943, the papers apparently were released to Mr. Sava N. Kosanovic, Dr. Tesla's nephew and the administrator of his estate. Mr. Kosanovic's address at that time was 11 Central Park South, New York, New York.

A complete search of our indices is being made to determine if we have any information that might be useful to you. You will be notified of the results of this search at the earliest possible date.

DE-110/100-2237-34

MAILED 3
MAR 10 1981
FBI

Sincerely,

MAR 12 1981

Roger S. Young
Assistant Director in Charge
Office of Congressional
and Public Affairs

1 - [redacted] (FOIPA) - Enc.
1 - Mr. Young - Enc.
1 - [redacted] - Enc.

(b)(7)(c)

NOTE: Reply discussed with [redacted] FOIPA, RMD, who has handled similar requests for information in our files concerning Dr. Tesla. In numerous previous responses we have said that the Office of Alien Property the Department of Justice impounded Dr. Tesla's papers after his death. However, the Office of Foreign Litigation, Civil Division, indicated that Dr. Tesla's papers are not in their possession.

Exec AD Inv. ___
Exec AD Adm. ___
Exec AD LES ___
Asst. Dir.:
Adm. Servs. ___
Crim. Inv. ___
Ident. ___
Intell. ___
Laboratory ___
Legal Coun. ___
Plan. & Insp. ___
Rec. Mgnt. ___
Tech. Servs. ___
Training ___
Public Affs. Off. ___
Telephone Rm. ___
Director's Sec'y ___

[redacted] (c)

60 MAR 30 1981

139

(b)
(7)
(c)

MAIL ROOM ☑

125

March 20, 1961

Lt. Col. A. J. MacLaren
Military Assistant
Strategic and Space Systems
Office of the Under Secretary
of Defense
Washington, D. C. 20301

FEDERAL GOVERNMENT

ALL INFORMATION CONTAINED
HEREIN IS UNCLASSIFIED
DATE 7-14-92 BY [illegible]

Dear Colonel MacLaren:

A complete search of our retrievable files concerning Dr. Nikola Tesla shows that all notes and material in his immediate possession at the time of his death on January 7, 1943, were placed in the custody of the Alien Property Custodian under seal by the United States Government. These materials have never been in the care or custody of the FBI.

On January 26 and 27, 1943, Federal authorities made a thorough review of the effects of Dr. Tesla to determine if any ideas of significant value to the United States war effort could be found. His effects were examined at the Manhattan Warehouse and Storage Company at 52nd and 7th Avenue, New York, New York, where they apparently were taken after his death. Participating in this examination were representatives from the New York and Washington Offices of the Alien Property Custodian, the Office of Scientific Research and Development at the Massachusetts Institute of Technology, the Office of Naval Intelligence, and United States Naval Research. The FBI did not participate in this examination. (65-47953 section 1)

It was the considered opinion of a spokesman of those examiners "that there exist among Dr. Tesla's papers and possessions no scientific notes, descriptions of hitherto unrevealed methods or devices, or actual apparatus which could be of significant value to this country or which would constitute a hazard in unfriendly hands." There was thought to be no technical or military reason why further custody of the property should be retained. However, our files indicate that certain papers, which were regarded as typical of Nikola Tesla's writings and thoughts in the period of 1925 to 1942, were removed for the purpose of record to the Office of the Alien Property Custodian. (65-47953 section 1)

MAILED 6
MAR 23 1961
FBI

Exec AD Inv. ___
Exec AD Adm. ___
Exec AD LES ___
Asst. Dir.:
Adm. Servs. ___
Crim. Inv. ___
Ident. ___
Intell. ___
Laboratory ___
Legal Coun. ___
Plan. & Insp. ___
Rec. Mgnt. ___
Tech. Servs. ___
Training ___
Public Affs. Off. ___
Telephone Rm. ___
Director's Sec'y ___

1 - Mr. Young
1 - [redacted]
1 - [redacted]

MAIL ROOM [redacted]

V-38 DE-113 100-2237-25 MAR 25 1961

BE

(SEE NOTE PAGE THREE)

[redacted]

126

. Col. A. J. MacLaran

A memo dated October 17, 1945, from our New York Office said that at that time Dr. Tesla's effects remained at the Manhattan Storage Warehouse in some 75 packing boxes and trunks under seal by the New York Department of Taxation. The rental for this storage, approximately $15 per month, was being paid by Charlotte Muzar, 134 East 63rd Street, New York, New York, who was listed as an agent for Sava Kosanovich, Dr. Tesla's nephew and administrator of his estate. (65-47953-14)

On October 26, 1945, [redacted] a young scientist who had been Tesla's protege, called in person at our New York Field Office. With him were [redacted] and [redacted] from a research development unit at Wright Field, Dayton, Ohio. These men carried a letter signed by [redacted] requesting that the FBI allow the bearers of the letter access to the effects of Nikola Tesla. (65-47953-15)

It was explained to [redacted] that the FBI had no jurisdiction over Tesla's effects, and they were referred to the Office of the Alien Property Custodian. Bureau files do not indicate whether the men ever examined Tesla's belongings. (65-47953-15)

The Tesla effects remained in rooms 5J and 5L of the Manhattan Storage Company. In the 1950s, FBI Agents were told by company management that the only recorded visit had been made by "Federal authorities" in January, 1943. [redacted] recalled that the men had taken numerous photographs. His description of the equipment used would tend to show that a microfilm reproduction was made of the papers of the deceased. (65-47953-27)

Our files do not reflect any pertinent information on the Tesla materials since that date. Their current whereabouts or condition are not reflected in our files.

For further information regarding this matter, you may wish to contact the Office of the Alien Property Custodian and the other Federal agencies mentioned above.

I hope that we have been of assistance to you.

Sincerely,

Roger S. Young
Assistant Director in Charge
Office of Congressional
and Public Affairs

(CONTINUED - OVER)

127

Lt. Col. A. J. MacLaran

NOTE: On February 9, 1981, Col. MacLaran wrote to us inquiring about the scientific papers of Dr. Nikola Tesla. In a return letter of March 9, we informed him that a thorough review of our files would be made in search of the information he requested. This was done and he is being informed of the results. Tesla's papers have been the subject of numerous inquiries by various individuals and organizations since his death. FBI received over 20 FOIA requests on this matter during the period 1973-1980. Matter coordinated with FOIA Section, RMD.

OFFICE OF THE UNDER SECRETARY OF DEFENSE

WASHINGTON, D.C. 20301

RESEARCH AND
ENGINEERING

1 APR 1981

FEDERAL GOVERNMENT

Mr. Roger S. Young
Assistant Director in Charge
Office of Congressional and Public Affairs
Federal Bureau of Investigation
Washington, D.C. 20535

both letters addressed to Lt Col. A.J MacLaren

Dear Mr. Young,

Thank you very much for your letters of March 10 and March 20, 1981, in response to our request re Dr. Tesla. We very much appreciate the effort that must have gone into this. On behalf of the Deputy Under Secretary (Strategic and Space Systems), Dr. S. L. Zeiberg, I would like to thank you and the people who spent their time searching out the relevant data.

Sincerely,

ALL INFORMATION CONTAINED
HEREIN IS UNCLASSIFIED
DATE [illegible] BY [illegible]

Allan J. MacLaren

Allan J. MacLaren
Colonel, USAF
Military Assistant
Strategic and Space Systems

DE-110 100-2237-36

16 APR 10 1981

Per DoD letter dated 3/29/93
With Enclosures 1 and 2
ALL DoD info is unclassified.
DoD referenced FOI/PA #s 356,608 and 362,001
4/8/93 9803 [redacted] b7C

V-11

No acknowledgement necessary

10 French

Vines

FBI
ALL INFORMATION CONTAINED
HEREIN IS UNCLASSIFIED
DATE 4-8-93 BY 9803 [redacted] ICE
FOIPA No. 356,608
362,001

b7C

Off. of Cong. and Pub. Aff.

129

21 July 1981 [redacted] (b)(7)(C)

Director of the FBI
Washington, D.C.

[redacted]

Dear Sir:

While attending college, I came across an article about the electrical genius, Nicolai Tesla. Mr. Tesla was an electrical genius with such peers as EDISON and WESTINGHOUSE. Tesla designed the basic generator and was the first man to introduce alternating current to the people. The article, written in an underground SanFrancisco newspaper, stated that Tesla also worked with electromagnetic waves and supposedly built a plant that could harness the electromagnetic waves out of the earth's atmosphere sufficiently enough to use them as a source of electricity. The article stated that Tesla built such a plant and lit up a city street 150 miles away by sending the electromagnetism via radio waves. This method is presently being used in electronic warfare. After that, the article stated that the FBI confiscated his plans and buried them in your archives. Their reasoning was that such a free form of energy would knock out a big chunk of the oil, coal, and nuclear forms of energy and their contributions to the economy(money for research and employment). All I want to know is if there is any truth to this story and if so what was the FBI's reasons and when are the archives opened again so that Tesla's work could come to light again. Now bear in mind that this man was an electrical genius and even had a unit of electrical measure named after him. If he did figure out a way to utilize the earth's electromagnetic waves then I believe that we are ready to gradually phase out our dependence on oil, ease the volatile tension in the Middle East and put all that money presently going to the Arabs into

[redacted]

100-2237-37

17 AUG 11 1981

(b)(7)(C)

130

space research, joint international research and deep-sea research to help solve our population problem. I am talking about huge sums of money being released that could speed up the experts present projected times of producing significant gains in these still relatively new fields.

You could at least take the time to check out what I am saying and judge for yourself whether or not the archives should be opened now to put the world back on a more secure heading.

Sincerely,

[redacted]

(b)(7)(C)

[redacted]

August 7, 1981

ALL INFORMATION CONTAINED
HEREIN IS UNCLASSIFIED
DATE 7-14-12 BY [illegible]

OUTSIDE SOURCE

[redacted] (b)(7)(c)

Dear [redacted]:

Judge Webster has referred your letter of July 21st to me for a reply. A check of our files indicates Dr. Nikola Tesla's effects were impounded after his death by the Office of Alien Property of the Department of Justice and not by the FBI. While your interest is indeed appreciated, the FBI is unable to answer your questions as we did not participate in the handling or have anything to do with the storage of Dr. Tesla's belongings.

To be as helpful as possible, I am forwarding a copy of this communication to the Department of Justice.

Sincerely,

S

Roger S. Young
Assistant Director in Charge
Office of Congressional
and Public Affairs

MAILED 9
AUG 10 1981
FBI

1 - Acting Assistant Attorney General - Enclosure
Civil Division

NOTE: [redacted] is not identifiable in Bufiles. Dr. Tesla died on 1/7/43 and we have received much correspondence regarding his belongings which were impounded by the Office of Alien Property of the Department of Justice.

[redacted] (4)

100-2237-38

Exec AD Inv. ___
Exec AD Adm. ___
Exec AD LES ___
Asst. Dir.:
Adm. Servs. ___
Crim. Inv. ___
Ident. ___
Intell. ___
Laboratory ___
Legal Coun. ___
Plan. & Insp. ___
Rec. Mgmt. ___
Tech. Servs. ___
Training ___
Public Affs. Off. ___
Telephone Rm. ___
Director's Sec'y ___

MAIL ROOM ☑

(b)(7)(c)

132

FD-36 (Rev. 8-26-82)

FBI

TRANSMIT VIA:
☐ Teletype
☐ Facsimile
☒ AIRTEL

PRECEDENCE:
☐ Immediate
☐ Priority
☐ Routine

CLASSIFICATION:
☐ TOP SECRET
☐ SECRET
☐ CONFIDENTIAL
☐ UNCLAS E F T O
☐ UNCLAS

SECRET

Date 8/18/83

TO: DIRECTOR, FBI
ATTN: INTD, SUPERVISOR [redacted]

SECRET

FROM: SAC, CINCINNATI [redacted] (P)

NIKOLA TESLA
[redacted]
(OO: CI)

This communication is classified "Secret" in its entirety.

Re telephone call of SA [redacted], Cincinnati Division, to Supervisor [redacted] FBIHQ, on 8/11/83.

Enclosed for the Bureau and New York is one copy each of pertinent pages from the 1981 book titled "Tesla: Man Out of Time" by Margaret Cheney, with important passages underlined.

For information of Bureau and New York, [redacted] at Wright-Patterson Air Force Base (WPAFB) and [redacted] also at WPAFB, have both been in contact with SA [redacted] at the Dayton, Ohio RA regarding possible FBI

SECRET

Classified by: 8262
Declassify on: OADR

Classified by [redacted]
Declassify on: OADR

ENCLOSURE

2 - Bureau (Enc. 1)
2 - New York (Enc. 1)
2 - Cincinnati
[redacted]
(6)

ALL INFORMATION CONTAINED HEREIN IS UNCLASSIFIED EXCEPT WHERE SHOWN OTHERWISE

17 AUG 22 1983

Approved: [redacted] Transmitted _____ (Number) _____ (Time) Per [redacted]

53 NOV [illegible] 1983

133

involvement in the seizing of Nikola Tesla's research papers and other documents and scientific instruments after his death on January 7, 1943.

They both explained that Tesla was a scientific genius and experimenter who was born in Yugoslavia of Serbian parents on 7/10/56, went to school later in Gratz, Austria, Prague, Czechoslovakia and Paris, France. He immigrated to the U.S. in the early 1880's, worked for Thomas Edison's laboratory for a couple of years, then started his own lab after being paid $1 million dollars for rights to his patents on his polyphase systems of alternating current dynamos, which lead to the harnessing of Niagra Falls for producing electricity and then the power system of the whole country. He was naturalized in 1889. He predicted wireless communication (radio). His later experiments in Colorado and elsewhere lead to his producing artificial lightning in the millions of volts. He also had patents on the concept of neon and flourescent lights, but he later made little money on his later inventions, although he continued to do experiments leading to devices of great potential worth, which he never patented. He became more reclusive in his later years, living in various hotels in New York City. In the 1930's he claimed he had developed the concept and method of building a "death ray", which could destroy planes at many miles distant, for defending America. Also, there are report of resonance machines or devices whereby he could shake one or many large city buildings from some distance away.

Both [redacted] and [redacted] said that Tesla donated "some" of his papers (or copies thereof) to the Tesla Institute in Belgrade, Yugoslavia; set up in the 1930's in his honor by their government. Biographies on Tesla claim that either the custodian of Alien Property and/or the FBI seized his papers and other personal effects, including a safe or safes, and other property immediately after his death in 1943. This is elaborated on in the enclosed copies of certain pages of Margaret Cheney's book, "Tesla: Man Out of Time". (b)(1) (c)

[redacted] said that after World War II Tesla's papers were shipped to the Tesla Institute in Belgrade, Yugoslavia, by his nephew, Sava Kosanovic, who had become Tito's Ambassador to the U.S. There were reports that some microfilming of Tesla's papers by government agents while they were still in storage in New York under Kosanovic's custody.

Also, the Soviet Union has allegedly had access to some of Tesla's papers, possibly in Belgrade and/or else where, which influenced their early research into directed energy weapons, and Butler feels access to much of Tesla's papers on lightning, beam weapons and/or "death rays" would give him more insight into the Soviet beam weapons program. This is Butler's area of expertise and responsibility. He has been unable to locate any Tesla papers or copies of same in the classified or unclassified libraries at WPAFB. However, there are reports that some portions of them were shipped by the Custodian of Alien Property Office in Washington, D.C. to a technical research lab at WPAFB, possibly the "Equipment Lab", now closed for some years or reorganized into another organization.

[redacted] and [redacted] are both desirous of learning the locations of such papers of Tesla as now exist in the U.S. for both intelligence and research purposes. Therefore, [redacted] would like to examine FBI files relating to Nikola Tesla and possibly any on Sava Kosanovic, his nephew who received the bulk of his papers after Tesla's death, and may possibly have been the subject of FBI investigation.

[redacted] travels to the Washington, D.C. area on FTD business periodically and can review FBI files at FBIHQ relating to Tesla and Kosanovic.

REQUEST OF THE BUREAU

The Bureau is requested to conduct full indices checks on both Nikola Tesla and Sava Kosanovic.

Should there be such files at FBIHQ, as well as at New York, it is requested that Bureau consider granting the above [redacted] of FTD, official access to same, in the interest of national security.

LEADS

NEW YORK

AT NEW YORK, NEW YORK

Will conduct same indices check as requested of Bureau and advise the Bureau and Cincinnati of results and confirm such files and references still exist there.

135

CI [redacted] (S) (b)(1) [redacted]CRET

CINCINNATI

AT DAYTON, OHIO

Will maintain contact with [redacted] and (b)(7)(c) [redacted]

S[redacted]RET

"A VISIONARY GENIUS AS FERTILE AS ANY IN THE MODERN HISTORY OF SCIENCE...."

Flamboyant, eccentric, almost supernaturally gifted, had he been born today he would still be ahead of his time. Called a madman by some, a genius by others, and an enigma by nearly everyone, Nikola Tesla was perhaps the greatest inventor the world has ever known.

He was a trailblazer who created astonishing, world-transforming devices, often without theoretical precedent. It was Tesla who harnessed the alternating electrical current we use today... Tesla who actually invented radio... Tesla who invented fluorescent lighting and the incredible bladeless turbine. He introduced us to the fundamentals of robotry and computer and missile science, which continue to create and transform the future.

This fascinating new biography, acclaimed by American Scientist as "excellent... a significant contribution to the recent history of science," is a riveting journey into the mind of the nineteenth-century wizard who was Edison's enemy, Mark Twain's friend, J. P. Morgan's client, and mentor to many of the twentieth-century's most famous scientists.

MARGARET CHENEY is a science writer and author of two other nonfiction books. She lives in California.

*The Sunday Times of London

0 39077
71009 00495
ISBN 0-440-39077-X

MARGARET CHENEY

A visionary genius, his discoveries radically changed—and continue to change—the world we live in. "A dramatic and poignant portrait." —Discover

TESLA: MAN OUT OF TIME

Includes eight pages of rare photographs

DELL $3.95

137

The ill-fated Wardenclyffe tower built in 1901–03. It was intended for radio broadcasting and wireless transmission of power across the Atlantic. (Courtesy L. Anderson, after photo by Lillian McChesney)

An artist's rendering of Tesla's concept of the war of the future. The towerlike structures (based on the intended final form of the Wardenclyffe tower) are directing remote-controlled defenses against robot attackers. As Hugo Gernsback wrote in *Science and Invention*, where this illustration appeared, "Machines only will meet in mortal combat. It will be a veritable war of Science." (Gernsback Publications, Inc.)

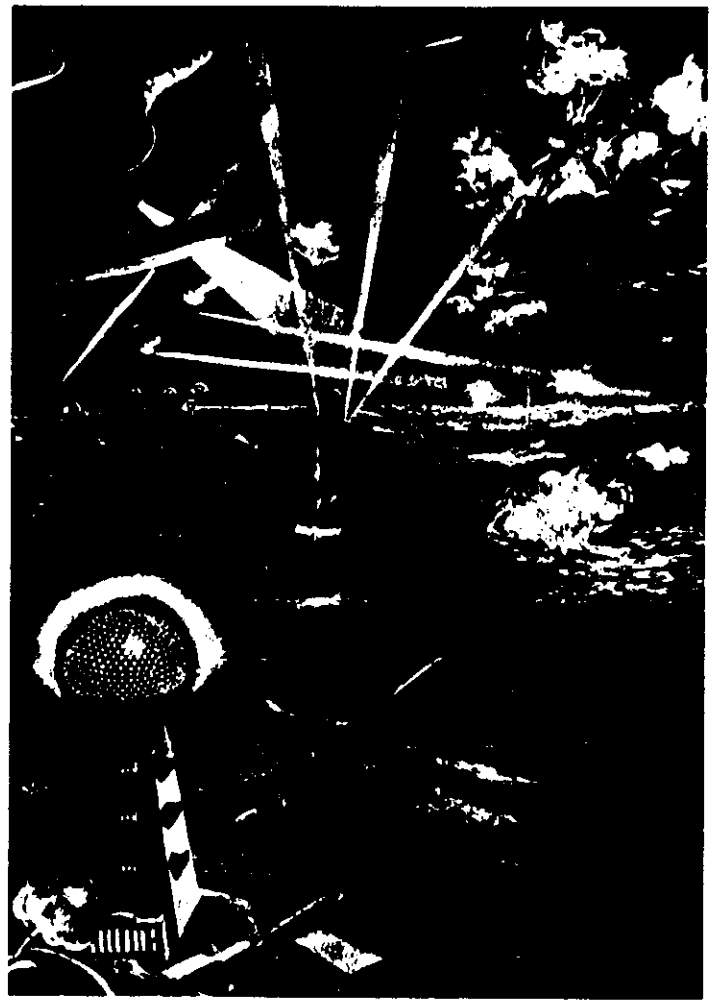

A trio of scientific greats: Albert Einstein, Nikola Tesla, and Charles Steinmetz, as they appeared in 1921 in a visit to the RCA transoceanic station at New Brunswick, N.J. At the time, Tesla was deeply involved in his patent dispute with Marconi. Only after his death would the U.S. Supreme Court uphold Tesla's claim to be the true father of radio. (RCA)

Tesla in his laboratory, 1898. The device shown is an unconnected coil illustrating the action of two resonating circuits of different frequencies—today one of the basic circuits used in computers. The pressure at the end of the coil facing the viewer (illuminated by streamers) is approximately one half million volts. (Courtesy L. Anderson)

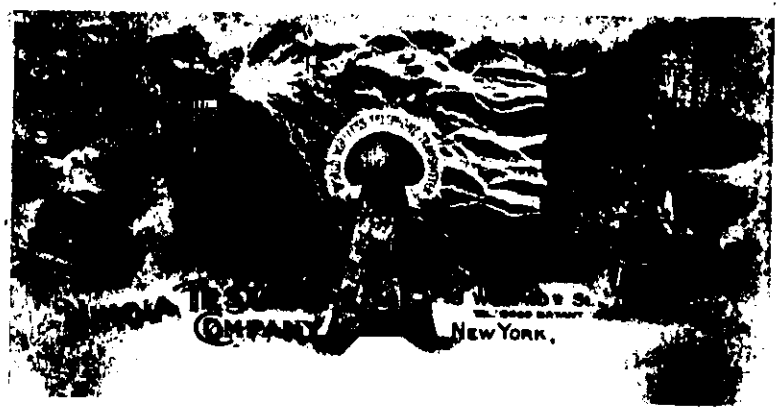

The letterhead of Tesla business stationery recalls some of his more important inventions. In the center is the Wardenclyffe tower as it was intended to look when finished. (Courtesy L. Anderson)

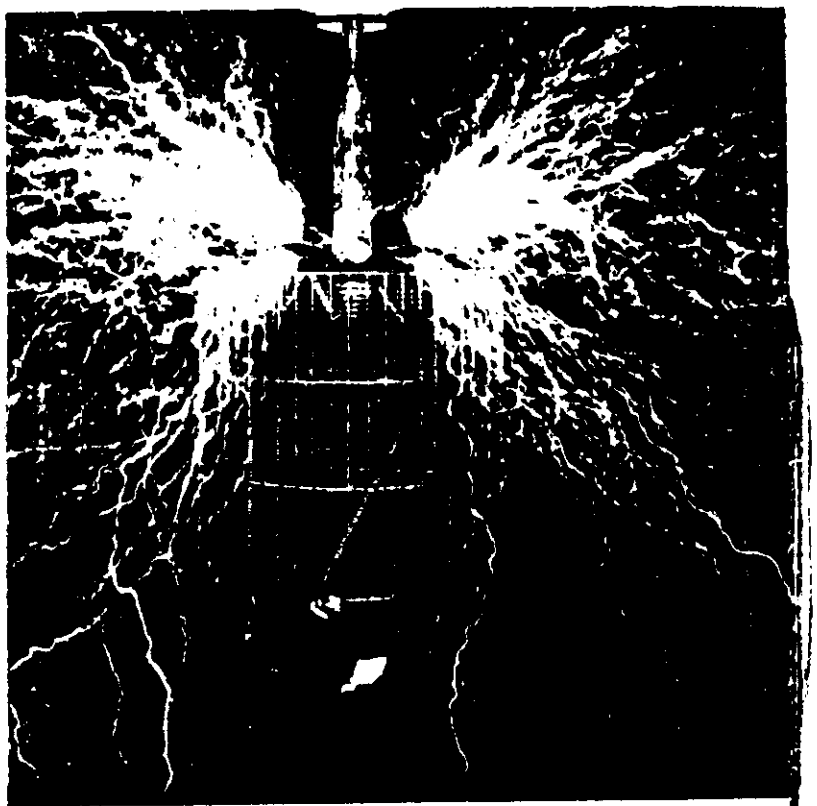

Discharge of several million volts cascading around Tesla in his Colorado Springs laboratory. The roar that accompanied such discharges could be heard ten miles away. (Burndy Library)

of low frequency, and would yield sinusoidal and continuous oscillations like those of an alternator.

"Taken in the narrowest significance of the term, however," Tesla wrote, "it is a resonant transformer which, besides possessing these qualities, is accurately proportioned to fit the globe and its electrical constants and properties, by virtue of which design it becomes highly efficient and effective in the wireless transmission of energy. Distance is then absolutely eliminated, there being *no diminution in the intensity of the transmitted impulses*. It is even possible to make the actions *increase with the distance from the point* according to an exact mathematical law."[5]

Once this powerful equipment was built and the inventor began testing he was able to emulate the electrical fireworks of even the wildest mountain storms. When the transmitter was operating, lightning arresters in a twelve-mile radius from his station were bridged with continuous fiery arcs, stronger and more persistent than those produced by natural lightning.

For the first time he kept a careful daily diary in which he recorded every aspect of his research. And because visual effects were useful as well as thrilling, he devoted many hours to photographic experiments.

The equipment Tesla was perfecting would, he hoped, one day be adaptable for commercial use. But first, thousands of observations and delicate adjustments had to be made. He no longer trusted his legendary memory to store such a volume of information. His daily notes referred constantly to experiments that had failed to turn out as expected, and he would ask himself why. This process was at sharp variance with the one he claimed to have used throughout his earlier life. Now middle-aged, he may have felt his memory waning slightly. Certainly he felt driven by the pressures of his self-imposed deadline.

In his Colorado journal his lifelong fascination with visual phenomena is underscored. The flashing lights that he had always experienced on the screen of his mind were dramatically externalized, and his descriptions, among the mass of mathematical formulas, are detailed, loving, almost erotic in their lingering portrayal of the colors and grandeur of his Colorado electrical storms.[6]

Nights when experiments were being made with the magnifying transmitter the prairie sky exploded with sound and color. Even the earth seemed alive and the crash of thunder from the spark gap could be heard for miles. Butterflies were sucked into the vortex of the

28

Death and Transfiguration

The new government of King Peter, with broad popular support, confronted the Germans and refused to ratify the compromise agreement that had been made with Hitler by Prince Paul. Almost at once reprisals began.

On Palm Sunday, 1941, three hundred Luftwaffe bombers swept over the Yugoslav capital of Belgrade. Methodically they crisscrossed the city street by street, strafing everything that breathed. By noon 25,000 civilians were dead, and the wounded lay everywhere. Most public buildings were left in ruins, including the modern laboratory known as the Tesla Institute.

The combined armed forces of Germany, Italy, Hungary, and Bulgaria invaded the doomed country. Within only days the Yugoslav Army was crushed, and King Peter was sent to England for safety. His government-in-exile would operate from London for the remainder of World War II.

This, however, was only the beginning of the war for Yugoslavs. Accustomed to successive invasions for a thousand years, the people were resilient. The remnants of the Army and Communist factions withdrew into the mountains, from which they launched guerrilla attacks on the invaders. These armed fighters, men and women, were supplied with food grown by the old people and children remaining in undefended villages.

Against them the Nazis and Fascists carried out murderous reprisals. In the fishing villages and along the stony slopes of the Adriatic, half the people in every hamlet were systematically shot.

Soon, however, it became apparent to military strategists in the United States and England that, not only were Axis forces killing Yugoslavs, but rival guerrilla factions of monarchists and Communists had begun to vie for Allied support and were shooting each other as well as the invaders.

Col. Drazha Mihailović, a Serbian army officer, led a faction called Chetniks (the "Yugoslav Army in the Fatherland"), composed mainly of Serbian and Bosnian monarchists. With close ties to King

Peter, they became the first major resistance movement in Europe.[1] The initial British aid to Yugoslavia went to the Chetniks, but it was short-lived. The National Liberation Army or Partisans, led by Josip Broz Tito of the Communist Party, was swiftly rising to prominence.

Allied strategists knew little of Tito. It was said he had been left wounded on a battlefield in 1917 and captured by the Russians. There he was trained as a Communist leader and sent to France during the Spanish Civil War to aid the Loyalists or Republicans.

A Croat, Tito had little reason to love the monarchy, for he was imprisoned after returning to Yugoslavia. On release, he became active in organizing a metal workers' union and helped to build the Yugoslav labor movement. His emergence as head of the Partisans in World War II was that of a natural leader who inspired his fighters and maintained rigorous discipline. He was looking ahead to a time when the Slavs could rebuild a free and united country without oppression either by foreigners or kings.

Tito's goal was to set up committees of popular liberation after the Russian style, while Mihailović and the Chetniks favored local administrative authorities under the monarchy. Both factions kept on killing Germans and Italians but, unfortunately, they also continued murdering each other.[2]

Prof. Bogdan Raditsa*, then director of the information service of the Yugoslav Embassy in Washington, D.C., recalls, "The situation became rather complicated when Yugoslavia collapsed in 1941 and when, at the end of that year, a Royal Yugoslav Mission came to this country." It was composed of members of King Peter's government and the Ban (Governor) of Croatia, Dr. Ivan Šubašić. Srba Kosanović, Tesla's nephew, then a member of the Democratic Party, also arrived as a minister of the exiled government.

"As soon as Kosanović came to the States," says Professor Raditsa, "he tried to reorient Tesla from the exclusive Serbian policy, and he succeeded. Tesla, even before, never felt himself a Great Serbian chauvinist. He used to say, 'I am a Serb but my fatherland is Croatia.'"[3]

The conflict between Serbs and Croats in exile intensified as the war went on, paralyzing normal Slav diplomatic activities in London, Washington, and New York.

"Kosanović, though a Serb," recalls Raditsa, "was leading the struggle for a brotherhood between the Serbs and Croats against Fotić and many other Serb members of various Yugoslav missions.

*Raditsa belonged to a family in southern Croatia that had always favored a union of Croatians and Serbs.

Thus he began using Tesla for the policy directed against the Great Serbians.

"Tesla himself ... was not aware of the deep conflict between the Serbs and Croats, and as basically a scientist and in old age, he was very candid in politics."

Raditsa said he seemed happy that he finally had a man of his own blood near him in New York and noted that Tesla began to rely upon Kosanović's opinion on everything. During this period the inventor was receiving about $500 per month from the royal government as an honorarium.

Various political messages elicited from Tesla for home consumption, says Raditsa, were actually written by Kosanović.[4]

Toward the end of 1942 the Yugoslav Information Center was opened in New York in the Royal Mission headquarters on Fifth Avenue. Raditsa and Kosanović worked together at this office, issuing bulletins and other publications. But a crisis broke out when news reached them of the fighting between Mihailović and Tito.

"Kosanović," he said, "joined Tito and began to popularize the National Liberation Movement for a new Yugoslavia. He had a terrible time to convince Tesla that monarchy was losing in Yugoslavia and that a new Yugoslavia was beginning to come out from the fratricidal civil war. As the largest majority of Serbs in Croatia were joining Tito, Kosanović convinced Tesla that he too should join the movement that was largely shared by the masses of the people, Serbs and Croats. So Tesla's message to the Serbs and Croats was written by Kosanović."[5]

On the walls of the Tesla Museum in Belgrade one may read a vastly enlarged photocopy of the words allegedly sent by Tesla to his embattled countrymen only months before his own death. American Vice-President Henry A. Wallace also had a hand in its drafting. Typewritten, it has many cross-outs and interlinings in Tesla's own handwriting yet the style is that of an ideologue, which the inventor was not:

> Out of this war ... a new world must be born, a world that would justify the sacrifices offered by humanity. This ... must be a world in which there shall be no exploitation of the weak by the strong, of the good by the evil, where there will be no humiliation of the poor by the violence of the rich; where the products of the intellect, science, and art will serve society for the betterment and beautification of life, and not the individuals for achieving wealth. This new world shall not be a world of the downtrodden and humiliated, but of free men and free nations, equal in dignity and respect for man.

The inventor's name also appeared on another message—sent to the Soviet Academy of Sciences on October 12, 1941, urging joint struggle against the Axis powers by Russia, Great Britain, and America, in aid of the revolutionary struggle of the Yugoslav people. This message is not to be seen in the Museum, however, presumably because nostalgia Russian-style has ceased to be politic.

Kosanović became chairman of the Yugoslav Economic Mission advocating a New Yugoslav federation versus the centralistic prewar royalist Yugoslavia. This new organization also began working for a new Central East European Federation. Raditsa too became a member of the Tito movement.

King Peter was desperately seeking for Mihailović the support of President Franklin Delano Roosevelt and Prime Minister Winston Churchill, as well as that of his own Uncle Bertie, who was King George VI of England. The British, at first sympathetic to the Chetnik cause, began to change as they received reports of the aggressive actions of Tito's Partisans.

In 1942 King Peter visited Washington to intercede with FDR. Yugoslav pilots were being trained in Tennessee. FDR told him that America would send airplanes to the Chetniks as soon as they could be spared from the war in the Middle East. The monarch visited New York City, attending a large reception for the American Friends of Yugoslavia at the Colony Club. The Colony, the first female socialites' club in America, had been founded at the inspiration of energetic Anne Morgan. She attended the function, as did the King's mother, Queen Marie, and Mrs. Roosevelt. It was the sort of affair Tesla himself would have delighted in had he not been weak and ill. So King Peter went to him.

In his diaries (*A King's Heritage*), under date July 8, 1942, the young Peter II writes: "I visited Dr. Nicola Tesla, the world-famous Yugoslav-American scientist, in his apartment in the Hotel New Yorker. After I had greeted him the aged scientist said: 'It is my greatest honor. I am glad you are in your youth, and I am content that you will be a great ruler. I believe I will live until you come back to a free Yugoslavia. From your father you have received his last words: 'Guard Yugoslavia.' I am proud to be a Serbian and a Yugoslav. Our people cannot perish. Preserve the unity of all Yugoslavs—the Serbs, the Croats, and Slovenes.'"

The King added that he was deeply touched and that both he and Dr. Tesla had wept. He then visited Columbia University, to be warmly welcomed by President Nicholas Murray Butler and to find another link with his own country in the Pupin Physics Laboratory.

Returning to Washington, he was assured by FDR that food, clothing, arms, and ammunition would be dropped over Yugoslavia. But he was shocked when, in 1943, the British Mission in Yugoslavia made official contact with Tito. Peter asked to be parachuted into his country, but Churchill demurred. Tito openly accused Mihailović of being a traitor.*

At the Teheran Conference in November there occurred, largely at Churchill's instance, what the King described as a "fatal change" of Allied policy. It was decided that "the basic force fighting the Germans in Yugoslavia recognized by the Allies was the National Liberation Army, under the command of Tito, and the Partisan force received full recognition as an Allied Army. Mihailović was thus denied and abandoned."†

Winston Churchill overnight became a hero of modern Yugoslavia. And when the young monarch frantically wrote to FDR for support, the ailing President replied urging him to accept Churchill's advice "as if it was my own." Within months Roosevelt died.

Tesla's nephew, Kosanović, along with certain other diplomatic representatives of King Peter, had been dismissed by the monarch at the height of the 1942 crisis. He often told Bogdan Raditsa in those days that he felt Tesla had been terribly shocked by his nephew's exclusion from the royal government. In fact, Kosanović believed that the inventor's death was actually precipitated by his own "setback."

"He thought," Kosanović repeatedly told Raditsa, "that I was punished, and that eventually I would be arrested or something of the kind, but I succeeded to convince him that it was inevitable in politics."*

During this period Kosanović was frank in saying that he tried to keep Tesla from seeing members of the royal government. Ambassador Fotić had become "the enemy" since he still favored a Great Serbian policy as opposed to the changes ahead. Tesla's relationship with this old friend became "lukewarm."

"There is no doubt," says Professor Raditsa, "that the whole internecine tragedy of Yugoslavia from 1941 to 1943 must have had a rather depressing impact upon Tesla. Very often he would ask me, could I explain to him what was going on among us, and why we cannot agree. . . ."

After the war, Mihailović would be executed by a "People's Court" for alleged collaboration with the enemy, and the Republic of Yugoslavia declared to exist, with Tito as President for life and the Communists firmly in charge.

A count of Yugoslavian casualties at the end of World War II disclosed that 2 million persons had died; tragically, many thousands had been killed by fellow Yugoslavs.

"After the war," recalls Professor Raditsa, "Kosanović became a minister in the Tito-Subašić Government, and I was his assistant in the Ministry of Information from 1944 to 1945, when I left the country, for I couldn't become a Communist. Later on in 1946, Sava Kosanović became Tito's ambassador in Washington but I never saw him again after I left Belgrade in October of 1945. Kosanović had accepted totally the Communist system in Yugoslavia and remained loyal until his death."

There had not been a time in ten centuries when the Yugoslavs had not been ruled and ransacked by invaders—by Venetians, Romans, Turks, Bulgars, Austrians, Hungarians, Germans, Italians, when they were not living under threat of torture, prison, or violent death. Now a marvelous truth began to dawn upon them: that they were free, in a manner of speaking.

Tesla would not live to see this. Whether he could ever have accepted the new government, with its Soviet-type Constitution and a Soviet alliance, whether he could ever have accepted the permanent exile of his beloved monarch, are unanswerable questions.

Unfortunately, however, all this was to have a bearing on how he would be remembered in the West. The fading of his scientific reputation, the forgetfulness of Americans in the postwar period, resulted in large degree from the disappearance of most of his scientific papers behind that new Cold War phenomenon, the Iron Curtain.

In 1948 Yugoslavia ceased to be an Iron Curtain country, declaring its independence from the Soviet doctrine of "limited sovereignty." America and her allies then were generous in sending economic and military aid to the Slavs; but the damage had been done. America had not raced to Tito's wartime support with the alacrity that Churchill had shown. In the future it would not be made easy for American scholars to draw on Yugoslav sources to document the achievements of Nikola Tesla.

The inventor became very feeble in the winter of 1942. His fear of germs was so obsessive that even his closest friends were

required to stand at a distance, like the subjects of a neurotic Tudor. (Pigeon germs did not seem to worry him.) He had heart trouble and suffered occasionally from fainting spells. No longer able to feed his beloved birds, he often relied upon a young man named Charles Hausler, who owned racing pigeons, to take care of them for him.

Hausler had worked for Tesla in this capacity from around 1928 onward, his job being to go to the New York Public Library at noon each day with grain and then to walk around the four sides of the building looking for young or injured birds on window sills or behind large statues. He would take them to Tesla's hotel for rest and recuperation. Then, he has recalled, "I would release them at the library for him." He remembered that the cages in Tesla's rooms had been built by a fine carpenter— "as Mr. Tesla was in all his doings it had to be done right." The pigeons also enjoyed a curtained shower bath.

Hausler and Tesla spent many hours together, talking mostly of pigeons. Once Tesla confided to him that "Thomas Edison could not be trusted." The boy remembered his employer as "a very kind and considerate human person," and there was one incident that stood out in his mind long afterward. "He had a large box or container in his room near the pigeon cages and he told me to be very careful not to disturb the box," said Hausler, "as it contained something that could destroy an airplane in the sky and he had hopes of presenting it to the world." He believed it probably was stored in the cellar of the hotel later.[9]

On a bitter day in early January 1943, Tesla called his other messenger boy, Kerrigan, and gave him a sealed envelope addressed to Mr. Samuel Clemens, 35 South Fifth Avenue, New York City. The boy set forth into the whipping wind and searched fruitlessly for the number. As it turned out, this had been the address of Tesla's first laboratory; but now South Fifth Avenue was West Broadway, and no one by the name of Samuel Clemens lived in the area.

Kerrigan made his way back to the Hotel New Yorker and reported to the sick man. In a weak voice, Tesla explained that Clemens was the famous Mark Twain and that everyone knew of him. He sent Kerrigan forth once more, and this time asked him also to take care of the pigeons. The perturbed messenger fed the birds and then consulted his supervisor, who told him that Mark Twain had been dead for twenty-five years. Once again Kerrigan trudged through the cold afternoon to Tesla's rooms, where he explained and tried to return the envelope.

The inventor was indignant and refused to hear that the humorist was dead. "He was in my room last night," he said. "He sat in that chair and talked to me for an hour. He is having financial difficulties and needs my help. So—don't come back until you have delivered that envelope." Once again the messenger went to his supervisor and together they opened the envelope. It contained a blank sheet of paper wrapped around twenty five-dollar bills—enough to help an old friend through a little fainting spell.

On the fourth of January, the inventor, although very weak, went to his office to make an experiment that George Scherff was interested in. Scherff dropped in to help him prepare for it. The work was interrupted, however, when Tesla felt a recurrence of some sharp pains in his chest.

Refusing medical aid, he returned to his hotel. Next day a maid came in and cleaned. As she left, he asked her to put the *Do Not Disturb* sign on his door to keep visitors away, and not to bother cleaning. The sign remained there the following day and the one after that.

Early on the morning of January 8, Alice Monaghan, a maid, ignored the sign and entered the apartment to find the inventor dead in bed, his sunken, emaciated face composed.[10] Assistant Medical Examiner H. W. Wembly examined the body, placed the time of death as 10:30 P.M. on January 7, 1943, and gave his opinion that the cause of death had been coronary thrombosis. Tesla had died in his sleep, and the examiner noted that he had found "No suspicious circumstances." The inventor was eighty-six years of age.

Kenneth Swezey was notified at once; and at ten o'clock that morning he telephoned to Dr. Rado at New York University. King Peter's headquarters, then at 745 Fifth Avenue, was advised by the professor. Tesla's nephew, Kosanović, then wartime president of the Eastern and Central European Planning Board for the Balkan countries, also was notified.

Then the FBI was called. Swezey and Kosanović summoned a locksmith and Tesla's safe was opened and the contents examined.

The body was removed to the Frank E. Campbell Funeral Home at Madison Avenue and 81st Street and a sculptor was engaged by Hugo Gernsback to prepare a death mask of the inventor.

Just before Tesla's death, Eleanor Roosevelt had tried to intercede in his behalf with President Roosevelt—perhaps with the idea of conferring some honor upon him. In the Tesla Museum at Belgrade three brief notes on White House stationery may be read. On

January 1, at the request of author Louis Adamić, Mrs. Roosevelt had promised to ask the President to write to Tesla and said that she herself would call on him on her next trip to New York. The second note is headed, "Memo for Mrs. Roosevelt" and is signed FDR: "I was having this looked into but the papers yesterday carried the story that Dr. Tesla had died. Therefore I am returning the enclosures herewith." A third note of January 11 from Eleanor Roosevelt to Adamić forwards the President's message and adds her sorrow at learning of the inventor's death.

Adamić wrote a moving eulogy to Tesla that was read by New York Mayor Fiorello H. LaGuardia over station WNYC on January 10.* Meanwhile the extreme tensions between Serb and Croat factions in the United States were making the planning of funeral services difficult. The body lay in state but, according to an unpublished letter of O'Neill's, "only twelve people, some of whom were newspaper reporters," came to view it.

When state services were held at four o'clock on January 12, in the Cathedral of St. John the Divine, however, more than two thousand people crowded in. Serbs and Croats were seated on opposing sides of the cathedral, Bishop William T. Manning having exacted from both factions a promise of no political speeches. The service was begun in English by Bishop Manning and concluded in Serbian by the Very Rev. Dusan Sukletović.

Among Balkan diplomats present were Ambassador Fotić, the Governor of Croatia, a former Prime Minister of Yugoslavia, and the Minister of Food and Reconstruction. In the front row with Kosanović, chief mourner and head of the important new trade mission, sat Swezey. Dr. Rado had been too ill to attend as an honorary pallbearer.

Figures important in American science and industry who did attend as honorary pallbearers included Professor Edwin H. Armstrong, Dr. E. F. W. Alexanderson of General Electric, Dr. Harvey Rentschler of Westinghouse, engineer Gano Dunn, and W. H. Barton, curator of the Hayden Planetarium of the American Museum of Natural History. Newbold Morris, president of the New York City Council, headed this group.

When word of Tesla's death spread abroad to war-stricken Europe, telegrams of tribute and sorrow began pouring in from scientists and governmental leaders alike. In the United States three Nobel prizewinners in physics, Millikan, Compton, and James Franck, joined in a eulogy to the inventor as "one of the outstanding intellects

of the world who paved the way for many of the important technological developments of modern times."

The President and Mrs. Roosevelt expressed their gratitude for Tesla's contributions "to science and industry and to this country." Vice-President Wallace, in the spirit of the new Yugoslavia, declared that, "In Nikola Tesla's death the common man loses one of his best friends."

Although Louis Adamić wrongly eulogized Tesla as one who had cared nothing for money, he could not have been more accurate when he said that Tesla was not really dead: "The real, important part of Tesla lives in his achievement, which is great, almost beyond calculation, and an integral part of our civilization, our daily lives, our current war effort.... His life is a triumph...."*

Among the honors that had come to Tesla in his life were many academic degrees from American and foreign universities; the John Scott Medal, the Edison Medal, and various awards from European governments. In September 1943 the Liberty ship *Nikola Tesla* was launched, an honor that would have pleased the scientist. But not until 1975 was he inducted into the National Inventors Hall of Fame.

Eight months after Tesla's death, the U.S. Supreme Court handed down the decision that he had been confident would come eventually—ruling that he was the inventor of radio.

His body was taken to Ferncliffe Cemetery at Ardsley-on-the-Hudson in the deep cold of the winter afternoon. In the car that followed the hearse rode Swezey and Kosanović. The inventor's remains were cremated and his ashes later returned to the land of his birth.*

In almost every nation in the world, the fighting and dying continued.

*Charlotte Muzar, formerly secretary to Sava N. Kosanović, carried Tesla's ashes to the Tesla Museum in Belgrade in 1957. Throughout the years Kosanović had spoken of leaving the ashes in America and had hoped an appropriate memorial to the inventor would be raised in the United States as their resting place.
—Archives, Tesla Memorial Society

541

29 The Missing Papers

In addition to his acknowledged achievements, Tesla left a legacy of riddles. To pose only three of the most major: Was his unrealized concept for the wireless transmission of energy through the Earth scientifically valid? What actually was he doing in his experimentation with death/disintegrator beam weapons? And what became of his unpatented research papers and other sensitive documents in the days immediately following his death?

In the category of subquestions, what turn of affairs rekindled the intense interest of the U.S. intelligence establishment in Tesla's work (as something surely did) in the late 1940's?

Like Einstein he had been an outsider and, like Edison, a wide-ranging generalist. As he himself had said, he had the "boldness of ignorance." Where others stopped short, aware of what could not be done, he continued. The survival of such mutants and polymaths as Tesla tends to be discouraged by modern scientific guilds. Whether either he or Edison could have flourished in today's milieu is conjectural.

The example set by Tesla has always been particularly inspiring to the lone runner. At the same time, however, his legacy to establishment science is profound for his research, although sometimes esoteric, was almost always sweeping in its potential to transform society. His contribution was major rather than incremental. His turbine failed in part because it would have required fundamental changes by whole industries. Alternating current triumphed only after it had overcome the resistance of an entire industry.

But there was an unfortunate corollary to Tesla's lone battles with the scientific-industrial establishment. Since he was part of no group or institution, he had no colleagues with whom to discuss work in progress, no formal, accessible repository for his research notes and papers. He worked not just in private, but—his love of flamboyant announcements to the press notwithstanding—in secret. Thus any inventions which he did not patent or give freely to the world were more or less shrouded in mystery. And, because of the handling of the

papers he left behind after his death, the range of his achievement continues to remain a partial mystery.

If this has been frustrating to the scientists who have succeeded Tesla, it has at least been stimulating. After a period of obscurity, the one hundredth anniversary of his birth in July 1956 brought an international reawakening to the importance of the inventor's life and genius. Interest in his work, fired by a growing awareness of the riddles surrounding it, has been escalating ever since, almost as if he had been reborn in his true psychological age.

He was honored by centennial celebrations in America and Europe. The American Institute of Electrical Engineers dedicated its fall meeting in Chicago to a review of his life and inventions. Commemorative programs were arranged by the Institute of Radio Engineers, the Chicago Museum of Science and Industry, the Franklin Institute, and various universities, the Tesla Society playing an active role in such recognition. Permanent memorials in the form of scholarships and medals were proposed and exhibits presented by science museums. Special ceremonies were conducted at Niagara Falls, and a statue was later erected in his honor on Goat Island, a gift from the people of Yugoslavia. Chicago, reminded by attorney/author Elmer Gertz that it should be eternally grateful to him for having made the Columbian Exposition of 1893 the "wonder of the globe," dedicated a new public school to Tesla's memory.

The inventor's old colleagues of the AIEE journeyed to Europe to attend more celebrations, statue unveilings, and dedications in his honor. The International Electrotechnical Commission in Munich took formal action, making his name an international scientific unit, the *tesla* joining such historic electrical symbols as farad, volt, ampere, and ohm.[1]

As the exploration of space accelerated, so did interest in Tesla, especially from the standpoint of beam weaponry and microwave work. In America, Russia, Canada, and various other countries, projects in his name or derived from his pioneering, from weather-control to nuclear fusion, began to attract scientific attention. Some were just the shoestring efforts of loners, their laboratories old Quonset huts. Some were top secret and financed by enormous budgets.

Tesla's year of secret experiments at Colorado Springs in 1899 provided the basic impetus for much of this new exploration. His *Colorado Springs Notes*,* when they appeared in English in 1978

*This book may be ordered from Nolit, Terazije, 27, Belgrade, Yugoslavia (about $40).

under the imprint of the Tesla Museum at Belgrade, were eagerly awaited by many scientists. But even this work left important questions unanswered.

The bulk of his papers having vanished from America, reliable information was harder to come by than the recurring rumors of conspiracy, espionage, and patent theft. Scientists thought it strange that some aspects of his Colorado Springs research found in scattered sources did not appear in the Yugoslav-published *Notes*. Only by piecing together fragmentary information could the magnitude of his experiments be comprehended.

Around 1928 O'Neill, by merest chance, had happened to see a legal advertisement in a New York newspaper announcing that six boxes placed in storage by Nikola Tesla would be sold by the storage warehouse for unpaid bills. Feeling that such material should be preserved, he went to the inventor and asked permission to try to obtain funds to reclaim the material.

"Tesla hit the ceiling," he recalled. "He assured me he was well able to take care of his own affairs.... He forbid me to buy them or do anything in any way about them."

Shortly after the inventor died, O'Neill got in touch with Sava Kosanović, told him about the boxes, and urged him to protect them. He was never able to get a positive statement from Kosanović that he had obtained the boxes and examined the contents. "He gave evasive assurances that there was no reason for me to worry..."

Others too were interested in the papers. A young American engineer engaged in war work consulted Tesla on a ballistics engineering problem because he could not get time on an overworked computer, and Tesla's mind was known to offer the nearest thing to it. Soon he became fascinated with Tesla's scientific papers and was allowed to take batches of them home to his hotel room where he and another American engineer pored over them each night. They were returned the next day, a procedure which continued for about two weeks prior to the Inventor's death.

Tesla had received offers to work for Germany and Russia. After the inventor died, both engineers became concerned that critical scientific information might fall into foreign hands and alerted United States security agencies and high government officials.

The relevant records that I have obtained from federal agencies under the Freedom of Information Act reveal strange twistings and inconsistencies in the handling of the Inventor's estate. Tesla left tons of papers, barrels and boxes full of them. But he left no will. He was

survived by five nieces and nephews, of whom two lived in America at the time of his death.

Curiously, the FBI released his estate to the Office of Alien Property, which promptly sealed the contents. Since Tesla was an American citizen, the OAP's concern in the matter was hard to justify. After a court hearing, however, the estate was released to Ambassador Kosanović, one of the heirs.

Sweezy, who also had hoped to write a biography of Tesla (his death intervened), received the following account in 1963 from a former aide of Ambassador Kosanović's:

"Back in 1943... when Tesla died, it was a matter of very short time when Mr. K was issued a certificate from or by the Office of Custodian of Alien Property conveying to Mr. K full rights to the Tesla papers.... he had them all packed up and sent off to the Manhattan Storage Company where they remained until ready for packing and shipping off to Yugoslavia in 1952. Mr. K paid for storage charges.... All this time the certificate from the Alien Property Office was in my possession (in case of need)...

"You will perhaps remember that a number of times Mr. K mentioned the fact that the custodian at the storage warehouse told him that some government guys were in to microfilm some of the papers.... when we opened the safe in the present museum building (in Belgrade, Yugoslavia) the bunch of keys, which was the last thing Mr. K. flung into the safe at the New Yorker Hotel before the combination was re-set to a new combination, were not found in the safe, but in an entirely different box. Also the gold medal (the Edison Medal) was missing from the safe.... Anyway, for years and years Mr. K was bothered by the fact that Tesla papers had been gone thru and just before his departure from Washington in 1949–50(?) he decided to follow my suggestion to call Edgar J. Hoover (sic) and ask him. Mr. Hoover denied categorically that the FBI had gone into the papers...."

The aide said Tesla had told his nephew that "he wished to leave his works, property, etc., to his native country." (Not only is this uncorroborated but the papers were in English.)

Immediately after Tesla's death an exchange of telegrams flew between FBI Agent Foxworth of the field division of the New York Bureau and the director of the New York Bureau of the FBI. The day following discovery of the body, Agent Foxworth reported:

"Experiments and research of Nikola Tesla, deceased. Espionage—M. Nikola Tesla, one of the world's outstanding scientists in the electrical field, died January seventh, nineteen forty three at the

Hotel New Yorker, New York City. During his lifetime, he conducted many experiments in connection with the wireless transmission of electrical power and ... what is commonly called the death ray. According to information furnished by X [name deleted], New York City, the notes and records of Tesla's experiments and formulae together with designs of machinery ... are among Tesla's personal effects, and no steps have been taken to preserve them or to keep them from falling into hands of people ... unfriendly to the war effort of the United Nations...." (The FBI was, however, advised by the office of Vice-President Henry A. Wallace that the government was "vitally interested" in preserving Tesla's papers.)

Bloyce D. Fitzgerald, "an electrical engineer who had been quite close to Tesla during his lifetime," continued Foxworth, "advised the New York office that on January seventh, nineteen forty three, Sava Kosanović, George Clark, who is in charge of the museum and laboratory for RCA, and Kenneth Swezey ... went to Tesla's rooms in the New Yorker [author's note: the correct date would have been January 8], and with the assistance of a locksmith broke into a safe which Tesla had in his rooms in which he kept some of his valuable papers.... Within the last month, Tesla told Fitzgerald that his experiments in connection with the wireless transmission of electrical power had been completed and perfected.

"Fitzgerald also knows that Tesla had conceived and designed a revolutionary type of torpedo which is not presently in use by any of the nations. It is Fitzgerald's belief that this design has not been made available to any nation up to the present time. From statements made to Fitzgerald by Tesla, he knows that the complete plans, specifications and explanation of the basic theories of these things are some place in the personal effects of Tesla. He also knows there is a working model of Tesla's, which cost more than ten thousand dollars to build, in a safety deposit box belonging to Tesla at the Governor Clinton Hotel, and Fitzgerald believes this model has to do with the so-called death ray or the wireless transmission of electrical current.

"Tesla has also told Fitzgerald in past conversations that he has some eighty trunks in different places containing transcripts and plans having to do with experiments conducted by him. Bureau is requested to advise immediately what, if any, action should be taken concerning this matter by the New York Field Division."[2]

Kosanović later reported to Walter Gorsuch of the Office of Alien Property in New York that he first went to Tesla's rooms with the other men to search for a will. After the safe was opened, Swezey took from it a book containing the testimonials sent to Tesla on his seventy-fifth birthday, while Kosanović took from the room three pictures of Tesla. According to the manager of the New Yorker Hotel and Kosanović, nothing else was removed. The safe was closed under a new combination, which combination was in Kosanović's exclusive possession.

On January 9, Gorsuch of OAP and Fitzgerald went to the New Yorker Hotel and seized all of Tesla's property, consisting of about two truckloads of material, sealed it and transferred it to the Manhattan Storage and Warehouse Company. It was added to about thirty barrels and bundles that had been there since about 1934, and these too were sealed under orders of the OAP.

In addition to the question of the legitimacy of Alien Property's involvement in the case is the question of why Kosanović was allowed to have access to the safe's combination, from which he later claimed the Edison Medal had vanished. Tesla's American naturalization papers, which he so prized that he always kept them in his safe, may now be seen at the Tesla Museum in Belgrade; but it is not known what other papers or objects were in the safe.

The Washington Bureau of the FBI went so far as to advise the New York Bureau "to discreetly take the matter up with the State's Attorney in New York City with the view to possibly taking Kosanovich into custody on a burglary charge and obtaining the various papers which Kosanovich is reported to have taken from Tesla's safe." New York was also told to contact the Surrogate Court so stops could be placed against all of Tesla's effects, so that no one could enter them without an FBI agent being present, and New York was to keep Washington advised of all developments.[3]

The idea of arresting the Yugoslav ambassador was quickly dropped. And very soon the Washington headquarters made a curious decision. Edward A. Tamm of the FBI in Washington advised D. M. Ladd of that Bureau that the whole matter was being turned over to the Custodian of Alien Property; and Tamm noted, "There appears to be no need for us to mess around in it."[4]

Soon the well-known electrical engineer Dr. John G. Trump, who was serving as a technical aide to the National Defense Research Committee of the Office of Scientific Research and Development, was asked to participate in an examination of Tesla's scientific papers. Present at the Manhattan Warehouse & Storage Company in addition

to Dr. Trump were Willis George, Office of Naval Intelligence, Third Naval District, Edward Palmer, chief yeoman, USNR, and John J. Corbett, chief yeoman, USNR.

Dr. Trump reported afterward that no examination was made of the vast amount of Tesla's property that had been in the basement of the New Yorker Hotel for ten years prior to his death, or of any of his papers except those in his immediate possession at the time of death. It should be remembered that Tesla's scientific reputation had been in eclipse for a number of years and that there had been many efforts to discredit his claims in radio, robotry, and alternating current. Dr. Trump was a busy man, just as the staff of the FBI was stretched thin by its preoccupation with investigating wartime sabotage.

"As a result of this examination," wrote Dr. Trump, "it is my considered opinion that there exist among Dr. Tesla's papers and possessions no scientific notes, descriptions of hitherto unrevealed methods or devices, or actual apparatus which could be of significant value to this country or which would constitute a hazard in unfriendly hands. I can therefore see no technical or military reason why further custody of the property should be retained."

He added: "For your records, there has been removed to your office a file of various written material by Dr. Tesla which covers typically and fairly completely the ideas with which he was concerned during his later years. These documents are enumerated and briefly abstracted in the attachment to this letter."

In closing Dr. Trump said: "It should be no discredit to this distinguished engineer and scientist, whose solid contributions to the electrical art were made at the beginning of the present century, to report that his thoughts and efforts during at least the past fifteen years were primarily of a speculative, philosophical, and somewhat promotional character—often concerned with the production and wireless transmission of power—but did not include new sound, workable principles or methods for realizing such results."

The file (of which Dr. Trump's notes were only an abstract) consisted apparently of either photostats or microfilm made by the naval officers present, and the original papers apparently remained in storage, later to be transmitted to Yugoslavia. The examination had failed to disclose any alien-owned property subject to the vesting power of the Alien Property Custodian under the Trading with the Enemy Act. Tesla's papers and personal effects were released in

February of 1943 for disposition by Kosanović, the administrator of his estate.

Dr. Trump's abstract included the following:

"*Art of Telegeodynamics, or Art of Producing Terrestrial Motions at Distance*—This document, in the form of a letter dated June 12, 1940, to the Westinghouse Electric & Manufacturing Co., proposes a method for the transmission of large amounts of power over vast distances by means of mechanical vibrations of the earth's crust. The source of power is a mechanical or electromechanical device bolted to some rocky protuberance and imparting power at a resonance frequency of the earth's crust. The proposed scheme appears to be completely visionary and unworkable. Westinghouse's reply indicates their polite rejection. . . .

"*New Art of Projecting Concentrated Non-Dispersive Energy through Natural Media*—This undated document by Tesla describes an electrostatic method of producing very high voltages and capable of very great power. This generator is used to accelerate charged particles, presumably electrons. Such a beam of high-energy electrons passing through air is the 'concentrated nondispersive' means by which energy is transmitted through natural media. As a component of this apparatus there is described an open-ended vacuum tube within which the electrons are first accelerated.

"The proposed scheme bears some relation to present means for producing high-energy cathode rays by the cooperative use of a high-voltage electrostatic generator and an evacuated electron acceleration tube. It is well known, however, that such devices, while of scientific and medical interest, are incapable of the transmission of large amounts of power in nondispersed beams over long distances. Tesla's disclosures in this memorandum would not enable the construction of workable combinations of generator and tube even of limited power, though the general elements of such a combination are succinctly described.

"*A Method of Producing Powerful Radiations*—an undated memorandum in Tesla's handwriting describing 'a new process of generating powerful rays or radiations.' This memorandum reviews the works of Lenard and Crookes, describes Tesla's work on the production of high voltages, and finally in the last paragraph gives the only description of the invention contained in the memorandum. . . . 'Briefly stated, my new simplified process of generating powerful rays consists

in creating through the medium of a high-speed jet of suitable fluid a vacuous space around a terminal of a circuit and supplying the same with currents of the required tension and volume.'"

Long afterward in a letter to a colleague, Dr. Trump told what happened when he visited the Hotel Governor Clinton to examine the "device" stored in its vault, presumably the same box remembered by the messenger boy in Tesla's room.

"Tesla had warned the management that this 'device' was a secret weapon," said Dr. Trump, "and it would detonate if opened by an unauthorized person. Upon opening the vault and indicating the package containing the secret weapon, the hotel manager and employees promptly left the scene." The federal agents who had come along also pulled back, the better to give him the sole distinction of opening the parcel.

It was wrapped in brown paper and tied with a string. He remembered hesitating, thinking how beautiful the weather was outdoors, and pondering on why he was not outside too.

He lifted the parcel onto a table and, mustering his courage, snipped the string with his pocket knife. He removed the wrapping. Inside was a handsome polished wooden chest bound with brass. It required a final effort of courage to raise the hinged lid.

Inside stood a multidecade resistance box of the type used for Wheatstone bridge resistance measurements—a common standard item to be found in every electrical laboratory before the turn of the century!

Why had Tesla seen fit to terrify the staff and management of the hotel with this harmless object for so many years? Perhaps he had become so accustomed to having his hotel bills paid behind his back (believing that the hotels, honored to have him living there, had routinely dismissed the billings), that he was insulted when the Governor Clinton brashly demanded its $400.

Although the FBI closed its Tesla file in 1943, it didn't seem to want to stay closed. It was reopened in 1957 when an informant complained that a New York couple were issuing newsletters containing "information pertaining to flying saucers and interplanetary matters" and exploiting the inventor's name and fame. They allegedly claimed that Tesla's engineers, after his death, had completed a "Tesla Set," a radio device for interplanetary communication, that the device had been placed in operation in 1950 and since then Tesla engineers had been in close touch with alien spaceships. Once again the FBI decided no action was warranted and the file was closed.

Sweasy had never put much credence in the "secret weapon" rumors and had written to an inquirer: "Because Tesla was a recluse, and himself liked to talk in mystifying terms during his later years, I think many legends have been built up about the dozens of ideas he had evolved but which were not permitted by others to see the light of day."

He said he had known the inventor well for two decades before his death: "Tesla's greatest genius flamed up during a dozen or so years just before and slightly after the turn of the century. What he did after that may have carried the germs of some of the developments we are witnessing today, but he had not carried any of them—at least on paper or in any other tangible form—to the point of practicality . . ."

Perhaps, but between 1945 and 1947 an interesting exchange of letters and cables occurred among the Air Technical Service Command at Wright Field, Ohio, in whose Equipment Laboratory much top-secret research was being performed, Military Intelligence in Washington, and the Office of Alien Property—subject, files of the late Nikola Tesla.

On August 21, 1945, the Air Technical Service Command requested permission from the commanding general of the U.S. Army Air Force in Washington, D.C., for Private Bloyce D. Fitzgerald to go to Washington for a period of seven days "for the purpose of securing property clearance on enemy impounded property."

On September 5, 1945, Colonel Holliday of the Equipment Laboratory, Propulsion and Accessories Subdivision, wrote to Lloyd L. Shaulis of the OAP in Washington, confirming a conversation with Fitzgerald and asking for photostatic copies of the exhibits annotated by Trump from the estate of Tesla. It was stated that the material would be used "in connection with projects for National Defense by this department," and that all of it would be returned in a reasonable length of time.

That was the last time that the Office of Alien Property or any other federal agency in the United States admitted to having possession of Tesla's papers on beam weaponry. Shaulis wrote to Colonel Holliday on September 11, 1945, saying, "The materials requested have been forwarded to Air Technical Service Command in care of Lt. Robert E. Houle. These data are made available to the Army Air Force by this office for use in experiments; please return them." They were never returned.

These were the full photostatic copies, not merely the abstracts. OAP has no record of *how many* copies were made by those who

150

examined the files with Dr. Trump. The Navy has no record of Tesla's papers; *no* federal archives have a record of them.

Curiously, four months after the photostats had been sent to Wright Field, Col. Ralph Doty, the chief of Military Intelligence in Washington wrote James Markham of Alien Property indicating that they had never been received: "This office is in receipt of a communication from Headquarters, Air Technical Service Command, Wright Field, requesting that we ascertain the whereabouts of the files of the late scientist, Dr. Nichola [sic] Tesla, which may contain data of great value to the above Headquarters. It has been indicated that your office might have these files in custody. If this is true, we would like to request your consent for a representative of the Air Technical Service Command to review them. In view of the extreme importance of these files to the above command, we would like to request that we be advised of *any attempt by any other agency to obtain them.* [Italics supplied.]

"Because of the urgency of this matter, this communication will be delivered to you by a Liaison Officer of this office in the hope of expediting the solicited information."

The "other" agency that had the files, or should have had them, was the Air Technical Service Command itself! Colonel Doty's letter, which was classified under the Espionage Act, was declassified on May 8, 1980.

This embarrassing contretemps goes unexplained in the records. Perhaps it was handled orally with the Liaison Officer.

However, on October 24, 1947, David L. Bazelon, assistant attorney general and director of the Office of Alien Property, wrote to the commanding officer of the Air Technical Service Command, Wright Field, Dayton, Ohio, regarding the Tesla photostats that had been sent by registered mail on or about September 11, 1945, to Colonel Holliday, at the latter's request.

"Our records do not reveal that this material has been returned," said Bazelon. He sent a description and asked that it be returned.

Obviously at least one set of Tesla's papers had reached Wright Field because on November 25, 1947, there was a response to the Office of Alien Property from Colonel Duffy, chief of the Electronic Plans Section, Electronic Subdivision, Engineering Division, Air Materiel Command, Wright Field. He replied: "These reports are now in the possession of the Electronic Subdivision and are being evaluated. . . ." He believed that the evaluation should be completed by January 1, 1948, and "At that time your office will be contacted with respect to final disposition of these papers."

There is no written record that OAP ever sought further to have the documents returned, and they were not returned.

For many years there have been rumors that these unpatented inventions or concepts of Tesla's found their way not only to the U.S. Army Air Force but to Russia and to private American defense industries, and ultimately into certain university research laboratories engaged in beam weaponry.

The Office of Alien Property experienced a very difficult problem over the years in explaining its role in connection with Tesla's papers. Between 1948 and 1978 it issued the following variations on a theme to many inquirers:

"While this Office participated in an examination of certain material owned by the late Dr. Tesla, our records do not disclose that any such material has been vested or is presently under the jurisdiction of this Office. . . ."

"This Office has never had custody . . . of any property of Nikola Tesla. . . ."

"While the Tesla papers were in our custody. . ."

"Photostatic copies of certain documents, made while the papers were under our seal. . . ."

"In 1943 this Office placed a seal on the property. . . ."

"While the Tesla papers were in our custody. . ." etc., etc., etc.

As for what is now Headquarters Aeronautical Systems Division, Wright-Patterson Air Force Base, Ohio, they state: "The organization (Equipment Laboratory) that performed the evaluation of Tesla's papers was deactivated several years ago. After conducting an extensive search of lists of records retired by that organization, *in which we found no mention of Tesla's papers, we concluded the documents were destroyed* at the time the laboratory was deactivated."[6] (Italics supplied. Response, under the Freedom of Information Act, dated July 30, 1980.)

Tesla's original papers, and the remaining models of his inventions—his magnifying transmitter, robot boats, early tube lighting, induction motors, turbine, exhibits shown at the Chicago World's Fair of 1893, such as the "Egg of Columbus," and others—left America in 1952 for Yugoslavia. His ashes were sent later. The artifacts may now be seen at the Tesla Museum in Belgrade, a dignified-looking building with a broad, well-proportioned facade at No. 51 Proleterskih

Brigada, an avenue renamed after the war, but formerly known under the monarchy as Crown Street. The museum bears a plaque on a low wall, printed in the old Cyrillic alphabet.

Here Tesla's English writings have been translated into Serbo-Croatian—except, as the archivist admits, for the "unimportant" material, which remains, just as he wrote it, in the language of his adopted country.

30 The Legacy

The fact that Tesla's research notes and papers have not been easily available for western scientists has not, of course, meant that Teslian research is dead. On the contrary, the very mystery surrounding some of his unproved claims has served to goad numerous scientists into trying to duplicate his experiments. And since his aspirations were virtually limitless, there has always been a chance that the rewards of success would not be inconsiderable. But the single greatest stimulus to try to follow in Tesla's footsteps doubtless remains the example of the man himself—his stunning record of achievement and the enduring fascination of his mind. As one admiring German writer put it, "Tesla went beyond the borders of his exact science to foretell what lies in the future ... a modern Prometheus who dared reach for the stars...."[1]

Although a comprehensive summary of the state of Tesla-inspired research today would be beyond either the scope of this book or the intent of its author, no account of the inventor's life would be complete without at least some indication of what has become of a few of his major preoccupations. The record, as one might expect, is both mixed and incomplete, but it is no less impressive for that.

To begin, then, with Tesla's experiments with ball lightning: He had no idea what ball lightning might be useful for when he first encountered it in his Colorado Springs research; to him it was a nuisance, but it demanded an explanation. And so he set about determining the mode of formation of the strange fireballs and learned to produce them artificially.

The technical explanation runs like this: In the highly resonant transformer secondary comprising his magnifying transmitter, the entire energy accumulated in the excited circuit, instead of requiring a quarter period for transformation from static to kinetic, could spend itself in less time, at hundreds of thousands of horsepower. Thus, for example, Tesla produced artificial fireballs by suddenly causing the impressed oscillations to be more rapid than free ones of the second-

ary. This shifted the point of maximum electrical pressure below the elevated terminal capacity, and a ball of fire would leap great distances.

Yet strangely enough, modern plasma physicists with the best-equipped laboratories, have failed to produce plasmoids with anything near the stability of the true ball-lightning spheres that he created.

Why the fascination with this problem? First, of course, because it is there, an unknown. But second because among other uses, it may hold a vital key in the international race to achieve controlled nuclear fusion—potentially the greatest power source in history. Among those long interested in ball-lightning research are Peter Kapitza, the great Russian physicist, Lambert Dolphin and his colleagues in the radio physics laboratory at SRI International, Dr. Robert W. Bass of Brigham Young University, and Robert Golka, with whom Bass has collaborated on research.

Golka, a Massachusetts physicist, Tesla disciple, and lightning experimenter, has pursued the ephemeral fireball with the fervor of a hunter of snarks. Like Tesla in Colorado, he has done his research alone in a remote western laboratory in the Utah salt flats, and like Tesla, he has struggled to win the kind of federal support that usually goes only to enormous institutions or corporations.

In the largest hangar at the far end of the ghost base at Wendover, Utah, which was built by the U.S. Army Air Force during World War II, big spotlights are often burning as Golka conducts lightning tests. Here, under tightest security in the 1940's, the B-29 *Enola Gay* was housed and outfitted for delivering the first atomic bombs to Hiroshima.

Golka made two trips to the Tesla Museum to pore over the inventor's then unpublished notes and concentrated on replicating as exactly as he could in the old air base hangar the magnifying transmitter that Tesla had built in 1899 when investigating the lightning storms of Pike's Peak.

"He [Tesla] was 'way ahead of anything we have today in the equipment he built," Golka says. "Such as the high-powered switches and spark gap switches. The knowledge has been lost; we don't know how he did it. Some of it was in the diaries, but he kept much of this stuff in his head."

Golka built a magnifying transmitter at his "Project Tesla" that would discharge 22 million volts, creating almost twice as powerful a chain-lightning storm as the maestro himself had produced at Colorado Springs.

The relevance of ball lightning to fusion research has to do with the problem of confining plasma. The heart of the most common type of experimental fusion reaction involves taking isotopic hydrogen gas and both accelerating and superheating it until the hydrogen nuclei fuse to make helium nuclei, releasing, in the process, staggering amounts of energy. Along the way, while the hydrogen is being charged with vast amounts of kinetic and thermal energy, it enters an imperfectly understood material state known as plasma.* In the penultimate stages of the process, before fusion begins, the besetting problem is to maintain the plasma's coherence, to confine it within some kind of invisible electromagnetic "bottle."†

Since the strongest geometric shape is a sphere, Golka believes that ball lightning offers the best potential for containment of the unstable mass. He describes the odd lightning as "a glowing sphere of a variety of colors, a half-inch in diameter or as big as a grapefruit," and resembling an onion in its "layers and layers of alternate charged particles, positive and negative." It may bounce along through buildings, fall into water and set it boiling, and sometimes, as at the Hill Air Force Base in Utah, it may knock out the most sophisticated electronic equipment. In the summer of 1978, with the use of CO-2 laser beams, he finally managed to produce "bead" lightning, which he believes to be a form of ball lightning, and to photograph it in sequential frames.

He then sought support from the U.S. Department of Energy for a major program of research for which he proposed to use a device called a pyrosphere, employing five laser beams to create thermonuclear fusion. In a "Fireball Fusion Reactor" only nonradioactive helium is created and, according to Golka, mathematical models indicate it can reach and hold temperatures above a billion degrees.

He also proposed to the Air Force another Teslian concept, a charged particle beam, but again one designed to employ laser technology. Such beam guns, he believes, would have a range of

*Until recent years plasma had no major industrial importance but was merely a laboratory curiosity. Richard L. Berstn, executive vice president of International Plasma Corp., believes that the first practical application of plasmas came in the 19th century when "the glowing plasma produced by a Tesla coil was used to locate leaks in glass vacuum flasks."

†Teslian ideas are also involved in other aspects of fusion research. Superconducting magnetic coils, cooled to a few degrees above absolute zero, are used in magnetic containment devices; and, in a newly developed rival process, hydrogen fuel pellets are being bombarded by high-energy particle beams.

6,000 miles and could melt and destroy ICBM-type missiles in the air. With a Tesla coil three times the size of his combined coils, Golka believed he could generate 200 million volts of electricity.

But he inherited the usual Teslian problems of a loner, and as he said, "The walls fall in on me when I work for corporations." His work reached a point where it could no longer progress with improvised equipment, but called for enormous investments. His competitors were large corporations and leading universities engaged in the nuclear-fusion race; and even some of the latter were being cut off from their federal grants. They too were deeply into laser technology, although Golka claims his system is different and unique. By no means the only scientist to have attempted to carry forward Tesla's work with ball lightning, he undoubtedly has been one of the most singleminded.*

Russia's Kapitza, who shared the 1978 Nobel Prize in physics with Arno Penzias and Robert W. Wilson of America for his work in magnetism and the behavior of matter at extremely low temperatures, acknowledges his debt to Tesla. "The efficient generation of super-high-frequency oscillations and their conversion back to direct-current electrical energy," he writes, "discloses possible solutions to the problem of transmitting electrical energy ... in free space. The transmission setup will, of course, be similar to that already considered but, instead of a wave guide, a highly directional beam must be used, which, as is well-known, only at short wavelengths will diverge little. Such a setup for the transmission of electrical energy, firstly thought by N. Tesla many years ago, has already been discussed.... Although ... possible in principle, it is tied up with the solution of a series of complicated engineering problems and therefore it can be implemented in practice only in such special situations in which other methods of energy transmission are inapplicable (for example, when energy must be supplied to a satellite)."[3]

In this field of wireless energy transmission, so directly concerned with the space race, there is progress nearer home. Richard Dickinson, who heads the Microwave Power Transmission project for Cal Tech's Jet Propulsion Laboratory in the desert near Barstow, California, traces his inspiration to the early work of Tesla. The concept of bringing electricity to Earth from an orbiting solar-power system via

*Lambert Dolphin says of Golka's replica of the Colorado Springs Tesla coil: "It is spectacular indeed, to either scientist or layman. I hope it ends up in a museum such as the Smithsonian where it can be appreciated." He too is a proponent of further research in ball lightning.

microwaves is daring, costly, romantic, and thoroughly in the style of the maestro.

"We beamed power from our transmitter at Goldstone a distance of one mile," Dickinson said of the NASA project initiated in the mid-seventies. "All of the microwave energy that fell within our target (of which we could only collect a portion with our existing apparatus), we converted 82.5 percent to useful direct current. Thirty-four thousand watts of direct current output carried a distance of one mile. We are well pleased. The next step is to look further into the technology and needs of the satellite power system of the future."[4]

William C. Brown of the Raytheon Company, who developed the rectenna used in this microwave-power research, also attributes the idea of sending electricity by radio waves to Tesla's pioneering in the fundamentals of radio broadcasting and wireless power transmission.

Theoretically, a city the size of New York could be supplied with five billion watts on a winter day by enormous satellite structures in the sky that would orbit synchronously with Earth at a height of 22,300 miles. But admittedly, the cost of such floating power stations would be many billions of dollars, and they would be highly vulnerable to enemy killer satellites, in the event of war.

Brookhaven National Laboratory, located just to the northeast of Tesla's old Wardenclyffe site at Shoreham, also feels a close link with the inventor through the advanced high-energy work being conducted at the laboratory. In 1976 it paid homage to him in a ceremony, and the Yugoslav government sent a plaque to be placed at the still-standing Wardenclyffe laboratory.

Canada, too, has long been a bastion of Tesla Energy System advocates, and because of the country's rich hydroelectric sources, through-the-Earth transmission—if it worked—could be a boon to areas of power shortage.

But—will it work? Several projects have been planned, and some partially implemented, in Canada, central Minnesota, and most recently in Southern California—to "pump" hydroelectric power wirelessly through the Earth to an area of need, employing the Tesla system as it is understood.[5] The U.S. Department of Energy has often been asked to fund projects based on Tesla's system.

Unfortunately, there is no evidence that the system ever worked for Tesla, and none that it could work for anyone else. One of the inventor's problems was that he improperly extended into the electromagnetic domain fluid and fluid-mechanical analogies. Tesla's patent No. 787,412 provides for the Earth to be excited by a carefully

154

valued wavelength to establish a standing wave condition. Tesla believed the propagation path fell along a diameter. But according to much knowledge developed since 1899, the propagation path would not be along a diameter but, rather, along an ellipsoidal arc somewhere between the diameter and the spherical surface.

A fundamental aspect of wave propagation of power is that *no power is transmitted if the wave is standing;* power is transmitted solely with a traveling component. Boundary layer propagation, i.e., the mode of lossless propagation of waves at the boundary of two differing media (such as earth and sky), is a viable concept. However, the boundary plane must be smooth and the waves must be properly launched. At the frequencies Tesla was using, such launching apparatus would be an enormous structure. In examining the photographs of his experimental station at Colorado Springs, it is apparent to experts that he did not employ apparatus essential to the launching of such waves.

Tesla probably was mistaken at Colorado Springs in his interpretation of the lightning storms which he observed traveling away from him (eastwardly) across the plains, producing maxima and minima effects upon his instruments. This he interpreted as standing waves being set up in the Earth by the traveling storm, with the crests of the waves passing through his location as the storms advanced. It is believed he was seeing an interference effect caused by the reradiating surface of the frontal range of mountains to the west of his station. The results would have been the same on his instruments.

Dr. Walt, formerly senior scientist at the Environmental Research Laboratories, National Oceanic and Atmospheric Administration, in Colorado, describes himself as a "firm skeptic" of the Tesla theory. "The concept that electromagnetic energy penetrates 'through the earth,'" he says, "is valid only if the frequency is sufficiently low *and* if the distances are small. It's all tied up with 'skin-effect' phenomena; that means that the field is confined to the surface of a good conductor as in metallic wave guide."[6]

Dr. Walt even goes so far as to suggest that Tesla never really accepted the fact that electromagnetic waves could transport energy through the air. "Instead he thought of the earth itself as a conveyor and also thought of the possibility of a return conductor at heights of '15 miles above sea level.' The parallel of this idea to the earth-ionosphere wave guide at extremely low frequencies is striking (see IEEE *Journals of Oceanic Engineering*, Vol. OE-2, No. 2, April 1977). Also his proposed resonance of the system might be interpreted as the first disclosure of the earth-ionosphere cavity oscillations that have

been associated from the early 1960s with W. O. Schumann, N. Christofilos, and J. Galejs, among others."[7]

With respect to wireless communication, the U.S. Navy's Project Sanguine/Seafarer of recent years has evolved from Tesla's Colorado experiments. In a thermonuclear war, conventional radio communication probably would be disrupted at certain heights and wavelengths. America's atomic submarine fleet might then be without a means of receiving messages. The U.S. Navy, seeing this danger, turned back to Tesla's nineteenth-century suggestion of employing 10 Hz signals (ELF or extra low frequency), to circle the globe and penetrate the deepest waters.

One of the headier speculations concerning Teslian science is a suggestion that Russia has been employing his theories on weather modification to interfere with the jet stream, causing droughts and extremes of hot and cold weather. However unlikely the charge, it is true that Tesla did do a good deal of theorizing (but very little experimentation) on weather control.

He wrote, for example, on the possible use of radio-controlled missiles and explosives to break up tornadoes and the use of "lightning of a certain kind" to trigger rainfall. Of the former he said, "It would not be difficult to provide special automata for this purpose, carrying explosive charges, liquid air or other gas, which could be put into action, automatically or otherwise, and which would create a sudden pressure or suction, breaking up the whirl. The missiles themselves might be made of material capable of spontaneous ignition." His proposal included a lengthy mathematical formula.[8]

As with much modern scientific exploration inspired by the maestro, the returns are still not in on weather changing. Scientist Frederic Jueneman, "Innovative Notebook" columnist for *Industrial Research* magazine, calls attention to the fact that Dr. Robert Helliwell and John Katsufrakis of Stanford University's Radio Science Laboratory, demonstrated that very low frequency radio waves can cause oscillations in the magnetosphere. With a 20-km antenna and a 5 kHz transmitter in the Antarctic, they found that the earth's magnetosphere could be modulated to cause high energy particles to cascade into our atmosphere, and by turning the signal on or off they could start or stop the energy flow.

"The theoretical implication suggested by their work," says Jueneman, "is that global weather control can be attained by the injection of relatively small 'signals' into the Van Allen belts—something like a super-transistor effect."

But Jueneman's speculations go further and are eminently

worthy of Tesla: "If Tesla's resonance effects, as shown by the Stanford team, can control enormous energies by miniscule triggering signals, then by an extension of this principle we should be able to affect the field environment of the very stars in the sky...With godlike arrogance, we someday may yet direct the stars in their courses."[9]

No biography of Tesla would be complete without mention of his bright following of amateur physicists who build Tesla coils for their personal research, endeavoring to replicate his electrical magic; and the young inventors who pore over his basic patents and still find inspiration from them.

Durlin C. Cox, a Wisconsin physicist who has pondered Tesla's published writings, has built two Tesla coils, the second of 10 million volts. The reasons: "My own personal interest in high voltage engineering, especially in the field of high frequency rf transformers; to further my studies on the laboratory production of ball lightning; and because the University of Wisconsin at Madison asked me to submit a Tesla coil in their bi-annual Engineering Exposition in the spring of 1981." He and friends built one Tesla coil for a Hollywood studio for lightning effects, which has been a common use of them.

Electrical engineer Leland Anderson has summarized the major points in design that a coil builder might gain from reading Tesla's *Colorado Springs Notes*:

1. The Q's of the primary and secondary must be as high as practicable.

2. The Q's of the primary and secondary should be equal.

3. The length of the secondary winding should be one-quarter of the effective operating wavelength.

4. The technique of using an "extra coil" tank circuit (or a variation of it) in the secondary to magnify the voltage should be used.

"With these criteria in mind," he says, "the builder will find that hundreds of turns are not necessary for the secondary winding to achieve high voltages."

Last but not least, what about Tesla's death/disintegrator rays? Were his concepts sound? If they were found useful by the U.S. Army Air Force research team, whose top-secret project was rumored to have had the code name "Project Nick," it may be safely assumed that instead of being "destroyed," as reported, his papers are still highly classified.

Dr. Trump's evaluation and Swezey's assessment of Tesla's "secret weapons" have, however, received updated concurrence by

Lambert Dolphin, assistant director of the Radio Physics Laboratory at SRI International, who has studied the inventor's work and his ball-lightning research for two decades. He points out that the fields of knowledge of both physics and electrical engineering have grown exponentially since about 1930.

"Whole libraries are now required just to keep track of all the theory and experience that have unfolded since Tesla's time," he says. "Our mathematical and practical understanding of electricity, magnetism, electromagnetic theory, and radio communications has continued to grow explosively ever since 1950, or should I say 1970!"[10]

Tesla, Dolphin believes, "may have had intuitive insight into lasers and high-energy particle beams as well as ultra-high voltage phenomena, but now that we understand all the physics much more, we can easily evaluate many of his extravagant later-life claims."[10]

In fact, there is no good evidence to suggest that Tesla anticipated lasers. His "teleforce rays" seem to have been concerned exclusively with high-energy particle beams. We still do not know precisely how he intended them to work, although, says Dolphin, the available evidence suggests that Tesla may not have paid sufficient attention to how greatly such beams may be absorbed or dispersed by molecules and atoms in the air. In any case, even if we did understand Tesla's intentions more clearly, we should be hard put to compare them to the current state of the art, much of which is hidden under high security classifications.

Nevertheless, Tesla's work with high voltages to accelerate charged particles does seem to have been decidedly in what is now the mainstream of physical research. "In this field," says Dolphin, "he anticipated modern linear and circular nuclear accelerators. Such machines today have energy levels of tens of billions of electron volts or at least 1,000 times greater energy levels than Tesla ever attained.

"I am sure his magnifying transmitters were spectacular... He probably generated some interesting arcs and sparks that were what we now study as *plasmas*. The containment of plasmas is a huge area of modern physics. For example ... to see if small amounts of matter can be turned into immense amounts of electrical power in carefully contained plasmas." But Tesla's early discoveries and inventions, he concludes, were indeed ingenious and ahead of their time.[11]

As this book goes to press, the Pentagon is studying the creation of a new branch of the armed services, to be known as the U.S. Space Command, whose primary arsenal will consist of laser and particle-beam weapons fired from "space battleships." In prose not

unlike Tesla's own, a Department of Defense fact sheet compares particle beams to "directed lightning bolts" —although without explicitly admitting that such a weapon has in fact been developed.

It is difficult to assess the current state of the beam-weapons program because virtually everything about it is heavily classified. Apparently the technology involved has proved to be complex and difficult, raising questions about the project's feasibility, but many experts nevertheless seem to be hard at work on the problem. At the same time, the activities of the other nations in this area have been monitored carefully by agencies of the federal government. Indeed the possibility of creating a family of particle-beam weapons has been a subject of serious discussion in this country for at least the past twenty-five years, and it is, in my opinion, of no little significance that as long ago as 1947 the Military Intelligence Service identified the writings about a particle-beam among Tesla's scientific papers as being "of extreme importance."

Since he had no laboratory in the later years of his life, Tesla was unable to develop his ideas. But it is undeniable that he described in general terms half a century ago what may prove to be one of the main weapons of the Space Age. And to the end of his days, Tesla the pacifist hoped that such knowledge would be used, not for war among Earthlings, but for interplanetary communication with our neighbors in space, of whose existence he felt certain.

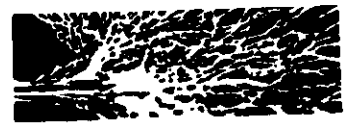

Bibliographical Essay

Some of Tesla's own writing—lectures, articles, patents, papers, and letters—is now available in the United States. His most important lectures and his brief autobiography, in bound volumes, are listed in the prologue to the reference notes.

Citation of biographies of Tesla by O'Neill, Hunt, and Draper, and others may be found in the reference notes. The O'Neill manuscript and the Swezey Collection are to be found at the Smithsonian Institution, Dibner Library.

Serious Tesla scholars will wish to consult the annotated *Dr. Nikola Tesla Bibliography* by J. T. Ratzlaff, and L. I. Anderson (San Carlos, California, Ragusan Press, 1979), for it contains some 3,000 sources of writings by and about Tesla. "Priority in the Invention of Radio, Tesla v. Marconi," by Leland Anderson may be obtained through the Antique Wireless Association, Monograph New Series No. 4.

A new means of analyzing Tesla's inventions is provided in *Dr. Nikola Tesla: Selected Patent Wrappers from The National Archives*, by J. T. Ratzlaff (Millbrae, Ca., Tesla Book Co., 1980). These "file wrappers" provide explanations and correspondence between the patentee and the Patent Office, to overcome objections raised by the examiner.

Tesla's *Colorado Springs Notes, 1899–1900*, published in 1978 by the Tesla Museum, is available through Nolit, Terazije, 27, Belgrade, Yugoslavia.

The Library of Congress Manuscripts Division contains microfilm correspondence between Tesla and George Scherff, Robert Underwood Johnson, Mark Twain, members of the Morgan family, George Westinghouse, and the Westinghouse Electric and Manufacturing Company.

In addition original correspondence and photographs may be found at the Butler Library, Rare Books and Manuscripts, Columbia University, including letters between Tesla and Johnson, Scherff, and

157

REFERENCE PAGES

96 pages

February 12, 1937

Mr. Edgar Hoover, Director,
Federal Bureau of Investigation,
Washington, D.C.

My dear Mr. Hoover:

I do not know whether or not the recent series of air crashes on the west coast has attracted the attention of your department, or whether, if investigation were indicated, the jurisdiction would be your own. An idea as to the cause of these crashes has occurred to me, however, and I thought it might bear a bit of checking up.

If you will check newspaper files as far back as 1934, I believe you will find that the earliest of the unexplained (and apparently unexplainable crashes) occurred about that time.

As I remember the events, it was during that year that three small planes exploded in the air over Texas and southwestern Kansas and Oklahoma. These crashes were not accounted for, either by subsequent investigation where the plane occupants were killed or by the experience of surviving plane occupants in one case.

Following these tragedies there came a lapse of about a year, after which there occurred (likewise without apparent reason) the series of crashes which cost the lives of a senator, of Knute Rockne, and a number of others. All crashes again occurred in the South and Southwest.

Again there was a lapse of time, this one not quite a year, and there started the worst series of air disasters the country has yet seen. One plane lost in the Southwest and not yet accounted for. One plane crashes into a mountainside within sight of its airport. And now the most recent incident, the falling of a United liner into San Francisco Bay while circling its airport, preparatory to landing.

RECORDED & INDEXED 62-47649-1

Now in this most recent incident, the experience of the radio operator at the airport seems to me to be highly illuminating. This operator reported a soft buzz interrupting his communication with the liner ... a loud roar such as produced by the worst imaginable static ... then silence. The plane had dropped into the bay like a plummet.

FEB 24 1937

[redacted] b6 b7C

159

Crack pilots do not suddenly become rank hams and bungle in handling a ship. Nor do the three motors (or even two) on the large airliners, stop simultaneously without extremely sufficient reason. Th ese things might happen once or even twice in a lifetime. They do not happen six and eight times a year. It is not logical that they should.

To digress for a moment, I recall reading an article in a magazine a year or two ago, written by Nikola Tesla, the inventor. The article dealt with a new invention of Mr. Tesla's ... a giant induction coil which would project power (high voltage) through the atmosphere without the use of transmission wires. Mr. Tesla devoted some space to the possible social benefits that would result to the public should his invention be perfected and become practical.

I have not heard of Mr. Tesla now in two or three years. Perhaps he has left the country. Perhaps he is still here. He might still be working on the invention described in the above-mentioned article. It might have been stolen from him.

In any case, his views on the ideas presented by these two unconnected subjects, would be well worth while having. And if I had the money and the time, I should certainly make an effort to smoke him out myself.

The thing is simply this: if one man can make an instrument that will project power through the air for even so short a distance as 500 yards (the then-practical limitations of Mr. Nikola's device) it is entirely possible for another to project power for several hundreds of miles. And the effect of such uncontrolled power on metallic objects in its path is entirely unpredictable.

Please do not think me a "crank" letter writer. I have never before written a letter of this type to anyone. But the idea seems to me so within the bounds of possibility that I most sincerely feel it will bear some practical study.

Yours very respectfully,

[redacted]

(b)(7)(c)

Letter Ack. + Ref
Bu. Air Commerce
cc [redacted]
2-27-37

XXXXXX
XXXXXX
XXXXXX

FEDERAL BUREAU OF INVESTIGATION
FOIPA DELETED PAGE INFORMATION SHEET

6 Page(s) withheld entirely at this location in the file. One or more of the following statements, where indicated, explain this deletion.

☒ Deletions were made pursuant to the exemptions indicated below with no segregable material available for release to you.

Section 552		Section 552a
☒ (b)(1)	☐ (b)(7)(A)	☐ (d)(5)
☐ (b)(2)	☐ (b)(7)(B)	☐ (j)(2)
☐ (b)(3)	☐ (b)(7)(C)	☐ (k)(1)
_____	☐ (b)(7)(D)	☐ (k)(2)
_____	☐ (b)(7)(E)	☐ (k)(3)
_____	☐ (b)(7)(F)	☐ (k)(4)
☐ (b)(4)	☐ (b)(8)	☐ (k)(5)
☐ (b)(5)	☐ (b)(9)	☐ (k)(6)
☐ (b)(6)		☐ (k)(7)

☐ Information pertained only to a third party with no reference to you or the subject of your request.

☐ Information pertained only to a third party. Your name is listed in the title only.

☐ Documents originated with another Government agency(ies). These documents were referred to that agency(ies) for review and direct response to you.

_____ Pages contain information furnished by another Government agency(ies). You will be advised by the FBI as to the releasability of this information following our consultation with the other agency(ies).

_____ Page(s) withheld for the following reason(s): _____

_____

☐ For your information: _____

_____

☒ The following number is to be used for reference regarding these pages:

65-30311-237

XXXXXX
XXXXXX
XXXXXX

XXXXXXXXXXXXXXXXXXXXX
X DELETED PAGE(S) X
X NO DUPLICATION FEE X
X FOR THIS PAGE X
XXXXXXXXXXXXXXXXXXXXX

FBI/DOJ

CC-287

Mr. Tolson
Mr. E.A. Tamm
Mr. Clegg
Mr. Glavin
Mr. Ladd
Mr. Nichols
Mr. Rosen
Mr. Tracy
Mr. Carson
Mr. Coffey
Mr. Hendon
Mr. Kramer
Mr. McGuire
Mr. Harbo
Mr. Quinn Tamm
Tele. Room
Mr. Nease
Miss Beahm

J. EDGAR HOOVER
DIRECTOR

Federal Bureau of Investigation
United States Department of Justice
Washington, D. C.

13818

JBL:ed

January 11, 1943

MEMORANDUM FOR MR. LADD

RE: UNKNOWN SUBJECTS;
EXPERIMENTS AND RESEARCH
OF NIKOLA TESLA (Deceased)
ESPIONAGE - M

(b)(7)(C)

In a teletype from the New York Office dated January 9, 1943, the Bureau's advice is requested as to what action should be taken in connection with this matter. It is to be noted that Tesla died January 7, 1943, and resided at the Hotel New Yorker. He was one of the world's outstanding scientists in the electrical field and has been conducting many experiments in connection with wireless transmission of electrical power and what is commonly referred to as the "Death Ray".

Sava Kosanovich, a distant relative intensely disliked by Tesla, is taking steps to get possession of these important documents and plans. Kosanovich on January 7, 1943, with George Clark, in charge of the Museum and Laboratory for RCA, and Kenneth Swezey of Brooklyn, New York, entered Tesla's rooms in the Hotel New Yorker and, with the aid of a locksmith, broke into a safe containing some of Tesla's valuable papers, including important electrical formulae, designs, et cetera.

Tesla is reported to have completed and perfected his experiments in the radio transmission of electrical power and to have conceived and designed a revolutionary type of torpedo not presently in use by any nation. It is reported that Kosanovich may possibly make this material available to the enemy.

ACTION:

I called Mr. D[redacted] of the New York Office at 12:30 P.M. and pointed out the apparent burglary violation on the part of Kosanovich. I told him this matter should be discreetly discussed with the State's Attorney in New York City with a view to locating Kosanovich and apprehending him on a burglary charge in order to determine the nature of the material he took from Tesla's safe. I pointed out the necessity for the State's Attorney keeping any action most secret in view of the highly confidential nature of the plans involved. I also suggested that the New York Office contact the Surrogate Court in order that Tesla's effects as well as the contents of his safety deposit boxes might not be entered without the presence of a Bureau Agent in order that we may endeavor to preserve the secrecy of any plans or items essential to the conduct of the war and national security.

Respectfully,

[redacted]

(b)(7)(C)

FOR VICTORY BUY UNITED STATES DEFENSE BONDS AND STAMPS

RECORDED & INDEXED

65 47753-1
F B I
1943

162

65-47953-1

[redacted] (b)(7)(c)

January 21, 1943

SAC, New York

Re: UNKNOWN SUBJECTS; SAVA KOSANOVICH; EXPERIMENTS AND RESEARCH OF NIKOLA TESLA (Deceased) ESPIONAGE (M)

Dear Sir:

Reference is made to a teletype dated January 9, 1943, from the New York Field Office and to a phone conversation between Mr. J. B. Little of the Bureau and Assistant Special Agent in Charge Donegan on January 11, 1943.

It was pointed out to Mr. Donegan that Sava Kosanovich, George Clark and Kenneth Sweeny may have committed a burglary violation by entering Tesla's rooms after his death and particularly by using a locksmith to get into a safe containing some of Tesla's valuable papers. Mr. Donegan was advised this matter should be discreetly discussed with the State's Attorney, New York City, with a view to locating Kosanovich and apprehending him on a burglary charge, in order to ascertain the nature of the material taken from the safe of Nikola Tesla. It was also suggested that the New York Office contact the Surrogate Court, in order that Tesla's effects, as well as the contents of his safety deposit boxes, might not be entered without the presence of an Agent, in order that the secrecy of any plans or items essential to the conduct of the war or national security might be preserved. It was stated that Kosanovich might possibly make certain material available to the enemy.

A review of the Bureau files reveals considerable information concerning Nikola Tesla and his inventions and it should be noted that one Nicola Tesla, who might have been identical with Nikola Tesla, made a speech at the Grange Hall, Springfield, Massachusetts, on June 4, 1922, under the auspices of the Friends of Soviet Russia.

Mr. Tolson
Mr. E. A. Tamm
Mr. Cleg
Mr. Gla
Mr. Ladd
Mr. Nich
Mr. Rose
Mr. Trac
Mr. Carson
Mr. Coffey
Mr. Hend
Mr. Kra
McGuire
Carbo
Quinn Tamm
Tease
Handy

[redacted] (b)(7)(c)

COPIES DESTROYED
148 OCT 26 1967

55 FEB 10 1943

Cat [redacted]

163

[redacted]

(6)(7)(C)

No record of Kenneth Sweezy could be located in the Bureau files from the information available.

The foregoing information is being furnished for possible future reference in connection with this case and it is desired that the Bureau be kept promptly and currently informed of all developments in this case.

Very truly yours,

John Edgar Hoover
Director

Federal Bureau of Investigation

United States Department of Justice
New York, New York

EBC:PM
65-12290

March 19, 1943

Director, FBI

Re: UNKNOWN SUBJECTS; SAVA KOSANOVICH;
EXPERIMENTS AND RESEARCH OF NIKOLA TESLA
(Deceased);
ESPIONAGE, MISCELLANEOUS

Dear Sir:

Reference is made to the Bureau letter in the above-captioned matter dated January 21, 1943, in which it is stated that it is desired that the Bureau be kept promptly and currently informed of all developments in this case.

In view of a telephone call from Mr. Little of the Bureau to Mr. T. J. Donegan, Assistant Special Agent in Charge of the New York Office, dated January 14, 1943, in which Mr. Little stated that the above-captioned matter was now being handled as an Alien Enemy Custodial Detention matter and therefore no further action should be taken in the matter by the New York Field Division, this case is being considered closed in this Office, unless advised to the contrary by the Bureau at some future time.

alien En custodian

Very truly yours,

E. E. Conroy

E. E. CONROY
Special Agent in Charge

ALL INFORMATION CONTAINED
HEREIN IS UNCLASSIFIED
DATE 4-18-89 BY SP1A
291860

ta

COPIES DESTROYED
148 OCT 26 1960

RECORDED & INDEXED

65-47953-3

(b)
(7)
(c)

FOR VICTORY
BUY
UNITED STATES DEFENSE BONDS AND STAMPS

165

FEDERAL BUREAU OF INVESTIGATION

Form No. 1
THIS CASE ORIGINATED AT NEW YORK CITY, N.Y. FILE NO. 100-8189

REPORT MADE AT	DATE WHEN MADE	PERIOD FOR WHICH MADE	REPORT MADE BY
BALTIMORE, MARYLAND	3-29-43	3-6-43	[redacted] (b)(7)(c)

TITLE	CHARACTER OF CASE
SAVA M. KOSANOVICH, with alias Sava M. Cosonovitch	INTERNAL SECURITY G. CUSTODIAL DETENTION

SYNOPSIS OF FACTS:

[redacted] SAVA [redacted]OSANOVICH, [redacted] Reported to have turned [redacted]tents and effects to Alien Property [redacted]odian, NYC, for NICK TESLA. [redacted] (b)(7)(c)

- R U C -

ALL INFORMATION CONTAINED HEREIN IS UNCLASSIFIED DATE 4-30-45 BY [illegible] 291860

REFERENCE: Letter from New York Field Division dated 2-22-43.

DETAILS: AT DOVER, DELAWARE

[redacted]

(b)(7)(c)

Mr. ABE SPANEL, President of the International Latex Corporation, advised that [redacted] He stated that he had been a very good friend of NICK TESLA who has died recently and that he believes that the subject is a third or fourth cousin of TESLA and that when TESLA died, the subject was his only close relative in this country and TESLA's effects came into his possession.

SPANEL related that the subject had recently turned over to the government the majority of the patents of NICK TESLA. SPANEL described TESLA as being one of the greatest inventors that has ever lived. He stated he had more than

APPROVED AND FORWARDED: SPECIAL AGENT IN CHARGE DO NOT WRITE IN THESE SPACES SF

COPIES DESTROYED 148 OCT 26 1960

65-47953 4

RECORDED

CONTESTED THIS REPORT

5 - Bureau
4 - NYC (2 G-2)
2 - Baltimore

APR 22 1943

17 [redacted] (b)(7)(c)

53 APR 22 19[illegible]

U. S. GOVERNMENT PRINTING OFFICE 7—2034

166

900 inventions and patents. SPANEL stated that at one time TESLA had an invention in which he was able to direct electrical current without the means of a conductor. He felt that this type of an invention would be of invaluable assistance to any country at war and for this reason felt that TESLA's inventions and patents should be put into the hands of proper Government officials, where they might be put to the best advantage for the United States. He does not believe the subject is engaged in any un-American activities and stated that he was more than willing to turn these patents and inventions over to the proper Government agency. He asserted that before TESLA died, he had spoken to the subject regarding his becoming a United States citizen and SPANEL believes that he is now taking the proper steps to achieve that end.

SPANEL also stated that the subject had handed all of the effects of the deceased TESLA to the Alien Property Custodian in New York City.

SPANEL advised that the day before TESLA died he had tried to get in touch with War Department officials in Washington in order that he might make available to them patents and inventions that he had developed. However, he was not able to get in touch with the proper authorities and he died the following day.

SPANEL advised that the Yugoslavian Government had been sending TESLA approximately $600.00 per month for sometime prior to his death and this was described as being a sort of pension.

SPANEL stated further that he has previously turned over information regarding the subject to Special Agent [redacted] of the New York Field Division. He also advised that WALDEMER KEMPFERT, Science Editor, New York Times and BILL LAURENZ, Science Feature Writer, New York Times and the Science Editor of the Herald Tribune would be able to elaborate on some of the accomplishments of NICK TESLA and that the June 1900 issue of the Century Magazine also contained an article relating to the inventions of TESLA.

(b)(7)(C)

SPANEL also stated that he believed BLOYCE FITZGERALD, Pierpont Hotel, Brooklyn, New York, Secretary to TESLA, has been contacted by Special Agent [redacted] and that if the New York Office wishes to contact SPANEL he may be reached at his home [redacted]

- REFERRED UPON COMPLETION TO THE OFFICE OF ORIGIN -

JOHN EDGAR HOOVER
DIRECTOR

CC-287

Mr. Tolson
Mr. E. A. Tamm
Mr. Clegg
Mr. Glavin
Mr. Ladd
Mr. Nichols
Mr. Rosen
Mr. Tracy
Mr. Carson
Mr. Coffey
Mr. Hendon
Mr. Kramer
Mr. McGuire
Mr. Harbo
Mr. Quinn Tamm
Tele. Room
Mr. Nease
Miss Beahm
Miss Gandy

Federal Bureau of Investigation
United States Department of Justice
Washington, D. C.

[redacted] (b)(7)(C)
2:45 p.m.

July 17, 1943

MEMORANDUM FOR [redacted]

RE: SAVA KOSANOVICH
INTERNAL SECURITY (G)
CUSTODIAL DETENTION

At this time SA [redacted] of the New York office telephoned, stating on the previous afternoon [redacted] telephoned that office [redacted] stated that she would like to be interviewed concerning certain information she possessed [redacted]

(b)(7)(D)

Agent [redacted] stated [redacted] two teletypes which the New York office forwarded to the Bureau under dates of January 9 and 12, 1943, in the case entitled UNKNOWN SUBJECTS, EQUIPMENT, EXPERIMENTS AND RESEARCH OF NICOLA TESLA DECEASED, ESPIONAGE (Bureau file 100-2237). Briefly, the information contained in these teletypes is that shortly after Nicola Tesla, one of the world's outstanding scientists in the electrical field, died in his hotel room at New York City on January 8, 1943, Sava Kosanovich, a distant relative, and other individuals entered his room and opened a safe, examining certain materials which he possessed. On January 8, Mr. L. M. C. Smith of the Department advised Mr. Tamm that he was concerned about the possibility of enemy agents confiscating some of the trunks of Tesla and that apparently the Alien Property Custodian was taking some action in this matter. Inasmuch as the matter was being handled by the Alien Property Custodian's office, the Bureau did not conduct any inquiries into this situation.

(b)(7)(C)

RECORDED 165-47953

[redacted]

FOR VICTORY BUY UNITED STATES SAVINGS BONDS AND STAMPS

COPIES DESTROYED
148 OCT 26 1960

ALL INFORMATION CONTAINED HEREIN IS UNCLASSIFIED DATE 4-18-89 BY SP1A 66cm
291860

57 AUG 19 1943

168

Mr. Ladd

[redacted]

ACTION:

[redacted]

There is attached for your approval a letter directed to the San Juan Field Office requesting that this interview be conducted and also instructing that she be interrogated concerning the other matter referred to above, inasmuch as the Pittsburg Office has not as yet covered this interview.

Respectfully,

[redacted]

(6) (7) (C)

Federal Bureau of Investigation
United States Department of Justice
New York 7, New York

IN REPLY, PLEASE REFER TO
FILE NO. 65-12290
HER:mhm

CONFIDENTIAL

October 17, 1945

Director, FBI

Re: UNKNOWN SUBJECTS;
SAVA KOSANOVICH;
Experiments and research of NIKOLA TESLA (deceased)
ESPIONAGE - M

Dear Sir:

Reference is made to the Bureau letter dated January 21, 1943, which bore a caption similiar to that mentioned above.

The referenced letter dealt with the death, on January 7, 1943, of the famous inventor, NIKOLA TESLA, who as well as being the inventor of Alternating Current, perfected many electrical devices. He is also credited with having developed the so called "death ray" which would safeguard any country from attack by air.

On June 9, 1945, [redacted] of New York City furnished information of a nonspecific nature indicating that it was his belief that persons sympathetic to Russia were making an effort to secure the effects of NIKOLA TESLA in order to salvage therefrom any models or designs of possible military value. [redacted] claimed that he heard that ABRAHAM N. [redacted], President of the NATIONAL LAND CORPORATION, of Dover, Delaware was the motivating influence behind this attempt to obtain TESLA'S papers which are presently held in storage at the MANHATTAN STORAGE WAREHOUSE in New York City. [redacted] promised to return to the New York Field Division shortly after his initial visit and furnish further and more specific information to support his claims.

RECORDED 47953-14

ENCLOSURE ATTACHED

He was not heard from again, however, until September 27, 1945, at which time he furnished the following additional information:

He said that a boyhood chum of his from Wichita, Kansas, BLOYCE FITZGERALD, had been TESLA'S protege and one of the inventors few confidents. According to [redacted], FITZGERALD who is now an Army Private stationed at Wright Field, Dayton, Ohio, is a brilliant 29 year old scientist who spent endless hours with TESLA prior to the latters death, during which time TESLA explained to him most secret experiments. [redacted] stated that FITZGERALD met TESLA in November 1942, but he had been corresponding with the latter since 1935. According to the informant, FITZGERALD had developed some sort of anti-tank gun, the details of which he presented to TESLA who made certai corrections in design and specifications to further perfect the weapon.

[redacted] related that sometime in December 1942, when FITZGERALD was attending a meeting of the AMERICAN SOCIETY OF MECHANICAL ENGINEERS, he made the acquaintance of ABRAHAM [redacted] who became interested in FITZGERALD'S

RETURN TO INDEXING DEPT.

170

gun. SPANEL offered financial aid to FITZGERALD and the two were in the closest contact with each other for a considerable period of time. [redacted] said that FITZGERALD had lined up a deal for the purchase of the gun by the REMINGTON ARMS COMPANY, but for some reason SPANEL blocked this deal by reaching top men in the REMINGTON COMPANY. SPANEL is then reported as having obtained a job for FITZGERALD with the HIGGENS SHIP BUILDING COMPANY in New Orleans and negotiated a contract with FITZGERALD for the purchase and manufacture of the gun in a manner which would return 80% of the profits derived to SPANEL,

[redacted] stated that in November of 1943, for some unknown reason but which he believes to be attributable to SPANEL, FITZGERALD was fired by the HIGGENS COMPANY. In September of 1944, FITZGERALD was inducted into the Army and for a considerable period of time was located at an ordinance experimental station at Elgin Field, Florida. [redacted] stated that at the present time FITZGERALD is engaged in a highly secret experimental project at Wright Field in Dayton, Ohio. In spite of his rank of Private, FITZGERALD actually is the director of this research and is working with many top young scientists who were inducted into Army from leading industrial posts.

According to [redacted], FITZGERALD is presently working on the perfection of TESLA'S "death ray" which in FITZGERALD'S opinion is the only possible defense against offensive use by another nation of the Atomic Bomb. In this connection, it is noted that the New York Times of September 22, 1940 in an article entitled "SCIENCE IN THE NEWS" by WILLIAM A. LAURENCE, Science Editor states that TESLA devulged to LAURENCE the fact that he had developed a "death ray" or "tele-force" which TESLA claimed would melt airplane motors at a distance of 250 miles, so that actually an invisible Chinese Wall would be built around a country against attack by an enemy air force.

According to the article in the TIMES, this electrical device would operate by the generation of power from a plant, a number of which might be located strategically along our coast lines and the beam from which would melt any engine within a radius of 250 miles.

[redacted] stated that during FITZGERALD'S acquaintance with SPANEL, FITZGERALD had told SPANEL of his associations with TESLA and had apparently described to SPANEL some of TESLA'S most secret work. [redacted] believes that SPANEL, who he claims is definitely pro-Russian in attitude, is now attempting through legal procedure to secure custody of TESLA'S effects which are now held by TESLA'S only heir, one SAVA KOSANOVICH, who is presently in Yugoslavia occupying some governmental post.

It will be recalled that in an article published on March 15, 1945, by the KING FEATURE SYNDICATE INCORPORATED, WESTBROOK PEGLER charged SPANEL with spreading pro-communist and pro- Russian propaganda through his full page advertisement in the newspapers, which SPANEL characterized as being published for the INTERNATIONAL LATEX CORPORATION, as a public service feature. It is also interesting to observe that in the New York Times of October 2, 1945, an article appears which states that SPANEL is suing the KING FEATURE SYNDICATE INCORPORATED for six million dollars alleging the column by PEGLER to have been libelous.

(b)(7)(C)

171

[redacted] stated that through FITZGERALD he too had met SPANEL and from this personal acquaintance he formed the opinion that SPANEL was definitely a communist and is probably one of the financial supporters of the Communist Party in this country. [redacted] stated that SPANEL was born in Russia, but is now an American citizen. He also charged that SPANEL exerted tremendous political influence in Washington, D. C., and said that one of SPANEL'S closest political friends was HENRY WALLACE.

[redacted] advised that two agents from Army Intelligence contacted and stated that in an investigation to determine the qualifications of FITZGERALD for a commission, they had developed information indicating that SPANEL was definitely endeavoring to secure possession of TESLA'S effects. [redacted] indicated that Army Intelligence was pursuing an investigation along these lines in an attempt to ascertain the complete story in this regard.

psychiatrist

[redacted] (b) (7) (C)

[redacted] stated that FITZGERALD had interested a group of young Army scientists now working with him at Wright Field in this foundation, and their ultimate goal is to secure the support of a wealthy backer in order that a foundation might be established and that a sort of "idea factory" might result. He said that they intended to contact HENRY FORD, SR., to solicit his aid in this regard.

[redacted] related that probably the greatest idea of TESLA'S was that involving the wireless transmission of electrical power. He claimed that TESLA had performed a successful experiment many years ago at Pikes Peak, at which time he harnassed local current from the sun's rays which he built up into a huge potential of electrical energy. [redacted] said that according to FITZGERALD, if this idea could be furthered, all electrical energy to operate the world's machinery might be gotten absolutely free rather than by the costly method with which electrical power is presently generated. He said that his idea was to conduct further experiments along this line in China where the need for electrical power is very great.

Inquiry was made at the MANHATTAN STORAGE WAREHOUSE in New York City, and it was determined that the effects of NIKOLA TESLA are contained in some

75 packing cases and trunks and are presently under seal by the New York State Department of Taxation. It was learned that the rental for this storage, which approximates $15 per month, is being paid by one CHARLOTTE MUZAR, 134 East 63rd Street, New York, New York, who is listed as the agent for SAVA KOSANOVICH.

Inquiry was also made at the office of the Alien Property Custodian in New York City, concerning an investigation conducted by this office at the time of TESLA'S death, and at which time the latters property was placed under seal by the United States Government. Mr. WALTER GORSUCH, Chief Investigator for the Alien Property Custodian, provided a cover letter and a summary of materials owned by TESLA at the time of his death which was examined by JOHN G. TRUMP, of the office of SCIENTIFIC RESEARCH & DEVELOPMENT. Mr. GORSUCH also stated that his file in this matter reflected that on the night TESLA died his safe was forced open by a representative of the SHORE & WALKER SAFE COMPANY. It was Mr. GORSUCH'S belief that a Mr. STEZEY who is believed to be one of the editors of the POPULAR SCIENCE MAGAZINE was present in TESLA'S room shortly after the safe was opened. These individuals were MILLIS GEORGE, EDWARD PALMER, and JOHN J. CORBETT.

There are enclosed herewith two typewritten copies of the report by Mr. TRUMP of the ALIEN PROPERTY CUSTODIAN reflecting the findings of Mr. TRUMP, following his examination of TESLA'S effects. There is also enclosed herewith a photostatic copy of a list of persons associated with NIKOLA TESLA. This latter item was furnished by [redacted] (b)(7)(C)

The above information is furnished for the Bureau's information, and no investigation is being conducted by this office.

Very truly yours,

E. P. CONROY, SAC

3 Enclosures

000004

173

13810

Address writer at:

Mass. Inst. of Tech.,
Cambridge, Mass.
January 29, 1943.

Mr. Walter Gorsuch,
Alien Property Custodian,
120 Broadway,
New York, New York.

Dear Sir:

At your request and that of Mr. Joseph T. King of the Washington office of the Alien Property Custodian, I have examined the private papers, writings, and other property of the late Dr. Nikola Tesla with the view to determining both their possible usefulness to this country in its war effort and the possible hazard attendant on their falling into unfriendly hands.

This examination was made at the Manhattan Warehouse, 52nd Street, New York City, on January 26-27, and included all of the notes and material in Dr. Tesla's immediate possession at the time of his death and now in the custody of your office. For reasons indicated below, no investigation was made of material in trunks which had remained untouched in the basement of the New Yorker Hotel for ten years prior to Dr. Tesla's death.

As a result of this examination, it is my considered opinion that there exist among Dr. Tesla's papers and possessions no scientific notes, descriptions of hitherto unrevealed methods or devices, or actual apparatus which could be of significant value to this country or which would constitute a hazard in unfriendly hands. I can therefore see no technical or military reason why further custody of the property should be retained.

For your records, there has been removed to your office a file of various written material by Dr. Tesla which covers typically and fairly completely the ideas with which he was concerned during his later years. These documents are enumerated and briefly abstracted in the attachment to this letter.

COPIES DESTROYED
148 OCT 26 1960

13811

It should be no discredit to this distinguished engineer and scientist whose solid contributions to the electrical art were made at the beginning of the present century to report that his thoughts and efforts during at least the past fifteen years were primarily of a speculative, philosophical, and somewhat promotional character--often concerned with the production and wireless transmission of power--but did not include new sound, workable principles or methods for realising such results.

Very truly yours,

JOHN G. TRUMP,
Technical Aide,
Division 14, NDRC.

Enclosure.

JGT/G

ABSTRACTS OF DR. NIKOLA TESLA'S WRITINGS
RETAINED AS EXHIBITS
FOR THE ALIEN PROPERTY CUSTODIAN

1.

On January 26 and 27, 1943, an examination was made of the technical papers of Dr. Nikola Tesla which, after his decease, had been stored in the Manhattan Warehouse in New York City. This examination was made for the purpose of determining if any ideas of significant value in the present United States war effort could be found among his possessions. Participating in this examination were Mr. John C. Newington, New York Office of the Alien Property Custodian; Mr. Charles J. Hedstniemi, Washington Office of the Alien Property Custodian; Dr. John G. Trump, Office of Scientific Research and Development, Massachusetts Institute of Technology, Cambridge, Massachusetts; Willis George, Office of Naval Intelligence, Third Naval District; Edward Palmer, Chief Yeoman, USNR; John J. Corbett, Chief Yeoman, USNR.

2.

The following papers, which are regarded as typical of Nikola Tesla's writings and thoughts in the period of 1925 to 1942, were removed for the purpose of record and are listed below in the random order in which they were found, together with a brief individual abstract.

Exhibit A

"Possibilities of Electrostatic Generators" - an undated article probably written about 1934 discussing the possibilities, as a source of high-voltage D-C power, of the Van de Graaff type of electrostatic belt generator. The article states correctly the electrostatic principles employed in this device and points out that such generators are not suitable for commercial high-power applications, though of undoubted scientific value. Tesla's wireless tower, erected in 1902 on Long Island, is stated in this memorandum to have been charged to 30 million volts.

Exhibit B

"Reactive Forces of Glycerine and Dynamite" - an undated memorandum involving some calculations of the explosive power of certain compounds and then deviating to a discussion of the possibility of transmitting power by mechanical vibrations along the earth's crust.

Exhibit C

"Process of De-Gassifying, Refining, and Purifying Metals" - a 41-page memorandum probably written about 1930 dealing with the above subject and proposing new theories of capillarity and surface tension. This correspondence indicated that this had been submitted to various industrial companies.

Exhibit D

"Reply to Amtorg re 'the generation of high-voltage and the acceleration of charged particles'" - This document, dated November 8, 1935, answers questions raised by Soviet engineers and scientists regarding Tesla's proposal of May 16, 1935. From this answer, it is deduced that the proposal concerned the generation of high voltages by electrostatic means. These means consisted of a high-voltage terminal presumably supported on an insulating column and charged by a gaseous charge conveying medium passing between ground and terminal. The ideas contained in this memorandum are fairly similar to the belt-conveyor electrostatic generator methods proposed by Van de Graaff and do not appear to offer any unusual features.

Exhibit E

"Art of Telegeodynamics, or Art of Producing Terrestrial Motions at Distance" - This document, in the form of a letter dated June 12, 1940, to the Westinghouse Electric & Manufacturing Company, proposes a method for the transmission of large amounts of power over vast distances by means of mechanical vibrations of the earth's crust. The source of power is a mechanical or electromechanical device bolted to some rocky protuberance and imparting power at a resonance frequency of the earth's crust. The proposed scheme appears to be completely visionary and unworkable. Westinghouse's reply indicates their polite rejection of this idea.

Exhibit F

"New Art of Projecting Concentrated Non-Dispersive Energy through Natural Media" - This undated document by Tesla describes an electrostatic method of producing very high voltages and capable of very great power. This generator is used to accelerate charged particles, presumably electrons. Such a beam of high-energy electrons passing through air is the "concentrated non-dispersive" means by which energy is transmitted through natural media. As a component of this apparatus there is described an open-ended vacuum tube within which the electrons are first accelerated.

Exhibit F (cont.)

The proposed scheme bears some relation to present means for producing high-energy cathode rays by the cooperative use of a high-voltage electrostatic generator and an evacuated electron acceleration tube. It is well known, however, that such devices, while of scientific and medical interest, are incapable of the transmission of large amounts of power in non-dispersed beams over long distances. Tesla's disclosures in this memorandum would not enable the construction of workable combinations of generator and tube even of limited power, though the general elements of such a combination are succinctly described.

Exhibit G

A circular by Carol Bird, dated September 10, 1938, entitled "Tremendous New Power Soon to Be Unleashed". This describes in popular style some biographical information concerning Nikola Tesla and some ideas for the transmission of power on which he is stated to be working. It appears that the method of transmission is by the mechanical resonance method outlined in Exhibit F, above.

Exhibit H

This exhibit consists of a series of letters to representatives of the British Government dated August 28, 1936; October 26, 1937; December 15, 1937; and April 5, 1938. It includes a reply dated January 7, 1938, from the British Government. These letters offer to the British Government, for a fee, the disclosure of a means for accelerating to high energies minute particles. Such beams would constitute a death ray capable of the protection of Great Britain from air attack.

The method proposed is essentially that described in Exhibit F above. Following the initial letter dated August 28, 1936, the subsequent letters attempt to clear up the "misunderstandings" of the British representatives and to expedite their acceptance of the Tesla proposal. The British reply dated January 7 is a polite expression of disinterest in the proposal.

Exhibit I

An undated memorandum written after Tesla's 79th birthday describing several discoveries which he believed he had made. The first related to a dynamic theory of gravity which is described as not yet completed. The second stated as a physical truth the belief that "there is no energy in matter other than that received from the environment". This second statement, which is discussed at length in this and other writings of Tesla, indicates his disbelief in the existence of atomic or nuclear energy.

Exhibit J

"A Method of Producing Powerful Radiations" - an undated memorandum in Tesla's handwriting describing "a new process of generating powerful rays or radiations". The memorandum reviews the works of Lenard and Crookes, describes Tesla's work on the production of high voltages, and finally in the last paragraph gives the only description of the invention contained in the memorandum. This description is as follows: "Briefly stated, my new simplified process of generating powerful rays consists in creating through the medium of a high-speed jet of suitable fluid a vacuous space around a terminal of a circuit and supplying the same with currents of the required tension and volume".

Exhibit K

A letter to prospective licensees on telegeodynamics dated December 27, 1941. This is a single-page letter with the typewritten signature of Dr. Nikola Tesla, in which he addresses himself to the prospective licensees of telegeodynamics, states that over a half million dollars was spent on this development with funds contributed by the Morgans, Crawford, J. J. Astor, and Fish, as well as commercial organizations, and states this to be a new art with which "unvelievable wonders can be achieved".

Exhibit L

Tesla's "New System of Fluid Propulsion". This is an undated memorandum of about 20 typewritten pages describing a system of fluid propulsion in which the conversion from hydraulic to rotary mechanical power is achieved by passing the fluid between flat circular disks, shaft-mounted and enclosed in a casing.

This memorandum written about 1925 describes in general terms a kind of hydraulic turbine which seems practical. There is copious evidence among the other of Tesla's papers that this idea was generally disclosed to appropriate individuals and that it received favorable comment and possibly some use. Some of these comments are contained on the last page of the exhibit.

Exhibit M

"The Power of the Future" - a memorandum apparently written by Tesla and probably in response to a request from some popular science group for an opinion as to the source of future power. This memorandum reviews the gradual evolution of power sources. It discusses in some detail the possibility of atomic power and states as his opinion that atomic power is not feasible. The discussion of atomic energy is apparently confused to some extent

Exhibit M (cont.)

with planetary energy. The article further discusses the subject of wind, tides, lightning, and water power as a source of commercial energy. The last sentence of this memorandum states: "With my wireless system, it is practicable to transmit electrical energy at a distance of twelve thousand miles with a loss not exceeding 5 per cent. I can conceive of no advances which would be more desirable at this time and more beneficial to the further progress of mankind." This memorandum constitutes an interesting generalized discussion of the various sources of power. It is qualitatively correct for the most part except probably in that portion which deals with atomic power.

Exhibit N

"The Transmission of Electric Energy Without Wires" - an article by N. Tesla in the Electric World, March 5, 1904, pages 429-431. A general, somewhat biographical article on Tesla's early work with some speculation on the possibility of long-distance wireless transmission of large amounts of energy.

Exhibit C

"World System of Wireless Transmission of Energy" - an article by N. Tesla in Telegraph and Telephone Age, October 16, 1927, pages 457 and 460. An article which traces the early work on the production and transmission of electromagnetic radiations, describes Tesla's efforts to increase the amount of power which can be transmitted without wires and concludes with a proposed "World System" for the wireless transmission of both power and communications. No workable disclosure of a means for accomplishing this is included, and such generalities as suggest the approach which Tesla had in mind do not seem capable of accomplishing the desired result.

Exhibit P

"Interview with Dr. Nikola Tesla" by Alden P. Armagnac for Popular Science Monthly, May 24, 1928. An 11-page memorandum written in popular conversational style describing an interview with Dr. Tesla and reporting his present work. This report includes statements on a new airplane, on rocket ships, on the wireless transmission of power, on a world system plan for the transmission of speech and television, on the impracticability of harnessing atomic energy, on radio activity, and on the acceleration of charged particles, such as cathode rays, by high voltages.

Exhibit Q

An agreement dated April 20, 1935, between Nikola Tesla and the Amtorg Trading Corporation, in which Tesla agreed to supply plans, specifications, and complete information on a method and apparatus for producing high voltages up to fifty million volts, for producing very small particles in a tube open to air, for increasing the charge of the particles to the full voltage of the high potential terminal, and for projecting the particles to distances of a hundred miles or more. The maximum speed of the particles was specified as not less than 350 miles per second. The receipt of $25,000 fee for this disclosure was acknowledged in this agreement, which was signed by Nikola Tesla and by A. Bartanian of the Amtorg Trading Corporation. The method referred to in this agreement is apparently that described in Exhibit F, above. It is probable that Exhibit D, above, is an effort by Tesla to clear up the questions raised by Soviet engineers after the subject disclosure had been made. There is no evidence that the inventions and information referred to in this agreement are other than those described in a number of Tesla's papers and published articles. It should therefore be expected, and it is substantiated by Exhibit D, that this disclosure subsequently proved unworkable.

3.

An examination of several items of scientific apparatus among the Tesla efforts at the Manhattan Warehouse and in a deposit box at the Governor Clinton Hotel showed those to be standard electrical measuring instruments in common use several decades ago.

JOHN G. TRUMP,
Technical Aide,
Division 14, NDRC.

Mass. Inst. of Tech.,
Cambridge, Mass.,
January 30, 1943.

JGT/G

LIST OF PERSONS ASSOCIATED WITH NIKOLA TESLA

Kerrigan, William - 89 Logan St., Brooklyn, N. Y.
Employed as building supt. Washington Market, Brooklyn. Mr. Kerrigan was the messenger boy for Postal Telegraph some years prior to Jan. 1943. At Mr. Tesla's request, he continued his services as special messenger when convenient. He had called upon Tesla the week prior to his death and has much valuable data and information concerning Tesla's contacts. I first met Mr. Kerrigan at the Frank Campbell funeral church.

Baumgarten, Charles - Room 1203, Municipal Bldg., Budget Bureau, N.Y.C.
Mr. Baumgarten was met at the funeral and Mr. William Lawrence of the New York Times and myself had lunch with him. Mr. Baumgarten knew Tesla and his connections with the Queensboro Bridge and many of his developments of Civic interest.

Skerritt, Miss Dorothy F. - Office, Biddle Purchasing Company, 107 Chambers Street, N.Y.C. - Wo. 2-5500.
Residence: Hasbrook Heights, New Jersey
Miss Skerritt was secretary to Doctor Tesla from 1912 until 1922. She is familiar with the Marconi patent suit, many of Tesla's scientific theories; knows the names of some of his friends; has witnessed demonstrations in his laboratory, then at 8 W. 40th St. N.Y.C. Miss Skerritt also knows that between 1916 and 1918, Doctor Tesla was at the Blackstone Hotel, Chicago and may have material there. She can give account of many of his deals with various firms.

Merrington, Marguerite - 46 W. 97th Street, N.Y.C. - Riverside 9-8186
Miss Merrington has known Doctor Tesla since 1893 and has been a guest of his on several occasions at the old Waldorf Hotel and at his laboratory in 1894 on Houston Street. Miss Merrington recalls the lighting effects without filaments and his radio controlled boat demonstrations. She also recalls statements regarding communication without wires by means of a small instrument. She has witnessed many laboratory experiments including power transmission without wires over short distances in the laboratory and also metallic plate suspension. He had also talked about communication with mars to her.

Holden, Mrs. Agnes J - 327 E. 52 St. N.Y.C. - Plaza 3-2341
Mrs. Holden is the daughter of Robert U. Johnson (deceased) (1936) who was a close friend of Tesla for many years. Mrs. Holden first met Mr. Tesla at her father's home when she was about 12 years old. The Johnsons were connected with the Century Magazine which published many articles regarding Tesla. Mr. Johnson wrote several poems about Tesla, one of which appeared in the April, 1895 issue of the

Century Magazine and the others appeared in "Poems of 50 years, 1880-1930 by Robert Underwood Johnson. Mrs. Holden has been in close contact with Doctor Tesla and has witnessed many of his demonstrations including that of the oscillator of 1899. She recalls the near destruction of the laboratory. Since "World II" , she has talked with Doctor Tesla with regard to instruments of war and he told her in response to her inquiry regarding tanks recently that he could stop them or the war. She recalls his discussions with her and her father regarding transmissions of power and Mars, etc. She says that she knows that Tesla has things for our Government only. Mrs. Holden witnessed many of the experiments and was present at the radio-controlled boat demonstration many years ago.

Lowenstein, Fritz (Deceased) Brother, Emil Lowenstein - 182 Bennett Ave. N.Y.C. - Wa-7-4519. Business (Artist) 420 Lexington Ave. N.Y.C. - Mu-5-8065. Mr. Fritz Lowenstein was the assistant to Dr. Tesla during his historic laboratory experiments in Colorado Springs in 1899. He was also to have appeared as a defense witness for Tesla in his Marconi patent suits during 1915, but for some reason failed to testify. The brother, Emil, address above, knows of the relatives of Mr. Fritz Lowenstein who have documents pertaining to the 1899 experiments. (Mr. G.H. Clark provided information re documents and Lowenstein) (Mr. Czito mentioned Lowenstein). Mr. Emil Lowenstein is not on friendly terms with the entire Lowenstein family and a Mr. Massey, 52 Vanderbilt Ave. can furnish additional information re Lowenstein.

Shirk, A.J. - Inventor's Model Shop, 70 West 100th St. N.Y.C. Ac-2-9466. Mr. Shirk has met Tesla on 3 occasions and appears to know quite a bit about his model work and laboratory developments, particularly within recent years. His exact status can only be determined by another call or ~~exact status~~ interview. He is attempting to determine the address of a Laboratory that existed at about 57th and 3rd Ave. and with whom a certain Dr. Walker was connected.

Arbus, Muriel, Miss - Res: 600 W. 13th St. Tel: Vanderbilt 4-9816, Bus: WPB, Chanin Building, N.Y.C. Miss Arbus has several photographs of Tesla and was a secretary to him before Miss Dorothy Skerritt, i.e. before 1912. She has not been interviewed except by phone.

Berg, Seigurd (or Sigmund) - Copenhagen, Denmark. Business: Paris, France. He has not been interviewed. See Mr. E. Fiensen of the International Latex Corp., Dover, Del. for information. Mrs Berg was a close friend of Tesla in Europe and mentioned other members of his family; Mr. Ernest and Mr. Esko Berg. are found in correspondence from Mrs. B.A. Behrend to Mr. Kenneth Sweezy in 1935 and 1934.

Behrend, Bernard, A. Mrs. - Rond Point, Aiken, S.C. Phone 136. Mr. Behrend and Mrs. Heaviside were very close friends of Dr. Tesla. Mrs. Behrend has many notes and technical data concerning Tesla's work either stored near Boston, Mass or at Aiken, S.C. Mr. Behrend was Chief Engineer for Westinghouse and supervised the construction of a great number of Tesla's motors and generators. He is author of "The Industion Motor" pub. 1921 in which a considerable portion is devoted to Tesla's work.

Boskan, Slavko, Mr. Engineer and author, Belgrade, Yugoslavia. Mr. Boskan published a book in Dresden, Germany entitled "Nikola und Ms Werk" in 1932 (Approx) Mr. Boskan was a close friend of Mr. Tesla and has considerable engineering data in his possession according to Mr. Sweezy.

Denton,Clifford, Mr. - Science Reporter.. New York Daily News, 220 E. 42nd St. N.Y.C. Mu-2-1234 Ext. 557 Mr. Denton has been present at many of Dr. Tesla's press releases and has many notes regarding the conferences. He said that he gave most of his data to Mr. Wm. Lawrence of the New York Times.

Brown Brothers (Mr. Arthur Brown) 220 W. 42 St. Bryant 9-4742. N.Y.C. Brown Brothers are photographers and have a large number of photos of Tesla and his laboratory equipment from which may be deduced mechanical construction details.

Curtis, Thomas Stanley - Address: unknown. Author "Experiments with High Frequencies currents" It is important to locate Mr. Curtis because he discussed many of Tesla's problems and appears to have technical data regarding his work.

Cramps, Shipbuilding Co. Philadelphia, Pa. Mr. Crosby, former Sec. of Commerce, and Mr. Cramps became interested in the radio controlled boat of Dr. Tesla about 35 years ago. Negotiations were carried on between Dr. Tesla and the above executives. This information was furnished by Mr. Kerr.

It may be well to contact Mr. Crosby's relatives or Mr. Cramps.

Czito, Julius - 4629 193rd St. Flushing, Long Island. Tel: Flushing 7-4711. Mr. Czito was mentioned to me first by Mr. Kosenovich and later Mr. Spanel had received his name from Mr. Wm. Lawrence. Mr. Czito is a machinest by trade and worked for Dr. Tesla as such from 1915 to 1929. He was particularly concerned with the construction of a turbin, and a fountain developed for a Mr. Hatmaker. Among other things, he worked on an extractor for sulpher from sea water and mechanical device for measuring the resistance of a ball bearing. He has little data left of Dr. Tesla's work but has a very good memory. He mentioned the Boston gear works, Mr. Bradley, Mr. Miller, the Zumbach Machinery Co. and Mr. Barney Levi. Mr. Czito's father also worked for Dr. Tesla in 1894 and was with him at his Houston St. laboratory. Mr. Czito, Sr. accompanied Dr. Tesla to Colorado Springs in 1899. Mr. Czito has a very good memory and can furnish additional information. He has discovered a photograph showing all of the employees of the old Tesla laboratory. He worked for Dr. Tesla on the development of a speedometer for the Waltham Watch Co. (This information from interview).

Clark, Mr. Geo. H. - Res: 349 E. 49th St. Tel: El-5-1603. Bus: RCA Mfg. Co. (Library) 25 Beaver St. N.Y.C. Room 314 A, Tel: Hanover 2-1829. Ext 123. Mr. G.H. Clark was contacted by virtue of a call placed in December to Mr. Oran Dunlap of the RCA Corp. Mr. Clark has a very large collection of personal data pertaining to radio pioneers, particularly Marconi. His business has been to collect such data in order to assist the prosecution of a suit of infrigment against the Marconi patents. He has never met Dr. Tesla but he knows of his work and is interested in collecting historical data for preservation. Mr. Clark is a friend of Mr. Sweezy.

Crosby, Former Sec. of Commerce, Washington, D. C. (address unknown) See Cramps and Kerr

Wetzel, Tailors - 2 E. 44th St. Murry Hill 2-6757. N.Y.C. This firm was tailor for Dr. Tesla throughout most of his life and may have information with regard to his friends, not otherwise listed.

French, Shriner, and Urner- Shoe Shops. 250 Madison Ave. Murry Hill 2-0319. N.Y.C.
Dr. Tesla purchased most all of his shoes from this firm for the past 50 years and data may be gathered from their records such as mailing addresses, etc.

Cornels, Fredrick C. F.B.I. Office Federal Court House Bldg. 12th Floor ? Regent 2-2315
Mr. Cornels was informed of the possible value of Dr. Tesla's data immediately following his death. So far as known, no action was taken.

Commercial Photostat Company, 11th Floor, Woolworth Bldg. N.Y.C.
Firm which made photostats of Tesla patents for Kerr.

Cramm, Ernest R. to contact call Mr. Clark of RCA.
Mr. Cramm knows a great deal about Dr. Tesla's relations with the RCA Company. Mr. Cramm was a former employee of RCA.

Gilder, Rodman - 108 E. 82nd St. N.Y.C. Butterfield 8-7397.
Son of Richard Watson Gilder, former Pub. of Century Magazine. Mr. Gilder knows of some old Tesla manuscripts and what has happened to his files of the Century Magazine at its dissolution. This name was received from Merrington.

Denmark, Lt. 1270 6th Ave. Room 811, Circle 6-1484 (restricted number) N.Y.C. U.S. Army Int. G2.
Lt. Denmark and his superiors were notified by Mr. Spanel and Washington with regard to Tesla devices. Lt. Denmark was interviewed personally with a group of 4 other officers including Mr. Ritchen.

Kirsch, Leon - a former draftsman for Tesla - name from Miss Dorothy Skerritt.
This party should be located because he had a lot of confidential data of Tesla's and made many drawings according to Miss Skerritt.

Drews, Lillian Married to an Austrian by name of DePree about 1914.
Miss Drews was secretary to Dr. Tesla prior to 1912. Her present address is unknown and she was not in good favor with Dr. Tesla, according to Miss Skerritt, the informant.

DosPassos, John - Attorney, and very good friend of Dr. Tesla. Address unknown.
Wanted Tesla to stop the Spanish American War. Formerly lived in New York. The Gentleman was expensively dressed and wore frocked coat similar to Tesla with bright checkered vest.

Had office in vicinity of 200 Broadway, as late as 1920. Mr. DosPassos is believed to have engineering data of Tesla's according to Thomas Byrne.

DeForrest, Dr. Lee- 6190 Hollywood Blvd. Los An[illegible]s, Calif. - Dr. DeForrest is [illegible] alive and was a friend of Dr. Tesla in the late 90 and early 1900's. There is a possibility that he may be able to assist in interpreting Tesla's works.

Dubilier, William - President of Cornell Dubilier Co., Manufacturers of CCondensers. Mr. G.H. Clark informs that Mr. Dubilier hasin his possession some of the original notes of the 1899 experiments in Colorado Springs.

Fradenburg, A.E. A reporter for the Brooklyn Eagle during 1930 who had numerous contacts with Tesla with regard to Power Transmission. His present address is unknown but he formerly resided in Brooklyn until 1934.

Fitzgerald, Francis, A. - Niagara Power Commission, Buffalo, N. Y. Mr. Fitzgerald, according to a personal interview with Dr. Tesla, was a friend of his on the A.C. power proposition for the development of Niagara. He also told me that Mr. Fitzgerald attempted to influence the Canadian Power Commission in 1927 for a project to transmit power without wires. There is a possibility that he may have some data.

Gernsback, Hugo p Publisher, Res; 230 West End Ave. Sohhler 4-2130 Bus: 25 W. Broadway, Tel: Rector 2-9690. A Friend of Tesla for about 35 years. Published many articles about Tesla during 1919 in the "Electrical Experimenter and later in Science and Invention." Has many of Tesla's original manuscripts and photos. Believes in all of Tesla's theories and has a working knowledge of them. This party was contacted several weeks prior to Dr. Tesla's death. Mr. Gernsback attempted to assist Dr. Tesla personally and appealed to Westinghouse for funds in 1933.

Hammond, John Hayes, Jr. Glochester, Mass. Tel. 2080 Mr. Hammond, Sr., financed some of Dr. Tesla's boat experiments and only 10 years ago John Hayes Hammond, Jr. operated one of Tesla's original models. The family has one of the boats in their

possession now. Much technical data can be gathered from this source.

Hassell, Eugene Floyd - Res: Belport, Long Island
Machinest, Sperry Gyroscope Company, Garden City, L.I. Employee Number 5470, Phone Vigilent 4-5400 (Restricted number) Ext. 211. Use any New York Phone. Name from Czito. This party knows of Tesla's laboratory on Long Island through the laundry driver named Tommy Wallen.

Hobbs, Octavious - Springfield Gardens, Long Island.
(Has not been contacted)

Hatmaker, (no initials) party who financed fountain built by Czito. Has not been contacted, but he lived in the St. Regis Hotel in 1920.

Kosonovich, Sava - Navarro Hotel, apt. 17B. 112 Central park south, N.Y.C. Tel: Circle 7-7900, Office- Regent 7-4662. President of the Central European Powers Association and former Minister of Yugoslavia to the U.S. Mr. K. is one of the two living nephews of Dr. Nikola Tesla (see Nikola Trbjevich) Mr. K. was present in the Hotel New Yorker on the morning following Dr. Tesla's death. Others present were K.M. Sweezy, G.H. Clark. Mr. K. knows of many blue prints that were in the rooms and a black notebook with several hundred pages containing the last notes of Dr. Tesla. Mr. K. says that some of the papers were marked "Government" and that Dr. Tesla had told him he had valuable information. Mr. K. is of the opinion that it may have been for the Yugoslav Gov't. He says that no will was found. His attorney is Mr. Wittenberg. He was appointed heir by the Surrogates Court of New York County. He said that the other nephew waived any interest. Mr. K. is not in accord with Mr. Fotich, present Ambassador of Yugloslavia to U.S., now in Washington. There is a bit of political unrest in the Yugoslav organization.

KOSANOVICH, SAVA

Kerr, John - Attorney, 233 Broadway, N.Y.C. Cooper Kerr Dunham (att. at Law) Courtland 7-9334 - also associated by Byrnes. This firm was the patent attorney for 112 of the Tesla patents. They also instituted the proceedings of the infringement suits for the Westinghouse Company. Mr. Kerr knew Tesla very well and can give considerable data. Mr. Cooper, now deceased, was however, the main instigator of the patents for Tesla. Mr. Cooper left this firm some time ago and Tesla apparently took some of his business

to the new Cooper associates. Many of the old patents of Tesla in his own handwriting are available at this office. Mr. Byrne has additional information. I am of the opinion that this firm still has a connection with Westinghouse.

Byrne, Thomas, J works for Cooper Kerr and Dunham (see John Kerr above). Mr. Byrne knew Tesla very well and also knows of the connections with the Union Sulpher Compnay and the turbine for which see Czito. There is a wealth of information in the office of this company regarding the system of Power Transmission and any patents on file which were never issued. Mr. Kerr and Mr. Byrne were contacted before Mr. Tesla's death.

Kostich (first name unknown) New York, Official photographer for the Yugoslav group. Office believed to be 235 E. 72nd St. and Residence in Long Island City. He may be reached through Regent 7-4662. He is a friend of Mr. Kosonovich.

Kulishich, Prof. Kosta Res: Belgrad, Yugoslovia at the Tesla Institute. He was a school mate of Tesla in Grotz. See the N.Y. Sun of August 27, 1931.

Gage, E. G. 111 Nassau St. N. Y. C. Engineer, works for Leon Ottinger, Courtland 7-5500.
He was a friend of Mr. J.S. Leach (deceased) formerly of Redbank, N. Y. who made electrical parts for Tesla's laboratory. He says that he can get information regarding Leach's relatives and perhaps drawings.

Levi, Bernard - Machinest, Zumbach Machinery Co. 134 W. 54 St. N.Y/C. Circle 7-1444
Received this name from Czito who said that Levi knew of other work by machinests on Tesla's equipment.

Lucan, John - address unknown - presumed to be in Manhattan. A former Western Union Messenger boy during June of 1937 who has other data regarding recent contacts by Tesla during his services as a messenger. He has not been located.

Lynch, Arthur. Lived in England. Believed to be near London, now deceased. Family had considerable correspondence with Tesla regarding transmission of power without wires.

Lawrence, William. Science Writer, New York Times. 229 W. 43 St. N.Y.C. Lackawanna 4-1000. Res: 541 E. 72nd St. Rhinelander 4-5528.

A friend of Tesla's for about 25 years. Has much old data regarding Tesla and has talked to him on many occasions regarding power transmission and the war effort. Has assisted greatly in providing information for gathering material, etc. This party was contacted before Dr. Tesla's death.

Massie, M.C. 52 Vanderbilt Ave. N.Y.C.

Maier, Ruth N. The Yugo Slow Society, 565 5th Ave. Room 807. Pl-8-0256
This is the information center and serves as the publicity agent for the group.
Miss E. Oppa also works there and has many names of Tesla's friends.

Martin, Octavo. Employee of Hotel New Yorker and friend of Tesla.

Mathews, Grenville (deceased) wife was Gana Walker, Met. Star sponsored by McCormick. The family lived in England until his eath and his wife now resides in New York. Mr. Matthews was refered to in Tesla's articles for the Telephone and Telegraph Age for Oct. 1927. Mr. Matthews had correspondence with Tesla on the so-called "Death-Ray". Gana Walker has all of her husband's data.

Mott, C.Jordan, Jr. 520 E. 90th St. N.Y.C. Bus: 6 E. 45th St.
Tel: Vanderbilt 6-0345.
The Mott family financed Tesla in various ventures. They may have some of this data.

Gossett, W. O. Ford Museum, Detroit, Mich.
Mr. Gossett is associated with a Mr. Black while he is on leave of absence to the Army. Mr. Black may be reached regarding some models of Tesla's which are understood to be on display at the Ford Museum.

Nathan, Thoma, A. 25 E. 83rd St. N.Y.C.
We do not know what connection this party had with Tesla but his name was secured.

O'Neill, John, J. Res: 209 N. Long Beach Ave. Freeport, Long Island.
Tel: Freeport 2-493.
Science editor of the New York Herald Tribune, 230 W. 41 St. N.Y.C. Pennsylvania 6-4000.
Mr. O'Neill has known Dr. Tesla for 40 years. He has had many discussions with him regarding his equipment and scientific ventures. He interested Dr. Tesla in 1934 and 1935 to present the matter of national protection devices to the U.S. Govt. Mr. O'Neill made

a few contacts and the matter was dropped. Mr. O'Neill has notes of 1938 and 1939 wherein Dr. Tesla declared he had been approached by the British Govt. through Stanley Baldwin and Neville Chamerlain to negotiate for one of his devices. Mr. O'Neill thought that the sum offered was for 30 millions of dollars. In the interview, Dr. Tesla stated that his device would operate over a range of 200-250 miles. Mr. O'Neill is of the opinion that Tesla had unusual powers. Mr. Lawrence is of the opinion that he does not know what he is talking about. O'Neill can furnish much additional information.

Pickard, Dr. Greenlief Whittier..59 Dalton St. Newton Center, Mass.
Dr. Pickard was a very good friend of Dr. Tesla. Dr. Pickard developed the vertical antenna system and has correspondence with Tesla concerning "wave propagation". This information should be valuable.

Sarony, Inc. Photographers, 362 5th Ave. N.Y.C. Wis 7-1713
They have photos of the old Tesla Laboratory and pictures of Tesla to 1914.

Page, Parker W. Attorney, Present address unknown, however he resided in Manhattan for about 40 years and was formerly associated with Cooper Kerr and Durham. He was last known to be associated with an attorney by the name of Bean in Manhattan. He worked out many of Tesla's details concerning Power Transmission and Tesla gave him many notes according to Mr. Kerr.

Radosavljevich, Paul, R. New York University, Professor, Education Dept. Tel: Spring 7- 2000.
A friend of Tesla for 35 years and knows much of his work with regard to the retina and bile chemistry.

Ritchen, (first name unknown) Anti-Trust Division, Custodian of Alien Property, 18th Floor, 120 Broadway, N.Y.C. Regent 2-3582 (restricted number). Mr. Ritchen supervised the various agents who were responsible for the sealing of the property in the Manhattan warehouse and various hotels. On Saturday eve., January 10, 1943. This office worked with Lt. Denmark.

Astor, Mrs. John Jacob (Lady Ribblesdale) now living in the U.S.
420 Park Ave., Plaza 9-6646
Lady Ribblesdale is the Mother of Vincent Astor who financed many of Tesla's developments about 1910 and their family may have data of importance.

Secor, Harry. Island Road, Ramsey, N. J. Res. Business: Model Craftsman Publication. Ramsey, New Jersey, Tel: Ramsey 519. This party knew Dr. Tesla very well and I talked to him several weeks prior to Tesla's death. He has some plans of Tesla equipment.

Sweezy, Kenneth, M. 163 Milton St. Brooklyn, N. Y. Evergreen 9-5809
Mr. Sweezy has known Dr. Tesla for approximately 15 years. He became a close confident of his on many things and did a very notable work in 1935 when he arranged for a collection of 100 letters from various scientific authorities commemorating Tesla's 75th birthday. Mr. Sweezy wrote many articles about Dr. Tesla and has some old clippings and miscellaneous data including several books detailing Tesla's work. Mr. Sweezy corresponded with Mr. Boskan and Mrs. Behrand. He is a friend of Mr. Clark. Mr. Sweezy would like to write a book of Tesla's life and had spoken to me with Dr. Tesla regarding it. I contacted Mr. Sweezy several weeks before Dr. Tesla's death. (Much information can be obtained here).

Scott, Prof. Charles F. Instructor of Electrical Engineering, Yale University, New Haven, Conn.
Prof. Scott was a friend of Tesla for about 43 years. He worked as an electrician with Tesla in the early days and knows a great deal about his work. Prof. Scott and Tesla did not enjoy close friendship during recent years because Prof. Scott could not understand in full, all of Tesla's work. More information can be obtained here.

Scherff, George, Mrs. 219 Grant Terrace, Maroneck, N. Y.
Mrs. Scherff was the auditor for Tesla for many years and has much information to give. She has information concerning Tesla's personal things and technical data and can provide much of value, including old documents.

Skerrett, John. Author- believed to be from Philadelphia, Pa. who witnessed many of Tesla's demonstrations. Miss Dorothy Skerrett can furnish additional information regarding him.

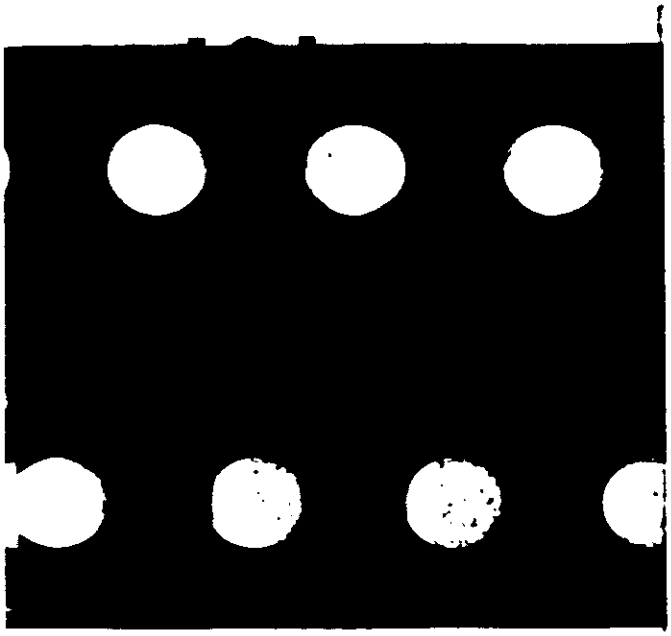

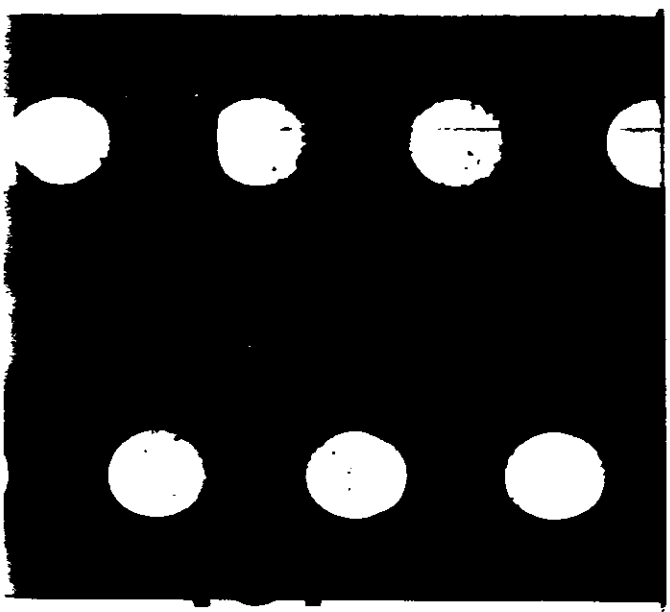

Tom -

It is my understanding that every case which is completed through disclosure is "preprocessed".

ITU's Reading Room maintains only those "preprocessed" cases which have been deemed to have sufficient public interest to warrant inclusion in the Reading Room.

The question, therefore, is: Does the Tesla material fit the criteria for inclusion in the FOIA Reading Room?

I think not. The

(b)(5)
(C)

CC-247

Mr. Tolson
Mr. Clegg
Mr. Glavin
Mr. Ladd
Mr. Nichols
Mr. Rosen
Mr. Tracy
Mr. Egan
Mr. Gurnea
Mr. Harbo
Mr. Mohr
Mr. Pennington
Mr. Quinn Tamm
Mr. Nease
Miss Gandy

June 8, 1949

MEMORANDUM FOR [redacted] (b)(7)(c)

RE: SAVA N. KOSANOVIC
YUGOSLAV AMBASSADOR TO THE US
INTERNAL SECURITY - R
(Bureau file 65-47953)

ALL INFORMATION CONTAINED
HEREIN IS UNCLASSIFIED
DATE 4-18-89 BY SP1 [illegible] #291860

PURPOSE

This memorandum is submitted to incorporate all the pertinent references in the Bureau files concerning the entitled individual who is the Yugoslav Ambassador to the United States.

A case was opened on this individual when information was received that Kosanovic had taken possession of the scientific papers of his uncle, Nikola Tesla, the internationally known inventor. Subsequent investigation determined that Kosanovic had turned over the possession of these scientific papers to the Alien Enemy Custodian in New York City.
(65-47953-X1 & Serial 3 & 4)

(b)(1)(D) [redacted]

(b)

OK

[redacted]

65-47953-21X

INDEXED 143

(b)(7)(c)

cc - Mr. Ladd
cc - [redacted]
cc - [redacted]
cc - [redacted]

CJM:jpa

THIS MEMORANDUM IS FOR ADMINISTRATIVE PURPOSES
TO BE DESTROYED AFTER ACTION IS TAKEN AND NOT SENT TO FILES

194

STANDARD FORM NO. 64

Office Memorandum • UNITED STATES GOVERNMENT

TO : The Director

DATE: April 3, 1950

FROM : D. M. Ladd

SUBJECT: SAVA N. KOSANOVIC
INTERNAL SECURITY - YU
Bureau File 65-47953

Tolson
Ladd
Clegg
Glavin
Nichols
Rosen
Tracy
Harbo
Mohr
Tele. Room
Nease
Gandy

ALL INFORMATION CONTAINED
HEREIN IS UNCLASSIFIED
DATE 4-18-89 BY SP1AGC

291860

Reference is made to my memorandum dated March 29, 1950, relating to the telephone inquiry by the Yugoslav Ambassador Sava N. Kosanovic as to the possibility of obtaining a copy of a microfilm copy of the technical papers of the late Nikola Tesla, world-famous scientist who died in New York in 1943.

Kosanovic claims to have been a nephew of Tesla and is known to have tried to obtain these papers at the time of Tesla's death. However, they were taken over at that time by the Alien Property Custodian. If any copies were made of these papers, they were made by the Office of the Alien Property Custodian which took possession of Tesla's papers in 1943 or the Department of the Army which was interested in copying Tesla's notes in 1945. The Army's interest apparently was developed by a young scientist named [redacted] who had been a protege of Tesla and one of his few confidants. [redacted], who knew that Tesla had been endeavoring to perfect the wireless transmission of electrical current, one of the basic concepts involved in the production of a "Death Ray" had subsequently entered the Army, and in October, 1945, appeared at our New York Office, together with three other members of the United States Army, to request our assistance in obtaining access to Tesla's papers which were stored in a warehouse of the Manhattan Storage Company. [redacted] and his associates were referred, at that time, to the Alien Property Custodian which was reported to have made an investigation of Tesla's belongings following the latter's death.

(b)(7)(C)

Although the Office of Alien Property or the Department of the Army might be able to furnish a copy of Tesla's papers to Kosanovic, it is not believed that the FBI should facilitate his search for this material, which although possibly of no present value from a National Defense standpoint, could still conceivably be of assistance to the Yugoslav Government.

COPIES DESTROYED
14 OCT 26 1960

[redacted] (b)(7)(C)

Attachments

RECORDED - 95

65 47953-2

(b)(7)(C) [redacted]

195

RECOMMENDATIONS:

1. That the attached letter explaining that we have never had such a copy as he requests, be sent to Mr. Kosmovic.

2. That the attached memo to the New York Office, instructing them to make further inquiry at the Manhattan Storage Company and advising that firm that we have no copy of Tesla's papers as they allegedly claim, be forwarded.

STANDARD FORM NO. 64

Office Memorandum • UNITED STATES GOVERNMENT

TO : Director, FBI

DATE: April 17, 1950

FROM : SAC, New York

SUBJECT: SAVA N. KOSANOVIC
INTERNAL SECURITY-YU
(Bufile 65-47953)

ALL INFORMATION CONTAINED
HEREIN IS UNCLASSIFIED
DATE 7-3-80 BY SP4 Jam/rte

Rebulet dated April 3 last.

On April 7, 1950 agents of this office interviewed Mr. J.V. POTTS, Vice President of the Manhattan Warehouse and Storage Company, 52nd Street & 7th Avenue, New York City, and at that time MR. POTTS advised that the rules of his firm required that all persons gaining access to goods stored by Manhattan first had to fill out an appropriate form setting forth their names, date of visit, and reason for requesting access to the goods.

In a review of the file pertaining to the storage of the effects of NIKOLA TESLA, MR. POTTS revealed that only one such visit had been made by persons outside of the management of Manhattan Storage itself. This one occasion took place on January 26 and 27, 1943, at which time representatives of the Alien Property Custodian made a thorough review of the entire effects of the TESLA estate.

The TESLA effects are stored in rooms 5J and 5L of Manhattan Storage's warehouse at 52nd Street & 7th Avenue, New York City. MR. MICHAEL KING, who stated he had been Floor Supervisor for approximately 10 years on the floor in question, stated that he could recall only one occasion in early 1943 when an examination was made of the TESLA effects. He stated that at that time numerous photographs were taken by the examiners. His description of the equipment used would tend to show that a microfilm reproduction was made of some of the papers of the deceased scientist. MR. KING added that several of the group making the examination wore U.S. Navy uniforms, and during the two days required to complete the examination the civilian assistants in the group were identified to him only as "FEDERAL AUTHORITIES". According to MR. KING, no other instance of microfilming of the records of the TESLA estate has taken place since that time.

It should be noted that the Bureau was informed of the examination mentioned above by New York letter (with attachments) dated October 17, 1945, entitled UNKNOWN SUBJECT; SAVA KOSANOVICH; Experiments & Research of NIKOLA TESLA (Deceased), Espionage-M.

UNRECORDED COPY FILED IN

RECORDED - 38
INDEXED - 38

65 47953 27

APR 18 1950

37

cc: 65-12290

(b)(7)(c)

EHC JJC
105-1391

R-435

APR 2

197

MR. POTTS stated that no inquiry had been received by Manhattan from SAVA N. KOSANOVICH, nor had Manhattan informed him, in any way, that an examination of the TESLA effects had been made by anyone. In fact, added MR. POTTS, the only correspondence relating to the TESLA estate has been in the form of bills for storage.

MR. POTTS stated that any personal inquires regarding the estate would of necessity be directed to him, and to date no such inquiries have been made.

Interviewing agents explained to MR. POTTS that the examination made, as mentioned above, was not instigated by the Bureau, nor had the Bureau taken part in that examination.

Unless advised to the contrary, this investigation is being placed in a closed status, and no further investigative action is contemplated by this office. CLOSED.

XXXXXX
XXXXXX
XXXXXX

FEDERAL BUREAU OF INVESTIGATION
FOIPA DELETED PAGE INFORMATION SHEET

4 Page(s) withheld entirely at this location in the file. One or more of the following statements, where indicated, explain this deletion.

☒ Deletions were made pursuant to the exemptions indicated below with no segregable material available for release to you.

Section 552		Section 552a
☒ (b)(1)	☐ (b)(7)(A)	☐ (d)(5)
☐ (b)(2)	☐ (b)(7)(B)	☐ (j)(2)
☐ (b)(3)	☐ (b)(7)(C)	☐ (k)(1)
_____	☐ (b)(7)(D)	☐ (k)(2)
_____	☐ (b)(7)(E)	☐ (k)(3)
_____	☐ (b)(7)(F)	☐ (k)(4)
☐ (b)(4)	☐ (b)(8)	☐ (k)(5)
☐ (b)(5)	☐ (b)(9)	☐ (k)(6)
☐ (b)(6)		☐ (k)(7)

☐ Information pertained only to a third party with no reference to you or the subject of your request.

☐ Information pertained only to a third party. Your name is listed in the title only.

☐ Documents originated with another Government agency(ies). These documents were referred to that agency(ies) for review and direct response to you.

_____ Pages contain information furnished by another Government agency(ies). You will be advised by the FBI as to the releasability of this information following our consultation with the other agency(ies).

_____ Page(s) withheld for the following reason(s): _____

_____

☐ For your information: _____

_____

☐ The following number is to be used for reference regarding these pages:

_____

XXXXXX
XXXXXX
XXXXXX

XXXXXXXXXXXXXXXXXXXXX
X DELETED PAGE(S) X
X NO DUPLICATION FEE X
X FOR THIS PAGE X
XXXXXXXXXXXXXXXXXXXXX

FBI/DOJ

OPTIONAL FORM NO. 10
JULY 1973 EDITION
GPA FPMR (41 CFR) 101-11.6

UNITED STATES GOVERNMENT

Memorandum

TO : DIRECTOR, FBI [redacted] (S) DATE: 8/20/76

FROM : SAC, BUFFALO [redacted] (S) (RUC) (b)

SUBJECT: [redacted] (S) (1) CONFIDENTIAL

(OO: NEW YORK)

Re Buffalo airtel to Bureau, dated 7/13/76.

Enclosed for the Bureau are six (6) copies of an LHM, captioned "NIKOLA TESLA MONUMENT, NIAGARA FALLS, NEW YORK," which is self-explanatory. One copy is being designated for Legat, Ottawa for information. Two copies are being furnished to New York, one to Newark for information since they had previous interest in this matter, and one copy to WFO for information because of U. S. and Yugoslav dignitaries who attended the unveiling of the monument.

Nothing adverse came to the attention of this office concerning the dedication of the Nikola Tesla Monument which was a bicentennial gift from the Yugoslav Government to the United States. Diplomatic representatives from the United States, Yugoslavia and Canada reportedly attended the affair. No further inquiries being made at Buffalo and it is closing its case administratively.

EX-113

CLASSIFIED BY 6166 REC-33 [redacted]
EXEMPT FROM GDS, CATEGORY 3 [redacted]
DATE OF DECLASSIFICATION INDEFINITE

ENCLOSURE

3 - Bureau (Encs. 6) (RM)
(1 - Legat, Ottawa) (S)
1 - Newark [redacted] (Info) (Enc.1) (RM)
2 - New York [redacted] (S) (Encs. 2) (RM)
1 - WFO [redacted] (Enc. 1) (Info) (RM)
1 - Buffalo (S)

7 AUG 25 1976 (b) (1)

CONFIDENTIAL

[redacted] (8) (b) (7) (C)

Copy to ... 1 Legat, Ottawa, 1 destroy
By routing slip for
[X] info [ ] action
date 8-2-76
by [redacted]

2-22-89
Classified by
Declassify on: OADR
#291860

SEP 10 1976

Buy U.S. Savings Bonds Regularly on the Payroll Savings Plan

5010-110

200

UNITED STATES DEPARTMENT OF JUSTICE

FEDERAL BUREAU OF INVESTIGATION

Buffalo, New York
August 20, 1976

In Reply, Please Refer to File No.

NIKOLA TESLA
MONUMENT
NIAGARA FALLS, NEW YORK

An article appeared in the "Buffalo Evening News," a daily newspaper published in Buffalo, New York, on July 24, 1976, which in part contained the following information:

The article was captioned "Dignitaries Unveil Statue of 'Genius' Tesla."

The article contained information that NIKOLA TESLA was the inventor of the alternating current and the first man to successfully transmit electric power. The background of TESLA set out in the article revealed that he arrived in New York City in 1884 with four cents in his pocket and plans for an airplane and a book of poetry. In 1888, he invented a system to make the transmission of alternating current practical, at 37 was a millionaire but died at the age of 88 in New York City alone and penniless.

The statue, approximately nine feet high, was erected on Goat Island, a site which is located on the property of the New York State Park and Recreation Department.

The article revealed that more than a thousand people listened to FRANK G. ZARB, Federal Energy Administration, representing President FORD, and Dr. IVO MARGAN, President of the Socialist Union of Croatia, representing Yugoslavian President TITO, as both pulled the cord unveiling the nine foot high statue of TESLA.

2-22-89
Classified by SDIAG/GLM
Declassify on: OADR
#241860

(b)
(1)
[redacted] (3)
ENCLOSURE

201

NIKOLA TESLA
MONUMENT
NIAGARA FALLS, NEW YORK

The sculpture was created by Yugoslavian FRANO KRSINIC and was the bicentennial gift of the Yugoslavian people to the United States. Both of the above men read official greetings from their presidents and exchanged pledges to continue good will and friendship between the two countries.

The article stated that following the unveiling, a reception-luncheon was held for several hundred persons at the Parkway-Ramada Inn, Niagara Falls, New York. Mr. ZARB toasted the Yugoslavian delegation which was answered by that country's Ambassador to the United States, DIMCE BELOVSKI.

According to the article, there was a bit of diplomatic byplay between Mr. ZARB and Ambassador BELOVSKI during the ceremonies. In his remarks at the statue unveiling, Mr. ZARB included an appeal to Yugoslavia to stop all harassment of Americans visiting that country.

In responding to Mr. ZARB's toast at the luncheon, the Ambassador gave assurance that his country wants American visitors and will welcome them.

According to the article, some observers thought that the Yugoslav release of an American held for the past seven months was timed to coincide with the unveiling of the statue.

The tribute to TESLA was sponsored by several Yugoslavian groups in cooperation with the Niagara Mohawk Power Corporation, Westinghouse, and the New York State Park and Recreation Commission.

An article appearing in the "Niagara Falls Gazette," a daily newspaper published in Niagara Falls, New York, captioned "Zarb Calls for Energy Independence for U. S." the article dealt with the unveiling of the Nikola Tesla Monument and stated that accompanying the Yugoslavian Ambassador to the ceremonies on July 23, 1976, were Dr. PAVLE SAVIC, President of the Academy of Science of Serbia,

NIKOLA TESLA
MONUMENT
NIAGARA FALLS, NEW YORK

and VASA VESKOVIC, Yugoslavian Consulate General in New York City.

An article appeared in the "Niagara Gazette" on July 24, 1976, captioned "Aide Almost Missed Event." The article in part indicated that friendship and cooperation between the United States and Yugoslavia was the theme of the day as that nation dedicated a statue of NIKOLA TESLA on July 23, 1976.

The friendship was personalized when a Yugoslavian tried to cross the border from Canada to the United States to attend the dedication without a visa.

The individual was GOJKO SEKULOVSKI, who was in Montreal, Quebec, Canada, as the Chairman of the Olympic Commission of Yugoslavia. He also happens to be the Assistant Secretary of State for Foreign Affairs in that country.

He did not have an American visa and almost missed the unveiling of the statue.

Fast thinking on the part of representatives of the Niagara Frontier State Park and Recreation Commission sent an official car to take the dignitary across the border, which saved the day.

In the "Niagara Falls Gazette" on July 24, 1976, there appeared an article concerning the unveiling of the statue which indicated that Dr. BOGDAN MAGLICH was Chairman of the Yugoslavian-American Bicentennial Committee and was a speaker at the affair. Dr. MAGLICH also serves as President of the Fusion Energy Corporation, Princeton, New Jersey. Dr. MAGLICH eulogized the inventor TESLA and stated "only America could have taken a giant of Tesla's stature, embraced him and provided him the means he needed to bring his talent to its best use of humanity."

NIKOLA TESLA
MONUMENT
NIAGARA FALLS, NEW YORK

(b)(2)

[redacted] were in a position to observe the commemoration of the Tesla Monument, stated that no adverse information came to their attention concerning the dedication of the statue on July 23, 1976.

4-750 (Rev. 12-14-88)

XXXXXX
XXXXXX
XXXXXX

FEDERAL BUREAU OF INVESTIGATION
FOIPA DELETED PAGE INFORMATION SHEET

3 Page(s) withheld entirely at this location in the file. One or more of the following statements, where indicated, explain this deletion.

☒ Deletions were made pursuant to the exemptions indicated below with no segregable material available for release to you.

Section 552		Section 552a
☒ (b)(1)	☐ (b)(7)(A)	☐ (d)(5)
☐ (b)(2)	☐ (b)(7)(B)	☐ (j)(2)
☐ (b)(3)	☐ (b)(7)(C)	☐ (k)(1)
_____	☐ (b)(7)(D)	☐ (k)(2)
_____	☐ (b)(7)(E)	☐ (k)(3)
_____	☐ (b)(7)(F)	☐ (k)(4)
☐ (b)(4)	☐ (b)(8)	☐ (k)(5)
☐ (b)(5)	☐ (b)(9)	☐ (k)(6)
☐ (b)(6)		☐ (k)(7)

☐ Information pertained only to a third party with no reference to you or the subject of your request.

☐ Information pertained only to a third party. Your name is listed in the title only.

☐ Documents originated with another Government agency(ies). These documents were referred to that agency(ies) for review and direct response to you.

_____ Pages contain information furnished by another Government agency(ies). You will be advised by the FBI as to the releasability of this information following our consultation with the other agency(ies).

_____ Page(s) withheld for the following reason(s): _____

_____

☐ For your information: _____

_____

☐ The following number is to be used for reference regarding these pages:

_____

XXXXXX
XXXXXX
XXXXXX

XXXXXXXXXXXXXXXXXXXXX
X DELETED PAGE(S) X
X NO DUPLICATE FEE X
X FOR THIS PAGE X
XXXXXXXXXXXXXXXXXXXXX

FBI/DOJ

205

July 7, 1975

[redacted] (b)(7)(c)

Dear [redacted]:

This will acknowledge your letter of June 9th.

In response to your inquiry, the papers of Dr. Nikola Tesla were impounded, after his death, by the Office of Alien Property of the Department of Justice.

Sincerely yours,

C. M. Kelley

Clarence M. Kelley
Director

~~1 - The Deputy Attorney General - Enclosure~~
~~Attention: Susan M. Hauser~~ REC 22 77-32591-20

NOTE: Bufile 100-2237 indicates that Dr. Tesla was a world famous electrical inventor, and at the time of his death his personal papers and effects were impounded by Office of Alien Property for national security reasons. Since Tesla's death in 1943 the Bureau has received numerous inquiries about the disposition of his technical papers. The above reply is forwarded in answer to these inquiries. Bufiles contain no information identifiable with requesters.

JUL 8 1975

Assoc. Dir. ___
Dep. AD Adm. ___
Dep. AD Inv. ___
Asst. Dir.
Adm. ___
Comp. Syst. ___
Ext. Affairs ___
Files & Com. ___
Gen. Inv. ___
Ident. ___
Inspection ___
Intell. ___
Laboratory ___
Plan. & Eval. ___
Spec. Inv. ___
Training ___
Legal Coun. ___
Telephone Rm. ___

[redacted]

MAILED 7
JUL 7 1975
FBI

(b)(7)(c)

[redacted]

56 JUL 29 197[redacted]

[redacted]

GPO 954-546

206

CURRENT BIOGRAPHY

WHO'S NEWS AND WHY

Vol. 4 No. 2 February 1943

The H. W. Wilson Co., New York

94-3-4-116-17

RECEIVED
FEB 19 1944
U.S. SUPERINTENDENT OF DOCUMENTS

IN THIS ISSUE

Architecture
Blomfield, Sir Reginald (Theodore) obit
Isham, Norman M(orrison) obit

Art
Ehnert, James, Baron obit
Glicenstein, Enrico obit
Groth, John (August)
Herlin, Emil obit
O'Day, Caroline Goodwin obit
Sykes, Charles H(enry) obit
Zorach, William

Aviation
Bissell, Clayton L.
Martin, Glenn L(uther)

Diplomacy
Chiang Tso-pin obit
Henderson, Sir Nevile (Meyrick) obit
Mello Franco, Afranio de obit
Murphy, Robert D(aniel)

Education
Boas, Franz obit
Bos, Lars Wilhelm, Rev. obit
Garfield, Harry A(ugustus) obit
Isham, Norman M(orrison) obit
Lodge, Gonzalez obit
Lowell, A(bbott) Lawrence obit
Reynolds, Helen Wilkinson

Engineering
Crawford, Frederick C(leveland)

Government—International
(See also Military and Naval)
Boisson, Pierre (François)
Chiang Tso-pin obit
Darlan, Jean (Louis Xavier François) obit
Ibn Saud, Abdal Aziz
Mello Franco, Afranio de obit
Noguès, Auguste (Paul)
Stresa, Emil Georg von obit

Government—United States
(See also Military and Naval)
Biddle, Francis M(yron)
Bissell, Clayton L.
Carlson, Evans F(ordyce)
Fuqua, Stephen Ogden
Gullion, Allen W(yant)
MacFarland, Francis N(ash)
Martin, Glenn L(uther)

Industry
Crawford, Frederick C(leveland)
Martin, Glenn L(uther)

Journalism
Bayer, Charles
Fawley, Frederick P(inley) obit
Fuqua, Stephen Ogden
Hebert, F(elix) E(dward) obit
Kreeger, William W(yant)

Labor
Andrews, John B(ertram) obit
Gullion, Allen W(yant)
Osborne, William Hamilton obit

Law
Gullion, Allen W(yant)
Osborne, William Hamilton obit

Literature
Fawley, Frederick P(inley) obit
Habe, Hans
Osborne, William Hamilton obit

Medicine
Crile, George (Washington) obit
Van Rensselaer, Mariana Griswold obit
Wiley, Harvey W(ashington) obit

Military and Naval
Anderson, Kenneth A(rthur)
Anderson, Nicholas E. obit
Bissell, Clayton L.
Carlson, Evans F(ordyce)
Fuqua, Stephen Ogden
Gullion, Allen W(yant)
MacFarland, Francis N(ash)
Martin, Glenn L(uther)
Mead, James M(iller)

Motion Pictures
Bayer, Charles
Eddy, Nelson
Howe, James Wong
Westley, Helen obit

Music
Eddy, Nelson

Naval
Borde, Jean (Joseph Jules Noel) de la
Carlson, Evans F(ordyce)
Zaidler, Curt Frederick obit

Radio
Eddy, Nelson
Fuqua, Stephen Ogden
Tinney, Cal(vin L.)

Religion
Bos, Lars Wilhelm, Rev. obit
Cadbury, H. Howard obit

Science
Boas, Franz obit
Carver, George Washington obit
Crile, George (Washington) obit
Howe, Harrison E(stell) obit
Ives, James E(dmund) obit
Rosenoff, Aaron J(oshua) obit
Schmeltz, Franz C(arl) obit
Tesla, Nikola obit

Social Service
Andrews, John B(ertram) obit
Carpenter, J(ulius) Henry, Rev.
O'Day, Caroline Goodwin obit
Smith, Ida B. Wise

Theatre
Behrman, S(amuel) N(athaniel)
Hibbard, Edna obit
Westley, Helen obit

Published monthly by the H. W. Wilson Company, 950 University Avenue, New York, N.Y. Subscription price $8.00 per year. Entered as second-class matter February 28, 1940, at the post office at New York, N.Y., under the act of March 3, 1879.

CURRENT BIOGRAPHY

Published monthly by The H. W. Wilson Company
950 University Avenue New York

Editor: Maxine Block Managing Editor: E. Mary Trow

Copyright, 1942, The H. W. Wilson Company. Reasonable quotation from this publication is permitted provided due credit is given to CURRENT BIOGRAPHY

Vol. 4 February 1943 No. 2

Explanations

Authorities for forms of names are the Library of Congress and the Wilson Company bibliographical indexes. Exception is made to the authorized form when the shortened form of a name is better known: e.g., Monty Woolley instead of Edgar Montillion Woolley. If the full name is not given in the heading it will be found in the sketch itself.

After the name, pronunciation is given if the name is difficult, and then the date of birth as fully as possible. The date of death is given for those who have died. The occupation of the subject follows. Next comes the sketch itself, followed by a list of references for further study. These include magazine and newspaper references (in one alphabet) and books. If the person is not living, references are made to obituaries in newspapers and magazines. Only books of an autobiographical or biographical nature are listed, including such well known reference works as *Who's Who, Who's Who in America*, etc.

The magazine articles listed under *References* are in abbreviated form (see list "Periodical and Newspaper Abbreviations" for complete title). The form of entry is as follows: Sat Eve Post 56:78-9 S '39 por. This means that an article supplementing our sketch will be found in *Saturday Evening Post*, volume 56, pages 78-9, in the September 1939 number. The abbreviation *por* means that the article is accompanied by a portrait. In the case of newspapers, the name of the paper is followed by paging and date.

When a name in a sketch is followed by '40 a biography of that person may be found in the 1940 *Current Biography* Yearbook published in December 1940; for a name followed by '41 see the 1941 *Current Biography* Yearbook; for a '42 name see index in the December 1942 *Current Biography*.

Photographs not credited to various studios and not obtained from the individuals themselves are obtained from Press Association, Inc., Rockefeller Plaza, New York City.

SMITH, IDA B. WISE—*Continued*

References

Christian-Evangelist p423-4 Ap 16 '42 por
Lit Digest 121:33 Je 13 '36 por
N Y Times IV p2 Ag 31 '41 por
Newsweek 16:40 Ag 19 '40 por
Time 29:55 Mr 1 '37 por; 39:51 Mr 2 '42 por; 39:12 Je 15 '42
Who's Who in America 1942-43

STAUSS, EMIL GEORG VON (shtous fŏn) Oct. 6, 1877—Dec.(?), 1942 German state councilor and a Vice-President of the Reichstag; former director of the Deutsche Bank in charge of its oil interests.

Obituary

N Y Times p17 D 12 '42

SYKES, CHARLES H(ENRY) Nov. 12, 1882—Dec. 19, 1942 Nationally known as the newspaper cartoonist, "Bill" Sykes; drew famous war cartoons for the First and Second World Wars; editorial cartoonist of the *Evening Public Ledger* of Philadelphia from its founding in 1914 until its suspension in January 1942.

Obituary

N Y Times p44 D 20 '42

TESLA, NIKOLA (tes'lă) July 9, 1856—Jan. 7, 1943 One of the world's greatest electrical inventors and designers; American citizen of Greek origin; worked with Edison; credited with many "epic making" inventions since he came to the United States in 1884; in his old age claimed to have invented a "death beam" powerful enough to destroy 10,000 airplanes at a distance of 250 miles and to annihilate an army of 1,000,000 soldiers instantaneously.

Obituary

N Y Times p19 Ja 8 '43 por

TINNEY, CAL(VIN L.) Feb. 2, 1908- Radio commentator

Address: b. c/o Mutual Broadcasting System, 1440 Broadway, New York City

Since August 1941 Cal Tinney's slow Texas drawl and homespun humor, with intimate, folksy interpolations, have been heard over the Mutual network in *Sizing up the News* each Monday and Wednesday evening from 8:00 to 8:15 p. m. Tinney's colloquialisms, which the folks "back home" chuckle over—his "just-between-you-and-me, ain't it the truth?" "it shore is" method—has captured many a listener bored with the formal, polished, or cut and dried comments of other newscasters.

But there has been more to Tinney than his mannerisms. Speaking usually as a representative of what the "common man" thinks about affairs at home and abroad, he has taken more than one direct and shrewd pot shot, left of center, at stuffed shirt policy, the doings of Big Business, politicians who coddle Fascism at the expense of democracy under high-sounding terms of Americanism, etc. It is not surprising that the sandy-haired young man from the West has occasionally found himself in hot water. Objections have at times been made to the FCC on the "character of the broadcaster's utterances." But Tinney has apparently survived the allegations against him, since he currently continues his bi-weekly talks.

The outspoken homespun philosopher, who has become a kind of Will Rogers columnist of the air, was born February 2, 1908 on a ranch in Pontotoc County, Oklahoma. His family, however, originally came from Texas, where his grandfather, a rugged individualist, had strange politics for those parts. "My grandfather was a Texas Republican," Tinney says sadly, "and they shot him. Seems he exploited his sentiments one Saturday night in a bar room. Ever since then my Pop has been a Democrat." So has the son and, judging by his broadcasts, a fervent New Deal-supporting one.

After attending the Oklahoma public schools Tinney enrolled at the Murray State School of Agriculture in Tishomingo, Oklahoma. There, however, his education lasted only two weeks. "I never did stay there long enough to find out whether it was a high school or college," he says. Young Tinney apparently decided he could get a better schooling by traveling and seeing the world at first hand. For some years he tramped around, often as an ordinary seaman aboard freighters off for foreign ports. He was a newspaperman of sorts, also, and found jobs in Shanghai and Paris. His work in the pre-War French capital was rewriting material found in English-printed newspapers. "It was easy," Tinney explains. "All you had to do was change words like lift to elevator, and caretaker to janitor."

After getting his education by travel, Cal Tinney settled down in Oklahoma to edit a country paper, and began to advertise it over Station KVOO at Tulsa. That was in 1932. His humorous, drawling voice soon became more popular than his gazette. So he gave up his job as an editor, but since 1934 he has written a weekly feature, "Man of the Week," for the McNaught Syndicate. He is the author, also, of a book called *Is It True What They Say about London? a Non-Partisan Portrait* (1936). When Tinney turned to radio for a living, his voice was heard, successively, on the *March of Time* (1932), the *Voice of America* (1933), and the *Maxwell House Show Boat* program (1934). From 1937 to 1939 he was on the *Vanity Fair* feature, and from 1939 to 1940 on *Youth vs. Age*. That year he originated, but did not appear on, *Stop Me If You Heard This One*.

Tinney is married to Mary Maxine Noble. The couple have two sons, David N. and Scott.

It was in 1940 that Tinney hit on the idea of a folksy newscast and tried it out in Tulsa, Oklahoma. Farm listeners chuckled, appreciated a commentator who spoke their own

Office Memorandum · UNITED STATES GOVERNMENT

TO: Director, FBI

FROM: SAC, New York

SUBJECT: "PLAIN TALK"
INFORMATION CONCERNING
Bureau File #94-36511

22925

Transmitted herewith for the information of the Bureau is the March 1948 issue of "Plain Talk".

Enc. (2)

ENCL ATTACHED

62-8845 ENCL

62 MAR 27 1948

RECORDED 94-36511-98
FBI
MAR 15 1948

INDEXED 138

EX-58

RED AMBASSADORS

Sava Kosanovich of Yugoslavia

By BOGDAN RADITSA

This is the first in a series of profiles of the Red Ambassadors who represent the several Soviet satellite governments in Washington. Others will follow shortly.

FAMILIAR as they are with the blasts of Vishinsky and Molotov, most Americans are not aware that some of the most fervid tirades against "U.S. imperialism" delivered in this country come from an officially accredited ambassador. Sava Kosanovich, a wiry, reddish-haired man in his early fifties, represents Tito in Washington and in the United Nations. He travels all over this country making speeches in praise of the "new progressive democracy" in the Balkans, denouncing "Anglo-American reaction" and helping to form front groups for Tito. Incidentally, the American ambassador in Yugoslavia cannot even move around Belgrade without special permits and a guard of secret police agents.

From Kosanovich's speeches at Lake Success and elsewhere, it would appear that everything in Yugoslavia before Tito came to power was reactionary or Fascist. Yet, when he was touring America during the war, he used to introduce himself as a "member of the democratic government of His Majesty King Peter the Second."

Kosanovich is a restless man—his face and hands seem to be always agitated and moving. He is a cultured man with a long background in liberal, democratic movements. But he is a man of strong ambitions, who was willing to betray his own past and his closest friends for those ambitions.

In an Embassy which is more of a propaganda bureau than a diplomatic office, Kosanovich is only the front man for the Cominform's schemes in America. The real power in the Embassy is held by members of the Communist Party and the secret police, OZNA, just as its real policy is directed from Moscow through Belgrade. Though Kosanovich repeats the Moscow line, he is not yet one of the inner circle.

I first met Kosanovich in the fall of 1941 in the United States, where he had come with some members of the exiled Royal Yugoslav Government, representing Croatia, Serbia and Slovenia. The tragicomic adventures of that royal mission in America centered around the battle between those who wanted Yugoslavia, after its liberation from the Nazis, to become a democratic federal union, and those who demanded a Yugoslavia which would be a Greater Serbia administered on the old prewar pattern. The grim outcome was that Tito succeeded in charming American public opinion with his sweeping promises of democracy and federation, while the exiles were quarreling among themselves—mostly for personal, rather than ideological, reasons.

KOSANOVICH dreamed for a good many years of becoming Yugoslav ambassador to Washington. His uncle, Nikola Tesla, was an important scientist

in America. He himself is descended from a long line of Serbian Orthodox ministers. His friends in politics used to tease him about his shyness toward women, his hatred of smoking and drinking. A strong and dynamic political leader, they said, should be a lady-killer, a hard drinker and a chain smoker.

In prewar Yugoslavia, Kosanovich always attached himself to some popular political leader. (It seemed to give him the feeling that he was running things himself.) In the beginning of his career he followed the tide of Svetozar Pribichevich, the leader of the Democratic Party, who sought a highly centralized Yugoslav state and drove the Communists underground through his secret police. That policy helped to reinforce communism for the present job.

Next, Kosanovich was attracted by the leaders of the Croatian peasants, Stevan Radich and Dr. Vladimir Machek, now in exile in Washington. He considered that he was Machek's "brain." Machek, however, did not always welcome the attentions of his satellite: several times he told me that he was tired of Kosanovich's "old maidish suggestions and tearful interventions." For when he is arguing any involved issue, Kosanovich's voice takes on a querulous tone which makes him sound like an adolescent.

During the war, Kosanovich defended Mihailovich and a united Yugoslavia. He took an active part in Allied meetings and the affairs of American Yugoslavs. His name often appeared in the "Letters to the Editor" column of *The New York Times*. He was a chairman of the Southeastern European Planning Board—a movement not popular with Stalin, as it threatened to block his plans for regional agreements and the artificial building up of buffer states. And he was active, with his friends Louis Adamic and the violinist, Zlatko Balokovic, in the formation and promotion of the United Committee of South-Slavic Americans, subsequently metamorphosed into an important part of the Kremlin's Pan-Slavic front.

In his speeches Kosanovich has been one of the principal promoters of an idea first advanced by Adamic—that America is a nation of nations. As such, she is not only Anglo-Saxon, but German, Italian, Negro or Slav. The Slavs of America should unite in the name of brotherhood to carry on their glorious traditions, to show other Americans the heritage they have brought to this country, and to keep in touch with their motherlands. On the surface this idea seems harmless enough, but it is the banner of Stalin's movement to divide the United States. Russia and her satellites carry the idea farther in their controlled press by openly maintaining that America cannot be progressive until it is transformed into a series of "people's republics" on the Soviet pattern, giving their national sovereignty to all the racial groups that compose the population. Behind that scheme is the desire to Balkanize the United States—to divide it into conflicting clans so that a revolution may be centralized through the only uniting force, the Communist Party.

FIORELLO LA GUARDIA was Kosanovich's greatest acquisition. He led the New York Mayor through the same political zig-zag he himself followed—first to Mihailovich, then to Tito. The speech of greeting to King Peter that La Guardia read in Serbo-Croatian on July 8, 1942, was written by Kosanovich. The Mayor read:

"Drazha Mihailovich and Vladimir Machek are the expression of the Yugo-

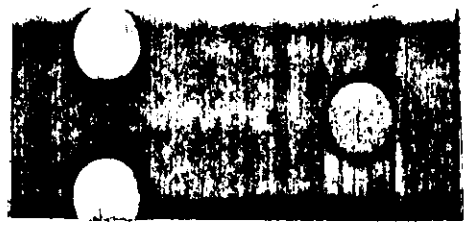

slav spirit of resistance—from Triglav to Vardar. They will go down in history. . . ."

In his own speeches Kosanovich often compared Mihailovich with MacArthur, Chiang Kai-shek and Timoshenko. For example, at a meeting of the anti-Nazi League in New York, June 8, 1942, he spoke of "the epic struggle which my people are making under the man whose name already symbolizes to mankind indomitable spiritual and physical resistance—Drazha Mihailovich."

Mihailovich was killed by a government of which Kosanovich was a member. Machek fled the country to escape the fate of Petkov, Maniu and other peasant leaders. Immediately after he became Tito's ambassador, Kosanovich quoted Count Ciano to prove that Machek had been willing to sell out Croatia for a relatively small amount of money. The former follower of Machek admitted intimately to a friend that he did not believe the accusation, but that Tito had asked him to make it.

On July 6, 1942, at a reception held in the Yugoslav delegation's mansion on New York's Fifth Avenue, Kosanovich introduced Mirko Markovich, editor of the Serbian Communist newspaper, *Slobodna Rec*, and now professor at Belgrade University. Markovich offered King Peter a check of one thousand dollars for "the Chetniks and regular army of General Mihailovich."

A week later orders arrived from Moscow that Mihailovich should be considered a traitor and Tito accepted as leader of the war for liberation. Markovich and his Serbian equivalent of the *Daily Worker* suddenly switched to attacking Mihailovich. Kosanovich did not—but his defense of the Chetniks' leader grew weaker. Shortly before he went to London in March, 1944, Kosanovich in a *New York Post* interview was quoted as follows: "Mihailovich is in the position of a General Lee. Tito is some kind of a Lincoln out to save the Union. Mihailovich was an army officer. I think he is sincere but he is surrounded by a very bad political entourage. The entourage was catastrophic. The Government, diplomats abroad, working in his name, are even more catastrophic."

Curiously, Kosanovich himself was a member of that same "catastrophic" government. When he joined the Yugoslav government-in-exile in London in the spring of 1944, it had already dismissed Mihailovich and sought an agreement with Tito's National Liberation Movement.

KING PETER was in London. Heading his government-in-exile was Dr. Ivan Subasich, the viceroy of Croatia. The group was more or less agreed that Yugoslavia should be restored on the basis of a federal union.

Kosanovich asked for a government representing all political parties, which would be strong enough to fight the Communists. He was a frequent visitor to King Peter and his mother. And when an agreement was drawn up between Subasich and Tito, Kosanovich was terribly dissatisfied with its terms. (I suspect that was because he had not taken an active part in it; he was inclined to think that everything in Yugoslav politics needed his guiding hand.)

Tito was in Belgrade. The Red Army was crossing the Danube in its push toward Vienna. On January 18, 1945, Tito's emissary, General Velebit, visited Kosanovich in Kingston House, London. Kosanovich left the interview pale and nervous. For the first time he realized that dealing with the Communists demanded fortitude.

A few days later, on January 23, King Peter dismissed Subasich's cabinet and reappointed its members only after all of them—including Kosanovich—had agreed in writing that, on their return to Yugoslavia, they would defend certain obligations the king had made concerning the Tito-Subasich agreement. The chief obligation was that the new united Yugoslav Government to be formed under Tito should guarantee all fundamental political and civil rights and freedoms to the Yugoslav people. Kosanovich took a prominent part in drafting this public statement announcing the reappointment of the previous cabinet and the obligations its members assumed. As the king's most intimate adviser, he drafted Peter's act of consent to the Regency. Before Kosanovich left London, the young king kissed him, and received his formal promises that he would defend the interests of the monarchy.

In the spring of 1945, Yugoslavia was "liberated" and the members of its London government-in-exile came back to join Tito's government with the blessing of Churchill, Roosevelt and Stalin. It was at that time that the Communists characterized Kosanovich as a "useful innocent" (*koristna budala*). In a meeting held in a swanky Belgrade apartment house—still the headquarters of the Communist Party of Yugoslavia—the ex-schoolteacher, Edward Kardelj, the Montenegrin, Milovan Gjilas, and other top Communist leaders were talking over the political characteristics of their new partners.

Gjilas said, according to a witness who reported the meeting to me: "The Anglo-Americans dream that they may influence us through someone who is not a Communist. Therefore Ivan Subasich is best fitted for the job of foreign minister. Though he sometimes wavers, he defended the agreement with Tito stubbornly in London and Washington. Milan Grol (the vice-premier and leader of the Serbian democrats) will serve as a Trojan Horse for the West. He is a reactionary politician who backed Mihailovich. If Grol declares that the Serbian people have to abandon Mihailovich, they will accept the idea. As for Kosanovich—he is not an important personality nor a politician. But he is a useful innocent, who may be of help in the United States where he is considered to be a Western-type democrat."

The only member of that London government who still survives politically is the "useful innocent." Subasich, after having been Tito's prime minister and foreign minister, is now a prisoner in Zagreb. Franc Snoj, after participating in the Communist government of Slovenia, was recently sentenced to seven years of slave labor for "espionage in favor of the Western democracies." The liberal Dr. B. Markovich of Serbia died in New York. I arrived there in time to see him before his death. After I had told him the grim story of what Yugoslavia looked like under the Communists, he said very sadly:

"How is it possible that Savitsa (the diminutive of Kosanovich's first name) could stay in such an outrageous government?"

TITO soon began to ignore all the obligations assumed in his agreement with Subasich. Even before the elections he declared that the king was never to come back. Milan Grol and others immediately left Tito's government. Everybody in Yugoslavia expected Kosanovich to do the same. But he began to yield to the Communists.

Subasich had just come back from a trip around Yugoslavia. He had seen that the people did not want commu-

212

nism; they wanted quick action by the democrats. And he had the courage to tell this to Tito. Although he was foreign minister, he was arrested.

I was with Kosanovich in his room in Belgrade's Hotel Majestic when Mrs. Subasich telephoned and asked for immediate help. Her husband was arrested and ill. Kosanovich tried to reassure her. He telephoned Lt. General Rankovich, OZNA's chief trigger-man. The Communist hangman answered coldly that nothing would happen to the foreign minister. Precautions were merely being taken to defend him from any attempt of the "Western reactionaries" upon his life.

We had just been reading Dante there in the hotel room—the part where Count Ugolino hungrily devours the brain of Archbishop Ruggieri, describing the merciless end of all traitors. The blood and turmoil of ancient fratricidal war rose before us: it seemed very near to our own Yugoslav tragedy.

Only a little later Kosanovich entered the new People's Front against the will of the Independent Democratic Party, of which he was Secretary-General. His party issued a clandestine communiqué describing his defection. Soon after that the chairman of the party, Dr. D. Boshkovich, was terribly beaten for three hours by a Communist youth mob. He was lying in a hospital the same night that Kosanovich was flying to the London conference of the Big Four, accompanying the Communist Kardelj as a "liberal and democrat." Before he left, Kosanovich had published an article in the Communist official organ, *Borba*, in which he attacked Subasich and the leadership of the party with whom he had worked closely for twenty years. The Communists wanted a proof of "betrayal." And the price was paid. From London, Kosanovich went to the Paris Peace Conference, and from there to Washington—to attack American democracy, which he had formerly praised.

I CANNOT BELIEVE Kosanovich is a happy man, though he has attained his ambition. Those who once opposed *fascism* and are now serving communism have lost all faith in themselves and in mankind. There are no more miserable people than the intelligentsia who know better—but who have been afraid to resist in the last battle for man's liberty.

Kosanovich once asked for a synthesis between political and economic democracy for the good of the people, and he is now defending the complete subjugation—economic, political and moral—of Yugoslavia to the Communists. Kosanovich once wanted Yugoslavia to be free of the influence of any big power, and he is now ambassador of a puppet state in Stalin's empire.

THE SOLUTION FOR PALESTINE

A comprehensive and authoritative discussion of the Hoover Plan (pages 32-33) and of the Lowdermilk Plan (*Palestine—Land of Promise*), offering an engineering rather than a political solution for the crisis in the Near East, will be presented in the next issue of PLAIN TALK.

213

FEDERAL BUREAU [redacted]

Case Originated At: PITTSBURGH File No. 61-128

Report Made At	Date Made	Period	Report Made By
PITTSBURGH	2/20/46	11/15,19,20, 21,26/45.	[redacted]

Title	Character
SLOBODNA REC (FREE EXPRESSION)	INTERNAL SECURITY - C REGISTRATION ACT

SYNOPSIS: SLOBODNA REC (Free Expression), Serbian communist-line tri-weekly newspaper printed at 1916 East [redacted], Pittsburgh, Pa., steadfastly adheres to the generally recognized communist line and operates, among Serbs in the U. S., as the organ for the dissemination of information on Serbian affairs in Yugoslavia. As the leading Slav communist organ it contained, during the period from 12/6/44 to 8/30/45, favorable publicity for such communist front organizations as the SWC, American Slav Congress, Vidovdan Committee and the United Committee of South Slavic Americans. It supported the TITO and STALIN governments unequivocally and denounced opposition believed to exist against these governments. Due to the leaving of the former Editor-In-Chief, MIRKO MARKOVICH, to confer with TITO and his representatives in Belgrade, Yugoslavia, the editorship has been undertaken by Reverend NIKOLA DRENOVAC. The Managing Editor is CHARLES VUICH and Business Manager is MANE [redacted]

- P -

J. A. Fletcher

1	Bureau (Encls.)	1	Milwaukee (Info.)
	Albany (Info.)	1	Newark (Info.)
	Anchorage (Info.)	1	New Haven (Info.)
	Baltimore (Info.)	1	New Orleans (Info.)
	Boston (Info.)	1	New York (Info.)
1	Buffalo (Info.)	1	Oklahoma City (Info.)
1	Butte (Info.)	1	Omaha (Info.)
1	Chicago (Info.)	1	Philadelphia (Info.)
1	Cincinnati (Info.)	1	Phoenix (Info.)
1	Cleveland (Info.)	1	Portland (Info.)
1	Denver (Info.)	1	Richmond (Info.)
1	Des Moines (Info.)	1	St. Louis (Info.)
1	Detroit (Info.)	1	St. Paul (Info.)
1	Houston (Info.)	1	Salt Lake City (Info.)
1	Indianapolis (Info.)	1	San Diego (Info.)
1	Jackson (Info.)	1	San Francisco (Info.)
1	Kansas City (Info.)	1	Savannah (Info.)
1	Little Rock (Info.)	1	Seattle (Info.)
1	Los Angeles (Info.)	1	Springfield (Info.)
1	Louisville (Info.)	1	Washington Field (Info.)
1	Memphis (Info.)	1	Pittsburgh
1	Miami (Info.)		

NO JUN 1946 5 PITTSBURGH

(Typed Entire)

SLOBODNA

39 FEB

INFORMATION CONTAINED HEREIN IS UNCLASSIFIED DATE 2- BY SP1 [redacted]

#29166

59 JUN 17 1946

b7C

97-

214

[redacted]

Translations of SLOBODNA REC as contained in this report were made at the Pittsburgh Field Office by [redacted] Serbo-Croatian translator, and [redacted] Slavonic translator.

II

ORGANIZATIONAL STRUCTURE

A - OFFICERS

In the "Statement Of The Ownership, Management, Circulation, Etc., Required By The Acts Of Congress Of August 24, 1912, and March 3, 1933," regarding newspapers utilizing the mails as a means of transmission, furnished the Pittsburgh Office by [redacted] Pittsburgh Post Office, the following are given as officers of SLOBODNA REC:

Publisher	J. KRSTOVICH
Editor	CHARLES VUICK
Managing Editor	None
Business Manager	MANE SHUSHNAR
Owner	JOHN KRSTOVICH

This statement was filed at the Pittsburgh Post Office by MANE SHUSHNAR on October 2, 1945.

"2. It is true that this year's calendars were printed too late, but we have inspite of this sold a sufficient number of calendars and some of the sellers have not sent in their money. In addition to the excellent success in advertisements for the calendar and besides the fact that the calendar was excellent, the work of the sale of the calendars is not satisfactory. Our activists should have paid more attention to this then than before selling the calendars.

"3. Soon we shall have received several hundred copies of the new book 'Guns For Tito.' We ought to do our best to sell these books as soon as possible. The book was compiled by an American Major who organized a shipment of weapons to TITO's Army and met TITO personally several times. The price of the book is $2.75.

"4. We must finish the sale of the book of NIKOLA TESLA. We should particularly interest the American engineers and unionists in it.

"5. Soon a book of MIRKO MARKOVICH will be off the press: 'That We May Understand Each Other.' Therefore it will be necessary to organize the sale of the same. The book contains 350 pages and the price of the same is $2.50.

"The working committee decided that by the end of the month of March or in April, MIRKO MARKOVICH should start for the Pacific Coast, to California, to work in the strengthening of our movement and newspaper and in building up of clubs and the apparatus. This will be discussed in detail at the meeting of the Supreme Board in Cleveland."

August 14, 1945 — "Reorganization Of Leadership Of Serbian Progressive Movement In City Of Akron Carried Out." This article, which is quoted below, indicates the then policy of SLOBODNA REC in its leadership in the Serbian Progressive Movement in the United States.

"Akron, August 10 - Last week, on Thursday evening, there was here held a special meeting of the Serbian political progressive club, which was attended by the editor-in-chief of SLOBODNA REC, MIRKO MARKOVICH, and the manager of the paper, MANE SHUSHNAR.

STANDARD FORM NO. 64

Office Memorandum • UNITED GOVERNMENT

TO : Director, FBI

DATE: November 7, 1947

FROM : SAC, Pittsburgh

SUBJECT: SLOBODNA REC
INTERNAL SECURITY - C
REGISTRATION ACT

The following article which appeared in the November 1, 1947, issue of the above captioned Communist line newspaper published at 1916 East Street, Pittsburgh, Pa., is furnished for your information:

Address of Ambassador ROSANOVICH at Banquet of 2nd Serbian Congress, October 26 in Pittsburgh, Pa.

ALL INFORMATION CONTAINED HEREIN IS UNCLASSIFIED DATE 2-22-19 BY SP1 AC/cm # 24860

Brothers and Sisters:

I come among you to extend you the greetings of the peoples and the government of the Federated People's Republic of Yugoslavia, headed by Marshal Tito and to thank you for the considerable aid which you have given your brothers in the old homeland.

By coincidence, I found myself in the period of 1943-44 in this great country where I did my best to defend the truth and contribute to the best of my ability to the thwarting of spreading untruths on the part of the official representatives of the then Yugoslav government in exile and of all those who wanted to convince public opinion of America and its official circles of the impossibility of restoring Yugoslavia. I recall your valuable help of that time. I remember a dear friend in the person of the late Rev. KRAJNOVICH and his constant struggle, as well as of so many others of that period.

You Americans of Serbian descent were hit the hardest. You were exposed to the greatest trials and the heaviest attacks. You had to exercise the greatest self-denial and perspective correctly to see the course of events because every effort was made to confuse you. The idea was that when Serbian Americans follow the wrong path, when chauvinism and national hatred get possession of them, when hatred toward the Croats and Slovenes and toward Yugoslav unity is aroused in them, then it will be easy for the same attitudes to work among Croatians and Slovenes as regards Yugoslav unity, giving chauvinism full sway and thus contributing to the weakening of the war effort in American and rendering impossible the struggle for the salvation and restoration of Yugoslavia and the Balkans.

In a letter of thanks for an honor which was shown me in February, 1944, by a great number of you who are now assembled at this Serbian

NOV 12 1947

RECORDED 77-724-175
INDEXED
EX-93
34 NOV 10 1947

(6)
(7)(C)

217

To: Director, FBI November 7, 1947
Re: SLOBODNA REC
IS - C; REGISTRATION ACT

Congress when I was elected an honorary president of the Vidovdan Congress I said:

"In an extraordinary difficult period of mankind you have with sacrifice and self-denial done your duty also toward your people from whom you sprang and toward America of which you are good citizens, and toward mankind. Since my arrival in America in 1941, in an official capacity, I found among you the best understanding and best cooperation for an ever greater unification of national forces in the struggle against all manifestations of fascism. Together we tried to be as serbs - bearers of Serbo-Croato-Sloveno-Macedonian harmony and unity at a time when the enemy banked his entire hope on disharmony and hatred. Working thus we have contributed to the correct understanding of the national-liberation struggle beset with so many obstacles and bedevilled with so much gossip. Time and events have borne out the truth thereof."

And when taking leave of Serbs in America in a letter of July 24, 1944, among other things I wrote:

"We have here been those who have defended the purity of the Serbian name at a time when it was being most degraded by the ignorant. History will show that we were right and that by our defending the unity of Serbs, Croats, Slovenes, and Macedonians we have best represented the true national Serbian interests and thus represented the interests not only of Yugoslavia but also of America and all United Nations. We have by common sacrifices of a liberation war achieved great successes in the country, but there still are great trials. Enemies will particularly seek to confuse the Serbs and destroy them with false defense of Serbian interests. I ask all my good friends to make every effort to promote harmony and unity. I ask all those who were being deceived in returning to Serbian tradition and enter the great circle of national harmony . . . I ask friends who have had the opportunity and bravery of seeing the right path from the very outset, that they forgive those who haven't seen it because they were deceived by those who thought they must be believed. The true national champion is known by his setting the errant ones on the right path. Responsible culprits who misused their positions and misused the credulity of the ignorant will answer to the people for their misdeeds. The more you will promote harmony, the better it will be for Serbdom, for Yugoslavia, and for America - toward which you have the greatest obligation."

To: Director, FBI
Re: SLOBODNA REC
IS - C; REGISTRATION ACT

November 7, 1947

That was the path to which you were called until his last days by our great countryman NIKOLA TESLA.

And you, by your moderation, have contributed to the interest of the democratic struggle of the world. You have contributed to the unification of all national forces in America in the organization of the war effort. And at the same time, as Americans of Serbian descent together with other Yugoslav Americans, you have shown your American fellow-citizens that your brothers in the old homeland are with united efforts resisting fascism and struggling for freedom and the restoration of their independent state, Yugoslavia.

In this you were able to be the best spokesmen. You and your predecessors have come to this country in search of freedom and better economic conditions.

Most of you and those before you have fled from Hapsburg serfdom because you were being oppressed both nationally and economically. You and your predecessors made valuable contributions to the development of the New World. You with your brother Slovenes and Croatians have sweated, shed blood, worn your bones, expended brains, and whatnot for the progress of this country. Long is the chain of miners, farmers, scientists, and soldiers who gave their best for the general progress and prosperity of the American Union. You have conscientiously been doing your duty and you have become good citizens of this great land. Who of us is not proud of the work, life and nobleness of NIKOLA TESLA without whose work and mind electricity would not be what it now is in the world; whose motor has harnessed the Niagara and the Dnieper, turning the wheels of industry wherever there is electricity? In every spark of electricity, shines his name. America is the greatest beneficiary of TESLA's genius. He asked for no riches.

And so, brothers and sisters, when during the war you have raised your voice for your brethren in the Balkans struggling not only for their life but also for a better and more secure existence of mankind, your voice thus had significance and importance. You were able to be the authorized spokesmen of the struggle which was going on over there.

XXXXXX
XXXXXX
XXXXXX

FEDERAL BUREAU OF INVESTIGATION
FOIPA DELETED PAGE INFORMATION SHEET

3 Page(s) withheld entirely at this location in the file. One or more of the following statements, where indicated, explain this deletion.

☒ Deletions were made pursuant to the exemptions indicated below with no segregable material available for release to you.

Section 552		Section 552a
☐ (b)(1)	☐ (b)(7)(A)	☐ (d)(5)
☐ (b)(2)	☐ (b)(7)(B)	☐ (j)(2)
☐ (b)(3)	☒ (b)(7)(C)	☐ (k)(1)
_____	☒ (b)(7)(D)	☐ (k)(2)
_____	☐ (b)(7)(E)	☐ (k)(3)
_____	☐ (b)(7)(F)	☐ (k)(4)
☐ (b)(4)	☐ (b)(8)	☐ (k)(5)
☐ (b)(5)	☐ (b)(9)	☐ (k)(6)
☐ (b)(6)		☐ (k)(7)

☐ Information pertained only to a third party with no reference to you or the subject of your request.

☐ Information pertained only to a third party. Your name is listed in the title only.

☐ Documents originated with another Government agency(ies). These documents were referred to that agency(ies) for review and direct response to you.

_____ Pages contain information furnished by another Government agency(ies). You will be advised by the FBI as to the releasability of this information following our consultation with the other agency(ies).

_____ Page(s) withheld for the following reason(s): _____

_____

☐ For your information: _____

_____

☒ The following number is to be used for reference regarding these pages:

100-10123-124

XXXXXX
XXXXXX
XXXXXX

XXXXXXXXXXXXXXXXXXXXX
X DELETED PAGE(S) X
X NO DUPLICATION FEE X
X FOR THIS PAGE X
XXXXXXXXXXXXXXXXXXXXX

FBI/DOJ

STANDARD FORM NO. 64

Office Memorandum • UNITED STATES GOVERNMENT

TO : Director, FBI

DATE: 5/8/45

FROM : SAC, Pittsburgh

SUBJECT: [redacted]

(b)7(c)

INTERNAL SECURITY - R

(b)7(D) [redacted] would-be radio repair man, advised this office that on April 29, 1945 he installed at the home of captioned subject, [redacted], a "Hammerlund H.Q. Receiver #120X". [redacted] stated that since this type receiving set is of a kind which is generally used by amateur radio experts or professionals and since the radio set itself was in such condition as to indicate that it had been purchased under a very high priority, he inquired of the subject how he happened to be in possession of such a radio set. [redacted] according to [redacted], was vague as to where he got it, saying that it had belonged at one time to NIKOLA TESLA'S son and was purchased before the war in New York City. [redacted] did not make any notation of the serial number of this radio but advised that under pretext he can review the operation of this set in the apartment of the subject and at that time get the serial number.

(b)7(D)

(b)7(D)

(b)7(D)

(b)7(c)

b7D

[redacted]

[redacted]

[redacted]

[redacted]

COPIES DESTROYED

14

ALL INFORMATION CONTAINED HEREIN IS UNCLASSIFIED DATE 4-16-89 BY SP1ALGCM # 291960

JUN 1 2 [redacted]

(b)7(c)

221

FEDERAL BUREAU OF INVESTIGATION

Form No. 1
THIS CASE ORIGINATED AT WASHINGTON, D. C.

FILE NO. 100-11980

CONFIDENTIAL

REPORT MADE AT	DATE WHEN MADE	PERIOD FOR WHICH MADE	REPORT MADE BY
WASHINGTON, D. C.	30 AUG 1946	7/8;8/2/46	[redacted] (b)(7)

TITLE: (b)(1) [redacted] (c)

CHARACTER OF CASE: (b)(1) [redacted] (c)

Confidential

SYNOPSIS OF FACTS:

The new Yugoslav Ambassador, SAVA N. KOSANOVIC, has stated to the newspaper that they do not contemplate hostilities over the Trieste question. [redacted] (b)(1) (c)

ALL INFORMATION CONTAINED HEREIN IS UNCLASSIFIED EXCEPT WHERE SHOWN OTHERWISE

NO SEP 1946 69 ...STICS

- P -

REFERENCE: Report of Special Agent [redacted] dated July 22, 1946, at Washington, D. C. (b)(7)(c)

DETAILS: AT WASHINGTON, D. C.

2-16-49 Classified by SPIAGGIM
Declassify on: OADR # 291860
~~DEFERRED RECORDING~~

GENERAL ACTIVITIES

HANDLED BY STOP DESK

The "Washington Post" for July 23, 1946, carries a headline relative to an interview had with the new Yugoslav Ambassador SAVA N. KOSANOVIC entitled "War Over Trieste Not Anticipated by Yugoslav Envoy". The article stated he had declared on the previous day that his country would not be provoked into any action in Trieste which would compromise the peace. He also stated they would not accept any solution of the problem which did not accord with their essential interests. He said his Government opposed Italian proposals for a plebecite in the disputed area because the Yugoslav population had been diminished by twenty-six years of Italian rule and the additional loss of 56,000 men in the fight against the Nazis.

APPROVED AND FORWARDED: Guy Hottel SPECIAL AGENT IN CHARGE

DO NOT WRITE IN THESE SPACES

100-32820-285

RECORDED & INDEXED 35

COPIES OF THIS REPORT
5 - Bureau
2 - Detroit
2 - Chicago
2 - Cleveland
2 - New York
2 - Pittsburgh
3 - Washington Field

F B I
37 SEP [redacted] (b)(7)(c)

EX - 14

37 SEP 18 1946

U. S. GOVERNMENT PRINTING OFFICE 16—80005-1

COPIES DESTROYED 7-30-58

CONFIDENTIAL

222

CONFIDENTIAL

[redacted] (b)(1) (C)

The article in the "Evening Star" which was referred to above appeared July 23, 1946, and was entitled "New Envoy Disclaims Any Yugoslav Plans for Coup at Trieste." This article was written by NEWBOLD NOYES, JR. The article quotes the Ambassador as saying that Yugoslavia would not be "provoked into compromising the peace." The article stated that the Ambassador had indicated his country would boycott Trieste if they did not get it. The article stated that KOSANOVIC is a nephew of NICOLA TESLA, the Yugoslav-American inventor.

[redacted] (C) (b)(1)

[redacted] (C)

[redacted] (C)

[redacted] (C)

CONFIDENTIAL

223

XXXXXX
XXXXXX
XXXXXX

FEDERAL BUREAU OF INVESTIGATION
FOIPA DELETED PAGE INFORMATION SHEET

2 Page(s) withheld entirely at this location in the file. One or more of the following statements, where indicated, explain this deletion.

☒ Deletions were made pursuant to the exemptions indicated below with no segregable material available for release to you.

Section 552		Section 552a
☒ (b)(1)	☐ (b)(7)(A)	☐ (d)(5)
☐ (b)(2)	☐ (b)(7)(B)	☐ (j)(2)
☐ (b)(3)	☒ (b)(7)(C)	☐ (k)(1)
_____	☐ (b)(7)(D)	☐ (k)(2)
_____	☐ (b)(7)(E)	☐ (k)(3)
_____	☐ (b)(7)(F)	☐ (k)(4)
☐ (b)(4)	☐ (b)(8)	☐ (k)(5)
☐ (b)(5)	☐ (b)(9)	☐ (k)(6)
☐ (b)(6)		☐ (k)(7)

☐ Information pertained only to a third party with no reference to you or the subject of your request.

☐ Information pertained only to a third party. Your name is listed in the title only.

☐ Documents originated with another Government agency(ies). These documents were referred to that agency(ies) for review and direct response to you.

_____ Pages contain information furnished by another Government agency(ies). You will be advised by the FBI as to the releasability of this information following our consultation with the other agency(ies).

_____ Page(s) withheld for the following reason(s): _____

_____

☐ For your information: _____

_____

☒ The following number is to be used for reference regarding these pages:

100-32820-461

XXXXXX
XXXXXX
XXXXXX

XXXXXXXXXXXXXXXXXXXXX
X DELETED PAGE(S) X
X NO DUPLICATION FEE X
X FOR THIS PAGE X
XXXXXXXXXXXXXXXXXXXXX

FBI/DOJ

XXXXXX
XXXXXX
XXXXXX

FEDERAL BUREAU OF INVESTIGATION
FOIPA DELETED PAGE INFORMATION SHEET

4 Page(s) withheld entirely at this location in the file. One or more of the following statements, where indicated, explain this deletion.

☒ Deletions were made pursuant to the exemptions indicated below with no segregable material available for release to you.

Section 552		Section 552a
☒ (b)(1)	☐ (b)(7)(A)	☐ (d)(5)
☐ (b)(2)	☐ (b)(7)(B)	☐ (j)(2)
☐ (b)(3)	☐ (b)(7)(C)	☐ (k)(1)
_____	☐ (b)(7)(D)	☐ (k)(2)
_____	☐ (b)(7)(E)	☐ (k)(3)
_____	☐ (b)(7)(F)	☐ (k)(4)
☐ (b)(4)	☐ (b)(8)	☐ (k)(5)
☐ (b)(5)	☐ (b)(9)	☐ (k)(6)
☐ (b)(6)		☐ (k)(7)

☐ Information pertained only to a third party with no reference to you or the subject of your request.

☐ Information pertained only to a third party. Your name is listed in the title only.

☐ Documents originated with another Government agency(ies). These documents were referred to that agency(ies) for review and direct response to you.

_____ Pages contain information furnished by another Government agency(ies). You will be advised by the FBI as to the releasability of this information following our consultation with the other agency(ies).

_____ Page(s) withheld for the following reason(s): _____

_____

☐ For your information: _____

_____

☒ The following number is to be used for reference regarding these pages:
100-32820-969

XXXXXX
XXXXXX
XXXXXX

XXXXXXXXXXXXXXXXXXXXX
X DELETED PAGE(S) X
X NO DUPLICATION FEE X
X FOR THIS PAGE X
XXXXXXXXXXXXXXXXXXXXX

FBI/DOJ

Federal Bureau of Investigation
United States Department of Justice

Form No. 1
This Case Originated At INDIANAPOLIS, INDIANA — File No. 100-4006

Report Made At	Date	Period	Report Made By
Indianapolis, Indiana	11/18/42	10/29,30/42	[redacted] (b)(7)(C)

Title: AMERICAN SLAV CONGRESS (ALL-SLAV CONGRESS)

Character of Case: INTERNAL SECURITY - C

Synopsis:

Information contained in bulletin entitled "News Flashes from Czechoslovakia under Nazi Domination" issued by Czechoslovak National Council of America, with reference to American Slav Congress, set forth herein. Includes information concerning the permanent committee set-up and a partial list of delegates to the American Slav Congress. [redacted] (b)(7)(D)

cc BR 3/29/47

- P - ALL INFORMATION CONTAINED HEREIN IS UNCLASSIFIED DATE 1-7-83 BY SP5 RTG/PMC

Reference: [redacted] (b)(7)(C) ENCLOSURE ATTACHED

Report of Special Agent [redacted] (b)(7)(C) dated May 12, 1942, at Detroit, Michigan.

Details: At Hammond, Indiana

[redacted] (b)(2) (b)(7)(D) obtained

Approved and Forwarded:	Special Agent in Charge	Do Not Write in These Spaces
		100-56614-42

5 Bureau
1 New York (Inf.)
1 Pittsburgh (Inf.)
1 Newark (Inf.)
1 Milwaukee (Inf.)
1 Washington Field (Inf.)
1 Chicago (Inf.)
1 Philadelphia (Inf.)
1 Cleveland (Inf.)
3 Detroit
3 Indianapolis

RECORDED & INDEXED

15 NOV 21 1942

[redacted] (b)(7)(C)

EX-17

FOR VICTORY BUY UNITED STATES DEFENSE BONDS AND STAMPS

60 JAN 2 7 1943

COPY IN FILE

226

a copy of a bulletin entitled "News Flashes from Czechoslovakia under Nazi Domination", published by the Czechoslovak National Council of America, 4049 West Twenty-sixth Street, Chicago, Illinois, release no. 132, dated May 11, 1942.

This bulletin contains news concerning the American Slav Congress held at Detroit, Michigan, April 25 and 26, 1942. The article contains the permanent committee set-up of the Congress and a list of men of eminence among the delegates to the Congress.

This article is being quoted below:

"AMERICAN SLAV CONGRESS FOR GREATER WAR EFFORT"

The coordination activities of all groups of Slavic extraction in America for an intensified war effort moved a long step closer to reality as a result of the American Slav Congress held in Detroit April 25 and 26 and attended by more than 2300 delegates representing church, fraternal, labor, social and cultural groups from all parts of the country. Every substantial American Slav organization in the country was represented.

Permanent Committee Set Up

A permanent committee was elected with LEO KRZYCKI, Vice-president of the Amalgamated Clothing Workers for President; Prof. J. J. ZMRHAL, of the Czechoslovak National Council, Vice-president; STEPHEN ZEMAN, JR., of the Slovak Evangelical Union, Secretary; VINKO NUK, of the Croatin Fraternal Union, Treasurer; and BLAIR F. GUNTHER, member of the Educational Committee of the Polish National Alliance, Chairman of the Board of Directors.

Participating Slavic nationality groups elected vice-presidents to the Board of Directors. Vice-presidents for the respective nationality groups elected were: EDMUND POINC, Polish; W. J. MUZIK, Czech; V. S. PLATEK, Slovak; VASIL DICOFF, Bulgarian; SAMUEL PERLINICH, Serbian; JOHN BUTKOVICH, Croatian; VINCENT CAINKAR, Slovene; PETER RATICA, Carpatho-Russian; GEORGE PIRINSKY, Macedonian; HARRY LUBESHKOFF, Russian; MICHAEL ATKATCH, Ukrainian.

The various nationality groups also elected members to the nationality committees of the Board of Directors. The National Committee of the congress held its first plenary session in Pittsburgh, May 10, to plan steps to translate the decisions of the congress into action.

Anti-Hitler Measures Adopted

Main decisions embodied in the resolutions of the congress were:

1. To make a direct appeal to American Slavs comprising more than half the workers in the war essential industries of the nation to intensify their production efforts to outproduce Hitler and the Axis.
2. To intensify vigilance against fifth-columnists operating within the various Slavic groups in this country aiming to sow division and disunity in the war effort.
3. To chart a plan to recruit 50,000 American Slav volunteers for a house-to-house campaign among American Slav families for raising the amount of war bond subscriptions to 10 per cent of income.
4. To take all measures to strengthen the bonds of solidarity among American Slav groups and between them and the Slav peoples of Europe for a concerted effort against HITLER.
5. To increase support of all war relief agencies, particularly the Russian, Yugoslavian, Polish, Czechoslovakian, British, Greek and Chinese.
6. To take steps to counteract the appeasers.
7. To set up a permanent organization to coordinate and assist in carrying out the decisions adopted by the Congress.

Response Exceeds Anticipations

The response to the first American Slav Congress ever held in America exceeded all anticipations. It revealed the depth of anti-Axis feeling that has seized hold of the Americans of Slav descent who came expressing desires to do their utmost to the end that the power of Hitlerism, arch-foe of the Slav peoples as of freedom-loving peoples everywhere shall be decisively smashed.

The delegates were mostly brawny men from coal mines, steel mills, machine shops—the men on whom the nation is counting for much of its war essential goods production and wholesome-looking women whose faces showed hardening lines of determination beneath war smiles.

Men of Eminence Among Delegates

Among the delegates most were men and women of distinction in many fields of activity—scholers, writers and clergymen, among them Rev. VINCENT BORKOVICZ, who represented the Very Rev. Bishop STEFAN S. WOZNICKI at the Congress and delivered the opening invocation; Metropolitan Bishop Benjamin, of the Russian Orthodox Church; Most Rev. JOHN BAJNOVICH of Johnstown, Pennsylvania, and Rev. RAWLOWSKI, of Buffalo, New York.

Among others present were JOSEPH WATTRAS, director of the Polish National Alliance of Pittsburgh; CHESTER A. KOZDROJ, President of the Polish Central Citizens' Committee of Detroit; Judge M. GRONKOWSKI of Hamtramck; Captain W. HETMAN, Polish War Veterans, Chicago; Dr. W. T. OSOWSKI; chairman Michigan All Slav Committee, Detroit; Mrs. M. NESTEROWICZ, dean of Polish journalists, Buffalo, New York; ZLATKO BALOKOWICH, famed Croatian violinist; FRANK GRIGORSKI, assistant district attorney of Milwaukee and president of the Pulaski Council there; VINCENT KLEIN, Secretary Chrysler Local No. 17 of UAW-CIO; Michigan State Senator, STANLEY NOWAK; Prof. J. J. ZMRHAL, President of the Czechoslovak National Council; JOSEPH MARTINEK, Executive Secretary of the Czechoslovak National Council, Chicago; KAREL ZRCHAL, President of the American Sokol Union; ADOLF HACER, President of the Czech American National Alliance; VINCENT VRDSKY, Secretary of the Czech American National Alliance; Rev. JAN S. BRADAC, Honorary President of the Slovak National Alliance; Rev. ARNOST BIZKA of the Federation of American Czechoslovaks in Texas; NICOLA TESLA, Serbian American inventor; ETBIN KRISTAN, prominent Slovenian writer; Dr. D. K. KATICH, first vice-president Michigan all-Slav Committee; SAMUEL PERLINICH, President of the Serbian National Foderation, Pittsburgh; Judge ANTHONY LUCAS, Pittsburgh; Ohio State Senator ROYD-BOICH; Judge GEORGE S. TENESY, Cleveland;

RAYMOND TRAVNIK, Slovenska Narodna Podporna Jednota; Rev. M. F[illegible]ENKO, Cleveland; W. MUZIK, President of the Czechoslovak Society of America; and Mrs. MARIE KRAL of the Nat'l Alliance of Czech Catholics.

From the serious and restrained mood of the delegates it was visible they had come for the one purpose of agreeing on a common line of action to be taken to guarantee a speedy end of HITLER and the Axis. There was a notable absence of the usual convention hilarity and abandon.

An International Event

It was a wartime meeting dominated by a wartime grimness. That the deliberations of the congress would have international repercussions was evidenced in the more than thousand telegrams from all parts of the world that reached the congress during the sessions.

One of the wires greeting it was from a Czech group in Teheran, Persia; there were many from Slavic groups in Chile, Argentina, Canada, and throughout America. Soviet writers and scientists and members of the Yugslav government in Kuibyshev wired the congress messages of greetings and good wishes.

The Congress was not only an event significant in the history of America's 15 million Slav-descended citizens but fraught with meaning for the destiny of the more than 200 millions of Slav peoples across the seas engaged in a life-and-death struggle against Nazi enslavers.

For the first time the peoples of the diverse Slavic groups in America were reaching a common understanding on a world-wide issue--a matter that gave delegates a feeling of considerable satisfaction.

Far beyond the brilliantly delivered keynote speeches and the iron note of resolve sounded in the resolutions--all of which raised the assembly to wild cheers of enthusiasm--was the vibrant sense of unity which, given expression by the congress carried to the Slav peoples

throughout the world its message of redoubled efforts to crush HITLER and guarantee a democratic victory for the world.

Keynote--Production for Victory

Production and sacrifice were the keynote motifs of the main address of the congress delivered by LEO KRZYCKI. Reminding listeners that American Slavs occupy a key position in America's war industrial pattern, he called for greater efforts this year to turn the scales of victory in favor of the democracies.

How to safeguard American war production and American morale took up the following sessions which were addressed by Prof. J. J. ZMRHAL, President of the Czechoslovak National Council of America, on fifth-column activities and measures to be taken against them; FRANK N. NISBEY, chairman of the Michigan Defense Savings Program on national morale; ELI OLIVER, of the Labor Division of the War Production Board and GEORGE ADDES, Secretary-Treasurer of the Auto Workers Union on problems facing labor in the war industries. These subjects were treated in further detail in special panel discussions later.

10,000 Hear Hon. Paul V. McNutt

Two thousand plates were served at the banquet tendered the delegates and guests by the Michigan Committee of the American Slav Congress in the Masonic Temple on April 25.

But the climax of the congress was a victory rally in the Michigan State Fair Coliseum where 10,000 persons assembled to hear the Hon. PAUL V. McNUTT, Federal Security Administrator and U. S. Government representative to the Congress who greeted the delegates and drew thunderclaps of applause by his appeal for "more tanks for TIMOSHENKO". "In this first Slav Congress you have shown the world the miracle of American unity," he declared.

A message from President ROOSEVELT was received wishing the Congress success in its work."

XXXXXX
XXXXXX
XXXXXX

FEDERAL BUREAU OF INVESTIGATION
FOIPA DELETED PAGE INFORMATION SHEET

__1__ Page(s) withheld entirely at this location in the file. One or more of the following statements, where indicated, explain this deletion.

☑ Deletions were made pursuant to the exemptions indicated below with no segregable material available for release to you.

Section 552		Section 552a
☐ (b)(1)	☐ (b)(7)(A)	☐ (d)(5)
☒ (b)(2)	☐ (b)(7)(B)	☐ (j)(2)
☐ (b)(3)	☒ (b)(7)(C)	☐ (k)(1)
_____	☒ (b)(7)(D)	☐ (k)(2)
_____	☐ (b)(7)(E)	☐ (k)(3)
_____	☐ (b)(7)(F)	☐ (k)(4)
☐ (b)(4)	☐ (b)(8)	☐ (k)(5)
☐ (b)(5)	☐ (b)(9)	☐ (k)(6)
☐ (b)(6)		☐ (k)(7)

☐ Information pertained only to a third party with no reference to you or the subject of your request.

☐ Information pertained only to a third party. Your name is listed in the title only.

☐ Documents originated with another Government agency(ies). These documents were referred to that agency(ies) for review and direct response to you.

_____ Pages contain information furnished by another Government agency(ies). You will be advised by the FBI as to the releasability of this information following our consultation with the other agency(ies).

_____ Page(s) withheld for the following reason(s): _____

_____

☐ For your information: _____

_____

☒ The following number is to be used for reference regarding these pages:

100-56674-42

XXXXXX
XXXXXX
XXXXXX

XXXXXXXXXXXXXXXXXXXXX
X DELETED PAGE(S) X
X NO DUPLICATION FEE X
X FOR THIS PAGE X
XXXXXXXXXXXXXXXXXXXXX

FBI/DOJ

4-750 (Rev. 12-14-88)

XXXXXX
XXXXXX
XXXXXX

FEDERAL BUREAU OF INVESTIGATION
FOIPA DELETED PAGE INFORMATION SHEET

4 Page(s) withheld entirely at this location in the file. One or more of the following statements, where indicated, explain this deletion.

☒ Deletions were made pursuant to the exemptions indicated below with no segregable material available for release to you.

Section 552		Section 552a
☒ (b)(1)	☐ (b)(7)(A)	☐ (d)(5)
☒ (b)(2)	☐ (b)(7)(B)	☐ (j)(2)
☐ (b)(3)	☒ (b)(7)(C)	☐ (k)(1)
_____	☒ (b)(7)(D)	☐ (k)(2)
_____	☐ (b)(7)(E)	☐ (k)(3)
_____	☐ (b)(7)(F)	☐ (k)(4)
☐ (b)(4)	☐ (b)(8)	☐ (k)(5)
☐ (b)(5)	☐ (b)(9)	☐ (k)(6)
☐ (b)(6)		☐ (k)(7)

☐ Information pertained only to a third party with no reference to you or the subject of your request.

☐ Information pertained only to a third party. Your name is listed in the title only.

☐ Documents originated with another Government agency(ies). These documents were referred to that agency(ies) for review and direct response to you.

_____ Pages contain information furnished by another Government agency(ies). You will be advised by the FBI as to the releasability of this information following our consultation with the other agency(ies).

_____ Page(s) withheld for the following reason(s): _____

_____

☐ For your information: _____

_____

☒ The following number is to be used for reference regarding these pages:

100-56674-95

XXXXXX
XXXXXX
XXXXXX

XXXXXXXXXXXXXXXXXXXXX
X DELETED PAGE(S) X
X NO DUPLICATION FEE X
X FOR THIS PAGE X
XXXXXXXXXXXXXXXXXXXXX

FBI/DOJ

233

FEDERAL BUREAU OF INVESTIGATION

Form No. 1
THIS CASE ORIGINATED AT NEW YORK FILE NO. 100-26200

REPORT MADE AT	DATE WHEN MADE	PERIOD FOR WHICH MADE	REPORT MADE BY
NEW YORK	6-23-48	7/24/47	[redacted] (b)(7)(C)

CONFIDENTIAL

TITLE: AMERICAN SLAV CONGRESS

41797

CHARACTER OF CASE: INTERNAL SECURITY - G; REGISTRATION ACT

SYNOPSIS OF FACTS:

In radio broadcast 7/27/47 ASC official asserted that first ASC Congress held 4/25,26/42, Detroit, Michigan, grew out of Tri-State All Slav Congress meeting in Pittsburgh, Pa., 12/3/38; stressed role of ASC in uniting Slavic groups for "peace, economic security and progress". [redacted]

News disseminated through quarterly magazine "The Slavic American" [redacted]

ALL INFORMATION CONTAINED HEREIN IS UNCLASSIFIED EXCEPT WHERE [redacted]

Class 10/18/80

DATE 5P/GSK/PB 7-15-80

CHARGE & EXP. BY 7-15-80

REASON FOR II. 1-2,4,5

DATE OF REVIEW 7-15-90

ENCL Behind file 9-15-48

APPROVED AND FORWARDED: Edward Scheidt SPECIAL AGENT IN CHARGE

DO NOT WRITE IN THESE SPACES

100-56674-1096 RECORDED - 111

COPIES OF THIS REPORT

5-Bureau (Encs.)
2-Chicago
2-Cleveland
2-Detroit
2-Los Angeles
2-Milwaukee
2-Pittsburgh
2-St. Louis
2-San Francisco
1-Washington Field (Inf.)
1-Newark (Inf.)
1-Boston (Inf.)
4-New York

F B I
34 JUN 25 1948

CONFIDENTIAL

COPIES DESTROYED 11-7-58

U. S. GOVERNMENT PRINTING OFFICE

CC-7-14-

61 SEP 15 1948

ENCLOSURE BEHIND FILE

1095

234

41824

NY 100-26200

[redacted]

(b)(1)
(b)(7)(C)

The first two issues of "The Slavic American", furnished by [redacted] contain the following articles: (b)(1)

Vol. 1, Fall 1947, No. 1

Articles

Henry Wallace, Champion of Peace....	3	..... by Leo Krzycki
Poland's Western Boundaries.....	5	.....by Congressman G. Sadowski
Statement on the Truman Doctrine At Senate Foreign Relations Committee Hearings.....	6	.....By George Pirinsky
As a Veteran Sees It, First in a Series of Articles.....	9	.....by Captain George Wuchinich
Spotlight on the Balkans, Statements on Balkan-Greek Question at U.N. Security Council Hearings.....	20	by Warren R. Austin, U. S. Representative and Andrei A. Gromyko, U.S.S.R. Representative
The Real Bulgaria An Answer to Life Magazine.....	50	.....by Dr. Nissim Mevorah

235

CONFIDENTIAL

Features

Story of the American Slav Congress 10 ...The Record of an Organization
Leo Krzycki,
Fifty Years a Servant of the People 18 .....by Tabitha Petran
One World Flight,
Stop-Over in Moscow..... 34 .....by Norman Corwin
Czechoslovak Sokol in America..... 40 .....The Symbol of a People
We Felt the Heartbeat of New Yugoslavia; The Rebuilding of a Country 43 .....by Zlatko Balokovic
Bright Passage,
A Review of the new book on Czechoslovakia, by Maurice Hindus 47 .....by Misko
Savo Radulovich..... 48 .....Yugoslav Artist
Highlights of Slavic American News.. 52 Notes on Rallies and Conferences
Slavic American Youth Get Together.. 54 .....Youth councils in action

Stories

My American Pilgrimage,
Excerpts from the new novel..... 38 .....by Stoyan Christowe
The Importance of Being Kobotchnick
A story of a Man and His Dog..... 42 .....by Louis Adamic

Vol. 1, Winter 1947, No. 2

Articles

Conspiracy Against Peace..... 5 .....by Louis Adamic
Deportation Laws Hit Slavic Americans..... 13 .....by Abner Green
Analysis of the Marshall Plan.... 22 .....by George Pirinsky
Program and Activities of the American Slav Congress..... 29 .....by George Pirinsky

CONFIDENTIAL

236

Features

Nikola Tesla	3	by Pauline Klopacka
Tribute to a Fighting Senator	9	ASC Testimonial Dinner
The World Youth Festival	10	by Ilona Vlahov
U.S.S.R. Thirty Years After Feudalism	14	by S. Serbuzov
Summary of a Journey	24	by Ella Winter
The Story of Geo Milev	31	by Maria Vladimirova
Prague	32	Europe's New Film Capital
Slav Saga in Pennsylvania	33	by Lyla Y. Slocum Eugene Konecky
American Clergymen See the New Yugoslavia	38	Digest of their Report
Pages from an Artist's Notebook	42	by Alvena Becker
Five Women	44	by Mario Seton

Fiction

Wedding Day	7	by Thomas Bell

[redacted]

CONTINUED

41860

NY 100-26200

CONFIDENTIAL

ENCLOSURES (5) TO BUREAU

[redacted]

b7c
b7D
0/5

Two copies of quarterly magazine "The Slavic American", Winter 1947 issue.

- P E N D I N G -

CONFIDENTIAL

238

XXXXXX
XXXXXX
XXXXXX

FEDERAL BUREAU OF INVESTIGATION
FOIPA DELETED PAGE INFORMATION SHEET

1 Page(s) withheld entirely at this location in the file. One or more of the following statements, where indicated, explain this deletion.

☒ Deletions were made pursuant to the exemptions indicated below with no segregable material available for release to you.

Section 552		Section 552a
☒ (b)(1)	☐ (b)(7)(A)	☐ (d)(5)
☒ (b)(2)	☐ (b)(7)(B)	☐ (j)(2)
☐ (b)(3)	☒ (b)(7)(C)	☐ (k)(1)
_____	☐ (b)(7)(D)	☐ (k)(2)
_____	☐ (b)(7)(E)	☐ (k)(3)
_____	☐ (b)(7)(F)	☐ (k)(4)
☐ (b)(4)	☐ (b)(8)	☐ (k)(5)
☐ (b)(5)	☐ (b)(9)	☐ (k)(6)
☐ (b)(6)		☐ (k)(7)

☐ Information pertained only to a third party with no reference to you or the subject of your request.

☐ Information pertained only to a third party. Your name is listed in the title only.

☐ Documents originated with another Government agency(ies). These documents were referred to that agency(ies) for review and direct response to you.

_____ Pages contain information furnished by another Government agency(ies). You will be advised by the FBI as to the releasability of this information following our consultation with the other agency(ies).

_____ Page(s) withheld for the following reason(s): _____

_____

☐ For your information: _____

_____

☒ The following number is to be used for reference regarding these pages:

100-56674-95

XXXXXX
XXXXXX
XXXXXX

XXXXXXXXXXXXXXXXXXXXXX
X DELETED PAGE(S) X
X NO DUPLICATION FEE X
X FOR THIS PAGE X
XXXXXXXXXXXXXXXXXXXXXX

FBI/DOJ

THE SLAVIC AMERICAN

50¢

Louis Adamic

Thomas Bell

S. Garbuzov

Abner Green

E. Konecky

Alvena Seckar

Marie Seton

Lyla Y. Slocum

M. Vladimirova

Ilene Vlahov

Ella Winter

NIKOLA TESLA - *Poet in Electricity*

ALL INFORMATION CONTAINED
HEREIN IS UNCLASSIFIED
DATE 2-14-95 BY [illegible]

WINTER 1947

240

Nikola TESLA

Whose daring imagination and concrete accomplishments are among the wonders of our age.

By PAULINE KLOPACKA

WHEN Nikola Tesla died in January of 1943 in comparative seclusion in a New York hotel, he owned no more than the few personal possessions that had become dear to him during the 86 years of his life. Yet his estate was so fabulous that its value can never be truly assessed. And his heirs were the men and women of all the world.

What price can be put on the work of a man who brought into being the electric power era? The industrial giant that the U. S. is today rests on the series of brilliant discoveries and inventions in the harnessing and transmission of electricity conceived by Nikola Tesla, who came to this country from the land of the South Slavs when he was 28 years of age.

It was at midnight between July 9 and 10 in 1856 that a son, Nikola, was born to the Rev. Milutin Tesla and Djouka, his wife, in the little Serbian village of Smiljan, in the province of Lika. Now a part of Yugoslavia, it was at that time under Austro-Hungarian rule.

Tesla's father, a Serb, was a priest of the Greek Church, and his mother of a distinguished Serbian family, came from a long line of inventors. Both father and mother gave to the child a valuable heritage and culture developed and passed on by ancestral families that had been community leaders for many generations.

It was at first planned that the son prepare for the priesthood but Nikola would have none of this. Physics and mathematics fascinated him. He would be a teacher of these favorite subjects. But then he switched to electrical engineering and at the age of 25 a graduate of Prague University—earlier training had been obtained at the Graz Polytechnic in Austria—he was set for his first job.

At that time the American Telephone System was brought to Europe and an installation set up in Budapest, where Tesla was a successful applicant for a position.

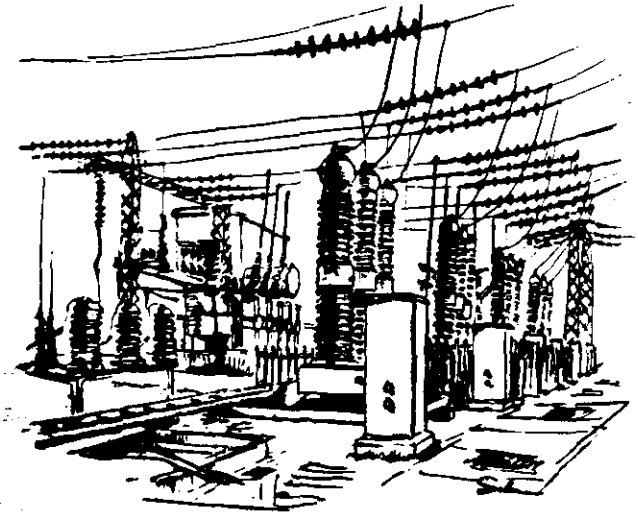

Drawings by Alvena Seckar

THREE years later, in 1884, he was U. S. bound. There were 4 cents in the young immigrant's pocket when he arrived in New York, but that did not disturb him. He had the names of friends. He would soon get to work.

His confidence was well founded, since within a few years he was counted among the ranking scientists of the country, his discoveries bringing in handsome royalties.

It is interesting to note the description of Tesla at this time by his biographer, J. J. O'Neill in the book, "Prodigal Genius": "Tesla was a

spectacular figure in New York in 1891. A tall, dark, handsome well-built individual with a flare for wearing clothes that gave him an air of magnificence, who spoke perfect English but carried an atmosphere of European culture. He was an outstanding personality to all who beheld him." One of his colleagues described him as "immaculately groomed, and of delightful courtesy and charm."

A review of Tesla's work is nothing short of amazing. To quote from J. J. O'Neill's book:

"It was Tesla's invention of the polyphase alternating current system that was directly responsible for harnessing Niagara Falls and opening the modern electric superpower era in which electricity is transported for hundreds of miles to operate the tens of thousands of mass production factories of our industrial system.

"Every one of the tall, Martian transmission lines that stalks across the earth and whose wires carry electricity to distant cities is a monument to Tesla, every dynamo and every motor that drives every machine in the country is a monument to him.

"He discovered the secret of transmitting electric power to the utmost ends of the earth without wires and demonstrated his system by which power could be drawn from the earth anywhere by making a connection to the ground; he set the entire earth in electrical vibration with a generator which sprouted lightning that rivaled the fiery artillery of the heavens. It was a minor portion of this discovery that he created the modern radio system. He planned our broadcasting methods of today 40 years ago when others saw in the wireless only the dot and dash message that might save ships in distress.

"Tesla was an inventor but he was much more than a producer of devices. He was a discoverer of new principles opening many new empires of knowledge which even today have been only partly explored. In a single burst of invention he created the world of power of today.

"He brought into being our electric power era, the rock bottom foundation on which the industrial system of the entire world is builded. He gave us our mass production system for without his motors and currents it could not exist.

"He gave us every essential of current radio. He invented radar 40 years before its use in World War II. He gave us our modern neon and other forms of gaseous tube lighting. He gave us fluorescent lighting. He gave us the high frequency currents which are performing their electronic wonders throughout the industrial and medical world. He gave us remote control by wireless."

Always proud of his national origin, Tesla spoke as follows during his visit to Belgrade in 1892 in answer to a speech of welcome by the city's mayor: "There is something in my which is only perhaps illusory . . . But if I were to be sufficiently fortunate to bring about at least some of my ideas it would be for the benefit of all humanity. If these hopes become one day a reality, my greatest joy would spring from the fact that this work would be the work of a Serb."

Tesla dedicated his life to peace, to lightening the burden of toil from the shoulders of his fellow man. As every scientist who so interprets his function in society, he was stricken when he saw the coming of World War II and his inventions being prepared for destructive purposes. He sought desperately to prevent the war and made available a device which he offered to the world, maintaining that it would make any country, no matter how small, safe within its boundaries. His offer was rejected.

But once the war was an accomplished fact, and when the people's armies rose in defense of their nations in what appeared to be an unequal fight, he did all he could to rally his countrymen to work to the limit in the war effort.

Shortly before his death he wrote as follows to his nephew, M. Sava Kosanovic, now Yugoslav Ambassador to the U. S.:

"President Roosevelt and Donald Nelson, Director of our War Production have repeatedly urged the American people, workers and employers, to meet as fully as possible the goals established for the production of war materials. . . . For that reason, my dear brothers and sisters, as the oldest Serb, Yugoslav and American in the U. S., I am addressing this letter to you, asking you to answer the call of President Roosevelt.

"The achievements of our brothers in the old country are worthy of the spirit which permeates our folklore . . . the fate of the Serbs, Croats and Slovenes is inseparable."

Tesla was not satisfied with his achievements in releasing the earth's energies so that men could work with less backbreaking effort and live more comfortably. The man who could draw up a design for a perfect motor was also concerned with drawing up a plan for a better world. When Tesla read the address of the then Vice-President, Henry A. Wallace, on The Future of the Common Man, he was fired with enthusiasm. The Yugoslav edition of the speech included a preface by Nikola Tesla written in October, 1942:

"Out of this war, the greatest since the beginning of history, a new world must be born, a world that would justify the sacrifices offered by humanity. This new world must be a world in which there shall be no exploitation of the weak by the strong, of the good by the evil; where there will be no humiliation of the poor by the violence of the rich; where the products of intellect, science and art will serve society for the betterment and beautification of life, and not individuals for the amassing of wealth. This new world shall not be a world of the downtrodden and humiliated, but of free men and free nations, equal in dignity and respect for man . . ."

This man, whose work was so advanced of his time that much of it still remains unexplored could have amassed millions, but he was so little interested in personal gain that to save his friend, Mr. Westinghouse, from bankruptcy he tore up a contract which would have brought him $12 millions in royalties. Pressed for funds during the latter part of his life, many of his inventions are lost to the world.

But though he was often short of money he would walk over to Herald Square and feed the pigeons. It was almost a sacred trust, feeding the pigeons twice a day. They had been his personal responsibility through the years, and if he could not be there to do the feeding, a Western Union messenger boy would be hired to do the job in his stead. Often he would forget an important engagement so that he might keep his "date" on Herald Square. The pigeons were a way to relaxation, a note of warmth in an otherwise rigidly disciplined life. He had few friends and never married, since he felt a scientist must keep himself free of personal relationships that would be unduly demanding.

Restless and eager to unravel every possible unknown to the very end of

(Continued on page 49)

GEO MILEV

describes only from the standpo. of his art. . . . In his attitude toward various events in the life around him, which impress him strongly, he does not take sides. He does not praise one and hurt the other; he merely describes everything he sees, describes it with the delicate, sweet colors of poetry. . . ."

Geo was fined 20,000 leva and sentenced to one year in prison. He could not believe that the court could make such a decision. With joking reference to the dullness of "their Honors," he left the courtroom believing that the decision would never be carried out.

He was right. Unable to enforce their decision legally, the government resorted to illegal means.

Next day, May 15, 1925, Geo was kidnapped from his home and killed by underlings of Prime Minister Alexander Tzankoff.

The cultural world of Europe protested Geo's death. Henri Barbusse, of France, visited Bulgaria to investigate the case. In his book "The Murderers" he made reference to the circumstances of Geo's death. Max Reinhardt protested and "regretted the loss of a very gifted theater director." Oskar Kokoshka, in Vienna, recognized the loss of "a precious critic and learned connoisseur of modern art."

Many Bulgarian writers were silent. Fearing for their lives, they did not dare to speak a word for Geo Milev or express regret for his death. The more courageous of them stated that "talent such as Geo's is born only once in a hundred years," that "He was the most cultured Bulgarian," "The most honest and courageous."

THE youth and the common people deeply mourned for Geo. They knew they had lost a sincere friend and teacher. Unable to use the Bulgarian printing presses, they copied his poems by hand and learned it by heart. Bulgarian students abroad printed it in Paris, and in Belgrade. In Prague it was translated into Czech and in Russia into Russian.

A few courageous young people in Bulgaria printed pamphlets about Geo. They were promptly tortured and imprisoned.

We, his family, searched for him for months, but we never learned exactly where and how he was killed.

There were rumors that he had been shot in the mountains, that he had been burned in the furnace of "Public Safety." These measures were used by Bulgarian Fascists long before the world knew of Hitler. Both stories, however, avowed that his spirit was not crushed.

Geo's voice was silenced forever. The murderers triumphed, but they forgot that he who speaks for the freedom of a tormented and deprived people does not die. In today's New Bulgaria, Geo Milev is honored as one of her most cherished sons. Geo's poems are celebrated especially by the youth of today, the heirs of the September Revolution of 1944, which fulfilled his prediction of a decade before that "September will be May."

TESLA

(Continued from page 4)

his life, he read a paper on the occasion of his 80th birthday on the perfection of a tube for atom smashing. As if that were not enough, he also presented a system of interplanetary communication.

Thus the fragmentary story of the life and work of a Yugoslav immigrant who, like so many tens of thousands of his fellow countrymen, left their homeland rather than live as subjects within the Austro-Hungarian empire.

He made a unique contribution to his adopted land, so ideally suited to the full scope of his genius, "the like of which in all *history* could probably be counted on the fingers of one hand."

It is to be hoped that just as he brought electrification to the U. S. in the short span of ten years, his adopted country might assist in the full electrification of the Balkans, reversing its present policy toward New Yugoslavia.

HE AMERICAN SLAV COMMITTEE
of Canton, Ohio
welcomes the new magazine
THE SLAVIC AMERICAN
and projects best wishes for its success. This organ, we know, will be a great contribution to the enlightenment of the homes of American Slavs.

Greetings to the Second Issue
of
THE SLAVIC AMERICAN
and
Best Wishes for Continued Success in the Coming Year
ALL SLAVIC COUNCIL OF NORTHERN CALIFORNIA
739 Page Street, San Francisco, Calif.

GREETINGS FROM
JIM BALANOFF

Greetings from Lodge 3052
American-Russian Fraternal Society, IWO
1010 East Foss Avenue Flint, Mich.

Greetings from
CLUB "YUGO-FORWARD"
Detroit, Mich.

THE STANLEY THEATRE
Presents
The Best Films from the U.S.S.R.
NOW! "THE GREAT GLINKA"
7th Ave. & 42nd St. New York City

Best Wishes for Success to
THE SLAVIC AMERICAN
American Russian Fraternal Society
Lodge 3069
120 Glenmore Ave. Brooklyn, N. Y.

Efficient Service Since 1919
LEON BENOFF
General Insurance Broker
391 East 149th St., New York
MElrose 5-0984
Insurance is cheaper to have than to need

243

FORM NO. 64

Office Men[illegible]dum • UNITED S[illegible] GOVERNMENT

TO : Director, FBI

DATE: April 11, 1949

FROM: SAC, New York

SUBJECT: AMERICAN SLAV CONGRESS;
INTERNAL SECURITY - C
(Bufile 100-56674)

Enclosed are two copies of the Fall, 1948 issue of "The Slavic American", a quarterly, published by the American Slav Congress.

These are being submitted for information only, not for evidence. One copy is being retained in the files of this office.

Encls. 2

[redacted]
100-26200

(b)
(7)
(C)

ALL INFORMATION CONTAINED
HEREIN IS UNCLASSIFIED
2-22-49 SP/RC

~~ENCLOSURE BEHIND FILE~~

-116

EX. 116

RECORDED - 105

INDEXED - 105

100-56674-1168

5 APR 12 1949

FILE

(b)
(7)
(C)

244

CONFID

SLAVIC AMERICAN

a Quarterly

Club Metro Dancers, Chicago

Published by The American Slav Congress

FALL 1948

245

The American Way of Life

"Why Go to War to Keep Others From Having Their Way of Life," asks Adamic

by LOUIS ADAMIC

THE opening lines of the Progressive Party's platform read: "Three years after the end of the Second World War the drums are beating for a third. Civil liberties are being destroyed. Millions cry out for relief from unbearably high prices. The American Way of Life is in danger."

The American Way of Life has been the issue in any American election ever since 1776. Every voter who goes to the polls, votes—intelligently or mistakenly; independently or under the spell of inveterate partisanship—for one or another concept of the American Way of Life.

Of course, various people, living in various circumstances, have various ideas of what constitutes the American Way of Life. I propose to state my ideas of it; also I shall presume to fit those ideas within the frame of the new Progressive Party which must continue to grow from its beginnings in 1948.

As I see the American Way of Life, its principles were born of the American Revolution. They were won in struggle; *nothing* as fundamental and deep-reaching comes easy. They are stated in the Declaration of Independence and the Constitution of the United States. Our job now is to perceive what policies and measures will safeguard the Way against decay and corruption, and will further its growth and evolution to meet successfully the problem of changing times and new conditions. The principles of 1776 are as valid as ever, but life is different today from what it was then. Fortunately growth and change are of the very essence of the American Way.

The first principle of the American Way of Life is the *right to life* itself; and this must be safeguarded against war on the one hand, and on the other against poverty, which in recent decades has taken a far heavier toll than any war in which this nation has ever so far been involved—though the "next war," if we permit it to be drummed up, will reverse the story.

The second principle of the American Way is *liberty* . . . it has always been our slogan and our pride. But we have long been cautioned that its price is eternal vigilance, and we know how to recognize those who have designs on it.

The third principle of our Way is *abundance*. When migrants from Europe first began to settle here, this was a land rich in the gifts of nature; and for all that those gifts have been abused by ignorance and irresponsibility, and particularly by exploiters and monopolists. Our resources are still great enough—if deforestation and erosion are checked in time, and if our mineral resources are properly conserved—to afford abundance, the *good* life, to all the inhabitants of These States.

And a fourth principle of the American Way is *opportunity*.

THE Progressive Party promises to safeguard the *right to life* by avoiding war—always the saddest failure of morality and now the potenial destroyer of human society and the globe itself.

Whether or not we can avoid World War III, I don't know; but I do know this—that if we don't try to avoid it, nothing else is worth trying to do nowadays. It is futile to wonder about the kind of curtains you'll hang up in your living-room . . . futile to write or read books, to go to lectures or to school . . . silly to worry about being called a Red or a Communist, or whatever, or about being hauled up before the fantastic Un-American Activities Committee . . . futile to work at your job, whatever it may be . . . silly to worry about keeping on the good side of whoever can take that job away from you.

War or peace? I don't know; but if we want any sort of future for this country, for the rest of the world, for ourselves and the Russians, for you and me personally, then we'd better work for peace . . . stand up for peace . . . stand up with our new political vehicle, the Progressive Party.

The Progressive Party further proposes to safeguard the *right to life* by abolishing poverty. Cynics, prestitutes, and generally people without hope and vision say this can't be done. They say Henry Wallace is a starry-eyed visionary. We say *it can* be done if we will jealously maintain freedom, bear in mind the limitless capabilities of Americans, and keep the grip of monopoly from arrogating the resources that should serve all, and if we will insist upon the application of the ever more marvelous discoveries and techniques of science for the common good.

The Progressive Party proposes to safeguard *liberty* — not with more lip service, but by adhering fully to the Constitution, including the Bill of Rights and all subsequent amendments, in all their vitality and integrity, and by reviving and enhancing the programs and formulations of Roosevelt's New Deal. The Progressive Party proposes to guard liberty

(Continued on page 26)

LOUIS ADAMIC

Slovenian American author and lecturer, a foremost authority on national groups, he is a prolific writer. Among his works are My Native Land, Dinner at the White House, Two-Way Passage, Nation of Nations, My America. He also edits and publishes a current affairs bulletin, Trends and Tides, issued from his home in Milford, New Jersey.

246

A HALF HOUR OF MUSIC

with

TWO DISTINGUISHED AMERICAN ARTISTS
OF SLAVIC DESCENT

in a unique

Album of Recordings

Now on Sale

ZLATKO
BALOKOVIC
Violinist

IVAN
PETROFF
Baritone

By BALOKOVIC

HYMN TO THE SUN	Rimsky-Korsakoff
CROATIAN RHAPSODY	Lhotka
FOR ONE MOMENT OF JOY	Croatian Folk Song

By PETROFF

LEGEND	Bulgarian Folk Song
PEASANT'S LAMENT	Bulgarian Folk Song
ARIA PRINCE IGOR	Borodin

By BOTH

SONGS MY MOTHER TAUGHT ME	Dvorak
ELEGIE	Massenet

Prize selections for your library long to be cherished and enjoyed

FOUR RECORDS TO EACH ALBUM

$4 the Album

postage prepaid

USE CONVENIENT ORDER BLANK ➔

AMERICAN SLAV CONGRESS
205 East 42nd Street
New York 17, N. Y.

$4 for album of 4 records

I enclose ..... for ☐ album(s)

Name .....

Address .....

City & Zone .....

State .....

(Make checks and money orders payable to
AMERICAN SLAV CONGRESS

The American Way

(*Continued from page 5*)

against that danger which most disturbed the Founding Fathers—the power of the military. And note how all these things are inter-related. Liberty is imperiled by poverty, by monopoly, by war. Every measure which the new party proposes is a measure to safeguard liberty.

By *abundance*, the new party means that our rich land—and our skills, brought here by immigrants from the Old World in the last 300 years—shall produce all that is needed to make the good life available to every law-abiding and industrious man and woman here, and their children, regardless of color, race or religion; and that these fruits of enterprise and labor shall not be so ill-divided that a few are glutted with a surfeit of luxuries while many who toil and sweat must for reasons beyond their control still go "ill-fed, ill-clothed and ill-housed."

The pioneers who first possessed the Atlantic seaboard and later pressed westward through the forests and the prairies, could win abundance by strength and industry, by the wide swing of the axe, the true aim of the flintlock, and the firm hand on the plow. There was *opportunity* galore. Almost any man could get land for the asking or for a few dollars an acre, and become

(*Continued on page 29*)

The American Way

(Continued from page 26)

an independent farmer. Any man could set up a little store in a new community and become a prosperous merchant as the town grew. Almost any man could start a paper, establish a factory or mill, or open a mine, and become an industrialist.

This is no longer true. Millions of square miles have been rendered useless for human use and habitation by irresponsible deforestation and by erosion. The number of family farms dwindles yearly; every day hundreds of independent merchants and small mining, milling and manufacturing companies are forced out of business by the power of monopoly, centered in Wall Street.

The relentless limitation of opportunity, the shrinking of abundance for millions, the violences done to liberty in defiance of the Constitution and in contempt of the tradition that began in 1776, the further threat against freedom in the ominous form of military rule, the denial of life itself to unnumbered victims of poverty, and the grave threat to all our lives in the probability of a war waged with atom bombs and bacteria —these developments, conditions and prospects now imperil the American Way of Life.

The Progressive Party proposes to restore and safeguard and extend that Way—the emphasis is on the word "extend." Nothing in nature stands still, and no more can human economic and social and political institutions. Change is the key principle of the American Way—growth, adaptation, progress. Had it not been for that principle, the USA would not exist—we would not now be debating the decisions made in an election; we would still be colonial subjects, or we wouldn't be here at all.

If we remembered more vividly what daring it took in 1776 to reject monarchy and form a republic, we would have less hesitation in rejecting the National Association of Manufacturers' notions of "free enterprise," and adopting measures more in keeping with today's facts of life. We would not hesitate to defy the greatest power on earth—that of monopoly corporations and cartels, whose agents have lately seized control of the U.S. Government.

Under Henry Wallace's leadership, the Progressive Party offers itself as a medium through which those who love their country and are also in favor of their own rightful individual interests can express themselves politically . . . in 1949 . . . 1950 . . . in 1952, assuming that the "next war," now being drummed up, won't destroy us all before then.

We know now that we have established a firm foundation for the new party under the leadership of Henry Wallace and Glen Taylor. Personally, I was not in this campaign only in reference to this year's election or because I think, as I do think, that Henry Wallace is a great American who should be in the White House in this crucial period. In the main, I was in this campaign because, like Wallace and Taylor, like many other Americans, I became convinced that neither of the old parties is fit to deal with the profound crisis which is coming to a climax in these middle years of the 20th century. I am in this movement because I want to help build a new people's party that will be capable of coping with the crisis now converging upon us and the rest of the world.

LIKE many Americans, I am foreign-born; and every once in a while I hear or read some remark to the effect that I have no right to be doing what I am doing—helping the growth of a new party which hopes to save the peace. Such remarks amuse me. It so happens that I have read rather extensively in American history, not as taught in most schools, but as it really happened; and I am impressed by this fact—that in all crucial or climactic periods in the career of this country, the so-called foreigners played important roles.

The Irish and German elements, for instance, were the big "foreign" groups around 1776, and it was they who became the backbone of General Washington's revolutionary army. The Irish and German elements also furnished the mass support to Thomas Jefferson when he started a new party 150 years ago. Jefferson did not triumph immediately (as Wallace didn't); his supporters stood it with him until he did (as I hope we will

(Continued on page 30)

Greetings From

MARY ANTONIC
BOZO BARANIC
MILO BARANIC
JOHN BEZELJ
PAUL BIAZEVICH
KAY BEGOVICH
FLORENCE FERKICH
GEORGE GELSOVICH
STEVE HROSTI
FRANK KURSOC
LJUBICA LOVRICH
ANTON PESUSICH
ERICA PETRAS
NICK PETRICH
A. PUJATCKY
LUCY LJUBENKO

Lodge 3172, A.R.F.S., Sioux City, Iowa

PETER ZAKUTONSKY
LOUIS KLYM
MARY KLYM
HELEN WONSOWIC
PAUL ROMANOV
MARY ROMANOV
BRANCH No. 14 LEMKO ASS'N, GARY, IND.
BRANCH No. 3295, IWO, CARPATHO-RUSSIANS, GARY, IND.
MILLIE KLYM
MICHAEL KLYM
ANNA SAMOZKA
WALTER IVANZOWICZ

A.S.C. of Newark, N. J.

JOHN J. KASKEVICH, M.D.
530 Summer Ave., Newark

JOHN BENKO
JOHN DOLINAJEC
MICHAEL DROBAN
STEVEN DZUROSKA
STEPHEN HRUSKA
TILLY JANOVITZ
MICHAEL KOLARIK
STEFAN LACKO
JOSEPH MATEJKA
MICHAEL MATEJKA
JOSEPH MEDVECKY
IMRO RIBAR
SHEPERO SHOE STORE
MATEJ STROMKO
STEFA TAL
JOSEPH TURZA
FRANK ZAVARTKAJ
JOSEPH ZILINEK

248

Delegates join in singing the National Anthem.

The American Way

(Continued from page 29)

with Wallace). The same was true again in the period of Andrew Jackson, when American democracy took another long step forward. When Lincoln came along and started a new party, his most steadfast backing came from the numerous new-immigrant groups—Germans, Finns, Poles, Scandinavians and others.

This was quite natural. As newcomers who came here seeking liberty, abundance and opportunity, they had a more acute sense of what America professed, and they took American principles more seriously than many of the old-line Americans who had begun to be matter-of-fact, if not smug, about the country. As newcomers, they were somewhat outside the mainstream of American life. By going behind the cause of Washington, Jefferson, Jackson and Lincoln, they became part of the mainstream. They promoted themselves from second-class citizens to first-class. It was Americanization at its very best. It made history, it enriched the traditions, it integrated the new Americans into the country as a whole.

And it is quite natural, and very fortunate, that many of us in the new-immigrant groups have joined with many old-line Negro Americans, with many white Americans of the earlier immigration waves, with Henry Wallace, in this movement to form a new party and make it competent to deal with the complex problems looming before us. Many of us Slavic Americans already in 1946 and early in 1947, sensed that Henry Wallace was right, and we became part of the growing impulse to form a new party. Regardless of what some of our opponents have said, this fact is strictly and wonderfully in the American tradition. It is part of the Americanization process. It is according to the American Way. We are promoting ourselves from second-class to first-class citizenship. This is resented by some of the Americans of the older strains, the self-styled standard Americans; but don't let that worry you too much. They, too, are being Americanized or re-Americanized as you assume your full rights and duties of citizenship. Americanism has its standards, to be sure; very high standards; but it is not anything rigid or dead; it is alive, vital, open to change and enrichment.

Slavic Americans are part of the whole immense American dynamic which is as yet little understood, and is full of promises and dangers. By coming here, we of the new immigration greatly complicated the American civilization as it was, say, 90 or 100 years ago. Most Slavic immigrants became workers in the great industries, and now their energy is integral with the American scene as a whole. Most immigrants in the last 100 years or so worked hard, many of them too hard at too little pay, and helped to create a complex industrial machine which, lest it overwhelm us, now needs intelligent handling and control. It is our duty to take an active interest in finding an approach to the immense industrial, economic and social problems facing us: for, let me repeat, our coming here and our labors in the last several decades have helped to create these problems.

Most of us who came over were ordinary people. But in the new immigration waves were also some extraordinary human beings. There was, for instance, a man of genius, Nikola Tesla. His numerous inventions now are one of the most important factors in the immense American industrial scheme which throbs with the high promises that pulsated through Tesla's brain, but which are also full of dangers. Personally, as one who happens to be proud of being of the same background as was Tesla, I feel it is my special duty to help do what is necessary to insure that Tesla's work, as well as the work of ordinary men and women, will go into the fulfillment of promises in our American Way of Life, rather than contribute to the catastrophe now threatening.

IN 1942, Henry Wallace made his famous speech on "The Century of the Common Man." Nikola Tesla, who was a very uncommon man, publicly endorsed that speech in glowing terms. And I think that I speak not only for myself, but also for Tesla, when I assert that the American Way of Life is not the way of incredibly greedy monopoly profits and prohibitive prices for the necessities of life. Look at this picture: Millions of men in their best years who fought and suffered, many of whom will carry greater or lesser disabilities to their graves—veterans to whom we said "Nothing is too good for you"—are unable to secure homes of minimum decency and convenience. Their families cannot be adequately fed with meat at 70¢ to $1.20 a pound. Whatever wage increases they may secure

(Continued on page 32)

249

comments from our readers

Dear Editor:

Our small club of eight members, from a small mining community in Pennsylvania, until recently was known as the Rural Ridge Busy Knitters Club. We are now a chapter of the Congress of American Women.

We have only fifteen dollars in our treasury and out of this we are sending you $10, because of our desire to contribute to the work you are doing.

May it help in some way towards *The Slavic American's* fight for freedom and democracy.

Anna Tominac, Pres.
Anne Kondrick, Sec'y.
Julia Pukavina, Treas.
Rural Ridge, Pa.

Dear Editor:

I send you post haste my renewal subscription for *The Slavic American.*

In all sincerity—keep up the good work for you are doing an excellent job in the struggle against fascism.

I never miss an issue.

Rev. Eliot White
New York, N. Y.

Dear Editor:

How about more profiles on Slavic American writers and scientists like Nikola Tesla? The field for this type of material is virtually endless.

Anton Markulic
Los Angeles, Calif.

(See page 13—Ed.)

The American Way

(Continued from page 30)

through their unions, increased living costs still stay one jump ahead of them.

We of the Progressive Party say this is not the American Way of Life. And "we" includes great numbers of ex-GIs and young workers, old-stock Americans and immigrants: Americans of all breeds and backgrounds.

If all Americans are employed at better than mere-existence wages or are engaged in business or professional activities at a reasonable compensation; if all Americans are well clothed and fed; if all Americans are secure instead of uncertain and worried, as the majority are today, there will be no war. The Hearsts, Peglers, Forrestals and Bullitts won't get to first base in trying to propagandize us into fear and hate of other countries which are emerging out of backwardness and, because of their different historic experiences, are attempting a different system for providing benefits and opportunities for their citizens.

Why go to war to keep others from having their way of life? We in the Wallace movement, in the Progressive Party, insist on peace in order to keep the American Way of Life. If our approach prevails in time, there will be no war and Russia will be no danger to America, to the American Way of Life. The chief danger to this country and to our institutions under the Constitution lies in our present high-level politicians and wire-pullers who have raised the cry of Communism and of the Russian menace as a smokescreen to neutralize any possible militancy on the part of labor, to scare us in the new-immigrant groups, to frighten the Negroes, and to confuse the people generally so they won't be able to figure out who or what is responsible for high living costs. Henry Wallace clearly means what he says; so he and his active supporters were smeared, lest too many voters vote for him and in their own interest.

The old-line politicians and wire-pullers and their propagandists are not afraid of Communism, but of American democracy and of the American people; of the people getting wise to themselves and demanding a return to the American Way of Life—the Way defined in the Declaration of Independence and the Constitution of the United States.

That's what *they* are afraid of . . . that's what *we* Progressives stand for . . . and that's what will prevail if you and I, all of us and all of our neighbors wherever we come from, do everything in our power to build the new party that has come into being around the personality and political philosophy of Henry Wallace. We, all of us, will have to do all we can in this post-election period to make of the Progressive Party a party capable of saving the country and helping to bring about a world in which the American Way of Life will include not warlike antagonism, but constructive interest in the ways of life in other countries.

250

SECRET

FEDERAL BUREAU OF INVESTIGATION

Form No. 1
THIS CASE ORIGINATED AT CINCINNATI, OHIO

NY FILE NO. 100-27583 MBJ

REPORT MADE AT	DATE WHEN MADE	PERIOD FOR WHICH MADE	REPORT MADE BY
NEW YORK CITY	11/13/43	10/6,7, 25-28/43	[redacted] (b)(7)(C)

TITLE [redacted] (b)(7)(C) 0/S

CHARACTER OF CASE: SECURITY MATTER - C.

SYNOPSIS OF FACTS: (S) [redacted] (S)

(b)(7)(C)
(b)(7)(D)
0/S

APPROPRIATE AGENCIES AND FIELD OFFICES ADVISED BY ROUTING SLIP(S) OF CRS DATE 9/16/82

CONTAINED ... UNCLASSIFIED ... WHERE SHOWN OTHERWISE

Inc INS - Detroit FNC 2-17-49 L-6-59 R-367

IES DESTROYED

- R U C -

REFERENCE: Bureau File #100-118061
Report of Special Agent [redacted] dated (b)(7)(C)
July 17, 1943 at Cincinnati, Ohio.

DETAILS: At New York, N. Y.

This investigation is predicated upon a request in

DECLASSIFIED ON 9-17-87
BY 3042 pwt/EBM
appeal # 87-0499

Class. & Ext. By JP-1 GSR/RDD
Reason - FCIM II, 1-2.4.2 2+3
Date of Review 7/30/92 7/30/82

APPROVED AND FORWARDED: E. E. Conroy SPECIAL AGENT IN CHARGE

DO NOT WRITE IN THESE SPACES

100- 118061 - 47

RECORDED & INDEXED

75

30 NOV 16 1943 (b)(7)(C) [redacted]

COPIES OF THIS REPORT
5 - Bureau
4 - Cincinnati (2-USA, Dayton) (#100-4083)
2 - New York

SECRET

7—2021

251

SECRET

NY 100-27583

reference report that indices of the New York office be checked against the names of the persons [redacted] (b)(7)(C)

SAVA KOSANOVICH first came to the attention of the Bureau in January, 1943, after the death of NIKOLA TESLA, one of the world's outstanding scientists in the electrical field. During his lifetime, TESLA conducted many experiments in connection with the wireless transmission of electrical power and just prior to his death, was interested in what is commonly called the "death-ray". (S) U

The notes and records of TESLA's experiments and formulae, together with designs of machinery necessary for their operation, were reported to be among TESLA's personal effects, after his death. (S) U

It was reported that KOSANOVICH claimed to be a nephew of TESLA, and he attempted to secure possession of TESLA's personal effects, and hired a private locksmith to gain access to TESLA's possessions. The Bureau was interested because of the supposedly vital importance of TESLA's inventions and the desire to keep them out of enemy hands, as one informant maintains that KOSANOVICH was pro-Axis in his sympathies. The matter was later handled as an alien enemy, custodial detention matter and no further investigation conducted by this office. (S) U

The Bureau advised by letter of January 21, 1943, that its files revealed confidential information concerning NIKOLA TESLA and his inventions and advised that one NICOLA TESLA, who might be identical with NIKOLA TESLA, made a speech in Springfield, Massachusetts on July 4, 1922 under the auspices of the Friends of Soviet Russia. (S) U

(S) [redacted] (S) U (b)(7)(C)

(S) U

SECRET

252

STANDARD FORM NO. 64

Office Memorandum • UNITED STATES GOVERNMENT

TO : MR. TOLSON

DATE: Jan. 30, 1951

FROM : L. B. NICHOLS

SUBJECT: [redacted]

(b)(7)(c)

ALL INFORMATION CONTAINED HEREIN IS UNCLASSIFIED DATE 2-22-89 BY SP1AGCom #241860

Tolson
Ladd
Clegg
Glavin
Nichols
Rosen
Tracy
Harbo
Belmont
Mohr
Tele. Room
Nease
Gandy

[redacted] called yesterday and said he would be in town for the next two or three days and wanted to see me. I told him I would be glad to see him late yesterday or today at his convenience. He is coming in today at 2:30 p.m.

I asked him if there was anything special which would require my doing any checking. He stated there were two things he wanted to discuss.

1. The case of Nicola Tesla and Abraham A. Spanel, President of International Latex Corporation, [redacted]

Our files reflect that Nicola Tesla was one of the world's outstanding scientists and in fact designed the generators installed at Niagara Falls. He died in New York on January 7, 1943, and is supposed to have left details and plans for a so-called death ray. [redacted]

(b)(7)(c)

Our files also reflect that Colonel Erskine of Military Intelligence called us on January 9, 1943, advising that Tesla had died, that A. Spanel had communicated with the War Department regarding this death, that Tesla had a nephew named Sava Kosanovich who had taken possession of Tesla's papers and Spanel thought the papers might be used against our Government.

We made an immediate inquiry in New York and the first report was that Kosanovich and others entered Tesla's room with the aid of a locksmith, broke into a safe containing some of Tesla's valuable papers including formula.

Coincident with this, on January 8, 1943 L. M. C. Smith called Mr. Tamm regarding the death of Tesla and Smith stated he was talking to the Alien Property Custodian about seizing these items.

We interviewed Spanel who expressed concern over Tesla's effects and Spanel stated that Kosanovich had turned over the effects of Tesla to the Alien Property Custodian. Spanel further stated the day before Tesla died, he tried to get in touch with the War Department to make available certain patents.

SE 2 1/00 - 346930-1

5 [redacted] 4 1951

RECORDED - 18

MAR 2 1951

COPIES DESTROYED

R94 JUL 27 1962

EX. - 8

INDEXED - 18

[redacted]

(b)(7)(c)

253

[redacted] (b)(7)(C)

In 1945, we talked to a Private Bloyce Fitzgerald, who stated he had been associated with Tesla, and that the Army believed that Tesla's "death ray" is the only defense against atom bombs.

It was very clear we had no responsibility for Tesla's effects, that the Alien Property Custodian seized them and we learned later that Naval authorities made microfilms of all his papers.

Kosanovich communicated with the Bureau on March 29, 1950, and under date of April 3, 1950, in response to his request for the microfilms of the papers of Tesla, who was a relative of Kosanovich, we advised Kosanovich that this Bureau had never been in possession of Tesla's papers.

[redacted] (b)(7)(C) (b)(7)(D)

Senator [redacted] furnished the Bureau five communications received from a [redacted] which pertained primarily to Abraham Spanel. This individual mentioned the FBI at length in these communications, pointing out that Mr. Foxworth had been called in on the Tesla case but was killed shortly thereafter. He further stated that he was associated with Fitzgerald and as such came in touch with Tesla. He stated the FBI investigated this matter but their hands were tied, that there was nothing the FBI could do as they had been stopped from a higher level, that [redacted] the FBI Agent he dealt with, resigned and requested never to discuss the matter with him again, that he had a wife and family to consider and that the last hope was Congress. These communications were furnished to the Department on September 19, 1950. (b) (7) (C)

[redacted] (b)(7)(C)

[redacted] (b)(7)(C)

We did have an Agent, [redacted] who entered on duty [redacted] resigned [redacted] The file does not indicate that we have ever interviewed [redacted] on the basis of [redacted] allegations.

I think we should see what specifics [redacted] wants. I think we can tell him on the Tesla papers that when they were reported to us, the Department stated that the Alien Property Custodian was going to seize the papers and that we learned Spanel had called the War Department about the papers falling into the wrong hands. [redacted] (b)(7)(C)

Right. H.

I agree. H.

Why wasn't he interviewed?

H. 3 -

255

STANDARD FORM NO. 64

Office Memorandum • UNITED STATES GOVERNMENT

TO : D. M. Ladd

FROM : E. G. Fitch

SUBJECT: [redacted] (b)(7)(C)

INTERNAL SECURITY - R

DATE: August 30, 1946

Mr. Tolson
Mr. E. A. Tamm
Mr. Clegg
Mr. Coffey
Mr. Glavin
Mr. Ladd
Mr. Nichols
Mr. Rosen
Mr. Tracy
Mr. Carson
Mr. Egan
Mr. Gurnea
Mr. Hendon
Mr. Pennington
Mr. Quinn Tamm
Mrs. Room
Mr. Nease
Miss Beach
Miss [illegible]

Mr. Lyon of the State Department informed Mr. Roach that he obtained a note from Colonel Grombach, Special Intelligence, War Department concerning the above mentioned individual. Mr. Lyon was of the opinion that the information supplied by Colonel Grombach may be of interest to the Bureau.

The information as obtained from Colonel Grombach by Mr. Lyon is quoted as follows:

NR [redacted] (pronounce: [redacted] and according to common saying his mistress, arrived apparently together with or shortly after [redacted] It is supposed [redacted] Nicolas Tesla the well known scientist, residing in Cleveland, Oh., (probably American citizen) [redacted]

see [redacted] (b)(7)(C)

(b)(7)(C)

RECOMMENDATION

It is suggested this memorandum be referred to the Internal Security Section for its information.

(b)(7)(C)

[redacted]

(b)(7)(C)

RECORDED & INDEXED 206

SE 26

100-348245-1

F R I

JAN 14 1947

53 JAN 23 1947

EX-16

(b)(7)(C)

5-[redacted]

256

FD-72
(1-10-49)

FEDERAL BUREAU OF INVESTIGATION

FORM NO. 1
THIS CASE ORIGINATED AT WASHINGTON FIELD

SECURITY INFORMATION - CONFIDENTIAL

REPORT MADE AT	DATE WHEN MADE	PERIOD FOR WHICH MADE	REPORT MADE BY
WASHINGTON, D. C.	JUN 1 1952	5/9,10,13,16,26/52	[redacted] SA

TITLE		CHARACTER OF CASE
[redacted] (b)(7)(C)	FOI/PA # 291860 APPEAL # CIVIL ACTION # REQUEST # 12,356	ESPIONAGE - R (b)(1)(c)

SYNOPSIS OF FACTS: DATE 2-16-89 [illegible] 6cm SI is [redacted] (b)(1)

2-16-89
Classified by SP1AAC4pn
Declassify on: OADR
291860

ALL INFORMATION CONTAIN
HEREIN IS UNCLASSIFIED
EXCEPT WHERE SHOWN
OTHERWISE

ICC by R/S as collected by Special to SIS

State OJH 7-11-52.

[redacted] (b)(1)(c)

Subject in interview and signed statement says [redacted]

(b)(1)(c)
(b)(7)(D)

Accompanied [illegible] by copy by [illegible] to AMEMB Nicosia 7-17-52 memo

photocopy

AGENCY OSI DIST OFF 4
REG. REC'D. 11-13-52
REPT. FORW. 12-1-52
BY [redacted]

DETAILS: AT WASHINGTON, D. C.: Re: [redacted] (b)(3)(A) (b)(1)(c) (b)(1)(s)

APPROVED AND FORWARDED:	SPECIAL AGENT IN CHARGE	DO NOT WRITE IN THESE SPACES
		100-356557-99 RECORDED - 19
		INDEXED 19
		JUN 26 1952 10 (b)(7)(c) SECRET

COPIES OF THIS REPORT
(6) - Bureau (100-356557)
1 - San Francisco (100-29336)(Info)
1 - Los Angeles (65-5203)(Info)
1 - New York (65-14842)(Info)
3 - Washington Field (100-19816)
E 49

E 9 AUG 1 1952

PROPERTY OF FBI - This confidential report and its con[illegible] you by the FBI and are not to be distributed outside of agency to w[illegible]

257

SECRET

[redacted]

(b)(7)(C)
(b)(7)(D)

INTERVIEW OF THE SUBJECT

(b)(7)(D) [redacted] was interviewed at the Washington Field Office by SA [redacted] and the reporting Agent, on May 9, 10, and 13, 1952, and by [redacted] and the reporting Agent, on May 26, 1952. (b)(7)(C)

History Prior to Entering United States

(b)(7)(D)

[redacted]

(b)(7)(C)

SECRET

258

[redacted]

Acquaintanceship with Officials in the Yugoslav Government

[redacted] admitted at this time he was interested in Yugoslav matters, Yugoslav progress in engineering, and their advances in equipment. He said he was also desirous of making the acquaintance of NIKOLA TESLA, who was an outstanding Yugoslav scientist and one of the founders of Westinghouse.

[redacted] (b)(2)(C)(b)(7)(D)

[redacted] He said KOSANOVIC was not a great

[redacted]

SECRET

administrator, but he has considerable respect for him in many ways. He believes that KOSANOVIC emphasized to the Yugoslav government that he (KOSANOVIC), would be especially effective as Ambassador because he was a nephew of TESLA (mentioned above) and a friend of Mayor LA GUARDIA, and other influential persons in this country.

[redacted]

(b)(7)(D)

[redacted]

SECRET

260

XXXXXX
XXXXXX
XXXXXX

FEDERAL BUREAU OF INVESTIGATION
FOIPA DELETED PAGE INFORMATION SHEET

2 Page(s) withheld entirely at this location in the file. One or more of the following statements, where indicated, explain this deletion.

☒ Deletions were made pursuant to the exemptions indicated below with no segregable material available for release to you.

Section 552		Section 552a
☒ (b)(1)	☐ (b)(7)(A)	☐ (d)(5)
☐ (b)(2)	☐ (b)(7)(B)	☐ (j)(2)
☐ (b)(3)	☐ (b)(7)(C)	☐ (k)(1)
_____	☐ (b)(7)(D)	☐ (k)(2)
_____	☐ (b)(7)(E)	☐ (k)(3)
_____	☐ (b)(7)(F)	☐ (k)(4)
☐ (b)(4)	☐ (b)(8)	☐ (k)(5)
☐ (b)(5)	☐ (b)(9)	☐ (k)(6)
☐ (b)(6)		☐ (k)(7)

☐ Information pertained only to a third party with no reference to you or the subject of your request.

☐ Information pertained only to a third party. Your name is listed in the title only.

☐ Documents originated with another Government agency(ies). These documents were referred to that agency(ies) for review and direct response to you.

_____ Pages contain information furnished by another Government agency(ies). You will be advised by the FBI as to the releasability of this information following our consultation with the other agency(ies).

_____ Page(s) withheld for the following reason(s): _____

_____

☐ For your information: _____

_____

☐ The following number is to be used for reference regarding these pages:

_____

XXXXXX
XXXXXX
XXXXXX

XXXXXXXXXXXXXXXXXXXXXX
X DELETED PAGE(S) X
X NO DUPLICATION FEE X
X FOR THIS PAGE X
XXXXXXXXXXXXXXXXXXXXXX

FBI/DOJ

Report Form
FD-263 (5-22-55)

FEDERAL BUREAU OF INVESTIGATION

Reporting Office	Office of Origin	Date	Investigative Period
WASHINGTON FIELD	BUREAU	3/28/60	2/18-3/15/60

TITLE OF CASE

[redacted] (b)(7)(C)

Applicant, Pan American Union,
Washington, D. C.

Report made by: [redacted] (b)(7)(C)

Typed by: mjr

CHARACTER OF CASE

LOYALTY OF EMPLOYEES OF THE UNITED NATIONS AND OTHER PUBLIC INTERNATIO ORGANIZATIONS

Synopsis

REFERENCE

Bulet dated 2/15/60;
Bu airtels dated 2/25 and 3/10/60;
Seattle airtel dated 2/26/60;
Baltimore airtels dated 2/27 and 3/4/60;
Norfolk airtel dated 3/1/60;
San Francisco airtel dated 3/3/60;
New York airtels dated 2/26, 3/3,4,10/60;
Chicago airtel dated 3/5/60;
Springfield airtel dated 3/8/60;
New Haven airtel dated 3/9/60.

DO TO: 5-3-1
REQ. REC'D 3/1
MAR 14 1960
ANS. [redacted]
BY:

(b)(7)(C)

- P -

2-21-89 SP/AGGUM

291860

Approved

Special Agent In Charge

Copies made:

6 - Bureau (138-4457) (Enc 6)

1 - Washington Field (138-4085)

Do not write in spaces below

138-4457-83

MAY 24 1960

[redacted]

(b)(7)(C)

cc CSC

[redacted]

Property of FBI - This report is loaned to you by the FBI, and neither it nor its contents are to be distributed outside the agency to which loaned

☆ U. S. GOVERNMENT PRINTING OFFICE: 1955 O—344750

262

204 (Rev. 3-3-59)

CONFIDENTIAL

UNITED STATES DEPARTMENT OF JUSTICE
FEDERAL BUREAU OF INVESTIGATION

SECRET

Copy to:

Report of: [redacted] Office: Washington, D. C.
Date:

Field Office File No.: 138-4085 Bureau File No.: 138-4457

Title: [redacted]
Applicant, Pan American Union,
Washington, D. C.

(b) (7) (c)

2-21-89
Classified by SPIA [illegible]
Declassify [illegible]
291860

Character: LOYALTY OF EMPLOYEES OF THE UNITED NATIONS AND OTHER PUBLIC INTERNATIONAL ORGANIZATIONS

Synopsis:

[redacted] has been interviewed on various occasions [redacted]

(b) (1) (b) (7) (c) (b) (7) (D)

- P -

CONFIDENTIAL

SECRET

This document contains neither recommendations nor conclusions of the FBI. It is the property of the FBI and is loaned to your agency; it and its contents are not to be distributed outside your agency.

263

[redacted] (c)

[redacted] (b) (1)

(c)

INTERVIEWS WITH [redacted]

On June 7, 1947, [redacted] was interviewed by SAs [redacted] and [redacted] of the Chicago Office.

[redacted] (b) (7) (D)

[redacted] (b) (7) (C)

(b)(7)(C) [redacted]

[redacted] admitted at this time he was interested in Yugoslav matters, Yugoslav progress in engineering, and their advances in equipment. He said he was also desirous of making the acquaintance of NIKOLA TESLA, who was an outstanding Yugoslav scientist and one of the founders of Westinghouse.

[redacted] He said KOSANOVIC was not a great administrator, but he has considerable respect for him in many ways. He believes that KOSANOVIC emphasized to the Yugoslav government that he (KOSANOVIC), would be especially effective as Ambassador because he was a newphew of TESLA (mentioned above) and a friend of Mayor LA GUARDIA, and other influential persons in this country.

[redacted]

(b)(7)(C)

(b)(7)(D)

DESCRIPTION OF FOLLOWING FILE MATERIAL

NIKOLA TESLA

100-2277	156	pages
REFERENCES	96	pages
	252	TOTAL PAGES

XXXXXXX
XXXXXXX
XXXXXXX

XXXXXXXXXXXXXXXXXXXX
X NO DUPLICATION FEE X
X FOR THIS PAGE X
XXXXXXXXXXXXXXXXXXXX

MAIN INVESTIGATIVE FILE

156 pages

[redacted] 9/24/40

Department of Justice,

Attn. Mr. G. Edgar Hoover,

Washington, D. C.

ALL INFORMATION CONTAINED
HEREIN IS UNCLASSIFIED
DATE 7-2-80 BY SP4 [illegible]

Dear Mr. Hoover:

The appended article was printed in the New York Times issue of Su September 22, 1940 and if based on proven facts, should be of vital importance to t War Department as well as to that of other nations now controlled by insane dictato

If, as the auther states, the teleforce has been perfected by Nikola Tesla, i would be a measure of foresightedness to insure his constant guarding against his b molested, possibly kidnapped and tortured, by alien enemies for the purpose of seizi the secret of such an invaluable instrument of war and/or defense

The foregoing is offered just in case the article and its inferences have no been called to your attention.

Very truly yours

[redacted]

1 ENCL

RECORDED & INDEXED

Mark 10/1/40 [redacted]
100-2237-1
FEDERAL BUREAU OF INVESTIGATION
2 SEP 26 1940
U.S. DEPARTMENT OF JUSTICE

3

NY Times 9/22/40

"Death Ray" for Planes

Nikola Tesla, one of the truly great inventors who celebrated his eighty-fourth birthday on July 10, tells the writer that he stands ready to divulge to the United States Government the secret of his "teleforce," with which, he said, airplane motors would be melted at a distance of 250 miles, so that an invisible Chinese Wall of Defense would be built around the country against any attempted attack by an enemy air force, no matter how large.

This "teleforce," he said, is based on an entirely new principle of physics that "no one has ever dreamed about," different from the principle embodied in his inventions relating to the transmission of electrical power from a distance, for which he has received a number of basic patents. This new type of force, Mr. Tesla said, would operate through a beam one one-hundred-millionth of a square centimeter in diameter, and could be generated from a special plant that would cost no more than $2,000,000 and would take only about three months to construct.

A dozen such plants, located at strategic points along the coast, according to Mr. Tesla, would be enough to defend the country against all possible aerial attack. The beam would melt any engine, whether Diesel or gasoline-driven, and would also ignite the explosives aboard any bomber. No possible defense against it could be devised, he asserts, as the beam would be all-penetrating.

High Vacuum Eliminated

The beam, he states, involves four new inventions, two of which already have been tested. One of these is a method and apparatus [illegible] producing rays [illegible] manifestations of [illegible] air, eliminating the [illegible] high vacuum; a second is a method and process for producing "very great electrical force"; the third is a method for amplifying this force, and the fourth is a new method for producing "a tremendous electrical repelling force." This would be the projector, or gun, of the system. The voltage for propelling the beam to its objective, according to the inventor, will attain a potential of 50,000,000 volts.

With this enormous voltage, he said, microscopic electrical particles of matter will be catapulted on their mission of defensive destruction. He has been working on this invention, he added, for many years and has recently made a number of improvements in it.

Mr. Tesla makes one important stipulation. Should the government decide to take up his offer he would go to work at once, but they would have to trust him. He would suffer "no interference from experts."

In ordinary times such a condition would very likely interpose an insuperable obstacle. But times being what they are, and with the nation getting ready to spend billions for national defense, at the same time taking in consideration the reputation of Mr. Tesla as an inventor who always was many years ahead of his time, the question arises whether it may not be advisable to take Mr. Tesla at his word and commission him to go ahead with the construction of his teleforce plant.

Such a Device "Invaluable"

After all, $2,000,000 would be relatively a very small sum compared with what is at stake. If Mr. Tesla really fulfills his promise the result achieved would be truly staggering. Not only would it save billions now planned for air defense, by making the country absolutely impregnable against any air attack, but it would also save many more billions in property that would otherwise be surely destroyed no matter how strong the defenses are as witness current events in England.

Take, for example, the Panama Canal. No matter how strong the defenses, a suicide squadron of dive bombers, according to some experts, might succeed in getting through and cause such damage that would make the Canal unusable, in which case our Navy might find itself bottled up.

Considering the probabilities in the case even if the chances were 100,000 to 1 against Mr. Tesla the odds would still be largely in favor of taking a chance on spending $2,000,000. In the opinion of the writer, who has known Mr. Tesla for many years and can testify that he still retains full intellectual vigor, the authorities in charge of building the national defense should at once look into the matter. The sum is insignificant compared with the magnitude of the stake.

ALL INFORMATION CONTAINED
HEREIN IS UNCLASSIFIED
DATE 7-19-92 BY [illegible]

100-2237-1

RECORDED & INDEXED

[redacted] 100-2237-1

October 1, 1940

[redacted]

(b)(7)(C)

Dear [redacted]

I wish to acknowledge receipt of your letter dated September 24, 1940, together with its enclosure.

Your courtesy and interest in bringing this information to my attention are indeed appreciated, and you may be assured your letter will receive appropriate consideration.

Sincerely yours,

John Edgar Hoover
Director

ALL INFORMATION CONTAINED
HEREIN IS UNCLASSIFIED
DATE 7-2-80 BY SP4 Jan/rtc

Mr. Tolson
Mr. Clegg
Mr. E. A. Tamm
Mr. Foxworth
Mr. Nathan
Mr. Ladd
Mr. Egan
Mr. Glavin
Mr. Nichols
Mr. Gandon
Mr. Rosen
Mr. Tracy
Miss Gandy

COMMUNICATIONS SECTION
MAILED
★ OCT 1 1940 ★
P.M.
FEDERAL BUREAU OF INVESTIGATION
U.S. DEPARTMENT OF JUSTICE

[redacted] (b)(7)(C)

5

[redacted]

NOT FOIA REDACTIONS

U. S. DEPARTMENT OF JUSTICE

JAN 12 1943

TELETYPE

[redacted]

Mr. Toleo
Mr. E. A.
Mr. Cl...
Mr. ...
Mr. ...
Mr. Nichol
Mr. ...
Mr. Tracy
Mr. Carson
Mr. ...
Mr. ...
Mr. McGuire
Mr. ...
Mr. Quinn
Mr. Nease
Mr. Gandy

FBI NYC 1-12-43 11-06 PM WHS
DIRECTOR
VEST

UNSUBS --- EQUIPMENT, EXPERIMENTS AND RESEARCH OF NIKOLA TESLA, DECEASED, [redacted] ESPIONAGE - M. RETEL UNDER ABOVE HEADING TO THE BUREAU FROM THIS OFFICE DATED JAN NINE LAST. INQUIRY DEVELOPS THAT TESLA DIE JAN EIGHT, RATHER THAN THURSDAY, JAN SEVEN, AS [redacted] STATED IN REFERENCE TELETYPE. ON THE NIGHT OF JAN EIGHT, SAVA KOSANOVICH, GEORG CLARK, AND KENNETH SWEEZEY VISITED TESLA-S HOTEL WITH A REPRESENTATIVE OF SHAW WALKER CO. IN ORDER TO OPEN THE SAFE IN THE ROOM OF TESLA. KOSANOVICH LATER REPORTED TO WALTER GORSUCH, OFFICE OF ALIEN PROPERTY CUSTODIAN, NYC, THAT HE WENT INTO THE ROOM IN ORDER TO SEARCH FOR A WILL OF TESLA. KOSANOVICH AND THE OTHERS MADE THE SEARCH OF THE SAFE IN THE PRESENCE OF THREE ASST MANAGERS OF HOTEL NEW YORKER AS WELL AS REPRESENTATIVES OF THE YUGOSLAVIAN CONSULATE, IDENTITIES OF LATTER NOT YET KNOWN. AFTER THE SAFE WAS OPENED, SWEEZEY, TOOK FROM THE SAFE A BOOK CONTAINING TESTIMONIALS SENT TO TESLA ON THE OCCASION OF HIS SEVE TY FIFTH BIRTHDAY. THIS BOOK WAS ARRANGED FOR TESLA BY SWEEZEY. KOSANOVICH TOOK FROM THE ROOM THREE PICTURES OF TESLA, TWO BEING EN-LARGED NEWSPAPER PICTUREX. ACCORDING TO MANAGERS OF HOTEL AND KOSANO-VICH HIMSELF, NOTHING ELSE WAS REMOVED FROM THE ROOM OR SAFE. THE SAFE WAS THEN CLOSED UNDER A NEW COMBINATION, WHICH COMBINATION IS NOW IN POSSESSION O[redacted] KOSANOVICH. ON SATURDAY AFTERNOON, JAN NINE, GORSUCH AND [redacted] FTIZGERALD OF ALIEN PROPERTY CONTROL WENT TO HOTEL AND SEIZED ALL THE PROPERTY OF TESLA, CONSISTING OF ABOUT TWO TRUCKLOANDS OF MATERIAL, SEALED ALL ARTICLES AND TRANSFERRED THEM TO THE MANHATTAN STORAGE AND WAREHOUSE CO. NY, WHERE THEY ARE NOW LOCATED AT THAT [redacted] TIME THERE WERE ALSO IN THIS WAREHOUSE APPROXIMATELY THIRTY BARRELS AND BUNDLES BELONGING TO TESLA WHICH HAD BEEN THERE SIN ABOUT NINETEEN THIRTY FOUR. THESE HAVE ALSO [redacted] BEEN SEALED AND ARE NOW UNDER ORDERS OF ALIEN PROPERTY CUSTODIAN. IN VIEW OF FACT TESL IS A US NATURALIZED CITIZEN, ALIEN PROPERTY CUSTODIAN FEELS THAT ITS JURISDICTION OVER PROPERTY IS DOUBTFUL BUT [redacted] FEELS THAT NO OTHER AGENCY WILL BE ABLE TO GET [redacted] TO THIS PROPERTY FOR AT LEAST TWO DAYS

COPIES DESTROYED 3/10/58 #4

ALL INFORMATION CONTAINED HEREIN IS UNCLASSIFIED DATE 7.13.82 INDEX

Rec'd 12 15 am 1-13-43

100-2237-2

NOT FOIA REDACTION

16 JAN 13 1943

COPY IN FILE

77 FEB 5 1943

[redacted]

REDACTIONS ON THIS PAGE ARE NOT FOIA DELETIONS

6

PAGE TWO
AFTER THAT TIME IT IS POSSIBLE THAT A PUBLIC ADMINISTRATOR WILL BE APPOINTED FOR THE PROPERTY WHO MAY TAKE THE PROPERTY INTO HIS CUSTODY. TESLA ALSO HAD SOME PROPERTY, [redacted] ALLEGED BY INFORMANT FITZGERALD IN THIS CASE, TO BE A WORKING MODEL OF AN INVENTION IN A SAFE DEPOSIT BOX IN GOVERNOR CLINTON HOTEL IN NY. INQUIRY SHOWS THAT THIS WAS PLACED HERE BY TESLA IN NINETEEN THIRTY TWO AS SECURITY FOR FOUR HUNDRED DOLLARS OWED HOTEL. THIS BILL IS STILL OWED AND HOTEL APPEARS UNWILLING TO RELEASE THIS PROPERTY TO ANYONE AT LEAST UNTIL [redacted] DEBT IS PAID, BUT THIS OFFICE WILL BE ADVISED IF ANYONE ATTEMPTS TO PAY BILL AND OBTAIN PROPERTY. CONCERNING TESLA HOTEL MANAGERS REPORT HE WAS [redacted] VERY ECCENTRIC IF NOT [redacted] MENTALLY DERANGED DURING PAST TEN YEARS AND IT IS DOUBTFUL IF HE HAS CREATED ANYTHING OF VALUE DURING THAT TIME, ALTHOPRIOR TO THAT HE PROBABLY WAS A VERY BRILLIANT INVENTOR. THEREFORE, ANY NOTES OF VALUE WERE PROBABLY THOSE MADE PRIOR TO THAT TIME. KOSANOVICH IS A NEPHEW OF TESLA WHO DESCRIBED HIMSELF AS FORMERLY QUOTE YUGOSLAV MINISTER OF STATE UNQUOTE AND NOW QUOTE [redacted] PRESIDENT OF EASTERN AND CENTRAL PLANNING BOARD REPRESENTING YUGOSLOVIA, CZECHOSLOVAKIA, POLAND AND GREECE, UNQUOTE. SWEEZEY IS A WRITER FOR POPULAR MECHANICS AND OTHER PUBLICATIONS WHO IS [redacted] DESIROUS OF PUBLISHING A BIOGRAPHY OF TESLA AND THERFORE WOULD LIKE TO OBTAIN CONTROL OF HIS NOTES FOR THIS WORK. CLARK IS EMPLOYED BY RCA AND WOULD ALSO PROVIDE STORAGE ROOM FOR TESLAS EFFECTS IN ORDER TO USE THEM IN WRITING A BIOGRAPHY. TESLA AT ONE TIME REPORTED TO BE WORKING ON EXPERIMENTS FOR YUGOSLAVIAN GOVERNMENT IN EXILE. IT IS DESIRED THAT BUREAU ADVISE IMMEDIATELY WHETHER IT IS INTERESTED FURTHER IN THIS PROPERTY FOR PURPOSES OF TAKING CONTROL OF IT. SUGGEST THAT, IN VIEW OF FACT THAT THE NOTES AND OTHER MATERIAL WOULD BE HIGHLY TECHNICAL IN CHARACTER AND FOR THAT REASON [redacted] COULD NOT BE REVIEWED [redacted] EXCEPT BY A TRAINED PERSON THE OFFICE OF SCIENTIFIC RESEARCH DEVEL-

OPMENT MIGHT BE INTERESTED.
FOXWORTH
END NYC S2 WHS
HOLD WA R 2 RSG

[redacted]

REDACTIONS ON THIS PAGE ARE NOT FOIA DELETIONS

[illegible] IS UNCLASSIFIED
DATE 7-13-82 [illegible]

Mr. [illegible]
Mr. [illegible]
Mr. [illegible]
Mr. Glavin
Mr. Ladd
Mr. Nichols
Mr. Bason
Mr. Tracy
Mr. Carson
Mr. Coffey
Mr. Hendon
Mr. McGuire
Mr. Mumf[illegible]
Mr. Quinn Tamm
Mr. N[illegible]
Miss Gandy

Little

FBI NYC 1-9-43 11-30 PM D[illegible]
DIRECTOR
COAT
UNKNOWN SUBJECTS. E[redacted] EXPERIMENTS AN[illegible] OF NIKOLA TESLA, DECEASED. ESPIONAGE - M. NIKOLA TESLA, ON[illegible] STANDING SCIENTISTS IN THE ELECTRICAL FIELD, DIED [illegible] TEEN FORTY THREE AT THE HOTEL NEW YORKER, NEW YORK [illegible] LIFETIME, HE CONDUCTED MANY EXPERIMENTS IN CONNECT[illegible] TRANSMISSION OF ELECTRICAL POWER AND [redacted] WHAT [illegible] THE DEATH RAY. ACCORDING TO INFORMATION FURNISHED [illegible] THREE SIX FIFTH AVENUE, NEW YORK CITY, THE NOTES A[illegible] EXPERIMENTS AND FORMULAE TOGETHER WITH DESIGNS OF [illegible] VITALIZE THEM ARE AMONG TESLAS PERSONAL EFFECTS, A[illegible] TAKEN TO PRESERVE THEM OR TO KEEP THEM FROM FALLIN[illegible] [redacted] UNFRIENDLY TO THE WAR EFFORT OF THE UN[illegible] ING TO SPANEL, A DISTANT RELATIVE OF TESLA, NAMED S[illegible] WAS INTENSELY DISLIKED BY TESLA, IS TAKING STEPS T[illegible] THESE IMPORTANT DOCUMNTS AND PLANS. SPANEL BELIEV[illegible] STRONG LIKELIHOOD THAT KOSANOVICH WILL MAKE THIS MATERIAL AVAILABLE TO TO THE ENEMY. SPANEL ADVISED G TWO HEADQUARTERS IN WASHINGTON, AS WELL AS MR MORKIN OF THE DEPARTMENT OF JUSTICE IN WASHINGTON, CONCERING THE ABOVE. SPANEL WAS ALSO INTELEPHONIC COMMUNICATION WITH [redacted] DR D LOZADO, ONE OF THE ADVISORS TO VICE PRESIDENT WALLACE CONCERNING THIS MATTER, AND LOZADO TOLD SPANEL [redacted] THAT THE GOVERNMENT WAS VITALLY INTERESTED IN THE EFFECTS OF TESLA AND REQUESTED SPANEL TO LOSE NO TIME IN DOING ALL HE COULD TO PRESERVE [redacted] THEM. BLOYCE FITZGERALD, AN ELECTRICAL ENGINEER WHO HAD BEEN QUITE CLOSE TO TESLA DURING HIS LIFE TIME, ADVISED THE NEW YORK OFFICE THAT ON JANUARY SEVENTH, NINETEEN FORTY THREE, SAVA KOSANOVICH, GEORGE CLARK, WHO IS IN CHARGE OF THE MUSEUM AND LABORATORY FOR RCA, AND KENNETH SWEZEY OF ONE SIX THREE MILTON STREET, BROOLKYN, NY, WENT TO TESLAS ROOMS IN THE NEW YORKER, AND WITH THE ASSISTANCE OF A [redacted] LOCKSMITH BROKE INTO A SAFE WHICH TESLA HAD INHIS ROOMS IN WHICH HE KEPT SOME OF HIS VALUABLE PAPERS, INCLUDING IMPORTANT [redacted] ELECTRICAL FORMULAE, DESIGNS, ET CETERA. WITHIN THE PAST MONTH, TESLA TOLD FITZGERALS THAT HIS EXPERIMENTS IN CONNECTION WITH THE WIRELESS TRANSMISSION OF ELECTRICAL POWER HAD BEEN COMPLETED AND PERFECTED.

Memo Mr. Ladd 1/11/43 JBL
Memo to Director 1/11/43 JBL.

RECORDED

100-2237-3

ENCLOSURE

F B

17 JAN 18 1943

FIVE

NOT FOIA REDACTIONS

Best Copy Available

8

PAGE TWO

FITZGERALD ALSO KNOWS THATTESLA HAS CONCEIVED AND [redacted] A REVOLUTIONARY TYPE OF TORPEDO WHICH IS NOT PRESENTLY IN USE [redacted] THE NATIONS. IT IS FITZGERALDS BELIEF THAT THIS DESIGN HAS NOT [redacted] AVAILABLE TO ANY NATION UP TO THE PRESENT TIME. FROM STATEME[redacted] TO FITZGEARLD BY TESLA , HE KNOWS THAT THE COMPLETE PLANS [redacted]CATIONS AND EXPLANATION OF THE BASIC THEORIES OF THESE THIN[redacted]OME PLACE IN THE PERSONAL EFFECTS OF TESLA. HE ALSO KNOWS THAT [redacted] A WORKING MODEL OF TESLAS WHICH COST MORE THAN TEN THOUSAND D[redacted]O BUILD IN A SAFETY [redacted] DEPOSIT BOX BELONGING TO TESLA[redacted]GOVERNOR CLINTON H[redacted]X HOTEL, AND [redacted]X FITZGEARLD [redacted] THIS MODEL HAS TO DO WITH THE SO CALLEDE DEATH RAY OR THE WIRE[redacted]NSMISSION OF ELECTRICAL CURRENT. TESLA HAS ALSO TOLD FITZGEARLE[redacted] CONVERSATIONS THAT HE HAS SOME [redacted]X EIGHTY [redacted] TRUNKS INDIFFERE[redacted]ES CONTAINING TRANSCRIPTS AND PLANS HAVING TO DO WITH EXPERIMENTS [redacted]ED BY HIM. BUREAU IS REQUESTED TO ADVISE IMMEDIATELY WHAT, IF [redacted]ION SHOULD BE TAKEN CONCERNING THIS MATTER BY THE NEW YORK FIEL[redacted]ION.

FOXWORTH

CORRECTION- THROUGHOUT THE ENTIRE TELETYPE THE NAME THAT SHOULD APPEAR IS FITZGEARLD [redacted] NOT FITZGERALD [redacted] AS IT SOMETIMES IS SPELLED

HOLD

NOT FOIA REDACTIONS

Best Copy Available

JOHN EDGAR HOOVER
DIRECTOR

C-287

Mr. Tolson
Mr. E.A. Tamm
Mr. Clegg
Mr. Glavin
Mr. Ladd
Mr. Nichols
Mr. Rosen
Mr. Tracy
Mr. Carson
Mr. Coffey
Mr. Hendon
Mr. Kramer
Mr. McGuire
Mr. Harbo
Mr. Quinn Tamm
Tele. Room
Mr. Nease
Miss Beahm
Miss Gandy

Federal Bureau of Investiga[redacted]
United States Department of [redacted]
Washington, D. C.

JBL:ed

January 11, 1943

ALL INFORMATION CONTAINED HEREIN IS UNCLASSIFIED DATE 2-2-80 BY SP4 Jmpte

MEMORANDUM FOR [redacted]

RE: UNKNOWN SUBJEC[redacted]
EXPERIMENTS A[redacted]
OF NIKOLA TESL[redacted]
ESPIONAGE - [redacted]

Nikola Tesla, one of the world's outsta[redacted] in the electrical field, died at his residence in the [redacted] New York City, on January 7, 1943. In the course of [redacted]ucted many experiments with respect to the transmission [redacted] by means of radio and what is commonly called the "Death Ray" [redacted] with respect to the wireless transmission of electrical [redacted] were [redacted] to have been completed and perfected, and Tesla had also co[redacted]ed and [redacted] a revolutionary type of torpedo which is not in use b[redacted]tio[redacted] present time. The specifications, explanations of the basi[redacted]ies, [redacted]rking models of Tesla's scientific endeavors are reported to be [redacted] his effects. Tesla is reported to have some 80 trunks in different places containing transcripts and plans having to do with his experiments as well as a working model of one of his developments in the safety deposit box at the Governor Clinton Hotel.

Information concerning Tesla's experiment[redacted]n reported to the New York Office by A. N. Spanel and Bloyce Fitzgerald, the latter an electrical engineer who had been quite close to Tesla. Both of these individuals have indicated that no steps have been taken to preserve Tesla's records and models or to keep them from falling into the hands of individuals sympathetic to the Axis powers.

1 ENCLO

Tesla has a distant relative by the name of Sava Kosanovich, whom he intensely disliked. Kosanovich is reported to be taking steps to get possession of these important documents and plans, and Spanel believes there is a strong likelihood that Kosanovich will make such information available to the enemy. On January 7, 1943, Kosanovich, accompanied by George Clark, in charge of the Museum and Laboratory for RCA, and Kenneth Swezey of Brooklyn, New York, entered Tesla's rooms at the Hotel New Yorker where, with the aid of a locksmith, they broke into a safe in which Tesla kept some of his valuable papers, including important electrical formulae, designs, et cetera.

RECORDED & INDEXED

D63

100-2237-3

Mr. Spanel, in addition to reporting these developments to the Bureau, has also advised the headquarters of the Military Intelligence Division, a Mr. Workin of the Department of Justice in Washington, and Dr. Lozado, one of the advisors to Vice President Wallace. Lozado advised Spanel that the Government was vitally interested in the effects of Tesla and requested that Spanel loose no time in doing all he could to preserve them.

1 JAN 18 1943

COPIES DESTROYED

FOR VICTORY BUY UNITED STATES SAVINGS BONDS AND STAMPS

55 JAN 26 1943

1-12-43

10

Best Copy Available

The New York Office was instructed to disc[illegible]ke the matter up with the State's Attorney in New York City with the [illegible] possibly taking Kosanovich into custody on a burglary charge and obt[illegible] the various papers which Kosanovich is reported to have taken from Tes[illegible]. It was pointed out that any activities pursued by the State's Attor[illegible]d be handled in a most secret fashion in order to avoid any publici[illegible]ect to Tesla's inventions. The New York Office was also instructe[illegible] the Surrogate Court in order that stops could be placed against t[illegible] of Tesla both in his hotel and any other points, in particular, the [illegible] boxes that he ma have in order that no one may enter them without a [illegible]tative being present and every precaution taken to preserve the secrecy [illegible]la's inventions. The New York Office is to keep the Bureau advised of all de[illegible]ents.

Respectfully,

D. M. Ladd

D. M. Ladd

L.M.C Smith is handlin this with alien Property Custodian so there appear to be no need for us to mess around in it.

EW

11

Best Copy Available

JOHN EDGAR HOOVER
DIRECTOR

7

Mr. Tolson
Mr. E. A. Tam
Mr. Clegg
Mr. Glavin
Mr. Ladd
Mr. Nichols
Mr. Rosen
Mr. Tracy
Mr. Carson
Mr. Coffey
Mr. Hendon
Mr. Kramer
Mr. McGuire
Mr. Harbo
Mr. Quinn Tam
Tele. Room
Mr. Nease
Miss Beahm
Miss Gandy

Federal Bureau of Investigation
United States Department of Justice
Washington, D. C.

EAT:DS

January 12, 1943

MEMORANDUM FOR MR. LADD

On Friday, January 8th, Mr. L. M. C. Smith called me in connection with the death of Nikola Tesla. He advised me that he was concerned about the possibility of enemy agents confiscating some of the trunks of Tesla, who had died on January 7th. He understood that the War Department was interested in this matter and that apparently the Alien Property Custodian's office was taking some action. He desired to know whether the Bureau would take some steps to refrain relatives of Tesla from taking the contents of his trunks and whether the Bureau would seize possession of the trunks. Mr. Smith indicated that he was talking to the Alien Property Custodian along the same lines. I told him that in view of the fact he was going to handle the matter with the Alien Property Custodian's office, there did not appear to be any action which the Bureau could or should take.

INFORMATION CONTAINED
IS UNCLASSIFIED
7-2-80 BY

I ENCLO. 1

Very truly yours,

Edw. A. Tamm

12 30 from 1/13/43
Called Donegan
& instructed no
further action

advise field

RECORDED

100-2237-3

B
1 JAN 13 1943

FOR VICTORY
BUY
UNITED STATES DEFENSE BONDS AND STAMPS

53 JAN 22 1943

12

[redacted]

(b)
(7)
(c)

April 16, 1948

ALL INFORMATION CONTAINED
HEREIN IS UNCLASSIFIED
DATE 2-3-88 BY SP4 JRM/RTC

Mr. J. E. Hoover
Federal Bureau of Investigation
Washington D.C.

Dear Mr. Hoover,

I am a student at the Milwaukee School of Engineering, studying Electrical Engineering. I am also interested in the life and work of Nickola Tesla. I understand that at the time of his death, your department took his manuscripts and experiment data for national security. I am preparing a paper to be presented before the student branch of the American Institute of Electrical Engineers on Tesla.

RECORDED & INDEXED 14 SEP 10
100-2237-3X

If it is possible I would appreciate material bearing on Tesla's [redacted] and methods of experiment.

FBI
APR 28 1948

13

This information would help me in a better presentation of this paper and consequently a far greater appreciation of his work in the field of science.

I know that a part of the experiments and theory have a secret classification, and I do not expect any of it.

I am intrested in "Ground Current Transmission" as the basis of my thesis for graduation. If it is possible to obtain this information, I would be very grateful.

Yours very truly,

[redacted] (6)(7)(c)

100-2237-3X April [illegible], 1948

RECORDED 65-47953-18

[redacted]

(b)
(7)
(C)

INFORMATION CONTAINED HEREIN IS UNCLASSIFIED DATE 7-3-[illegible] BY SP4

Dear [redacted]

Your letter of April [illegible], 1948, has been received and I want to express my appreciation to you for having written me as you did. The effects of Nickola Tesla were handled by the Office of Alien Property, and not by this Bureau. It is suggested you may desire to communicate with the Office of Alien Property, United States Department of Justice, 101 Indiana Avenue, Washington, D. C.

Sincerely yours,

John Edgar Hoover
Director

NOTE: This individual requests information relative to the work of Nickola Tesla relative to electrical experiments he was conducting, which Swain understands were taken by this Bureau and held for security reasons. Bureau file [illegible] reflects that the effects of Tesla were handled by the Office of Alien Property.

VWPrjec

Mr. Tolson
Mr. E. A. Tamm
Mr. Clegg
Mr. Glavin
Mr. Ladd
Mr. Nichols
Mr. Rosen
Mr. Tracy
Mr. Egan
Mr. Gurnea
Mr. Harbo
Mr. Pohr
Mr. Pennington
Mr. Quinn Tamm
Tele. Room
Mr. Nease
Miss Gandy

COMMUNICATIONS SECTION
MAILED 8
☆ APR 2[illegible] 1948 P.M.
FEDERAL BUREAU OF INVESTIGATION
U. S. DEPARTMENT OF JUSTICE

6 0 MAY 10 1948

RECEIVED READING ROOM
APR 7 00 PM '48

15

April 3, 1950

ALL INFORMATION CONTAINED
HEREIN IS UNCLASSIFIED
DATE 7-2-80 BY SP4 [illegible]

[redacted]

(b)
(7)
(C)

[redacted]:

Reference is made to your inquiry by telephone on March 29, 1950, concerning certain technical papers which belonged to the late Nikola Tesla.

From an examination of our files, we have been able to determine that this Bureau has never been in possession, as had been indicated to you, of a copy of Dr. Tesla's papers.

Very sincerely yours,

J. Edgar Hoover

100-2237-3X1

~~65-47953-26~~

RECORDED - 53

APR 7 1950

80

67C

[redacted]

EX-115

U.S. DEPT. OF JUSTICE
RECEIVED READING ROOM
FBI
APR 3 5 19 PM '50

(b)
(7)
(C)

APR 4 11 20 AM '50
RECEIVED
U S DEPT
[redacted]

[redacted]

Tolson
Ladd
Clegg
Glavin
Nichols
Rosen
Tracy
Carbo
Ohr
Tele. Room
Case
Andy

MAILED 4
APR 4 1950
COMM - FBI

16

Director, FBI

SAC, New York

April 17, 1950

(b)
(7)
(C)

[redacted]

Rebulet dated April 3 last.

On April 7, 1950 agents of this office interviewed Mr. J.V. POTTS, Vice President of the Manhattan Warehouse and Storage Company, 52nd Street & 7th Avenue, New York City, and at that time Mr. POTTS advised that the rules of his firm required that all persons gaining access to goods stored by Manhattan first had to fill out an appropriate form setting forth their names, date of visit, and reason for requesting access to the goods.

In a review of the file pertaining to the storage of the effects of NIKOLA TESLA, Mr. POTTS revealed that only one such visit had been made by persons outside of the management of Manhattan Storage itself. This one occassion took place on January 26 and 27, 1943, at which time representatives of the Alien Property Custodian made a thorough review of the entire effects of the TESLA estate.

NIKOLA TESLA

The TESLA effects are stored in rooms 5J and 5L of Manhattan Storage's warehouse at 52nd Street & 7th Avenue, New York City. MR. MICHAEL KING, who stated he had been Floor Supervisor for approximately 10 years on the floor in question, stated that he could recall only the one occassion in early 1943 when an examination was made of the TESLA effects. He stated that at that time numerous photographs were taken by the examiners. His description of the equipment used would tend to show that a microfilm reproduction was made of some of the papers of the deceased scientist. Mr. KING added that several of the group making the examination wore U.S. Navy uniforms, and during the two days required to complete the examination the civilian assistants in the group were identified to him only as "FEDERAL AUTHORITIES". According to Mr. KING, no other instance of microfilming of the records of the TESLA estate has taken place since that time.

It should be noted that the Bureau was informed of the examination mentioned above by New York letter (with attachments) dated October 17, 1945, entitled UNKNOWN SUBJECT; SAVA NOSANOVICH; Experiments & Research of NIKOLA TESLA (Deceased), Espionage-M.

cc: 65-12290

ALL INFORMATION CONTAINED HEREIN IS UNCLASSIFIED DATE 7-3-80 BY SP4 Jrm/rtc

100-2237-
NOT RECORDED
148 APR 28

EHH:JJC
105-1391

17

MR. POTTS stated that no inquiry had been received by Manhattan from SAVA N. KOSANOVICH, nor had Manhattan informed him, in any way, that an examination of the TESLA effects had been made by anyone. In fact, added MR. POTTS, the only correspondence relating to the TESLA estate has been in the form of bills for storage.

MR. POTTS stated that any personal inquires regarding the estate would of necessity be directed to him, and to date no such inquiries have been made.

Interviewing agents explained to MR. POTTS that the examination made, as mentioned above, was not instigated by the Bureau, nor had the Bureau taken part in that examination.

Unless advised to the contrary, this investigation is being placed in a closed status, and no further investigative action is contemplated by this office. CLOSED.

[redacted]

(b)
(7)
(C)

[redacted]

August 18, 1952

Federal Bureau of Investigation
Department of Records
Washington, D. C.

ALL INFORMATION CONTAINED
HEREIN IS UNCLASSIFIED
DATE 2-2-80 BY SP4 Jam/jr

Gentlemen:

In a manner of introduction, I wish to state that I am working toward a degree in Electrical Engineering at the Institute of Technology of the University of Minnesota.

For several years, I have been engaged in a study of extensive compass and detail concerning the researches and writings of the late, world renowned scientist, Dr. Nikola Tesla. At considerable expense, I have acquired an extensive collection of materials relating to Dr. Tesla and his works which include:

1) Personal letters written by Tesla to his close friend.

2) Numerous periodicals, some of which are to be found in only a few libraries throughout the United States.

3) A few rare books which have now become "collector's items".

4) A collection of issued patents.

Although the items listed are considerable in number, the specific information desired is lacking.

As I understand it, because of the nature of Dr. Tesla's role in scientific developments, all research papers, patent applications, etc., were secured by the Federal Bureau of Investigation at the time of Dr. Tesla's death in January of 1943.

The purpose of this seizure, as described in numerous articles, was to determine whether these papers contained suggestions leading toward advancements in the field of science.

100 2237-4

RECORDED - 68

Reply
8-26-52

[redacted]

W - 28

(b)
(7)
(C)

[redacted]

19

Now it seems that sufficient time has elapsed for an investigation of this kind. If Dr. Tesla's Estate has been released by the department in charge, any records that can be made available for examination will be welcomed.

A letter from Harold I. Baynton, Assistant Attorney General, Director, Office of Alien Property, informed me that the Library of Congress listed certain works, writings and research studies prepared by the late Dr. Tesla. However, a letter addressed to the Library failed to bring results as the Library "has no files on the researches of Tesla".

A similar result was obtained from the Bureau of Naval Research and the Department of Commerce.

I am especially interested in the research work in which Tesla was engaged in his later years. There are various unpublished works, such as a 10-page typewritten statement presented in 1937 at a meeting of several well-known editors outlining his discoveries and giving a resume' of his work in the fields of gravity and cosmic ray research, etc. Also, Tesla prepared various papers, one of which was in effort to secure the Pierre Gutzman Prize from the Institute of France. My inquiry is in effort to determine whether any of these documents, as well as others, are at this time available.

I will greatly appreciate any information in regard to any records which you may have.

Very truly yours,

(6)
(7)
(C)

[redacted]

August 26, 1952

EX. - 28

[redacted]

INDEXED 68
RECORDED - 68

100-2237-4

(b)(7)(c)

ALL INFORMATION CONTAINED HEREIN IS UNCLASSIFIED DATE 7-2-80 BY SP4 Jmfrte

Dear [redacted]

With reference to your letter of August 18, 1952, our files disclose that the effects of Nikola Tesla were taken into custody at the time of his death by the Office of Alien Property, and not by this Bureau. Consequently, you may wish to communicate further with that agency, which may be addressed as follows: (65-47953)

Assistant Attorney General
Rowland F. Kirks
Director, Office of Alien Property
United States Department of Justice
101 Indiana Avenue, N. W.
Washington 25, D. C.

Sincerely yours,

John Edgar Hoover
Director

cc - 1 - Assistant Attorney General (with copy of incoming)
Rowland F. Kirks
Director, Office of Alien Property
United States Department of Justice
101 Indiana Avenue, N. W.
Washington 25, D. C.

MAILED 10
AUG 27 1952
COMM-FBI

[redacted]

(b)
(7)
(c)

100-2237

NOTE: No reference Bureau files on correspondent in Minnesota.. 8-22-52...per [redacted]

60 SEP 10 1952

21

STANDARD FORM NO. 64

Office Memorandum • UNITED STATES GOVERNMENT

TO : MR. A. H. BELMONT

DATE: May 5, 1953

FROM : MR. L. L. LAUGHLIN

SUBJECT: NIKOLA TESLA (Deceased)
INFORMATION CONCERNING

[redacted] INFORMATION CONTAINED HEREIN IS UNCLASSIFIED DATE 2-22-80 BY SP4 Smith

[redacted] called on the afternoon of May 4, 1953.

[redacted] stated that he had been reading a book entitled, "The Prodigal Genius - The Life of Nikola Tesla" by John J. O'Neill, whom [redacted] described as a science writer for a New York newspaper (publisher - Ives Washburn). [redacted] noted in this book that Bureau Agents went to Tesla's room following his death on January 7, 1943, opened his safe, examined his papers, and took over his personal files. [redacted] said this appeared on page 277. [redacted] stated that Tesla is the father of modern power engineering, being responsible for the invention of the A. C. generator, motor transmission, and other electrical engineering feats. He inquired (1) if the papers and works of Tesla were in the possession of the Bureau, and (2) if so, were they available for review in view of their scientific importance.

I told [redacted] that the statement concerning the Bureau's taking Tesla's files did not seem very logical but that I would check on the matter. (b) (7) (C)

The Bureau's files reflect that shortly after the death of Tesla in his hotel room in New York City on January 7, 1943, Sava Kosanovich, a distant relative, and other individuals entered his room and opened the safe, examining certain materials which he possessed. On January 8, 1943, Mr. L. M. C. Smith of the Department advised Mr. Tamm that he was concerned about the possibility of enemy agents confiscating some of the trunks of Tesla and apparently the Office of Alien Property Custodian was taking some action regarding these effects. Since the matter was being handled by the Office of Alien Property Custodian, the Bureau did not make any inquiries into this situation. (65-47953-6)

It is noted also that the Bureau received a letter dated April 16, 1948, from [redacted] explaining that he was studying electrical engineering at the Milwaukee School of Engineering and

100-2237-4X

[redacted]

RECORDED-66
INDEXED-66 MAY 6 1953

65-47953

1 - Mr. Nichols

[redacted] (b) (7) (C)

22

was interested in the life and works of Tesla. [redacted] stated that he understood at the time of Tesla's death the Bureau took his manuscripts and experiment data for national security. The Bureau on April 22, 1948, advised [redacted] that the effects of Tesla were handled by the Office of Alien Property and not by the FBI.(65-47953-18)

I called [redacted] this morning and told him that it was the office of Alien Property and not the FBI which took over the effects of Tesla following his death. Accordingly, I suggested that [redacted] might wish to communicate with the office of Alien Property for further information concerning this matter.

The book "Prodigal Genius - The Life of Nikola Tesla" is not in the Bureau Library. A copy is being obtained from the Library of Congress. It will be examined to determine specifically the reference made to the Bureau's taking these papers. At that time a determination can be made as to what further action should be taken.

(b)
(7)
(C

ADDENDUM: LLL:mer 5-14-53

Page 277 of the "Prodigal Genius - The Life of Nikola Tesla," describing Tesla's death, contains the following statement: "Operatives from the Federal Bureau of Investigation came and opened the safe in his room and took the papers it contained, to examine them for a reported important secret invention of possible use in the war."

Since this work was published in 1944, it is not felt that any particular purpose would be served by raising an objection with the publishers at this time. [redacted] the individual who raised the question, has been set straight and, therefore, no further action is being taken.

STANDARD FORM NO. 64

Office Memorandum • UNITED STATES GOVERNMENT

TO : Director, FBI

DATE: 2/19/54

FROM : SAC, New York (6[illegible])

INDEXED

SUBJECT: LELAND I. [illegible]
[illegible]

INFORMATION CONTAINED
IN IS UNCLASSIFIED
[illegible] 7-2-80 [illegible]

Mr. GEORGE H. SCHERFF, JR., 149 [illegible]ord Road, [illegible] Rochelle, New York, advised that he received two letters from LELAND [illegible], 127 Seymour Avenue Southeast, Minneapolis, Minnesota, photostat[illegible] of which are being furnished the Bureau and Minneapolis.

Mr. SCHERFF stated that he was an associate [illegible] NIKOLA TESLA in 1914 and that for many years his father had been Dr. [illegible] private secretary. Mr. SCHERFF said that he never heard of LELAND I. A[illegible] did he ever hear of any of the names mentioned in ANDERSON'S letter.

Mr. SCHERFF stated that he has quite a bit of [illegible]'S writings in his possession and he didn't know whether or not they would be of value to a foreign government.

[redacted] (6)(7)(C)

No further action is being taken by the N.Y. Office, UACB.

Encs. (29)
1 - Minneapolis (3 Encs.)

EXP. PROC.

memo: New York
[redacted]: aaa
3-10-54

100-2237-4X1
~~100-0-4973~~

RECORDED - 15
MAR 1 1954
3-11

INDEXED - 15
EX-129

67C

[redacted]

no action

[redacted]

(6)
(7)
(C)

24

Leland I. Anderson
127 Seymour Avenue Southeast
Minneapolis 14, Minnesota

February 3, 1954

Mr. George H. Scherff, Jr.
149 Seacord Road
Westchester, NEW YORK

Dear Mr. Scherff:

re.: The Life and Work of Dr. Nikola Tesla.

Recently, I have founded an organization in name and honor of Dr. Tesla in cooperation with several people who were intimately associated with Tesla during his lifetime, and with others who are interested in Dr. Tesla and his achievements from a scientific and historical standpoint. (See enclosed brochure.) I have had some difficulty locating a few of Tesla's associates, and, the name of George Scherff is among them. Therefore, it is my sincere hope that you, Mr. Scherff, are the person I seek as having been associated with Tesla.

I have personally studied the works of Tesla for a number of years, being particularly interested in elaborating upon his researches regarding high-tension radiant beams. Through some travel and other efforts, I have been fortunate to locate many original collections of Tesla's correspondence and manuscripts, and in a few cases obtained a number of interesting items.

I was in New York a short time ago on business, and while there I visited Mr. Kenneth M. Swezey. He intends to undertake some significant work on behalf of Tesla in the near future, and since he knew Tesla for so many years during his later life, it will be handled with great understanding.

I hope that you may have some interest in the work which I have initiated on behalf of Dr. Tesla. There are many matters that I wish to discuss with you, provided of course, that you are the Mr. Scherff related to the Tesla story. I would be most happy to hear from you at your earliest convenience, and will send you all publications of the organization if you wish to receive them.

Very truly yours,

Leland I. Anderson

25

TESLA-INTERNATIONAL

University Station, Box [illegible]
MINNEAPOLIS · 14 · MINNESOTA

To Those Who Are Interested in the Life and Work of
DR. NIKOLA TESLA

Following the death of Dr. Nikola Tesla on the 7th of [illegible], Mr. John J. O'Neill, former Science Editor of the New York Herald Tribune, presented the biography

PRODIGAL GENIUS
The Life of Nikola Tesla

- a memorable tribute to one of the most outstanding figures in the entire field of electrical science. Many reading this biography learned of Nikola Tesla for the first time despite his monumentous achievements with which he has won world-wide acclaim in scientific circles. Even those closely associated with the fields of science and engineering discovered a remarkable story not generally known of the brilliant genius Tesla whose sensitive personality and seclusion kept his fame in a shadow.

The TESLA-INTERNATIONAL organization is being established in the United States in name and honor of Dr. Nikola Tesla by those sharing a mutual interest in his life and works. The organization has as its objective the promulgation of the truth about Nikola Tesla; that a full recognition be made for his unparalleled research work on the effects of currents of high frequency and high potential, and for his achievements in the realms of polyphase power transmission and telecommunication. It would be the duty of the organization to do all in its power that the name of Tesla win in the eyes of the nation the fame deserving of a truly great American for his contributions to science, industry, and to this country.

A journal of the TESLA-INTERNATIONAL organization was issued beginning the month of November, [illegible]. In addition to items of recent and historical interest related to Tesla, the journal will include:

1) A formal roster of all [illegible] have an interest in the Tesla organization and wish to engage in its activities.

2) An opportunity of [illegible] of the organization through the medium of the journal.

3) A comprehensive bibliography [illegible] listing of all available items concerning Tesla, which would include a cataloging of the various collections of Teslians not generally known. Such a listing will be of particular importance to scholars in the research field.

4) A presentation of hitherto unpublished writings and analyses of Tesla's technical research studies as they become available.

The journal of the TESLA-INTERNATIONAL organization will be forthcoming at intervals of 1½ - 2 months. Subscription rate is $1.00 for 10 issues. Membership in the TESLA-INTERNATIONAL organization is concurrent with subscription to the journal.

Leland I. Anderson
127 Seymour Ave. S. E.
Minneapolis 14, Minnesota

REGISTERED

VIA AIR MAIL

Mr. George H. Scherff, Jr.
149 Seacord Road
Westchester, NEW YORK

MINNEAPOLIS FEB 1954

NEW ROCHELLE FEB 1954

FEB 1954

MINNEAPOLIS MINN. FEB 1954 NO. 35

Leland I. Anderson
127 Seymour Avenue Southeast
Minneapolis 14, Minnesota

February 12, 1953

Dear Mr. Scherff,

It was so very rewarding to receive your reply concerning Dr. Nikola Tesla... I have initiated an undertaking on behalf of Tesla because I feel that in all right and justice something should be done to perpetuate the name of Tesla and see to it that his name becomes a part of the heritage of this nation. A great task perhaps, but as time goes on I believe the name of Tesla will become more significant in scientific developments. I hope that you may have an interest in the organization which I have proposed and established, and I will be honored to have you as a member. The organization is presently set up on the basis of those having a mutual interest in Tesla, with a free exchange of information between members. The first two issues of the journal of the organization are being sent to you under separate cover, and should reach you in a day or two.

Some other members which may be of interest to you are; Muriel Arbus, Dorothy Skerritt, Kenneth Swezey and W. W. Wilhelm. The recent deaths of John O'Neill and Edwin Armstrong were very unexpected, and it is with a great sadness that I received the news and loss of these two members.

Do you know if Mr. Lowenstien had a daughter? The reason I ask is that a woman visited Mr. O'Neill before his death and told him that she inherited a great amount of Teslaiana from her father - whom I presume to be Mr. Lowenstien. This woman was afraid of disclosing the information by reason of her mistaken notion and fear that she would rudely be raided by the army. You see Mr. O'Neill related to me that a few army officials visited his home with insistent requests for information. Of course all this sort of government interest was aroused by Tesla's "Death-Ray" rumors, played up by enterprising journalists. Well, the result of all this is that she refused to give Mr. O'Neill her married name - only that she married a Siamese prince no less, and moved to some mid-western city. If this woman has the amount of material that Mr. O'Neill intimated, it would certainly be important to locate her.

I believe that one of the valuable efforts of the Tesla organization would be to catalog every piece of information concerning Tesla. I have made a beginning effort along this line, and I hope that before too long all collections of Teslaiana may be located, cataloged, and reproduced for fear of eventual loss. Through Mary A. Benjamin (of Walter R. Benjamin Autographs in New York) I have obtained a number of significant items of correspondence between Tesla and Robert U. Johnson. The entire collection of correspondence with Mr. Johnson numbers in excess of 70 pieces. I share this collection with Mrs.

Leland I. Anderson
127 Seymour Avenue Southeast
Minneapolis 14, Minnesota

James W. McChesney of Long Island. The period of this correspondence runs from 1894-1930. Mrs. McChesney has another group of correspondence between Tesla and George Sylvester Viereck which is very interesting in that it is from a period later in Tesla's life. (If you wish to receive any photostatic copies from these collections I will be happy to send them to you.)

I am interested to learn whether you have collected any mementoes, correspondence, writings, etc. of Tesla. For a long while I have been trying to locate a copy of the brochure which Tesla issued the first week of February, 1904. It came in a large square envelope bearing a large red wax seal with the initials "N.T." stamped thereon. Quite a number of them were distributed throughout New York and elsewhere by the Tesla enterprise in an effort to secure financial backing for the tower and power plant erected at Wardenclyffe, Long Island. You no doubt know of the brochure of which I speak. I thought it would be interesting to reproduce this brochure and distribute it among the members of the Tesla organization as a memento. Although I have written and inquired about this brochure extensively, I have not been able to locate a copy. Did you ever have one?

I have hopes that in 1956 (The Tesla Centenary) some significant observance may be organized here in the United States in honor of Tesla. The Tesla Museum in Yugoslavia has obtained the Tesla inheritance, which amounts to 9 tons of apparatus, writings, etc. It is the intention (so stated) of the Museum to publish the entire writings of Tesla, including those in the inheritance, on the Tesla Centenary. I don't know what sort of political propaganda might be injected in this publication, but it occured to me that it may be appropriate to arrange an advance publication in this country [illegible] unpublished works. Unfortunately, there is not much to work on as yet. While the Tesla estate remained in this country, photostats of nearly every important paper in the estate were made under order of Wright Field Development Center in Ohio. If these photostats could be located there would be much material for a publication. However, in working with the Library of Congress in preparation of a file on Tesla, these photostats have escaped the most extensive search thus far.

Hoping that you may be interested in the efforts of the TESLA-INTERNATIONAL on behalf of Tesla and wish to associate yourself with it, I am,

Yours faithfully,

Leland I. Anderson

TESLA INTERNATIONAL

[illegible] Station B [illegible]

[illegible] 14 [illegible] MINNESOTA

IMPORTANT ANNOUNCEMENT

To Members of the TESLA INTERNATIONAL organization
and those interested in the works of
Dr Nikola Tesla

[illegible]

"[illegible] Writings of Nikola Tesla"

by

[illegible] Martin

[illegible] it is with great pleasure that the [illegible] organization announces the reprinting of [illegible] literature

[illegible] and significant work [illegible] a great demand for this [illegible] IS STRICTLY [illegible] will not be repeated when the [illegible] desiring a copy of the book are [illegible]

Cost of this book [illegible] printing rate is only $4.00 [illegible] United States to members and friends [illegible] organization

Leland I. Anderson
127 Seymour Avenue S. E.
Minneapolis 14, Minnesota
3 CENTS 3
3 CENTS 3
SPECIAL DELIVERY
VIA AIR MAI
Mr. George Scherff
149 Seacord Road
New Rochelle, New York
SPECIAL DELIVERY

SAC, New York

March 10, 1954

RECORDED - 15

~~105-0-4973~~

EX-129

Director, FBI

100-2237-4X1

[redacted]

NOT AN FOIA REDACTION

LELAND I. ANDERSON
MISCELLANEOUS; INTERNAL SECURITY - YU

Reurlet 2-19-54 concerning the above-captioned individual. Relet forwarded to the Bureau two Photostats of two letters from Anderson which were received and made available to your office by George H. Scherff, Jr.

There is returned herewith one set of the Photostats received by the Bureau as enclosures with your letter inasmuch as it appears this set was intended for retention in your office file.

Attachment

[redacted]

(b)
(7)
(C)

ALL INFORMATION CONTAINED
HEREIN IS UNCLASSIFIED
DATE 7-2-80 BY SP4 Jrm/rtc

(b)
(7)
(C)

[redacted]

Tolson
Ladd
Nichols
Belmont
Clegg
Glavin
Harbo
Rosen
Tracy
Gearty
Mohr
Winterrowd
Tele. Room
Holloman
Miss Gandy

MAILED 16
MAR 10 1954
COMM - FBI

32

KENNETH M. SWEZEY

ALL INFORMATION CONTAINED HEREIN IS UNCLASSIFIED DATE 7-2-80 BY SP4 [illegible]

163 Milton Street
Brooklyn 22, N.Y.
June 25, 1955

Mr. Tolson
Mr. Boardman
Mr. [illegible]
Mr. Belmont
Mr. Harbo
Mr. Mohr
Mr. Parsons
Mr. Rosen
Mr. Tamm
Mr. Sizoo
Mr. Winterrowd
Tele. Room
Mr. Holloman
Miss Gandy

[redacted]

Mr. J. Edgar Hoover
Federal Bureau of Investigation
Washington, D.C.

Dear Mr. Hoover:

Back in 1943, the local Alien Property Custodian searched through the belongings of the late electrical inventor, Nikola Tesla, stored in the Manhattan Storage Warehouse in New York City. Tesla had been a naturalized American for more than fifty years, so I believe that the search was made on the grounds that the property was to be sent to Yugoslavia, through Tesla's nephew and heir, Mr. Sava Kosanović (Mr. Kosanović had been Minister of State under the King's government, later became Ambassador to the United States from the present government, and is now a Minister serving in Belgrade).

According to the attorney who handled the Tesla estate, Mr. Philip Wittenberg, the Alien Property Custodian assured him that nothing had been held. I have a letter from the Office of Alien Property, dated March 15, 1955, which confirms this statement.

In gathering material to help in a nation-wide commemoration of Tesla's hundredth birthday next year---which will be participated in by leading scientific and engineering societies, museums, and universities---I have just discovered, however, that Tesla's solid gold Edison Medal somehow vanished during that search.

As a friend who had known Tesla well during his last twenty years, I was with Mr. Kosanović in Tesla's room in the Hotel New Yorker on the day he died. A safe expert was called in to unlock Tesla's safe. Among its contents were several honorary degrees, a volume of greetings which I had gathered for him on his seventy-fifth birthday, a bunch of keys, and the Edison Medal. We kept out the book of greetings (I mentioned this at the time to the assistant manager of the hotel and later to a Mr. Gorsuch of the Alien Property Custodian's office), but everything else, including the medal and the keys, was replaced and the safe was locked.

RECORDED - 82 / 60-2237-5
INDEXED - 82

Except when it was inspected by the Alien Property Custodian, the safe was never reopened until it

Memo Belmont - Boardman 6/29/55. Let ack. [redacted] 6/29/55 390

6 JUL 11 1955

EXP. PROC.

JUN 27 1955

33

arrived in Belgrade (where Tesla's property was to be installed in a special Tesla Museum) and was there opened by Mr. Kosanovic. According to his former secretary, both the bunch of keys and the medal were missing. The keys were later found in a tin box outside the safe; the medal was never found.

I learned of the disappearance of the medal only by accident. Mr. Kosanovic had asked his former secretary to get permission from the American Institute of Electrical Engineers (who gave Tesla the Medal) to have it duplicated. This was given, but the cost, it turned out, would be about four hundred dollars. In the meantime, the Tesla Museum, in Yugoslavia, is quietly trying to raise the money to pay for it.

The irony of this situation is more disturbing than the money involved. By giving us a system which made electric power universally available, Tesla---probably more than any other one man---helped put America on top of the world. At the time he died, his gold Edison Medal was the only material evidence left of this country's appreciation. That this last token should have disappeared ---to have to be replaced by his materially poor countrymen overseas for whom he had done nothing---seems a tragic denouement.

John O'Neill, in his biography of Tesla, states that the FBI broke into Tesla's safe on the day he died, and an article in the current (June) Coronet repeats this. I know this isn't true. I did hear, however, that the FBI somehow lent a hand to the Alien Property Custodian during the latter's search in the warehouse.

If that is so, I thought that perhaps some of your men might remember the conditions under which the search was made and therefore might have a suggestion as to what could have happened to the medal. After this long time, I have no hope that the medal can actually be restored, and I am already trying to interest Americans in making a replacement. But future biographers might be spared a lot of wild guessing and wrong blaming if some hint could be obtained as to whether the original got lost, strayed, or stolen---and who might have been responsible.

With best regards and sincere appreciation for any help you can give,

Sincerely,

Kenneth M. Swezey

Kenneth M. Swezey

P.S.: I am enclosing an editorial from last month's POWER magazine which outlines Tesla's contribution to the electric power industry.

K.M.S.

LOUIS N ROWLEY, EDITOR · MAY 1955 · ESTABLISHED 1882 **Power**

Strange Genius

ASK ANY GROUP of power men to name those who laid the foundation for today's electrical generation and distribution. You'll wind up with an impressive list—Edison, Brush, Thomson, Westinghouse, many others. But there is almost sure to be a significant omission.

Yet this forgotten man conceived the polyphase ac motor—still basic—and devised a suitable system of generation and distribution for applying it. To grasp the magnitude of this contribution, we must turn back to the 1880's when the electrical era was being born, and the "battle of the systems" held sway.

Arc lights and motors were being operated on constant-current series systems. Edison's Pearl Street generating station had opened in 1882, supplying incandescent lamps and, later, dc motors on a constant-potential system. Under the leadership of Westinghouse and Stanley, the advantages of ac distribution were demonstrated. But there was no successful ac motor.

In May, 1888, a young Yugo-Slav engineer, but four years in the United States, read a paper before the American Institute of Electrical Engineers. In it he described a new ac system. Its heart was the induction motor with its basic and beautiful concept of the rotating magnetic field. The man was Nikola Tesla, the system he described was destined to sweep the field.

With characteristic vision, George Westinghouse realized the fundamental importance of the polyphase ac system and acquired the basic patents. Its first impact on the general public was at the Chicago World's Fair of 1893. There a 2-phase generator supplied motors and lamps, and, through rotary converters and motor-generators, a variety of dc equipment.

But it remained for the Niagara Falls power project to demonstrate in the most dramatic way possible that polyphase ac was the system of the future. Since 1886 when a charter to develop its power had been granted, the eyes of the world had been on Niagara. An international commission, headed by Lord Kelvin, had reviewed 17 proposals, found none acceptable. Later, just five years after Tesla's AIEE paper, it was officially decided to use the polyphase system.

In August, 1895, Niagara power was delivered to the first industrial customer and in 1896 ac transmission to Buffalo, 22 miles away, was begun. By that time, the steam turbine had been introduced in America and the modern age of electric power had truly opened.

For Nikola Tesla, these far-reaching inventions were but a beginning. Still to come was brilliant work in high frequencies, thinking basic to much of today's radio art. Yet by the time of his death in 1943, both he and his work had begun to slip into obscurity. Why?

A man of flashing insights and enormous brilliance, Tesla was largely indifferent to the development of his ideas. This he left to others while he followed the lure of new challenges. In later years, his projects became more grandiose, his ways more mysterious, his pronouncements more Olympian. And working alone, as he did, he formed none of the institutional ties that help to perpetuate a record of accomplishment.

Next year—July 10, 1956—will be the 100th anniversary of Nikola Tesla's birth. It would be fitting for our engineering societies to commemorate this occasion, to acknowledge our debt to this strange and lonely genius who changed our world for the better.

ALL INFORMATION CONTAINED
HEREIN IS UNCLASSIFIED
DATE 7-14-82 BY [illegible]

100-2237-5

(REPRINTED BY PERMISSION)

35

АМЕРИКАНСКИ
СРБОБРАН
THE AMERICAN SRBOBRAN
Second Class Mail Privileges Authorized at Pittsburgh, Pa.

THE LARGEST AND OLDEST SERBIAN DAILY NEWSPAPER IN AMERICA
Published Daily Except Sat's, Sundays and Holidays by SERB NATIONAL FEDERATION
3414 Fifth Avenue Telephone MAyflower 1-6600 Pittsburgh 13, Pa.

MOMCHILO SOKICH, Editor — JOVAN BRATICH, Ass't. Editor
MILAN M. KARLO, Editor English Section

ПРЕТПЛАТА НА ЛИСТ

За Сједињене Државе: на годину $8.00; шест месеци $4.00. За Канаду: на годину $9.00; шест месеци $4.50. За стране земље: на годину $10.00; шест месеци $5.00. За град Питебург: на годину $9.00; шест месеци $4.50. — Један број 5ц. Претплата за енглеско издање $4.00 годишње.

SUBSCRIPTION RATES

For United States of America: For One Year $8; Six Months $4. For Canada: One Year $9; Six Months $4.50; Foreign Countries: One Year $10; Six Months $5. For Pittsburgh: One Year $9; Six Months $4.50.—Single copy 5c. Subscription for the English Section only is $4.00 per Year.

Рукописи се не враћају никоме. — Огласи се плаћају унапред.

RECOGNITION FOR TESLA

Largely thru a young American engineer's efforts, the world today is re-scanning the record and achievements of our inventive genius, Nikola Tesla. Of late, even the big-time magazines have devoted space to the amazing career and fascinating character of the pioneering electrical wizard.

The man behind this belated recognition for the one-time Serbian immigrant boy who made millions but died almost a pauper is Leland P. Anderson, head of the **Tesla Society**, which has headquarters at the University of Minnesota.

Thru travels, correspondence and detailed research, Mr. Anderson has dug up many friends of the late genius and induced them to join in his noble work. A good many of these are American-Serbians. They serve Mr. Anderson and he serves them, with information issued thru his TESLIAN publication. This is, at present, a mimeographed publication issued monthly which casts new light on the known life and record of the late Dr. Tesla.

The latest issue (March-June) informs of progress plans to honor Dr. Tesla even more. It also presents an account of a fascinating editorial, "Strange Genius", by the POWER magazine of the powerful McGraw-Hill publishing line. This editorial traces the introduction of Dr. Tesla's polyphase system, described by Mr. Anderson, as the **"most tremendous event in all engineering history."**

Editorialist Louis M. Bowler, according to the TESLIAN, answers the perplexing question why, in view of Tesla's important discoveries, he fell short of the comparative popularity won by Edison and Bell. Then in closing, he suggests: "It would be fitting for our engineering societies, in commemoration of the 100th anniversary of Nikola Tesla's birth (July 10, 1956), to acknowledge our debt to this strange and lonely genius who changed our world for the better."

This appears to be just what Mr. Anderson was waiting for. For now, in the same issue of his TESLIAN, he has prepared a form to petition Postmaster General Arthur E. Summerfield to issue a Tesla commemorative stamp next year.

[redacted] this form in duplicate in this issue and [redacted] Send [redacted] petition.

ION CONTAINED
CLASSIFIED
BY SP4 Jones

INDEXED-59
100 2237 A
NOT RECORDED
138 JUL 11 1955

ICAN SRBOBRAN
29, 1955
sburgh, Pennsylvania

Office Memorandum • UNITED STATES GOVERNMENT

TO : L. V. BOARDMAN

DATE: June 29, 1955

FROM : A. H. BELMONT

ALL INFORMATION CONTAINED HEREIN IS UNCLASSIFIED DATE 7-2-80 BY SP4 JM/rtc

SUBJECT: NIKOLA TESLA
MISCELLANEOUS - INFORMATION CONCERNING (ESPIONAGE)

Tolson
Boardman
Nichols
Belmont
Harbo
Mohr
Parsons
Rosen
Tamm
Sizoo
Winterrowd
Tele. Room
Holloman
Gandy

Nikola Tesla, a native of Yugoslavia, was a famous electric inventor who died in New York City in 1943 where he had lived for many years. In attached letter to Bureau dated 6-25-55 Kenneth M. Swezey, Brooklyn, New York, advises he is gathering material to help in a nation-wide commemoration of Tesla's hundredth birth anniversary in 1956. Swezey relates he was present when Tesla's safe was opened by friends after his death and advises the contents were thereafter replaced and then impounded by the United States Alien Property Custodian. Later the safe was removed to Belgrade, Yugoslavia, to be installed in a Tesla Museum. Missing from Tesla's effects is a gold Edison medal he had been awarded. Swezey is seeking to locate the medal and has been advised by the Office of Alien Property (OAP) that OAP held none of Tesla's property. Swezey states he has heard the FBI assisted OAP in handling Tesla's effects while in storage, and accordingly, he asks whether Bureau could assist him in locating the Edison medal. Re FBI's assistance to OAP Swezey mentions that in the Tesla biography ("The Prodigal Genius" - 1944) by John O'Neill it was stated FBI broke into Tesla's safe the day he died (1-8-43 to protect contents from enemy hands). Swezey notes this same comment appears in article ("The Genius Who Walked Alone") by Alfred H. Sinks in the June, 1955, "Coronet." Swezey says he knows FBI did not do this [redacted] Bureau did not enter into Tesla safe matter upon Department's advice it was being handled by OAP. Bureau previously aware of comment in O'Neill's book.

(b)(7)(C)

[redacted]

In 1945 Sinks requested for his use as author data re Bureau's microfilm procedure. Was advised no such data available for publicati

Enclosure Letr 6-30-55
100-2237
cc - 1 - 65-47953
Ticklers - Mr. Bird
Mr. Belmont
Mr. Boardman
ETB:jaa
(5)

RECORDED - 97 100-2237-6

EX-104

6 JUL 7 1955

6 JUL 11 1955

37

Memorandum For Mr. Boardman

RECOMMENDATION:

That the attached letter be sent to Swezey advising Bureau did not participate in the handling of Tesla's effects and that the matter was handled by OAP. Therefore, Bureau unable to be of assistance; that no action be taken relative to Sinks' comment in "Coronet" article.

Tickler - M. Bird
Mr. Belmont
Mr. Boardman

June 30, 1955

RA
RA

ALL INFORMATION CONTAINED
HEREIN IS UNCLASSIFIED
DATE 2-2-80 BY SP4 Jrm/R

Mr. Kenneth M. Swezey
163 Milton Street
Brooklyn 23, New York

(Original)

Dear Mr. Swezey:

With reference to your letter of June 25, 1955, our files disclose the effects of Nikola Tesla were taken into custody after his death by the Office of Alien Property and not by this Bureau.

Since we did not participate in the handling of Mr. Tesla's effects, we are unable to supply the information you requested.

Sincerely yours,

J. Edgar Hoover

John Edgar Hoover
Director

COMM — FBI
JUN 30 1955
MAILED 25

100-2237-6X

RECORDED - 26
INDEXED - 26

EX-113

~~65-47153~~

64 JUL 1 1955

NOTE:

A cover memorandum from Belmont to Boardman was prepared by ETB:jaa on 6-29-55 in connection with this outgoing mail.

Bufiles contain no derogatory data re correspondent; reflect only that he was close friend and admirer of Tesla.

Tolson
Boardman
Nichols
Belmont
Harbo
Mohr
Parsons
Rosen
Tamm
Sizoo
Winterrowd
Tele. Room
Holloman
Gandy

[redacted]

64 JUL 8 1955

39

[redacted] (b)

August 1, 1955.

Mr. J. Edgar Hoover,
Federal Bureau of Investigation,
Washington, D.C.

Dear Mr. Hoover:

In his book, "Prodigal Genius", The Life of Nikola Tesla, Mr. Jo[illegible] J O'Neil says, on page 277, that the F.B.I. went to Tesla's hotel room, opened his steel safe and removed from it, the papers it contained.

Was there ever any publication of what these papers contained? I[illegible] so, could you inform me where I might obtain a copy of such publication?

If there was no publication of the Safe's content, after more tha[illegible] 12 years, would it be improper to publish them?

If there was no publication of the safe's content, but there were no particular secrets found there in, could you inform me where I might learn what the safe contained?

Any information on this matter will be appreciated.

Thank you for your trouble.

Sincerely,

[redacted]

(b)
(7)
(c)

ALL INFORMATION CONTAINED
HEREIN IS UNCLASSIFIED
DATE 7-2-83 BY SP4 Jam/rtc

EX-104

100-2237-6X1

RECORDED - 77

INDEXED - 77

2 AUG 12 1955

(b)
(7)
(c)

40

100-2237-6X1

~~65-47953-34~~

August 11, 1955

[redacted]

EX-104

[redacted]

ALL INFORMATION CONTAINED HEREIN IS UNCLASSIFIED DATE 7-2-80 BY [signature]

Dear [redacted]:

Your letter dated August 1, 1955, has been received, and in response to your inquiry, I would like to advise that our files reflect that the effects of Nikola Tesla were taken into custody after his death by the Office of Alien Property and not by this Bureau.

Since we did not participate in the handling of Mr. Tesla's effects, we are unable to supply the information you requested.

Sincerely yours,

John Edgar Hoover
Director

COMM-FBI AUG 11 1955 MAILED 19

NOTE: Bufiles reflect no record on correspondent. This type of reply utilized by Internal Security Division in answering similar inquiries on 6/30/55. (65-47953-33) Cover memo from Mr. Belmont to Mr. Boardman dated 6/29/55 set out background of this matter which concerned the death of Tesla, a famous electrical inventor. Bureau was not involved in this matter, and the opening of the safe mentioned was done by the Office of Alien Property.

Mr. Tolson
Mr. Boardman
Mr. Nichols
Mr. Belmont
Mr. Harbo
Mr. Mohr
Mr. Parsons
Mr. Rosen
Mr. Tamm
Miss Gandy

[redacted]

63 SEP 28 1955

[redacted]

AUG 18 1955

41

[redacted] (5

September 10., 1955.

Mr. John Edgar Hoover,
Federal Bureau Of Investigation,
Washington 25, D.C.

Dear Mr. Hoover:

Refering to my letter to you August first, 4 x 1 this year - your letter to me, August 11th., reletive to the matter of the papers of Mr. Nikola Tesla.

On August 26, I wrote the office of Alien Property regarding this matter, indicating that I had received the information from you that it was their department which had taken the Tesla Property into custody - not yours..

I have a letter from Mr. Henry G. Hilken - that Department - File Number HGH:N SM:elk 017-3566, in which I am told that office "never had custody, nor has vested, any property of Nikola Tesla".

As I began this matter with you - because it was stated in Mr. O'Neill's book that it was your department who opened Tesla's safe I am wondering if you have any further suggestions along lines I might follow to obtain some information in this regard?

Thank you for your time and trouble.

Sincerely,

[redacted] (b) (7) (c)

ALL INFORMATION CONTAINED
HEREIN IS UNCLASSIFIED
DATE 7-2-80 BY SP4 Jrm/rte

EX-PROC
SEP 19 1955

RECORDED-12 100-2237-6X2

EX-107 (b) (7) (c)

17 SEP 20

[redacted]

42

RECORDED
INDEXED-12

100-2237-6X2

EX-107

September 20, 1955

(b)(7)(C)

ALL INFORMATION CONTAINED
HEREIN IS UNCLASSIFIED
DATE 7-2-80 BY SP4 jem/rtc

Dear [redacted]:

I have received your letter dated September 10, 1955.

As you were advised by my letter of August 11, 1955, this Bureau was not connected in any respect with the acquisition or custody of the effects of Nikola Tesla, and it is therefore not possible to furnish you any additional information.

Sincerely yours,

John Edgar Hoover
Director

(b)(7)(C)

NOTE: By letter 8-11-55, we referred [redacted] to the Office of Alien Property, which Office was reported to have assumed custody of Tesla's effects subsequent to his dea (65-47953-6)

(3)

(b)(7)(C)

COMM - FBI
SEP 20 1955
MAILED 30

SEP 28 1955

43

L INFORMATION CONTAINED
HEREIN IS UNCLASSIFIED
DATE 7-3-80 BY SP4 Jan/etc

RECOGNITION FOR TESLA

(Please fill out this form and mail to the address appearing below.)

THE TESLA SOCIETY
University Station, Box 135
Minneapolis 14, Minnesota

(date)

(city & state)

Hon. Arthur E. Summerfield
Postmaster General, Postoffice Dept.
Washington, D. C.

Dear Sir:

Nikola Tesla's contributions to science, industry, and to his adopted country have greatly inspired engineering progress. His electrical systems helped create an American conomy of world pre-eminence.

We respectfully request issuance of a 1956 commemorative stamp to be issued on the centennial of Tesla's birth (1856-1943).

(signed) _____

AMERICAN SRBOBRAN
June 29, 1955
Pittsburgh, Pennsylvani

Ex. - 10€
INDEXED-59

100 2237-A
NOT RECORDED
138 JUL 11 1955

6C JUL 13 1955

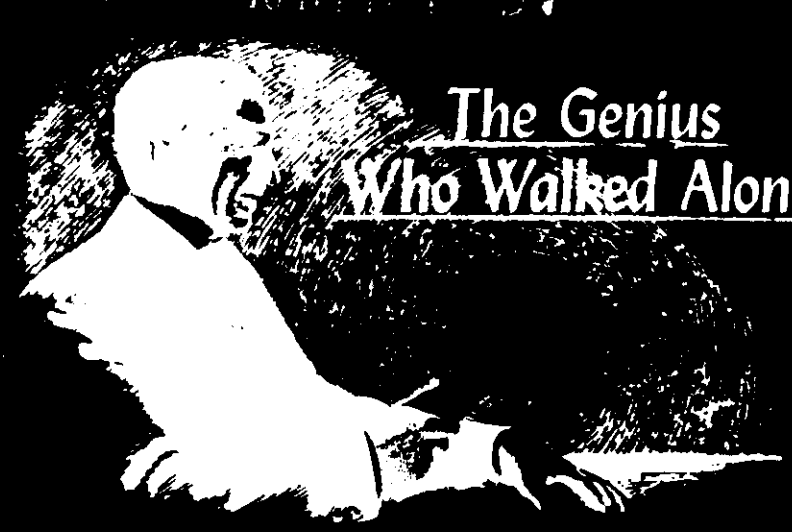

The Genius Who Walked Alone

by ALFRED H. SINKS

Nikola Tesla was a great inventor—and also a prophet without honor

COUNTER-ESPIONAGE WHEELS started turning early on the morning of January 8, 1943. Anxious FBI agents slipped into a room in the Hotel New Yorker where, late the night before, a chambermaid had discovered the body of Nikola Tesla, dead at 86, regarded by many as the greatest scientific genius of his time.

For years, Tesla had been making scientific predictions so fantastic as to be literally out of this world. Of late he had been working—or so he said—on revolutionary new weapons powerful enough to annihilate armies at a single blow.

There was only one Tesla, and the story might—incredible as it sounded—be true. The old man's safe might hold these secrets, and the Government could not risk the chance of enemy spies getting there first.

Half hoping to find something which would bring a sudden and decisive end to World War II, the G-men broke open the dead man's strong box. If anything of importance was discovered, it has never been revealed.

Yet, their quick action was justified, for you could never be sure about Tesla, one of the strangest men who ever lived. Most people took him with a grain of salt, yet no serious scientist dared shrug away his claims as nonsense. Not after Thomas Edison tried it and Tesla proved him wrong.

The world's leading physicists and electrical engineers had to eat crow back in the 1880s when Tesla solved a problem they had thought impossible. That one accomplishment—the invention of a practical alternating-current motor and gen-

45

[redacted]

Mr. Felt
Mr. Baker
Mr. Callahan
Mr. Cleveland
Mr. Conrad
Mr. Gebhardt
Mr. Jenkins
Mr. Marshall
Mr. Miller E.S.
Mr. Sovars
Mr. Thompson
Mr. Walters
Tele. Room
Mr. Boise
Mr. Bowers
Mr. Fenwick
Mr. Herrington
Mr. Conroy
Mr. Mintz
Mr. Eardley
Mrs. Hogan

(b)
(7)
(C)

United States Senate

June 26, 1973

Respectfully referred to:

Congressional Liaison
Federal Bureau of Investigation
Department of Justice
Washington, D. C. 20530

Because of the desire of this office to be responsive to all inquiries and communications, your consideration of the attached is requested. Your findings and views, in duplicate form, along with return of the enclosure, will be appreciated by

Senator [redacted]

ATTN: U.S.S[redacted]

(b)
(7)
(C)

Form #2

ST-105

100-2237-24

7 JUN 29 1973

ENCLOSURE

[redacted]

(b)
(7)
(C)

CORR[redacted]ENCE

46

[redacted]

20 June 1973

(b)(7)(C)

Dear Senator [redacted]

Though in Alaska temporarily working on a military contract, I still consider myself an [redacted] resident, hence it is to you that I write.

During my days at [redacted] College, I became interested in a fascinating Czech physicist, Nicolai Tesla. Proffessor Tesla emmigrated to this country in the twenties, I believe, and did some of his most original work here. Tesla had a peculiar bent of mind, in his younger days he was often called a mad scientist, and did not publish extensively when he came to the US. Most of the extant primary material is in untranslated Czech. Tesla was, however, an extensive note taker. It thought it strange that upon his death, none of his notes from his American period ever appeared. Upon discussing this with a friend, I was informed that all of Mr. Tesla's notes were confiscated by the FBI. I cannot conceive how these notes on physics and electricity can in any way endanger the national safety. It seems that Mr. Hoover in his zeal, had confiscated material whose only sin was a radical approach to science. There is indication that much of Professor Tesla's later work concerned a very novel approach to time theory. Needless to say, it has been radical approaches to physics that have been our greatest scientific advances in modern times, viz. Einstein, Heisenberg, et al.

I was wondering if your office might be able to determine if these papers are still extant, and if so, see to it that the public has access to them. It would be a shame to see all of Nicolai Teslas work to have been in vain.

Please excuse my typing, in all the thousands of words I typed trying to get a liberal education, I never did master the typewriter.

Sincerely yours,

[redacted]

(b)(7)(C)

100-2237-24

ENCLOSURE

47

July 5, 1973

ST-105

REC-15

100-2237-24

ALL INFORMATION CONTAINED HEREIN IS UNCLASSIFIED DATE 7-8-80 BY SP2 jmp/ste

Honorable [redacted]
United States Senate
Washington, D. C. 20510

(b)(7)(C)

Dear Senator [redacted]:

This is to acknowledge receipt of your communication dated June 26th enclosing a letter from your constituent, [redacted] who is temporarily employed in Alaska.

In response to [redacted] inquiry, central files of the Federal Bureau of Investigation indicate that the effects of Dr. Nikola Tesla were impounded after his death by the Office of Alien Property of the Department of Justice and not by the FBI. Since we did not participate in the handling of Dr. Tesla's belongings, I am unable to furnish the information you desire.

I am returning your enclosure as you requested.

Sincerely yours,

William D. Ruckelshaus

William D. Ruckelshaus
Acting Director

MAILED 24
JUL 5 - 1973
FBI

Enclosure

1 - Portland - Enclosures (2)
1 - Congressional Services Office - Enclosures (2)
NOTE: Bufiles reveal prior cordial correspondence with Senator [redacted] is not identifiable in Bufile [redacted] Bufile 100-2237 reflects that Dr. Tesla was a world-famous electrical inventor, and at the time of his death, all of his personal papers and effects were believed dangerous to the count security if they fell into unauthorized hands. The book, "Prodig Genius," by John J. O'Neill, alleged that the FBI took over a ce safe and opened it, appropriating his property. Bufiles clearl indicate that it was the Office of Alien Property of the Depar which did so, and the above reply is forwarded in answer to re inquiries.

(6)(7)

Mr. Felt
Mr. Baker
Mr. Callahan
Mr. Cleveland
Mr. Conrad
Mr. Gebhardt
Mr. Jenkins
Mr. Marshall
Mr. Miller, E.S.
Mr. Soyars
Mr. Thompson
Mr. Walters
Tele. Room
Mr. Baise
Mr. Barnes
Mr. Bowers
Mr. Herington
Mr. Conmy
Mr. Mintz
Mr. Eardley
Mrs. Hogan

54 JUL 13 1973

[redacted] TELETYPE UNIT

(b)(7)(C)

48

(b) (7) (c) [redacted]

FEDERAL BUREAU OF INVESTIGATION
Washington, D.C.

12 July 1973

ALL INFORMATION CONTAINED
HEREIN IS UNCLASSIFIED
DATE 7-3-80 BY SP4 Jam/rtc

Dear Sirs,

It has come to my attention that upon the death of Mr. Nikola Tesla, the founder of modern A.C. power systems, and the original inventor of radio, and innumerable other devices, operatives of the F.B.I. opened his safe and removed his papers on 7 January 1943, within a few hours of his demise. Also, all records of his work have been siezed and held by our government since his death. I would like to know WHY, and also to be informed as to who was, and is responsible for keeping the lid on these records. I would also like to know where they are now.

I do hope you enjoy a good laugh over the aparent naievity of such a request as this, but it is a rather strange situation to exist in a country like this, that a man of such genius and achievement could be systematically cut out of history books, and that the facts about his works could be concealed to the degree they have been. I wish to obtain access to all these old records which have been concealed for thirty years. I would appreciate your kind consideration and attention to this matter and any assistence you may care to give.

EX-105

100-2237-25

9 JUL 20 1973

C-60

[redacted]

[redacted]

(b) (7) (c)

ack 7-19-73

CORRESPO

49

July 19, 1973

REC-60/100-2237-25

[redacted]

(b)(7)(c)

EX-105

ALL INFORMATION CONTAINED HEREIN IS UNCLASSIFIED DATE 7-3-80 BY SP4 Jm/rt

Dear [redacted]

Your letter was received on July 16th. In response to your inquiry, the effects of Dr. Nikola Tesla were impounded, after his death, by the Office of Alien Property of the Department of Justice and not by the FBI. Since we did not participate in the handling of Dr. Tesla's belongings, I am unable to furnish the information you desire. A copy of your communication and of this reply have been referred to the Department of Justice.

MAILED 4
JUL 19 1973
FBI

Sincerely yours,

C. M. Kelley

Clarence M. Kelley
Director

NOTE: Bufiles contain no record of correspondent. (Bufile 100-223 reflects that Dr. Tesla was a world-famous electrical inventor, and at the time of his death, all of his personal papers and effects were believed dangerous to the country's security if they fell into unauthorized hands. The book, "Prodigal Genius," by John J. O'Neil alleged that the FBI took over a certain safe and opened it, appropriating his property. Bufiles clearly indicate that it was the Office of Alien Property of the Department which did so, and the above reply is forwarded in answer to related inquiries. Copy of letter referred to the Assistant Attorney General, Civil Divisio of the Department.)

Assoc. Dir. ____
Asst. Dir.:
Admin. ____
Comp. Syst. ____
Files & Com. ____
Gen. Inv. ____
Ident. ____
Inspection ____
Intell. ____
Laboratory ____
Plan. & Eval. ____
Spec. Inv. ____
Training ____
Legal Coun. ____
Cong. Serv. ____
Corr. & Crm. Research ____
Press Off. ____
Telephone Rm. ____
Director Sec'y ____

[redacted]

MAIL ROOM ☐ TELETYPE UNIT ☐

(6)
(7)
(c)

50

[redacted]

Clarence M. Kelley
Director
Federal Bureau of Investigation
Washington D.C. 20535

ALL INFORMATION CONTAINED
HEREIN IS UNCLASSIFIED
DATE 7-3-80 BY SP4 Jam/rtc

Dear Mr. Kelley,

Thank you for your letter of the 19th of July. I appreciate the information about the Office of Alien Property and its connection with the impounding of the effects of Dr. Nikola Tesla. In my letter of the 16th I did not mean to imply the FBI had impounded his effects, as I was aware of the O.A.P.s general part in the affair. The fact remains that to the best of my knowledge, it WAS agents of the FBI who did in fact break into his safe only hours after his death, and did remove the papers therein. Now, in so far as the Bureau was connected, I wish to understand that extent. I do appreciate your refering my communication to the appropriate persons in the Justice Department, but perhaps you could see that the above mentioned connection of the Bureau could be further looked into. I am curious as to who asked the Bureau to perform such an act, whether is was a person in the O.A.P. or what, and on what grounds they were carried out, and to whom they were responsible. Also, to what person were the perloined papers delivered? Names of the agents involved would be appreciated. As to what happened to any other effects of his, that is probably a question more ably answered by the O.A.P., yet if Bureau agents participated once they may have done so on other occasions. If the persons who did open the safe were NOT FBI agents, then we are faced with the fact that persons aparently posed as Bureau operatives, an even more interesting situation. Perhaps this whets your own curiosity a[redacted]

ST 108
REC 68 100-2237-26
AUG 1973

Da

iml
ack 8-2-73
[redacted]

CORRE[redacted]CE

51

this affair, [redacted] interest. Are you aware that before the year 1900 he was able to transmit thousands of watts of electric power to any point on the globe WITHOUT WIRES. This and other feats would make him a prime target for vested interest groups, notably the J.P.Morgan combine with whom he had connections. I am aware of the well earned tradition of the Bureau of NOT serving any master but the common good, so again we have a curious point if indeed strings were pulled. Quite frankly, it looks as if someone went to a lot of trouble to see that his ideas were not broadly available to ensure the stability of their own electric technological apple cart financially, at the expense of unguessable benefits to to humanity as a whole. How would you like to be able to draw unlimited power out of the air to run say a lightbulb with ONE wire? He did it, and much more. My sincere thanks for your thought and attentions to these matters.

Very best wishes,

(b)
(7)
(C)

REC 68 / 00-2237-26

August 2, 1973

ST-102

[redacted]

(b)(7)(C)

ALL INFORMATION CONTAINED HEREIN IS UNCLASSIFIED DATE 2-3-80 BY SP4 Jpm/rte

Dear [redacted]:

Your letter, which was received on July 30th, has been reviewed and I would like to point out that FBI Agents were not involved in removal of papers from the safe of Dr. Nikola Tesla, nor did we at any time have custody of his property.

I realize there have been some written accounts that our Agents acquired Dr. Tesla's belongings; however, these accounts are simply not true. You can be assured we were absolutely not responsible and there was no impersonation involved.

Sincerely yours,

C. M. Kelley

Clarence M. Kelley
Director

NOTE: Correspondent had written in mid-July and asked about the effects of Dr. Tesla and he was advised that the Office of Alien Property had participated in removing his effects from his hotel room. A copy of his communication was referred to the Department of Justice. Bufiles indicate clearly that after Dr. Tesla's death some relatives opened the safe in his hotel room with the help of a locksmith and, thereafter, the Office of Alien Property confiscated all of his belongings. Bufile 100-2237 mentions that the FBI was advised of the existence of this property; however, inasmuch as the Office of Alien Property was handling Dr. Tesla's effects, the Bureau had absolutely no hand in the entire matter.

AUG 2 - 1973

Assoc. Dir. ____
Asst. Dir.:
Admin. ____
Comp. Syst. ____
Files & Com. ____
Gen. Inv. ____
Ident. ____
Inspection ____
Intell. ____
Laboratory ____
Plan. & Eval. ____
Spec. Inv. ____
Training ____
Legal Coun. ____
Cong. Serv. ____
Corr. & Crm. Research ____
Press Off. ____
Telephone Rm. ____
Director Sec'y ____

[redacted] (3)

(b)(7)(C)

MAIL ROOM ☐ TELETYPE UNIT ☐

AUG 10 1973

53

June 9, 1975

Federal Bureau of Investigation
U.S. Department of Justice
Washington D.C. 20535

Sirs:

We recently contacted the San Francisco FBI office and a review of their files revealed information concerning the scientist Nikola Tesla or his papers which we understand to have been impounded.

If you could make a thorough investigation of all files and materials available to you, we would greatly appreciate the correspondence of any information that might be discovered.

Thank you,

ALL INFORMATION CONTAINED HEREIN IS UNCLASSIFIED DATE 7-3-8 BY SP4 Jam/rtc

[redacted]

100-2237-26X

REC-36

(b)
(7)
(c)

[redacted]

54

July 7, 1975

~~62-115530-4553~~

100-2237-26X

ALL INFORMATION CONTAINED HEREIN IS UNCLASSIFIED DATE 2-3-80 BY [illegible]

[redacted] (C)

[redacted] (b)(7)(C)

Dear [redacted]

This will acknowledge your letter of June 9th.

In response to your inquiry, the papers of Dr. Nikola Tesla were impounded, after his death, by the Office of Alien Property of the Department of Justice.

Sincerely yours,

C. M. Kelley

Clarence M. Kelley
Director

~~1 - The Deputy Attorney General - Enclosure~~
~~Attention: Susan M. Hauser~~

NOTE: Bufile 100-2237 indicates that Dr. Tesla was a world famous electrical inventor, and at the time of his death his personal papers and effects were impounded by Office of Alien Property for national security reasons. Since Tesla's death in 1943 the Bureau has received numerous inquiries about the disposition of his technical papers. The above reply is forwarded in answer to these inquiries. Bufiles contain no information identifiable with requesters.

Assoc. Dir. ____
Dep. AD Adm. ____
Dep. AD Inv. ____
Asst. Dir.:
Admin. ____
Comp. Syst. ____
Ext. Affairs ____
Files & Com. ____
Gen. Inv. ____
Ident. ____
Inspection ____
Intell. ____
Laboratory ____
Plan. & Evol. ____
Spec. Inv. ____
Training ____
Legal Coun. ____
Rm. ____

[redacted] (4)

[redacted] (b)(7)(E)

MAILED 7
JUL 7 1975
FBI

55

GPO 954-5

[redacted] (b)(7)(C)

13 November 1975

Mr. Clarence Kelley
Director
F.B.I.
Washington, D.C. 20535

ALL INFORMATION CONTAINED HEREIN IS UNCLASSIFIED DATE 2-3-80 BY SP4 Jm/rte

Dear Mr. Kelley:

In reply to the letter of 10 November from your office:

I restate that I was not asking about the existence or non-existence of any investigative information on Nikola Tesla, but on his technical papers seized on his death in 1943 and reported in the papers of that time.

The reason given in the reply from your office, the second paragraph, as to why I cannot get any information on Tesla's papers makes no sense in itself or in reply to my inquiry. The third paragraph stating the conditions under which a search will be made is a clear bureaucratic circumvention of the Freedom of Information Act and an excuse on the part of the individual handling my request for doing any work beyond the drafting of a letter. Will it be the decision of your office to let the situation stand like this?

As I stated in my first letter, I am following up the Tesla data for a magazine article. I am tempted to have your reply of the 10th printed and run nationally as an example of how bureaucratic manoeuvring is used to get around the FOIA. Does the bureau need more of this type of publicity?

It is disheartening to see an agency entrusted to uphold the law using its resources to mock the law.

Sincerely,

[redacted] (b)(7)(C)

a.k. 11-26-75

[redacted]

21 NOV 1

[redacted]

56

REC-57 EX 103
100-2237-27

November 26, 1975

[redacted]

(6)
(7)
(C)

ALL INFORMATION CONTAINED
HEREIN IS UNCLASSIFIED
DATE 2-3-00 BY SP4 Jm/rtc

Dear [redacted]:

This will acknowledge receipt of your letter to the Bureau on November 14th.

In response to your inquiry, the papers of Dr. Nikola Tesla were impounded, after his death, by the Office of Alien Property of the Department of Justice.

Sincerely yours,

C. M. Kelley

Clarence M. Kelley
Director

1 - The Deputy Attorney General - Enclosure
Attention: Susan M. Hauser

NOTE: Bufile 100-2237 indicates that Dr. Tesla was a World famous electrical inventor, and at the time of his death his personal papers and effects were impounded by Office of Alien Property for National Security reasons. Since Tesla's death in 1943 the Bureau has received numerous inquiries about the disposition of his technical papers. The above reply is forwarded in answer to these inquiries.

[redacted] (5)

(6)
(7)
(C)

Assoc. Dir. ____
Dep. AD Adm. ____
Dep. AD Inv. ____
Asst. Dir.:
Admin. ____
Comp. Syst. ____
Ext. Affairs ____
Files & Com. ____
Gen. Inv. ____
Ident. ____
Inspection ____
Intell. ____
Laboratory ____
Plan. & Eval. ____
Spec. Inv. ____
Training ____
Legal Coun. ____
Telephone Rm. ____
Director Sec'y ____

MAIL ROOM ☐ TELETYPE UNIT ☐

DEC 24 1975

[redacted]

GPO : 1975 O - 569-920

57

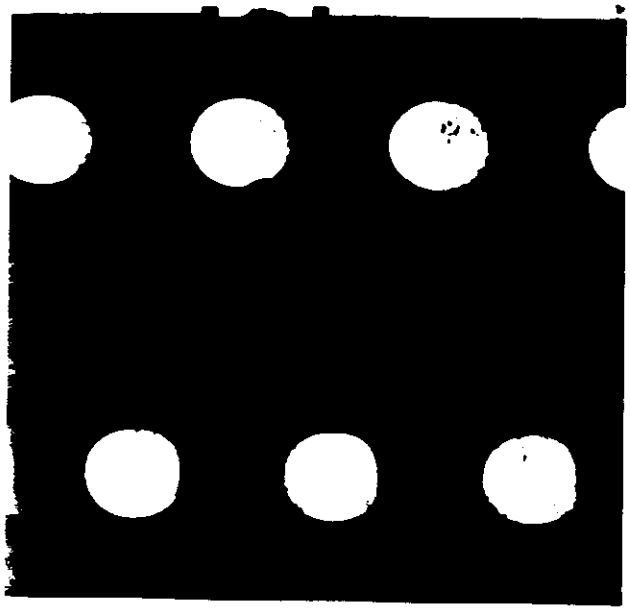

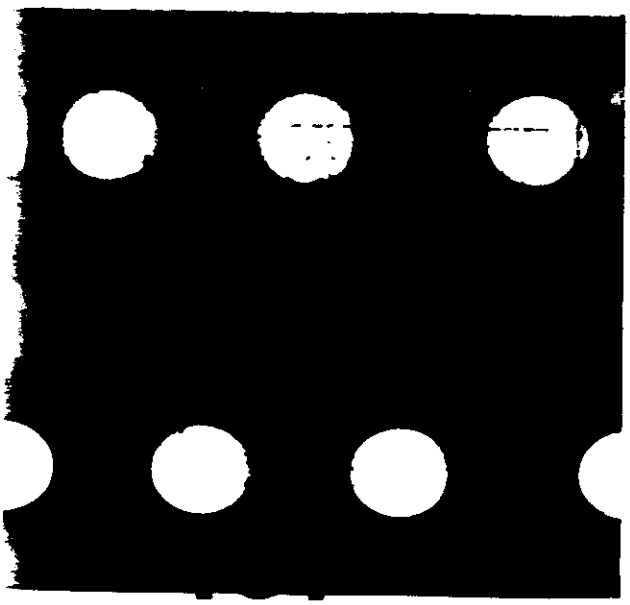

ROUTING AND TRANSMITTAL SLIP

1 TO (Name, office symbol or location) Alan McCreight Rm. 5435 - JEH	INITIALS DATE	ACTION CIRCULATE COORDINATION
2	INITIALS DATE	FILE INFORMATION
3	INITIALS DATE	NOTE AND RETURN PER CONVERSATION
4	INITIALS DATE	SEE ME SIGNATURE

REMARKS

FOIA - [redacted] (b)(7)(c)

Do NOT use this form as a RECORD of approvals, concurrences, disapprovals, clearances, and similar actions

FROM (Name, office symbol or location) Susan M. Hauser	DATE 10/21/75 PHONE 2145

OPTIONAL FORM 41
AUGUST 1967
GSA FPMR (41CFR) 100-11.206

+48—16—81894-1 552-103 GPO 5041-101

58

[redacted]

17 October 1975

Freedom of Information Act Request

Deputy Attorney General
U.S. Department of Justice
Washington, D.C. 20535

[redacted]

Gentlemen:

I am writing an article for a magazine on early twentieth century inventors and want to obtain information on some papers of Nikola Tesla that were seized by the FBI on his death in 1943.

Tesla invented a number of electrical devices and because of the war and because Tesla was born a Yugoslavian national, it was probably considered a measure of preventitive safety to hold in safekeeping papers that might have any bearing on national security.

I would like to find out: 1) if the FBI still has the papers; 2) if they do have the papers, what must be done to see them; 3) if they do not have the papers, who does have them or what happened to them?

100-2237-28

I would be very grateful for your help with this.

REC-2

5 OCT 24 1975

Sincerely,

[redacted]

(6)
(7)
(C)

[redacted]

ALL INFORMATION CONTAINED
HEREIN IS UNCLASSIFIED
DATE 1-3-80 BY SP4 Jmplete

[redacted]

59

erator put Tesla's name among the world's top scientists.

From his invention sprang the industrial age we live in. For without his alternating current, there would be no mass production of automobiles, aircraft, refrigerators; no great water-power dams and generating plants, no Diesel-electric trains; we could not have developed radio, television or atomic power.

The *direct* current that Edison worked with—a feeble force at best—could be sent no more than a couple of miles over wires because its power leaked away rapidly into the surrounding atmosphere. Lights near the power station might burn brightly and steadily, but those near the end of the line would be dim and fluttering.

Tesla sold his basic alternating-current patents in 1888, for a million dollars down. By 1895, the first great power station at Niagara Falls had been built, and by the end of 1896, two more Tesla generators had been installed. Within a few years, the pace of life over half the earth had changed from a crawl to a fast gallop—and it has been gathering speed ever since.

THE MAN who, by his brilliant idea of a "rotating magnetic field," changed the face of the earth and the living habits of the human race was a Croat, born in 1857 in Smiljan, a village in what is now Yugoslavia, but was then part of the old Austro-Hungarian Empire.

When he was about six, Nikola Tesla's father, the village priest, was transferred to a larger parish in the city of Gospic. There, the lad grew up and perfected his earliest "inventions." Of these, his favorite was an "engine" powered by 16 June bugs, harnessed in sets of four to spokes which radiated from the drive shaft.

Nikola was a frail lad, often ill; and he nearly went blind from too much reading. He read everything he could get his hands on, not only science but also religion, philosophy, history, literature. By the time he finished high school, he was fluent in French, German and Italian, as well as his native Serbo-Croat.

He got his schooling—the best his doting family could afford—at Gospic, Carlstadt, Gratz, the University of Prague and, finally, at Budapest. At the University, he saw his first electric motor, a new type direct-current affair whose brushes and commutators sent out showers of crackling blue sparks.

"If we got rid of those brushes and commutators, with all that noise and loss of energy, we'd have a much better motor," Nikola told his professor. "Perhaps it might be done with an alternating current."

"Nonsense!" barked the professor. "An alternating current would never run anything. You're not the brilliant student I thought you were. Forget it!"

But Tesla could not forget. The teacher's ridicule only stamped the idea indelibly on his brain. It became an obsession, a passion—how to make an alternating current drive a motor. In every idle moment, wherever he went, he wrestled with this problem.

Tesla's mind had an unusual twist. Almost from infancy, he had been able to see things in his mind's eye so vividly—and in such minute detail—that often he had trouble telling the real from the imaginary.

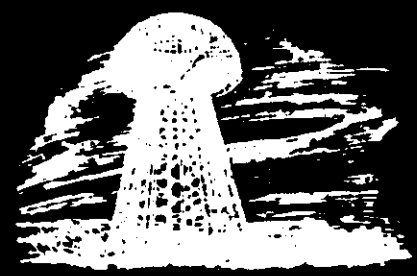

Where the average engineer or inventor would reach instinctively for drawing board, paper and pencil, Tesla would simply switch on that uncanny magic lantern inside his brain. He would fix a mental image there. Then he would alter this detail or that, discard one plan, try another, without ever putting a line on paper.

Years later - from these mental images alone - he could give his workmen exact instructions on how to build each part of a new device, though it was unlike anything ever seen before.

Thus, needing no drafting room and few laboratory conveniences to work on an idea, Tesla could use every spare minute that he had to test and revise his theory of alternating current.

His first real job was manager of a newly organized telephone company in Budapest. But telephone circuits were dull stuff compared with the challenge of that one big idea. He moved to Paris where he became a kind of general trouble-shooter for the Continental Edison Company.

His brain was still chipping away at his big problem, but the trouble was, he couldn't share it with trained men who might have helped him work it out. For whenever he mentioned alternating current to an electrical engineer, the man would look at him as though he were crazy.

But then came the moment when he knew he had solved it. He was walking with a friend in the Bois de Boulogne. Suddenly, he stopped short and began jabbing with his cane at some invisible object in the air.

"See, it works!" he shouted. "It is the rotating magnetic field which causes the armature to turn. It pulls the magnets around with it, causing the shaft to revolve. As I oscillate this switch, causing the current to flow first in one direction, then the other . . ."

Never mind what his friend thought. Tesla had the answer.

At the office, his colleagues scoffed or looked blank. But the manager, listening to the outpourings of scientific jargon, suddenly thought of his boss back in the United States. If there *were* some truth in what the Croat said, surely the famous electrical wizard would be smart enough to see it.

So he gave Tesla a letter of introduction to Thomas Edison and urged him to try his luck in America. Thus, Tesla, now 27, arrived in New York. He was handsome, over six-feet-two, with a distinguished head and deep-set blue eyes. His Slavic face was broad across the cheekbones, his dark hair thick, his chin sharply pointed. Of worldly goods, he had the clothes on his back, four cents in cash, the letter to Edison, and the idea which was to change the world.

Edison thought less than nothing of the idea. It seemed so preposterous that he wouldn't even listen

61

and, of course, Tesla had no drawings with which to try to convince him. But Edison gave him a job, for he had excellent training as an engineer and Edison needed trained men.

Busy with routine electrical work, Tesla waited nearly three years for a chance to turn his mental image into an actual motor he could show to others. In 1887, he was able to borrow enough money to start his own laboratory, and the following year the alternating-current motor and generator were practical realities on a laboratory scale though much practical engineering would still be needed to fit them to commercial use.

George Westinghouse, another inventor, was the first to see their value. He bought the patents and gave Tesla a job as engineer in his Pittsburgh factory.

But Tesla couldn't get along with the other Westinghouse engineers. From his standpoint, the alternating-current job was done. Even "schoolboys" could now iron out the few remaining kinks. Meantime, his brain had started to hatch even bigger dreams. He went back to his laboratory in New York.

"Be alone," he once told a science writer. "That's the secret of invention. Be alone—that's where great ideas are born."

AND HE WAS. In the years that followed, Tesla had many admiring acquaintances, but seldom a friend. After his mother, no woman ever entered his personal life.

His manner toward others was cordial but reserved, distant. His words were as if uttered by some god, sitting on an Olympus high above the rest of humanity. Backed by his fame, those words made a tremendous impression.

He lectured at every scientific center in this country and in all the important capitals abroad. Things which, as yet, existed only inside that amazing brain of his were so real to him, he made them real to his listeners.

He described radar and radio broadcasting and even television. He advocated electro-therapy. He foresaw a day when man would control nature in every respect—even the weather—when machines of all kinds, and the power to run them, would be so cheap that poverty would vanish from the world.

Without wanting to be, Tesla was a superb actor. After listening to him and seeing his wonders, audiences were ready to believe nearly anything.

Tesla reasoned that you could sell electric power cheap if you could do away with the millions of poles and insulators, the millions of tons of copper wire used to transmit it from place to place. He thought he knew how to do it—and J. P. Morgan backed him with $300,000.

On Long Island, Tesla built a huge power plant with a 154-foot steel-ribbed tower topped by an enormous mushroom-shaped copper dome. From this dome he planned to bombard the earth's crust with millions of volts of electric energy. The power so added to the earth's permanent charge could be drained off at some other point—*any* point—on the earth's surface. Thus, it would be possible for electric power to be sent anywhere without conduits, poles or wires. Or so he thought, until he tried it.

62

In November 1928, Tesla announced that he could abolish war.

The inventor had designed a small, inexpensive, radio-controlled boat which, through its supposed ability to destroy the biggest battleships, would make great navies useless. Not many years later, he was talking of another super-weapon: a "death ray" which would annihilate whole armies.

Yet Tesla never suspected that the real super-weapon of the future would come from atomic fission. For Einstein's basic notion which led to smashing the atom, he had only ridicule. Alone in his middle age, he had fallen out of step with the world's great thinker.

Not all Tesla's later inventions were fantastic. Some, like his induction coils and oscillators, and pioneer work on "tuned" electrical circuits, were highly important.

Though he never succeeded in transmitting power without wires on a big scale, he *did* prove that a single wire is enough. And some of his brilliant prophecies inspired the more plodding scientists to work out the practical problems of induction heating, radio-telephone, radar and many other electronic marvels of today.

But as he grew older, he withdrew further and further within himself. His strange prophecies sounded like a voice from another planet. For companionship now, the old man had only his dreams, and they grew stranger with the years. Completely alone at last, a stooped, gaunt figure with thin, silvery hair, he used to slip from his hotel room, buy a bag of birdseed and trudge slowly over to a park where hundreds of pigeons awaited him. These were his friends. They needed him, though the world did not.

When he grew too ill to go out, each day he sent a Western Union messenger to the park. After feeding the birds, the boy was instructed to see if any of them seemed sick. If so, he was to bring them back to Tesla's room where the inventor would nurse them gently back to health.

Perhaps this sad little labor of love showed that the man who changed the world had, at last, discovered a great truth. Perhaps he knew now that the greatest power for good lies not in lonely thought but in a human heart pulsating like his own "tuned circuits"—in tune with the hearts of his fellowmen. Or did he ever know? You could never be sure about Tesla.

Winnie Wit

IN THE EARLY 1920s, when Winston Churchill had offended both his own supporters and the political opposition, the late George Bernard Shaw wrote him: "I enclose two vouchers for the première of my new play, for yourself and a friend—if any."

Back to the playwright promptly came the theater checks with this note from "Winnie": "I regret I am unable to attend the première of your new play. Please send me two vouchers for the second performance—if any."

—[illegible]

RECOGNITION FOR TESLA

At long last Serbians—American and Canadian—have acted to honor the memory and achievements of one of Serbia's greatest sons.

For the world-wide Centennial celebration of Dr. Nikola Tesla's birth next year, Serbs on this Continent plan to erect a bust statue of the electrical genius to stand before the entrance of the Monastery at Libertyville, Ill.

Steps looking towards that end were taken at the recent SNF convention following the reading of a letter by President Mike Radakovich from His Grace, Bishop Nicolai. As the universally-renowned churchman stated, erection of a suitable monument, by Serbians, would forever remind other Serbs of the honor and glory of Dr. Nikola Tesla . . . . And that he was a SERBIAN, son of a SERBIAN ORTHODOX clergyman, born in the SERBIAN SELO of Smiljan in Lika.

Further, His Grace urged that the undertaking be a joint one and representative of ALL the Serbian organizations in the United States and Canada. He naturally looked to the SNF for leadership, and the greatest monetary contribution. But he also besought the help of the Serbian Nat'l Defense and the Jedinstvo beneficial society.

The Convention voted $1000 for the project and a hand collection was taken up among the delegates and guests, kinsmen Milos Konjevich of Joliet, Ill., giving $200. It is probable that the balance of the needed $3000 will be raised thru public good-will offerings and via cash gifts of the other two organizations mentioned.

And after a suitable bust has been erected for Dr. Tesla, Bishop Nicolai suggested a similar-like monument honor the memory of Dr. Mihailo Pupin, also a world-renowned scientist, author and educator.

This is a subject near and dear to all good Serbian hearts

ALL INFORMATION CONTAINED
HEREIN IS UNCLASSIFIED
DATE 7-3-80 BY [illegible]

INDEXED - 36
100 2237 A
NOT RECORDED
12 OCT 7 1955

"AMERICAN SRBOBRAN"
September 28, 1955
Pittsburgh, Pa.

EX-113
7531
60 OCT 7 1955
100-2237
64

INFORMATION CONTAINED
UNCLASSIFIED
DATE 7-3-80 BY SP4 Jm/rtc

100-2237

SNF Opens Drive for Tesla Memorial at Libertyville—

$2000 PUBLIC AID SOUGHT

PITTSBURGH, PA. — The Serb Nat'l Federation Executive Board has acted quickly to implement a Convention decision to honor the memory of the illustrious Dr. Nikola Tesla.

At its first meeting of October 8, the Board drafted a resolution calling on all SNF members and good Serbians to help finance a memorial project for the late scientist-inventor genius.

This would stand before the entrance of the Monastery in Libertyville, Ill.

Cost of the contemplated project, which would clarion to the world that Dr. Tesla was a Serbian, is estimated at $3000. The Convention voted $1000 to the cause and a hand collection among 122 delegates yielded several hundred dollars more.

Kinsman Milos Konjevich of Joliet, Ill., gave $200.

Public Aid Sought

Balance of the needed sum is now being sought thru good-will offerings of the general Serbian populace in the United States and Canada.

A fund, similar to the one being conducted to help defray mortgage expenses on Shadeland, has been established.

It is hoped to raise the necessary monies and complete the project in time for the worldwide Centennial celebration for the genius next year.

Spearheading the movement for recognition, especially among American elements, is the TESLA SOCIETY, founded by scientist-engineer Leland Anderson, a fanatical admirer of the late Dr. Nikola Tesla.

Mr. Anderson right now is conducting a search for a famous portrait of the Serbian electrical wizard done at the turn of the century in New York.

Seek Missing Portrait

In his current TESLAIAN publication, Mr. Anderson revealed the work, by Princess Vilma Lwoff-Parlaghy, is missing.

Reviewing developments, Mr. Anderson wrote:

"On March 1, 1916, the Princess gave a reception in her new studio in New York especially to exhibit her latest protrait of Nikola Tesla. An article in the NEW YORK TIMES for March 2, 1916, stated—

" 'It was one of the beliefs of Mr. Tesla that there was something unlucky about posing for a picture and he never sat to any before he entered the studio of the Princess. The room which she had chosen did not have a skylight in it and the much desired North exposure was missing.

" 'At the suggestion of Mr. Tesla, a cluster of powerful incandescents was put up in the corner of the apartment and the rays, filtered thru blue glass, were just the right quality. The portrait was shown under the same illumination.

At Ease for Sitting

" 'Mr. Tesla, having solved the problem of the artifical sun, fell to thinking about other parts of the universe, and there he sat oblivious to his surroundings.

" 'The painter was able to produce a likeness in which there is no evidence that the subject was conscious that anybody was watching him, much less studying his features from the other side of the easel.

" 'Among those who attended the reception were Mrs. C. B. Alexander, Henry P. Davison, the Countless de Rittenburg and Mrs. E. T. Isham.' "

After the Princess died, in 1923, her studio and all objects of art, was sold at auction.

The Telsa portrait, 53x48 inches, appeared on the cover of TIME magazine (July 20, 1931) and in the ELECTRICAL EXPERIMENTER (January 1919), Mr. Anderson says.

Its location is not now known.

INDEXED - 14

100-2237-A

NOT RECORDED
129 NOV 4 1955

AMERICAN SRBOBRAN
October 26, 1955
Pittsburgh, Pa.

EX-1

65

279
68 NOV 9 1955

100-2237

[redacted]AF $1580

Half of $3000 Costs For Statue Pledged

Cadiz, O., Serb Gives $100 For Bust Image of Inventor To Be Placed at Monastery

Pittsburgh, Pa.—Half of the $3000 fund goal for a statue memorial of the late Dr. Nikola Tesla has been realized, the SNF announced today.

In fact, total contributions counted so far come to $1580.

The Fund is an outgrowth of a plea by Bishop Nicolai for Serbians to do honor for the memory of the noted electrical wizard during the world-wide Centennial celebration planned for the genius next year.

In the wake of the plea, voiced at the recent 7th Convention at Niagara Falls, Canada, the delegates approved a $1000 gift from the SNF and decided to raise, by public grant, the balance of $2000.

A hand collection among the 122 grass-roots leaders of the Society raised another $450. Then, at its first meeting October 5, the newly-elected Executive Board of the SNF appealed to the membership at large to fulfill the balance required.

First Contribution $100

A scant 24 hours after the appeal was published in the Society's "Srbobran" organ last Wednesday, Sime Zelich of Cadiz, O., gave $100.

The proposed memorial, a statue image, would be placed before the entrance of the St. Sava Serbian Monastery in Libertyville, Ill.

historians, writers, educators, scientists, etc., would not be misled, Bishop Nicolai believes.

Be that as it may, the SNF's goal is to amass the needed monies in time to erect and dedicate the memorial before the Tesla Centennial celebration ends.

Donors and the amounts of their donations are as follows:

SNF	$ 1000.00
Delegate M. Konjevich	200.00
" Todor Dragich	50.00
" Petar Borovich	25.00
SNF Counsel N. Stone	25.00
Delegate N. Stepanovich	20.00
" Maxim Jakovac	20.00
" Ilija Janjanin	20.00
" Lou Balta	10.00
" Jovan Vukcevich	10.00
" Milan Kajganovich	10.00
" Stevan Rogulja	10.00
" Bogdan Dragicich	5.00
" Milan Tomich	5.00
" Todor Vuicich	5.00
" Djuro Lukich	5.00
" G. Stoisavljevich	5.00
" R. Vukadinovich	5.00
" Janko Mrmich	5.00
" Petar Maravich	5.00
" Mirko Baranin	5.00

INFORMATION CONTAINED IS UNCLASSIFIED DATE 2-3-80 BY [redacted]

3 NOV 14

ıtion at Niagara Falls, Can-
a, the delegates approved a
000 gift from the SNF and
cided to raise, by public
ant, the balance of $2000.

hand collection among the
grass-roots leaders of the So-
raised another $450. Then,
first meeting October 5, the
ly-elected Executive Board of
SNF appealed to the mem-
ship at large to fulfill the bal-
e required.

First Contribution $100

A scant 24 hours after the ap-
l was published in the Society's
bobran" organ last Wednes-
, Sime Zelich of Cadiz, O.,
e $100.

The proposed memorial, a
tue image, would be placed be-
e the entrance of the St. Sava
bian Monastery in Libertyville,

"There it would proclaim to
ns of thousands of Serbian
sitors annually that Nikola
esla was of Serbian immigrant
ock and son of a Serbian
rthodox clergyman," Bishop
icolai declared.

For half a century and more,
general American public has
en misled anent the nationality
the man who foretold the com-
of atomic energy power.

Only recently, a prominent
American magazine listed him,
ncorrectly, as of Croatian
tock. The mistake was subse-
uently publicly corrected with
pologies by the publication.

But lacking an image reference,
th historical statistics, similar
ors are likely in the future.

Old References Poor

The magazine publication, for
stance, explained it obtained its
ference material from an anti-
ated guide book.

Since the misleading matter
re was never challenged by
rbians and other interested
rties before, the magazine logi-
ly assumed it was factual.

Erection of a bust statue,
lso listing Dr. Tesla's date of
irth, birthplace, parents, etc.,
ould counter the old myths
nd make certain that future

Centennial celebration ends.

Donors and the amounts of their donations are as follows:

SNF	$ 1000.00
Delegate M. Konjevich	200.00
" Todor Dragich	50.00
" Petar Borovich	25.00
SNF Counsel N. Stolac	25.00
Delegate N. Stepanovich	20.00
" Maxim Jakovac	20.00
" Ilija Janjanin	20.00
" Lou Balta	10.00
" Jovan Vukcevich	10.00
" Milan Kajganovich	10.00
" Stevan Rogulja	10.00
" Bogdan Dragisich	5.00
" Milan Tomich	5.00
" Todor Vuicich	5.00
" Djuro Lukich	5.00
" G. Stoisavljevich	5.00
" R. Vukadinovich	5.00
" Janko Mrmich	5.00
" Petar Maravich	5.00
" Mirko Baranin	5.00
" Stanko Jelich	5.00
★ ★ ★	
Prof. Anthony Tomovich (Edmonton, Alberta, Can.)	10.00
Teta Andia Mamula (Pittsburgh)	5.00
Martha Mamula Bjelosh (Pittsburgh)	10.00
Sime Zelich (Cadiz, O.)	100.00
Milinko Alexich, war invalid (Omaha, Nebr.)	
Total	$ 1,[illegible]

—the honoring, forever, of two of Serbia's best-known immigrant sons who contributed so greatly to the welfare and prosperity of their adopted America.

We hope to report developments as soon as they take place, remembering Bishop Nikolai's concluding remarks:

"Nikola Tesla, in the field of science, brought the Serbian name great glory—just as did the greatest Serbian knights on the field of battle."

23 June 56

Federal Bureau of Investigation
Washington 25, D.C.

Gentlemen:

[redacted]

During my senior year at Georgetown University I read J.J.O'Niel's Biography of Nikoli Tesla; the book, entitled "Prodigal Genius", described quite a few of Tesla's experiments, most of which I tried myself in the physics lab. I am interested in reviewing Tesla's experiments in wireless electric power transmission.

Unfortunately, Tesla died in 1945 just at the time he supposedly had developed a system of wireless power transmission. Since World War II was then in progress his papers were seized and sealed by the F.B.I. I suppose that by now Tesla's papers have been released for publication, but a call to the Library of Congress produced no results. Therefore, I have two questions:

1) Does the F.B.I. now have Tesla's scientific papers?

2) If so, are they available for public inspection? If they were released, who has them?

I will certainly appreciate any help you can give me along these lines. Tesla published very little of his findings; this, coupled with the fact that wireless power is connected by most people with "Death Rays" and crack-pots has made it nearly impossible for me to find anything on the subject.

Yours very truly,

[redacted]

[redacted] (b) (7) (C)

RECORDED - 86 100-2237-7

JUL 3 1956

[redacted] (b) (7) (C)

INFORMATION CONTAINED HEREIN IS UNCLASSIFIED 2-3-80 BY SP4 Jmp/etc

[redacted] (b) (7) (C)

68

100-2237-7
RECORDED - 86
INDEXED - 86

EX-122

15

L INFORMATION CONTAINED
EREIN IS UNCLASSIFIED
DATE 7-3-80 BY SP4 Jmfrte

June 29, 1956

[redacted]

(6)(7)(C)

Dear [redacted]

Nikoli Tesla

Your letter dated June 23, 1956, has been received, and in response to your inquiry, I would like to advise that our files reflect that the effects of Nikola Tesla were taken into custody after his death by the Office of Alien Property and not by this Bureau.

Since we did not participate in the handling of Mr. Tesla's effects, we are unable to supply the information you requested.

Sincerely yours,

John Edgar Hoover
Director

COMM — FBI
JUN 29 1956
MAILED 24

NOTE: Bufiles reflect no record on correspondent and reveal the correct spelling of Tesla's name as "Nikola." Bufiles reflect this type of reply h been utilized by the Domestic Intelligence Division in answering similar inquiries. (65-47953; 100-2237) Cover memo from Mr. Belmont to Boardman 6-29-55, set out background of this matter which concerned the death of Tesla, a famous electrical inventor. Bureau was not involved in this matter, and the opening of the safe containing his effects was done by the Office of Alien Property.

Tolson
Boardman
Nichols
Belmont
Harbo
Mohr
Parsons
Rosen
Tamm
Sizoo
Winterrowd
Tele. Room
Holloman
Gandy

FBI
JUL 17 1956

[redacted]

(3)

(6)(7)(C)

[redacted]

69

STANDARD FORM NO. 64

Office Memorandum • UNITED STATES GOVERNMENT

TO : DIRECTOR, FBI

DATE: 7/25/57

FROM : SAC, NEW YORK (65-12290)

SUBJECT: NIKOLA TESLA (Deceased)
IS -YU

INFORMATION CONTAINED HEREIN IS UNCLASSIFIED DATE 7-3-80 BY SP4 Jrmfr

[redacted] Street, New York 24, New York, a United States citizen of Yugoslav extraction, who on occasion, voluntarily furnishes the New York Office with information he considers to be in the interests of the Security of the United States Government, furnished Special Agent NICHOLAS J.MASTROVICH the following information on July 3, 1957: (b)(7)(D)

MR & MRS. JOHN STORM

[redacted] stated that a certain woman named Mrs. MARGARET STORM who lives with her husband, JOHN, at the Colonial Hotel, 51 West 81st Street, New York 24, New York, has been issuing newsletters which contain information pertaining to flying saucers and interplanetary matters. (b)(7)(D)

SECTION NEWSLETTER NEWSLE

[redacted] stated that in his opinion Mr. and Mrs. STORM are exploiting the reputation and genius of NIKOLA TESLA, deceased, inventor of Yugoslav extraction who achieved world wide fame as a result of his inventions in the United States. (b)(7)(D)

TESLA was born in Smiljan, Yugoslavia in July, 1859 and came to the United States in 1894 and became a naturalized United States citizen. In 1886 TESLA designed the arc-lighting system and two years later he invented the Tesla motor and designed a plan for the transmission of alternating current. In subsequent years, TESLA's discoveries and inventions included such fields and appliances as wireless communication, electrical oscillation, radiant power and radio active matter. After 1900, communications and wireless power transmission occupied most of his research.

2 - Bureau (RM) (Encs.2)
1 - Los Angeles (Info) (Encl.1) (RM)
1 - New York (65-12290)

NJM:mcd
(4)

SE 43 100-2237-

RECORDED-56

INDEXED-56

14 JUL 29 1957

0 1957

70

TESLA's only military invention was a method to which he once eluded but never fully described. This invention was a means whereby an inpenetrable "wall of force" can be erected around the United States' borders which would render helpless any military attack. TESLA disclosed the existence of his plan in 1934 and stated he intended to present it to the Geneva Conference but seldom referred to it afterward.

The "New York Times" dated 9/22/40, carried an article setting forth NICOLA TESLA's plan for a "Death Ray". This article included information to the effect that TESLA, on his 84th birthday, July 10, 1940, advised New York Times reporter WILLIAM L. LAWRENCE that he was ready to divulge to the United States Government the secret of his "teleforce", with which he said airplane motors would be melted at a distance of 250 miles so that an invisible Chinese wall of defense would be built around the country against any attempted attack by an enemy airforce no matter how large. According to TESLA, this "teleforce" was based on an entirely new principle of Physics that "no one has ever dreamed about" and was different from the principle embodied in his inventions relating to the transmission of electrical power from a distance, for which he received a number of basic patents.

TESLA stated that this new type of force would operate through a beam one hundredth millionth of a square centimeter in diameter and could be generated from a special plant that would cost no more than two million dollars and would take only about three months to construct. TESLA stated that a dzen such plants located at strategic points along the coast, according to TESLA, would be enough to defend the United States against all possible aerial attacks. TESLA stated that this beam would melt any engine and would also ignite explosives aboard any bomber. TESLA stated that no possible defense against it could be devised and he asserted that the beam would be all penetrating.

TESLA stated to Mr. LAWRENCE that he makes one important stipulation before he would divulge this secret to the United States Government and that was that should the United States Government decide to take up his offer, he would go to work at once but that the United States Government would have to trust him. TESLA stated that he would suffer "no interference from experts."

In this "New York Times" article Mr. LAWRENCE commented that with conditions as they were in 1940, and with the United States getting ready to spend millions of dollars for National Defense, Mr. TESLA's great reputation as an inventor, who always was many years ahead of his time, should be given careful consideration. Mr. LAWRENCE stated, in his opinion, the United States Government should take Mr. TESLA at his word and commission him to go ahead with the construction of his "teleforce" plant.

The New York file of Mr. TESLA bears no indication that any additional developments were carried on in connection with TESLA's invention and whether or not TESLA fully divulged his new plan to the United States Government.

TESLA died at the age of 85 on January 7, 1943.

Mr. [redacted] provided a two page copy of the above mentioned newsletter which Mr. and Mrs. STORM have been distributing in connection with the alleged invention by TESLA, which, according to Mr. and Mrs. STORM, consists of a radio type machine known as the Tesla Set which was invented by Mr. TESLA in 1938 for interplanetary communication. Mr. and Mrs. STORM claim that TESLA's engineers did not complete the Tesla Set until after TESLA's death in 1943. Mr. and Mrs. STORM claim that this Set was placed in operation in 1950 and since that time TESLA engineers have been in close touch with space ships. etc. (X)(D)

The Newsletter furnished by Mr. [redacted] included (6)(7)(D) the following names:

MARGARET STORM
JOHN STORM
GEORGE VAN TASSEL, Yucca Valley, California NY
DAN FRY NY - NMEX
GEORGE KING, London, England

The files of the New York Office contained no pertinent information regarding any of the above mentioned individuals. ARMAHO NY

Two photostatic copies of this newsletter are being sent to the Bureau for purposes of information while one copy is being submitted to the Los Angeles Office for information purposes.

[redacted] (b) (7) (C)

Mr. J. Edgar Hoover

L INFORMATION CONTAINED
EIN IS UNCLASSIFIED
7-3-80 BY SP4 Jam/rtc

Dear Sir:

I an hopeful that you can help me obtain certain information on records and data, which belonged to Dr. Nikola Tesla. He was an Electrical Engineer and prolific inventor.

He was born in Yugoslavia in 1856 and died in the United States, New York City, January 7th, 1943. He was a naturalized citizen of this country.

The only information I could find of his records was a report that the F.B.I. removed his papers for examination, and that the records were sealed by the custodian of alien property.

I have been doing some theoretical research of my own, which I believe may be along the same lines he followed in certain of his experiments. I also believe the development of his ideas would be in the interest of our country regardless of who developes them.

If it is at all possible for me to have access to at least some of his experimental work, I would certainly appreciate it. I am not able, by reason of the vast finances, which would be required, to conduct such experiments myself, so the data he made and collected would be invaluable.

Of course, it is possible that his records do not contain material pertinent to his electronics work, because from what I understand from reading about him, he kept most of his records in his head and wrote down very little of his data.

It is also possible that some of his ideas are impractical, but I feel sure that certain of his ideas will be of immense value to our country within the next several decades or even before, if they are developed at a rapid rate.

I would appreciate hearing from you on the subject, if you have any information pertaining to it, which you could make available to me.

100-2237-9

REC-1

Sincerely,
16 MAR 18 1958

[redacted]

Ack 3/14/58 [redacted]

[redacted]

(b) (7) (C)

[redacted]

74

March 14, 1958

REC-1

100-2237-

[redacted]

(b)(7)(c)

ALL INFORMATION CONTAINED HEREIN IS UNCLASSIFIED DATE 7-3-80 [illegible]

Dear [redacted]:

Your letter postmarked March 7, 1958, has been received.

In response to your inquiry, I would like to advise that our files reflect that the effects of Dr. Nikola Tesla were taken into custody after his death by the Office of Alien Property in the Department of Justice and not by the FBI.

Since we did not participate in the handling of Dr. Tesla's effects, we are unable to supply the information you requested.

Sincerely yours,

John Edgar Hoover
Director

NOTE: Buffiles reflect no record on correspondent. Buffiles reflect above type of reply has been utilized in the past in answering similar inquiries. (100-2237-7) Cover Memorandum from Belmont to Boardman 6/29/55 set forth background of this matter which concerned the death of Tesla, [illegible] electrical inventor. Bureau was not involved in this matter, and [illegible] of the safe containing his effects was done by the Office of Alien Property.

Tolson
Nichols
Boardman
Belmont
Mohr
Parsons
Rosen
Tamm
Trotter
Nease
Tele. Room
Holloman
Gandy

MAIL ROOM

[redacted] also (b)(7)(c)

COMM - FBI
MAR 14 1958
MAILED 19

68 MAR 21 1958

FBI - JUSTICE
REC'D BY [illegible]

[redacted]

(b)(7)(c)

75

June 24, 1957

Federal Bureau of Investigation
Washington 25, D.C.

ALL INFORMATION CONTAINED
HEREIN IS UNCLASSIFIED
DATE 7-3-80 BY SP4 Jan/rtc

Dear Sirs,

I am doing a research study on the life of Dr. Nikola Tesla of New York City (1856 - 1943), and desire information which you may have. It was reported in the book "Prodigal Genius" that Dr. Tesla's papers were seized from his New York hotel room upon his death in 1943 by the F.B.I. I am very interested in getting copies of his papers for my study and would like to know if this report is true and where I might obtain further information about them or if you are holding them.

REC-91 100-2237

EX 101

Sincerely ~~yours~~,

[redacted]

(b)
(7)
(C)

[redacted]

CRIME REC

EX 101

REC- 91

July 2, 1959

Ink 100-2237-10

[redacted]

(b)(7)(c)

L INFORMATION CONTAINED
EIN IS UNCLASSIFIED
DATE 7-3-80 BY SP4 Jamfite

Dear [redacted]

Your letter dated June 24, 1959, has been received.

In response to your inquiry, I wish to advise that our files reflect that the effects of Dr. Nikola Tesla were impounded, after his death, by the Office of Alien Property of the Department of Justice and not by the FBI. Since we did not participate in the handling of Dr. Tesla's effects, we are unable to supply the information you desire.

Sincerely yours,

MAILED 5
JUL 2 1959
COMM-FBI

John Edgar Hoover
Director

NOTE: Bufile 100-2237 reflects that Dr. Tesla was a world-famous electrical inventor, and at the time of his death, all of his personal papers and effects were believed dangerous to the country's security if they fell into unauthorized hands. The book, "Prodigal Genius," by John J. O'Neil, alleges that the FBI took over a certain safe and opened it, appropriating his property. Bufiles clearly indicate that it was the Office of Alien Property of the Department who did so, and the above reply is forwarded in answer to related inquiries.

Tolson
Belmont
DeLoach
McGuire
Mohr
Parsons
Rosen
Tamm
Trotter
W.C. Sullivan
Tele. Room
Holloman
Gandy

[redacted]
(3)

FBI

57 JUL 9 1959

MAIL ROOM ☐ TELETYPE UNIT ☐

[redacted]

(b)(7)(c)

[redacted]

77

OPTIONAL FORM NO. 10

UNITED STATES GOVERNMENT

Memorandum

Tolson
Mohr
Parsons
Belmont
Callahan
Conrad
Malone
McGuire
Rosen
Tamm
Trotter
W.C. Sullivan
Tele. Room
Ingram
Gandy

TO : MR. TROTTER

DATE: 12-6-60

FROM : A. K. Bowles

SUBJECT: NIKOLA TESLA (DECEASED)
INFORMATION CONCERNING

ALL INFORMATION CONTAINED HEREIN IS UNCLASSIFIED DATE 7-3-80 BY

(b)(7)(C)

[redacted] telephoned December 5 and was referred to Ident by switchboard because he wanted to talk with someone in charge of records of deceased. [redacted] said he is making a research study for U. S. Air Force on subject of geophysics. His deadline is ten days from now. [redacted] said he just discovered a sentence in a book by John J. O'Neill entitled "The Prodigal Genius -- The Life of Nikola Tesla," which states the FBI took custody of papers from Tesla's safe after his death in New York City in 1943. Tesla was a world-famous Yugoslav scientist and inventor in the electrical field who died January 7, 1943, in New York City. [redacted] requested immediate access to Tesla's scientific works which may shed light on [redacted] research study. I told [redacted] we would have somebody from our Boston Office contact him immediately.

(b)(7)(C)

Bureau file 100-2237 shows no investigation of Tesla has been conducted by Bureau. Since erroneous statement concerning FBI's taking custody of papers from Tesla's safe after his death appeared in O'Neill's book published in 1944, Bureau has received numerous inquiries from scientists desiring to review Tesla's writings. Each inquiry has been answered by stating FBI did not participate in handling Tesla's effects, but information has come to our attention that Office of Alien Property of Department of Justice may have examined Tesla's effects. (File indicates that representatives of Office of Alien Property did actually review Tesla's possessions, including his writings, but file does not show what final disposition was made of Tesla's possessions.)

A teletype to Boston Division was prepared, but before it was sent [redacted] telephoned again to furnish me the exact page in O'Neill's book in which he refers to the FBI. At that time I told [redacted] the statement in the book was untrue -- that the FBI had not examined or taken custody of Tesla's papers. I suggested to [redacted] that he might contact Office of Alien Property. (Therefore, teletype to Boston was not necessary.) 100-2237-11

ACTION:

For record.

AKB:ks

EX-113 REC-38 5 DEC 8 1960

51 DEC 13 1960

(5)

Bu file 100-2237
1- Mr. Belmont

78

[redacted]
(b)
(7)
(c)

February 14, 1961

Federal Bureau of Investigation
Department of Information
Washington 25, D. C.

[redacted] INFORMATION CONTAINED
HEREIN IS UNCLASSIFIED
DATE 7-3-80 BY SP4 jm/rtc

Dear Sir:

I am a college student who is doing a research paper on Nikola Tesla. As I was collecting the material for my paper, I discovered that at the time of Tesla's death, the department of the F.B.I. confiscated the data and papers that Tesla had collected from his research in the field of electricity. This confiscation of his material was stated in the PRODIGAL GENIUS by J.J. O'Neil, published in 1944 at New York city by Washburn Inc.

I have developed an interest in the discoveries and accomplishments of Tesla that is presently limited by the shortage of factual material. If in your files, you have any information concerning Nikola Tesla that you are permitted to release, I will sincerly appreciate your co-operation in helping me give the proper recognition to this great scientist and American. Below I have listed the facts that may be helpful to you;

REC- 55 100-22137-18
FEB 28 1961
EX.-102

1. Born in 1856 at Smiljan, Crotia, now Yugoslavia
2. Came to America in 1884 and was employed for a short time with the Edison Co. at Orange, N.J.
3. Died on January 7, 1943 at New York city

Thanking you for your time and co-operation that I have taken, I remain,

Sincerly Yours,

[redacted]
(b)
(7)
(c)

[redacted]

79

esd 100-2237-12

REC- 55

EX-76

February 23, 1961

[redacted]

(6)(c)

ALL INFORMATION CONTAINED HEREIN IS UNCLASSIFIED DATE 7-3-80 BY [illegible]

Dear [redacted]:

Your letter of February 14, 1961, has been received, and the interest which prompted you to write is appreciated.

In response to your inquiry, I wish to advise that our files reflect that the effects of Dr. Nikola Tesla were impounded, after his death, by the Office of Alien Property of the Department of Justice and not by the FBI. Since we did not participate in the handling of Dr. Tesla's effects, we are unable to supply the information you desire.

MAILED 10
FEB 23 1961
COMM-FBI

Sincerely yours, (b)(7)(c)

John Edgar Hoover
Director

NOTE: No record could be located in Bufiles identifiable with correspondent. Bufile 100-2237 reflects that Dr. Tesla was a world-famous electrical inventor, and at the time of his death, all of his personal papers and effects were believed dangerous to the country's security if they fell into unauthorized hands. The book, "Prodigal Genius," by John J. O'Neill, alleges that the FBI took over a certain safe and opened it, appropriating his property. Bufiles clearly indicate that it was the Office of Alien Property of the Department who did so, and the above reply is forwarded in answer to related inquiries.

Tolson
Parsons
Mohr
Belmont
Callahan
Conrad
DeLoach
Evans
Malone
Rosen
Tavel
Trotter
W.C. Sullivan
Tele. Room
Ingram
Gandy

(3)
50 MAR 6 1961
MAIL ROOM TELETYPE UNIT

[redacted] (b)(7)(c)

80

November 21, 1962

Federal Bureau of Investigation

Washington 25, D.C.

Gentlemen:

I am making a study, motivated out of personal curiosity, into the life and works of Nikola Tesla. Mr. Tesla died on January 7, 1943 in the Hotel New Yorker. Since F.B.I. Operatives opened his safe and took his papers for examination, I wonder if these papers are available for perusal? If they are available, where would they be located, and are copies available to the public?

I am a citizen of the United States, and have been cleared for security--- the latest one being for work on [redacted]

Thank you very much for any information or help you may be able to give me in this matter!!

Respectfully yours,

[redacted]

(6)
(7)
(C)

ALL INFORMATION CONTAINED HEREIN IS UNCLASSIFIED DATE 7-3-80 BY SP4 [illegible]

EX-114

REC-39 100-2237 1B

5 NOV 28 1962

[redacted] 11-27-62

81

RA-114

REC-39 100-2237-13

November 27, 1962

[redacted]

(b) (7) (c) ALL INFORMATION CONTAINED HEREIN IS UNCLASSIFIED DATE 7-3-80 BY SP4 Jam/rtc

REC'D-READING ROOM FBI NOV 27 4 53 PM '62

Dear [redacted]

Your letter of November 21st has been received.

In response to your inquiry, I would like to point out that the effects of Dr. Nikola Tesla were impounded, after his death, by the Office of Alien Property of the Department of Justice and not by the FBI. Since this Bureau did not participate in the handling of Dr. Tesla's effects, I am unable to supply the information you desire.

Sincerely yours,

J. Edgar Hoover

John Edgar Hoover
Director

[redacted] (b) (7) (c)

MAILED 8 NOV 2 1962 COMM-FBI

NOTE: Bufiles contain no record identifiable with correspondent. Bufile 100-2237 shows that Dr. Tesla was one of the world's outstanding scientists in the electrical field, and at the time of his death, all of his personal papers and effects were believed dangerous to the country's security if they fell into unauthorized hands. The book, "Prodigal Genius," by John J. O'Neil, alleges that the FBI took over a certain safe and opened it, appropriating Dr. Tesla's property. Bufiles clearly indicate that it was the Office of Alien Property of the Department which did so, and the above reply has been forwarded in answer to related inquiries. Dr. Tesla was born in Yugoslavia and died in New York City 1-7-43.

Tolson
Belmont
Mohr
Casper
Callahan
Conrad
DeLoach
Evans
Gale
Rosen
Sullivan
Tavel
Trotter
Tele. Room
Holmes
Gandy

[redacted] (3) (b) (7) (c)

RECEIVED DIRECTOR

140

53 DEC 3 1962

[redacted]

MAIL ROOM ☐ TELETYPE UNIT ☐

[redacted]

82

[redacted] (b)(7)(c)

10 March 1964.

Federal Bureau of Investigation,
Washington 25, D.C.

ALL INFORMATION CONTAINED
HEREIN IS UNCLASSIFIED
DATE 7-14-82 BY SP/JSK/MKE

Dear Sirs,

For some time, have been wondering about the matter of what was reported on the late Nikola Tesla, the inventor. He died during early January 1943, while in residence at the Hotel New Yorker, New York City. Accounts have it that his belongings (papers, etc.) were studied. Would appreciate learning if anything can be learned about this.

Am hoping to be on leave, and in Washington, along the third week of April. This is mentioned, in case it is possible to view anything relating to the question.

Sincerely,

[redacted]

ITC 3-17-64
ack 3-18-64
[redacted]

(b)(7)(c)

[redacted]

83

TRUE COPY

(b)(7)(c) [redacted] 10 March 1964.

Federal Bureau of Investigation
Washington 25, D. C.

Dear Sirs,

For some time, have been wondering about the matter of what was reported on the late Nikola Tesla, the inventor. He died during early January 1943, while in residence at the Hotel New Yorker, New York City. Accounts have it that his belongings (papers, etc.) were studied. Would appreciate learning if anything can be learned about this.

Am hoping to be on leave, and in Washington, along the third week of April. This is mentioned, in case it is possible to view anything relating to the question.

Sincerely,

[redacted] (b)(7)(c)

ALL INFORMATION CONTAINED HEREIN IS UNCLASSIFIED DATE 7-3-80 BY SP4 Jm/rtc

100-2237-14

10 MAR 13 1964

(b)(7)(c)

84

REC-130

100-2237-14

March 18, 1964

INFORMATION CONTAINED
HEREIN IS UNCLASSIFIED
DATE 7-3-80 BY SP4 Jan/rtc

[redacted] (b) (7) (c)

Dear [redacted]

Your letter of March 10th has been received.

In response to your inquiry, I would like to point out that the effects of Dr. Nikola Tesla were impounded, after his death, by the Office of Alien Property of the Department of Justice and not the FBI. Since we did not participate in the handling of Dr. Tesla's effects, I am unable to supply the information you desire.

Sincerely yours,

J. Edgar Hoover

John Edgar Hoover
Director

MAR 18 4 11 PM '64
REC'D-READING ROOM
FBI

MAILED 19
MAR 18 1964
COMM-FBI

NOTE: No record could be located in Bufiles identifiable with correspondent. Bufile 100-2237 reflects that Dr. Tesla was a world-famous electrical inventor and at the time of his death, all of his personal papers and effects were believe dangerous to the country's security if they fell into unauthorized hands. The book, "Prodigal Genius," by John J. O'Neil, alleges that the FBI took over a certain safe and opened it, appropriating his property. Bufiles clearly indicate that it was the Office of Alien Property of the Department which did so, and the above reply is forwarded in answer to related inquiries.

[redacted] (3) [redacted] (b) (7) (c) [redacted]

Tolson
Belmont
Mohr
Casper
Callahan
Conrad
DeLoach
Evans
Gale
Rosen
Sullivan
Tavel
Trotter
Tele. Room
Holmes
Gandy

57 MAR 2 ...

MAIL ROOM ☐ TELETYPE UNIT ☐

85

TRUE COPY

Sir,

According to "Prodical Genius, Nikola Tesla" Tesla
by J. J. O'Neil (a book) some papers were taken from the safe of Mr. Festa about 1945 yr. Is this true. If so are the papers declasified yet? If so may I obtain a copy?

[redacted] (b)(7)(C)

Sir,

According to "Prodical Genius, Nikola Tesla" by J. J. O'Neil (a book) some papers were taken from the safe of Mr. Tesla about 1945 yr. Is this true. If so are the papers declasified yet? If so may I obtain a copy?

REC-15
EX-10
100-2237-15
JUN 23 1964

[redacted] b(7)(c)

[redacted]

ALL INFORMATION CONTAINED
HEREIN IS UNCLASSIFIED
DATE 7-3-80 BY SP4 Jones/rtc

96

June 22, 1964

REC- 15

100 2237 15

[redacted] (b)(7)(c)

ALL INFORMATION CONTAINED HEREIN IS UNCLASSIFIED DATE 7-3-80 BY SP4 Jmfrte

REC'D-READING ROOM FBI JUN 22 3 30 PM '64

Dear [redacted]

Your card of June 16th has been received.

In response to your inquiry, I would like to point out that the effects of Dr. Nikola Tesla were impounded, after his death, by the Office of Alien Property of the Department of Justice and not by the FBI. Since we did not participate in the handling of Dr. Tesla's effects, I am unable to furnish the information you desire.

MAILED 20 JUN 22 1964 COMM...

Sincerely yours,

J. Edgar Hoover

NOTE: No record could be located in Bufiles identifiable with correspondent. Bufile 100-2237 reflects that Dr. Tesla was a world-famous electrical invent and at the time of his death, all of his personal papers and effects were believed dangerous to the country's security if they fell into unauthorized han The book, "Prodigal Genius," by John J. O'Neil, alleges that the FBI took ov a certain safe and opened it, appropriating his property. Bufiles clearly indicate that it was the Office of Alien Property of the Department which did s and the above reply is forwarded in answer to related inquiries.

[redacted] (3)

[redacted]

(b)(7)(c)

Tol[redacted]
Belm[redacted]
Mohr
Casper
Callahan
Conrad
DeLoach
Evans
Gale
Rosen
Sullivan
Tavel
Trot[redacted]
Tel[redacted]
[redacted]dy

RECEIVED DIRECTOR

64 JUN 26 1964

MAIL ROOM ☐ TELETYPE UNIT ☐

87

OREGON STATE UNIVERSITY
CORVALLIS, OREGON 97331
SCHOOL OF SCIENCE
Reply to: DEPARTMENT OF GENERAL SCIENCE

March 28, 1967

FEDERAL BUREAU OF INVESTIGATION
Department of Information
9th Street & Pennsylvania Aven, N.W.
Washington 25, D. C. 20535

ALL INFORMATION CONTAINED
HEREIN IS UNCLASSIFIED
DATE 2-3-80 BY SP4 jrm/pte

Dear Sirs:

I am a student of the history of science at Oregon State University, and I am attempting to write a research paper on a very eccentric scientist who died in 1943. His name was Nikola Tesla, a naturalized American of Serbian extraction, and he died in his hotel room in New York City on January 8, 1943.

During the years leading up to World War II, Nikola Tesla supposedly invented a "Death Ray" which could destroy several hundred aircraft. Mr. Tesla was a very prolific and creative genius during his early years but gradually became something of a crackpot in his old age. As a student of the history of science, it is important to determine whether or not Tesla had any valid ideas in the plans for his death ray. Tesla invented the fluorescent light and also was one of the first scientists to discover X-Rays--hence there may be some possibility that his death ray might actually have been some crude type of laser.

In Tesla's biography, "Prodigal Genius", by John J. O'Neill, the author states on page 277:

> "Operatives from the F.B.I. came to Tesla's hotel room shortly after his death and opened the safe in his room. They took the papers that it contained in order to examine them for a reported secret invention of possible use in the war..."

I am trying to locate Tesla's secret and unpublished writings concerning his death ray. I have searched the literature quite thoroughly and have found nothing. Does the F.B.I. still have these papers or can you tell where I might be able to obtain these writings for examination? Any assistance or information that you may lend me will be very much appreciated.

100-2237-16

Sincerely yours,

[redacted]

REC 49
12 APR 4 1967

(6)
(7)
(C)

4/3/67

CORRESPONDENCE 88

April 3, 1967

REC 49 100-2237-16

[redacted]

ALL INFORMATION CONTAINED HEREIN IS UNCLASSIFIED DATE 7-3-80 BY SP4 Jam/rtc

(b)
(7)
(c)

Dear [redacted]

Your letter of March 28th has been received.

In response to your inquiry, the effects of Dr. Nikola Tesla were impounded, after his death, by the Office of Alien Property of the Department of Justice and not by the FBI. Since we did not participate in the handling of Dr. Tesla's effects, I am unable to furnish the information you desire.

Sincerely yours,

J. Edgar Hoover

John Edgar Hoover
Director

MAILED 30
APR 3 1967
COMM-FBI

NOTE: No record could be located in Bufiles identifiable with correspondent. Bufile 100-2237 reflects that Dr. Tesla was a world-famous electrical inventor, and at the time of his death, all of his personal papers and effects were believed dangerous to the country's security if they fell into unauthorized hands. The book, "Prodigal Genius," by John J. O'Neil, alleges that the FBI took over a certain safe and opened it, appropriating his property. Bufiles clearly indicate that it was the Office of Alien Property of the Department which did so, and the above reply is forwarded in answer to related inquiries.

[redacted] (3)

Tolson
DeLoach
Mohr
Wick
Casper
Callahan
Conrad
Felt
Gale
Rosen
Sullivan
Tavel
Trotter
Tele Room
Holmes
Gandy

54 APR 11 1967

MAIL ROOM ☐ TELETYPE UNIT ☐

(b)
(7)
(c)

89

J. Edgar Hoover
Federal Bureau of Investigation
Washington D. C.

TRUE COPY

[redacted]

Feb. 25, 1969

Dear Mr. Hoover,

HEREIN IS UNCLASSIFIED
DATE 2-3-80 BY SP4 Jam/etc

In the year 1943 the F.B.I. confiscated all of the papers and maybe some of the machines of physicist, Nikola Tesla. These papers were his experiments and ideas at the time of his death. According to the books I've read, these papers were confiscated on the grounds of the enemy getting ahold of his ideas and apply them to war machines.

I have studied all of the material on this man and have found him to be more intelligent than the great "Brain" of his time, Thomas Edison.

Why without Nikola Tesla there would be Westinghouse Company as we know today. This is the man who harnessed Niagara Falls, and was the one and only man who could see the possibilities of Alternating Current when men like Edison said "it would never work."

What I am wondering is, maybe these papers could be reclassified from whatever "Top Secret" classification they now have and be made available for study by the people who understand and can gain knowledge from them.

I would be willing to pay for reproductions of his experiments if nothing else. He still has a great many ideas that have never been tried.

It disturbs me to think that everyone has forgotten about the ideas of this man when he was so advanced for his time.

I can say with assurance that no man alive can say that he knows all of Tesla's ideas. And studying other men's ideas is the way to advance in science faster.

100-2237-12

I hope something can be done to get these papers released.

Thank You,

[redacted] (b)(7)(c)

/s/ [redacted]

100-2237-

90

Feb. 25, 1969

Dear Mr. Hoover,

In the year 1943 the F.B.I. confiscated all of the papers and maybe some of the machines of physicist, Nikola Tesla. These papers were his experiments and ideas at the time of his death. According to the books I've read, these papers were confiscated on the grounds of the enemy getting ahold of his ideas and apply them to war machines.

I have studied all of the material on this man and have found him to be more intelligent than the great "Brain" of his time, Thomas Edison.

Why without Nikola Tesla there would be Westinghouse Company as we know today. This is the man who harnessed Niagara Falls, and was the one and only man who could see the possibilities of Alternating Current when men like Edison said "it would never work".

What I am wondering is, maybe these papers could be reclassified from whatever "Top Secret" classification they now have and be made available for study by the people who understand and can gain knowledge from them. (b)(7)(c)

ALL INFORMATION CONTAINED HEREIN IS UNCLASSIFIED DATE 1-14-82 BY [illegible]

CO[redacted]NDENCE

91

I would be willing to pay for reproductions of his experiments if nothing else. He still has a great many ideas that have never been tried.

It disturbs me to think that everyone has forgotten about the ideas of this man when he was so advanced for his time.

I can say with assurance that no man alive can say that he knows all of Tesla's ideas. And studying other men's ideas is the way to advance in science faster.

I hope something can be done to get these papers released.

Thank You,

[redacted] (b)(7)(c)

March 4, 1969

100-2237-17

[redacted]

(b)(7)(c)

Dear [redacted]

Your letter of February 25th has been received.

In response to your inquiry, the effects of Dr. Nikola Tesla were impounded, after his death, by the Office of Alien Property of the Department of Justice and not by the FBI. Since we did not participate in the handling of Dr. Tesla's belongings, I am unable to furnish the information you desire. A copy of your communication has been referred to the Department of Justice.

Sincerely yours,

J. Edgar Hoover

MAILED 10
MAR 4 - 1969
COMM-FBI

NOTE: Bufiles contain no record of correspondent. Bufile 100-2237 reflects that Dr. Tesla was a world-famous electrical inventor, and at the time of his death, all of his personal papers and effects were believed dangerous to the country's security if they fell into unauthorized hands. The book, "Prodigal Genius," by John J. O'Neil, alleges that the FBI took over a certain safe and opened it, appropriating his property. Bufiles clearly indicate that it was the Office of Alien Property of the Department which did so, and the above reply is forwarded in answer to related inquiries. Copy of letter referred to Assistant Attorney General, Civil Division of the Department.

[redacted] (3)

[redacted]

54 MAR 13 1969

Tolson
DeLoach
Mohr
Bishop
Casper
Callahan
Conrad
Felt
Gale
Rosen
Sullivan
Tavel
Trotter
Tele. Room
Holmes
Gandy

MAIL ROOM ☐ TELETYPE UNIT ☐

[redacted]

(b)(7)(c)

93

(b)(7)(c)

[redacted]

April 8, 1970

Federal Bureau of Investigation
Director of Central Records
Washington, D.C.

Dear Sir:

I am doing a research paper on Nickola Tesla and would appreciate it if you could please provide me with the following information.

That information being why did your Bureau impound his personal effects immediately after his death on January 7, 1943. Secondly, could you provide a list of those effects, and lastly, when were they released and to whom were they given.

Thanking you for the information

[redacted] (b)(7)(c)

P

ALL INFORMATION CONTAINED
HEREIN IS UNCLASSIFIED
DATE 7-3-80 BY SP4 Jmp/stc

REC 44 100-2237-18

APR 15 1970

[redacted]

4/14/70

[redacted]

(b)(7)(c)

CORRES[redacted]

94

REC 44 100 2237-18

April 14, 1970

46

ALL INFORMATION CONTAINED HEREIN IS UNCLASSIFIED DATE 7-3-80 BY SP4 Jrmprte

[redacted]

(b) (7) (c)

Dear [redacted]:

In reply to your inquiry of April 8th, the effects of Dr. Nikola Tesla were impounded, after his death, by the Office of Alien Property of the Department of Justice and not by the FBI. Since we did not participate in the handling of Dr. Tesla's belongings, I am unable to furnish the information you desire. A copy of your communication has been referred to the Department of Justice for any help it may be able to offer.

Sincerely yours,

Edgar Hoover

John Edgar Hoover
Director

[redacted]

(b) (7) (c)

MAILED 9
APR 14 1970
COMM-FBI

NOTE: Bufiles contain no information identifiable with correspondent. Bufile 100-2237 reflects that Dr. Tesla was a world-famous electrical inventor, and at the time of his death, all of his personal papers and effects were believed dangerous to the country's security if they fell into unauthorized hands. The book, "Prodigal Genius," by John J. O'Neil, alleges that the FBI took over a certain safe and opened it, appropriating his property. Bufiles clearly indicate that it was the Office of Alien Property of the Department which did so, and the above reply is forwarded in answer to related inquiries. Copy of letter referred to Assistant Attorney General, Civil Division of the Department.

Tolson
DeLoach
Walters
Mohr
Bishop
Casper
Callahan
Conrad
Felt
Gale
Rosen
Sullivan
Tavel
Soyars
Tele. R
Holmes
Gandy

59 APR 20 1970

MAIL ROOM TELETYPE UNIT

[redacted] (3) [redacted] [redacted] [redacted]

(b) (7) (c) 95

July 15, 1970

REC-3 100-2237-19

[redacted] (6)(7)(C)

ALL INFORMATION CONTAINED HEREIN IS UNCLASSIFIED DATE 7-3-80 BY [signature]

Dear [redacted]:

Your letter was received on July 13th and the interest which prompted you to write to me is appreciated. With respect to your inquiry, the effects of Dr. Nikola Tesla were impounded, after his death, by the Office of Alien Property of the Department of Justice and the FBI did not participate in the handling of Dr. Tesla's belongings. In addition, this Bureau is strictly an investigative agency of the Federal Government and matters such as you mentioned do not come within the scope of this Bureau's authority.

Sincerely yours,

J. Edgar Hoover

[redacted] (6)(7)(C)

John Edgar Hoover
Director

MAILED 8
JUL 15 1970
COMM-FBI

NOTE: Bufiles contain no record of correspondent. Bufile 100-2237 reflects that Dr. Tesla was a world-famous electrical inventor, and, at the time of his death, all of his personal papers and effects were believed dangerous to the country's security if they fell into unauthorized hands. Bufiles indicate that the Office of Alien Property of the Department appropriated his property and replies similar to the above have been used to answer related inquiries.

Tolson
DeLoach
Walters
Mohr
Bishop
Casper
Callahan
Conrad
Felt
Gale
Rosen
Sullivan
Tavel
Soyars
Tele. Room
Holmes
Gandy

54 JUL 23 1970

[redacted] (2)

MAIL ROOM [ ] TELETYPE UNIT [ ]

[redacted] (6)(7)(C)

96

(b)(7)(c)

[redacted]

INFORMATION CONTAINED
HEREIN IS UNCLASSIFIED
DATE 7-3-80 BY SP4 Jmfete

July 8, 1970.

Mr. J. Edgar Hoover,
Director,
Federal Bureau of Investigation,
Washington D. C.

N.I.K. - Tesla

Dear Sir,

I am writing this to you as I believe that most of the government is infiltrated with foreign agents, and there is a very good chance this could be of extreme importance for the defense of our nation.

I met a man a number of years ago that was raised on Long Island in the neighborhood where Mr. Tesla, inventor of the Tesla Coil, had his lab. He told me of Mr. Tesla's notes blowing down the street when the junk men were dismantling his equipment. It would be a wonderful thing is some of these notes were salvaged and could be found.

Mr. Tesla was at least a century ahead of his time. He sent radio signals around the world seventeen years prior to Mr. Marconi, who received the credit, and pioneered many fields. He was so far advanced that he had to invent a special math to keep up with his work.

He, on several accasions talked before the scientists of the world and became very angry at their inability to understand him, and due to this was violently disliked and didnot receive acknowledgement for his discoveries. One of the notes read by this man told of the radio transmission of electricity being brought to a high degree of effiency.

Now here is the thing that should be investigated throughly. During my High School education, in the winter of either 19-25-26 or 1926-27, I made a currant events report on an article appearing in a small publication of that name that was received weekly at the Troy Highschool, Troy Montana. It stated in this article that Mr. Tesla had made an offer to the Congress of the United States that if they would install radio transmission towers at every 150 miles around the border of this country, that he would install equipment that would broadcast a vertical plane of energy beyond the atmosphere through which no material object could pass as it would shatter or lose it's monecular coohesion. It was refused.

There is a good chance that this data is in the files of congress. What a defence, and boy do we need it. EX-117 REC-3 100-2237-19

I have had some results along this line with structured vortices of magnetic fields, but do not have the technical equipment or knowledge to carry out further experiments. The theory is quite simple and deals with particle acceleration, and it works to the best of my knowledge.

9 JUL 16 1970

Sincerely

[redacted]

(b)(6)(c)

[redacted]

97

[redacted] (b)(7)(c)

6 DECEMBER 1971

FEDERAL BUREAU OF INVESTIGATION

WASHINGTON, D.C.

Dear Sir:

I have recently begun a collection and reading file of all matters pertaining to Nikola Tesla. In so doing I was amazed to find that upon his death; January 7, 1943, in NYC, your bureau confined his papers. May I ask if you still "have them in jail". I am extremely interested in his work(s) and am trying to establish my own "Tesla" library. Your assistance would be greatly appreciated.

Very truly yours,

[redacted]

[redacted] (b)(7)(C)

[redacted]

REC- 39 100-2237-20

16 DEC 15 1971

[redacted]

[redacted]

INFORMATION CONTAINED HEREIN IS UNCLASSIFIED DATE 7-3-80 BY [redacted] (b)(7)(C)

[redacted]

98

December 14, 1971

REC- 28 100-2237-20

[redacted] (b)(7)(C)

ALL INFORMATION CONTAINED HEREIN IS UNCLASSIFIED DATE 7-3-80 BY [redacted]

(b)(7)(C)

Dear [redacted]:

Your letter of December 6th has been received.

In response to your inquiry, the effects of Dr. Nikola Tesla were impounded, after his death, by the Office of Alien Property of the Department of Justice and not by the FBI. We did not participate in the handling of Dr. Tesla's belongings in any way. Copies of your communication and my reply have been referred to the Department of Justice.

Sincerely yours,

J. Edgar Hoover

John Edgar Hoover
Director

[redacted] (b)(7)(C)

NOTE: Bufiles contain no record correspondent. Dr. Tesla was world-famous electrical inventor, and at death, his effects believed dangerous to country's security. "Prodigal Genius," by John J. O'Neil, alleges FBI took safe and appropriated his property. Above reply previously given to same inquiries. (100-2237) Material sent to the Assistant Attorney, Civil Division, of the Department.

[redacted] (4)

Tolson
Felt
Rosen
Mohr
Bishop
Miller, E.S.
Callahan
Casper
Conrad
Dalbey
Cleveland
Ponder
Bates
Tavel
Walters
Soyars
Tele. Room
Holmes
Gandy

MAILED 8
FBI

[redacted] (b)(7)(C)

58 DEC 21 1971

MAIL ROOM ☐ TELETYPE UNIT ☐

99

Federal Bureau Of Investigation
Ninth Street and Pennsylvania
Northeast Washington D. C. 20535

Dear Sirs,

Upon rea ding a biography on Nikola Tesla, I found the urge to read more on him and his works. At the end of the book it was stated that the F.B.I. went to his hotel room gathered up his papers and locked them in a vault. The thing I would like to know is the real reason they were locked up and if it would be possible to see some of these records and any other works of his.

I can think of only one possible reason as to cause of his records being locked up and that is because he was too far advanced for his time. This seems to be the only logical solution, but, with technology much more advanced now than in his time it would seem likely that scientists take over where he left off.

Please let me know If I can look at the records and if you can please answer my question of the real reason his records were locked up.

Thank You,

[redacted]

ALL INFORMATION CONTAINED
HEREIN IS UNCLASSIFIED
DATE 7-3-80 BY SP4 Jam/rtc

ST-113

(b)
(7)
(C)

REC-48

100-2237-21

[redacted]

Ack
10-31-72
[redacted]

100

ST-113

REC-48

October 31, 1972

100-2237-21

[redacted]

ALL INFORMATION CONTAINED HEREIN IS UNCLASSIFIED DATE 7-3-80 BY [signature]

(b)(7)(c)

Dear [redacted]:

Your letter was received on October 26th.

In response to your inquiry, the effects of Dr. Nikola Tesla were impounded, after his death, by the Office of Alien Property of the Department of Justice and not by the FBI. Since we did not participate in the handling of Dr. Tesla's belongings, I am unable to furnish the information you desire. I am forwarding a copy of your communication and of this reply to the Department of Justice.

Sincerely yours,

L. Patrick Gray III

L. Patrick Gray, III
Acting Director

MAILED 8
OCT 31 1972
FBI

NOTE: Correspondent is not identifiable in Bufiles. Bufile 100-2237 reflects that Dr. Tesla was a world-famous electrical inventor, and at the time of his death, all of his personal papers and effects were believed dangerous to the country's security if they fell into unauthorized hands. The book, "Prodigal Genius," by John J. O'Neil, alleges that the FBI took over a certain safe and opened it, appropriating his property. Bufiles clearly indicate that it was the Office of Alien Property of the Department which did so, and the above reply is forwarded in answer to related inquiries. Copy of letter referred to Assistant Attorney General, Civil Division of the Department.

Felt
Baker
Bates
Bishop
Callahan
Cleveland
Conrad
Dalbey
Jenkins
Marshall
Miller, E.S.
Ponder
Soyars
Walters
Tele. Room
Mr. Kinley
Mr. Armstrong
Ms. He[illegible]
Mrs. N[illegible]

[redacted]

57 NOV 6 1972

MAIL ROOM ☐ TELETYPE UNIT ☐

(b)(7)(c)

[redacted]

101

[redacted]

April 3, 973

(b)
(2)
[redacted]

Federal Bureau of Investigation
Washington
District of Columbia

1 ex
Zip Co
dir
gen

ALL INFORMATION CONTAINED
HEREIN IS UNCLASSIFIED
DATE 7-2-80 BY SP4 Jm/rtc

Dear sirs:

During my research on Nikola Tesla, I found that the F.B.I. had confiscated his records pertaining to his experiments. I would like to know if such information is available and if so how copies might be obtained.

t

I am an engineering student and hope possibly to resume where Tesla left off.

I have the honor to remain,

O
Nikola Tesla

EX-111 REC-36 [redacted] 100-2237-22 (b)(7)(c)

10 APR 11 1973

[redacted]

CORRES

102

EX-111

REC-36

100-2237-22

April 11, 1973

[redacted]

(b) ALL INFORMATION CONTAINED
(7) HEREIN IS UNCLASSIFIED
(c) DATE 7-3-80 BY SP4 Jim/rte

Dear [redacted]:

Your letter was received on April 9th.

In response to your inquiry, the effects of Dr. Nikola Tesla were impounded, after his death, by the Office of Alien Property of the Department of Justice and not by the FBI. Since we did not participate in the handling of Dr. Tesla's belongings, I am unable to furnish the information you desire. A copy of your communication and of this reply have been referred to the Department of Justice.

Sincerely yours,

L. Patrick Gray, III
Acting Director

NOTE: Bufiles contain no record of correspondent. (Bufile 100-2237 reflects that Dr. Tesla was a world-famous electrical inventor, and at the time of his death, all of his personal papers and effects were believed dangerous to the country's security if they fell into unauthorized hands. The book, "Prodigal Genius," by John J. O'Neill, alleged that the FBI took over a certain safe and opened it, appropriating his property. Bufiles clearly indicate that it was the Office of Alien Property of the Department which did so, and the above reply is forwarded in answer to related inquiries. Copy of letter referred to the Assistant Attorney General, Civil Division of the Department.)

[redacted] (4)

Mr. Felt
Mr. Baker
Mr. Callahan
Mr. Cleveland
Mr. Conrad
Mr. Gebhardt
Mr. Jenkins
Mr. Marshall
Mr. Miller, E.S.
Mr. Soyars
Mr. Thompson
Mr. Walters
Tele. Room
Mr. Kinley
Mr. Armstrong
Mr. Bowers
Mr. Herington
Ms. Herwig
Mr. Mintz
Mrs. Neenan

54 APR 2 [redacted]

MAIL ROOM ☐ TELETYPE UNIT ☐

(b)
(7)
(c) [redacted]

103

[redacted] (b)(7)(c)

June 20, 1973

Federal Bureau of Investigation
Department of Justice
Washington, D. C.

INFORMATION CONTAINED
HEREIN IS UNCLASSIFIED
DATE 7-3-80 BY SP4 Jm/rte

Gentlemen:

I would like to know if any microfilm or other reproductions of Nikola Tesla's notes and papers exist at your office. Tesla was a famous scientist who died in New York City. The Federal Bureau of Investigation entered his safe shortly after this to remove his papers for examination for the war effort. After the war the papers were offered to any group that would start a museum to house them. No one accepted and the papers were finally sent to the Tesla Museum in Belgrade, Yugoslavia, sometime in the early 1950's, possibly just before 1954. Tesla was the inventor of all ac motors and the polyphase system, as well as all flourescent and neon lamps. He was a major pioneer in the early days of radio and discovered many of the early principles of radar. He declined nomination of a Nobel Prize. He was a naturalized citizen of America and said he valued his citizenship papers above all his awards and possessions. Despite this, all his papers were sent to another nation.

I would like to examine some of his papers from 1899 and later without having to fly to Yugoslavia. I have only seen a condesnsed copy of his research from Colorado Springs, but am unable to obtain copies. The principles and equipment are rather out-of-date and well-known, but still useful in my research. [redacted]

I would greatly appreciate help in this matter.

Sincerely, REC-26 100-2237-23

[redacted] (b)(7)(c)

JUN 29 1973

P.S. Tesla died in January of 1943 and shortly after ~~this~~ the papers were removed from his safe. The original copies of these papers were sent abroad prior to 1954, as I believe it was in that year the Yugoslavs founded the Tesla Museum (not to be confused with the Tesla Institute). [redacted]

(b)(7)(c)

104

EX-109

June 27, 1973

REC-26 100-2237-23

[redacted] (b)(7)(C)

ALL INFORMATION CONTAINED HEREIN IS UNCLASSIFIED DATE 2-3-80 BY [illegible]

Dear [redacted]:

Your letter was received on June 25th.

In response to your inquiry, the effects of Dr. Nikola Tesla were impounded, after his death, by the Office of Alien Property of the Department of Justice and not by the FBI. Since we did not participate in the handling of Dr. Tesla's belongings, I am unable to furnish the information you desire. A copy of your communication and of this reply have been referred to the Department of Justice.

Sincerely yours,

William D. Ruckelshaus

William D. Ruckelshaus
Acting Director

[redacted] (b)(7)(C)

MAILED 24 FBI

NOTE: Bufiles indicate one letter to correspondent dated 4-15-66 in reply to his inquiry regarding the Air Force's Project Blue Book and UFO sightings. Bufile 100-2237 reflects that Dr. Tesla was a world-famous electrical inventor, and at the time of his death, all of his personal papers and effects were believed dangerous to the country's security if they fell into unauthorized hands. The book, "Prodigal Genius," by John J. O'Neill, alleged that the FBI took over a certain safe and opened it, appropriating his property. Bufiles clearly indicate that it was the Office of Alien Property of the Department that did so, and the above reply is forwarded in answer to related inquiries. Copy of letter referred to the Assistant Attorney General, Civil Division of the Department.)

[redacted] (4)

[redacted] (b)(7)(C)

Felt
Baker
Callahan
Cleveland
Conrad
Gebhardt
Jenkins
Marshall
Miller, E.S.
Soyars
Thompson
Walters
Room
Kaise
James
Powers
Herrington
Conmy
Mintz
Wardley
Logan

54 JUL 8 1973

MAIL ROOM ☑ TELETYPE UNIT ☐

105

100-2237-28

November 10, 1975

[redacted]

(b) (7) (c) ALL INFORMATION CONTAINED HEREIN IS UNCLASSIFIED DATE 7-3-80 BY SP4 Jpm/rtc

Dear [redacted]:

This is to acknowledge receipt of your Freedom of Information-Privacy Acts (FOIPA) request forwarded to the FBI by the Department of Justice on October 22nd.

In response to your request for files pertaining to Nikola Tesla, please be advised that in order to preserve the privacy of an individual who may be the subject of a similar inquiry, it has been necessary for the FBI to maintain the practice of not indicating whether we do or do not have such information in our files.

If you can provide notarized authorization from Mr. Tesla's next of kin directing us to release to you any information our files may contain concerning him, we shall thereafter search our files and advise you accordingly.

Since we have not conducted a search of our files, please do not infer that we do or do not have the information you requested.

Sincerely yours,

C. M. Kelley

Clarence M. Kelley
Director

MAILED 6
NOV 10 1975
-FBI

1 - The Deputy Attorney General - Enclosure
Attention: Susan M. Hauser

[redacted] (5)

(b) (7) (c)

Assoc. Dir. ___
Dep. AD Adm. ___
Dep. AD Inv. ___
Asst. Dir.:
Admin. ___
Comp. Syst. ___
Ext. Affairs ___
Files & Com. ___
Gen. Inv. ___
Ident. ___
Inspection ___
Intell. ___
Laboratory ___
Plan. & Eval. ___
Spec. Inv. ___
Training ___
Legal Coun. ___
Telephone Rm. ___
Director Sec'y ___

MAIL ROOM ☐ TELETYPE UNIT ☐

62 DEC 30 1975 F 303

[redacted]

GPO : 1975 O - 569-920

106

[redacted] (6)(7)(c)

April 20, 1976

Mr. Clarence Kelly
Director
F.B.I.
Washington, DC

ALL INFORMATION CONTAINED HEREIN IS UNCLASSIFIED DATE 7-3-80 BY [illegible]

Dear Mr. Kelly:

Mr. Allen and Mr. Ruchlehaus, former acting Director of the FBI, contacted me in 1973 regarding the unavailability of American microfilm records of Nikola Tesla's unpublished diary (now in the Belgrade museum, arranged by month per folder).

At the time I discounted the possibility that these unpublished discoveries had military significance. But because of experiments now under way at Hill AFB, I now suspect such military applications exist and feel it imperative that you be notified, particularly in view of the fact that the Soviets have primary access to the entire collection.

Two photos of each page exist.

After Tesla's death, scientists from the Navy and OSS performed a cursory examination of the diary and notes, which if my memory serves me correctly, was one month long, hardly enough time to decipher Tesla's torturous handwriting. Though Tesla wrote in English, his penmanship was small, blurred, and as difficult to translate as a foreign language.

According to the museum director (1971), the Soviets had made copies of some portions, but not the Colorado Springs diary, which numbers 500 pages, 20 that directly pertain to ball lightning, and 20 or so relevant to the equipment construction. (We copied the most significant portions, but feel more exists)

FX-115 REC-52 100-2237-29

[redacted] an article [redacted] magazine, EDN (an electrical engineering magazine), but only with the very recent receipt of an unpublished manuscript from John J. O'Neill's book (PRODIGAL GENIUS) did I place credence on Tesla's later claim to military applications. Incidentally, some of O'Neill's descriptions were inaccurate and exagerated, as we have exceeded Tesla's results and are familiar with the experiments. At any rate, there are three possible military applications.

(b)(7)(c)

4 MAY 3 1976

[redacted]

107

First, Tesla claimed that the lightning balls (which destroyed his equipment) could be used to destroy aircraft. I have talked to AF personnel --such as [redacted] who saw one inside his plane in flight--and found AF personnel fear these "rf balls," as they call them.

Second, it is a suspicion of mine that ball lightning, if injected with lithium, could produce a cheap fusion bomb.

Third--and this may be no more than a suspicion--the propulsion mode of ball lightning involves electro-gravitic interaction, by which means air vehicles of revolutionary configuration may be constructed. There are no presently-known laws of physics that can account for the propulsion (400 mph or so when following an airliner). Other hitherto unsuspected applications may exist.

(b)(7)(C)

None of these applications were the goal of Project Tesla, which centered on producing ball lightning as Tesla did and studying it as a plasma confinement technique for fusion reactors. Incidentally, Tesla's claim to setting up standing waves on the earth's surface (wireless power) was erroneous and involved techniques similar to Project Sanguine, that is, using the earth's atmosphere as a waveguide ([redacted] is aware of our research).

Cordially,

[redacted]

P.S. By a copy of this letter, along with the enclosures, I am notifying the C.I.A.

Enclosures: 2

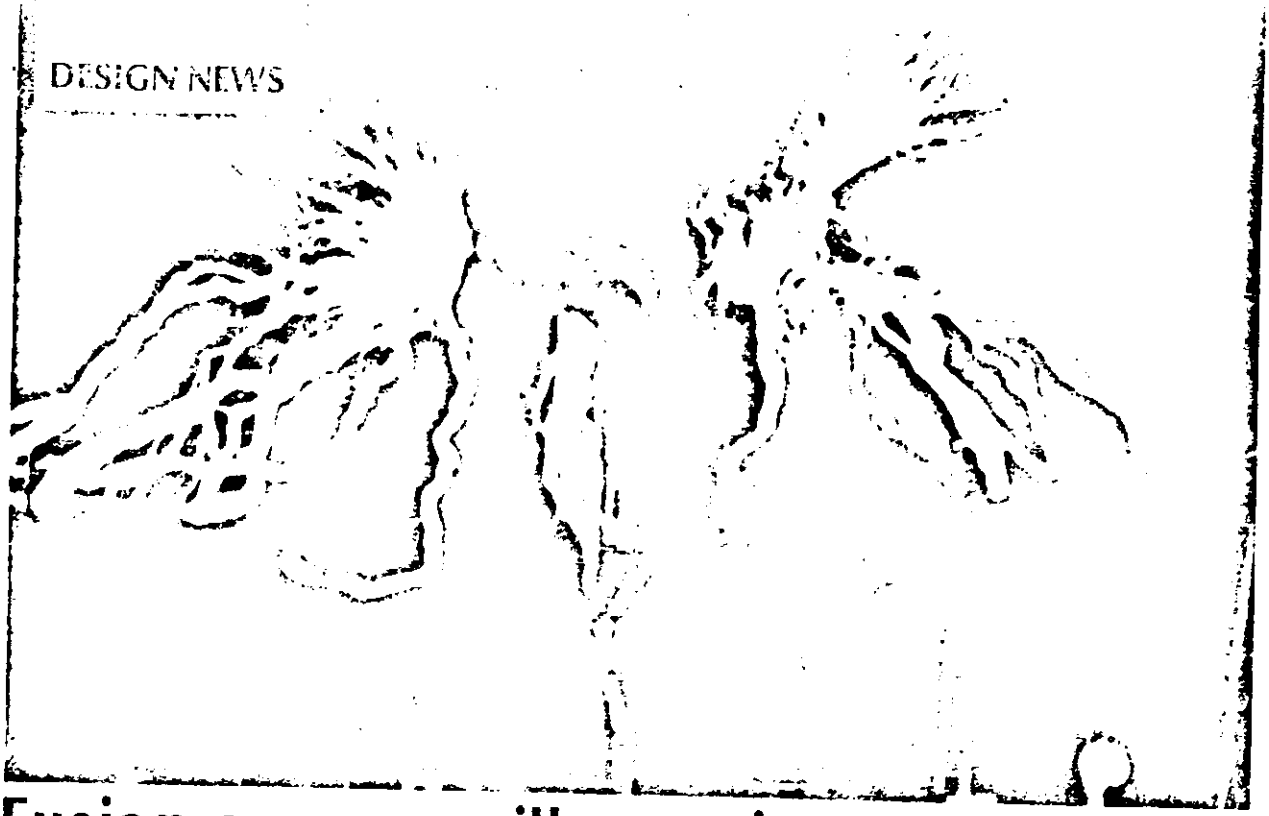

Fusion energy: will experiments in ball lightning provide the key?

Paul Snigier, Associate Editor

In the vast and empty hangar where the first atomic bomb was assembled, a man-made lightning storm is now being unleashed. The voltages of these lightning bolts—20 million volts—are the highest discharge voltages ever produced by man.

Project Tesla, headed by Robert K. Golka and Dr. Robert W. Bass, is an attempt to artificially duplicate one of nature's rarest and most terrifying phenomena—ball lightning. The experiments are based upon the unpublished notes of Nikola Tesla, who, in 1899 at his Colorado Springs laboratory, used a secret *magnifying transmitter* to produce 1.5-in. lightning balls that floated for 30 sec.

The energy surplus

Many physicists, including the eminent Dr. James Tuck, founder of the U.S. fusion program, believe that the lightning ball holds the key to a fantastic, cheap and endless energy source—fusion power, or the energy source used by the stars and sun. The fuel is deuterium, or heavy water, that can be inexpensively extracted from ocean water to provide mankind

Highest voltage continuously oscillating damped-wave lightning generator (ever produced by mankind) creates a current of 1100A at 12.5 MV! Subsequent improvements raised this to a peak current of 2200A at 20 MV. Further improvements could conceivably produce bolts that exceed natural lightning (100 MV)!

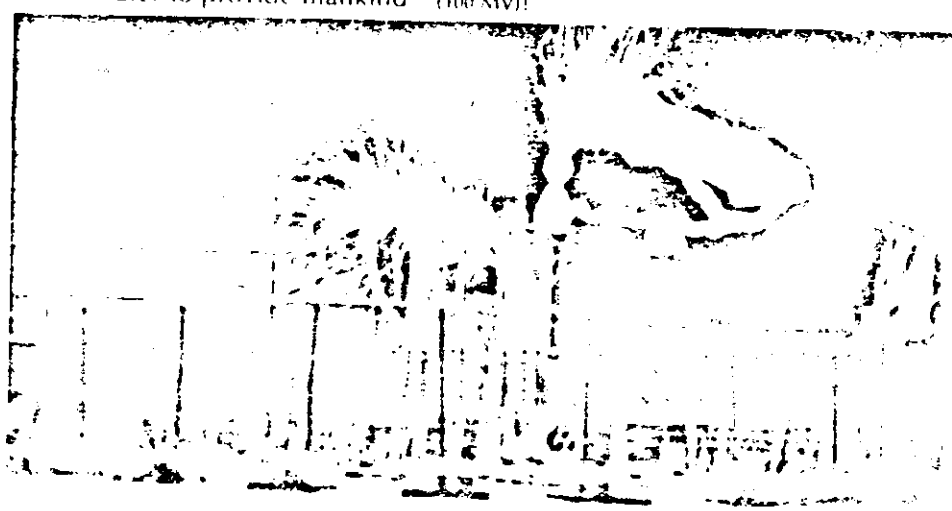

100-2237-29

DISCLOSURE

with millions of years of [illegible]. Unfortunately, progress in fusion research, which has centered on magnetic confinement and laser implosions, has been frustratingly slow and full of unpleasant surprises; and scientists warn that success could be as far off as four decades! But if these promising experiments under way at Wendover, UT, are successful, a new unexpected confinement technique could unleash this energy source.

In search of nature's secrets...

Ball lightning, a glowing sphere of red, orange or yellow plasma, often materializes during lightning storms and floats about, often against a strong wind. The ball may bounce along the floor and, on occasion, the sphere will "slip" through glass without breaking it. (The author recently investigated one such case in a hospital, in which the lights were damaged.) At times it materializes inside or even outside aircraft in flight, seemingly impervious to deformation from the wind force.

Witnesses of ball lightning have included such notables as Niels Bohr and Victor Weisskopf, the Director of the MIT Physics Department. Another witness was Secretary of State Dean Acheson, who reported seeing it cross the breakfast table aboard the presidential plane.

The accidental formation of ball lightning has been observed about once per year for the past decade inside building 985 at Hill AF Missile Radiographic Facility, UT. The volleyball-size fireballs drop out of the space adjacent to the high voltage supply of the 25 Mev linear accelerator.

The ball of blue fire floats down to the floor, rolls around randomly and then rises again to the power-supply area where it dissipates without detectable damage. Despite troubleshooting, no explanation can be found for this occurrence.

On one occasion, lightning struck the building—a large concrete structure with a 60-ft. ceiling inside—and, simultaneously, an intense sphere of fire the size of a tennis ball formed above the conduit on the wall at [illegible]ly shoulder level. It moved along the wall for a distance of some 30 ft., floated out and around the neck and shoulders of a person standing near the wall, moved back to the wall and continued along for several feet until it intercepted a duplex outlet on the conduit. At this the ball exploded, causing electrical damage throughout.

A new state of matter?

No presently known laws of physics can account for the stability and bouncing of fireballs unless it includes surface tension. This hitherto unobserved state of matter is a new concept, since plasmas have never previously exhibited such strong surface tension. Also, presently known laws cannot account for the propulsion.

Project Tesla has developed a rigorous mathematical model of the lightning ball's absolute, asymptotic, fluid-dynamical stability. Initial computer studies indicated a density range of 10^{15}-10^{17} cm^{-3}, with a temperature of 10^{5}-10^{6} °K—or seven times hotter than the sun! □

Chapter 34

TESLA TRIES TO PREVENT WORLD WAR II

When Tesla was talking as a scientist he was opposed to wars on moral, economic and all practical and theoretical grounds. But, like most scientists, when he stopped thinking as a scientist, and let his emotions rule his thoughts, he found exceptions in which he felt some wars and situations were justifiable. As a scientist he was unwilling to have the discoveries of scientists applied to the pruposes of war makers, but when the emotional phase of his nature took the ruling position he was then willing to apply his genius to devising measures that would prevent wars by supplying protective devices.

This attitude is exemplified in the following statement which he prepared in the twenties but did not publish:

"At present many of the ablest minds are trying to devise expedients for preventing a repetition of the awful conflict which is only theoretically ended and the duration and main issues of which I correctly predicted in an article printed in the Sun of December 20, 1914. The League is not a remedy but, on the contrary, in the opinion of a number of competent men, may bring about results just the opposite. It is particularly regrettable that a punitive policy was adopted in framing the terms of peace because a few years hence it will be possible for nations to fight without armies, ships or guns, by weapons far more terrible, to the destructive action and range of which there is virtually no limit. Any city at any distance whatsoever from the enemy can be destroyed by him and no power on earth can stop him from doing so. If we want to avert an impending calamity and a state of things which may transorm this globe into an inferno, we should push the development of flying machines and wireless transmission of energy without an instant's delay and with all the power and resources of the nation."

Tesla saw preventative possibilities in his new invention which embodied "death ray" characteristics and which was made several years after the foregoing statement was written. He saw it providing a curtain of protection which any country, no matter how small, could use as a protection against invasion. While he might offer it as a defensive weapon, however, there would be nothing to stop military men from using it as a weapon of offense.

While I did not know the nature of Tesla's plan I was convinced that it did embody many discoveries that would be of commercial value, and these were the angles he should seek to develop. I felt that if he could be induced to develop some minor phase of his work that would have immediate commercial use he could derive an income from it which would enable him to proceed with his more elaborate plans. To this end I sought to gain some insight into his thoughts, that would enable me to get a practical plan in operation. This was no secret to Tesla and he successfully parried every thrust I made.

The clearest conception I got, and that was largely from scattered remarks, and by making deductions from them, concerned a possible manner in which one phase of his curtain of protection might operate. This was a "war" angle and as such it did not interest

100-2237-01

me, but since it involved "lightning balls," or "fire balls," I was very curious. Fi[illegible]lls had always fascina[illegible]o, and I had read everything I could lay my hands on about them.

A fire ball is a strange phenomenon associated with lightning. Some of the energy of the lightning stroke appears to become locked into a ball shaped structure which may be of any size from a couple of inches to a foot in diameter. It looks like a perfect sphere, brightly incandescent and floats like a bubble, being easily carried by air currents. They may last for a short time, from a fraction of a second to many seconds. In this interval, during which they stay fairly close to the ground, they may come close to many objects without damaging them or being damaged by them. Suddenly, for no known reason, the ball explodes doing as much damage as a bomb, if close to structures, and no damage if in the open.

The fire ball looked to me like a gigantically enlarged model of the tiny electron, one of the building blocks of matter, which acts as if it were just a spherical area of space in which an amount of energy was crystallized to give it structure. I felt that if it were possible to discover how a large amount of energy was stored in this fairy bubble structure of a fire ball a new insight might be gained into the structure of the electron and other fundamental particles of matter. Also this method of storing energy could be applied to a thousand useful purposes.

When I approached Tesla with pleas along this line to develop this possible phase of his discovery he would evade direct reply by indulging in a, not always, tolerant lecture on my gullability in believing theories about the complex structure of the atom. While he had in earlier years discussed some of his experiences with fire balls in his laboratory at Colorado Springs and explained his theory of their formation, he would not in the later years permit himself to be drawn into a discussion of them as a possible part of his system. This, of course, made me suspicious that the clue was "hot" but I could be completely wrong in my conclusions. Tesla was very quick in detecting my technique when I sought to narrow down a field by trying to get him to deny statements when he was adamant to direct questions.

Tesla became familiar with the destructive characteristics of fire balls in his experiments at Colorado Springs in 1899. He produced them quite by accident and saw them, more than once, explode and shatter his tall mast and also destroy apparatus within his laboratory. The destructive action accompanying the disintegration of a fire ball, he declared, takes place with inconceivabel violence.

He studied the process by which they were produced, not because he wanted to produce them but in order to eliminate the conditions in which they were created. It is not pleasant, he related, to have a fire ball explode in your vicinity for they will destroy anything they come in contact with.

It will be necessary to reconstruct his statements from very fragmentary notes and a long distance memory.

"Parasite oscillations, or circuits, within the main circuit were a source of danger from this cause. Points of resistance in the main circuit could result in minor oscillating circuits between terminals or between two points of resistance and these minor circuits would have a very much higher period of oscillation than the main circuit and could be set into oscillation by the main current of lower frequency.

"Even when the principal oscillating circuit was adjusted for the greatest efficiency of operation by the dimination of all sources of losses the fire balls continued to occur but these were due to stray high frequency charges from random earth currents.

"From these experiences it became apparent that the fire balls resulted from the interaction of two frequencies, a stray higher frequency wave imposed on the lower frequency free oscillation of the main circuit.

"As the free oscillation of the circuit builds up from the zero point to the quarter wave length node it passes through various rates of change. In a current of shorter wavelength the rates of change will be steeper. When the two currents react on each other the resultant complex will contain a wave in which there is an extremely steep rate of change, and for the briefest instant currents may move at a tremendous rate, at the rate of millions of horsepower.

"This condition acts as a trigger which may cause the total energy of the powerful longer wave to be discharged in an infinitesmally small interval of time and at a proportionately tremendously great rate of energy movement which cannot confine itself to the metal circuit and is released into surrounding space with inconceivable violence."

It is but a step, from learning how a high frequency current can explosively discharge a lower frequency current, to using the principle to design a system in which these explosions can be produced by intent. The following process appears a possible one but no evidence is available that it is the one Tesla evolved: An oscillator, such as he used to send power wirelessly around the earth at Colorado Springs, is set in operation at a frequency to which a given warship is resonant. The complex structure of a ship would provide a great number of spots in which electrical oscillations will be set up of a much higher frequency than those coursing through the ship as a whole. These parasite currents will react on the main current causing the production of fireballs which by their explosions will destroy the ship, even more effectively than the explosion of the magazine which would also take place. A second oscillator may be used to transmit the shorter wavelength current.

Somewhat later I learned the reason for Tesla's reticence to discuss details. This came shortly after Stanley Baldwin replaced Neville Chamberlin as Prime Minister of Great Britain.

Tesla revealed that he had carried on negotiations with Prime Minister Chamberlin for the sale of his ray system to Great Britain for $30,000,000 on the basis of his presentation that the device would provide complete protection for the British Isles against any enemy approaching by sea or air, and would provide an

offensive weapon to which there was no defense. He was convinced, he declared, of the sincerity of Mr. Chamberlain and his intent to adopt the device as it would have prevented the outbreak of the then threatening war, and would have made possible the continuation- under the duress which this weapon would make possible - of the working agreement involving France, Germany and Britain to maintain the status quo in Europe. When Chamberlin failed, at the Munich conference, to retain this state of European equilibrium it was necessary to get rid of Chamberlin and install a new Prime Minister who could make the effort to shift one corner of the triangle from Germany to Russia. Baldwin found no virtue in Tesla's plan and preemptorially ended the negotiations.

Tesla was greatly disappointed by the collapse of his negotiations with the British Government. With it there collapsed his hopes of providing a demonstration of his most recent, and, what he considered, his most important discoveries. He did not, however, dwell on the jubject; beyond the single conversation he did not mention the matter again. He did not get another chance to finance the demonstration of these discoveries.

During the period in which the negotiations were being carried on, Tesla declared, efforts had been made to steal the invention. His room had been entered and his papers examined but the thieves, or spies, left empty handed. There was no danger, he said, that his invention could be stolen for he had at no time committed any part of it to paper. He could trust his memory to preserve every fine detail of his investigations. This was true, he said, of all of his later major discoveries.

The nature of his system makes little difference now; he has gone and has taken it with him. Perhaps, if there is any communication from beyond the veil that separates this life from whatever exists hereafter, Tesla may look down upon earth's struggling mortals and find some way of dropping a hint concerning what he accomplished; but, if the situation is such that this cannot take place, then we must await until the human race produces another Tesla.

ooo

ALL INFORMATION CONTAINED
HEREIN IS UNCLASSIFIED
DATE 7-3-80 BY SP4 Jam/rtc

April 30, 1976 [redacted]

EX-115

REC-47

100-2237-29

[redacted]

(b)(7)(c)

Dear [redacted]:

Thank you for your letter of April 20th, with enclosures. It was certainly most thoughtful of you to furnish us this information, and your interest and courtesy are indeed appreciated.

MAILED 6
APR 30 1976
FBI

Sincerely yours,

C. M. Kelley

Clarence M. Kelley
Director

NOTE: Bufiles indicate limited correspondence with [redacted], last outgoing 6-27-73, in reply to his request concerning papers of Dr. Nikola Tesla. Dr. Tesla was a world-famous electrical inventor, and at the time of his death in 1943, all of his personal papers and effects were believed dangerous to the country's security if they fell into unauthorized hands. The book, "Prodigal Genius," by John J. O'Neill, alleged that the FBI took over a certain safe and opened it, appropriating his property. Bufiles indicated the Office of Alien Property of the Department of Justice did so. Bufile 100-2237-23.

Assoc. Dir. ___
Dep. AD Adm. ___
Dep. AD Inv. ___
Asst. Dir.:
Admin. ___
Comp. Syst. ___
Ext. Affairs ___
Files & Com. ___
Gen. Inv. ___
Ident. ___
Inspe[redacted]
Intel[redacted]
[redacted]
Legal C[redacted]
Plan. & Eval. ___
Spec. Inv. ___
Training ___
Telephone Rm. ___
Director [redacted]

[redacted] (3)

(b)(7)(c)

[redacted]

MAIL ROOM ☐ TELETYPE UNIT ☐

~~58 MAY 21 1976~~
31 JUN 21 1976

GPO : 1975 O - 594-120

115

Assoc. Dir. ___
Dep. AD Adm. ___
Dep. AD Inv. ___
Asst. Dir.:
Adm. Serv. ___
Ext. Affairs ___
Fin. & Pers. ___
Gen. Inv. ___
Ident. ___
Inspection ___
Intell. ___
Laboratory ___
Legal Coun. ___
Plan. & Eval. ___
Rec. Mgnt. ___
Spec. Inv. ___
Training ___
Telephone Rm. ___
Director Sec'y ___
FBI/DOJ

JUN 16

United States Senate

To ensure proper handling please return all correspondence TO THE ATTENTION OF:

[redacted]

Respectfully referred to:

FBI

Please respond to the attached inquiry in duplicate and return the enclosure. Thank you for your cooperation.

(b)(7)(C)

[redacted] U.S.S.

EXP PROC

REC-34 100-2237

JUN 17 1976

[redacted]

ENCLOSURE

116

Case

[redacted]

(b)(7)(c)

New Senate Office Bldg
Room 5241, Washington DC 2510

Dear Sir.

I am a substitute in the Milwaukee Public School System. I do scientific experiments in high voltage electricity. I have studied all the available writings of the dead genius Nikola Tesla (1861 - January 7, 1943)

When Nicola Tesla died the Federal Bureau of Investigation came and opened the ~~[illegible]~~ safe in his room and took the papers it contained, to examine ~~[illegible]~~ them

117

ENCLOSURE

for a reported secret invention of
possible use in II W.W..

As a citizen & a
Scientist I would like to
study these unpublished papers
with hope of findings new
ideas for producing an alternate
source of energy. Something
that Nikola Tesla knew about
and because of his unfortunate
financial status, was not able
to develop into a working model
Please help. -

With love in The Lo

[redacted]

(b)(7)(c)

[redacted]

REC-34

100-2237-30

June 23, 1976

Honorable [redacted]
United States Senate
Washington, D. C. 20510

ALL INFORMATION CONTAINED HEREIN IS UNCLASSIFIED DATE 2-3-80 BY SP4 Jrm/rtc (b) (7) (c)

Dear Senator [redacted]:

This will respond to your communication of June 16th enclosing the letter of [redacted]

The effects of Dr. Nikola Tesla were impounded, after his death, by the Office of Alien Property of the Department of Justice and not by the FBI. Since we did not participate in the handling of Dr. Tesla's belongings, I am unable to furnish the information you desire.

A copy of your communication and of this reply are being referred to the Department of Justice and the enclosure to your communication is being returned as requested.

Sincerely yours,

C. M. Kelley

Clarence M. Kelley
Director

Enclosure
1 - Assistant Attorney General - Enclosures (2)
Civil Division
1 - Milwaukee - Enclosures (2)
1 - Office of Congressional Affairs - Enclosures (2)
NOTE: This response is consistent with past responses to inquiries of a similar nature. Bufile 100-2237 reflects that the Office of Alien Property took possession of Dr. Tesla's papers following his death.

[redacted] (7)

Assoc. Dir. ___
Dep. AD Adm. ___
Dep. AD Inv. ___
Asst. Dir.:
Adm. Serv. ___
Ext. Affairs ___
Fin. & Pers. ___
Gen. Inv. ___
Ident. ___
Inspection ___
Intell. ___
Laboratory ___
Legal Coun. ___
Plan. & Eval. ___
Rec. Mgnt. ___
Spec. Inv. ___
Training ___
Telephone Rm. ___
Director Sec'y ___

MAILED 10
JUN 23 1976
FBI

(b) (7) (c)

[redacted]

56 JUL 14 1976

MAIL ROOM ☐ TELETYPE UNIT ☐

[redacted]

119

FBI/DOJ

July 26, 1979

Dear Mr. Webster:

ALL INFORMATION CONTAINED HEREIN IS UNCLASSIFIED DATE 7-14-81 BY [illegible]

OUTSIDE SOURCE

I am writing this letter in regard to some papers you have in your possession by Nikola Tesla.

I have for some time now been studying the works of Mr. Tesla and I am involved in the research and further developement of his efforts. I have in my possession a copy of almost everything that was ever written by him.

However I have read that on the day following his death (he died the night of January 7th, 1943, so probably January 8th, 1943) the Federal Bureau of Investigation went to where Mr. Tesla had been staying - the Hotel New Yorker, New York City, New York and collected all notes and papers that he had with him there.

REC 79 100-22237-[illegible]

2 AUG 7 1979

To further my studies and hopefully complete them it would be deeply appreciated if you would send me a copy of all the notes, papers, books, drawings etc. that were found there.

ack 8-4-79

[redacted]

(b) Thank you,

(7)

(c)

[redacted]

120

UNITED STATES GOVERNMENT — UNITED STATES DEPARTMENT OF JUSTICE
FEDERAL BUREAU OF INVESTIGATION

Memorandum

Assoc. Dir. ___
Dep. AD Adm. ___
Dep. AD Inv. ___
Asst. Dir.:
Adm. Servs. ___
Crim. Inv. ___
Ident. ___
Intell. ___
Laboratory ___
Legal Coun. ___
Plan. & Insp. ___
Rec. Mgmt. ___
Tech. Servs. ___
Training ___
Public Affs. Off. ___
Telephone Rm. ___
Director's Sec'y ___

TO : Mr. Bresson

DATE: 2/25/80

FROM : [redacted] (b)(7)(c)

SUBJECT: FREEDOM OF INFORMATION ACT DISCLOSURE REGARDING DR. NIKOLA TESLA

ALL INFORMATION CONTAINED HEREIN IS UNCLASSIFIED DATE 7-3-80 BY SP4 Jrm/r

PURPOSE:

To reduce time spent on handling of requests for information on captioned subject and to promote uniformity of disclosure.

DETAILS:

A search of FBIHQ central records indices reflects that Dr. Nikola Tesla is carried as the subject of Bufile 100-2237. Virtually all information in this file is inquiry-type correspondence. For purposes of FOIA releases, copies of this material have not been made and requesters have been so advised. Copies of the remaining material in the file totalling 29 pages, however, has been processed for disclosure. Numerous requesters have sought information relating to Dr. Tesla under the FOIA. Therefore, it is recommended that the disclosure documents maintained in Bufile 190-16504-4 be considered the preprocessed release appropriate for responses by the Initial Processing Unit for any further requests for information on this subject.

RECOMMENDATION:

That the Initial Processing Unit, FOIPA Branch, Records Management Division, add captioned case to their list of preprocessed cases and handle any future requests for such information. 100-2237-

1 - [redacted]
1 - [redacted]

XEROX

MAR 27 1980

100-2237 190
190-16504 1980

(b)(7)(c)

[redacted]

[redacted] (7)

121

Buy U.S. Savings Bonds Regularly on the Payroll Savings Plan

August 6, 1979

OUTSIDE SOURCE

[redacted] (b)(1)(c)

ALL INFORMATION CONTAINED HEREIN IS UNCLASSIFIED DATE 2-3-80 BY SP4 Jenkins

Dear [redacted]:

Your recent letter requesting information concerning Dr. Nikola Tesla has been received.

The effects of Dr. Tesla were impounded, after his death, by the Office of Alien Property of the Department of Justice and not by the FBI. We have no preprinted material available for public distribution regarding Dr. Tesla. However, under the provisions of the Freedom of Information Act (Title 5, United States Code, Section 552), requests have been made in the past regarding your topic and there may be documents available to you under Title 28--Code of Federal Regulations.

If you are interested in seeking such documents under the Freedom of Information Act, you should make a separate inquiry, clearly marking the envelope and letter as a Freedom of Information Act request, and direct it to the Director, Federal Bureau of Investigation, 9th Street and Pennsylvania Avenue, N.W., Washington, D. C. 20535. In the letter you must request documents regarding the specific topic of interest to you.

REC-79
EX-137
100-2237-32

Sincerely yours,

DE-79

William L. Bailey
Assistant Director

MAILED 11
AUG 6 1979
FBI

2 AUG 7 1979

Assoc. Dir. 1
Dep. AD Adm.
Dep. AD Inv.
Asst. Dir.:
Adm. Servs.
Crim. Inv.
Ident.
Intell.
Laboratory
Legal Coun.
Plan. & Insp.
Rec. Mgnt.
Tech. Servs.
Training
Public Affs. Off.
Telephone Rm.

[redacted] - Enclosure
Room 6958
(This correspondence response may engender a future FOIA inquiry.)

NOTE: Based upon available information, correspondent is not identifiable in Bufiles.

[redacted]lch (4)

(b)(7)(c)

122

[redacted]

FBI/DC

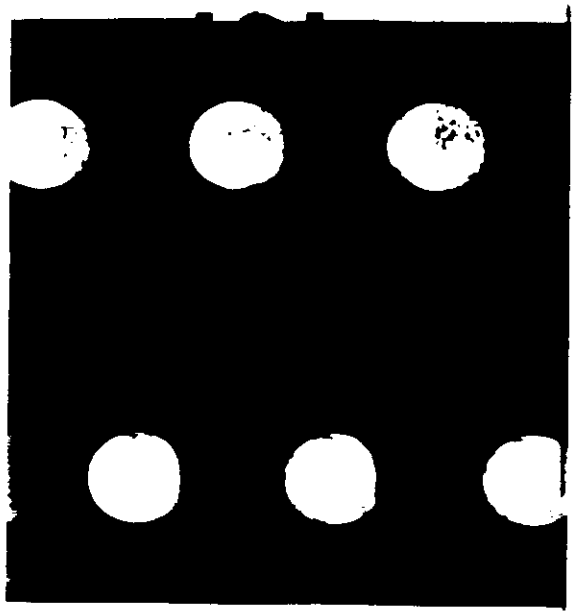

(Rev. 10/10/79)

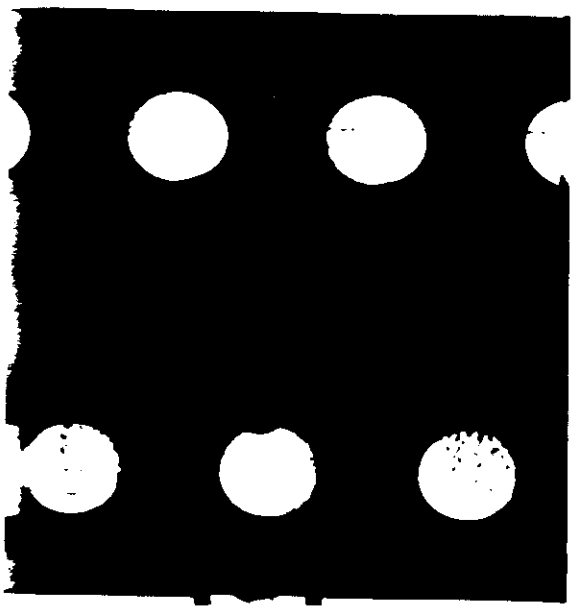

DEPARTMENT OF JUSTICE
FEDERAL BUREAU OF INVESTIGATION
INTERNAL ROUTING/ACTION SLIP

TO	BLDG.	ROOM	NAME/TITLE/ORGANIZATION	
	JEH	7142	Mr. Colwell	235
	JEH	7110	Mr. Boynton	235
	JEH	7110	Mr. Moore	235
	JEH	5829	Mr. Bailey/Rogers	211
	JEH	5829	Mr. O'Brien/Lass	211
	JEH	6296	Mr. Flanders/Woleslagle	314
			OPERATIONS SECTION	
	JEH	6992	Mr. Ervin/Poston	314
	JEH	6993	Mr. Tierney/Poston	314
	JEH	6280	CHIEF, TAR/Secretary	314
			SA:	
			Attn:	
	JEH	6587	CHIEF, FIELD COOR.	314
			SA:	
			Attn:	
	JEH	6958	CHIEF, IPU/Secretary	314
			SA:	
			Attn:	
	JEH	6363	File Duplication	314
	JEH	6268	Tickler/Index Group	314
	JEH	6992	Leave Clerk	314
	JEH	6348	Word Processing Center	314
	JEH	6380	DCRU	314
			Attn:	

BLDG	ROOM	NAME/TITLE/ORGANIZATION	
		DISCLOSURE SECTION	
JEH	6995	Mr. Bresson/Nemmensen	314
JEH	6994	Mr. Lewis/Nemmensen	314
JEH	6927	CHIEF, UNIT A/Secretary	314
		SA: Team	
		RA: Team	
JEH	6959	CHIEF, [redacted]	314
		SA: Team	
		RA: Team	
JEH	6975	CHIEF, UNIT C/Secretary	314
		SA: Team	
		RA: Team	
JEH	6986	CHIEF, UNIT D	314
		SA: Team	
		RA: Team	
JEH	6786	CHIEF, UNIT E	314
		SA: Team	
		RA: Team	
JEH	6387	CHIEF, UNIT F/Secretary	314
		SA: Team	
		RA: Team	

(2)

ALL INFORMATION CONTAINED HEREIN IS UNCLASSIFIED DATE 2-14-82 BY [illegible]

I would prefer IPU being alerted that any request for Tesla file be referred directly to [redacted] whereupon she would see that appropriate release is made

☐ RECOMMENDATION/COMMENT
☐ SEE REMARKS ON REVERSE
☐ MAKE COPIES (NO.)
☐ RETURN (BY)
☐ LOG
☐ FILE
☐ SEE ME
☐ CALL ME
☐ NECESSARY ACTION
☐ COORDINATE
☐ PER INQUIRY
☐ INFORMATION

FROM Freedom of Information-Privacy Acts Branch

THOMAS H. BRESSON SECTION CHIEF

BLDG. | ROOM

PHONE | DATE

[redacted]

FORM DOJ-359A
8-1-74

(b)
(7)
(C)

123

CONFIDENTIAL

OFFICE OF THE UNDER SECRETARY OF DEFENSE

WASHINGTON, D.C. 20301

RESEARCH AND ENGINEERING

FEDERAL GOVERNMENT

9 FEB 1981

B11

MEMORANDUM FOR THE DIRECTOR, FEDERAL BUREAU OF INVESTIGATION

SUBJECT: Papers Recovered on the Death of Nicola Tesla (U)

(U) We understand that the FBI may have possession of a number of papers found after the death of Nicola Tesla in 1943. Nicola Tesla was a brilliant electrical engineer (i.e. the Tesla Coil) who was a pioneer in various aspects of electrical transmission phenomena.

(C) We believe that certain of Tesla's papers may contain basic principles which would be of considerable value to certain ongoing research within the DoD. It would be very helpful to have access to his papers.

(U) Since we have really no idea of the possible volume of these papers, we would be happy to provide a researcher who could assist you in reducing the magnitude of the search. If there are further questions, I am the point of contact within the DoD and can be reached at 695-6364 or 695-7417.

Allan J. MacLaren

Allan J. MacLaren
LtColonel, USAF
Military Assistant
Strategic and Space Systems

REGISTERED
1059638

FBI
ALL INFORMATION CONTAINED
HEREIN IS UNCLASSIFIED
DATE 4-8-93 BY 9803 [redacted] b7C
FOIPA No. 356,608
362,001

100-2237-33

Per DOD letter dated 3-29-93
with Enclosures 1 and 2
All DOD info is unclassified
DOD referenced FOI/PA #'s 356,608 and
362,001
4/8/93 9803 [redacted] b7C

ALL INFORMATION CONTAINED
HEREIN IS UNCLASSIFIED
DATE 7-14-93 BY SP1DSK/MK

2 MAR 12 1981

b7C

Classifed by: DUSDRE/S&SS
Declassify on: February 1987

DECLASSIFIED BY 1048 [redacted]
ON 1-27-93
Per Army letter 5-25-89
291860

CORRESPONDENCE

50 MAR 30 1981

CONFIDENTIAL

124

March 10, 1981

Lt. Col. Allan J. MacLaren, USAF
Military Assistant
Strategic and Space Systems
Office of the Under Secretary
of Defense
Washington, D. C. 20301

FEDERAL GOVERNMENT

ALL INFORMATION CONTAINED
HEREIN IS UNCLASSIFIED
DATE 7-14-92 BY SP1 ASK/MKE

Dear Colonel MacLaren:

Your memorandum of February 9 requesting access to the scientific papers of Dr. Nikola Tesla which might be in our files has been referred to my office for reply.

A preliminary review of our files indicates that the FBI did not participate in the handling of Dr. Tesla's belongings following his death in New York City in January, 1943. His papers were examined by representatives of the Office of Alien Property, the Navy Department and the Office of Scientific Research and Development. In February, 1943, the papers apparently were released to Mr. Sava N. Kosanovic, Dr. Tesla's nephew and the administrator of his estate. Mr. Kosanovic's address at that time was 11 Central Park South, New York, New York.

A complete search of our indices is being made to determine if we have any information that might be useful to you. You will be notified of the results of this search at the earliest possible date.

DE-110/100-2237-34

MAILED 3
MAR 10 1981
FBI

Sincerely,

MAR 12 1981

Roger S. Young
Assistant Director in Charge
Office of Congressional
and Public Affairs

1 - [redacted] (FOIPA) - Enc.
1 - Mr. Young - Enc.
1 - [redacted] - Enc.

(b)(7)(c)

NOTE: Reply discussed with [redacted] FOIPA, RMD, who has handled similar requests for information in our files concerning Dr. Tesla. In numerous previous responses we have said that the Office of Alien Property the Department of Justice impounded Dr. Tesla's papers after his death. However, the Office of Foreign Litigation, Civil Division, indicated that Dr. Tesla's papers are not in their possession.

Exec AD Inv. ___
Exec AD Adm. ___
Exec AD LES ___
Asst. Dir.:
Adm. Servs. ___
Crim. Inv. ___
Ident. ___
Intell. ___
Laboratory ___
Legal Coun. ___
Plan. & Insp. ___
Rec. Mgnt. ___
Tech. Servs. ___
Training ___
Public Affs. Off. ___
Telephone Rm. ___
Director's Sec'y ___

[redacted] (c)

60 MAR 30 1981

139

(b)
(7)
(c)

MAIL ROOM ☑

125

March 20, 1961

Lt. Col. A. J. MacLaren
Military Assistant
Strategic and Space Systems
Office of the Under Secretary
of Defense
Washington, D. C. 20301

FEDERAL GOVERNMENT

ALL INFORMATION CONTAINED
HEREIN IS UNCLASSIFIED
DATE 7-14-92 BY [illegible]

Dear Colonel MacLaren:

A complete search of our retrievable files concerning Dr. Nikola Tesla shows that all notes and material in his immediate possession at the time of his death on January 7, 1943, were placed in the custody of the Alien Property Custodian under seal by the United States Government. These materials have never been in the care or custody of the FBI.

On January 26 and 27, 1943, Federal authorities made a thorough review of the effects of Dr. Tesla to determine if any ideas of significant value to the United States war effort could be found. His effects were examined at the Manhattan Warehouse and Storage Company at 52nd and 7th Avenue, New York, New York, where they apparently were taken after his death. Participating in this examination were representatives from the New York and Washington Offices of the Alien Property Custodian, the Office of Scientific Research and Development at the Massachusetts Institute of Technology, the Office of Naval Intelligence, and United States Naval Research. The FBI did not participate in this examination. (65-47953 section 1)

It was the considered opinion of a spokesman of those examiners "that there exist among Dr. Tesla's papers and possessions no scientific notes, descriptions of hitherto unrevealed methods or devices, or actual apparatus which could be of significant value to this country or which would constitute a hazard in unfriendly hands." There was thought to be no technical or military reason why further custody of the property should be retained. However, our files indicate that certain papers, which were regarded as typical of Nikola Tesla's writings and thoughts in the period of 1925 to 1942, were removed for the purpose of record to the Office of the Alien Property Custodian. (65-47953 section 1)

MAILED 6
MAR 23 1961
FBI

Exec AD Inv. ___
Exec AD Adm. ___
Exec AD LES ___
Asst. Dir.:
Adm. Servs. ___
Crim. Inv. ___
Ident. ___
Intell. ___
Laboratory ___
Legal Coun. ___
Plan. & Insp. ___
Rec. Mgnt. ___
Tech. Servs. ___
Training ___
Public Affs. Off. ___
Telephone Rm. ___
Director's Sec'y ___

1 - Mr. Young
1 - [redacted]
1 - [redacted]

MAIL ROOM [redacted]

V-38 DE-113 100-2237-25 MAR 25 1961

BE

(SEE NOTE PAGE THREE)

[redacted]

126

. Col. A. J. MacLaran

A memo dated October 17, 1945, from our New York Office said that at that time Dr. Tesla's effects remained at the Manhattan Storage Warehouse in some 75 packing boxes and trunks under seal by the New York Department of Taxation. The rental for this storage, approximately $15 per month, was being paid by Charlotte Muzar, 134 East 63rd Street, New York, New York, who was listed as an agent for Sava Kosanovich, Dr. Tesla's nephew and administrator of his estate. (65-47953-14)

On October 26, 1945, [redacted] a young scientist who had been Tesla's protege, called in person at our New York Field Office. With him were [redacted] and [redacted] from a research development unit at Wright Field, Dayton, Ohio. These men carried a letter signed by [redacted] requesting that the FBI allow the bearers of the letter access to the effects of Nikola Tesla. (65-47953-15)

It was explained to [redacted] that the FBI had no jurisdiction over Tesla's effects, and they were referred to the Office of the Alien Property Custodian. Bureau files do not indicate whether the men ever examined Tesla's belongings. (65-47953-15)

The Tesla effects remained in rooms 5J and 5L of the Manhattan Storage Company. In the 1950s, FBI Agents were told by company management that the only recorded visit had been made by "Federal authorities" in January, 1943. [redacted] recalled that the men had taken numerous photographs. His description of the equipment used would tend to show that a microfilm reproduction was made of the papers of the deceased. (65-47953-27)

Our files do not reflect any pertinent information on the Tesla materials since that date. Their current whereabouts or condition are not reflected in our files.

For further information regarding this matter, you may wish to contact the Office of the Alien Property Custodian and the other Federal agencies mentioned above.

I hope that we have been of assistance to you.

Sincerely,

Roger S. Young
Assistant Director in Charge
Office of Congressional
and Public Affairs

(CONTINUED - OVER)

127

Lt. Col. A. J. MacLaran

NOTE: On February 9, 1981, Col. MacLaran wrote to us inquiring about the scientific papers of Dr. Nikola Tesla. In a return letter of March 9, we informed him that a thorough review of our files would be made in search of the information he requested. This was done and he is being informed of the results. Tesla's papers have been the subject of numerous inquiries by various individuals and organizations since his death. FBI received over 20 FOIA requests on this matter during the period 1973-1980. Matter coordinated with FOIA Section, RMD.

OFFICE OF THE UNDER SECRETARY OF DEFENSE

WASHINGTON, D.C. 20301

RESEARCH AND
ENGINEERING

1 APR 1981

FEDERAL GOVERNMENT

Mr. Roger S. Young
Assistant Director in Charge
Office of Congressional and Public Affairs
Federal Bureau of Investigation
Washington, D.C. 20535

both letters addressed to Lt Col. A.J MacLaren

Dear Mr. Young,

Thank you very much for your letters of March 10 and March 20, 1981, in response to our request re Dr. Tesla. We very much appreciate the effort that must have gone into this. On behalf of the Deputy Under Secretary (Strategic and Space Systems), Dr. S. L. Zeiberg, I would like to thank you and the people who spent their time searching out the relevant data.

Sincerely,

ALL INFORMATION CONTAINED
HEREIN IS UNCLASSIFIED
DATE [illegible] BY [illegible]

Allan J. MacLaren

Allan J. MacLaren
Colonel, USAF
Military Assistant
Strategic and Space Systems

DE-110 100-2237-36

16 APR 10 1981

Per DoD letter dated 3/29/93
With Enclosures 1 and 2
ALL DoD info is unclassified.
DoD referenced FOI/PA #s 356,608 and 362,001
4/8/93 9803 [redacted] b7C

V-11

No acknowledgement necessary

10 French

Vines

FBI
ALL INFORMATION CONTAINED
HEREIN IS UNCLASSIFIED
DATE 4-8-93 BY 9803 [redacted] ICE
FOIPA No. 356,608
362,001

b7C

Off. of Cong. and Pub. Aff.

129

21 July 1981 [redacted] (b)(7)(C)

Director of the FBI
Washington, D.C.

[redacted]

Dear Sir:

While attending college, I came across an article about the electrical genius, Nicolai Tesla. Mr. Tesla was an electrical genius with such peers as EDISON and WESTINGHOUSE. Tesla designed the basic generator and was the first man to introduce alternating current to the people. The article, written in an underground SanFrancisco newspaper, stated that Tesla also worked with electromagnetic waves and supposedly built a plant that could harness the electromagnetic waves out of the earth's atmosphere sufficiently enough to use them as a source of electricity. The article stated that Tesla built such a plant and lit up a city street 150 miles away by sending the electromagnetism via radio waves. This method is presently being used in electronic warfare. After that, the article stated that the FBI confiscated his plans and buried them in your archives. Their reasoning was that such a free form of energy would knock out a big chunk of the oil, coal, and nuclear forms of energy and their contributions to the economy(money for research and employment). All I want to know is if there is any truth to this story and if so what was the FBI's reasons and when are the archives opened again so that Tesla's work could come to light again. Now bear in mind that this man was an electrical genius and even had a unit of electrical measure named after him. If he did figure out a way to utilize the earth's electromagnetic waves then I believe that we are ready to gradually phase out our dependence on oil, ease the volatile tension in the Middle East and put all that money presently going to the Arabs into

[redacted]

100-2237-37

17 AUG 11 1981

(b)(7)(C)

130

space research, joint international research and deep-sea research to help solve our population problem. I am talking about huge sums of money being released that could speed up the experts present projected times of producing significant gains in these still relatively new fields.

You could at least take the time to check out what I am saying and judge for yourself whether or not the archives should be opened now to put the world back on a more secure heading.

Sincerely,

[redacted]

(b)(7)(C)

[redacted]

August 7, 1981

ALL INFORMATION CONTAINED
HEREIN IS UNCLASSIFIED
DATE 7-14-12 BY [illegible]

OUTSIDE SOURCE

[redacted] (b)(7)(c)

Dear [redacted]:

Judge Webster has referred your letter of July 21st to me for a reply. A check of our files indicates Dr. Nikola Tesla's effects were impounded after his death by the Office of Alien Property of the Department of Justice and not by the FBI. While your interest is indeed appreciated, the FBI is unable to answer your questions as we did not participate in the handling or have anything to do with the storage of Dr. Tesla's belongings.

To be as helpful as possible, I am forwarding a copy of this communication to the Department of Justice.

Sincerely,

S

Roger S. Young
Assistant Director in Charge
Office of Congressional
and Public Affairs

MAILED 9
AUG 10 1981
FBI

1 - Acting Assistant Attorney General - Enclosure
Civil Division

NOTE: [redacted] is not identifiable in Bufiles. Dr. Tesla died on 1/7/43 and we have received much correspondence regarding his belongings which were impounded by the Office of Alien Property of the Department of Justice.

[redacted] (4)

100-2237-38

Exec AD Inv. ___
Exec AD Adm. ___
Exec AD LES ___
Asst. Dir.:
Adm. Servs. ___
Crim. Inv. ___
Ident. ___
Intell. ___
Laboratory ___
Legal Coun. ___
Plan. & Insp. ___
Rec. Mgmt. ___
Tech. Servs. ___
Training ___
Public Affs. Off. ___
Telephone Rm. ___
Director's Sec'y ___

MAIL ROOM ☑

(b)(7)(c)

132

FD-36 (Rev. 8-26-82)

FBI

TRANSMIT VIA:
☐ Teletype
☐ Facsimile
☒ AIRTEL

PRECEDENCE:
☐ Immediate
☐ Priority
☐ Routine

CLASSIFICATION:
☐ TOP SECRET
☐ SECRET
☐ CONFIDENTIAL
☐ UNCLAS E F T O
☐ UNCLAS

SECRET

Date 8/18/83

TO: DIRECTOR, FBI
ATTN: INTD, SUPERVISOR [redacted]

SECRET

FROM: SAC, CINCINNATI [redacted] (P)

NIKOLA TESLA
[redacted]
(OO: CI)

This communication is classified "Secret" in its entirety.

Re telephone call of SA [redacted], Cincinnati Division, to Supervisor [redacted] FBIHQ, on 8/11/83.

Enclosed for the Bureau and New York is one copy each of pertinent pages from the 1981 book titled "Tesla: Man Out of Time" by Margaret Cheney, with important passages underlined.

For information of Bureau and New York, [redacted] at Wright-Patterson Air Force Base (WPAFB) and [redacted] also at WPAFB, have both been in contact with SA [redacted] at the Dayton, Ohio RA regarding possible FBI

SECRET

Classified by: 8262
Declassify on: OADR

Classified by [redacted]
Declassify on: OADR

ENCLOSURE

2 - Bureau (Enc. 1)
2 - New York (Enc. 1)
2 - Cincinnati
[redacted]
(6)

ALL INFORMATION CONTAINED HEREIN IS UNCLASSIFIED EXCEPT WHERE SHOWN OTHERWISE

17 AUG 22 1983

Approved: [redacted] Transmitted _____ (Number) _____ (Time) Per [redacted]

53 NOV [illegible] 1983

133

DESCRIPTION OF FOLLOWING FILE MATERIAL

NIKOLA TESLA

100-2277	156	pages
REFERENCES	96	pages
	252	TOTAL PAGES

XXXXXXX
XXXXXXX
XXXXXXX

XXXXXXXXXXXXXXXXXXXX
X NO DUPLICATION FEE X
X FOR THIS PAGE X
XXXXXXXXXXXXXXXXXXXX

MAIN INVESTIGATIVE FILE

156 pages

[redacted] 9/24/40

Department of Justice,

Attn. Mr. G. Edgar Hoover,

Washington, D. C.

ALL INFORMATION CONTAINED
HEREIN IS UNCLASSIFIED
DATE 7-2-80 BY SP4 [illegible]

Dear Mr. Hoover:

The appended article was printed in the New York Times issue of Su September 22, 1940 and if based on proven facts, should be of vital importance to t War Department as well as to that of other nations now controlled by insane dictato

If, as the auther states, the teleforce has been perfected by Nikola Tesla, i would be a measure of foresightedness to insure his constant guarding against his b molested, possibly kidnapped and tortured, by alien enemies for the purpose of seizi the secret of such an invaluable instrument of war and/or defense

The foregoing is offered just in case the article and its inferences have no been called to your attention.

Very truly yours

[redacted]

1 ENCL

RECORDED & INDEXED

Mark 10/1/40 [redacted]
100-2237-1
FEDERAL BUREAU OF INVESTIGATION
2 SEP 26 1940
U.S. DEPARTMENT OF JUSTICE

3

NY Times 9/22/40

"Death Ray" for Planes

Nikola Tesla, one of the truly great inventors who celebrated his eighty-fourth birthday on July 10, tells the writer that he stands ready to divulge to the United States Government the secret of his "teleforce," with which, he said, airplane motors would be melted at a distance of 250 miles, so that an invisible Chinese Wall of Defense would be built around the country against any attempted attack by an enemy air force, no matter how large.

This "teleforce," he said, is based on an entirely new principle of physics that "no one has ever dreamed about," different from the principle embodied in his inventions relating to the transmission of electrical power from a distance, for which he has received a number of basic patents. This new type of force, Mr. Tesla said, would operate through a beam one one-hundred-millionth of a square centimeter in diameter, and could be generated from a special plant that would cost no more than $2,000,000 and would take only about three months to construct.

A dozen such plants, located at strategic points along the coast, according to Mr. Tesla, would be enough to defend the country against all possible aerial attack. The beam would melt any engine, whether Diesel or gasoline-driven, and would also ignite the explosives aboard any bomber. No possible defense against it could be devised, he asserts, as the beam would be all-penetrating.

High Vacuum Eliminated

The beam, he states, involves four new inventions, two of which already have been tested. One of these is a method and apparatus [illegible] producing rays [illegible] manifestations of [illegible] air, eliminating the [illegible] high vacuum; a second is a method and process for producing "very great electrical force"; the third is a method for amplifying this force, and the fourth is a new method for producing "a tremendous electrical repelling force." This would be the projector, or gun, of the system. The voltage for propelling the beam to its objective, according to the inventor, will attain a potential of 50,000,000 volts.

With this enormous voltage, he said, microscopic electrical particles of matter will be catapulted on their mission of defensive destruction. He has been working on this invention, he added, for many years and has recently made a number of improvements in it.

Mr. Tesla makes one important stipulation. Should the government decide to take up his offer he would go to work at once, but they would have to trust him. He would suffer "no interference from experts."

In ordinary times such a condition would very likely interpose an insuperable obstacle. But times being what they are, and with the nation getting ready to spend billions for national defense, at the same time taking in consideration the reputation of Mr. Tesla as an inventor who always was many years ahead of his time, the question arises whether it may not be advisable to take Mr. Tesla at his word and commission him to go ahead with the construction of his teleforce plant.

Such a Device "Invaluable"

After all, $2,000,000 would be relatively a very small sum compared with what is at stake. If Mr. Tesla really fulfills his promise the result achieved would be truly staggering. Not only would it save billions now planned for air defense, by making the country absolutely impregnable against any air attack, but it would also save many more billions in property that would otherwise be surely destroyed no matter how strong the defenses are as witness current events in England.

Take, for example, the Panama Canal. No matter how strong the defenses, a suicide squadron of dive bombers, according to some experts, might succeed in getting through and cause such damage that would make the Canal unusable, in which case our Navy might find itself bottled up.

Considering the probabilities in the case even if the chances were 100,000 to 1 against Mr. Tesla the odds would still be largely in favor of taking a chance on spending $2,000,000. In the opinion of the writer, who has known Mr. Tesla for many years and can testify that he still retains full intellectual vigor, the authorities in charge of building the national defense should at once look into the matter. The sum is insignificant compared with the magnitude of the stake.

ALL INFORMATION CONTAINED
HEREIN IS UNCLASSIFIED
DATE 7-19-92 BY [illegible]

100-2237-1

RECORDED & INDEXED

[redacted] 100-2237-1

October 1, 1940

[redacted]

(b)(7)(C)

Dear [redacted]

I wish to acknowledge receipt of your letter dated September 24, 1940, together with its enclosure.

Your courtesy and interest in bringing this information to my attention are indeed appreciated, and you may be assured your letter will receive appropriate consideration.

Sincerely yours,

John Edgar Hoover
Director

ALL INFORMATION CONTAINED
HEREIN IS UNCLASSIFIED
DATE 7-2-80 BY SP4 Jan/rtc

Mr. Tolson
Mr. Clegg
Mr. E. A. Tamm
Mr. Foxworth
Mr. Nathan
Mr. Ladd
Mr. Egan
Mr. Glavin
Mr. Nichols
Mr. Gandon
Mr. Rosen
Mr. Tracy
Miss Gandy

COMMUNICATIONS SECTION
MAILED
★ OCT 1 1940 ★
P.M.
FEDERAL BUREAU OF INVESTIGATION
U.S. DEPARTMENT OF JUSTICE

[redacted] (b)(7)(C)

5

[redacted]

NOT FOIA REDACTIONS

U. S. DEPARTMENT OF JUSTICE

JAN 12 1943

TELETYPE

[redacted]

Mr. Toleo
Mr. E. A.
Mr. Cl...
Mr. ...
Mr. ...
Mr. Nichol
Mr. ...
Mr. Tracy
Mr. Carson
Mr. ...
Mr. ...
Mr. McGuire
Mr. ...
Mr. Quinn
Mr. Nease
Mr. Gandy

FBI NYC 1-12-43 11-06 PM WHS
DIRECTOR
VEST

UNSUBS --- EQUIPMENT, EXPERIMENTS AND RESEARCH OF NIKOLA TESLA, DECEASED, [redacted] ESPIONAGE - M. RETEL UNDER ABOVE HEADING TO THE BUREAU FROM THIS OFFICE DATED JAN NINE LAST. INQUIRY DEVELOPS THAT TESLA DIE JAN EIGHT, RATHER THAN THURSDAY, JAN SEVEN, AS [redacted] STATED IN REFERENCE TELETYPE. ON THE NIGHT OF JAN EIGHT, SAVA KOSANOVICH, GEORG CLARK, AND KENNETH SWEEZEY VISITED TESLA-S HOTEL WITH A REPRESENTATIVE OF SHAW WALKER CO. IN ORDER TO OPEN THE SAFE IN THE ROOM OF TESLA. KOSANOVICH LATER REPORTED TO WALTER GORSUCH, OFFICE OF ALIEN PROPERTY CUSTODIAN, NYC, THAT HE WENT INTO THE ROOM IN ORDER TO SEARCH FOR A WILL OF TESLA. KOSANOVICH AND THE OTHERS MADE THE SEARCH OF THE SAFE IN THE PRESENCE OF THREE ASST MANAGERS OF HOTEL NEW YORKER AS WELL AS REPRESENTATIVES OF THE YUGOSLAVIAN CONSULATE, IDENTITIES OF LATTER NOT YET KNOWN. AFTER THE SAFE WAS OPENED, SWEEZEY, TOOK FROM THE SAFE A BOOK CONTAINING TESTIMONIALS SENT TO TESLA ON THE OCCASION OF HIS SEVE TY FIFTH BIRTHDAY. THIS BOOK WAS ARRANGED FOR TESLA BY SWEEZEY. KOSANOVICH TOOK FROM THE ROOM THREE PICTURES OF TESLA, TWO BEING EN-LARGED NEWSPAPER PICTUREX. ACCORDING TO MANAGERS OF HOTEL AND KOSANO-VICH HIMSELF, NOTHING ELSE WAS REMOVED FROM THE ROOM OR SAFE. THE SAFE WAS THEN CLOSED UNDER A NEW COMBINATION, WHICH COMBINATION IS NOW IN POSSESSION O[redacted] KOSANOVICH. ON SATURDAY AFTERNOON, JAN NINE, GORSUCH AND [redacted] FTIZGERALD OF ALIEN PROPERTY CONTROL WENT TO HOTEL AND SEIZED ALL THE PROPERTY OF TESLA, CONSISTING OF ABOUT TWO TRUCKLOANDS OF MATERIAL, SEALED ALL ARTICLES AND TRANSFERRED THEM TO THE MANHATTAN STORAGE AND WAREHOUSE CO. NY, WHERE THEY ARE NOW LOCATED AT THAT [redacted] TIME THERE WERE ALSO IN THIS WAREHOUSE APPROXIMATELY THIRTY BARRELS AND BUNDLES BELONGING TO TESLA WHICH HAD BEEN THERE SIN ABOUT NINETEEN THIRTY FOUR. THESE HAVE ALSO [redacted] BEEN SEALED AND ARE NOW UNDER ORDERS OF ALIEN PROPERTY CUSTODIAN. IN VIEW OF FACT TESL IS A US NATURALIZED CITIZEN, ALIEN PROPERTY CUSTODIAN FEELS THAT ITS JURISDICTION OVER PROPERTY IS DOUBTFUL BUT [redacted] FEELS THAT NO OTHER AGENCY WILL BE ABLE TO GET [redacted] TO THIS PROPERTY FOR AT LEAST TWO DAYS

COPIES DESTROYED 3/10/58 #4

ALL INFORMATION CONTAINED HEREIN IS UNCLASSIFIED DATE 7.13.82 INDEX

Rec'd 12 15 am 1-13-43

100-2237-2

NOT FOIA REDACTION

16 JAN 13 1943

COPY IN FILE

77 FEB 5 1943

[redacted]

REDACTIONS ON THIS PAGE ARE NOT FOIA DELETIONS

6

PAGE TWO
AFTER THAT TIME IT IS POSSIBLE THAT A PUBLIC ADMINISTRATOR WILL BE APPOINTED FOR THE PROPERTY WHO MAY TAKE THE PROPERTY INTO HIS CUSTODY. TESLA ALSO HAD SOME PROPERTY, [redacted] ALLEGED BY INFORMANT FITZGERALD IN THIS CASE, TO BE A WORKING MODEL OF AN INVENTION IN A SAFE DEPOSIT BOX IN GOVERNOR CLINTON HOTEL IN NY. INQUIRY SHOWS THAT THIS WAS PLACED HERE BY TESLA IN NINETEEN THIRTY TWO AS SECURITY FOR FOUR HUNDRED DOLLARS OWED HOTEL. THIS BILL IS STILL OWED AND HOTEL APPEARS UNWILLING TO RELEASE THIS PROPERTY TO ANYONE AT LEAST UNTIL [redacted] DEBT IS PAID, BUT THIS OFFICE WILL BE ADVISED IF ANYONE ATTEMPTS TO PAY BILL AND OBTAIN PROPERTY. CONCERNING TESLA HOTEL MANAGERS REPORT HE WAS [redacted] VERY ECCENTRIC IF NOT [redacted] MENTALLY DERANGED DURING PAST TEN YEARS AND IT IS DOUBTFUL IF HE HAS CREATED ANYTHING OF VALUE DURING THAT TIME, ALTHOPRIOR TO THAT HE PROBABLY WAS A VERY BRILLIANT INVENTOR. THEREFORE, ANY NOTES OF VALUE WERE PROBABLY THOSE MADE PRIOR TO THAT TIME. KOSANOVICH IS A NEPHEW OF TESLA WHO DESCRIBED HIMSELF AS FORMERLY QUOTE YUGOSLAV MINISTER OF STATE UNQUOTE AND NOW QUOTE [redacted] PRESIDENT OF EASTERN AND CENTRAL PLANNING BOARD REPRESENTING YUGOSLOVIA, CZECHOSLOVAKIA, POLAND AND GREECE, UNQUOTE. SWEEZEY IS A WRITER FOR POPULAR MECHANICS AND OTHER PUBLICATIONS WHO IS [redacted] DESIROUS OF PUBLISHING A BIOGRAPHY OF TESLA AND THERFORE WOULD LIKE TO OBTAIN CONTROL OF HIS NOTES FOR THIS WORK. CLARK IS EMPLOYED BY RCA AND WOULD ALSO PROVIDE STORAGE ROOM FOR TESLAS EFFECTS IN ORDER TO USE THEM IN WRITING A BIOGRAPHY. TESLA AT ONE TIME REPORTED TO BE WORKING ON EXPERIMENTS FOR YUGOSLAVIAN GOVERNMENT IN EXILE. IT IS DESIRED THAT BUREAU ADVISE IMMEDIATELY WHETHER IT IS INTERESTED FURTHER IN THIS PROPERTY FOR PURPOSES OF TAKING CONTROL OF IT. SUGGEST THAT, IN VIEW OF FACT THAT THE NOTES AND OTHER MATERIAL WOULD BE HIGHLY TECHNICAL IN CHARACTER AND FOR THAT REASON [redacted] COULD NOT BE REVIEWED [redacted] EXCEPT BY A TRAINED PERSON THE OFFICE OF SCIENTIFIC RESEARCH DEVEL-

OPMENT MIGHT BE INTERESTED.
FOXWORTH
END NYC S2 WHS
HOLD WA R 2 RSG

[redacted]

REDACTIONS ON THIS PAGE ARE NOT FOIA DELETIONS

[illegible] IS UNCLASSIFIED
DATE 7-13-82 [illegible]

Mr. [illegible]
Mr. [illegible]
Mr. [illegible]
Mr. Glavin
Mr. Ladd
Mr. Nichols
Mr. Bason
Mr. Tracy
Mr. Carson
Mr. Coffey
Mr. Hendon
Mr. McGuire
Mr. Mumf[illegible]
Mr. Quinn Tamm
Mr. N[illegible]
Miss Gandy

Little

FBI NYC 1-9-43 11-30 PM D[illegible]
DIRECTOR
COAT
UNKNOWN SUBJECTS. E[redacted] EXPERIMENTS AN[illegible] OF NIKOLA TESLA, DECEASED. ESPIONAGE - M. NIKOLA TESLA, ON[illegible] STANDING SCIENTISTS IN THE ELECTRICAL FIELD, DIED [illegible] TEEN FORTY THREE AT THE HOTEL NEW YORKER, NEW YORK [illegible] LIFETIME, HE CONDUCTED MANY EXPERIMENTS IN CONNECT[illegible] TRANSMISSION OF ELECTRICAL POWER AND [redacted] WHAT [illegible] THE DEATH RAY. ACCORDING TO INFORMATION FURNISHED [illegible] THREE SIX FIFTH AVENUE, NEW YORK CITY, THE NOTES A[illegible] EXPERIMENTS AND FORMULAE TOGETHER WITH DESIGNS OF [illegible] VITALIZE THEM ARE AMONG TESLAS PERSONAL EFFECTS, A[illegible] TAKEN TO PRESERVE THEM OR TO KEEP THEM FROM FALLIN[illegible] [redacted] UNFRIENDLY TO THE WAR EFFORT OF THE UN[illegible] ING TO SPANEL, A DISTANT RELATIVE OF TESLA, NAMED S[illegible] WAS INTENSELY DISLIKED BY TESLA, IS TAKING STEPS T[illegible] THESE IMPORTANT DOCUMNTS AND PLANS. SPANEL BELIEV[illegible] STRONG LIKELIHOOD THAT KOSANOVICH WILL MAKE THIS MATERIAL AVAILABLE TO TO THE ENEMY. SPANEL ADVISED G TWO HEADQUARTERS IN WASHINGTON, AS WELL AS MR MORKIN OF THE DEPARTMENT OF JUSTICE IN WASHINGTON, CONCERING THE ABOVE. SPANEL WAS ALSO INTELEPHONIC COMMUNICATION WITH [redacted] DR D LOZADO, ONE OF THE ADVISORS TO VICE PRESIDENT WALLACE CONCERNING THIS MATTER, AND LOZADO TOLD SPANEL [redacted] THAT THE GOVERNMENT WAS VITALLY INTERESTED IN THE EFFECTS OF TESLA AND REQUESTED SPANEL TO LOSE NO TIME IN DOING ALL HE COULD TO PRESERVE [redacted] THEM. BLOYCE FITZGERALD, AN ELECTRICAL ENGINEER WHO HAD BEEN QUITE CLOSE TO TESLA DURING HIS LIFE TIME, ADVISED THE NEW YORK OFFICE THAT ON JANUARY SEVENTH, NINETEEN FORTY THREE, SAVA KOSANOVICH, GEORGE CLARK, WHO IS IN CHARGE OF THE MUSEUM AND LABORATORY FOR RCA, AND KENNETH SWEZEY OF ONE SIX THREE MILTON STREET, BROOLKYN, NY, WENT TO TESLAS ROOMS IN THE NEW YORKER, AND WITH THE ASSISTANCE OF A [redacted] LOCKSMITH BROKE INTO A SAFE WHICH TESLA HAD INHIS ROOMS IN WHICH HE KEPT SOME OF HIS VALUABLE PAPERS, INCLUDING IMPORTANT [redacted] ELECTRICAL FORMULAE, DESIGNS, ET CETERA. WITHIN THE PAST MONTH, TESLA TOLD FITZGERALS THAT HIS EXPERIMENTS IN CONNECTION WITH THE WIRELESS TRANSMISSION OF ELECTRICAL POWER HAD BEEN COMPLETED AND PERFECTED.

Memo Mr. Ladd 1/11/43 JBL
Memo to Director 1/11/43 JBL.

RECORDED

100-2237-3

ENCLOSURE

F B

17 JAN 18 1943

FIVE

NOT FOIA REDACTIONS

Best Copy Available

8

PAGE TWO

FITZGERALD ALSO KNOWS THATTESLA HAS CONCEIVED AND [redacted] A REVOLUTIONARY TYPE OF TORPEDO WHICH IS NOT PRESENTLY IN USE [redacted] THE NATIONS. IT IS FITZGERALDS BELIEF THAT THIS DESIGN HAS NOT [redacted] AVAILABLE TO ANY NATION UP TO THE PRESENT TIME. FROM STATEME[redacted] TO FITZGEARLD BY TESLA , HE KNOWS THAT THE COMPLETE PLANS [redacted]CATIONS AND EXPLANATION OF THE BASIC THEORIES OF THESE THIN[redacted]OME PLACE IN THE PERSONAL EFFECTS OF TESLA. HE ALSO KNOWS THAT [redacted] A WORKING MODEL OF TESLAS WHICH COST MORE THAN TEN THOUSAND D[redacted]O BUILD IN A SAFETY [redacted] DEPOSIT BOX BELONGING TO TESLA[redacted]GOVERNOR CLINTON H[redacted]X HOTEL, AND [redacted]X FITZGEARLD [redacted] THIS MODEL HAS TO DO WITH THE SO CALLEDE DEATH RAY OR THE WIRE[redacted]NSMISSION OF ELECTRICAL CURRENT. TESLA HAS ALSO TOLD FITZGEARLE[redacted] CONVERSATIONS THAT HE HAS SOME [redacted]X EIGHTY [redacted] TRUNKS INDIFFERE[redacted]ES CONTAINING TRANSCRIPTS AND PLANS HAVING TO DO WITH EXPERIMENTS [redacted]ED BY HIM. BUREAU IS REQUESTED TO ADVISE IMMEDIATELY WHAT, IF [redacted]ION SHOULD BE TAKEN CONCERNING THIS MATTER BY THE NEW YORK FIEL[redacted]ION.

FOXWORTH

CORRECTION- THROUGHOUT THE ENTIRE TELETYPE THE NAME THAT SHOULD APPEAR IS FITZGEARLD [redacted] NOT FITZGERALD [redacted] AS IT SOMETIMES IS SPELLED

HOLD

NOT FOIA REDACTIONS

Best Copy Available

JOHN EDGAR HOOVER
DIRECTOR

C-287

Mr. Tolson
Mr. E.A. Tamm
Mr. Clegg
Mr. Glavin
Mr. Ladd
Mr. Nichols
Mr. Rosen
Mr. Tracy
Mr. Carson
Mr. Coffey
Mr. Hendon
Mr. Kramer
Mr. McGuire
Mr. Harbo
Mr. Quinn Tamm
Tele. Room
Mr. Nease
Miss Beahm
Miss Gandy

Federal Bureau of Investiga[redacted]
United States Department of [redacted]
Washington, D. C.

JBL:ed

January 11, 1943

ALL INFORMATION CONTAINED HEREIN IS UNCLASSIFIED DATE 2-2-80 BY SP4 Jmpte

MEMORANDUM FOR [redacted]

RE: UNKNOWN SUBJEC[redacted]
EXPERIMENTS A[redacted]
OF NIKOLA TESL[redacted]
ESPIONAGE - [redacted]

Nikola Tesla, one of the world's outsta[redacted] in the electrical field, died at his residence in the [redacted] New York City, on January 7, 1943. In the course of [redacted]ucted many experiments with respect to the transmission [redacted] by means of radio and what is commonly called the "Death Ray" [redacted] with respect to the wireless transmission of electrical [redacted] were [redacted] to have been completed and perfected, and Tesla had also co[redacted]ed and [redacted] a revolutionary type of torpedo which is not in use b[redacted]tio[redacted] present time. The specifications, explanations of the basi[redacted]ies, [redacted]rking models of Tesla's scientific endeavors are reported to be [redacted] his effects. Tesla is reported to have some 80 trunks in different places containing transcripts and plans having to do with his experiments as well as a working model of one of his developments in the safety deposit box at the Governor Clinton Hotel.

Information concerning Tesla's experiment[redacted]n reported to the New York Office by A. N. Spanel and Bloyce Fitzgerald, the latter an electrical engineer who had been quite close to Tesla. Both of these individuals have indicated that no steps have been taken to preserve Tesla's records and models or to keep them from falling into the hands of individuals sympathetic to the Axis powers.

1 ENCLO

Tesla has a distant relative by the name of Sava Kosanovich, whom he intensely disliked. Kosanovich is reported to be taking steps to get possession of these important documents and plans, and Spanel believes there is a strong likelihood that Kosanovich will make such information available to the enemy. On January 7, 1943, Kosanovich, accompanied by George Clark, in charge of the Museum and Laboratory for RCA, and Kenneth Swezey of Brooklyn, New York, entered Tesla's rooms at the Hotel New Yorker where, with the aid of a locksmith, they broke into a safe in which Tesla kept some of his valuable papers, including important electrical formulae, designs, et cetera.

RECORDED & INDEXED

D63

100-2237-3

Mr. Spanel, in addition to reporting these developments to the Bureau, has also advised the headquarters of the Military Intelligence Division, a Mr. Workin of the Department of Justice in Washington, and Dr. Lozado, one of the advisors to Vice President Wallace. Lozado advised Spanel that the Government was vitally interested in the effects of Tesla and requested that Spanel loose no time in doing all he could to preserve them.

1 JAN 18 1943

COPIES DESTROYED

FOR VICTORY BUY UNITED STATES SAVINGS BONDS AND STAMPS

55 JAN 26 1943

1-12-43

10

Best Copy Available

The New York Office was instructed to disc[illegible]ke the matter up with the State's Attorney in New York City with the [illegible] possibly taking Kosanovich into custody on a burglary charge and obt[illegible] the various papers which Kosanovich is reported to have taken from Tes[illegible]. It was pointed out that any activities pursued by the State's Attor[illegible]d be handled in a most secret fashion in order to avoid any publici[illegible]ect to Tesla's inventions. The New York Office was also instructe[illegible] the Surrogate Court in order that stops could be placed against t[illegible] of Tesla both in his hotel and any other points, in particular, the [illegible] boxes that he ma have in order that no one may enter them without a [illegible]tative being present and every precaution taken to preserve the secrecy [illegible]la's inventions. The New York Office is to keep the Bureau advised of all de[illegible]ents.

Respectfully,

D. M. Ladd

D. M. Ladd

L.M.C Smith is handlin this with alien Property Custodian so there appear to be no need for us to mess around in it.

EW

11

Best Copy Available

JOHN EDGAR HOOVER
DIRECTOR

7

Mr. Tolson
Mr. E. A. Tam
Mr. Clegg
Mr. Glavin
Mr. Ladd
Mr. Nichols
Mr. Rosen
Mr. Tracy
Mr. Carson
Mr. Coffey
Mr. Hendon
Mr. Kramer
Mr. McGuire
Mr. Harbo
Mr. Quinn Tam
Tele. Room
Mr. Nease
Miss Beahm
Miss Gandy

Federal Bureau of Investigation
United States Department of Justice
Washington, D. C.

EAT:DS

January 12, 1943

MEMORANDUM FOR MR. LADD

On Friday, January 8th, Mr. L. M. C. Smith called me in connection with the death of Nikola Tesla. He advised me that he was concerned about the possibility of enemy agents confiscating some of the trunks of Tesla, who had died on January 7th. He understood that the War Department was interested in this matter and that apparently the Alien Property Custodian's office was taking some action. He desired to know whether the Bureau would take some steps to refrain relatives of Tesla from taking the contents of his trunks and whether the Bureau would seize possession of the trunks. Mr. Smith indicated that he was talking to the Alien Property Custodian along the same lines. I told him that in view of the fact he was going to handle the matter with the Alien Property Custodian's office, there did not appear to be any action which the Bureau could or should take.

INFORMATION CONTAINED
IS UNCLASSIFIED
7-2-80 BY

I ENCLO. 1

Very truly yours,

Edw. A. Tamm

12 30 from 1/13/43
Called Donegan
& instructed no
further action

advise field

RECORDED

100-2237-3

B
1 JAN 13 1943

FOR VICTORY
BUY
UNITED STATES DEFENSE BONDS AND STAMPS

53 JAN 22 1943

12

[redacted]

(b)
(7)
(c)

April 16, 1948

ALL INFORMATION CONTAINED
HEREIN IS UNCLASSIFIED
DATE 2-3-88 BY SP4 JRM/RTC

Mr. J. E. Hoover
Federal Bureau of Investigation
Washington D.C.

Dear Mr. Hoover,

I am a student at the Milwaukee School of Engineering, studying Electrical Engineering. I am also interested in the life and work of Nickola Tesla. I understand that at the time of his death, your department took his manuscripts and experiment data for national security. I am preparing a paper to be presented before the student branch of the American Institute of Electrical Engineers on Tesla.

RECORDED & INDEXED 14 SEP 10
100-2237-3X

If it is possible I would appreciate material bearing on Tesla's [redacted] and methods of experiment.

FBI
APR 28 1948

13

This information would help me in a better presentation of this paper and consequently a far greater appreciation of his work in the field of science.

I know that a part of the experiments and theory have a secret classification, and I do not expect any of it.

I am intrested in "Ground Current Transmission" as the basis of my thesis for graduation. If it is possible to obtain this information, I would be very grateful.

Yours very truly,

[redacted] (6)(7)(c)

100-2237-3X April [illegible], 1948

RECORDED 65-47953-18

[redacted]

(b)
(7)
(C)

INFORMATION CONTAINED HEREIN IS UNCLASSIFIED DATE 7-3-[illegible] BY SP4

Dear [redacted]

Your letter of April [illegible], 1948, has been received and I want to express my appreciation to you for having written me as you did. The effects of Nickola Tesla were handled by the Office of Alien Property, and not by this Bureau. It is suggested you may desire to communicate with the Office of Alien Property, United States Department of Justice, 101 Indiana Avenue, Washington, D. C.

Sincerely yours,

John Edgar Hoover
Director

NOTE: This individual requests information relative to the work of Nickola Tesla relative to electrical experiments he was conducting, which Swain understands were taken by this Bureau and held for security reasons. Bureau file [illegible] reflects that the effects of Tesla were handled by the Office of Alien Property.

VWPrjec

Mr. Tolson
Mr. E. A. Tamm
Mr. Clegg
Mr. Glavin
Mr. Ladd
Mr. Nichols
Mr. Rosen
Mr. Tracy
Mr. Egan
Mr. Gurnea
Mr. Harbo
Mr. Pohr
Mr. Pennington
Mr. Quinn Tamm
Tele. Room
Mr. Nease
Miss Gandy

COMMUNICATIONS SECTION
MAILED 8
☆ APR 2[illegible] 1948 P.M.
FEDERAL BUREAU OF INVESTIGATION
U. S. DEPARTMENT OF JUSTICE

6 0 MAY 10 1948

RECEIVED READING ROOM
APR 7 00 PM '48

15

April 3, 1950

ALL INFORMATION CONTAINED
HEREIN IS UNCLASSIFIED
DATE 7-2-80 BY SP4 [illegible]

[redacted]

(b)
(7)
(C)

[redacted]:

Reference is made to your inquiry by telephone on March 29, 1950, concerning certain technical papers which belonged to the late Nikola Tesla.

From an examination of our files, we have been able to determine that this Bureau has never been in possession, as had been indicated to you, of a copy of Dr. Tesla's papers.

Very sincerely yours,

J. Edgar Hoover

100-2237-3X1

~~65-47953-26~~

RECORDED - 53

APR 7 1950

80

67C

[redacted]

EX-115

U.S. DEPT. OF JUSTICE
RECEIVED READING ROOM
FBI
APR 3 5 19 PM '50

(b)
(7)
(C)

APR 4 11 20 AM '50
RECEIVED
U S DEPT
[redacted]

[redacted]

Tolson
Ladd
Clegg
Glavin
Nichols
Rosen
Tracy
Carbo
Ohr
Tele. Room
Case
Andy

MAILED 4
APR 4 1950
COMM - FBI

16

Director, FBI

SAC, New York

April 17, 1950

(b)
(7)
(C)

[redacted]

Rebulet dated April 3 last.

On April 7, 1950 agents of this office interviewed Mr. J.V. POTTS, Vice President of the Manhattan Warehouse and Storage Company, 52nd Street & 7th Avenue, New York City, and at that time Mr. POTTS advised that the rules of his firm required that all persons gaining access to goods stored by Manhattan first had to fill out an appropriate form setting forth their names, date of visit, and reason for requesting access to the goods.

In a review of the file pertaining to the storage of the effects of NIKOLA TESLA, MR. POTTS revealed that only one such visit had been made by persons outside of the management of Manhattan Storage itself. This one occassion took place on January 26 and 27, 1943, at which time representatives of the Alien Property Custodian made a thorough review of the entire effects of the TESLA estate.

NIKOLA TESLA

The TESLA effects are stored in rooms 5J and 5L of Manhattan Storage's warehouse at 52nd Street & 7th Avenue, New York City. MR. MICHAEL KING, who stated he had been Floor Supervisor for approximately 10 years on the floor in question, stated that he could recall only the one occassion in early 1943 when an examination was made of the TESLA effects. He stated that at that time numerous photographs were taken by the examiners. His description of the equipment used would tend to show that a microfilm reproduction was made of some of the papers of the deceased scientist. MR. KING added that several of the group making the examination wore U.S. Navy uniforms, and during the two days required to complete the examination the civilian assistants in the group were identified to him only as "FEDERAL AUTHORITIES". According to MR. KING, no other instance of microfilming of the records of the TESLA estate has taken place since that time.

It should be noted that the Bureau was informed of the examination mentioned above by New York letter (with attachments) dated October 17, 1945, entitled UNKNOWN SUBJECT; SAVA NOSANOVICH; Experiments & Research of NIKOLA TESLA (Deceased), Espionage-M.

cc: 65-12290

ALL INFORMATION CONTAINED HEREIN IS UNCLASSIFIED DATE 7-3-80 BY SP4 Jrm/rtc

100-2237-
NOT RECORDED
148 APR 28

EHH:JJC
105-1391

17

MR. POTTS stated that no inquiry had been received by Manhattan from SAVA N. KOSANOVICH, nor had Manhattan informed him, in any way, that an examination of the TESLA effects had been made by anyone. In fact, added MR. POTTS, the only correspondence relating to the TESLA estate has been in the form of bills for storage.

MR. POTTS stated that any personal inquires regarding the estate would of necessity be directed to him, and to date no such inquiries have been made.

Interviewing agents explained to MR. POTTS that the examination made, as mentioned above, was not instigated by the Bureau, nor had the Bureau taken part in that examination.

Unless advised to the contrary, this investigation is being placed in a closed status, and no further investigative action is contemplated by this office. CLOSED.

[redacted]

(b)
(7)
(C)

[redacted]

August 18, 1952

Federal Bureau of Investigation
Department of Records
Washington, D. C.

ALL INFORMATION CONTAINED
HEREIN IS UNCLASSIFIED
DATE 2-2-80 BY SP4 Jam/jr

Gentlemen:

In a manner of introduction, I wish to state that I am working toward a degree in Electrical Engineering at the Institute of Technology of the University of Minnesota.

For several years, I have been engaged in a study of extensive compass and detail concerning the researches and writings of the late, world renowned scientist, Dr. Nikola Tesla. At considerable expense, I have acquired an extensive collection of materials relating to Dr. Tesla and his works which include:

1) Personal letters written by Tesla to his close friend.

2) Numerous periodicals, some of which are to be found in only a few libraries throughout the United States.

3) A few rare books which have now become "collector's items".

4) A collection of issued patents.

Although the items listed are considerable in number, the specific information desired is lacking.

As I understand it, because of the nature of Dr. Tesla's role in scientific developments, all research papers, patent applications, etc., were secured by the Federal Bureau of Investigation at the time of Dr. Tesla's death in January of 1943.

The purpose of this seizure, as described in numerous articles, was to determine whether these papers contained suggestions leading toward advancements in the field of science.

100 2237-4

RECORDED - 68

Reply
8-26-52

[redacted]

W - 28

(b)
(7)
(C)

[redacted]

19

Now it seems that sufficient time has elapsed for an investigation of this kind. If Dr. Tesla's Estate has been released by the department in charge, any records that can be made available for examination will be welcomed.

A letter from Harold I. Baynton, Assistant Attorney General, Director, Office of Alien Property, informed me that the Library of Congress listed certain works, writings and research studies prepared by the late Dr. Tesla. However, a letter addressed to the Library failed to bring results as the Library "has no files on the researches of Tesla".

A similar result was obtained from the Bureau of Naval Research and the Department of Commerce.

I am especially interested in the research work in which Tesla was engaged in his later years. There are various unpublished works, such as a 10-page typewritten statement presented in 1937 at a meeting of several well-known editors outlining his discoveries and giving a resume' of his work in the fields of gravity and cosmic ray research, etc. Also, Tesla prepared various papers, one of which was in effort to secure the Pierre Gutzman Prize from the Institute of France. My inquiry is in effort to determine whether any of these documents, as well as others, are at this time available.

I will greatly appreciate any information in regard to any records which you may have.

Very truly yours,

(6)
(7)
(C)

[redacted]

August 26, 1952

EX. - 28

[redacted]

INDEXED 68
RECORDED - 68

100-2237-4

(b)(7)(c)

ALL INFORMATION CONTAINED HEREIN IS UNCLASSIFIED DATE 7-2-80 BY SP4 Jmfrte

Dear [redacted]

With reference to your letter of August 18, 1952, our files disclose that the effects of Nikola Tesla were taken into custody at the time of his death by the Office of Alien Property, and not by this Bureau. Consequently, you may wish to communicate further with that agency, which may be addressed as follows: (65-47953)

Assistant Attorney General
Rowland F. Kirks
Director, Office of Alien Property
United States Department of Justice
101 Indiana Avenue, N. W.
Washington 25, D. C.

Sincerely yours,

John Edgar Hoover
Director

cc - 1 - Assistant Attorney General (with copy of incoming)
Rowland F. Kirks
Director, Office of Alien Property
United States Department of Justice
101 Indiana Avenue, N. W.
Washington 25, D. C.

MAILED 10
AUG 27 1952
COMM-FBI

[redacted]

(b)
(7)
(c)

100-2237

NOTE: No reference Bureau files on correspondent in Minnesota.. 8-22-52...per [redacted]

60 SEP 10 1952

21

STANDARD FORM NO. 64

Office Memorandum • UNITED STATES GOVERNMENT

TO : MR. A. H. BELMONT

DATE: May 5, 1953

FROM : MR. L. L. LAUGHLIN

SUBJECT: NIKOLA TESLA (Deceased)
INFORMATION CONCERNING

[redacted] INFORMATION CONTAINED HEREIN IS UNCLASSIFIED DATE 2-22-80 BY SP4 Smith

[redacted] called on the afternoon of May 4, 1953.

[redacted] stated that he had been reading a book entitled, "The Prodigal Genius - The Life of Nikola Tesla" by John J. O'Neill, whom [redacted] described as a science writer for a New York newspaper (publisher - Ives Washburn). [redacted] noted in this book that Bureau Agents went to Tesla's room following his death on January 7, 1943, opened his safe, examined his papers, and took over his personal files. [redacted] said this appeared on page 277. [redacted] stated that Tesla is the father of modern power engineering, being responsible for the invention of the A. C. generator, motor transmission, and other electrical engineering feats. He inquired (1) if the papers and works of Tesla were in the possession of the Bureau, and (2) if so, were they available for review in view of their scientific importance.

I told [redacted] that the statement concerning the Bureau's taking Tesla's files did not seem very logical but that I would check on the matter. (b) (7) (C)

The Bureau's files reflect that shortly after the death of Tesla in his hotel room in New York City on January 7, 1943, Sava Kosanovich, a distant relative, and other individuals entered his room and opened the safe, examining certain materials which he possessed. On January 8, 1943, Mr. L. M. C. Smith of the Department advised Mr. Tamm that he was concerned about the possibility of enemy agents confiscating some of the trunks of Tesla and apparently the Office of Alien Property Custodian was taking some action regarding these effects. Since the matter was being handled by the Office of Alien Property Custodian, the Bureau did not make any inquiries into this situation. (65-47953-6)

It is noted also that the Bureau received a letter dated April 16, 1948, from [redacted] explaining that he was studying electrical engineering at the Milwaukee School of Engineering and

100-2237-4X

[redacted]

RECORDED-66
INDEXED-66 MAY 6 1953

65-47953

1 - Mr. Nichols

[redacted] (b) (7) (C)

22

was interested in the life and works of Tesla. [redacted] stated that he understood at the time of Tesla's death the Bureau took his manuscripts and experiment data for national security. The Bureau on April 22, 1948, advised [redacted] that the effects of Tesla were handled by the Office of Alien Property and not by the FBI.(65-47953-18)

I called [redacted] this morning and told him that it was the office of Alien Property and not the FBI which took over the effects of Tesla following his death. Accordingly, I suggested that [redacted] might wish to communicate with the office of Alien Property for further information concerning this matter.

The book "Prodigal Genius - The Life of Nikola Tesla" is not in the Bureau Library. A copy is being obtained from the Library of Congress. It will be examined to determine specifically the reference made to the Bureau's taking these papers. At that time a determination can be made as to what further action should be taken.

(b)
(7)
(C

ADDENDUM: LLL:mer 5-14-53

Page 277 of the "Prodigal Genius - The Life of Nikola Tesla," describing Tesla's death, contains the following statement: "Operatives from the Federal Bureau of Investigation came and opened the safe in his room and took the papers it contained, to examine them for a reported important secret invention of possible use in the war."

Since this work was published in 1944, it is not felt that any particular purpose would be served by raising an objection with the publishers at this time. [redacted] the individual who raised the question, has been set straight and, therefore, no further action is being taken.

STANDARD FORM NO. 64

Office Memorandum • UNITED STATES GOVERNMENT

TO : Director, FBI

DATE: 2/19/54

FROM : SAC, New York (6[illegible])

INDEXED

SUBJECT: LELAND I. [illegible]
[illegible]

INFORMATION CONTAINED
IN IS UNCLASSIFIED
[illegible] 7-2-80 [illegible]

Mr. GEORGE H. SCHERFF, JR., 149 [illegible]ord Road, [illegible] Rochelle, New York, advised that he received two letters from LELAND [illegible], 127 Seymour Avenue Southeast, Minneapolis, Minnesota, photostat[illegible] of which are being furnished the Bureau and Minneapolis.

Mr. SCHERFF stated that he was an associate [illegible] NIKOLA TESLA in 1914 and that for many years his father had been Dr. [illegible] private secretary. Mr. SCHERFF said that he never heard of LELAND I. A[illegible] did he ever hear of any of the names mentioned in ANDERSON'S letter.

Mr. SCHERFF stated that he has quite a bit of [illegible]'S writings in his possession and he didn't know whether or not they would be of value to a foreign government.

[redacted] (6)(7)(C)

No further action is being taken by the N.Y. Office, UACB.

Encs. (29)
1 - Minneapolis (3 Encs.)

EXP. PROC.

memo: New York
[redacted]: aaa
3-10-54

100-2237-4X1
~~100-0-4973~~

RECORDED - 15
MAR 1 1954
3-11

INDEXED - 15
EX-129

67C

[redacted]

no action

[redacted]

(6)
(7)
(C)

24

Leland I. Anderson
127 Seymour Avenue Southeast
Minneapolis 14, Minnesota

February 3, 1954

Mr. George H. Scherff, Jr.
149 Seacord Road
Westchester, NEW YORK

Dear Mr. Scherff:

re.: The Life and Work of Dr. Nikola Tesla.

Recently, I have founded an organization in name and honor of Dr. Tesla in cooperation with several people who were intimately associated with Tesla during his lifetime, and with others who are interested in Dr. Tesla and his achievements from a scientific and historical standpoint. (See enclosed brochure.) I have had some difficulty locating a few of Tesla's associates, and, the name of George Scherff is among them. Therefore, it is my sincere hope that you, Mr. Scherff, are the person I seek as having been associated with Tesla.

I have personally studied the works of Tesla for a number of years, being particularly interested in elaborating upon his researches regarding high-tension radiant beams. Through some travel and other efforts, I have been fortunate to locate many original collections of Tesla's correspondence and manuscripts, and in a few cases obtained a number of interesting items.

I was in New York a short time ago on business, and while there I visited Mr. Kenneth M. Swezey. He intends to undertake some significant work on behalf of Tesla in the near future, and since he knew Tesla for so many years during his later life, it will be handled with great understanding.

I hope that you may have some interest in the work which I have initiated on behalf of Dr. Tesla. There are many matters that I wish to discuss with you, provided of course, that you are the Mr. Scherff related to the Tesla story. I would be most happy to hear from you at your earliest convenience, and will send you all publications of the organization if you wish to receive them.

Very truly yours,

Leland I. Anderson

25

TESLA-INTERNATIONAL

University Station, Box [illegible]
MINNEAPOLIS · 14 · MINNESOTA

To Those Who Are Interested in the Life and Work of
DR. NIKOLA TESLA

Following the death of Dr. Nikola Tesla on the 7th of [illegible] Mr. John J. O'Neill, former Science Editor of the New York Herald Tribune, presented the biography

PRODIGAL GENIUS
The Life of Nikola Tesla

- a memorable tribute to one of the most outstanding figures in the entire field of electrical science. Many reading this biography learned of Nikola Tesla for the first time despite his monumentous achievements with which he has won world-wide acclaim in scientific circles. Even those closely associated with the fields of science and engineering discovered a remarkable story not generally known of the brilliant genius Tesla whose sensitive personality and seclusion kept his fame in a shadow.

The TESLA-INTERNATIONAL organization is being established in the United States in name and honor of Dr. Nikola Tesla by those sharing a mutual interest in his life and works. The organization has as its objective the promulgation of the truth about Nikola Tesla; that a full recognition be made for his unparalleled research work on the effects of currents of high frequency and high potential, and for his achievements in the realms of polyphase power transmission and telecommunication. It would be the duty of the organization to do all in its power that the name of Tesla win in the eyes of the nation the fame deserving of a truly great American for his contributions to science, industry, and to this country.

A journal of the TESLA-INTERNATIONAL organization was issued beginning the month of November, [illegible]. In addition to items of recent and historical interest related to Tesla, the journal will include:

1) A formal roster of all [illegible] have an interest in the Tesla organization and wish to engage in its activities.

2) An opportunity of [illegible] of the organization through the medium of the journal.

3) A comprehensive bibliography [illegible] listing of all available items concerning Tesla, which would include a cataloging of the various collections of Teslians not generally known. Such a listing will be of particular importance to scholars in the research field.

4) A presentation of hitherto unpublished writings and analyses of Tesla's technical research studies as they become available.

The journal of the TESLA-INTERNATIONAL organization will be forthcoming at intervals of 1½ - 2 months. Subscription rate is $1.00 for 10 issues. Membership in the TESLA-INTERNATIONAL organization is concurrent with subscription to the journal.

Leland I. Anderson
127 Seymour Ave. S. E.
Minneapolis 14, Minnesota

REGISTERED

VIA AIR MAIL

Mr. George H. Scherff, Jr.
149 Seacord Road
Westchester, NEW YORK

MINNEAPOLIS FEB 1954

NEW ROCHELLE FEB 1954

FEB 1954

MINNEAPOLIS MINN. FEB 1954 NO. 35

Leland I. Anderson
127 Seymour Avenue Southeast
Minneapolis 14, Minnesota

February 12, 1953

Dear Mr. Scherff,

It was so very rewarding to receive your reply concerning Dr. Nikola Tesla... I have initiated an undertaking on behalf of Tesla because I feel that in all right and justice something should be done to perpetuate the name of Tesla and see to it that his name becomes a part of the heritage of this nation. A great task perhaps, but as time goes on I believe the name of Tesla will become more significant in scientific developments. I hope that you may have an interest in the organization which I have proposed and established, and I will be honored to have you as a member. The organization is presently set up on the basis of those having a mutual interest in Tesla, with a free exchange of information between members. The first two issues of the journal of the organization are being sent to you under separate cover, and should reach you in a day or two.

Some other members which may be of interest to you are; Muriel Arbus, Dorothy Skerritt, Kenneth Swezey and W. W. Wilhelm. The recent deaths of John O'Neill and Edwin Armstrong were very unexpected, and it is with a great sadness that I received the news and loss of these two members.

Do you know if Mr. Lowenstien had a daughter? The reason I ask is that a woman visited Mr. O'Neill before his death and told him that she inherited a great amount of Teslaiana from her father - whom I presume to be Mr. Lowenstien. This woman was afraid of disclosing the information by reason of her mistaken notion and fear that she would rudely be raided by the army. You see Mr. O'Neill related to me that a few army officials visited his home with insistent requests for information. Of course all this sort of government interest was aroused by Tesla's "Death-Ray" rumors, played up by enterprising journalists. Well, the result of all this is that she refused to give Mr. O'Neill her married name - only that she married a Siamese prince no less, and moved to some mid-western city. If this woman has the amount of material that Mr. O'Neill intimated, it would certainly be important to locate her.

I believe that one of the valuable efforts of the Tesla organization would be to catalog every piece of information concerning Tesla. I have made a beginning effort along this line, and I hope that before too long all collections of Teslaiana may be located, cataloged, and reproduced for fear of eventual loss. Through Mary A. Benjamin (of Walter R. Benjamin Autographs in New York) I have obtained a number of significant items of correspondence between Tesla and Robert U. Johnson. The entire collection of correspondence with Mr. Johnson numbers in excess of 70 pieces. I share this collection with Mrs.

Leland I. Anderson
127 Seymour Avenue Southeast
Minneapolis 14, Minnesota

James W. McChesney of Long Island. The period of this correspondence runs from 1894-1930. Mrs. McChesney has another group of correspondence between Tesla and George Sylvester Viereck which is very interesting in that it is from a period later in Tesla's life. (If you wish to receive any photostatic copies from these collections I will be happy to send them to you.)

I am interested to learn whether you have collected any mementoes, correspondence, writings, etc. of Tesla. For a long while I have been trying to locate a copy of the brochure which Tesla issued the first week of February, 1904. It came in a large square envelope bearing a large red wax seal with the initials "N.T." stamped thereon. Quite a number of them were distributed throughout New York and elsewhere by the Tesla enterprise in an effort to secure financial backing for the tower and power plant erected at Wardenclyffe, Long Island. You no doubt know of the brochure of which I speak. I thought it would be interesting to reproduce this brochure and distribute it among the members of the Tesla organization as a memento. Although I have written and inquired about this brochure extensively, I have not been able to locate a copy. Did you ever have one?

I have hopes that in 1956 (The Tesla Centenary) some significant observance may be organized here in the United States in honor of Tesla. The Tesla Museum in Yugoslavia has obtained the Tesla inheritance, which amounts to 9 tons of apparatus, writings, etc. It is the intention (so stated) of the Museum to publish the entire writings of Tesla, including those in the inheritance, on the Tesla Centenary. I don't know what sort of political propaganda might be injected in this publication, but it occured to me that it may be appropriate to arrange an advance publication in this country [illegible] unpublished works. Unfortunately, there is not much to work on as yet. While the Tesla estate remained in this country, photostats of nearly every important paper in the estate were made under order of Wright Field Development Center in Ohio. If these photostats could be located there would be much material for a publication. However, in working with the Library of Congress in preparation of a file on Tesla, these photostats have escaped the most extensive search thus far.

Hoping that you may be interested in the efforts of the TESLA-INTERNATIONAL on behalf of Tesla and wish to associate yourself with it, I am,

Yours faithfully,

Leland I. Anderson

TESLA INTERNATIONAL

[illegible] Station B [illegible]

[illegible] 14 [illegible] MINNESOTA

IMPORTANT ANNOUNCEMENT

To Members of the TESLA INTERNATIONAL organization
and those interested in the works of
Dr Nikola Tesla

[illegible]

"[illegible] Writings of Nikola Tesla"

by

[illegible] Martin

[illegible] it is with great pleasure that [illegible] organization announces the reprinting [illegible] literature

[illegible] and significant work [illegible] a great demand for this [illegible] IS STRICTLY [illegible] will not be repeated when the [illegible] desiring a copy of the book are [illegible]

Cost of [illegible] rate is only $4.00 [illegible] United States to members and friends [illegible] organization

30

Leland I. Anderson
127 Seymour Avenue S. E.
Minneapolis 14, Minnesota
3 CENTS 3
3 CENTS 3
SPECIAL DELIVERY
VIA AIR MAI
Mr. George Scherff
149 Seacord Road
New Rochelle, New York
SPECIAL DELIVERY

SAC, New York

March 10, 1954

RECORDED - 15

~~105-0-4973~~

EX-129

Director, FBI

100-2237-4X1

[redacted]

NOT AN FOIA REDACTION

LELAND I. ANDERSON
MISCELLANEOUS; INTERNAL SECURITY - YU

Reurlet 2-19-54 concerning the above-captioned individual. Relet forwarded to the Bureau two Photostats of two letters from Anderson which were received and made available to your office by George H. Scherff, Jr.

There is returned herewith one set of the Photostats received by the Bureau as enclosures with your letter inasmuch as it appears this set was intended for retention in your office file.

Attachment

[redacted]

(b)
(7)
(C)

ALL INFORMATION CONTAINED
HEREIN IS UNCLASSIFIED
DATE 7-2-80 BY SP4 Jrm/rtc

(b)
(7)
(C)

[redacted]

Tolson
Ladd
Nichols
Belmont
Clegg
Glavin
Harbo
Rosen
Tracy
Gearty
Mohr
Winterrowd
Tele. Room
Holloman
Miss Gandy

MAILED 16
MAR 10 1954
COMM - FBI

32

KENNETH M. SWEZEY

ALL INFORMATION CONTAINED HEREIN IS UNCLASSIFIED DATE 7-2-80 BY SP4 [illegible]

163 Milton Street
Brooklyn 22, N.Y.
June 25, 1955

Mr. Tolson
Mr. Boardman
Mr. [illegible]
Mr. Belmont
Mr. Harbo
Mr. Mohr
Mr. Parsons
Mr. Rosen
Mr. Tamm
Mr. Sizoo
Mr. Winterrowd
Tele. Room
Mr. Holloman
Miss Gandy

[redacted]

Mr. J. Edgar Hoover
Federal Bureau of Investigation
Washington, D.C.

Dear Mr. Hoover:

Back in 1943, the local Alien Property Custodian searched through the belongings of the late electrical inventor, Nikola Tesla, stored in the Manhattan Storage Warehouse in New York City. Tesla had been a naturalized American for more than fifty years, so I believe that the search was made on the grounds that the property was to be sent to Yugoslavia, through Tesla's nephew and heir, Mr. Sava Kosanović (Mr. Kosanović had been Minister of State under the King's government, later became Ambassador to the United States from the present government, and is now a Minister serving in Belgrade).

According to the attorney who handled the Tesla estate, Mr. Philip Wittenberg, the Alien Property Custodian assured him that nothing had been held. I have a letter from the Office of Alien Property, dated March 15, 1955, which confirms this statement.

In gathering material to help in a nation-wide commemoration of Tesla's hundredth birthday next year---which will be participated in by leading scientific and engineering societies, museums, and universities---I have just discovered, however, that Tesla's solid gold Edison Medal somehow vanished during that search.

As a friend who had known Tesla well during his last twenty years, I was with Mr. Kosanović in Tesla's room in the Hotel New Yorker on the day he died. A safe expert was called in to unlock Tesla's safe. Among its contents were several honorary degrees, a volume of greetings which I had gathered for him on his seventy-fifth birthday, a bunch of keys, and the Edison Medal. We kept out the book of greetings (I mentioned this at the time to the assistant manager of the hotel and later to a Mr. Gorsuch of the Alien Property Custodian's office), but everything else, including the medal and the keys, was replaced and the safe was locked.

RECORDED - 82 / 60-2237-5
INDEXED - 82

Except when it was inspected by the Alien Property Custodian, the safe was never reopened until it

Memo Belmont - Boardman 6/29/55. Let ack. [redacted] 6/29/55 390

6 JUL 11 1955

EXP. PROC.

JUN 27 1955

33

arrived in Belgrade (where Tesla's property was to be installed in a special Tesla Museum) and was there opened by Mr. Kosanovic. According to his former secretary, both the bunch of keys and the medal were missing. The keys were later found in a tin box outside the safe; the medal was never found.

I learned of the disappearance of the medal only by accident. Mr. Kosanovic had asked his former secretary to get permission from the American Institute of Electrical Engineers (who gave Tesla the Medal) to have it duplicated. This was given, but the cost, it turned out, would be about four hundred dollars. In the meantime, the Tesla Museum, in Yugoslavia, is quietly trying to raise the money to pay for it.

The irony of this situation is more disturbing than the money involved. By giving us a system which made electric power universally available, Tesla---probably more than any other one man---helped put America on top of the world. At the time he died, his gold Edison Medal was the only material evidence left of this country's appreciation. That this last token should have disappeared ---to have to be replaced by his materially poor countrymen overseas for whom he had done nothing---seems a tragic denouement.

John O'Neill, in his biography of Tesla, states that the FBI broke into Tesla's safe on the day he died, and an article in the current (June) Coronet repeats this. I know this isn't true. I did hear, however, that the FBI somehow lent a hand to the Alien Property Custodian during the latter's search in the warehouse.

If that is so, I thought that perhaps some of your men might remember the conditions under which the search was made and therefore might have a suggestion as to what could have happened to the medal. After this long time, I have no hope that the medal can actually be restored, and I am already trying to interest Americans in making a replacement. But future biographers might be spared a lot of wild guessing and wrong blaming if some hint could be obtained as to whether the original got lost, strayed, or stolen---and who might have been responsible.

With best regards and sincere appreciation for any help you can give,

Sincerely,

Kenneth M. Swezey

Kenneth M. Swezey

P.S.: I am enclosing an editorial from last month's POWER magazine which outlines Tesla's contribution to the electric power industry.

K.M.S.

LOUIS N ROWLEY, EDITOR · MAY 1955 · ESTABLISHED 1882 **Power**

Strange Genius

ASK ANY GROUP of power men to name those who laid the foundation for today's electrical generation and distribution. You'll wind up with an impressive list—Edison, Brush, Thomson, Westinghouse, many others. But there is almost sure to be a significant omission.

Yet this forgotten man conceived the polyphase ac motor—still basic—and devised a suitable system of generation and distribution for applying it. To grasp the magnitude of this contribution, we must turn back to the 1880's when the electrical era was being born, and the "battle of the systems" held sway.

Arc lights and motors were being operated on constant-current series systems. Edison's Pearl Street generating station had opened in 1882, supplying incandescent lamps and, later, dc motors on a constant-potential system. Under the leadership of Westinghouse and Stanley, the advantages of ac distribution were demonstrated. But there was no successful ac motor.

In May, 1888, a young Yugo-Slav engineer, but four years in the United States, read a paper before the American Institute of Electrical Engineers. In it he described a new ac system. Its heart was the induction motor with its basic and beautiful concept of the rotating magnetic field. The man was Nikola Tesla, the system he described was destined to sweep the field.

With characteristic vision, George Westinghouse realized the fundamental importance of the polyphase ac system and acquired the basic patents. Its first impact on the general public was at the Chicago World's Fair of 1893. There a 2-phase generator supplied motors and lamps, and, through rotary converters and motor-generators, a variety of dc equipment.

But it remained for the Niagara Falls power project to demonstrate in the most dramatic way possible that polyphase ac was the system of the future. Since 1886 when a charter to develop its power had been granted, the eyes of the world had been on Niagara. An international commission, headed by Lord Kelvin, had reviewed 17 proposals, found none acceptable. Later, just five years after Tesla's AIEE paper, it was officially decided to use the polyphase system.

In August, 1895, Niagara power was delivered to the first industrial customer and in 1896 ac transmission to Buffalo, 22 miles away, was begun. By that time, the steam turbine had been introduced in America and the modern age of electric power had truly opened.

For Nikola Tesla, these far-reaching inventions were but a beginning. Still to come was brilliant work in high frequencies, thinking basic to much of today's radio art. Yet by the time of his death in 1943, both he and his work had begun to slip into obscurity. Why?

A man of flashing insights and enormous brilliance, Tesla was largely indifferent to the development of his ideas. This he left to others while he followed the lure of new challenges. In later years, his projects became more grandiose, his ways more mysterious, his pronouncements more Olympian. And working alone, as he did, he formed none of the institutional ties that help to perpetuate a record of accomplishment.

Next year—July 10, 1956—will be the 100th anniversary of Nikola Tesla's birth. It would be fitting for our engineering societies to commemorate this occasion, to acknowledge our debt to this strange and lonely genius who changed our world for the better.

ALL INFORMATION CONTAINED
HEREIN IS UNCLASSIFIED
DATE 7-14-82 BY [illegible]

100-2237-5

(REPRINTED BY PERMISSION)

35

АМЕРИКАНСКИ
СРБОБРАН
THE AMERICAN SRBOBRAN
Second Class Mail Privileges Authorized at Pittsburgh, Pa.

THE LARGEST AND OLDEST SERBIAN DAILY NEWSPAPER IN AMERICA
Published Daily Except Sat's, Sundays and Holidays by SERB NATIONAL FEDERATION
3414 Fifth Avenue Telephone MAyflower 1-6600 Pittsburgh 13, Pa.

MOMCHILO SOKICH, Editor — JOVAN BRATICH, Ass't. Editor
MILAN M. KARLO, Editor English Section

ПРЕТПЛАТА НА ЛИСТ

За Сједињене Државе: на годину $8.00; шест месеци $4.00. За Канаду: на годину $9.00; шест месеци $4.50. За стране земље: на годину $10.00; шест месеци $5.00. За град Питебург: на годину $9.00; шест месеци $4.50. — Један број 5ц. Претплата за енглеско издање $4.00 годишње.

SUBSCRIPTION RATES

For United States of America: For One Year $8; Six Months $4. For Canada: One Year $9; Six Months $4.50; Foreign Countries: One Year $10; Six Months $5. For Pittsburgh: One Year $9; Six Months $4.50.—Single copy 5c. Subscription for the English Section only is $4.00 per Year.

Рукописи се не враћају никоме. — Огласи се плаћају унапред.

RECOGNITION FOR TESLA

Largely thru a young American engineer's efforts, the world today is re-scanning the record and achievements of our inventive genius, Nikola Tesla. Of late, even the big-time magazines have devoted space to the amazing career and fascinating character of the pioneering electrical wizard.

The man behind this belated recognition for the one-time Serbian immigrant boy who made millions but died almost a pauper is Leland P. Anderson, head of the **Tesla Society**, which has headquarters at the University of Minnesota.

Thru travels, correspondence and detailed research, Mr. Anderson has dug up many friends of the late genius and induced them to join in his noble work. A good many of these are American-Serbians. They serve Mr. Anderson and he serves them, with information issued thru his TESLIAN publication. This is, at present, a mimeographed publication issued monthly which casts new light on the known life and record of the late Dr. Tesla.

The latest issue (March-June) informs of progress plans to honor Dr. Tesla even more. It also presents an account of a fascinating editorial, "Strange Genius", by the POWER magazine of the powerful McGraw-Hill publishing line. This editorial traces the introduction of Dr. Tesla's polyphase system, described by Mr. Anderson, as the **"most tremendous event in all engineering history."**

Editorialist Louis M. Bowler, according to the TESLIAN, answers the perplexing question why, in view of Tesla's important discoveries, he fell short of the comparative popularity won by Edison and Bell. Then in closing, he suggests: "It would be fitting for our engineering societies, in commemoration of the 100th anniversary of Nikola Tesla's birth (July 10, 1956), to acknowledge our debt to this strange and lonely genius who changed our world for the better."

This appears to be just what Mr. Anderson was waiting for. For now, in the same issue of his TESLIAN, he has prepared a form to petition Postmaster General Arthur E. Summerfield to issue a Tesla commemorative stamp next year.

[redacted] this form in duplicate in this issue and [redacted] Send [redacted] petition.

ION CONTAINED
CLASSIFIED
BY SP4 Jones

INDEXED-59
100 2237 A
NOT RECORDED
138 JUL 11 1955

ICAN SRBOBRAN
29, 1955
sburgh, Pennsylvania

Office Memorandum • UNITED STATES GOVERNMENT

TO : L. V. BOARDMAN

DATE: June 29, 1955

FROM : A. H. BELMONT

ALL INFORMATION CONTAINED HEREIN IS UNCLASSIFIED DATE 7-2-80 BY SP4 JM/rtc

SUBJECT: NIKOLA TESLA
MISCELLANEOUS - INFORMATION CONCERNING (ESPIONAGE)

Tolson
Boardman
Nichols
Belmont
Harbo
Mohr
Parsons
Rosen
Tamm
Sizoo
Winterrowd
Tele. Room
Holloman
Gandy

Nikola Tesla, a native of Yugoslavia, was a famous electric inventor who died in New York City in 1943 where he had lived for many years. In attached letter to Bureau dated 6-25-55 Kenneth M. Swezey, Brooklyn, New York, advises he is gathering material to help in a nation-wide commemoration of Tesla's hundredth birth anniversary in 1956. Swezey relates he was present when Tesla's safe was opened by friends after his death and advises the contents were thereafter replaced and then impounded by the United States Alien Property Custodian. Later the safe was removed to Belgrade, Yugoslavia, to be installed in a Tesla Museum. Missing from Tesla's effects is a gold Edison medal he had been awarded. Swezey is seeking to locate the medal and has been advised by the Office of Alien Property (OAP) that OAP held none of Tesla's property. Swezey states he has heard the FBI assisted OAP in handling Tesla's effects while in storage, and accordingly, he asks whether Bureau could assist him in locating the Edison medal. Re FBI's assistance to OAP Swezey mentions that in the Tesla biography ("The Prodigal Genius" - 1944) by John O'Neill it was stated FBI broke into Tesla's safe the day he died (1-8-43 to protect contents from enemy hands). Swezey notes this same comment appears in article ("The Genius Who Walked Alone") by Alfred H. Sinks in the June, 1955, "Coronet." Swezey says he knows FBI did not do this [redacted] Bureau did not enter into Tesla safe matter upon Department's advice it was being handled by OAP. Bureau previously aware of comment in O'Neill's book.

(b)(7)(C)

[redacted]

In 1945 Sinks requested for his use as author data re Bureau's microfilm procedure. Was advised no such data available for publicati

Enclosure Letr 6-30-55
100-2237
cc - 1 - 65-47953
Ticklers - Mr. Bird
Mr. Belmont
Mr. Boardman
ETB:jaa
(5)

RECORDED - 97 100-2237-6

EX-104

6 JUL 7 1955

6 JUL 11 1955

37

Memorandum For Mr. Boardman

RECOMMENDATION:

That the attached letter be sent to Swezey advising Bureau did not participate in the handling of Tesla's effects and that the matter was handled by OAP. Therefore, Bureau unable to be of assistance; that no action be taken relative to Sinks' comment in "Coronet" article.

Tickler - M. Bird
Mr. Belmont
Mr. Boardman

June 30, 1955

RA
RA

ALL INFORMATION CONTAINED
HEREIN IS UNCLASSIFIED
DATE 2-2-80 BY SP4 Jrm/R

Mr. Kenneth M. Swezey
163 Milton Street
Brooklyn 23, New York

(Original)

Dear Mr. Swezey:

With reference to your letter of June 25, 1955, our files disclose the effects of Nikola Tesla were taken into custody after his death by the Office of Alien Property and not by this Bureau.

Since we did not participate in the handling of Mr. Tesla's effects, we are unable to supply the information you requested.

Sincerely yours,

J. Edgar Hoover

John Edgar Hoover
Director

COMM — FBI
JUN 30 1955
MAILED 25

100-2237-6X

RECORDED - 26
INDEXED - 26

EX-113

~~65-47153~~

64 JUL 1 1955

NOTE:

A cover memorandum from Belmont to Boardman was prepared by ETB:jaa on 6-29-55 in connection with this outgoing mail.

Bufiles contain no derogatory data re correspondent; reflect only that he was close friend and admirer of Tesla.

Tolson
Boardman
Nichols
Belmont
Harbo
Mohr
Parsons
Rosen
Tamm
Sizoo
Winterrowd
Tele. Room
Holloman
Gandy

[redacted]

64 JUL 8 1955

39

[redacted] (b)

August 1, 1955.

Mr. J. Edgar Hoover,
Federal Bureau of Investigation,
Washington, D.C.

Dear Mr. Hoover:

In his book, "Prodigal Genius", The Life of Nikola Tesla, Mr. Jo[illegible] J O'Neil says, on page 277, that the F.B.I. went to Tesla's hotel room, opened his steel safe and removed from it, the papers it contained.

Was there ever any publication of what these papers contained? I[illegible] so, could you inform me where I might obtain a copy of such publication?

If there was no publication of the Safe's content, after more tha[illegible] 12 years, would it be improper to publish them?

If there was no publication of the safe's content, but there were no particular secrets found there in, could you inform me where I might learn what the safe contained?

Any information on this matter will be appreciated.

Thank you for your trouble.

Sincerely,

[redacted]

(b)
(7)
(c)

ALL INFORMATION CONTAINED
HEREIN IS UNCLASSIFIED
DATE 7-2-83 BY SP4 Jam/rtc

EX-104

100-2237-6X1

RECORDED - 77

INDEXED - 77

2 AUG 12 1955

(b)
(7)
(c)

40

100-2237-6X1

~~65-47953-34~~

August 11, 1955

[redacted]

EX-104

[redacted]

ALL INFORMATION CONTAINED HEREIN IS UNCLASSIFIED DATE 7-2-80 BY [signature]

Dear [redacted]:

Your letter dated August 1, 1955, has been received, and in response to your inquiry, I would like to advise that our files reflect that the effects of Nikola Tesla were taken into custody after his death by the Office of Alien Property and not by this Bureau.

Since we did not participate in the handling of Mr. Tesla's effects, we are unable to supply the information you requested.

Sincerely yours,

John Edgar Hoover
Director

COMM-FBI AUG 11 1955 MAILED 19

NOTE: Bufiles reflect no record on correspondent. This type of reply utilized by Internal Security Division in answering similar inquiries on 6/30/55. (65-47953-33) Cover memo from Mr. Belmont to Mr. Boardman dated 6/29/55 set out background of this matter which concerned the death of Tesla, a famous electrical inventor. Bureau was not involved in this matter, and the opening of the safe mentioned was done by the Office of Alien Property.

Mr. Tolson
Mr. Boardman
Mr. Nichols
Mr. Belmont
Mr. Harbo
Mr. Mohr
Mr. Parsons
Mr. Rosen
Mr. Tamm
Miss Gandy

[redacted]

63 SEP 28 1955

[redacted]

AUG 18 1955

41

[redacted] (5

September 10., 1955.

Mr. John Edgar Hoover,
Federal Bureau Of Investigation,
Washington 25, D.C.

Dear Mr. Hoover:

Refering to my letter to you August first, 4x1 this year - your letter to me, August 11th., reletive to the matter of the papers of Mr. Nikola Tesla.

On August 26, I wrote the office of Alien Property regarding this matter, indicating that I had received the information from you that it was their department which had taken the Tesla Property into custody - not yours..

I have a letter from Mr. Henry G. Hilken - that Department - File Number HGH:N SM:elk 017-3566, in which I am told that office "never had custody, nor has vested, any property of Nikola Tesla".

As I began this matter with you - because it was stated in Mr. O'Neill's book that it was your department who opened Tesla's safe I am wondering if you have any further suggestions along lines I might follow to obtain some information in this regard?

Thank you for your time and trouble.

Sincerely,

[redacted] (b) (7) (c)

ALL INFORMATION CONTAINED
HEREIN IS UNCLASSIFIED
DATE 7-2-80 BY SP4 Jrm/rte

EX-PROC
SEP 19 1955

RECORDED-12 100-2237-6X2

EX-107 (b) (7) (c)

17 SEP 20

[redacted]

42

RECORDED
INDEXED-12

100-2237-6X2

EX-107

September 20, 1955

(b)(7)(C)

ALL INFORMATION CONTAINED
HEREIN IS UNCLASSIFIED
DATE 7-2-80 BY SP4 jem/rtc

Dear [redacted]:

I have received your letter dated September 10, 1955.

As you were advised by my letter of August 11, 1955, this Bureau was not connected in any respect with the acquisition or custody of the effects of Nikola Tesla, and it is therefore not possible to furnish you any additional information.

Sincerely yours,

John Edgar Hoover
Director

(b)(7)(C)

NOTE: By letter 8-11-55, we referred [redacted] to the Office of Alien Property, which Office was reported to have assumed custody of Tesla's effects subsequent to his dea (65-47953-6)

(3)

(b)(7)(C)

COMM - FBI
SEP 20 1955
MAILED 30

SEP 28 1955

43

L INFORMATION CONTAINED
HEREIN IS UNCLASSIFIED
DATE 7-3-80 BY SP4 Jan/etc

RECOGNITION FOR TESLA

(Please fill out this form and mail to the address appearing below.)

THE TESLA SOCIETY
University Station, Box 135
Minneapolis 14, Minnesota

(date)

(city & state)

Hon. Arthur E. Summerfield
Postmaster General, Postoffice Dept.
Washington, D. C.

Dear Sir:

Nikola Tesla's contributions to science, industry, and to his adopted country have greatly inspired engineering progress. His electrical systems helped create an American conomy of world pre-eminence.

We respectfully request issuance of a 1956 commemorative stamp to be issued on the centennial of Tesla's birth (1856-1943).

(signed) _____

AMERICAN SRBOBRAN
June 29, 1955
Pittsburgh, Pennsylvani

Ex. - 10€
INDEXED-59

100 2237-A
NOT RECORDED
138 JUL 11 1955

6C JUL 13 1955

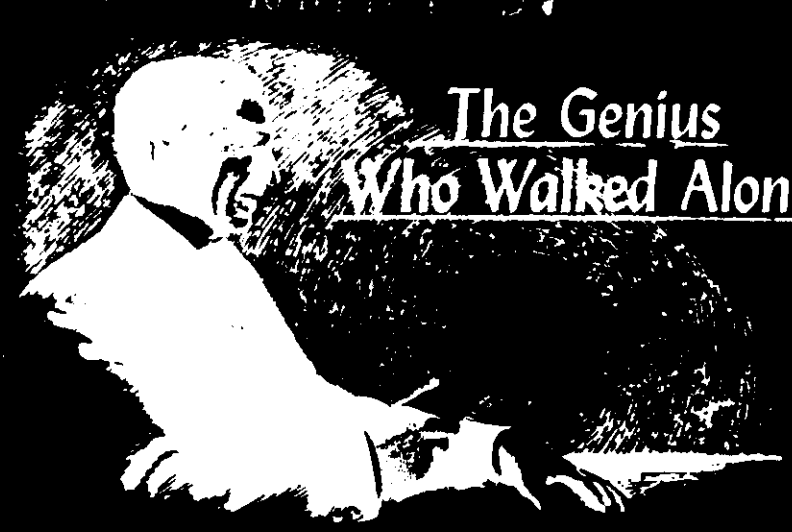

The Genius Who Walked Alone

by ALFRED H. SINKS

Nikola Tesla was a great inventor—and also a prophet without honor

COUNTER-ESPIONAGE WHEELS started turning early on the morning of January 8, 1943. Anxious FBI agents slipped into a room in the Hotel New Yorker where, late the night before, a chambermaid had discovered the body of Nikola Tesla, dead at 86, regarded by many as the greatest scientific genius of his time.

For years, Tesla had been making scientific predictions so fantastic as to be literally out of this world. Of late he had been working—or so he said—on revolutionary new weapons powerful enough to annihilate armies at a single blow.

There was only one Tesla, and the story might—incredible as it sounded—be true. The old man's safe might hold these secrets, and the Government could not risk the chance of enemy spies getting there first.

Half hoping to find something which would bring a sudden and decisive end to World War II, the G-men broke open the dead man's strong box. If anything of importance was discovered, it has never been revealed.

Yet, their quick action was justified, for you could never be sure about Tesla, one of the strangest men who ever lived. Most people took him with a grain of salt, yet no serious scientist dared shrug away his claims as nonsense. Not after Thomas Edison tried it and Tesla proved him wrong.

The world's leading physicists and electrical engineers had to eat crow back in the 1880s when Tesla solved a problem they had thought impossible. That one accomplishment—the invention of a practical alternating-current motor and gen-

45

[redacted]

Mr. Felt
Mr. Baker
Mr. Callahan
Mr. Cleveland
Mr. Conrad
Mr. Gebhardt
Mr. Jenkins
Mr. Marshall
Mr. Miller E.S.
Mr. Sovars
Mr. Thompson
Mr. Walters
Tele. Room
Mr. Boise
Mr. Bowers
Mr. Fenwick
Mr. Herrington
Mr. Conroy
Mr. Mintz
Mr. Eardley
Mrs. Hogan

(b)
(7)
(C)

United States Senate

June 26, 1973

Respectfully referred to:

Congressional Liaison
Federal Bureau of Investigation
Department of Justice
Washington, D. C. 20530

Because of the desire of this office to be responsive to all inquiries and communications, your consideration of the attached is requested. Your findings and views, in duplicate form, along with return of the enclosure, will be appreciated by

Senator [redacted]

ATTN: U.S.S[redacted]

(b)
(7)
(C)

Form #2

ST-105

100-2237-24

7 JUN 29 1973

ENCLOSURE

[redacted]

(b)
(7)
(C)

CORR[redacted]ENCE

46

[redacted]

20 June 1973

(b)(7)(C)

Dear Senator [redacted]

Though in Alaska temporarily working on a military contract, I still consider myself an [redacted] resident, hence it is to you that I write.

During my days at [redacted] College, I became interested in a fascinating Czech physicist, Nicolai Tesla. Proffessor Tesla emmigrated to this country in the twenties, I believe, and did some of his most original work here. Tesla had a peculiar bent of mind, in his younger days he was often called a mad scientist, and did not publish extensively when he came to the US. Most of the extant primary material is in untranslated Czech. Tesla was, however, an extensive note taker. It thought it strange that upon his death, none of his notes from his American period ever appeared. Upon discussing this with a friend, I was informed that all of Mr. Tesla's notes were confiscated by the FBI. I cannot conceive how these notes on physics and electricity can in any way endanger the national safety. It seems that Mr. Hoover in his zeal, had confiscated material whose only sin was a radical approach to science. There is indication that much of Professor Tesla's later work concerned a very novel approach to time theory. Needless to say, it has been radical approaches to physics that have been our greatest scientific advances in modern times, viz. Einstein, Heisenberg, et al.

I was wondering if your office might be able to determine if these papers are still extant, and if so, see to it that the public has access to them. It would be a shame to see all of Nicolai Teslas work to have been in vain.

Please excuse my typing, in all the thousands of words I typed trying to get a liberal education, I never did master the typewriter.

Sincerely yours,

[redacted]

(b)(7)(C)

100-2237-24

ENCLOSURE

47

July 5, 1973

ST-105

REC-15

100-2237-24

ALL INFORMATION CONTAINED HEREIN IS UNCLASSIFIED DATE 7-8-80 BY SP2 jmp/ste

Honorable [redacted]
United States Senate
Washington, D. C. 20510

(b)(7)(C)

Dear Senator [redacted]:

This is to acknowledge receipt of your communication dated June 26th enclosing a letter from your constituent, [redacted] who is temporarily employed in Alaska.

In response to [redacted] inquiry, central files of the Federal Bureau of Investigation indicate that the effects of Dr. Nikola Tesla were impounded after his death by the Office of Alien Property of the Department of Justice and not by the FBI. Since we did not participate in the handling of Dr. Tesla's belongings, I am unable to furnish the information you desire.

I am returning your enclosure as you requested.

Sincerely yours,

William D. Ruckelshaus

William D. Ruckelshaus
Acting Director

MAILED 24
JUL 5 - 1973
FBI

Enclosure

1 - Portland - Enclosures (2)
1 - Congressional Services Office - Enclosures (2)
NOTE: Bufiles reveal prior cordial correspondence with Senator [redacted] is not identifiable in Bufile [redacted] Bufile 100-2237 reflects that Dr. Tesla was a world-famous electrical inventor, and at the time of his death, all of his personal papers and effects were believed dangerous to the count security if they fell into unauthorized hands. The book, "Prodig Genius," by John J. O'Neill, alleged that the FBI took over a ce safe and opened it, appropriating his property. Bufiles clearl indicate that it was the Office of Alien Property of the Depar which did so, and the above reply is forwarded in answer to re inquiries.

(6)(7)

Mr. Felt
Mr. Baker
Mr. Callahan
Mr. Cleveland
Mr. Conrad
Mr. Gebhardt
Mr. Jenkins
Mr. Marshall
Mr. Miller, E.S.
Mr. Soyars
Mr. Thompson
Mr. Walters
Tele. Room
Mr. Baise
Mr. Barnes
Mr. Bowers
Mr. Herington
Mr. Conmy
Mr. Mintz
Mr. Eardley
Mrs. Hogan

54 JUL 13 1973

[redacted] TELETYPE UNIT

(b)(7)(C)

48

(b)
(7)
(c)

[redacted]

FEDERAL BUREAU OF INVESTIGATION
Washington, D.C.

12 July 1973

ALL INFORMATION CONTAINED
HEREIN IS UNCLASSIFIED
DATE 7-3-80 BY SP4 Jam/rtc

Dear Sirs,

It has come to my attention that upon the death of Mr. Nikola Tesla, the founder of modern A.C. power systems, and the original inventor of radio, and innumerable other devices, operatives of the F.B.I. opened his safe and removed his papers on 7 January 1943, within a few hours of his demise. Also, all records of his work have been siezed and held by our government since his death. I would like to know WHY, and also to be informed as to who was, and is responsible for keeping the lid on these records. I would also like to know where they are now.

I do hope you enjoy a good laugh over the aparent naievity of such a request as this, but it is a rather strange situation to exist in a country like this, that a man of such genius and achievement could be systematically cut out of history books, and that the facts about his works could be concealed to the degree they have been. I wish to obtain access to all these old records which have been concealed for thirty years. I would appreciate your kind consideration and attention to this matter and any assistence you may care to give.

EX-105

100-2237-25

9 JUL 20 1973

C-60

[redacted]

[redacted]

(b)
(7)
(c)

ack
7-19-73

CORRESPO

49

July 19, 1973

REC-60/100-2237-25

[redacted]

(b)(7)(c)

EX-105

ALL INFORMATION CONTAINED HEREIN IS UNCLASSIFIED DATE 7-3-80 BY SP4 Jm/rt

Dear [redacted]

Your letter was received on July 16th. In response to your inquiry, the effects of Dr. Nikola Tesla were impounded, after his death, by the Office of Alien Property of the Department of Justice and not by the FBI. Since we did not participate in the handling of Dr. Tesla's belongings, I am unable to furnish the information you desire. A copy of your communication and of this reply have been referred to the Department of Justice.

MAILED 4
JUL 19 1973
FBI

Sincerely yours,

C. M. Kelley

Clarence M. Kelley
Director

NOTE: Bufiles contain no record of correspondent. (Bufile 100-223 reflects that Dr. Tesla was a world-famous electrical inventor, and at the time of his death, all of his personal papers and effects were believed dangerous to the country's security if they fell into unauthorized hands. The book, "Prodigal Genius," by John J. O'Neil alleged that the FBI took over a certain safe and opened it, appropriating his property. Bufiles clearly indicate that it was the Office of Alien Property of the Department which did so, and the above reply is forwarded in answer to related inquiries. Copy of letter referred to the Assistant Attorney General, Civil Divisio of the Department.)

Assoc. Dir. ____
Asst. Dir.:
Admin. ____
Comp. Syst. ____
Files & Com. ____
Gen. Inv. ____
Ident. ____
Inspection ____
Intell. ____
Laboratory ____
Plan. & Eval. ____
Spec. Inv. ____
Training ____
Legal Coun. ____
Cong. Serv. ____
Corr. & Crm. Research ____
Press Off. ____
Telephone Rm. ____
Director Sec'y ____

[redacted]

MAIL ROOM ☐ TELETYPE UNIT ☐

(6)
(7)
(c)

50

[redacted]

Clarence M. Kelley
Director
Federal Bureau of Investigation
Washington D.C. 20535

ALL INFORMATION CONTAINED
HEREIN IS UNCLASSIFIED
DATE 7-3-80 BY SP4 Jam/rtc

Dear Mr. Kelley,

Thank you for your letter of the 19th of July. I appreciate the information about the Office of Alien Property and its connection with the impounding of the effects of Dr. Nikola Tesla. In my letter of the 16th I did not mean to imply the FBI had impounded his effects, as I was aware of the O.A.P.s general part in the affair. The fact remains that to the best of my knowledge, it WAS agents of the FBI who did in fact break into his safe only hours after his death, and did remove the papers therein. Now, in so far as the Bureau was connected, I wish to understand that extent. I do appreciate your refering my communication to the appropriate persons in the Justice Department, but perhaps you could see that the above mentioned connection of the Bureau could be further looked into. I am curious as to who asked the Bureau to perform such an act, whether is was a person in the O.A.P. or what, and on what grounds they were carried out, and to whom they were responsible. Also, to what person were the perloined papers delivered? Names of the agents involved would be appreciated. As to what happened to any other effects of his, that is probably a question more ably answered by the O.A.P., yet if Bureau agents participated once they may have done so on other occasions. If the persons who did open the safe were NOT FBI agents, then we are faced with the fact that persons aparently posed as Bureau operatives, an even more interesting situation. Perhaps this whets your own curiosity a[redacted]

ST 108
REC 68 100-2237-26
AUG 1973

Da

iml
ack 8-2-73
[redacted]

CORRE[redacted]CE

51

this affair, [redacted] interest. Are you aware that before the year 1900 he was able to transmit thousands of watts of electric power to any point on the globe WITHOUT WIRES. This and other feats would make him a prime target for vested interest groups, notably the J.P.Morgan combine with whom he had connections. I am aware of the well earned tradition of the Bureau of NOT serving any master but the common good, so again we have a curious point if indeed strings were pulled. Quite frankly, it looks as if someone went to a lot of trouble to see that his ideas were not broadly available to ensure the stability of their own electric technological apple cart financially, at the expense of unguessable benefits to to humanity as a whole. How would you like to be able to draw unlimited power out of the air to run say a lightbulb with ONE wire? He did it, and much more. My sincere thanks for your thought and attentions to these matters.

Very best wishes,

(b)
(7)
(C)

REC 68 / 00-2237-26

August 2, 1973

ST-102

[redacted]

(b)(7)(C)

ALL INFORMATION CONTAINED HEREIN IS UNCLASSIFIED DATE 2-3-80 BY SP4 Jpm/rte

Dear [redacted]:

Your letter, which was received on July 30th, has been reviewed and I would like to point out that FBI Agents were not involved in removal of papers from the safe of Dr. Nikola Tesla, nor did we at any time have custody of his property.

I realize there have been some written accounts that our Agents acquired Dr. Tesla's belongings; however, these accounts are simply not true. You can be assured we were absolutely not responsible and there was no impersonation involved.

Sincerely yours,

C. M. Kelley

Clarence M. Kelley
Director

NOTE: Correspondent had written in mid-July and asked about the effects of Dr. Tesla and he was advised that the Office of Alien Property had participated in removing his effects from his hotel room. A copy of his communication was referred to the Department of Justice. Bufiles indicate clearly that after Dr. Tesla's death some relatives opened the safe in his hotel room with the help of a locksmith and, thereafter, the Office of Alien Property confiscated all of his belongings. Bufile 100-2237 mentions that the FBI was advised of the existence of this property; however, inasmuch as the Office of Alien Property was handling Dr. Tesla's effects, the Bureau had absolutely no hand in the entire matter.

AUG 2 - 1973

Assoc. Dir. ____
Asst. Dir.:
Admin. ____
Comp. Syst. ____
Files & Com. ____
Gen. Inv. ____
Ident. ____
Inspection ____
Intell. ____
Laboratory ____
Plan. & Eval. ____
Spec. Inv. ____
Training ____
Legal Coun. ____
Cong. Serv. ____
Corr. & Crm. Research ____
Press Off. ____
Telephone Rm. ____
Director Sec'y ____

[redacted] (3)

(b)(7)(C)

MAIL ROOM ☐ TELETYPE UNIT ☐

AUG 10 1973

53

June 9, 1975

Federal Bureau of Investigation
U.S. Department of Justice
Washington D.C. 20535

Sirs:

We recently contacted the San Francisco FBI office and a review of their files revealed information concerning the scientist Nikola Tesla or his papers which we understand to have been impounded.

If you could make a thorough investigation of all files and materials available to you, we would greatly appreciate the correspondence of any information that might be discovered.

Thank you,

ALL INFORMATION CONTAINED HEREIN IS UNCLASSIFIED DATE 7-3-8 BY SP4 Jam/rtc

[redacted]

100-2237-26X

REC-36

(b)
(7)
(c)

[redacted]

54

July 7, 1975

~~62-115530-4553~~

100-2237-26X

ALL INFORMATION CONTAINED HEREIN IS UNCLASSIFIED DATE 2-3-80 BY [illegible]

[redacted] (C)

[redacted] (b)(7)(C)

Dear [redacted]

This will acknowledge your letter of June 9th.

In response to your inquiry, the papers of Dr. Nikola Tesla were impounded, after his death, by the Office of Alien Property of the Department of Justice.

Sincerely yours,

C. M. Kelley

Clarence M. Kelley
Director

~~1 - The Deputy Attorney General - Enclosure~~
~~Attention: Susan M. Hauser~~

NOTE: Bufile 100-2237 indicates that Dr. Tesla was a world famous electrical inventor, and at the time of his death his personal papers and effects were impounded by Office of Alien Property for national security reasons. Since Tesla's death in 1943 the Bureau has received numerous inquiries about the disposition of his technical papers. The above reply is forwarded in answer to these inquiries. Bufiles contain no information identifiable with requesters.

Assoc. Dir. ____
Dep. AD Adm. ____
Dep. AD Inv. ____
Asst. Dir.:
Admin. ____
Comp. Syst. ____
Ext. Affairs ____
Files & Com. ____
Gen. Inv. ____
Ident. ____
Inspection ____
Intell. ____
Laboratory ____
Plan. & Evol. ____
Spec. Inv. ____
Training ____
Legal Coun. ____
Rm. ____

[redacted] (4)

[redacted] (b)(7)(E)

MAILED 7
JUL 7 1975
FBI

55

GPO 954-5

[redacted] (b)(7)(C)

13 November 1975

Mr. Clarence Kelley
Director
F.B.I.
Washington, D.C. 20535

ALL INFORMATION CONTAINED HEREIN IS UNCLASSIFIED DATE 2-3-80 BY SP4 Jm/rte

Dear Mr. Kelley:

In reply to the letter of 10 November from your office:

I restate that I was not asking about the existence or non-existence of any investigative information on Nikola Tesla, but on his technical papers seized on his death in 1943 and reported in the papers of that time.

The reason given in the reply from your office, the second paragraph, as to why I cannot get any information on Tesla's papers makes no sense in itself or in reply to my inquiry. The third paragraph stating the conditions under which a search will be made is a clear bureaucratic circumvention of the Freedom of Information Act and an excuse on the part of the individual handling my request for doing any work beyond the drafting of a letter. Will it be the decision of your office to let the situation stand like this?

As I stated in my first letter, I am following up the Tesla data for a magazine article. I am tempted to have your reply of the 10th printed and run nationally as an example of how bureaucratic manoeuvring is used to get around the FOIA. Does the bureau need more of this type of publicity?

It is disheartening to see an agency entrusted to uphold the law using its resources to mock the law.

Sincerely,

[redacted] (b)(7)(C)

a.k. 11-26-75

[redacted]

21 NOV 1

[redacted]

56

REC-57 EX 103
100-2237-27

November 26, 1975

[redacted]

(6)
(7)
(C)

ALL INFORMATION CONTAINED
HEREIN IS UNCLASSIFIED
DATE 2-3-00 BY SP4 Jm/rtc

Dear [redacted]:

This will acknowledge receipt of your letter to the Bureau on November 14th.

In response to your inquiry, the papers of Dr. Nikola Tesla were impounded, after his death, by the Office of Alien Property of the Department of Justice.

Sincerely yours,

C. M. Kelley

Clarence M. Kelley
Director

1 - The Deputy Attorney General - Enclosure
Attention: Susan M. Hauser

NOTE: Bufile 100-2237 indicates that Dr. Tesla was a World famous electrical inventor, and at the time of his death his personal papers and effects were impounded by Office of Alien Property for National Security reasons. Since Tesla's death in 1943 the Bureau has received numerous inquiries about the disposition of his technical papers. The above reply is forwarded in answer to these inquiries.

[redacted] (5)

(6)
(7)
(C)

Assoc. Dir. ____
Dep. AD Adm. ____
Dep. AD Inv. ____
Asst. Dir.:
Admin. ____
Comp. Syst. ____
Ext. Affairs ____
Files & Com. ____
Gen. Inv. ____
Ident. ____
Inspection ____
Intell. ____
Laboratory ____
Plan. & Eval. ____
Spec. Inv. ____
Training ____
Legal Coun. ____
Telephone Rm. ____
Director Sec'y ____

MAIL ROOM ☐ TELETYPE UNIT ☐

DEC 24 1975

[redacted]

GPO : 1975 O - 569-920

57

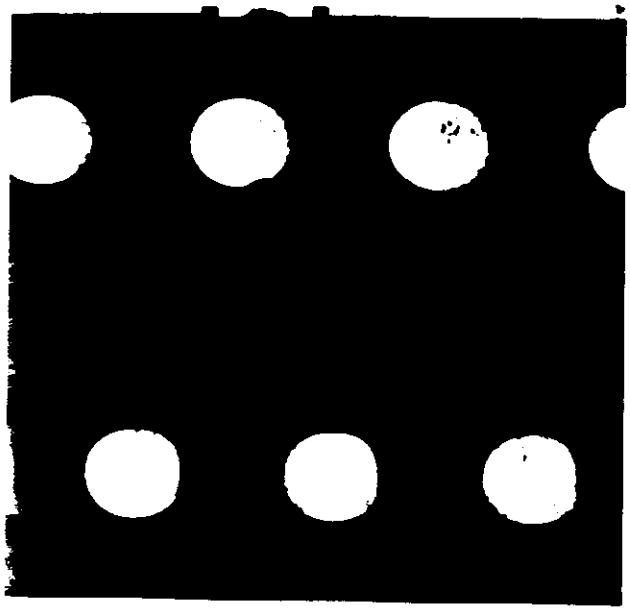

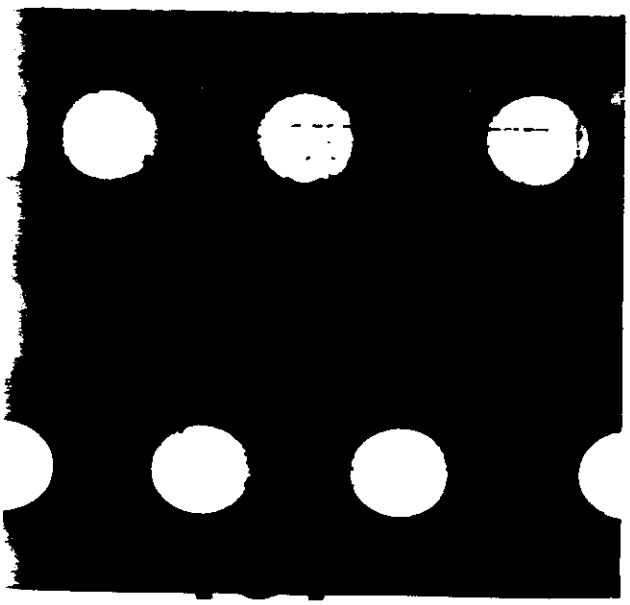

ROUTING AND TRANSMITTAL SLIP

1 TO (Name, office symbol or location) Alan McCreight Rm. 5435 - JEH	INITIALS DATE	ACTION CIRCULATE COORDINATION
2	INITIALS DATE	FILE INFORMATION
3	INITIALS DATE	NOTE AND RETURN PER CONVERSATION
4	INITIALS DATE	SEE ME SIGNATURE

REMARKS

FOIA - [redacted] (b)(7)(c)

Do NOT use this form as a RECORD of approvals, concurrences, disapprovals, clearances, and similar actions

FROM (Name, office symbol or location) Susan M. Hauser	DATE 10/21/75 PHONE 2145

OPTIONAL FORM 41
AUGUST 1967
GSA FPMR (41CFR) 100-11.206

+48—16—81894-1 552-103 GPO 5041-101

58

[redacted]

17 October 1975

Freedom of Information Act Request

Deputy Attorney General
U.S. Department of Justice
Washington, D.C. 20535

[redacted]

Gentlemen:

I am writing an article for a magazine on early twentieth century inventors and want to obtain information on some papers of Nikola Tesla that were seized by the FBI on his death in 1943.

Tesla invented a number of electrical devices and because of the war and because Tesla was born a Yugoslavian national, it was probably considered a measure of preventitive safety to hold in safekeeping papers that might have any bearing on national security.

I would like to find out: 1) if the FBI still has the papers; 2) if they do have the papers, what must be done to see them; 3) if they do not have the papers, who does have them or what happened to them?

100-2237-28

I would be very grateful for your help with this.

REC-2

5 OCT 24 1975

Sincerely,

[redacted]

(6)
(7)
(C)

[redacted]

ALL INFORMATION CONTAINED
HEREIN IS UNCLASSIFIED
DATE 1-3-80 BY SP4 Jmplete

[redacted]

59

erator put Tesla's name among the world's top scientists.

From his invention sprang the industrial age we live in. For without his alternating current, there would be no mass production of automobiles, aircraft, refrigerators; no great water-power dams and generating plants, no Diesel-electric trains; we could not have developed radio, television or atomic power.

The *direct* current that Edison worked with—a feeble force at best—could be sent no more than a couple of miles over wires because its power leaked away rapidly into the surrounding atmosphere. Lights near the power station might burn brightly and steadily, but those near the end of the line would be dim and fluttering.

Tesla sold his basic alternating-current patents in 1888, for a million dollars down. By 1895, the first great power station at Niagara Falls had been built, and by the end of 1896, two more Tesla generators had been installed. Within a few years, the pace of life over half the earth had changed from a crawl to a fast gallop—and it has been gathering speed ever since.

THE MAN who, by his brilliant idea of a "rotating magnetic field," changed the face of the earth and the living habits of the human race was a Croat, born in 1857 in Smiljan, a village in what is now Yugoslavia, but was then part of the old Austro-Hungarian Empire.

When he was about six, Nikola Tesla's father, the village priest, was transferred to a larger parish in the city of Gospic. There, the lad grew up and perfected his earliest "inventions." Of these, his favorite was an "engine" powered by 16 June bugs, harnessed in sets of four to spokes which radiated from the drive shaft.

Nikola was a frail lad, often ill; and he nearly went blind from too much reading. He read everything he could get his hands on, not only science but also religion, philosophy, history, literature. By the time he finished high school, he was fluent in French, German and Italian, as well as his native Serbo-Croat.

He got his schooling—the best his doting family could afford—at Gospic, Carlstadt, Gratz, the University of Prague and, finally, at Budapest. At the University, he saw his first electric motor, a new type direct-current affair whose brushes and commutators sent out showers of crackling blue sparks.

"If we got rid of those brushes and commutators, with all that noise and loss of energy, we'd have a much better motor," Nikola told his professor. "Perhaps it might be done with an alternating current."

"Nonsense!" barked the professor. "An alternating current would never run anything. You're not the brilliant student I thought you were. Forget it!"

But Tesla could not forget. The teacher's ridicule only stamped the idea indelibly on his brain. It became an obsession, a passion—how to make an alternating current drive a motor. In every idle moment, wherever he went, he wrestled with this problem.

Tesla's mind had an unusual twist. Almost from infancy, he had been able to see things in his mind's eye so vividly—and in such minute detail—that often he had trouble telling the real from the imaginary.

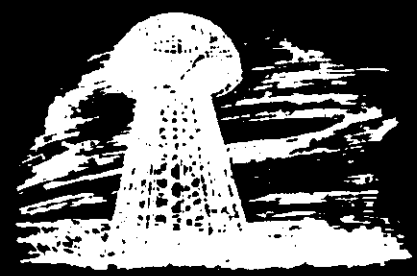

Where the average engineer or inventor would reach instinctively for drawing board, paper and pencil, Tesla would simply switch on that uncanny magic lantern inside his brain. He would fix a mental image there. Then he would alter this detail or that, discard one plan, try another, without ever putting a line on paper.

Years later - from these mental images alone - he could give his workmen exact instructions on how to build each part of a new device, though it was unlike anything ever seen before.

Thus, needing no drafting room and few laboratory conveniences to work on an idea, Tesla could use every spare minute that he had to test and revise his theory of alternating current.

His first real job was manager of a newly organized telephone company in Budapest. But telephone circuits were dull stuff compared with the challenge of that one big idea. He moved to Paris where he became a kind of general trouble-shooter for the Continental Edison Company.

His brain was still chipping away at his big problem, but the trouble was, he couldn't share it with trained men who might have helped him work it out. For whenever he mentioned alternating current to an electrical engineer, the man would look at him as though he were crazy.

But then came the moment when he knew he had solved it. He was walking with a friend in the Bois de Boulogne. Suddenly, he stopped short and began jabbing with his cane at some invisible object in the air.

"See, it works!" he shouted. "It is the rotating magnetic field which causes the armature to turn. It pulls the magnets around with it, causing the shaft to revolve. As I oscillate this switch, causing the current to flow first in one direction, then the other . . ."

Never mind what his friend thought. Tesla had the answer.

At the office, his colleagues scoffed or looked blank. But the manager, listening to the outpourings of scientific jargon, suddenly thought of his boss back in the United States. If there *were* some truth in what the Croat said, surely the famous electrical wizard would be smart enough to see it.

So he gave Tesla a letter of introduction to Thomas Edison and urged him to try his luck in America. Thus, Tesla, now 27, arrived in New York. He was handsome, over six-feet-two, with a distinguished head and deep-set blue eyes. His Slavic face was broad across the cheekbones, his dark hair thick, his chin sharply pointed. Of worldly goods, he had the clothes on his back, four cents in cash, the letter to Edison, and the idea which was to change the world.

Edison thought less than nothing of the idea. It seemed so preposterous that he wouldn't even listen

61

and, of course, Tesla had no drawings with which to try to convince him. But Edison gave him a job, for he had excellent training as an engineer and Edison needed trained men.

Busy with routine electrical work, Tesla waited nearly three years for a chance to turn his mental image into an actual motor he could show to others. In 1887, he was able to borrow enough money to start his own laboratory, and the following year the alternating-current motor and generator were practical realities on a laboratory scale though much practical engineering would still be needed to fit them to commercial use.

George Westinghouse, another inventor, was the first to see their value. He bought the patents and gave Tesla a job as engineer in his Pittsburgh factory.

But Tesla couldn't get along with the other Westinghouse engineers. From his standpoint, the alternating-current job was done. Even "schoolboys" could now iron out the few remaining kinks. Meantime, his brain had started to hatch even bigger dreams. He went back to his laboratory in New York.

"Be alone," he once told a science writer. "That's the secret of invention. Be alone—that's where great ideas are born."

AND HE WAS. In the years that followed, Tesla had many admiring acquaintances, but seldom a friend. After his mother, no woman ever entered his personal life.

His manner toward others was cordial but reserved, distant. His words were as if uttered by some god, sitting on an Olympus high above the rest of humanity. Backed by his fame, those words made a tremendous impression.

He lectured at every scientific center in this country and in all the important capitals abroad. Things which, as yet, existed only inside that amazing brain of his were so real to him, he made them real to his listeners.

He described radar and radio broadcasting and even television. He advocated electro-therapy. He foresaw a day when man would control nature in every respect—even the weather—when machines of all kinds, and the power to run them, would be so cheap that poverty would vanish from the world.

Without wanting to be, Tesla was a superb actor. After listening to him and seeing his wonders, audiences were ready to believe nearly anything.

Tesla reasoned that you could sell electric power cheap if you could do away with the millions of poles and insulators, the millions of tons of copper wire used to transmit it from place to place. He thought he knew how to do it—and J. P. Morgan backed him with $300,000.

On Long Island, Tesla built a huge power plant with a 154-foot steel-ribbed tower topped by an enormous mushroom-shaped copper dome. From this dome he planned to bombard the earth's crust with millions of volts of electric energy. The power so added to the earth's permanent charge could be drained off at some other point—*any* point—on the earth's surface. Thus, it would be possible for electric power to be sent anywhere without conduits, poles or wires. Or so he thought, until he tried it.

62

In November 1928, Tesla announced that he could abolish war.

The inventor had designed a small, inexpensive, radio-controlled boat which, through its supposed ability to destroy the biggest battleships, would make great navies useless. Not many years later, he was talking of another super-weapon: a "death ray" which would annihilate whole armies.

Yet Tesla never suspected that the real super-weapon of the future would come from atomic fission. For Einstein's basic notion which led to smashing the atom, he had only ridicule. Alone in his middle age, he had fallen out of step with the world's great thinker.

Not all Tesla's later inventions were fantastic. Some, like his induction coils and oscillators, and pioneer work on "tuned" electrical circuits, were highly important.

Though he never succeeded in transmitting power without wires on a big scale, he *did* prove that a single wire is enough. And some of his brilliant prophecies inspired the more plodding scientists to work out the practical problems of induction heating, radio-telephone, radar and many other electronic marvels of today.

But as he grew older, he withdrew further and further within himself. His strange prophecies sounded like a voice from another planet. For companionship now, the old man had only his dreams, and they grew stranger with the years. Completely alone at last, a stooped, gaunt figure with thin, silvery hair, he used to slip from his hotel room, buy a bag of birdseed and trudge slowly over to a park where hundreds of pigeons awaited him. These were his friends. They needed him, though the world did not.

When he grew too ill to go out, each day he sent a Western Union messenger to the park. After feeding the birds, the boy was instructed to see if any of them seemed sick. If so, he was to bring them back to Tesla's room where the inventor would nurse them gently back to health.

Perhaps this sad little labor of love showed that the man who changed the world had, at last, discovered a great truth. Perhaps he knew now that the greatest power for good lies not in lonely thought but in a human heart pulsating like his own "tuned circuits"—in tune with the hearts of his fellowmen. Or did he ever know? You could never be sure about Tesla.

Winnie Wit

IN THE EARLY 1920s, when Winston Churchill had offended both his own supporters and the political opposition, the late George Bernard Shaw wrote him: "I enclose two vouchers for the première of my new play, for yourself and a friend—if any."

Back to the playwright promptly came the theater checks with this note from "Winnie": "I regret I am unable to attend the première of your new play. Please send me two vouchers for the second performance—if any."

—[illegible]

RECOGNITION FOR TESLA

At long last Serbians—American and Canadian—have acted to honor the memory and achievements of one of Serbia's greatest sons.

For the world-wide Centennial celebration of Dr. Nikola Tesla's birth next year, Serbs on this Continent plan to erect a bust statue of the electrical genius to stand before the entrance of the Monastery at Libertyville, Ill.

Steps looking towards that end were taken at the recent SNF convention following the reading of a letter by President Mike Radakovich from His Grace, Bishop Nicolai. As the universally-renowned churchman stated, erection of a suitable monument, by Serbians, would forever remind other Serbs of the honor and glory of Dr. Nikola Tesla . . . . And that he was a SERBIAN, son of a SERBIAN ORTHODOX clergyman, born in the SERBIAN SELO of Smiljan in Lika.

Further, His Grace urged that the undertaking be a joint one and representative of ALL the Serbian organizations in the United States and Canada. He naturally looked to the SNF for leadership, and the greatest monetary contribution. But he also besought the help of the Serbian Nat'l Defense and the Jedinstvo beneficial society.

The Convention voted $1000 for the project and a hand collection was taken up among the delegates and guests, kinsmen Milos Konjevich of Joliet, Ill., giving $200. It is probable that the balance of the needed $3000 will be raised thru public good-will offerings and via cash gifts of the other two organizations mentioned.

And after a suitable bust has been erected for Dr. Tesla, Bishop Nicolai suggested a similar-like monument honor the memory of Dr. Mihailo Pupin, also a world-renowned scientist, author and educator.

This is a subject near and dear to all good Serbian hearts

ALL INFORMATION CONTAINED
HEREIN IS UNCLASSIFIED
DATE 7-3-80 BY [illegible]

INDEXED - 36
100 2237 A
NOT RECORDED
12 OCT 7 1955

"AMERICAN SRBOBRAN"
September 28, 1955
Pittsburgh, Pa.

EX-113
7531
60 OCT 7 1955
100-2237
64

INFORMATION CONTAINED
UNCLASSIFIED
DATE 7-3-80 BY SP4 Jm/rtc

100-2237

SNF Opens Drive for Tesla Memorial at Libertyville—

$2000 PUBLIC AID SOUGHT

PITTSBURGH, PA. — The Serb Nat'l Federation Executive Board has acted quickly to implement a Convention decision to honor the memory of the illustrious Dr. Nikola Tesla.

At its first meeting of October 8, the Board drafted a resolution calling on all SNF members and good Serbians to help finance a memorial project for the late scientist-inventor genius.

This would stand before the entrance of the Monastery in Libertyville, Ill.

Cost of the contemplated project, which would clarion to the world that Dr. Tesla was a Serbian, is estimated at $3000. The Convention voted $1000 to the cause and a hand collection among 122 delegates yielded several hundred dollars more.

Kinsman Milos Konjevich of Joliet, Ill., gave $200.

Public Aid Sought

Balance of the needed sum is now being sought thru good-will offerings of the general Serbian populace in the United States and Canada.

A fund, similar to the one being conducted to help defray mortgage expenses on Shadeland, has been established.

It is hoped to raise the necessary monies and complete the project in time for the worldwide Centennial celebration for the genius next year.

Spearheading the movement for recognition, especially among American elements, is the TESLA SOCIETY, founded by scientist-engineer Leland Anderson, a fanatical admirer of the late Dr. Nikola Tesla.

Mr. Anderson right now is conducting a search for a famous portrait of the Serbian electrical wizard done at the turn of the century in New York.

Seek Missing Portrait

In his current TESLAIAN publication, Mr. Anderson revealed the work, by Princess Vilma Lwoff-Parlaghy, is missing.

Reviewing developments, Mr. Anderson wrote:

"On March 1, 1916, the Princess gave a reception in her new studio in New York especially to exhibit her latest protrait of Nikola Tesla. An article in the NEW YORK TIMES for March 2, 1916, stated—

" 'It was one of the beliefs of Mr. Tesla that there was something unlucky about posing for a picture and he never sat to any before he entered the studio of the Princess. The room which she had chosen did not have a skylight in it and the much desired North exposure was missing.

" 'At the suggestion of Mr. Tesla, a cluster of powerful incandescents was put up in the corner of the apartment and the rays, filtered thru blue glass, were just the right quality. The portrait was shown under the same illumination.

At Ease for Sitting

" 'Mr. Tesla, having solved the problem of the artifical sun, fell to thinking about other parts of the universe, and there he sat oblivious to his surroundings.

" 'The painter was able to produce a likeness in which there is no evidence that the subject was conscious that anybody was watching him, much less studying his features from the other side of the easel.

" 'Among those who attended the reception were Mrs. C. B. Alexander, Henry P. Davison, the Countless de Rittenburg and Mrs. E. T. Isham.' "

After the Princess died, in 1923, her studio and all objects of art, was sold at auction.

The Telsa portrait, 53x48 inches, appeared on the cover of TIME magazine (July 20, 1931) and in the ELECTRICAL EXPERIMENTER (January 1919), Mr. Anderson says.

Its location is not now known.

INDEXED - 14

100-2237-A

NOT RECORDED
129 NOV 4 1955

AMERICAN SRBOBRAN
October 26, 1955
Pittsburgh, Pa.

EX-1

65

279
68 NOV 9 1955

100-2237

[redacted]AF $1580

Half of $3000 Costs For Statue Pledged

Cadiz, O., Serb Gives $100 For Bust Image of Inventor To Be Placed at Monastery

Pittsburgh, Pa.—Half of the $3000 fund goal for a statue memorial of the late Dr. Nikola Tesla has been realized, the SNF announced today.

In fact, total contributions counted so far come to $1580.

The Fund is an outgrowth of a plea by Bishop Nicolai for Serbians to do honor for the memory of the noted electrical wizard during the world-wide Centennial celebration planned for the genius next year.

In the wake of the plea, voiced at the recent 7th Convention at Niagara Falls, Canada, the delegates approved a $1000 gift from the SNF and decided to raise, by public grant, the balance of $2000.

A hand collection among the 122 grass-roots leaders of the Society raised another $450. Then, at its first meeting October 5, the newly-elected Executive Board of the SNF appealed to the membership at large to fulfill the balance required.

First Contribution $100

A scant 24 hours after the appeal was published in the Society's "Srbobran" organ last Wednesday, Sime Zelich of Cadiz, O., gave $100.

The proposed memorial, a statue image, would be placed before the entrance of the St. Sava Serbian Monastery in Libertyville, Ill.

historians, writers, educators, scientists, etc., would not be misled, Bishop Nicolai believes.

Be that as it may, the SNF's goal is to amass the needed monies in time to erect and dedicate the memorial before the Tesla Centennial celebration ends.

Donors and the amounts of their donations are as follows:

SNF	$ 1000.00
Delegate M. Konjevich	200.00
" Todor Dragich	50.00
" Petar Borovich	25.00
SNF Counsel N. Stone	25.00
Delegate N. Stepanovich	20.00
" Maxim Jakovac	20.00
" Ilija Janjanin	20.00
" Lou Balta	10.00
" Jovan Vukcevich	10.00
" Milan Kajganovich	10.00
" Stevan Rogulja	10.00
" Bogdan Dragicich	5.00
" Milan Tomich	5.00
" Todor Vuicich	5.00
" Djuro Lukich	5.00
" G. Stoisavljevich	5.00
" R. Vukadinovich	5.00
" Janko Mrmich	5.00
" Petar Maravich	5.00
" Mirko Baranin	5.00

INFORMATION CONTAINED IS UNCLASSIFIED DATE 2-3-80 BY [redacted]

3 NOV 14

ıtion at Niagara Falls, Can-
a, the delegates approved a
000 gift from the SNF and
cided to raise, by public
ant, the balance of $2000.

hand collection among the
grass-roots leaders of the So-
raised another $450. Then,
first meeting October 5, the
ly-elected Executive Board of
SNF appealed to the mem-
ship at large to fulfill the bal-
e required.

First Contribution $100

A scant 24 hours after the ap-
l was published in the Society's
bobran" organ last Wednes-
, Sime Zelich of Cadiz, O.,
e $100.

The proposed memorial, a
tue image, would be placed be-
e the entrance of the St. Sava
bian Monastery in Libertyville,

"There it would proclaim to
ns of thousands of Serbian
sitors annually that Nikola
esla was of Serbian immigrant
ock and son of a Serbian
rthodox clergyman," Bishop
icolai declared.

For half a century and more,
general American public has
en misled anent the nationality
the man who foretold the com-
of atomic energy power.

Only recently, a prominent
American magazine listed him,
ncorrectly, as of Croatian
tock. The mistake was subse-
uently publicly corrected with
pologies by the publication.

But lacking an image reference,
th historical statistics, similar
ors are likely in the future.

Old References Poor

The magazine publication, for
stance, explained it obtained its
ference material from an anti-
ated guide book.

Since the misleading matter
re was never challenged by
rbians and other interested
rties before, the magazine logi-
ly assumed it was factual.

Erection of a bust statue,
lso listing Dr. Tesla's date of
irth, birthplace, parents, etc.,
ould counter the old myths
nd make certain that future

Centennial celebration ends.

Donors and the amounts of their donations are as follows:

SNF	$ 1000.00
Delegate M. Konjevich	200.00
" Todor Dragich	50.00
" Petar Borovich	25.00
SNF Counsel N. Stolac	25.00
Delegate N. Stepanovich	20.00
" Maxim Jakovac	20.00
" Ilija Janjanin	20.00
" Lou Balta	10.00
" Jovan Vukcevich	10.00
" Milan Kajganovich	10.00
" Stevan Rogulja	10.00
" Bogdan Dragisich	5.00
" Milan Tomich	5.00
" Todor Vuicich	5.00
" Djuro Lukich	5.00
" G. Stoisavljevich	5.00
" R. Vukadinovich	5.00
" Janko Mrmich	5.00
" Petar Maravich	5.00
" Mirko Baranin	5.00
" Stanko Jelich	5.00
★ ★ ★	
Prof. Anthony Tomovich (Edmonton, Alberta, Can.)	10.00
Teta Andia Mamula (Pittsburgh)	5.00
Martha Mamula Bjelosh (Pittsburgh)	10.00
Sime Zelich (Cadiz, O.)	100.00
Milinko Alexich, war invalid (Omaha, Nebr.)	
Total	$ 1,[illegible]

—the honoring, forever, of two of Serbia's best-known immigrant sons who contributed so greatly to the welfare and prosperity of their adopted America.

We hope to report developments as soon as they take place, remembering Bishop Nikolai's concluding remarks:

"Nikola Tesla, in the field of science, brought the Serbian name great glory—just as did the greatest Serbian knights on the field of battle."

23 June 56

Federal Bureau of Investigation
Washington 25, D.C.

Gentlemen:

[redacted]

During my senior year at Georgetown University I read J.J.O'Niel's Biography of Nikoli Tesla; the book, entitled "Prodigal Genius", described quite a few of Tesla's experiments, most of which I tried myself in the physics lab. I am interested in reviewing Tesla's experiments in wireless electric power transmission.

Unfortunately, Tesla died in 1945 just at the time he supposedly had developed a system of wireless power transmission. Since World War II was then in progress his papers were seized and sealed by the F.B.I. I suppose that by now Tesla's papers have been released for publication, but a call to the Library of Congress produced no results. Therefore, I have two questions:

1) Does the F.B.I. now have Tesla's scientific papers?

2) If so, are they available for public inspection? If they were released, who has them?

I will certainly appreciate any help you can give me along these lines. Tesla published very little of his findings; this, coupled with the fact that wireless power is connected by most people with "Death Rays" and crack-pots has made it nearly impossible for me to find anything on the subject.

Yours very truly,

[redacted]

[redacted] (b) (7) (C)

RECORDED - 86 100-2237-7

JUL 3 1956

[redacted] (b) (7) (C)

INFORMATION CONTAINED HEREIN IS UNCLASSIFIED 2-3-80 BY SP4 Jmp/etc

[redacted] (b) (7) (C)

68

100-2237-7
RECORDED - 86
INDEXED - 86

EX-122

15

L INFORMATION CONTAINED
EREIN IS UNCLASSIFIED
DATE 7-3-80 BY SP4 Jmfrte

June 29, 1956

[redacted]

(6)(7)(C)

Dear [redacted]

Nikoli Tesla

Your letter dated June 23, 1956, has been received, and in response to your inquiry, I would like to advise that our files reflect that the effects of Nikola Tesla were taken into custody after his death by the Office of Alien Property and not by this Bureau.

Since we did not participate in the handling of Mr. Tesla's effects, we are unable to supply the information you requested.

Sincerely yours,

John Edgar Hoover
Director

COMM — FBI
JUN 29 1956
MAILED 24

NOTE: Bufiles reflect no record on correspondent and reveal the correct spelling of Tesla's name as "Nikola." Bufiles reflect this type of reply h been utilized by the Domestic Intelligence Division in answering similar inquiries. (65-47953; 100-2237) Cover memo from Mr. Belmont to Boardman 6-29-55, set out background of this matter which concerned the death of Tesla, a famous electrical inventor. Bureau was not involved in this matter, and the opening of the safe containing his effects was done by the Office of Alien Property.

Tolson
Boardman
Nichols
Belmont
Harbo
Mohr
Parsons
Rosen
Tamm
Sizoo
Winterrowd
Tele. Room
Holloman
Gandy

FBI
JUL 17 1956

[redacted]

(3)

(6)(7)(C)

[redacted]

69

STANDARD FORM NO. 64

Office Memorandum • UNITED STATES GOVERNMENT

TO : DIRECTOR, FBI

DATE: 7/25/57

FROM : SAC, NEW YORK (65-12290)

SUBJECT: NIKOLA TESLA (Deceased)
IS -YU

INFORMATION CONTAINED HEREIN IS UNCLASSIFIED DATE 7-3-80 BY SP4 Jrmfr

[redacted] Street, New York 24, New York, a United States citizen of Yugoslav extraction, who on occasion, voluntarily furnishes the New York Office with information he considers to be in the interests of the Security of the United States Government, furnished Special Agent NICHOLAS J.MASTROVICH the following information on July 3, 1957: (b)(7)(D)

MR & MRS. JOHN STORM

[redacted] stated that a certain woman named Mrs. MARGARET STORM who lives with her husband, JOHN, at the Colonial Hotel, 51 West 81st Street, New York 24, New York, has been issuing newsletters which contain information pertaining to flying saucers and interplanetary matters. (b)(7)(D)

SECTION NEWSLETTER NEWSLE

[redacted] stated that in his opinion Mr. and Mrs. STORM are exploiting the reputation and genius of NIKOLA TESLA, deceased, inventor of Yugoslav extraction who achieved world wide fame as a result of his inventions in the United States. (b)(7)(D)

TESLA was born in Smiljan, Yugoslavia in July, 1859 and came to the United States in 1894 and became a naturalized United States citizen. In 1886 TESLA designed the arc-lighting system and two years later he invented the Tesla motor and designed a plan for the transmission of alternating current. In subsequent years, TESLA's discoveries and inventions included such fields and appliances as wireless communication, electrical oscillation, radiant power and radio active matter. After 1900, communications and wireless power transmission occupied most of his research.

2 - Bureau (RM) (Encs.2)
1 - Los Angeles (Info) (Encl.1) (RM)
1 - New York (65-12290)

NJM:mcd
(4)

SE 43 100-2237-

RECORDED-56

INDEXED-56

14 JUL 29 1957

0 1957

70

TESLA's only military invention was a method to which he once eluded but never fully described. This invention was a means whereby an inpenetrable "wall of force" can be erected around the United States' borders which would render helpless any military attack. TESLA disclosed the existence of his plan in 1934 and stated he intended to present it to the Geneva Conference but seldom referred to it afterward.

The "New York Times" dated 9/22/40, carried an article setting forth NICOLA TESLA's plan for a "Death Ray". This article included information to the effect that TESLA, on his 84th birthday, July 10, 1940, advised New York Times reporter WILLIAM L. LAWRENCE that he was ready to divulge to the United States Government the secret of his "teleforce", with which he said airplane motors would be melted at a distance of 250 miles so that an invisible Chinese wall of defense would be built around the country against any attempted attack by an enemy airforce no matter how large. According to TESLA, this "teleforce" was based on an entirely new principle of Physics that "no one has ever dreamed about" and was different from the principle embodied in his inventions relating to the transmission of electrical power from a distance, for which he received a number of basic patents.

TESLA stated that this new type of force would operate through a beam one hundredth millionth of a square centimeter in diameter and could be generated from a special plant that would cost no more than two million dollars and would take only about three months to construct. TESLA stated that a dzen such plants located at strategic points along the coast, according to TESLA, would be enough to defend the United States against all possible aerial attacks. TESLA stated that this beam would melt any engine and would also ignite explosives aboard any bomber. TESLA stated that no possible defense against it could be devised and he asserted that the beam would be all penetrating.

TESLA stated to Mr. LAWRENCE that he makes one important stipulation before he would divulge this secret to the United States Government and that was that should the United States Government decide to take up his offer, he would go to work at once but that the United States Government would have to trust him. TESLA stated that he would suffer "no interference from experts."

In this "New York Times" article Mr. LAWRENCE commented that with conditions as they were in 1940, and with the United States getting ready to spend millions of dollars for National Defense, Mr. TESLA's great reputation as an inventor, who always was many years ahead of his time, should be given careful consideration. Mr. LAWRENCE stated, in his opinion, the United States Government should take Mr. TESLA at his word and commission him to go ahead with the construction of his "teleforce" plant.

The New York file of Mr. TESLA bears no indication that any additional developments were carried on in connection with TESLA's invention and whether or not TESLA fully divulged his new plan to the United States Government.

TESLA died at the age of 85 on January 7, 1943.

Mr. [redacted] provided a two page copy of the above mentioned newsletter which Mr. and Mrs. STORM have been distributing in connection with the alleged invention by TESLA, which, according to Mr. and Mrs. STORM, consists of a radio type machine known as the Tesla Set which was invented by Mr. TESLA in 1938 for interplanetary communication. Mr. and Mrs. STORM claim that TESLA's engineers did not complete the Tesla Set until after TESLA's death in 1943. Mr. and Mrs. STORM claim that this Set was placed in operation in 1950 and since that time TESLA engineers have been in close touch with space ships. etc. (X)(D)

The Newsletter furnished by Mr. [redacted] included (6)(7)(D) the following names:

MARGARET STORM
JOHN STORM
GEORGE VAN TASSEL, Yucca Valley, California NY
DAN FRY NY - NMEX
GEORGE KING, London, England

The files of the New York Office contained no pertinent information regarding any of the above mentioned individuals. ARMAHO NY

Two photostatic copies of this newsletter are being sent to the Bureau for purposes of information while one copy is being submitted to the Los Angeles Office for information purposes.

[redacted] (b) (7) (C)

Mr. J. Edgar Hoover

L INFORMATION CONTAINED
EIN IS UNCLASSIFIED
7-3-80 BY SP4 Jam/rtc

Dear Sir:

I an hopeful that you can help me obtain certain information on records and data, which belonged to Dr. Nikola Tesla. He was an Electrical Engineer and prolific inventor.

He was born in Yugoslavia in 1856 and died in the United States, New York City, January 7th, 1943. He was a naturalized citizen of this country.

The only information I could find of his records was a report that the F.B.I. removed his papers for examination, and that the records were sealed by the custodian of alien property.

I have been doing some theoretical research of my own, which I believe may be along the same lines he followed in certain of his experiments. I also believe the development of his ideas would be in the interest of our country regardless of who developes them.

If it is at all possible for me to have access to at least some of his experimental work, I would certainly appreciate it. I am not able, by reason of the vast finances, which would be required, to conduct such experiments myself, so the data he made and collected would be invaluable.

Of course, it is possible that his records do not contain material pertinent to his electronics work, because from what I understand from reading about him, he kept most of his records in his head and wrote down very little of his data.

It is also possible that some of his ideas are impractical, but I feel sure that certain of his ideas will be of immense value to our country within the next several decades or even before, if they are developed at a rapid rate.

I would appreciate hearing from you on the subject, if you have any information pertaining to it, which you could make available to me.

100-2237-9

REC-1

Sincerely,
16 MAR 18 1958

[redacted]

Ack 3/14/58 [redacted]

[redacted]

(b) (7) (C)

[redacted]

74

March 14, 1958

REC-1

100-2237-

[redacted]

(b)(7)(c)

ALL INFORMATION CONTAINED HEREIN IS UNCLASSIFIED DATE 7-3-80 [illegible]

Dear [redacted]:

Your letter postmarked March 7, 1958, has been received.

In response to your inquiry, I would like to advise that our files reflect that the effects of Dr. Nikola Tesla were taken into custody after his death by the Office of Alien Property in the Department of Justice and not by the FBI.

Since we did not participate in the handling of Dr. Tesla's effects, we are unable to supply the information you requested.

Sincerely yours,

John Edgar Hoover
Director

NOTE: Buffiles reflect no record on correspondent. Buffiles reflect above type of reply has been utilized in the past in answering similar inquiries. (100-2237-7) Cover Memorandum from Belmont to Boardman 6/29/55 set forth background of this matter which concerned the death of Tesla, [illegible] electrical inventor. Bureau was not involved in this matter, and [illegible] of the [illegible] containing his effects was done by the Office of Alien Property.

Tolson
Nichols
Boardman
Belmont
Mohr
Parsons
Rosen
Tamm
Trotter
Nease
Tele. Room
Holloman
Gandy

[redacted] also (b)(7)(c)

COMM - FBI
MAR 14 1958
MAILED 19

68 MAR 21 1958

MAIL ROOM

(b)(7)(c)

75

June 24, 1957

Federal Bureau of Investigation
Washington 25, D.C.

ALL INFORMATION CONTAINED
HEREIN IS UNCLASSIFIED
DATE 7-3-80 BY SP4 Jan/rtc

Dear Sirs,

I am doing a research study on the life of Dr. Nikola Tesla of New York City (1856 - 1943), and desire information which you may have. It was reported in the book "Prodigal Genius" that Dr. Tesla's papers were seized from his New York hotel room upon his death in 1943 by the F.B.I. I am very interested in getting copies of his papers for my study and would like to know if this report is true and where I might obtain further information about them or if you are holding them.

REC-91 100-2237

EX 101

Sincerely ~~yours~~,

[redacted]

(b)
(7)
(C)

[redacted]

CRIME REC

EX 101

REC- 91

July 2, 1959

Ink 100-2237-10

[redacted]

(b)(7)(c)

L INFORMATION CONTAINED
EIN IS UNCLASSIFIED
DATE 7-3-80 BY SP4 Jamfite

Dear [redacted]

Your letter dated June 24, 1959, has been received.

In response to your inquiry, I wish to advise that our files reflect that the effects of Dr. Nikola Tesla were impounded, after his death, by the Office of Alien Property of the Department of Justice and not by the FBI. Since we did not participate in the handling of Dr. Tesla's effects, we are unable to supply the information you desire.

Sincerely yours,

MAILED 5
JUL 2 1959
COMM-FBI

John Edgar Hoover
Director

NOTE: Bufile 100-2237 reflects that Dr. Tesla was a world-famous electrical inventor, and at the time of his death, all of his personal papers and effects were believed dangerous to the country's security if they fell into unauthorized hands. The book, "Prodigal Genius," by John J. O'Neil, alleges that the FBI took over a certain safe and opened it, appropriating his property. Bufiles clearly indicate that it was the Office of Alien Property of the Department who did so, and the above reply is forwarded in answer to related inquiries.

Tolson
Belmont
DeLoach
McGuire
Mohr
Parsons
Rosen
Tamm
Trotter
W.C. Sullivan
Tele. Room
Holloman
Gandy

[redacted]
(3)

FBI

57 JUL 9 1959

MAIL ROOM ☐ TELETYPE UNIT ☐

[redacted]

(b)(7)(c)

[redacted]

77

OPTIONAL FORM NO. 10

UNITED STATES GOVERNMENT

Memorandum

Tolson
Mohr
Parsons
Belmont
Callahan
Conrad
Malone
McGuire
Rosen
Tamm
Trotter
W.C. Sullivan
Tele. Room
Ingram
Gandy

TO : MR. TROTTER

DATE: 12-6-60

FROM : A. K. Bowles

SUBJECT: NIKOLA TESLA (DECEASED)
INFORMATION CONCERNING

ALL INFORMATION CONTAINED HEREIN IS UNCLASSIFIED DATE 7-3-80 BY

(b)(7)(C)

[redacted] telephoned December 5 and was referred to Ident by switchboard because he wanted to talk with someone in charge of records of deceased. [redacted] said he is making a research study for U. S. Air Force on subject of geophysics. His deadline is ten days from now. [redacted] said he just discovered a sentence in a book by John J. O'Neill entitled "The Prodigal Genius -- The Life of Nikola Tesla," which states the FBI took custody of papers from Tesla's safe after his death in New York City in 1943. Tesla was a world-famous Yugoslav scientist and inventor in the electrical field who died January 7, 1943, in New York City. [redacted] requested immediate access to Tesla's scientific works which may shed light on [redacted] research study. I told [redacted] we would have somebody from our Boston Office contact him immediately.

(b)(7)(C)

Bureau file 100-2237 shows no investigation of Tesla has been conducted by Bureau. Since erroneous statement concerning FBI's taking custody of papers from Tesla's safe after his death appeared in O'Neill's book published in 1944, Bureau has received numerous inquiries from scientists desiring to review Tesla's writings. Each inquiry has been answered by stating FBI did not participate in handling Tesla's effects, but information has come to our attention that Office of Alien Property of Department of Justice may have examined Tesla's effects. (File indicates that representatives of Office of Alien Property did actually review Tesla's possessions, including his writings, but file does not show what final disposition was made of Tesla's possessions.)

A teletype to Boston Division was prepared, but before it was sent [redacted] telephoned again to furnish me the exact page in O'Neill's book in which he refers to the FBI. At that time I told [redacted] the statement in the book was untrue -- that the FBI had not examined or taken custody of Tesla's papers. I suggested to [redacted] that he might contact Office of Alien Property. (Therefore, teletype to Boston was not necessary.) 100-2237-11

ACTION:

For record.

AKB:ks

EX-113 REC-38 5 DEC 8 1960

51 DEC 13 1960

(5)

Bu file 100-2237
1- Mr. Belmont

78

[redacted]
(b)
(7)
(c)

February 14, 1961

Federal Bureau of Investigation
Department of Information
Washington 25, D. C.

[redacted] INFORMATION CONTAINED
HEREIN IS UNCLASSIFIED
DATE 7-3-80 BY SP4 jm/rtc

Dear Sir:

I am a college student who is doing a research paper on Nikola Tesla. As I was collecting the material for my paper, I discovered that at the time of Tesla's death, the department of the F.B.I. confiscated the data and papers that Tesla had collected from his research in the field of electricity. This confiscation of his material was stated in the PRODIGAL GENIUS by J.J. O'Neil, published in 1944 at New York city by Washburn Inc.

I have developed an interest in the discoveries and accomplishments of Tesla that is presently limited by the shortage of factual material. If in your files, you have any information concerning Nikola Tesla that you are permitted to release, I will sincerly appreciate your co-operation in helping me give the proper recognition to this great scientist and American. Below I have listed the facts that may be helpful to you;

REC- 55 100-22137-18
FEB 28 1961
EX.-102

1. Born in 1856 at Smiljan, Crotia, now Yugoslavia
2. Came to America in 1884 and was employed for a short time with the Edison Co. at Orange, N.J.
3. Died on January 7, 1943 at New York city

Thanking you for your time and co-operation that I have taken, I remain,

Sincerly Yours,

[redacted]
(b)
(7)
(c)

[redacted]

79

esd 100-2237-12

REC- 55

EX-76

February 23, 1961

[redacted]

(6)(c)

ALL INFORMATION CONTAINED HEREIN IS UNCLASSIFIED DATE 7-3-80 BY [illegible]

Dear [redacted]:

Your letter of February 14, 1961, has been received, and the interest which prompted you to write is appreciated.

In response to your inquiry, I wish to advise that our files reflect that the effects of Dr. Nikola Tesla were impounded, after his death, by the Office of Alien Property of the Department of Justice and not by the FBI. Since we did not participate in the handling of Dr. Tesla's effects, we are unable to supply the information you desire.

MAILED 10
FEB 23 1961
COMM-FBI

Sincerely yours, (b)(7)(c)

John Edgar Hoover
Director

NOTE: No record could be located in Bufiles identifiable with correspondent. Bufile 100-2237 reflects that Dr. Tesla was a world-famous electrical inventor, and at the time of his death, all of his personal papers and effects were believed dangerous to the country's security if they fell into unauthorized hands. The book, "Prodigal Genius," by John J. O'Neill, alleges that the FBI took over a certain safe and opened it, appropriating his property. Bufiles clearly indicate that it was the Office of Alien Property of the Department who did so, and the above reply is forwarded in answer to related inquiries.

Tolson
Parsons
Mohr
Belmont
Callahan
Conrad
DeLoach
Evans
Malone
Rosen
Tavel
Trotter
W.C. Sullivan
Tele. Room
Ingram
Gandy

(3)
50 MAR 6 1961
MAIL ROOM TELETYPE UNIT

[redacted] (b)(7)(c)

80

November 21, 1962

Federal Bureau of Investigation

Washington 25, D.C.

Gentlemen:

I am making a study, motivated out of personal curiosity, into the life and works of Nikola Tesla. Mr. Tesla died on January 7, 1943 in the Hotel New Yorker. Since F.B.I. Operatives opened his safe and took his papers for examination, I wonder if these papers are available for perusal? If they are available, where would they be located, and are copies available to the public?

I am a citizen of the United States, and have been cleared for security--- the latest one being for work on [redacted]

Thank you very much for any information or help you may be able to give me in this matter!!

Respectfully yours,

[redacted]

(6)
(7)
(C)

ALL INFORMATION CONTAINED HEREIN IS UNCLASSIFIED DATE 7-3-80 BY SP4 [illegible]

EX-114

REC-39 100-2237 1B

5 NOV 28 1962

[redacted] 11-27-62

81

RA-114

REC-39 100-2237-13

November 27, 1962

[redacted]

(b) (7) (c) ALL INFORMATION CONTAINED HEREIN IS UNCLASSIFIED DATE 7-3-80 BY SP4 Jam/rtc

REC'D-READING ROOM FBI NOV 27 4 53 PM '62

Dear [redacted]

Your letter of November 21st has been received.

In response to your inquiry, I would like to point out that the effects of Dr. Nikola Tesla were impounded, after his death, by the Office of Alien Property of the Department of Justice and not by the FBI. Since this Bureau did not participate in the handling of Dr. Tesla's effects, I am unable to supply the information you desire.

Sincerely yours,

J. Edgar Hoover

John Edgar Hoover
Director

[redacted] (b) (7) (c)

MAILED 8 NOV 2 1962 COMM-FBI

NOTE: Bufiles contain no record identifiable with correspondent. Bufile 100-2237 shows that Dr. Tesla was one of the world's outstanding scientists in the electrical field, and at the time of his death, all of his personal papers and effects were believed dangerous to the country's security if they fell into unauthorized hands. The book, "Prodigal Genius," by John J. O'Neil, alleges that the FBI took over a certain safe and opened it, appropriating Dr. Tesla's property. Bufiles clearly indicate that it was the Office of Alien Property of the Department which did so, and the above reply has been forwarded in answer to related inquiries. Dr. Tesla was born in Yugoslavia and died in New York City 1-7-43.

Tolson
Belmont
Mohr
Casper
Callahan
Conrad
DeLoach
Evans
Gale
Rosen
Sullivan
Tavel
Trotter
Tele. Room
Holmes
Gandy

[redacted] (3) 3 blc

RECEIVED-DIRECTOR

140

53 DEC 3 1962

[redacted]

MAIL ROOM ☐ TELETYPE UNIT ☐

[redacted] [redacted]

82

[redacted] (b)(7)(c)

10 March 1964.

Federal Bureau of Investigation,
Washington 25, D.C.

ALL INFORMATION CONTAINED
HEREIN IS UNCLASSIFIED
DATE 7-14-82 BY SP/JSK/MKE

Dear Sirs,

For some time, have been wondering about the matter of what was reported on the late Nikola Tesla, the inventor. He died during early January 1943, while in residence at the Hotel New Yorker, New York City. Accounts have it that his belongings (papers, etc.) were studied. Would appreciate learning if anything can be learned about this.

Am hoping to be on leave, and in Washington, along the third week of April. This is mentioned, in case it is possible to view anything relating to the question.

Sincerely,

[redacted]

ITC 3-17-64
ack 3-18-64

[redacted]

(b)(7)(c)

[redacted]

83

TRUE COPY

(b)(7)(c) [redacted] 10 March 1964.

Federal Bureau of Investigation
Washington 25, D. C.

Dear Sirs,

For some time, have been wondering about the matter of what was reported on the late Nikola Tesla, the inventor. He died during early January 1943, while in residence at the Hotel New Yorker, New York City. Accounts have it that his belongings (papers, etc.) were studied. Would appreciate learning if anything can be learned about this.

Am hoping to be on leave, and in Washington, along the third week of April. This is mentioned, in case it is possible to view anything relating to the question.

Sincerely,

[redacted] (b)(7)(c)

ALL INFORMATION CONTAINED HEREIN IS UNCLASSIFIED DATE 7-3-80 BY SP4 Jm/rtc

100-2237-14

10 MAR 13 1964

(b)(7)(c)

84

REC-130

100-2237-14

March 18, 1964

INFORMATION CONTAINED
HEREIN IS UNCLASSIFIED
DATE 7-3-80 BY SP4 Jan/rtc

[redacted] (b) (7) (c)

Dear [redacted]

Your letter of March 10th has been received.

In response to your inquiry, I would like to point out that the effects of Dr. Nikola Tesla were impounded, after his death, by the Office of Alien Property of the Department of Justice and not the FBI. Since we did not participate in the handling of Dr. Tesla's effects, I am unable to supply the information you desire.

Sincerely yours,

J. Edgar Hoover

John Edgar Hoover
Director

MAR 18 4 11 PM '64
REC'D-READING ROOM
FBI

MAILED 19
MAR 18 1964
COMM-FBI

NOTE: No record could be located in Bufiles identifiable with correspondent. Bufile 100-2237 reflects that Dr. Tesla was a world-famous electrical inventor and at the time of his death, all of his personal papers and effects were believe dangerous to the country's security if they fell into unauthorized hands. The book, "Prodigal Genius," by John J. O'Neil, alleges that the FBI took over a certain safe and opened it, appropriating his property. Bufiles clearly indicate that it was the Office of Alien Property of the Department which did so, and the above reply is forwarded in answer to related inquiries.

[redacted] (3) [redacted] (b) (7) (c) [redacted]

Tolson
Belmont
Mohr
Casper
Callahan
Conrad
DeLoach
Evans
Gale
Rosen
Sullivan
Tavel
Trotter
Tele. Room
Holmes
Gandy

57 MAR 2 ...

MAIL ROOM ☐ TELETYPE UNIT ☐

85

TRUE COPY

Sir,

According to "Prodical Genius, Nikola Tesla" Tesla
by J. J. O'Neil (a book) some papers were taken from the safe of Mr. Festa about 1945 yr. Is this true. If so are the papers declasified yet? If so may I obtain a copy?

[redacted] (b)(7)(C)

Sir,

According to "Prodical Genius, Nikola Tesla" by J. J. O'Neil (a book) some papers were taken from the safe of Mr. Tesla about 1945 yr. Is this true. If so are the papers declasified yet? If so may I obtain a copy?

REC-15
EX-10
100-2237-15
JUN 23 1964

[redacted] b(7)(c)

[redacted]

ALL INFORMATION CONTAINED
HEREIN IS UNCLASSIFIED
DATE 7-3-80 BY SP4 Jones/rtc

96

June 22, 1964

REC- 15

100 2237 15

[redacted] (b)(7)(c)

ALL INFORMATION CONTAINED HEREIN IS UNCLASSIFIED DATE 7-3-80 BY SP4 Jmfrte

REC'D-READING ROOM FBI JUN 22 3 30 PM '64

Dear [redacted]

Your card of June 16th has been received.

In response to your inquiry, I would like to point out that the effects of Dr. Nikola Tesla were impounded, after his death, by the Office of Alien Property of the Department of Justice and not by the FBI. Since we did not participate in the handling of Dr. Tesla's effects, I am unable to furnish the information you desire.

MAILED 20 JUN 22 1964 COMM...

Sincerely yours,

J. Edgar Hoover

NOTE: No record could be located in Bufiles identifiable with correspondent. Bufile 100-2237 reflects that Dr. Tesla was a world-famous electrical invent and at the time of his death, all of his personal papers and effects were believed dangerous to the country's security if they fell into unauthorized han The book, "Prodigal Genius," by John J. O'Neil, alleges that the FBI took ov a certain safe and opened it, appropriating his property. Bufiles clearly indicate that it was the Office of Alien Property of the Department which did s and the above reply is forwarded in answer to related inquiries.

[redacted] (3)

[redacted]

(b)(7)(c)

Tol[redacted]
Belm[redacted]
Mohr
Casper
Callahan
Conrad
DeLoach
Evans
Gale
Rosen
Sullivan
Tavel
Trot[redacted]
Tel[redacted]
[redacted]dy

RECEIVED DIRECTOR

64 JUN 26 1964

MAIL ROOM ☐ TELETYPE UNIT ☐

87

OREGON STATE UNIVERSITY
CORVALLIS, OREGON 97331
SCHOOL OF SCIENCE
Reply to: DEPARTMENT OF GENERAL SCIENCE

March 28, 1967

FEDERAL BUREAU OF INVESTIGATION
Department of Information
9th Street & Pennsylvania Aven, N.W.
Washington 25, D. C. 20535

ALL INFORMATION CONTAINED
HEREIN IS UNCLASSIFIED
DATE 2-3-80 BY SP4 jrm/pte

Dear Sirs:

I am a student of the history of science at Oregon State University, and I am attempting to write a research paper on a very eccentric scientist who died in 1943. His name was Nikola Tesla, a naturalized American of Serbian extraction, and he died in his hotel room in New York City on January 8, 1943.

During the years leading up to World War II, Nikola Tesla supposedly invented a "Death Ray" which could destroy several hundred aircraft. Mr. Tesla was a very prolific and creative genius during his early years but gradually became something of a crackpot in his old age. As a student of the history of science, it is important to determine whether or not Tesla had any valid ideas in the plans for his death ray. Tesla invented the fluorescent light and also was one of the first scientists to discover X-Rays--hence there may be some possibility that his death ray might actually have been some crude type of laser.

In Tesla's biography, "Prodigal Genius", by John J. O'Neill, the author states on page 277:

> "Operatives from the F.B.I. came to Tesla's hotel room shortly after his death and opened the safe in his room. They took the papers that it contained in order to examine them for a reported secret invention of possible use in the war..."

I am trying to locate Tesla's secret and unpublished writings concerning his death ray. I have searched the literature quite thoroughly and have found nothing. Does the F.B.I. still have these papers or can you tell where I might be able to obtain these writings for examination? Any assistance or information that you may lend me will be very much appreciated.

100-2237-16

Sincerely yours,

[redacted]

REC 49
12 APR 4 1967

(6)
(7)
(C)

4/3/67

CORRESPONDENCE 88

April 3, 1967

REC 49 100-2237-16

[redacted]

ALL INFORMATION CONTAINED HEREIN IS UNCLASSIFIED DATE 7-3-80 BY SP4 Jam/rtc

(b)
(7)
(c)

Dear [redacted]

Your letter of March 28th has been received.

In response to your inquiry, the effects of Dr. Nikola Tesla were impounded, after his death, by the Office of Alien Property of the Department of Justice and not by the FBI. Since we did not participate in the handling of Dr. Tesla's effects, I am unable to furnish the information you desire.

Sincerely yours,

J. Edgar Hoover

John Edgar Hoover
Director

MAILED 30
APR 3 1967
COMM-FBI

NOTE: No record could be located in Bufiles identifiable with correspondent. Bufile 100-2237 reflects that Dr. Tesla was a world-famous electrical inventor, and at the time of his death, all of his personal papers and effects were believed dangerous to the country's security if they fell into unauthorized hands. The book, "Prodigal Genius," by John J. O'Neil, alleges that the FBI took over a certain safe and opened it, appropriating his property. Bufiles clearly indicate that it was the Office of Alien Property of the Department which did so, and the above reply is forwarded in answer to related inquiries.

[redacted] (3)

Tolson
DeLoach
Mohr
Wick
Casper
Callahan
Conrad
Felt
Gale
Rosen
Sullivan
Tavel
Trotter
Tele Room
Holmes
Gandy

54 APR 11 1967

MAIL ROOM ☐ TELETYPE UNIT ☐

(b)
(7)
(c)

89

J. Edgar Hoover
Federal Bureau of Investigation
Washington D. C.

TRUE COPY

[redacted]

Feb. 25, 1969

Dear Mr. Hoover,

HEREIN IS UNCLASSIFIED
DATE 2-3-80 BY SP4 Jam/etc

In the year 1943 the F.B.I. confiscated all of the papers and maybe some of the machines of physicist, Nikola Tesla. These papers were his experiments and ideas at the time of his death. According to the books I've read, these papers were confiscated on the grounds of the enemy getting ahold of his ideas and apply them to war machines.

I have studied all of the material on this man and have found him to be more intelligent than the great "Brain" of his time, Thomas Edison.

Why without Nikola Tesla there would be Westinghouse Company as we know today. This is the man who harnessed Niagara Falls, and was the one and only man who could see the possibilities of Alternating Current when men like Edison said "it would never work."

What I am wondering is, maybe these papers could be reclassified from whatever "Top Secret" classification they now have and be made available for study by the people who understand and can gain knowledge from them.

I would be willing to pay for reproductions of his experiments if nothing else. He still has a great many ideas that have never been tried.

It disturbs me to think that everyone has forgotten about the ideas of this man when he was so advanced for his time.

I can say with assurance that no man alive can say that he knows all of Tesla's ideas. And studying other men's ideas is the way to advance in science faster.

100-2237-12

I hope something can be done to get these papers released.

Thank You,

[redacted] (b)(7)(c)

/s/ [redacted]

100-2237-

90

Feb. 25, 1969

Dear Mr. Hoover,

In the year 1943 the F.B.I. confiscated all of the papers and maybe some of the machines of physicist, Nikola Tesla. These papers were his experiments and ideas at the time of his death. According to the books I've read, these papers were confiscated on the grounds of the enemy getting ahold of his ideas and apply them to war machines.

I have studied all of the material on this man and have found him to be more intelligent than the great "Brain" of his time, Thomas Edison.

Why without Nikola Tesla there would be Westinghouse Company as we know today. This is the man who harnessed Niagara Falls, and was the one and only man who could see the possibilities of Alternating Current when men like Edison said "it would never work".

What I am wondering is, maybe these papers could be reclassified from whatever "Top Secret" classification they now have and be made available for study by the people who understand and can gain knowledge from them. (b)(7)(c)

ALL INFORMATION CONTAINED HEREIN IS UNCLASSIFIED DATE 1-14-82 BY [illegible]

CO[redacted]NDENCE

91

I would be willing to pay for reproductions of his experiments if nothing else. He still has a great many ideas that have never been tried.

It disturbs me to think that everyone has forgotten about the ideas of this man when he was so advanced for his time.

I can say with assurance that no man alive can say that he knows all of Tesla's ideas. And studying other men's ideas is the way to advance in science faster.

I hope something can be done to get these papers released.

Thank You,

[redacted] (b)(7)(c)

March 4, 1969

100-2237-17

[redacted]

(b)(7)(c)

Dear [redacted]

Your letter of February 25th has been received.

In response to your inquiry, the effects of Dr. Nikola Tesla were impounded, after his death, by the Office of Alien Property of the Department of Justice and not by the FBI. Since we did not participate in the handling of Dr. Tesla's belongings, I am unable to furnish the information you desire. A copy of your communication has been referred to the Department of Justice.

Sincerely yours,

J. Edgar Hoover

MAILED 10
MAR 4 - 1969
COMM-FBI

NOTE: Bufiles contain no record of correspondent. Bufile 100-2237 reflects that Dr. Tesla was a world-famous electrical inventor, and at the time of his death, all of his personal papers and effects were believed dangerous to the country's security if they fell into unauthorized hands. The book, "Prodigal Genius," by John J. O'Neil, alleges that the FBI took over a certain safe and opened it, appropriating his property. Bufiles clearly indicate that it was the Office of Alien Property of the Department which did so, and the above reply is forwarded in answer to related inquiries. Copy of letter referred to Assistant Attorney General, Civil Division of the Department.

[redacted] (3)

[redacted]

54 MAR 13 1969

Tolson
DeLoach
Mohr
Bishop
Casper
Callahan
Conrad
Felt
Gale
Rosen
Sullivan
Tavel
Trotter
Tele. Room
Holmes
Gandy

MAIL ROOM ☐ TELETYPE UNIT ☐

[redacted]

(b)(7)(c)

93

(b)(7)(c)

[redacted]

April 8, 1970

Federal Bureau of Investigation
Director of Central Records
Washington, D.C.

Dear Sir:

I am doing a research paper on Nickola Tesla and would appreciate it if you could please provide me with the following information.

That information being why did your Bureau impound his personal effects immediately after his death on January 7, 1943. Secondly, could you provide a list of those effects, and lastly, when were they released and to whom were they given.

Thanking you for the information

[redacted] (b)(7)(c)

P

ALL INFORMATION CONTAINED
HEREIN IS UNCLASSIFIED
DATE 7-3-80 BY SP4 Jmp/stc

REC 44 100-2237-18

APR 15 1970

[redacted]

4/14/70

[redacted]

(b)(7)(c)

CORRES[redacted]

94

REC 44 100 2237-18

April 14, 1970

46

ALL INFORMATION CONTAINED HEREIN IS UNCLASSIFIED DATE 7-3-80 BY SP4 Jrmprte

[redacted]

(b) (7) (c)

Dear [redacted]:

In reply to your inquiry of April 8th, the effects of Dr. Nikola Tesla were impounded, after his death, by the Office of Alien Property of the Department of Justice and not by the FBI. Since we did not participate in the handling of Dr. Tesla's belongings, I am unable to furnish the information you desire. A copy of your communication has been referred to the Department of Justice for any help it may be able to offer.

Sincerely yours,

Edgar Hoover

John Edgar Hoover
Director

[redacted]

(b) (7) (c)

MAILED 9
APR 14 1970
COMM-FBI

NOTE: Bufiles contain no information identifiable with correspondent. Bufile 100-2237 reflects that Dr. Tesla was a world-famous electrical inventor, and at the time of his death, all of his personal papers and effects were believed dangerous to the country's security if they fell into unauthorized hands. The book, "Prodigal Genius," by John J. O'Neil, alleges that the FBI took over a certain safe and opened it, appropriating his property. Bufiles clearly indicate that it was the Office of Alien Property of the Department which did so, and the above reply is forwarded in answer to related inquiries. Copy of letter referred to Assistant Attorney General, Civil Division of the Department.

Tolson
DeLoach
Walters
Mohr
Bishop
Casper
Callahan
Conrad
Felt
Gale
Rosen
Sullivan
Tavel
Soyars
Tele. R
Holmes
Gandy

59 APR 20 1970

MAIL ROOM TELETYPE UNIT

[redacted] (3) [redacted] [redacted] [redacted]

(b) (7) (c) 95

July 15, 1970

REC-3 100-2237-19

[redacted] (6)(7)(C)

ALL INFORMATION CONTAINED HEREIN IS UNCLASSIFIED DATE 7-3-80 BY [signature]

Dear [redacted]:

Your letter was received on July 13th and the interest which prompted you to write to me is appreciated. With respect to your inquiry, the effects of Dr. Nikola Tesla were impounded, after his death, by the Office of Alien Property of the Department of Justice and the FBI did not participate in the handling of Dr. Tesla's belongings. In addition, this Bureau is strictly an investigative agency of the Federal Government and matters such as you mentioned do not come within the scope of this Bureau's authority.

Sincerely yours,

J. Edgar Hoover

[redacted] (6)(7)(C)

John Edgar Hoover
Director

MAILED 8
JUL 15 1970
COMM-FBI

NOTE: Bufiles contain no record of correspondent. Bufile 100-2237 reflects that Dr. Tesla was a world-famous electrical inventor, and, at the time of his death, all of his personal papers and effects were believed dangerous to the country's security if they fell into unauthorized hands. Bufiles indicate that the Office of Alien Property of the Department appropriated his property and replies similar to the above have been used to answer related inquiries.

Tolson
DeLoach
Walters
Mohr
Bishop
Casper
Callahan
Conrad
Felt
Gale
Rosen
Sullivan
Tavel
Soyars
Tele. Room
Holmes
Gandy

54 JUL 23 1970

[redacted] (2)

MAIL ROOM [ ] TELETYPE UNIT [ ]

[redacted] (6)(7)(C)

96

(b)(7)(c)

[redacted]

INFORMATION CONTAINED
HEREIN IS UNCLASSIFIED
DATE 7-3-80 BY SP4 Jmfete

July 8, 1970.

Mr. J. Edgar Hoover,
Director,
Federal Bureau of Investigation,
Washington D. C.

N.I.K. - Tesla

Dear Sir,

I am writing this to you as I believe that most of the government is infiltrated with foreign agents, and there is a very good chance this could be of extreme importance for the defense of our nation.

I met a man a number of years ago that was raised on Long Island in the neighborhood where Mr. Tesla, inventor of the Tesla Coil, had his lab. He told me of Mr. Tesla's notes blowing down the street when the junk men were dismantling his equipment. It would be a wonderful thing is some of these notes were salvaged and could be found.

Mr. Tesla was at least a century ahead of his time. He sent radio signals around the world seventeen years prior to Mr. Marconi, who received the credit, and pioneered many fields. He was so far advanced that he had to invent a special math to keep up with his work.

He, on several accasions talked before the scientists of the world and became very angry at their inability to understand him, and due to this was violently disliked and didnot receive acknowledgement for his discoveries. One of the notes read by this man told of the radio transmission of electricity being brought to a high degree of effiency.

Now here is the thing that should be investigated throughly. During my High School education, in the winter of either 19-25-26 or 1926-27, I made a currant events report on an article appearing in a small publication of that name that was received weekly at the Troy Highschool, Troy Montana. It stated in this article that Mr. Tesla had made an offer to the Congress of the United States that if they would install radio transmission towers at every 150 miles around the border of this country, that he would install equipment that would broadcast a vertical plane of energy beyond the atmosphere through which no material object could pass as it would shatter or lose it's monecular coohesion. It was refused.

There is a good chance that this data is in the files of congress. What a defence, and boy do we need it. EX-117 REC-3 100-2237-19

I have had some results along this line with structured vortices of magnetic fields, but do not have the technical equipment or knowledge to carry out further experiments. The theory is quite simple and deals with particle acceleration, and it works to the best of my knowledge.

9 JUL 16 1970

Sincerely

[redacted]

(b)(6)(c)

[redacted]

97

[redacted] (b)(7)(c)

6 DECEMBER 1971

FEDERAL BUREAU OF INVESTIGATION

WASHINGTON, D.C.

Dear Sir:

I have recently begun a collection and reading file of all matters pertaining to Nikola Tesla. In so doing I was amazed to find that upon his death; January 7, 1943, in NYC, your bureau confined his papers. May I ask if you still "have them in jail". I am extremely interested in his work(s) and am trying to establish my own "Tesla" library. Your assistance would be greatly appreciated.

Very truly yours,

[redacted]

[redacted] (b)(7)(C)

[redacted]

REC- 39 100-2237-20

16 DEC 15 1971

[redacted]

[redacted]

INFORMATION CONTAINED HEREIN IS UNCLASSIFIED DATE 7-3-80 BY [redacted] (b)(7)(C)

[redacted]

98

December 14, 1971

REC- 28 100-2237-20

[redacted] (b)(7)(C)

ALL INFORMATION CONTAINED HEREIN IS UNCLASSIFIED DATE 7-3-80 BY [redacted]

(b)(7)(C)

Dear [redacted]:

Your letter of December 6th has been received.

In response to your inquiry, the effects of Dr. Nikola Tesla were impounded, after his death, by the Office of Alien Property of the Department of Justice and not by the FBI. We did not participate in the handling of Dr. Tesla's belongings in any way. Copies of your communication and my reply have been referred to the Department of Justice.

Sincerely yours,

J. Edgar Hoover

John Edgar Hoover
Director

[redacted] (b)(7)(C)

NOTE: Bufiles contain no record correspondent. Dr. Tesla was world-famous electrical inventor, and at death, his effects believed dangerous to country's security. "Prodigal Genius," by John J. O'Neil, alleges FBI took safe and appropriated his property. Above reply previously given to same inquiries. (100-2237) Material sent to the Assistant Attorney, Civil Division, of the Department.

[redacted] (4)

Tolson
Felt
Rosen
Mohr
Bishop
Miller, E.S.
Callahan
Casper
Conrad
Dalbey
Cleveland
Ponder
Bates
Tavel
Walters
Soyars
Tele. Room
Holmes
Gandy

MAILED 8
FBI

[redacted] (b)(7)(C)

58 DEC 21 1971

MAIL ROOM ☐ TELETYPE UNIT ☐

99

Federal Bureau Of Investigation
Ninth Street and Pennsylvania
Northeast Washington D. C. 20535

Dear Sirs,

Upon rea ding a biography on Nikola Tesla, I found the urge to read more on him and his works. At the end of the book it was stated that the F.B.I. went to his hotel room gathered up his papers and locked them in a vault. The thing I would like to know is the real reason they were locked up and if it would be possible to see some of these records and any other works of his.

I can think of only one possible reason as to cause of his records being locked up and that is because he was too far advanced for his time. This seems to be the only logical solution, but, with technology much more advanced now than in his time it would seem likely that scientists take over where he left off.

Please let me know If I can look at the records and if you can please answer my question of the real reason his records were locked up.

Thank You,

[redacted]

ALL INFORMATION CONTAINED
HEREIN IS UNCLASSIFIED
DATE 7-3-80 BY SP4 Jam/rtc

ST-113

(b)
(7)
(C)

REC-48

100-2237-21

[redacted]

Ack
10-31-72
[redacted]

100

ST-113

REC-48

October 31, 1972

100-2237-21

[redacted]

ALL INFORMATION CONTAINED HEREIN IS UNCLASSIFIED DATE 7-3-80 BY [signature]

(b)(7)(c)

Dear [redacted]:

Your letter was received on October 26th.

In response to your inquiry, the effects of Dr. Nikola Tesla were impounded, after his death, by the Office of Alien Property of the Department of Justice and not by the FBI. Since we did not participate in the handling of Dr. Tesla's belongings, I am unable to furnish the information you desire. I am forwarding a copy of your communication and of this reply to the Department of Justice.

Sincerely yours,

L. Patrick Gray III

L. Patrick Gray, III
Acting Director

MAILED 8
OCT 31 1972
FBI

NOTE: Correspondent is not identifiable in Bufiles. Bufile 100-2237 reflects that Dr. Tesla was a world-famous electrical inventor, and at the time of his death, all of his personal papers and effects were believed dangerous to the country's security if they fell into unauthorized hands. The book, "Prodigal Genius," by John J. O'Neil, alleges that the FBI took over a certain safe and opened it, appropriating his property. Bufiles clearly indicate that it was the Office of Alien Property of the Department which did so, and the above reply is forwarded in answer to related inquiries. Copy of letter referred to Assistant Attorney General, Civil Division of the Department.

Felt
Baker
Bates
Bishop
Callahan
Cleveland
Conrad
Dalbey
Jenkins
Marshall
Miller, E.S.
Ponder
Soyars
Walters
Tele. Room
Mr. Kinley
Mr. Armstrong
Ms. He[illegible]
Mrs. N[illegible]

[redacted]

57 NOV 6 1972

MAIL ROOM ☐ TELETYPE UNIT ☐

(b)(7)(c)

[redacted]

101

[redacted]

April 3, 973

(b)
(2)
[redacted]

Federal Bureau of Investigation
Washington
District of Columbia

1 ex
Zip Co
dir
gen

ALL INFORMATION CONTAINED
HEREIN IS UNCLASSIFIED
DATE 7-2-80 BY SP4 Jm/rtc

Dear sirs:

During my research on Nikola Tesla, I found that the F.B.I. had confiscated his records pertaining to his experiments. I would like to know if such information is available and if so how copies might be obtained.

t

I am an engineering student and hope possibly to resume where Tesla left off.

I have the honor to remain,

(b)
(7)
(c)

EX-111 REC-36 [redacted] 100-2237-22

10 APR 11 1973

[redacted]

CORRES

102

O
Nikola Tesla

EX-111

REC-36

100-2237-22

April 11, 1973

[redacted]

(b) ALL INFORMATION CONTAINED
(7) HEREIN IS UNCLASSIFIED
(c) DATE 7-3-80 BY SP4 Jim/rte

Dear [redacted]:

Your letter was received on April 9th.

In response to your inquiry, the effects of Dr. Nikola Tesla were impounded, after his death, by the Office of Alien Property of the Department of Justice and not by the FBI. Since we did not participate in the handling of Dr. Tesla's belongings, I am unable to furnish the information you desire. A copy of your communication and of this reply have been referred to the Department of Justice.

Sincerely yours,

L. Patrick Gray, III
Acting Director

NOTE: Bufiles contain no record of correspondent. (Bufile 100-2237 reflects that Dr. Tesla was a world-famous electrical inventor, and at the time of his death, all of his personal papers and effects were believed dangerous to the country's security if they fell into unauthorized hands. The book, "Prodigal Genius," by John J. O'Neill, alleged that the FBI took over a certain safe and opened it, appropriating his property. Bufiles clearly indicate that it was the Office of Alien Property of the Department which did so, and the above reply is forwarded in answer to related inquiries. Copy of letter referred to the Assistant Attorney General, Civil Division of the Department.)

[redacted] (4)

Mr. Felt
Mr. Baker
Mr. Callahan
Mr. Cleveland
Mr. Conrad
Mr. Gebhardt
Mr. Jenkins
Mr. Marshall
Mr. Miller, E.S.
Mr. Soyars
Mr. Thompson
Mr. Walters
Tele. Room
Mr. Kinley
Mr. Armstrong
Mr. Bowers
Mr. Herington
Ms. Herwig
Mr. Mintz
Mrs. Neenan

MAIL ROOM ☐ TELETYPE UNIT ☐

54 APR 2 [redacted]

(b)
(7)
(c) [redacted]

103

[redacted] (b)(7)(c)

June 20, 1973

Federal Bureau of Investigation
Department of Justice
Washington, D. C.

INFORMATION CONTAINED
HEREIN IS UNCLASSIFIED
DATE 7-3-80 BY SP4 Jm/rte

Gentlemen:

I would like to know if any microfilm or other reproductions of Nikola Tesla's notes and papers exist at your office. Tesla was a famous scientist who died in New York City. The Federal Bureau of Investigation entered his safe shortly after this to remove his papers for examination for the war effort. After the war the papers were offered to any group that would start a museum to house them. No one accepted and the papers were finally sent to the Tesla Museum in Belgrade, Yugoslavia, sometime in the early 1950's, possibly just before 1954. Tesla was the inventor of all ac motors and the polyphase system, as well as all flourescent and neon lamps. He was a major pioneer in the early days of radio and discovered many of the early principles of radar. He declined nomination of a Nobel Prize. He was a naturalized citizen of America and said he valued his citizenship papers above all his awards and possessions. Despite this, all his papers were sent to another nation.

I would like to examine some of his papers from 1899 and later without having to fly to Yugoslavia. I have only seen a condesnsed copy of his research from Colorado Springs, but am unable to obtain copies. The principles and equipment are rather out-of-date and well-known, but still useful in my research. [redacted]

I would greatly appreciate help in this matter.

Sincerely, REC-26 100-2237-23

[redacted] (b)(7)(c)

JUN 29 1973

P.S. Tesla died in January of 1943 and shortly after ~~this~~ the papers were removed from his safe. The original copies of these papers were sent abroad prior to 1954, as I believe it was in that year the Yugoslavs founded the Tesla Museum (not to be confused with the Tesla Institute). [redacted]

(b)(7)(c)

104

EX-109

June 27, 1973

REC-26 100-2237-23

[redacted] (b)(7)(C)

ALL INFORMATION CONTAINED HEREIN IS UNCLASSIFIED DATE 2-3-80 BY [illegible]

Dear [redacted]:

Your letter was received on June 25th.

In response to your inquiry, the effects of Dr. Nikola Tesla were impounded, after his death, by the Office of Alien Property of the Department of Justice and not by the FBI. Since we did not participate in the handling of Dr. Tesla's belongings, I am unable to furnish the information you desire. A copy of your communication and of this reply have been referred to the Department of Justice.

Sincerely yours,

William D. Ruckelshaus

William D. Ruckelshaus
Acting Director

[redacted] (b)(7)(C)

MAILED 24 FBI

NOTE: Bufiles indicate one letter to correspondent dated 4-15-66 in reply to his inquiry regarding the Air Force's Project Blue Book and UFO sightings. Bufile 100-2237 reflects that Dr. Tesla was a world-famous electrical inventor, and at the time of his death, all of his personal papers and effects were believed dangerous to the country's security if they fell into unauthorized hands. The book, "Prodigal Genius," by John J. O'Neill, alleged that the FBI took over a certain safe and opened it, appropriating his property. Bufiles clearly indicate that it was the Office of Alien Property of the Department that did so, and the above reply is forwarded in answer to related inquiries. Copy of letter referred to the Assistant Attorney General, Civil Division of the Department.)

[redacted] (4)

[redacted] (b)(7)(C)

Felt
Baker
Callahan
Cleveland
Conrad
Gebhardt
Jenkins
Marshall
Miller, E.S.
Soyars
Thompson
Walters
Room
Kaise
James
Powers
Herrington
Conmy
Mintz
Wardley
Logan

54 JUL 8 1973

MAIL ROOM ☑ TELETYPE UNIT ☐

105

100-2237-28

November 10, 1975

[redacted]

(b) (7) (c) ALL INFORMATION CONTAINED HEREIN IS UNCLASSIFIED DATE 7-3-80 BY SP4 Jpm/rtc

Dear [redacted]:

This is to acknowledge receipt of your Freedom of Information-Privacy Acts (FOIPA) request forwarded to the FBI by the Department of Justice on October 22nd.

In response to your request for files pertaining to Nikola Tesla, please be advised that in order to preserve the privacy of an individual who may be the subject of a similar inquiry, it has been necessary for the FBI to maintain the practice of not indicating whether we do or do not have such information in our files.

If you can provide notarized authorization from Mr. Tesla's next of kin directing us to release to you any information our files may contain concerning him, we shall thereafter search our files and advise you accordingly.

Since we have not conducted a search of our files, please do not infer that we do or do not have the information you requested.

Sincerely yours,

C. M. Kelley

Clarence M. Kelley
Director

MAILED 6
NOV 10 1975
-FBI

1 - The Deputy Attorney General - Enclosure
Attention: Susan M. Hauser

[redacted] (5)

(b) (7) (c)

Assoc. Dir. ___
Dep. AD Adm. ___
Dep. AD Inv. ___
Asst. Dir.:
Admin. ___
Comp. Syst. ___
Ext. Affairs ___
Files & Com. ___
Gen. Inv. ___
Ident. ___
Inspection ___
Intell. ___
Laboratory ___
Plan. & Eval. ___
Spec. Inv. ___
Training ___
Legal Coun. ___
Telephone Rm. ___
Director Sec'y ___

MAIL ROOM ☑ TELETYPE UNIT ☐

62 DEC 30 1975 F 303

[redacted]

GPO : 1975 O - 569-920

106

[redacted] (6)(7)(c)

April 20, 1976

Mr. Clarence Kelly
Director
F.B.I.
Washington, DC

ALL INFORMATION CONTAINED HEREIN IS UNCLASSIFIED DATE 7-3-80 BY [illegible]

Dear Mr. Kelly:

Mr. Allen and Mr. Ruchlehaus, former acting Director of the FBI, contacted me in 1973 regarding the unavailability of American microfilm records of Nikola Tesla's unpublished diary (now in the Belgrade museum, arranged by month per folder).

At the time I discounted the possibility that these unpublished discoveries had military significance. But because of experiments now under way at Hill AFB, I now suspect such military applications exist and feel it imperative that you be notified, particularly in view of the fact that the Soviets have primary access to the entire collection.

Two photos of each page exist.

After Tesla's death, scientists from the Navy and OSS performed a cursory examination of the diary and notes, which if my memory serves me correctly, was one month long, hardly enough time to decipher Tesla's torturous handwriting. Though Tesla wrote in English, his penmanship was small, blurred, and as difficult to translate as a foreign language.

According to the museum director (1971), the Soviets had made copies of some portions, but not the Colorado Springs diary, which numbers 500 pages, 20 that directly pertain to ball lightning, and 20 or so relevant to the equipment construction. (We copied the most significant portions, but feel more exists)

FX-115 REC-52 100-2237-29

[redacted] an article [redacted] magazine, EDN (an electrical engineering magazine), but only with the very recent receipt of an unpublished manuscript from John J. O'Neill's book (PRODIGAL GENIUS) did I place credence on Tesla's later claim to military applications. Incidentally, some of O'Neill's descriptions were inaccurate and exagerated, as we have exceeded Tesla's results and are familiar with the experiments. At any rate, there are three possible military applications.

(b)(7)(c)

4 MAY 3 1976

[redacted]

107

First, Tesla claimed that the lightning balls (which destroyed his equipment) could be used to destroy aircraft. I have talked to AF personnel --such as [redacted] who saw one inside his plane in flight--and found AF personnel fear these "rf balls," as they call them.

Second, it is a suspicion of mine that ball lightning, if injected with lithium, could produce a cheap fusion bomb.

Third--and this may be no more than a suspicion--the propulsion mode of ball lightning involves electro-gravitic interaction, by which means air vehicles of revolutionary configuration may be constructed. There are no presently-known laws of physics that can account for the propulsion (400 mph or so when following an airliner). Other hitherto unsuspected applications may exist.

(b)(7)(C)

None of these applications were the goal of Project Tesla, which centered on producing ball lightning as Tesla did and studying it as a plasma confinement technique for fusion reactors. Incidentally, Tesla's claim to setting up standing waves on the earth's surface (wireless power) was erroneous and involved techniques similar to Project Sanguine, that is, using the earth's atmosphere as a waveguide ([redacted] is aware of our research).

Cordially,

[redacted]

P.S. By a copy of this letter, along with the enclosures, I am notifying the C.I.A.

Enclosures: 2

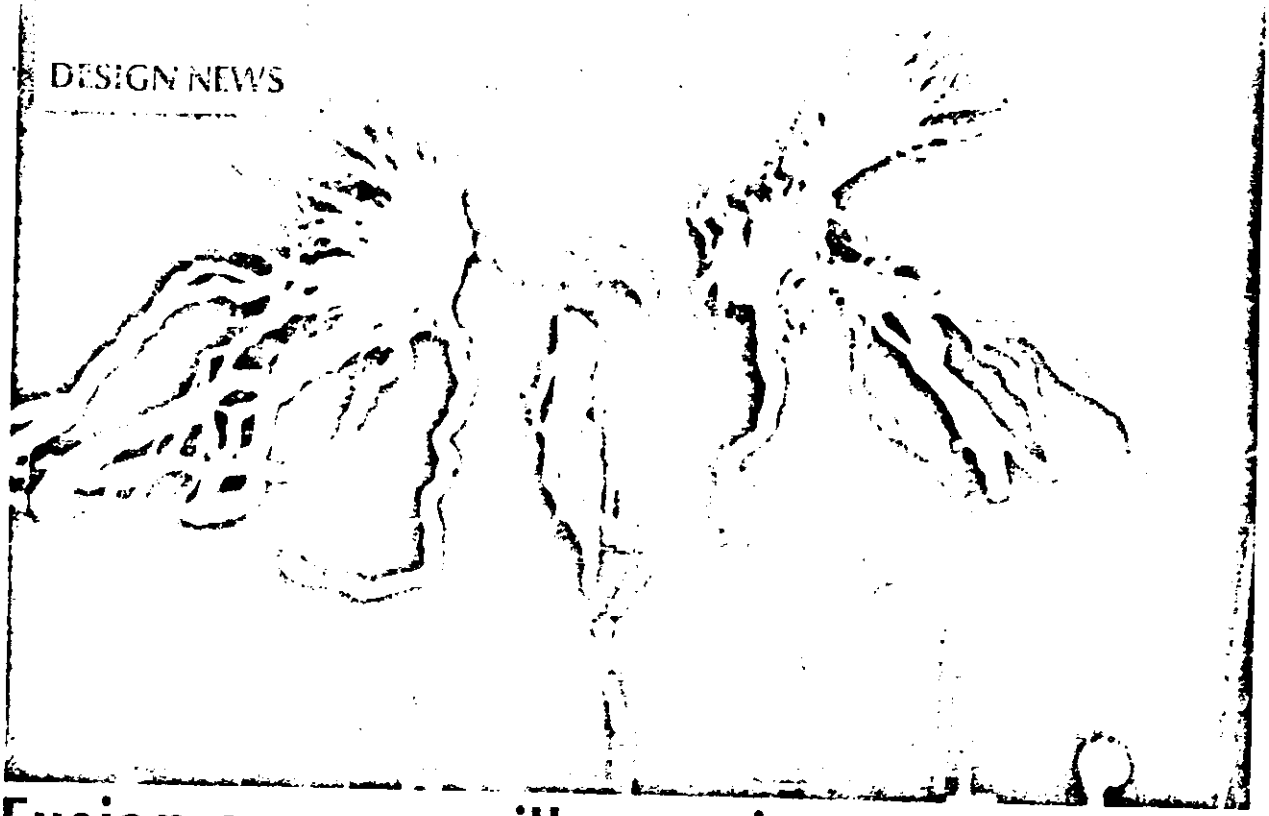

Fusion energy: will experiments in ball lightning provide the key?

Paul Snigier, Associate Editor

In the vast and empty hangar where the first atomic bomb was assembled, a man-made lightning storm is now being unleashed. The voltages of these lightning bolts—20 million volts—are the highest discharge voltages ever produced by man.

Project Tesla, headed by Robert K. Golka and Dr. Robert W. Bass, is an attempt to artificially duplicate one of nature's rarest and most terrifying phenomena—ball lightning. The experiments are based upon the unpublished notes of Nikola Tesla, who, in 1899 at his Colorado Springs laboratory, used a secret *magnifying transmitter* to produce 1.5-in. lightning balls that floated for 30 sec.

The energy surplus

Many physicists, including the eminent Dr. James Tuck, founder of the U.S. fusion program, believe that the lightning ball holds the key to a fantastic, cheap and endless energy source—fusion power, or the energy source used by the stars and sun. The fuel is deuterium, or heavy water, that can be inexpensively extracted from ocean water to provide mankind

Highest voltage continuously oscillating damped-wave lightning generator (ever produced by mankind) creates a current of 1100A at 12.5 MV! Subsequent improvements raised this to a peak current of 2200A at 20 MV. Further improvements could conceivably produce bolts that exceed natural lightning (100 MV)!

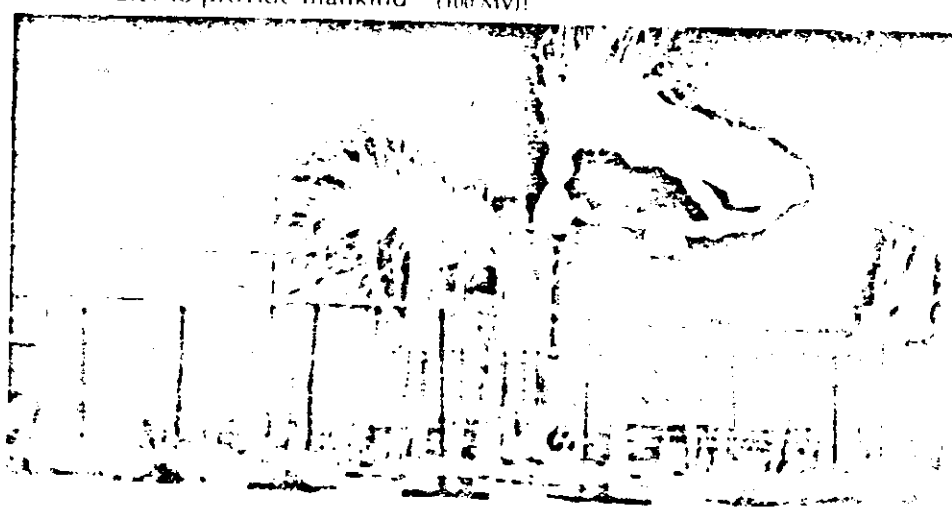

100-2237-29

DISCLOSURE

with millions of years of [illegible]. Unfortunately, progress in fusion research, which has centered on magnetic confinement and laser implosions, has been frustratingly slow and full of unpleasant surprises; and scientists warn that success could be as far off as four decades! But if these promising experiments under way at Wendover, UT, are successful, a new unexpected confinement technique could unleash this energy source.

In search of nature's secrets...

Ball lightning, a glowing sphere of red, orange or yellow plasma, often materializes during lightning storms and floats about, often against a strong wind. The ball may bounce along the floor and, on occasion, the sphere will "slip" through glass without breaking it. (The author recently investigated one such case in a hospital, in which the lights were damaged.) At times it materializes inside or even outside aircraft in flight, seemingly impervious to deformation from the wind force.

Witnesses of ball lightning have included such notables as Niels Bohr and Victor Weisskopf, the Director of the MIT Physics Department. Another witness was Secretary of State Dean Acheson, who reported seeing it cross the breakfast table aboard the presidential plane.

The accidental formation of ball lightning has been observed about once per year for the past decade inside building 985 at Hill AF Missile Radiographic Facility, UT. The volleyball-size fireballs drop out of the space adjacent to the high voltage supply of the 25 Mev linear accelerator.

The ball of blue fire floats down to the floor, rolls around randomly and then rises again to the power-supply area where it dissipates without detectable damage. Despite troubleshooting, no explanation can be found for this occurrence.

On one occasion, lightning struck the building—a large concrete structure with a 60-ft. ceiling inside—and, simultaneously, an intense sphere of fire the size of a tennis ball formed above the conduit on the wall at [illegible]ly shoulder level. It moved along the wall for a distance of some 30 ft., floated out and around the neck and shoulders of a person standing near the wall, moved back to the wall and continued along for several feet until it intercepted a duplex outlet on the conduit. At this the ball exploded, causing electrical damage throughout.

A new state of matter?

No presently known laws of physics can account for the stability and bouncing of fireballs unless it includes surface tension. This hitherto unobserved state of matter is a new concept, since plasmas have never previously exhibited such strong surface tension. Also, presently known laws cannot account for the propulsion.

Project Tesla has developed a rigorous mathematical model of the lightning ball's absolute, asymptotic, fluid-dynamical stability. Initial computer studies indicated a density range of 10^{15}-10^{17} cm^{-3}, with a temperature of 10^{5}-10^{6} °K—or seven times hotter than the sun! □

Chapter 34

TESLA TRIES TO PREVENT WORLD WAR II

When Tesla was talking as a scientist he was opposed to wars on moral, economic and all practical and theoretical grounds. But, like most scientists, when he stopped thinking as a scientist, and let his emotions rule his thoughts, he found exceptions in which he felt some wars and situations were justifiable. As a scientist he was unwilling to have the discoveries of scientists applied to the pruposes of war makers, but when the emotional phase of his nature took the ruling position he was then willing to apply his genius to devising measures that would prevent wars by supplying protective devices.

This attitude is exemplified in the following statement which he prepared in the twenties but did not publish:

"At present many of the ablest minds are trying to devise expedients for preventing a repetition of the awful conflict which is only theoretically ended and the duration and main issues of which I correctly predicted in an article printed in the Sun of December 20, 1914. The League is not a remedy but, on the contrary, in the opinion of a number of competent men, may bring about results just the opposite. It is particularly regrettable that a punitive policy was adopted in framing the terms of peace because a few years hence it will be possible for nations to fight without armies, ships or guns, by weapons far more terrible, to the destructive action and range of which there is virtually no limit. Any city at any distance whatsoever from the enemy can be destroyed by him and no power on earth can stop him from doing so. If we want to avert an impending calamity and a state of things which may transorm this globe into an inferno, we should push the development of flying machines and wireless transmission of energy without an instant's delay and with all the power and resources of the nation."

Tesla saw preventative possibilities in his new invention which embodied "death ray" characteristics and which was made several years after the foregoing statement was written. He saw it providing a curtain of protection which any country, no matter how small, could use as a protection against invasion. While he might offer it as a defensive weapon, however, there would be nothing to stop military men from using it as a weapon of offense.

While I did not know the nature of Tesla's plan I was convinced that it did embody many discoveries that would be of commercial value, and these were the angles he should seek to develop. I felt that if he could be induced to develop some minor phase of his work that would have immediate commercial use he could derive an income from it which would enable him to proceed with his more elaborate plans. To this end I sought to gain some insight into his thoughts, that would enable me to get a practical plan in operation. This was no secret to Tesla and he successfully parried every thrust I made.

The clearest conception I got, and that was largely from scattered remarks, and by making deductions from them, concerned a possible manner in which one phase of his curtain of protection might operate. This was a "war" angle and as such it did not interest

100-2237-01

me, but since it involved "lightning balls," or "fire balls," I was very curious. Fi[illegible]lls had always fascina[illegible]o, and I had read everything I could lay my hands on about them.

A fire ball is a strange phenomenon associated with lightning. Some of the energy of the lightning stroke appears to become locked into a ball shaped structure which may be of any size from a couple of inches to a foot in diameter. It looks like a perfect sphere, brightly incandescent and floats like a bubble, being easily carried by air currents. They may last for a short time, from a fraction of a second to many seconds. In this interval, during which they stay fairly close to the ground, they may come close to many objects without damaging them or being damaged by them. Suddenly, for no known reason, the ball explodes doing as much damage as a bomb, if close to structures, and no damage if in the open.

The fire ball looked to me like a gigantically enlarged model of the tiny electron, one of the building blocks of matter, which acts as if it were just a spherical area of space in which an amount of energy was crystallized to give it structure. I felt that if it were possible to discover how a large amount of energy was stored in this fairy bubble structure of a fire ball a new insight might be gained into the structure of the electron and other fundamental particles of matter. Also this method of storing energy could be applied to a thousand useful purposes.

When I approached Tesla with pleas along this line to develop this possible phase of his discovery he would evade direct reply by indulging in a, not always, tolerant lecture on my gullability in believing theories about the complex structure of the atom. While he had in earlier years discussed some of his experiences with fire balls in his laboratory at Colorado Springs and explained his theory of their formation, he would not in the later years permit himself to be drawn into a discussion of them as a possible part of his system. This, of course, made me suspicious that the clue was "hot" but I could be completely wrong in my conclusions. Tesla was very quick in detecting my technique when I sought to narrow down a field by trying to get him to deny statements when he was adamant to direct questions.

Tesla became familiar with the destructive characteristics of fire balls in his experiments at Colorado Springs in 1899. He produced them quite by accident and saw them, more than once, explode and shatter his tall mast and also destroy apparatus within his laboratory. The destructive action accompanying the disintegration of a fire ball, he declared, takes place with inconceivabel violence.

He studied the process by which they were produced, not because he wanted to produce them but in order to eliminate the conditions in which they were created. It is not pleasant, he related, to have a fire ball explode in your vicinity for they will destroy anything they come in contact with.

It will be necessary to reconstruct his statements from very fragmentary notes and a long distance memory.

"Parasite oscillations, or circuits, within the main circuit were a source of danger from this cause. Points of resistance in the main circuit could result in minor oscillating circuits between terminals or between two points of resistance and these minor circuits would have a very much higher period of oscillation than the main circuit and could be set into oscillation by the main current of lower frequency.

"Even when the principal oscillating circuit was adjusted for the greatest efficiency of operation by the dimination of all sources of losses the fire balls continued to occur but these were due to stray high frequency charges from random earth currents.

"From these experiences it became apparent that the fire balls resulted from the interaction of two frequencies, a stray higher frequency wave imposed on the lower frequency free oscillation of the main circuit.

"As the free oscillation of the circuit builds up from the zero point to the quarter wave length node it passes through various rates of change. In a current of shorter wavelength the rates of change will be steeper. When the two currents react on each other the resultant complex will contain a wave in which there is an extremely steep rate of change, and for the briefest instant currents may move at a tremendous rate, at the rate of millions of horsepower.

"This condition acts as a trigger which may cause the total energy of the powerful longer wave to be discharged in an infinitesmally small interval of time and at a proportionately tremendously great rate of energy movement which cannot confine itself to the metal circuit and is released into surrounding space with inconceivable violence."

It is but a step, from learning how a high frequency current can explosively discharge a lower frequency current, to using the principle to design a system in which these explosions can be produced by intent. The following process appears a possible one but no evidence is available that it is the one Tesla evolved: An oscillator, such as he used to send power wirelessly around the earth at Colorado Springs, is set in operation at a frequency to which a given warship is resonant. The complex structure of a ship would provide a great number of spots in which electrical oscillations will be set up of a much higher frequency than those coursing through the ship as a whole. These parasite currents will react on the main current causing the production of fireballs which by their explosions will destroy the ship, even more effectively than the explosion of the magazine which would also take place. A second oscillator may be used to transmit the shorter wavelength current.

Somewhat later I learned the reason for Tesla's reticence to discuss details. This came shortly after Stanley Baldwin replaced Neville Chamberlin as Prime Minister of Great Britain.

Tesla revealed that he had carried on negotiations with Prime Minister Chamberlin for the sale of his ray system to Great Britain for $30,000,000 on the basis of his presentation that the device would provide complete protection for the British Isles against any enemy approaching by sea or air, and would provide an

offensive weapon to which there was no defense. He was convinced, he declared, of the sincerity of Mr. Chamberlain and his intent to adopt the device as it would have prevented the outbreak of the then threatening war, and would have made possible the continuation- under the duress which this weapon would make possible - of the working agreement involving France, Germany and Britain to maintain the status quo in Europe. When Chamberlin failed, at the Munich conference, to retain this state of European equilibrium it was necessary to get rid of Chamberlin and install a new Prime Minister who could make the effort to shift one corner of the triangle from Germany to Russia. Baldwin found no virtue in Tesla's plan and preemptorially ended the negotiations.

Tesla was greatly disappointed by the collapse of his negotiations with the British Government. With it there collapsed his hopes of providing a demonstration of his most recent, and, what he considered, his most important discoveries. He did not, however, dwell on the jubject; beyond the single conversation he did not mention the matter again. He did not get another chance to finance the demonstration of these discoveries.

During the period in which the negotiations were being carried on, Tesla declared, efforts had been made to steal the invention. His room had been entered and his papers examined but the thieves, or spies, left empty handed. There was no danger, he said, that his invention could be stolen for he had at no time committed any part of it to paper. He could trust his memory to preserve every fine detail of his investigations. This was true, he said, of all of his later major discoveries.

The nature of his system makes little difference now; he has gone and has taken it with him. Perhaps, if there is any communication from beyond the veil that separates this life from whatever exists hereafter, Tesla may look down upon earth's struggling mortals and find some way of dropping a hint concerning what he accomplished; but, if the situation is such that this cannot take place, then we must await until the human race produces another Tesla.

ooo

ALL INFORMATION CONTAINED
HEREIN IS UNCLASSIFIED
DATE 7-3-80 BY SP4 Jam/rtc

April 30, 1976 [redacted]

EX-115

REC-47

100-2237-29

[redacted]

(b)(7)(c)

Dear [redacted]:

Thank you for your letter of April 20th, with enclosures. It was certainly most thoughtful of you to furnish us this information, and your interest and courtesy are indeed appreciated.

MAILED 6
APR 30 1976
FBI

Sincerely yours,

C. M. Kelley

Clarence M. Kelley
Director

NOTE: Bufiles indicate limited correspondence with [redacted], last outgoing 6-27-73, in reply to his request concerning papers of Dr. Nikola Tesla. Dr. Tesla was a world-famous electrical inventor, and at the time of his death in 1943, all of his personal papers and effects were believed dangerous to the country's security if they fell into unauthorized hands. The book, "Prodigal Genius," by John J. O'Neill, alleged that the FBI took over a certain safe and opened it, appropriating his property. Bufiles indicated the Office of Alien Property of the Department of Justice did so. Bufile 100-2237-23.

Assoc. Dir. ___
Dep. AD Adm. ___
Dep. AD Inv. ___
Asst. Dir.:
Admin. ___
Comp. Syst. ___
Ext. Affairs ___
Files & Com. ___
Gen. Inv. ___
Ident. ___
Inspe[redacted]
Intel[redacted]
[redacted]
Legal C[redacted]
Plan. & Eval. ___
Spec. Inv. ___
Training ___
Telephone Rm. ___
Director [redacted]

[redacted] (3)

(b)(7)(c)

[redacted]

MAIL ROOM ☐ TELETYPE UNIT ☐

~~58 MAY 21 1976~~
31 JUN 21 1976

GPO : 1975 O - 594-120

115

Assoc. Dir. ___
Dep. AD Adm. ___
Dep. AD Inv. ___
Asst. Dir.:
Adm. Serv. ___
Ext. Affairs ___
Fin. & Pers. ___
Gen. Inv. ___
Ident. ___
Inspection ___
Intell. ___
Laboratory ___
Legal Coun. ___
Plan. & Eval. ___
Rec. Mgnt. ___
Spec. Inv. ___
Training ___
Telephone Rm. ___
Director Sec'y ___
FBI/DOJ

JUN 16

United States Senate

To ensure proper handling please return all correspondence TO THE ATTENTION OF:

[redacted]

Respectfully referred to:

FBI

Please respond to the attached inquiry in duplicate and return the enclosure. Thank you for your cooperation.

(b)(7)(C)

[redacted] U.S.S.

EXP PROC

REC-34 100-2237

JUN 17 1976

[redacted]

ENCLOSURE

116

Case

[redacted]

(b)(7)(c)

New Senate Office Bldg
Room 5241, Washington DC 2510

Dear Sir.

I am a substitute in the Milwaukee Public School System. I do scientific experiments in high voltage electricity. I have studied all the available writings of the dead genius Nikola Tesla (1861 - January 7, 1943)

When Nicola Tesla died the Federal Bureau of Investigation came and opened the ~~[illegible]~~ safe in his room and took the papers it contained, to examine ~~[illegible]~~ them

117

ENCLOSURE

for a reported secret invention of
possible use in II W.W..

As a citizen & a
Scientist I would like to
study these unpublished papers
with hope of findings new
ideas for producing an alternate
source of energy. Something
that Nikola Tesla knew about
and because of his unfortunate
financial status, was not able
to develop into a working model
Please help. -

With love in The Lo

[redacted]

(b)(7)(c)

[redacted]

REC-34

100-2237-30

June 23, 1976

Honorable [redacted]
United States Senate
Washington, D. C. 20510

ALL INFORMATION CONTAINED HEREIN IS UNCLASSIFIED DATE 2-3-80 BY SP4 Jrm/rtc (b) (7) (c)

Dear Senator [redacted]:

This will respond to your communication of June 16th enclosing the letter of [redacted]

The effects of Dr. Nikola Tesla were impounded, after his death, by the Office of Alien Property of the Department of Justice and not by the FBI. Since we did not participate in the handling of Dr. Tesla's belongings, I am unable to furnish the information you desire.

A copy of your communication and of this reply are being referred to the Department of Justice and the enclosure to your communication is being returned as requested.

Sincerely yours,

C. M. Kelley

Clarence M. Kelley
Director

Enclosure
1 - Assistant Attorney General - Enclosures (2)
Civil Division
1 - Milwaukee - Enclosures (2)
1 - Office of Congressional Affairs - Enclosures (2)
NOTE: This response is consistent with past responses to inquiries of a similar nature. Bufile 100-2237 reflects that the Office of Alien Property took possession of Dr. Tesla's papers following his death.

[redacted] (7)

Assoc. Dir. ___
Dep. AD Adm. ___
Dep. AD Inv. ___
Asst. Dir.:
Adm. Serv. ___
Ext. Affairs ___
Fin. & Pers. ___
Gen. Inv. ___
Ident. ___
Inspection ___
Intell. ___
Laboratory ___
Legal Coun. ___
Plan. & Eval. ___
Rec. Mgnt. ___
Spec. Inv. ___
Training ___
Telephone Rm. ___
Director Sec'y ___

MAILED 10
JUN 23 1976
FBI

(b) (7) (c)

[redacted]

56 JUL 14 1976

MAIL ROOM ☐ TELETYPE UNIT ☐

[redacted]

119

FBI/DOJ

July 26, 1979

Dear Mr. Webster:

ALL INFORMATION CONTAINED HEREIN IS UNCLASSIFIED DATE 7-14-81 BY [illegible]

OUTSIDE SOURCE

I am writing this letter in regard to some papers you have in your possession by Nikola Tesla.

I have for some time now been studying the works of Mr. Tesla and I am involved in the research and further developement of his efforts. I have in my possession a copy of almost everything that was ever written by him.

However I have read that on the day following his death (he died the night of January 7th, 1943, so probably January 8th, 1943) the Federal Bureau of Investigation went to where Mr. Tesla had been staying - the Hotel New Yorker, New York City, New York and collected all notes and papers that he had with him there.

REC 79 100-22237-[illegible]

2 AUG 7 1979

To further my studies and hopefully complete them it would be deeply appreciated if you would send me a copy of all the notes, papers, books, drawings etc. that were found there.

ack 8-4-79

[redacted]

(b) Thank you,

(7)

(c)

[redacted]

120

UNITED STATES GOVERNMENT — UNITED STATES DEPARTMENT OF JUSTICE
FEDERAL BUREAU OF INVESTIGATION

Memorandum

Assoc. Dir. ___
Dep. AD Adm. ___
Dep. AD Inv. ___
Asst. Dir.:
Adm. Servs. ___
Crim. Inv. ___
Ident. ___
Intell. ___
Laboratory ___
Legal Coun. ___
Plan. & Insp. ___
Rec. Mgmt. ___
Tech. Servs. ___
Training ___
Public Affs. Off. ___
Telephone Rm. ___
Director's Sec'y ___

TO : Mr. Bresson

DATE: 2/25/80

FROM : [redacted] (b)(7)(c)

SUBJECT: FREEDOM OF INFORMATION ACT DISCLOSURE REGARDING DR. NIKOLA TESLA

ALL INFORMATION CONTAINED HEREIN IS UNCLASSIFIED DATE 7-3-80 BY SP4 Jrm/r

PURPOSE:

To reduce time spent on handling of requests for information on captioned subject and to promote uniformity of disclosure.

DETAILS:

A search of FBIHQ central records indices reflects that Dr. Nikola Tesla is carried as the subject of Bufile 100-2237. Virtually all information in this file is inquiry-type correspondence. For purposes of FOIA releases, copies of this material have not been made and requesters have been so advised. Copies of the remaining material in the file totalling 29 pages, however, has been processed for disclosure. Numerous requesters have sought information relating to Dr. Tesla under the FOIA. Therefore, it is recommended that the disclosure documents maintained in Bufile 190-16504-4 be considered the preprocessed release appropriate for responses by the Initial Processing Unit for any further requests for information on this subject.

RECOMMENDATION:

That the Initial Processing Unit, FOIPA Branch, Records Management Division, add captioned case to their list of preprocessed cases and handle any future requests for such information. 100-2237-

1 - [redacted]
1 - [redacted]

XEROX

MAR 27 1980

100-2237 190
190-16504 1980

(b)(7)(c)

[redacted]

[redacted] (7)

121

Buy U.S. Savings Bonds Regularly on the Payroll Savings Plan

August 6, 1979

OUTSIDE SOURCE

[redacted] (b)(1)(c)

ALL INFORMATION CONTAINED HEREIN IS UNCLASSIFIED DATE 2-3-80 BY SP4 Jenkins

Dear [redacted]:

Your recent letter requesting information concerning Dr. Nikola Tesla has been received.

The effects of Dr. Tesla were impounded, after his death, by the Office of Alien Property of the Department of Justice and not by the FBI. We have no preprinted material available for public distribution regarding Dr. Tesla. However, under the provisions of the Freedom of Information Act (Title 5, United States Code, Section 552), requests have been made in the past regarding your topic and there may be documents available to you under Title 28--Code of Federal Regulations.

If you are interested in seeking such documents under the Freedom of Information Act, you should make a separate inquiry, clearly marking the envelope and letter as a Freedom of Information Act request, and direct it to the Director, Federal Bureau of Investigation, 9th Street and Pennsylvania Avenue, N.W., Washington, D. C. 20535. In the letter you must request documents regarding the specific topic of interest to you.

REC-79
EX-137
100-2237-32

Sincerely yours,

DE-79

William L. Bailey
Assistant Director

MAILED 11
AUG 6 1979
FBI

2 AUG 7 1979

Assoc. Dir. 1
Dep. AD Adm.
Dep. AD Inv.
Asst. Dir.:
Adm. Servs.
Crim. Inv.
Ident.
Intell.
Laboratory
Legal Coun.
Plan. & Insp.
Rec. Mgnt.
Tech. Servs.
Training
Public Affs. Off.
Telephone Rm.

[redacted] - Enclosure
Room 6958
(This correspondence response may engender a future FOIA inquiry.)

NOTE: Based upon available information, correspondent is not identifiable in Bufiles.

[redacted]lch (4)

(b)(7)(c)

122

[redacted]

FBI/DC

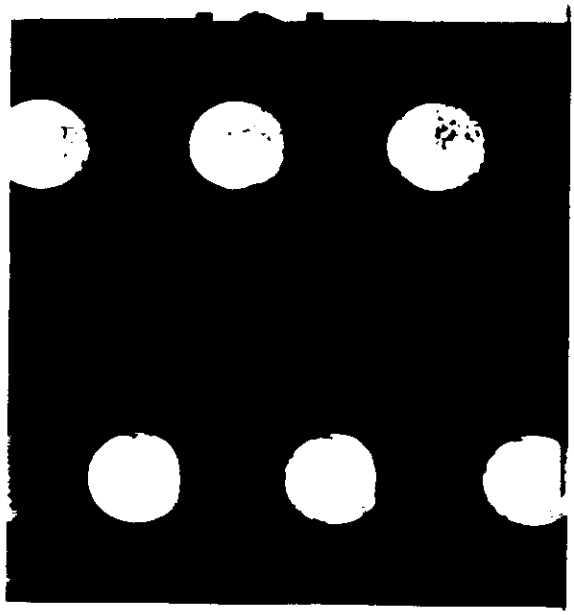

(Rev. 10/10/79)

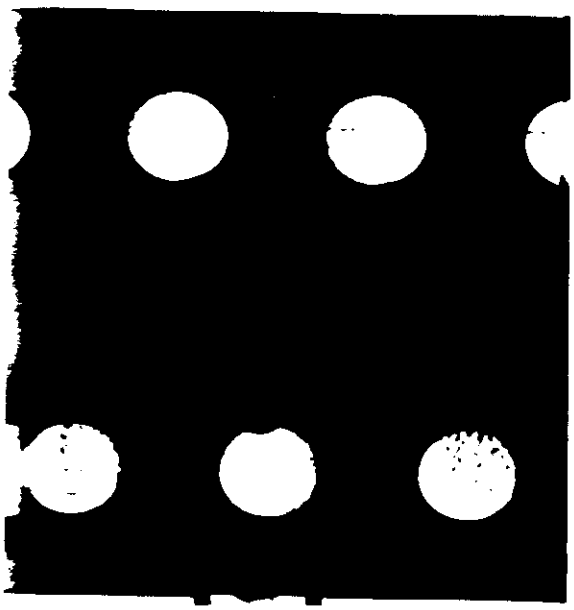

DEPARTMENT OF JUSTICE
FEDERAL BUREAU OF INVESTIGATION
INTERNAL ROUTING/ACTION SLIP

TO	BLDG.	ROOM	NAME/TITLE/ORGANIZATION	
	JEH	7142	Mr. Colwell	235
	JEH	7110	Mr. Boynton	235
	JEH	7110	Mr. Moore	235
	JEH	5829	Mr. Bailey/Rogers	211
	JEH	5829	Mr. O'Brien/Lass	211
	JEH	6296	Mr. Flanders/Woleslagle	314
			OPERATIONS SECTION	
	JEH	6992	Mr. Ervin/Poston	314
	JEH	6993	Mr. Tierney/Poston	314
	JEH	6280	CHIEF, TAR/Secretary	314
			SA:	
			Attn:	
	JEH	6587	CHIEF, FIELD COOR.	314
			SA:	
			Attn:	
	JEH	6958	CHIEF, IPU/Secretary	314
			SA:	
			Attn:	
	JEH	6363	File Duplication	314
	JEH	6268	Tickler/Index Group	314
	JEH	6992	Leave Clerk	314
	JEH	6348	Word Processing Center	314
	JEH	6380	DCRU	314
			Attn:	

BLDG	ROOM	NAME/TITLE/ORGANIZATION	
		DISCLOSURE SECTION	
JEH	6995	Mr. Bresson/Nemmensen	314
JEH	6994	Mr. Lewis/Nemmensen	314
JEH	6927	CHIEF, UNIT A/Secretary	314
		SA: Team	
		RA: Team	
JEH	6959	CHIEF, [redacted]	314
		SA: Team	
		RA: Team	
JEH	6975	CHIEF, UNIT C/Secretary	314
		SA: Team	
		RA: Team	
JEH	6986	CHIEF, UNIT D	314
		SA: Team	
		RA: Team	
JEH	6786	CHIEF, UNIT E	314
		SA: Team	
		RA: Team	
JEH	6387	CHIEF, UNIT F/Secretary	314
		SA: Team	
		RA: Team	

(2)

ALL INFORMATION CONTAINED HEREIN IS UNCLASSIFIED DATE 2-14-82 BY [illegible]

I would prefer IPU being alerted that any request for Tesla file be referred directly to [redacted] whereupon she would see that appropriate release is made

☐ RECOMMENDATION/COMMENT
☐ SEE REMARKS ON REVERSE
☐ MAKE COPIES (NO.)
☐ RETURN (BY)
☐ LOG
☐ FILE
☐ SEE ME
☐ CALL ME
☐ NECESSARY ACTION
☐ COORDINATE
☐ PER INQUIRY
☐ INFORMATION

FROM Freedom of Information-Privacy Acts Branch

THOMAS H. BRESSON SECTION CHIEF

BLDG. | ROOM | PHONE | DATE

[redacted]

FORM DOJ-359A 8-1-74

(b) (7)(c)

(b) (7)(c)

123

CONFIDENTIAL

OFFICE OF THE UNDER SECRETARY OF DEFENSE

WASHINGTON, D.C. 20301

RESEARCH AND ENGINEERING

FEDERAL GOVERNMENT

9 FEB 1981

B11

MEMORANDUM FOR THE DIRECTOR, FEDERAL BUREAU OF INVESTIGATION

SUBJECT: Papers Recovered on the Death of Nicola Tesla (U)

(U) We understand that the FBI may have possession of a number of papers found after the death of Nicola Tesla in 1943. Nicola Tesla was a brilliant electrical engineer (i.e. the Tesla Coil) who was a pioneer in various aspects of electrical transmission phenomena.

(C) We believe that certain of Tesla's papers may contain basic principles which would be of considerable value to certain ongoing research within the DoD. It would be very helpful to have access to his papers.

(U) Since we have really no idea of the possible volume of these papers, we would be happy to provide a researcher who could assist you in reducing the magnitude of the search. If there are further questions, I am the point of contact within the DoD and can be reached at 695-6364 or 695-7417.

Allan J. MacLaren

Allan J. MacLaren
LtColonel, USAF
Military Assistant
Strategic and Space Systems

REGISTERED
1059638

FBI
ALL INFORMATION CONTAINED
HEREIN IS UNCLASSIFIED
DATE 4-8-93 BY 9803 [redacted] b7C
FOIPA No. 356,608
362,001

100-2237-33

Per DOD letter dated 3-29-93
with Enclosures 1 and 2
All DOD info is unclassified
DOD referenced FOI/PA #'s 356,608 and
362,001
4/8/93 9803 [redacted] b7C

ALL INFORMATION CONTAINED
HEREIN IS UNCLASSIFIED
DATE 7-14-93 BY SP1DSK/MK

2 MAR 12 1981

b7C

Classifed by: DUSDRE/S&SS
Declassify on: February 1987

DECLASSIFIED BY 1048 [redacted]
ON 1-27-93
Per Army letter 5-25-89
291860

CORRESPONDENCE

50 MAR 30 1981

CONFIDENTIAL

124

March 10, 1981

Lt. Col. Allan J. MacLaren, USAF
Military Assistant
Strategic and Space Systems
Office of the Under Secretary
of Defense
Washington, D. C. 20301

FEDERAL GOVERNMENT

ALL INFORMATION CONTAINED
HEREIN IS UNCLASSIFIED
DATE 7-14-92 BY SP1 ASK/MKE

Dear Colonel MacLaren:

Your memorandum of February 9 requesting access to the scientific papers of Dr. Nikola Tesla which might be in our files has been referred to my office for reply.

A preliminary review of our files indicates that the FBI did not participate in the handling of Dr. Tesla's belongings following his death in New York City in January, 1943. His papers were examined by representatives of the Office of Alien Property, the Navy Department and the Office of Scientific Research and Development. In February, 1943, the papers apparently were released to Mr. Sava N. Kosanovic, Dr. Tesla's nephew and the administrator of his estate. Mr. Kosanovic's address at that time was 11 Central Park South, New York, New York.

A complete search of our indices is being made to determine if we have any information that might be useful to you. You will be notified of the results of this search at the earliest possible date.

DE-110/100-2237-34

MAILED 3
MAR 10 1981
FBI

Sincerely,

MAR 12 1981

Roger S. Young
Assistant Director in Charge
Office of Congressional
and Public Affairs

1 - [redacted] (FOIPA) - Enc.
1 - Mr. Young - Enc.
1 - [redacted] - Enc.

(b)(7)(c)

NOTE: Reply discussed with [redacted] FOIPA, RMD, who has handled similar requests for information in our files concerning Dr. Tesla. In numerous previous responses we have said that the Office of Alien Property the Department of Justice impounded Dr. Tesla's papers after his death. However, the Office of Foreign Litigation, Civil Division, indicated that Dr. Tesla's papers are not in their possession.

Exec AD Inv. ___
Exec AD Adm. ___
Exec AD LES ___
Asst. Dir.:
Adm. Servs. ___
Crim. Inv. ___
Ident. ___
Intell. ___
Laboratory ___
Legal Coun. ___
Plan. & Insp. ___
Rec. Mgnt. ___
Tech. Servs. ___
Training ___
Public Affs. Off. ___
Telephone Rm. ___
Director's Sec'y ___

[redacted] (c)

60 MAR 30 1981

139

(b)
(7)
(c)

MAIL ROOM ☑

125

March 20, 1961

Lt. Col. A. J. MacLaren
Military Assistant
Strategic and Space Systems
Office of the Under Secretary
of Defense
Washington, D. C. 20301

FEDERAL GOVERNMENT

ALL INFORMATION CONTAINED
HEREIN IS UNCLASSIFIED
DATE 7-14-92 BY [illegible]

Dear Colonel MacLaren:

A complete search of our retrievable files concerning Dr. Nikola Tesla shows that all notes and material in his immediate possession at the time of his death on January 7, 1943, were placed in the custody of the Alien Property Custodian under seal by the United States Government. These materials have never been in the care or custody of the FBI.

On January 26 and 27, 1943, Federal authorities made a thorough review of the effects of Dr. Tesla to determine if any ideas of significant value to the United States war effort could be found. His effects were examined at the Manhattan Warehouse and Storage Company at 52nd and 7th Avenue, New York, New York, where they apparently were taken after his death. Participating in this examination were representatives from the New York and Washington Offices of the Alien Property Custodian, the Office of Scientific Research and Development at the Massachusetts Institute of Technology, the Office of Naval Intelligence, and United States Naval Research. The FBI did not participate in this examination. (65-47953 section 1)

It was the considered opinion of a spokesman of those examiners "that there exist among Dr. Tesla's papers and possessions no scientific notes, descriptions of hitherto unrevealed methods or devices, or actual apparatus which could be of significant value to this country or which would constitute a hazard in unfriendly hands." There was thought to be no technical or military reason why further custody of the property should be retained. However, our files indicate that certain papers, which were regarded as typical of Nikola Tesla's writings and thoughts in the period of 1925 to 1942, were removed for the purpose of record to the Office of the Alien Property Custodian. (65-47953 section 1)

MAILED 6
MAR 23 1961
FBI

Exec AD Inv. ___
Exec AD Adm. ___
Exec AD LES ___
Asst. Dir.:
Adm. Servs. ___
Crim. Inv. ___
Ident. ___
Intell. ___
Laboratory ___
Legal Coun. ___
Plan. & Insp. ___
Rec. Mgnt. ___
Tech. Servs. ___
Training ___
Public Affs. Off. ___
Telephone Rm. ___
Director's Sec'y ___

1 - Mr. Young
1 - [redacted]
1 - [redacted]

MAIL ROOM [redacted]

V-38 DE-113 100-2237-25 MAR 25 1961

BE

(SEE NOTE PAGE THREE)

[redacted]

126

. Col. A. J. MacLaran

A memo dated October 17, 1945, from our New York Office said that at that time Dr. Tesla's effects remained at the Manhattan Storage Warehouse in some 75 packing boxes and trunks under seal by the New York Department of Taxation. The rental for this storage, approximately $15 per month, was being paid by Charlotte Muzar, 134 East 63rd Street, New York, New York, who was listed as an agent for Sava Kosanovich, Dr. Tesla's nephew and administrator of his estate. (65-47953-14)

On October 26, 1945, [redacted] a young scientist who had been Tesla's protege, called in person at our New York Field Office. With him were [redacted] and [redacted] from a research development unit at Wright Field, Dayton, Ohio. These men carried a letter signed by [redacted] requesting that the FBI allow the bearers of the letter access to the effects of Nikola Tesla. (65-47953-15)

It was explained to [redacted] that the FBI had no jurisdiction over Tesla's effects, and they were referred to the Office of the Alien Property Custodian. Bureau files do not indicate whether the men ever examined Tesla's belongings. (65-47953-15)

The Tesla effects remained in rooms 5J and 5L of the Manhattan Storage Company. In the 1950s, FBI Agents were told by company management that the only recorded visit had been made by "Federal authorities" in January, 1943. [redacted] recalled that the men had taken numerous photographs. His description of the equipment used would tend to show that a microfilm reproduction was made of the papers of the deceased. (65-47953-27)

Our files do not reflect any pertinent information on the Tesla materials since that date. Their current whereabouts or condition are not reflected in our files.

For further information regarding this matter, you may wish to contact the Office of the Alien Property Custodian and the other Federal agencies mentioned above.

I hope that we have been of assistance to you.

Sincerely,

Roger S. Young
Assistant Director in Charge
Office of Congressional
and Public Affairs

(CONTINUED - OVER)

127

Lt. Col. A. J. MacLaran

NOTE: On February 9, 1981, Col. MacLaran wrote to us inquiring about the scientific papers of Dr. Nikola Tesla. In a return letter of March 9, we informed him that a thorough review of our files would be made in search of the information he requested. This was done and he is being informed of the results. Tesla's papers have been the subject of numerous inquiries by various individuals and organizations since his death. FBI received over 20 FOIA requests on this matter during the period 1973-1980. Matter coordinated with FOIA Section, RMD.

OFFICE OF THE UNDER SECRETARY OF DEFENSE

WASHINGTON, D.C. 20301

RESEARCH AND
ENGINEERING

1 APR 1981

FEDERAL GOVERNMENT

Mr. Roger S. Young
Assistant Director in Charge
Office of Congressional and Public Affairs
Federal Bureau of Investigation
Washington, D.C. 20535

both letters addressed to Lt Col. A.J MacLaren

Dear Mr. Young,

Thank you very much for your letters of March 10 and March 20, 1981, in response to our request re Dr. Tesla. We very much appreciate the effort that must have gone into this. On behalf of the Deputy Under Secretary (Strategic and Space Systems), Dr. S. L. Zeiberg, I would like to thank you and the people who spent their time searching out the relevant data.

Sincerely,

ALL INFORMATION CONTAINED
HEREIN IS UNCLASSIFIED
DATE [illegible] BY [illegible]

Allan J. MacLaren

Allan J. MacLaren
Colonel, USAF
Military Assistant
Strategic and Space Systems

DE-110 100-2237-36

16 APR 10 1981

Per DoD letter dated 3/29/93
With Enclosures 1 and 2
ALL DoD info is unclassified.
DoD referenced FOI/PA #s 356,608 and 362,001
4/8/93 9803 [redacted] b7C

V-11

No acknowledgement necessary

10 French

Vines

FBI
ALL INFORMATION CONTAINED
HEREIN IS UNCLASSIFIED
DATE 4-8-93 BY 9803 [redacted] ICE
FOIPA No. 356,608
362,001

b7C

Off. of Cong. and Pub. Aff.

129

21 July 1981 [redacted] (b)(7)(C)

Director of the FBI
Washington, D.C.

[redacted]

Dear Sir:

While attending college, I came across an article about the electrical genius, Nicolai Tesla. Mr. Tesla was an electrical genius with such peers as EDISON and WESTINGHOUSE. Tesla designed the basic generator and was the first man to introduce alternating current to the people. The article, written in an underground SanFrancisco newspaper, stated that Tesla also worked with electromagnetic waves and supposedly built a plant that could harness the electromagnetic waves out of the earth's atmosphere sufficiently enough to use them as a source of electricity. The article stated that Tesla built such a plant and lit up a city street 150 miles away by sending the electromagnetism via radio waves. This method is presently being used in electronic warfare. After that, the article stated that the FBI confiscated his plans and buried them in your archives. Their reasoning was that such a free form of energy would knock out a big chunk of the oil, coal, and nuclear forms of energy and their contributions to the economy(money for research and employment). All I want to know is if there is any truth to this story and if so what was the FBI's reasons and when are the archives opened again so that Tesla's work could come to light again. Now bear in mind that this man was an electrical genius and even had a unit of electrical measure named after him. If he did figure out a way to utilize the earth's electromagnetic waves then I believe that we are ready to gradually phase out our dependence on oil, ease the volatile tension in the Middle East and put all that money presently going to the Arabs into

[redacted]

100-2237-37

17 AUG 11 1981

(b)(7)(C)

130

space research, joint international research and deep-sea research to help solve our population problem. I am talking about huge sums of money being released that could speed up the experts present projected times of producing significant gains in these still relatively new fields.

You could at least take the time to check out what I am saying and judge for yourself whether or not the archives should be opened now to put the world back on a more secure heading.

Sincerely,

[redacted]

(b)(7)(C)

[redacted]

August 7, 1981

ALL INFORMATION CONTAINED
HEREIN IS UNCLASSIFIED
DATE 7-14-12 BY [illegible]

OUTSIDE SOURCE

[redacted] (b)(7)(c)

Dear [redacted]:

Judge Webster has referred your letter of July 21st to me for a reply. A check of our files indicates Dr. Nikola Tesla's effects were impounded after his death by the Office of Alien Property of the Department of Justice and not by the FBI. While your interest is indeed appreciated, the FBI is unable to answer your questions as we did not participate in the handling or have anything to do with the storage of Dr. Tesla's belongings.

To be as helpful as possible, I am forwarding a copy of this communication to the Department of Justice.

Sincerely,

S

Roger S. Young
Assistant Director in Charge
Office of Congressional
and Public Affairs

MAILED 9
AUG 10 1981
FBI

1 - Acting Assistant Attorney General - Enclosure
Civil Division

NOTE: [redacted] is not identifiable in Bufiles. Dr. Tesla died on 1/7/43 and we have received much correspondence regarding his belongings which were impounded by the Office of Alien Property of the Department of Justice.

[redacted] (4)

100-2237-38

Exec AD Inv. ___
Exec AD Adm. ___
Exec AD LES ___
Asst. Dir.:
Adm. Servs. ___
Crim. Inv. ___
Ident. ___
Intell. ___
Laboratory ___
Legal Coun. ___
Plan. & Insp. ___
Rec. Mgmt. ___
Tech. Servs. ___
Training ___
Public Affs. Off. ___
Telephone Rm. ___
Director's Sec'y ___

MAIL ROOM ☑

(b)(7)(c)

132

FD-36 (Rev. 8-26-82)

FBI

TRANSMIT VIA:
☐ Teletype
☐ Facsimile
☒ AIRTEL

PRECEDENCE:
☐ Immediate
☐ Priority
☐ Routine

CLASSIFICATION:
☐ TOP SECRET
☐ SECRET
☐ CONFIDENTIAL
☐ UNCLAS E F T O
☐ UNCLAS

SECRET

Date 8/18/83

TO: DIRECTOR, FBI
ATTN: INTD, SUPERVISOR [redacted]

SECRET

FROM: SAC, CINCINNATI [redacted] (P)

NIKOLA TESLA
[redacted]
(OO: CI)

This communication is classified "Secret" in its entirety.

Re telephone call of SA [redacted], Cincinnati Division, to Supervisor [redacted] FBIHQ, on 8/11/83.

Enclosed for the Bureau and New York is one copy each of pertinent pages from the 1981 book titled "Tesla: Man Out of Time" by Margaret Cheney, with important passages underlined.

For information of Bureau and New York, [redacted] at Wright-Patterson Air Force Base (WPAFB) and [redacted] also at WPAFB, have both been in contact with SA [redacted] at the Dayton, Ohio RA regarding possible FBI

SECRET

Classified by: 8262
Declassify on: OADR

Classified by [redacted]
Declassify on: OADR

ENCLOSURE

2 - Bureau (Enc. 1)
2 - New York (Enc. 1)
2 - Cincinnati
[redacted]
(6)

ALL INFORMATION CONTAINED HEREIN IS UNCLASSIFIED EXCEPT WHERE SHOWN OTHERWISE

17 AUG 22 1983

Approved: [redacted] Transmitted _____ (Number) _____ (Time) Per [redacted]

53 NOV [illegible] 1983

133

involvement in the seizing of Nikola Tesla's research papers and other documents and scientific instruments after his death on January 7, 1943.

They both explained that Tesla was a scientific genius and experimenter who was born in Yugoslavia of Serbian parents on 7/10/56, went to school later in Gratz, Austria, Prague, Czechoslovakia and Paris, France. He immigrated to the U.S. in the early 1880's, worked for Thomas Edison's laboratory for a couple of years, then started his own lab after being paid $1 million dollars for rights to his patents on his polyphase systems of alternating current dynamos, which lead to the harnessing of Niagra Falls for producing electricity and then the power system of the whole country. He was naturalized in 1889. He predicted wireless communication (radio). His later experiments in Colorado and elsewhere lead to his producing artificial lightning in the millions of volts. He also had patents on the concept of neon and flourescent lights, but he later made little money on his later inventions, although he continued to do experiments leading to devices of great potential worth, which he never patented. He became more reclusive in his later years, living in various hotels in New York City. In the 1930's he claimed he had developed the concept and method of building a "death ray", which could destroy planes at many miles distant, for defending America. Also, there are report of resonance machines or devices whereby he could shake one or many large city buildings from some distance away.

Both [redacted] and [redacted] said that Tesla donated "some" of his papers (or copies thereof) to the Tesla Institute in Belgrade, Yugoslavia; set up in the 1930's in his honor by their government. Biographies on Tesla claim that either the custodian of Alien Property and/or the FBI seized his papers and other personal effects, including a safe or safes, and other property immediately after his death in 1943. This is elaborated on in the enclosed copies of certain pages of Margaret Cheney's book, "Tesla: Man Out of Time". (b)(1) (c)

[redacted] said that after World War II Tesla's papers were shipped to the Tesla Institute in Belgrade, Yugoslavia, by his nephew, Sava Kosanovic, who had become Tito's Ambassador to the U.S. There were reports that some microfilming of Tesla's papers by government agents while they were still in storage in New York under Kosanovic's custody.

Also, the Soviet Union has allegedly had access to some of Tesla's papers, possibly in Belgrade and/or else where, which influenced their early research into directed energy weapons, and Butler feels access to much of Tesla's papers on lightning, beam weapons and/or "death rays" would give him more insight into the Soviet beam weapons program. This is Butler's area of expertise and responsibility. He has been unable to locate any Tesla papers or copies of same in the classified or unclassified libraries at WPAFB. However, there are reports that some portions of them were shipped by the Custodian of Alien Property Office in Washington, D.C. to a technical research lab at WPAFB, possibly the "Equipment Lab", now closed for some years or reorganized into another organization.

[redacted] and [redacted] are both desirous of learning the locations of such papers of Tesla as now exist in the U.S. for both intelligence and research purposes. Therefore, [redacted] would like to examine FBI files relating to Nikola Tesla and possibly any on Sava Kosanovic, his nephew who received the bulk of his papers after Tesla's death, and may possibly have been the subject of FBI investigation.

[redacted] travels to the Washington, D.C. area on FTD business periodically and can review FBI files at FBIHQ relating to Tesla and Kosanovic.

REQUEST OF THE BUREAU

The Bureau is requested to conduct full indices checks on both Nikola Tesla and Sava Kosanovic.

Should there be such files at FBIHQ, as well as at New York, it is requested that Bureau consider granting the above [redacted] of FTD, official access to same, in the interest of national security.

LEADS

NEW YORK

AT NEW YORK, NEW YORK

Will conduct same indices check as requested of Bureau and advise the Bureau and Cincinnati of results and confirm such files and references still exist there.

135

CINCINNATI

AT DAYTON, OHIO

Will maintain contact with [redacted] and (b)(7)(c) [redacted]

"A VISIONARY GENIUS AS FERTILE AS ANY IN THE MODERN HISTORY OF SCIENCE...."

Flamboyant, eccentric, almost supernaturally gifted, had he been born today he would still be ahead of his time. Called a madman by some, a genius by others, and an enigma by nearly everyone, Nikola Tesla was perhaps the greatest inventor the world has ever known.

He was a trailblazer who created astonishing, world-transforming devices, often without theoretical precedent. It was Tesla who harnessed the alternating electrical current we use today... Tesla who actually invented radio... Tesla who invented fluorescent lighting and the incredible bladeless turbine. He introduced us to the fundamentals of robotry and computer and missile science, which continue to create and transform the future.

This fascinating new biography, acclaimed by American Scientist as "excellent... a significant contribution to the recent history of science," is a riveting journey into the mind of the nineteenth-century wizard who was Edison's enemy, Mark Twain's friend, J. P. Morgan's client, and mentor to many of the twentieth-century's most famous scientists.

MARGARET CHENEY is a science writer and author of two other nonfiction books. She lives in California.

*The Sunday Times of London

0 39077
71009 00495
ISBN 0-440-39077-X

MARGARET CHENEY

A visionary genius, his discoveries radically changed—and continue to change—the world we live in. "A dramatic and poignant portrait." —Discover

TESLA: MAN OUT OF TIME

Includes eight pages of rare photographs

DELL $3.95

137

The ill-fated Wardenclyffe tower built in 1901–03. It was intended for radio broadcasting and wireless transmission of power across the Atlantic. (Courtesy L. Anderson, after photo by Lillian McChesney)

An artist's rendering of Tesla's concept of the war of the future. The towerlike structures (based on the intended final form of the Wardenclyffe tower) are directing remote-controlled defenses against robot attackers. As Hugo Gernsback wrote in *Science and Invention*, where this illustration appeared, "Machines only will meet in mortal combat. It will be a veritable war of Science." (Gernsback Publications, Inc.)

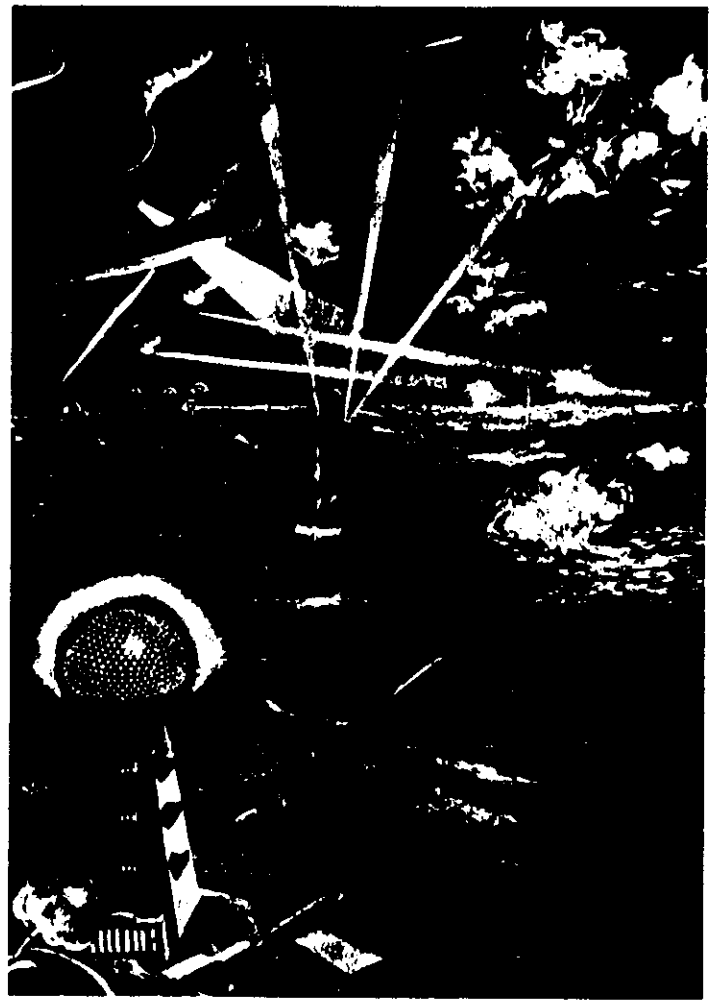

A trio of scientific greats: Albert Einstein, Nikola Tesla, and Charles Steinmetz, as they appeared in 1921 in a visit to the RCA transoceanic station at New Brunswick, N.J. At the time, Tesla was deeply involved in his patent dispute with Marconi. Only after his death would the U.S. Supreme Court uphold Tesla's claim to be the true father of radio. (RCA)

Tesla in his laboratory, 1898. The device shown is an unconnected coil illustrating the action of two resonating circuits of different frequencies—today one of the basic circuits used in computers. The pressure at the end of the coil facing the viewer (illuminated by streamers) is approximately one half million volts. (Courtesy L. Anderson)

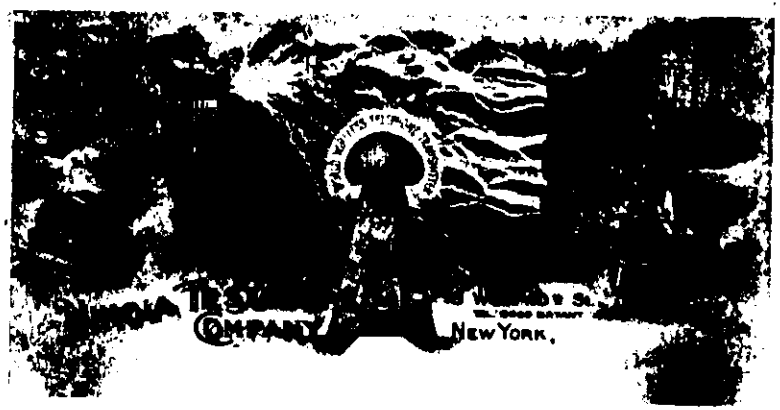

The letterhead of Tesla business stationery recalls some of his more important inventions. In the center is the Wardenclyffe tower as it was intended to look when finished. (Courtesy L. Anderson)

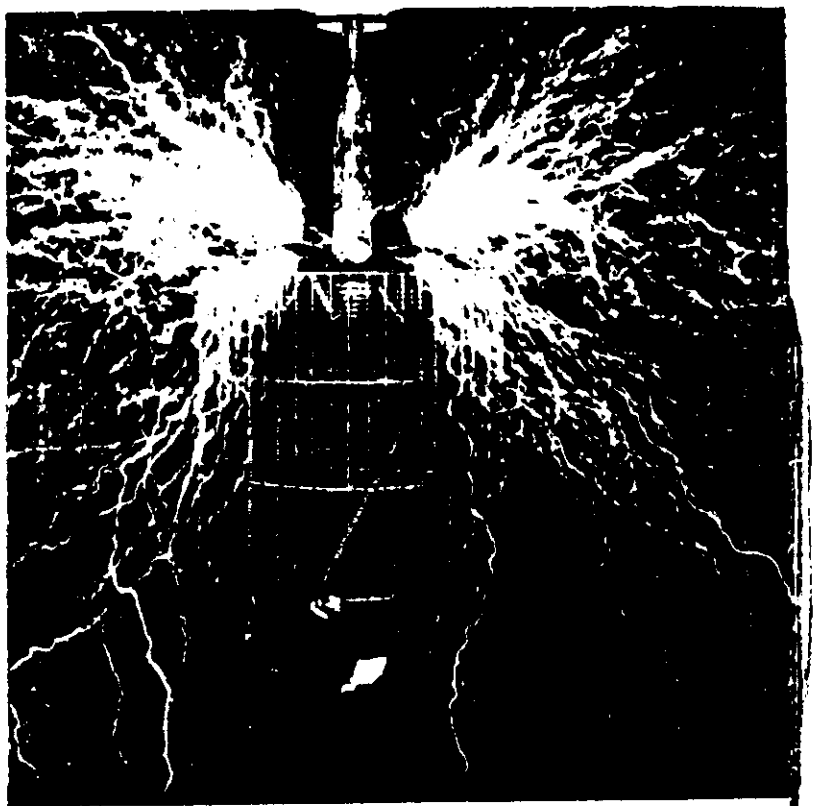

Discharge of several million volts cascading around Tesla in his Colorado Springs laboratory. The roar that accompanied such discharges could be heard ten miles away. (Burndy Library)

of low frequency, and would yield sinusoidal and continuous oscillations like those of an alternator.

"Taken in the narrowest significance of the term, however," Tesla wrote, "it is a resonant transformer which, besides possessing these qualities, is accurately proportioned to fit the globe and its electrical constants and properties, by virtue of which design it becomes highly efficient and effective in the wireless transmission of energy. Distance is then absolutely eliminated, there being *no diminution in the intensity of the transmitted impulses*. It is even possible to make the actions *increase with the distance from the point* according to an exact mathematical law."[5]

Once this powerful equipment was built and the inventor began testing he was able to emulate the electrical fireworks of even the wildest mountain storms. When the transmitter was operating, lightning arresters in a twelve-mile radius from his station were bridged with continuous fiery arcs, stronger and more persistent than those produced by natural lightning.

For the first time he kept a careful daily diary in which he recorded every aspect of his research. And because visual effects were useful as well as thrilling, he devoted many hours to photographic experiments.

The equipment Tesla was perfecting would, he hoped, one day be adaptable for commercial use. But first, thousands of observations and delicate adjustments had to be made. He no longer trusted his legendary memory to store such a volume of information. His daily notes referred constantly to experiments that had failed to turn out as expected, and he would ask himself why. This process was at sharp variance with the one he claimed to have used throughout his earlier life. Now middle-aged, he may have felt his memory waning slightly. Certainly he felt driven by the pressures of his self-imposed deadline.

In his Colorado journal his lifelong fascination with visual phenomena is underscored. The flashing lights that he had always experienced on the screen of his mind were dramatically externalized, and his descriptions, among the mass of mathematical formulas, are detailed, loving, almost erotic in their lingering portrayal of the colors and grandeur of his Colorado electrical storms.[6]

Nights when experiments were being made with the magnifying transmitter the prairie sky exploded with sound and color. Even the earth seemed alive and the crash of thunder from the spark gap could be heard for miles. Butterflies were sucked into the vortex of the

28

Death and Transfiguration

The new government of King Peter, with broad popular support, confronted the Germans and refused to ratify the compromise agreement that had been made with Hitler by Prince Paul. Almost at once reprisals began.

On Palm Sunday, 1941, three hundred Luftwaffe bombers swept over the Yugoslav capital of Belgrade. Methodically they crisscrossed the city street by street, strafing everything that breathed. By noon 25,000 civilians were dead, and the wounded lay everywhere. Most public buildings were left in ruins, including the modern laboratory known as the Tesla Institute.

The combined armed forces of Germany, Italy, Hungary, and Bulgaria invaded the doomed country. Within only days the Yugoslav Army was crushed, and King Peter was sent to England for safety. His government-in-exile would operate from London for the remainder of World War II.

This, however, was only the beginning of the war for Yugoslavs. Accustomed to successive invasions for a thousand years, the people were resilient. The remnants of the Army and Communist factions withdrew into the mountains, from which they launched guerrilla attacks on the invaders. These armed fighters, men and women, were supplied with food grown by the old people and children remaining in undefended villages.

Against them the Nazis and Fascists carried out murderous reprisals. In the fishing villages and along the stony slopes of the Adriatic, half the people in every hamlet were systematically shot.

Soon, however, it became apparent to military strategists in the United States and England that, not only were Axis forces killing Yugoslavs, but rival guerrilla factions of monarchists and Communists had begun to vie for Allied support and were shooting each other as well as the invaders.

Col. Drazha Mihailović, a Serbian army officer, led a faction called Chetniks (the "Yugoslav Army in the Fatherland"), composed mainly of Serbian and Bosnian monarchists. With close ties to King

Peter, they became the first major resistance movement in Europe.[1] The initial British aid to Yugoslavia went to the Chetniks, but it was short-lived. The National Liberation Army or Partisans, led by Josip Broz Tito of the Communist Party, was swiftly rising to prominence.

Allied strategists knew little of Tito. It was said he had been left wounded on a battlefield in 1917 and captured by the Russians. There he was trained as a Communist leader and sent to France during the Spanish Civil War to aid the Loyalists or Republicans.

A Croat, Tito had little reason to love the monarchy, for he was imprisoned after returning to Yugoslavia. On release, he became active in organizing a metal workers' union and helped to build the Yugoslav labor movement. His emergence as head of the Partisans in World War II was that of a natural leader who inspired his fighters and maintained rigorous discipline. He was looking ahead to a time when the Slavs could rebuild a free and united country without oppression either by foreigners or kings.

Tito's goal was to set up committees of popular liberation after the Russian style, while Mihailović and the Chetniks favored local administrative authorities under the monarchy. Both factions kept on killing Germans and Italians but, unfortunately, they also continued murdering each other.[2]

Prof. Bogdan Raditsa*, then director of the information service of the Yugoslav Embassy in Washington, D.C., recalls, "The situation became rather complicated when Yugoslavia collapsed in 1941 and when, at the end of that year, a Royal Yugoslav Mission came to this country." It was composed of members of King Peter's government and the Ban (Governor) of Croatia, Dr. Ivan Šubašić. Srba Kosanović, Tesla's nephew, then a member of the Democratic Party, also arrived as a minister of the exiled government.

"As soon as Kosanović came to the States," says Professor Raditsa, "he tried to reorient Tesla from the exclusive Serbian policy, and he succeeded. Tesla, even before, never felt himself a Great Serbian chauvinist. He used to say, 'I am a Serb but my fatherland is Croatia.'"[3]

The conflict between Serbs and Croats in exile intensified as the war went on, paralyzing normal Slav diplomatic activities in London, Washington, and New York.

"Kosanović, though a Serb," recalls Raditsa, "was leading the struggle for a brotherhood between the Serbs and Croats against Fotić and many other Serb members of various Yugoslav missions.

*Raditsa belonged to a family in southern Croatia that had always favored a union of Croatians and Serbs.

Thus he began using Tesla for the policy directed against the Great Serbians.

"Tesla himself ... was not aware of the deep conflict between the Serbs and Croats, and as basically a scientist and in old age, he was very candid in politics."

Raditsa said he seemed happy that he finally had a man of his own blood near him in New York and noted that Tesla began to rely upon Kosanović's opinion on everything. During this period the inventor was receiving about $500 per month from the royal government as an honorarium.

Various political messages elicited from Tesla for home consumption, says Raditsa, were actually written by Kosanović.[4]

Toward the end of 1942 the Yugoslav Information Center was opened in New York in the Royal Mission headquarters on Fifth Avenue. Raditsa and Kosanović worked together at this office, issuing bulletins and other publications. But a crisis broke out when news reached them of the fighting between Mihailović and Tito.

"Kosanović," he said, "joined Tito and began to popularize the National Liberation Movement for a new Yugoslavia. He had a terrible time to convince Tesla that monarchy was losing in Yugoslavia and that a new Yugoslavia was beginning to come out from the fratricidal civil war. As the largest majority of Serbs in Croatia were joining Tito, Kosanović convinced Tesla that he too should join the movement that was largely shared by the masses of the people, Serbs and Croats. So Tesla's message to the Serbs and Croats was written by Kosanović."[5]

On the walls of the Tesla Museum in Belgrade one may read a vastly enlarged photocopy of the words allegedly sent by Tesla to his embattled countrymen only months before his own death. American Vice-President Henry A. Wallace also had a hand in its drafting. Typewritten, it has many cross-outs and interlinings in Tesla's own handwriting yet the style is that of an ideologue, which the inventor was not:

> Out of this war ... a new world must be born, a world that would justify the sacrifices offered by humanity. This ... must be a world in which there shall be no exploitation of the weak by the strong, of the good by the evil, where there will be no humiliation of the poor by the violence of the rich; where the products of the intellect, science, and art will serve society for the betterment and beautification of life, and not the individuals for achieving wealth. This new world shall not be a world of the downtrodden and humiliated, but of free men and free nations, equal in dignity and respect for man.

The inventor's name also appeared on another message—sent to the Soviet Academy of Sciences on October 12, 1941, urging joint struggle against the Axis powers by Russia, Great Britain, and America, in aid of the revolutionary struggle of the Yugoslav people. This message is not to be seen in the Museum, however, presumably because nostalgia Russian-style has ceased to be politic.

Kosanović became chairman of the Yugoslav Economic Mission advocating a New Yugoslav federation versus the centralistic prewar royalist Yugoslavia. This new organization also began working for a new Central East European Federation. Raditsa too became a member of the Tito movement.

King Peter was desperately seeking for Mihailović the support of President Franklin Delano Roosevelt and Prime Minister Winston Churchill, as well as that of his own Uncle Bertie, who was King George VI of England. The British, at first sympathetic to the Chetnik cause, began to change as they received reports of the aggressive actions of Tito's Partisans.

In 1942 King Peter visited Washington to intercede with FDR. Yugoslav pilots were being trained in Tennessee. FDR told him that America would send airplanes to the Chetniks as soon as they could be spared from the war in the Middle East. The monarch visited New York City, attending a large reception for the American Friends of Yugoslavia at the Colony Club. The Colony, the first female socialites' club in America, had been founded at the inspiration of energetic Anne Morgan. She attended the function, as did the King's mother, Queen Marie, and Mrs. Roosevelt. It was the sort of affair Tesla himself would have delighted in had he not been weak and ill. So King Peter went to him.

In his diaries (*A King's Heritage*), under date July 8, 1942, the young Peter II writes: "I visited Dr. Nicola Tesla, the world-famous Yugoslav-American scientist, in his apartment in the Hotel New Yorker. After I had greeted him the aged scientist said: 'It is my greatest honor. I am glad you are in your youth, and I am content that you will be a great ruler. I believe I will live until you come back to a free Yugoslavia. From your father you have received his last words: 'Guard Yugoslavia.' I am proud to be a Serbian and a Yugoslav. Our people cannot perish. Preserve the unity of all Yugoslavs—the Serbs, the Croats, and Slovenes.'"

The King added that he was deeply touched and that both he and Dr. Tesla had wept. He then visited Columbia University, to be warmly welcomed by President Nicholas Murray Butler and to find another link with his own country in the Pupin Physics Laboratory.

Returning to Washington, he was assured by FDR that food, clothing, arms, and ammunition would be dropped over Yugoslavia. But he was shocked when, in 1943, the British Mission in Yugoslavia made official contact with Tito. Peter asked to be parachuted into his country, but Churchill demurred. Tito openly accused Mihailović of being a traitor.*

At the Teheran Conference in November there occurred, largely at Churchill's instance, what the King described as a "fatal change" of Allied policy. It was decided that "the basic force fighting the Germans in Yugoslavia recognized by the Allies was the National Liberation Army, under the command of Tito, and the Partisan force received full recognition as an Allied Army. Mihailović was thus denied and abandoned."†

Winston Churchill overnight became a hero of modern Yugoslavia. And when the young monarch frantically wrote to FDR for support, the ailing President replied urging him to accept Churchill's advice "as if it was my own." Within months Roosevelt died.

Tesla's nephew, Kosanović, along with certain other diplomatic representatives of King Peter, had been dismissed by the monarch at the height of the 1942 crisis. He often told Bogdan Raditsa in those days that he felt Tesla had been terribly shocked by his nephew's exclusion from the royal government. In fact, Kosanović believed that the inventor's death was actually precipitated by his own "setback."

"He thought," Kosanović repeatedly told Raditsa, "that I was punished, and that eventually I would be arrested or something of the kind, but I succeeded to convince him that it was inevitable in politics."*

During this period Kosanović was frank in saying that he tried to keep Tesla from seeing members of the royal government. Ambassador Fotić had become "the enemy" since he still favored a Great Serbian policy as opposed to the changes ahead. Tesla's relationship with this old friend became "lukewarm."

"There is no doubt," says Professor Raditsa, "that the whole internecine tragedy of Yugoslavia from 1941 to 1943 must have had a rather depressing impact upon Tesla. Very often he would ask me, could I explain to him what was going on among us, and why we cannot agree. . . ."

After the war, Mihailović would be executed by a "People's Court" for alleged collaboration with the enemy, and the Republic of Yugoslavia declared to exist, with Tito as President for life and the Communists firmly in charge.

A count of Yugoslavian casualties at the end of World War II disclosed that 2 million persons had died; tragically, many thousands had been killed by fellow Yugoslavs.

"After the war," recalls Professor Raditsa, "Kosanović became a minister in the Tito-Subašić Government, and I was his assistant in the Ministry of Information from 1944 to 1945, when I left the country, for I couldn't become a Communist. Later on in 1946, Sava Kosanović became Tito's ambassador in Washington but I never saw him again after I left Belgrade in October of 1945. Kosanović had accepted totally the Communist system in Yugoslavia and remained loyal until his death."

There had not been a time in ten centuries when the Yugoslavs had not been ruled and ransacked by invaders—by Venetians, Romans, Turks, Bulgars, Austrians, Hungarians, Germans, Italians, when they were not living under threat of torture, prison, or violent death. Now a marvelous truth began to dawn upon them: that they were free, in a manner of speaking.

Tesla would not live to see this. Whether he could ever have accepted the new government, with its Soviet-type Constitution and a Soviet alliance, whether he could ever have accepted the permanent exile of his beloved monarch, are unanswerable questions.

Unfortunately, however, all this was to have a bearing on how he would be remembered in the West. The fading of his scientific reputation, the forgetfulness of Americans in the postwar period, resulted in large degree from the disappearance of most of his scientific papers behind that new Cold War phenomenon, the Iron Curtain.

In 1948 Yugoslavia ceased to be an Iron Curtain country, declaring its independence from the Soviet doctrine of "limited sovereignty." America and her allies then were generous in sending economic and military aid to the Slavs; but the damage had been done. America had not raced to Tito's wartime support with the alacrity that Churchill had shown. In the future it would not be made easy for American scholars to draw on Yugoslav sources to document the achievements of Nikola Tesla.

The inventor became very feeble in the winter of 1942. His fear of germs was so obsessive that even his closest friends were

required to stand at a distance, like the subjects of a neurotic Tudor. (Pigeon germs did not seem to worry him.) He had heart trouble and suffered occasionally from fainting spells. No longer able to feed his beloved birds, he often relied upon a young man named Charles Hausler, who owned racing pigeons, to take care of them for him.

Hausler had worked for Tesla in this capacity from around 1928 onward, his job being to go to the New York Public Library at noon each day with grain and then to walk around the four sides of the building looking for young or injured birds on window sills or behind large statues. He would take them to Tesla's hotel for rest and recuperation. Then, he has recalled, "I would release them at the library for him." He remembered that the cages in Tesla's rooms had been built by a fine carpenter— "as Mr. Tesla was in all his doings it had to be done right." The pigeons also enjoyed a curtained shower bath.

Hausler and Tesla spent many hours together, talking mostly of pigeons. Once Tesla confided to him that "Thomas Edison could not be trusted." The boy remembered his employer as "a very kind and considerate human person," and there was one incident that stood out in his mind long afterward. "He had a large box or container in his room near the pigeon cages and he told me to be very careful not to disturb the box," said Hausler, "as it contained something that could destroy an airplane in the sky and he had hopes of presenting it to the world." He believed it probably was stored in the cellar of the hotel later.[9]

On a bitter day in early January 1943, Tesla called his other messenger boy, Kerrigan, and gave him a sealed envelope addressed to Mr. Samuel Clemens, 35 South Fifth Avenue, New York City. The boy set forth into the whipping wind and searched fruitlessly for the number. As it turned out, this had been the address of Tesla's first laboratory; but now South Fifth Avenue was West Broadway, and no one by the name of Samuel Clemens lived in the area.

Kerrigan made his way back to the Hotel New Yorker and reported to the sick man. In a weak voice, Tesla explained that Clemens was the famous Mark Twain and that everyone knew of him. He sent Kerrigan forth once more, and this time asked him also to take care of the pigeons. The perturbed messenger fed the birds and then consulted his supervisor, who told him that Mark Twain had been dead for twenty-five years. Once again Kerrigan trudged through the cold afternoon to Tesla's rooms, where he explained and tried to return the envelope.

The inventor was indignant and refused to hear that the humorist was dead. "He was in my room last night," he said. "He sat in that chair and talked to me for an hour. He is having financial difficulties and needs my help. So—don't come back until you have delivered that envelope." Once again the messenger went to his supervisor and together they opened the envelope. It contained a blank sheet of paper wrapped around twenty five-dollar bills—enough to help an old friend through a little fainting spell.

On the fourth of January, the inventor, although very weak, went to his office to make an experiment that George Scherff was interested in. Scherff dropped in to help him prepare for it. The work was interrupted, however, when Tesla felt a recurrence of some sharp pains in his chest.

Refusing medical aid, he returned to his hotel. Next day a maid came in and cleaned. As she left, he asked her to put the *Do Not Disturb* sign on his door to keep visitors away, and not to bother cleaning. The sign remained there the following day and the one after that.

Early on the morning of January 8, Alice Monaghan, a maid, ignored the sign and entered the apartment to find the inventor dead in bed, his sunken, emaciated face composed.[10] Assistant Medical Examiner H. W. Wembly examined the body, placed the time of death as 10:30 P.M. on January 7, 1943, and gave his opinion that the cause of death had been coronary thrombosis. Tesla had died in his sleep, and the examiner noted that he had found "No suspicious circumstances." The inventor was eighty-six years of age.

Kenneth Swezey was notified at once; and at ten o'clock that morning he telephoned to Dr. Rado at New York University. King Peter's headquarters, then at 745 Fifth Avenue, was advised by the professor. Tesla's nephew, Kosanović, then wartime president of the Eastern and Central European Planning Board for the Balkan countries, also was notified.

Then the FBI was called. Swezey and Kosanović summoned a locksmith and Tesla's safe was opened and the contents examined.

The body was removed to the Frank E. Campbell Funeral Home at Madison Avenue and 81st Street and a sculptor was engaged by Hugo Gernsback to prepare a death mask of the inventor.

Just before Tesla's death, Eleanor Roosevelt had tried to intercede in his behalf with President Roosevelt—perhaps with the idea of conferring some honor upon him. In the Tesla Museum at Belgrade three brief notes on White House stationery may be read. On

January 1, at the request of author Louis Adamić, Mrs. Roosevelt had promised to ask the President to write to Tesla and said that she herself would call on him on her next trip to New York. The second note is headed, "Memo for Mrs. Roosevelt" and is signed FDR: "I was having this looked into but the papers yesterday carried the story that Dr. Tesla had died. Therefore I am returning the enclosures herewith." A third note of January 11 from Eleanor Roosevelt to Adamić forwards the President's message and adds her sorrow at learning of the inventor's death.

Adamić wrote a moving eulogy to Tesla that was read by New York Mayor Fiorello H. LaGuardia over station WNYC on January 10.* Meanwhile the extreme tensions between Serb and Croat factions in the United States were making the planning of funeral services difficult. The body lay in state but, according to an unpublished letter of O'Neill's, "only twelve people, some of whom were newspaper reporters," came to view it.

When state services were held at four o'clock on January 12, in the Cathedral of St. John the Divine, however, more than two thousand people crowded in. Serbs and Croats were seated on opposing sides of the cathedral, Bishop William T. Manning having exacted from both factions a promise of no political speeches. The service was begun in English by Bishop Manning and concluded in Serbian by the Very Rev. Dusan Sukletović.

Among Balkan diplomats present were Ambassador Fotić, the Governor of Croatia, a former Prime Minister of Yugoslavia, and the Minister of Food and Reconstruction. In the front row with Kosanović, chief mourner and head of the important new trade mission, sat Swezey. Dr. Rado had been too ill to attend as an honorary pallbearer.

Figures important in American science and industry who did attend as honorary pallbearers included Professor Edwin H. Armstrong, Dr. E. F. W. Alexanderson of General Electric, Dr. Harvey Rentschler of Westinghouse, engineer Gano Dunn, and W. H. Barton, curator of the Hayden Planetarium of the American Museum of Natural History. Newbold Morris, president of the New York City Council, headed this group.

When word of Tesla's death spread abroad to war-stricken Europe, telegrams of tribute and sorrow began pouring in from scientists and governmental leaders alike. In the United States three Nobel prizewinners in physics, Millikan, Compton, and James Franck, joined in a eulogy to the inventor as "one of the outstanding intellects

of the world who paved the way for many of the important technological developments of modern times."

The President and Mrs. Roosevelt expressed their gratitude for Tesla's contributions "to science and industry and to this country." Vice-President Wallace, in the spirit of the new Yugoslavia, declared that, "In Nikola Tesla's death the common man loses one of his best friends."

Although Louis Adamić wrongly eulogized Tesla as one who had cared nothing for money, he could not have been more accurate when he said that Tesla was not really dead: "The real, important part of Tesla lives in his achievement, which is great, almost beyond calculation, and an integral part of our civilization, our daily lives, our current war effort.... His life is a triumph...."*

Among the honors that had come to Tesla in his life were many academic degrees from American and foreign universities; the John Scott Medal, the Edison Medal, and various awards from European governments. In September 1943 the Liberty ship *Nikola Tesla* was launched, an honor that would have pleased the scientist. But not until 1975 was he inducted into the National Inventors Hall of Fame.

Eight months after Tesla's death, the U.S. Supreme Court handed down the decision that he had been confident would come eventually—ruling that he was the inventor of radio.

His body was taken to Ferncliffe Cemetery at Ardsley-on-the-Hudson in the deep cold of the winter afternoon. In the car that followed the hearse rode Swezey and Kosanović. The inventor's remains were cremated and his ashes later returned to the land of his birth.*

In almost every nation in the world, the fighting and dying continued.

*Charlotte Muzar, formerly secretary to Sava N. Kosanović, carried Tesla's ashes to the Tesla Museum in Belgrade in 1957. Throughout the years Kosanović had spoken of leaving the ashes in America and had hoped an appropriate memorial to the inventor would be raised in the United States as their resting place.
—Archives, Tesla Memorial Society

541

29 The Missing Papers

In addition to his acknowledged achievements, Tesla left a legacy of riddles. To pose only three of the most major: Was his unrealized concept for the wireless transmission of energy through the Earth scientifically valid? What actually was he doing in his experimentation with death/disintegrator beam weapons? And what became of his unpatented research papers and other sensitive documents in the days immediately following his death?

In the category of subquestions, what turn of affairs rekindled the intense interest of the U.S. intelligence establishment in Tesla's work (as something surely did) in the late 1940's?

Like Einstein he had been an outsider and, like Edison, a wide-ranging generalist. As he himself had said, he had the "boldness of ignorance." Where others stopped short, aware of what could not be done, he continued. The survival of such mutants and polymaths as Tesla tends to be discouraged by modern scientific guilds. Whether either he or Edison could have flourished in today's milieu is conjectural.

The example set by Tesla has always been particularly inspiring to the lone runner. At the same time, however, his legacy to establishment science is profound for his research, although sometimes esoteric, was almost always sweeping in its potential to transform society. His contribution was major rather than incremental. His turbine failed in part because it would have required fundamental changes by whole industries. Alternating current triumphed only after it had overcome the resistance of an entire industry.

But there was an unfortunate corollary to Tesla's lone battles with the scientific-industrial establishment. Since he was part of no group or institution, he had no colleagues with whom to discuss work in progress, no formal, accessible repository for his research notes and papers. He worked not just in private, but—his love of flamboyant announcements to the press notwithstanding—in secret. Thus any inventions which he did not patent or give freely to the world were more or less shrouded in mystery. And, because of the handling of the

papers he left behind after his death, the range of his achievement continues to remain a partial mystery.

If this has been frustrating to the scientists who have succeeded Tesla, it has at least been stimulating. After a period of obscurity, the one hundredth anniversary of his birth in July 1956 brought an international reawakening to the importance of the inventor's life and genius. Interest in his work, fired by a growing awareness of the riddles surrounding it, has been escalating ever since, almost as if he had been reborn in his true psychological age.

He was honored by centennial celebrations in America and Europe. The American Institute of Electrical Engineers dedicated its fall meeting in Chicago to a review of his life and inventions. Commemorative programs were arranged by the Institute of Radio Engineers, the Chicago Museum of Science and Industry, the Franklin Institute, and various universities, the Tesla Society playing an active role in such recognition. Permanent memorials in the form of scholarships and medals were proposed and exhibits presented by science museums. Special ceremonies were conducted at Niagara Falls, and a statue was later erected in his honor on Goat Island, a gift from the people of Yugoslavia. Chicago, reminded by attorney/author Elmer Gertz that it should be eternally grateful to him for having made the Columbian Exposition of 1893 the "wonder of the globe," dedicated a new public school to Tesla's memory.

The inventor's old colleagues of the AIEE journeyed to Europe to attend more celebrations, statue unveilings, and dedications in his honor. The International Electrotechnical Commission in Munich took formal action, making his name an international scientific unit, the *tesla* joining such historic electrical symbols as farad, volt, ampere, and ohm.[1]

As the exploration of space accelerated, so did interest in Tesla, especially from the standpoint of beam weaponry and microwave work. In America, Russia, Canada, and various other countries, projects in his name or derived from his pioneering, from weather-control to nuclear fusion, began to attract scientific attention. Some were just the shoestring efforts of loners, their laboratories old Quonset huts. Some were top secret and financed by enormous budgets.

Tesla's year of secret experiments at Colorado Springs in 1899 provided the basic impetus for much of this new exploration. His *Colorado Springs Notes*,* when they appeared in English in 1978

*This book may be ordered from Nolit, Terazije, 27, Belgrade, Yugoslavia (about $40).

under the imprint of the Tesla Museum at Belgrade, were eagerly awaited by many scientists. But even this work left important questions unanswered.

The bulk of his papers having vanished from America, reliable information was harder to come by than the recurring rumors of conspiracy, espionage, and patent theft. Scientists thought it strange that some aspects of his Colorado Springs research found in scattered sources did not appear in the Yugoslav-published *Notes*. Only by piecing together fragmentary information could the magnitude of his experiments be comprehended.

Around 1928 O'Neill, by merest chance, had happened to see a legal advertisement in a New York newspaper announcing that six boxes placed in storage by Nikola Tesla would be sold by the storage warehouse for unpaid bills. Feeling that such material should be preserved, he went to the inventor and asked permission to try to obtain funds to reclaim the material.

"Tesla hit the ceiling," he recalled. "He assured me he was well able to take care of his own affairs.... He forbid me to buy them or do anything in any way about them."

Shortly after the inventor died, O'Neill got in touch with Sava Kosanović, told him about the boxes, and urged him to protect them. He was never able to get a positive statement from Kosanović that he had obtained the boxes and examined the contents. "He gave evasive assurances that there was no reason for me to worry..."

Others too were interested in the papers. A young American engineer engaged in war work consulted Tesla on a ballistics engineering problem because he could not get time on an overworked computer, and Tesla's mind was known to offer the nearest thing to it. Soon he became fascinated with Tesla's scientific papers and was allowed to take batches of them home to his hotel room where he and another American engineer pored over them each night. They were returned the next day, a procedure which continued for about two weeks prior to the Inventor's death.

Tesla had received offers to work for Germany and Russia. After the inventor died, both engineers became concerned that critical scientific information might fall into foreign hands and alerted United States security agencies and high government officials.

The relevant records that I have obtained from federal agencies under the Freedom of Information Act reveal strange twistings and inconsistencies in the handling of the Inventor's estate. Tesla left tons of papers, barrels and boxes full of them. But he left no will. He was

survived by five nieces and nephews, of whom two lived in America at the time of his death.

Curiously, the FBI released his estate to the Office of Alien Property, which promptly sealed the contents. Since Tesla was an American citizen, the OAP's concern in the matter was hard to justify. After a court hearing, however, the estate was released to Ambassador Kosanović, one of the heirs.

Sweezy, who also had hoped to write a biography of Tesla (his death intervened), received the following account in 1963 from a former aide of Ambassador Kosanović's:

"Back in 1943... when Tesla died, it was a matter of very short time when Mr. K was issued a certificate from or by the Office of Custodian of Alien Property conveying to Mr. K full rights to the Tesla papers.... he had them all packed up and sent off to the Manhattan Storage Company where they remained until ready for packing and shipping off to Yugoslavia in 1952. Mr. K paid for storage charges.... All this time the certificate from the Alien Property Office was in my possession (in case of need)...

"You will perhaps remember that a number of times Mr. K mentioned the fact that the custodian at the storage warehouse told him that some government guys were in to microfilm some of the papers.... when we opened the safe in the present museum building (in Belgrade, Yugoslavia) the bunch of keys, which was the last thing Mr. K. flung into the safe at the New Yorker Hotel before the combination was re-set to a new combination, were not found in the safe, but in an entirely different box. Also the gold medal (the Edison Medal) was missing from the safe.... Anyway, for years and years Mr. K was bothered by the fact that Tesla papers had been gone thru and just before his departure from Washington in 1949–50(?) he decided to follow my suggestion to call Edgar J. Hoover (sic) and ask him. Mr. Hoover denied categorically that the FBI had gone into the papers...."

The aide said Tesla had told his nephew that "he wished to leave his works, property, etc., to his native country." (Not only is this uncorroborated but the papers were in English.)

Immediately after Tesla's death an exchange of telegrams flew between FBI Agent Foxworth of the field division of the New York Bureau and the director of the New York Bureau of the FBI. The day following discovery of the body, Agent Foxworth reported:

"Experiments and research of Nikola Tesla, deceased. Espionage—M. Nikola Tesla, one of the world's outstanding scientists in the electrical field, died January seventh, nineteen forty three at the

Hotel New Yorker, New York City. During his lifetime, he conducted many experiments in connection with the wireless transmission of electrical power and ... what is commonly called the death ray. According to information furnished by X [name deleted], New York City, the notes and records of Tesla's experiments and formulae together with designs of machinery ... are among Tesla's personal effects, and no steps have been taken to preserve them or to keep them from falling into hands of people ... unfriendly to the war effort of the United Nations...." (The FBI was, however, advised by the office of Vice-President Henry A. Wallace that the government was "vitally interested" in preserving Tesla's papers.)

Bloyce D. Fitzgerald, "an electrical engineer who had been quite close to Tesla during his lifetime," continued Foxworth, "advised the New York office that on January seventh, nineteen forty three, Sava Kosanović, George Clark, who is in charge of the museum and laboratory for RCA, and Kenneth Swezey ... went to Tesla's rooms in the New Yorker [author's note: the correct date would have been January 8], and with the assistance of a locksmith broke into a safe which Tesla had in his rooms in which he kept some of his valuable papers.... Within the last month, Tesla told Fitzgerald that his experiments in connection with the wireless transmission of electrical power had been completed and perfected.

"Fitzgerald also knows that Tesla had conceived and designed a revolutionary type of torpedo which is not presently in use by any of the nations. It is Fitzgerald's belief that this design has not been made available to any nation up to the present time. From statements made to Fitzgerald by Tesla, he knows that the complete plans, specifications and explanation of the basic theories of these things are some place in the personal effects of Tesla. He also knows there is a working model of Tesla's, which cost more than ten thousand dollars to build, in a safety deposit box belonging to Tesla at the Governor Clinton Hotel, and Fitzgerald believes this model has to do with the so-called death ray or the wireless transmission of electrical current.

"Tesla has also told Fitzgerald in past conversations that he has some eighty trunks in different places containing transcripts and plans having to do with experiments conducted by him. Bureau is requested to advise immediately what, if any, action should be taken concerning this matter by the New York Field Division."[2]

Kosanović later reported to Walter Gorsuch of the Office of Alien Property in New York that he first went to Tesla's rooms with the other men to search for a will. After the safe was opened, Swezey took from it a book containing the testimonials sent to Tesla on his seventy-fifth birthday, while Kosanović took from the room three pictures of Tesla. According to the manager of the New Yorker Hotel and Kosanović, nothing else was removed. The safe was closed under a new combination, which combination was in Kosanović's exclusive possession.

On January 9, Gorsuch of OAP and Fitzgerald went to the New Yorker Hotel and seized all of Tesla's property, consisting of about two truckloads of material, sealed it and transferred it to the Manhattan Storage and Warehouse Company. It was added to about thirty barrels and bundles that had been there since about 1934, and these too were sealed under orders of the OAP.

In addition to the question of the legitimacy of Alien Property's involvement in the case is the question of why Kosanović was allowed to have access to the safe's combination, from which he later claimed the Edison Medal had vanished. Tesla's American naturalization papers, which he so prized that he always kept them in his safe, may now be seen at the Tesla Museum in Belgrade; but it is not known what other papers or objects were in the safe.

The Washington Bureau of the FBI went so far as to advise the New York Bureau "to discreetly take the matter up with the State's Attorney in New York City with the view to possibly taking Kosanovich into custody on a burglary charge and obtaining the various papers which Kosanovich is reported to have taken from Tesla's safe." New York was also told to contact the Surrogate Court so stops could be placed against all of Tesla's effects, so that no one could enter them without an FBI agent being present, and New York was to keep Washington advised of all developments.[3]

The idea of arresting the Yugoslav ambassador was quickly dropped. And very soon the Washington headquarters made a curious decision. Edward A. Tamm of the FBI in Washington advised D. M. Ladd of that Bureau that the whole matter was being turned over to the Custodian of Alien Property; and Tamm noted, "There appears to be no need for us to mess around in it."[4]

Soon the well-known electrical engineer Dr. John G. Trump, who was serving as a technical aide to the National Defense Research Committee of the Office of Scientific Research and Development, was asked to participate in an examination of Tesla's scientific papers. Present at the Manhattan Warehouse & Storage Company in addition

to Dr. Trump were Willis George, Office of Naval Intelligence, Third Naval District, Edward Palmer, chief yeoman, USNR, and John J. Corbett, chief yeoman, USNR.

Dr. Trump reported afterward that no examination was made of the vast amount of Tesla's property that had been in the basement of the New Yorker Hotel for ten years prior to his death, or of any of his papers except those in his immediate possession at the time of death. It should be remembered that Tesla's scientific reputation had been in eclipse for a number of years and that there had been many efforts to discredit his claims in radio, robotry, and alternating current. Dr. Trump was a busy man, just as the staff of the FBI was stretched thin by its preoccupation with investigating wartime sabotage.

"As a result of this examination," wrote Dr. Trump, "it is my considered opinion that there exist among Dr. Tesla's papers and possessions no scientific notes, descriptions of hitherto unrevealed methods or devices, or actual apparatus which could be of significant value to this country or which would constitute a hazard in unfriendly hands. I can therefore see no technical or military reason why further custody of the property should be retained."

He added: "For your records, there has been removed to your office a file of various written material by Dr. Tesla which covers typically and fairly completely the ideas with which he was concerned during his later years. These documents are enumerated and briefly abstracted in the attachment to this letter."

In closing Dr. Trump said: "It should be no discredit to this distinguished engineer and scientist, whose solid contributions to the electrical art were made at the beginning of the present century, to report that his thoughts and efforts during at least the past fifteen years were primarily of a speculative, philosophical, and somewhat promotional character—often concerned with the production and wireless transmission of power—but did not include new sound, workable principles or methods for realizing such results."

The file (of which Dr. Trump's notes were only an abstract) consisted apparently of either photostats or microfilm made by the naval officers present, and the original papers apparently remained in storage, later to be transmitted to Yugoslavia. The examination had failed to disclose any alien-owned property subject to the vesting power of the Alien Property Custodian under the Trading with the Enemy Act. Tesla's papers and personal effects were released in

February of 1943 for disposition by Kosanović, the administrator of his estate.

Dr. Trump's abstract included the following:

"*Art of Telegeodynamics, or Art of Producing Terrestrial Motions at Distance*—This document, in the form of a letter dated June 12, 1940, to the Westinghouse Electric & Manufacturing Co., proposes a method for the transmission of large amounts of power over vast distances by means of mechanical vibrations of the earth's crust. The source of power is a mechanical or electromechanical device bolted to some rocky protuberance and imparting power at a resonance frequency of the earth's crust. The proposed scheme appears to be completely visionary and unworkable. Westinghouse's reply indicates their polite rejection. . . .

"*New Art of Projecting Concentrated Non-Dispersive Energy through Natural Media*—This undated document by Tesla describes an electrostatic method of producing very high voltages and capable of very great power. This generator is used to accelerate charged particles, presumably electrons. Such a beam of high-energy electrons passing through air is the 'concentrated nondispersive' means by which energy is transmitted through natural media. As a component of this apparatus there is described an open-ended vacuum tube within which the electrons are first accelerated.

"The proposed scheme bears some relation to present means for producing high-energy cathode rays by the cooperative use of a high-voltage electrostatic generator and an evacuated electron acceleration tube. It is well known, however, that such devices, while of scientific and medical interest, are incapable of the transmission of large amounts of power in nondispersed beams over long distances. Tesla's disclosures in this memorandum would not enable the construction of workable combinations of generator and tube even of limited power, though the general elements of such a combination are succinctly described.

"*A Method of Producing Powerful Radiations*—an undated memorandum in Tesla's handwriting describing 'a new process of generating powerful rays or radiations.' This memorandum reviews the works of Lenard and Crookes, describes Tesla's work on the production of high voltages, and finally in the last paragraph gives the only description of the invention contained in the memorandum. . . . 'Briefly stated, my new simplified process of generating powerful rays consists

in creating through the medium of a high-speed jet of suitable fluid a vacuous space around a terminal of a circuit and supplying the same with currents of the required tension and volume.'"

Long afterward in a letter to a colleague, Dr. Trump told what happened when he visited the Hotel Governor Clinton to examine the "device" stored in its vault, presumably the same box remembered by the messenger boy in Tesla's room.

"Tesla had warned the management that this 'device' was a secret weapon," said Dr. Trump, "and it would detonate if opened by an unauthorized person. Upon opening the vault and indicating the package containing the secret weapon, the hotel manager and employees promptly left the scene." The federal agents who had come along also pulled back, the better to give him the sole distinction of opening the parcel.

It was wrapped in brown paper and tied with a string. He remembered hesitating, thinking how beautiful the weather was outdoors, and pondering on why he was not outside too.

He lifted the parcel onto a table and, mustering his courage, snipped the string with his pocket knife. He removed the wrapping. Inside was a handsome polished wooden chest bound with brass. It required a final effort of courage to raise the hinged lid.

Inside stood a multidecade resistance box of the type used for Wheatstone bridge resistance measurements—a common standard item to be found in every electrical laboratory before the turn of the century!

Why had Tesla seen fit to terrify the staff and management of the hotel with this harmless object for so many years? Perhaps he had become so accustomed to having his hotel bills paid behind his back (believing that the hotels, honored to have him living there, had routinely dismissed the billings), that he was insulted when the Governor Clinton brashly demanded its $400.

Although the FBI closed its Tesla file in 1943, it didn't seem to want to stay closed. It was reopened in 1957 when an informant complained that a New York couple were issuing newsletters containing "information pertaining to flying saucers and interplanetary matters" and exploiting the inventor's name and fame. They allegedly claimed that Tesla's engineers, after his death, had completed a "Tesla Set," a radio device for interplanetary communication, that the device had been placed in operation in 1950 and since then Tesla engineers had been in close touch with alien spaceships. Once again the FBI decided no action was warranted and the file was closed.

Sweasy had never put much credence in the "secret weapon" rumors and had written to an inquirer: "Because Tesla was a recluse, and himself liked to talk in mystifying terms during his later years, I think many legends have been built up about the dozens of ideas he had evolved but which were not permitted by others to see the light of day."

He said he had known the inventor well for two decades before his death: "Tesla's greatest genius flamed up during a dozen or so years just before and slightly after the turn of the century. What he did after that may have carried the germs of some of the developments we are witnessing today, but he had not carried any of them—at least on paper or in any other tangible form—to the point of practicality . . ."

Perhaps, but between 1945 and 1947 an interesting exchange of letters and cables occurred among the Air Technical Service Command at Wright Field, Ohio, in whose Equipment Laboratory much top-secret research was being performed, Military Intelligence in Washington, and the Office of Alien Property—subject, files of the late Nikola Tesla.

On August 21, 1945, the Air Technical Service Command requested permission from the commanding general of the U.S. Army Air Force in Washington, D.C., for Private Bloyce D. Fitzgerald to go to Washington for a period of seven days "for the purpose of securing property clearance on enemy impounded property."

On September 5, 1945, Colonel Holliday of the Equipment Laboratory, Propulsion and Accessories Subdivision, wrote to Lloyd L. Shaulis of the OAP in Washington, confirming a conversation with Fitzgerald and asking for photostatic copies of the exhibits annotated by Trump from the estate of Tesla. It was stated that the material would be used "in connection with projects for National Defense by this department," and that all of it would be returned in a reasonable length of time.

That was the last time that the Office of Alien Property or any other federal agency in the United States admitted to having possession of Tesla's papers on beam weaponry. Shaulis wrote to Colonel Holliday on September 11, 1945, saying, "The materials requested have been forwarded to Air Technical Service Command in care of Lt. Robert E. Houle. These data are made available to the Army Air Force by this office for use in experiments; please return them." They were never returned.

These were the full photostatic copies, not merely the abstracts. OAP has no record of *how many* copies were made by those who

150

examined the files with Dr. Trump. The Navy has no record of Tesla's papers; *no* federal archives have a record of them.

Curiously, four months after the photostats had been sent to Wright Field, Col. Ralph Doty, the chief of Military Intelligence in Washington wrote James Markham of Alien Property indicating that they had never been received: "This office is in receipt of a communication from Headquarters, Air Technical Service Command, Wright Field, requesting that we ascertain the whereabouts of the files of the late scientist, Dr. Nichola [sic] Tesla, which may contain data of great value to the above Headquarters. It has been indicated that your office might have these files in custody. If this is true, we would like to request your consent for a representative of the Air Technical Service Command to review them. In view of the extreme importance of these files to the above command, we would like to request that we be advised of *any attempt by any other agency to obtain them.* [Italics supplied.]

"Because of the urgency of this matter, this communication will be delivered to you by a Liaison Officer of this office in the hope of expediting the solicited information."

The "other" agency that had the files, or should have had them, was the Air Technical Service Command itself! Colonel Doty's letter, which was classified under the Espionage Act, was declassified on May 8, 1980.

This embarrassing contretemps goes unexplained in the records. Perhaps it was handled orally with the Liaison Officer.

However, on October 24, 1947, David L. Bazelon, assistant attorney general and director of the Office of Alien Property, wrote to the commanding officer of the Air Technical Service Command, Wright Field, Dayton, Ohio, regarding the Tesla photostats that had been sent by registered mail on or about September 11, 1945, to Colonel Holliday, at the latter's request.

"Our records do not reveal that this material has been returned," said Bazelon. He sent a description and asked that it be returned.

Obviously at least one set of Tesla's papers had reached Wright Field because on November 25, 1947, there was a response to the Office of Alien Property from Colonel Duffy, chief of the Electronic Plans Section, Electronic Subdivision, Engineering Division, Air Materiel Command, Wright Field. He replied: "These reports are now in the possession of the Electronic Subdivision and are being evaluated. . . ." He believed that the evaluation should be completed by January 1, 1948, and "At that time your office will be contacted with respect to final disposition of these papers."

There is no written record that OAP ever sought further to have the documents returned, and they were not returned.

For many years there have been rumors that these unpatented inventions or concepts of Tesla's found their way not only to the U.S. Army Air Force but to Russia and to private American defense industries, and ultimately into certain university research laboratories engaged in beam weaponry.

The Office of Alien Property experienced a very difficult problem over the years in explaining its role in connection with Tesla's papers. Between 1948 and 1978 it issued the following variations on a theme to many inquirers:

"While this Office participated in an examination of certain material owned by the late Dr. Tesla, our records do not disclose that any such material has been vested or is presently under the jurisdiction of this Office. . . ."

"This Office has never had custody . . . of any property of Nikola Tesla. . . ."

"While the Tesla papers were in our custody. . ."

"Photostatic copies of certain documents, made while the papers were under our seal. . . ."

"In 1943 this Office placed a seal on the property. . . ."

"While the Tesla papers were in our custody. . ." etc., etc., etc.

As for what is now Headquarters Aeronautical Systems Division, Wright-Patterson Air Force Base, Ohio, they state: "The organization (Equipment Laboratory) that performed the evaluation of Tesla's papers was deactivated several years ago. After conducting an extensive search of lists of records retired by that organization, *in which we found no mention of Tesla's papers, we concluded the documents were destroyed* at the time the laboratory was deactivated."[6] (Italics supplied. Response, under the Freedom of Information Act, dated July 30, 1980.)

Tesla's original papers, and the remaining models of his inventions—his magnifying transmitter, robot boats, early tube lighting, induction motors, turbine, exhibits shown at the Chicago World's Fair of 1893, such as the "Egg of Columbus," and others—left America in 1952 for Yugoslavia. His ashes were sent later. The artifacts may now be seen at the Tesla Museum in Belgrade, a dignified-looking building with a broad, well-proportioned facade at No. 51 Proleterskih

Brigada, an avenue renamed after the war, but formerly known under the monarchy as Crown Street. The museum bears a plaque on a low wall, printed in the old Cyrillic alphabet.

Here Tesla's English writings have been translated into Serbo-Croatian—except, as the archivist admits, for the "unimportant" material, which remains, just as he wrote it, in the language of his adopted country.

30 The Legacy

The fact that Tesla's research notes and papers have not been easily available for western scientists has not, of course, meant that Teslian research is dead. On the contrary, the very mystery surrounding some of his unproved claims has served to goad numerous scientists into trying to duplicate his experiments. And since his aspirations were virtually limitless, there has always been a chance that the rewards of success would not be inconsiderable. But the single greatest stimulus to try to follow in Tesla's footsteps doubtless remains the example of the man himself—his stunning record of achievement and the enduring fascination of his mind. As one admiring German writer put it, "Tesla went beyond the borders of his exact science to foretell what lies in the future ... a modern Prometheus who dared reach for the stars...."[1]

Although a comprehensive summary of the state of Tesla-inspired research today would be beyond either the scope of this book or the intent of its author, no account of the inventor's life would be complete without at least some indication of what has become of a few of his major preoccupations. The record, as one might expect, is both mixed and incomplete, but it is no less impressive for that.

To begin, then, with Tesla's experiments with ball lightning: He had no idea what ball lightning might be useful for when he first encountered it in his Colorado Springs research; to him it was a nuisance, but it demanded an explanation. And so he set about determining the mode of formation of the strange fireballs and learned to produce them artificially.

The technical explanation runs like this: In the highly resonant transformer secondary comprising his magnifying transmitter, the entire energy accumulated in the excited circuit, instead of requiring a quarter period for transformation from static to kinetic, could spend itself in less time, at hundreds of thousands of horsepower. Thus, for example, Tesla produced artificial fireballs by suddenly causing the impressed oscillations to be more rapid than free ones of the second-

ary. This shifted the point of maximum electrical pressure below the elevated terminal capacity, and a ball of fire would leap great distances.

Yet strangely enough, modern plasma physicists with the best-equipped laboratories, have failed to produce plasmoids with anything near the stability of the true ball-lightning spheres that he created.

Why the fascination with this problem? First, of course, because it is there, an unknown. But second because among other uses, it may hold a vital key in the international race to achieve controlled nuclear fusion—potentially the greatest power source in history. Among those long interested in ball-lightning research are Peter Kapitza, the great Russian physicist, Lambert Dolphin and his colleagues in the radio physics laboratory at SRI International, Dr. Robert W. Bass of Brigham Young University, and Robert Golka, with whom Bass has collaborated on research.

Golka, a Massachusetts physicist, Tesla disciple, and lightning experimenter, has pursued the ephemeral fireball with the fervor of a hunter of snarks. Like Tesla in Colorado, he has done his research alone in a remote western laboratory in the Utah salt flats, and like Tesla, he has struggled to win the kind of federal support that usually goes only to enormous institutions or corporations.

In the largest hangar at the far end of the ghost base at Wendover, Utah, which was built by the U.S. Army Air Force during World War II, big spotlights are often burning as Golka conducts lightning tests. Here, under tightest security in the 1940's, the B-29 *Enola Gay* was housed and outfitted for delivering the first atomic bombs to Hiroshima.

Golka made two trips to the Tesla Museum to pore over the inventor's then unpublished notes and concentrated on replicating as exactly as he could in the old air base hangar the magnifying transmitter that Tesla had built in 1899 when investigating the lightning storms of Pike's Peak.

"He [Tesla] was 'way ahead of anything we have today in the equipment he built," Golka says. "Such as the high-powered switches and spark gap switches. The knowledge has been lost; we don't know how he did it. Some of it was in the diaries, but he kept much of this stuff in his head."

Golka built a magnifying transmitter at his "Project Tesla" that would discharge 22 million volts, creating almost twice as powerful a chain-lightning storm as the maestro himself had produced at Colorado Springs.

The relevance of ball lightning to fusion research has to do with the problem of confining plasma. The heart of the most common type of experimental fusion reaction involves taking isotopic hydrogen gas and both accelerating and superheating it until the hydrogen nuclei fuse to make helium nuclei, releasing, in the process, staggering amounts of energy. Along the way, while the hydrogen is being charged with vast amounts of kinetic and thermal energy, it enters an imperfectly understood material state known as plasma.* In the penultimate stages of the process, before fusion begins, the besetting problem is to maintain the plasma's coherence, to confine it within some kind of invisible electromagnetic "bottle."†

Since the strongest geometric shape is a sphere, Golka believes that ball lightning offers the best potential for containment of the unstable mass. He describes the odd lightning as "a glowing sphere of a variety of colors, a half-inch in diameter or as big as a grapefruit," and resembling an onion in its "layers and layers of alternate charged particles, positive and negative." It may bounce along through buildings, fall into water and set it boiling, and sometimes, as at the Hill Air Force Base in Utah, it may knock out the most sophisticated electronic equipment. In the summer of 1978, with the use of CO-2 laser beams, he finally managed to produce "bead" lightning, which he believes to be a form of ball lightning, and to photograph it in sequential frames.

He then sought support from the U.S. Department of Energy for a major program of research for which he proposed to use a device called a pyrosphere, employing five laser beams to create thermonuclear fusion. In a "Fireball Fusion Reactor" only nonradioactive helium is created and, according to Golka, mathematical models indicate it can reach and hold temperatures above a billion degrees.

He also proposed to the Air Force another Teslian concept, a charged particle beam, but again one designed to employ laser technology. Such beam guns, he believes, would have a range of

*Until recent years plasma had no major industrial importance but was merely a laboratory curiosity. Richard L. Berstn, executive vice president of International Plasma Corp., believes that the first practical application of plasmas came in the 19th century when "the glowing plasma produced by a Tesla coil was used to locate leaks in glass vacuum flasks."

†Teslian ideas are also involved in other aspects of fusion research. Superconducting magnetic coils, cooled to a few degrees above absolute zero, are used in magnetic containment devices; and, in a newly developed rival process, hydrogen fuel pellets are being bombarded by high-energy particle beams.

6,000 miles and could melt and destroy ICBM-type missiles in the air. With a Tesla coil three times the size of his combined coils, Golka believed he could generate 200 million volts of electricity.

But he inherited the usual Teslian problems of a loner, and as he said, "The walls fall in on me when I work for corporations." His work reached a point where it could no longer progress with improvised equipment, but called for enormous investments. His competitors were large corporations and leading universities engaged in the nuclear-fusion race; and even some of the latter were being cut off from their federal grants. They too were deeply into laser technology, although Golka claims his system is different and unique. By no means the only scientist to have attempted to carry forward Tesla's work with ball lightning, he undoubtedly has been one of the most singleminded.*

Russia's Kapitza, who shared the 1978 Nobel Prize in physics with Arno Penzias and Robert W. Wilson of America for his work in magnetism and the behavior of matter at extremely low temperatures, acknowledges his debt to Tesla. "The efficient generation of super-high-frequency oscillations and their conversion back to direct-current electrical energy," he writes, "discloses possible solutions to the problem of transmitting electrical energy ... in free space. The transmission setup will, of course, be similar to that already considered but, instead of a wave guide, a highly directional beam must be used, which, as is well-known, only at short wavelengths will diverge little. Such a setup for the transmission of electrical energy, firstly thought by N. Tesla many years ago, has already been discussed.... Although ... possible in principle, it is tied up with the solution of a series of complicated engineering problems and therefore it can be implemented in practice only in such special situations in which other methods of energy transmission are inapplicable (for example, when energy must be supplied to a satellite)."[3]

In this field of wireless energy transmission, so directly concerned with the space race, there is progress nearer home. Richard Dickinson, who heads the Microwave Power Transmission project for Cal Tech's Jet Propulsion Laboratory in the desert near Barstow, California, traces his inspiration to the early work of Tesla. The concept of bringing electricity to Earth from an orbiting solar-power system via

*Lambert Dolphin says of Golka's replica of the Colorado Springs Tesla coil: "It is spectacular indeed, to either scientist or layman. I hope it ends up in a museum such as the Smithsonian where it can be appreciated." He too is a proponent of further research in ball lightning.

microwaves is daring, costly, romantic, and thoroughly in the style of the maestro.

"We beamed power from our transmitter at Goldstone a distance of one mile," Dickinson said of the NASA project initiated in the mid-seventies. "All of the microwave energy that fell within our target (of which we could only collect a portion with our existing apparatus), we converted 82.5 percent to useful direct current. Thirty-four thousand watts of direct current output carried a distance of one mile. We are well pleased. The next step is to look further into the technology and needs of the satellite power system of the future."[4]

William C. Brown of the Raytheon Company, who developed the rectenna used in this microwave-power research, also attributes the idea of sending electricity by radio waves to Tesla's pioneering in the fundamentals of radio broadcasting and wireless power transmission.

Theoretically, a city the size of New York could be supplied with five billion watts on a winter day by enormous satellite structures in the sky that would orbit synchronously with Earth at a height of 22,300 miles. But admittedly, the cost of such floating power stations would be many billions of dollars, and they would be highly vulnerable to enemy killer satellites, in the event of war.

Brookhaven National Laboratory, located just to the northeast of Tesla's old Wardenclyffe site at Shoreham, also feels a close link with the inventor through the advanced high-energy work being conducted at the laboratory. In 1976 it paid homage to him in a ceremony, and the Yugoslav government sent a plaque to be placed at the still-standing Wardenclyffe laboratory.

Canada, too, has long been a bastion of Tesla Energy System advocates, and because of the country's rich hydroelectric sources, through-the-Earth transmission—if it worked—could be a boon to areas of power shortage.

But—will it work? Several projects have been planned, and some partially implemented, in Canada, central Minnesota, and most recently in Southern California—to "pump" hydroelectric power wirelessly through the Earth to an area of need, employing the Tesla system as it is understood.[5] The U.S. Department of Energy has often been asked to fund projects based on Tesla's system.

Unfortunately, there is no evidence that the system ever worked for Tesla, and none that it could work for anyone else. One of the inventor's problems was that he improperly extended into the electromagnetic domain fluid and fluid-mechanical analogies. Tesla's patent No. 787,412 provides for the Earth to be excited by a carefully

154

valued wavelength to establish a standing wave condition. Tesla believed the propagation path fell along a diameter. But according to much knowledge developed since 1899, the propagation path would not be along a diameter but, rather, along an ellipsoidal arc somewhere between the diameter and the spherical surface.

A fundamental aspect of wave propagation of power is that *no power is transmitted if the wave is standing;* power is transmitted solely with a traveling component. Boundary layer propagation, i.e., the mode of lossless propagation of waves at the boundary of two differing media (such as earth and sky), is a viable concept. However, the boundary plane must be smooth and the waves must be properly launched. At the frequencies Tesla was using, such launching apparatus would be an enormous structure. In examining the photographs of his experimental station at Colorado Springs, it is apparent to experts that he did not employ apparatus essential to the launching of such waves.

Tesla probably was mistaken at Colorado Springs in his interpretation of the lightning storms which he observed traveling away from him (eastwardly) across the plains, producing maxima and minima effects upon his instruments. This he interpreted as standing waves being set up in the Earth by the traveling storm, with the crests of the waves passing through his location as the storms advanced. It is believed he was seeing an interference effect caused by the reradiating surface of the frontal range of mountains to the west of his station. The results would have been the same on his instruments.

Dr. Walt, formerly senior scientist at the Environmental Research Laboratories, National Oceanic and Atmospheric Administration, in Colorado, describes himself as a "firm skeptic" of the Tesla theory. "The concept that electromagnetic energy penetrates 'through the earth,'" he says, "is valid only if the frequency is sufficiently low *and* if the distances are small. It's all tied up with 'skin-effect' phenomena; that means that the field is confined to the surface of a good conductor as in metallic wave guide."[6]

Dr. Walt even goes so far as to suggest that Tesla never really accepted the fact that electromagnetic waves could transport energy through the air. "Instead he thought of the earth itself as a conveyor and also thought of the possibility of a return conductor at heights of '15 miles above sea level.' The parallel of this idea to the earth-ionosphere wave guide at extremely low frequencies is striking (see IEEE *Journals of Oceanic Engineering*, Vol. OE-2, No. 2, April 1977). Also his proposed resonance of the system might be interpreted as the first disclosure of the earth-ionosphere cavity oscillations that have

been associated from the early 1960s with W. O. Schumann, N. Christofilos, and J. Galejs, among others."[7]

With respect to wireless communication, the U.S. Navy's Project Sanguine/Seafarer of recent years has evolved from Tesla's Colorado experiments. In a thermonuclear war, conventional radio communication probably would be disrupted at certain heights and wavelengths. America's atomic submarine fleet might then be without a means of receiving messages. The U.S. Navy, seeing this danger, turned back to Tesla's nineteenth-century suggestion of employing 10 Hz signals (ELF or extra low frequency), to circle the globe and penetrate the deepest waters.

One of the headier speculations concerning Teslian science is a suggestion that Russia has been employing his theories on weather modification to interfere with the jet stream, causing droughts and extremes of hot and cold weather. However unlikely the charge, it is true that Tesla did do a good deal of theorizing (but very little experimentation) on weather control.

He wrote, for example, on the possible use of radio-controlled missiles and explosives to break up tornadoes and the use of "lightning of a certain kind" to trigger rainfall. Of the former he said, "It would not be difficult to provide special automata for this purpose, carrying explosive charges, liquid air or other gas, which could be put into action, automatically or otherwise, and which would create a sudden pressure or suction, breaking up the whirl. The missiles themselves might be made of material capable of spontaneous ignition." His proposal included a lengthy mathematical formula.[8]

As with much modern scientific exploration inspired by the maestro, the returns are still not in on weather changing. Scientist Frederic Jueneman, "Innovative Notebook" columnist for *Industrial Research* magazine, calls attention to the fact that Dr. Robert Helliwell and John Katsufrakis of Stanford University's Radio Science Laboratory, demonstrated that very low frequency radio waves can cause oscillations in the magnetosphere. With a 20-km antenna and a 5 kHz transmitter in the Antarctic, they found that the earth's magnetosphere could be modulated to cause high energy particles to cascade into our atmosphere, and by turning the signal on or off they could start or stop the energy flow.

"The theoretical implication suggested by their work," says Jueneman, "is that global weather control can be attained by the injection of relatively small 'signals' into the Van Allen belts—something like a super-transistor effect."

But Jueneman's speculations go further and are eminently

worthy of Tesla: "If Tesla's resonance effects, as shown by the Stanford team, can control enormous energies by miniscule triggering signals, then by an extension of this principle we should be able to affect the field environment of the very stars in the sky...With godlike arrogance, we someday may yet direct the stars in their courses."[9]

No biography of Tesla would be complete without mention of his bright following of amateur physicists who build Tesla coils for their personal research, endeavoring to replicate his electrical magic; and the young inventors who pore over his basic patents and still find inspiration from them.

Durlin C. Cox, a Wisconsin physicist who has pondered Tesla's published writings, has built two Tesla coils, the second of 10 million volts. The reasons: "My own personal interest in high voltage engineering, especially in the field of high frequency rf transformers; to further my studies on the laboratory production of ball lightning; and because the University of Wisconsin at Madison asked me to submit a Tesla coil in their bi-annual Engineering Exposition in the spring of 1981." He and friends built one Tesla coil for a Hollywood studio for lightning effects, which has been a common use of them.

Electrical engineer Leland Anderson has summarized the major points in design that a coil builder might gain from reading Tesla's *Colorado Springs Notes*:

1. The Q's of the primary and secondary must be as high as practicable.

2. The Q's of the primary and secondary should be equal.

3. The length of the secondary winding should be one-quarter of the effective operating wavelength.

4. The technique of using an "extra coil" tank circuit (or a variation of it) in the secondary to magnify the voltage should be used.

"With these criteria in mind," he says, "the builder will find that hundreds of turns are not necessary for the secondary winding to achieve high voltages."

Last but not least, what about Tesla's death/disintegrator rays? Were his concepts sound? If they were found useful by the U.S. Army Air Force research team, whose top-secret project was rumored to have had the code name "Project Nick," it may be safely assumed that instead of being "destroyed," as reported, his papers are still highly classified.

Dr. Trump's evaluation and Swezey's assessment of Tesla's "secret weapons" have, however, received updated concurrence by

Lambert Dolphin, assistant director of the Radio Physics Laboratory at SRI International, who has studied the inventor's work and his ball-lightning research for two decades. He points out that the fields of knowledge of both physics and electrical engineering have grown exponentially since about 1930.

"Whole libraries are now required just to keep track of all the theory and experience that have unfolded since Tesla's time," he says. "Our mathematical and practical understanding of electricity, magnetism, electromagnetic theory, and radio communications has continued to grow explosively ever since 1950, or should I say 1970!"[10]

Tesla, Dolphin believes, "may have had intuitive insight into lasers and high-energy particle beams as well as ultra-high voltage phenomena, but now that we understand all the physics much more, we can easily evaluate many of his extravagant later-life claims."[10]

In fact, there is no good evidence to suggest that Tesla anticipated lasers. His "teleforce rays" seem to have been concerned exclusively with high-energy particle beams. We still do not know precisely how he intended them to work, although, says Dolphin, the available evidence suggests that Tesla may not have paid sufficient attention to how greatly such beams may be absorbed or dispersed by molecules and atoms in the air. In any case, even if we did understand Tesla's intentions more clearly, we should be hard put to compare them to the current state of the art, much of which is hidden under high security classifications.

Nevertheless, Tesla's work with high voltages to accelerate charged particles does seem to have been decidedly in what is now the mainstream of physical research. "In this field," says Dolphin, "he anticipated modern linear and circular nuclear accelerators. Such machines today have energy levels of tens of billions of electron volts or at least 1,000 times greater energy levels than Tesla ever attained.

"I am sure his magnifying transmitters were spectacular... He probably generated some interesting arcs and sparks that were what we now study as *plasmas*. The containment of plasmas is a huge area of modern physics. For example ... to see if small amounts of matter can be turned into immense amounts of electrical power in carefully contained plasmas." But Tesla's early discoveries and inventions, he concludes, were indeed ingenious and ahead of their time.[11]

As this book goes to press, the Pentagon is studying the creation of a new branch of the armed services, to be known as the U.S. Space Command, whose primary arsenal will consist of laser and particle-beam weapons fired from "space battleships." In prose not

unlike Tesla's own, a Department of Defense fact sheet compares particle beams to "directed lightning bolts" —although without explicitly admitting that such a weapon has in fact been developed.

It is difficult to assess the current state of the beam-weapons program because virtually everything about it is heavily classified. Apparently the technology involved has proved to be complex and difficult, raising questions about the project's feasibility, but many experts nevertheless seem to be hard at work on the problem. At the same time, the activities of the other nations in this area have been monitored carefully by agencies of the federal government. Indeed the possibility of creating a family of particle-beam weapons has been a subject of serious discussion in this country for at least the past twenty-five years, and it is, in my opinion, of no little significance that as long ago as 1947 the Military Intelligence Service identified the writings about a particle-beam among Tesla's scientific papers as being "of extreme importance."

Since he had no laboratory in the later years of his life, Tesla was unable to develop his ideas. But it is undeniable that he described in general terms half a century ago what may prove to be one of the main weapons of the Space Age. And to the end of his days, Tesla the pacifist hoped that such knowledge would be used, not for war among Earthlings, but for interplanetary communication with our neighbors in space, of whose existence he felt certain.

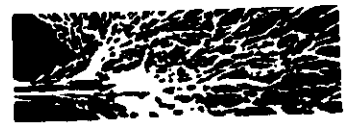

Bibliographical Essay

Some of Tesla's own writing—lectures, articles, patents, papers, and letters—is now available in the United States. His most important lectures and his brief autobiography, in bound volumes, are listed in the prologue to the reference notes.

Citation of biographies of Tesla by O'Neill, Hunt, and Draper, and others may be found in the reference notes. The O'Neill manuscript and the Swezey Collection are to be found at the Smithsonian Institution, Dibner Library.

Serious Tesla scholars will wish to consult the annotated *Dr. Nikola Tesla Bibliography* by J. T. Ratzlaff, and L. I. Anderson (San Carlos, California, Ragusan Press, 1979), for it contains some 3,000 sources of writings by and about Tesla. "Priority in the Invention of Radio, Tesla v. Marconi," by Leland Anderson may be obtained through the Antique Wireless Association, Monograph New Series No. 4.

A new means of analyzing Tesla's inventions is provided in *Dr. Nikola Tesla: Selected Patent Wrappers from The National Archives*, by J. T. Ratzlaff (Millbrae, Ca., Tesla Book Co., 1980). These "file wrappers" provide explanations and correspondence between the patentee and the Patent Office, to overcome objections raised by the examiner.

Tesla's *Colorado Springs Notes, 1899–1900*, published in 1978 by the Tesla Museum, is available through Nolit, Terazije, 27, Belgrade, Yugoslavia.

The Library of Congress Manuscripts Division contains microfilm correspondence between Tesla and George Scherff, Robert Underwood Johnson, Mark Twain, members of the Morgan family, George Westinghouse, and the Westinghouse Electric and Manufacturing Company.

In addition original correspondence and photographs may be found at the Butler Library, Rare Books and Manuscripts, Columbia University, including letters between Tesla and Johnson, Scherff, and

157

REFERENCE PAGES

96 pages

February 12, 1937

Mr. Edgar Hoover, Director,
Federal Bureau of Investigation,
Washington, D.C.

My dear Mr. Hoover:

I do not know whether or not the recent series of air crashes on the west coast has attracted the attention of your department, or whether, if investigation were indicated, the jurisdiction would be your own. An idea as to the cause of these crashes has occurred to me, however, and I thought it might bear a bit of checking up.

If you will check newspaper files as far back as 1934, I believe you will find that the earliest of the unexplained (and apparently unexplainable crashes) occurred about that time.

As I remember the events, it was during that year that three small planes exploded in the air over Texas and southwestern Kansas and Oklahoma. These crashes were not accounted for, either by subsequent investigation where the plane occupants were killed or by the experience of surviving plane occupants in one case.

Following these tragedies there came a lapse of about a year, after which there occurred (likewise without apparent reason) the series of crashes which cost the lives of a senator, of Knute Rockne, and a number of others. All crashes again occurred in the South and Southwest.

Again there was a lapse of time, this one not quite a year, and there started the worst series of air disasters the country has yet seen. One plane lost in the Southwest and not yet accounted for. One plane crashes into a mountainside within sight of its airport. And now the most recent incident, the falling of a United liner into San Francisco Bay while circling its airport, preparatory to landing.

RECORDED & INDEXED 62-47649-1

Now in this most recent incident, the experience of the radio operator at the airport seems to me to be highly illuminating. This operator reported a soft buzz interrupting his communication with the liner ... a loud roar such as produced by the worst imaginable static ... then silence. The plane had dropped into the bay like a plummet.

FEB 24 1937

[redacted] b6 b7C

159

Crack pilots do not suddenly become rank hams and bungle in handling a ship. Nor do the three motors (or even two) on the large airliners, stop simultaneously without extremely sufficient reason. Th ese things might happen once or even twice in a lifetime. They do not happen six and eight times a year. It is not logical that they should.

To digress for a moment, I recall reading an article in a magazine a year or two ago, written by Nikola Tesla, the inventor. The article dealt with a new invention of Mr. Tesla's ... a giant induction coil which would project power (high voltage) through the atmosphere without the use of transmission wires. Mr. Tesla devoted some space to the possible social benefits that would result to the public should his invention be perfected and become practical.

I have not heard of Mr. Tesla now in two or three years. Perhaps he has left the country. Perhaps he is still here. He might still be working on the invention described in the above-mentioned article. It might have been stolen from him.

In any case, his views on the ideas presented by these two unconnected subjects, would be well worth while having. And if I had the money and the time, I should certainly make an effort to smoke him out myself.

The thing is simply this: if one man can make an instrument that will project power through the air for even so short a distance as 500 yards (the then-practical limitations of Mr. Nikola's device) it is entirely possible for another to project power for several hundreds of miles. And the effect of such uncontrolled power on metallic objects in its path is entirely unpredictable.

Please do not think me a "crank" letter writer. I have never before written a letter of this type to anyone. But the idea seems to me so within the bounds of possibility that I most sincerely feel it will bear some practical study.

Yours very respectfully,

[redacted]

(b)(7)(c)

Letter Ack. + Ref
Bu. Air Commerce
cc [redacted]
2-27-37

XXXXXX
XXXXXX
XXXXXX

FEDERAL BUREAU OF INVESTIGATION
FOIPA DELETED PAGE INFORMATION SHEET

6 Page(s) withheld entirely at this location in the file. One or more of the following statements, where indicated, explain this deletion.

☒ Deletions were made pursuant to the exemptions indicated below with no segregable material available for release to you.

Section 552		Section 552a
☒ (b)(1)	☐ (b)(7)(A)	☐ (d)(5)
☐ (b)(2)	☐ (b)(7)(B)	☐ (j)(2)
☐ (b)(3)	☐ (b)(7)(C)	☐ (k)(1)
_____	☐ (b)(7)(D)	☐ (k)(2)
_____	☐ (b)(7)(E)	☐ (k)(3)
_____	☐ (b)(7)(F)	☐ (k)(4)
☐ (b)(4)	☐ (b)(8)	☐ (k)(5)
☐ (b)(5)	☐ (b)(9)	☐ (k)(6)
☐ (b)(6)		☐ (k)(7)

☐ Information pertained only to a third party with no reference to you or the subject of your request.

☐ Information pertained only to a third party. Your name is listed in the title only.

☐ Documents originated with another Government agency(ies). These documents were referred to that agency(ies) for review and direct response to you.

_____ Pages contain information furnished by another Government agency(ies). You will be advised by the FBI as to the releasability of this information following our consultation with the other agency(ies).

_____ Page(s) withheld for the following reason(s): _____

_____

☐ For your information: _____

_____

☒ The following number is to be used for reference regarding these pages:

65-30311-237

XXXXXX
XXXXXX
XXXXXX

XXXXXXXXXXXXXXXXXXXXX
X DELETED PAGE(S) X
X NO DUPLICATION FEE X
X FOR THIS PAGE X
XXXXXXXXXXXXXXXXXXXXX

FBI/DOJ

CC-287

Mr. Tolson
Mr. E.A. Tamm
Mr. Clegg
Mr. Glavin
Mr. Ladd
Mr. Nichols
Mr. Rosen
Mr. Tracy
Mr. Carson
Mr. Coffey
Mr. Hendon
Mr. Kramer
Mr. McGuire
Mr. Harbo
Mr. Quinn Tamm
Tele. Room
Mr. Nease
Miss Beahm

J. EDGAR HOOVER
DIRECTOR

Federal Bureau of Investigation
United States Department of Justice
Washington, D. C.

13818

JBL:ed

January 11, 1943

MEMORANDUM FOR MR. LADD

RE: UNKNOWN SUBJECTS;
EXPERIMENTS AND RESEARCH
OF NIKOLA TESLA (Deceased)
ESPIONAGE - M

(b)(7)(C)

In a teletype from the New York Office dated January 9, 1943, the Bureau's advice is requested as to what action should be taken in connection with this matter. It is to be noted that Tesla died January 7, 1943, and resided at the Hotel New Yorker. He was one of the world's outstanding scientists in the electrical field and has been conducting many experiments in connection with wireless transmission of electrical power and what is commonly referred to as the "Death Ray".

Sava Kosanovich, a distant relative intensely disliked by Tesla, is taking steps to get possession of these important documents and plans. Kosanovich on January 7, 1943, with George Clark, in charge of the Museum and Laboratory for RCA, and Kenneth Swezey of Brooklyn, New York, entered Tesla's rooms in the Hotel New Yorker and, with the aid of a locksmith, broke into a safe containing some of Tesla's valuable papers, including important electrical formulae, designs, et cetera.

Tesla is reported to have completed and perfected his experiments in the radio transmission of electrical power and to have conceived and designed a revolutionary type of torpedo not presently in use by any nation. It is reported that Kosanovich may possibly make this material available to the enemy.

ACTION:

I called Mr. D[redacted] of the New York Office at 12:30 P.M. and pointed out the apparent burglary violation on the part of Kosanovich. I told him this matter should be discreetly discussed with the State's Attorney in New York City with a view to locating Kosanovich and apprehending him on a burglary charge in order to determine the nature of the material he took from Tesla's safe. I pointed out the necessity for the State's Attorney keeping any action most secret in view of the highly confidential nature of the plans involved. I also suggested that the New York Office contact the Surrogate Court in order that Tesla's effects as well as the contents of his safety deposit boxes might not be entered without the presence of a Bureau Agent in order that we may endeavor to preserve the secrecy of any plans or items essential to the conduct of the war and national security.

Respectfully,

[redacted]

(b)(7)(C)

FOR VICTORY BUY UNITED STATES DEFENSE BONDS AND STAMPS

RECORDED & INDEXED

65 47753-1
F B I
1943

162

65-47953-1

[redacted] (b)(7)(c)

January 21, 1943

SAC, New York

Re: UNKNOWN SUBJECTS; SAVA KOSANOVICH; EXPERIMENTS AND RESEARCH OF NIKOLA TESLA (Deceased) ESPIONAGE (M)

Dear Sir:

Reference is made to a teletype dated January 9, 1943, from the New York Field Office and to a phone conversation between Mr. J. B. Little of the Bureau and Assistant Special Agent in Charge Donegan on January 11, 1943.

It was pointed out to Mr. Donegan that Sava Kosanovich, George Clark and Kenneth Sweeny may have committed a burglary violation by entering Tesla's rooms after his death and particularly by using a locksmith to get into a safe containing some of Tesla's valuable papers. Mr. Donegan was advised this matter should be discreetly discussed with the State's Attorney, New York City, with a view to locating Kosanovich and apprehending him on a burglary charge, in order to ascertain the nature of the material taken from the safe of Nikola Tesla. It was also suggested that the New York Office contact the Surrogate Court, in order that Tesla's effects, as well as the contents of his safety deposit boxes, might not be entered without the presence of an Agent, in order that the secrecy of any plans or items essential to the conduct of the war or national security might be preserved. It was stated that Kosanovich might possibly make certain material available to the enemy.

A review of the Bureau files reveals considerable information concerning Nikola Tesla and his inventions and it should be noted that one Nicola Tesla, who might have been identical with Nikola Tesla, made a speech at the Grange Hall, Springfield, Massachusetts, on June 4, 1922, under the auspices of the Friends of Soviet Russia.

Mr. Tolson
Mr. E. A. Tamm
Mr. Cleg
Mr. Gla
Mr. Ladd
Mr. Nich
Mr. Rose
Mr. Trac
Mr. Carson
Mr. Coffey
Mr. Hend
Mr. Kra
McGuire
Carbo
Quinn Tamm
Tease
Handy

[redacted] (b)(7)(c)

COPIES DESTROYED
148 OCT 26 1967

55 FEB 10 1943

Cat [redacted]

163

[redacted]

(6)(7)(C)

No record of Kenneth Sweezy could be located in the Bureau files from the information available.

The foregoing information is being furnished for possible future reference in connection with this case and it is desired that the Bureau be kept promptly and currently informed of all developments in this case.

Very truly yours,

John Edgar Hoover
Director

Federal Bureau of Investigation

United States Department of Justice
New York, New York

EBC:PM
65-12290

March 19, 1943

Director, FBI

Re: UNKNOWN SUBJECTS; SAVA KOSANOVICH;
EXPERIMENTS AND RESEARCH OF NIKOLA TESLA
(Deceased);
ESPIONAGE, MISCELLANEOUS

Dear Sir:

Reference is made to the Bureau letter in the above-captioned matter dated January 21, 1943, in which it is stated that it is desired that the Bureau be kept promptly and currently informed of all developments in this case.

In view of a telephone call from Mr. Little of the Bureau to Mr. T. J. Donegan, Assistant Special Agent in Charge of the New York Office, dated January 14, 1943, in which Mr. Little stated that the above-captioned matter was now being handled as an Alien Enemy Custodial Detention matter and therefore no further action should be taken in the matter by the New York Field Division, this case is being considered closed in this Office, unless advised to the contrary by the Bureau at some future time.

alien En custodian

Very truly yours,

E. E. Conroy

E. E. CONROY
Special Agent in Charge

ALL INFORMATION CONTAINED
HEREIN IS UNCLASSIFIED
DATE 4-18-89 BY SP1 [illegible]
291860

ta

COPIES DESTROYED
148 OCT 26 1960

RECORDED & INDEXED

65-47953-3

(b)
(c)

FOR VICTORY
BUY
UNITED STATES DEFENSE BONDS AND STAMPS

165

FEDERAL BUREAU OF INVESTIGATION

Form No. 1
THIS CASE ORIGINATED AT NEW YORK CITY, N.Y. FILE NO. 100-8189

REPORT MADE AT	DATE WHEN MADE	PERIOD FOR WHICH MADE	REPORT MADE BY
BALTIMORE, MARYLAND	3-29-43	3-6-43	[redacted] (b)(7)(c)

TITLE	CHARACTER OF CASE
SAVA M. KOSANOVICH, with alias Sava M. Cosonovitch	INTERNAL SECURITY G. CUSTODIAL DETENTION

SYNOPSIS OF FACTS:

[redacted] SAVA [redacted]OSANOVICH, [redacted] Reported to have turned [redacted]tents and effects to Alien Property [redacted]odian, NYC, for NICK TESLA. [redacted] (b)(7)(c)

- R U C -

ALL INFORMATION CONTAINED HEREIN IS UNCLASSIFIED DATE 4-30-45 BY [illegible] 291860

REFERENCE: Letter from New York Field Division dated 2-22-43.

DETAILS: AT DOVER, DELAWARE

[redacted]

(b)(7)(c)

Mr. ABE SPANEL, President of the International Latex Corporation, advised that [redacted] He stated that he had been a very good friend of NICK TESLA who has died recently and that he believes that the subject is a third or fourth cousin of TESLA and that when TESLA died, the subject was his only close relative in this country and TESLA's effects came into his possession.

SPANEL related that the subject had recently turned over to the government the majority of the patents of NICK TESLA. SPANEL described TESLA as being one of the greatest inventors that has ever lived. He stated he had more than

APPROVED AND FORWARDED: SPECIAL AGENT IN CHARGE DO NOT WRITE IN THESE SPACES SF

COPIES DESTROYED 148 OCT 26 1960 [illegible] 65-47953 4 RECORDED

CONTESTED THIS REPORT
5 - Bureau
4 - NYC (2 G-2)
2 - Baltimore

APR 22 1943

17 [redacted] (b)(7)(c)

53 APR 22 19[illegible]

U. S. GOVERNMENT PRINTING OFFICE 7—2034

166

900 inventions and patents. SPANEL stated that at one time TESLA had an invention in which he was able to direct electrical current without the means of a conductor. He felt that this type of an invention would be of invaluable assistance to any country at war and for this reason felt that TESLA's inventions and patents should be put into the hands of proper Government officials, where they might be put to the best advantage for the United States. He does not believe the subject is engaged in any un-American activities and stated that he was more than willing to turn these patents and inventions over to the proper Government agency. He asserted that before TESLA died, he had spoken to the subject regarding his becoming a United States citizen and SPANEL believes that he is now taking the proper steps to achieve that end.

SPANEL also stated that the subject had handed all of the effects of the deceased TESLA to the Alien Property Custodian in New York City.

SPANEL advised that the day before TESLA died he had tried to get in touch with War Department officials in Washington in order that he might make available to them patents and inventions that he had developed. However, he was not able to get in touch with the proper authorities and he died the following day.

SPANEL advised that the Yugoslavian Government had been sending TESLA approximately $600.00 per month for sometime prior to his death and this was described as being a sort of pension.

SPANEL stated further that he has previously turned over information regarding the subject to Special Agent [redacted] of the New York Field Division. He also advised that WALDEMER KEMPFERT, Science Editor, New York Times and BILL LAURENZ, Science Feature Writer, New York Times and the Science Editor of the Herald Tribune would be able to elaborate on some of the accomplishments of NICK TESLA and that the June 1900 issue of the Century Magazine also contained an article relating to the inventions of TESLA.

(b)(7)(C)

SPANEL also stated that he believed BLOYCE FITZGERALD, Pierpont Hotel, Brooklyn, New York, Secretary to TESLA, has been contacted by Special Agent [redacted] and that if the New York Office wishes to contact SPANEL he may be reached at his home [redacted]

- REFERRED UPON COMPLETION TO THE OFFICE OF ORIGIN -

JOHN EDGAR HOOVER
DIRECTOR

CC-287

Mr. Tolson
Mr. E. A. Tamm
Mr. Clegg
Mr. Glavin
Mr. Ladd
Mr. Nichols
Mr. Rosen
Mr. Tracy
Mr. Carson
Mr. Coffey
Mr. Hendon
Mr. Kramer
Mr. McGuire
Mr. Harbo
Mr. Quinn Tamm
Tele. Room
Mr. Nease
Miss Beahm
Miss Gandy

Federal Bureau of Investigation
United States Department of Justice
Washington, D. C.

[redacted] (b)(7)(C)
2:45 p.m.

July 17, 1943

MEMORANDUM FOR [redacted]

RE: SAVA KOSANOVICH
INTERNAL SECURITY (G)
CUSTODIAL DETENTION

At this time SA [redacted] of the New York office telephoned, stating on the previous afternoon [redacted] telephoned that office [redacted] stated that she would like to be interviewed concerning certain information she possessed [redacted]

(b)(7)(D)

Agent [redacted] stated [redacted] two teletypes which the New York office forwarded to the Bureau under dates of January 9 and 12, 1943, in the case entitled UNKNOWN SUBJECTS, EQUIPMENT, EXPERIMENTS AND RESEARCH OF NICOLA TESLA DECEASED, ESPIONAGE (Bureau file 100-2237). Briefly, the information contained in these teletypes is that shortly after Nicola Tesla, one of the world's outstanding scientists in the electrical field, died in his hotel room at New York City on January 8, 1943, Sava Kosanovich, a distant relative, and other individuals entered his room and opened a safe, examining certain materials which he possessed. On January 8, Mr. L. M. C. Smith of the Department advised Mr. Tamm that he was concerned about the possibility of enemy agents confiscating some of the trunks of Tesla and that apparently the Alien Property Custodian was taking some action in this matter. Inasmuch as the matter was being handled by the Alien Property Custodian's office, the Bureau did not conduct any inquiries into this situation.

(b)(7)(C)

RECORDED 165-47953

[redacted]

FOR VICTORY BUY UNITED STATES SAVINGS BONDS AND STAMPS

COPIES DESTROYED
148 OCT 26 1960

ALL INFORMATION CONTAINED HEREIN IS UNCLASSIFIED DATE 4-18-89 BY SP1A 66cm
291860

57 AUG 19 1943

168

Mr. Ladd

[redacted]

ACTION:

[redacted]

There is attached for your approval a letter directed to the San Juan Field Office requesting that this interview be conducted and also instructing that she be interrogated concerning the other matter referred to above, inasmuch as the Pittsburg Office has not as yet covered this interview.

Respectfully,

[redacted]

(6) (7) (C)

Federal Bureau of Investigation
United States Department of Justice
New York 7, New York

IN REPLY, PLEASE REFER TO
FILE NO. 65-12290
HER:mhm

CONFIDENTIAL

October 17, 1945

Director, FBI

Re: UNKNOWN SUBJECTS;
SAVA KOSANOVICH;
Experiments and research of NIKOLA TESLA (deceased)
ESPIONAGE - M

Dear Sir:

Reference is made to the Bureau letter dated January 21, 1943, which bore a caption similiar to that mentioned above.

The referenced letter dealt with the death, on January 7, 1943, of the famous inventor, NIKOLA TESLA, who as well as being the inventor of Alternating Current, perfected many electrical devices. He is also credited with having developed the so called "death ray" which would safeguard any country from attack by air.

On June 9, 1945, [redacted] of New York City furnished information of a nonspecific nature indicating that it was his belief that persons sympathetic to Russia were making an effort to secure the effects of NIKOLA TESLA in order to salvage therefrom any models or designs of possible military value. [redacted] claimed that he heard that ABRAHAM N. [redacted], President of the NATIONAL LAND CORPORATION, of Dover, Delaware was the motivating influence behind this attempt to obtain TESLA'S papers which are presently held in storage at the MANHATTAN STORAGE WAREHOUSE in New York City. [redacted] promised to return to the New York Field Division shortly after his initial visit and furnish further and more specific information to support his claims.

RECORDED 47953-14

ENCLOSURE ATTACHED

He was not heard from again, however, until September 27, 1945, at which time he furnished the following additional information:

He said that a boyhood chum of his from Wichita, Kansas, BLOYCE FITZGERALD, had been TESLA'S protege and one of the inventors few confidents. According to [redacted], FITZGERALD who is now an Army Private stationed at Wright Field, Dayton, Ohio, is a brilliant 29 year old scientist who spent endless hours with TESLA prior to the latters death, during which time TESLA explained to him most secret experiments. [redacted] stated that FITZGERALD met TESLA in November 1942, but he had been corresponding with the latter since 1935. According to the informant, FITZGERALD had developed some sort of anti-tank gun, the details of which he presented to TESLA who made certai corrections in design and specifications to further perfect the weapon.

[redacted] related that sometime in December 1942, when FITZGERALD was attending a meeting of the AMERICAN SOCIETY OF MECHANICAL ENGINEERS, he made the acquaintance of ABRAHAM [redacted] who became interested in FITZGERALD'S

RETURN TO INDEXING DEPT.

170

gun. SPANEL offered financial aid to FITZGERALD and the two were in the closest contact with each other for a considerable period of time. [redacted] said that FITZGERALD had lined up a deal for the purchase of the gun by the REMINGTON ARMS COMPANY, but for some reason SPANEL blocked this deal by reaching top men in the REMINGTON COMPANY. SPANEL is then reported as having obtained a job for FITZGERALD with the HIGGENS SHIP BUILDING COMPANY in New Orleans and negotiated a contract with FITZGERALD for the purchase and manufacture of the gun in a manner which would return 80% of the profits derived to SPANEL,

[redacted] stated that in November of 1943, for some unknown reason but which he believes to be attributable to SPANEL, FITZGERALD was fired by the HIGGENS COMPANY. In September of 1944, FITZGERALD was inducted into the Army and for a considerable period of time was located at an ordinance experimental station at Elgin Field, Florida. [redacted] stated that at the present time FITZGERALD is engaged in a highly secret experimental project at Wright Field in Dayton, Ohio. In spite of his rank of Private, FITZGERALD actually is the director of this research and is working with many top young scientists who were inducted into Army from leading industrial posts.

According to [redacted], FITZGERALD is presently working on the perfection of TESLA'S "death ray" which in FITZGERALD'S opinion is the only possible defense against offensive use by another nation of the Atomic Bomb. In this connection, it is noted that the New York Times of September 22, 1940 in an article entitled "SCIENCE IN THE NEWS" by WILLIAM A. LAURENCE, Science Editor states that TESLA devulged to LAURENCE the fact that he had developed a "death ray" or "tele-force" which TESLA claimed would melt airplane motors at a distance of 250 miles, so that actually an invisible Chinese Wall would be built around a country against attack by an enemy air force.

According to the article in the TIMES, this electrical device would operate by the generation of power from a plant, a number of which might be located strategically along our coast lines and the beam from which would melt any engine within a radius of 250 miles.

[redacted] stated that during FITZGERALD'S acquaintance with SPANEL, FITZGERALD had told SPANEL of his associations with TESLA and had apparently described to SPANEL some of TESLA'S most secret work. [redacted] believes that SPANEL, who he claims is definitely pro-Russian in attitude, is now attempting through legal procedure to secure custody of TESLA'S effects which are now held by TESLA'S only heir, one SAVA KOSANOVICH, who is presently in Yugoslavia occupying some governmental post.

It will be recalled that in an article published on March 15, 1945, by the KING FEATURE SYNDICATE INCORPORATED, WESTBROOK PEGLER charged SPANEL with spreading pro-communist and pro- Russian propaganda through his full page advertisement in the newspapers, which SPANEL characterized as being published for the INTERNATIONAL LATEX CORPORATION, as a public service feature. It is also interesting to observe that in the New York Times of October 2, 1945, an article appears which states that SPANEL is suing the KING FEATURE SYNDICATE INCORPORATED for six million dollars alleging the column by PEGLER to have been libelous.

(b)(7)(C)

171

[redacted] stated that through FITZGERALD he too had met SPANEL and from this personal acquaintance he formed the opinion that SPANEL was definitely a communist and is probably one of the financial supporters of the Communist Party in this country. [redacted] stated that SPANEL was born in Russia, but is now an American citizen. He also charged that SPANEL exerted tremendous political influence in Washington, D. C., and said that one of SPANEL'S closest political friends was HENRY WALLACE.

[redacted] advised that two agents from Army Intelligence contacted and stated that in an investigation to determine the qualifications of FITZGERALD for a commission, they had developed information indicating that SPANEL was definitely endeavoring to secure possession of TESLA'S effects. [redacted] indicated that Army Intelligence was pursuing an investigation along these lines in an attempt to ascertain the complete story in this regard.

psychiatrist

[redacted] (b)(7)(C)

[redacted] stated that FITZGERALD had interested a group of young Army scientists now working with him at Wright Field in this foundation, and their ultimate goal is to secure the support of a wealthy backer in order that a foundation might be established and that a sort of "idea factory" might result. He said that they intended to contact HENRY FORD, SR., to solicit his aid in this regard.

[redacted] related that probably the greatest idea of TESLA'S was that involving the wireless transmission of electrical power. He claimed that TESLA had performed a successful experiment many years ago at Pikes Peak, at which time he harnassed local current from the sun's rays which he built up into a huge potential of electrical energy. [redacted] said that according to FITZGERALD, if this idea could be furthered, all electrical energy to operate the world's machinery might be gotten absolutely free rather than by the costly method with which electrical power is presently generated. He said that his idea was to conduct further experiments along this line in China where the need for electrical power is very great.

Inquiry was made at the MANHATTAN STORAGE WAREHOUSE in New York City, and it was determined that the effects of NIKOLA TESLA are contained in some

75 packing cases and trunks and are presently under seal by the New York State Department of Taxation. It was learned that the rental for this storage, which approximates $15 per month, is being paid by one CHARLOTTE MUZAR, 134 East 63rd Street, New York, New York, who is listed as the agent for SAVA KOSANOVICH.

Inquiry was also made at the office of the Alien Property Custodian in New York City, concerning an investigation conducted by this office at the time of TESLA'S death, and at which time the latters property was placed under seal by the United States Government. Mr. WALTER GORSUCH, Chief Investigator for the Alien Property Custodian, provided a cover letter and a summary of materials owned by TESLA at the time of his death which was examined by JOHN G. TRUMP, of the office of SCIENTIFIC RESEARCH & DEVELOPMENT. Mr. GORSUCH also stated that his file in this matter reflected that on the night TESLA died his safe was forced open by a representative of the SHORE & WALKER SAFE COMPANY. It was Mr. GORSUCH'S belief that a Mr. STEZEY who is believed to be one of the editors of the POPULAR SCIENCE MAGAZINE was present in TESLA'S room shortly after the safe was opened. These individuals were MILLIS GEORGE, EDWARD PALMER, and JOHN J. CORBETT.

There are enclosed herewith two typewritten copies of the report by Mr. TRUMP of the ALIEN PROPERTY CUSTODIAN reflecting the findings of Mr. TRUMP, following his examination of TESLA'S effects. There is also enclosed herewith a photostatic copy of a list of persons associated with NIKOLA TESLA. This latter item was furnished by [redacted] (b)(7)(C)

The above information is furnished for the Bureau's information, and no investigation is being conducted by this office.

Very truly yours,

E. P. CONROY, SAC

3 Enclosures

000004

173

13810

Address writer at:

Mass. Inst. of Tech.,
Cambridge, Mass.
January 29, 1943.

Mr. Walter Gorsuch,
Alien Property Custodian,
120 Broadway,
New York, New York.

Dear Sir:

At your request and that of Mr. Joseph T. King of the Washington office of the Alien Property Custodian, I have examined the private papers, writings, and other property of the late Dr. Nikola Tesla with the view to determining both their possible usefulness to this country in its war effort and the possible hazard attendant on their falling into unfriendly hands.

This examination was made at the Manhattan Warehouse, 52nd Street, New York City, on January 26-27, and included all of the notes and material in Dr. Tesla's immediate possession at the time of his death and now in the custody of your office. For reasons indicated below, no investigation was made of material in trunks which had remained untouched in the basement of the New Yorker Hotel for ten years prior to Dr. Tesla's death.

As a result of this examination, it is my considered opinion that there exist among Dr. Tesla's papers and possessions no scientific notes, descriptions of hitherto unrevealed methods or devices, or actual apparatus which could be of significant value to this country or which would constitute a hazard in unfriendly hands. I can therefore see no technical or military reason why further custody of the property should be retained.

For your records, there has been removed to your office a file of various written material by Dr. Tesla which covers typically and fairly completely the ideas with which he was concerned during his later years. These documents are enumerated and briefly abstracted in the attachment to this letter.

COPIES DESTROYED
148 OCT 26 1960

13811

It should be no discredit to this distinguished engineer and scientist whose solid contributions to the electrical art were made at the beginning of the present century to report that his thoughts and efforts during at least the past fifteen years were primarily of a speculative, philosophical, and somewhat promotional character--often concerned with the production and wireless transmission of power--but did not include new sound, workable principles or methods for realising such results.

Very truly yours,

JOHN G. TRUMP,
Technical Aide,
Division 14, NDRC.

Enclosure.

JGT/G

ABSTRACTS OF DR. NIKOLA TESLA'S WRITINGS
RETAINED AS EXHIBITS
FOR THE ALIEN PROPERTY CUSTODIAN

1.

On January 26 and 27, 1943, an examination was made of the technical papers of Dr. Nikola Tesla which, after his decease, had been stored in the Manhattan Warehouse in New York City. This examination was made for the purpose of determining if any ideas of significant value in the present United States war effort could be found among his possessions. Participating in this examination were Mr. John C. Newington, New York Office of the Alien Property Custodian; Mr. Charles J. Hedstniemi, Washington Office of the Alien Property Custodian; Dr. John G. Trump, Office of Scientific Research and Development, Massachusetts Institute of Technology, Cambridge, Massachusetts; Willis George, Office of Naval Intelligence, Third Naval District; Edward Palmer, Chief Yeoman, USNR; John J. Corbett, Chief Yeoman, USNR.

2.

The following papers, which are regarded as typical of Nikola Tesla's writings and thoughts in the period of 1925 to 1942, were removed for the purpose of record and are listed below in the random order in which they were found, together with a brief individual abstract.

Exhibit A

"Possibilities of Electrostatic Generators" - an undated article probably written about 1934 discussing the possibilities, as a source of high-voltage D-C power, of the Van de Graaff type of electrostatic belt generator. The article states correctly the electrostatic principles employed in this device and points out that such generators are not suitable for commercial high-power applications, though of undoubted scientific value. Tesla's wireless tower, erected in 1902 on Long Island, is stated in this memorandum to have been charged to 30 million volts.

Exhibit B

"Reactive Forces of Glycerine and Dynamite" - an undated memorandum involving some calculations of the explosive power of certain compounds and then deviating to a discussion of the possibility of transmitting power by mechanical vibrations along the earth's crust.

Exhibit C

"Process of De-Gassifying, Refining, and Purifying Metals" - a 41-page memorandum probably written about 1930 dealing with the above subject and proposing new theories of capillarity and surface tension. This correspondence indicated that this had been submitted to various industrial companies.

Exhibit D

"Reply to Amtorg re 'the generation of high-voltage and the acceleration of charged particles'" - This document, dated November 8, 1935, answers questions raised by Soviet engineers and scientists regarding Tesla's proposal of May 16, 1935. From this answer, it is deduced that the proposal concerned the generation of high voltages by electrostatic means. These means consisted of a high-voltage terminal presumably supported on an insulating column and charged by a gaseous charge conveying medium passing between ground and terminal. The ideas contained in this memorandum are fairly similar to the belt-conveyor electrostatic generator methods proposed by Van de Graaff and do not appear to offer any unusual features.

Exhibit E

"Art of Telegeodynamics, or Art of Producing Terrestrial Motions at Distance" - This document, in the form of a letter dated June 12, 1940, to the Westinghouse Electric & Manufacturing Company, proposes a method for the transmission of large amounts of power over vast distances by means of mechanical vibrations of the earth's crust. The source of power is a mechanical or electromechanical device bolted to some rocky protuberance and imparting power at a resonance frequency of the earth's crust. The proposed scheme appears to be completely visionary and unworkable. Westinghouse's reply indicates their polite rejection of this idea.

Exhibit F

"New Art of Projecting Concentrated Non-Dispersive Energy through Natural Media" - This undated document by Tesla describes an electrostatic method of producing very high voltages and capable of very great power. This generator is used to accelerate charged particles, presumably electrons. Such a beam of high-energy electrons passing through air is the "concentrated non-dispersive" means by which energy is transmitted through natural media. As a component of this apparatus there is described an open-ended vacuum tube within which the electrons are first accelerated.

Exhibit F (cont.)

The proposed scheme bears some relation to present means for producing high-energy cathode rays by the cooperative use of a high-voltage electrostatic generator and an evacuated electron acceleration tube. It is well known, however, that such devices, while of scientific and medical interest, are incapable of the transmission of large amounts of power in non-dispersed beams over long distances. Tesla's disclosures in this memorandum would not enable the construction of workable combinations of generator and tube even of limited power, though the general elements of such a combination are succinctly described.

Exhibit G

A circular by Carol Bird, dated September 10, 1938, entitled "Tremendous New Power Soon to Be Unleashed". This describes in popular style some biographical information concerning Nikola Tesla and some ideas for the transmission of power on which he is stated to be working. It appears that the method of transmission is by the mechanical resonance method outlined in Exhibit F, above.

Exhibit H

This exhibit consists of a series of letters to representatives of the British Government dated August 28, 1936; October 26, 1937; December 15, 1937; and April 5, 1938. It includes a reply dated January 7, 1938, from the British Government. These letters offer to the British Government, for a fee, the disclosure of a means for accelerating to high energies minute particles. Such beams would constitute a death ray capable of the protection of Great Britain from air attack.

The method proposed is essentially that described in Exhibit F above. Following the initial letter dated August 28, 1936, the subsequent letters attempt to clear up the "misunderstandings" of the British representatives and to expedite their acceptance of the Tesla proposal. The British reply dated January 7 is a polite expression of disinterest in the proposal.

Exhibit I

An undated memorandum written after Tesla's 79th birthday describing several discoveries which he believed he had made. The first related to a dynamic theory of gravity which is described as not yet completed. The second stated as a physical truth the belief that "there is no energy in matter other than that received from the environment". This second statement, which is discussed at length in this and other writings of Tesla, indicates his disbelief in the existence of atomic or nuclear energy.

Exhibit J

"A Method of Producing Powerful Radiations" - an undated memorandum in Tesla's handwriting describing "a new process of generating powerful rays or radiations". The memorandum reviews the works of Lenard and Crookes, describes Tesla's work on the production of high voltages, and finally in the last paragraph gives the only description of the invention contained in the memorandum. This description is as follows: "Briefly stated, my new simplified process of generating powerful rays consists in creating through the medium of a high-speed jet of suitable fluid a vacuous space around a terminal of a circuit and supplying the same with currents of the required tension and volume".

Exhibit K

A letter to prospective licensees on telegeodynamics dated December 27, 1941. This is a single-page letter with the typewritten signature of Dr. Nikola Tesla, in which he addresses himself to the prospective licensees of telegeodynamics, states that over a half million dollars was spent on this development with funds contributed by the Morgans, Crawford, J. J. Astor, and Fish, as well as commercial organizations, and states this to be a new art with which "unvelievable wonders can be achieved".

Exhibit L

Tesla's "New System of Fluid Propulsion". This is an undated memorandum of about 20 typewritten pages describing a system of fluid propulsion in which the conversion from hydraulic to rotary mechanical power is achieved by passing the fluid between flat circular disks, shaft-mounted and enclosed in a casing.

This memorandum written about 1925 describes in general terms a kind of hydraulic turbine which seems practical. There is copious evidence among the other of Tesla's papers that this idea was generally disclosed to appropriate individuals and that it received favorable comment and possibly some use. Some of these comments are contained on the last page of the exhibit.

Exhibit M

"The Power of the Future" - a memorandum apparently written by Tesla and probably in response to a request from some popular science group for an opinion as to the source of future power. This memorandum reviews the gradual evolution of power sources. It discusses in some detail the possibility of atomic power and states as his opinion that atomic power is not feasible. The discussion of atomic energy is apparently confused to some extent

Exhibit M (cont.)

with planetary energy. The article further discusses the subject of wind, tides, lightning, and water power as a source of commercial energy. The last sentence of this memorandum states: "With my wireless system, it is practicable to transmit electrical energy at a distance of twelve thousand miles with a loss not exceeding 5 per cent. I can conceive of no advances which would be more desirable at this time and more beneficial to the further progress of mankind." This memorandum constitutes an interesting generalized discussion of the various sources of power. It is qualitatively correct for the most part except probably in that portion which deals with atomic power.

Exhibit N

"The Transmission of Electric Energy Without Wires" - an article by N. Tesla in the Electric World, March 5, 1904, pages 429-431. A general, somewhat biographical article on Tesla's early work with some speculation on the possibility of long-distance wireless transmission of large amounts of energy.

Exhibit C

"World System of Wireless Transmission of Energy" - an article by N. Tesla in Telegraph and Telephone Age, October 16, 1927, pages 457 and 460. An article which traces the early work on the production and transmission of electromagnetic radiations, describes Tesla's efforts to increase the amount of power which can be transmitted without wires and concludes with a proposed "World System" for the wireless transmission of both power and communications. No workable disclosure of a means for accomplishing this is included, and such generalities as suggest the approach which Tesla had in mind do not seem capable of accomplishing the desired result.

Exhibit P

"Interview with Dr. Nikola Tesla" by Alden P. Armagnac for Popular Science Monthly, May 24, 1928. An 11-page memorandum written in popular conversational style describing an interview with Dr. Tesla and reporting his present work. This report includes statements on a new airplane, on rocket ships, on the wireless transmission of power, on a world system plan for the transmission of speech and television, on the impracticability of harnessing atomic energy, on radio activity, and on the acceleration of charged particles, such as cathode rays, by high voltages.

Exhibit Q

An agreement dated April 20, 1935, between Nikola Tesla and the Amtorg Trading Corporation, in which Tesla agreed to supply plans, specifications, and complete information on a method and apparatus for producing high voltages up to fifty million volts, for producing very small particles in a tube open to air, for increasing the charge of the particles to the full voltage of the high potential terminal, and for projecting the particles to distances of a hundred miles or more. The maximum speed of the particles was specified as not less than 350 miles per second. The receipt of $25,000 fee for this disclosure was acknowledged in this agreement, which was signed by Nikola Tesla and by A. Bartanian of the Amtorg Trading Corporation. The method referred to in this agreement is apparently that described in Exhibit F, above. It is probable that Exhibit D, above, is an effort by Tesla to clear up the questions raised by Soviet engineers after the subject disclosure had been made. There is no evidence that the inventions and information referred to in this agreement are other than those described in a number of Tesla's papers and published articles. It should therefore be expected, and it is substantiated by Exhibit D, that this disclosure subsequently proved unworkable.

3.

An examination of several items of scientific apparatus among the Tesla efforts at the Manhattan Warehouse and in a deposit box at the Governor Clinton Hotel showed those to be standard electrical measuring instruments in common use several decades ago.

JOHN G. TRUMP,
Technical Aide,
Division 14, NDRC.

Mass. Inst. of Tech.,
Cambridge, Mass.,
January 30, 1943.

JGT/G

LIST OF PERSONS ASSOCIATED WITH NIKOLA TESLA

Kerrigan, William - 89 Logan St., Brooklyn, N. Y.
Employed as building supt. Washington Market, Brooklyn. Mr. Kerrigan was the messenger boy for Postal Telegraph some years prior to Jan. 1943. At Mr. Tesla's request, he continued his services as special messenger when convenient. He had called upon Tesla the week prior to his death and has much valuable data and information concerning Tesla's contacts. I first met Mr. Kerrigan at the Frank Campbell funeral church.

Baumgarten, Charles - Room 1203, Municipal Bldg., Budget Bureau, N.Y.C.
Mr. Baumgarten was met at the funeral and Mr. William Lawrence of the New York Times and myself had lunch with him. Mr. Baumgarten knew Tesla and his connections with the Queensboro Bridge and many of his developments of Civic interest.

Skerritt, Miss Dorothy F. - Office, Biddle Purchasing Company, 107 Chambers Street, N.Y.C. - Wo. 2-5500.
Residence: Hasbrook Heights, New Jersey
Miss Skerritt was secretary to Doctor Tesla from 1912 until 1922. She is familiar with the Marconi patent suit, many of Tesla's scientific theories; knows the names of some of his friends; has witnessed demonstrations in his laboratory, then at 8 W. 40th St. N.Y.C. Miss Skerritt also knows that between 1916 and 1918, Doctor Tesla was at the Blackstone Hotel, Chicago and may have material there. She can give account of many of his deals with various firms.

Merrington, Marguerite - 46 W. 97th Street, N.Y.C. - Riverside 9-8186
Miss Merrington has known Doctor Tesla since 1893 and has been a guest of his on several occasions at the old Waldorf Hotel and at his laboratory in 1894 on Houston Street. Miss Merrington recalls the lighting effects without filaments and his radio controlled boat demonstrations. She also recalls statements regarding communication without wires by means of a small instrument. She has witnessed many laboratory experiments including power transmission without wires over short distances in the laboratory and also metallic plate suspension. He had also talked about communication with mars to her.

Holden, Mrs. Agnes J - 327 E. 52 St. N.Y.C. - Plaza 3-2341
Mrs. Holden is the daughter of Robert U. Johnson (deceased) (1936) who was a close friend of Tesla for many years. Mrs. Holden first met Mr. Tesla at her father's home when she was about 12 years old. The Johnsons were connected with the Century Magazine which published many articles regarding Tesla. Mr. Johnson wrote several poems about Tesla, one of which appeared in the April, 1895 issue of the

Century Magazine and the others appeared in "Poems of 50 years, 1880-1930 by Robert Underwood Johnson. Mrs. Holden has been in close contact with Doctor Tesla and has witnessed many of his demonstrations including that of the oscillator of 1899. She recalls the near destruction of the laboratory. Since "World II" , she has talked with Doctor Tesla with regard to instruments of war and he told her in response to her inquiry regarding tanks recently that he could stop them or the war. She recalls his discussions with her and her father regarding transmissions of power and Mars, etc. She says that she knows that Tesla has things for our Government only. Mrs. Holden witnessed many of the experiments and was present at the radio-controlled boat demonstration many years ago.

Lowenstein, Fritz (Deceased) Brother, Emil Lowenstein - 182 Bennett Ave. N.Y.C. - Wa-7-4519. Business (Artist) 420 Lexington Ave. N.Y.C. - Mu-5-8065. Mr. Fritz Lowenstein was the assistant to Dr. Tesla during his historic laboratory experiments in Colorado Springs in 1899. He was also to have appeared as a defense witness for Tesla in his Marconi patent suits during 1915, but for some reason failed to testify. The brother, Emil, address above, knows of the relatives of Mr. Fritz Lowenstein who have documents pertaining to the 1899 experiments. (Mr. G.H. Clark provided information re documents and Lowenstein) (Mr. Czito mentioned Lowenstein). Mr. Emil Lowenstein is not on friendly terms with the entire Lowenstein family and a Mr. Massey, 52 Vanderbilt Ave. can furnish additional information re Lowenstein.

Shirk, A.J. - Inventor's Model Shop, 70 West 100th St. N.Y.C. Ac-2-9466. Mr. Shirk has met Tesla on 3 occasions and appears to know quite a bit about his model work and laboratory developments, particularly within recent years. His exact status can only be determined by another call or ~~exact status~~ interview. He is attempting to determine the address of a Laboratory that existed at about 57th and 3rd Ave. and with whom a certain Dr. Walker was connected.

Arbus, Muriel, Miss - Res: 600 W. 13th St. Tel: Vanderbilt 4-9816, Bus: WPB, Chanin Building, N.Y.C. Miss Arbus has several photographs of Tesla and was a secretary to him before Miss Dorothy Skerritt, i.e. before 1912. She has not been interviewed except by phone.

Berg, Seigurd (or Sigmund) - Copenhagen, Denmark. Business: Paris, France. He has not been interviewed. See Mr. E. Fiensen of the International Latex Corp., Dover, Del. for information. Mrs Berg was a close friend of Tesla in Europe and mentioned other members of his family; Mr. Ernest and Mr. Esko Berg. are found in correspondence from Mrs. B.A. Behrend to Mr. Kenneth Sweezy in 1935 and 1934.

Behrend, Bernard, A. Mrs. - Rond Point, Aiken, S.C. Phone 136. Mr. Behrend and Mrs. Heaviside were very close friends of Dr. Tesla. Mrs. Behrend has many notes and technical data concerning Tesla's work either stored near Boston, Mass or at Aiken, S.C. Mr. Behrend was Chief Engineer for Westinghouse and supervised the construction of a great number of Tesla's motors and generators. He is author of "The Industion Motor" pub. 1921 in which a considerable portion is devoted to Tesla's work.

Boskan, Slavko, Mr. Engineer and author, Belgrade, Yugoslavia. Mr. Boskan published a book in Dresden, Germany entitled "Nikola und Ms Werk" in 1932 (Approx) Mr. Boskan was a close friend of Mr. Tesla and has considerable engineering data in his possession according to Mr. Sweezy.

Denton,Clifford, Mr. - Science Reporter.. New York Daily News, 220 E. 42nd St. N.Y.C. Mu-2-1234 Ext. 557 Mr. Denton has been present at many of Dr. Tesla's press releases and has many notes regarding the conferences. He said that he gave most of his data to Mr. Wm. Lawrence of the New York Times.

Brown Brothers (Mr. Arthur Brown) 220 W. 42 St. Bryant 9-4742. N.Y.C. Brown Brothers are photographers and have a large number of photos of Tesla and his laboratory equipment from which may be deduced mechanical construction details.

Curtis, Thomas Stanley - Address: unknown. Author "Experiments with High Frequencies currents" It is important to locate Mr. Curtis because he discussed many of Tesla's problems and appears to have technical data regarding his work.

Cramps, Shipbuilding Co. Philadelphia, Pa. Mr. Crosby, former Sec. of Commerce, and Mr. Cramps became interested in the radio controlled boat of Dr. Tesla about 35 years ago. Negotiations were carried on between Dr. Tesla and the above executives. This information was furnished by Mr. Kerr.

It may be well to contact Mr. Crosby's relatives or Mr. Cramps.

Czito, Julius - 4629 193rd St. Flushing, Long Island. Tel: Flushing 7-4711. Mr. Czito was mentioned to me first by Mr. Kosenovich and later Mr. Spanel had received his name from Mr. Wm. Lawrence. Mr. Czito is a machinest by trade and worked for Dr. Tesla as such from 1915 to 1929. He was particularly concerned with the construction of a turbin, and a fountain developed for a Mr. Hatmaker. Among other things, he worked on an extractor for sulpher from sea water and mechanical device for measuring the resistance of a ball bearing. He has little data left of Dr. Tesla's work but has a very good memory. He mentioned the Boston gear works, Mr. Bradley, Mr. Miller, the Zumbach Machinery Co. and Mr. Barney Levi. Mr. Czito's father also worked for Dr. Tesla in 1894 and was with him at his Houston St. laboratory. Mr. Czito, Sr. accompanied Dr. Tesla to Colorado Springs in 1899. Mr. Czito has a very good memory and can furnish additional information. He has discovered a photograph showing all of the employees of the old Tesla laboratory. He worked for Dr. Tesla on the development of a speedometer for the Waltham Watch Co. (This information from interview).

Clark, Mr. Geo. H. - Res: 349 E. 49th St. Tel: El-5-1603. Bus: RCA Mfg. Co. (Library) 25 Beaver St. N.Y.C. Room 314 A, Tel: Hanover 2-1829. Ext 123. Mr. G.H. Clark was contacted by virtue of a call placed in December to Mr. Oran Dunlap of the RCA Corp. Mr. Clark has a very large collection of personal data pertaining to radio pioneers, particularly Marconi. His business has been to collect such data in order to assist the prosecution of a suit of infrigment against the Marconi patents. He has never met Dr. Tesla but he knows of his work and is interested in collecting historical data for preservation. Mr. Clark is a friend of Mr. Sweezy.

Crosby, Former Sec. of Commerce, Washington, D. C. (address unknown) See Cramps and Kerr

Wetzel, Tailors - 2 E. 44th St. Murry Hill 2-6757. N.Y.C. This firm was tailor for Dr. Tesla throughout most of his life and may have information with regard to his friends, not otherwise listed.

French, Shriner, and Urner- Shoe Shops. 250 Madison Ave. Murry Hill 2-0319. N.Y.C.
Dr. Tesla purchased most all of his shoes from this firm for the past 50 years and data may be gathered from their records such as mailing addresses, etc.

Cornels, Fredrick C. F.B.I. Office Federal Court House Bldg. 12th Floor ? Regent 2-2315
Mr. Cornels was informed of the possible value of Dr. Tesla's data immediately following his death. So far as known, no action was taken.

Commercial Photostat Company, 11th Floor, Woolworth Bldg. N.Y.C.
Firm which made photostats of Tesla patents for Kerr.

Cramm, Ernest R. to contact call Mr. Clark of RCA.
Mr. Cramm knows a great deal about Dr. Tesla's relations with the RCA Company. Mr. Cramm was a former employee of RCA.

Gilder, Rodman - 108 E. 82nd St. N.Y.C. Butterfield 8-7397.
Son of Richard Watson Gilder, former Pub. of Century Magazine. Mr. Gilder knows of some old Tesla manuscripts and what has happened to his files of the Century Magazine at its dissolution. This name was received from Merrington.

Denmark, Lt. 1270 6th Ave. Room 811, Circle 6-1484 (restricted number) N.Y.C. U.S. Army Int. G2.
Lt. Denmark and his superiors were notified by Mr. Spanel and Washington with regard to Tesla devices. Lt. Denmark was interviewed personally with a group of 4 other officers including Mr. Ritchen.

Kirsch, Leon - a former draftsman for Tesla - name from Miss Dorothy Skerritt.
This party should be located because he had a lot of confidential data of Tesla's and made many drawings according to Miss Skerritt.

Drews, Lillian Married to an Austrian by name of DePree about 1914.
Miss Drews was secretary to Dr. Tesla prior to 1912. Her present address is unknown and she was not in good favor with Dr. Tesla, according to Miss Skerritt, the informant.

DosPassos, John - Attorney, and very good friend of Dr. Tesla. Address unknown.
Wanted Tesla to stop the Spanish American War. Formerly lived in New York. The Gentleman was expensively dressed and wore frocked coat similar to Tesla with bright checkered vest.

Had office in vicinity of 200 Broadway, as late as 1920. Mr. DosPassos is believed to have engineering data of Tesla's according to Thomas Byrne.

DeForrest, Dr. Lee- 6190 Hollywood Blvd. Los An[illegible]s, Calif. - Dr. DeForrest is [illegible] alive and was a friend of Dr. Tesla in the late 90 and early 1900's. There is a possibility that he may be able to assist in interpreting Tesla's works.

Dubilier, William - President of Cornell Dubilier Co., Manufacturers of CCondensers. Mr. G.H. Clark informs that Mr. Dubilier hasin his possession some of the original notes of the 1899 experiments in Colorado Springs.

Fradenburg, A.E. A reporter for the Brooklyn Eagle during 1930 who had numerous contacts with Tesla with regard to Power Transmission. His present address is unknown but he formerly resided in Brooklyn until 1934.

Fitzgerald, Francis, A. - Niagara Power Commission, Buffalo, N. Y. Mr. Fitzgerald, according to a personal interview with Dr. Tesla, was a friend of his on the A.C. power proposition for the development of Niagara. He also told me that Mr. Fitzgerald attempted to influence the Canadian Power Commission in 1927 for a project to transmit power without wires. There is a possibility that he may have some data.

Gernsback, Hugo p Publisher, Res; 230 West End Ave. Sohhler 4-2130 Bus: 25 W. Broadway, Tel: Rector 2-9690. A Friend of Tesla for about 35 years. Published many articles about Tesla during 1919 in the "Electrical Experimenter and later in Science and Invention." Has many of Tesla's original manuscripts and photos. Believes in all of Tesla's theories and has a working knowledge of them. This party was contacted several weeks prior to Dr. Tesla's death. Mr. Gernsback attempted to assist Dr. Tesla personally and appealed to Westinghouse for funds in 1933.

Hammond, John Hayes, Jr. Glochester, Mass. Tel. 2080 Mr. Hammond, Sr., financed some of Dr. Tesla's boat experiments and only 10 years ago John Hayes Hammond, Jr. operated one of Tesla's original models. The family has one of the boats in their

possession now. Much technical data can be gathered from this source.

Hassell, Eugene Floyd - Res: Belport, Long Island
Machinest, Sperry Gyroscope Company, Garden City, L.I. Employee Number 5470, Phone Vigilent 4-5400 (Restricted number) Ext. 211. Use any New York Phone. Name from Czito. This party knows of Tesla's laboratory on Long Island through the laundry driver named Tommy Wallen.

Hobbs, Octavious - Springfield Gardens, Long Island.
(Has not been contacted)

Hatmaker, (no initials) party who financed fountain built by Czito. Has not been contacted, but he lived in the St. Regis Hotel in 1920.

Kosonovich, Sava - Navarro Hotel, apt. 17B. 112 Central park south, N.Y.C. Tel: Circle 7-7900, Office- Regent 7-4662. President of the Central European Powers Association and former Minister of Yugoslavia to the U.S. Mr. K. is one of the two living nephews of Dr. Nikola Tesla (see Nikola Trbjevich) Mr. K. was present in the Hotel New Yorker on the morning following Dr. Tesla's death. Others present were K.M. Sweezy, G.H. Clark. Mr. K. knows of many blue prints that were in the rooms and a black notebook with several hundred pages containing the last notes of Dr. Tesla. Mr. K. says that some of the papers were marked "Government" and that Dr. Tesla had told him he had valuable information. Mr. K. is of the opinion that it may have been for the Yugoslav Gov't. He says that no will was found. His attorney is Mr. Wittenberg. He was appointed heir by the Surrogates Court of New York County. He said that the other nephew waived any interest. Mr. K. is not in accord with Mr. Fotich, present Ambassador of Yugloslavia to U.S., now in Washington. There is a bit of political unrest in the Yugoslav organization.

KOSANOVICH, SAVA

Kerr, John - Attorney, 233 Broadway, N.Y.C. Cooper Kerr Dunham (att. at Law) Courtland 7-9334 - also associated by Byrnes. This firm was the patent attorney for 112 of the Tesla patents. They also instituted the proceedings of the infringement suits for the Westinghouse Company. Mr. Kerr knew Tesla very well and can give considerable data. Mr. Cooper, now deceased, was however, the main instigator of the patents for Tesla. Mr. Cooper left this firm some time ago and Tesla apparently took some of his business

to the new Cooper associates. Many of the old patents of Tesla in his own handwriting are available at this office. Mr. Byrne has additional information. I am of the opinion that this firm still has a connection with Westinghouse.

Byrne, Thomas, J works for Cooper Kerr and Dunham (see John Kerr above). Mr. Byrne knew Tesla very well and also knows of the connections with the Union Sulpher Compnay and the turbine for which see Czito. There is a wealth of information in the office of this company regarding the system of Power Transmission and any patents on file which were never issued. Mr. Kerr and Mr. Byrne were contacted before Mr. Tesla's death.

Kostich (first name unknown) New York, Official photographer for the Yugoslav group. Office believed to be 235 E. 72nd St. and Residence in Long Island City. He may be reached through Regent 7-4662. He is a friend of Mr. Kosonovich.

Kulishich, Prof. Kosta Res: Belgrad, Yugoslovia at the Tesla Institute. He was a school mate of Tesla in Grotz. See the N.Y. Sun of August 27, 1931.

Gage, E. G. 111 Nassau St. N. Y. C. Engineer, works for Leon Ottinger, Courtland 7-5500.
He was a friend of Mr. J.S. Leach (deceased) formerly of Redbank, N. Y. who made electrical parts for Tesla's laboratory. He says that he can get information regarding Leach's relatives and perhaps drawings.

Levi, Bernard - Machinest, Zumbach Machinery Co. 134 W. 54 St. N.Y/C. Circle 7-1444
Received this name from Czito who said that Levi knew of other work by machinests on Tesla's equipment.

Lucan, John - address unknown - presumed to be in Manhattan. A former Western Union Messenger boy during June of 1937 who has other data regarding recent contacts by Tesla during his services as a messenger. He has not been located.

Lynch, Arthur. Lived in England. Believed to be near London, now deceased. Family had considerable correspondence with Tesla regarding transmission of power without wires.

Lawrence, William. Science Writer, New York Times. 229 W. 43 St. N.Y.C. Lackawanna 4-1000. Res: 541 E. 72nd St. Rhinelander 4-5528.

A friend of Tesla's for about 25 years. Has much old data regarding Tesla and has talked to him on many occasions regarding power transmission and the war effort. Has assisted greatly in providing information for gathering material, etc. This party was contacted before Dr. Tesla's death.

Massie, M.C. 52 Vanderbilt Ave. N.Y.C.

Maier, Ruth N. The Yugo Slow Society, 565 5th Ave. Room 807. Pl-8-0256
This is the information center and serves as the publicity agent for the group.
Miss E. Oppa also works there and has many names of Tesla's friends.

Martin, Octavo. Employee of Hotel New Yorker and friend of Tesla.

Mathews, Grenville (deceased) wife was Gana Walker, Met. Star sponsored by McCormick. The family lived in England until his eath and his wife now resides in New York. Mr. Matthews was refered to in Tesla's articles for the Telephone and Telegraph Age for Oct. 1927. Mr. Matthews had correspondence with Tesla on the so-called "Death-Ray". Gana Walker has all of her husband's data.

Mott, C.Jordan, Jr. 520 E. 90th St. N.Y.C. Bus: 6 E. 45th St.
Tel: Vanderbilt 6-0345.
The Mott family financed Tesla in various ventures. They may have some of this data.

Gossett, W. O. Ford Museum, Detroit, Mich.
Mr. Gossett is associated with a Mr. Black while he is on leave of absence to the Army. Mr. Black may be reached regarding some models of Tesla's which are understood to be on display at the Ford Museum.

Nathan, Thoma, A. 25 E. 83rd St. N.Y.C.
We do not know what connection this party had with Tesla but his name was secured.

O'Neill, John, J. Res: 209 N. Long Beach Ave. Freeport, Long Island.
Tel: Freeport 2-493.
Science editor of the New York Herald Tribune, 230 W. 41 St. N.Y.C. Pennsylvania 6-4000.
Mr. O'Neill has known Dr. Tesla for 40 years. He has had many discussions with him regarding his equipment and scientific ventures. He interested Dr. Tesla in 1934 and 1935 to present the matter of national protection devices to the U.S. Govt. Mr. O'Neill made

a few contacts and the matter was dropped. Mr. O'Neill has notes of 1938 and 1939 wherein Dr. Tesla declared he had been approached by the British Govt. through Stanley Baldwin and Neville Chamerlain to negotiate for one of his devices. Mr. O'Neill thought that the sum offered was for 30 millions of dollars. In the interview, Dr. Tesla stated that his device would operate over a range of 200-250 miles. Mr. O'Neill is of the opinion that Tesla had unusual powers. Mr. Lawrence is of the opinion that he does not know what he is talking about. O'Neill can furnish much additional information.

Pickard, Dr. Greenlief Whittier..59 Dalton St. Newton Center, Mass.
Dr. Pickard was a very good friend of Dr. Tesla. Dr. Pickard developed the vertical antenna system and has correspondence with Tesla concerning "wave propagation". This information should be valuable.

Sarony, Inc. Photographers, 362 5th Ave. N.Y.C. Wis 7-1713
They have photos of the old Tesla Laboratory and pictures of Tesla to 1914.

Page, Parker W. Attorney, Present address unknown, however he resided in Manhattan for about 40 years and was formerly associated with Cooper Kerr and Durham. He was last known to be associated with an attorney by the name of Bean in Manhattan. He worked out many of Tesla's details concerning Power Transmission and Tesla gave him many notes according to Mr. Kerr.

Radosavljevich, Paul, R. New York University, Professor, Education Dept. Tel: Spring 7- 2000.
A friend of Tesla for 35 years and knows much of his work with regard to the retina and bile chemistry.

Ritchen, (first name unknown) Anti-Trust Division, Custodian of Alien Property, 18th Floor, 120 Broadway, N.Y.C. Regent 2-3582 (restricted number). Mr. Ritchen supervised the various agents who were responsible for the sealing of the property in the Manhattan warehouse and various hotels. On Saturday eve., January 10, 1943. This office worked with Lt. Denmark.

Astor, Mrs. John Jacob (Lady Ribblesdale) now living in the U.S.
420 Park Ave., Plaza 9-6646
Lady Ribblesdale is the Mother of Vincent Astor who financed many of Tesla's developments about 1910 and their family may have data of importance.

Secor, Harry. Island Road, Ramsey, N. J. Res. Business: Model Craftsman Publication. Ramsey, New Jersey, Tel: Ramsey 519. This party knew Dr. Tesla very well and I talked to him several weeks prior to Tesla's death. He has some plans of Tesla equipment.

Sweezy, Kenneth, M. 163 Milton St. Brooklyn, N. Y. Evergreen 9-5809
Mr. Sweezy has known Dr. Tesla for approximately 15 years. He became a close confident of his on many things and did a very notable work in 1935 when he arranged for a collection of 100 letters from various scientific authorities commemorating Tesla's 75th birthday. Mr. Sweezy wrote many articles about Dr. Tesla and has some old clippings and miscellaneous data including several books detailing Tesla's work. Mr. Sweezy corresponded with Mr. Boskan and Mrs. Behrand. He is a friend of Mr. Clark. Mr. Sweezy would like to write a book of Tesla's life and had spoken to me with Dr. Tesla regarding it. I contacted Mr. Sweezy several weeks before Dr. Tesla's death. (Much information can be obtained here).

Scott, Prof. Charles F. Instructor of Electrical Engineering, Yale University, New Haven, Conn.
Prof. Scott was a friend of Tesla for about 43 years. He worked as an electrician with Tesla in the early days and knows a great deal about his work. Prof. Scott and Tesla did not enjoy close friendship during recent years because Prof. Scott could not understand in full, all of Tesla's work. More information can be obtained here.

Scherff, George, Mrs. 219 Grant Terrace, Maroneck, N. Y.
Mrs. Scherff was the auditor for Tesla for many years and has much information to give. She has information concerning Tesla's personal things and technical data and can provide much of value, including old documents.

Skerrett, John. Author- believed to be from Philadelphia, Pa. who witnessed many of Tesla's demonstrations. Miss Dorothy Skerrett can furnish additional information regarding him.

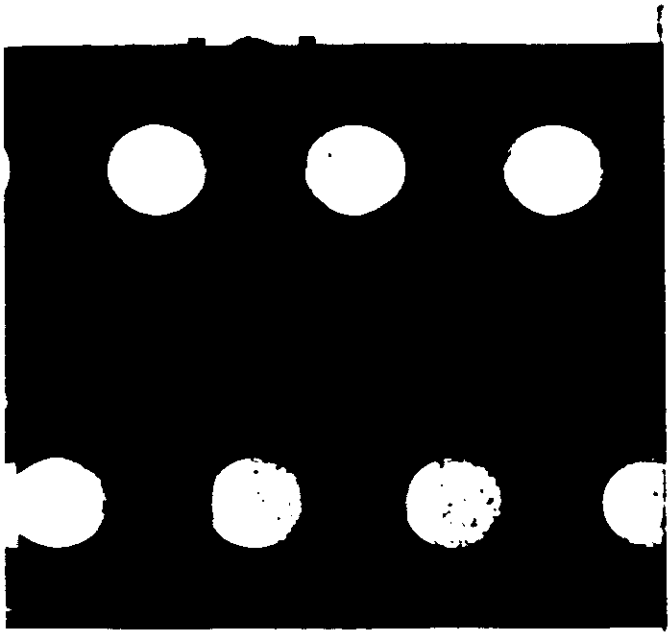

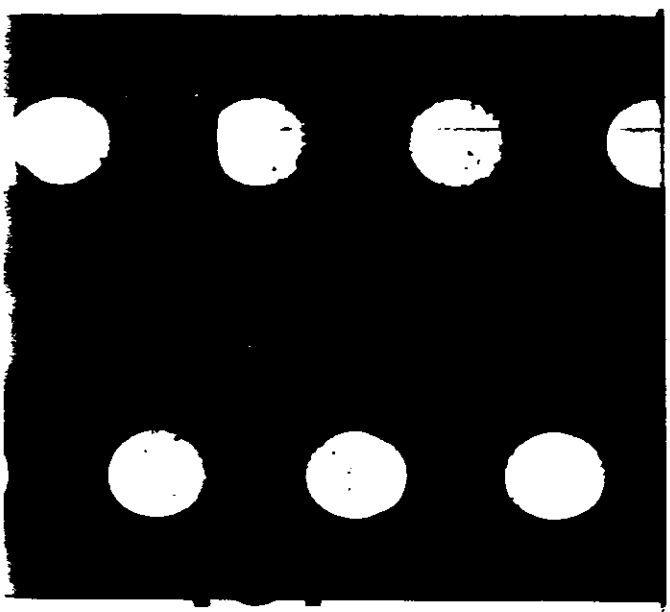

Tom -

It is my understanding that every case which is completed through disclosure is "preprocessed".

ITU's Reading Room maintains only those "preprocessed" cases which have been deemed to have sufficient public interest to warrant inclusion in the Reading Room.

The question, therefore, is: Does the Tesla material fit the criteria for inclusion in the FOIA Reading Room?

I think not. The

(b)(5)
(C)

CC-247

Mr. Tolson
Mr. Clegg
Mr. Glavin
Mr. Ladd
Mr. Nichols
Mr. Rosen
Mr. Tracy
Mr. Egan
Mr. Gurnea
Mr. Harbo
Mr. Mohr
Mr. Pennington
Mr. Quinn Tamm
Mr. Nease
Miss Gandy

June 8, 1949

MEMORANDUM FOR [redacted] (b)(7)(c)

RE: SAVA N. KOSANOVIC
YUGOSLAV AMBASSADOR TO THE US
INTERNAL SECURITY - R
(Bureau file 65-47953)

ALL INFORMATION CONTAINED
HEREIN IS UNCLASSIFIED
DATE 4-18-89 BY SP1 [illegible]
#291860

PURPOSE

This memorandum is submitted to incorporate all the pertinent references in the Bureau files concerning the entitled individual who is the Yugoslav Ambassador to the United States.

A case was opened on this individual when information was received that Kosanovic had taken possession of the scientific papers of his uncle, Nikola Tesla, the internationally known inventor. Subsequent investigation determined that Kosanovic had turned over the possession of these scientific papers to the Alien Enemy Custodian in New York City.
(65-47953-X1 & Serial 3 & 4)

(b)(1)(D) [redacted]

(b)

OK

[redacted]

65-47953-21X

INDEXED 143

(b)(7)(c)

cc - Mr. Ladd
cc - [redacted]
cc - [redacted]
cc - [redacted]

CJM:jpa

THIS MEMORANDUM IS FOR ADMINISTRATIVE PURPOSES
TO BE DESTROYED AFTER ACTION IS TAKEN AND NOT SENT TO FILES

194

STANDARD FORM NO. 64

Office Memorandum • UNITED STATES GOVERNMENT

TO : The Director

DATE: April 3, 1950

FROM : D. M. Ladd

SUBJECT: SAVA N. KOSANOVIC
INTERNAL SECURITY - YU
Bureau File 65-47953

Tolson
Ladd
Clegg
Glavin
Nichols
Rosen
Tracy
Harbo
Mohr
Tele. Room
Nease
Gandy

ALL INFORMATION CONTAINED
HEREIN IS UNCLASSIFIED
DATE 4-18-89 BY SP1AGC

291860

Reference is made to my memorandum dated March 29, 1950, relating to the telephone inquiry by the Yugoslav Ambassador Sava N. Kosanovic as to the possibility of obtaining a copy of a microfilm copy of the technical papers of the late Nikola Tesla, world-famous scientist who died in New York in 1943.

Kosanovic claims to have been a nephew of Tesla and is known to have tried to obtain these papers at the time of Tesla's death. However, they were taken over at that time by the Alien Property Custodian. If any copies were made of these papers, they were made by the Office of the Alien Property Custodian which took possession of Tesla's papers in 1943 or the Department of the Army which was interested in copying Tesla's notes in 1945. The Army's interest apparently was developed by a young scientist named [redacted] who had been a protege of Tesla and one of his few confidants. [redacted], who knew that Tesla had been endeavoring to perfect the wireless transmission of electrical current, one of the basic concepts involved in the production of a "Death Ray" had subsequently entered the Army, and in October, 1945, appeared at our New York Office, together with three other members of the United States Army, to request our assistance in obtaining access to Tesla's papers which were stored in a warehouse of the Manhattan Storage Company. [redacted] and his associates were referred, at that time, to the Alien Property Custodian which was reported to have made an investigation of Tesla's belongings following the latter's death.

(b)(7)(C)

Although the Office of Alien Property or the Department of the Army might be able to furnish a copy of Tesla's papers to Kosanovic, it is not believed that the FBI should facilitate his search for this material, which although possibly of no present value from a National Defense standpoint, could still conceivably be of assistance to the Yugoslav Government.

COPIES DESTROYED
14 OCT 26 1960

[redacted] (b)(7)(C)

Attachments

RECORDED - 95

65 47953-2

(b)(7)(C) [redacted]

195

RECOMMENDATIONS:

1. That the attached letter explaining that we have never had such a copy as he requests, be sent to Mr. Kosmovic.

2. That the attached memo to the New York Office, instructing them to make further inquiry at the Manhattan Storage Company and advising that firm that we have no copy of Tesla's papers as they allegedly claim, be forwarded.

STANDARD FORM NO. 64

Office Memorandum • UNITED STATES GOVERNMENT

TO : Director, FBI

DATE: April 17, 1950

FROM : SAC, New York

SUBJECT: SAVA N. KOSANOVIC
INTERNAL SECURITY-YU
(Bufile 65-47953)

ALL INFORMATION CONTAINED
HEREIN IS UNCLASSIFIED
DATE 7-3-80 BY SP4 Jam/rte

Rebulet dated April 3 last.

On April 7, 1950 agents of this office interviewed Mr. J.V. POTTS, Vice President of the Manhattan Warehouse and Storage Company, 52nd Street & 7th Avenue, New York City, and at that time MR. POTTS advised that the rules of his firm required that all persons gaining access to goods stored by Manhattan first had to fill out an appropriate form setting forth their names, date of visit, and reason for requesting access to the goods.

In a review of the file pertaining to the storage of the effects of NIKOLA TESLA, MR. POTTS revealed that only one such visit had been made by persons outside of the management of Manhattan Storage itself. This one occasion took place on January 26 and 27, 1943, at which time representatives of the Alien Property Custodian made a thorough review of the entire effects of the TESLA estate.

The TESLA effects are stored in rooms 5J and 5L of Manhattan Storage's warehouse at 52nd Street & 7th Avenue, New York City. MR. MICHAEL KING, who stated he had been Floor Supervisor for approximately 10 years on the floor in question, stated that he could recall only one occasion in early 1943 when an examination was made of the TESLA effects. He stated that at that time numerous photographs were taken by the examiners. His description of the equipment used would tend to show that a microfilm reproduction was made of some of the papers of the deceased scientist. MR. KING added that several of the group making the examination wore U.S. Navy uniforms, and during the two days required to complete the examination the civilian assistants in the group were identified to him only as "FEDERAL AUTHORITIES". According to MR. KING, no other instance of microfilming of the records of the TESLA estate has taken place since that time.

It should be noted that the Bureau was informed of the examination mentioned above by New York letter (with attachments) dated October 17, 1945, entitled UNKNOWN SUBJECT; SAVA KOSANOVICH; Experiments & Research of NIKOLA TESLA (Deceased), Espionage-M.

UNRECORDED COPY FILED IN

RECORDED - 38
INDEXED - 38

65 47953 27

APR 18 1950

37

cc: 65-12290

(b)(7)(c)

EHC JJC
105-1391

R-435

APR 2

197

MR. POTTS stated that no inquiry had been received by Manhattan from SAVA N. KOSANOVICH, nor had Manhattan informed him, in any way, that an examination of the TESLA effects had been made by anyone. In fact, added MR. POTTS, the only correspondence relating to the TESLA estate has been in the form of bills for storage.

MR. POTTS stated that any personal inquires regarding the estate would of necessity be directed to him, and to date no such inquiries have been made.

Interviewing agents explained to MR. POTTS that the examination made, as mentioned above, was not instigated by the Bureau, nor had the Bureau taken part in that examination.

Unless advised to the contrary, this investigation is being placed in a closed status, and no further investigative action is contemplated by this office. CLOSED.

XXXXXX
XXXXXX
XXXXXX

FEDERAL BUREAU OF INVESTIGATION
FOIPA DELETED PAGE INFORMATION SHEET

4 Page(s) withheld entirely at this location in the file. One or more of the following statements, where indicated, explain this deletion.

☒ Deletions were made pursuant to the exemptions indicated below with no segregable material available for release to you.

Section 552		Section 552a
☒ (b)(1)	☐ (b)(7)(A)	☐ (d)(5)
☐ (b)(2)	☐ (b)(7)(B)	☐ (j)(2)
☐ (b)(3)	☐ (b)(7)(C)	☐ (k)(1)
_____	☐ (b)(7)(D)	☐ (k)(2)
_____	☐ (b)(7)(E)	☐ (k)(3)
_____	☐ (b)(7)(F)	☐ (k)(4)
☐ (b)(4)	☐ (b)(8)	☐ (k)(5)
☐ (b)(5)	☐ (b)(9)	☐ (k)(6)
☐ (b)(6)		☐ (k)(7)

☐ Information pertained only to a third party with no reference to you or the subject of your request.

☐ Information pertained only to a third party. Your name is listed in the title only.

☐ Documents originated with another Government agency(ies). These documents were referred to that agency(ies) for review and direct response to you.

_____ Pages contain information furnished by another Government agency(ies). You will be advised by the FBI as to the releasability of this information following our consultation with the other agency(ies).

_____ Page(s) withheld for the following reason(s): _____

_____

☐ For your information: _____

_____

☐ The following number is to be used for reference regarding these pages:

_____

XXXXXX
XXXXXX
XXXXXX

XXXXXXXXXXXXXXXXXXXXX
X DELETED PAGE(S) X
X NO DUPLICATION FEE X
X FOR THIS PAGE X
XXXXXXXXXXXXXXXXXXXXX

FBI/DOJ

OPTIONAL FORM NO. 10
JULY 1973 EDITION
GPA FPMR (41 CFR) 101-11.6

UNITED STATES GOVERNMENT

Memorandum

TO : DIRECTOR, FBI [redacted] (S) DATE: 8/20/76

FROM : SAC, BUFFALO [redacted] (S) (RUC) (b)

SUBJECT: [redacted] (S) (1) CONFIDENTIAL

(OO: NEW YORK)

Re Buffalo airtel to Bureau, dated 7/13/76.

Enclosed for the Bureau are six (6) copies of an LHM, captioned "NIKOLA TESLA MONUMENT, NIAGARA FALLS, NEW YORK," which is self-explanatory. One copy is being designated for Legat, Ottawa for information. Two copies are being furnished to New York, one to Newark for information since they had previous interest in this matter, and one copy to WFO for information because of U. S. and Yugoslav dignitaries who attended the unveiling of the monument.

Nothing adverse came to the attention of this office concerning the dedication of the Nikola Tesla Monument which was a bicentennial gift from the Yugoslav Government to the United States. Diplomatic representatives from the United States, Yugoslavia and Canada reportedly attended the affair. No further inquiries being made at Buffalo and it is closing its case administratively.

EX-113

CLASSIFIED BY 6166 REC-33 [redacted]
EXEMPT FROM GDS, CATEGORY 3 [redacted]
DATE OF DECLASSIFICATION INDEFINITE

ENCLOSURE

3 - Bureau (Encs. 6) (RM)
(1 - Legat, Ottawa) (S)
1 - Newark [redacted] (Info) (Enc.1) (RM)
2 - New York [redacted] (S) (Encs. 2) (RM)
1 - WFO [redacted] (Enc. 1) (Info) (RM)
1 - Buffalo (S)

7 AUG 25 1976 (b) (1)

CONFIDENTIAL

[redacted] (8) (b) (7) (C)

Copy to ... 1 Legat, Ottawa, 1 destroy
By routing slip for
[X] info [ ] action
date 8-2-76
by [redacted]

2-22-89
Classified by
Declassify on: OADR
#291860

SEP 10 1976

Buy U.S. Savings Bonds Regularly on the Payroll Savings Plan

5010-110

200

UNITED STATES DEPARTMENT OF JUSTICE

FEDERAL BUREAU OF INVESTIGATION

Buffalo, New York
August 20, 1976

In Reply, Please Refer to File No.

NIKOLA TESLA
MONUMENT
NIAGARA FALLS, NEW YORK

An article appeared in the "Buffalo Evening News," a daily newspaper published in Buffalo, New York, on July 24, 1976, which in part contained the following information:

The article was captioned "Dignitaries Unveil Statue of 'Genius' Tesla."

The article contained information that NIKOLA TESLA was the inventor of the alternating current and the first man to successfully transmit electric power. The background of TESLA set out in the article revealed that he arrived in New York City in 1884 with four cents in his pocket and plans for an airplane and a book of poetry. In 1888, he invented a system to make the transmission of alternating current practical, at 37 was a millionaire but died at the age of 88 in New York City alone and penniless.

The statue, approximately nine feet high, was erected on Goat Island, a site which is located on the property of the New York State Park and Recreation Department.

The article revealed that more than a thousand people listened to FRANK G. ZARB, Federal Energy Administration, representing President FORD, and Dr. IVO MARGAN, President of the Socialist Union of Croatia, representing Yugoslavian President TITO, as both pulled the cord unveiling the nine foot high statue of TESLA.

2-22-89
Classified by SDIAG/LM
Declassify on: OADR
#241860

(b)
(1)
[redacted] (3)
ENCLOSURE

201

NIKOLA TESLA
MONUMENT
NIAGARA FALLS, NEW YORK

The sculpture was created by Yugoslavian FRANO KRSINIC and was the bicentennial gift of the Yugoslavian people to the United States. Both of the above men read official greetings from their presidents and exchanged pledges to continue good will and friendship between the two countries.

The article stated that following the unveiling, a reception-luncheon was held for several hundred persons at the Parkway-Ramada Inn, Niagara Falls, New York. Mr. ZARB toasted the Yugoslavian delegation which was answered by that country's Ambassador to the United States, DIMCE BELOVSKI.

According to the article, there was a bit of diplomatic byplay between Mr. ZARB and Ambassador BELOVSKI during the ceremonies. In his remarks at the statue unveiling, Mr. ZARB included an appeal to Yugoslavia to stop all harassment of Americans visiting that country.

In responding to Mr. ZARB's toast at the luncheon, the Ambassador gave assurance that his country wants American visitors and will welcome them.

According to the article, some observers thought that the Yugoslav release of an American held for the past seven months was timed to coincide with the unveiling of the statue.

The tribute to TESLA was sponsored by several Yugoslavian groups in cooperation with the Niagara Mohawk Power Corporation, Westinghouse, and the New York State Park and Recreation Commission.

An article appearing in the "Niagara Falls Gazette," a daily newspaper published in Niagara Falls, New York, captioned "Zarb Calls for Energy Independence for U. S." the article dealt with the unveiling of the Nikola Tesla Monument and stated that accompanying the Yugoslavian Ambassador to the ceremonies on July 23, 1976, were Dr. PAVLE SAVIC, President of the Academy of Science of Serbia,

NIKOLA TESLA
MONUMENT
NIAGARA FALLS, NEW YORK

and VASA VESKOVIC, Yugoslavian Consulate General in New York City.

An article appeared in the "Niagara Gazette" on July 24, 1976, captioned "Aide Almost Missed Event." The article in part indicated that friendship and cooperation between the United States and Yugoslavia was the theme of the day as that nation dedicated a statue of NIKOLA TESLA on July 23, 1976.

The friendship was personalized when a Yugoslavian tried to cross the border from Canada to the United States to attend the dedication without a visa.

The individual was GOJKO SEKULOVSKI, who was in Montreal, Quebec, Canada, as the Chairman of the Olympic Commission of Yugoslavia. He also happens to be the Assistant Secretary of State for Foreign Affairs in that country.

He did not have an American visa and almost missed the unveiling of the statue.

Fast thinking on the part of representatives of the Niagara Frontier State Park and Recreation Commission sent an official car to take the dignitary across the border, which saved the day.

In the "Niagara Falls Gazette" on July 24, 1976, there appeared an article concerning the unveiling of the statue which indicated that Dr. BOGDAN MAGLICH was Chairman of the Yugoslavian-American Bicentennial Committee and was a speaker at the affair. Dr. MAGLICH also serves as President of the Fusion Energy Corporation, Princeton, New Jersey. Dr. MAGLICH eulogized the inventor TESLA and stated "only America could have taken a giant of Tesla's stature, embraced him and provided him the means he needed to bring his talent to its best use of humanity."

NIKOLA TESLA
MONUMENT
NIAGARA FALLS, NEW YORK

(b)(2)

[redacted] were in a position to observe the commemoration of the Tesla Monument, stated that no adverse information came to their attention concerning the dedication of the statue on July 23, 1976.

4-750 (Rev. 12-14-88)

XXXXXX
XXXXXX
XXXXXX

FEDERAL BUREAU OF INVESTIGATION
FOIPA DELETED PAGE INFORMATION SHEET

3 Page(s) withheld entirely at this location in the file. One or more of the following statements, where indicated, explain this deletion.

☒ Deletions were made pursuant to the exemptions indicated below with no segregable material available for release to you.

Section 552		Section 552a
☒ (b)(1)	☐ (b)(7)(A)	☐ (d)(5)
☐ (b)(2)	☐ (b)(7)(B)	☐ (j)(2)
☐ (b)(3)	☐ (b)(7)(C)	☐ (k)(1)
_____	☐ (b)(7)(D)	☐ (k)(2)
_____	☐ (b)(7)(E)	☐ (k)(3)
_____	☐ (b)(7)(F)	☐ (k)(4)
☐ (b)(4)	☐ (b)(8)	☐ (k)(5)
☐ (b)(5)	☐ (b)(9)	☐ (k)(6)
☐ (b)(6)		☐ (k)(7)

☐ Information pertained only to a third party with no reference to you or the subject of your request.

☐ Information pertained only to a third party. Your name is listed in the title only.

☐ Documents originated with another Government agency(ies). These documents were referred to that agency(ies) for review and direct response to you.

_____ Pages contain information furnished by another Government agency(ies). You will be advised by the FBI as to the releasability of this information following our consultation with the other agency(ies).

_____ Page(s) withheld for the following reason(s): _____

_____

☐ For your information: _____

_____

☐ The following number is to be used for reference regarding these pages:

_____

XXXXXX
XXXXXX
XXXXXX

XXXXXXXXXXXXXXXXXXXXX
X DELETED PAGE(S) X
X NO DUPLICATE FEE X
X FOR THIS PAGE X
XXXXXXXXXXXXXXXXXXXXX

FBI/DOJ

205

July 7, 1975

[redacted] (b)(7)(c)

Dear [redacted]:

This will acknowledge your letter of June 9th.

In response to your inquiry, the papers of Dr. Nikola Tesla were impounded, after his death, by the Office of Alien Property of the Department of Justice.

Sincerely yours,

C. M. Kelley

Clarence M. Kelley
Director

~~1 - The Deputy Attorney General - Enclosure~~
~~Attention: Susan M. Hauser~~ REC 22 77-32591-20

NOTE: Bufile 100-2237 indicates that Dr. Tesla was a world famous electrical inventor, and at the time of his death his personal papers and effects were impounded by Office of Alien Property for national security reasons. Since Tesla's death in 1943 the Bureau has received numerous inquiries about the disposition of his technical papers. The above reply is forwarded in answer to these inquiries. Bufiles contain no information identifiable with requesters.

JUL 8 1975

Assoc. Dir. ___
Dep. AD Adm. ___
Dep. AD Inv. ___
Asst. Dir.
Adm. ___
Comp. Syst. ___
Ext. Affairs ___
Files & Com. ___
Gen. Inv. ___
Ident. ___
Inspection ___
Intell. ___
Laboratory ___
Plan. & Eval. ___
Spec. Inv. ___
Training ___
Legal Coun. ___
Telephone Rm. ___

[redacted]

MAILED 7
JUL 7 1975
FBI

(b)(7)(c)

[redacted]

56 JUL 29 197[redacted]

[redacted]

GPO 954-546

206

CURRENT BIOGRAPHY

WHO'S NEWS AND WHY

Vol. 4 No. 2 February 1943

The H. W. Wilson Co., New York

94-3-4-116-17

RECEIVED
FEB 19 1944
U.S. SUPERINTENDENT OF DOCUMENTS

IN THIS ISSUE

Architecture
Blomfield, Sir Reginald (Theodore) obit
Isham, Norman M(orrison) obit

Art
Ehnert, James, Baron obit
Glicenstein, Enrico obit
Groth, John (August)
Herlin, Emil obit
O'Day, Caroline Goodwin obit
Sykes, Charles H(enry) obit
Zorach, William

Aviation
Bissell, Clayton L.
Martin, Glenn L(uther)

Diplomacy
Chiang Tso-pin obit
Henderson, Sir Nevile (Meyrick) obit
Mello Franco, Afranio de obit
Murphy, Robert D(aniel)

Education
Boas, Franz obit
Bos, Lars Wilhelm, Rev. obit
Garfield, Harry A(ugustus) obit
Isham, Norman M(orrison) obit
Lodge, Gonzalez obit
Lowell, A(bbott) Lawrence obit
Reynolds, Helen Wilkinson

Engineering
Crawford, Frederick C(leveland)

Government—International
(See also Military and Naval)
Boisson, Pierre (François)
Chiang Tso-pin obit
Darlan, Jean (Louis Xavier François) obit
Ibn Saud, Abdal Aziz
Mello Franco, Afranio de obit
Noguès, Auguste (Paul)
Stresa, Emil Georg von obit

Government—United States
(See also Military and Naval)
Biddle, Francis M(yron)
Bissell, Clayton L.
Carlson, Evans F(ordyce)
Fuqua, Stephen Ogden
Gullion, Allen W(yant)
MacFarland, Francis N(ash)
Martin, Glenn L(uther)

Industry
Crawford, Frederick C(leveland)
Martin, Glenn L(uther)

Journalism
Bayer, Charles
Fawley, Frederick P(inley) obit
Fuqua, Stephen Ogden
Hebert, F(elix) E(dward) obit
Kreeger, William W(yant)

Labor
Andrews, John B(ertram) obit
Gullion, Allen W(yant)
Osborne, William Hamilton obit

Law
Gullion, Allen W(yant)
Osborne, William Hamilton obit

Literature
Fawley, Frederick P(inley) obit
Habe, Hans
Osborne, William Hamilton obit

Medicine
Crile, George (Washington) obit
Van Rensselaer, Mariana Griswold obit
Wiley, Harvey W(ashington) obit

Military and Naval
Anderson, Kenneth A(rthur)
Anderson, Nicholas E. obit
Bissell, Clayton L.
Carlson, Evans F(ordyce)
Fuqua, Stephen Ogden
Gullion, Allen W(yant)
MacFarland, Francis N(ash)
Martin, Glenn L(uther)
Mead, James M(iller)

Motion Pictures
Bayer, Charles
Eddy, Nelson
Howe, James Wong
Westley, Helen obit

Music
Eddy, Nelson

Naval
Borde, Jean (Joseph Jules Noel) de la
Carlson, Evans F(ordyce)
Zaidler, Curt Frederick obit

Radio
Eddy, Nelson
Fuqua, Stephen Ogden
Tinney, Cal(vin L.)

Religion
Bos, Lars Wilhelm, Rev. obit
Cadbury, H. Howard obit

Science
Boas, Franz obit
Carver, George Washington obit
Crile, George (Washington) obit
Howe, Harrison E(stell) obit
Ives, James E(dmund) obit
Rosenoff, Aaron J(oshua) obit
Schmeltz, Franz C(arl) obit
Tesla, Nikola obit

Social Service
Andrews, John B(ertram) obit
Carpenter, J(ulius) Henry, Rev.
O'Day, Caroline Goodwin obit
Smith, Ida B. Wise

Theatre
Behrman, S(amuel) N(athaniel)
Hibbard, Edna obit
Westley, Helen obit

Published monthly by the H. W. Wilson Company, 950 University Avenue, New York, N.Y. Subscription price $8.00 per year. Entered as second-class matter February 28, 1940, at the post office at New York, N.Y., under the act of March 3, 1879.

CURRENT BIOGRAPHY

Published monthly by The H. W. Wilson Company
950 University Avenue New York

Editor: Maxine Block Managing Editor: E. Mary Trow

Copyright, 1942, The H. W. Wilson Company. Reasonable quotation from this publication is permitted provided due credit is given to CURRENT BIOGRAPHY

Vol. 4 February 1943 No. 2

Explanations

Authorities for forms of names are the Library of Congress and the Wilson Company bibliographical indexes. Exception is made to the authorized form when the shortened form of a name is better known: e.g., Monty Woolley instead of Edgar Montillion Woolley. If the full name is not given in the heading it will be found in the sketch itself.

After the name, pronunciation is given if the name is difficult, and then the date of birth as fully as possible. The date of death is given for those who have died. The occupation of the subject follows. Next comes the sketch itself, followed by a list of references for further study. These include magazine and newspaper references (in one alphabet) and books. If the person is not living, references are made to obituaries in newspapers and magazines. Only books of an autobiographical or biographical nature are listed, including such well known reference works as *Who's Who, Who's Who in America*, etc.

The magazine articles listed under *References* are in abbreviated form (see list "Periodical and Newspaper Abbreviations" for complete title). The form of entry is as follows: Sat Eve Post 56:78-9 S '39 por. This means that an article supplementing our sketch will be found in *Saturday Evening Post*, volume 56, pages 78-9, in the September 1939 number. The abbreviation *por* means that the article is accompanied by a portrait. In the case of newspapers, the name of the paper is followed by paging and date.

When a name in a sketch is followed by '40 a biography of that person may be found in the 1940 *Current Biography* Yearbook published in December 1940; for a name followed by '41 see the 1941 *Current Biography* Yearbook; for a '42 name see index in the December 1942 *Current Biography*.

Photographs not credited to various studios and not obtained from the individuals themselves are obtained from Press Association, Inc., Rockefeller Plaza, New York City.

SMITH, IDA B. WISE—*Continued*

References

Christian-Evangelist p423-4 Ap 16 '42 por
Lit Digest 121:33 Je 13 '36 por
N Y Times IV p2 Ag 31 '41 por
Newsweek 16:40 Ag 19 '40 por
Time 29:55 Mr 1 '37 por; 39:51 Mr 2 '42 por; 39:12 Je 15 '42
Who's Who in America 1942-43

STAUSS, EMIL GEORG VON (shtous fŏn) Oct. 6, 1877—Dec.(?), 1942 German state councilor and a Vice-President of the Reichstag; former director of the Deutsche Bank in charge of its oil interests.

Obituary

N Y Times p17 D 12 '42

SYKES, CHARLES H(ENRY) Nov. 12, 1882—Dec. 19, 1942 Nationally known as the newspaper cartoonist, "Bill" Sykes; drew famous war cartoons for the First and Second World Wars; editorial cartoonist of the *Evening Public Ledger* of Philadelphia from its founding in 1914 until its suspension in January 1942.

Obituary

N Y Times p44 D 20 '42

TESLA, NIKOLA (tes'lă) July 9, 1856—Jan. 7, 1943 One of the world's greatest electrical inventors and designers; American citizen of Greek origin; worked with Edison; credited with many "epic making" inventions since he came to the United States in 1884; in his old age claimed to have invented a "death beam" powerful enough to destroy 10,000 airplanes at a distance of 250 miles and to annihilate an army of 1,000,000 soldiers instantaneously.

Obituary

N Y Times p19 Ja 8 '43 por

TINNEY, CAL(VIN L.) Feb. 2, 1908- Radio commentator

Address: b. c/o Mutual Broadcasting System, 1440 Broadway, New York City

Since August 1941 Cal Tinney's slow Texas drawl and homespun humor, with intimate, folksy interpolations, have been heard over the Mutual network in *Sizing up the News* each Monday and Wednesday evening from 8:00 to 8:15 p. m. Tinney's colloquialisms, which the folks "back home" chuckle over—his "just-between-you-and-me, ain't it the truth?" "it shore is" method—has captured many a listener bored with the formal, polished, or cut and dried comments of other newscasters.

But there has been more to Tinney than his mannerisms. Speaking usually as a representative of what the "common man" thinks about affairs at home and abroad, he has taken more than one direct and shrewd pot shot, left of center, at stuffed shirt policy, the doings of Big Business, politicians who coddle Fascism at the expense of democracy under high-sounding terms of Americanism, etc. It is not surprising that the sandy-haired young man from the West has occasionally found himself in hot water. Objections have at times been made to the FCC on the "character of the broadcaster's utterances." But Tinney has apparently survived the allegations against him, since he currently continues his bi-weekly talks.

The outspoken homespun philosopher, who has become a kind of Will Rogers columnist of the air, was born February 2, 1908 on a ranch in Pontotoc County, Oklahoma. His family, however, originally came from Texas, where his grandfather, a rugged individualist, had strange politics for those parts. "My grandfather was a Texas Republican," Tinney says sadly, "and they shot him. Seems he exploited his sentiments one Saturday night in a bar room. Ever since then my Pop has been a Democrat." So has the son and, judging by his broadcasts, a fervent New Deal-supporting one.

After attending the Oklahoma public schools Tinney enrolled at the Murray State School of Agriculture in Tishomingo, Oklahoma. There, however, his education lasted only two weeks. "I never did stay there long enough to find out whether it was a high school or college," he says. Young Tinney apparently decided he could get a better schooling by traveling and seeing the world at first hand. For some years he tramped around, often as an ordinary seaman aboard freighters off for foreign ports. He was a newspaperman of sorts, also, and found jobs in Shanghai and Paris. His work in the pre-War French capital was rewriting material found in English-printed newspapers. "It was easy," Tinney explains. "All you had to do was change words like lift to elevator, and caretaker to janitor."

After getting his education by travel, Cal Tinney settled down in Oklahoma to edit a country paper, and began to advertise it over Station KVOO at Tulsa. That was in 1932. His humorous, drawling voice soon became more popular than his gazette. So he gave up his job as an editor, but since 1934 he has written a weekly feature, "Man of the Week," for the McNaught Syndicate. He is the author, also, of a book called *Is It True What They Say about London? a Non-Partisan Portrait* (1936). When Tinney turned to radio for a living, his voice was heard, successively, on the *March of Time* (1932), the *Voice of America* (1933), and the *Maxwell House Show Boat* program (1934). From 1937 to 1939 he was on the *Vanity Fair* feature, and from 1939 to 1940 on *Youth vs. Age*. That year he originated, but did not appear on, *Stop Me If You Heard This One*.

Tinney is married to Mary Maxine Noble. The couple have two sons, David N. and Scott.

It was in 1940 that Tinney hit on the idea of a folksy newscast and tried it out in Tulsa, Oklahoma. Farm listeners chuckled, appreciated a commentator who spoke their own

Office Memorandum · UNITED STATES GOVERNMENT

TO: Director, FBI

FROM: SAC, New York

SUBJECT: "PLAIN TALK"
INFORMATION CONCERNING
Bureau File #94-36511

22925

Transmitted herewith for the information of the Bureau is the March 1948 issue of "Plain Talk".

Enc. (2)

ENCL ATTACHED

62-8845 ENCL

62 MAR 27 1948

RECORDED 94-36511-98
FBI
MAR 15 1948

INDEXED 138

EX-58

RED AMBASSADORS

Sava Kosanovich of Yugoslavia

By BOGDAN RADITSA

This is the first in a series of profiles of the Red Ambassadors who represent the several Soviet satellite governments in Washington. Others will follow shortly.

FAMILIAR as they are with the blasts of Vishinsky and Molotov, most Americans are not aware that some of the most fervid tirades against "U.S. imperialism" delivered in this country come from an officially accredited ambassador. Sava Kosanovich, a wiry, reddish-haired man in his early fifties, represents Tito in Washington and in the United Nations. He travels all over this country making speeches in praise of the "new progressive democracy" in the Balkans, denouncing "Anglo-American reaction" and helping to form front groups for Tito. Incidentally, the American ambassador in Yugoslavia cannot even move around Belgrade without special permits and a guard of secret police agents.

From Kosanovich's speeches at Lake Success and elsewhere, it would appear that everything in Yugoslavia before Tito came to power was reactionary or Fascist. Yet, when he was touring America during the war, he used to introduce himself as a "member of the democratic government of His Majesty King Peter the Second."

Kosanovich is a restless man—his face and hands seem to be always agitated and moving. He is a cultured man with a long background in liberal, democratic movements. But he is a man of strong ambitions, who was willing to betray his own past and his closest friends for those ambitions.

In an Embassy which is more of a propaganda bureau than a diplomatic office, Kosanovich is only the front man for the Cominform's schemes in America. The real power in the Embassy is held by members of the Communist Party and the secret police, OZNA, just as its real policy is directed from Moscow through Belgrade. Though Kosanovich repeats the Moscow line, he is not yet one of the inner circle.

I first met Kosanovich in the fall of 1941 in the United States, where he had come with some members of the exiled Royal Yugoslav Government, representing Croatia, Serbia and Slovenia. The tragicomic adventures of that royal mission in America centered around the battle between those who wanted Yugoslavia, after its liberation from the Nazis, to become a democratic federal union, and those who demanded a Yugoslavia which would be a Greater Serbia administered on the old prewar pattern. The grim outcome was that Tito succeeded in charming American public opinion with his sweeping promises of democracy and federation, while the exiles were quarreling among themselves—mostly for personal, rather than ideological, reasons.

KOSANOVICH dreamed for a good many years of becoming Yugoslav ambassador to Washington. His uncle, Nikola Tesla, was an important scientist

in America. He himself is descended from a long line of Serbian Orthodox ministers. His friends in politics used to tease him about his shyness toward women, his hatred of smoking and drinking. A strong and dynamic political leader, they said, should be a lady-killer, a hard drinker and a chain smoker.

In prewar Yugoslavia, Kosanovich always attached himself to some popular political leader. (It seemed to give him the feeling that he was running things himself.) In the beginning of his career he followed the tide of Svetozar Pribichevich, the leader of the Democratic Party, who sought a highly centralized Yugoslav state and drove the Communists underground through his secret police. That policy helped to reinforce communism for the present job.

Next, Kosanovich was attracted by the leaders of the Croatian peasants, Stevan Radich and Dr. Vladimir Machek, now in exile in Washington. He considered that he was Machek's "brain." Machek, however, did not always welcome the attentions of his satellite: several times he told me that he was tired of Kosanovich's "old maidish suggestions and tearful interventions." For when he is arguing any involved issue, Kosanovich's voice takes on a querulous tone which makes him sound like an adolescent.

During the war, Kosanovich defended Mihailovich and a united Yugoslavia. He took an active part in Allied meetings and the affairs of American Yugoslavs. His name often appeared in the "Letters to the Editor" column of *The New York Times*. He was a chairman of the Southeastern European Planning Board—a movement not popular with Stalin, as it threatened to block his plans for regional agreements and the artificial building up of buffer states. And he was active, with his friends Louis Adamic and the violinist, Zlatko Balokovic, in the formation and promotion of the United Committee of South-Slavic Americans, subsequently metamorphosed into an important part of the Kremlin's Pan-Slavic front.

In his speeches Kosanovich has been one of the principal promoters of an idea first advanced by Adamic—that America is a nation of nations. As such, she is not only Anglo-Saxon, but German, Italian, Negro or Slav. The Slavs of America should unite in the name of brotherhood to carry on their glorious traditions, to show other Americans the heritage they have brought to this country, and to keep in touch with their motherlands. On the surface this idea seems harmless enough, but it is the banner of Stalin's movement to divide the United States. Russia and her satellites carry the idea farther in their controlled press by openly maintaining that America cannot be progressive until it is transformed into a series of "people's republics" on the Soviet pattern, giving their national sovereignty to all the racial groups that compose the population. Behind that scheme is the desire to Balkanize the United States—to divide it into conflicting clans so that a revolution may be centralized through the only uniting force, the Communist Party.

FIORELLO LA GUARDIA was Kosanovich's greatest acquisition. He led the New York Mayor through the same political zig-zag he himself followed—first to Mihailovich, then to Tito. The speech of greeting to King Peter that La Guardia read in Serbo-Croatian on July 8, 1942, was written by Kosanovich. The Mayor read:

"Drazha Mihailovich and Vladimir Machek are the expression of the Yugo-

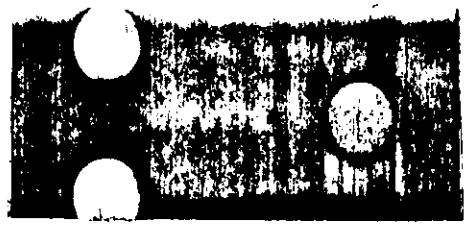

slav spirit of resistance—from Triglav to Vardar. They will go down in history. . . ."

In his own speeches Kosanovich often compared Mihailovich with MacArthur, Chiang Kai-shek and Timoshenko. For example, at a meeting of the anti-Nazi League in New York, June 8, 1942, he spoke of "the epic struggle which my people are making under the man whose name already symbolizes to mankind indomitable spiritual and physical resistance—Drazha Mihailovich."

Mihailovich was killed by a government of which Kosanovich was a member. Machek fled the country to escape the fate of Petkov, Maniu and other peasant leaders. Immediately after he became Tito's ambassador, Kosanovich quoted Count Ciano to prove that Machek had been willing to sell out Croatia for a relatively small amount of money. The former follower of Machek admitted intimately to a friend that he did not believe the accusation, but that Tito had asked him to make it.

On July 6, 1942, at a reception held in the Yugoslav delegation's mansion on New York's Fifth Avenue, Kosanovich introduced Mirko Markovich, editor of the Serbian Communist newspaper, *Slobodna Rec*, and now professor at Belgrade University. Markovich offered King Peter a check of one thousand dollars for "the Chetniks and regular army of General Mihailovich."

A week later orders arrived from Moscow that Mihailovich should be considered a traitor and Tito accepted as leader of the war for liberation. Markovich and his Serbian equivalent of the *Daily Worker* suddenly switched to attacking Mihailovich. Kosanovich did not—but his defense of the Chetniks' leader grew weaker. Shortly before he went to London in March, 1944, Kosanovich in a *New York Post* interview was quoted as follows: "Mihailovich is in the position of a General Lee. Tito is some kind of a Lincoln out to save the Union. Mihailovich was an army officer. I think he is sincere but he is surrounded by a very bad political entourage. The entourage was catastrophic. The Government, diplomats abroad, working in his name, are even more catastrophic."

Curiously, Kosanovich himself was a member of that same "catastrophic" government. When he joined the Yugoslav government-in-exile in London in the spring of 1944, it had already dismissed Mihailovich and sought an agreement with Tito's National Liberation Movement.

KING PETER was in London. Heading his government-in-exile was Dr. Ivan Subasich, the viceroy of Croatia. The group was more or less agreed that Yugoslavia should be restored on the basis of a federal union.

Kosanovich asked for a government representing all political parties, which would be strong enough to fight the Communists. He was a frequent visitor to King Peter and his mother. And when an agreement was drawn up between Subasich and Tito, Kosanovich was terribly dissatisfied with its terms. (I suspect that was because he had not taken an active part in it; he was inclined to think that everything in Yugoslav politics needed his guiding hand.)

Tito was in Belgrade. The Red Army was crossing the Danube in its push toward Vienna. On January 18, 1945, Tito's emissary, General Velebit, visited Kosanovich in Kingston House, London. Kosanovich left the interview pale and nervous. For the first time he realized that dealing with the Communists demanded fortitude.

A few days later, on January 23, King Peter dismissed Subasich's cabinet and reappointed its members only after all of them—including Kosanovich—had agreed in writing that, on their return to Yugoslavia, they would defend certain obligations the king had made concerning the Tito-Subasich agreement. The chief obligation was that the new united Yugoslav Government to be formed under Tito should guarantee all fundamental political and civil rights and freedoms to the Yugoslav people. Kosanovich took a prominent part in drafting this public statement announcing the reappointment of the previous cabinet and the obligations its members assumed. As the king's most intimate adviser, he drafted Peter's act of consent to the Regency. Before Kosanovich left London, the young king kissed him, and received his formal promises that he would defend the interests of the monarchy.

In the spring of 1945, Yugoslavia was "liberated" and the members of its London government-in-exile came back to join Tito's government with the blessing of Churchill, Roosevelt and Stalin. It was at that time that the Communists characterized Kosanovich as a "useful innocent" (*koristna budala*). In a meeting held in a swanky Belgrade apartment house—still the headquarters of the Communist Party of Yugoslavia—the ex-schoolteacher, Edward Kardelj, the Montenegrin, Milovan Gjilas, and other top Communist leaders were talking over the political characteristics of their new partners.

Gjilas said, according to a witness who reported the meeting to me: "The Anglo-Americans dream that they may influence us through someone who is not a Communist. Therefore Ivan Subasich is best fitted for the job of foreign minister. Though he sometimes wavers, he defended the agreement with Tito stubbornly in London and Washington. Milan Grol (the vice-premier and leader of the Serbian democrats) will serve as a Trojan Horse for the West. He is a reactionary politician who backed Mihailovich. If Grol declares that the Serbian people have to abandon Mihailovich, they will accept the idea. As for Kosanovich—he is not an important personality nor a politician. But he is a useful innocent, who may be of help in the United States where he is considered to be a Western-type democrat."

The only member of that London government who still survives politically is the "useful innocent." Subasich, after having been Tito's prime minister and foreign minister, is now a prisoner in Zagreb. Franc Snoj, after participating in the Communist government of Slovenia, was recently sentenced to seven years of slave labor for "espionage in favor of the Western democracies." The liberal Dr. B. Markovich of Serbia died in New York. I arrived there in time to see him before his death. After I had told him the grim story of what Yugoslavia looked like under the Communists, he said very sadly:

"How is it possible that Savitsa (the diminutive of Kosanovich's first name) could stay in such an outrageous government?"

TITO soon began to ignore all the obligations assumed in his agreement with Subasich. Even before the elections he declared that the king was never to come back. Milan Grol and others immediately left Tito's government. Everybody in Yugoslavia expected Kosanovich to do the same. But he began to yield to the Communists.

Subasich had just come back from a trip around Yugoslavia. He had seen that the people did not want commu-

212

nism; they wanted quick action by the democrats. And he had the courage to tell this to Tito. Although he was foreign minister, he was arrested.

I was with Kosanovich in his room in Belgrade's Hotel Majestic when Mrs. Subasich telephoned and asked for immediate help. Her husband was arrested and ill. Kosanovich tried to reassure her. He telephoned Lt. General Rankovich, OZNA's chief trigger-man. The Communist hangman answered coldly that nothing would happen to the foreign minister. Precautions were merely being taken to defend him from any attempt of the "Western reactionaries" upon his life.

We had just been reading Dante there in the hotel room—the part where Count Ugolino hungrily devours the brain of Archbishop Ruggieri, describing the merciless end of all traitors. The blood and turmoil of ancient fratricidal war rose before us: it seemed very near to our own Yugoslav tragedy.

Only a little later Kosanovich entered the new People's Front against the will of the Independent Democratic Party, of which he was Secretary-General. His party issued a clandestine communiqué describing his defection. Soon after that the chairman of the party, Dr. D. Boshkovich, was terribly beaten for three hours by a Communist youth mob. He was lying in a hospital the same night that Kosanovich was flying to the London conference of the Big Four, accompanying the Communist Kardelj as a "liberal and democrat." Before he left, Kosanovich had published an article in the Communist official organ, *Borba*, in which he attacked Subasich and the leadership of the party with whom he had worked closely for twenty years. The Communists wanted a proof of "betrayal." And the price was paid. From London, Kosanovich went to the Paris Peace Conference, and from there to Washington—to attack American democracy, which he had formerly praised.

I CANNOT BELIEVE Kosanovich is a happy man, though he has attained his ambition. Those who once opposed *fascism* and are now serving communism have lost all faith in themselves and in mankind. There are no more miserable people than the intelligentsia who know better—but who have been afraid to resist in the last battle for man's liberty.

Kosanovich once asked for a synthesis between political and economic democracy for the good of the people, and he is now defending the complete subjugation—economic, political and moral—of Yugoslavia to the Communists. Kosanovich once wanted Yugoslavia to be free of the influence of any big power, and he is now ambassador of a puppet state in Stalin's empire.

THE SOLUTION FOR PALESTINE

A comprehensive and authoritative discussion of the Hoover Plan (pages 32-33) and of the Lowdermilk Plan (*Palestine—Land of Promise*), offering an engineering rather than a political solution for the crisis in the Near East, will be presented in the next issue of PLAIN TALK.

213

FEDERAL BUREAU [redacted]

Case Originated At: PITTSBURGH File No. 61-128

Report Made At	Date Made	Period	Report Made By
PITTSBURGH	2/20/46	11/15,19,20, 21,26/45.	[redacted]

Title	Character
SLOBODNA REC (FREE EXPRESSION)	INTERNAL SECURITY - C REGISTRATION ACT

SYNOPSIS: SLOBODNA REC (Free Expression), Serbian communist-line tri-weekly newspaper printed at 1916 East [redacted], Pittsburgh, Pa., steadfastly adheres to the generally recognized communist line and operates, among Serbs in the U. S., as the organ for the dissemination of information on Serbian affairs in Yugoslavia. As the leading Slav communist organ it contained, during the period from 12/6/44 to 8/30/45, favorable publicity for such communist front organizations as the SWC, American Slav Congress, Vidovdan Committee and the United Committee of South Slavic Americans. It supported the TITO and STALIN governments unequivocally and denounced opposition believed to exist against these governments. Due to the leaving of the former Editor-In-Chief, MIRKO MARKOVICH, to confer with TITO and his representatives in Belgrade, Yugoslavia, the editorship has been undertaken by Reverend NIKOLA DRENOVAC. The Managing Editor is CHARLES VUICH and Business Manager is MANE [redacted]

- P -

J. A. Fletcher

1	Bureau (Encls.)	1	Milwaukee (Info.)
	Albany (Info.)	1	Newark (Info.)
	Anchorage (Info.)	1	New Haven (Info.)
	Baltimore (Info.)	1	New Orleans (Info.)
	Boston (Info.)	1	New York (Info.)
1	Buffalo (Info.)	1	Oklahoma City (Info.)
1	Butte (Info.)	1	Omaha (Info.)
1	Chicago (Info.)	1	Philadelphia (Info.)
1	Cincinnati (Info.)	1	Phoenix (Info.)
1	Cleveland (Info.)	1	Portland (Info.)
1	Denver (Info.)	1	Richmond (Info.)
1	Des Moines (Info.)	1	St. Louis (Info.)
1	Detroit (Info.)	1	St. Paul (Info.)
1	Houston (Info.)	1	Salt Lake City (Info.)
1	Indianapolis (Info.)	1	San Diego (Info.)
1	Jackson (Info.)	1	San Francisco (Info.)
1	Kansas City (Info.)	1	Savannah (Info.)
1	Little Rock (Info.)	1	Seattle (Info.)
1	Los Angeles (Info.)	1	Springfield (Info.)
1	Louisville (Info.)	1	Washington Field (Info.)
1	Memphis (Info.)	1	Pittsburgh
1	Miami (Info.)		

NO JUN 1946 5 PITTSBURGH

(Typed Entire)

SLOBODNA

39 FEB

INFORMATION CONTAINED HEREIN IS UNCLASSIFIED DATE 2- BY SP1 [redacted]

#29166

59 JUN 17 1946

b7C

97-

214

[redacted]

Translations of SLOBODNA REC as contained in this report were made at the Pittsburgh Field Office by [redacted] Serbo-Croatian translator, and [redacted] Slavonic translator.

II

ORGANIZATIONAL STRUCTURE

A - OFFICERS

In the "Statement Of The Ownership, Management, Circulation, Etc., Required By The Acts Of Congress Of August 24, 1912, and March 3, 1933," regarding newspapers utilizing the mails as a means of transmission, furnished the Pittsburgh Office by [redacted] Pittsburgh Post Office, the following are given as officers of SLOBODNA REC:

Publisher	J. KRSTOVICH
Editor	CHARLES VUICK
Managing Editor	None
Business Manager	MANE SHUSHNAR
Owner	JOHN KRSTOVICH

This statement was filed at the Pittsburgh Post Office by MANE SHUSHNAR on October 2, 1945.

"2. It is true that this year's calendars were printed too late, but we have inspite of this sold a sufficient number of calendars and some of the sellers have not sent in their money. In addition to the excellent success in advertisements for the calendar and besides the fact that the calendar was excellent, the work of the sale of the calendars is not satisfactory. Our activists should have paid more attention to this then than before selling the calendars.

"3. Soon we shall have received several hundred copies of the new book 'Guns For Tito.' We ought to do our best to sell these books as soon as possible. The book was compiled by an American Major who organized a shipment of weapons to TITO's Army and met TITO personally several times. The price of the book is $2.75.

"4. We must finish the sale of the book of NIKOLA TESLA. We should particularly interest the American engineers and unionists in it.

"5. Soon a book of MIRKO MARKOVICH will be off the press: 'That We May Understand Each Other.' Therefore it will be necessary to organize the sale of the same. The book contains 350 pages and the price of the same is $2.50.

"The working committee decided that by the end of the month of March or in April, MIRKO MARKOVICH should start for the Pacific Coast, to California, to work in the strengthening of our movement and newspaper and in building up of clubs and the apparatus. This will be discussed in detail at the meeting of the Supreme Board in Cleveland."

August 14, 1945 — "Reorganization Of Leadership Of Serbian Progressive Movement In City Of Akron Carried Out." This article, which is quoted below, indicates the then policy of SLOBODNA REC in its leadership in the Serbian Progressive Movement in the United States.

"Akron, August 10 - Last week, on Thursday evening, there was here held a special meeting of the Serbian political progressive club, which was attended by the editor-in-chief of SLOBODNA REC, MIRKO MARKOVICH, and the manager of the paper, MANE SHUSHNAR.

STANDARD FORM NO. 64

Office Memorandum • UNITED GOVERNMENT

TO : Director, FBI

DATE: November 7, 1947

FROM : SAC, Pittsburgh

SUBJECT: SLOBODNA REC
INTERNAL SECURITY - C
REGISTRATION ACT

The following article which appeared in the November 1, 1947, issue of the above captioned Communist line newspaper published at 1916 East Street, Pittsburgh, Pa., is furnished for your information:

Address of Ambassador ROSANOVICH at Banquet of 2nd Serbian Congress, October 26 in Pittsburgh, Pa.

ALL INFORMATION CONTAINED HEREIN IS UNCLASSIFIED DATE 2-22-19 BY SP1 AC/cm # 24860

Brothers and Sisters:

I come among you to extend you the greetings of the peoples and the government of the Federated People's Republic of Yugoslavia, headed by Marshal Tito and to thank you for the considerable aid which you have given your brothers in the old homeland.

By coincidence, I found myself in the period of 1943-44 in this great country where I did my best to defend the truth and contribute to the best of my ability to the thwarting of spreading untruths on the part of the official representatives of the then Yugoslav government in exile and of all those who wanted to convince public opinion of America and its official circles of the impossibility of restoring Yugoslavia. I recall your valuable help of that time. I remember a dear friend in the person of the late Rev. KRAJNOVICH and his constant struggle, as well as of so many others of that period.

You Americans of Serbian descent were hit the hardest. You were exposed to the greatest trials and the heaviest attacks. You had to exercise the greatest self-denial and perspective correctly to see the course of events because every effort was made to confuse you. The idea was that when Serbian Americans follow the wrong path, when chauvinism and national hatred get possession of them, when hatred toward the Croats and Slovenes and toward Yugoslav unity is aroused in them, then it will be easy for the same attitudes to work among Croatians and Slovenes as regards Yugoslav unity, giving chauvinism full sway and thus contributing to the weakening of the war effort in American and rendering impossible the struggle for the salvation and restoration of Yugoslavia and the Balkans.

In a letter of thanks for an honor which was shown me in February, 1944, by a great number of you who are now assembled at this Serbian

NOV 12 1947

RECORDED 77-724-175
INDEXED
EX-93
34 NOV 10 1947

(6)
(7)(C)

217

To: Director, FBI November 7, 1947
Re: SLOBODNA REC
IS - C; REGISTRATION ACT

Congress when I was elected an honorary president of the Vidovdan Congress I said:

"In an extraordinary difficult period of mankind you have with sacrifice and self-denial done your duty also toward your people from whom you sprang and toward America of which you are good citizens, and toward mankind. Since my arrival in America in 1941, in an official capacity, I found among you the best understanding and best cooperation for an ever greater unification of national forces in the struggle against all manifestations of fascism. Together we tried to be as serbs - bearers of Serbo-Croato-Sloveno-Macedonian harmony and unity at a time when the enemy banked his entire hope on disharmony and hatred. Working thus we have contributed to the correct understanding of the national-liberation struggle beset with so many obstacles and bedevilled with so much gossip. Time and events have borne out the truth thereof."

And when taking leave of Serbs in America in a letter of July 24, 1944, among other things I wrote:

"We have here been those who have defended the purity of the Serbian name at a time when it was being most degraded by the ignorant. History will show that we were right and that by our defending the unity of Serbs, Croats, Slovenes, and Macedonians we have best represented the true national Serbian interests and thus represented the interests not only of Yugoslavia but also of America and all United Nations. We have by common sacrifices of a liberation war achieved great successes in the country, but there still are great trials. Enemies will particularly seek to confuse the Serbs and destroy them with false defense of Serbian interests. I ask all my good friends to make every effort to promote harmony and unity. I ask all those who were being deceived in returning to Serbian tradition and enter the great circle of national harmony . . . I ask friends who have had the opportunity and bravery of seeing the right path from the very outset, that they forgive those who haven't seen it because they were deceived by those who thought they must be believed. The true national champion is known by his setting the errant ones on the right path. Responsible culprits who misused their positions and misused the credulity of the ignorant will answer to the people for their misdeeds. The more you will promote harmony, the better it will be for Serbdom, for Yugoslavia, and for America - toward which you have the greatest obligation."

To: Director, FBI
Re: SLOBODNA REC
IS - C; REGISTRATION ACT

November 7, 1947

That was the path to which you were called until his last days by our great countryman NIKOLA TESLA.

And you, by your moderation, have contributed to the interest of the democratic struggle of the world. You have contributed to the unification of all national forces in America in the organization of the war effort. And at the same time, as Americans of Serbian descent together with other Yugoslav Americans, you have shown your American fellow-citizens that your brothers in the old homeland are with united efforts resisting fascism and struggling for freedom and the restoration of their independent state, Yugoslavia.

In this you were able to be the best spokesmen. You and your predecessors have come to this country in search of freedom and better economic conditions.

Most of you and those before you have fled from Hapsburg serfdom because you were being oppressed both nationally and economically. You and your predecessors made valuable contributions to the development of the New World. You with your brother Slovenes and Croatians have sweated, shed blood, worn your bones, expended brains, and whatnot for the progress of this country. Long is the chain of miners, farmers, scientists, and soldiers who gave their best for the general progress and prosperity of the American Union. You have conscientiously been doing your duty and you have become good citizens of this great land. Who of us is not proud of the work, life and nobleness of NIKOLA TESLA without whose work and mind electricity would not be what it now is in the world; whose motor has harnessed the Niagara and the Dnieper, turning the wheels of industry wherever there is electricity? In every spark of electricity, shines his name. America is the greatest beneficiary of TESLA's genius. He asked for no riches.

And so, brothers and sisters, when during the war you have raised your voice for your brethren in the Balkans struggling not only for their life but also for a better and more secure existence of mankind, your voice thus had significance and importance. You were able to be the authorized spokesmen of the struggle which was going on over there.

XXXXXX
XXXXXX
XXXXXX

FEDERAL BUREAU OF INVESTIGATION
FOIPA DELETED PAGE INFORMATION SHEET

3 Page(s) withheld entirely at this location in the file. One or more of the following statements, where indicated, explain this deletion.

☒ Deletions were made pursuant to the exemptions indicated below with no segregable material available for release to you.

Section 552		Section 552a
☐ (b)(1)	☐ (b)(7)(A)	☐ (d)(5)
☐ (b)(2)	☐ (b)(7)(B)	☐ (j)(2)
☐ (b)(3)	☒ (b)(7)(C)	☐ (k)(1)
_____	☒ (b)(7)(D)	☐ (k)(2)
_____	☐ (b)(7)(E)	☐ (k)(3)
_____	☐ (b)(7)(F)	☐ (k)(4)
☐ (b)(4)	☐ (b)(8)	☐ (k)(5)
☐ (b)(5)	☐ (b)(9)	☐ (k)(6)
☐ (b)(6)		☐ (k)(7)

☐ Information pertained only to a third party with no reference to you or the subject of your request.

☐ Information pertained only to a third party. Your name is listed in the title only.

☐ Documents originated with another Government agency(ies). These documents were referred to that agency(ies) for review and direct response to you.

_____ Pages contain information furnished by another Government agency(ies). You will be advised by the FBI as to the releasability of this information following our consultation with the other agency(ies).

_____ Page(s) withheld for the following reason(s): _____

_____

☐ For your information: _____

_____

☒ The following number is to be used for reference regarding these pages:

100-10123-124

XXXXXX
XXXXXX
XXXXXX

XXXXXXXXXXXXXXXXXXXXX
X DELETED PAGE(S) X
X NO DUPLICATION FEE X
X FOR THIS PAGE X
XXXXXXXXXXXXXXXXXXXXX

FBI/DOJ

STANDARD FORM NO. 64

Office Memorandum • UNITED STATES GOVERNMENT

TO : Director, FBI

DATE: 5/8/45

FROM : SAC, Pittsburgh

SUBJECT: [redacted]

(b)7(c)

INTERNAL SECURITY - R

(b)7(D) [redacted] would-be radio repair man, advised this office that on April 29, 1945 he installed at the home of captioned subject, [redacted], a "Hammerlund H.Q. Receiver #120X". [redacted] stated that since this type receiving set is of a kind which is generally used by amateur radio experts or professionals and since the radio set itself was in such condition as to indicate that it had been purchased under a very high priority, he inquired of the subject how he happened to be in possession of such a radio set. [redacted] according to [redacted], was vague as to where he got it, saying that it had belonged at one time to NIKOLA TESLA'S son and was purchased before the war in New York City. [redacted] did not make any notation of the serial number of this radio but advised that under pretext he can review the operation of this set in the apartment of the subject and at that time get the serial number.

(b)7(D)

(b)7(D)

(b)7(D)

(b)7(c)

b7D

[redacted]

[redacted]

[redacted]

[redacted]

COPIES DESTROYED

14

ALL INFORMATION CONTAINED HEREIN IS UNCLASSIFIED DATE 4-16-89 BY SP1ALGCM # 291960

JUN 1 2 [redacted]

(b)7(c)

221

FEDERAL BUREAU OF INVESTIGATION

Form No. 1
THIS CASE ORIGINATED AT WASHINGTON, D. C.

FILE NO. 100-11980

CONFIDENTIAL

REPORT MADE AT	DATE WHEN MADE	PERIOD FOR WHICH MADE	REPORT MADE BY
WASHINGTON, D. C.	30 AUG 1946	7/8;8/2/46	[redacted] (b)(7)

TITLE: (b)(1) [redacted] (c)

CHARACTER OF CASE: (b)(1) [redacted] (c)

Confidential

SYNOPSIS OF FACTS:

The new Yugoslav Ambassador, SAVA N. KOSANOVIC, has stated to the newspaper that they do not contemplate hostilities over the Trieste question. [redacted] (b)(1) (c)

ALL INFORMATION CONTAINED HEREIN IS UNCLASSIFIED EXCEPT WHERE SHOWN OTHERWISE

NO SEP 1946 69 ...STICS

- P -

REFERENCE: Report of Special Agent [redacted] dated July 22, 1946, at Washington, D. C. (b)(7)(c)

2-16-49 Classified by SPIAGGIM
Declassify on: OADR # 291860
DEFERRED RECORDING

DETAILS: AT WASHINGTON, D. C.

GENERAL ACTIVITIES

HANDLED BY STOP DESK

The "Washington Post" for July 23, 1946, carries a headline relative to an interview had with the new Yugoslav Ambassador SAVA N. KOSANOVIC entitled "War Over Trieste Not Anticipated by Yugoslav Envoy". The article stated he had declared on the previous day that his country would not be provoked into any action in Trieste which would compromise the peace. He also stated they would not accept any solution of the problem which did not accord with their essential interests. He said his Government opposed Italian proposals for a plebecite in the disputed area because the Yugoslav population had been diminished by twenty-six years of Italian rule and the additional loss of 56,000 men in the fight against the Nazis.

APPROVED AND FORWARDED: Guy Hottel SPECIAL AGENT IN CHARGE

DO NOT WRITE IN THESE SPACES

100-32820-285

RECORDED & INDEXED 35

COPIES OF THIS REPORT
5 - Bureau
2 - Detroit
2 - Chicago
2 - Cleveland
2 - New York
2 - Pittsburgh
3 - Washington Field

F B I
37 SEP [redacted] (b)(7)(c)

EX - 14

37 SEP 18 1946

U. S. GOVERNMENT PRINTING OFFICE 16—80005-1

COPIES DESTROYED 7-30-58

CONFIDENTIAL

222

CONFIDENTIAL

[redacted] (b)(1) (C)

The article in the "Evening Star" which was referred to above appeared July 23, 1946, and was entitled "New Envoy Disclaims Any Yugoslav Plans for Coup at Trieste." This article was written by NEWBOLD NOYES, JR. The article quotes the Ambassador as saying that Yugoslavia would not be "provoked into compromising the peace." The article stated that the Ambassador had indicated his country would boycott Trieste if they did not get it. The article stated that KOSANOVIC is a nephew of NICOLA TESLA, the Yugoslav-American inventor.

[redacted] (C) (b)(1)

[redacted] (C)

[redacted] (C)

[redacted] (C)

CONFIDENTIAL

223

XXXXXX
XXXXXX
XXXXXX

FEDERAL BUREAU OF INVESTIGATION
FOIPA DELETED PAGE INFORMATION SHEET

2 Page(s) withheld entirely at this location in the file. One or more of the following statements, where indicated, explain this deletion.

☒ Deletions were made pursuant to the exemptions indicated below with no segregable material available for release to you.

Section 552		Section 552a
☒ (b)(1)	☐ (b)(7)(A)	☐ (d)(5)
☐ (b)(2)	☐ (b)(7)(B)	☐ (j)(2)
☐ (b)(3)	☒ (b)(7)(C)	☐ (k)(1)
_____	☐ (b)(7)(D)	☐ (k)(2)
_____	☐ (b)(7)(E)	☐ (k)(3)
_____	☐ (b)(7)(F)	☐ (k)(4)
☐ (b)(4)	☐ (b)(8)	☐ (k)(5)
☐ (b)(5)	☐ (b)(9)	☐ (k)(6)
☐ (b)(6)		☐ (k)(7)

☐ Information pertained only to a third party with no reference to you or the subject of your request.

☐ Information pertained only to a third party. Your name is listed in the title only.

☐ Documents originated with another Government agency(ies). These documents were referred to that agency(ies) for review and direct response to you.

_____ Pages contain information furnished by another Government agency(ies). You will be advised by the FBI as to the releasability of this information following our consultation with the other agency(ies).

_____ Page(s) withheld for the following reason(s): _____

_____

☐ For your information: _____

_____

☒ The following number is to be used for reference regarding these pages:

100-32820-461

XXXXXX
XXXXXX
XXXXXX

XXXXXXXXXXXXXXXXXXXXX
X DELETED PAGE(S) X
X NO DUPLICATION FEE X
X FOR THIS PAGE X
XXXXXXXXXXXXXXXXXXXXX

FBI/DOJ

XXXXXX
XXXXXX
XXXXXX

FEDERAL BUREAU OF INVESTIGATION
FOIPA DELETED PAGE INFORMATION SHEET

4 Page(s) withheld entirely at this location in the file. One or more of the following statements, where indicated, explain this deletion.

☒ Deletions were made pursuant to the exemptions indicated below with no segregable material available for release to you.

Section 552		Section 552a
☒ (b)(1)	☐ (b)(7)(A)	☐ (d)(5)
☐ (b)(2)	☐ (b)(7)(B)	☐ (j)(2)
☐ (b)(3)	☐ (b)(7)(C)	☐ (k)(1)
_____	☐ (b)(7)(D)	☐ (k)(2)
_____	☐ (b)(7)(E)	☐ (k)(3)
_____	☐ (b)(7)(F)	☐ (k)(4)
☐ (b)(4)	☐ (b)(8)	☐ (k)(5)
☐ (b)(5)	☐ (b)(9)	☐ (k)(6)
☐ (b)(6)		☐ (k)(7)

☐ Information pertained only to a third party with no reference to you or the subject of your request.

☐ Information pertained only to a third party. Your name is listed in the title only.

☐ Documents originated with another Government agency(ies). These documents were referred to that agency(ies) for review and direct response to you.

_____ Pages contain information furnished by another Government agency(ies). You will be advised by the FBI as to the releasability of this information following our consultation with the other agency(ies).

_____ Page(s) withheld for the following reason(s): _____

_____

☐ For your information: _____

_____

☒ The following number is to be used for reference regarding these pages:
100-32820-969

XXXXXX
XXXXXX
XXXXXX

XXXXXXXXXXXXXXXXXXXXX
X DELETED PAGE(S) X
X NO DUPLICATION FEE X
X FOR THIS PAGE X
XXXXXXXXXXXXXXXXXXXXX

FBI/DOJ

Federal Bureau of Investigation
United States Department of Justice

Form No. 1
This Case Originated At INDIANAPOLIS, INDIANA — File No. 100-4006

Report Made At	Date	Period	Report Made By
Indianapolis, Indiana	11/18/42	10/29,30/42	[redacted] (b)(7)(C)

Title: AMERICAN SLAV CONGRESS (ALL-SLAV CONGRESS)

Character of Case: INTERNAL SECURITY - C

Synopsis:

Information contained in bulletin entitled "News Flashes from Czechoslovakia under Nazi Domination" issued by Czechoslovak National Council of America, with reference to American Slav Congress, set forth herein. Includes information concerning the permanent committee set-up and a partial list of delegates to the American Slav Congress. [redacted] (b)(7)(D)

cc BR 3/29/47

- P - ALL INFORMATION CONTAINED HEREIN IS UNCLASSIFIED DATE 1-7-83 BY SP5 RTG/PMC

Reference: [redacted] (b)(7)(C) ENCLOSURE ATTACHED

Report of Special Agent [redacted] (b)(7)(C) dated May 12, 1942, at Detroit, Michigan.

Details: At Hammond, Indiana

[redacted] (b)(2) (b)(7)(D) obtained

Approved and Forwarded:	Special Agent in Charge	Do Not Write in These Spaces
		100-56614-42

5 Bureau
1 New York (Inf.)
1 Pittsburgh (Inf.)
1 Newark (Inf.)
1 Milwaukee (Inf.)
1 Washington Field (Inf.)
1 Chicago (Inf.)
1 Philadelphia (Inf.)
1 Cleveland (Inf.)
3 Detroit
3 Indianapolis

RECORDED & INDEXED

15 NOV 21 1942

[redacted] (b)(7)(C)

EX-17

FOR VICTORY BUY UNITED STATES DEFENSE BONDS AND STAMPS

60 JAN 2 7 1943

COPY IN FILE

226

a copy of a bulletin entitled "News Flashes from Czechoslovakia under Nazi Domination", published by the Czechoslovak National Council of America, 4049 West Twenty-sixth Street, Chicago, Illinois, release no. 132, dated May 11, 1942.

This bulletin contains news concerning the American Slav Congress held at Detroit, Michigan, April 25 and 26, 1942. The article contains the permanent committee set-up of the Congress and a list of men of eminence among the delegates to the Congress.

This article is being quoted below:

"AMERICAN SLAV CONGRESS FOR GREATER WAR EFFORT"

The coordination activities of all groups of Slavic extraction in America for an intensified war effort moved a long step closer to reality as a result of the American Slav Congress held in Detroit April 25 and 26 and attended by more than 2300 delegates representing church, fraternal, labor, social and cultural groups from all parts of the country. Every substantial American Slav organization in the country was represented.

Permanent Committee Set Up

A permanent committee was elected with LEO KRZYCKI, Vice-president of the Amalgamated Clothing Workers for President; Prof. J. J. ZMRHAL, of the Czechoslovak National Council, Vice-president; STEPHEN ZEMAN, JR., of the Slovak Evangelical Union, Secretary; VINKO NUK, of the Croatin Fraternal Union, Treasurer; and BLAIR F. GUNTHER, member of the Educational Committee of the Polish National Alliance, Chairman of the Board of Directors.

Participating Slavic nationality groups elected vice-presidents to the Board of Directors. Vice-presidents for the respective nationality groups elected were: EDMUND POINC, Polish; W. J. MUZIK, Czech; V. S. PLATEK, Slovak; VASIL DICOFF, Bulgarian; SAMUEL PERLINICH, Serbian; JOHN BUTKOVICH, Croatian; VINCENT CAINKAR, Slovene; PETER RATICA, Carpatho-Russian; GEORGE PIRINSKY, Macedonian; HARRY LUBESHKOFF, Russian; MICHAEL ATKATCH, Ukrainian.

The various nationality groups also elected members to the nationality committees of the Board of Directors. The National Committee of the congress held its first plenary session in Pittsburgh, May 10, to plan steps to translate the decisions of the congress into action.

Anti-Hitler Measures Adopted

Main decisions embodied in the resolutions of the congress were:

1. To make a direct appeal to American Slavs comprising more than half the workers in the war essential industries of the nation to intensify their production efforts to outproduce Hitler and the Axis.
2. To intensify vigilance against fifth-columnists operating within the various Slavic groups in this country aiming to sow division and disunity in the war effort.
3. To chart a plan to recruit 50,000 American Slav volunteers for a house-to-house campaign among American Slav families for raising the amount of war bond subscriptions to 10 per cent of income.
4. To take all measures to strengthen the bonds of solidarity among American Slav groups and between them and the Slav peoples of Europe for a concerted effort against HITLER.
5. To increase support of all war relief agencies, particularly the Russian, Yugoslavian, Polish, Czechoslovakian, British, Greek and Chinese.
6. To take steps to counteract the appeasers.
7. To set up a permanent organization to coordinate and assist in carrying out the decisions adopted by the Congress.

Response Exceeds Anticipations

The response to the first American Slav Congress ever held in America exceeded all anticipations. It revealed the depth of anti-Axis feeling that has seized hold of the Americans of Slav descent who came expressing desires to do their utmost to the end that the power of Hitlerism, arch-foe of the Slav peoples as of freedom-loving peoples everywhere shall be decisively smashed.

The delegates were mostly brawny men from coal mines, steel mills, machine shops—the men on whom the nation is counting for much of its war essential goods production and wholesome-looking women whose faces showed hardening lines of determination beneath war smiles.

Men of Eminence Among Delegates

Among the delegates most were men and women of distinction in many fields of activity—scholers, writers and clergymen, among them Rev. VINCENT BORKOVICZ, who represented the Very Rev. Bishop STEFAN S. WOZNICKI at the Congress and delivered the opening invocation; Metropolitan Bishop Benjamin, of the Russian Orthodox Church; Most Rev. JOHN BAJNOVICH of Johnstown, Pennsylvania, and Rev. RAWLOWSKI, of Buffalo, New York.

Among others present were JOSEPH WATTRAS, director of the Polish National Alliance of Pittsburgh; CHESTER A. KOZDROJ, President of the Polish Central Citizens' Committee of Detroit; Judge M. GRONKOWSKI of Hamtramck; Captain W. HETMAN, Polish War Veterans, Chicago; Dr. W. T. OSOWSKI; chairman Michigan All Slav Committee, Detroit; Mrs. M. NESTEROWICZ, dean of Polish journalists, Buffalo, New York; ZLATKO BALOKOWICH, famed Croatian violinist; FRANK GRIGORSKI, assistant district attorney of Milwaukee and president of the Pulaski Council there; VINCENT KLEIN, Secretary Chrysler Local No. 17 of UAW-CIO; Michigan State Senator, STANLEY NOWAK; Prof. J. J. ZMRHAL, President of the Czechoslovak National Council; JOSEPH MARTINEK, Executive Secretary of the Czechoslovak National Council, Chicago; KAREL ZRCHAL, President of the American Sokol Union; ADOLF HACER, President of the Czech American National Alliance; VINCENT VRDSKY, Secretary of the Czech American National Alliance; Rev. JAN S. BRADAC, Honorary President of the Slovak National Alliance; Rev. ARNOST BIZKA of the Federation of American Czechoslovaks in Texas; NICOLA TESLA, Serbian American inventor; ETBIN KRISTAN, prominent Slovenian writer; Dr. D. K. KATICH, first vice-president Michigan all-Slav Committee; SAMUEL PERLINICH, President of the Serbian National Foderation, Pittsburgh; Judge ANTHONY LUCAS, Pittsburgh; Ohio State Senator ROYD-BOICH; Judge GEORGE S. TENESY, Cleveland;

RAYMOND TRAVNIK, Slovenska Narodna Podporna Jednota; Rev. M. F[illegible]ENKO, Cleveland; W. MUZIK, President of the Czechoslovak Society of America; and Mrs. MARIE KRAL of the Nat'l Alliance of Czech Catholics.

From the serious and restrained mood of the delegates it was visible they had come for the one purpose of agreeing on a common line of action to be taken to guarantee a speedy end of HITLER and the Axis. There was a notable absence of the usual convention hilarity and abandon.

An International Event

It was a wartime meeting dominated by a wartime grimness. That the deliberations of the congress would have international repercussions was evidenced in the more than thousand telegrams from all parts of the world that reached the congress during the sessions.

One of the wires greeting it was from a Czech group in Teheran, Persia; there were many from Slavic groups in Chile, Argentina, Canada, and throughout America. Soviet writers and scientists and members of the Yugslav government in Kuibyshev wired the congress messages of greetings and good wishes.

The Congress was not only an event significant in the history of America's 15 million Slav-descended citizens but fraught with meaning for the destiny of the more than 200 millions of Slav peoples across the seas engaged in a life-and-death struggle against Nazi enslavers.

For the first time the peoples of the diverse Slavic groups in America were reaching a common understanding on a world-wide issue--a matter that gave delegates a feeling of considerable satisfaction.

Far beyond the brilliantly delivered keynote speeches and the iron note of resolve sounded in the resolutions--all of which raised the assembly to wild cheers of enthusiasm--was the vibrant sense of unity which, given expression by the congress carried to the Slav peoples

throughout the world its message of redoubled efforts to crush HITLER and guarantee a democratic victory for the world.

Keynote--Production for Victory

Production and sacrifice were the keynote motifs of the main address of the congress delivered by LEO KRZYCKI. Reminding listeners that American Slavs occupy a key position in America's war industrial pattern, he called for greater efforts this year to turn the scales of victory in favor of the democracies.

How to safeguard American war production and American morale took up the following sessions which were addressed by Prof. J. J. ZMRHAL, President of the Czechoslovak National Council of America, on fifth-column activities and measures to be taken against them; FRANK N. NISBEY, chairman of the Michigan Defense Savings Program on national morale; ELI OLIVER, of the Labor Division of the War Production Board and GEORGE ADDES, Secretary-Treasurer of the Auto Workers Union on problems facing labor in the war industries. These subjects were treated in further detail in special panel discussions later.

10,000 Hear Hon. Paul V. McNutt

Two thousand plates were served at the banquet tendered the delegates and guests by the Michigan Committee of the American Slav Congress in the Masonic Temple on April 25.

But the climax of the congress was a victory rally in the Michigan State Fair Coliseum where 10,000 persons assembled to hear the Hon. PAUL V. McNUTT, Federal Security Administrator and U. S. Government representative to the Congress who greeted the delegates and drew thunderclaps of applause by his appeal for "more tanks for TIMOSHENKO". "In this first Slav Congress you have shown the world the miracle of American unity," he declared.

A message from President ROOSEVELT was received wishing the Congress success in its work."

XXXXXX
XXXXXX
XXXXXX

FEDERAL BUREAU OF INVESTIGATION
FOIPA DELETED PAGE INFORMATION SHEET

__1__ Page(s) withheld entirely at this location in the file. One or more of the following statements, where indicated, explain this deletion.

☑ Deletions were made pursuant to the exemptions indicated below with no segregable material available for release to you.

Section 552		Section 552a
☐ (b)(1)	☐ (b)(7)(A)	☐ (d)(5)
☒ (b)(2)	☐ (b)(7)(B)	☐ (j)(2)
☐ (b)(3)	☒ (b)(7)(C)	☐ (k)(1)
_____	☒ (b)(7)(D)	☐ (k)(2)
_____	☐ (b)(7)(E)	☐ (k)(3)
_____	☐ (b)(7)(F)	☐ (k)(4)
☐ (b)(4)	☐ (b)(8)	☐ (k)(5)
☐ (b)(5)	☐ (b)(9)	☐ (k)(6)
☐ (b)(6)		☐ (k)(7)

☐ Information pertained only to a third party with no reference to you or the subject of your request.

☐ Information pertained only to a third party. Your name is listed in the title only.

☐ Documents originated with another Government agency(ies). These documents were referred to that agency(ies) for review and direct response to you.

_____ Pages contain information furnished by another Government agency(ies). You will be advised by the FBI as to the releasability of this information following our consultation with the other agency(ies).

_____ Page(s) withheld for the following reason(s): _____

_____

☐ For your information: _____

_____

☒ The following number is to be used for reference regarding these pages:

100-56674-42

XXXXXX
XXXXXX
XXXXXX

XXXXXXXXXXXXXXXXXXXXX
X DELETED PAGE(S) X
X NO DUPLICATION FEE X
X FOR THIS PAGE X
XXXXXXXXXXXXXXXXXXXXX

FBI/DOJ

4-750 (Rev. 12-14-88)

XXXXXX
XXXXXX
XXXXXX

FEDERAL BUREAU OF INVESTIGATION
FOIPA DELETED PAGE INFORMATION SHEET

4 Page(s) withheld entirely at this location in the file. One or more of the following statements, where indicated, explain this deletion.

☒ Deletions were made pursuant to the exemptions indicated below with no segregable material available for release to you.

Section 552		Section 552a
☒ (b)(1)	☐ (b)(7)(A)	☐ (d)(5)
☒ (b)(2)	☐ (b)(7)(B)	☐ (j)(2)
☐ (b)(3)	☒ (b)(7)(C)	☐ (k)(1)
_____	☒ (b)(7)(D)	☐ (k)(2)
_____	☐ (b)(7)(E)	☐ (k)(3)
_____	☐ (b)(7)(F)	☐ (k)(4)
☐ (b)(4)	☐ (b)(8)	☐ (k)(5)
☐ (b)(5)	☐ (b)(9)	☐ (k)(6)
☐ (b)(6)		☐ (k)(7)

☐ Information pertained only to a third party with no reference to you or the subject of your request.

☐ Information pertained only to a third party. Your name is listed in the title only.

☐ Documents originated with another Government agency(ies). These documents were referred to that agency(ies) for review and direct response to you.

_____ Pages contain information furnished by another Government agency(ies). You will be advised by the FBI as to the releasability of this information following our consultation with the other agency(ies).

_____ Page(s) withheld for the following reason(s): _____

_____

☐ For your information: _____

_____

☒ The following number is to be used for reference regarding these pages:

100-56674-95

XXXXXX
XXXXXX
XXXXXX

XXXXXXXXXXXXXXXXXXXXX
X DELETED PAGE(S) X
X NO DUPLICATION FEE X
X FOR THIS PAGE X
XXXXXXXXXXXXXXXXXXXXX

FBI/DOJ

233

FEDERAL BUREAU OF INVESTIGATION

Form No. 1
THIS CASE ORIGINATED AT NEW YORK FILE NO. 100-26200

REPORT MADE AT	DATE WHEN MADE	PERIOD FOR WHICH MADE	REPORT MADE BY
NEW YORK	6-23-48	7/24/47	[redacted] (b)(7)(C)

CONFIDENTIAL

TITLE	CHARACTER OF CASE
AMERICAN SLAV CONGRESS 41797	INTERNAL SECURITY - G; REGISTRATION ACT

SYNOPSIS OF FACTS:

In radio broadcast 7/27/47 ASC official asserted that first ASC Congress held 4/25,26/42, Detroit, Michigan, grew out of Tri-State All Slav Congress meeting in Pittsburgh, Pa., 12/3/38; stressed role of ASC in uniting Slavic groups for "peace, economic security and progress". [redacted]

News disseminated through quarterly magazine "The Slavic American" [redacted]

ALL INFORMATION CONTAINED HEREIN IS UNCLASSIFIED EXCEPT WHERE [redacted]

Class 10/18/80

DATE 5p/GSK/PB 7-15-80

CHARGE & EXP. BY 7-15-80
REASON FOR II. 1-2,4,5
DATE OF REVIEW 7-15-90

ENCL Behind file 9-15-48

APPROVED AND FORWARDED: Edward Scheidt SPECIAL AGENT IN CHARGE

DO NOT WRITE IN THESE SPACES

100-56674-1096 RECORDED - 111

COPIES OF THIS REPORT

5-Bureau (Encs.)
2-Chicago
2-Cleveland
2-Detroit
2-Los Angeles
2-Milwaukee
2-Pittsburgh
2-St. Louis
2-San Francisco
1-Washington Field (Inf.)
1-Newark (Inf.)
1-Boston (Inf.)
4-New York

F B I
34 JUN 25 1948

CONFIDENTIAL

COPIES DESTROYED 11-7-58

U. S. GOVERNMENT PRINTING OFFICE

CC-7-14-

61 SEP 15 1948 ENCLOSURE BEHIND FILE

1095 234

41824

NY 100-26200

[redacted]

(b)(1)
(b)(7)(C)

The first two issues of "The Slavic American", furnished by [redacted] contain the following articles: (b)(1)

Vol. 1, Fall 1947, No. 1

Articles

Henry Wallace, Champion of Peace....	3	..... by Leo Krzycki
Poland's Western Boundaries.....	5	.....by Congressman G. Sadowski
Statement on the Truman Doctrine At Senate Foreign Relations Committee Hearings.....	6	.....By George Pirinsky
As a Veteran Sees It, First in a Series of Articles.....	9	.....by Captain George Wuchinich
Spotlight on the Balkans, Statements on Balkan-Greek Question at U.N. Security Council Hearings.....	20	by Warren R. Austin, U. S. Representative and Andrei A. Gromyko, U.S.S.R. Representative
The Real Bulgaria An Answer to Life Magazine.....	50	.....by Dr. Nissim Mevorah

235

CONFIDENTIAL

Features

Story of the American Slav Congress 10 ...The Record of an Organization
Leo Krzycki,
Fifty Years a Servant of the People 18 .....by Tabitha Petran
One World Flight,
Stop-Over in Moscow..... 34 .....by Norman Corwin
Czechoslovak Sokol in America..... 40 .....The Symbol of a People
We Felt the Heartbeat of New Yugoslavia; The Rebuilding of a Country 43 .....by Zlatko Balokovic
Bright Passage,
A Review of the new book on Czechoslovakia, by Maurice Hindus 47 .....by Misko
Savo Radulovich..... 48 .....Yugoslav Artist
Highlights of Slavic American News.. 52 Notes on Rallies and Conferences
Slavic American Youth Get Together.. 54 .....Youth councils in action

Stories

My American Pilgrimage,
Excerpts from the new novel..... 38 .....by Stoyan Christowe
The Importance of Being Kobotchnick
A story of a Man and His Dog..... 42 .....by Louis Adamic

Vol. 1, Winter 1947, No. 2

Articles

Conspiracy Against Peace..... 5 .....by Louis Adamic
Deportation Laws Hit Slavic Americans..... 13 .....by Abner Green
Analysis of the Marshall Plan.... 22 .....by George Pirinsky
Program and Activities of the American Slav Congress..... 29 .....by George Pirinsky

CONFIDENTIAL

236

Features

Nikola Tesla	3	by Pauline Klopacka
Tribute to a Fighting Senator	9	ASC Testimonial Dinner
The World Youth Festival	10	by Ilona Vlahov
U.S.S.R. Thirty Years After Feudalism	14	by S. Serbuzov
Summary of a Journey	24	by Ella Winter
The Story of Geo Milev	31	by Maria Vladimirova
Prague	32	Europe's New Film Capital
Slav Saga in Pennsylvania	33	by Lyla Y. Slocum Eugene Konecky
American Clergymen See the New Yugoslavia	38	Digest of their Report
Pages from an Artist's Notebook	42	by Alvena Becker
Five Women	44	by Mario Seton

Fiction

Wedding Day	7	by Thomas Bell

[redacted]

CONTINUED

41860

NY 100-26200

CONFIDENTIAL

ENCLOSURES (5) TO BUREAU

[redacted]

b7c
b7D
0/5

Two copies of quarterly magazine "The Slavic American", Winter 1947 issue.

- P E N D I N G -

CONFIDENTIAL

238

XXXXXX
XXXXXX
XXXXXX

FEDERAL BUREAU OF INVESTIGATION
FOIPA DELETED PAGE INFORMATION SHEET

1 Page(s) withheld entirely at this location in the file. One or more of the following statements, where indicated, explain this deletion.

☒ Deletions were made pursuant to the exemptions indicated below with no segregable material available for release to you.

Section 552		Section 552a
☒ (b)(1)	☐ (b)(7)(A)	☐ (d)(5)
☒ (b)(2)	☐ (b)(7)(B)	☐ (j)(2)
☐ (b)(3)	☒ (b)(7)(C)	☐ (k)(1)
_____	☐ (b)(7)(D)	☐ (k)(2)
_____	☐ (b)(7)(E)	☐ (k)(3)
_____	☐ (b)(7)(F)	☐ (k)(4)
☐ (b)(4)	☐ (b)(8)	☐ (k)(5)
☐ (b)(5)	☐ (b)(9)	☐ (k)(6)
☐ (b)(6)		☐ (k)(7)

☐ Information pertained only to a third party with no reference to you or the subject of your request.

☐ Information pertained only to a third party. Your name is listed in the title only.

☐ Documents originated with another Government agency(ies). These documents were referred to that agency(ies) for review and direct response to you.

_____ Pages contain information furnished by another Government agency(ies). You will be advised by the FBI as to the releasability of this information following our consultation with the other agency(ies).

_____ Page(s) withheld for the following reason(s): _____

_____

☐ For your information: _____

_____

☒ The following number is to be used for reference regarding these pages:

100-56674-95

XXXXXX
XXXXXX
XXXXXX

XXXXXXXXXXXXXXXXXXXXXX
X DELETED PAGE(S) X
X NO DUPLICATION FEE X
X FOR THIS PAGE X
XXXXXXXXXXXXXXXXXXXXXX

FBI/DOJ

THE SLAVIC AMERICAN

50¢

Louis Adamic

Thomas Bell

S. Garbuzov

Abner Green

E. Konecky

Alvena Seckar

Marie Seton

Lyla Y. Slocum

M. Vladimirova

Ilene Vlahov

Ella Winter

NIKOLA TESLA - *Poet in Electricity*

ALL INFORMATION CONTAINED
HEREIN IS UNCLASSIFIED
DATE 2-14-95 BY [illegible]

WINTER 1947

240

Nikola TESLA

Whose daring imagination and concrete accomplishments are among the wonders of our age.

By PAULINE KLOPACKA

WHEN Nikola Tesla died in January of 1943 in comparative seclusion in a New York hotel, he owned no more than the few personal possessions that had become dear to him during the 86 years of his life. Yet his estate was so fabulous that its value can never be truly assessed. And his heirs were the men and women of all the world.

What price can be put on the work of a man who brought into being the electric power era? The industrial giant that the U. S. is today rests on the series of brilliant discoveries and inventions in the harnessing and transmission of electricity conceived by Nikola Tesla, who came to this country from the land of the South Slavs when he was 28 years of age.

It was at midnight between July 9 and 10 in 1856 that a son, Nikola, was born to the Rev. Milutin Tesla and Djouka, his wife, in the little Serbian village of Smiljan, in the province of Lika. Now a part of Yugoslavia, it was at that time under Austro-Hungarian rule.

Tesla's father, a Serb, was a priest of the Greek Church, and his mother of a distinguished Serbian family, came from a long line of inventors. Both father and mother gave to the child a valuable heritage and culture developed and passed on by ancestral families that had been community leaders for many generations.

It was at first planned that the son prepare for the priesthood but Nikola would have none of this. Physics and mathematics fascinated him. He would be a teacher of these favorite subjects. But then he switched to electrical engineering and at the age of 25 a graduate of Prague University—earlier training had been obtained at the Graz Polytechnic in Austria—he was set for his first job.

At that time the American Telephone System was brought to Europe and an installation set up in Budapest, where Tesla was a successful applicant for a position.

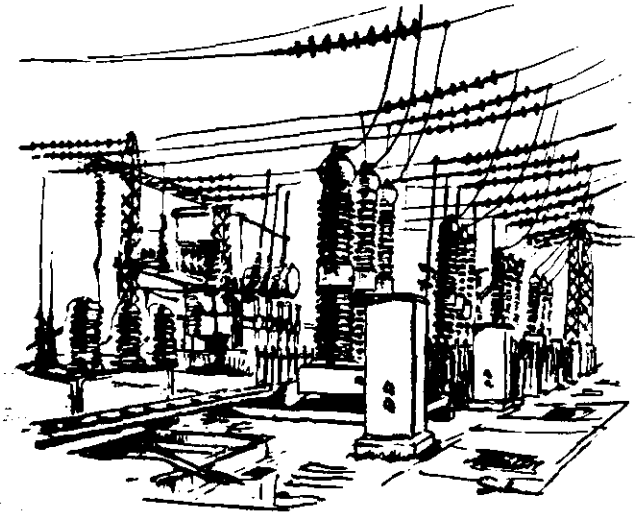

Drawings by Alvena Seckar

THREE years later, in 1884, he was U. S. bound. There were 4 cents in the young immigrant's pocket when he arrived in New York, but that did not disturb him. He had the names of friends. He would soon get to work.

His confidence was well founded, since within a few years he was counted among the ranking scientists of the country, his discoveries bringing in handsome royalties.

It is interesting to note the description of Tesla at this time by his biographer, J. J. O'Neill in the book, "Prodigal Genius": "Tesla was a

spectacular figure in New York in 1891. A tall, dark, handsome well-built individual with a flare for wearing clothes that gave him an air of magnificence, who spoke perfect English but carried an atmosphere of European culture. He was an outstanding personality to all who beheld him." One of his colleagues described him as "immaculately groomed, and of delightful courtesy and charm."

A review of Tesla's work is nothing short of amazing. To quote from J. J. O'Neill's book:

"It was Tesla's invention of the polyphase alternating current system that was directly responsible for harnessing Niagara Falls and opening the modern electric superpower era in which electricity is transported for hundreds of miles to operate the tens of thousands of mass production factories of our industrial system.

"Every one of the tall, Martian transmission lines that stalks across the earth and whose wires carry electricity to distant cities is a monument to Tesla, every dynamo and every motor that drives every machine in the country is a monument to him.

"He discovered the secret of transmitting electric power to the utmost ends of the earth without wires and demonstrated his system by which power could be drawn from the earth anywhere by making a connection to the ground; he set the entire earth in electrical vibration with a generator which sprouted lightning that rivaled the fiery artillery of the heavens. It was a minor portion of this discovery that he created the modern radio system. He planned our broadcasting methods of today 40 years ago when others saw in the wireless only the dot and dash message that might save ships in distress.

"Tesla was an inventor but he was much more than a producer of devices. He was a discoverer of new principles opening many new empires of knowledge which even today have been only partly explored. In a single burst of invention he created the world of power of today.

"He brought into being our electric power era, the rock bottom foundation on which the industrial system of the entire world is builded. He gave us our mass production system for without his motors and currents it could not exist.

"He gave us every essential of current radio. He invented radar 40 years before its use in World War II. He gave us our modern neon and other forms of gaseous tube lighting. He gave us fluorescent lighting. He gave us the high frequency currents which are performing their electronic wonders throughout the industrial and medical world. He gave us remote control by wireless."

Always proud of his national origin, Tesla spoke as follows during his visit to Belgrade in 1892 in answer to a speech of welcome by the city's mayor: "There is something in my which is only perhaps illusory . . . But if I were to be sufficiently fortunate to bring about at least some of my ideas it would be for the benefit of all humanity. If these hopes become one day a reality, my greatest joy would spring from the fact that this work would be the work of a Serb."

Tesla dedicated his life to peace, to lightening the burden of toil from the shoulders of his fellow man. As every scientist who so interprets his function in society, he was stricken when he saw the coming of World War II and his inventions being prepared for destructive purposes. He sought desperately to prevent the war and made available a device which he offered to the world, maintaining that it would make any country, no matter how small, safe within its boundaries. His offer was rejected.

But once the war was an accomplished fact, and when the people's armies rose in defense of their nations in what appeared to be an unequal fight, he did all he could to rally his countrymen to work to the limit in the war effort.

Shortly before his death he wrote as follows to his nephew, M. Sava Kosanovic, now Yugoslav Ambassador to the U. S.:

"President Roosevelt and Donald Nelson, Director of our War Production have repeatedly urged the American people, workers and employers, to meet as fully as possible the goals established for the production of war materials. . . . For that reason, my dear brothers and sisters, as the oldest Serb, Yugoslav and American in the U. S., I am addressing this letter to you, asking you to answer the call of President Roosevelt.

"The achievements of our brothers in the old country are worthy of the spirit which permeates our folklore . . . the fate of the Serbs, Croats and Slovenes is inseparable."

Tesla was not satisfied with his achievements in releasing the earth's energies so that men could work with less backbreaking effort and live more comfortably. The man who could draw up a design for a perfect motor was also concerned with drawing up a plan for a better world. When Tesla read the address of the then Vice-President, Henry A. Wallace, on The Future of the Common Man, he was fired with enthusiasm. The Yugoslav edition of the speech included a preface by Nikola Tesla written in October, 1942:

"Out of this war, the greatest since the beginning of history, a new world must be born, a world that would justify the sacrifices offered by humanity. This new world must be a world in which there shall be no exploitation of the weak by the strong, of the good by the evil; where there will be no humiliation of the poor by the violence of the rich; where the products of intellect, science and art will serve society for the betterment and beautification of life, and not individuals for the amassing of wealth. This new world shall not be a world of the downtrodden and humiliated, but of free men and free nations, equal in dignity and respect for man . . ."

This man, whose work was so advanced of his time that much of it still remains unexplored could have amassed millions, but he was so little interested in personal gain that to save his friend, Mr. Westinghouse, from bankruptcy he tore up a contract which would have brought him $12 millions in royalties. Pressed for funds during the latter part of his life, many of his inventions are lost to the world.

But though he was often short of money he would walk over to Herald Square and feed the pigeons. It was almost a sacred trust, feeding the pigeons twice a day. They had been his personal responsibility through the years, and if he could not be there to do the feeding, a Western Union messenger boy would be hired to do the job in his stead. Often he would forget an important engagement so that he might keep his "date" on Herald Square. The pigeons were a way to relaxation, a note of warmth in an otherwise rigidly disciplined life. He had few friends and never married, since he felt a scientist must keep himself free of personal relationships that would be unduly demanding.

Restless and eager to unravel every possible unknown to the very end of

(Continued on page 49)

GEO MILEV

describes only from the standpo. of his art. . . . In his attitude toward various events in the life around him, which impress him strongly, he does not take sides. He does not praise one and hurt the other; he merely describes everything he sees, describes it with the delicate, sweet colors of poetry. . . ."

Geo was fined 20,000 leva and sentenced to one year in prison. He could not believe that the court could make such a decision. With joking reference to the dullness of "their Honors," he left the courtroom believing that the decision would never be carried out.

He was right. Unable to enforce their decision legally, the government resorted to illegal means.

Next day, May 15, 1925, Geo was kidnapped from his home and killed by underlings of Prime Minister Alexander Tzankoff.

The cultural world of Europe protested Geo's death. Henri Barbusse, of France, visited Bulgaria to investigate the case. In his book "The Murderers" he made reference to the circumstances of Geo's death. Max Reinhardt protested and "regretted the loss of a very gifted theater director." Oskar Kokoshka, in Vienna, recognized the loss of "a precious critic and learned connoisseur of modern art."

Many Bulgarian writers were silent. Fearing for their lives, they did not dare to speak a word for Geo Milev or express regret for his death. The more courageous of them stated that "talent such as Geo's is born only once in a hundred years," that "He was the most cultured Bulgarian," "The most honest and courageous."

THE youth and the common people deeply mourned for Geo. They knew they had lost a sincere friend and teacher. Unable to use the Bulgarian printing presses, they copied his poems by hand and learned it by heart. Bulgarian students abroad printed it in Paris, and in Belgrade. In Prague it was translated into Czech and in Russia into Russian.

A few courageous young people in Bulgaria printed pamphlets about Geo. They were promptly tortured and imprisoned.

We, his family, searched for him for months, but we never learned exactly where and how he was killed.

There were rumors that he had been shot in the mountains, that he had been burned in the furnace of "Public Safety." These measures were used by Bulgarian Fascists long before the world knew of Hitler. Both stories, however, avowed that his spirit was not crushed.

Geo's voice was silenced forever. The murderers triumphed, but they forgot that he who speaks for the freedom of a tormented and deprived people does not die. In today's New Bulgaria, Geo Milev is honored as one of her most cherished sons. Geo's poems are celebrated especially by the youth of today, the heirs of the September Revolution of 1944, which fulfilled his prediction of a decade before that "September will be May."

TESLA

(Continued from page 4)

his life, he read a paper on the occasion of his 80th birthday on the perfection of a tube for atom smashing. As if that were not enough, he also presented a system of interplanetary communication.

Thus the fragmentary story of the life and work of a Yugoslav immigrant who, like so many tens of thousands of his fellow countrymen, left their homeland rather than live as subjects within the Austro-Hungarian empire.

He made a unique contribution to his adopted land, so ideally suited to the full scope of his genius, "the like of which in all *history* could probably be counted on the fingers of one hand."

It is to be hoped that just as he brought electrification to the U. S. in the short span of ten years, his adopted country might assist in the full electrification of the Balkans, reversing its present policy toward New Yugoslavia.

HE AMERICAN SLAV COMMITTEE
of Canton, Ohio
welcomes the new magazine
THE SLAVIC AMERICAN
and projects best wishes for its success. This organ, we know, will be a great contribution to the enlightenment of the homes of American Slavs.

Greetings to the Second Issue
of
THE SLAVIC AMERICAN
and
Best Wishes for Continued Success in the Coming Year
ALL SLAVIC COUNCIL OF NORTHERN CALIFORNIA
739 Page Street, San Francisco, Calif.

GREETINGS FROM
JIM BALANOFF

Greetings from Lodge 3052
American-Russian Fraternal Society, IWO
1010 East Foss Avenue Flint, Mich.

Greetings from
CLUB "YUGO-FORWARD"
Detroit, Mich.

THE STANLEY THEATRE
Presents
The Best Films from the U.S.S.R.
NOW! "THE GREAT GLINKA"
7th Ave. & 42nd St. New York City

Best Wishes for Success to
THE SLAVIC AMERICAN
American Russian Fraternal Society
Lodge 3069
120 Glenmore Ave. Brooklyn, N. Y.

Efficient Service Since 1919
LEON BENOFF
General Insurance Broker
391 East 149th St., New York
MElrose 5-0984
Insurance is cheaper to have than to need

243

FORM NO. 64

Office Men[illegible]dum • UNITED S[illegible] GOVERNMENT

TO : Director, FBI

DATE: April 11, 1949

FROM: SAC, New York

SUBJECT: AMERICAN SLAV CONGRESS;
INTERNAL SECURITY - C
(Bufile 100-56674)

Enclosed are two copies of the Fall, 1948 issue of "The Slavic American", a quarterly, published by the American Slav Congress.

These are being submitted for information only, not for evidence. One copy is being retained in the files of this office.

Encls. 2

[redacted]
100-26200

(b)
(7)
(C)

ALL INFORMATION CONTAINED
HEREIN IS UNCLASSIFIED
2-22-49 SP/RC

~~ENCLOSURE BEHIND FILE~~

-116

EX. 116

RECORDED - 105

INDEXED - 105

100-56674-1168

5 APR 12 1949

FILE

(b)
(7)
(C)

244

CONFID

SLAVIC AMERICAN

a Quarterly

Club Metro Dancers, Chicago

Published by The American Slav Congress

FALL 1948

245

The American Way of Life

"Why Go to War to Keep Others From Having Their Way of Life," asks Adamic

by LOUIS ADAMIC

THE opening lines of the Progressive Party's platform read: "Three years after the end of the Second World War the drums are beating for a third. Civil liberties are being destroyed. Millions cry out for relief from unbearably high prices. The American Way of Life is in danger."

The American Way of Life has been the issue in any American election ever since 1776. Every voter who goes to the polls, votes—intelligently or mistakenly; independently or under the spell of inveterate partisanship—for one or another concept of the American Way of Life.

Of course, various people, living in various circumstances, have various ideas of what constitutes the American Way of Life. I propose to state my ideas of it; also I shall presume to fit those ideas within the frame of the new Progressive Party which must continue to grow from its beginnings in 1948.

As I see the American Way of Life, its principles were born of the American Revolution. They were won in struggle; *nothing* as fundamental and deep-reaching comes easy. They are stated in the Declaration of Independence and the Constitution of the United States. Our job now is to perceive what policies and measures will safeguard the Way against decay and corruption, and will further its growth and evolution to meet successfully the problem of changing times and new conditions. The principles of 1776 are as valid as ever, but life is different today from what it was then. Fortunately growth and change are of the very essence of the American Way.

The first principle of the American Way of Life is the *right to life* itself; and this must be safeguarded against war on the one hand, and on the other against poverty, which in recent decades has taken a far heavier toll than any war in which this nation has ever so far been involved—though the "next war," if we permit it to be drummed up, will reverse the story.

The second principle of the American Way is *liberty* . . . it has always been our slogan and our pride. But we have long been cautioned that its price is eternal vigilance, and we know how to recognize those who have designs on it.

The third principle of our Way is *abundance*. When migrants from Europe first began to settle here, this was a land rich in the gifts of nature; and for all that those gifts have been abused by ignorance and irresponsibility, and particularly by exploiters and monopolists. Our resources are still great enough—if deforestation and erosion are checked in time, and if our mineral resources are properly conserved—to afford abundance, the *good* life, to all the inhabitants of These States.

And a fourth principle of the American Way is *opportunity*.

THE Progressive Party promises to safeguard the *right to life* by avoiding war—always the saddest failure of morality and now the potenial destroyer of human society and the globe itself.

Whether or not we can avoid World War III, I don't know; but I do know this—that if we don't try to avoid it, nothing else is worth trying to do nowadays. It is futile to wonder about the kind of curtains you'll hang up in your living-room . . . futile to write or read books, to go to lectures or to school . . . silly to worry about being called a Red or a Communist, or whatever, or about being hauled up before the fantastic Un-American Activities Committee . . . futile to work at your job, whatever it may be . . . silly to worry about keeping on the good side of whoever can take that job away from you.

War or peace? I don't know; but if we want any sort of future for this country, for the rest of the world, for ourselves and the Russians, for you and me personally, then we'd better work for peace . . . stand up for peace . . . stand up with our new political vehicle, the Progressive Party.

The Progressive Party further proposes to safeguard the *right to life* by abolishing poverty. Cynics, prestitutes, and generally people without hope and vision say this can't be done. They say Henry Wallace is a starry-eyed visionary. We say *it can* be done if we will jealously maintain freedom, bear in mind the limitless capabilities of Americans, and keep the grip of monopoly from arrogating the resources that should serve all, and if we will insist upon the application of the ever more marvelous discoveries and techniques of science for the common good.

The Progressive Party proposes to safeguard *liberty* — not with more lip service, but by adhering fully to the Constitution, including the Bill of Rights and all subsequent amendments, in all their vitality and integrity, and by reviving and enhancing the programs and formulations of Roosevelt's New Deal. The Progressive Party proposes to guard liberty

(Continued on page 26)

LOUIS ADAMIC

Slovenian American author and lecturer, a foremost authority on national groups, he is a prolific writer. Among his works are My Native Land, Dinner at the White House, Two-Way Passage, Nation of Nations, My America. He also edits and publishes a current affairs bulletin, Trends and Tides, issued from his home in Milford, New Jersey.

246

A HALF HOUR OF MUSIC

with

TWO DISTINGUISHED AMERICAN ARTISTS
OF SLAVIC DESCENT

in a unique

Album of Recordings

Now on Sale

ZLATKO
BALOKOVIC
Violinist

IVAN
PETROFF
Baritone

By BALOKOVIC

HYMN TO THE SUN	Rimsky-Korsakoff
CROATIAN RHAPSODY	Lhotka
FOR ONE MOMENT OF JOY	Croatian Folk Song

By PETROFF

LEGEND	Bulgarian Folk Song
PEASANT'S LAMENT	Bulgarian Folk Song
ARIA PRINCE IGOR	Borodin

By BOTH

SONGS MY MOTHER TAUGHT ME	Dvorak
ELEGIE	Massenet

Prize selections for your library long to be cherished and enjoyed

FOUR RECORDS TO EACH ALBUM

$4 the Album

postage prepaid

USE CONVENIENT ORDER BLANK ➔

AMERICAN SLAV CONGRESS
205 East 42nd Street
New York 17, N. Y.

$4 for album of 4 records

I enclose ..... for ☐ album(s)

Name .....

Address .....

City & Zone .....

State .....

(Make checks and money orders payable to
AMERICAN SLAV CONGRESS

The American Way

(*Continued from page 5*)

against that danger which most disturbed the Founding Fathers—the power of the military. And note how all these things are inter-related. Liberty is imperiled by poverty, by monopoly, by war. Every measure which the new party proposes is a measure to safeguard liberty.

By *abundance*, the new party means that our rich land—and our skills, brought here by immigrants from the Old World in the last 300 years—shall produce all that is needed to make the good life available to every law-abiding and industrious man and woman here, and their children, regardless of color, race or religion; and that these fruits of enterprise and labor shall not be so ill-divided that a few are glutted with a surfeit of luxuries while many who toil and sweat must for reasons beyond their control still go "ill-fed, ill-clothed and ill-housed."

The pioneers who first possessed the Atlantic seaboard and later pressed westward through the forests and the prairies, could win abundance by strength and industry, by the wide swing of the axe, the true aim of the flintlock, and the firm hand on the plow. There was *opportunity* galore. Almost any man could get land for the asking or for a few dollars an acre, and become

(*Continued on page 29*)

The American Way

(Continued from page 26)

an independent farmer. Any man could set up a little store in a new community and become a prosperous merchant as the town grew. Almost any man could start a paper, establish a factory or mill, or open a mine, and become an industrialist.

This is no longer true. Millions of square miles have been rendered useless for human use and habitation by irresponsible deforestation and by erosion. The number of family farms dwindles yearly; every day hundreds of independent merchants and small mining, milling and manufacturing companies are forced out of business by the power of monopoly, centered in Wall Street.

The relentless limitation of opportunity, the shrinking of abundance for millions, the violences done to liberty in defiance of the Constitution and in contempt of the tradition that began in 1776, the further threat against freedom in the ominous form of military rule, the denial of life itself to unnumbered victims of poverty, and the grave threat to all our lives in the probability of a war waged with atom bombs and bacteria —these developments, conditions and prospects now imperil the American Way of Life.

The Progressive Party proposes to restore and safeguard and extend that Way—the emphasis is on the word "extend." Nothing in nature stands still, and no more can human economic and social and political institutions. Change is the key principle of the American Way—growth, adaptation, progress. Had it not been for that principle, the USA would not exist—we would not now be debating the decisions made in an election; we would still be colonial subjects, or we wouldn't be here at all.

If we remembered more vividly what daring it took in 1776 to reject monarchy and form a republic, we would have less hesitation in rejecting the National Association of Manufacturers' notions of "free enterprise," and adopting measures more in keeping with today's facts of life. We would not hesitate to defy the greatest power on earth—that of monopoly corporations and cartels, whose agents have lately seized control of the U.S. Government.

Under Henry Wallace's leadership, the Progressive Party offers itself as a medium through which those who love their country and are also in favor of their own rightful individual interests can express themselves politically . . . in 1949 . . . 1950 . . . in 1952, assuming that the "next war," now being drummed up, won't destroy us all before then.

We know now that we have established a firm foundation for the new party under the leadership of Henry Wallace and Glen Taylor. Personally, I was not in this campaign only in reference to this year's election or because I think, as I do think, that Henry Wallace is a great American who should be in the White House in this crucial period. In the main, I was in this campaign because, like Wallace and Taylor, like many other Americans, I became convinced that neither of the old parties is fit to deal with the profound crisis which is coming to a climax in these middle years of the 20th century. I am in this movement because I want to help build a new people's party that will be capable of coping with the crisis now converging upon us and the rest of the world.

LIKE many Americans, I am foreign-born; and every once in a while I hear or read some remark to the effect that I have no right to be doing what I am doing—helping the growth of a new party which hopes to save the peace. Such remarks amuse me. It so happens that I have read rather extensively in American history, not as taught in most schools, but as it really happened; and I am impressed by this fact—that in all crucial or climactic periods in the career of this country, the so-called foreigners played important roles.

The Irish and German elements, for instance, were the big "foreign" groups around 1776, and it was they who became the backbone of General Washington's revolutionary army. The Irish and German elements also furnished the mass support to Thomas Jefferson when he started a new party 150 years ago. Jefferson did not triumph immediately (as Wallace didn't); his supporters stood it with him until he did (as I hope we will

(Continued on page 30)

Greetings From

MARY ANTONIC
BOZO BARANIC
MILO BARANIC
JOHN BEZELJ
PAUL BIAZEVICH
KAY BEGOVICH
FLORENCE FERKICH
GEORGE GELSOVICH
STEVE HROSTI
FRANK KURSOC
LJUBICA LOVRICH
ANTON PESUSICH
ERICA PETRAS
NICK PETRICH
A. PUJATCKY
LUCY LJUBENKO

Lodge 3172, A.R.F.S., Sioux City, Iowa

PETER ZAKUTONSKY
LOUIS KLYM
MARY KLYM
HELEN WONSOWIC
PAUL ROMANOV
MARY ROMANOV
BRANCH No. 14 LEMKO ASS'N, GARY, IND.
BRANCH No. 3295, IWO, CARPATHO-RUSSIANS, GARY, IND.
MILLIE KLYM
MICHAEL KLYM
ANNA SAMOZKA
WALTER IVANZOWICZ

A.S.C. of Newark, N. J.

JOHN J. KASKEVICH, M.D.
530 Summer Ave., Newark

JOHN BENKO
JOHN DOLINAJEC
MICHAEL DROBAN
STEVEN DZUROSKA
STEPHEN HRUSKA
TILLY JANOVITZ
MICHAEL KOLARIK
STEFAN LACKO
JOSEPH MATEJKA
MICHAEL MATEJKA
JOSEPH MEDVECKY
IMRO RIBAR
SHEPERO SHOE STORE
MATEJ STROMKO
STEFA TAL
JOSEPH TURZA
FRANK ZAVARTKAJ
JOSEPH ZILINEK

248

Delegates join in singing the National Anthem.

The American Way

(Continued from page 29)

with Wallace). The same was true again in the period of Andrew Jackson, when American democracy took another long step forward. When Lincoln came along and started a new party, his most steadfast backing came from the numerous new-immigrant groups—Germans, Finns, Poles, Scandinavians and others.

This was quite natural. As newcomers who came here seeking liberty, abundance and opportunity, they had a more acute sense of what America professed, and they took American principles more seriously than many of the old-line Americans who had begun to be matter-of-fact, if not smug, about the country. As newcomers, they were somewhat outside the mainstream of American life. By going behind the cause of Washington, Jefferson, Jackson and Lincoln, they became part of the mainstream. They promoted themselves from second-class citizens to first-class. It was Americanization at its very best. It made history, it enriched the traditions, it integrated the new Americans into the country as a whole.

And it is quite natural, and very fortunate, that many of us in the new-immigrant groups have joined with many old-line Negro Americans, with many white Americans of the earlier immigration waves, with Henry Wallace, in this movement to form a new party and make it competent to deal with the complex problems looming before us. Many of us Slavic Americans already in 1946 and early in 1947, sensed that Henry Wallace was right, and we became part of the growing impulse to form a new party. Regardless of what some of our opponents have said, this fact is strictly and wonderfully in the American tradition. It is part of the Americanization process. It is according to the American Way. We are promoting ourselves from second-class to first-class citizenship. This is resented by some of the Americans of the older strains, the self-styled standard Americans; but don't let that worry you too much. They, too, are being Americanized or re-Americanized as you assume your full rights and duties of citizenship. Americanism has its standards, to be sure; very high standards; but it is not anything rigid or dead; it is alive, vital, open to change and enrichment.

Slavic Americans are part of the whole immense American dynamic which is as yet little understood, and is full of promises and dangers. By coming here, we of the new immigration greatly complicated the American civilization as it was, say, 90 or 100 years ago. Most Slavic immigrants became workers in the great industries, and now their energy is integral with the American scene as a whole. Most immigrants in the last 100 years or so worked hard, many of them too hard at too little pay, and helped to create a complex industrial machine which, lest it overwhelm us, now needs intelligent handling and control. It is our duty to take an active interest in finding an approach to the immense industrial, economic and social problems facing us: for, let me repeat, our coming here and our labors in the last several decades have helped to create these problems.

Most of us who came over were ordinary people. But in the new immigration waves were also some extraordinary human beings. There was, for instance, a man of genius, Nikola Tesla. His numerous inventions now are one of the most important factors in the immense American industrial scheme which throbs with the high promises that pulsated through Tesla's brain, but which are also full of dangers. Personally, as one who happens to be proud of being of the same background as was Tesla, I feel it is my special duty to help do what is necessary to insure that Tesla's work, as well as the work of ordinary men and women, will go into the fulfillment of promises in our American Way of Life, rather than contribute to the catastrophe now threatening.

IN 1942, Henry Wallace made his famous speech on "The Century of the Common Man." Nikola Tesla, who was a very uncommon man, publicly endorsed that speech in glowing terms. And I think that I speak not only for myself, but also for Tesla, when I assert that the American Way of Life is not the way of incredibly greedy monopoly profits and prohibitive prices for the necessities of life. Look at this picture: Millions of men in their best years who fought and suffered, many of whom will carry greater or lesser disabilities to their graves—veterans to whom we said "Nothing is too good for you"—are unable to secure homes of minimum decency and convenience. Their families cannot be adequately fed with meat at 70¢ to $1.20 a pound. Whatever wage increases they may secure

(Continued on page 32)

249

comments from our readers

Dear Editor:

Our small club of eight members, from a small mining community in Pennsylvania, until recently was known as the Rural Ridge Busy Knitters Club. We are now a chapter of the Congress of American Women.

We have only fifteen dollars in our treasury and out of this we are sending you $10, because of our desire to contribute to the work you are doing.

May it help in some way towards *The Slavic American's* fight for freedom and democracy.

Anna Tominac, Pres.
Anne Kondrick, Sec'y.
Julia Pukavina, Treas.
Rural Ridge, Pa.

Dear Editor:

I send you post haste my renewal subscription for *The Slavic American.*

In all sincerity—keep up the good work for you are doing an excellent job in the struggle against fascism.

I never miss an issue.

Rev. Eliot White
New York, N. Y.

Dear Editor:

How about more profiles on Slavic American writers and scientists like Nikola Tesla? The field for this type of material is virtually endless.

Anton Markulic
Los Angeles, Calif.

(See page 13—Ed.)

The American Way

(Continued from page 30)

through their unions, increased living costs still stay one jump ahead of them.

We of the Progressive Party say this is not the American Way of Life. And "we" includes great numbers of ex-GIs and young workers, old-stock Americans and immigrants: Americans of all breeds and backgrounds.

If all Americans are employed at better than mere-existence wages or are engaged in business or professional activities at a reasonable compensation; if all Americans are well clothed and fed; if all Americans are secure instead of uncertain and worried, as the majority are today, there will be no war. The Hearsts, Peglers, Forrestals and Bullitts won't get to first base in trying to propagandize us into fear and hate of other countries which are emerging out of backwardness and, because of their different historic experiences, are attempting a different system for providing benefits and opportunities for their citizens.

Why go to war to keep others from having their way of life? We in the Wallace movement, in the Progressive Party, insist on peace in order to keep the American Way of Life. If our approach prevails in time, there will be no war and Russia will be no danger to America, to the American Way of Life. The chief danger to this country and to our institutions under the Constitution lies in our present high-level politicians and wire-pullers who have raised the cry of Communism and of the Russian menace as a smokescreen to neutralize any possible militancy on the part of labor, to scare us in the new-immigrant groups, to frighten the Negroes, and to confuse the people generally so they won't be able to figure out who or what is responsible for high living costs. Henry Wallace clearly means what he says; so he and his active supporters were smeared, lest too many voters vote for him and in their own interest.

The old-line politicians and wire-pullers and their propagandists are not afraid of Communism, but of American democracy and of the American people; of the people getting wise to themselves and demanding a return to the American Way of Life—the Way defined in the Declaration of Independence and the Constitution of the United States.

That's what *they* are afraid of . . . that's what *we* Progressives stand for . . . and that's what will prevail if you and I, all of us and all of our neighbors wherever we come from, do everything in our power to build the new party that has come into being around the personality and political philosophy of Henry Wallace. We, all of us, will have to do all we can in this post-election period to make of the Progressive Party a party capable of saving the country and helping to bring about a world in which the American Way of Life will include not warlike antagonism, but constructive interest in the ways of life in other countries.

250

SECRET

FEDERAL BUREAU OF INVESTIGATION

Form No. 1
THIS CASE ORIGINATED AT CINCINNATI, OHIO

NY FILE NO. 100-27583 MBJ

REPORT MADE AT	DATE WHEN MADE	PERIOD FOR WHICH MADE	REPORT MADE BY
NEW YORK CITY	11/13/43	10/6,7, 25-28/43	[redacted] (b)(7)(C)

TITLE [redacted] (b)(7)(C) 0/S

CHARACTER OF CASE: SECURITY MATTER - C.

SYNOPSIS OF FACTS: (S) [redacted] (S)

(b)(7)(C)
(b)(7)(D)
0/S

APPROPRIATE AGENCIES AND FIELD OFFICES ADVISED BY ROUTING SLIP(S) OF CRS DATE 9/16/82

CONTAINED ... UNCLASSIFIED ... WHERE SHOWN OTHERWISE

Ice INS - Detroit
FNC 2-17-49
L-6-59
R-367

IES DESTROYED

- R U C -

REFERENCE: Bureau File #100-118061
Report of Special Agent [redacted] dated (b)(7)(C)
July 17, 1943 at Cincinnati, Ohio.

DETAILS: At New York, N. Y.

This investigation is predicated upon a request in

DECLASSIFIED ON 9-17-87
BY 3042 pwt/EAn
appeal # 87-0499

Class. & Ext. By JP-1 GSR/RDD
Reason - FCIM II, 1-2.4.2 2+3
Date of Review 7/30/92 7/30/82

APPROVED AND FORWARDED: E. E. Conroy SPECIAL AGENT IN CHARGE

DO NOT WRITE IN THESE SPACES

100- 118061 - 47

RECORDED & INDEXED

75

30 NOV 16 1943 (b)(7)(C) [redacted]

COPIES OF THIS REPORT
5 - Bureau
4 - Cincinnati (2-USA, Dayton) (#100-4083)
2 - New York

SECRET

7—2021

251

SECRET

NY 100-27583

reference report that indices of the New York office be checked against the names of the persons [redacted] (b)(7)(C)

SAVA KOSANOVICH first came to the attention of the Bureau in January, 1943, after the death of NIKOLA TESLA, one of the world's outstanding scientists in the electrical field. During his lifetime, TESLA conducted many experiments in connection with the wireless transmission of electrical power and just prior to his death, was interested in what is commonly called the "death-ray". (S) U

The notes and records of TESLA's experiments and formulae, together with designs of machinery necessary for their operation, were reported to be among TESLA's personal effects, after his death. (S) U

It was reported that KOSANOVICH claimed to be a nephew of TESLA, and he attempted to secure possession of TESLA's personal effects, and hired a private locksmith to gain access to TESLA's possessions. The Bureau was interested because of the supposedly vital importance of TESLA's inventions and the desire to keep them out of enemy hands, as one informant maintains that KOSANOVICH was pro-Axis in his sympathies. The matter was later handled as an alien enemy, custodial detention matter and no further investigation conducted by this office. (S) U

The Bureau advised by letter of January 21, 1943, that its files revealed confidential information concerning NIKOLA TESLA and his inventions and advised that one NICOLA TESLA, who might be identical with NIKOLA TESLA, made a speech in Springfield, Massachusetts on July 4, 1922 under the auspices of the Friends of Soviet Russia. (S) U

(S) [redacted] (S) U (b)(7)(C)

(S) U

SECRET

252

STANDARD FORM NO. 64

Office Memorandum • UNITED STATES GOVERNMENT

TO : MR. TOLSON

DATE: Jan. 30, 1951

FROM : L. B. NICHOLS

SUBJECT: [redacted]

(b)(7)(c)

ALL INFORMATION CONTAINED HEREIN IS UNCLASSIFIED DATE 2-22-89 BY SP1AGCom #241860

Tolson
Ladd
Clegg
Glavin
Nichols
Rosen
Tracy
Harbo
Belmont
Mohr
Tele. Room
Nease
Gandy

[redacted] called yesterday and said he would be in town for the next two or three days and wanted to see me. I told him I would be glad to see him late yesterday or today at his convenience. He is coming in today at 2:30 p.m.

I asked him if there was anything special which would require my doing any checking. He stated there were two things he wanted to discuss.

1. The case of Nicola Tesla and Abraham A. Spanel, President of International Latex Corporation, [redacted]

Our files reflect that Nicola Tesla was one of the world's outstanding scientists and in fact designed the generators installed at Niagara Falls. He died in New York on January 7, 1943, and is supposed to have left details and plans for a so-called death ray. [redacted]

(b)(7)(c)

Our files also reflect that Colonel Erskine of Military Intelligence called us on January 9, 1943, advising that Tesla had died, that A. Spanel had communicated with the War Department regarding this death, that Tesla had a nephew named Sava Kosanovich who had taken possession of Tesla's papers and Spanel thought the papers might be used against our Government.

We made an immediate inquiry in New York and the first report was that Kosanovich and others entered Tesla's room with the aid of a locksmith, broke into a safe containing some of Tesla's valuable papers including formula.

Coincident with this, on January 8, 1943 L. M. C. Smith called Mr. Tamm regarding the death of Tesla and Smith stated he was talking to the Alien Property Custodian about seizing these items.

We interviewed Spanel who expressed concern over Tesla's effects and Spanel stated that Kosanovich had turned over the effects of Tesla to the Alien Property Custodian. Spanel further stated the day before Tesla died, he tried to get in touch with the War Department to make available certain patents.

SE 2 1/00 - 346930-1

5 [redacted] 4 1951

RECORDED - 18

MAR 2 1951

COPIES DESTROYED

R94 JUL 27 1962

EX. - 8

INDEXED - 18

[redacted]

(b)(7)(c)

253

[redacted] (b)(7)(C)

In 1945, we talked to a Private Bloyce Fitzgerald, who stated he had been associated with Tesla, and that the Army believed that Tesla's "death ray" is the only defense against atom bombs.

It was very clear we had no responsibility for Tesla's effects, that the Alien Property Custodian seized them and we learned later that Naval authorities made microfilms of all his papers.

Kosanovich communicated with the Bureau on March 29, 1950, and under date of April 3, 1950, in response to his request for the microfilms of the papers of Tesla, who was a relative of Kosanovich, we advised Kosanovich that this Bureau had never been in possession of Tesla's papers.

[redacted] (b)(7)(C) (b)(7)(D)

Senator [redacted] furnished the Bureau five communications received from a [redacted] which pertained primarily to Abraham Spanel. This individual mentioned the FBI at length in these communications, pointing out that Mr. Foxworth had been called in on the Tesla case but was killed shortly thereafter. He further stated that he was associated with Fitzgerald and as such came in touch with Tesla. He stated the FBI investigated this matter but their hands were tied, that there was nothing the FBI could do as they had been stopped from a higher level, that [redacted] the FBI Agent he dealt with, resigned and requested never to discuss the matter with him again, that he had a wife and family to consider and that the last hope was Congress. These communications were furnished to the Department on September 19, 1950. (b) (7) (C)

[redacted] (b)(7)(C)

[redacted] (b)(7)(C)

We did have an Agent, [redacted] who entered on duty [redacted] resigned [redacted] The file does not indicate that we have ever interviewed [redacted] on the basis of [redacted] allegations.

I think we should see what specifics [redacted] wants. I think we can tell him on the Tesla papers that when they were reported to us, the Department stated that the Alien Property Custodian was going to seize the papers and that we learned Spanel had called the War Department about the papers falling into the wrong hands. [redacted] (b)(7)(C)

Right. H.

I agree. H.

Why wasn't he interviewed?

H. 3 -

255

STANDARD FORM NO. 64

Office Memorandum • UNITED STATES GOVERNMENT

TO : D. M. Ladd

FROM : E. G. Fitch

SUBJECT: [redacted] (b)(7)(C)

INTERNAL SECURITY - R

DATE: August 30, 1946

Mr. Tolson
Mr. E. A. Tamm
Mr. Clegg
Mr. Coffey
Mr. Glavin
Mr. Ladd
Mr. Nichols
Mr. Rosen
Mr. Tracy
Mr. Carson
Mr. Egan
Mr. Gurnea
Mr. Hendon
Mr. Pennington
Mr. Quinn Tamm
Mrs. Room
Mr. Nease
Miss Beach
Miss [illegible]

Mr. Lyon of the State Department informed Mr. Roach that he obtained a note from Colonel Grombach, Special Intelligence, War Department concerning the above mentioned individual. Mr. Lyon was of the opinion that the information supplied by Colonel Grombach may be of interest to the Bureau.

The information as obtained from Colonel Grombach by Mr. Lyon is quoted as follows:

NR [redacted] (pronounce: [redacted] and according to common saying his mistress, arrived apparently together with or shortly after [redacted] It is supposed [redacted] Nicolas Tesla the well known scientist, residing in Cleveland, Oh., (probably American citizen) [redacted]

see [redacted] (b)(7)(C)

(b)(7)(C)

RECOMMENDATION

It is suggested this memorandum be referred to the Internal Security Section for its information.

(b)(7)(C)

[redacted]

(b)(7)(C)

RECORDED & INDEXED 206

SE 26

100-348245-1

F R I

JAN 14 1947

53 JAN 23 1947

EX-16

(b)(7)(C)

5-[redacted]

256

FD-72
(1-10-49)

FEDERAL BUREAU OF INVESTIGATION

FORM NO. 1
THIS CASE ORIGINATED AT WASHINGTON FIELD

SECURITY INFORMATION - CONFIDENTIAL

REPORT MADE AT	DATE WHEN MADE	PERIOD FOR WHICH MADE	REPORT MADE BY
WASHINGTON, D. C.	JUN 1 1952	5/9,10,13,16,26/52	[redacted] SA

TITLE		CHARACTER OF CASE
[redacted] (b)(7)(C)	FOI/PA # 291860 APPEAL # CIVIL ACTION # REQUEST # 12,356	ESPIONAGE - R (b)(1)(c)

SYNOPSIS OF FACTS: DATE 2-16-89 [illegible] 6cm SI is [redacted] (b)(1)

2-16-89
Classified by SP1AAC4pn
Declassify on: OADR
291860

ALL INFORMATION CONTAIN
HEREIN IS UNCLASSIFIED
EXCEPT WHERE SHOWN
OTHERWISE

ICC by R/S as collected by Special to SIS

State OJH 7-11-52.

[redacted] (b)(1)(c)

Subject in interview and signed statement says [redacted]

(b)(1)(c)
(b)(7)(D)

Accompanied [illegible] by copy by [illegible] to AMEMB Nicosia 7-17-52 memo

photocopy

AGENCY OSI DIST OFF 4
REG. REC'D. 11-13-52
REPT. FORW. 12-1-52
BY [redacted]

DETAILS: AT WASHINGTON, D. C.: Re: [redacted] (b)(3)(A) (b)(1)(c) (b)(1)(s)

APPROVED AND FORWARDED:	SPECIAL AGENT IN CHARGE	DO NOT WRITE IN THESE SPACES
		100-356557-99 RECORDED - 19
		INDEXED 19
		JUN 26 1952 10 (b)(7)(c) SECRET

COPIES OF THIS REPORT
(6) - Bureau (100-356557)
1 - San Francisco (100-29336)(Info)
1 - Los Angeles (65-5203)(Info)
1 - New York (65-14842)(Info)
3 - Washington Field (100-19816)
E 49

E 9 AUG 1 1952

PROPERTY OF FBI - This confidential report and its con[illegible] you by the FBI and are not to be distributed outside of agency to w[illegible]

257

SECRET

[redacted]

(b)(7)(C)
(b)(7)(D)

INTERVIEW OF THE SUBJECT

(b)(7)(D) [redacted] was interviewed at the Washington Field Office by SA [redacted] and the reporting Agent, on May 9, 10, and 13, 1952, and by [redacted] and the reporting Agent, on May 26, 1952. (b)(7)(C)

History Prior to Entering United States

(b)(7)(D)

[redacted]

(b)(7)(C)

SECRET

258

[redacted]

Acquaintanceship with Officials in the Yugoslav Government

[redacted] admitted at this time he was interested in Yugoslav matters, Yugoslav progress in engineering, and their advances in equipment. He said he was also desirous of making the acquaintance of NIKOLA TESLA, who was an outstanding Yugoslav scientist and one of the founders of Westinghouse.

[redacted] (b)(2)(C)(b)(7)(D)

[redacted] He said KOSANOVIC was not a great

[redacted]

SECRET

administrator, but he has considerable respect for him in many ways. He believes that KOSANOVIC emphasized to the Yugoslav government that he (KOSANOVIC), would be especially effective as Ambassador because he was a nephew of TESLA (mentioned above) and a friend of Mayor LA GUARDIA, and other influential persons in this country.

[redacted]

(b)(7)(D)

[redacted]

SECRET

260

XXXXXX
XXXXXX
XXXXXX

FEDERAL BUREAU OF INVESTIGATION
FOIPA DELETED PAGE INFORMATION SHEET

2 Page(s) withheld entirely at this location in the file. One or more of the following statements, where indicated, explain this deletion.

☒ Deletions were made pursuant to the exemptions indicated below with no segregable material available for release to you.

Section 552		Section 552a
☒ (b)(1)	☐ (b)(7)(A)	☐ (d)(5)
☐ (b)(2)	☐ (b)(7)(B)	☐ (j)(2)
☐ (b)(3)	☐ (b)(7)(C)	☐ (k)(1)
_____	☐ (b)(7)(D)	☐ (k)(2)
_____	☐ (b)(7)(E)	☐ (k)(3)
_____	☐ (b)(7)(F)	☐ (k)(4)
☐ (b)(4)	☐ (b)(8)	☐ (k)(5)
☐ (b)(5)	☐ (b)(9)	☐ (k)(6)
☐ (b)(6)		☐ (k)(7)

☐ Information pertained only to a third party with no reference to you or the subject of your request.

☐ Information pertained only to a third party. Your name is listed in the title only.

☐ Documents originated with another Government agency(ies). These documents were referred to that agency(ies) for review and direct response to you.

_____ Pages contain information furnished by another Government agency(ies). You will be advised by the FBI as to the releasability of this information following our consultation with the other agency(ies).

_____ Page(s) withheld for the following reason(s): _____

_____

☐ For your information: _____

_____

☐ The following number is to be used for reference regarding these pages:

_____

XXXXXX
XXXXXX
XXXXXX

XXXXXXXXXXXXXXXXXXXXXX
X DELETED PAGE(S) X
X NO DUPLICATION FEE X
X FOR THIS PAGE X
XXXXXXXXXXXXXXXXXXXXXX

FBI/DOJ

Report Form
FD-263 (5-22-55)

FEDERAL BUREAU OF INVESTIGATION

Reporting Office	Office of Origin	Date	Investigative Period
WASHINGTON FIELD	BUREAU	3/28/60	2/18-3/15/60

TITLE OF CASE

[redacted] (b)(7)(C)

Applicant, Pan American Union,
Washington, D. C.

Report made by: [redacted] (b)(7)(C)

Typed by: mjr

CHARACTER OF CASE

LOYALTY OF EMPLOYEES OF THE UNITED NATIONS AND OTHER PUBLIC INTERNATIO ORGANIZATIONS

Synopsis

REFERENCE

Bulet dated 2/15/60;
Bu airtels dated 2/25 and 3/10/60;
Seattle airtel dated 2/26/60;
Baltimore airtels dated 2/27 and 3/4/60;
Norfolk airtel dated 3/1/60;
San Francisco airtel dated 3/3/60;
New York airtels dated 2/26, 3/3,4,10/60;
Chicago airtel dated 3/5/60;
Springfield airtel dated 3/8/60;
New Haven airtel dated 3/9/60.

DO TO: 5-3-1
REQ. REC'D 3/1
MAR 14 1960
ANS. [redacted]
BY:

(b)(7)(C)

- P -

2-21-89 SP/AGGUM

291860

Approved

Special Agent In Charge

Copies made:

6 - Bureau (138-4457) (Enc 6)

1 - Washington Field (138-4085)

Do not write in spaces below

138-4457-83

MAY 24 1960

[redacted]

(b)(7)(C)

cc CSC

[redacted]

Property of FBI - This report is loaned to you by the FBI, and neither it nor its contents are to be distributed outside the agency to which loaned

☆ U. S. GOVERNMENT PRINTING OFFICE: 1955 O—344750

262

204 (Rev. 3-3-59)

CONFIDENTIAL

UNITED STATES DEPARTMENT OF JUSTICE
FEDERAL BUREAU OF INVESTIGATION

SECRET

Copy to:

Report of: [redacted] Office: Washington, D. C.
Date:

Field Office File No.: 138-4085 Bureau File No.: 138-4457

(b)
(7)
(c)

Title: [redacted]
Applicant, Pan American Union,
Washington, D. C.

2-21-89
Classified by SPIA [illegible]
Declassify [illegible]
291860

Character: LOYALTY OF EMPLOYEES OF THE UNITED NATIONS AND OTHER PUBLIC INTERNATIONAL ORGANIZATIONS

Synopsis:

[redacted]

(b)
(1)
(b)
(7)
(c)

[redacted] has been interviewed on various occasions [redacted]

(b)
(7)
(D)

- P -

CONFIDENTIAL

SECRET

This document contains neither recommendations nor conclusions of the FBI. It is the property of the FBI and is loaned to your agency; it and its contents are not to be distributed outside your agency.

263

[redacted] (c)

[redacted] (b) (1)

(c)

INTERVIEWS WITH [redacted]

On June 7, 1947, [redacted] was interviewed by SAs [redacted] and [redacted] of the Chicago Office.

[redacted] (b) (7) (D)

[redacted] (b) (7) (C)

(b)(7)(C) [redacted]

[redacted] admitted at this time he was interested in Yugoslav matters, Yugoslav progress in engineering, and their advances in equipment. He said he was also desirous of making the acquaintance of NIKOLA TESLA, who was an outstanding Yugoslav scientist and one of the founders of Westinghouse.

[redacted] He said KOSANOVIC was not a great administrator, but he has considerable respect for him in many ways. He believes that KOSANOVIC emphasized to the Yugoslav government that he (KOSANOVIC), would be especially effective as Ambassador because he was a newphew of TESLA (mentioned above) and a friend of Mayor LA GUARDIA, and other influential persons in this country.

[redacted]

(b)(7)(C)

(b)(7)(D)

involvement in the seizing of Nikola Tesla's research papers and other documents and scientific instruments after his death on January 7, 1943.

They both explained that Tesla was a scientific genius and experimenter who was born in Yugoslavia of Serbian parents on 7/10/56, went to school later in Gratz, Austria, Prague, Czechoslovakia and Paris, France. He immigrated to the U.S. in the early 1880's, worked for Thomas Edison's laboratory for a couple of years, then started his own lab after being paid $1 million dollars for rights to his patents on his polyphase systems of alternating current dynamos, which lead to the harnessing of Niagra Falls for producing electricity and then the power system of the whole country. He was naturalized in 1889. He predicted wireless communication (radio). His later experiments in Colorado and elsewhere lead to his producing artificial lightning in the millions of volts. He also had patents on the concept of neon and flourescent lights, but he later made little money on his later inventions, although he continued to do experiments leading to devices of great potential worth, which he never patented. He became more reclusive in his later years, living in various hotels in New York City. In the 1930's he claimed he had developed the concept and method of building a "death ray", which could destroy planes at many miles distant, for defending America. Also, there are report of resonance machines or devices whereby he could shake one or many large city buildings from some distance away.

Both [redacted] and [redacted] said that Tesla donated "some" of his papers (or copies thereof) to the Tesla Institute in Belgrade, Yugoslavia; set up in the 1930's in his honor by their government. Biographies on Tesla claim that either the custodian of Alien Property and/or the FBI seized his papers and other personal effects, including a safe or safes, and other property immediately after his death in 1943. This is elaborated on in the enclosed copies of certain pages of Margaret Cheney's book, "Tesla: Man Out of Time". (b)(1) (c)

[redacted] said that after World War II Tesla's papers were shipped to the Tesla Institute in Belgrade, Yugoslavia, by his nephew, Sava Kosanovic, who had become Tito's Ambassador to the U.S. There were reports that some microfilming of Tesla's papers by government agents while they were still in storage in New York under Kosanovic's custody.

Also, the Soviet Union has allegedly had access to some of Tesla's papers, possibly in Belgrade and/or else where, which influenced their early research into directed energy weapons, and Butler feels access to much of Tesla's papers on lightning, beam weapons and/or "death rays" would give him more insight into the Soviet beam weapons program. This is Butler's area of expertise and responsibility. He has been unable to locate any Tesla papers or copies of same in the classified or unclassified libraries at WPAFB. However, there are reports that some portions of them were shipped by the Custodian of Alien Property Office in Washington, D.C. to a technical research lab at WPAFB, possibly the "Equipment Lab", now closed for some years or reorganized into another organization.

[redacted] and [redacted] are both desirous of learning the locations of such papers of Tesla as now exist in the U.S. for both intelligence and research purposes. Therefore, [redacted] would like to examine FBI files relating to Nikola Tesla and possibly any on Sava Kosanovic, his nephew who received the bulk of his papers after Tesla's death, and may possibly have been the subject of FBI investigation.

[redacted] travels to the Washington, D.C. area on FTD business periodically and can review FBI files at FBIHQ relating to Tesla and Kosanovic.

REQUEST OF THE BUREAU

The Bureau is requested to conduct full indices checks on both Nikola Tesla and Sava Kosanovic.

Should there be such files at FBIHQ, as well as at New York, it is requested that Bureau consider granting the above [redacted] of FTD, official access to same, in the interest of national security.

LEADS

NEW YORK

AT NEW YORK, NEW YORK

Will conduct same indices check as requested of Bureau and advise the Bureau and Cincinnati of results and confirm such files and references still exist there.

135

CI [[redacted]] (S) (b)(1)

CINCINNATI

AT DAYTON, OHIO

Will maintain contact with [redacted] and (b)(7)(c)
[redacted]

"A VISIONARY GENIUS AS FERTILE AS ANY IN THE MODERN HISTORY OF SCIENCE...."

Flamboyant, eccentric, almost supernaturally gifted, had he been born today he would still be ahead of his time. Called a madman by some, a genius by others, and an enigma by nearly everyone, Nikola Tesla was perhaps the greatest inventor the world has ever known.

He was a trailblazer who created astonishing, world-transforming devices, often without theoretical precedent. It was Tesla who harnessed the alternating electrical current we use today... Tesla who actually invented radio... Tesla who invented fluorescent lighting and the incredible bladeless turbine. He introduced us to the fundamentals of robotry and computer and missile science, which continue to create and transform the future.

This fascinating new biography, acclaimed by American Scientist as "excellent... a significant contribution to the recent history of science," is a riveting journey into the mind of the nineteenth-century wizard who was Edison's enemy, Mark Twain's friend, J. P. Morgan's client, and mentor to many of the twentieth-century's most famous scientists.

MARGARET CHENEY is a science writer and author of two other nonfiction books. She lives in California.

*The Sunday Times of London

0 39077
71009 00495
ISBN 0-440-39077-X

MARGARET CHENEY

A visionary genius, his discoveries radically changed—and continue to change—the world we live in. "A dramatic and poignant portrait." —Discover

TESLA: MAN OUT OF TIME

Includes eight pages of rare photographs

DELL $3.95

137

The ill-fated Wardenclyffe tower built in 1901–03. It was intended for radio broadcasting and wireless transmission of power across the Atlantic. (Courtesy L. Anderson, after photo by Lillian McChesney)

An artist's rendering of Tesla's concept of the war of the future. The towerlike structures (based on the intended final form of the Wardenclyffe tower) are directing remote-controlled defenses against robot attackers. As Hugo Gernsback wrote in *Science and Invention*, where this illustration appeared, "Machines only will meet in mortal combat. It will be a veritable war of Science." (Gernsback Publications, Inc.)

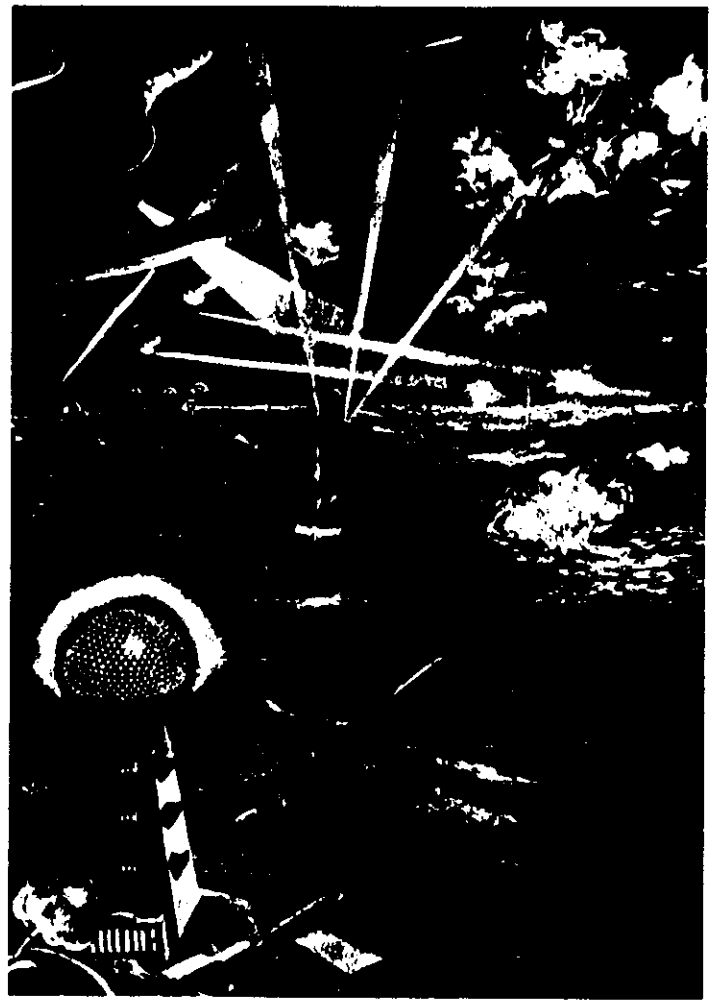

A trio of scientific greats: Albert Einstein, Nikola Tesla, and Charles Steinmetz, as they appeared in 1921 in a visit to the RCA transoceanic station at New Brunswick, N.J. At the time, Tesla was deeply involved in his patent dispute with Marconi. Only after his death would the U.S. Supreme Court uphold Tesla's claim to be the true father of radio. (RCA)

Tesla in his laboratory, 1898. The device shown is an unconnected coil illustrating the action of two resonating circuits of different frequencies—today one of the basic circuits used in computers. The pressure at the end of the coil facing the viewer (illuminated by streamers) is approximately one half million volts. (Courtesy L. Anderson)

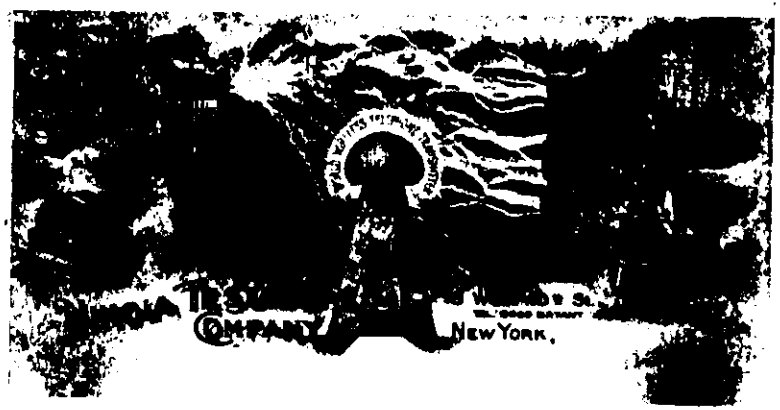

The letterhead of Tesla business stationery recalls some of his more important inventions. In the center is the Wardenclyffe tower as it was intended to look when finished. (Courtesy L. Anderson)

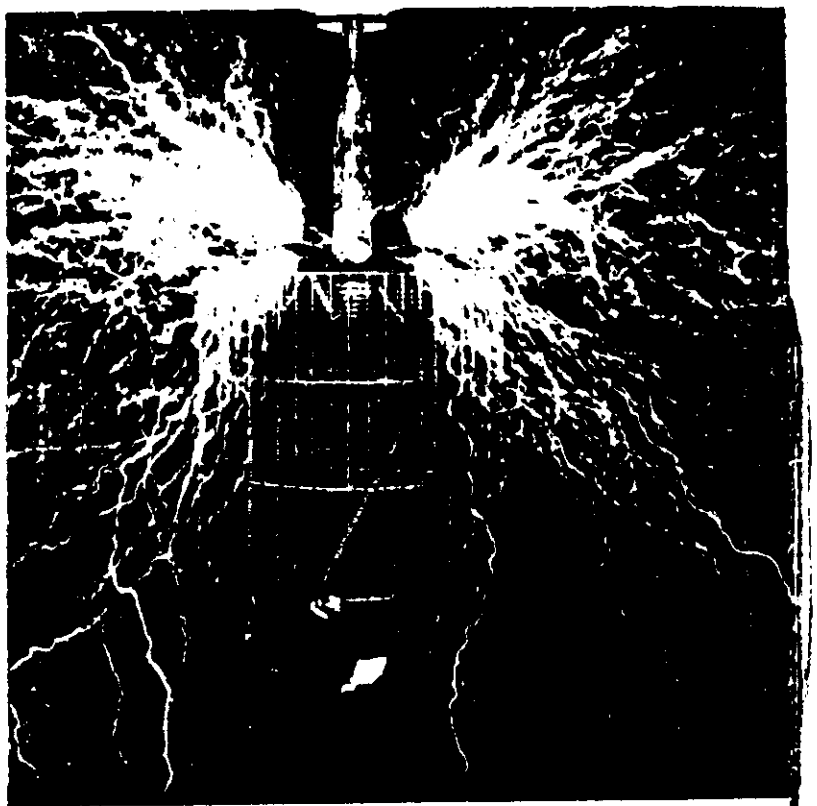

Discharge of several million volts cascading around Tesla in his Colorado Springs laboratory. The roar that accompanied such discharges could be heard ten miles away. (Burndy Library)

of low frequency, and would yield sinusoidal and continuous oscillations like those of an alternator.

"Taken in the narrowest significance of the term, however," Tesla wrote, "it is a resonant transformer which, besides possessing these qualities, is accurately proportioned to fit the globe and its electrical constants and properties, by virtue of which design it becomes highly efficient and effective in the wireless transmission of energy. Distance is then absolutely eliminated, there being *no diminution in the intensity of the transmitted impulses*. It is even possible to make the actions *increase with the distance from the point* according to an exact mathematical law."[5]

Once this powerful equipment was built and the inventor began testing he was able to emulate the electrical fireworks of even the wildest mountain storms. When the transmitter was operating, lightning arresters in a twelve-mile radius from his station were bridged with continuous fiery arcs, stronger and more persistent than those produced by natural lightning.

For the first time he kept a careful daily diary in which he recorded every aspect of his research. And because visual effects were useful as well as thrilling, he devoted many hours to photographic experiments.

The equipment Tesla was perfecting would, he hoped, one day be adaptable for commercial use. But first, thousands of observations and delicate adjustments had to be made. He no longer trusted his legendary memory to store such a volume of information. His daily notes referred constantly to experiments that had failed to turn out as expected, and he would ask himself why. This process was at sharp variance with the one he claimed to have used throughout his earlier life. Now middle-aged, he may have felt his memory waning slightly. Certainly he felt driven by the pressures of his self-imposed deadline.

In his Colorado journal his lifelong fascination with visual phenomena is underscored. The flashing lights that he had always experienced on the screen of his mind were dramatically externalized, and his descriptions, among the mass of mathematical formulas, are detailed, loving, almost erotic in their lingering portrayal of the colors and grandeur of his Colorado electrical storms.[6]

Nights when experiments were being made with the magnifying transmitter the prairie sky exploded with sound and color. Even the earth seemed alive and the crash of thunder from the spark gap could be heard for miles. Butterflies were sucked into the vortex of the

28

Death and Transfiguration

The new government of King Peter, with broad popular support, confronted the Germans and refused to ratify the compromise agreement that had been made with Hitler by Prince Paul. Almost at once reprisals began.

On Palm Sunday, 1941, three hundred Luftwaffe bombers swept over the Yugoslav capital of Belgrade. Methodically they crisscrossed the city street by street, strafing everything that breathed. By noon 25,000 civilians were dead, and the wounded lay everywhere. Most public buildings were left in ruins, including the modern laboratory known as the Tesla Institute.

The combined armed forces of Germany, Italy, Hungary, and Bulgaria invaded the doomed country. Within only days the Yugoslav Army was crushed, and King Peter was sent to England for safety. His government-in-exile would operate from London for the remainder of World War II.

This, however, was only the beginning of the war for Yugoslavs. Accustomed to successive invasions for a thousand years, the people were resilient. The remnants of the Army and Communist factions withdrew into the mountains, from which they launched guerrilla attacks on the invaders. These armed fighters, men and women, were supplied with food grown by the old people and children remaining in undefended villages.

Against them the Nazis and Fascists carried out murderous reprisals. In the fishing villages and along the stony slopes of the Adriatic, half the people in every hamlet were systematically shot.

Soon, however, it became apparent to military strategists in the United States and England that, not only were Axis forces killing Yugoslavs, but rival guerrilla factions of monarchists and Communists had begun to vie for Allied support and were shooting each other as well as the invaders.

Col. Drazha Mihailović, a Serbian army officer, led a faction called Chetniks (the "Yugoslav Army in the Fatherland"), composed mainly of Serbian and Bosnian monarchists. With close ties to King

Peter, they became the first major resistance movement in Europe.[1] The initial British aid to Yugoslavia went to the Chetniks, but it was short-lived. The National Liberation Army or Partisans, led by Josip Broz Tito of the Communist Party, was swiftly rising to prominence.

Allied strategists knew little of Tito. It was said he had been left wounded on a battlefield in 1917 and captured by the Russians. There he was trained as a Communist leader and sent to France during the Spanish Civil War to aid the Loyalists or Republicans.

A Croat, Tito had little reason to love the monarchy, for he was imprisoned after returning to Yugoslavia. On release, he became active in organizing a metal workers' union and helped to build the Yugoslav labor movement. His emergence as head of the Partisans in World War II was that of a natural leader who inspired his fighters and maintained rigorous discipline. He was looking ahead to a time when the Slavs could rebuild a free and united country without oppression either by foreigners or kings.

Tito's goal was to set up committees of popular liberation after the Russian style, while Mihailović and the Chetniks favored local administrative authorities under the monarchy. Both factions kept on killing Germans and Italians but, unfortunately, they also continued murdering each other.[2]

Prof. Bogdan Raditsa*, then director of the information service of the Yugoslav Embassy in Washington, D.C., recalls, "The situation became rather complicated when Yugoslavia collapsed in 1941 and when, at the end of that year, a Royal Yugoslav Mission came to this country." It was composed of members of King Peter's government and the Ban (Governor) of Croatia, Dr. Ivan Šubašić. Srba Kosanović, Tesla's nephew, then a member of the Democratic Party, also arrived as a minister of the exiled government.

"As soon as Kosanović came to the States," says Professor Raditsa, "he tried to reorient Tesla from the exclusive Serbian policy, and he succeeded. Tesla, even before, never felt himself a Great Serbian chauvinist. He used to say, 'I am a Serb but my fatherland is Croatia.'"[3]

The conflict between Serbs and Croats in exile intensified as the war went on, paralyzing normal Slav diplomatic activities in London, Washington, and New York.

"Kosanović, though a Serb," recalls Raditsa, "was leading the struggle for a brotherhood between the Serbs and Croats against Fotić and many other Serb members of various Yugoslav missions.

*Raditsa belonged to a family in southern Croatia that had always favored a union of Croatians and Serbs.

Thus he began using Tesla for the policy directed against the Great Serbians.

"Tesla himself ... was not aware of the deep conflict between the Serbs and Croats, and as basically a scientist and in old age, he was very candid in politics."

Raditsa said he seemed happy that he finally had a man of his own blood near him in New York and noted that Tesla began to rely upon Kosanović's opinion on everything. During this period the inventor was receiving about $500 per month from the royal government as an honorarium.

Various political messages elicited from Tesla for home consumption, says Raditsa, were actually written by Kosanović.[4]

Toward the end of 1942 the Yugoslav Information Center was opened in New York in the Royal Mission headquarters on Fifth Avenue. Raditsa and Kosanović worked together at this office, issuing bulletins and other publications. But a crisis broke out when news reached them of the fighting between Mihailović and Tito.

"Kosanović," he said, "joined Tito and began to popularize the National Liberation Movement for a new Yugoslavia. He had a terrible time to convince Tesla that monarchy was losing in Yugoslavia and that a new Yugoslavia was beginning to come out from the fratricidal civil war. As the largest majority of Serbs in Croatia were joining Tito, Kosanović convinced Tesla that he too should join the movement that was largely shared by the masses of the people, Serbs and Croats. So Tesla's message to the Serbs and Croats was written by Kosanović."[5]

On the walls of the Tesla Museum in Belgrade one may read a vastly enlarged photocopy of the words allegedly sent by Tesla to his embattled countrymen only months before his own death. American Vice-President Henry A. Wallace also had a hand in its drafting. Typewritten, it has many cross-outs and interlinings in Tesla's own handwriting yet the style is that of an ideologue, which the inventor was not:

> Out of this war ... a new world must be born, a world that would justify the sacrifices offered by humanity. This ... must be a world in which there shall be no exploitation of the weak by the strong, of the good by the evil, where there will be no humiliation of the poor by the violence of the rich; where the products of the intellect, science, and art will serve society for the betterment and beautification of life, and not the individuals for achieving wealth. This new world shall not be a world of the downtrodden and humiliated, but of free men and free nations, equal in dignity and respect for man.

The inventor's name also appeared on another message—sent to the Soviet Academy of Sciences on October 12, 1941, urging joint struggle against the Axis powers by Russia, Great Britain, and America, in aid of the revolutionary struggle of the Yugoslav people. This message is not to be seen in the Museum, however, presumably because nostalgia Russian-style has ceased to be politic.

Kosanović became chairman of the Yugoslav Economic Mission advocating a New Yugoslav federation versus the centralistic prewar royalist Yugoslavia. This new organization also began working for a new Central East European Federation. Raditsa too became a member of the Tito movement.

King Peter was desperately seeking for Mihailović the support of President Franklin Delano Roosevelt and Prime Minister Winston Churchill, as well as that of his own Uncle Bertie, who was King George VI of England. The British, at first sympathetic to the Chetnik cause, began to change as they received reports of the aggressive actions of Tito's Partisans.

In 1942 King Peter visited Washington to intercede with FDR. Yugoslav pilots were being trained in Tennessee. FDR told him that America would send airplanes to the Chetniks as soon as they could be spared from the war in the Middle East. The monarch visited New York City, attending a large reception for the American Friends of Yugoslavia at the Colony Club. The Colony, the first female socialites' club in America, had been founded at the inspiration of energetic Anne Morgan. She attended the function, as did the King's mother, Queen Marie, and Mrs. Roosevelt. It was the sort of affair Tesla himself would have delighted in had he not been weak and ill. So King Peter went to him.

In his diaries (*A King's Heritage*), under date July 8, 1942, the young Peter II writes: "I visited Dr. Nicola Tesla, the world-famous Yugoslav-American scientist, in his apartment in the Hotel New Yorker. After I had greeted him the aged scientist said: 'It is my greatest honor. I am glad you are in your youth, and I am content that you will be a great ruler. I believe I will live until you come back to a free Yugoslavia. From your father you have received his last words: 'Guard Yugoslavia.' I am proud to be a Serbian and a Yugoslav. Our people cannot perish. Preserve the unity of all Yugoslavs—the Serbs, the Croats, and Slovenes.'"

The King added that he was deeply touched and that both he and Dr. Tesla had wept. He then visited Columbia University, to be warmly welcomed by President Nicholas Murray Butler and to find another link with his own country in the Pupin Physics Laboratory.

Returning to Washington, he was assured by FDR that food, clothing, arms, and ammunition would be dropped over Yugoslavia. But he was shocked when, in 1943, the British Mission in Yugoslavia made official contact with Tito. Peter asked to be parachuted into his country, but Churchill demurred. Tito openly accused Mihailović of being a traitor.*

At the Teheran Conference in November there occurred, largely at Churchill's instance, what the King described as a "fatal change" of Allied policy. It was decided that "the basic force fighting the Germans in Yugoslavia recognized by the Allies was the National Liberation Army, under the command of Tito, and the Partisan force received full recognition as an Allied Army. Mihailović was thus denied and abandoned."†

Winston Churchill overnight became a hero of modern Yugoslavia. And when the young monarch frantically wrote to FDR for support, the ailing President replied urging him to accept Churchill's advice "as if it was my own." Within months Roosevelt died.

Tesla's nephew, Kosanović, along with certain other diplomatic representatives of King Peter, had been dismissed by the monarch at the height of the 1942 crisis. He often told Bogdan Raditsa in those days that he felt Tesla had been terribly shocked by his nephew's exclusion from the royal government. In fact, Kosanović believed that the inventor's death was actually precipitated by his own "setback."

"He thought," Kosanović repeatedly told Raditsa, "that I was punished, and that eventually I would be arrested or something of the kind, but I succeeded to convince him that it was inevitable in politics."*

During this period Kosanović was frank in saying that he tried to keep Tesla from seeing members of the royal government. Ambassador Fotić had become "the enemy" since he still favored a Great Serbian policy as opposed to the changes ahead. Tesla's relationship with this old friend became "lukewarm."

"There is no doubt," says Professor Raditsa, "that the whole internecine tragedy of Yugoslavia from 1941 to 1943 must have had a rather depressing impact upon Tesla. Very often he would ask me, could I explain to him what was going on among us, and why we cannot agree. . . ."

After the war, Mihailović would be executed by a "People's Court" for alleged collaboration with the enemy, and the Republic of Yugoslavia declared to exist, with Tito as President for life and the Communists firmly in charge.

A count of Yugoslavian casualties at the end of World War II disclosed that 2 million persons had died; tragically, many thousands had been killed by fellow Yugoslavs.

"After the war," recalls Professor Raditsa, "Kosanović became a minister in the Tito-Subašić Government, and I was his assistant in the Ministry of Information from 1944 to 1945, when I left the country, for I couldn't become a Communist. Later on in 1946, Sava Kosanović became Tito's ambassador in Washington but I never saw him again after I left Belgrade in October of 1945. Kosanović had accepted totally the Communist system in Yugoslavia and remained loyal until his death."

There had not been a time in ten centuries when the Yugoslavs had not been ruled and ransacked by invaders—by Venetians, Romans, Turks, Bulgars, Austrians, Hungarians, Germans, Italians, when they were not living under threat of torture, prison, or violent death. Now a marvelous truth began to dawn upon them: that they were free, in a manner of speaking.

Tesla would not live to see this. Whether he could ever have accepted the new government, with its Soviet-type Constitution and a Soviet alliance, whether he could ever have accepted the permanent exile of his beloved monarch, are unanswerable questions.

Unfortunately, however, all this was to have a bearing on how he would be remembered in the West. The fading of his scientific reputation, the forgetfulness of Americans in the postwar period, resulted in large degree from the disappearance of most of his scientific papers behind that new Cold War phenomenon, the Iron Curtain.

In 1948 Yugoslavia ceased to be an Iron Curtain country, declaring its independence from the Soviet doctrine of "limited sovereignty." America and her allies then were generous in sending economic and military aid to the Slavs; but the damage had been done. America had not raced to Tito's wartime support with the alacrity that Churchill had shown. In the future it would not be made easy for American scholars to draw on Yugoslav sources to document the achievements of Nikola Tesla.

The inventor became very feeble in the winter of 1942. His fear of germs was so obsessive that even his closest friends were

required to stand at a distance, like the subjects of a neurotic Tudor. (Pigeon germs did not seem to worry him.) He had heart trouble and suffered occasionally from fainting spells. No longer able to feed his beloved birds, he often relied upon a young man named Charles Hausler, who owned racing pigeons, to take care of them for him.

Hausler had worked for Tesla in this capacity from around 1928 onward, his job being to go to the New York Public Library at noon each day with grain and then to walk around the four sides of the building looking for young or injured birds on window sills or behind large statues. He would take them to Tesla's hotel for rest and recuperation. Then, he has recalled, "I would release them at the library for him." He remembered that the cages in Tesla's rooms had been built by a fine carpenter— "as Mr. Tesla was in all his doings it had to be done right." The pigeons also enjoyed a curtained shower bath.

Hausler and Tesla spent many hours together, talking mostly of pigeons. Once Tesla confided to him that "Thomas Edison could not be trusted." The boy remembered his employer as "a very kind and considerate human person," and there was one incident that stood out in his mind long afterward. "He had a large box or container in his room near the pigeon cages and he told me to be very careful not to disturb the box," said Hausler, "as it contained something that could destroy an airplane in the sky and he had hopes of presenting it to the world." He believed it probably was stored in the cellar of the hotel later.[9]

On a bitter day in early January 1943, Tesla called his other messenger boy, Kerrigan, and gave him a sealed envelope addressed to Mr. Samuel Clemens, 35 South Fifth Avenue, New York City. The boy set forth into the whipping wind and searched fruitlessly for the number. As it turned out, this had been the address of Tesla's first laboratory; but now South Fifth Avenue was West Broadway, and no one by the name of Samuel Clemens lived in the area.

Kerrigan made his way back to the Hotel New Yorker and reported to the sick man. In a weak voice, Tesla explained that Clemens was the famous Mark Twain and that everyone knew of him. He sent Kerrigan forth once more, and this time asked him also to take care of the pigeons. The perturbed messenger fed the birds and then consulted his supervisor, who told him that Mark Twain had been dead for twenty-five years. Once again Kerrigan trudged through the cold afternoon to Tesla's rooms, where he explained and tried to return the envelope.

The inventor was indignant and refused to hear that the humorist was dead. "He was in my room last night," he said. "He sat in that chair and talked to me for an hour. He is having financial difficulties and needs my help. So—don't come back until you have delivered that envelope." Once again the messenger went to his supervisor and together they opened the envelope. It contained a blank sheet of paper wrapped around twenty five-dollar bills—enough to help an old friend through a little fainting spell.

On the fourth of January, the inventor, although very weak, went to his office to make an experiment that George Scherff was interested in. Scherff dropped in to help him prepare for it. The work was interrupted, however, when Tesla felt a recurrence of some sharp pains in his chest.

Refusing medical aid, he returned to his hotel. Next day a maid came in and cleaned. As she left, he asked her to put the *Do Not Disturb* sign on his door to keep visitors away, and not to bother cleaning. The sign remained there the following day and the one after that.

Early on the morning of January 8, Alice Monaghan, a maid, ignored the sign and entered the apartment to find the inventor dead in bed, his sunken, emaciated face composed.[10] Assistant Medical Examiner H. W. Wembly examined the body, placed the time of death as 10:30 P.M. on January 7, 1943, and gave his opinion that the cause of death had been coronary thrombosis. Tesla had died in his sleep, and the examiner noted that he had found "No suspicious circumstances." The inventor was eighty-six years of age.

Kenneth Swezey was notified at once; and at ten o'clock that morning he telephoned to Dr. Rado at New York University. King Peter's headquarters, then at 745 Fifth Avenue, was advised by the professor. Tesla's nephew, Kosanović, then wartime president of the Eastern and Central European Planning Board for the Balkan countries, also was notified.

Then the FBI was called. Swezey and Kosanović summoned a locksmith and Tesla's safe was opened and the contents examined.

The body was removed to the Frank E. Campbell Funeral Home at Madison Avenue and 81st Street and a sculptor was engaged by Hugo Gernsback to prepare a death mask of the inventor.

Just before Tesla's death, Eleanor Roosevelt had tried to intercede in his behalf with President Roosevelt—perhaps with the idea of conferring some honor upon him. In the Tesla Museum at Belgrade three brief notes on White House stationery may be read. On

January 1, at the request of author Louis Adamić, Mrs. Roosevelt had promised to ask the President to write to Tesla and said that she herself would call on him on her next trip to New York. The second note is headed, "Memo for Mrs. Roosevelt" and is signed FDR: "I was having this looked into but the papers yesterday carried the story that Dr. Tesla had died. Therefore I am returning the enclosures herewith." A third note of January 11 from Eleanor Roosevelt to Adamić forwards the President's message and adds her sorrow at learning of the inventor's death.

Adamić wrote a moving eulogy to Tesla that was read by New York Mayor Fiorello H. LaGuardia over station WNYC on January 10.* Meanwhile the extreme tensions between Serb and Croat factions in the United States were making the planning of funeral services difficult. The body lay in state but, according to an unpublished letter of O'Neill's, "only twelve people, some of whom were newspaper reporters," came to view it.

When state services were held at four o'clock on January 12, in the Cathedral of St. John the Divine, however, more than two thousand people crowded in. Serbs and Croats were seated on opposing sides of the cathedral, Bishop William T. Manning having exacted from both factions a promise of no political speeches. The service was begun in English by Bishop Manning and concluded in Serbian by the Very Rev. Dusan Sukletović.

Among Balkan diplomats present were Ambassador Fotić, the Governor of Croatia, a former Prime Minister of Yugoslavia, and the Minister of Food and Reconstruction. In the front row with Kosanović, chief mourner and head of the important new trade mission, sat Swezey. Dr. Rado had been too ill to attend as an honorary pallbearer.

Figures important in American science and industry who did attend as honorary pallbearers included Professor Edwin H. Armstrong, Dr. E. F. W. Alexanderson of General Electric, Dr. Harvey Rentschler of Westinghouse, engineer Gano Dunn, and W. H. Barton, curator of the Hayden Planetarium of the American Museum of Natural History. Newbold Morris, president of the New York City Council, headed this group.

When word of Tesla's death spread abroad to war-stricken Europe, telegrams of tribute and sorrow began pouring in from scientists and governmental leaders alike. In the United States three Nobel prizewinners in physics, Millikan, Compton, and James Franck, joined in a eulogy to the inventor as "one of the outstanding intellects

of the world who paved the way for many of the important technological developments of modern times."

The President and Mrs. Roosevelt expressed their gratitude for Tesla's contributions "to science and industry and to this country." Vice-President Wallace, in the spirit of the new Yugoslavia, declared that, "In Nikola Tesla's death the common man loses one of his best friends."

Although Louis Adamić wrongly eulogized Tesla as one who had cared nothing for money, he could not have been more accurate when he said that Tesla was not really dead: "The real, important part of Tesla lives in his achievement, which is great, almost beyond calculation, and an integral part of our civilization, our daily lives, our current war effort.... His life is a triumph...."*

Among the honors that had come to Tesla in his life were many academic degrees from American and foreign universities; the John Scott Medal, the Edison Medal, and various awards from European governments. In September 1943 the Liberty ship *Nikola Tesla* was launched, an honor that would have pleased the scientist. But not until 1975 was he inducted into the National Inventors Hall of Fame.

Eight months after Tesla's death, the U.S. Supreme Court handed down the decision that he had been confident would come eventually—ruling that he was the inventor of radio.

His body was taken to Ferncliffe Cemetery at Ardsley-on-the-Hudson in the deep cold of the winter afternoon. In the car that followed the hearse rode Swezey and Kosanović. The inventor's remains were cremated and his ashes later returned to the land of his birth.*

In almost every nation in the world, the fighting and dying continued.

*Charlotte Muzar, formerly secretary to Sava N. Kosanović, carried Tesla's ashes to the Tesla Museum in Belgrade in 1957. Throughout the years Kosanović had spoken of leaving the ashes in America and had hoped an appropriate memorial to the inventor would be raised in the United States as their resting place.
—Archives, Tesla Memorial Society

541

29 The Missing Papers

In addition to his acknowledged achievements, Tesla left a legacy of riddles. To pose only three of the most major: Was his unrealized concept for the wireless transmission of energy through the Earth scientifically valid? What actually was he doing in his experimentation with death/disintegrator beam weapons? And what became of his unpatented research papers and other sensitive documents in the days immediately following his death?

In the category of subquestions, what turn of affairs rekindled the intense interest of the U.S. intelligence establishment in Tesla's work (as something surely did) in the late 1940's?

Like Einstein he had been an outsider and, like Edison, a wide-ranging generalist. As he himself had said, he had the "boldness of ignorance." Where others stopped short, aware of what could not be done, he continued. The survival of such mutants and polymaths as Tesla tends to be discouraged by modern scientific guilds. Whether either he or Edison could have flourished in today's milieu is conjectural.

The example set by Tesla has always been particularly inspiring to the lone runner. At the same time, however, his legacy to establishment science is profound for his research, although sometimes esoteric, was almost always sweeping in its potential to transform society. His contribution was major rather than incremental. His turbine failed in part because it would have required fundamental changes by whole industries. Alternating current triumphed only after it had overcome the resistance of an entire industry.

But there was an unfortunate corollary to Tesla's lone battles with the scientific-industrial establishment. Since he was part of no group or institution, he had no colleagues with whom to discuss work in progress, no formal, accessible repository for his research notes and papers. He worked not just in private, but—his love of flamboyant announcements to the press notwithstanding—in secret. Thus any inventions which he did not patent or give freely to the world were more or less shrouded in mystery. And, because of the handling of the

papers he left behind after his death, the range of his achievement continues to remain a partial mystery.

If this has been frustrating to the scientists who have succeeded Tesla, it has at least been stimulating. After a period of obscurity, the one hundredth anniversary of his birth in July 1956 brought an international reawakening to the importance of the inventor's life and genius. Interest in his work, fired by a growing awareness of the riddles surrounding it, has been escalating ever since, almost as if he had been reborn in his true psychological age.

He was honored by centennial celebrations in America and Europe. The American Institute of Electrical Engineers dedicated its fall meeting in Chicago to a review of his life and inventions. Commemorative programs were arranged by the Institute of Radio Engineers, the Chicago Museum of Science and Industry, the Franklin Institute, and various universities, the Tesla Society playing an active role in such recognition. Permanent memorials in the form of scholarships and medals were proposed and exhibits presented by science museums. Special ceremonies were conducted at Niagara Falls, and a statue was later erected in his honor on Goat Island, a gift from the people of Yugoslavia. Chicago, reminded by attorney/author Elmer Gertz that it should be eternally grateful to him for having made the Columbian Exposition of 1893 the "wonder of the globe," dedicated a new public school to Tesla's memory.

The inventor's old colleagues of the AIEE journeyed to Europe to attend more celebrations, statue unveilings, and dedications in his honor. The International Electrotechnical Commission in Munich took formal action, making his name an international scientific unit, the *tesla* joining such historic electrical symbols as farad, volt, ampere, and ohm.[1]

As the exploration of space accelerated, so did interest in Tesla, especially from the standpoint of beam weaponry and microwave work. In America, Russia, Canada, and various other countries, projects in his name or derived from his pioneering, from weather-control to nuclear fusion, began to attract scientific attention. Some were just the shoestring efforts of loners, their laboratories old Quonset huts. Some were top secret and financed by enormous budgets.

Tesla's year of secret experiments at Colorado Springs in 1899 provided the basic impetus for much of this new exploration. His *Colorado Springs Notes*,* when they appeared in English in 1978

*This book may be ordered from Nolit, Terazije, 27, Belgrade, Yugoslavia (about $40).

under the imprint of the Tesla Museum at Belgrade, were eagerly awaited by many scientists. But even this work left important questions unanswered.

The bulk of his papers having vanished from America, reliable information was harder to come by than the recurring rumors of conspiracy, espionage, and patent theft. Scientists thought it strange that some aspects of his Colorado Springs research found in scattered sources did not appear in the Yugoslav-published *Notes*. Only by piecing together fragmentary information could the magnitude of his experiments be comprehended.

Around 1928 O'Neill, by merest chance, had happened to see a legal advertisement in a New York newspaper announcing that six boxes placed in storage by Nikola Tesla would be sold by the storage warehouse for unpaid bills. Feeling that such material should be preserved, he went to the inventor and asked permission to try to obtain funds to reclaim the material.

"Tesla hit the ceiling," he recalled. "He assured me he was well able to take care of his own affairs.... He forbid me to buy them or do anything in any way about them."

Shortly after the inventor died, O'Neill got in touch with Sava Kosanović, told him about the boxes, and urged him to protect them. He was never able to get a positive statement from Kosanović that he had obtained the boxes and examined the contents. "He gave evasive assurances that there was no reason for me to worry..."

Others too were interested in the papers. A young American engineer engaged in war work consulted Tesla on a ballistics engineering problem because he could not get time on an overworked computer, and Tesla's mind was known to offer the nearest thing to it. Soon he became fascinated with Tesla's scientific papers and was allowed to take batches of them home to his hotel room where he and another American engineer pored over them each night. They were returned the next day, a procedure which continued for about two weeks prior to the Inventor's death.

Tesla had received offers to work for Germany and Russia. After the inventor died, both engineers became concerned that critical scientific information might fall into foreign hands and alerted United States security agencies and high government officials.

The relevant records that I have obtained from federal agencies under the Freedom of Information Act reveal strange twistings and inconsistencies in the handling of the Inventor's estate. Tesla left tons of papers, barrels and boxes full of them. But he left no will. He was

survived by five nieces and nephews, of whom two lived in America at the time of his death.

Curiously, the FBI released his estate to the Office of Alien Property, which promptly sealed the contents. Since Tesla was an American citizen, the OAP's concern in the matter was hard to justify. After a court hearing, however, the estate was released to Ambassador Kosanović, one of the heirs.

Sweezy, who also had hoped to write a biography of Tesla (his death intervened), received the following account in 1963 from a former aide of Ambassador Kosanović's:

"Back in 1943... when Tesla died, it was a matter of very short time when Mr. K was issued a certificate from or by the Office of Custodian of Alien Property conveying to Mr. K full rights to the Tesla papers.... he had them all packed up and sent off to the Manhattan Storage Company where they remained until ready for packing and shipping off to Yugoslavia in 1952. Mr. K paid for storage charges.... All this time the certificate from the Alien Property Office was in my possession (in case of need)...

"You will perhaps remember that a number of times Mr. K mentioned the fact that the custodian at the storage warehouse told him that some government guys were in to microfilm some of the papers.... when we opened the safe in the present museum building (in Belgrade, Yugoslavia) the bunch of keys, which was the last thing Mr. K. flung into the safe at the New Yorker Hotel before the combination was re-set to a new combination, were not found in the safe, but in an entirely different box. Also the gold medal (the Edison Medal) was missing from the safe.... Anyway, for years and years Mr. K was bothered by the fact that Tesla papers had been gone thru and just before his departure from Washington in 1949–50(?) he decided to follow my suggestion to call Edgar J. Hoover (sic) and ask him. Mr. Hoover denied categorically that the FBI had gone into the papers...."

The aide said Tesla had told his nephew that "he wished to leave his works, property, etc., to his native country." (Not only is this uncorroborated but the papers were in English.)

Immediately after Tesla's death an exchange of telegrams flew between FBI Agent Foxworth of the field division of the New York Bureau and the director of the New York Bureau of the FBI. The day following discovery of the body, Agent Foxworth reported:

"Experiments and research of Nikola Tesla, deceased. Espionage—M. Nikola Tesla, one of the world's outstanding scientists in the electrical field, died January seventh, nineteen forty three at the

Hotel New Yorker, New York City. During his lifetime, he conducted many experiments in connection with the wireless transmission of electrical power and ... what is commonly called the death ray. According to information furnished by X [name deleted], New York City, the notes and records of Tesla's experiments and formulae together with designs of machinery ... are among Tesla's personal effects, and no steps have been taken to preserve them or to keep them from falling into hands of people ... unfriendly to the war effort of the United Nations...." (The FBI was, however, advised by the office of Vice-President Henry A. Wallace that the government was "vitally interested" in preserving Tesla's papers.)

Bloyce D. Fitzgerald, "an electrical engineer who had been quite close to Tesla during his lifetime," continued Foxworth, "advised the New York office that on January seventh, nineteen forty three, Sava Kosanović, George Clark, who is in charge of the museum and laboratory for RCA, and Kenneth Swezey ... went to Tesla's rooms in the New Yorker [author's note: the correct date would have been January 8], and with the assistance of a locksmith broke into a safe which Tesla had in his rooms in which he kept some of his valuable papers.... Within the last month, Tesla told Fitzgerald that his experiments in connection with the wireless transmission of electrical power had been completed and perfected.

"Fitzgerald also knows that Tesla had conceived and designed a revolutionary type of torpedo which is not presently in use by any of the nations. It is Fitzgerald's belief that this design has not been made available to any nation up to the present time. From statements made to Fitzgerald by Tesla, he knows that the complete plans, specifications and explanation of the basic theories of these things are some place in the personal effects of Tesla. He also knows there is a working model of Tesla's, which cost more than ten thousand dollars to build, in a safety deposit box belonging to Tesla at the Governor Clinton Hotel, and Fitzgerald believes this model has to do with the so-called death ray or the wireless transmission of electrical current.

"Tesla has also told Fitzgerald in past conversations that he has some eighty trunks in different places containing transcripts and plans having to do with experiments conducted by him. Bureau is requested to advise immediately what, if any, action should be taken concerning this matter by the New York Field Division."[2]

Kosanović later reported to Walter Gorsuch of the Office of Alien Property in New York that he first went to Tesla's rooms with the other men to search for a will. After the safe was opened, Swezey took from it a book containing the testimonials sent to Tesla on his seventy-fifth birthday, while Kosanović took from the room three pictures of Tesla. According to the manager of the New Yorker Hotel and Kosanović, nothing else was removed. The safe was closed under a new combination, which combination was in Kosanović's exclusive possession.

On January 9, Gorsuch of OAP and Fitzgerald went to the New Yorker Hotel and seized all of Tesla's property, consisting of about two truckloads of material, sealed it and transferred it to the Manhattan Storage and Warehouse Company. It was added to about thirty barrels and bundles that had been there since about 1934, and these too were sealed under orders of the OAP.

In addition to the question of the legitimacy of Alien Property's involvement in the case is the question of why Kosanović was allowed to have access to the safe's combination, from which he later claimed the Edison Medal had vanished. Tesla's American naturalization papers, which he so prized that he always kept them in his safe, may now be seen at the Tesla Museum in Belgrade; but it is not known what other papers or objects were in the safe.

The Washington Bureau of the FBI went so far as to advise the New York Bureau "to discreetly take the matter up with the State's Attorney in New York City with the view to possibly taking Kosanovich into custody on a burglary charge and obtaining the various papers which Kosanovich is reported to have taken from Tesla's safe." New York was also told to contact the Surrogate Court so stops could be placed against all of Tesla's effects, so that no one could enter them without an FBI agent being present, and New York was to keep Washington advised of all developments.[3]

The idea of arresting the Yugoslav ambassador was quickly dropped. And very soon the Washington headquarters made a curious decision. Edward A. Tamm of the FBI in Washington advised D. M. Ladd of that Bureau that the whole matter was being turned over to the Custodian of Alien Property; and Tamm noted, "There appears to be no need for us to mess around in it."[4]

Soon the well-known electrical engineer Dr. John G. Trump, who was serving as a technical aide to the National Defense Research Committee of the Office of Scientific Research and Development, was asked to participate in an examination of Tesla's scientific papers. Present at the Manhattan Warehouse & Storage Company in addition

to Dr. Trump were Willis George, Office of Naval Intelligence, Third Naval District, Edward Palmer, chief yeoman, USNR, and John J. Corbett, chief yeoman, USNR.

Dr. Trump reported afterward that no examination was made of the vast amount of Tesla's property that had been in the basement of the New Yorker Hotel for ten years prior to his death, or of any of his papers except those in his immediate possession at the time of death. It should be remembered that Tesla's scientific reputation had been in eclipse for a number of years and that there had been many efforts to discredit his claims in radio, robotry, and alternating current. Dr. Trump was a busy man, just as the staff of the FBI was stretched thin by its preoccupation with investigating wartime sabotage.

"As a result of this examination," wrote Dr. Trump, "it is my considered opinion that there exist among Dr. Tesla's papers and possessions no scientific notes, descriptions of hitherto unrevealed methods or devices, or actual apparatus which could be of significant value to this country or which would constitute a hazard in unfriendly hands. I can therefore see no technical or military reason why further custody of the property should be retained."

He added: "For your records, there has been removed to your office a file of various written material by Dr. Tesla which covers typically and fairly completely the ideas with which he was concerned during his later years. These documents are enumerated and briefly abstracted in the attachment to this letter."

In closing Dr. Trump said: "It should be no discredit to this distinguished engineer and scientist, whose solid contributions to the electrical art were made at the beginning of the present century, to report that his thoughts and efforts during at least the past fifteen years were primarily of a speculative, philosophical, and somewhat promotional character—often concerned with the production and wireless transmission of power—but did not include new sound, workable principles or methods for realizing such results."

The file (of which Dr. Trump's notes were only an abstract) consisted apparently of either photostats or microfilm made by the naval officers present, and the original papers apparently remained in storage, later to be transmitted to Yugoslavia. The examination had failed to disclose any alien-owned property subject to the vesting power of the Alien Property Custodian under the Trading with the Enemy Act. Tesla's papers and personal effects were released in

February of 1943 for disposition by Kosanović, the administrator of his estate.

Dr. Trump's abstract included the following:

"*Art of Telegeodynamics, or Art of Producing Terrestrial Motions at Distance*—This document, in the form of a letter dated June 12, 1940, to the Westinghouse Electric & Manufacturing Co., proposes a method for the transmission of large amounts of power over vast distances by means of mechanical vibrations of the earth's crust. The source of power is a mechanical or electromechanical device bolted to some rocky protuberance and imparting power at a resonance frequency of the earth's crust. The proposed scheme appears to be completely visionary and unworkable. Westinghouse's reply indicates their polite rejection. . . .

"*New Art of Projecting Concentrated Non-Dispersive Energy through Natural Media*—This undated document by Tesla describes an electrostatic method of producing very high voltages and capable of very great power. This generator is used to accelerate charged particles, presumably electrons. Such a beam of high-energy electrons passing through air is the 'concentrated nondispersive' means by which energy is transmitted through natural media. As a component of this apparatus there is described an open-ended vacuum tube within which the electrons are first accelerated.

"The proposed scheme bears some relation to present means for producing high-energy cathode rays by the cooperative use of a high-voltage electrostatic generator and an evacuated electron acceleration tube. It is well known, however, that such devices, while of scientific and medical interest, are incapable of the transmission of large amounts of power in nondispersed beams over long distances. Tesla's disclosures in this memorandum would not enable the construction of workable combinations of generator and tube even of limited power, though the general elements of such a combination are succinctly described.

"*A Method of Producing Powerful Radiations*—an undated memorandum in Tesla's handwriting describing 'a new process of generating powerful rays or radiations.' This memorandum reviews the works of Lenard and Crookes, describes Tesla's work on the production of high voltages, and finally in the last paragraph gives the only description of the invention contained in the memorandum. . . . 'Briefly stated, my new simplified process of generating powerful rays consists

in creating through the medium of a high-speed jet of suitable fluid a vacuous space around a terminal of a circuit and supplying the same with currents of the required tension and volume.'"

Long afterward in a letter to a colleague, Dr. Trump told what happened when he visited the Hotel Governor Clinton to examine the "device" stored in its vault, presumably the same box remembered by the messenger boy in Tesla's room.

"Tesla had warned the management that this 'device' was a secret weapon," said Dr. Trump, "and it would detonate if opened by an unauthorized person. Upon opening the vault and indicating the package containing the secret weapon, the hotel manager and employees promptly left the scene." The federal agents who had come along also pulled back, the better to give him the sole distinction of opening the parcel.

It was wrapped in brown paper and tied with a string. He remembered hesitating, thinking how beautiful the weather was outdoors, and pondering on why he was not outside too.

He lifted the parcel onto a table and, mustering his courage, snipped the string with his pocket knife. He removed the wrapping. Inside was a handsome polished wooden chest bound with brass. It required a final effort of courage to raise the hinged lid.

Inside stood a multidecade resistance box of the type used for Wheatstone bridge resistance measurements—a common standard item to be found in every electrical laboratory before the turn of the century!

Why had Tesla seen fit to terrify the staff and management of the hotel with this harmless object for so many years? Perhaps he had become so accustomed to having his hotel bills paid behind his back (believing that the hotels, honored to have him living there, had routinely dismissed the billings), that he was insulted when the Governor Clinton brashly demanded its $400.

Although the FBI closed its Tesla file in 1943, it didn't seem to want to stay closed. It was reopened in 1957 when an informant complained that a New York couple were issuing newsletters containing "information pertaining to flying saucers and interplanetary matters" and exploiting the inventor's name and fame. They allegedly claimed that Tesla's engineers, after his death, had completed a "Tesla Set," a radio device for interplanetary communication, that the device had been placed in operation in 1950 and since then Tesla engineers had been in close touch with alien spaceships. Once again the FBI decided no action was warranted and the file was closed.

Sweasy had never put much credence in the "secret weapon" rumors and had written to an inquirer: "Because Tesla was a recluse, and himself liked to talk in mystifying terms during his later years, I think many legends have been built up about the dozens of ideas he had evolved but which were not permitted by others to see the light of day."

He said he had known the inventor well for two decades before his death: "Tesla's greatest genius flamed up during a dozen or so years just before and slightly after the turn of the century. What he did after that may have carried the germs of some of the developments we are witnessing today, but he had not carried any of them—at least on paper or in any other tangible form—to the point of practicality . . ."

Perhaps, but between 1945 and 1947 an interesting exchange of letters and cables occurred among the Air Technical Service Command at Wright Field, Ohio, in whose Equipment Laboratory much top-secret research was being performed, Military Intelligence in Washington, and the Office of Alien Property—subject, files of the late Nikola Tesla.

On August 21, 1945, the Air Technical Service Command requested permission from the commanding general of the U.S. Army Air Force in Washington, D.C., for Private Bloyce D. Fitzgerald to go to Washington for a period of seven days "for the purpose of securing property clearance on enemy impounded property."

On September 5, 1945, Colonel Holliday of the Equipment Laboratory, Propulsion and Accessories Subdivision, wrote to Lloyd L. Shaulis of the OAP in Washington, confirming a conversation with Fitzgerald and asking for photostatic copies of the exhibits annotated by Trump from the estate of Tesla. It was stated that the material would be used "in connection with projects for National Defense by this department," and that all of it would be returned in a reasonable length of time.

That was the last time that the Office of Alien Property or any other federal agency in the United States admitted to having possession of Tesla's papers on beam weaponry. Shaulis wrote to Colonel Holliday on September 11, 1945, saying, "The materials requested have been forwarded to Air Technical Service Command in care of Lt. Robert E. Houle. These data are made available to the Army Air Force by this office for use in experiments; please return them." They were never returned.

These were the full photostatic copies, not merely the abstracts. OAP has no record of *how many* copies were made by those who

150

examined the files with Dr. Trump. The Navy has no record of Tesla's papers; *no* federal archives have a record of them.

Curiously, four months after the photostats had been sent to Wright Field, Col. Ralph Doty, the chief of Military Intelligence in Washington wrote James Markham of Alien Property indicating that they had never been received: "This office is in receipt of a communication from Headquarters, Air Technical Service Command, Wright Field, requesting that we ascertain the whereabouts of the files of the late scientist, Dr. Nichola [sic] Tesla, which may contain data of great value to the above Headquarters. It has been indicated that your office might have these files in custody. If this is true, we would like to request your consent for a representative of the Air Technical Service Command to review them. In view of the extreme importance of these files to the above command, we would like to request that we be advised of *any attempt by any other agency to obtain them.* [Italics supplied.]

"Because of the urgency of this matter, this communication will be delivered to you by a Liaison Officer of this office in the hope of expediting the solicited information."

The "other" agency that had the files, or should have had them, was the Air Technical Service Command itself! Colonel Doty's letter, which was classified under the Espionage Act, was declassified on May 8, 1980.

This embarrassing contretemps goes unexplained in the records. Perhaps it was handled orally with the Liaison Officer.

However, on October 24, 1947, David L. Bazelon, assistant attorney general and director of the Office of Alien Property, wrote to the commanding officer of the Air Technical Service Command, Wright Field, Dayton, Ohio, regarding the Tesla photostats that had been sent by registered mail on or about September 11, 1945, to Colonel Holliday, at the latter's request.

"Our records do not reveal that this material has been returned," said Bazelon. He sent a description and asked that it be returned.

Obviously at least one set of Tesla's papers had reached Wright Field because on November 25, 1947, there was a response to the Office of Alien Property from Colonel Duffy, chief of the Electronic Plans Section, Electronic Subdivision, Engineering Division, Air Materiel Command, Wright Field. He replied: "These reports are now in the possession of the Electronic Subdivision and are being evaluated. . . ." He believed that the evaluation should be completed by January 1, 1948, and "At that time your office will be contacted with respect to final disposition of these papers."

There is no written record that OAP ever sought further to have the documents returned, and they were not returned.

For many years there have been rumors that these unpatented inventions or concepts of Tesla's found their way not only to the U.S. Army Air Force but to Russia and to private American defense industries, and ultimately into certain university research laboratories engaged in beam weaponry.

The Office of Alien Property experienced a very difficult problem over the years in explaining its role in connection with Tesla's papers. Between 1948 and 1978 it issued the following variations on a theme to many inquirers:

"While this Office participated in an examination of certain material owned by the late Dr. Tesla, our records do not disclose that any such material has been vested or is presently under the jurisdiction of this Office. . . ."

"This Office has never had custody . . . of any property of Nikola Tesla. . . ."

"While the Tesla papers were in our custody. . ."

"Photostatic copies of certain documents, made while the papers were under our seal. . . ."

"In 1943 this Office placed a seal on the property. . . ."

"While the Tesla papers were in our custody. . ." etc., etc., etc.

As for what is now Headquarters Aeronautical Systems Division, Wright-Patterson Air Force Base, Ohio, they state: "The organization (Equipment Laboratory) that performed the evaluation of Tesla's papers was deactivated several years ago. After conducting an extensive search of lists of records retired by that organization, *in which we found no mention of Tesla's papers, we concluded the documents were destroyed* at the time the laboratory was deactivated."[6] (Italics supplied. Response, under the Freedom of Information Act, dated July 30, 1980.)

Tesla's original papers, and the remaining models of his inventions—his magnifying transmitter, robot boats, early tube lighting, induction motors, turbine, exhibits shown at the Chicago World's Fair of 1893, such as the "Egg of Columbus," and others—left America in 1952 for Yugoslavia. His ashes were sent later. The artifacts may now be seen at the Tesla Museum in Belgrade, a dignified-looking building with a broad, well-proportioned facade at No. 51 Proleterskih

Brigada, an avenue renamed after the war, but formerly known under the monarchy as Crown Street. The museum bears a plaque on a low wall, printed in the old Cyrillic alphabet.

Here Tesla's English writings have been translated into Serbo-Croatian—except, as the archivist admits, for the "unimportant" material, which remains, just as he wrote it, in the language of his adopted country.

30 The Legacy

The fact that Tesla's research notes and papers have not been easily available for western scientists has not, of course, meant that Teslian research is dead. On the contrary, the very mystery surrounding some of his unproved claims has served to goad numerous scientists into trying to duplicate his experiments. And since his aspirations were virtually limitless, there has always been a chance that the rewards of success would not be inconsiderable. But the single greatest stimulus to try to follow in Tesla's footsteps doubtless remains the example of the man himself—his stunning record of achievement and the enduring fascination of his mind. As one admiring German writer put it, "Tesla went beyond the borders of his exact science to foretell what lies in the future ... a modern Prometheus who dared reach for the stars...."[1]

Although a comprehensive summary of the state of Tesla-inspired research today would be beyond either the scope of this book or the intent of its author, no account of the inventor's life would be complete without at least some indication of what has become of a few of his major preoccupations. The record, as one might expect, is both mixed and incomplete, but it is no less impressive for that.

To begin, then, with Tesla's experiments with ball lightning: He had no idea what ball lightning might be useful for when he first encountered it in his Colorado Springs research; to him it was a nuisance, but it demanded an explanation. And so he set about determining the mode of formation of the strange fireballs and learned to produce them artificially.

The technical explanation runs like this: In the highly resonant transformer secondary comprising his magnifying transmitter, the entire energy accumulated in the excited circuit, instead of requiring a quarter period for transformation from static to kinetic, could spend itself in less time, at hundreds of thousands of horsepower. Thus, for example, Tesla produced artificial fireballs by suddenly causing the impressed oscillations to be more rapid than free ones of the second-

ary. This shifted the point of maximum electrical pressure below the elevated terminal capacity, and a ball of fire would leap great distances.

Yet strangely enough, modern plasma physicists with the best-equipped laboratories, have failed to produce plasmoids with anything near the stability of the true ball-lightning spheres that he created.

Why the fascination with this problem? First, of course, because it is there, an unknown. But second because among other uses, it may hold a vital key in the international race to achieve controlled nuclear fusion—potentially the greatest power source in history. Among those long interested in ball-lightning research are Peter Kapitza, the great Russian physicist, Lambert Dolphin and his colleagues in the radio physics laboratory at SRI International, Dr. Robert W. Bass of Brigham Young University, and Robert Golka, with whom Bass has collaborated on research.

Golka, a Massachusetts physicist, Tesla disciple, and lightning experimenter, has pursued the ephemeral fireball with the fervor of a hunter of snarks. Like Tesla in Colorado, he has done his research alone in a remote western laboratory in the Utah salt flats, and like Tesla, he has struggled to win the kind of federal support that usually goes only to enormous institutions or corporations.

In the largest hangar at the far end of the ghost base at Wendover, Utah, which was built by the U.S. Army Air Force during World War II, big spotlights are often burning as Golka conducts lightning tests. Here, under tightest security in the 1940's, the B-29 *Enola Gay* was housed and outfitted for delivering the first atomic bombs to Hiroshima.

Golka made two trips to the Tesla Museum to pore over the inventor's then unpublished notes and concentrated on replicating as exactly as he could in the old air base hangar the magnifying transmitter that Tesla had built in 1899 when investigating the lightning storms of Pike's Peak.

"He [Tesla] was 'way ahead of anything we have today in the equipment he built," Golka says. "Such as the high-powered switches and spark gap switches. The knowledge has been lost; we don't know how he did it. Some of it was in the diaries, but he kept much of this stuff in his head."

Golka built a magnifying transmitter at his "Project Tesla" that would discharge 22 million volts, creating almost twice as powerful a chain-lightning storm as the maestro himself had produced at Colorado Springs.

The relevance of ball lightning to fusion research has to do with the problem of confining plasma. The heart of the most common type of experimental fusion reaction involves taking isotopic hydrogen gas and both accelerating and superheating it until the hydrogen nuclei fuse to make helium nuclei, releasing, in the process, staggering amounts of energy. Along the way, while the hydrogen is being charged with vast amounts of kinetic and thermal energy, it enters an imperfectly understood material state known as plasma.* In the penultimate stages of the process, before fusion begins, the besetting problem is to maintain the plasma's coherence, to confine it within some kind of invisible electromagnetic "bottle."†

Since the strongest geometric shape is a sphere, Golka believes that ball lightning offers the best potential for containment of the unstable mass. He describes the odd lightning as "a glowing sphere of a variety of colors, a half-inch in diameter or as big as a grapefruit," and resembling an onion in its "layers and layers of alternate charged particles, positive and negative." It may bounce along through buildings, fall into water and set it boiling, and sometimes, as at the Hill Air Force Base in Utah, it may knock out the most sophisticated electronic equipment. In the summer of 1978, with the use of CO-2 laser beams, he finally managed to produce "bead" lightning, which he believes to be a form of ball lightning, and to photograph it in sequential frames.

He then sought support from the U.S. Department of Energy for a major program of research for which he proposed to use a device called a pyrosphere, employing five laser beams to create thermonuclear fusion. In a "Fireball Fusion Reactor" only nonradioactive helium is created and, according to Golka, mathematical models indicate it can reach and hold temperatures above a billion degrees.

He also proposed to the Air Force another Teslian concept, a charged particle beam, but again one designed to employ laser technology. Such beam guns, he believes, would have a range of

*Until recent years plasma had no major industrial importance but was merely a laboratory curiosity. Richard L. Berstn, executive vice president of International Plasma Corp., believes that the first practical application of plasmas came in the 19th century when "the glowing plasma produced by a Tesla coil was used to locate leaks in glass vacuum flasks."

†Teslian ideas are also involved in other aspects of fusion research. Superconducting magnetic coils, cooled to a few degrees above absolute zero, are used in magnetic containment devices; and, in a newly developed rival process, hydrogen fuel pellets are being bombarded by high-energy particle beams.

6,000 miles and could melt and destroy ICBM-type missiles in the air. With a Tesla coil three times the size of his combined coils, Golka believed he could generate 200 million volts of electricity.

But he inherited the usual Teslian problems of a loner, and as he said, "The walls fall in on me when I work for corporations." His work reached a point where it could no longer progress with improvised equipment, but called for enormous investments. His competitors were large corporations and leading universities engaged in the nuclear-fusion race; and even some of the latter were being cut off from their federal grants. They too were deeply into laser technology, although Golka claims his system is different and unique. By no means the only scientist to have attempted to carry forward Tesla's work with ball lightning, he undoubtedly has been one of the most singleminded.*

Russia's Kapitza, who shared the 1978 Nobel Prize in physics with Arno Penzias and Robert W. Wilson of America for his work in magnetism and the behavior of matter at extremely low temperatures, acknowledges his debt to Tesla. "The efficient generation of super-high-frequency oscillations and their conversion back to direct-current electrical energy," he writes, "discloses possible solutions to the problem of transmitting electrical energy ... in free space. The transmission setup will, of course, be similar to that already considered but, instead of a wave guide, a highly directional beam must be used, which, as is well-known, only at short wavelengths will diverge little. Such a setup for the transmission of electrical energy, firstly thought by N. Tesla many years ago, has already been discussed.... Although ... possible in principle, it is tied up with the solution of a series of complicated engineering problems and therefore it can be implemented in practice only in such special situations in which other methods of energy transmission are inapplicable (for example, when energy must be supplied to a satellite)."[3]

In this field of wireless energy transmission, so directly concerned with the space race, there is progress nearer home. Richard Dickinson, who heads the Microwave Power Transmission project for Cal Tech's Jet Propulsion Laboratory in the desert near Barstow, California, traces his inspiration to the early work of Tesla. The concept of bringing electricity to Earth from an orbiting solar-power system via

*Lambert Dolphin says of Golka's replica of the Colorado Springs Tesla coil: "It is spectacular indeed, to either scientist or layman. I hope it ends up in a museum such as the Smithsonian where it can be appreciated." He too is a proponent of further research in ball lightning.

microwaves is daring, costly, romantic, and thoroughly in the style of the maestro.

"We beamed power from our transmitter at Goldstone a distance of one mile," Dickinson said of the NASA project initiated in the mid-seventies. "All of the microwave energy that fell within our target (of which we could only collect a portion with our existing apparatus), we converted 82.5 percent to useful direct current. Thirty-four thousand watts of direct current output carried a distance of one mile. We are well pleased. The next step is to look further into the technology and needs of the satellite power system of the future."[4]

William C. Brown of the Raytheon Company, who developed the rectenna used in this microwave-power research, also attributes the idea of sending electricity by radio waves to Tesla's pioneering in the fundamentals of radio broadcasting and wireless power transmission.

Theoretically, a city the size of New York could be supplied with five billion watts on a winter day by enormous satellite structures in the sky that would orbit synchronously with Earth at a height of 22,300 miles. But admittedly, the cost of such floating power stations would be many billions of dollars, and they would be highly vulnerable to enemy killer satellites, in the event of war.

Brookhaven National Laboratory, located just to the northeast of Tesla's old Wardenclyffe site at Shoreham, also feels a close link with the inventor through the advanced high-energy work being conducted at the laboratory. In 1976 it paid homage to him in a ceremony, and the Yugoslav government sent a plaque to be placed at the still-standing Wardenclyffe laboratory.

Canada, too, has long been a bastion of Tesla Energy System advocates, and because of the country's rich hydroelectric sources, through-the-Earth transmission—if it worked—could be a boon to areas of power shortage.

But—will it work? Several projects have been planned, and some partially implemented, in Canada, central Minnesota, and most recently in Southern California—to "pump" hydroelectric power wirelessly through the Earth to an area of need, employing the Tesla system as it is understood.[5] The U.S. Department of Energy has often been asked to fund projects based on Tesla's system.

Unfortunately, there is no evidence that the system ever worked for Tesla, and none that it could work for anyone else. One of the inventor's problems was that he improperly extended into the electromagnetic domain fluid and fluid-mechanical analogies. Tesla's patent No. 787,412 provides for the Earth to be excited by a carefully

154

valued wavelength to establish a standing wave condition. Tesla believed the propagation path fell along a diameter. But according to much knowledge developed since 1899, the propagation path would not be along a diameter but, rather, along an ellipsoidal arc somewhere between the diameter and the spherical surface.

A fundamental aspect of wave propagation of power is that *no power is transmitted if the wave is standing;* power is transmitted solely with a traveling component. Boundary layer propagation, i.e., the mode of lossless propagation of waves at the boundary of two differing media (such as earth and sky), is a viable concept. However, the boundary plane must be smooth and the waves must be properly launched. At the frequencies Tesla was using, such launching apparatus would be an enormous structure. In examining the photographs of his experimental station at Colorado Springs, it is apparent to experts that he did not employ apparatus essential to the launching of such waves.

Tesla probably was mistaken at Colorado Springs in his interpretation of the lightning storms which he observed traveling away from him (eastwardly) across the plains, producing maxima and minima effects upon his instruments. This he interpreted as standing waves being set up in the Earth by the traveling storm, with the crests of the waves passing through his location as the storms advanced. It is believed he was seeing an interference effect caused by the reradiating surface of the frontal range of mountains to the west of his station. The results would have been the same on his instruments.

Dr. Walt, formerly senior scientist at the Environmental Research Laboratories, National Oceanic and Atmospheric Administration, in Colorado, describes himself as a "firm skeptic" of the Tesla theory. "The concept that electromagnetic energy penetrates 'through the earth,'" he says, "is valid only if the frequency is sufficiently low *and* if the distances are small. It's all tied up with 'skin-effect' phenomena; that means that the field is confined to the surface of a good conductor as in metallic wave guide."[6]

Dr. Walt even goes so far as to suggest that Tesla never really accepted the fact that electromagnetic waves could transport energy through the air. "Instead he thought of the earth itself as a conveyor and also thought of the possibility of a return conductor at heights of '15 miles above sea level.' The parallel of this idea to the earth-ionosphere wave guide at extremely low frequencies is striking (see IEEE *Journals of Oceanic Engineering*, Vol. OE-2, No. 2, April 1977). Also his proposed resonance of the system might be interpreted as the first disclosure of the earth-ionosphere cavity oscillations that have

been associated from the early 1960s with W. O. Schumann, N. Christofilos, and J. Galejs, among others."[7]

With respect to wireless communication, the U.S. Navy's Project Sanguine/Seafarer of recent years has evolved from Tesla's Colorado experiments. In a thermonuclear war, conventional radio communication probably would be disrupted at certain heights and wavelengths. America's atomic submarine fleet might then be without a means of receiving messages. The U.S. Navy, seeing this danger, turned back to Tesla's nineteenth-century suggestion of employing 10 Hz signals (ELF or extra low frequency), to circle the globe and penetrate the deepest waters.

One of the headier speculations concerning Teslian science is a suggestion that Russia has been employing his theories on weather modification to interfere with the jet stream, causing droughts and extremes of hot and cold weather. However unlikely the charge, it is true that Tesla did do a good deal of theorizing (but very little experimentation) on weather control.

He wrote, for example, on the possible use of radio-controlled missiles and explosives to break up tornadoes and the use of "lightning of a certain kind" to trigger rainfall. Of the former he said, "It would not be difficult to provide special automata for this purpose, carrying explosive charges, liquid air or other gas, which could be put into action, automatically or otherwise, and which would create a sudden pressure or suction, breaking up the whirl. The missiles themselves might be made of material capable of spontaneous ignition." His proposal included a lengthy mathematical formula.[8]

As with much modern scientific exploration inspired by the maestro, the returns are still not in on weather changing. Scientist Frederic Jueneman, "Innovative Notebook" columnist for *Industrial Research* magazine, calls attention to the fact that Dr. Robert Helliwell and John Katsufrakis of Stanford University's Radio Science Laboratory, demonstrated that very low frequency radio waves can cause oscillations in the magnetosphere. With a 20-km antenna and a 5 kHz transmitter in the Antarctic, they found that the earth's magnetosphere could be modulated to cause high energy particles to cascade into our atmosphere, and by turning the signal on or off they could start or stop the energy flow.

"The theoretical implication suggested by their work," says Jueneman, "is that global weather control can be attained by the injection of relatively small 'signals' into the Van Allen belts—something like a super-transistor effect."

But Jueneman's speculations go further and are eminently

worthy of Tesla: "If Tesla's resonance effects, as shown by the Stanford team, can control enormous energies by miniscule triggering signals, then by an extension of this principle we should be able to affect the field environment of the very stars in the sky...With godlike arrogance, we someday may yet direct the stars in their courses."[9]

No biography of Tesla would be complete without mention of his bright following of amateur physicists who build Tesla coils for their personal research, endeavoring to replicate his electrical magic; and the young inventors who pore over his basic patents and still find inspiration from them.

Durlin C. Cox, a Wisconsin physicist who has pondered Tesla's published writings, has built two Tesla coils, the second of 10 million volts. The reasons: "My own personal interest in high voltage engineering, especially in the field of high frequency rf transformers; to further my studies on the laboratory production of ball lightning; and because the University of Wisconsin at Madison asked me to submit a Tesla coil in their bi-annual Engineering Exposition in the spring of 1981." He and friends built one Tesla coil for a Hollywood studio for lightning effects, which has been a common use of them.

Electrical engineer Leland Anderson has summarized the major points in design that a coil builder might gain from reading Tesla's *Colorado Springs Notes*:

1. The Q's of the primary and secondary must be as high as practicable.

2. The Q's of the primary and secondary should be equal.

3. The length of the secondary winding should be one-quarter of the effective operating wavelength.

4. The technique of using an "extra coil" tank circuit (or a variation of it) in the secondary to magnify the voltage should be used.

"With these criteria in mind," he says, "the builder will find that hundreds of turns are not necessary for the secondary winding to achieve high voltages."

Last but not least, what about Tesla's death/disintegrator rays? Were his concepts sound? If they were found useful by the U.S. Army Air Force research team, whose top-secret project was rumored to have had the code name "Project Nick," it may be safely assumed that instead of being "destroyed," as reported, his papers are still highly classified.

Dr. Trump's evaluation and Swezey's assessment of Tesla's "secret weapons" have, however, received updated concurrence by

Lambert Dolphin, assistant director of the Radio Physics Laboratory at SRI International, who has studied the inventor's work and his ball-lightning research for two decades. He points out that the fields of knowledge of both physics and electrical engineering have grown exponentially since about 1930.

"Whole libraries are now required just to keep track of all the theory and experience that have unfolded since Tesla's time," he says. "Our mathematical and practical understanding of electricity, magnetism, electromagnetic theory, and radio communications has continued to grow explosively ever since 1950, or should I say 1970!"[10]

Tesla, Dolphin believes, "may have had intuitive insight into lasers and high-energy particle beams as well as ultra-high voltage phenomena, but now that we understand all the physics much more, we can easily evaluate many of his extravagant later-life claims."[10]

In fact, there is no good evidence to suggest that Tesla anticipated lasers. His "teleforce rays" seem to have been concerned exclusively with high-energy particle beams. We still do not know precisely how he intended them to work, although, says Dolphin, the available evidence suggests that Tesla may not have paid sufficient attention to how greatly such beams may be absorbed or dispersed by molecules and atoms in the air. In any case, even if we did understand Tesla's intentions more clearly, we should be hard put to compare them to the current state of the art, much of which is hidden under high security classifications.

Nevertheless, Tesla's work with high voltages to accelerate charged particles does seem to have been decidedly in what is now the mainstream of physical research. "In this field," says Dolphin, "he anticipated modern linear and circular nuclear accelerators. Such machines today have energy levels of tens of billions of electron volts or at least 1,000 times greater energy levels than Tesla ever attained.

"I am sure his magnifying transmitters were spectacular... He probably generated some interesting arcs and sparks that were what we now study as *plasmas*. The containment of plasmas is a huge area of modern physics. For example ... to see if small amounts of matter can be turned into immense amounts of electrical power in carefully contained plasmas." But Tesla's early discoveries and inventions, he concludes, were indeed ingenious and ahead of their time.[11]

As this book goes to press, the Pentagon is studying the creation of a new branch of the armed services, to be known as the U.S. Space Command, whose primary arsenal will consist of laser and particle-beam weapons fired from "space battleships." In prose not

unlike Tesla's own, a Department of Defense fact sheet compares particle beams to "directed lightning bolts" —although without explicitly admitting that such a weapon has in fact been developed.

It is difficult to assess the current state of the beam-weapons program because virtually everything about it is heavily classified. Apparently the technology involved has proved to be complex and difficult, raising questions about the project's feasibility, but many experts nevertheless seem to be hard at work on the problem. At the same time, the activities of the other nations in this area have been monitored carefully by agencies of the federal government. Indeed the possibility of creating a family of particle-beam weapons has been a subject of serious discussion in this country for at least the past twenty-five years, and it is, in my opinion, of no little significance that as long ago as 1947 the Military Intelligence Service identified the writings about a particle-beam among Tesla's scientific papers as being "of extreme importance."

Since he had no laboratory in the later years of his life, Tesla was unable to develop his ideas. But it is undeniable that he described in general terms half a century ago what may prove to be one of the main weapons of the Space Age. And to the end of his days, Tesla the pacifist hoped that such knowledge would be used, not for war among Earthlings, but for interplanetary communication with our neighbors in space, of whose existence he felt certain.

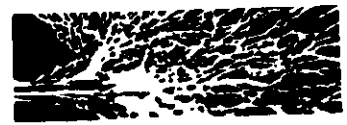

Bibliographical Essay

Some of Tesla's own writing—lectures, articles, patents, papers, and letters—is now available in the United States. His most important lectures and his brief autobiography, in bound volumes, are listed in the prologue to the reference notes.

Citation of biographies of Tesla by O'Neill, Hunt, and Draper, and others may be found in the reference notes. The O'Neill manuscript and the Swezey Collection are to be found at the Smithsonian Institution, Dibner Library.

Serious Tesla scholars will wish to consult the annotated *Dr. Nikola Tesla Bibliography* by J. T. Ratzlaff, and L. I. Anderson (San Carlos, California, Ragusan Press, 1979), for it contains some 3,000 sources of writings by and about Tesla. "Priority in the Invention of Radio, Tesla v. Marconi," by Leland Anderson may be obtained through the Antique Wireless Association, Monograph New Series No. 4.

A new means of analyzing Tesla's inventions is provided in *Dr. Nikola Tesla: Selected Patent Wrappers from The National Archives*, by J. T. Ratzlaff (Millbrae, Ca., Tesla Book Co., 1980). These "file wrappers" provide explanations and correspondence between the patentee and the Patent Office, to overcome objections raised by the examiner.

Tesla's *Colorado Springs Notes, 1899–1900*, published in 1978 by the Tesla Museum, is available through Nolit, Terazije, 27, Belgrade, Yugoslavia.

The Library of Congress Manuscripts Division contains microfilm correspondence between Tesla and George Scherff, Robert Underwood Johnson, Mark Twain, members of the Morgan family, George Westinghouse, and the Westinghouse Electric and Manufacturing Company.

In addition original correspondence and photographs may be found at the Butler Library, Rare Books and Manuscripts, Columbia University, including letters between Tesla and Johnson, Scherff, and

157

REFERENCE PAGES

96 pages

February 12, 1937

Mr. Edgar Hoover, Director,
Federal Bureau of Investigation,
Washington, D.C.

My dear Mr. Hoover:

I do not know whether or not the recent series of air crashes on the west coast has attracted the attention of your department, or whether, if investigation were indicated, the jurisdiction would be your own. An idea as to the cause of these crashes has occurred to me, however, and I thought it might bear a bit of checking up.

If you will check newspaper files as far back as 1934, I believe you will find that the earliest of the unexplained (and apparently unexplainable crashes) occurred about that time.

As I remember the events, it was during that year that three small planes exploded in the air over Texas and southwestern Kansas and Oklahoma. These crashes were not accounted for, either by subsequent investigation where the plane occupants were killed or by the experience of surviving plane occupants in one case.

Following these tragedies there came a lapse of about a year, after which there occurred (likewise without apparent reason) the series of crashes which cost the lives of a senator, of Knute Rockne, and a number of others. All crashes again occurred in the South and Southwest.

Again there was a lapse of time, this one not quite a year, and there started the worst series of air disasters the country has yet seen. One plane lost in the Southwest and not yet accounted for. One plane crashes into a mountainside within sight of its airport. And now the most recent incident, the falling of a United liner into San Francisco Bay while circling its airport, preparatory to landing.

RECORDED & INDEXED 62-47649-1

Now in this most recent incident, the experience of the radio operator at the airport seems to me to be highly illuminating. This operator reported a soft buzz interrupting his communication with the liner ... a loud roar such as produced by the worst imaginable static ... then silence. The plane had dropped into the bay like a plummet.

FEB 24 1937

[redacted] b6 b7C

159

Crack pilots do not suddenly become rank hams and bungle in handling a ship. Nor do the three motors (or even two) on the large airliners, stop simultaneously without extremely sufficient reason. Th ese things might happen once or even twice in a lifetime. They do not happen six and eight times a year. It is not logical that they should.

To digress for a moment, I recall reading an article in a magazine a year or two ago, written by Nikola Tesla, the inventor. The article dealt with a new invention of Mr. Tesla's ... a giant induction coil which would project power (high voltage) through the atmosphere without the use of transmission wires. Mr. Tesla devoted some space to the possible social benefits that would result to the public should his invention be perfected and become practical.

I have not heard of Mr. Tesla now in two or three years. Perhaps he has left the country. Perhaps he is still here. He might still be working on the invention described in the above-mentioned article. It might have been stolen from him.

In any case, his views on the ideas presented by these two unconnected subjects, would be well worth while having. And if I had the money and the time, I should certainly make an effort to smoke him out myself.

The thing is simply this: if one man can make an instrument that will project power through the air for even so short a distance as 500 yards (the then-practical limitations of Mr. Nikola's device) it is entirely possible for another to project power for several hundreds of miles. And the effect of such uncontrolled power on metallic objects in its path is entirely unpredictable.

Please do not think me a "crank" letter writer. I have never before written a letter of this type to anyone. But the idea seems to me so within the bounds of possibility that I most sincerely feel it will bear some practical study.

Yours very respectfully,

[redacted]

(b)(7)(c)

Letter Ack. + Ref
Bu. Air Commerce
cc [redacted]
2-27-37

XXXXXX
XXXXXX
XXXXXX

FEDERAL BUREAU OF INVESTIGATION
FOIPA DELETED PAGE INFORMATION SHEET

6 Page(s) withheld entirely at this location in the file. One or more of the following statements, where indicated, explain this deletion.

☒ Deletions were made pursuant to the exemptions indicated below with no segregable material available for release to you.

Section 552		Section 552a
☒ (b)(1)	☐ (b)(7)(A)	☐ (d)(5)
☐ (b)(2)	☐ (b)(7)(B)	☐ (j)(2)
☐ (b)(3)	☐ (b)(7)(C)	☐ (k)(1)
_____	☐ (b)(7)(D)	☐ (k)(2)
_____	☐ (b)(7)(E)	☐ (k)(3)
_____	☐ (b)(7)(F)	☐ (k)(4)
☐ (b)(4)	☐ (b)(8)	☐ (k)(5)
☐ (b)(5)	☐ (b)(9)	☐ (k)(6)
☐ (b)(6)		☐ (k)(7)

☐ Information pertained only to a third party with no reference to you or the subject of your request.

☐ Information pertained only to a third party. Your name is listed in the title only.

☐ Documents originated with another Government agency(ies). These documents were referred to that agency(ies) for review and direct response to you.

_____ Pages contain information furnished by another Government agency(ies). You will be advised by the FBI as to the releasability of this information following our consultation with the other agency(ies).

_____ Page(s) withheld for the following reason(s): _____

_____

☐ For your information: _____

_____

☒ The following number is to be used for reference regarding these pages:

65-30311-237

XXXXXX
XXXXXX
XXXXXX

XXXXXXXXXXXXXXXXXXXXX
X DELETED PAGE(S) X
X NO DUPLICATION FEE X
X FOR THIS PAGE X
XXXXXXXXXXXXXXXXXXXXX

FBI/DOJ

CC-287

Mr. Tolson
Mr. E.A. Tamm
Mr. Clegg
Mr. Glavin
Mr. Ladd
Mr. Nichols
Mr. Rosen
Mr. Tracy
Mr. Carson
Mr. Coffey
Mr. Hendon
Mr. Kramer
Mr. McGuire
Mr. Harbo
Mr. Quinn Tamm
Tele. Room
Mr. Nease
Miss Beahm

J. EDGAR HOOVER
DIRECTOR

Federal Bureau of Investigation
United States Department of Justice
Washington, D. C.

13818

JBL:ed

January 11, 1943

MEMORANDUM FOR MR. LADD

RE: UNKNOWN SUBJECTS;
EXPERIMENTS AND RESEARCH
OF NIKOLA TESLA (Deceased)
ESPIONAGE - M

(b)(7)(C)

In a teletype from the New York Office dated January 9, 1943, the Bureau's advice is requested as to what action should be taken in connection with this matter. It is to be noted that Tesla died January 7, 1943, and resided at the Hotel New Yorker. He was one of the world's outstanding scientists in the electrical field and has been conducting many experiments in connection with wireless transmission of electrical power and what is commonly referred to as the "Death Ray".

Sava Kosanovich, a distant relative intensely disliked by Tesla, is taking steps to get possession of these important documents and plans. Kosanovich on January 7, 1943, with George Clark, in charge of the Museum and Laboratory for RCA, and Kenneth Swezey of Brooklyn, New York, entered Tesla's rooms in the Hotel New Yorker and, with the aid of a locksmith, broke into a safe containing some of Tesla's valuable papers, including important electrical formulae, designs, et cetera.

Tesla is reported to have completed and perfected his experiments in the radio transmission of electrical power and to have conceived and designed a revolutionary type of torpedo not presently in use by any nation. It is reported that Kosanovich may possibly make this material available to the enemy.

ACTION:

I called Mr. D[redacted] of the New York Office at 12:30 P.M. and pointed out the apparent burglary violation on the part of Kosanovich. I told him this matter should be discreetly discussed with the State's Attorney in New York City with a view to locating Kosanovich and apprehending him on a burglary charge in order to determine the nature of the material he took from Tesla's safe. I pointed out the necessity for the State's Attorney keeping any action most secret in view of the highly confidential nature of the plans involved. I also suggested that the New York Office contact the Surrogate Court in order that Tesla's effects as well as the contents of his safety deposit boxes might not be entered without the presence of a Bureau Agent in order that we may endeavor to preserve the secrecy of any plans or items essential to the conduct of the war and national security.

Respectfully,

[redacted]

(b)(7)(C)

FOR VICTORY BUY UNITED STATES DEFENSE BONDS AND STAMPS

RECORDED & INDEXED

65 47753-1
F B I
1943

162

65-47953-1

[redacted] (b)(7)(c)

January 21, 1943

SAC, New York

Re: UNKNOWN SUBJECTS; SAVA KOSANOVICH; EXPERIMENTS AND RESEARCH OF NIKOLA TESLA (Deceased) ESPIONAGE (M)

Dear Sir:

Reference is made to a teletype dated January 9, 1943, from the New York Field Office and to a phone conversation between Mr. J. B. Little of the Bureau and Assistant Special Agent in Charge Donegan on January 11, 1943.

It was pointed out to Mr. Donegan that Sava Kosanovich, George Clark and Kenneth Sweeny may have committed a burglary violation by entering Tesla's rooms after his death and particularly by using a locksmith to get into a safe containing some of Tesla's valuable papers. Mr. Donegan was advised this matter should be discreetly discussed with the State's Attorney, New York City, with a view to locating Kosanovich and apprehending him on a burglary charge, in order to ascertain the nature of the material taken from the safe of Nikola Tesla. It was also suggested that the New York Office contact the Surrogate Court, in order that Tesla's effects, as well as the contents of his safety deposit boxes, might not be entered without the presence of an Agent, in order that the secrecy of any plans or items essential to the conduct of the war or national security might be preserved. It was stated that Kosanovich might possibly make certain material available to the enemy.

A review of the Bureau files reveals considerable information concerning Nikola Tesla and his inventions and it should be noted that one Nicola Tesla, who might have been identical with Nikola Tesla, made a speech at the Grange Hall, Springfield, Massachusetts, on June 4, 1922, under the auspices of the Friends of Soviet Russia.

Mr. Tolson
Mr. E. A. Tamm
Mr. Cleg
Mr. Gla
Mr. Ladd
Mr. Nich
Mr. Rose
Mr. Trac
Mr. Carson
Mr. Coffey
Mr. Hend
Mr. Kra
McGuire
Carbo
Quinn Tamm
Tease
Handy

[redacted] (b)(7)(c)

COPIES DESTROYED
148 OCT 26 1967

55 FEB 10 1943

Cat [redacted]

163

[redacted]

(6)(7)(C)

No record of Kenneth Sweezy could be located in the Bureau files from the information available.

The foregoing information is being furnished for possible future reference in connection with this case and it is desired that the Bureau be kept promptly and currently informed of all developments in this case.

Very truly yours,

John Edgar Hoover
Director

Federal Bureau of Investigation

United States Department of Justice
New York, New York

EBC:PM
65-12290

March 19, 1943

Director, FBI

Re: UNKNOWN SUBJECTS; SAVA KOSANOVICH;
EXPERIMENTS AND RESEARCH OF NIKOLA TESLA
(Deceased);
ESPIONAGE, MISCELLANEOUS

Dear Sir:

Reference is made to the Bureau letter in the above-captioned matter dated January 21, 1943, in which it is stated that it is desired that the Bureau be kept promptly and currently informed of all developments in this case.

In view of a telephone call from Mr. Little of the Bureau to Mr. T. J. Donegan, Assistant Special Agent in Charge of the New York Office, dated January 14, 1943, in which Mr. Little stated that the above-captioned matter was now being handled as an Alien Enemy Custodial Detention matter and therefore no further action should be taken in the matter by the New York Field Division, this case is being considered closed in this Office, unless advised to the contrary by the Bureau at some future time.

alien En custodian

Very truly yours,

E. E. Conroy

E. E. CONROY
Special Agent in Charge

ALL INFORMATION CONTAINED
HEREIN IS UNCLASSIFIED
DATE 4-18-89 BY SP1A
291860

ta

COPIES DESTROYED
148 OCT 26 1960

RECORDED & INDEXED

65-47953-3

(b)
(c)

FOR VICTORY
BUY
UNITED STATES DEFENSE BONDS AND STAMPS

165

FEDERAL BUREAU OF INVESTIGATION

Form No. 1
THIS CASE ORIGINATED AT NEW YORK CITY, N.Y. FILE NO. 100-8189

REPORT MADE AT	DATE WHEN MADE	PERIOD FOR WHICH MADE	REPORT MADE BY
BALTIMORE, MARYLAND	3-29-43	3-6-43	[redacted] (b)(7)(c)

TITLE	CHARACTER OF CASE
SAVA M. KOSANOVICH, with alias Sava M. Cosonovitch	INTERNAL SECURITY G. CUSTODIAL DETENTION

SYNOPSIS OF FACTS:

[redacted] SAVA [redacted]OSANOVICH, [redacted] Reported to have turned [redacted]tents and effects to Alien Property [redacted]odian, NYC, for NICK TESLA. [redacted] (b)(7)(c)

- R U C -

ALL INFORMATION CONTAINED HEREIN IS UNCLASSIFIED DATE 4-30-45 BY [illegible] 291860

REFERENCE: Letter from New York Field Division dated 2-22-43.

DETAILS: AT DOVER, DELAWARE

[redacted]

(b)(7)(c)

Mr. ABE SPANEL, President of the International Latex Corporation, advised that [redacted] He stated that he had been a very good friend of NICK TESLA who has died recently and that he believes that the subject is a third or fourth cousin of TESLA and that when TESLA died, the subject was his only close relative in this country and TESLA's effects came into his possession.

SPANEL related that the subject had recently turned over to the government the majority of the patents of NICK TESLA. SPANEL described TESLA as being one of the greatest inventors that has ever lived. He stated he had more than

APPROVED AND FORWARDED: SPECIAL AGENT IN CHARGE DO NOT WRITE IN THESE SPACES SF

COPIES DESTROYED 148 OCT 26 1960 [illegible] 65-47953 4 RECORDED

CONTESTED THIS REPORT
5 - Bureau
4 - NYC (2 G-2)
2 - Baltimore

APR 22 1943

17 [redacted] (b)(7)(c)

53 APR 22 19[illegible]

U. S. GOVERNMENT PRINTING OFFICE 7—2034

166

900 inventions and patents. SPANEL stated that at one time TESLA had an invention in which he was able to direct electrical current without the means of a conductor. He felt that this type of an invention would be of invaluable assistance to any country at war and for this reason felt that TESLA's inventions and patents should be put into the hands of proper Government officials, where they might be put to the best advantage for the United States. He does not believe the subject is engaged in any un-American activities and stated that he was more than willing to turn these patents and inventions over to the proper Government agency. He asserted that before TESLA died, he had spoken to the subject regarding his becoming a United States citizen and SPANEL believes that he is now taking the proper steps to achieve that end.

SPANEL also stated that the subject had handed all of the effects of the deceased TESLA to the Alien Property Custodian in New York City.

SPANEL advised that the day before TESLA died he had tried to get in touch with War Department officials in Washington in order that he might make available to them patents and inventions that he had developed. However, he was not able to get in touch with the proper authorities and he died the following day.

SPANEL advised that the Yugoslavian Government had been sending TESLA approximately $600.00 per month for sometime prior to his death and this was described as being a sort of pension.

SPANEL stated further that he has previously turned over information regarding the subject to Special Agent [redacted] of the New York Field Division. He also advised that WALDEMER KEMPFERT, Science Editor, New York Times and BILL LAURENZ, Science Feature Writer, New York Times and the Science Editor of the Herald Tribune would be able to elaborate on some of the accomplishments of NICK TESLA and that the June 1900 issue of the Century Magazine also contained an article relating to the inventions of TESLA.

(b)(7)(C)

SPANEL also stated that he believed BLOYCE FITZGERALD, Pierpont Hotel, Brooklyn, New York, Secretary to TESLA, has been contacted by Special Agent [redacted] and that if the New York Office wishes to contact SPANEL he may be reached at his home [redacted]

- REFERRED UPON COMPLETION TO THE OFFICE OF ORIGIN -

JOHN EDGAR HOOVER
DIRECTOR

CC-287

Mr. Tolson
Mr. E. A. Tamm
Mr. Clegg
Mr. Glavin
Mr. Ladd
Mr. Nichols
Mr. Rosen
Mr. Tracy
Mr. Carson
Mr. Coffey
Mr. Hendon
Mr. Kramer
Mr. McGuire
Mr. Harbo
Mr. Quinn Tamm
Tele. Room
Mr. Nease
Miss Beahm
Miss Gandy

Federal Bureau of Investigation
United States Department of Justice
Washington, D. C.

[redacted] (b)(7)(C)
2:45 p.m.

July 17, 1943

MEMORANDUM FOR [redacted]

RE: SAVA KOSANOVICH
INTERNAL SECURITY (G)
CUSTODIAL DETENTION

At this time SA [redacted] of the New York office telephoned, stating on the previous afternoon [redacted] telephoned that office [redacted] stated that she would like to be interviewed concerning certain information she possessed [redacted]

(b)(7)(D)

Agent [redacted] stated [redacted] two teletypes which the New York office forwarded to the Bureau under dates of January 9 and 12, 1943, in the case entitled UNKNOWN SUBJECTS, EQUIPMENT, EXPERIMENTS AND RESEARCH OF NICOLA TESLA DECEASED, ESPIONAGE (Bureau file 100-2237). Briefly, the information contained in these teletypes is that shortly after Nicola Tesla, one of the world's outstanding scientists in the electrical field, died in his hotel room at New York City on January 8, 1943, Sava Kosanovich, a distant relative, and other individuals entered his room and opened a safe, examining certain materials which he possessed. On January 8, Mr. L. M. C. Smith of the Department advised Mr. Tamm that he was concerned about the possibility of enemy agents confiscating some of the trunks of Tesla and that apparently the Alien Property Custodian was taking some action in this matter. Inasmuch as the matter was being handled by the Alien Property Custodian's office, the Bureau did not conduct any inquiries into this situation.

(b)(7)(C)

RECORDED 165-47953

[redacted]

FOR VICTORY BUY UNITED STATES SAVINGS BONDS AND STAMPS

COPIES DESTROYED
148 OCT 26 1960

ALL INFORMATION CONTAINED HEREIN IS UNCLASSIFIED DATE 4-18-89 BY SP1A 66cm
291860

57 AUG 19 1943

168

Mr. Ladd

[redacted]

ACTION:

[redacted]

There is attached for your approval a letter directed to the San Juan Field Office requesting that this interview be conducted and also instructing that she be interrogated concerning the other matter referred to above, inasmuch as the Pittsburg Office has not as yet covered this interview.

Respectfully,

[redacted]

(6) (7) (C)

Federal Bureau of Investigation
United States Department of Justice
New York 7, New York

IN REPLY, PLEASE REFER TO
FILE NO. 65-12290
HER:mhm

CONFIDENTIAL

October 17, 1945

Director, FBI

Re: UNKNOWN SUBJECTS;
SAVA KOSANOVICH;
Experiments and research of NIKOLA TESLA (deceased)
ESPIONAGE - M

Dear Sir:

Reference is made to the Bureau letter dated January 21, 1943, which bore a caption similiar to that mentioned above.

The referenced letter dealt with the death, on January 7, 1943, of the famous inventor, NIKOLA TESLA, who as well as being the inventor of Alternating Current, perfected many electrical devices. He is also credited with having developed the so called "death ray" which would safeguard any country from attack by air.

On June 9, 1945, [redacted] of New York City furnished information of a nonspecific nature indicating that it was his belief that persons sympathetic to Russia were making an effort to secure the effects of NIKOLA TESLA in order to salvage therefrom any models or designs of possible military value. [redacted] claimed that he heard that ABRAHAM N. [redacted], President of the NATIONAL LAND CORPORATION, of Dover, Delaware was the motivating influence behind this attempt to obtain TESLA'S papers which are presently held in storage at the MANHATTAN STORAGE WAREHOUSE in New York City. [redacted] promised to return to the New York Field Division shortly after his initial visit and furnish further and more specific information to support his claims.

RECORDED 47953-14

ENCLOSURE ATTACHED

He was not heard from again, however, until September 27, 1945, at which time he furnished the following additional information:

He said that a boyhood chum of his from Wichita, Kansas, BLOYCE FITZGERALD, had been TESLA'S protege and one of the inventors few confidents. According to [redacted], FITZGERALD who is now an Army Private stationed at Wright Field, Dayton, Ohio, is a brilliant 29 year old scientist who spent endless hours with TESLA prior to the latters death, during which time TESLA explained to him most secret experiments. [redacted] stated that FITZGERALD met TESLA in November 1942, but he had been corresponding with the latter since 1935. According to the informant, FITZGERALD had developed some sort of anti-tank gun, the details of which he presented to TESLA who made certai corrections in design and specifications to further perfect the weapon.

[redacted] related that sometime in December 1942, when FITZGERALD was attending a meeting of the AMERICAN SOCIETY OF MECHANICAL ENGINEERS, he made the acquaintance of ABRAHAM [redacted] who became interested in FITZGERALD'S

RETURN TO INDEXING DEPT.

170

gun. SPANEL offered financial aid to FITZGERALD and the two were in the closest contact with each other for a considerable period of time. [redacted] said that FITZGERALD had lined up a deal for the purchase of the gun by the REMINGTON ARMS COMPANY, but for some reason SPANEL blocked this deal by reaching top men in the REMINGTON COMPANY. SPANEL is then reported as having obtained a job for FITZGERALD with the HIGGENS SHIP BUILDING COMPANY in New Orleans and negotiated a contract with FITZGERALD for the purchase and manufacture of the gun in a manner which would return 80% of the profits derived to SPANEL,

[redacted] stated that in November of 1943, for some unknown reason but which he believes to be attributable to SPANEL, FITZGERALD was fired by the HIGGENS COMPANY. In September of 1944, FITZGERALD was inducted into the Army and for a considerable period of time was located at an ordinance experimental station at Elgin Field, Florida. [redacted] stated that at the present time FITZGERALD is engaged in a highly secret experimental project at Wright Field in Dayton, Ohio. In spite of his rank of Private, FITZGERALD actually is the director of this research and is working with many top young scientists who were inducted into Army from leading industrial posts.

According to [redacted], FITZGERALD is presently working on the perfection of TESLA'S "death ray" which in FITZGERALD'S opinion is the only possible defense against offensive use by another nation of the Atomic Bomb. In this connection, it is noted that the New York Times of September 22, 1940 in an article entitled "SCIENCE IN THE NEWS" by WILLIAM A. LAURENCE, Science Editor states that TESLA devulged to LAURENCE the fact that he had developed a "death ray" or "tele-force" which TESLA claimed would melt airplane motors at a distance of 250 miles, so that actually an invisible Chinese Wall would be built around a country against attack by an enemy air force.

According to the article in the TIMES, this electrical device would operate by the generation of power from a plant, a number of which might be located strategically along our coast lines and the beam from which would melt any engine within a radius of 250 miles.

[redacted] stated that during FITZGERALD'S acquaintance with SPANEL, FITZGERALD had told SPANEL of his associations with TESLA and had apparently described to SPANEL some of TESLA'S most secret work. [redacted] believes that SPANEL, who he claims is definitely pro-Russian in attitude, is now attempting through legal procedure to secure custody of TESLA'S effects which are now held by TESLA'S only heir, one SAVA KOSANOVICH, who is presently in Yugoslavia occupying some governmental post.

It will be recalled that in an article published on March 15, 1945, by the KING FEATURE SYNDICATE INCORPORATED, WESTBROOK PEGLER charged SPANEL with spreading pro-communist and pro- Russian propaganda through his full page advertisement in the newspapers, which SPANEL characterized as being published for the INTERNATIONAL LATEX CORPORATION, as a public service feature. It is also interesting to observe that in the New York Times of October 2, 1945, an article appears which states that SPANEL is suing the KING FEATURE SYNDICATE INCORPORATED for six million dollars alleging the column by PEGLER to have been libelous.

(b)(7)(C)

171

[redacted] stated that through FITZGERALD he too had met SPANEL and from this personal acquaintance he formed the opinion that SPANEL was definitely a communist and is probably one of the financial supporters of the Communist Party in this country. [redacted] stated that SPANEL was born in Russia, but is now an American citizen. He also charged that SPANEL exerted tremendous political influence in Washington, D. C., and said that one of SPANEL'S closest political friends was HENRY WALLACE.

[redacted] advised that two agents from Army Intelligence contacted and stated that in an investigation to determine the qualifications of FITZGERALD for a commission, they had developed information indicating that SPANEL was definitely endeavoring to secure possession of TESLA'S effects. [redacted] indicated that Army Intelligence was pursuing an investigation along these lines in an attempt to ascertain the complete story in this regard.

psychiatrist

[redacted] (b) (7) (C)

[redacted] stated that FITZGERALD had interested a group of young Army scientists now working with him at Wright Field in this foundation, and their ultimate goal is to secure the support of a wealthy backer in order that a foundation might be established and that a sort of "idea factory" might result. He said that they intended to contact HENRY FORD, SR., to solicit his aid in this regard.

[redacted] related that probably the greatest idea of TESLA'S was that involving the wireless transmission of electrical power. He claimed that TESLA had performed a successful experiment many years ago at Pikes Peak, at which time he harnassed local current from the sun's rays which he built up into a huge potential of electrical energy. [redacted] said that according to FITZGERALD, if this idea could be furthered, all electrical energy to operate the world's machinery might be gotten absolutely free rather than by the costly method with which electrical power is presently generated. He said that his idea was to conduct further experiments along this line in China where the need for electrical power is very great.

Inquiry was made at the MANHATTAN STORAGE WAREHOUSE in New York City, and it was determined that the effects of NIKOLA TESLA are contained in some

75 packing cases and trunks and are presently under seal by the New York State Department of Taxation. It was learned that the rental for this storage, which approximates $15 per month, is being paid by one CHARLOTTE MUZAR, 134 East 63rd Street, New York, New York, who is listed as the agent for SAVA KOSANOVICH.

Inquiry was also made at the office of the Alien Property Custodian in New York City, concerning an investigation conducted by this office at the time of TESLA'S death, and at which time the latters property was placed under seal by the United States Government. Mr. WALTER GORSUCH, Chief Investigator for the Alien Property Custodian, provided a cover letter and a summary of materials owned by TESLA at the time of his death which was examined by JOHN G. TRUMP, of the office of SCIENTIFIC RESEARCH & DEVELOPMENT. Mr. GORSUCH also stated that his file in this matter reflected that on the night TESLA died his safe was forced open by a representative of the SHORE & WALKER SAFE COMPANY. It was Mr. GORSUCH'S belief that a Mr. STEZEY who is believed to be one of the editors of the POPULAR SCIENCE MAGAZINE was present in TESLA'S room shortly after the safe was opened. These individuals were MILLIS GEORGE, EDWARD PALMER, and JOHN J. CORBETT.

There are enclosed herewith two typewritten copies of the report by Mr. TRUMP of the ALIEN PROPERTY CUSTODIAN reflecting the findings of Mr. TRUMP, following his examination of TESLA'S effects. There is also enclosed herewith a photostatic copy of a list of persons associated with NIKOLA TESLA. This latter item was furnished by [redacted] (b)(7)(C)

The above information is furnished for the Bureau's information, and no investigation is being conducted by this office.

Very truly yours,

E. P. CONROY, SAC

3 Enclosures

000004

173

13810

Address writer at:

Mass. Inst. of Tech.,
Cambridge, Mass.
January 29, 1943.

Mr. Walter Gorsuch,
Alien Property Custodian,
120 Broadway,
New York, New York.

Dear Sir:

At your request and that of Mr. Joseph T. King of the Washington office of the Alien Property Custodian, I have examined the private papers, writings, and other property of the late Dr. Nikola Tesla with the view to determining both their possible usefulness to this country in its war effort and the possible hazard attendant on their falling into unfriendly hands.

This examination was made at the Manhattan Warehouse, 52nd Street, New York City, on January 26-27, and included all of the notes and material in Dr. Tesla's immediate possession at the time of his death and now in the custody of your office. For reasons indicated below, no investigation was made of material in trunks which had remained untouched in the basement of the New Yorker Hotel for ten years prior to Dr. Tesla's death.

As a result of this examination, it is my considered opinion that there exist among Dr. Tesla's papers and possessions no scientific notes, descriptions of hitherto unrevealed methods or devices, or actual apparatus which could be of significant value to this country or which would constitute a hazard in unfriendly hands. I can therefore see no technical or military reason why further custody of the property should be retained.

For your records, there has been removed to your office a file of various written material by Dr. Tesla which covers typically and fairly completely the ideas with which he was concerned during his later years. These documents are enumerated and briefly abstracted in the attachment to this letter.

COPIES DESTROYED
148 OCT 26 1960

13811

It should be no discredit to this distinguished engineer and scientist whose solid contributions to the electrical art were made at the beginning of the present century to report that his thoughts and efforts during at least the past fifteen years were primarily of a speculative, philosophical, and somewhat promotional character--often concerned with the production and wireless transmission of power--but did not include new sound, workable principles or methods for realising such results.

Very truly yours,

JOHN G. TRUMP,
Technical Aide,
Division 14, NDRC.

Enclosure.

JGT/G

ABSTRACTS OF DR. NIKOLA TESLA'S WRITINGS
RETAINED AS EXHIBITS
FOR THE ALIEN PROPERTY CUSTODIAN

1.

On January 26 and 27, 1943, an examination was made of the technical papers of Dr. Nikola Tesla which, after his decease, had been stored in the Manhattan Warehouse in New York City. This examination was made for the purpose of determining if any ideas of significant value in the present United States war effort could be found among his possessions. Participating in this examination were Mr. John C. Newington, New York Office of the Alien Property Custodian; Mr. Charles J. Hedstniemi, Washington Office of the Alien Property Custodian; Dr. John G. Trump, Office of Scientific Research and Development, Massachusetts Institute of Technology, Cambridge, Massachusetts; Willis George, Office of Naval Intelligence, Third Naval District; Edward Palmer, Chief Yeoman, USNR; John J. Corbett, Chief Yeoman, USNR.

2.

The following papers, which are regarded as typical of Nikola Tesla's writings and thoughts in the period of 1925 to 1942, were removed for the purpose of record and are listed below in the random order in which they were found, together with a brief individual abstract.

Exhibit A

"Possibilities of Electrostatic Generators" - an undated article probably written about 1934 discussing the possibilities, as a source of high-voltage D-C power, of the Van de Graaff type of electrostatic belt generator. The article states correctly the electrostatic principles employed in this device and points out that such generators are not suitable for commercial high-power applications, though of undoubted scientific value. Tesla's wireless tower, erected in 1902 on Long Island, is stated in this memorandum to have been charged to 30 million volts.

Exhibit B

"Reactive Forces of Glycerine and Dynamite" - an undated memorandum involving some calculations of the explosive power of certain compounds and then deviating to a discussion of the possibility of transmitting power by mechanical vibrations along the earth's crust.

Exhibit C

"Process of De-Gassifying, Refining, and Purifying Metals" - a 41-page memorandum probably written about 1930 dealing with the above subject and proposing new theories of capillarity and surface tension. This correspondence indicated that this had been submitted to various industrial companies.

Exhibit D

"Reply to Amtorg re 'the generation of high-voltage and the acceleration of charged particles'" - This document, dated November 8, 1935, answers questions raised by Soviet engineers and scientists regarding Tesla's proposal of May 16, 1935. From this answer, it is deduced that the proposal concerned the generation of high voltages by electrostatic means. These means consisted of a high-voltage terminal presumably supported on an insulating column and charged by a gaseous charge conveying medium passing between ground and terminal. The ideas contained in this memorandum are fairly similar to the belt-conveyor electrostatic generator methods proposed by Van de Graaff and do not appear to offer any unusual features.

Exhibit E

"Art of Telegeodynamics, or Art of Producing Terrestrial Motions at Distance" - This document, in the form of a letter dated June 12, 1940, to the Westinghouse Electric & Manufacturing Company, proposes a method for the transmission of large amounts of power over vast distances by means of mechanical vibrations of the earth's crust. The source of power is a mechanical or electromechanical device bolted to some rocky protuberance and imparting power at a resonance frequency of the earth's crust. The proposed scheme appears to be completely visionary and unworkable. Westinghouse's reply indicates their polite rejection of this idea.

Exhibit F

"New Art of Projecting Concentrated Non-Dispersive Energy through Natural Media" - This undated document by Tesla describes an electrostatic method of producing very high voltages and capable of very great power. This generator is used to accelerate charged particles, presumably electrons. Such a beam of high-energy electrons passing through air is the "concentrated non-dispersive" means by which energy is transmitted through natural media. As a component of this apparatus there is described an open-ended vacuum tube within which the electrons are first accelerated.

Exhibit F (cont.)

The proposed scheme bears some relation to present means for producing high-energy cathode rays by the cooperative use of a high-voltage electrostatic generator and an evacuated electron acceleration tube. It is well known, however, that such devices, while of scientific and medical interest, are incapable of the transmission of large amounts of power in non-dispersed beams over long distances. Tesla's disclosures in this memorandum would not enable the construction of workable combinations of generator and tube even of limited power, though the general elements of such a combination are succinctly described.

Exhibit G

A circular by Carol Bird, dated September 10, 1938, entitled "Tremendous New Power Soon to Be Unleashed". This describes in popular style some biographical information concerning Nikola Tesla and some ideas for the transmission of power on which he is stated to be working. It appears that the method of transmission is by the mechanical resonance method outlined in Exhibit F, above.

Exhibit H

This exhibit consists of a series of letters to representatives of the British Government dated August 28, 1936; October 26, 1937; December 15, 1937; and April 5, 1938. It includes a reply dated January 7, 1938, from the British Government. These letters offer to the British Government, for a fee, the disclosure of a means for accelerating to high energies minute particles. Such beams would constitute a death ray capable of the protection of Great Britain from air attack.

The method proposed is essentially that described in Exhibit F above. Following the initial letter dated August 28, 1936, the subsequent letters attempt to clear up the "misunderstandings" of the British representatives and to expedite their acceptance of the Tesla proposal. The British reply dated January 7 is a polite expression of disinterest in the proposal.

Exhibit I

An undated memorandum written after Tesla's 79th birthday describing several discoveries which he believed he had made. The first related to a dynamic theory of gravity which is described as not yet completed. The second stated as a physical truth the belief that "there is no energy in matter other than that received from the environment". This second statement, which is discussed at length in this and other writings of Tesla, indicates his disbelief in the existence of atomic or nuclear energy.

Exhibit J

"A Method of Producing Powerful Radiations" - an undated memorandum in Tesla's handwriting describing "a new process of generating powerful rays or radiations". The memorandum reviews the works of Lenard and Crookes, describes Tesla's work on the production of high voltages, and finally in the last paragraph gives the only description of the invention contained in the memorandum. This description is as follows: "Briefly stated, my new simplified process of generating powerful rays consists in creating through the medium of a high-speed jet of suitable fluid a vacuous space around a terminal of a circuit and supplying the same with currents of the required tension and volume".

Exhibit K

A letter to prospective licensees on telegeodynamics dated December 27, 1941. This is a single-page letter with the typewritten signature of Dr. Nikola Tesla, in which he addresses himself to the prospective licensees of telegeodynamics, states that over a half million dollars was spent on this development with funds contributed by the Morgans, Crawford, J. J. Astor, and Fish, as well as commercial organizations, and states this to be a new art with which "unvelievable wonders can be achieved".

Exhibit L

Tesla's "New System of Fluid Propulsion". This is an undated memorandum of about 20 typewritten pages describing a system of fluid propulsion in which the conversion from hydraulic to rotary mechanical power is achieved by passing the fluid between flat circular disks, shaft-mounted and enclosed in a casing.

This memorandum written about 1925 describes in general terms a kind of hydraulic turbine which seems practical. There is copious evidence among the other of Tesla's papers that this idea was generally disclosed to appropriate individuals and that it received favorable comment and possibly some use. Some of these comments are contained on the last page of the exhibit.

Exhibit M

"The Power of the Future" - a memorandum apparently written by Tesla and probably in response to a request from some popular science group for an opinion as to the source of future power. This memorandum reviews the gradual evolution of power sources. It discusses in some detail the possibility of atomic power and states as his opinion that atomic power is not feasible. The discussion of atomic energy is apparently confused to some extent

Exhibit M (cont.)

with planetary energy. The article further discusses the subject of wind, tides, lightning, and water power as a source of commercial energy. The last sentence of this memorandum states: "With my wireless system, it is practicable to transmit electrical energy at a distance of twelve thousand miles with a loss not exceeding 5 per cent. I can conceive of no advances which would be more desirable at this time and more beneficial to the further progress of mankind." This memorandum constitutes an interesting generalized discussion of the various sources of power. It is qualitatively correct for the most part except probably in that portion which deals with atomic power.

Exhibit N

"The Transmission of Electric Energy Without Wires" - an article by N. Tesla in the Electric World, March 5, 1904, pages 429-431. A general, somewhat biographical article on Tesla's early work with some speculation on the possibility of long-distance wireless transmission of large amounts of energy.

Exhibit C

"World System of Wireless Transmission of Energy" - an article by N. Tesla in Telegraph and Telephone Age, October 16, 1927, pages 457 and 460. An article which traces the early work on the production and transmission of electromagnetic radiations, describes Tesla's efforts to increase the amount of power which can be transmitted without wires and concludes with a proposed "World System" for the wireless transmission of both power and communications. No workable disclosure of a means for accomplishing this is included, and such generalities as suggest the approach which Tesla had in mind do not seem capable of accomplishing the desired result.

Exhibit P

"Interview with Dr. Nikola Tesla" by Alden P. Armagnac for Popular Science Monthly, May 24, 1928. An 11-page memorandum written in popular conversational style describing an interview with Dr. Tesla and reporting his present work. This report includes statements on a new airplane, on rocket ships, on the wireless transmission of power, on a world system plan for the transmission of speech and television, on the impracticability of harnessing atomic energy, on radio activity, and on the acceleration of charged particles, such as cathode rays, by high voltages.

Exhibit Q

An agreement dated April 20, 1935, between Nikola Tesla and the Amtorg Trading Corporation, in which Tesla agreed to supply plans, specifications, and complete information on a method and apparatus for producing high voltages up to fifty million volts, for producing very small particles in a tube open to air, for increasing the charge of the particles to the full voltage of the high potential terminal, and for projecting the particles to distances of a hundred miles or more. The maximum speed of the particles was specified as not less than 350 miles per second. The receipt of $25,000 fee for this disclosure was acknowledged in this agreement, which was signed by Nikola Tesla and by A. Bartanian of the Amtorg Trading Corporation. The method referred to in this agreement is apparently that described in Exhibit F, above. It is probable that Exhibit D, above, is an effort by Tesla to clear up the questions raised by Soviet engineers after the subject disclosure had been made. There is no evidence that the inventions and information referred to in this agreement are other than those described in a number of Tesla's papers and published articles. It should therefore be expected, and it is substantiated by Exhibit D, that this disclosure subsequently proved unworkable.

3.

An examination of several items of scientific apparatus among the Tesla efforts at the Manhattan Warehouse and in a deposit box at the Governor Clinton Hotel showed those to be standard electrical measuring instruments in common use several decades ago.

JOHN G. TRUMP,
Technical Aide,
Division 14, NDRC.

Mass. Inst. of Tech.,
Cambridge, Mass.,
January 30, 1943.

JGT/G

LIST OF PERSONS ASSOCIATED WITH NIKOLA TESLA

Kerrigan, William - 89 Logan St., Brooklyn, N. Y.
Employed as building supt. Washington Market, Brooklyn. Mr. Kerrigan was the messenger boy for Postal Telegraph some years prior to Jan. 1943. At Mr. Tesla's request, he continued his services as special messenger when convenient. He had called upon Tesla the week prior to his death and has much valuable data and information concerning Tesla's contacts. I first met Mr. Kerrigan at the Frank Campbell funeral church.

Baumgarten, Charles - Room 1203, Municipal Bldg., Budget Bureau, N.Y.C.
Mr. Baumgarten was met at the funeral and Mr. William Lawrence of the New York Times and myself had lunch with him. Mr. Baumgarten knew Tesla and his connections with the Queensboro Bridge and many of his developments of Civic interest.

Skerritt, Miss Dorothy F. - Office, Biddle Purchasing Company, 107 Chambers Street, N.Y.C. - Wo. 2-5500.
Residence: Hasbrook Heights, New Jersey
Miss Skerritt was secretary to Doctor Tesla from 1912 until 1922. She is familiar with the Marconi patent suit, many of Tesla's scientific theories; knows the names of some of his friends; has witnessed demonstrations in his laboratory, then at 8 W. 40th St. N.Y.C. Miss Skerritt also knows that between 1916 and 1918, Doctor Tesla was at the Blackstone Hotel, Chicago and may have material there. She can give account of many of his deals with various firms.

Merrington, Marguerite - 46 W. 97th Street, N.Y.C. - Riverside 9-8186
Miss Merrington has known Doctor Tesla since 1893 and has been a guest of his on several occasions at the old Waldorf Hotel and at his laboratory in 1894 on Houston Street. Miss Merrington recalls the lighting effects without filaments and his radio controlled boat demonstrations. She also recalls statements regarding communication without wires by means of a small instrument. She has witnessed many laboratory experiments including power transmission without wires over short distances in the laboratory and also metallic plate suspension. He had also talked about communication with mars to her.

Holden, Mrs. Agnes J - 327 E. 52 St. N.Y.C. - Plaza 3-2341
Mrs. Holden is the daughter of Robert U. Johnson (deceased) (1936) who was a close friend of Tesla for many years. Mrs. Holden first met Mr. Tesla at her father's home when she was about 12 years old. The Johnsons were connected with the Century Magazine which published many articles regarding Tesla. Mr. Johnson wrote several poems about Tesla, one of which appeared in the April, 1895 issue of the

Century Magazine and the others appeared in "Poems of 50 years, 1880-1930 by Robert Underwood Johnson. Mrs. Holden has been in close contact with Doctor Tesla and has witnessed many of his demonstrations including that of the oscillator of 1899. She recalls the near destruction of the laboratory. Since "World II" , she has talked with Doctor Tesla with regard to instruments of war and he told her in response to her inquiry regarding tanks recently that he could stop them or the war. She recalls his discussions with her and her father regarding transmissions of power and Mars, etc. She says that she knows that Tesla has things for our Government only. Mrs. Holden witnessed many of the experiments and was present at the radio-controlled boat demonstration many years ago.

Lowenstein, Fritz (Deceased) Brother, Emil Lowenstein - 182 Bennett Ave. N.Y.C. - Wa-7-4519. Business (Artist) 420 Lexington Ave. N.Y.C. - Mu-5-8065. Mr. Fritz Lowenstein was the assistant to Dr. Tesla during his historic laboratory experiments in Colorado Springs in 1899. He was also to have appeared as a defense witness for Tesla in his Marconi patent suits during 1915, but for some reason failed to testify. The brother, Emil, address above, knows of the relatives of Mr. Fritz Lowenstein who have documents pertaining to the 1899 experiments. (Mr. G.H. Clark provided information re documents and Lowenstein) (Mr. Czito mentioned Lowenstein). Mr. Emil Lowenstein is not on friendly terms with the entire Lowenstein family and a Mr. Massey, 52 Vanderbilt Ave. can furnish additional information re Lowenstein.

Shirk, A.J. - Inventor's Model Shop, 70 West 100th St. N.Y.C. Ac-2-9466. Mr. Shirk has met Tesla on 3 occasions and appears to know quite a bit about his model work and laboratory developments, particularly within recent years. His exact status can only be determined by another call or ~~exact status~~ interview. He is attempting to determine the address of a Laboratory that existed at about 57th and 3rd Ave. and with whom a certain Dr. Walker was connected.

Arbus, Muriel, Miss - Res: 600 W. 13th St. Tel: Vanderbilt 4-9816, Bus: WPB, Chanin Building, N.Y.C. Miss Arbus has several photographs of Tesla and was a secretary to him before Miss Dorothy Skerritt, i.e. before 1912. She has not been interviewed except by phone.

Berg, Seigurd (or Sigmund) - Copenhagen, Denmark. Business: Paris, France. He has not been interviewed. See Mr. E. Fiensen of the International Latex Corp., Dover, Del. for information. Mrs Berg was a close friend of Tesla in Europe and mentioned other members of his family; Mr. Ernest and Mr. Esko Berg. are found in correspondence from Mrs. B.A. Behrend to Mr. Kenneth Sweezy in 1935 and 1934.

Behrend, Bernard, A. Mrs. - Rond Point, Aiken, S.C. Phone 136. Mr. Behrend and Mrs. Heaviside were very close friends of Dr. Tesla. Mrs. Behrend has many notes and technical data concerning Tesla's work either stored near Boston, Mass or at Aiken, S.C. Mr. Behrend was Chief Engineer for Westinghouse and supervised the construction of a great number of Tesla's motors and generators. He is author of "The Industion Motor" pub. 1921 in which a considerable portion is devoted to Tesla's work.

Boskan, Slavko, Mr. Engineer and author, Belgrade, Yugoslavia. Mr. Boskan published a book in Dresden, Germany entitled "Nikola und Ms Werk" in 1932 (Approx) Mr. Boskan was a close friend of Mr. Tesla and has considerable engineering data in his possession according to Mr. Sweezy.

Denton,Clifford, Mr. - Science Reporter.. New York Daily News, 220 E. 42nd St. N.Y.C. Mu-2-1234 Ext. 557 Mr. Denton has been present at many of Dr. Tesla's press releases and has many notes regarding the conferences. He said that he gave most of his data to Mr. Wm. Lawrence of the New York Times.

Brown Brothers (Mr. Arthur Brown) 220 W. 42 St. Bryant 9-4742. N.Y.C. Brown Brothers are photographers and have a large number of photos of Tesla and his laboratory equipment from which may be deduced mechanical construction details.

Curtis, Thomas Stanley - Address: unknown. Author "Experiments with High Frequencies currents" It is important to locate Mr. Curtis because he discussed many of Tesla's problems and appears to have technical data regarding his work.

Cramps, Shipbuilding Co. Philadelphia, Pa. Mr. Crosby, former Sec. of Commerce, and Mr. Cramps became interested in the radio controlled boat of Dr. Tesla about 35 years ago. Negotiations were carried on between Dr. Tesla and the above executives. This information was furnished by Mr. Kerr.

It may be well to contact Mr. Crosby's relatives or Mr. Cramps.

Czito, Julius - 4629 193rd St. Flushing, Long Island. Tel: Flushing 7-4711. Mr. Czito was mentioned to me first by Mr. Kosenovich and later Mr. Spanel had received his name from Mr. Wm. Lawrence. Mr. Czito is a machinest by trade and worked for Dr. Tesla as such from 1915 to 1929. He was particularly concerned with the construction of a turbin, and a fountain developed for a Mr. Hatmaker. Among other things, he worked on an extractor for sulpher from sea water and mechanical device for measuring the resistance of a ball bearing. He has little data left of Dr. Tesla's work but has a very good memory. He mentioned the Boston gear works, Mr. Bradley, Mr. Miller, the Zumbach Machinery Co. and Mr. Barney Levi. Mr. Czito's father also worked for Dr. Tesla in 1894 and was with him at his Houston St. laboratory. Mr. Czito, Sr. accompanied Dr. Tesla to Colorado Springs in 1899. Mr. Czito has a very good memory and can furnish additional information. He has discovered a photograph showing all of the employees of the old Tesla laboratory. He worked for Dr. Tesla on the development of a speedometer for the Waltham Watch Co. (This information from interview).

Clark, Mr. Geo. H. - Res: 349 E. 49th St. Tel: El-5-1603. Bus: RCA Mfg. Co. (Library) 25 Beaver St. N.Y.C. Room 314 A, Tel: Hanover 2-1829. Ext 123. Mr. G.H. Clark was contacted by virtue of a call placed in December to Mr. Oran Dunlap of the RCA Corp. Mr. Clark has a very large collection of personal data pertaining to radio pioneers, particularly Marconi. His business has been to collect such data in order to assist the prosecution of a suit of infrigment against the Marconi patents. He has never met Dr. Tesla but he knows of his work and is interested in collecting historical data for preservation. Mr. Clark is a friend of Mr. Sweezy.

Crosby, Former Sec. of Commerce, Washington, D. C. (address unknown) See Cramps and Kerr

Wetzel, Tailors - 2 E. 44th St. Murry Hill 2-6757. N.Y.C. This firm was tailor for Dr. Tesla throughout most of his life and may have information with regard to his friends, not otherwise listed.

French, Shriner, and Urner- Shoe Shops. 250 Madison Ave. Murry Hill 2-0319. N.Y.C.
Dr. Tesla purchased most all of his shoes from this firm for the past 50 years and data may be gathered from their records such as mailing addresses, etc.

Cornels, Fredrick C. F.B.I. Office Federal Court House Bldg. 12th Floor ? Regent 2-2315
Mr. Cornels was informed of the possible value of Dr. Tesla's data immediately following his death. So far as known, no action was taken.

Commercial Photostat Company, 11th Floor, Woolworth Bldg. N.Y.C.
Firm which made photostats of Tesla patents for Kerr.

Cramm, Ernest R. to contact call Mr. Clark of RCA.
Mr. Cramm knows a great deal about Dr. Tesla's relations with the RCA Company. Mr. Cramm was a former employee of RCA.

Gilder, Rodman - 108 E. 82nd St. N.Y.C. Butterfield 8-7397.
Son of Richard Watson Gilder, former Pub. of Century Magazine. Mr. Gilder knows of some old Tesla manuscripts and what has happened to his files of the Century Magazine at its dissolution. This name was received from Merrington.

Denmark, Lt. 1270 6th Ave. Room 811, Circle 6-1484 (restricted number) N.Y.C. U.S. Army Int. G2.
Lt. Denmark and his superiors were notified by Mr. Spanel and Washington with regard to Tesla devices. Lt. Denmark was interviewed personally with a group of 4 other officers including Mr. Ritchen.

Kirsch, Leon - a former draftsman for Tesla - name from Miss Dorothy Skerritt.
This party should be located because he had a lot of confidential data of Tesla's and made many drawings according to Miss Skerritt.

Drews, Lillian Married to an Austrian by name of DePree about 1914.
Miss Drews was secretary to Dr. Tesla prior to 1912. Her present address is unknown and she was not in good favor with Dr. Tesla, according to Miss Skerritt, the informant.

DosPassos, John - Attorney, and very good friend of Dr. Tesla. Address unknown.
Wanted Tesla to stop the Spanish American War. Formerly lived in New York. The Gentleman was expensively dressed and wore frocked coat similar to Tesla with bright checkered vest.

Had office in vicinity of 200 Broadway, as late as 1920. Mr. DosPassos is believed to have engineering data of Tesla's according to Thomas Byrne.

DeForrest, Dr. Lee- 6190 Hollywood Blvd. Los An[illegible]s, Calif. - Dr. DeForrest is [illegible] alive and was a friend of Dr. Tesla in the late 90 and early 1900's. There is a possibility that he may be able to assist in interpreting Tesla's works.

Dubilier, William - President of Cornell Dubilier Co., Manufacturers of CCondensers. Mr. G.H. Clark informs that Mr. Dubilier hasin his possession some of the original notes of the 1899 experiments in Colorado Springs.

Fradenburg, A.E. A reporter for the Brooklyn Eagle during 1930 who had numerous contacts with Tesla with regard to Power Transmission. His present address is unknown but he formerly resided in Brooklyn until 1934.

Fitzgerald, Francis, A. - Niagara Power Commission, Buffalo, N. Y. Mr. Fitzgerald, according to a personal interview with Dr. Tesla, was a friend of his on the A.C. power proposition for the development of Niagara. He also told me that Mr. Fitzgerald attempted to influence the Canadian Power Commission in 1927 for a project to transmit power without wires. There is a possibility that he may have some data.

Gernsback, Hugo p Publisher, Res; 230 West End Ave. Sohhler 4-2130 Bus: 25 W. Broadway, Tel: Rector 2-9690. A Friend of Tesla for about 35 years. Published many articles about Tesla during 1919 in the "Electrical Experimenter and later in Science and Invention." Has many of Tesla's original manuscripts and photos. Believes in all of Tesla's theories and has a working knowledge of them. This party was contacted several weeks prior to Dr. Tesla's death. Mr. Gernsback attempted to assist Dr. Tesla personally and appealed to Westinghouse for funds in 1933.

Hammond, John Hayes, Jr. Glochester, Mass. Tel. 2080 Mr. Hammond, Sr., financed some of Dr. Tesla's boat experiments and only 10 years ago John Hayes Hammond, Jr. operated one of Tesla's original models. The family has one of the boats in their

possession now. Much technical data can be gathered from this source.

Hassell, Eugene Floyd - Res: Belport, Long Island
Machinest, Sperry Gyroscope Company, Garden City, L.I. Employee Number 5470, Phone Vigilent 4-5400 (Restricted number) Ext. 211. Use any New York Phone. Name from Czito. This party knows of Tesla's laboratory on Long Island through the laundry driver named Tommy Wallen.

Hobbs, Octavious - Springfield Gardens, Long Island.
(Has not been contacted)

Hatmaker, (no initials) party who financed fountain built by Czito. Has not been contacted, but he lived in the St. Regis Hotel in 1920.

Kosonovich, Sava - Navarro Hotel, apt. 17B. 112 Central park south, N.Y.C. Tel: Circle 7-7900, Office- Regent 7-4662. President of the Central European Powers Association and former Minister of Yugoslavia to the U.S. Mr. K. is one of the two living nephews of Dr. Nikola Tesla (see Nikola Trbjevich) Mr. K. was present in the Hotel New Yorker on the morning following Dr. Tesla's death. Others present were K.M. Sweezy, G.H. Clark. Mr. K. knows of many blue prints that were in the rooms and a black notebook with several hundred pages containing the last notes of Dr. Tesla. Mr. K. says that some of the papers were marked "Government" and that Dr. Tesla had told him he had valuable information. Mr. K. is of the opinion that it may have been for the Yugoslav Gov't. He says that no will was found. His attorney is Mr. Wittenberg. He was appointed heir by the Surrogates Court of New York County. He said that the other nephew waived any interest. Mr. K. is not in accord with Mr. Fotich, present Ambassador of Yugloslavia to U.S., now in Washington. There is a bit of political unrest in the Yugoslav organization.

KOSANOVICH, SAVA

Kerr, John - Attorney, 233 Broadway, N.Y.C. Cooper Kerr Dunham (att. at Law) Courtland 7-9334 - also associated by Byrnes. This firm was the patent attorney for 112 of the Tesla patents. They also instituted the proceedings of the infringement suits for the Westinghouse Company. Mr. Kerr knew Tesla very well and can give considerable data. Mr. Cooper, now deceased, was however, the main instigator of the patents for Tesla. Mr. Cooper left this firm some time ago and Tesla apparently took some of his business

to the new Cooper associates. Many of the old patents of Tesla in his own handwriting are available at this office. Mr. Byrne has additional information. I am of the opinion that this firm still has a connection with Westinghouse.

Byrne, Thomas, J works for Cooper Kerr and Dunham (see John Kerr above). Mr. Byrne knew Tesla very well and also knows of the connections with the Union Sulpher Compnay and the turbine for which see Czito. There is a wealth of information in the office of this company regarding the system of Power Transmission and any patents on file which were never issued. Mr. Kerr and Mr. Byrne were contacted before Mr. Tesla's death.

Kostich (first name unknown) New York, Official photographer for the Yugoslav group. Office believed to be 235 E. 72nd St. and Residence in Long Island City. He may be reached through Regent 7-4662. He is a friend of Mr. Kosonovich.

Kulishich, Prof. Kosta Res: Belgrad, Yugoslovia at the Tesla Institute. He was a school mate of Tesla in Grotz. See the N.Y. Sun of August 27, 1931.

Gage, E. G. 111 Nassau St. N. Y. C. Engineer, works for Leon Ottinger, Courtland 7-5500.
He was a friend of Mr. J.S. Leach (deceased) formerly of Redbank, N. Y. who made electrical parts for Tesla's laboratory. He says that he can get information regarding Leach's relatives and perhaps drawings.

Levi, Bernard - Machinest, Zumbach Machinery Co. 134 W. 54 St. N.Y/C. Circle 7-1444
Received this name from Czito who said that Levi knew of other work by machinests on Tesla's equipment.

Lucan, John - address unknown - presumed to be in Manhattan. A former Western Union Messenger boy during June of 1937 who has other data regarding recent contacts by Tesla during his services as a messenger. He has not been located.

Lynch, Arthur. Lived in England. Believed to be near London, now deceased. Family had considerable correspondence with Tesla regarding transmission of power without wires.

Lawrence, William. Science Writer, New York Times. 229 W. 43 St. N.Y.C. Lackawanna 4-1000. Res: 541 E. 72nd St. Rhinelander 4-5528.

A friend of Tesla's for about 25 years. Has much old data regarding Tesla and has talked to him on many occasions regarding power transmission and the war effort. Has assisted greatly in providing information for gathering material, etc. This party was contacted before Dr. Tesla's death.

Massie, M.C. 52 Vanderbilt Ave. N.Y.C.

Maier, Ruth N. The Yugo Slow Society, 565 5th Ave. Room 807. Pl-8-0256
This is the information center and serves as the publicity agent for the group.
Miss E. Oppa also works there and has many names of Tesla's friends.

Martin, Octavo. Employee of Hotel New Yorker and friend of Tesla.

Mathews, Grenville (deceased) wife was Gana Walker, Met. Star sponsored by McCormick. The family lived in England until his eath and his wife now resides in New York. Mr. Matthews was refered to in Tesla's articles for the Telephone and Telegraph Age for Oct. 1927. Mr. Matthews had correspondence with Tesla on the so-called "Death-Ray". Gana Walker has all of her husband's data.

Mott, C.Jordan, Jr. 520 E. 90th St. N.Y.C. Bus: 6 E. 45th St.
Tel: Vanderbilt 6-0345.
The Mott family financed Tesla in various ventures. They may have some of this data.

Gossett, W. O. Ford Museum, Detroit, Mich.
Mr. Gossett is associated with a Mr. Black while he is on leave of absence to the Army. Mr. Black may be reached regarding some models of Tesla's which are understood to be on display at the Ford Museum.

Nathan, Thoma, A. 25 E. 83rd St. N.Y.C.
We do not know what connection this party had with Tesla but his name was secured.

O'Neill, John, J. Res: 209 N. Long Beach Ave. Freeport, Long Island.
Tel: Freeport 2-493.
Science editor of the New York Herald Tribune, 230 W. 41 St. N.Y.C. Pennsylvania 6-4000.
Mr. O'Neill has known Dr. Tesla for 40 years. He has had many discussions with him regarding his equipment and scientific ventures. He interested Dr. Tesla in 1934 and 1935 to present the matter of national protection devices to the U.S. Govt. Mr. O'Neill made

a few contacts and the matter was dropped. Mr. O'Neill has notes of 1938 and 1939 wherein Dr. Tesla declared he had been approached by the British Govt. through Stanley Baldwin and Neville Chamerlain to negotiate for one of his devices. Mr. O'Neill thought that the sum offered was for 30 millions of dollars. In the interview, Dr. Tesla stated that his device would operate over a range of 200-250 miles. Mr. O'Neill is of the opinion that Tesla had unusual powers. Mr. Lawrence is of the opinion that he does not know what he is talking about. O'Neill can furnish much additional information.

Pickard, Dr. Greenlief Whittier..59 Dalton St. Newton Center, Mass.
Dr. Pickard was a very good friend of Dr. Tesla. Dr. Pickard developed the vertical antenna system and has correspondence with Tesla concerning "wave propagation". This information should be valuable.

Sarony, Inc. Photographers, 362 5th Ave. N.Y.C. Wis 7-1713
They have photos of the old Tesla Laboratory and pictures of Tesla to 1914.

Page, Parker W. Attorney, Present address unknown, however he resided in Manhattan for about 40 years and was formerly associated with Cooper Kerr and Durham. He was last known to be associated with an attorney by the name of Bean in Manhattan. He worked out many of Tesla's details concerning Power Transmission and Tesla gave him many notes according to Mr. Kerr.

Radosavljevich, Paul, R. New York University, Professor, Education Dept. Tel: Spring 7- 2000.
A friend of Tesla for 35 years and knows much of his work with regard to the retina and bile chemistry.

Ritchen, (first name unknown) Anti-Trust Division, Custodian of Alien Property, 18th Floor, 120 Broadway, N.Y.C. Regent 2-3582 (restricted number). Mr. Ritchen supervised the various agents who were responsible for the sealing of the property in the Manhattan warehouse and various hotels. On Saturday eve., January 10, 1943. This office worked with Lt. Denmark.

Astor, Mrs. John Jacob (Lady Ribblesdale) now living in the U.S.
420 Park Ave., Plaza 9-6646
Lady Ribblesdale is the Mother of Vincent Astor who financed many of Tesla's developments about 1910 and their family may have data of importance.

Secor, Harry. Island Road, Ramsey, N. J. Res. Business: Model Craftsman Publication. Ramsey, New Jersey, Tel: Ramsey 519. This party knew Dr. Tesla very well and I talked to him several weeks prior to Tesla's death. He has some plans of Tesla equipment.

Sweezy, Kenneth, M. 163 Milton St. Brooklyn, N. Y. Evergreen 9-5809
Mr. Sweezy has known Dr. Tesla for approximately 15 years. He became a close confident of his on many things and did a very notable work in 1935 when he arranged for a collection of 100 letters from various scientific authorities commemorating Tesla's 75th birthday. Mr. Sweezy wrote many articles about Dr. Tesla and has some old clippings and miscellaneous data including several books detailing Tesla's work. Mr. Sweezy corresponded with Mr. Boskan and Mrs. Behrand. He is a friend of Mr. Clark. Mr. Sweezy would like to write a book of Tesla's life and had spoken to me with Dr. Tesla regarding it. I contacted Mr. Sweezy several weeks before Dr. Tesla's death. (Much information can be obtained here).

Scott, Prof. Charles F. Instructor of Electrical Engineering, Yale University, New Haven, Conn.
Prof. Scott was a friend of Tesla for about 43 years. He worked as an electrician with Tesla in the early days and knows a great deal about his work. Prof. Scott and Tesla did not enjoy close friendship during recent years because Prof. Scott could not understand in full, all of Tesla's work. More information can be obtained here.

Scherff, George, Mrs. 219 Grant Terrace, Maroneck, N. Y.
Mrs. Scherff was the auditor for Tesla for many years and has much information to give. She has information concerning Tesla's personal things and technical data and can provide much of value, including old documents.

Skerrett, John. Author- believed to be from Philadelphia, Pa. who witnessed many of Tesla's demonstrations. Miss Dorothy Skerrett can furnish additional information regarding him.

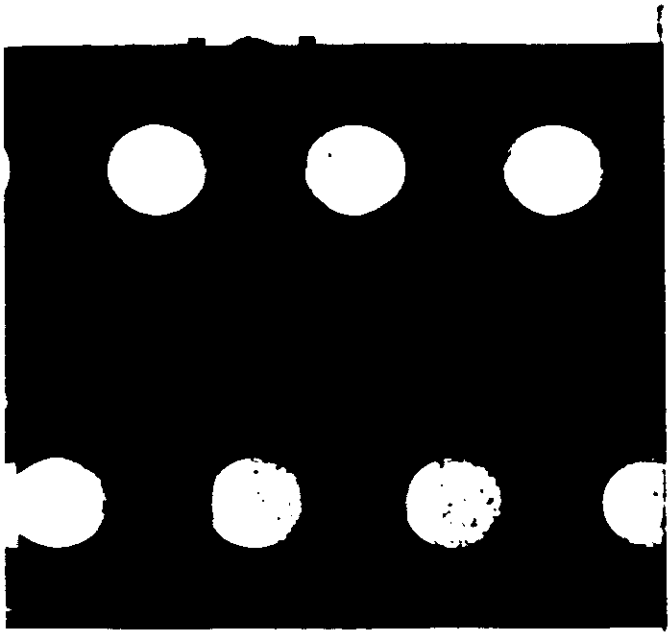

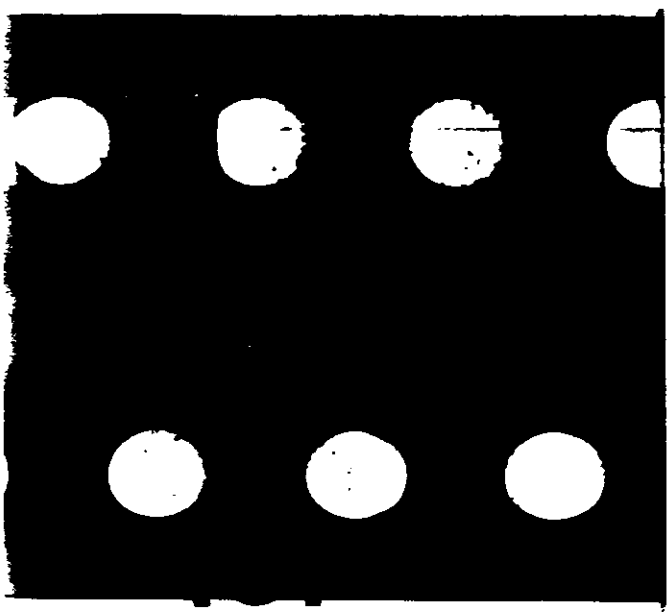

Tom -

It is my understanding that every case which is completed through disclosure is "preprocessed".

ITU's Reading Room maintains only those "preprocessed" cases which have been deemed to have sufficient public interest to warrant inclusion in the Reading Room.

The question, therefore, is: Does the Tesla material fit the criteria for inclusion in the FOIA Reading Room?

I think not. The

(b)(5)
(C)

CC-247

Mr. Tolson
Mr. Clegg
Mr. Glavin
Mr. Ladd
Mr. Nichols
Mr. Rosen
Mr. Tracy
Mr. Egan
Mr. Gurnea
Mr. Harbo
Mr. Mohr
Mr. Pennington
Mr. Quinn Tamm
Mr. Nease
Miss Gandy

June 8, 1949

MEMORANDUM FOR [redacted] (b)(7)(c)

RE: SAVA N. KOSANOVIC
YUGOSLAV AMBASSADOR TO THE US
INTERNAL SECURITY - R
(Bureau file 65-47953)

ALL INFORMATION CONTAINED
HEREIN IS UNCLASSIFIED
DATE 4-18-89 BY SP1 [illegible] #291860

PURPOSE

This memorandum is submitted to incorporate all the pertinent references in the Bureau files concerning the entitled individual who is the Yugoslav Ambassador to the United States.

A case was opened on this individual when information was received that Kosanovic had taken possession of the scientific papers of his uncle, Nikola Tesla, the internationally known inventor. Subsequent investigation determined that Kosanovic had turned over the possession of these scientific papers to the Alien Enemy Custodian in New York City.
(65-47953-X1 & Serial 3 & 4)

(b)(1)(D) [redacted]

(b)

OK

[redacted]

65-47953-21X

INDEXED 143

(b)(7)(c)

cc - Mr. Ladd
cc - [redacted]
cc - [redacted]
cc - [redacted]

CJM:jpa

THIS MEMORANDUM IS FOR ADMINISTRATIVE PURPOSES
TO BE DESTROYED AFTER ACTION IS TAKEN AND NOT SENT TO FILES

194

STANDARD FORM NO. 64

Office Memorandum • UNITED STATES GOVERNMENT

TO : The Director

DATE: April 3, 1950

FROM : D. M. Ladd

SUBJECT: SAVA N. KOSANOVIC
INTERNAL SECURITY - YU
Bureau File 65-47953

Tolson
Ladd
Clegg
Glavin
Nichols
Rosen
Tracy
Harbo
Mohr
Tele. Room
Nease
Gandy

ALL INFORMATION CONTAINED
HEREIN IS UNCLASSIFIED
DATE 4-18-89 BY SP1AGC

291860

Reference is made to my memorandum dated March 29, 1950, relating to the telephone inquiry by the Yugoslav Ambassador Sava N. Kosanovic as to the possibility of obtaining a copy of a microfilm copy of the technical papers of the late Nikola Tesla, world-famous scientist who died in New York in 1943.

Kosanovic claims to have been a nephew of Tesla and is known to have tried to obtain these papers at the time of Tesla's death. However, they were taken over at that time by the Alien Property Custodian. If any copies were made of these papers, they were made by the Office of the Alien Property Custodian which took possession of Tesla's papers in 1943 or the Department of the Army which was interested in copying Tesla's notes in 1945. The Army's interest apparently was developed by a young scientist named [redacted] who had been a protege of Tesla and one of his few confidants. [redacted], who knew that Tesla had been endeavoring to perfect the wireless transmission of electrical current, one of the basic concepts involved in the production of a "Death Ray" had subsequently entered the Army, and in October, 1945, appeared at our New York Office, together with three other members of the United States Army, to request our assistance in obtaining access to Tesla's papers which were stored in a warehouse of the Manhattan Storage Company. [redacted] and his associates were referred, at that time, to the Alien Property Custodian which was reported to have made an investigation of Tesla's belongings following the latter's death.

(b)(7)(C)

Although the Office of Alien Property or the Department of the Army might be able to furnish a copy of Tesla's papers to Kosanovic, it is not believed that the FBI should facilitate his search for this material, which although possibly of no present value from a National Defense standpoint, could still conceivably be of assistance to the Yugoslav Government.

COPIES DESTROYED
14 OCT 26 1960

[redacted] (b)(7)(C)

Attachments

RECORDED - 95

65 47953-2

(b)(7)(C) [redacted]

195

RECOMMENDATIONS:

1. That the attached letter explaining that we have never had such a copy as he requests, be sent to Mr. Kosmovic.

2. That the attached memo to the New York Office, instructing them to make further inquiry at the Manhattan Storage Company and advising that firm that we have no copy of Tesla's papers as they allegedly claim, be forwarded.

STANDARD FORM NO. 64

Office Memorandum • UNITED STATES GOVERNMENT

TO : Director, FBI

DATE: April 17, 1950

FROM : SAC, New York

SUBJECT: SAVA N. KOSANOVIC
INTERNAL SECURITY-YU
(Bufile 65-47953)

ALL INFORMATION CONTAINED
HEREIN IS UNCLASSIFIED
DATE 7-3-80 BY SP4 Jam/rte

Rebulet dated April 3 last.

On April 7, 1950 agents of this office interviewed Mr. J.V. POTTS, Vice President of the Manhattan Warehouse and Storage Company, 52nd Street & 7th Avenue, New York City, and at that time MR. POTTS advised that the rules of his firm required that all persons gaining access to goods stored by Manhattan first had to fill out an appropriate form setting forth their names, date of visit, and reason for requesting access to the goods.

In a review of the file pertaining to the storage of the effects of NIKOLA TESLA, MR. POTTS revealed that only one such visit had been made by persons outside of the management of Manhattan Storage itself. This one occasion took place on January 26 and 27, 1943, at which time representatives of the Alien Property Custodian made a thorough review of the entire effects of the TESLA estate.

The TESLA effects are stored in rooms 5J and 5L of Manhattan Storage's warehouse at 52nd Street & 7th Avenue, New York City. MR. MICHAEL KING, who stated he had been Floor Supervisor for approximately 10 years on the floor in question, stated that he could recall only one occasion in early 1943 when an examination was made of the TESLA effects. He stated that at that time numerous photographs were taken by the examiners. His description of the equipment used would tend to show that a microfilm reproduction was made of some of the papers of the deceased scientist. MR. KING added that several of the group making the examination wore U.S. Navy uniforms, and during the two days required to complete the examination the civilian assistants in the group were identified to him only as "FEDERAL AUTHORITIES". According to MR. KING, no other instance of microfilming of the records of the TESLA estate has taken place since that time.

It should be noted that the Bureau was informed of the examination mentioned above by New York letter (with attachments) dated October 17, 1945, entitled UNKNOWN SUBJECT; SAVA KOSANOVICH; Experiments & Research of NIKOLA TESLA (Deceased), Espionage-M.

UNRECORDED COPY FILED IN

RECORDED - 38
INDEXED - 38

65 47953 27
APR 18 1950
37

cc: 65-12290

(b)(7)(c)

EHC JJC
105-1391

R-435

APR 2

197

MR. POTTS stated that no inquiry had been received by Manhattan from SAVA N. KOSANOVICH, nor had Manhattan informed him, in any way, that an examination of the TESLA effects had been made by anyone. In fact, added MR. POTTS, the only correspondence relating to the TESLA estate has been in the form of bills for storage.

MR. POTTS stated that any personal inquires regarding the estate would of necessity be directed to him, and to date no such inquiries have been made.

Interviewing agents explained to MR. POTTS that the examination made, as mentioned above, was not instigated by the Bureau, nor had the Bureau taken part in that examination.

Unless advised to the contrary, this investigation is being placed in a closed status, and no further investigative action is contemplated by this office. CLOSED.

XXXXXX
XXXXXX
XXXXXX

FEDERAL BUREAU OF INVESTIGATION
FOIPA DELETED PAGE INFORMATION SHEET

4 Page(s) withheld entirely at this location in the file. One or more of the following statements, where indicated, explain this deletion.

☒ Deletions were made pursuant to the exemptions indicated below with no segregable material available for release to you.

Section 552		Section 552a
☒ (b)(1)	☐ (b)(7)(A)	☐ (d)(5)
☐ (b)(2)	☐ (b)(7)(B)	☐ (j)(2)
☐ (b)(3)	☐ (b)(7)(C)	☐ (k)(1)
_____	☐ (b)(7)(D)	☐ (k)(2)
_____	☐ (b)(7)(E)	☐ (k)(3)
_____	☐ (b)(7)(F)	☐ (k)(4)
☐ (b)(4)	☐ (b)(8)	☐ (k)(5)
☐ (b)(5)	☐ (b)(9)	☐ (k)(6)
☐ (b)(6)		☐ (k)(7)

☐ Information pertained only to a third party with no reference to you or the subject of your request.

☐ Information pertained only to a third party. Your name is listed in the title only.

☐ Documents originated with another Government agency(ies). These documents were referred to that agency(ies) for review and direct response to you.

_____ Pages contain information furnished by another Government agency(ies). You will be advised by the FBI as to the releasability of this information following our consultation with the other agency(ies).

_____ Page(s) withheld for the following reason(s): _____

_____

☐ For your information: _____

_____

☐ The following number is to be used for reference regarding these pages:

_____

XXXXXX
XXXXXX
XXXXXX

XXXXXXXXXXXXXXXXXXXXX
X DELETED PAGE(S) X
X NO DUPLICATION FEE X
X FOR THIS PAGE X
XXXXXXXXXXXXXXXXXXXXX

FBI/DOJ

OPTIONAL FORM NO. 10
JULY 1973 EDITION
GPA FPMR (41 CFR) 101-11.6

UNITED STATES GOVERNMENT

Memorandum

TO : DIRECTOR, FBI [redacted] (S) DATE: 8/20/76

FROM : SAC, BUFFALO [redacted] (S) (RUC) (b)

SUBJECT: [redacted] (S) (1) CONFIDENTIAL

(OO: NEW YORK)

Re Buffalo airtel to Bureau, dated 7/13/76.

Enclosed for the Bureau are six (6) copies of an LHM, captioned "NIKOLA TESLA MONUMENT, NIAGARA FALLS, NEW YORK," which is self-explanatory. One copy is being designated for Legat, Ottawa for information. Two copies are being furnished to New York, one to Newark for information since they had previous interest in this matter, and one copy to WFO for information because of U. S. and Yugoslav dignitaries who attended the unveiling of the monument.

Nothing adverse came to the attention of this office concerning the dedication of the Nikola Tesla Monument which was a bicentennial gift from the Yugoslav Government to the United States. Diplomatic representatives from the United States, Yugoslavia and Canada reportedly attended the affair. No further inquiries being made at Buffalo and it is closing its case administratively.

EX-113

CLASSIFIED BY 6166 REC-33 [redacted]
EXEMPT FROM GDS, CATEGORY 3 [redacted]
DATE OF DECLASSIFICATION INDEFINITE

ENCLOSURE

3 - Bureau (Encs. 6) (RM)
(1 - Legat, Ottawa) (S)
1 - Newark [redacted] (Info) (Enc.1) (RM)
2 - New York [redacted] (S) (Encs. 2) (RM)
1 - WFO [redacted] (Enc. 1) (Info) (RM)
1 - Buffalo (S)

7 AUG 25 1976 (b) (1)

CONFIDENTIAL

[redacted] (8) (b) (7) (C)

Copy to ... 1 Legat, Ottawa, 1 destroy
By routing slip for
[X] info [ ] action
date 8-2-76
by [redacted]

2-22-89
Classified by
Declassify on: OADR
#291860

SEP 10 1976

Buy U.S. Savings Bonds Regularly on the Payroll Savings Plan

5010-110

200

UNITED STATES DEPARTMENT OF JUSTICE

FEDERAL BUREAU OF INVESTIGATION

In Reply, Please Refer to File No.

Buffalo, New York
August 20, 1976

NIKOLA TESLA
MONUMENT
NIAGARA FALLS, NEW YORK

An article appeared in the "Buffalo Evening News," a daily newspaper published in Buffalo, New York, on July 24, 1976, which in part contained the following information:

The article was captioned "Dignitaries Unveil Statue of 'Genius' Tesla."

The article contained information that NIKOLA TESLA was the inventor of the alternating current and the first man to successfully transmit electric power. The background of TESLA set out in the article revealed that he arrived in New York City in 1884 with four cents in his pocket and plans for an airplane and a book of poetry. In 1888, he invented a system to make the transmission of alternating current practical, at 37 was a millionaire but died at the age of 88 in New York City alone and penniless.

The statue, approximately nine feet high, was erected on Goat Island, a site which is located on the property of the New York State Park and Recreation Department.

The article revealed that more than a thousand people listened to FRANK G. ZARB, Federal Energy Administration, representing President FORD, and Dr. IVO MARGAN, President of the Socialist Union of Croatia, representing Yugoslavian President TITO, as both pulled the cord unveiling the nine foot high statue of TESLA.

2-22-89
Classified by SDIAG/GLM
Declassify on: OADR
#241860

(b)
(1)
[redacted] (3)
ENCLOSURE

201

NIKOLA TESLA
MONUMENT
NIAGARA FALLS, NEW YORK

The sculpture was created by Yugoslavian FRANO KRSINIC and was the bicentennial gift of the Yugoslavian people to the United States. Both of the above men read official greetings from their presidents and exchanged pledges to continue good will and friendship between the two countries.

The article stated that following the unveiling, a reception-luncheon was held for several hundred persons at the Parkway-Ramada Inn, Niagara Falls, New York. Mr. ZARB toasted the Yugoslavian delegation which was answered by that country's Ambassador to the United States, DIMCE BELOVSKI.

According to the article, there was a bit of diplomatic byplay between Mr. ZARB and Ambassador BELOVSKI during the ceremonies. In his remarks at the statue unveiling, Mr. ZARB included an appeal to Yugoslavia to stop all harassment of Americans visiting that country.

In responding to Mr. ZARB's toast at the luncheon, the Ambassador gave assurance that his country wants American visitors and will welcome them.

According to the article, some observers thought that the Yugoslav release of an American held for the past seven months was timed to coincide with the unveiling of the statue.

The tribute to TESLA was sponsored by several Yugoslavian groups in cooperation with the Niagara Mohawk Power Corporation, Westinghouse, and the New York State Park and Recreation Commission.

An article appearing in the "Niagara Falls Gazette," a daily newspaper published in Niagara Falls, New York, captioned "Zarb Calls for Energy Independence for U. S." the article dealt with the unveiling of the Nikola Tesla Monument and stated that accompanying the Yugoslavian Ambassador to the ceremonies on July 23, 1976, were Dr. PAVLE SAVIC, President of the Academy of Science of Serbia,

NIKOLA TESLA
MONUMENT
NIAGARA FALLS, NEW YORK

and VASA VESKOVIC, Yugoslavian Consulate General in New York City.

An article appeared in the "Niagara Gazette" on July 24, 1976, captioned "Aide Almost Missed Event." The article in part indicated that friendship and cooperation between the United States and Yugoslavia was the theme of the day as that nation dedicated a statue of NIKOLA TESLA on July 23, 1976.

The friendship was personalized when a Yugoslavian tried to cross the border from Canada to the United States to attend the dedication without a visa.

The individual was GOJKO SEKULOVSKI, who was in Montreal, Quebec, Canada, as the Chairman of the Olympic Commission of Yugoslavia. He also happens to be the Assistant Secretary of State for Foreign Affairs in that country.

He did not have an American visa and almost missed the unveiling of the statue.

Fast thinking on the part of representatives of the Niagara Frontier State Park and Recreation Commission sent an official car to take the dignitary across the border, which saved the day.

In the "Niagara Falls Gazette" on July 24, 1976, there appeared an article concerning the unveiling of the statue which indicated that Dr. BOGDAN MAGLICH was Chairman of the Yugoslavian-American Bicentennial Committee and was a speaker at the affair. Dr. MAGLICH also serves as President of the Fusion Energy Corporation, Princeton, New Jersey. Dr. MAGLICH eulogized the inventor TESLA and stated "only America could have taken a giant of Tesla's stature, embraced him and provided him the means he needed to bring his talent to its best use of humanity."

NIKOLA TESLA
MONUMENT
NIAGARA FALLS, NEW YORK

(b)(2)

[redacted] were in a position to observe the commemoration of the Tesla Monument, stated that no adverse information came to their attention concerning the dedication of the statue on July 23, 1976.

4-750 (Rev. 12-14-88)

XXXXXX
XXXXXX
XXXXXX

FEDERAL BUREAU OF INVESTIGATION
FOIPA DELETED PAGE INFORMATION SHEET

3 Page(s) withheld entirely at this location in the file. One or more of the following statements, where indicated, explain this deletion.

☒ Deletions were made pursuant to the exemptions indicated below with no segregable material available for release to you.

Section 552		Section 552a
☒ (b)(1)	☐ (b)(7)(A)	☐ (d)(5)
☐ (b)(2)	☐ (b)(7)(B)	☐ (j)(2)
☐ (b)(3)	☐ (b)(7)(C)	☐ (k)(1)
_____	☐ (b)(7)(D)	☐ (k)(2)
_____	☐ (b)(7)(E)	☐ (k)(3)
_____	☐ (b)(7)(F)	☐ (k)(4)
☐ (b)(4)	☐ (b)(8)	☐ (k)(5)
☐ (b)(5)	☐ (b)(9)	☐ (k)(6)
☐ (b)(6)		☐ (k)(7)

☐ Information pertained only to a third party with no reference to you or the subject of your request.

☐ Information pertained only to a third party. Your name is listed in the title only.

☐ Documents originated with another Government agency(ies). These documents were referred to that agency(ies) for review and direct response to you.

_____ Pages contain information furnished by another Government agency(ies). You will be advised by the FBI as to the releasability of this information following our consultation with the other agency(ies).

_____ Page(s) withheld for the following reason(s): _____

_____

☐ For your information: _____

_____

☐ The following number is to be used for reference regarding these pages:

_____

XXXXXX
XXXXXX
XXXXXX

XXXXXXXXXXXXXXXXXXXXX
X DELETED PAGE(S) X
X NO DUPLICATE FEE X
X FOR THIS PAGE X
XXXXXXXXXXXXXXXXXXXXX

FBI/DOJ

205

July 7, 1975

[redacted] (b)(7)(c)

Dear [redacted]:

This will acknowledge your letter of June 9th.

In response to your inquiry, the papers of Dr. Nikola Tesla were impounded, after his death, by the Office of Alien Property of the Department of Justice.

Sincerely yours,

C. M. Kelley

Clarence M. Kelley
Director

~~1 - The Deputy Attorney General - Enclosure~~
~~Attention: Susan M. Hauser~~ REC 22 77-32591-20

NOTE: Bufile 100-2237 indicates that Dr. Tesla was a world famous electrical inventor, and at the time of his death his personal papers and effects were impounded by Office of Alien Property for national security reasons. Since Tesla's death in 1943 the Bureau has received numerous inquiries about the disposition of his technical papers. The above reply is forwarded in answer to these inquiries. Bufiles contain no information identifiable with requesters.

JUL 8 1975

Assoc. Dir. ___
Dep. AD Adm. ___
Dep. AD Inv. ___
Asst. Dir.
Adm. ___
Comp. Syst. ___
Ext. Affairs ___
Files & Com. ___
Gen. Inv. ___
Ident. ___
Inspection ___
Intell. ___
Laboratory ___
Plan. & Eval. ___
Spec. Inv. ___
Training ___
Legal Coun. ___
Telephone Rm. ___

[redacted]

MAILED 7
JUL 7 1975
FBI

(b)(7)(c)

[redacted]

56 JUL 29 197[redacted]

[redacted]

GPO 954-546

206

CURRENT BIOGRAPHY

WHO'S NEWS AND WHY

Vol. 4 No. 2 February 1943

The H. W. Wilson Co., New York

94-3-4-116-17

RECEIVED
FEB 19 1944
U.S. SUPERINTENDENT OF DOCUMENTS

IN THIS ISSUE

Architecture
Blomfield, Sir Reginald (Theodore) obit
Isham, Norman M(orrison) obit

Art
Ehnert, James, Baron obit
Glicenstein, Enrico obit
Groth, John (August)
Herlin, Emil obit
O'Day, Caroline Goodwin obit
Sykes, Charles H(enry) obit
Zorach, William

Aviation
Bissell, Clayton L.
Martin, Glenn L(uther)

Diplomacy
Chiang Tso-pin obit
Henderson, Sir Nevile (Meyrick) obit
Mello Franco, Afranio de obit
Murphy, Robert D(aniel)

Education
Boas, Franz obit
Bos, Lars Wilhelm, Rev. obit
Garfield, Harry A(ugustus) obit
Isham, Norman M(orrison) obit
Lodge, Gonzalez obit
Lowell, A(bbott) Lawrence obit
Reynolds, Helen Wilkinson

Engineering
Crawford, Frederick C(leveland)

Government—International
(See also Military and Naval)
Boisson, Pierre (François)
Chiang Tso-pin obit
Darlan, Jean (Louis Xavier François) obit
Ibn Saud, Abdal Aziz
Mello Franco, Afranio de obit
Noguès, Auguste (Paul)
Stresa, Emil Georg von obit

Government—United States
(See also Military and Naval)
Biddle, Francis M(yron)
Bissell, Clayton L.
Carlson, Evans F(ordyce)
Fuqua, Stephen Ogden
Gullion, Allen W(yant)
MacFarland, Francis N(ash)
Martin, Glenn L(uther)

Industry
Crawford, Frederick C(leveland)
Martin, Glenn L(uther)

Journalism
Bayer, Charles
Fawley, Frederick P(inley) obit
Fuqua, Stephen Ogden
Hebert, F(elix) E(dward) obit
Kreeger, William W(yant)

Labor
Andrews, John B(ertram) obit
Gullion, Allen W(yant)
Osborne, William Hamilton obit

Law
Gullion, Allen W(yant)
Osborne, William Hamilton obit

Literature
Fawley, Frederick P(inley) obit
Habe, Hans
Osborne, William Hamilton obit

Medicine
Crile, George (Washington) obit
Van Rensselaer, Mariana Griswold obit
Wiley, Harvey W(ashington) obit

Military and Naval
Anderson, Kenneth A(rthur)
Anderson, Nicholas E. obit
Bissell, Clayton L.
Carlson, Evans F(ordyce)
Fuqua, Stephen Ogden
Gullion, Allen W(yant)
MacFarland, Francis N(ash)
Martin, Glenn L(uther)
Mead, James M(iller)

Motion Pictures
Bayer, Charles
Eddy, Nelson
Howe, James Wong
Westley, Helen obit

Music
Eddy, Nelson

Naval
Borde, Jean (Joseph Jules Noel) de la
Carlson, Evans F(ordyce)
Zaidler, Curt Frederick obit

Radio
Eddy, Nelson
Fuqua, Stephen Ogden
Tinney, Cal(vin L.)

Religion
Bos, Lars Wilhelm, Rev. obit
Cadbury, H. Howard obit

Science
Boas, Franz obit
Carver, George Washington obit
Crile, George (Washington) obit
Howe, Harrison E(stell) obit
Ives, James E(dmund) obit
Rosenoff, Aaron J(oshua) obit
Schmeltz, Franz C(arl) obit
Tesla, Nikola obit

Social Service
Andrews, John B(ertram) obit
Carpenter, J(ulius) Henry, Rev.
O'Day, Caroline Goodwin obit
Smith, Ida B. Wise

Theatre
Behrman, S(amuel) N(athaniel)
Hibbard, Edna obit
Westley, Helen obit

Published monthly by the H. W. Wilson Company, 950 University Avenue, New York, N.Y. Subscription price $8.00 per year. Entered as second-class matter February 28, 1940, at the post office at New York, N.Y., under the act of March 3, 1879.

CURRENT BIOGRAPHY

Published monthly by The H. W. Wilson Company
950 University Avenue New York

Editor: Maxine Block Managing Editor: E. Mary Trow

Copyright, 1942, The H. W. Wilson Company. Reasonable quotation from this publication is permitted provided due credit is given to CURRENT BIOGRAPHY

Vol. 4 February 1943 No. 2

Explanations

Authorities for forms of names are the Library of Congress and the Wilson Company bibliographical indexes. Exception is made to the authorized form when the shortened form of a name is better known: e.g., Monty Woolley instead of Edgar Montillion Woolley. If the full name is not given in the heading it will be found in the sketch itself.

After the name, pronunciation is given if the name is difficult, and then the date of birth as fully as possible. The date of death is given for those who have died. The occupation of the subject follows. Next comes the sketch itself, followed by a list of references for further study. These include magazine and newspaper references (in one alphabet) and books. If the person is not living, references are made to obituaries in newspapers and magazines. Only books of an autobiographical or biographical nature are listed, including such well known reference works as *Who's Who, Who's Who in America*, etc.

The magazine articles listed under *References* are in abbreviated form (see list "Periodical and Newspaper Abbreviations" for complete title). The form of entry is as follows: Sat Eve Post 56:78-9 S '39 por. This means that an article supplementing our sketch will be found in *Saturday Evening Post*, volume 56, pages 78-9, in the September 1939 number. The abbreviation *por* means that the article is accompanied by a portrait. In the case of newspapers, the name of the paper is followed by paging and date.

When a name in a sketch is followed by '40 a biography of that person may be found in the 1940 *Current Biography* Yearbook published in December 1940; for a name followed by '41 see the 1941 *Current Biography* Yearbook; for a '42 name see index in the December 1942 *Current Biography*.

Photographs not credited to various studios and not obtained from the individuals themselves are obtained from Press Association, Inc., Rockefeller Plaza, New York City.

SMITH, IDA B. WISE—*Continued*

References

Christian-Evangelist p423-4 Ap 16 '42 por
Lit Digest 121:33 Je 13 '36 por
N Y Times IV p2 Ag 31 '41 por
Newsweek 16:40 Ag 19 '40 por
Time 29:55 Mr 1 '37 por; 39:51 Mr 2 '42 por; 39:12 Je 15 '42
Who's Who in America 1942-43

STAUSS, EMIL GEORG VON (shtous fŏn) Oct. 6, 1877—Dec.(?), 1942 German state councilor and a Vice-President of the Reichstag; former director of the Deutsche Bank in charge of its oil interests.

Obituary

N Y Times p17 D 12 '42

SYKES, CHARLES H(ENRY) Nov. 12, 1882—Dec. 19, 1942 Nationally known as the newspaper cartoonist, "Bill" Sykes; drew famous war cartoons for the First and Second World Wars; editorial cartoonist of the *Evening Public Ledger* of Philadelphia from its founding in 1914 until its suspension in January 1942.

Obituary

N Y Times p44 D 20 '42

TESLA, NIKOLA (tes'lă) July 9, 1856—Jan. 7, 1943 One of the world's greatest electrical inventors and designers; American citizen of Greek origin; worked with Edison; credited with many "epic making" inventions since he came to the United States in 1884; in his old age claimed to have invented a "death beam" powerful enough to destroy 10,000 airplanes at a distance of 250 miles and to annihilate an army of 1,000,000 soldiers instantaneously.

Obituary

N Y Times p19 Ja 8 '43 por

TINNEY, CAL(VIN L.) Feb. 2, 1908- Radio commentator

Address: b. c/o Mutual Broadcasting System, 1440 Broadway, New York City

Since August 1941 Cal Tinney's slow Texas drawl and homespun humor, with intimate, folksy interpolations, have been heard over the Mutual network in *Sizing up the News* each Monday and Wednesday evening from 8:00 to 8:15 p. m. Tinney's colloquialisms, which the folks "back home" chuckle over—his "just-between-you-and-me, ain't it the truth?" "it shore is" method—has captured many a listener bored with the formal, polished, or cut and dried comments of other newscasters.

But there has been more to Tinney than his mannerisms. Speaking usually as a representative of what the "common man" thinks about affairs at home and abroad, he has taken more than one direct and shrewd pot shot, left of center, at stuffed shirt policy, the doings of Big Business, politicians who coddle Fascism at the expense of democracy under high-sounding terms of Americanism, etc. It is not surprising that the sandy-haired young man from the West has occasionally found himself in hot water. Objections have at times been made to the FCC on the "character of the broadcaster's utterances." But Tinney has apparently survived the allegations against him, since he currently continues his bi-weekly talks.

The outspoken homespun philosopher, who has become a kind of Will Rogers columnist of the air, was born February 2, 1908 on a ranch in Pontotoc County, Oklahoma. His family, however, originally came from Texas, where his grandfather, a rugged individualist, had strange politics for those parts. "My grandfather was a Texas Republican," Tinney says sadly, "and they shot him. Seems he exploited his sentiments one Saturday night in a bar room. Ever since then my Pop has been a Democrat." So has the son and, judging by his broadcasts, a fervent New Deal-supporting one.

After attending the Oklahoma public schools Tinney enrolled at the Murray State School of Agriculture in Tishomingo, Oklahoma. There, however, his education lasted only two weeks. "I never did stay there long enough to find out whether it was a high school or college," he says. Young Tinney apparently decided he could get a better schooling by traveling and seeing the world at first hand. For some years he tramped around, often as an ordinary seaman aboard freighters off for foreign ports. He was a newspaperman of sorts, also, and found jobs in Shanghai and Paris. His work in the pre-War French capital was rewriting material found in English-printed newspapers. "It was easy," Tinney explains. "All you had to do was change words like lift to elevator, and caretaker to janitor."

After getting his education by travel, Cal Tinney settled down in Oklahoma to edit a country paper, and began to advertise it over Station KVOO at Tulsa. That was in 1932. His humorous, drawling voice soon became more popular than his gazette. So he gave up his job as an editor, but since 1934 he has written a weekly feature, "Man of the Week," for the McNaught Syndicate. He is the author, also, of a book called *Is It True What They Say about London? a Non-Partisan Portrait* (1936). When Tinney turned to radio for a living, his voice was heard, successively, on the *March of Time* (1932), the *Voice of America* (1933), and the *Maxwell House Show Boat* program (1934). From 1937 to 1939 he was on the *Vanity Fair* feature, and from 1939 to 1940 on *Youth vs. Age*. That year he originated, but did not appear on, *Stop Me If You Heard This One*.

Tinney is married to Mary Maxine Noble. The couple have two sons, David N. and Scott.

It was in 1940 that Tinney hit on the idea of a folksy newscast and tried it out in Tulsa, Oklahoma. Farm listeners chuckled, appreciated a commentator who spoke their own

Office Memorandum · UNITED STATES GOVERNMENT

TO: Director, FBI

FROM: SAC, New York

SUBJECT: "PLAIN TALK"
INFORMATION CONCERNING
Bureau File #94-36511

22925

Transmitted herewith for the information of the Bureau is the March 1948 issue of "Plain Talk".

Enc. (2)

ENCL ATTACHED

62-8845 ENCL

62 MAR 27 1948

RECORDED 94-36511-98
FBI
MAR 15 1948

INDEXED 138

EX-58

RED AMBASSADORS

Sava Kosanovich of Yugoslavia

By BOGDAN RADITSA

This is the first in a series of profiles of the Red Ambassadors who represent the several Soviet satellite governments in Washington. Others will follow shortly.

FAMILIAR as they are with the blasts of Vishinsky and Molotov, most Americans are not aware that some of the most fervid tirades against "U.S. imperialism" delivered in this country come from an officially accredited ambassador. Sava Kosanovich, a wiry, reddish-haired man in his early fifties, represents Tito in Washington and in the United Nations. He travels all over this country making speeches in praise of the "new progressive democracy" in the Balkans, denouncing "Anglo-American reaction" and helping to form front groups for Tito. Incidentally, the American ambassador in Yugoslavia cannot even move around Belgrade without special permits and a guard of secret police agents.

From Kosanovich's speeches at Lake Success and elsewhere, it would appear that everything in Yugoslavia before Tito came to power was reactionary or Fascist. Yet, when he was touring America during the war, he used to introduce himself as a "member of the democratic government of His Majesty King Peter the Second."

Kosanovich is a restless man—his face and hands seem to be always agitated and moving. He is a cultured man with a long background in liberal, democratic movements. But he is a man of strong ambitions, who was willing to betray his own past and his closest friends for those ambitions.

In an Embassy which is more of a propaganda bureau than a diplomatic office, Kosanovich is only the front man for the Cominform's schemes in America. The real power in the Embassy is held by members of the Communist Party and the secret police, OZNA, just as its real policy is directed from Moscow through Belgrade. Though Kosanovich repeats the Moscow line, he is not yet one of the inner circle.

I first met Kosanovich in the fall of 1941 in the United States, where he had come with some members of the exiled Royal Yugoslav Government, representing Croatia, Serbia and Slovenia. The tragicomic adventures of that royal mission in America centered around the battle between those who wanted Yugoslavia, after its liberation from the Nazis, to become a democratic federal union, and those who demanded a Yugoslavia which would be a Greater Serbia administered on the old prewar pattern. The grim outcome was that Tito succeeded in charming American public opinion with his sweeping promises of democracy and federation, while the exiles were quarreling among themselves—mostly for personal, rather than ideological, reasons.

KOSANOVICH dreamed for a good many years of becoming Yugoslav ambassador to Washington. His uncle, Nikola Tesla, was an important scientist

in America. He himself is descended from a long line of Serbian Orthodox ministers. His friends in politics used to tease him about his shyness toward women, his hatred of smoking and drinking. A strong and dynamic political leader, they said, should be a lady-killer, a hard drinker and a chain smoker.

In prewar Yugoslavia, Kosanovich always attached himself to some popular political leader. (It seemed to give him the feeling that he was running things himself.) In the beginning of his career he followed the tide of Svetozar Pribichevich, the leader of the Democratic Party, who sought a highly centralized Yugoslav state and drove the Communists underground through his secret police. That policy helped to reinforce communism for the present job.

Next, Kosanovich was attracted by the leaders of the Croatian peasants, Stevan Radich and Dr. Vladimir Machek, now in exile in Washington. He considered that he was Machek's "brain." Machek, however, did not always welcome the attentions of his satellite: several times he told me that he was tired of Kosanovich's "old maidish suggestions and tearful interventions." For when he is arguing any involved issue, Kosanovich's voice takes on a querulous tone which makes him sound like an adolescent.

During the war, Kosanovich defended Mihailovich and a united Yugoslavia. He took an active part in Allied meetings and the affairs of American Yugoslavs. His name often appeared in the "Letters to the Editor" column of *The New York Times*. He was a chairman of the Southeastern European Planning Board—a movement not popular with Stalin, as it threatened to block his plans for regional agreements and the artificial building up of buffer states. And he was active, with his friends Louis Adamic and the violinist, Zlatko Balokovic, in the formation and promotion of the United Committee of South-Slavic Americans, subsequently metamorphosed into an important part of the Kremlin's Pan-Slavic front.

In his speeches Kosanovich has been one of the principal promoters of an idea first advanced by Adamic—that America is a nation of nations. As such, she is not only Anglo-Saxon, but German, Italian, Negro or Slav. The Slavs of America should unite in the name of brotherhood to carry on their glorious traditions, to show other Americans the heritage they have brought to this country, and to keep in touch with their motherlands. On the surface this idea seems harmless enough, but it is the banner of Stalin's movement to divide the United States. Russia and her satellites carry the idea farther in their controlled press by openly maintaining that America cannot be progressive until it is transformed into a series of "people's republics" on the Soviet pattern, giving their national sovereignty to all the racial groups that compose the population. Behind that scheme is the desire to Balkanize the United States—to divide it into conflicting clans so that a revolution may be centralized through the only uniting force, the Communist Party.

FIORELLO LA GUARDIA was Kosanovich's greatest acquisition. He led the New York Mayor through the same political zig-zag he himself followed—first to Mihailovich, then to Tito. The speech of greeting to King Peter that La Guardia read in Serbo-Croatian on July 8, 1942, was written by Kosanovich. The Mayor read:

"Drazha Mihailovich and Vladimir Machek are the expression of the Yugo-

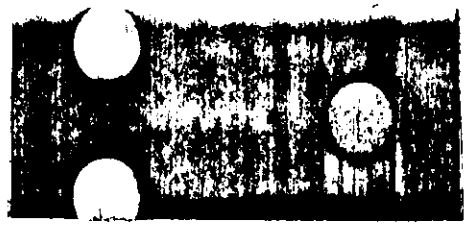

slav spirit of resistance—from Triglav to Vardar. They will go down in history. . . ."

In his own speeches Kosanovich often compared Mihailovich with MacArthur, Chiang Kai-shek and Timoshenko. For example, at a meeting of the anti-Nazi League in New York, June 8, 1942, he spoke of "the epic struggle which my people are making under the man whose name already symbolizes to mankind indomitable spiritual and physical resistance—Drazha Mihailovich."

Mihailovich was killed by a government of which Kosanovich was a member. Machek fled the country to escape the fate of Petkov, Maniu and other peasant leaders. Immediately after he became Tito's ambassador, Kosanovich quoted Count Ciano to prove that Machek had been willing to sell out Croatia for a relatively small amount of money. The former follower of Machek admitted intimately to a friend that he did not believe the accusation, but that Tito had asked him to make it.

On July 6, 1942, at a reception held in the Yugoslav delegation's mansion on New York's Fifth Avenue, Kosanovich introduced Mirko Markovich, editor of the Serbian Communist newspaper, *Slobodna Rec*, and now professor at Belgrade University. Markovich offered King Peter a check of one thousand dollars for "the Chetniks and regular army of General Mihailovich."

A week later orders arrived from Moscow that Mihailovich should be considered a traitor and Tito accepted as leader of the war for liberation. Markovich and his Serbian equivalent of the *Daily Worker* suddenly switched to attacking Mihailovich. Kosanovich did not—but his defense of the Chetniks' leader grew weaker. Shortly before he went to London in March, 1944, Kosanovich in a *New York Post* interview was quoted as follows: "Mihailovich is in the position of a General Lee. Tito is some kind of a Lincoln out to save the Union. Mihailovich was an army officer. I think he is sincere but he is surrounded by a very bad political entourage. The entourage was catastrophic. The Government, diplomats abroad, working in his name, are even more catastrophic."

Curiously, Kosanovich himself was a member of that same "catastrophic" government. When he joined the Yugoslav government-in-exile in London in the spring of 1944, it had already dismissed Mihailovich and sought an agreement with Tito's National Liberation Movement.

KING PETER was in London. Heading his government-in-exile was Dr. Ivan Subasich, the viceroy of Croatia. The group was more or less agreed that Yugoslavia should be restored on the basis of a federal union.

Kosanovich asked for a government representing all political parties, which would be strong enough to fight the Communists. He was a frequent visitor to King Peter and his mother. And when an agreement was drawn up between Subasich and Tito, Kosanovich was terribly dissatisfied with its terms. (I suspect that was because he had not taken an active part in it; he was inclined to think that everything in Yugoslav politics needed his guiding hand.)

Tito was in Belgrade. The Red Army was crossing the Danube in its push toward Vienna. On January 18, 1945, Tito's emissary, General Velebit, visited Kosanovich in Kingston House, London. Kosanovich left the interview pale and nervous. For the first time he realized that dealing with the Communists demanded fortitude.

A few days later, on January 23, King Peter dismissed Subasich's cabinet and reappointed its members only after all of them—including Kosanovich—had agreed in writing that, on their return to Yugoslavia, they would defend certain obligations the king had made concerning the Tito-Subasich agreement. The chief obligation was that the new united Yugoslav Government to be formed under Tito should guarantee all fundamental political and civil rights and freedoms to the Yugoslav people. Kosanovich took a prominent part in drafting this public statement announcing the reappointment of the previous cabinet and the obligations its members assumed. As the king's most intimate adviser, he drafted Peter's act of consent to the Regency. Before Kosanovich left London, the young king kissed him, and received his formal promises that he would defend the interests of the monarchy.

In the spring of 1945, Yugoslavia was "liberated" and the members of its London government-in-exile came back to join Tito's government with the blessing of Churchill, Roosevelt and Stalin. It was at that time that the Communists characterized Kosanovich as a "useful innocent" (*koristna budala*). In a meeting held in a swanky Belgrade apartment house—still the headquarters of the Communist Party of Yugoslavia—the ex-schoolteacher, Edward Kardelj, the Montenegrin, Milovan Gjilas, and other top Communist leaders were talking over the political characteristics of their new partners.

Gjilas said, according to a witness who reported the meeting to me: "The Anglo-Americans dream that they may influence us through someone who is not a Communist. Therefore Ivan Subasich is best fitted for the job of foreign minister. Though he sometimes wavers, he defended the agreement with Tito stubbornly in London and Washington. Milan Grol (the vice-premier and leader of the Serbian democrats) will serve as a Trojan Horse for the West. He is a reactionary politician who backed Mihailovich. If Grol declares that the Serbian people have to abandon Mihailovich, they will accept the idea. As for Kosanovich—he is not an important personality nor a politician. But he is a useful innocent, who may be of help in the United States where he is considered to be a Western-type democrat."

The only member of that London government who still survives politically is the "useful innocent." Subasich, after having been Tito's prime minister and foreign minister, is now a prisoner in Zagreb. Franc Snoj, after participating in the Communist government of Slovenia, was recently sentenced to seven years of slave labor for "espionage in favor of the Western democracies." The liberal Dr. B. Markovich of Serbia died in New York. I arrived there in time to see him before his death. After I had told him the grim story of what Yugoslavia looked like under the Communists, he said very sadly:

"How is it possible that Savitsa (the diminutive of Kosanovich's first name) could stay in such an outrageous government?"

TITO soon began to ignore all the obligations assumed in his agreement with Subasich. Even before the elections he declared that the king was never to come back. Milan Grol and others immediately left Tito's government. Everybody in Yugoslavia expected Kosanovich to do the same. But he began to yield to the Communists.

Subasich had just come back from a trip around Yugoslavia. He had seen that the people did not want commu-

212

nism; they wanted quick action by the democrats. And he had the courage to tell this to Tito. Although he was foreign minister, he was arrested.

I was with Kosanovich in his room in Belgrade's Hotel Majestic when Mrs. Subasich telephoned and asked for immediate help. Her husband was arrested and ill. Kosanovich tried to reassure her. He telephoned Lt. General Rankovich, OZNA's chief trigger-man. The Communist hangman answered coldly that nothing would happen to the foreign minister. Precautions were merely being taken to defend him from any attempt of the "Western reactionaries" upon his life.

We had just been reading Dante there in the hotel room—the part where Count Ugolino hungrily devours the brain of Archbishop Ruggieri, describing the merciless end of all traitors. The blood and turmoil of ancient fratricidal war rose before us: it seemed very near to our own Yugoslav tragedy.

Only a little later Kosanovich entered the new People's Front against the will of the Independent Democratic Party, of which he was Secretary-General. His party issued a clandestine communiqué describing his defection. Soon after that the chairman of the party, Dr. D. Boshkovich, was terribly beaten for three hours by a Communist youth mob. He was lying in a hospital the same night that Kosanovich was flying to the London conference of the Big Four, accompanying the Communist Kardelj as a "liberal and democrat." Before he left, Kosanovich had published an article in the Communist official organ, *Borba*, in which he attacked Subasich and the leadership of the party with whom he had worked closely for twenty years. The Communists wanted a proof of "betrayal." And the price was paid. From London, Kosanovich went to the Paris Peace Conference, and from there to Washington—to attack American democracy, which he had formerly praised.

I CANNOT BELIEVE Kosanovich is a happy man, though he has attained his ambition. Those who once opposed *fascism* and are now serving communism have lost all faith in themselves and in mankind. There are no more miserable people than the intelligentsia who know better—but who have been afraid to resist in the last battle for man's liberty.

Kosanovich once asked for a synthesis between political and economic democracy for the good of the people, and he is now defending the complete subjugation—economic, political and moral—of Yugoslavia to the Communists. Kosanovich once wanted Yugoslavia to be free of the influence of any big power, and he is now ambassador of a puppet state in Stalin's empire.

THE SOLUTION FOR PALESTINE

A comprehensive and authoritative discussion of the Hoover Plan (pages 32-33) and of the Lowdermilk Plan (*Palestine—Land of Promise*), offering an engineering rather than a political solution for the crisis in the Near East, will be presented in the next issue of PLAIN TALK.

213

FEDERAL BUREAU [redacted]

Case Originated At: PITTSBURGH File No. 61-128

Report Made At	Date Made	Period	Report Made By
PITTSBURGH	2/20/46	11/15,19,20, 21,26/45.	[redacted]

Title	Character
SLOBODNA REC (FREE EXPRESSION)	INTERNAL SECURITY - C REGISTRATION ACT

SYNOPSIS: SLOBODNA REC (Free Expression), Serbian communist-line tri-weekly newspaper printed at 1916 East [redacted], Pittsburgh, Pa., steadfastly adheres to the generally recognized communist line and operates, among Serbs in the U. S., as the organ for the dissemination of information on Serbian affairs in Yugoslavia. As the leading Slav communist organ it contained, during the period from 12/6/44 to 8/30/45, favorable publicity for such communist front organizations as the SWC, American Slav Congress, Vidovdan Committee and the United Committee of South Slavic Americans. It supported the TITO and STALIN governments unequivocally and denounced opposition believed to exist against these governments. Due to the leaving of the former Editor-In-Chief, MIRKO MARKOVICH, to confer with TITO and his representatives in Belgrade, Yugoslavia, the editorship has been undertaken by Reverend NIKOLA DRENOVAC. The Managing Editor is CHARLES VUICH and Business Manager is MANE [redacted]

- P -

J. A. Fletcher

1	Bureau (Encls.)	1	Milwaukee (Info.)
	Albany (Info.)	1	Newark (Info.)
	Anchorage (Info.)	1	New Haven (Info.)
	Baltimore (Info.)	1	New Orleans (Info.)
	Boston (Info.)	1	New York (Info.)
1	Buffalo (Info.)	1	Oklahoma City (Info.)
1	Butte (Info.)	1	Omaha (Info.)
1	Chicago (Info.)	1	Philadelphia (Info.)
1	Cincinnati (Info.)	1	Phoenix (Info.)
1	Cleveland (Info.)	1	Portland (Info.)
1	Denver (Info.)	1	Richmond (Info.)
1	Des Moines (Info.)	1	St. Louis (Info.)
1	Detroit (Info.)	1	St. Paul (Info.)
1	Houston (Info.)	1	Salt Lake City (Info.)
1	Indianapolis (Info.)	1	San Diego (Info.)
1	Jackson (Info.)	1	San Francisco (Info.)
1	Kansas City (Info.)	1	Savannah (Info.)
1	Little Rock (Info.)	1	Seattle (Info.)
1	Los Angeles (Info.)	1	Springfield (Info.)
1	Louisville (Info.)	1	Washington Field (Info.)
1	Memphis (Info.)	1	Pittsburgh
1	Miami (Info.)		

NO JUN 1946 5 PITTSBURGH

(Typed Entire)

SLOBODNA

39 FEB

INFORMATION CONTAINED HEREIN IS UNCLASSIFIED DATE 2- BY SP1 [redacted]

#29166

59 JUN 17 1946

b7C

97-

214

[redacted]

Translations of SLOBODNA REC as contained in this report were made at the Pittsburgh Field Office by [redacted] Serbo-Croatian translator, and [redacted] Slavonic translator.

II

ORGANIZATIONAL STRUCTURE

A - OFFICERS

In the "Statement Of The Ownership, Management, Circulation, Etc., Required By The Acts Of Congress Of August 24, 1912, and March 3, 1933," regarding newspapers utilizing the mails as a means of transmission, furnished the Pittsburgh Office by [redacted] Pittsburgh Post Office, the following are given as officers of SLOBODNA REC:

Publisher	J. KRSTOVICH
Editor	CHARLES VUICK
Managing Editor	None
Business Manager	MANE SHUSHNAR
Owner	JOHN KRSTOVICH

This statement was filed at the Pittsburgh Post Office by MANE SHUSHNAR on October 2, 1945.

"2. It is true that this year's calendars were printed too late, but we have inspite of this sold a sufficient number of calendars and some of the sellers have not sent in their money. In addition to the excellent success in advertisements for the calendar and besides the fact that the calendar was excellent, the work of the sale of the calendars is not satisfactory. Our activists should have paid more attention to this then than before selling the calendars.

"3. Soon we shall have received several hundred copies of the new book 'Guns For Tito.' We ought to do our best to sell these books as soon as possible. The book was compiled by an American Major who organized a shipment of weapons to TITO's Army and met TITO personally several times. The price of the book is $2.75.

"4. We must finish the sale of the book of NIKOLA TESLA. We should particularly interest the American engineers and unionists in it.

"5. Soon a book of MIRKO MARKOVICH will be off the press: 'That We May Understand Each Other.' Therefore it will be necessary to organize the sale of the same. The book contains 350 pages and the price of the same is $2.50.

"The working committee decided that by the end of the month of March or in April, MIRKO MARKOVICH should start for the Pacific Coast, to California, to work in the strengthening of our movement and newspaper and in building up of clubs and the apparatus. This will be discussed in detail at the meeting of the Supreme Board in Cleveland."

August 14, 1945 — "Reorganization Of Leadership Of Serbian Progressive Movement In City Of Akron Carried Out." This article, which is quoted below, indicates the then policy of SLOBODNA REC in its leadership in the Serbian Progressive Movement in the United States.

"Akron, August 10 - Last week, on Thursday evening, there was here held a special meeting of the Serbian political progressive club, which was attended by the editor-in-chief of SLOBODNA REC, MIRKO MARKOVICH, and the manager of the paper, MANE SHUSHNAR.

STANDARD FORM NO. 64

Office Memorandum • UNITED GOVERNMENT

TO : Director, FBI

DATE: November 7, 1947

FROM : SAC, Pittsburgh

SUBJECT: SLOBODNA REC
INTERNAL SECURITY - C
REGISTRATION ACT

The following article which appeared in the November 1, 1947, issue of the above captioned Communist line newspaper published at 1916 East Street, Pittsburgh, Pa., is furnished for your information:

Address of Ambassador ROSANOVICH at Banquet of 2nd Serbian Congress, October 26 in Pittsburgh, Pa.

ALL INFORMATION CONTAINED HEREIN IS UNCLASSIFIED DATE 2-22-19 BY SP1 AC/cm # 24860

Brothers and Sisters:

I come among you to extend you the greetings of the peoples and the government of the Federated People's Republic of Yugoslavia, headed by Marshal Tito and to thank you for the considerable aid which you have given your brothers in the old homeland.

By coincidence, I found myself in the period of 1943-44 in this great country where I did my best to defend the truth and contribute to the best of my ability to the thwarting of spreading untruths on the part of the official representatives of the then Yugoslav government in exile and of all those who wanted to convince public opinion of America and its official circles of the impossibility of restoring Yugoslavia. I recall your valuable help of that time. I remember a dear friend in the person of the late Rev. KRAJNOVICH and his constant struggle, as well as of so many others of that period.

You Americans of Serbian descent were hit the hardest. You were exposed to the greatest trials and the heaviest attacks. You had to exercise the greatest self-denial and perspective correctly to see the course of events because every effort was made to confuse you. The idea was that when Serbian Americans follow the wrong path, when chauvinism and national hatred get possession of them, when hatred toward the Croats and Slovenes and toward Yugoslav unity is aroused in them, then it will be easy for the same attitudes to work among Croatians and Slovenes as regards Yugoslav unity, giving chauvinism full sway and thus contributing to the weakening of the war effort in American and rendering impossible the struggle for the salvation and restoration of Yugoslavia and the Balkans.

In a letter of thanks for an honor which was shown me in February, 1944, by a great number of you who are now assembled at this Serbian

NOV 12 1947

RECORDED 77-724-175
INDEXED
EX-93
34 NOV 10 1947

(6)
(7)(C)

217

To: Director, FBI November 7, 1947
Re: SLOBODNA REC
IS - C; REGISTRATION ACT

Congress when I was elected an honorary president of the Vidovdan Congress I said:

"In an extraordinary difficult period of mankind you have with sacrifice and self-denial done your duty also toward your people from whom you sprang and toward America of which you are good citizens, and toward mankind. Since my arrival in America in 1941, in an official capacity, I found among you the best understanding and best cooperation for an ever greater unification of national forces in the struggle against all manifestations of fascism. Together we tried to be as serbs - bearers of Serbo-Croato-Sloveno-Macedonian harmony and unity at a time when the enemy banked his entire hope on disharmony and hatred. Working thus we have contributed to the correct understanding of the national-liberation struggle beset with so many obstacles and bedevilled with so much gossip. Time and events have borne out the truth thereof."

And when taking leave of Serbs in America in a letter of July 24, 1944, among other things I wrote:

"We have here been those who have defended the purity of the Serbian name at a time when it was being most degraded by the ignorant. History will show that we were right and that by our defending the unity of Serbs, Croats, Slovenes, and Macedonians we have best represented the true national Serbian interests and thus represented the interests not only of Yugoslavia but also of America and all United Nations. We have by common sacrifices of a liberation war achieved great successes in the country, but there still are great trials. Enemies will particularly seek to confuse the Serbs and destroy them with false defense of Serbian interests. I ask all my good friends to make every effort to promote harmony and unity. I ask all those who were being deceived in returning to Serbian tradition and enter the great circle of national harmony . . . I ask friends who have had the opportunity and bravery of seeing the right path from the very outset, that they forgive those who haven't seen it because they were deceived by those who thought they must be believed. The true national champion is known by his setting the errant ones on the right path. Responsible culprits who misused their positions and misused the credulity of the ignorant will answer to the people for their misdeeds. The more you will promote harmony, the better it will be for Serbdom, for Yugoslavia, and for America - toward which you have the greatest obligation."

To: Director, FBI
Re: SLOBODNA REC
IS - C; REGISTRATION ACT

November 7, 1947

That was the path to which you were called until his last days by our great countryman NIKOLA TESLA.

And you, by your moderation, have contributed to the interest of the democratic struggle of the world. You have contributed to the unification of all national forces in America in the organization of the war effort. And at the same time, as Americans of Serbian descent together with other Yugoslav Americans, you have shown your American fellow-citizens that your brothers in the old homeland are with united efforts resisting fascism and struggling for freedom and the restoration of their independent state, Yugoslavia.

In this you were able to be the best spokesmen. You and your predecessors have come to this country in search of freedom and better economic conditions.

Most of you and those before you have fled from Hapsburg serfdom because you were being oppressed both nationally and economically. You and your predecessors made valuable contributions to the development of the New World. You with your brother Slovenes and Croatians have sweated, shed blood, worn your bones, expended brains, and whatnot for the progress of this country. Long is the chain of miners, farmers, scientists, and soldiers who gave their best for the general progress and prosperity of the American Union. You have conscientiously been doing your duty and you have become good citizens of this great land. Who of us is not proud of the work, life and nobleness of NIKOLA TESLA without whose work and mind electricity would not be what it now is in the world; whose motor has harnessed the Niagara and the Dnieper, turning the wheels of industry wherever there is electricity? In every spark of electricity, shines his name. America is the greatest beneficiary of TESLA's genius. He asked for no riches.

And so, brothers and sisters, when during the war you have raised your voice for your brethren in the Balkans struggling not only for their life but also for a better and more secure existence of mankind, your voice thus had significance and importance. You were able to be the authorized spokesmen of the struggle which was going on over there.

XXXXXX
XXXXXX
XXXXXX

FEDERAL BUREAU OF INVESTIGATION
FOIPA DELETED PAGE INFORMATION SHEET

3 Page(s) withheld entirely at this location in the file. One or more of the following statements, where indicated, explain this deletion.

☒ Deletions were made pursuant to the exemptions indicated below with no segregable material available for release to you.

Section 552		Section 552a
☐ (b)(1)	☐ (b)(7)(A)	☐ (d)(5)
☐ (b)(2)	☐ (b)(7)(B)	☐ (j)(2)
☐ (b)(3)	☒ (b)(7)(C)	☐ (k)(1)
_____	☒ (b)(7)(D)	☐ (k)(2)
_____	☐ (b)(7)(E)	☐ (k)(3)
_____	☐ (b)(7)(F)	☐ (k)(4)
☐ (b)(4)	☐ (b)(8)	☐ (k)(5)
☐ (b)(5)	☐ (b)(9)	☐ (k)(6)
☐ (b)(6)		☐ (k)(7)

☐ Information pertained only to a third party with no reference to you or the subject of your request.

☐ Information pertained only to a third party. Your name is listed in the title only.

☐ Documents originated with another Government agency(ies). These documents were referred to that agency(ies) for review and direct response to you.

_____ Pages contain information furnished by another Government agency(ies). You will be advised by the FBI as to the releasability of this information following our consultation with the other agency(ies).

_____ Page(s) withheld for the following reason(s): _____

_____

☐ For your information: _____

_____

☒ The following number is to be used for reference regarding these pages:

100-10123-124

XXXXXX
XXXXXX
XXXXXX

XXXXXXXXXXXXXXXXXXXXX
X DELETED PAGE(S) X
X NO DUPLICATION FEE X
X FOR THIS PAGE X
XXXXXXXXXXXXXXXXXXXXX

FBI/DOJ

STANDARD FORM NO. 64

Office Memorandum • UNITED STATES GOVERNMENT

TO : Director, FBI

DATE: 5/8/45

FROM : SAC, Pittsburgh

SUBJECT: [redacted]

(b)(7)(c)

INTERNAL SECURITY - R

(b)(7)(D) [redacted] would-be radio repair man, advised this office that on April 29, 1945 he installed at the home of captioned subject, [redacted], a "Hammerlund H.Q. Receiver #120X". [redacted] stated that since this type receiving set is of a kind which is generally used by amateur radio experts or professionals and since the radio set itself was in such condition as to indicate that it had been purchased under a very high priority, he inquired of the subject how he happened to be in possession of such a radio set. [redacted] according to [redacted], was vague as to where he got it, saying that it had belonged at one time to NIKOLA TESLA'S son and was purchased before the war in New York City. [redacted] did not make any notation of the serial number of this radio but advised that under pretext he can review the operation of this set in the apartment of the subject and at that time get the serial number.

(b)(7)(D)

(b)(7)(D)

(b)(7)(D)

(b)(7)(c)

b7D

[redacted]

[redacted]

[redacted]

[redacted]

COPIES DESTROYED

14

ALL INFORMATION CONTAINED HEREIN IS UNCLASSIFIED DATE 4-16-89 BY SP1ALGCM # 291960

JUN 1 2 [redacted]

(b)(7)(c)

221

FEDERAL BUREAU OF INVESTIGATION

Form No. 1
THIS CASE ORIGINATED AT WASHINGTON, D. C.

FILE NO. 100-11980

CONFIDENTIAL

REPORT MADE AT	DATE WHEN MADE	PERIOD FOR WHICH MADE	REPORT MADE BY
WASHINGTON, D. C.	30 AUG 1946	7/8;8/2/46	[redacted] (b)(7)

TITLE: (b)(1) [redacted] (c)

CHARACTER OF CASE: (b)(1) [redacted] (c)

Confidential

SYNOPSIS OF FACTS:

The new Yugoslav Ambassador, SAVA N. KOSANOVIC, has stated to the newspaper that they do not contemplate hostilities over the Trieste question. [redacted] (b)(1) (c)

ALL INFORMATION CONTAINED HEREIN IS UNCLASSIFIED EXCEPT WHERE SHOWN OTHERWISE

NO SEP 1946 69 ...STICS

- P -

REFERENCE: Report of Special Agent [redacted] dated July 22, 1946, at Washington, D. C. (b)(7)(c)

DETAILS: AT WASHINGTON, D. C.

2-16-49 Classified by SPIAGGIM
Declassify on: OADR # 291860
~~DEFERRED RECORDING~~

GENERAL ACTIVITIES

HANDLED BY STOP DESK

The "Washington Post" for July 23, 1946, carries a headline relative to an interview had with the new Yugoslav Ambassador SAVA N. KOSANOVIC entitled "War Over Trieste Not Anticipated by Yugoslav Envoy". The article stated he had declared on the previous day that his country would not be provoked into any action in Trieste which would compromise the peace. He also stated they would not accept any solution of the problem which did not accord with their essential interests. He said his Government opposed Italian proposals for a plebecite in the disputed area because the Yugoslav population had been diminished by twenty-six years of Italian rule and the additional loss of 56,000 men in the fight against the Nazis.

APPROVED AND FORWARDED: Guy Hottel SPECIAL AGENT IN CHARGE

DO NOT WRITE IN THESE SPACES

100-32820-285

RECORDED & INDEXED 35

COPIES OF THIS REPORT
5 - Bureau
2 - Detroit
2 - Chicago
2 - Cleveland
2 - New York
2 - Pittsburgh
3 - Washington Field

F B I
37 SEP [redacted] (b)(7)(c)

EX - 14

37 SEP 18 1946

U. S. GOVERNMENT PRINTING OFFICE 16—80005-1

COPIES DESTROYED 7-30-58

CONFIDENTIAL

222

CONFIDENTIAL

[redacted] (b)(1) (C)

The article in the "Evening Star" which was referred to above appeared July 23, 1946, and was entitled "New Envoy Disclaims Any Yugoslav Plans for Coup at Trieste." This article was written by NEWBOLD NOYES, JR. The article quotes the Ambassador as saying that Yugoslavia would not be "provoked into compromising the peace." The article stated that the Ambassador had indicated his country would boycott Trieste if they did not get it. The article stated that KOSANOVIC is a nephew of NICOLA TESLA, the Yugoslav-American inventor.

[redacted] (C) (b)(1)

[redacted] (C)

[redacted] (C)

[redacted] (C)

CONFIDENTIAL

223

XXXXXX
XXXXXX
XXXXXX

FEDERAL BUREAU OF INVESTIGATION
FOIPA DELETED PAGE INFORMATION SHEET

2 Page(s) withheld entirely at this location in the file. One or more of the following statements, where indicated, explain this deletion.

☒ Deletions were made pursuant to the exemptions indicated below with no segregable material available for release to you.

Section 552		Section 552a
☒ (b)(1)	☐ (b)(7)(A)	☐ (d)(5)
☐ (b)(2)	☐ (b)(7)(B)	☐ (j)(2)
☐ (b)(3)	☒ (b)(7)(C)	☐ (k)(1)
_____	☐ (b)(7)(D)	☐ (k)(2)
_____	☐ (b)(7)(E)	☐ (k)(3)
_____	☐ (b)(7)(F)	☐ (k)(4)
☐ (b)(4)	☐ (b)(8)	☐ (k)(5)
☐ (b)(5)	☐ (b)(9)	☐ (k)(6)
☐ (b)(6)		☐ (k)(7)

☐ Information pertained only to a third party with no reference to you or the subject of your request.

☐ Information pertained only to a third party. Your name is listed in the title only.

☐ Documents originated with another Government agency(ies). These documents were referred to that agency(ies) for review and direct response to you.

_____ Pages contain information furnished by another Government agency(ies). You will be advised by the FBI as to the releasability of this information following our consultation with the other agency(ies).

_____ Page(s) withheld for the following reason(s): _____

_____

☐ For your information: _____

_____

☒ The following number is to be used for reference regarding these pages:

100-32820-461

XXXXXX
XXXXXX
XXXXXX

XXXXXXXXXXXXXXXXXXXXX
X DELETED PAGE(S) X
X NO DUPLICATION FEE X
X FOR THIS PAGE X
XXXXXXXXXXXXXXXXXXXXX

FBI/DOJ

XXXXXX
XXXXXX
XXXXXX

FEDERAL BUREAU OF INVESTIGATION
FOIPA DELETED PAGE INFORMATION SHEET

4 Page(s) withheld entirely at this location in the file. One or more of the following statements, where indicated, explain this deletion.

☒ Deletions were made pursuant to the exemptions indicated below with no segregable material available for release to you.

Section 552		Section 552a
☒ (b)(1)	☐ (b)(7)(A)	☐ (d)(5)
☐ (b)(2)	☐ (b)(7)(B)	☐ (j)(2)
☐ (b)(3)	☐ (b)(7)(C)	☐ (k)(1)
_____	☐ (b)(7)(D)	☐ (k)(2)
_____	☐ (b)(7)(E)	☐ (k)(3)
_____	☐ (b)(7)(F)	☐ (k)(4)
☐ (b)(4)	☐ (b)(8)	☐ (k)(5)
☐ (b)(5)	☐ (b)(9)	☐ (k)(6)
☐ (b)(6)		☐ (k)(7)

☐ Information pertained only to a third party with no reference to you or the subject of your request.

☐ Information pertained only to a third party. Your name is listed in the title only.

☐ Documents originated with another Government agency(ies). These documents were referred to that agency(ies) for review and direct response to you.

_____ Pages contain information furnished by another Government agency(ies). You will be advised by the FBI as to the releasability of this information following our consultation with the other agency(ies).

_____ Page(s) withheld for the following reason(s): _____

_____

☐ For your information: _____

_____

☒ The following number is to be used for reference regarding these pages:
100-32820-969

XXXXXX
XXXXXX
XXXXXX

XXXXXXXXXXXXXXXXXXXXX
X DELETED PAGE(S) X
X NO DUPLICATION FEE X
X FOR THIS PAGE X
XXXXXXXXXXXXXXXXXXXXX

FBI/DOJ

Federal Bureau of Investigation
United States Department of Justice

Form No. 1
This Case Originated At INDIANAPOLIS, INDIANA — File No. 100-4006

Report Made At	Date	Period	Report Made By
Indianapolis, Indiana	11/18/42	10/29,30/42	[redacted] (b)(7)(C)

Title: AMERICAN SLAV CONGRESS (ALL-SLAV CONGRESS)

Character of Case: INTERNAL SECURITY - C

Synopsis:

Information contained in bulletin entitled "News Flashes from Czechoslovakia under Nazi Domination" issued by Czechoslovak National Council of America, with reference to American Slav Congress, set forth herein. Includes information concerning the permanent committee set-up and a partial list of delegates to the American Slav Congress. [redacted] (b)(7)(D)

cc BR 3/29/47

- P - ALL INFORMATION CONTAINED HEREIN IS UNCLASSIFIED DATE 1-7-83 BY SP5 RTG/PMC

Reference: [redacted] (b)(7)(C) ENCLOSURE ATTACHED

Report of Special Agent [redacted] (b)(7)(C) dated May 12, 1942, at Detroit, Michigan.

Details: At Hammond, Indiana

[redacted] (b)(2) (b)(7)(D) obtained

Approved and Forwarded:	Special Agent in Charge	Do Not Write in These Spaces
		100-56614-42

5 Bureau
1 New York (Inf.)
1 Pittsburgh (Inf.)
1 Newark (Inf.)
1 Milwaukee (Inf.)
1 Washington Field (Inf.)
1 Chicago (Inf.)
1 Philadelphia (Inf.)
1 Cleveland (Inf.)
3 Detroit
3 Indianapolis

RECORDED & INDEXED

15 NOV 21 1942

[redacted] (b)(7)(C)

EX-17

FOR VICTORY BUY UNITED STATES DEFENSE BONDS AND STAMPS

60 JAN 2 7 1943

COPY IN FILE

226

a copy of a bulletin entitled "News Flashes from Czechoslovakia under Nazi Domination", published by the Czechoslovak National Council of America, 4049 West Twenty-sixth Street, Chicago, Illinois, release no. 132, dated May 11, 1942.

This bulletin contains news concerning the American Slav Congress held at Detroit, Michigan, April 25 and 26, 1942. The article contains the permanent committee set-up of the Congress and a list of men of eminence among the delegates to the Congress.

This article is being quoted below:

"AMERICAN SLAV CONGRESS FOR GREATER WAR EFFORT"

The coordination activities of all groups of Slavic extraction in America for an intensified war effort moved a long step closer to reality as a result of the American Slav Congress held in Detroit April 25 and 26 and attended by more than 2300 delegates representing church, fraternal, labor, social and cultural groups from all parts of the country. Every substantial American Slav organization in the country was represented.

Permanent Committee Set Up

A permanent committee was elected with LEO KRZYCKI, Vice-president of the Amalgamated Clothing Workers for President; Prof. J. J. ZMRHAL, of the Czechoslovak National Council, Vice-president; STEPHEN ZEMAN, JR., of the Slovak Evangelical Union, Secretary; VINKO NUK, of the Croatin Fraternal Union, Treasurer; and BLAIR F. GUNTHER, member of the Educational Committee of the Polish National Alliance, Chairman of the Board of Directors.

Participating Slavic nationality groups elected vice-presidents to the Board of Directors. Vice-presidents for the respective nationality groups elected were: EDMUND POINC, Polish; W. J. MUZIK, Czech; V. S. PLATEK, Slovak; VASIL DICOFF, Bulgarian; SAMUEL PERLINICH, Serbian; JOHN BUTKOVICH, Croatian; VINCENT CAINKAR, Slovene; PETER RATICA, Carpatho-Russian; GEORGE PIRINSKY, Macedonian; HARRY LUBESHKOFF, Russian; MICHAEL ATKATCH, Ukrainian.

The various nationality groups also elected members to the nationality committees of the Board of Directors. The National Committee of the congress held its first plenary session in Pittsburgh, May 10, to plan steps to translate the decisions of the congress into action.

Anti-Hitler Measures Adopted

Main decisions embodied in the resolutions of the congress were:

1. To make a direct appeal to American Slavs comprising more than half the workers in the war essential industries of the nation to intensify their production efforts to outproduce Hitler and the Axis.
2. To intensify vigilance against fifth-columnists operating within the various Slavic groups in this country aiming to sow division and disunity in the war effort.
3. To chart a plan to recruit 50,000 American Slav volunteers for a house-to-house campaign among American Slav families for raising the amount of war bond subscriptions to 10 per cent of income.
4. To take all measures to strengthen the bonds of solidarity among American Slav groups and between them and the Slav peoples of Europe for a concerted effort against HITLER.
5. To increase support of all war relief agencies, particularly the Russian, Yugoslavian, Polish, Czechoslovakian, British, Greek and Chinese.
6. To take steps to counteract the appeasers.
7. To set up a permanent organization to coordinate and assist in carrying out the decisions adopted by the Congress.

Response Exceeds Anticipations

The response to the first American Slav Congress ever held in America exceeded all anticipations. It revealed the depth of anti-Axis feeling that has seized hold of the Americans of Slav descent who came expressing desires to do their utmost to the end that the power of Hitlerism, arch-foe of the Slav peoples as of freedom-loving peoples everywhere shall be decisively smashed.

The delegates were mostly brawny men from coal mines, steel mills, machine shops—the men on whom the nation is counting for much of its war essential goods production and wholesome-looking women whose faces showed hardening lines of determination beneath war smiles.

Men of Eminence Among Delegates

Among the delegates most were men and women of distinction in many fields of activity—scholers, writers and clergymen, among them Rev. VINCENT BORKOVICZ, who represented the Very Rev. Bishop STEFAN S. WOZNICKI at the Congress and delivered the opening invocation; Metropolitan Bishop Benjamin, of the Russian Orthodox Church; Most Rev. JOHN BAJNOVICH of Johnstown, Pennsylvania, and Rev. RAWLOWSKI, of Buffalo, New York.

Among others present were JOSEPH WATTRAS, director of the Polish National Alliance of Pittsburgh; CHESTER A. KOZDROJ, President of the Polish Central Citizens' Committee of Detroit; Judge M. GRONKOWSKI of Hamtramck; Captain W. HETMAN, Polish War Veterans, Chicago; Dr. W. T. OSOWSKI; chairman Michigan All Slav Committee, Detroit; Mrs. M. NESTEROWICZ, dean of Polish journalists, Buffalo, New York; ZLATKO BALOKOWICH, famed Croatian violinist; FRANK GRIGORSKI, assistant district attorney of Milwaukee and president of the Pulaski Council there; VINCENT KLEIN, Secretary Chrysler Local No. 17 of UAW-CIO; Michigan State Senator, STANLEY NOWAK; Prof. J. J. ZMRHAL, President of the Czechoslovak National Council; JOSEPH MARTINEK, Executive Secretary of the Czechoslovak National Council, Chicago; KAREL ZRCHAL, President of the American Sokol Union; ADOLF HACER, President of the Czech American National Alliance; VINCENT VRDSKY, Secretary of the Czech American National Alliance; Rev. JAN S. BRADAC, Honorary President of the Slovak National Alliance; Rev. ARNOST BIZKA of the Federation of American Czechoslovaks in Texas; NICOLA TESLA, Serbian American inventor; ETBIN KRISTAN, prominent Slovenian writer; Dr. D. K. KATICH, first vice-president Michigan all-Slav Committee; SAMUEL PERLINICH, President of the Serbian National Foderation, Pittsburgh; Judge ANTHONY LUCAS, Pittsburgh; Ohio State Senator ROYD-BOICH; Judge GEORGE S. TENESY, Cleveland;

RAYMOND TRAVNIK, Slovenska Narodna Podporna Jednota; Rev. M. F[illegible]ENKO, Cleveland; W. MUZIK, President of the Czechoslovak Society of America; and Mrs. MARIE KRAL of the Nat'l Alliance of Czech Catholics.

From the serious and restrained mood of the delegates it was visible they had come for the one purpose of agreeing on a common line of action to be taken to guarantee a speedy end of HITLER and the Axis. There was a notable absence of the usual convention hilarity and abandon.

An International Event

It was a wartime meeting dominated by a wartime grimness. That the deliberations of the congress would have international repercussions was evidenced in the more than thousand telegrams from all parts of the world that reached the congress during the sessions.

One of the wires greeting it was from a Czech group in Teheran, Persia; there were many from Slavic groups in Chile, Argentina, Canada, and throughout America. Soviet writers and scientists and members of the Yugslav government in Kuibyshev wired the congress messages of greetings and good wishes.

The Congress was not only an event significant in the history of America's 15 million Slav-descended citizens but fraught with meaning for the destiny of the more than 200 millions of Slav peoples across the seas engaged in a life-and-death struggle against Nazi enslavers.

For the first time the peoples of the diverse Slavic groups in America were reaching a common understanding on a world-wide issue--a matter that gave delegates a feeling of considerable satisfaction.

Far beyond the brilliantly delivered keynote speeches and the iron note of resolve sounded in the resolutions--all of which raised the assembly to wild cheers of enthusiasm--was the vibrant sense of unity which, given expression by the congress carried to the Slav peoples

throughout the world its message of redoubled efforts to crush HITLER and guarantee a democratic victory for the world.

Keynote--Production for Victory

Production and sacrifice were the keynote motifs of the main address of the congress delivered by LEO KRZYCKI. Reminding listeners that American Slavs occupy a key position in America's war industrial pattern, he called for greater efforts this year to turn the scales of victory in favor of the democracies.

How to safeguard American war production and American morale took up the following sessions which were addressed by Prof. J. J. ZMRHAL, President of the Czechoslovak National Council of America, on fifth-column activities and measures to be taken against them; FRANK N. NISBEY, chairman of the Michigan Defense Savings Program on national morale; ELI OLIVER, of the Labor Division of the War Production Board and GEORGE ADDES, Secretary-Treasurer of the Auto Workers Union on problems facing labor in the war industries. These subjects were treated in further detail in special panel discussions later.

10,000 Hear Hon. Paul V. McNutt

Two thousand plates were served at the banquet tendered the delegates and guests by the Michigan Committee of the American Slav Congress in the Masonic Temple on April 25.

But the climax of the congress was a victory rally in the Michigan State Fair Coliseum where 10,000 persons assembled to hear the Hon. PAUL V. McNUTT, Federal Security Administrator and U. S. Government representative to the Congress who greeted the delegates and drew thunderclaps of applause by his appeal for "more tanks for TIMOSHENKO". "In this first Slav Congress you have shown the world the miracle of American unity," he declared.

A message from President ROOSEVELT was received wishing the Congress success in its work."

XXXXXX
XXXXXX
XXXXXX

FEDERAL BUREAU OF INVESTIGATION
FOIPA DELETED PAGE INFORMATION SHEET

__1__ Page(s) withheld entirely at this location in the file. One or more of the following statements, where indicated, explain this deletion.

☑ Deletions were made pursuant to the exemptions indicated below with no segregable material available for release to you.

Section 552		Section 552a
☐ (b)(1)	☐ (b)(7)(A)	☐ (d)(5)
☒ (b)(2)	☐ (b)(7)(B)	☐ (j)(2)
☐ (b)(3)	☒ (b)(7)(C)	☐ (k)(1)
_____	☒ (b)(7)(D)	☐ (k)(2)
_____	☐ (b)(7)(E)	☐ (k)(3)
_____	☐ (b)(7)(F)	☐ (k)(4)
☐ (b)(4)	☐ (b)(8)	☐ (k)(5)
☐ (b)(5)	☐ (b)(9)	☐ (k)(6)
☐ (b)(6)		☐ (k)(7)

☐ Information pertained only to a third party with no reference to you or the subject of your request.

☐ Information pertained only to a third party. Your name is listed in the title only.

☐ Documents originated with another Government agency(ies). These documents were referred to that agency(ies) for review and direct response to you.

_____ Pages contain information furnished by another Government agency(ies). You will be advised by the FBI as to the releasability of this information following our consultation with the other agency(ies).

_____ Page(s) withheld for the following reason(s): _____

_____

☐ For your information: _____

_____

☒ The following number is to be used for reference regarding these pages:

100-56674-42

XXXXXX
XXXXXX
XXXXXX

XXXXXXXXXXXXXXXXXXXXX
X DELETED PAGE(S) X
X NO DUPLICATION FEE X
X FOR THIS PAGE X
XXXXXXXXXXXXXXXXXXXXX

FBI/DOJ

4-750 (Rev. 12-14-88)

XXXXXX
XXXXXX
XXXXXX

FEDERAL BUREAU OF INVESTIGATION
FOIPA DELETED PAGE INFORMATION SHEET

4 Page(s) withheld entirely at this location in the file. One or more of the following statements, where indicated, explain this deletion.

☒ Deletions were made pursuant to the exemptions indicated below with no segregable material available for release to you.

Section 552		Section 552a
☒ (b)(1)	☐ (b)(7)(A)	☐ (d)(5)
☒ (b)(2)	☐ (b)(7)(B)	☐ (j)(2)
☐ (b)(3)	☒ (b)(7)(C)	☐ (k)(1)
_____	☒ (b)(7)(D)	☐ (k)(2)
_____	☐ (b)(7)(E)	☐ (k)(3)
_____	☐ (b)(7)(F)	☐ (k)(4)
☐ (b)(4)	☐ (b)(8)	☐ (k)(5)
☐ (b)(5)	☐ (b)(9)	☐ (k)(6)
☐ (b)(6)		☐ (k)(7)

☐ Information pertained only to a third party with no reference to you or the subject of your request.

☐ Information pertained only to a third party. Your name is listed in the title only.

☐ Documents originated with another Government agency(ies). These documents were referred to that agency(ies) for review and direct response to you.

_____ Pages contain information furnished by another Government agency(ies). You will be advised by the FBI as to the releasability of this information following our consultation with the other agency(ies).

_____ Page(s) withheld for the following reason(s): _____

_____

☐ For your information: _____

_____

☒ The following number is to be used for reference regarding these pages:

100-56674-95

XXXXXX
XXXXXX
XXXXXX

XXXXXXXXXXXXXXXXXXXXX
X DELETED PAGE(S) X
X NO DUPLICATION FEE X
X FOR THIS PAGE X
XXXXXXXXXXXXXXXXXXXXX

FBI/DOJ

233

FEDERAL BUREAU OF INVESTIGATION

Form No. 1
THIS CASE ORIGINATED AT NEW YORK FILE NO. 100-26200

REPORT MADE AT	DATE WHEN MADE	PERIOD FOR WHICH MADE	REPORT MADE BY
NEW YORK	6-23-48	7/24/47	[redacted] (b)(7)(C)

CONFIDENTIAL

TITLE	CHARACTER OF CASE
AMERICAN SLAV CONGRESS 41797	INTERNAL SECURITY - G; REGISTRATION ACT

SYNOPSIS OF FACTS:

In radio broadcast 7/27/47 ASC official asserted that first ASC Congress held 4/25,26/42, Detroit, Michigan, grew out of Tri-State All Slav Congress meeting in Pittsburgh, Pa., 12/3/38; stressed role of ASC in uniting Slavic groups for "peace, economic security and progress". [redacted]

News disseminated through quarterly magazine "The Slavic American" [redacted]

ALL INFORMATION CONTAINED HEREIN IS UNCLASSIFIED EXCEPT WHERE [redacted]

Class 10/18/80

DATE 5p/GSK/PB 7-15-80

CHARGE & EXP. BY 7-15-80
REASON FOR II. 1-2,4,5
DATE OF REVIEW 7-15-90

ENCL Behind file 9-15-48

APPROVED AND FORWARDED: Edward Scheidt SPECIAL AGENT IN CHARGE

DO NOT WRITE IN THESE SPACES

100-56674-1096 RECORDED - 111

COPIES OF THIS REPORT

5-Bureau (Encs.)
2-Chicago
2-Cleveland
2-Detroit
2-Los Angeles
2-Milwaukee
2-Pittsburgh
2-St. Louis
2-San Francisco
1-Washington Field (Inf.)
1-Newark (Inf.)
1-Boston (Inf.)
4-New York

F B I
34 JUN 25 1948

CONFIDENTIAL

COPIES DESTROYED 11-7-58

U. S. GOVERNMENT PRINTING OFFICE

CC-7-14-

61 SEP 15 1948 ENCLOSURE BEHIND FILE

1095 234

41824

NY 100-26200

[redacted]

(b)(1)
(b)(7)(C)

The first two issues of "The Slavic American", furnished by [redacted] contain the following articles: (b)(1)

Vol. 1, Fall 1947, No. 1

Articles

Henry Wallace, Champion of Peace....	3	..... by Leo Krzycki
Poland's Western Boundaries.....	5	.....by Congressman G. Sadowski
Statement on the Truman Doctrine At Senate Foreign Relations Committee Hearings.....	6	.....By George Pirinsky
As a Veteran Sees It, First in a Series of Articles.....	9	.....by Captain George Wuchinich
Spotlight on the Balkans, Statements on Balkan-Greek Question at U.N. Security Council Hearings.....	20	by Warren R. Austin, U. S. Representative and Andrei A. Gromyko, U.S.S.R. Representative
The Real Bulgaria An Answer to Life Magazine.....	50	.....by Dr. Nissim Mevorah

235

CONFIDENTIAL

Features

Story of the American Slav Congress 10 ...The Record of an Organization
Leo Krzycki,
Fifty Years a Servant of the People 18 .....by Tabitha Petran
One World Flight,
Stop-Over in Moscow..... 34 .....by Norman Corwin
Czechoslovak Sokol in America..... 40 .....The Symbol of a People
We Felt the Heartbeat of New Yugoslavia; The Rebuilding of a Country 43 .....by Zlatko Balokovic
Bright Passage,
A Review of the new book on Czechoslovakia, by Maurice Hindus 47 .....by Misko
Savo Radulovich..... 48 .....Yugoslav Artist
Highlights of Slavic American News.. 52 Notes on Rallies and Conferences
Slavic American Youth Get Together.. 54 .....Youth councils in action

Stories

My American Pilgrimage,
Excerpts from the new novel..... 38 .....by Stoyan Christowe
The Importance of Being Kobotchnick
A story of a Man and His Dog..... 42 .....by Louis Adamic

Vol. 1, Winter 1947, No. 2

Articles

Conspiracy Against Peace..... 5 .....by Louis Adamic
Deportation Laws Hit Slavic Americans..... 13 .....by Abner Green
Analysis of the Marshall Plan.... 22 .....by George Pirinsky
Program and Activities of the American Slav Congress..... 29 .....by George Pirinsky

CONFIDENTIAL

236

Features

Nikola Tesla	3	by Pauline Klopacka
Tribute to a Fighting Senator	9	ASC Testimonial Dinner
The World Youth Festival	10	by Ilona Vlahov
U.S.S.R. Thirty Years After Feudalism	14	by S. Serbuzov
Summary of a Journey	24	by Ella Winter
The Story of Geo Milev	31	by Maria Vladimirova
Prague	32	Europe's New Film Capital
Slav Saga in Pennsylvania	33	by Lyla Y. Slocum Eugene Konecky
American Clergymen See the New Yugoslavia	38	Digest of their Report
Pages from an Artist's Notebook	42	by Alvena Becker
Five Women	44	by Mario Seton

Fiction

Wedding Day	7	by Thomas Bell

[redacted]

CONTINUED

41860

NY 100-26200

CONFIDENTIAL

ENCLOSURES (5) TO BUREAU

[redacted]

b7c
b7D
0/5

Two copies of quarterly magazine "The Slavic American", Winter 1947 issue.

- P E N D I N G -

CONFIDENTIAL

238

XXXXXX
XXXXXX
XXXXXX

FEDERAL BUREAU OF INVESTIGATION
FOIPA DELETED PAGE INFORMATION SHEET

1 Page(s) withheld entirely at this location in the file. One or more of the following statements, where indicated, explain this deletion.

☒ Deletions were made pursuant to the exemptions indicated below with no segregable material available for release to you.

Section 552		Section 552a
☒ (b)(1)	☐ (b)(7)(A)	☐ (d)(5)
☒ (b)(2)	☐ (b)(7)(B)	☐ (j)(2)
☐ (b)(3)	☒ (b)(7)(C)	☐ (k)(1)
_____	☐ (b)(7)(D)	☐ (k)(2)
_____	☐ (b)(7)(E)	☐ (k)(3)
_____	☐ (b)(7)(F)	☐ (k)(4)
☐ (b)(4)	☐ (b)(8)	☐ (k)(5)
☐ (b)(5)	☐ (b)(9)	☐ (k)(6)
☐ (b)(6)		☐ (k)(7)

☐ Information pertained only to a third party with no reference to you or the subject of your request.

☐ Information pertained only to a third party. Your name is listed in the title only.

☐ Documents originated with another Government agency(ies). These documents were referred to that agency(ies) for review and direct response to you.

_____ Pages contain information furnished by another Government agency(ies). You will be advised by the FBI as to the releasability of this information following our consultation with the other agency(ies).

_____ Page(s) withheld for the following reason(s): _____

_____

☐ For your information: _____

_____

☒ The following number is to be used for reference regarding these pages:

100-56674-95

XXXXXX
XXXXXX
XXXXXX

XXXXXXXXXXXXXXXXXXXXXX
X DELETED PAGE(S) X
X NO DUPLICATION FEE X
X FOR THIS PAGE X
XXXXXXXXXXXXXXXXXXXXXX

FBI/DOJ

THE SLAVIC AMERICAN

50¢

Louis Adamic

Thomas Bell

S. Garbuzov

Abner Green

E. Konecky

Alvena Seckar

Marie Seton

Lyla Y. Slocum

M. Vladimirova

Ilene Vlahov

Ella Winter

NIKOLA TESLA - *Poet in Electricity*

ALL INFORMATION CONTAINED
HEREIN IS UNCLASSIFIED
DATE 2-14-95 BY [illegible]

WINTER 1947

240

Nikola TESLA

Whose daring imagination and concrete accomplishments are among the wonders of our age.

By PAULINE KLOPACKA

WHEN Nikola Tesla died in January of 1943 in comparative seclusion in a New York hotel, he owned no more than the few personal possessions that had become dear to him during the 86 years of his life. Yet his estate was so fabulous that its value can never be truly assessed. And his heirs were the men and women of all the world.

What price can be put on the work of a man who brought into being the electric power era? The industrial giant that the U. S. is today rests on the series of brilliant discoveries and inventions in the harnessing and transmission of electricity conceived by Nikola Tesla, who came to this country from the land of the South Slavs when he was 28 years of age.

It was at midnight between July 9 and 10 in 1856 that a son, Nikola, was born to the Rev. Milutin Tesla and Djouka, his wife, in the little Serbian village of Smiljan, in the province of Lika. Now a part of Yugoslavia, it was at that time under Austro-Hungarian rule.

Tesla's father, a Serb, was a priest of the Greek Church, and his mother of a distinguished Serbian family, came from a long line of inventors. Both father and mother gave to the child a valuable heritage and culture developed and passed on by ancestral families that had been community leaders for many generations.

It was at first planned that the son prepare for the priesthood but Nikola would have none of this. Physics and mathematics fascinated him. He would be a teacher of these favorite subjects. But then he switched to electrical engineering and at the age of 25 a graduate of Prague University—earlier training had been obtained at the Graz Polytechnic in Austria—he was set for his first job.

At that time the American Telephone System was brought to Europe and an installation set up in Budapest, where Tesla was a successful applicant for a position.

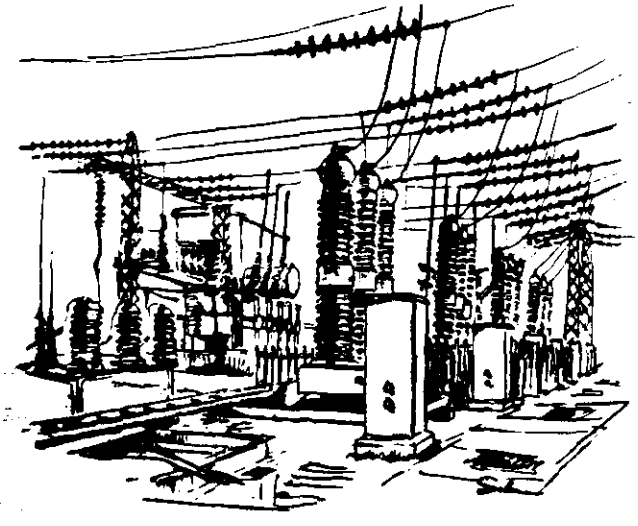

Drawings by Alvena Seckar

THREE years later, in 1884, he was U. S. bound. There were 4 cents in the young immigrant's pocket when he arrived in New York, but that did not disturb him. He had the names of friends. He would soon get to work.

His confidence was well founded, since within a few years he was counted among the ranking scientists of the country, his discoveries bringing in handsome royalties.

It is interesting to note the description of Tesla at this time by his biographer, J. J. O'Neill in the book, "Prodigal Genius": "Tesla was a

spectacular figure in New York in 1891. A tall, dark, handsome well-built individual with a flare for wearing clothes that gave him an air of magnificence, who spoke perfect English but carried an atmosphere of European culture. He was an outstanding personality to all who beheld him." One of his colleagues described him as "immaculately groomed, and of delightful courtesy and charm."

A review of Tesla's work is nothing short of amazing. To quote from J. J. O'Neill's book:

"It was Tesla's invention of the polyphase alternating current system that was directly responsible for harnessing Niagara Falls and opening the modern electric superpower era in which electricity is transported for hundreds of miles to operate the tens of thousands of mass production factories of our industrial system.

"Every one of the tall, Martian transmission lines that stalks across the earth and whose wires carry electricity to distant cities is a monument to Tesla, every dynamo and every motor that drives every machine in the country is a monument to him.

"He discovered the secret of transmitting electric power to the utmost ends of the earth without wires and demonstrated his system by which power could be drawn from the earth anywhere by making a connection to the ground; he set the entire earth in electrical vibration with a generator which sprouted lightning that rivaled the fiery artillery of the heavens. It was a minor portion of this discovery that he created the modern radio system. He planned our broadcasting methods of today 40 years ago when others saw in the wireless only the dot and dash message that might save ships in distress.

"Tesla was an inventor but he was much more than a producer of devices. He was a discoverer of new principles opening many new empires of knowledge which even today have been only partly explored. In a single burst of invention he created the world of power of today.

"He brought into being our electric power era, the rock bottom foundation on which the industrial system of the entire world is builded. He gave us our mass production system for without his motors and currents it could not exist.

"He gave us every essential of current radio. He invented radar 40 years before its use in World War II. He gave us our modern neon and other forms of gaseous tube lighting. He gave us fluorescent lighting. He gave us the high frequency currents which are performing their electronic wonders throughout the industrial and medical world. He gave us remote control by wireless."

Always proud of his national origin, Tesla spoke as follows during his visit to Belgrade in 1892 in answer to a speech of welcome by the city's mayor: "There is something in my which is only perhaps illusory . . . But if I were to be sufficiently fortunate to bring about at least some of my ideas it would be for the benefit of all humanity. If these hopes become one day a reality, my greatest joy would spring from the fact that this work would be the work of a Serb."

Tesla dedicated his life to peace, to lightening the burden of toil from the shoulders of his fellow man. As every scientist who so interprets his function in society, he was stricken when he saw the coming of World War II and his inventions being prepared for destructive purposes. He sought desperately to prevent the war and made available a device which he offered to the world, maintaining that it would make any country, no matter how small, safe within its boundaries. His offer was rejected.

But once the war was an accomplished fact, and when the people's armies rose in defense of their nations in what appeared to be an unequal fight, he did all he could to rally his countrymen to work to the limit in the war effort.

Shortly before his death he wrote as follows to his nephew, M. Sava Kosanovic, now Yugoslav Ambassador to the U. S.:

"President Roosevelt and Donald Nelson, Director of our War Production have repeatedly urged the American people, workers and employers, to meet as fully as possible the goals established for the production of war materials. . . . For that reason, my dear brothers and sisters, as the oldest Serb, Yugoslav and American in the U. S., I am addressing this letter to you, asking you to answer the call of President Roosevelt.

"The achievements of our brothers in the old country are worthy of the spirit which permeates our folklore . . . the fate of the Serbs, Croats and Slovenes is inseparable."

Tesla was not satisfied with his achievements in releasing the earth's energies so that men could work with less backbreaking effort and live more comfortably. The man who could draw up a design for a perfect motor was also concerned with drawing up a plan for a better world. When Tesla read the address of the then Vice-President, Henry A. Wallace, on The Future of the Common Man, he was fired with enthusiasm. The Yugoslav edition of the speech included a preface by Nikola Tesla written in October, 1942:

"Out of this war, the greatest since the beginning of history, a new world must be born, a world that would justify the sacrifices offered by humanity. This new world must be a world in which there shall be no exploitation of the weak by the strong, of the good by the evil; where there will be no humiliation of the poor by the violence of the rich; where the products of intellect, science and art will serve society for the betterment and beautification of life, and not individuals for the amassing of wealth. This new world shall not be a world of the downtrodden and humiliated, but of free men and free nations, equal in dignity and respect for man . . ."

This man, whose work was so advanced of his time that much of it still remains unexplored could have amassed millions, but he was so little interested in personal gain that to save his friend, Mr. Westinghouse, from bankruptcy he tore up a contract which would have brought him $12 millions in royalties. Pressed for funds during the latter part of his life, many of his inventions are lost to the world.

But though he was often short of money he would walk over to Herald Square and feed the pigeons. It was almost a sacred trust, feeding the pigeons twice a day. They had been his personal responsibility through the years, and if he could not be there to do the feeding, a Western Union messenger boy would be hired to do the job in his stead. Often he would forget an important engagement so that he might keep his "date" on Herald Square. The pigeons were a way to relaxation, a note of warmth in an otherwise rigidly disciplined life. He had few friends and never married, since he felt a scientist must keep himself free of personal relationships that would be unduly demanding.

Restless and eager to unravel every possible unknown to the very end of

(Continued on page 49)

GEO MILEV

describes only from the standpo. of his art. . . . In his attitude toward various events in the life around him, which impress him strongly, he does not take sides. He does not praise one and hurt the other; he merely describes everything he sees, describes it with the delicate, sweet colors of poetry. . . ."

Geo was fined 20,000 leva and sentenced to one year in prison. He could not believe that the court could make such a decision. With joking reference to the dullness of "their Honors," he left the courtroom believing that the decision would never be carried out.

He was right. Unable to enforce their decision legally, the government resorted to illegal means.

Next day, May 15, 1925, Geo was kidnapped from his home and killed by underlings of Prime Minister Alexander Tzankoff.

The cultural world of Europe protested Geo's death. Henri Barbusse, of France, visited Bulgaria to investigate the case. In his book "The Murderers" he made reference to the circumstances of Geo's death. Max Reinhardt protested and "regretted the loss of a very gifted theater director." Oskar Kokoshka, in Vienna, recognized the loss of "a precious critic and learned connoisseur of modern art."

Many Bulgarian writers were silent. Fearing for their lives, they did not dare to speak a word for Geo Milev or express regret for his death. The more courageous of them stated that "talent such as Geo's is born only once in a hundred years," that "He was the most cultured Bulgarian," "The most honest and courageous."

THE youth and the common people deeply mourned for Geo. They knew they had lost a sincere friend and teacher. Unable to use the Bulgarian printing presses, they copied his poems by hand and learned it by heart. Bulgarian students abroad printed it in Paris, and in Belgrade. In Prague it was translated into Czech and in Russia into Russian.

A few courageous young people in Bulgaria printed pamphlets about Geo. They were promptly tortured and imprisoned.

We, his family, searched for him for months, but we never learned exactly where and how he was killed.

There were rumors that he had been shot in the mountains, that he had been burned in the furnace of "Public Safety." These measures were used by Bulgarian Fascists long before the world knew of Hitler. Both stories, however, avowed that his spirit was not crushed.

Geo's voice was silenced forever. The murderers triumphed, but they forgot that he who speaks for the freedom of a tormented and deprived people does not die. In today's New Bulgaria, Geo Milev is honored as one of her most cherished sons. Geo's poems are celebrated especially by the youth of today, the heirs of the September Revolution of 1944, which fulfilled his prediction of a decade before that "September will be May."

TESLA

(Continued from page 4)

his life, he read a paper on the occasion of his 80th birthday on the perfection of a tube for atom smashing. As if that were not enough, he also presented a system of interplanetary communication.

Thus the fragmentary story of the life and work of a Yugoslav immigrant who, like so many tens of thousands of his fellow countrymen, left their homeland rather than live as subjects within the Austro-Hungarian empire.

He made a unique contribution to his adopted land, so ideally suited to the full scope of his genius, "the like of which in all *history* could probably be counted on the fingers of one hand."

It is to be hoped that just as he brought electrification to the U. S. in the short span of ten years, his adopted country might assist in the full electrification of the Balkans, reversing its present policy toward New Yugoslavia.

HE AMERICAN SLAV COMMITTEE
of Canton, Ohio
welcomes the new magazine
THE SLAVIC AMERICAN
and projects best wishes for its success. This organ, we know, will be a great contribution to the enlightenment of the homes of American Slavs.

Greetings to the Second Issue
of
THE SLAVIC AMERICAN
and
Best Wishes for Continued Success in the Coming Year
ALL SLAVIC COUNCIL OF NORTHERN CALIFORNIA
739 Page Street, San Francisco, Calif.

GREETINGS FROM
JIM BALANOFF

Greetings from Lodge 3052
American-Russian Fraternal Society, IWO
1010 East Foss Avenue Flint, Mich.

Greetings from
CLUB "YUGO-FORWARD"
Detroit, Mich.

THE STANLEY THEATRE
Presents
The Best Films from the U.S.S.R.
NOW! "THE GREAT GLINKA"
7th Ave. & 42nd St. New York City

Best Wishes for Success to
THE SLAVIC AMERICAN
American Russian Fraternal Society
Lodge 3069
120 Glenmore Ave. Brooklyn, N. Y.

Efficient Service Since 1919
LEON BENOFF
General Insurance Broker
391 East 149th St., New York
MElrose 5-0984
Insurance is cheaper to have than to need

243

FORM NO. 64

Office Men[illegible]dum • UNITED S[illegible] GOVERNMENT

TO : Director, FBI

DATE: April 11, 1949

FROM: SAC, New York

SUBJECT: AMERICAN SLAV CONGRESS;
INTERNAL SECURITY - C
(Bufile 100-56674)

Enclosed are two copies of the Fall, 1948 issue of "The Slavic American", a quarterly, published by the American Slav Congress.

These are being submitted for information only, not for evidence. One copy is being retained in the files of this office.

Encls. 2

[redacted]
100-26200

(b)
(7)
(C)

ALL INFORMATION CONTAINED
HEREIN IS UNCLASSIFIED
2-22-49 SP/RC

~~ENCLOSURE BEHIND FILE~~

-116

EX. 116

RECORDED - 105

INDEXED - 105

100-56674-1168

5 APR 12 1949

FILE

(b)
(7)
(C)

244

CONFID

SLAVIC AMERICAN

a Quarterly

Club Metro Dancers, Chicago

Published by The American Slav Congress

FALL 1948

245

The American Way of Life

"Why Go to War to Keep Others From Having Their Way of Life," asks Adamic

by LOUIS ADAMIC

THE opening lines of the Progressive Party's platform read: "Three years after the end of the Second World War the drums are beating for a third. Civil liberties are being destroyed. Millions cry out for relief from unbearably high prices. The American Way of Life is in danger."

The American Way of Life has been the issue in any American election ever since 1776. Every voter who goes to the polls, votes—intelligently or mistakenly; independently or under the spell of inveterate partisanship—for one or another concept of the American Way of Life.

Of course, various people, living in various circumstances, have various ideas of what constitutes the American Way of Life. I propose to state my ideas of it; also I shall presume to fit those ideas within the frame of the new Progressive Party which must continue to grow from its beginnings in 1948.

As I see the American Way of Life, its principles were born of the American Revolution. They were won in struggle; *nothing* as fundamental and deep-reaching comes easy. They are stated in the Declaration of Independence and the Constitution of the United States. Our job now is to perceive what policies and measures will safeguard the Way against decay and corruption, and will further its growth and evolution to meet successfully the problem of changing times and new conditions. The principles of 1776 are as valid as ever, but life is different today from what it was then. Fortunately growth and change are of the very essence of the American Way.

The first principle of the American Way of Life is the *right to life* itself; and this must be safeguarded against war on the one hand, and on the other against poverty, which in recent decades has taken a far heavier toll than any war in which this nation has ever so far been involved—though the "next war," if we permit it to be drummed up, will reverse the story.

The second principle of the American Way is *liberty* . . . it has always been our slogan and our pride. But we have long been cautioned that its price is eternal vigilance, and we know how to recognize those who have designs on it.

The third principle of our Way is *abundance*. When migrants from Europe first began to settle here, this was a land rich in the gifts of nature; and for all that those gifts have been abused by ignorance and irresponsibility, and particularly by exploiters and monopolists. Our resources are still great enough—if deforestation and erosion are checked in time, and if our mineral resources are properly conserved—to afford abundance, the *good* life, to all the inhabitants of These States.

And a fourth principle of the American Way is *opportunity*.

THE Progressive Party promises to safeguard the *right to life* by avoiding war—always the saddest failure of morality and now the potenial destroyer of human society and the globe itself.

Whether or not we can avoid World War III, I don't know; but I do know this—that if we don't try to avoid it, nothing else is worth trying to do nowadays. It is futile to wonder about the kind of curtains you'll hang up in your living-room . . . futile to write or read books, to go to lectures or to school . . . silly to worry about being called a Red or a Communist, or whatever, or about being hauled up before the fantastic Un-American Activities Committee . . . futile to work at your job, whatever it may be . . . silly to worry about keeping on the good side of whoever can take that job away from you.

War or peace? I don't know; but if we want any sort of future for this country, for the rest of the world, for ourselves and the Russians, for you and me personally, then we'd better work for peace . . . stand up for peace . . . stand up with our new political vehicle, the Progressive Party.

The Progressive Party further proposes to safeguard the *right to life* by abolishing poverty. Cynics, prestitutes, and generally people without hope and vision say this can't be done. They say Henry Wallace is a starry-eyed visionary. We say *it can* be done if we will jealously maintain freedom, bear in mind the limitless capabilities of Americans, and keep the grip of monopoly from arrogating the resources that should serve all, and if we will insist upon the application of the ever more marvelous discoveries and techniques of science for the common good.

The Progressive Party proposes to safeguard *liberty* — not with more lip service, but by adhering fully to the Constitution, including the Bill of Rights and all subsequent amendments, in all their vitality and integrity, and by reviving and enhancing the programs and formulations of Roosevelt's New Deal. The Progressive Party proposes to guard liberty

(Continued on page 26)

LOUIS ADAMIC

Slovenian American author and lecturer, a foremost authority on national groups, he is a prolific writer. Among his works are My Native Land, Dinner at the White House, Two-Way Passage, Nation of Nations, My America. He also edits and publishes a current affairs bulletin, Trends and Tides, issued from his home in Milford, New Jersey.

246

A HALF HOUR OF MUSIC

with

TWO DISTINGUISHED AMERICAN ARTISTS
OF SLAVIC DESCENT

in a unique

Album of Recordings

Now on Sale

ZLATKO
BALOKOVIC
Violinist

IVAN
PETROFF
Baritone

By BALOKOVIC

HYMN TO THE SUN	Rimsky-Korsakoff
CROATIAN RHAPSODY	Lhotka
FOR ONE MOMENT OF JOY	Croatian Folk Song

By PETROFF

LEGEND	Bulgarian Folk Song
PEASANT'S LAMENT	Bulgarian Folk Song
ARIA PRINCE IGOR	Borodin

By BOTH

SONGS MY MOTHER TAUGHT ME	Dvorak
ELEGIE	Massenet

Prize selections for your library long to be cherished and enjoyed

FOUR RECORDS TO EACH ALBUM

$4 the Album

postage prepaid

USE CONVENIENT ORDER BLANK ➔

AMERICAN SLAV CONGRESS
205 East 42nd Street
New York 17, N. Y.

$4 for album of 4 records

I enclose ..... for ☐ album(s)

Name .....

Address .....

City & Zone .....

State .....

(Make checks and money orders payable to
AMERICAN SLAV CONGRESS

The American Way

(*Continued from page 5*)

against that danger which most disturbed the Founding Fathers—the power of the military. And note how all these things are inter-related. Liberty is imperiled by poverty, by monopoly, by war. Every measure which the new party proposes is a measure to safeguard liberty.

By *abundance*, the new party means that our rich land—and our skills, brought here by immigrants from the Old World in the last 300 years—shall produce all that is needed to make the good life available to every law-abiding and industrious man and woman here, and their children, regardless of color, race or religion; and that these fruits of enterprise and labor shall not be so ill-divided that a few are glutted with a surfeit of luxuries while many who toil and sweat must for reasons beyond their control still go "ill-fed, ill-clothed and ill-housed."

The pioneers who first possessed the Atlantic seaboard and later pressed westward through the forests and the prairies, could win abundance by strength and industry, by the wide swing of the axe, the true aim of the flintlock, and the firm hand on the plow. There was *opportunity* galore. Almost any man could get land for the asking or for a few dollars an acre, and become

(*Continued on page 29*)

The American Way

(Continued from page 26)

an independent farmer. Any man could set up a little store in a new community and become a prosperous merchant as the town grew. Almost any man could start a paper, establish a factory or mill, or open a mine, and become an industrialist.

This is no longer true. Millions of square miles have been rendered useless for human use and habitation by irresponsible deforestation and by erosion. The number of family farms dwindles yearly; every day hundreds of independent merchants and small mining, milling and manufacturing companies are forced out of business by the power of monopoly, centered in Wall Street.

The relentless limitation of opportunity, the shrinking of abundance for millions, the violences done to liberty in defiance of the Constitution and in contempt of the tradition that began in 1776, the further threat against freedom in the ominous form of military rule, the denial of life itself to unnumbered victims of poverty, and the grave threat to all our lives in the probability of a war waged with atom bombs and bacteria —these developments, conditions and prospects now imperil the American Way of Life.

The Progressive Party proposes to restore and safeguard and extend that Way—the emphasis is on the word "extend." Nothing in nature stands still, and no more can human economic and social and political institutions. Change is the key principle of the American Way—growth, adaptation, progress. Had it not been for that principle, the USA would not exist—we would not now be debating the decisions made in an election; we would still be colonial subjects, or we wouldn't be here at all.

If we remembered more vividly what daring it took in 1776 to reject monarchy and form a republic, we would have less hesitation in rejecting the National Association of Manufacturers' notions of "free enterprise," and adopting measures more in keeping with today's facts of life. We would not hesitate to defy the greatest power on earth—that of monopoly corporations and cartels, whose agents have lately seized control of the U.S. Government.

Under Henry Wallace's leadership, the Progressive Party offers itself as a medium through which those who love their country and are also in favor of their own rightful individual interests can express themselves politically . . . in 1949 . . . 1950 . . . in 1952, assuming that the "next war," now being drummed up, won't destroy us all before then.

We know now that we have established a firm foundation for the new party under the leadership of Henry Wallace and Glen Taylor. Personally, I was not in this campaign only in reference to this year's election or because I think, as I do think, that Henry Wallace is a great American who should be in the White House in this crucial period. In the main, I was in this campaign because, like Wallace and Taylor, like many other Americans, I became convinced that neither of the old parties is fit to deal with the profound crisis which is coming to a climax in these middle years of the 20th century. I am in this movement because I want to help build a new people's party that will be capable of coping with the crisis now converging upon us and the rest of the world.

LIKE many Americans, I am foreign-born; and every once in a while I hear or read some remark to the effect that I have no right to be doing what I am doing—helping the growth of a new party which hopes to save the peace. Such remarks amuse me. It so happens that I have read rather extensively in American history, not as taught in most schools, but as it really happened; and I am impressed by this fact—that in all crucial or climactic periods in the career of this country, the so-called foreigners played important roles.

The Irish and German elements, for instance, were the big "foreign" groups around 1776, and it was they who became the backbone of General Washington's revolutionary army. The Irish and German elements also furnished the mass support to Thomas Jefferson when he started a new party 150 years ago. Jefferson did not triumph immediately (as Wallace didn't); his supporters stood it with him until he did (as I hope we will

(Continued on page 30)

Greetings From

MARY ANTONIC
BOZO BARANIC
MILO BARANIC
JOHN BEZELJ
PAUL BIAZEVICH
KAY BEGOVICH
FLORENCE FERKICH
GEORGE GELSOVICH
STEVE HROSTI
FRANK KURSOC
LJUBICA LOVRICH
ANTON PESUSICH
ERICA PETRAS
NICK PETRICH
A. PUJATCKY
LUCY LJUBENKO

Lodge 3172, A.R.F.S., Sioux City, Iowa

PETER ZAKUTONSKY
LOUIS KLYM
MARY KLYM
HELEN WONSOWIC
PAUL ROMANOV
MARY ROMANOV
BRANCH No. 14 LEMKO ASS'N, GARY, IND.
BRANCH No. 3295, IWO, CARPATHO-RUSSIANS, GARY, IND.
MILLIE KLYM
MICHAEL KLYM
ANNA SAMOZKA
WALTER IVANZOWICZ

A.S.C. of Newark, N. J.

JOHN J. KASKEVICH, M.D.
530 Summer Ave., Newark

JOHN BENKO
JOHN DOLINAJEC
MICHAEL DROBAN
STEVEN DZUROSKA
STEPHEN HRUSKA
TILLY JANOVITZ
MICHAEL KOLARIK
STEFAN LACKO
JOSEPH MATEJKA
MICHAEL MATEJKA
JOSEPH MEDVECKY
IMRO RIBAR
SHEPERO SHOE STORE
MATEJ STROMKO
STEFA TAL
JOSEPH TURZA
FRANK ZAVARTKAJ
JOSEPH ZILINEK

248

Delegates join in singing the National Anthem.

The American Way

(Continued from page 29)

with Wallace). The same was true again in the period of Andrew Jackson, when American democracy took another long step forward. When Lincoln came along and started a new party, his most steadfast backing came from the numerous new-immigrant groups—Germans, Finns, Poles, Scandinavians and others.

This was quite natural. As newcomers who came here seeking liberty, abundance and opportunity, they had a more acute sense of what America professed, and they took American principles more seriously than many of the old-line Americans who had begun to be matter-of-fact, if not smug, about the country. As newcomers, they were somewhat outside the mainstream of American life. By going behind the cause of Washington, Jefferson, Jackson and Lincoln, they became part of the mainstream. They promoted themselves from second-class citizens to first-class. It was Americanization at its very best. It made history, it enriched the traditions, it integrated the new Americans into the country as a whole.

And it is quite natural, and very fortunate, that many of us in the new-immigrant groups have joined with many old-line Negro Americans, with many white Americans of the earlier immigration waves, with Henry Wallace, in this movement to form a new party and make it competent to deal with the complex problems looming before us. Many of us Slavic Americans already in 1946 and early in 1947, sensed that Henry Wallace was right, and we became part of the growing impulse to form a new party. Regardless of what some of our opponents have said, this fact is strictly and wonderfully in the American tradition. It is part of the Americanization process. It is according to the American Way. We are promoting ourselves from second-class to first-class citizenship. This is resented by some of the Americans of the older strains, the self-styled standard Americans; but don't let that worry you too much. They, too, are being Americanized or re-Americanized as you assume your full rights and duties of citizenship. Americanism has its standards, to be sure; very high standards; but it is not anything rigid or dead; it is alive, vital, open to change and enrichment.

Slavic Americans are part of the whole immense American dynamic which is as yet little understood, and is full of promises and dangers. By coming here, we of the new immigration greatly complicated the American civilization as it was, say, 90 or 100 years ago. Most Slavic immigrants became workers in the great industries, and now their energy is integral with the American scene as a whole. Most immigrants in the last 100 years or so worked hard, many of them too hard at too little pay, and helped to create a complex industrial machine which, lest it overwhelm us, now needs intelligent handling and control. It is our duty to take an active interest in finding an approach to the immense industrial, economic and social problems facing us: for, let me repeat, our coming here and our labors in the last several decades have helped to create these problems.

Most of us who came over were ordinary people. But in the new immigration waves were also some extraordinary human beings. There was, for instance, a man of genius, Nikola Tesla. His numerous inventions now are one of the most important factors in the immense American industrial scheme which throbs with the high promises that pulsated through Tesla's brain, but which are also full of dangers. Personally, as one who happens to be proud of being of the same background as was Tesla, I feel it is my special duty to help do what is necessary to insure that Tesla's work, as well as the work of ordinary men and women, will go into the fulfillment of promises in our American Way of Life, rather than contribute to the catastrophe now threatening.

IN 1942, Henry Wallace made his famous speech on "The Century of the Common Man." Nikola Tesla, who was a very uncommon man, publicly endorsed that speech in glowing terms. And I think that I speak not only for myself, but also for Tesla, when I assert that the American Way of Life is not the way of incredibly greedy monopoly profits and prohibitive prices for the necessities of life. Look at this picture: Millions of men in their best years who fought and suffered, many of whom will carry greater or lesser disabilities to their graves—veterans to whom we said "Nothing is too good for you"—are unable to secure homes of minimum decency and convenience. Their families cannot be adequately fed with meat at 70¢ to $1.20 a pound. Whatever wage increases they may secure

(Continued on page 32)

249

comments from our readers

Dear Editor:

Our small club of eight members, from a small mining community in Pennsylvania, until recently was known as the Rural Ridge Busy Knitters Club. We are now a chapter of the Congress of American Women.

We have only fifteen dollars in our treasury and out of this we are sending you $10, because of our desire to contribute to the work you are doing.

May it help in some way towards *The Slavic American's* fight for freedom and democracy.

Anna Tominac, Pres.
Anne Kondrick, Sec'y.
Julia Pukavina, Treas.
Rural Ridge, Pa.

Dear Editor:

I send you post haste my renewal subscription for *The Slavic American.*

In all sincerity—keep up the good work for you are doing an excellent job in the struggle against fascism.

I never miss an issue.

Rev. Eliot White
New York, N. Y.

Dear Editor:

How about more profiles on Slavic American writers and scientists like Nikola Tesla? The field for this type of material is virtually endless.

Anton Markulic
Los Angeles, Calif.

(See page 13—Ed.)

The American Way

(Continued from page 30)

through their unions, increased living costs still stay one jump ahead of them.

We of the Progressive Party say this is not the American Way of Life. And "we" includes great numbers of ex-GIs and young workers, old-stock Americans and immigrants: Americans of all breeds and backgrounds.

If all Americans are employed at better than mere-existence wages or are engaged in business or professional activities at a reasonable compensation; if all Americans are well clothed and fed; if all Americans are secure instead of uncertain and worried, as the majority are today, there will be no war. The Hearsts, Peglers, Forrestals and Bullitts won't get to first base in trying to propagandize us into fear and hate of other countries which are emerging out of backwardness and, because of their different historic experiences, are attempting a different system for providing benefits and opportunities for their citizens.

Why go to war to keep others from having their way of life? We in the Wallace movement, in the Progressive Party, insist on peace in order to keep the American Way of Life. If our approach prevails in time, there will be no war and Russia will be no danger to America, to the American Way of Life. The chief danger to this country and to our institutions under the Constitution lies in our present high-level politicians and wire-pullers who have raised the cry of Communism and of the Russian menace as a smokescreen to neutralize any possible militancy on the part of labor, to scare us in the new-immigrant groups, to frighten the Negroes, and to confuse the people generally so they won't be able to figure out who or what is responsible for high living costs. Henry Wallace clearly means what he says; so he and his active supporters were smeared, lest too many voters vote for him and in their own interest.

The old-line politicians and wire-pullers and their propagandists are not afraid of Communism, but of American democracy and of the American people; of the people getting wise to themselves and demanding a return to the American Way of Life—the Way defined in the Declaration of Independence and the Constitution of the United States.

That's what *they* are afraid of . . . that's what *we* Progressives stand for . . . and that's what will prevail if you and I, all of us and all of our neighbors wherever we come from, do everything in our power to build the new party that has come into being around the personality and political philosophy of Henry Wallace. We, all of us, will have to do all we can in this post-election period to make of the Progressive Party a party capable of saving the country and helping to bring about a world in which the American Way of Life will include not warlike antagonism, but constructive interest in the ways of life in other countries.

250

SECRET

FEDERAL BUREAU OF INVESTIGATION

Form No. 1
THIS CASE ORIGINATED AT CINCINNATI, OHIO

NY FILE NO. 100-27583 MBJ

REPORT MADE AT	DATE WHEN MADE	PERIOD FOR WHICH MADE	REPORT MADE BY
NEW YORK CITY	11/13/43	10/6,7, 25-28/43	[redacted] (b)(7)(C)

TITLE [redacted] (b)(7)(C) 0/S

CHARACTER OF CASE: SECURITY MATTER - C.

SYNOPSIS OF FACTS: (S) [redacted] (S)

(b)(7)(C)
(b)(7)(D)
0/S

APPROPRIATE AGENCIES AND FIELD OFFICES ADVISED BY ROUTING SLIP(S) OF CRS DATE 9/16/82

CONTAINED ... UNCLASSIFIED ... WHERE SHOWN OTHERWISE

Inc INS - Detroit FNC 2-17-49 L-6-59 R-367

IES DESTROYED

- R U C -

REFERENCE: Bureau File #100-118061
Report of Special Agent [redacted] dated (b)(7)(C)
July 17, 1943 at Cincinnati, Ohio.

DETAILS: At New York, N. Y.

This investigation is predicated upon a request in

DECLASSIFIED ON 9-17-87
BY 3042 pwt/EBM
appeal # 87-0499

Class. & Ext. By JP-1 GSR/RDD
Reason - FCIM II, 1-2.4.2 2+3
Date of Review 7/30/92 7/30/82

APPROVED AND FORWARDED: E. E. Conroy SPECIAL AGENT IN CHARGE

DO NOT WRITE IN THESE SPACES

100- 118061 - 47

RECORDED & INDEXED

75

30 NOV 16 1943 (b)(7)(C) [redacted]

COPIES OF THIS REPORT
5 - Bureau
4 - Cincinnati (2-USA, Dayton) (#100-4083)
2 - New York

SECRET

7—2021

251

SECRET

NY 100-27583

reference report that indices of the New York office be checked against the names of the persons [redacted] (b)(7)(C)

SAVA KOSANOVICH first came to the attention of the Bureau in January, 1943, after the death of NIKOLA TESLA, one of the world's outstanding scientists in the electrical field. During his lifetime, TESLA conducted many experiments in connection with the wireless transmission of electrical power and just prior to his death, was interested in what is commonly called the "death-ray". (S) U

The notes and records of TESLA's experiments and formulae, together with designs of machinery necessary for their operation, were reported to be among TESLA's personal effects, after his death. (S) U

It was reported that KOSANOVICH claimed to be a nephew of TESLA, and he attempted to secure possession of TESLA's personal effects, and hired a private locksmith to gain access to TESLA's possessions. The Bureau was interested because of the supposedly vital importance of TESLA's inventions and the desire to keep them out of enemy hands, as one informant maintains that KOSANOVICH was pro-Axis in his sympathies. The matter was later handled as an alien enemy, custodial detention matter and no further investigation conducted by this office. (S) U

The Bureau advised by letter of January 21, 1943, that its files revealed confidential information concerning NIKOLA TESLA and his inventions and advised that one NICOLA TESLA, who might be identical with NIKOLA TESLA, made a speech in Springfield, Massachusetts on July 4, 1922 under the auspices of the Friends of Soviet Russia. (S) U

(S) [redacted] (S) U (b)(7)(C)

(S) U

SECRET

252

STANDARD FORM NO. 64

Office Memorandum • UNITED STATES GOVERNMENT

TO : MR. TOLSON

DATE: Jan. 30, 1951

FROM : L. B. NICHOLS

SUBJECT: [redacted]

(b)(7)(c)

ALL INFORMATION CONTAINED HEREIN IS UNCLASSIFIED DATE 2-22-89 BY SP1AGCom #241860

Tolson
Ladd
Clegg
Glavin
Nichols
Rosen
Tracy
Harbo
Belmont
Mohr
Tele. Room
Nease
Gandy

[redacted] called yesterday and said he would be in town for the next two or three days and wanted to see me. I told him I would be glad to see him late yesterday or today at his convenience. He is coming in today at 2:30 p.m.

I asked him if there was anything special which would require my doing any checking. He stated there were two things he wanted to discuss.

1. The case of Nicola Tesla and Abraham A. Spanel, President of International Latex Corporation, [redacted]

Our files reflect that Nicola Tesla was one of the world's outstanding scientists and in fact designed the generators installed at Niagara Falls. He died in New York on January 7, 1943, and is supposed to have left details and plans for a so-called death ray. [redacted]

(b)(7)(c)

Our files also reflect that Colonel Erskine of Military Intelligence called us on January 9, 1943, advising that Tesla had died, that A. Spanel had communicated with the War Department regarding this death, that Tesla had a nephew named Sava Kosanovich who had taken possession of Tesla's papers and Spanel thought the papers might be used against our Government.

We made an immediate inquiry in New York and the first report was that Kosanovich and others entered Tesla's room with the aid of a locksmith, broke into a safe containing some of Tesla's valuable papers including formula.

Coincident with this, on January 8, 1943 L. M. C. Smith called Mr. Tamm regarding the death of Tesla and Smith stated he was talking to the Alien Property Custodian about seizing these items.

We interviewed Spanel who expressed concern over Tesla's effects and Spanel stated that Kosanovich had turned over the effects of Tesla to the Alien Property Custodian. Spanel further stated the day before Tesla died, he tried to get in touch with the War Department to make available certain patents.

SE 2 1/00 - 346930-1

5 [redacted] 4 1951

RECORDED - 18

MAR 2 1951

COPIES DESTROYED

R94 JUL 27 1962

EX. - 8

INDEXED - 18

[redacted]

(b)(7)(c)

253

[redacted] (b)(7)(C)

In 1945, we talked to a Private Bloyce Fitzgerald, who stated he had been associated with Tesla, and that the Army believed that Tesla's "death ray" is the only defense against atom bombs.

It was very clear we had no responsibility for Tesla's effects, that the Alien Property Custodian seized them and we learned later that Naval authorities made microfilms of all his papers.

Kosanovich communicated with the Bureau on March 29, 1950, and under date of April 3, 1950, in response to his request for the microfilms of the papers of Tesla, who was a relative of Kosanovich, we advised Kosanovich that this Bureau had never been in possession of Tesla's papers.

[redacted] (b)(7)(C) (b)(7)(D)

Senator [redacted] furnished the Bureau five communications received from a [redacted] which pertained primarily to Abraham Spanel. This individual mentioned the FBI at length in these communications, pointing out that Mr. Foxworth had been called in on the Tesla case but was killed shortly thereafter. He further stated that he was associated with Fitzgerald and as such came in touch with Tesla. He stated the FBI investigated this matter but their hands were tied, that there was nothing the FBI could do as they had been stopped from a higher level, that [redacted] the FBI Agent he dealt with, resigned and requested never to discuss the matter with him again, that he had a wife and family to consider and that the last hope was Congress. These communications were furnished to the Department on September 19, 1950. (b) (7) (C)

[redacted] (b)(7)(C)

[redacted] (b)(7)(C)

We did have an Agent, [redacted] who entered on duty [redacted] resigned [redacted] The file does not indicate that we have ever interviewed [redacted] on the basis of [redacted] allegations.

I think we should see what specifics [redacted] wants. I think we can tell him on the Tesla papers that when they were reported to us, the Department stated that the Alien Property Custodian was going to seize the papers and that we learned Spanel had called the War Department about the papers falling into the wrong hands. [redacted] (b)(7)(C)

Right. H.

I agree. H.

Why wasn't he interviewed?

H. 3 -

255

STANDARD FORM NO. 64

Office Memorandum • UNITED STATES GOVERNMENT

TO : D. M. Ladd

FROM : E. G. Fitch

SUBJECT: [redacted] (b)(7)(C)

INTERNAL SECURITY - R

DATE: August 30, 1946

Mr. Tolson
Mr. E. A. Tamm
Mr. Clegg
Mr. Coffey
Mr. Glavin
Mr. Ladd
Mr. Nichols
Mr. Rosen
Mr. Tracy
Mr. Carson
Mr. Egan
Mr. Gurnea
Mr. Hendon
Mr. Pennington
Mr. Quinn Tamm
Mrs. Room
Mr. Nease
Miss Beach
Miss [illegible]

Mr. Lyon of the State Department informed Mr. Roach that he obtained a note from Colonel Grombach, Special Intelligence, War Department concerning the above mentioned individual. Mr. Lyon was of the opinion that the information supplied by Colonel Grombach may be of interest to the Bureau.

The information as obtained from Colonel Grombach by Mr. Lyon is quoted as follows:

NR [redacted] (pronounce: [redacted] and according to common saying his mistress, arrived apparently together with or shortly after [redacted] It is supposed [redacted] Nicolas Tesla the well known scientist, residing in Cleveland, Oh., (probably American citizen) [redacted]

see [redacted] (b)(7)(C)

(b)(7)(C)

RECOMMENDATION

It is suggested this memorandum be referred to the Internal Security Section for its information.

(b)(7)(C)

[redacted]

(b)(7)(C)

RECORDED & INDEXED 206

SE 26

100-348245-1

F R I

JAN 14 1947

EX-16

53 JAN 23 1947

(b)(7)(C)

5-[redacted]

256

FD-72
(1-10-49)

FEDERAL BUREAU OF INVESTIGATION

FORM NO. 1
THIS CASE ORIGINATED AT WASHINGTON FIELD

SECURITY INFORMATION - CONFIDENTIAL

REPORT MADE AT	DATE WHEN MADE	PERIOD FOR WHICH MADE	REPORT MADE BY
WASHINGTON, D. C.	JUN 1 1952	5/9,10,13,16,26/52	[redacted] SA

TITLE		CHARACTER OF CASE
[redacted] (b)(7)(C)	FOI/PA # 291860 APPEAL # CIVIL ACTION # REQUEST # 12,356	ESPIONAGE - R (b)(1)(c)

SYNOPSIS OF FACTS: DATE 2-16-89 [illegible] 6cm SI is [redacted] (b)(1)

2-16-89
Classified by SP1AAC4pn
Declassify on: OADR
291860

ALL INFORMATION CONTAIN
HEREIN IS UNCLASSIFIED
EXCEPT WHERE SHOWN
OTHERWISE

ICC by R/S as collected by Special to SIS

State OJH 7-11-52.

[redacted] (b)(1)(c)

Subject in interview and signed statement says [redacted]

(b)(1)(c)
(b)(7)(D)

Accompanied [illegible] by copy by [illegible] to AMEMB Nicosia 7-17-52 memo

photocopy

AGENCY OSI DIST OFF 4
REG. REC'D. 11-13-52
REPT. FORW. 12-1-52
BY [redacted]

DETAILS: AT WASHINGTON, D. C.: Re: [redacted] (b)(3)(A) (b)(1)(c) (b)(1)(s)

APPROVED AND FORWARDED:	SPECIAL AGENT IN CHARGE	DO NOT WRITE IN THESE SPACES
		100-356557-99 RECORDED - 19
		INDEXED 19
		JUN 26 1952 10 (b)(7)(c) SECRET

COPIES OF THIS REPORT
(6) - Bureau (100-356557)
1 - San Francisco (100-29336)(Info)
1 - Los Angeles (65-5203)(Info)
1 - New York (65-14842)(Info)
3 - Washington Field (100-19816)
E 49

E 9 AUG 1 1952

PROPERTY OF FBI - This confidential report and its con[illegible] you by the FBI and are not to be distributed outside of agency to w[illegible]

257

SECRET

[redacted]

(b)(7)(C)
(b)(7)(D)

INTERVIEW OF THE SUBJECT

(b)(7)(D) [redacted] was interviewed at the Washington Field Office by SA [redacted] and the reporting Agent, on May 9, 10, and 13, 1952, and by [redacted] and the reporting Agent, on May 26, 1952. (b)(7)(C)

History Prior to Entering United States

(b)(7)(D)

[redacted]

(b)(7)(C)

SECRET

258

[redacted]

Acquaintanceship with Officials in the Yugoslav Government

[redacted] admitted at this time he was interested in Yugoslav matters, Yugoslav progress in engineering, and their advances in equipment. He said he was also desirous of making the acquaintance of NIKOLA TESLA, who was an outstanding Yugoslav scientist and one of the founders of Westinghouse.

[redacted] (b)(2)(C)(b)(7)(D)

[redacted] He said KOSANOVIC was not a great

[redacted]

SECRET

administrator, but he has considerable respect for him in many ways. He believes that KOSANOVIC emphasized to the Yugoslav government that he (KOSANOVIC), would be especially effective as Ambassador because he was a nephew of TESLA (mentioned above) and a friend of Mayor LA GUARDIA, and other influential persons in this country.

[redacted]

(b)(7)(D)

[redacted]

SECRET

260

XXXXXX
XXXXXX
XXXXXX

FEDERAL BUREAU OF INVESTIGATION
FOIPA DELETED PAGE INFORMATION SHEET

2 Page(s) withheld entirely at this location in the file. One or more of the following statements, where indicated, explain this deletion.

☒ Deletions were made pursuant to the exemptions indicated below with no segregable material available for release to you.

Section 552		Section 552a
☒ (b)(1)	☐ (b)(7)(A)	☐ (d)(5)
☐ (b)(2)	☐ (b)(7)(B)	☐ (j)(2)
☐ (b)(3)	☐ (b)(7)(C)	☐ (k)(1)
_____	☐ (b)(7)(D)	☐ (k)(2)
_____	☐ (b)(7)(E)	☐ (k)(3)
_____	☐ (b)(7)(F)	☐ (k)(4)
☐ (b)(4)	☐ (b)(8)	☐ (k)(5)
☐ (b)(5)	☐ (b)(9)	☐ (k)(6)
☐ (b)(6)		☐ (k)(7)

☐ Information pertained only to a third party with no reference to you or the subject of your request.

☐ Information pertained only to a third party. Your name is listed in the title only.

☐ Documents originated with another Government agency(ies). These documents were referred to that agency(ies) for review and direct response to you.

_____ Pages contain information furnished by another Government agency(ies). You will be advised by the FBI as to the releasability of this information following our consultation with the other agency(ies).

_____ Page(s) withheld for the following reason(s): _____

_____

☐ For your information: _____

_____

☐ The following number is to be used for reference regarding these pages:

_____

XXXXXX
XXXXXX
XXXXXX

XXXXXXXXXXXXXXXXXXXXXX
X DELETED PAGE(S) X
X NO DUPLICATION FEE X
X FOR THIS PAGE X
XXXXXXXXXXXXXXXXXXXXXX

FBI/DOJ

Report Form
FD-263 (5-22-55)

FEDERAL BUREAU OF INVESTIGATION

Reporting Office	Office of Origin	Date	Investigative Period
WASHINGTON FIELD	BUREAU	3/28/60	2/18-3/15/60

TITLE OF CASE

[redacted] (b)(7)(C)

Applicant, Pan American Union,
Washington, D. C.

Report made by: [redacted] (b)(7)(C)

Typed by: mjr

CHARACTER OF CASE

LOYALTY OF EMPLOYEES OF THE UNITED NATIONS AND OTHER PUBLIC INTERNATIO ORGANIZATIONS

Synopsis

REFERENCE

Bulet dated 2/15/60;
Bu airtels dated 2/25 and 3/10/60;
Seattle airtel dated 2/26/60;
Baltimore airtels dated 2/27 and 3/4/60;
Norfolk airtel dated 3/1/60;
San Francisco airtel dated 3/3/60;
New York airtels dated 2/26, 3/3,4,10/60;
Chicago airtel dated 3/5/60;
Springfield airtel dated 3/8/60;
New Haven airtel dated 3/9/60.

DO TO: 5-3-1
REQ. REC'D 3/1
MAR 14 1960
ANS. [redacted]
BY:

(b)(7)(C)

- P -

2-21-89 SP/AGGUM

291860

Approved

Special Agent In Charge

Copies made:

6 - Bureau (138-4457) (Enc 6)

1 - Washington Field (138-4085)

Do not write in spaces below

138-4457-83

MAY 24 1960

[redacted]

(b)(7)(C)

cc CSC

[redacted]

Property of FBI - This report is loaned to you by the FBI, and neither it nor its contents are to be distributed outside the agency to which loaned

☆ U. S. GOVERNMENT PRINTING OFFICE: 1955 O—344750

262

204 (Rev. 3-3-59)

CONFIDENTIAL

UNITED STATES DEPARTMENT OF JUSTICE
FEDERAL BUREAU OF INVESTIGATION

SECRET

Copy to:

Report of: [redacted] Office: Washington, D. C.
Date:

Field Office File No.: 138-4085 Bureau File No.: 138-4457

(b)
(7)
(c)

Title: [redacted]
Applicant, Pan American Union,
Washington, D. C.

2-21-89
Classified by SPIA [illegible]
Declassify [illegible]
291860

Character: LOYALTY OF EMPLOYEES OF THE UNITED NATIONS AND OTHER PUBLIC INTERNATIONAL ORGANIZATIONS

Synopsis:

[redacted] has been interviewed on various occasions [redacted]

(b)
(1)
(b)
(7)
(c)
(b)
(7)
(D)

- P -

CONFIDENTIAL

SECRET

This document contains neither recommendations nor conclusions of the FBI. It is the property of the FBI and is loaned to your agency; it and its contents are not to be distributed outside your agency.

263

[redacted] (c)

[redacted] (b) (1)

(c)

INTERVIEWS WITH [redacted]

On June 7, 1947, [redacted] was interviewed by SAs [redacted] and [redacted] of the Chicago Office.

[redacted] (b) (7) (D)

[redacted] (b) (7) (C)

(b)(7)(C) [redacted]

[redacted] admitted at this time he was interested in Yugoslav matters, Yugoslav progress in engineering, and their advances in equipment. He said he was also desirous of making the acquaintance of NIKOLA TESLA, who was an outstanding Yugoslav scientist and one of the founders of Westinghouse.

[redacted] He said KOSANOVIC was not a great administrator, but he has considerable respect for him in many ways. He believes that KOSANOVIC emphasized to the Yugoslav government that he (KOSANOVIC), would be especially effective as Ambassador because he was a newphew of TESLA (mentioned above) and a friend of Mayor LA GUARDIA, and other influential persons in this country.

[redacted]

(b)(7)(C)

(b)(7)(D)

PMG construction manual

Hugh Piggott - Scoraig Wind Electric - February 2001 comments welcome at hugh.piggott@enterprise.net

Contents page

1. Introduction 2
2. List of materials and tools 6
3. Jigs and Moulds 8
4. Stator construction 23
5. Rotor construction 29
6. Assembly 34
7. Testing and connecting 39
8. Additional information 47

This manual was commissioned by
Dr Smail Khennas
Senior Energy Specialist
Intermediate Technology
The Schumacher Centre
for Technology and Development
Bourton Hall
Bourton on Dunsmore
Warwickshire
Tel +44-1788-661 100
Fax: +44 -1788 44-(0)1788-661 101
Email: smailk@itdg.org.uk
Url: http://www.oneworld.org/itdg
Url:http://www.itdg.org.pe
Company Reg No 871954, England
Charity No 247257

with funding from the UK government DFID

On site assembly in Peru

1. Introduction

This manual describes how to build a 'permanent magnet generator' (PMG). We can also call it an 'alternator', because it generates alternating current (AC). It will not generate 'mains voltage' or 'utility power' AC. It generates low voltage, 'three phase' AC, and then changes it into 'direct current' (DC) for charging a 12 volt battery.

What this PMG is made of

1. EXPLODED PMG

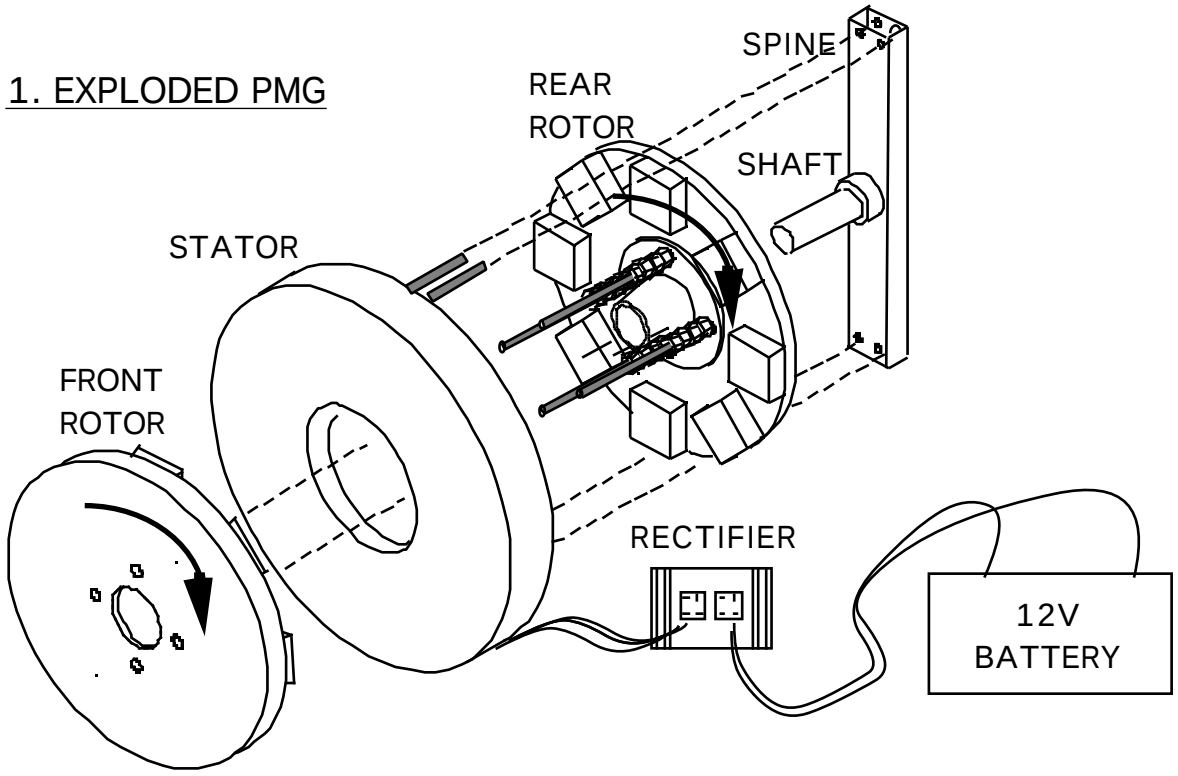

The PMG (see diagram 1) consists of:-

- A steel spine and shaft.
- A stator containing coils of wire
- Two magnet rotors
- A rectifier

The stator contains six coils of copper wire, cast in fibreglass resin. This stator casting is mounted onto the spine; it does not move. Wires from the coils take electricity to the rectifier, which changes the AC to DC for charging the battery. The rectifier is mounted on an aluminium 'heatsink' to keep it cool.

The magnet rotors are mounted on bearings, which turn on the shaft. The rear rotor is behind the stator, and enclosed within it. The front one is on the outside, fixed to the rear one by long studs which pass through a hole in the stator. The wind turbine rotor blades will be mounted on the same studs. They will turn the magnet rotors, and move the magnets past the coils. Magnetic flux passes from one rotor to the other through the stator. This moving magnetic flux is what produces the electric power.

Building the PMG

This manual describes how to build the PMG. Read right through it before starting.

Section 2. is a list of materials and tools for the job.

Section 3 explains how to build the special tools (called jigs) and the moulds which are needed. You can build more than one PMG with them. There are many possible ways to make these jigs and moulds, but there is only room in this manual to describe one way to do it.

Section 4 is about the stator. It describes how to wind the coils of enamelled copper wire, and cast them in resin, using the jigs and moulds.

Section 5 shows how to build the magnet rotors, using magnet blocks and steel disks, set in another resin casting.

Section 6 shows how to assemble the parts into a whole PMG. It explains how to build the mechanical parts, how to balance the rotors, and what is required to connect the wiring from the stator.

Section 7 is about testing the PMG. It contains procedures for checking that it is correctly balanced and ready to use. It describes the options for connecting up the electrical output. It also explains how to connect the PMG to the battery.

Section 8 contains additional information about the use of polyester resins, and about using the PMG for hydro power.

What this PMG can do

This PMG is made for small wind generators (see diagram 2). To build a complete wind generator, you also need

- a tower : perhaps a steel pipe, supported with guy ropes,
- a 'yaw head' swivelling on the tower top,
- a tail, to keep it facing towards the wind,
- a set of blades, to turn it.

The spine of the PMG bolts on to the yaw head. The blade assembly fits on to the front of the PMG. The yaw head and tail need to be so constructed that the wind generator will turn from strong winds, to protect itself. (This manual does not describe the blades, tower, or yaw head.)

On test at Scoraig

2. WIND TURBINE

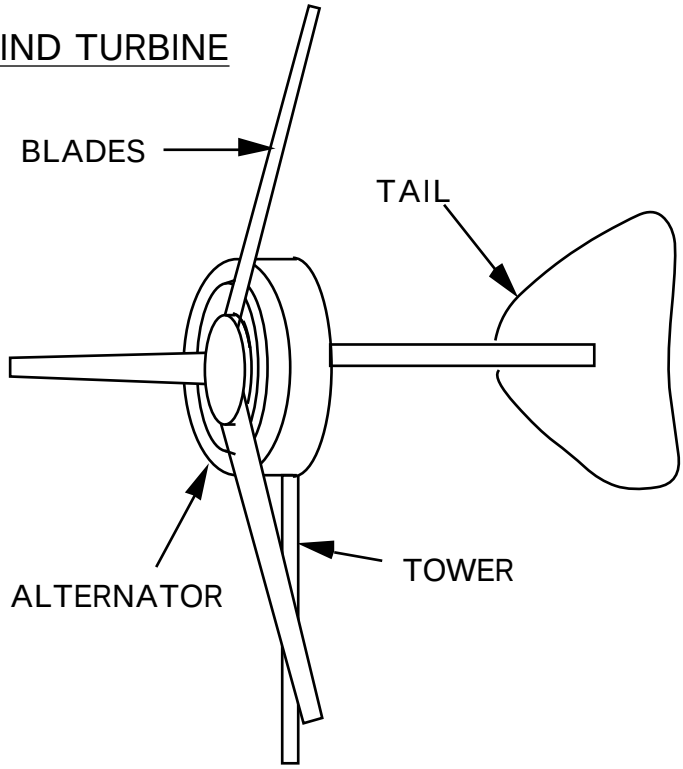

The PMG works at low rotational speed. The chart shows the power output of the PMG, charging a 12 volt battery. At 420 rpm it generates 180 watts, which is 15 amps at 12 volts (15A x 12V = 180W).

At higher speed, the PMG can generate more power. But high currents cause the coils to heat up, and so the efficiency gets worse as the output current gets higher. For higher speed it is better to change the stator coils, either by using different size wire, or by changing the way they are connected.

If the PMG is always used at higher speeds, it is better to use thicker wire, which can carry more current without getting so hot. Using thicker wire means there are fewer turns on the coils, which means that the PMG would not work at low speed.

To use the same PMG for both low and high speeds, it is possible to change the connections. There are two ways to connect the stator wires to the rectifier. They can be connected 'star' or 'delta'. See Section 7 for a detailed description of the star and delta connections.

See diagram 3 for the graph of power vs. speed. Star begins to work at low speed (170 rpm). Delta gives more power, but only at higher speed. Star is good in very low windspeeds, and delta is better in higher winds.

A bigger version of this PMG would be able to give higher power at lower speed.

3.GRAPH OF POWER VS. SPEED

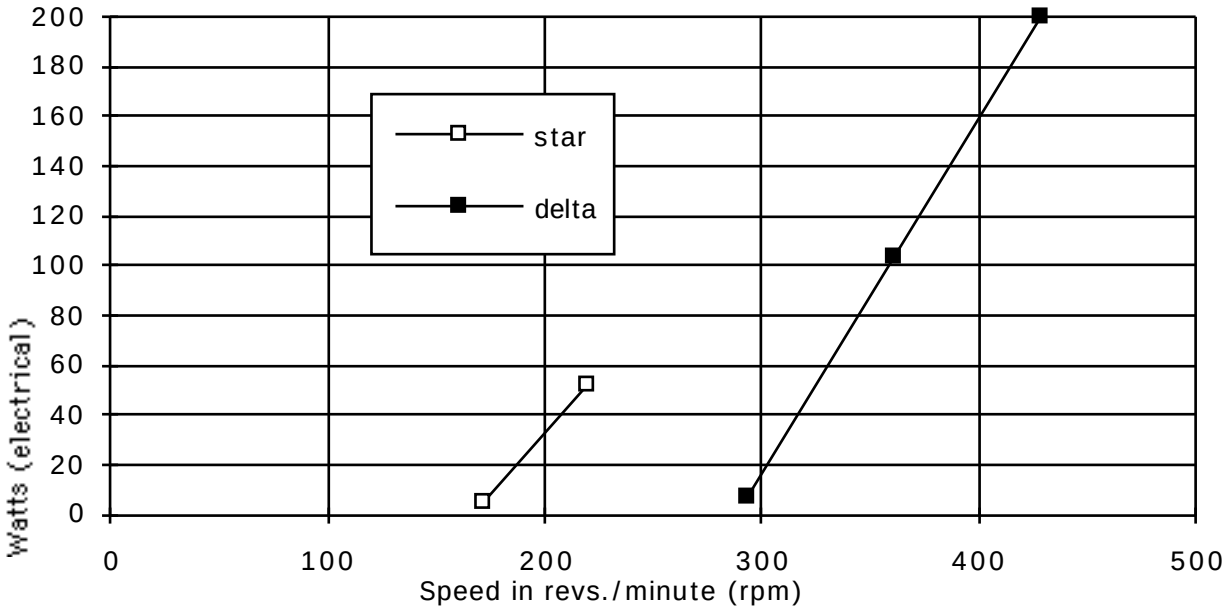

Caution

Take care when building and assembling the PMG so that the magnets cannot come loose. This can happen under extreme circumstances. Loose magnets rubbing on the stator can then destroy the PMG.

- Follow all the instructions for casting the magnet rotors - do not simply glue the magnets to the steel disks.
- Do not hit the magnet rotors with hammers during assembly.
- Take care that there is at least 1mm gap clearance between the magnets and the stator, on both sides. (For heavy duty, or high speed, use a larger gap.)
- Do not run the PMG at speeds faster than 800 rpm on a wind turbine. (When the wind turbine yaws, large gyroscopic forces will flex the shaft, and the magnets may touch.)
- Do not mount the rotor blade assembly directly onto the front magnet rotor disk, at any point away from the studs. Mount it only onto the studs and nuts themselves, which come through the disk.
- When mounting the PMG on the wind turbine yaw mount, keep the box section 'spine' of the PMG vertically upright, and not horizontally cross-wise.

2. List of Materials and tools

Materials for PMGs	No. per PMG	size	Total wt. grams
FIBREGLASS SUPPLIES			
Polyester resin (premixed with accelerator)			2700
Catalyst (peroxide)			50
Talcum filler powder			1200
Fibreglass mat (1oz/sqfoot)		1 sq metre	300
Colouring pigment resin (if required)			50
plasticene or putty			
STAINLESS STEEL			
stainless steel wire		2mm x10metres	200
MAGNETS			
Grade 3 ferrite magnet blocks (premagnetised)	16	20 x 50 x 50mm	4000
ELECTRICAL			
Enamelled winding wire		14AWG or 1.7mm (or 17AWG - see p.44)	3000
flexible wire (about 14AWG size)		same size x 6 metres	
solder and sleeving for connections			
1/2 inch masking tape			
Bridge rectifiers	2	25A 200V single phase	
Heatsink for rectifiers			250
STEEL			
Box section tube ('RHS') for spine	1	380 x 50 x25 x 4mm	1100
Magnet disk (or octagonal) plates	2	6mm x 305mm Outer Diameter	6000
10mm threaded rod ('studding')		1000mm	500
10mm nuts	32		300
10mm washers	16		
8mm threaded rod		400mm	125
8mm nuts	8		50
5mm nuts and bolts for rectifiers	2	5mm x 20mm	
Shaft		25mm x 150mm	500
MECHANICAL			
Bearing hub to fit shaft, as described in Section 6	1		1250

Spine, shaft, hub and magnet rotor

Materials for moulds and jigs

Composite floorboards (other ideas are possible) and wood glue
Sand paper, wax polish
(Polyurethane varnish, and PVA release agent, if available.)
Paint brushes, and thinners to clean them
13mm Plywood for jigs and formers and stator mould centre
Steel rod, or pipe, for coil winding machine
Small pieces of steel plate or thick sheet metal

Bolts (with nuts and washers)	diameter	length	For
2 with butterfly nuts	6mm	60mm	coil winder
4	10mm	25mm	balancing with jig
1	12mm	150mm	stator mould

Tools

Safety goggles, face mask, gloves, etc. as required

Workbench with vice
Welder
Angle grinder
Hacksaw, hammer, punch, chisel
Compasses, tape measure, angle gauge.
Spanners: 8, 10, 13, 17, 19mm : two of each.
Tap wrench and M10 taps for outer holes in magnet rotors.
Brass wire to gauge the heights of magnets

Pillar Drill Press
Drill bits 6,8,10,12mm
Holesaws 25mm, 65mm

Wood lathe, or a substitute as in Section 3
Chisel for wood lathe
Jigsaw to cut wood

Scales to weigh resin. Dispenser for catalyst, plastic buckets, scissors.

Soldering iron, resin-cored solder, wire cutters, sharp knife.

3. Jigs and Moulds

This section describes how to make the jigs and moulds for building a PMG. Once you have made them, they can be used again, to build more PMGs.

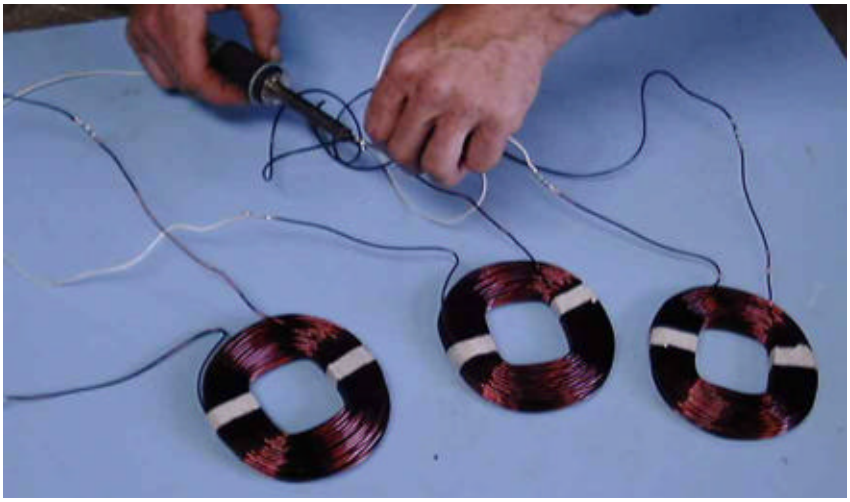

Some coils for the stator

Coil winding machine

The PMG stator contains six coils of copper wire (see diagram 4).

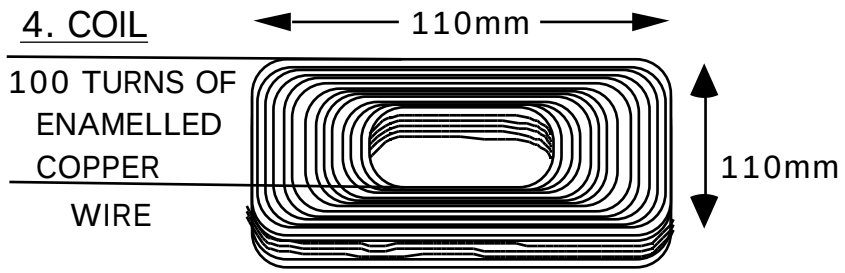

The coils will be wound on a plywood coil-former.
The former is mounted on the end of a crankshaft, between cheek pieces.

- Make a crankshaft, turned by a handle (see diagram 5).

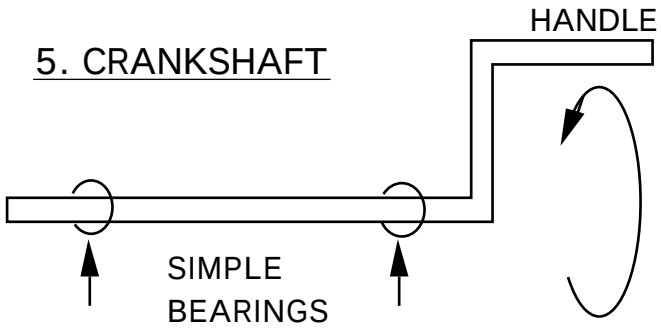

- Cut a small flat steel plate 60 x 30 x 6 mm (suggested sizes) and fix it securely or weld it to the end of the crankshaft as shown in diagram 6.
- Drill 2 holes, 6mm diameter and 40mm apart, centred on the shaft.

6. STEEL PLATE

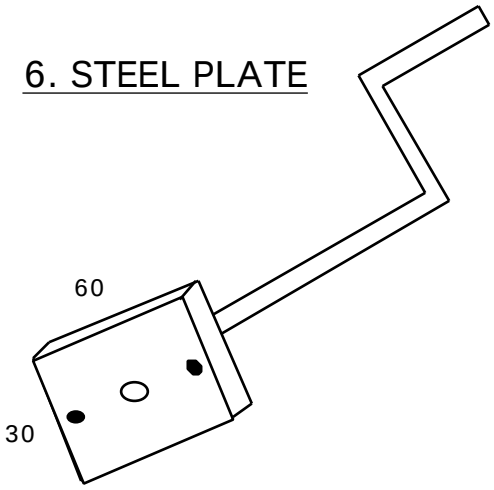

- Cut out 3 pieces of 13mm plywood as in diagram 7.

7. COIL-FORMER AND CHEEK PIECES

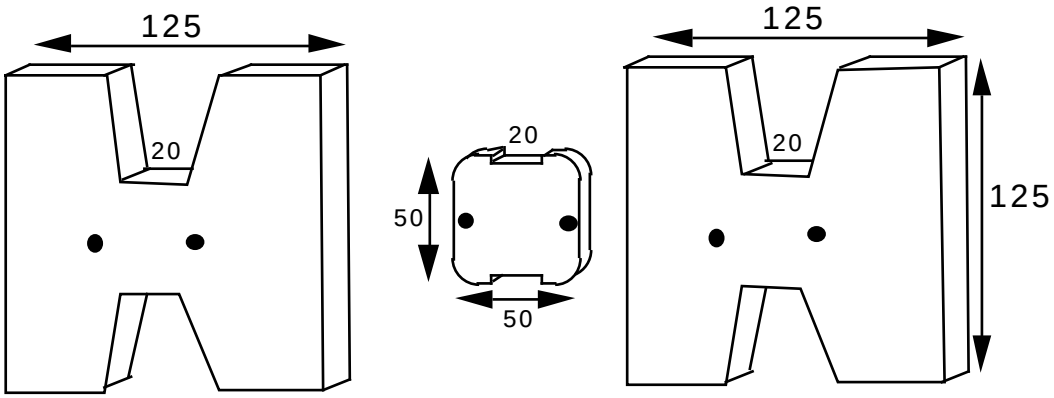

The coil former is 50mm by 50mm by 13 thick. It has rounded corners. The two 'cheek pieces' are 125mm by 125mm. There are 20mm wide notches top and bottom in each. The notches are for putting masking tape under the coil, so that it can be taped up before removing it from the former.

- Stack the pieces with the notches in line (diagram 8), and drill holes for the mounting bolts.

The holes are 6mm diameter and 40mm apart.
Use a drill press to drill the holes exactly square to the plywood.

8. DRILLING THE 2 HOLES

STACK THE THREE PIECES LIKE THIS:-

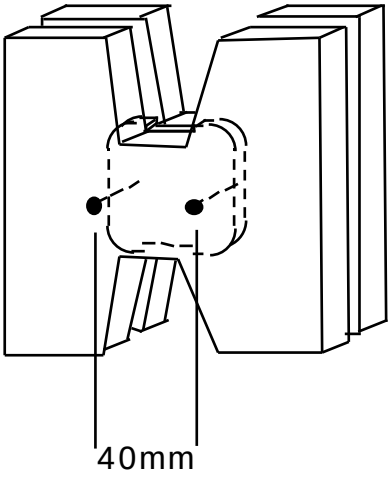

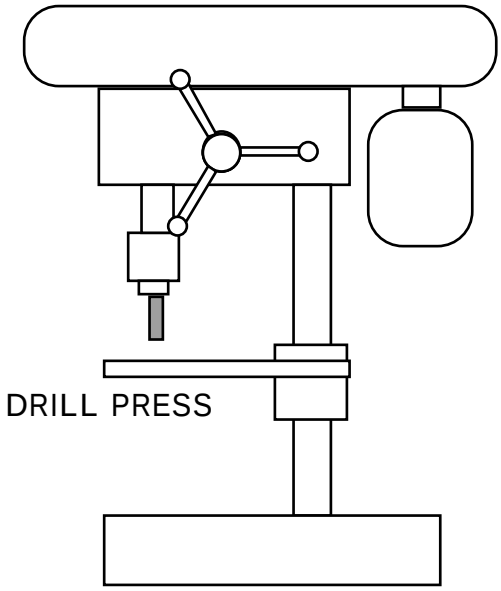

- Pass two bolts through the holes in the flat plate, and bolt on the cheekpieces , with the coil-former between them. Use butterfly nuts if possible. (diagram 9.)

9. FITTING THE COIL FORMER AND CHEEK PIECES

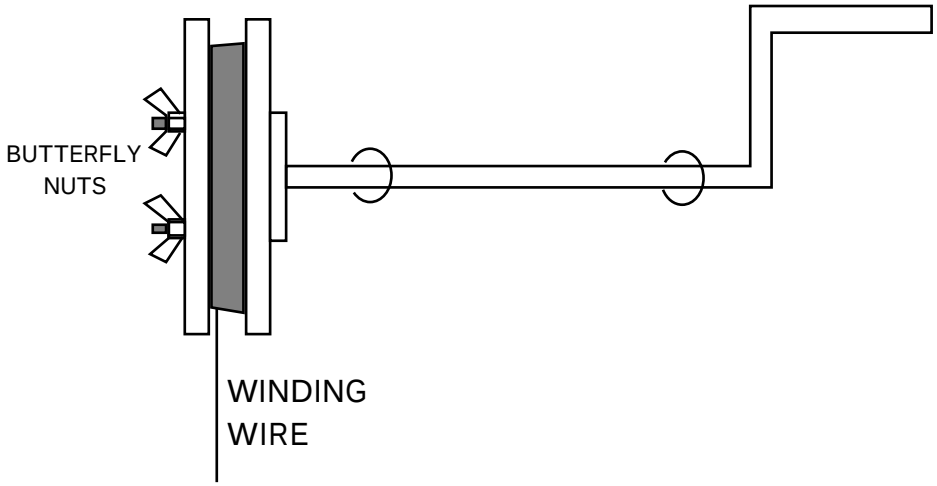

Jigs for the rotors

PCD jig for drilling holes

The magnet rotors are mounted on a bearing hub (see diagram 10). The hub has a flange with holes in it. For example there may be four holes on a 102mm (4 inch) 'pitch circle diameter' (PCD). Or you may have some other arrangement. This will depend on what kind of hub it is. Here we shall say 102mm PCD.

10. THE BEARING HUB PCD

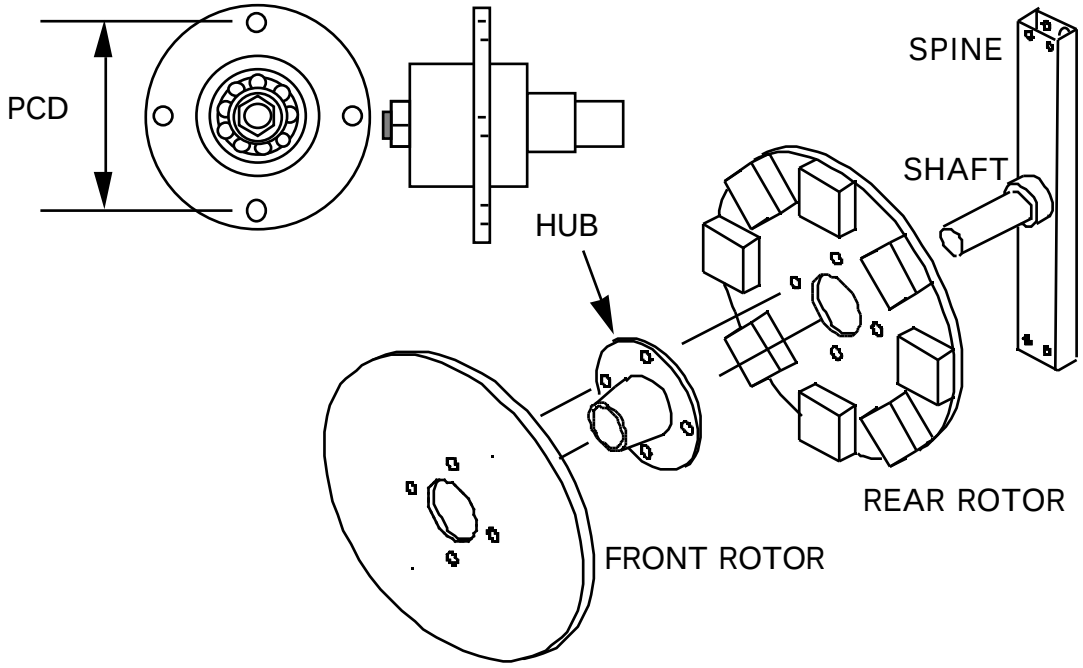

The PCD jig will be used to drill holes in the rotors etc.
It will also be used to balance the rotors.
The holes must be marked and drilled very precisely. (See diagram 11.)

- Cut a square piece of steel plate 125mm by 125mm.
- Draw diagonal lines between the corners and mark the exact centre with a punch.
- Set your compasses at 51mm radius (or to suit whatever PCD). Draw a circle.
- The diameter of the circle is the PCD of the holes in the hub.
- Punch both places where one line meets the circle.
- Set your compasses at 72mm. Mark two points exactly this distance from the first two, on the circle. (If you have a different PCD, this size would not be 72mm. Find the size by trial and error.)
- Drill four holes exactly 72 mm apart on the circle. Use a small drill first and then a larger one.

11. MARKING AND DRILLING THE PCD JIG

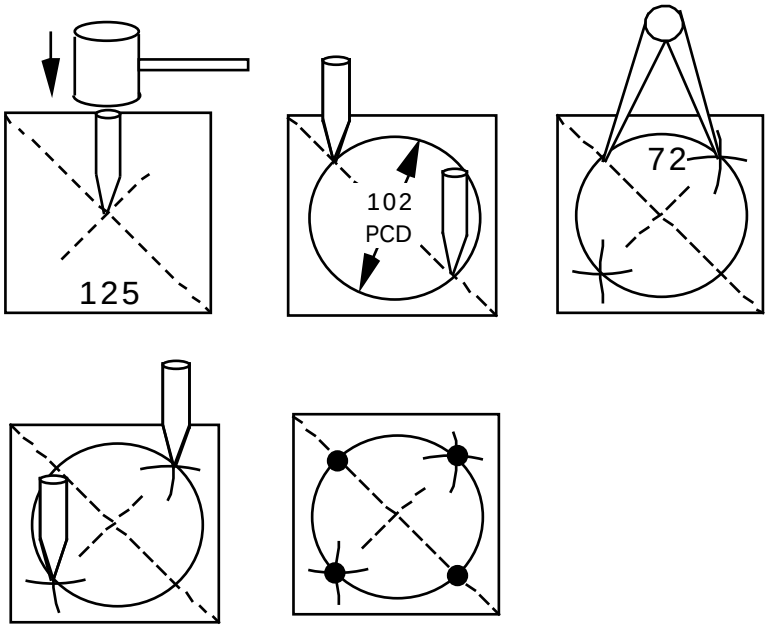

Magnet positioning jig (See diagram 12)

This jig is for putting the magnet blocks into the correct places on the steel disks. Only one jig is needed. Make the jig from 250x250 mm plywood or aluminium sheet (not steel).

12. THE MAGNET POSITIONING JIG

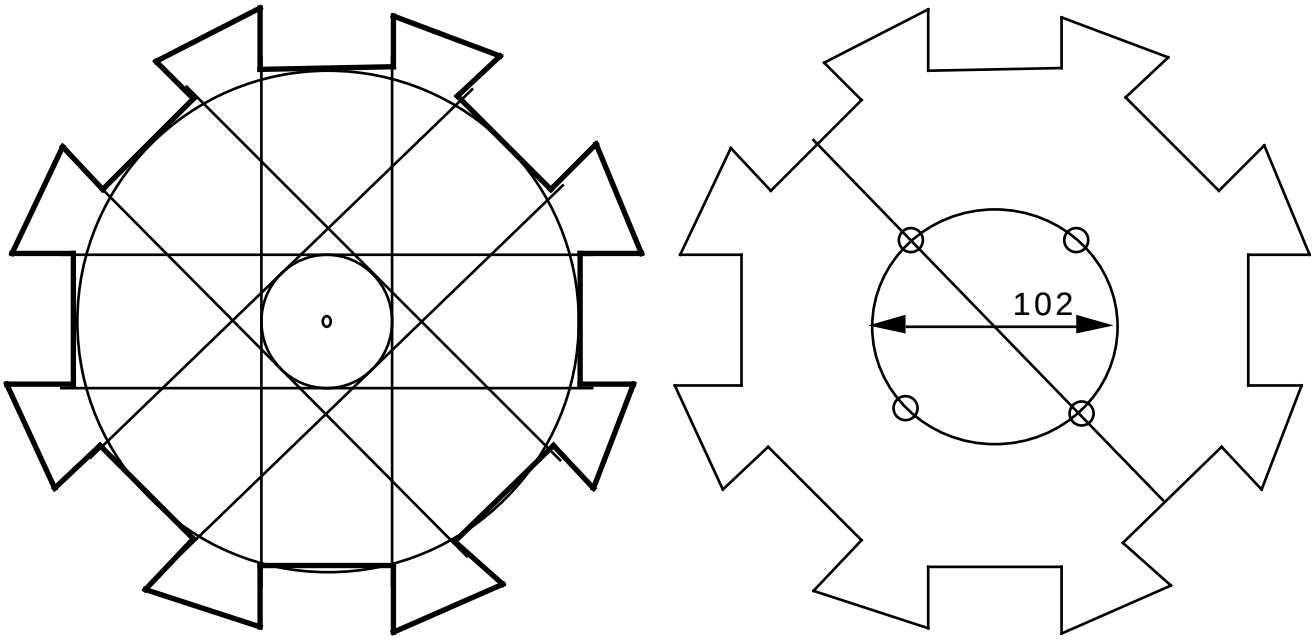

- Mark the centre of the workpiece.
- Draw three circles, with diameters 50mm, 102mm and 200mm, on this centre.
- Draw a pair of parallel straight lines, as tangents to the 50mm circle as shown.

- Draw 3 more pairs of straight lines at 45 and 90 degree angles to the first pair.
- Using these lines, mark the magnet positions, and cut out the jig along the bold lines as shown in the diagram.
- Draw a line connecting two opposite magnet centres.
- Place the PCD jig on top of the 102mm circle, aligned with the magnet centres, and drill four holes to match the four holes in the steel disks.

Making the moulds

Make moulds for the stator and rotor castings. They can be turned from wood or aluminium. Another method is to make plaster or clay plugs on a wheel, like a pot. The shape of the plug would be the shape of the outside of the stator. Then make a fibreglass mould on the plug. The surface of each mould must be perfectly flat.

The moulds need to be strong and smooth. It is not easy to separate the stator casting from the moulds. Hammer blows are usually needed.

It is a good idea to wind one coil (see section 4) before making the stator mould. This coil should fit neatly in the mould.

Here is one way to make the moulds, from composite wooden floorboard sheets, using wood-turning.

Stator Outer mould

- Cut out several disks of flooring sheet (see diagram 13), approximately 500mm diameter.

13. DISKS

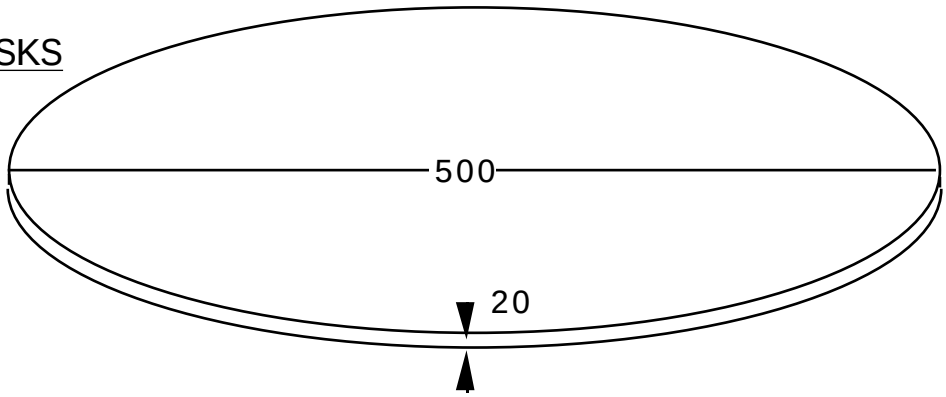

- Take all but one of the disks, and cut circular hole in each, 360mm diameter to form rings (see diagram 14).

14. RINGS

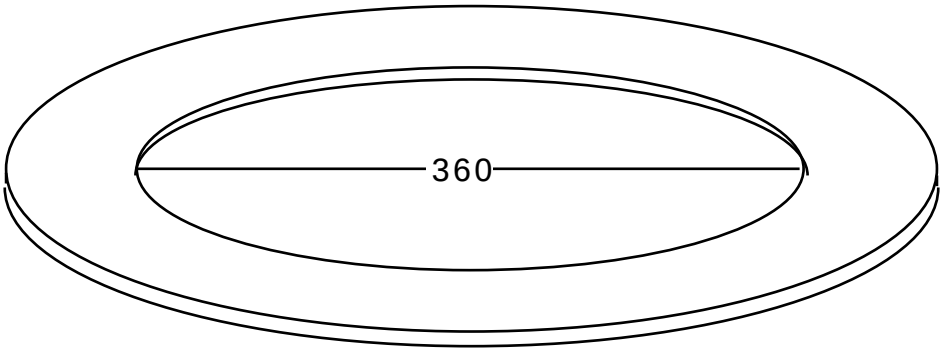

- Draw a circle 360 mm diameter on the remaining disk
- Drill a 12 mm hole at the centre of this disk, to help with centring.
- Glue the rings on top of the remaining disk, to form a stack, with a hole 60mm deep (diagram 15). Use plenty of glue at the insides of the rings.
- Cut out a small disk of 15 mm plywood, 140 mm in diameter, and drill a 12 mm hole at its centre.
- Placing a 12 mm bolt through both holes, glue the small disk into the exact centre of the hollow. Use plenty of glue at the edge of the disk.

15. STACK

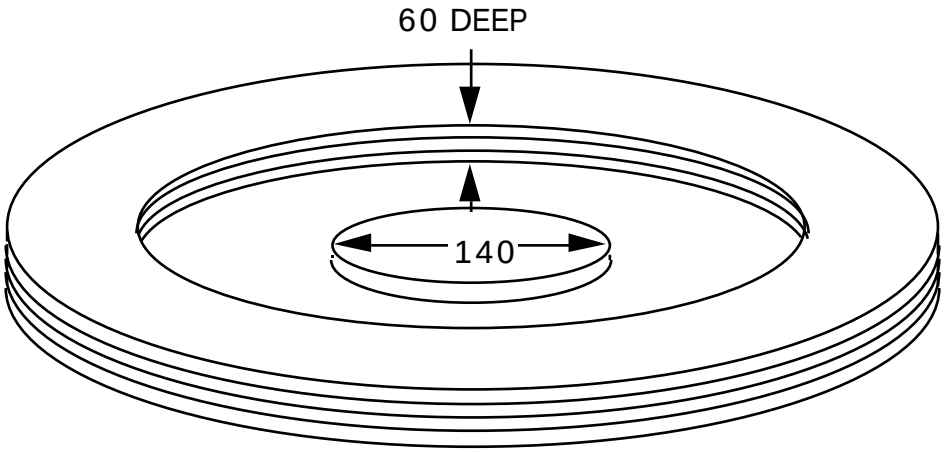

- Mount another piece of wood or board onto a lathe, a motor or the wheel hub of a small vehicle (for example a 3-wheel taxi). This is a the faceplate (see diagram 16).
- Spin the faceplate and use a pencil to make a very small circle at the centre.
- Drill a 12mm hole precisely at this centre. Hold the drill parallel to the shaft.
- Screw the glued stack onto the faceplate, using a 12mm bolt to centre it. Use four woodscrews through the disk and into the faceplate.
- Check that the face of the mould runs true. You can do this by holding a pencil close to it while it spins. Where the pencil makes marks, the face is 'high'. Loosen the screws and insert pieces of paper between the faceplate and the stack, on the opposite side from the pencil marks. Tighten the screws and check again.

16. TURNING A MOULD

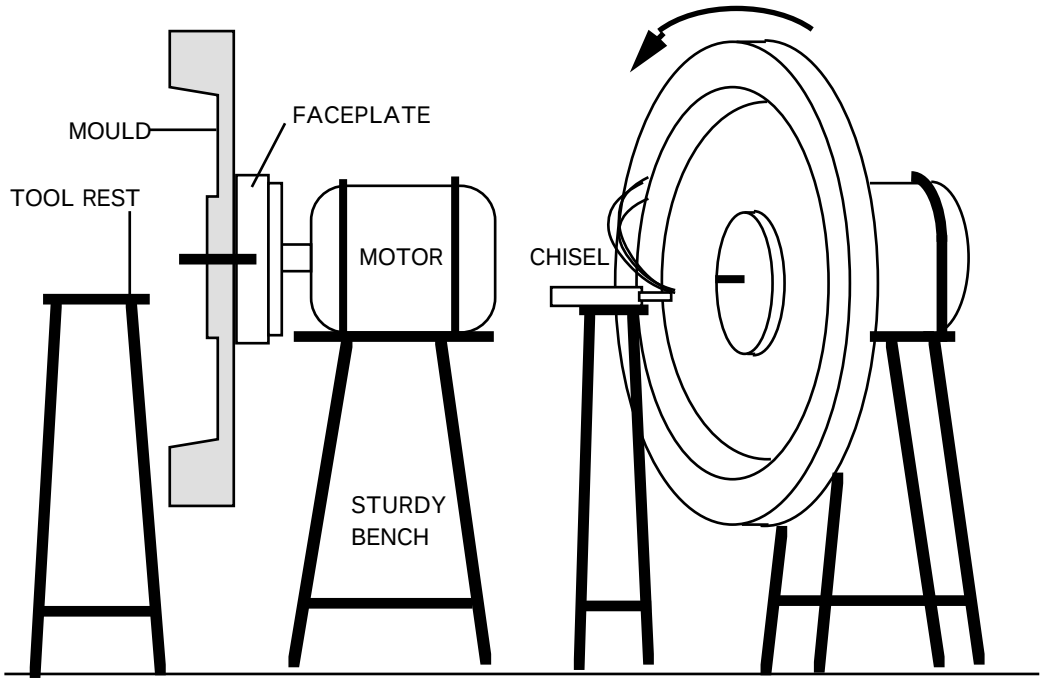

Now it is possible to shape the mould with a chisel. Wear a mask over your mouth to avoid inhaling the dust. Beware of loose clothing, which may become caught in the rotating mould.

Turning a stator mould on an electric motor

- Cut a smooth surface on the inner edges of the stack (diagram 17).
- The surface tapers at about seven degrees.
- The overall diameter at the outer edge is 380mm
- The diameter of the flat face is 360 mm.
- The corner inside is smooth (slight radius) not sharp.

17. THE SHAPE OF THE STATOR MOULD

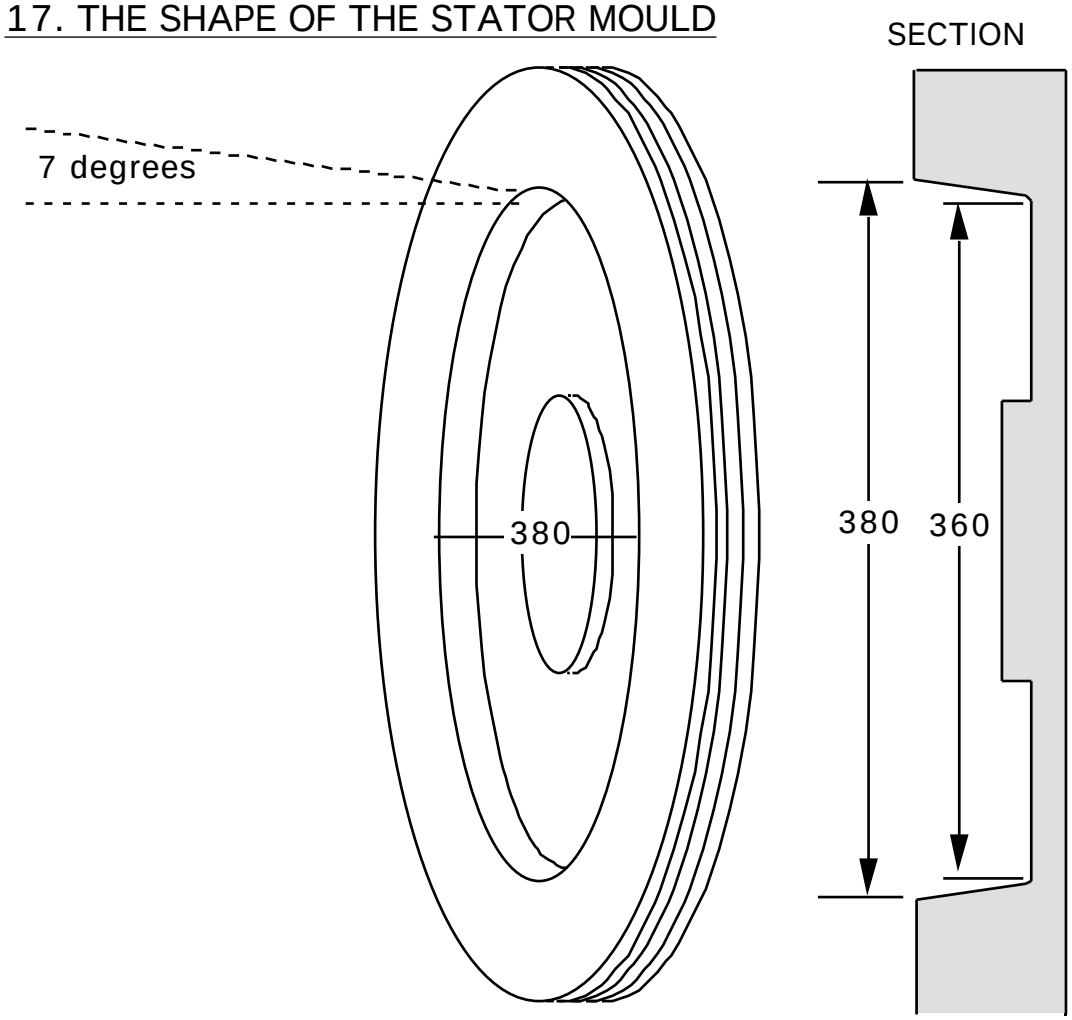

- Turn the inner disk down to 130 mm diameter on the face (see diagram 18), with a taper. The corners are rounded as before.

18. CENTRE DISK

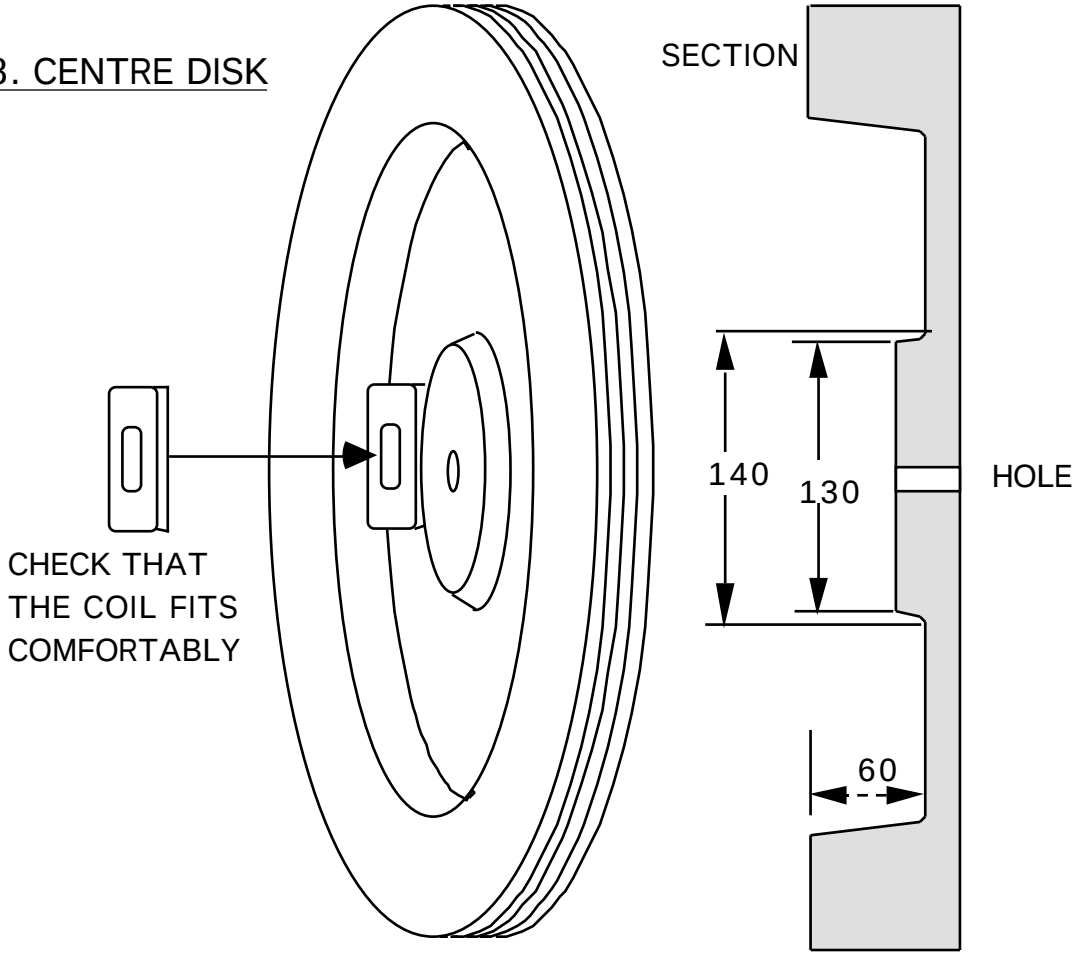

- Place a coil against the face of the mould and check that it fits comfortably - if not, then the hollow must be made a little larger, or the centre disk a little smaller. In the end, the coil's centre must be at 250 mm from the mould centre.
- Remove the mould from the lathe or motor.

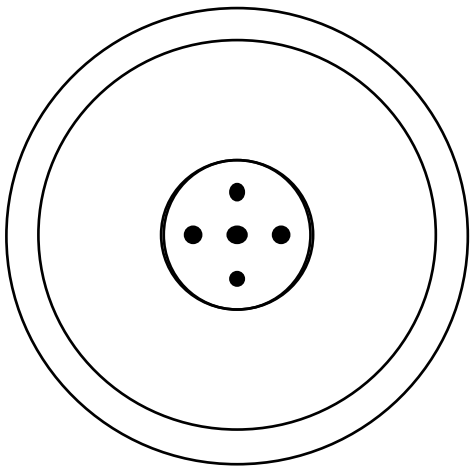

19.HOLES IN THE MOULD

Drill four holes in the central part which are used to separate the two moulds (diagram 19). Screw some small pieces of plywood onto the underside of the mould to make 'feet'.

Stator Inner mould

- Cut disks with diameter 370mm

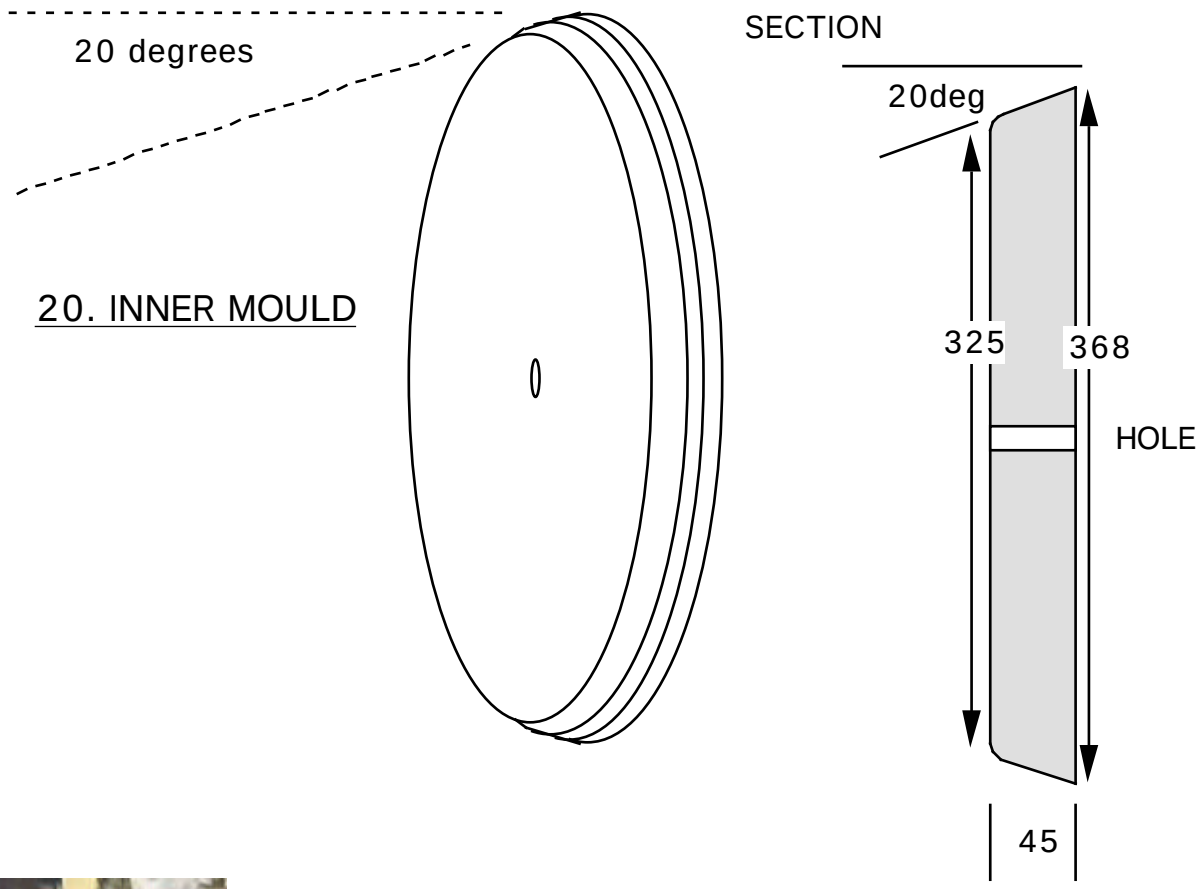

Sawing flat faces
on the inner mould

- Drill a 12mm hole at the centre of each
- Glue them into a stack (diagram 20), using a 12mm bolt to centre them.
- The stack is at least 45 mm thick, better 50 mm.
- Turn a 20 degree taper on the rim, and round off the corner, so that the diameter reduces from 368mm to 325mm.

- Check that the outer mod fits over the inner mould, with a 6mm gap all around the edge. Then remove the inner mould from the faceplate.
- Draw 2 lines on the larger face of the mould, 340mm apart (diagram 21)

- Cut two flat faces, as shown in diagram 21

21. CUTTING FACES ON THE INNER MOULD

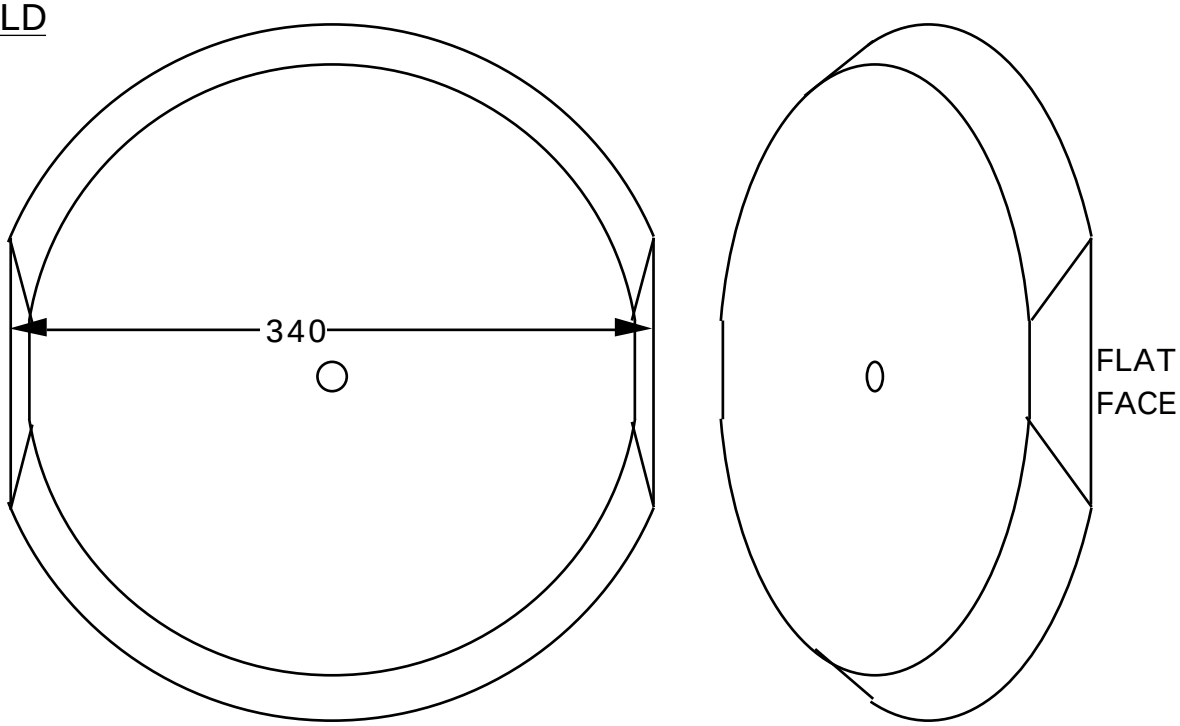

These two faces will create a thicker casting around the mounting studs.

Magnet rotor moulds

The PMG needs two magnet rotors. Only one mould is needed, but production is easier if there are two moulds, so that two rotors can be produced at one time.

The outer mould (diagram 22) is similar to the stator outer mould, but simpler

22. ROTOR MOULD

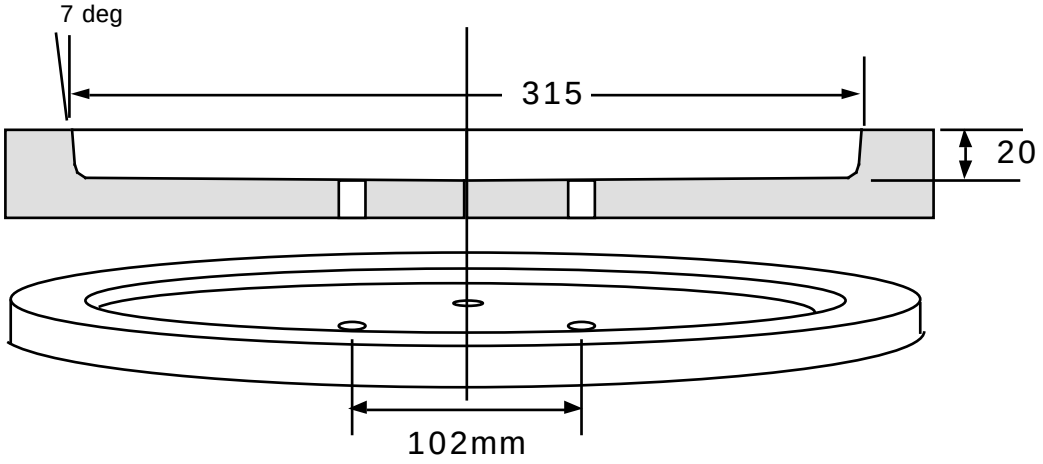

Use the PCD jig to drill four holes to match the holes in the magnet disks.

Each magnet rotor also needs an inner disk mould (diagram 23), with the same pattern of four holes.

23 MAGNET ROTOR INNER DISK

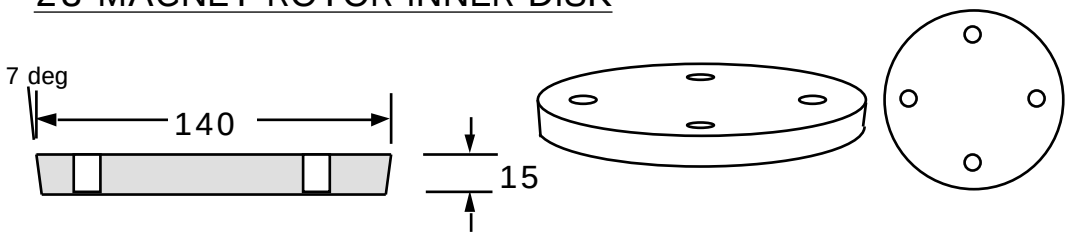

All moulds are sanded down to a very smooth surface, and finished with polyurethane varnish and wax polish. Do not use ordinary paint on the moulds. The heat of the resin process will cause the paint to wrinkle and spoil the appearance of the casting.

Rotor mould being made and used

Jigs for the stator

Stator studs jig (see diagram 24)

The stator needs four 8 mm supporting studs cast into it. These studs need a jig to hold them in place, until the resin is set. This jig is made from wood 380 x 50 x 25mm. It must be made precisely, or the studs will not fit the spine later.

- Make a punch mark at the exact centre of the largest face (see diagram 24).
- Use dividers or compasses to mark arcs at a radius of 178 mm from this mark.
- Punch four marks on these arcs, 30 mm apart and 10mm from the edge.
- Drill through with an 8mm drill (using a smaller size first to be accurate). Use a drill press, to drill the holes truly square.
- Remove some of the underside of the ends of the piece of wood, so as to prevent contact with the fibreglass resin.

24. STATOR STUDS JIG

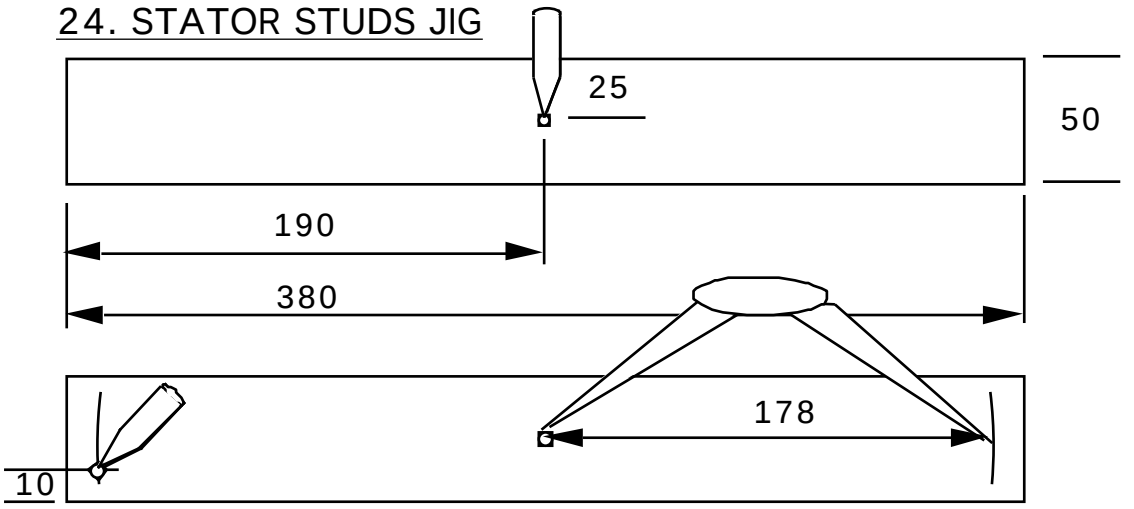

DRILL HOLES WITH A PILLAR DRILL FOR ACCURATE ALIGNMENT

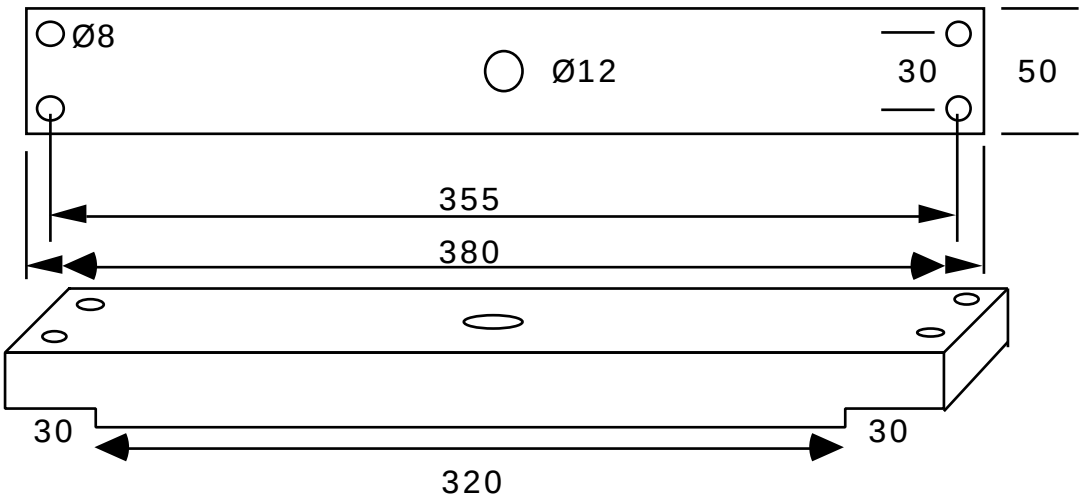

Paper templates (see diagram 25)

Fibreglass 'chopped strand mat' (CSM) is to be used in the stator. Make some paper templates for cutting out the pieces of CSM. Later you can lay the templates on the sheet of CSM, draw around them with a felt pen and then cut the pieces out.

25. PAPER TEMPLATES FOR GLASSFIBRE CSM

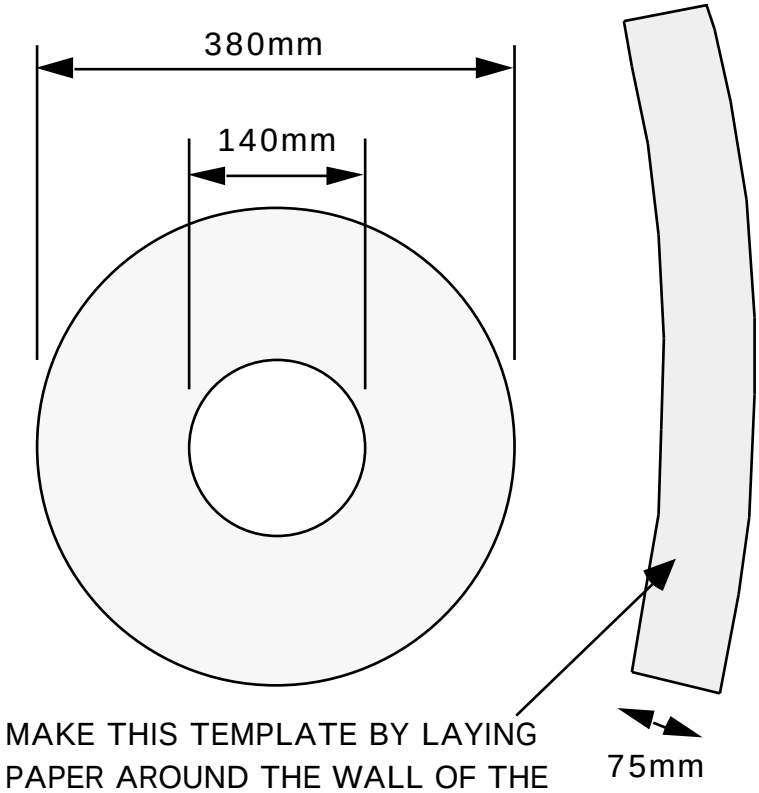

4. Stator construction

This section tells how to make a stator, using the jigs and moulds from section 3. It is a good idea to wind a coil before making the stator moulds, so that the mould can be checked for correct fit.

Winding the coils

- Mount the reel of winding wire on an axle behind you, in line with the coil former. The wire should form an 'S' bend as it winds onto the coil (diagram 26).

26. CORRECT WIRE FEED

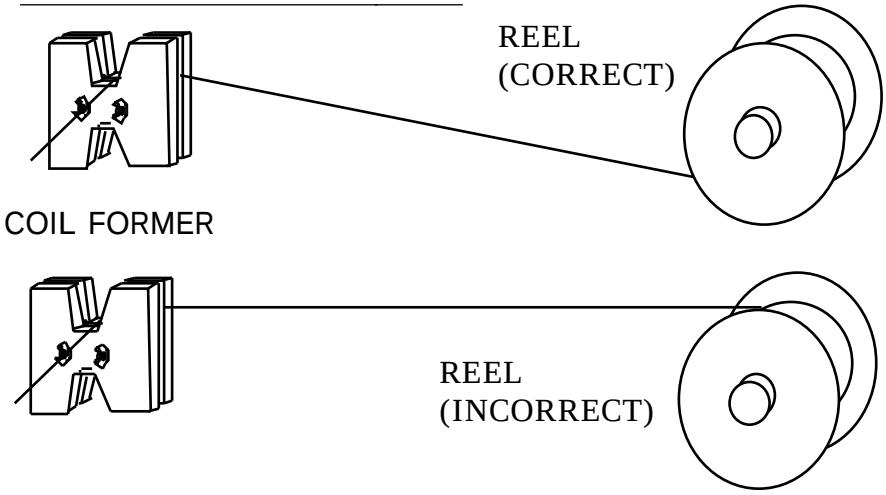

- Bend the tail of the wire 90 degrees, at a point 100mm from the end. Do not handle the bend any other part of the wire; leave it straight. Bent wire does not make a compact coil.
- Place this bend in the notch, so that the tail hangs out.
- Twist the tail loosely around one of the butterfly bolts.
- Grip the wire between the reel and the winder in a piece of rag to keep it tight.
- Wind the handle of the crankshaft.

The first turn lies against the cheek piece on the side where the tail comes out. The other turns lie against each other neatly, without crossing over. Build the coil up in even layers. Count the number of turns carefully. Normally there will be 100 turns.

- When the coil is complete, pass a piece of sticky tape under the coil on both sides and bind it tightly. Do not cut off the winding wire until this is done, or the coil will spring out, and loosen. Cut the tail of wire 100mm away from the coil.
- Remove the coil from the former, and wind five more coils in exactly the same way.
- Place the coils on a table (so that they are all exactly the same way up (diagram 27) Check that the starting tail is on the upper surface, and not hidden under the coil.
- Number the coils 1-6, writing on the masking tape.

27. THE COILS MUST ALL BE THE SAME WAY UP

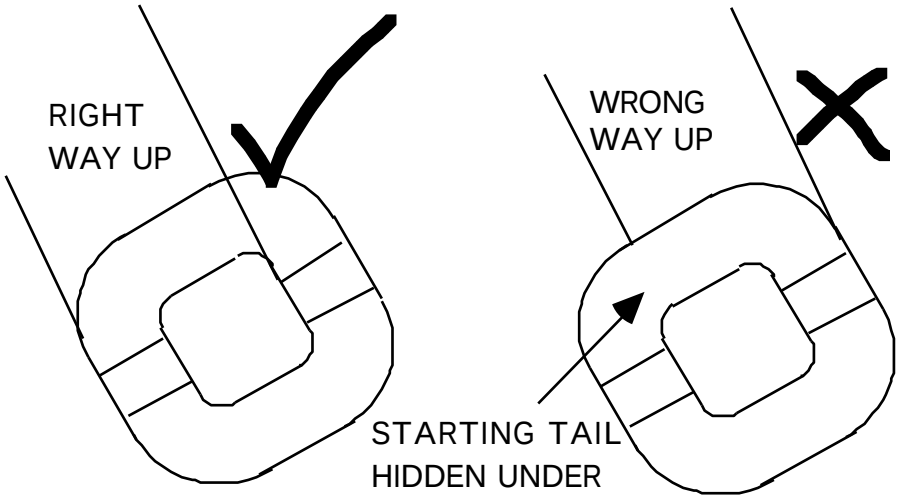

- Scrape the enamel off the last 20mm of each tail of enamelled wire, until it is all bright copper. (A hacksaw blade makes a very good scraper, when the edge has been sharpened with a grinder.)
- Solder on tails of flexible wire (diagram 28).

28. SOLDERING ON TAILS OF FLEX

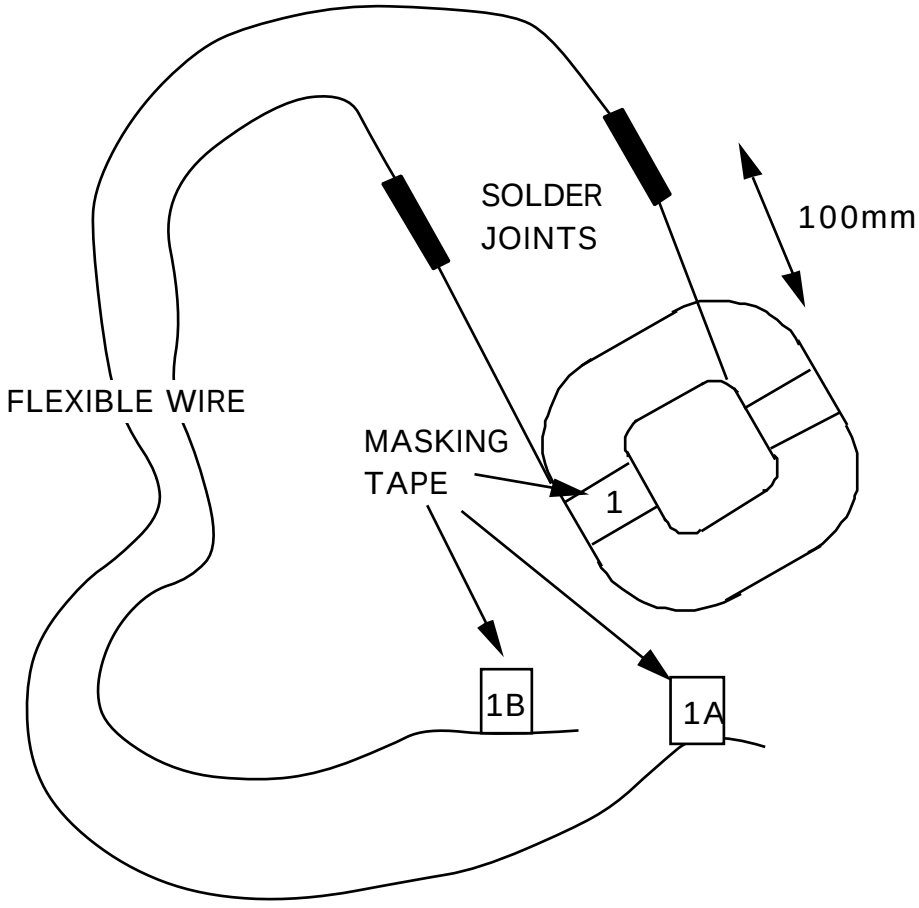

Suggested lengths of flexible tails:

coils 1 and 6 - 800 mm flex
coils 2 and 5 - 600 mm flex
coils 3 and 4 - 400 mm flex

- Cover the soldered joints with sleeving. Leave no bare copper showing.
- Label the tails with the coil number and the letter A or B.

A is for the start of the coil, B is for the finish. Do not mix them up.
Or use two colours: black flex for the starts and white for the finishes.

- Lay the coils out in the outer mould.
- Check that they will fit comfortably, and that the tails are long enough to remain within the mould until the exit point between coils 3 and 4.

It is important to lay all the coils the same way up.

29. THE COILS IN THE MOULD

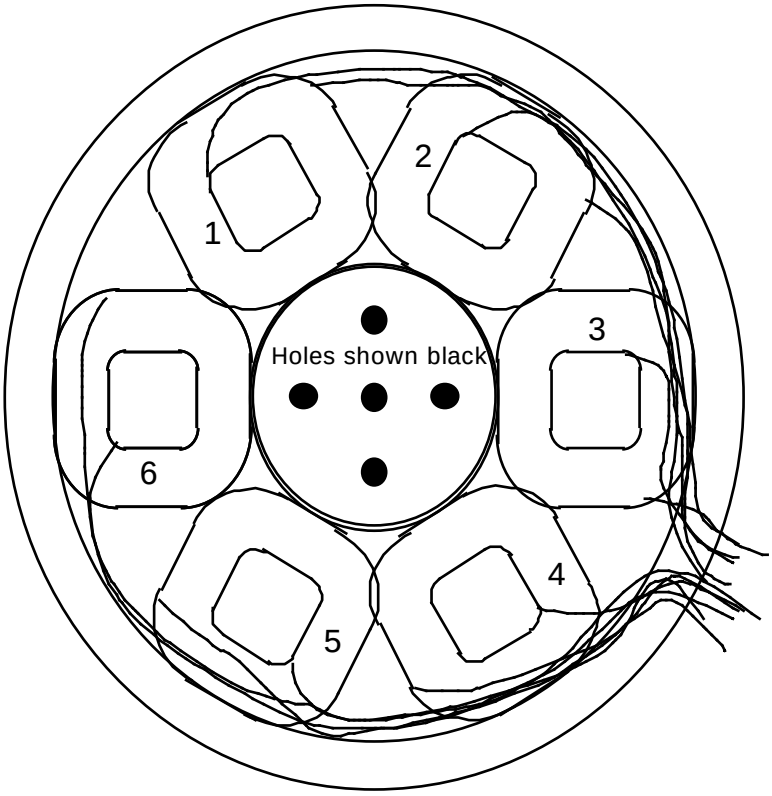

Preparations for stator casting

The stator casting will contain:-

- six coils
- polyester resin and talcum powder (and perhaps pigment)
- fibreglass mat (CSM)
- four studs of 8mm x 100mm threaded rod

Also, be sure to have the moulds prepared properly. Sand them, seal them, polish them. If PVA release agent can be got, then use it.

Cut out pieces of fibreglass CSM, using the templates. There will be 2 circular disks for laying flat in the outer mould. You also need enough curved strip pieces to cover the inside wall of the outer mould in a double thickness of CSM. Overlap 25mm between pieces.

When you are sure that you have everything to hand, start the resin casting process. It is a good idea to read through the procedure first, and check that you understand it all before you start. There are notes on polyester resins in section 8.

The stator casting procedure

Diagram 30 shows the procedure for weighing out the resin and the talcum powder. The talcum powder is only used for bulk mixes (not thin layers with CSM), to prevent overheating, and to thicken the mix. Different mixes use different weights - follow the step by step instructions below. Diagram 31 shows all the parts coming together.

30. MIXING POLYESTER RESIN

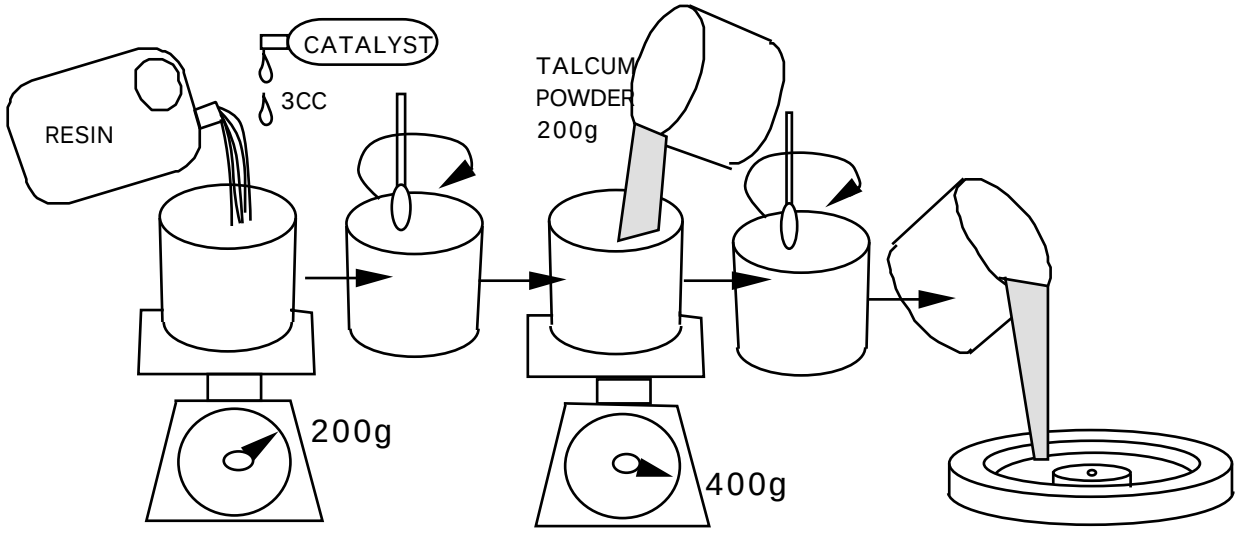

Mix resin with catalyst thoroughly but slowly to avoid churning in air bubbles. Add any talcum powder only after the catalyst is mixed. When the resin is mixed, use it at once. After a few minutes in the mixing bucket, it will heat up, and begin to set.

Use exactly the right amount of catalyst. Resin casting needs less catalyst than normal fibreglass work (about half the time). When the workshop is hot, put in less catalyst. Casting thick layers of resin, put in less catalyst. If in doubt, make some trial mixes of resin, to find out the correct amount of catalyst.

If there is no PVA 'release agent', then take care not to wipe the polish off the mould with brush strokes. Apply the resin with a 'prodding' action.

- Place the outer mould on some newspaper on a workbench.
- Mix 200g of resin, with 3cc of catalyst (and 15-30cc of pigment for colour, if required). Use no talcum powder in the first two mixes.
- Paint this resin all over the inside of the outer mould. Do not paint it on top of the island in the centre.
- Apply one layer of fibreglass mat (CSM), and paint more resin over it again, with a poking motion to remove bubbles. Work the resin into the CSM.
- Apply a second layer of CSM to the wall, but keep one disk for later.
- Put the coils into the mould. The wire tails all come out in one place, between coils 3 and 4.
- Mix another 100 g of resin with 2cc catalyst. Pour this over the wires of the coils so that it soaks in. Avoid making 'pools' of resin.
- Mix another 600g of resin with 9cc catalyst and 600g of talcum powder. Pour this mix into the spaces between the coils. The resin should fill the outer mould until it is level with the island at the centre.
- Shake the mould vigorously, to remove air bubbles. Rotary motion and vibration will help the resin to settle, and help any air bubbles to rise .
- Mix another 200g resin with 3cc catalyst and only 100g of talc. Put the second CSM disk over the coils and paint it with this mix. Thoroughly wash out the paint brush with thinners.
- Put the inner mould down inside the outer mould, and fit the 12 mm bolt though the centre of both. Tuck the wiring neatly into the space between the moulds. One flat spot on the inner mould sits over the part where the wires come out of the stator. The resin will rise up the sides. Some resin may spill out.
- If necessary, pour resin gently into the gap between the moulds until it rises to near the top of the female mould. You may need to mix another 100g of resin with 1.5cc of catalyst to do this. Keep notes of the amounts of resin used, for next time.
- Place the jig (for the studs - diagram 24) over the inner mould, with one end over the wire tails. Tighten the 12mm bolt with a nut. Insert the four 8mm studs into the holes, with nuts on top. The studs should be immersed in resin for about half of their length.

Six stages of the rotor casting procedure

31. STATOR CASTING ELEMENTS

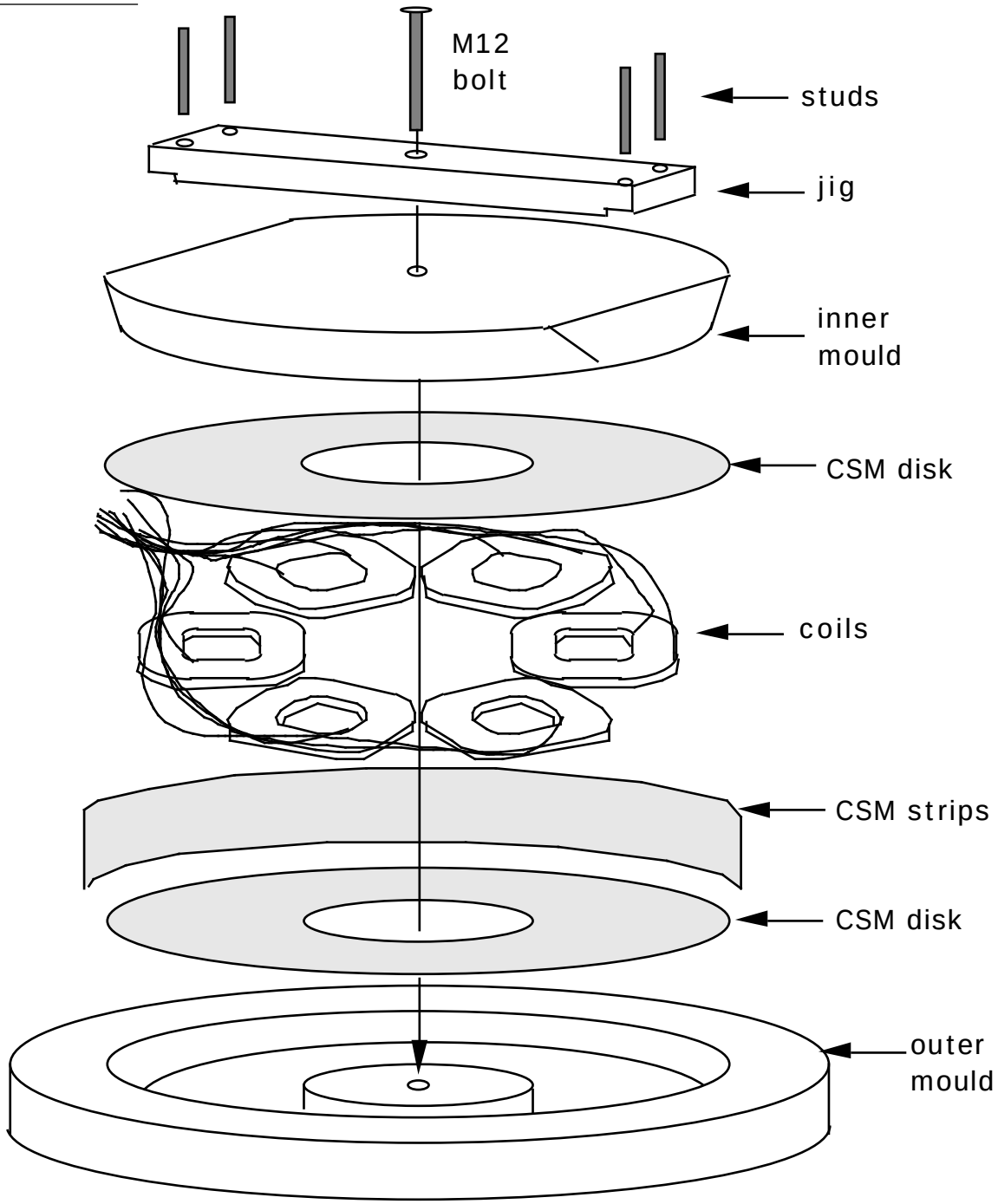

The casting is now complete. It should become slightly warm, and harden within hours. If it does not begin to set within a few hours, then put it in a warm place to speed up the process.

When the resin is fully hard, remove the casting from the mould. Be patient and gentle if possible. Remove the jig from the studs. Tap the two moulds apart, using a bolt in each of the holes around the central hole. Knock the casting out of the outer mould by turning it over and knocking the edge of the mould gently against the floor.

5. Rotor construction

The magnet rotor is also a casting. There is also a procedure later for assembling the parts. First collect together the magnet plates, magnet blocks, stainless wire rope, etc. as described next.

Magnet plates

Each magnet rotor is built on a steel disk, 6mm thick. See diagram 32. Do not use aluminium or stainless steel for this disk! The disks have to be made of magnetic material. The disk has holes to mount it to the hub - in this manual the hub has four holes, each 10mm diameter, on a circle at 4 inches (102mm) PCD. If a different hub is chosen, then all the jigs and moulds must match this hub.

At the centre of the disk is a 65mm diameter hole. There should also be four holes drilled and tapped (threaded) for M10 rod between the magnet positions, at 220mm PCD. Screw four pieces of M10 rod, 20mm long, into these holes. These will bond to the resin and help to secure the casting onto the disk.

32. MAGNET ROTOR DISK

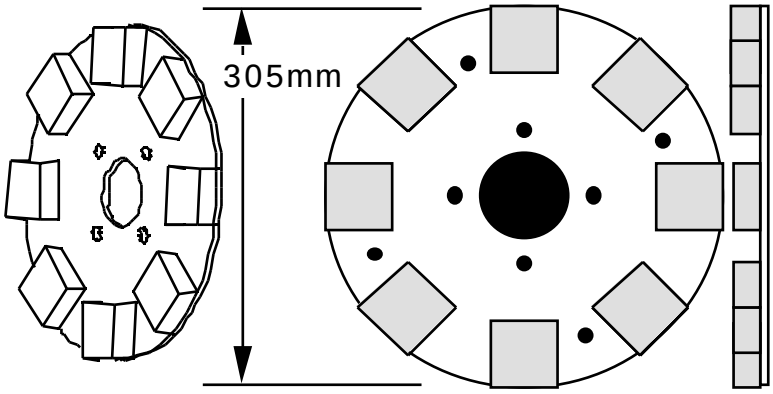

The magnet plates must be flat, not warped. It is not easy to cut the outer circle without warping the plate. A guillotine can cut steel plate into an octagon (see diagram 33), without warping the plate. This is an alternative way to make the rotor disk. First cut a square, draw a circle on it, and then cut off the corners at 45 degrees. The length of each edge is 116 mm.

The magnets will be placed on the corners of the octagon.

33. ALTERNATIVE SHAPE : AN OCTAGON

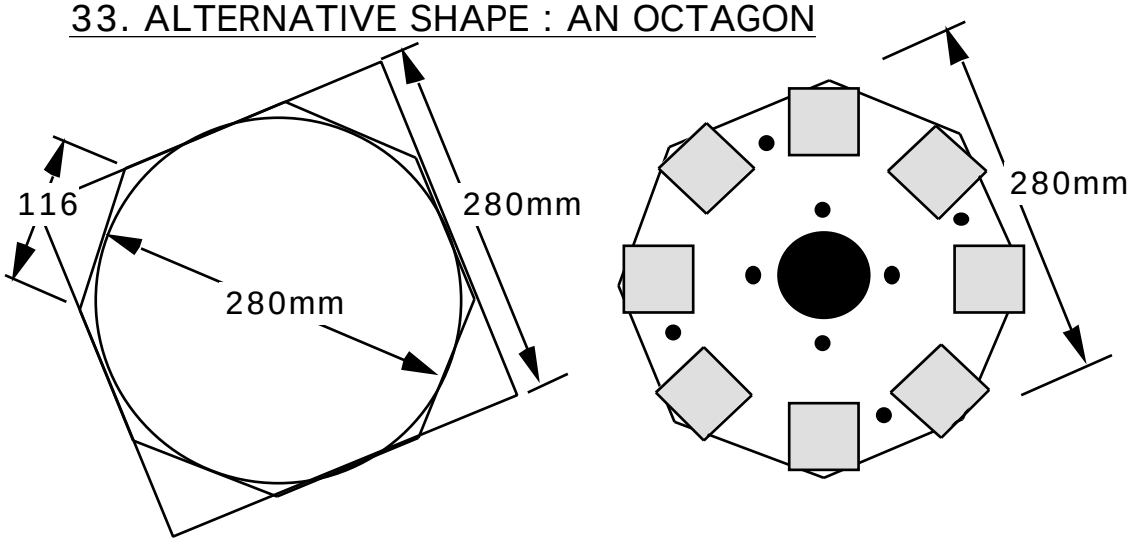

The central hole is made with a hole-saw or it can be cut out on a lathe.

Grind the steel disks until they are bright and clean, just before putting them in the mould for resin casting. Remove any grease with spirits.

Magnet blocks

There are 8 magnet blocks on each rotor. Each block has a north pole and a south pole (see diagram 34).

34. POLES ON THE MAGNET BLOCKS

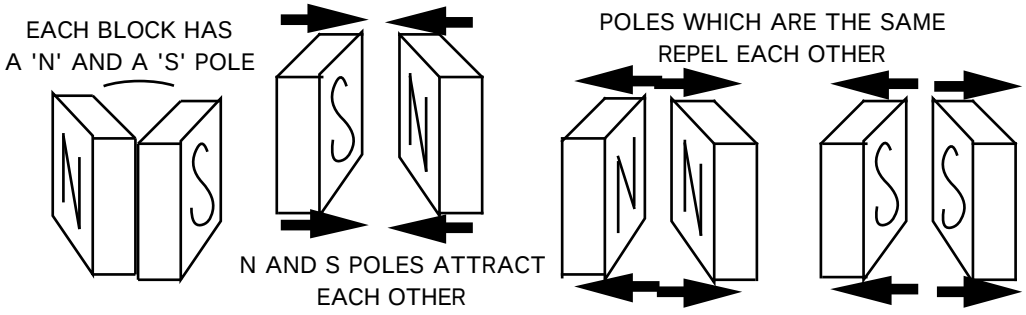

Take care when handling the magnets. Magnets can damage floppy discs, music tapes, credit cards and other magnetic media. Separate them from each other by sliding them sideways. They attract each other with strong forces. Take care not to let them fly together - they may break. Never use a hammer to assemble the PMG. You may break a magnet or break the resin holding it.

The top faces of the magnet blocks on the disk must alternate N-S-N-S-... There is a method to check that you are doing this correctly, as follows. Each time a magnet block is placed, hold it so that it repels the one before (see diagram 35). Then place it without turning it over. When they are all in, check with another magnet: it will be attracted, repelled, attracted, repelled, by each magnet in the circle.

35. PLACING THE MAGNET BLOCKS

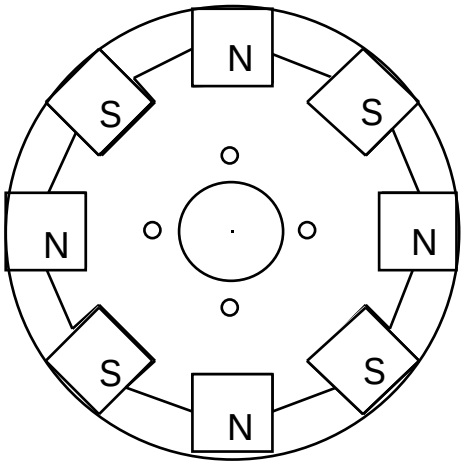

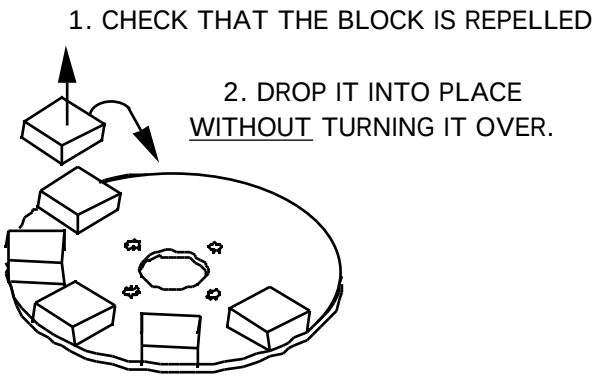

The two magnet rotors must attract each other when the mounting holes are aligned. Check that the magnets next to the holes on one rotor are different from the ones next to the holes on the other rotor (see diagram 36).

36. THE TWO ROTORS ARE NOT THE SAME

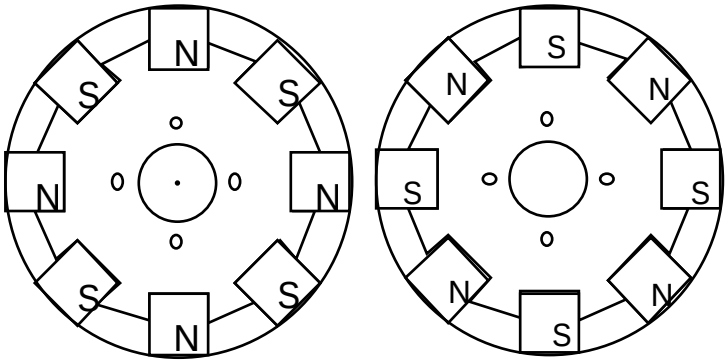

Stainless Steel wire

When the PMG is turning, the magnets will try to fly off the rotors. There is a large centrifugal force pulling the magnet blocks to fly away. When we started building these PMGs, the magnet blocks were simply glued to the steel disks. When the PMGs turned fast, the magnets flew off, and the wind generators were destroyed.

Now we embed the magnets in a resin casting. Resin alone is not strong enough to hold the magnets. It should be reinforced. Wrap wire around the outside of the magnet rotors to hold the magnets in. Steel wire is strong enough, but steel would take the magnetism from the magnet blocks. We use stainless steel because it is not magnetic and it does not spoil the effect of the magnets. Stainless steel wire cable is used on fishing boats.

Before using any resin assemble the parts dry. Put the stainless steel rope around outside the magnets five times, and cut it off with a grinder or chisel. Tape it in several places so that it is in a coil, ready to drop into place later.

Rotor casting procedure

Before starting, check that everything is ready:

- the moulds are prepared with polish or release agent,
- the magnets and the magnet disks are clean and bright (no grease),
- 16 strips of CSM are ready to fit between the magnets
- the stainless steel wire is cut to length and taped
- the magnet positioning jig is ready

The amounts of resin mentioned in this procedure are enough for two magnet rotors.

37. MAGNET ROTOR MOULD ASSEMBLY

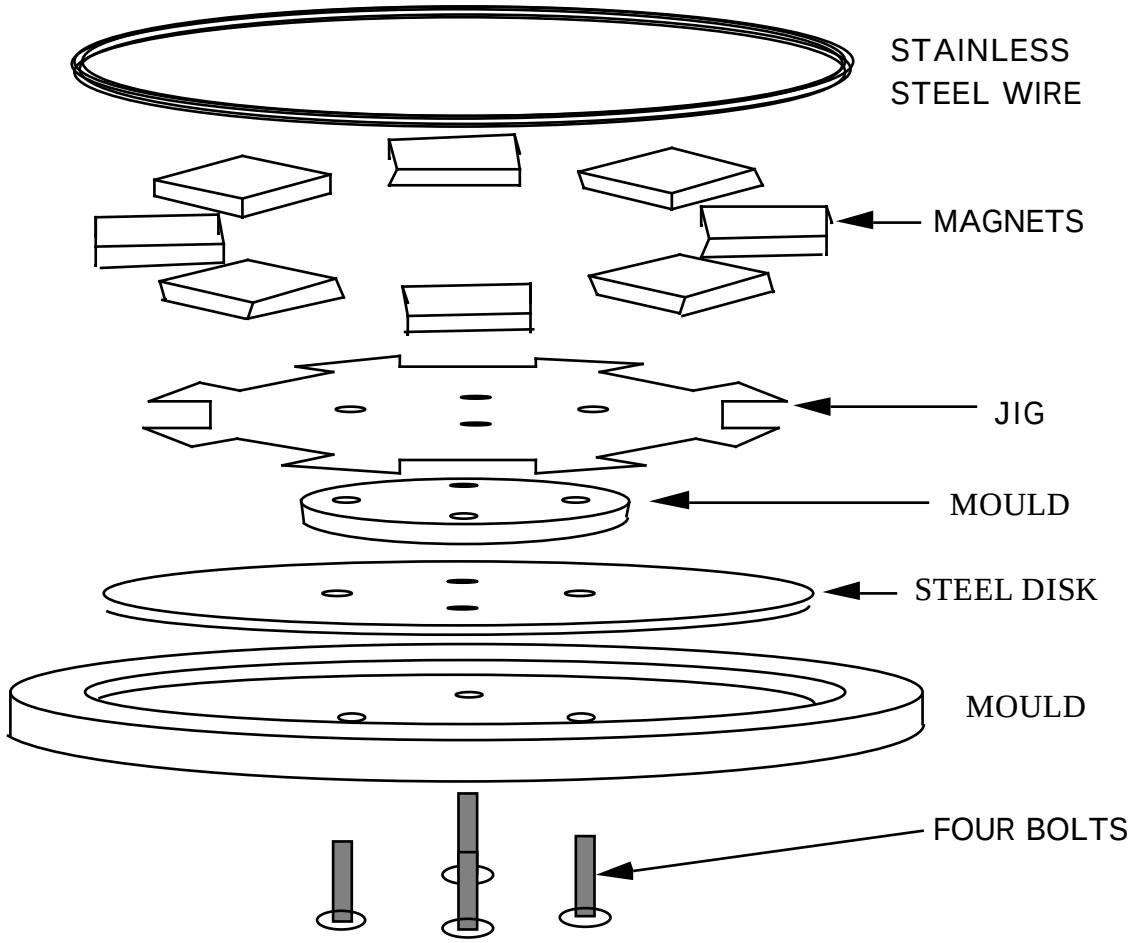

- Place four bolts through the holes in the outer mould, from below (see diagram 37). Lay a steel disk in the outer mould. Place the inner mould on top. Check the taper, and place the smaller face down, so that it can be easily removed after casting.

- Mix 200g of resin with 3cc catalyst. Paint it all over the steel disk. Add 20g of pigment for colour if required. Mix 100g talcum powder with the remains of the

resin. Pour this mix around the edge of the disk until it fills the gap, level with the top of the steel disk.

- Place the magnet positioning jig onto the bolts. Place the magnet blocks on the steel disk, within the positioning jig. Take care that the poles of the magnets alternate - north, south, north, south.. Before you place a magnet on the disk, check that the underside of the magnet is repelled by the one next to it (diagram 35). When all the magnets are in, remove the positioning jig, and use it for the next magnet rotor. Remember : position the magnet blocks differently, so that the two rotors attract each other.
  Take care not to knock the magnets out of place, or they will slide together under the magnetic attraction.

- Fit nuts to the four bolts and tighten the central disk down onto the steel disk.

- Mix 500g of resin with 7cc of catalyst. Add 300g talcum powder. Lay small strips of CSM between the magnets and into the gap at the edge. Add resin until the CSM is soaked. Poke it, or vibrate it, to remove bubbles.

- Lay the coil of stainless steel wire loosely around the outside of the magnets, below the top of the mould. Do not let the wire fall below the magnets. Let it sit on the CSM. Take care not to move the magnets around.

- Mix 500g of resin with 7cc of catalyst. Add 300g talcum powder. Fill the spaces between the magnets until the resin mix reaches the top of the mould.

Leave the rotor castings to set hard (several hours) before you remove them from the moulds. Be patient when removing the rotors from the moulds. Do not use violent hammer blows which may damage them. Hit the mould, and not the rotor.

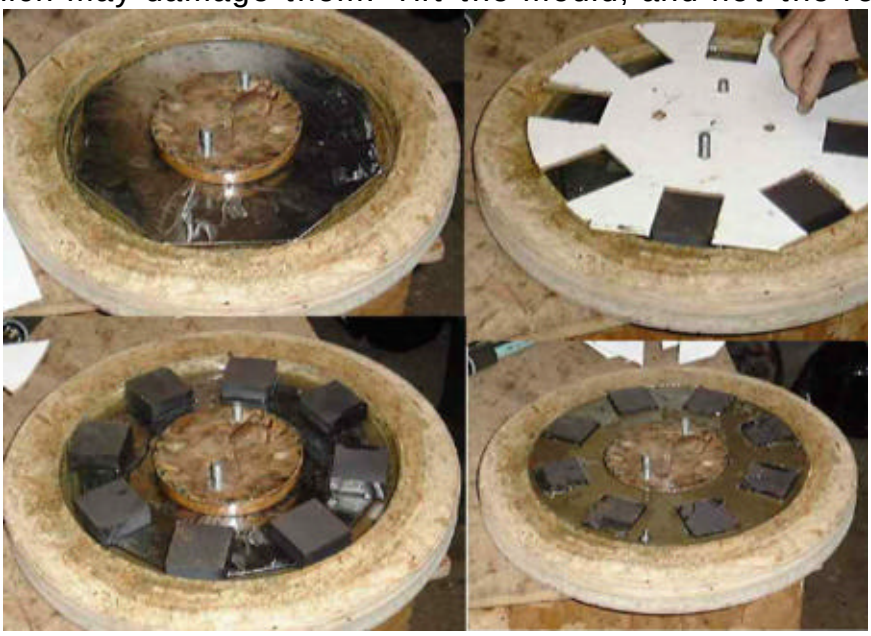

Four stages of the rotor casting procedure

6. Assembly

Rotor balancing

Each rotor should be balanced, or the PMG will shake when it is turning. The whole PMG needs to be balanced again at the end, because the rotors may not be mounted exactly centrally. A different procedure is used for the final balancing in Section 6.

To balance a magnet rotor (see diagram 38), first attach the PCD jig (from diagram 11), using four bolts. Then balance the rotor on a spike as shown:

38. ASSEMBLY OF THE BALANCING JIG AND SPIKE

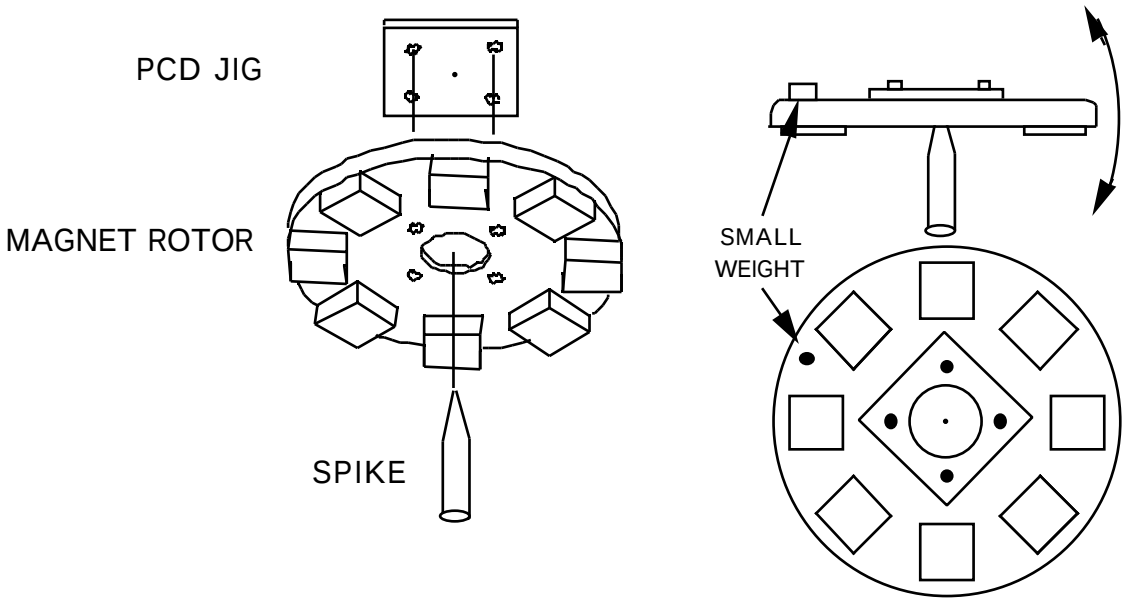

If the rotor will sit level, then it is balanced. If it will not sit level, then add small weights to it, or drill out some of the resin between magnets, until it will sit level. Turn the PCD jig around on the rotor, and check it again. Replace any weights with pieces of M10 threaded rod, screwed into holes in the resin between the magnets.

PMG spine and bearing hub (see diagram 39)

Make the spine of the PMG from a 380mm length of 'box section' steel tube 50x25x4mm (sometimes called RHS). Mark the exact centre of one large face, and then mark four 8mm holes, in the same way as for the 'stator studs jig'. It could also be possible to use the stator studs jig to help drill the holes.

The hole at the centre is 25mm (or to suit the shaft used). Drill this with a hole-saw, or bore it on a lathe.

39. THE BOX SECTION SPINE

DRILL HOLES WITH A PILLAR DRILL FOR ACCURATE ALIGNMENT

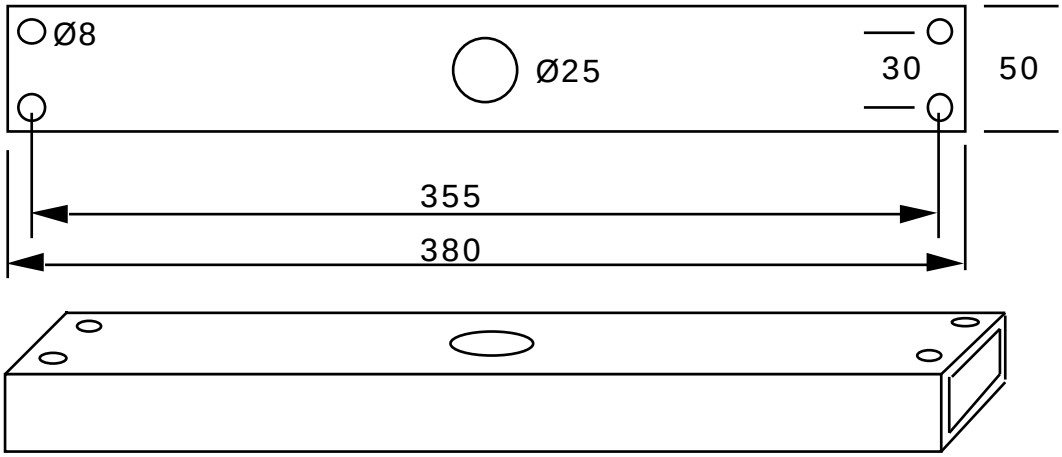

Weld the shaft in the 25mm hole. Take care to hold the shaft as square as possible (90 degrees) to the spine, when welding it.

The bearing hub (diagram 40) fits on the shaft. It has two 50x25 mm deep-groove ballraces in it, with a spacer between them. It needs a plastic cap over the end to keep dirt out of the bearings.

Do not forget to grease the bearings. Pack them with grease around half of their circumference only. Do not fill them entirely or they will become stiff to turn.

40. THE BEARING HUB

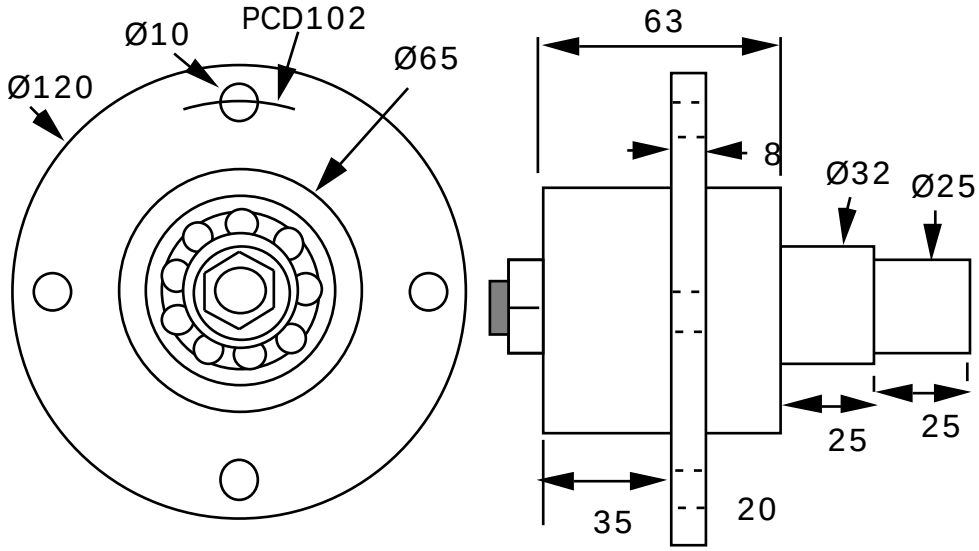

Photos show the rear magnet rotor being fitted

PMG assembly

- Cut 4 pieces of M10 threaded rod, each 200 long. They are used as studs to hold the magnet rotors to the hub. The wind turbine blades will also mount onto these studs.
- Put 6 nuts onto each stud) see diagram 41).
- Fit the studs through the holes in the bearing hub, from the front
- Put the rear magnet rotor onto the ends of the studs.
- Put a nut on the end of each stud, and tighten the other nuts down, so that the rear magnet rotor is attached to the back of the hub flange. The outer end nut should be sealed with paint or thread-sealant.
- Place the spine in a vice with the shaft upward. Place the hub onto the shaft. Do not hammer the magnet rotor while fitting. Fasten the hub to the shaft with a nut and split pin. Do not over tighten the nut. Fit a dust cover over the end of the bearing hub.

41. STUDS

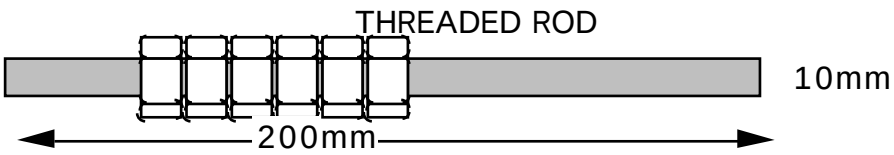

- Rotate the magnet rotor past a piece of brass wire. Do not use steel wire, because it is attracted to the magnets. The magnet faces should all be at the same height +/- 0.5mm. If not, use very thin shims between hub-flange and rotor-disk, to adjust the rotor.
- Using a spirit level, adjust the spine in the vice until the magnet rotor is level. Check both ways: north-south and east-west.
- Take the stator. Fit one 8 mm nut onto each support stud. Screw them right down.
- Place the stator over the rear magnet rotor

and fit its support studs into the holes in the spine. Fit more 8 mm nuts to the ends of the studs.

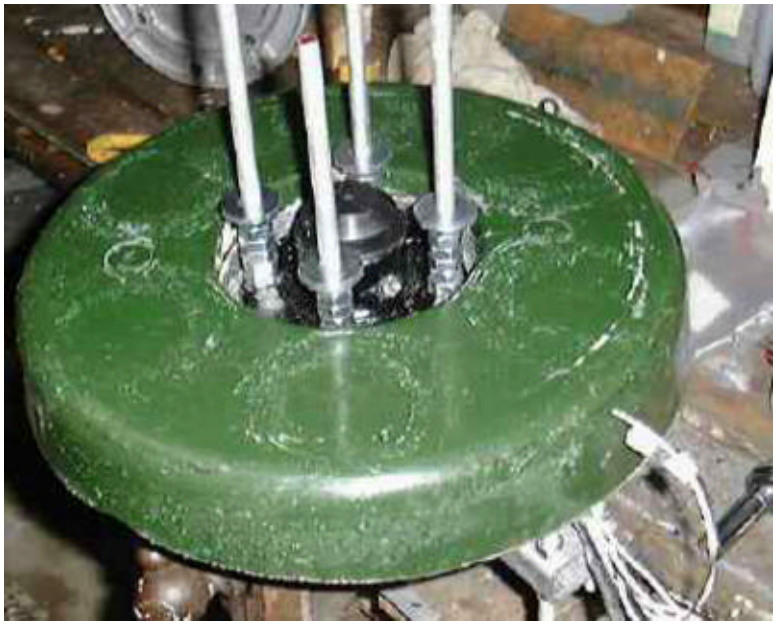
Fitting the stator

- Slowly lower the stator, and rotate the rear magnet rotor. Keep the stator level in both directions. You will hear a sound when the highest magnet touches the stator.
- Use the nuts to raise the stator <u>equally</u> 1mm on all four studs.
- Fit some washers to the 10 mm studs which hold the rotors. Always the same number of nuts and washers on each stud. A total of six nuts and two washers may be enough. Then fit the front magnet rotor.

- If the front magnet rotor is less than 1mm from the stator at any point, then add more washers under it. If it is much more than 1mm from the stator then remove washers. To find the correct number it is necessary to remove washers until it begins to rub the stator. Then add 1mm.
- When the front rotor is 1mm from the stator, then fit more nuts on top, and tighten them securely.

Fitting the front magnet rotor

<u>Electrical Parts</u>

The next section (Section 7) will describe how to connect the rectifier to the stator. I recommend using two 'single phase bridge rectifiers' (see diagram 42). They come in blocks 30 x 30 mm. The positive terminals are both connected to the battery positive terminal. (They are often at right angles to the other three.) Both negative terminals are connect to the battery negative. The remaining four terminals are for AC connection to the stator. You will probably only need to use three of these, connected as desired to suit the speed (see Section 7).

42. RECTIFIERS ETC.

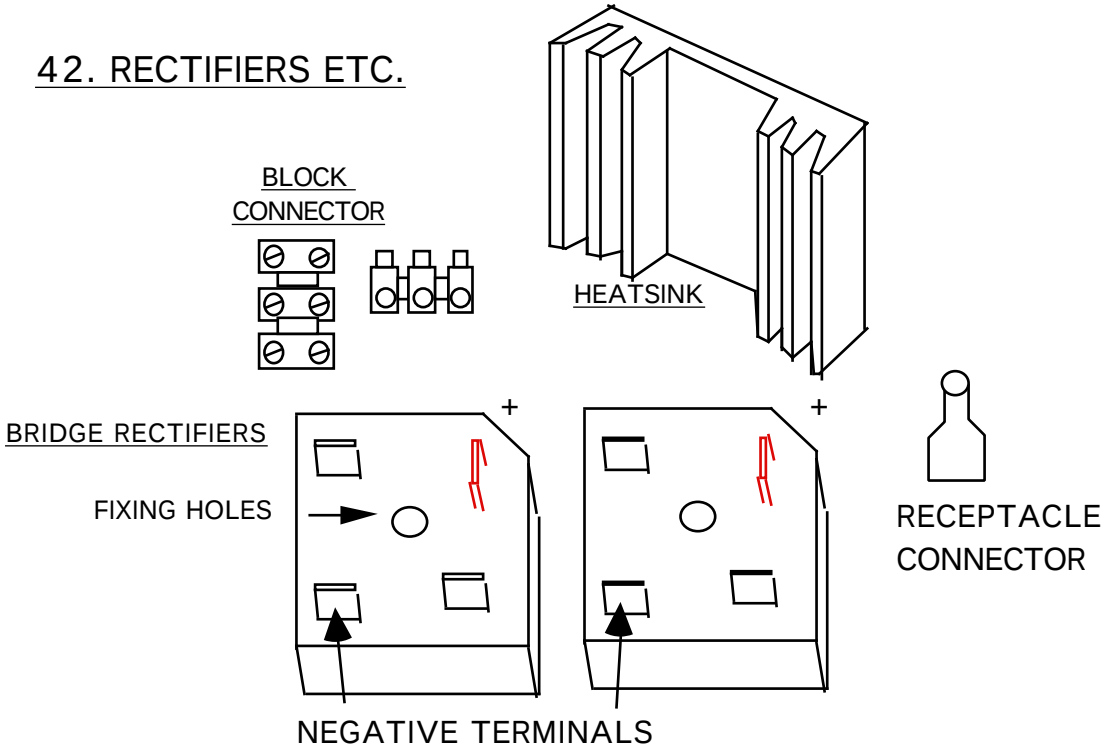

'Block connectors' are useful for connecting the wires from the stator. Alternatively soldering or crimping would be fine.

Use solder, or crimped 'receptacle' connectors, to connect wires to the rectifiers. Take care not to overheat the rectifiers while soldering. Bolt the rectifiers onto the heatsink, which will probably look like the one in the diagram, but can be any piece of aluminium approximately 250 grams or more in weight.

Keep all the connections under a weatherproof cover.

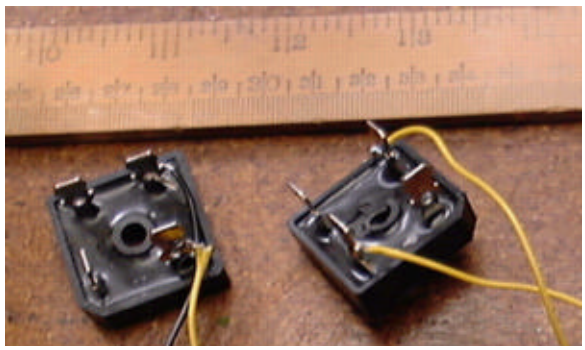

Two bridge rectifiers

7. Testing and connecting

Check that the PMG has no faults before it is put into use. It will be much easier to correct the faults now, than to return the unit to the workshop later.

Mechanical testing

Mount the spine vertically in a vice. The magnet rotors are free to move. The shaft is horizontal, as it will be in a wind generator. Check that the wires are not touching each other, creating a short circuit which makes the PMG harder to turn.

Check that the rotor will spin freely.

Spin the rotor and listen for sounds. There should not be any scuffing or brushing of the rotor, as it turns. It should spin freely for several seconds and gradually come to a halt. If it slows down rapidly then there may be an electrical fault, or the bearings may be over-tightened.

Grasp the stator with both hands. Push one side backward while pulling the other side forward, while the rotor is spinning. It must not touch the rotor. If there is a rubbing sound, then it may be necessary to disassemble the PMG and assemble it more carefully, with more space between the rotor and the stator. Or it may be possible to correct the problem by making minor adjustments to the stator mounting studs.

Stop the rotor with one of the studs in the 3 o'clock position (diagram 43). Hang an object weighing 100 grams on this stud. The rotor should begin to turn clockwise. If it will not turn, then the bearings may be over-greased or too tight.

43. HANG A WEIGHT ON ONE OF THE STUDS

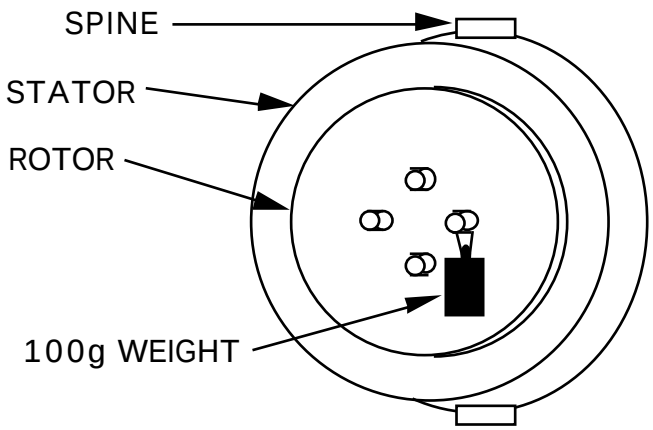

Checking the balance

The rotors have already been balanced in section 6. The wind turbine blades must also be balanced in the same way. When the unit is assembled, you should check the balance again using the new procedure below. This is necessary because the rotor disk may not be perfectly central on the PMG shaft.

Repeat the starting test (diagram 43) with each of the four rotor studs in the 3 o'clock position. Try different weights, and find the lightest weight which will start the rotor turning. If one stud needs much more weight than another, then the rotor is not balanced. Fix small weights to the rotor until the balance is correct.

Electrical testing

Coil connection test

It would be helpful to have a multimeter when testing the PMG, but it is possible to do some basic tests with a 3 volt torch bulb. See diagram 44.

- Connect the wires 1B to 4A, 2B to 5A, and 3B to 6A. (Series connections of pairs of coils which are in the same phase.)
- Set the multimeter to '10VAC' or similar (if you have one).
- Connect the meter, or a bulb, between the wires marked 1A and 4B.

44. TESTING THE COILS

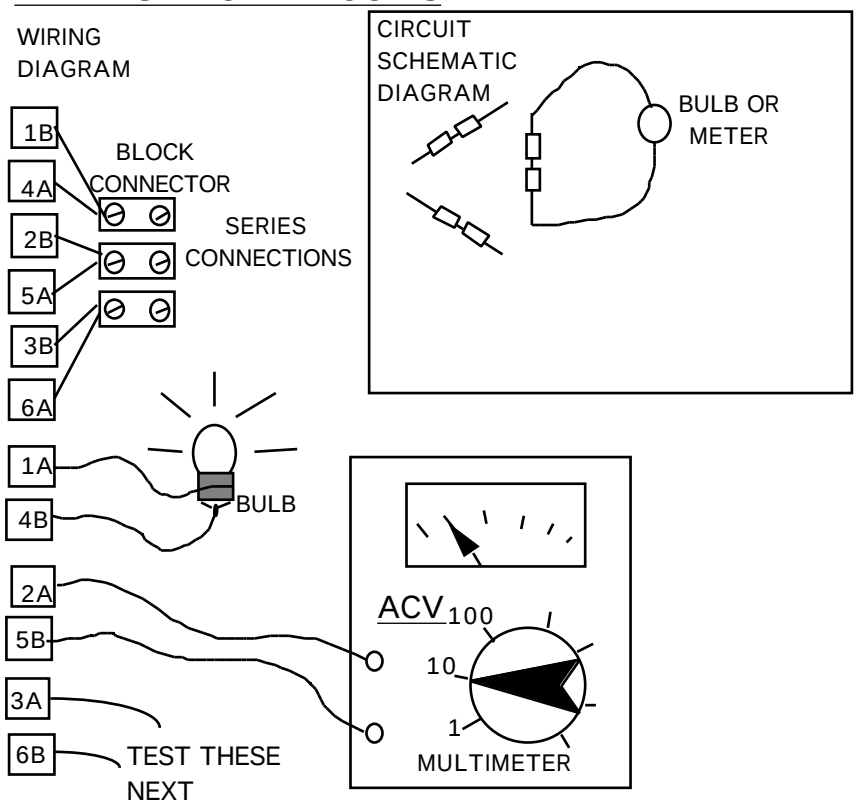

- Rotate the PMG slowly by hand, about one revolution per second.
- The meter should give a reading of about two volts, or the bulb should flicker.
- Repeat the test with two more pairs of wires: 2A and 5B, 3A and 6B.
  In each case the result should be the same.

If there is no reading, or a very low reading, then check that the series connections (1B-4A, 2B-5A, 3B-6A) are correct. If all these connections are good, then it is possible that one coil has been reversed (placed upside-down).

If any coils have been reversed, then it is necessary to do another test (see diagram 45), to find out which one is at fault. Connect 4B-2A and 5B-3A as shown in the diagram. Now test between 1A and 6B. There should NOT be more than a very small voltage. If there is a voltage, or the bulb lights up, then reverse the connections (swap A for B) on the coils until the voltage drops to a very low level.

When the faulty coil has been found, label the tails again, with A and B at the correct ends.

45. CHECKING FOR A REVERSED COIL

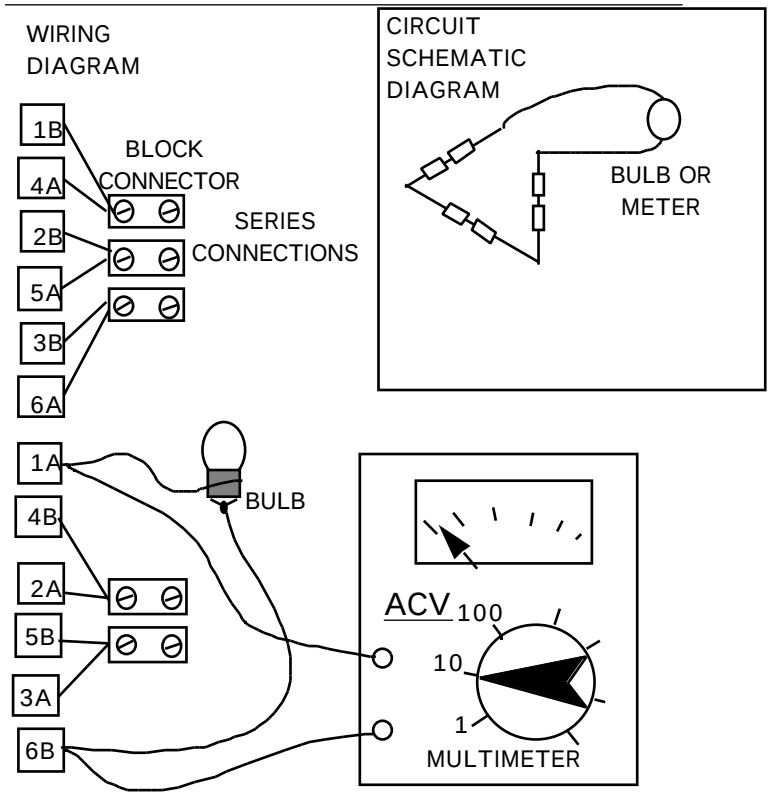

There will always be a small voltage in this test, because the coils are not perfectly positioned in the mould. If the test gives more than one volt, then it should be possible in future to make a better stator by placing the coils at exactly equal distances apart in the mould.

DC output test

When these tests have been completed and the results are correct, then connect the rectifier, as shown in diagram 46. Connect the tails 1A, 2A and 3A together. Connect each of 4B, 5B and 6B to any three of the rectifier AC terminals (marked with 'S' symbol). This is the 'star' connection. Connect a bulb to the output. If possible, also a multimeter on 10 VDC (or similar).

46. DC TEST

COILS CONNECTED STAR

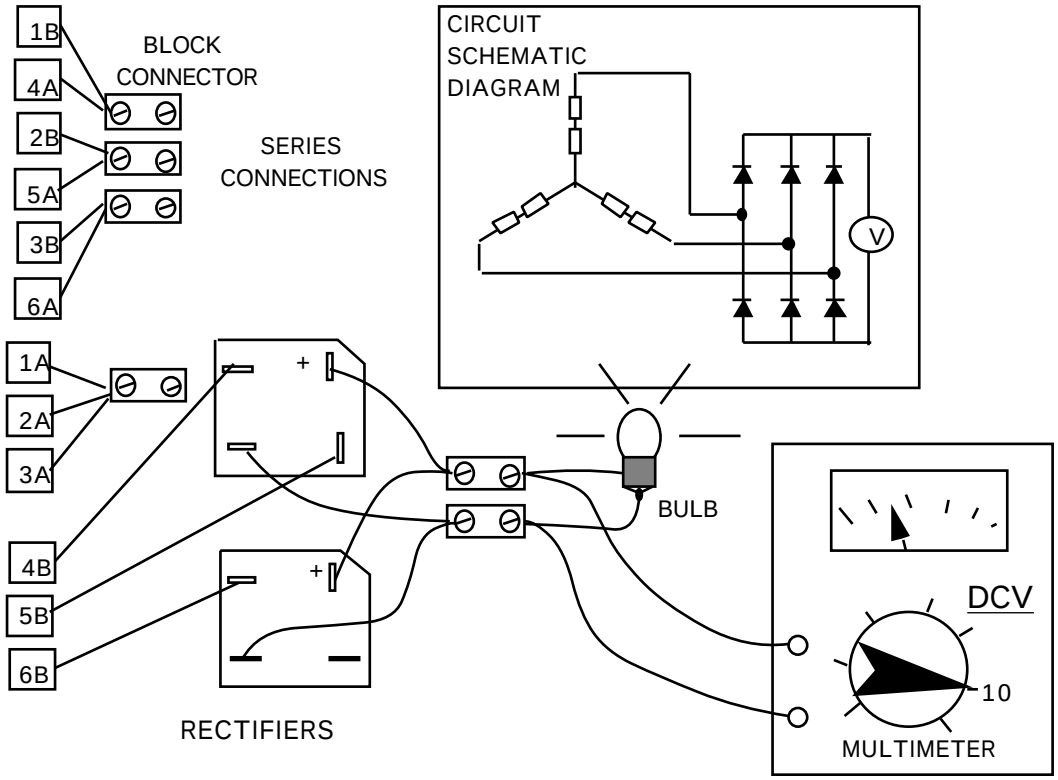

Rotate the rotor by hand as before, approximately one revolution per second (60 rpm). The meter should show a steady reading around 4 volts DC (or 3 volts with the bulb present). The bulb should glow with a steady light, not flickering as before.

If there is no reading, or the bulb flickers, then there is a faulty connection or a faulty rectifier. Check the connections carefully. Try another rectifier.

You can also test the PMG without a bulb or a meter. Simply connect the positive and negative wires from the rectifiers together (all four) in a 'short circuit'. Now try to turn the PMG. It should be stiff but smooth to turn. If it trembles as you turn it then there is a fault.

Connecting the PMG to the 12 volt battery

Star and Delta connections

For low windspeeds, connect the coils 'star' as above. For high winds, and higher current output, connect the coils 'delta', as in diagram 47.

47. DELTA CONNECTION

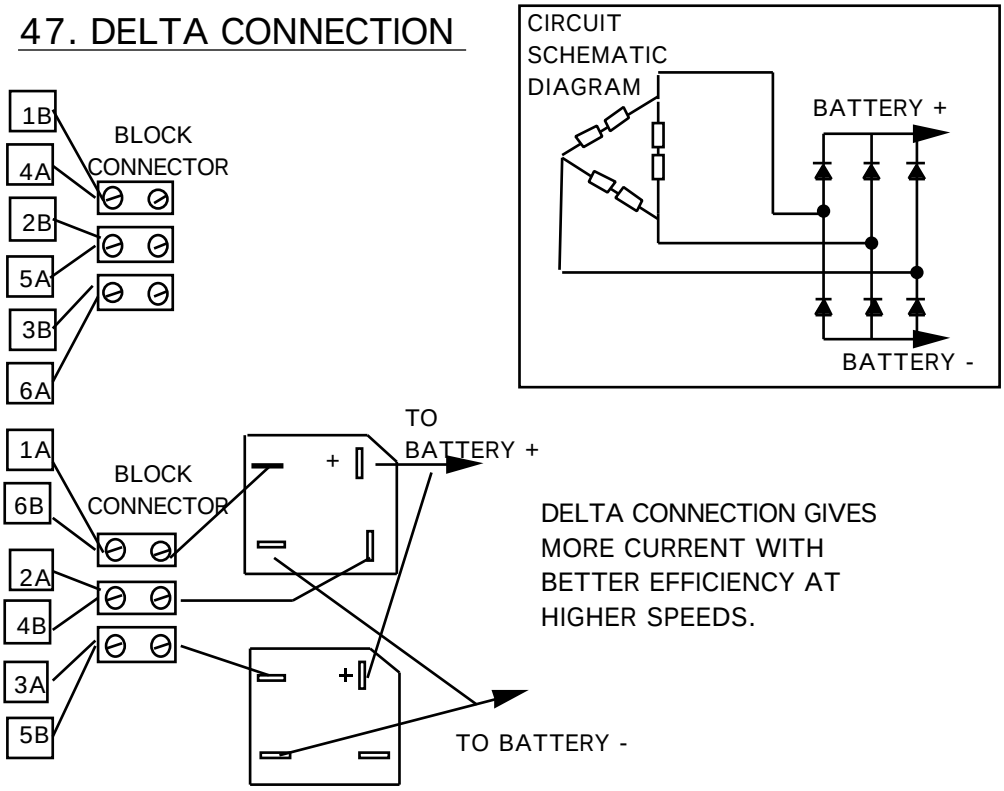

It is also possible to wire a relay (see diagram 48) which will switch the connections from star to delta and back as desired.

48. USING A RELAY TO CHANGE BETWEEN STAR AND DELTA

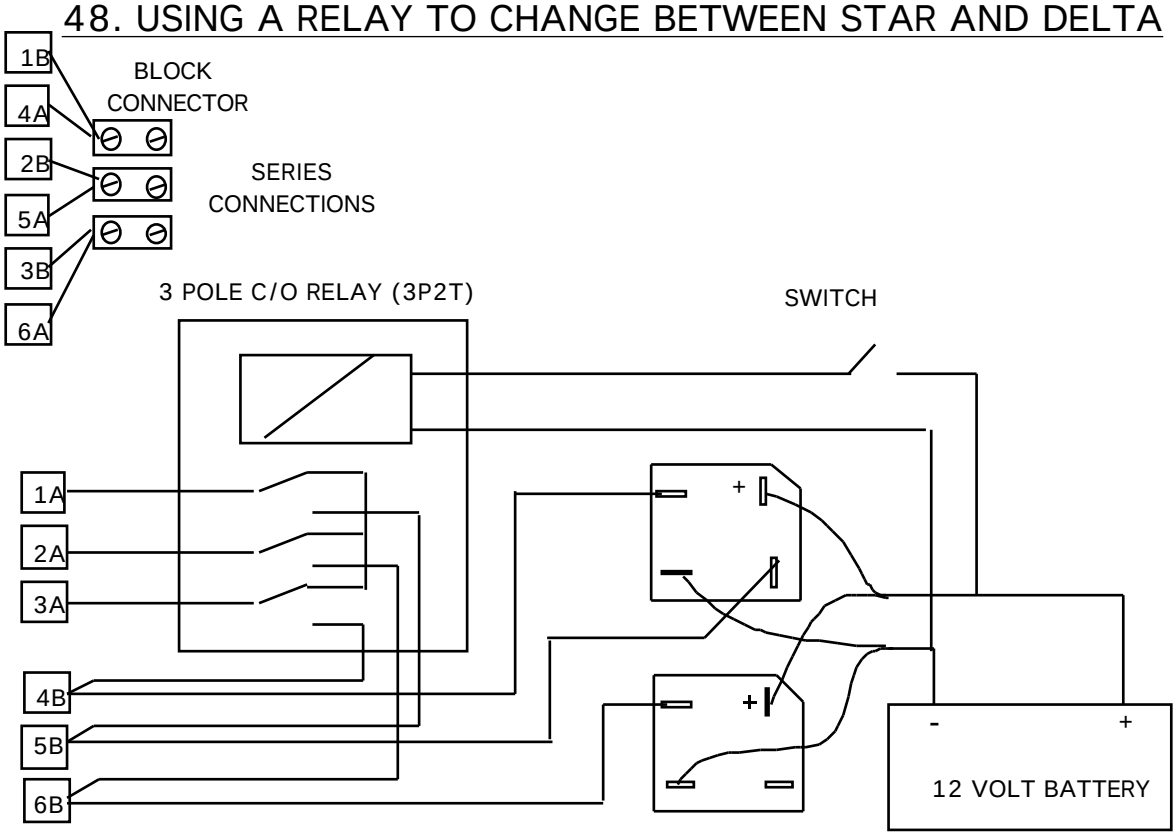

Yet another option for connecting the stator

At the time of writing this document, the above arrangement (using a relay to change the connections) is still under development. Later, an electronic control circuit will be available to automate the changeover. This is all very complex, and it so it can go wrong.

If you do not wish to have to change the connections between low and high windspeeds, then the PMG will still work. However, the efficiency will be slightly less. Three are two options:-

- If you expect mainly low windspeeds, then you can simply use the star connection shown in diagram 46.

- If you also need higher power in higher winds, you can use a 17AWG wire (1.2 mm diameter) to wind coils with 200 turns each. Then you can connect one group in delta and one group in star as shown in diagram 49. Note that you need six AC terminals on the rectifiers so you will need three rectifier blocks.

49. STAR/DELTA CONNECTION

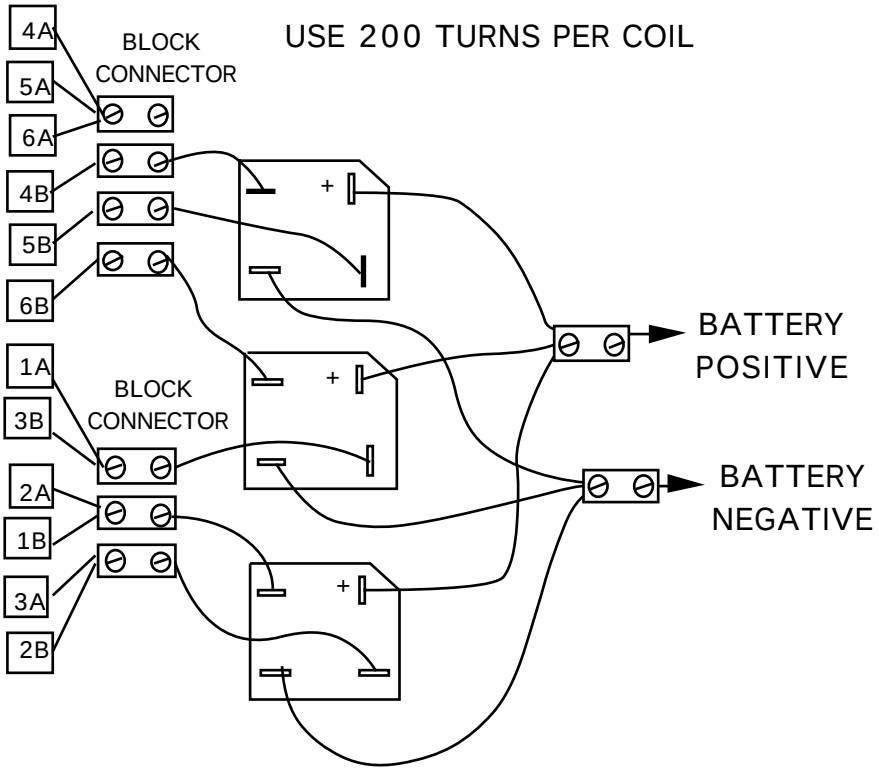

PMG-to-Battery Cable size

The cable from the PMG to the battery can be either three-phase-AC or DC. If the rectifier is mounted at the wind generator, then it will be DC. This is only slightly more efficient than three phase AC.

At 12 volts, the size of the cable must be large. Even if the current is only 15 amps, it is advisable to use a heavy cable. For a distance of 20 metres, the recommended size is 6 mm^2 (10AWG). The diameter (thickness) of each copper wire is about 3mm. A 15 amps current flowing in this cable will lose 15% of the power from the wind generator as heat in the cable. If the cable is longer, it should be heavier, in direct proportion.

Electrical Safety

There is no danger of electric shock from a 12 volt battery. But if the wind generator is disconnected from the battery, and running fast, then the voltage will be higher than 12 volts, maybe as high as 50 volts. Do not run the PMG at high speed without a battery connected.

The battery contains stored electrical energy. When there is a short-circuit fault in the wiring from the battery, for example the positive and negative wires touching each other, this energy is released in a very high current. The cable will heat up and burn. Therefore it is necessary to use a fuse or a circuit breaker on every wire which attaches to the battery positive terminal. Use one fuse for the wind generator and a separate one for the cable to the load (the lights, or whatever uses the power). See diagram 50.

50. CONNECTING THE BATTERY

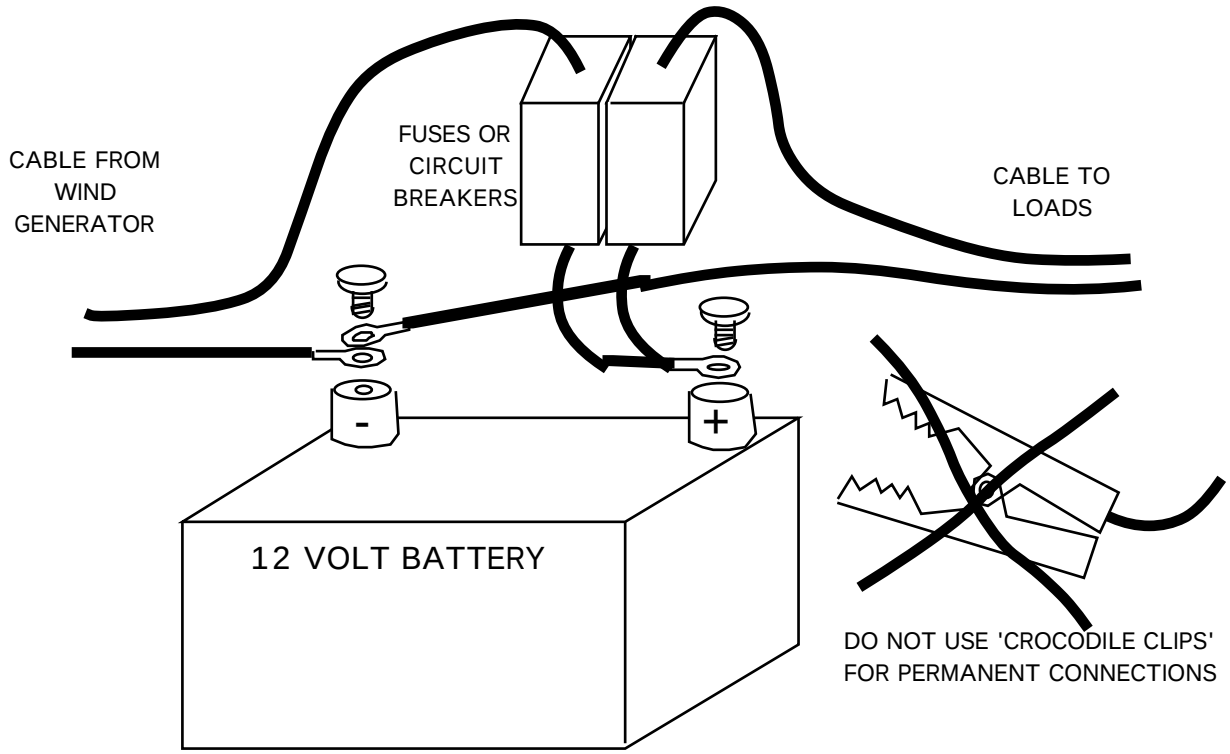

Battery acid is bad for the clothes and the skin. Do not splash it. Be especially careful of the eyes. If there is an accident, the best cure is to flush with plenty of water.

Batteries produce hydrogen gas, which is very explosive. Do not make sparks near a battery or it may explode, and throw acid in the eyes!

Battery Charging

Lead acid batteries should be kept in a charged condition. In the case of a wind powered system, you may have to wait for a wind to charge the battery. But be careful not to discharge the battery too deeply, or to keep it too long in a discharged state, or it will be damaged (sulphated) and become useless. Stop using a battery before it is fully discharged. If there is a problem with the wind generator, then charge the battery from another source within two weeks.

Charging the battery too hard will also damage it. At first, when the battery is discharged, it is safe to use a high current, but later the current must be reduced or the battery will overheat and the plates will be damaged. The best way to fully charge a battery is to use a small current for a long time.

Watch the battery voltage. If the battery voltage is below 11.5 volts, then it is being discharged too much. If the voltage is high (over 14 volts) then the battery charging current is too high. Use less current or more current in the loads to correct these problems. If there is no voltmeter available, then the user should watch the brightness of the lights and follow these rules:-

- Dim lights, mean low battery. Use less electricity!
- Very bright lights mean too much windpower. Use more electricity!

A good way to use more electricity is too charge more batteries in windy weather, perhaps charging batteries from neighbours' houses.

There are simple electronic circuits which can regulate the battery voltage automatically. They are called 'low voltage disconnects' and 'shunt regulators'. If the user is not willing to watch the battery voltage, then it is necessary to fit a disconnect and a regulator.

8. Additional information

Using polyester resin

Polyester is the plastic substance used in fibreglass work for building boats, car body parts, etc. Various things are added to it to make it work better for various jobs. Talk to your supplier and explain what the resin is to be used for. Your supplier should be able to help you.

Hardeners

There are two systems used to harden polyester resin, and each system uses two chemicals. For resin casting and most fibreglass work we use peroxide and cobalt. ('Body filler pastes' use the other system.)

Cobalt is a purple fluid. Ask the supplier to mix the right amount of cobalt into the resin. After it is mixed, the resin must be stored in the dark, or it will harden.

Peroxide is a hazardous chemical. Avoid contact with skin. Store in a PVC container, in the dark, below 25 degrees C. Never mix it with cobalt (except for the cobalt already in the resin), or it will explode. Mix very small quantities (about 1-2%) of peroxide with resin or it will overheat.

Wax-free 'Air inhibited' resin 'B'

This type of resin is used for 'gel-coats' on boat moulds, where the resin is going to be built up in stages. We do not recommend using this resin for the PMG. Any exposed surface will remain tacky indefinitely. Ask for resin 'A', or better still 'casting resin'.

Thixotropic additive

A special powder of very light silica is often added to resin to make it thicker, so that it is easier to spread it with a paint brush. This powder is not needed for casting resin . If it is already added, it does no harm.

Styrene monomer

Approximately 35% of the resin as supplied is styrene monomer. This is used for thinning the resin. It causes the smell. It is possible to add a little more styrene monomer (10%) to make it more liquid.

Pigment

Pigment is used to colour the casting, if a coloured finish is desired. Add pigment to the first mix, which will be on the outside of the casting. Add no more than 10% pigment to the mix. It is not necessary to add pigment to the resin. Without pigment, the casting is transparent and the coils are visible.

Fibreglass

The resin has almost no strength without fibreglass. It is available in sheets of 'chopped strand mat' (CSM). It is also possible to buy just chopped strands, and to mix them with the resin. This is useful for the magnet rotor castings. Add a little resin to the fibreglass, and press out all the air bubbles, before adding more resin.

Talcum powder

Talcum powder is a cheap filler which can be mixed with the resin after the peroxide has been added. It makes the resin mixture much cheaper, and a little thicker. Resin can be mixed with up to twice its own weight of talcum powder. The powder also helps to reduce the heat build-up in large resin castings.

Using painted moulds in Peru

Mould preparation

Polyurethane varnish

Ordinary paint should not be used on moulds. Better to use nothing. If possible, use polyurethane varnish. This will prevent moisture coming out of a mould made from wood, plaster or clay. Smooth the varnish off with sandpaper before polishing it.

Polish

Polish the mould several times before using it first time. Rub all the polish off with a rag and then leave it some hours and do it again. Silicone polish is not compatible with PVA release agent. Use wax polish.

PVA Release agent

Paint this over the mould and let it dry. It forms a sheet of PVA, which greatly helps to separate the casting from the mould.

Using the PMG for hydro power

The PMG can also be used for charging batteries from small hydro turbines. It will be ideal for low head, low power sites, because it is efficient even when producing only a few watts. It can also be used for higher head higher power sites, because it is capable of high power outputs at high rpm.

There is a danger of rust damage to the magnet rotors in a very humid or wet environment such as in a hydro application. It is advisable to galvanise or plate the steel components with zinc.

Low head sites

Here are some examples of conditions where the PMG could work without modification (connected delta). It would need a simple 'impulse' runner mounted on the front magnet rotor.

Head (metres)	10	10	5
Flow (litres/second)	1	5	5
Net Power(watts)	40	200	100
pcd runner (cm)	37	27	23
speed (rpm)	325	440	360

High head, high power

At higher rpm, higher power is available from the PMG. Doubling the speed can also double the output voltage and the current, offering four times as much power with the same efficiency as before. The PMG may overheat under these conditions, so it may be better to keep the current the same, and have better efficiency. Much will depend on whether the water is used for cooling.

In any case, increasing the speed improves the PMG's power handling abilities considerably. It would be risky to run a wind turbine at high speeds, because of the problem of gyroscopic forces on the rotors, but this problem does not arise with hydro power, because the shaft axis is fixed.

If higher voltage is not required, then the stator winding can be changed to give 12 volts (as before) at the higher speed, but deliver higher current without overheating. This is done by connecting the coils of each phase in parallel instead of in series. Or the coils can be wound with fewer turns of thicker wire. This is better still, because parallel and delta connections can suffer from parasitic internal currents.

Do not use the star/delta connection (diagram 49) for hydro power where the speed is constant. There is no advantage.

Tim Harwood's Excess Energy CD Motor

Tim Harwood M.A. © Feb 2004 v. 1.02

timharwood@usa.net

The world's first excess energy experiment using household items & Radio Shack parts

This experiment dates from the fall of 2001 when the Twin Towers were crumbling in New York. It concerns an attempt to replicate a rather obscure device invented in the 1960s, commonly referred to as the 'Adams motor.' The vision I had held was to produce a cheap and simple excess energy experiment, that could be replicated at home for minimal cost. Somewhat to my own surprise, but not due to lack of application or due to accident, I succeeded admirably in this goal, despite the near universal opinion such a thing was both 'impossible' and 'against all the laws of physics.'

No-one can deny that despite the generosity of Nexus magazine and the articles they published on behalf of Mr Adams in the 1990s, the motor had become widely perceived as a fraud by the late 1990s. Indeed, a couple of the major 'free energy' websites actually listed the device as a known fraud, and when I began my researches, several people were kind enough to email me about these 'proved facts.' It is therefore due in very large part to my personal efforts and the 'CD motor' project, that the Adams motor has been successfully retrieved from historical obscurity.

This file is presented as a practical guide to construction and replication, and will not address advanced optimization strategies or detailed theories of operation. Suffice to say significant performance gains above what can be obtained by following these instructions are possible. Besides saving a considerable amount of space, the physics involved is simply far too complex to explain without a common 'hands on' based grasp of the technology. There is no substitute for lab bench time and expertise.

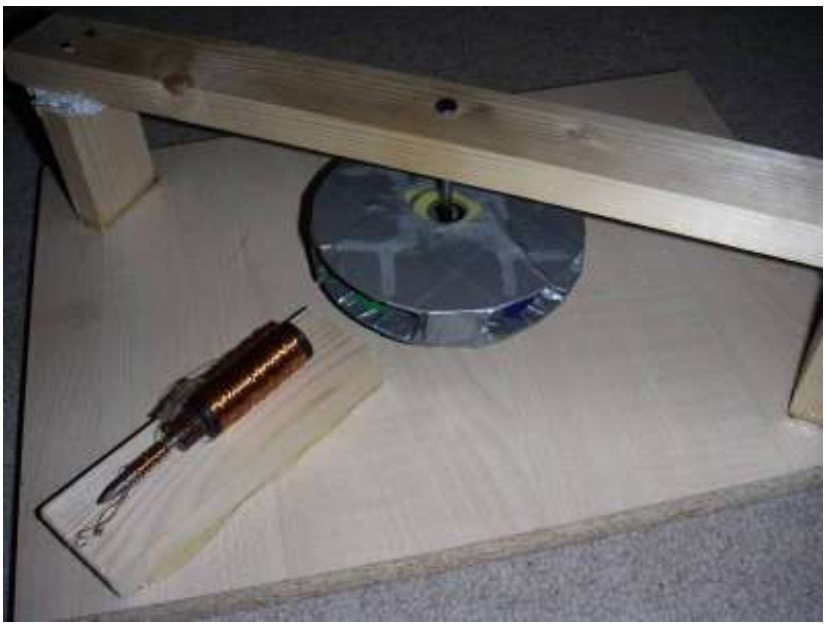

The original 1.0 CD motor motor depicted without modification.

It really did 'run cold' first time.

Construction Guidelines for the Historic CD Motor Device

2 CDs - Can be taken from old computer magazine covers, for example

3/4" Magnets - Glue 2 grade 8 ceramic disc magnets together to make one magnet

Circuitry - Hall ic, MOSFET, general purpose wire, etc

12v 7Ah lead acid battery - A good Ah rating is required for best results

24 – 26 awg stator wire - Enameled copper required to wind stator

Mild steel nails, washers, nail head covers, misc

Wood / plastic - Magnetically non conductive material to fix parts

2,500 psi epoxy glue - This is about the strongest glue you can easily buy

TOTAL COST ABOUT $50

The first step is filling in the center of the CD. This can be achieved via a variety of methods, and while not the one I originally employed, mounting on an old hard drive platter has emerged as the most popular choice. Other people have used parts from old video recorders, record players, and 1/4" bike bearings. Use parts to hand and common sense.

As a general note, plastic parts are to be preferred on the rotor section because they are non conductive and offer only frictional losses. Also, the CDs MUST be used in 'magnet sandwich' pairs for structural stability. Hard pressed CDs such as those found on magazine covers or free Internet trial disks should be used, because CD-RW disks are too flimsy.

The images should really be self explanatory here, and anyone of basic intelligence should be able to combine wood, nails, and glue, to provide a some form of basic low friction basic mounting.

Stator construction is eccentric, but not difficult. Again, it is simpler to copy the images.

Note the approximate 4:1 dimensions on the rotor / stator interaction. The final stator is illustrated with enameled copper wire bare for clarity of illustration, but should be insulated with tape during normal operation. As much as anything, this eccentric geometry and scale is the secret of the motor.

Adams Type Brushless Pulse Motor Tip Sheet

Disclaimer: No attempt is made to speak for Mr Adams in this file. What is presented is a collection of personal opinions / observations, on how to extract optimal performance from Adams type brushless pulse motors. While I have done my best to be as accurate as possible, opinions in these matters inevitably vary, especially as regards optimal switching solutions.

Stator Guidelines

Many people (used to) ignore Mr Adam's original 4:1 instruction, and do not build stators with the geometry suggested (stator head HALF width / height of rotor magnet). The stator wind is the most critical part of the motor, and while I appreciate conventional theory says these stators are wrong in several respects, I can assure you this is what is required. Whether the magnets are square or round faced is not critical.

If you have any doubts, you can just copy what you see in the given illustrations. A mild steel nail about 100mm long with an 8.5mm head makes a most excellent and highly cost effective stator core, and I used a tap washer (bathroom section in your local hardware store, a non conductive part) to 'end,' my stator. Pair that with rotor magnets about 17 – 20 mm (3/4" approx) in diameter. The stators MUST be wound solid to 90-100% of the rotor magnet width.

I have found 24 awg (0.56mm) wire to be a helpful base to work from in this respect, but 25 awg and 26 awg are also commonly employed. The important point is that the total resistance of each individual stator, should not be less than 6 ohms. If using two stators connected in series for smoother rotor torque transfer, 12 ohms is therefore the correct minimum specification.

Magnet type: Ceramic / Ferrite Grade 8

Ceramic and ferrite are two words for typically the same magnet. Grade 8 is generally the strongest grade sold. Ceramic magnets are highly resistant to demagnetisation, and also have a field strength that works well when combined with a 12v control pulse. So they are both reliable and easy to work with. There is no reason to use anything else when you first start your experiments. Stronger magnets only make manifesting the effect harder, requiring higher quality stator cores, and scale absolute output only, not efficiency.

Magnet size: 3/4 " / 17-20 mm

The effect is critically related to pulse width. **In general the longer the period of the pulse, the less exotic its properties**. For this reason, magnets larger than ¾" should not be used. They can be either square or circular faced. One inch diameter is too wide, and motors built on this scale only work with 555 or other suitable control circuitry to adjust the pulse width down. Keep in mind the faster the rotor spins, the shorter the required pulse width. A timing system that works directly off the pole faces of the rotor magnets, automatically reduces the pulse width as rotor speed inreases.

Magnet duty: 20%

I prefer just under 20% duty (this means the physical space between the rotor magnets, should be roughly five times the width of the pole face of the magnets). Size and scale is one of the reasons the CD motor concept works so well, because it forces correct duty. Try NOT use 'generator' windings or any other complications around the rotor. The stator pulse should be a clean relatively low duty input onto the face of a permanent magnet. Any additional loads placed on the rotor, tend to compromise the magnitude of the switch closure event, and are relatively ineffective at tapping current besides.

Voltage Input

Expect performance to vary with input voltage. Some prefer to run run the motor at multiples of the 9v negative energy harmonic for optimal current draw results e.g. 12v is typically the minimum required to fully close the air gap down, but after that 18v, 27v, 36v, 45v, etc should be used. For best 'back emf' output, 120v and most especially 240v are suggested for investigation. **Keep in mind the higher the voltage rating of a part, the worse it tends to become at handling current**. So while theory may suggest higher input voltages, practical MOSFET based engineering may prefer a 240v maximum.

Windings Resistance: 6 - 9 Ohms

24 awg wire is really a minimum for these motors. Lutec are said to use 6.8 ohm stators, whereas Mr Adams originally recommended 10 ohms. So 6 - 10 ohms is a sensible range to aim for. It is unlikely your first stator will be fully optimal, so expect to experiment. More turns on the stator do deliver a greater back emf recharge effect, but diminishing returns are manifested beyond the 4:1 ratio. Best torque is generally seen at 9 ohms. Best system throughput at 6 ohms, which is also less demanding to switch. Higher ohm sets produce very low current draw, but at the expense of rotor torque i.e. you are not gaining efficiency. Coldest operation is typically seen around 4 - 5 ohms.

Alternative Winding Methods: Bifilar and Unidirectional

Winding the coils unidirectionally helps increase flux density. Since a magnetic field is produced around the wire as the current flows through the wire, by winding the drive coils directionally, the field that surrounds nearly every turn of wire has the same polarity. Under loaded conditions, it is also reported by some that bifilar winds improve performance.

General Construction

Apart from the stator cores, keep as much metal out of the design as possible. It acts as an electromagnetic drag upon the rotor, lowering efficiency. The magnets are fixed with 2,500 psi epoxy glue (comes in 2 syringes, resin and hardener). Be sure to mix thoroughly for best results, and try and get an exothermic brand for faster setting. Attend to the basics such as oiling the motor shaft etc.

Air Gap: 1 - 1.2 mm

There is a common but false opinion, that the shorter the air gap between the stator head and the face of the rotor magnets, the higher the efficiency. This is simply not true. A distance of about 1.1 -1.2 mm generally delivers optimal results. Air gaps below 1 mm result in a substantial drop in performance.

Rotor Speed: 1,500 – 3,600 rpm

No less than 1,500 - 2,000 rpm. With a fairly light well balanced rotor, 2,500 rpm is possible off a 12v input. If you wish to make a heavier rotor, a higher input voltage will be required to compensate. 120v and 240v are interesting values to investigate as regards current draw required, with reductions of over 70% reported.

Battery Type: 7 Ah Lead Acid

Some batteries recharge much more efficiency than others. The Adams motor works on the basis of drawing energy from a supply battery for a pulse, and then releasing an impulse of energy back to the source which is recharged. Lead acid batteries while heavy, offer the greatest efficiency in this process. The second main parameter for battery efficiency is the Ah (amp hour) rating. Up to about 4-5 Ah significant increases in recharge efficiency are gained.

Circuitry: Ground the Stator to the Supply Terminal

The only important point about circuitry for Adams motor, is that the **stator coils should be grounded to the supply terminal of the battery when the main pulse input circuit is open**. This can be implemented by various methods, but a high quality 400v rated discrete diode placed in parallel round the main control transistor is probably the easiest method. As a by product of the manufacturing process, MOSFETS contain an integrated body diode, providing a path to ground for the back emf surge. In this sense, all MOSFETS are a form of bidirectional switch. Capacitors rated to 400 – 500v can be used for back-emf capture. This will eliminate sparking on reed switches, sharply reducing burn out. It may also enable you to manifest the significant battery recharge effect.

Trigger Point: Just before the Center Point

Generally optimal rotor speed and efficiency is reached if the stator coils are pulsed just before the center point is reached. The reason for this is simple enough. There is a small delay between the application of the magnetic field H, and the resultant flux B manifested in the core. Triggering the demagnetization pulse just before the center point, allows for this delay. Higher quality core materials / and or a smaller scale of construction, will reduce the length of this delay.

Timing: Different options, different advantages

Hall ics are fragile. While a little more complicated to implement, optical systems are the most robust brushless solutions. The other option is a tiny generator coil, with diode circuitry as a trigger, but the output from such coils is very rough, and would only be suitable to trigger transistors, which is turn power the main circuit switch, which may be a higher performing MOSEFT type. For over-unity back emf output, quality MOSFET based switching solutions are absolutely required.

Note: GENERATOR COILS DIRECTLY POWERING THE MAIN CIRCUIT SWITCH CAUSE A SIGNIFICANT PERFORMANCE LOSS. THIS IDEA IS JUST PLAIN IDIOTIC.

Example Very Simple Induction Coil Based PNP Transistor Circuit Type

Dedicated Low Draw Pickup Coil Circuit

(Basic Transistor Based Commutation)

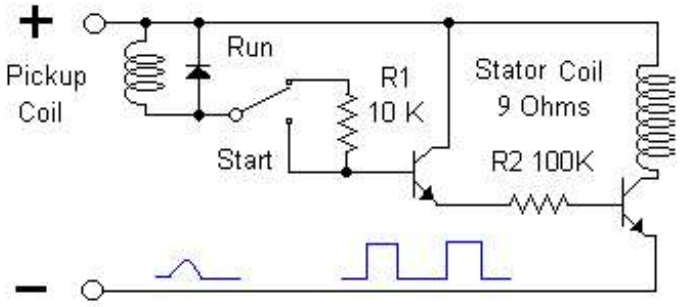

'Start' setting bypasses resistor, giving a longer pulse width

'Run' setting optimises the pulse width for normal operation

Resistor values may need adjustment for motor variations

Design Templates For Simple Adams Motors

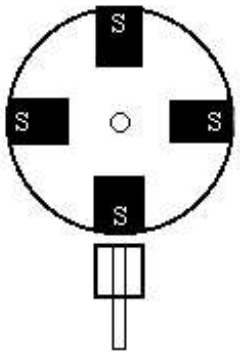

Initial testing layout

Hopeless with a mechanical load

S poles perform slightly better

Place Hall ic opposite stator

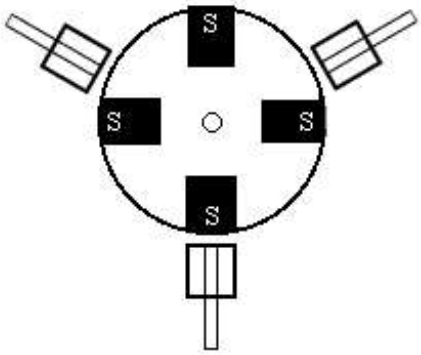

Suggested optimal rotor drive layout

0, 120, 240 degree stator spacing

Delivers near constant rotor torque

Stators pulsed and timed separately

Setting Stator Wind Depth - The Paper Clip Test

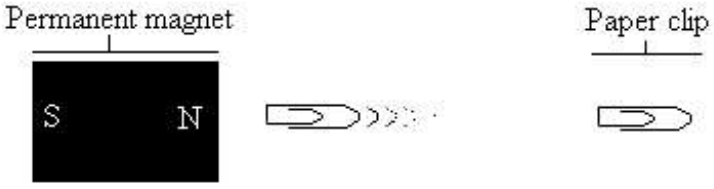

Take one permanent magnet, and one paperclip

Place on smooth surface, and push paper clip towards pm

Note distance at which paper clip flies into face of magnet

Replications

Brian's CD Motor

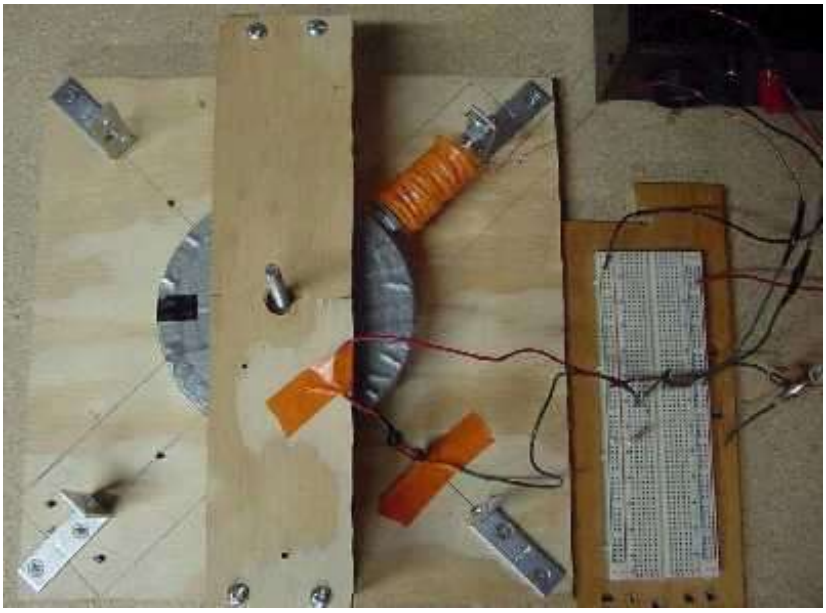

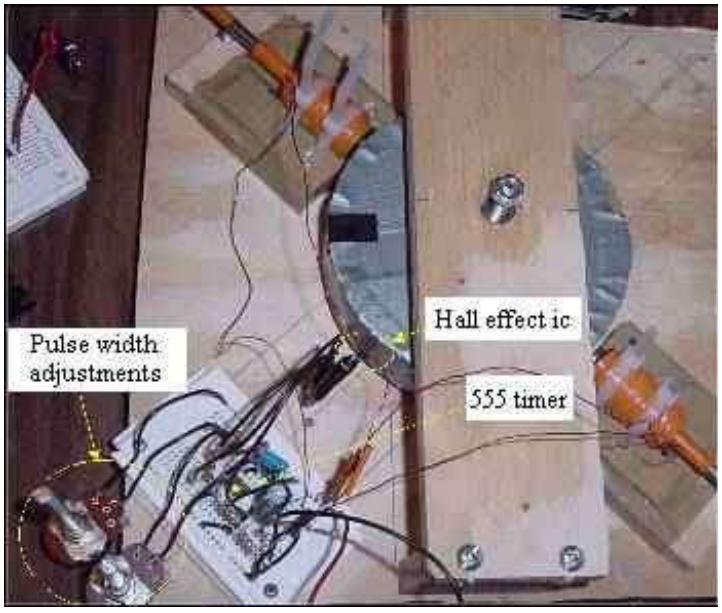

The only deviation from my design Brain made was his use of slightly larger 1” magnets. Sadly, this was enough to result in a motor that ran 'hot' rather than 'cold.' However, this identified pulse width as a critical variable, and with the addition of 555 circuitry, cool ambient operation was easily obtained.

Matts CD Motor / Hard Drive Motor Combo Experiment

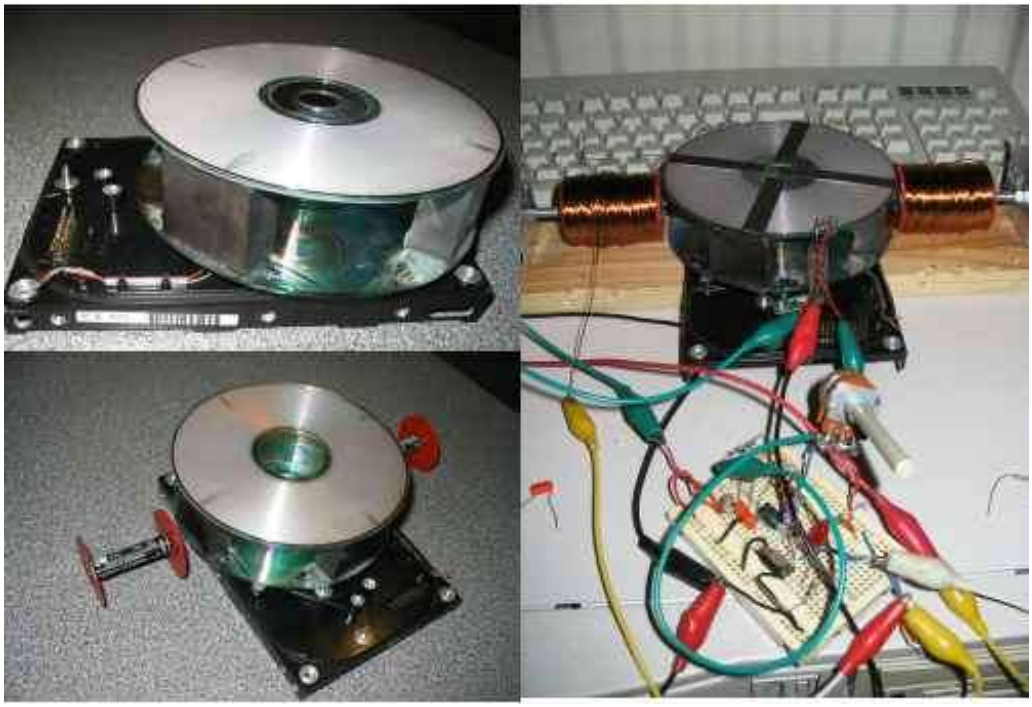

Matt's Comments

I've built an Adams motor based on the ideas from your CD Adams motor. I had to change a few items because of what I had available.

It uses hard disk base for the bearings, 4 30mm square magnets. I tried to follow your rules as accurately as possible based on the larger magnets. I used .56mm winding wire as you suggested for the stators but based on the larger magnets each winding came to around 10 ohms. The magnets were sandwiched in between 2 CD's and the whole thing mounted on the hard disk motor. I used an infa red receiver and emitter taken from the inside of a mouse for the optical eye. The signal fed into a simple transistor and then into 555 timer for creating pulses.

I got the thing running from the start, but the power transistor driving the stators ran hot, and the rotor ran pretty slow. After another night of tweaking, moving the eye and altering the pulse width, I've now managed to get the motor running with a stone cold power transistor. I've put a multimeter on the input and it draws around 170mA I don’t know what rpm its going at but it seems to be doing a fair few rpm.

I've included some pictures of the thing when it's running but because of the flash I don’t think you get much sense of speed. I tried adjusting the shutter speed so I could measure the blur on the rotor to find out how fast the thins spinning at.

Feel free to use the pics as you wish.

Regards.
Matt

Exact CD Motor Replication

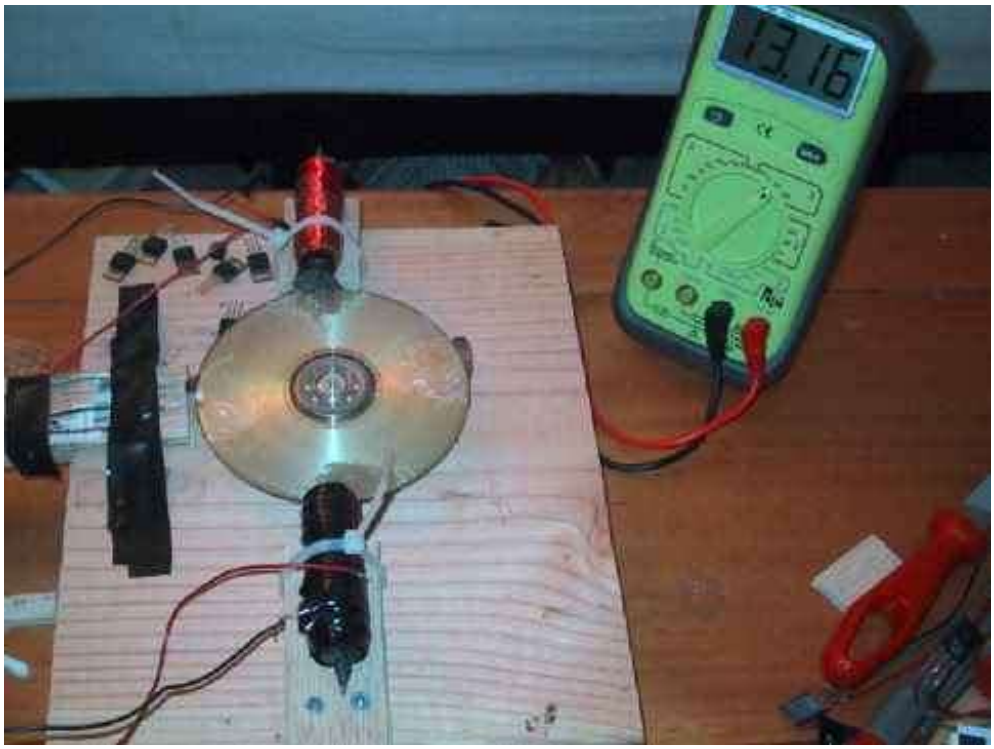

Bill's Modified Kit Motor

'I couldn't believe how easy it was for a novice to construct a machine from Tim's website and get cold running first time. My simple Hall effect driven motor is smooth and really does defy belief in how efficient it is. My machine uses a mere 70 miliamps per hour, and I do indeed get the chill effect Tim describes.'

Bill, England, January 2003.'

Roland's Modified Kit Motor Experiments

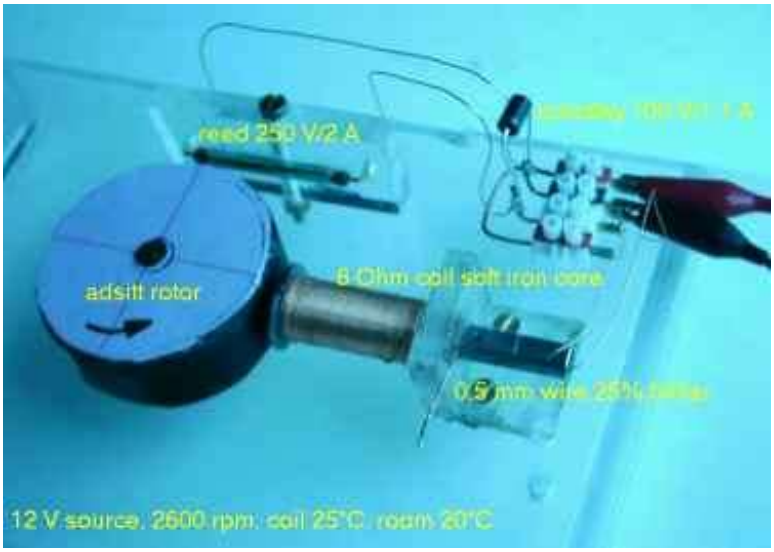

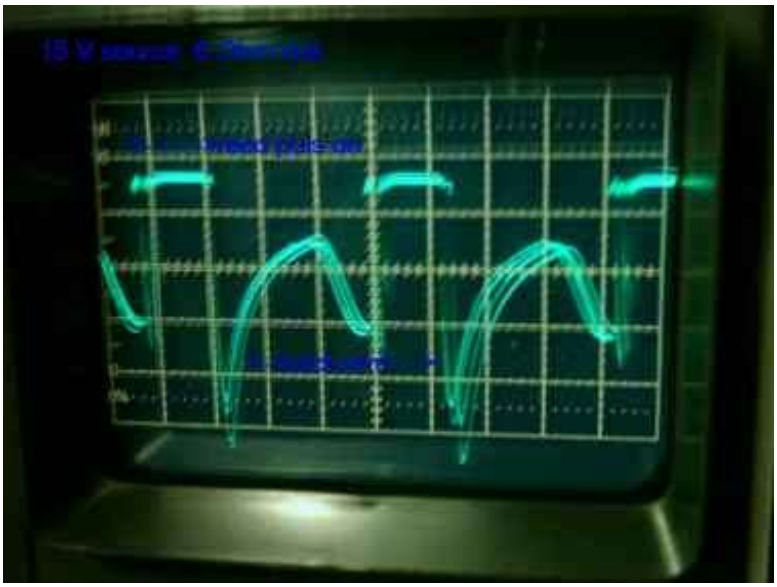

The accusation the Adams motor back emf effect is 'voltage only,' is shown to be untrue by this extremely clear oscilloscope trace. The substantial current component is simply unarguable. These are independently repeatable scientific results.

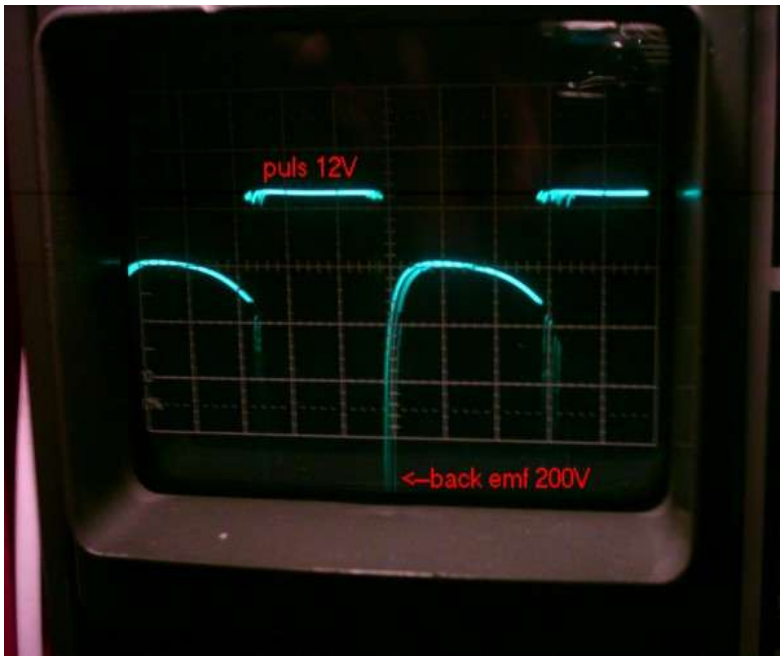

Comments

The Schottky diode in parallel with the reed switch successfully eliminated the sparking effects that were damaging the reed contact. I could not fix the reed on a point however, because when I start the motor, it runs to 2000 rpm. Then I have to change the position to shorten the stator coil input pulse, which boosts rotor speed up to about 2575 rpm.

Setup is now thus:

12 V acid battery 44 Ah
Reed 250 V/2 A
Schottky 100 V/1,1 A
4 rotor magnet: diameter 18 mm, length 10 mm
stator coil: soft iron core diameter 9 mm, wounded diameter 18 mm, inner 25% bifilar, 0,5 mm wire, 6 Ohm, length 38 mm
2603 rpm +/- 0,1 rpm
room: 20°C coil: 25°C

Testing

Start with: 12,53 V
After 1 min: Voltage jumps between 12,45 and 12,52
After 1 h: Voltage jumps between 12,42 and 12,47
After 3 h: Voltage jumps between 12,41 and 12,44
Disconnected battery shows 12,43 V

So I say thank you for your very important suggestions. The reed and the Schottky - it's so simple and cheap. The strong back-emf effect certainly did manifest, so I must conclude this was definitely a good first unit to learn about the Adams motor effect.

Greetings from Germany

Roland

The Original Hard Drive Motor

This fascinating motor was based upon a rotor scavenged from an old computer hard drive. Hence as one would expect, it is almost entirely frictionless, and also very well calibrated. Between the dual hard drive platters reside 4 1/2 " (12.7mm) square faced NIB magnets, fixed in place with high strength epoxy glue, at 90 degrees apart. The diameter of the hard drive platters (disks) is 130mm. The stator cores are made from permalloy (these were found to produce better results than relay cores). The dimensions of stator cores are as follows = 6x6x45mm. Each stator has 450 turns of enameled copper wire of 0.54mm diameter / 24awg.

In the above picture you can see the oscilloscope reading. The back EMF (cemf) was connected to the power supply (car / automobile battery 12V). The duration of the pulse command and back EMF spike was measured on an oscilloscope, and as can be seen, the measured back EMF is a full 80% of the delivered pulse width, even using basic transistor grade switching parts! The motor runs at about 2800 RPM, and does so ABSOLUTELY COLD, as does the circuitry.

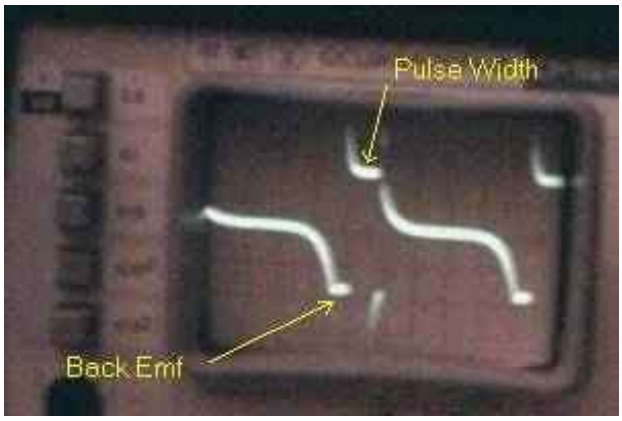

The battery started with a rating of 12.38V
Then a load (the motor) was placed on it, and the battery voltage fell to 12.32V
After 2 hours the battery voltage rose to 12.35V
After 20 hours battery voltage was recorded slightly lower at 12.32V
Then the battery was then disconnected

Adeonekonade's Replication

These pictures were posted independently on the Internet, but the site has not been accessible recently, so I decided to include them in the standard pdf download. Adeonekonade used a temperature probe, and recorded a genuine, and persistent drop in temperature, while the motor was running. He also tried other arrangements that departed from my suggested rotor / stator geometry, and discovered the motor began to heat up. While I had been accused of lying about the temperature drop, because such a thing was 'impossible and against all the laws of physics,' this wholly independent replication, with measured probe readings, rather settled the argument. Adeon kindly validated voltage input harmonics.

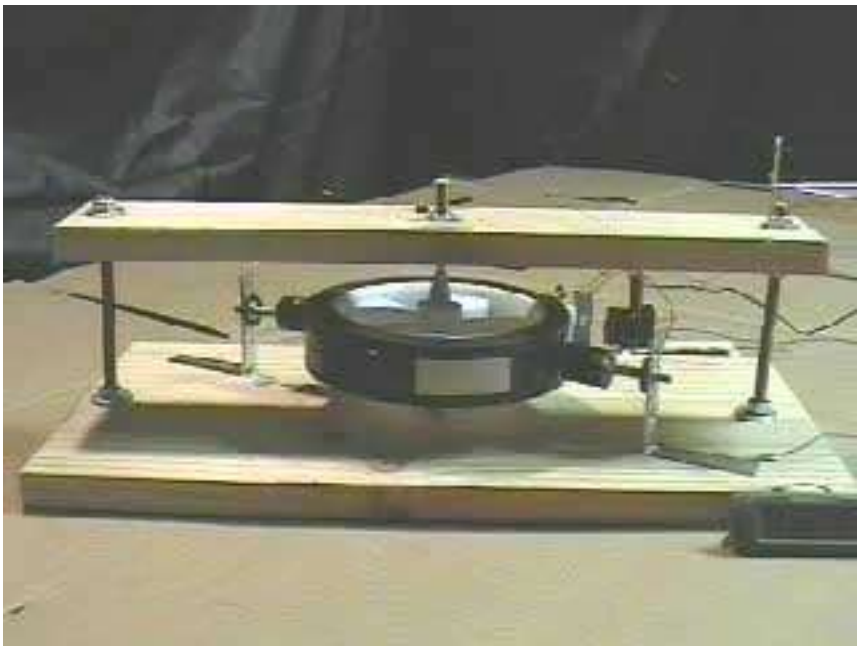

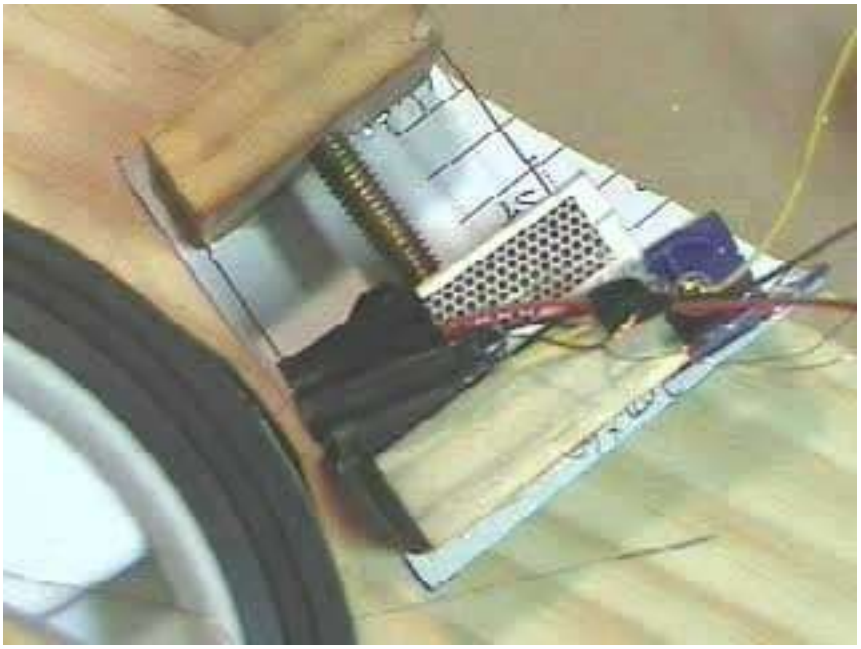

Please note that while best overall motor performance may be found with 9 ohm coils, the greatest temperature drop may be found with 24 awg wire and 4 - 5 ohm sets. Personally, I felt when optimized for temperature, the motor was always at its most impressive, as output numbers can always be explained away in some fashion by an academic. Measured temperature drops can not be dismissed quite so easily. Despite several challenges on my part, no skeptic has yet been able to cite a reference from the mainstream literature, to an electromagnetic system that drops in temperature under load.

The CD motor is a simple and robust experiment that can easily be replicated using the instructions contained within this file. Built as stated, it performs as stated.

POLYESTER CAPACITORS

	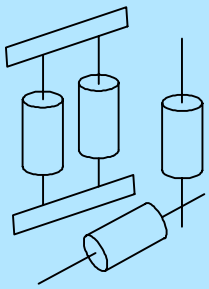	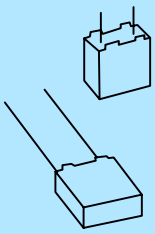	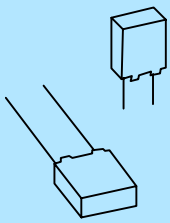
	MULTIPURPOSE	**HIGH PERFORMANCE** **WOUND & *STACKED TECHN.*** **DIN 44122**	**HIGH PERFORMANCE** ***STACKED TECHNOLOGY***
SERIES	**MKT A50**	**MKT R82**	**MKT RSB**
Pitch	**Axial**	**5 mm**	**5 mm**
Dielectric	Polyester	Polyester	Polyester
Electrodes	Metallized film	Metallized film	Metallized film
Capacitance range	0.001 to 10 µF	0.001 to 4.7 µF	0.001 to 1.5 µF
Rated voltage	50 to 1000 Vdc	50 to 400 Vdc	63 to 630 Vdc
Available tolerance	±5 ±10 ±20 %	±5 ±10 ±20 %	±5 ±10 ±20 %
Pulse rise time (dV/dt)	1 to 50 V/µs	25 to 400 V/µs	250 to 800 V/µs
Climatic category (IEC 60068-1)	55/100/56	55/100/56	55/125/56
Operating temperature range	-55 to +105°C	-55 to +105°C	-55 to +125°C
Packing	Loose or taped	Loose or taped	Loose or taped

	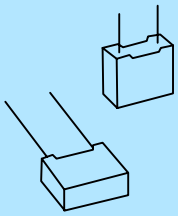	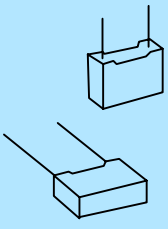	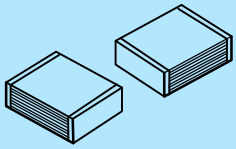
	MULTIPURPOSE **WOUND & *STACKED TECHN.***	**MULTIPURPOSE** **WOUND & *STACKED TECHN.***	**MULTIPURPOSE**
SERIES	**MKT R66**	**MKT R60**	**MKT LDE**
Pitch	**7.5 mm**	**10 to 27.5 mm**	**SMD (size: 12.06 to 60.54)**
Dielectric	Polyester	Polyester	Polyester (PEN)
Electrodes	Metallized film	Metallized film	Metallized film
Capacitance range	0.001 to 3.3 µF	0.001 to 22 µF	0.001 to 4.7 µF
Rated voltage	63 to 630 Vdc	63 to 1000 Vdc	50 to 630 Vdc
Available tolerance	±5 ±10 ±20 %	±5 ±10 ±20 %	±5 ±10 ±20 %
Pulse rise time (dV/dt)	5 to 300 V/µs	1 to 200 V/µs	100 V/µs
Climatic category (IEC 60068-1)	55/100/56	55/100/56	55/125/56
Operating temperature range	-55 to +105°C (125°C)	-55 to +105°C (125°C)	-55 to +125°C
Packing	Loose or taped	Loose or taped	Loose or taped

POLYPROPYLENE CAPACITORS

	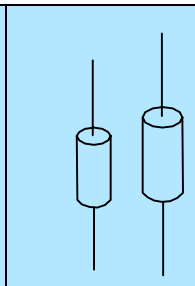	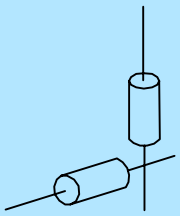	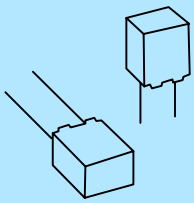
SERIES	**MULTIPURPOSE** **MKP A70**	**HIGH CURRENT** **KP A72**	**TIMING** **KP-MKP R79**
Pitch	**Axial**	**Axial**	**5 mm**
Dielectric	Polypropylene	Polypropylene	Polypropylene
Electrodes	Metallized film	Film-foil	Film-foil Metallized film*
Capacitance range	0.001 to 4.7 μF	47 pF to 0.33 μF	100 pF to 0.0027 μF 0.001 to 0.15 μF*
Rated voltage	160 to 630 Vdc	100 to 2000 Vdc	100 to 630 Vdc
Available tolerance	±5 ±10 ±20 %	±5 ±10 ±20 %	±2.5 ±5 ±10 %
Pulse rise time (dV/dt)	1 to 30 V/μs	1000 to 27000 V/μs	20 to 1000 V/μs
Climatic category (IEC 60068-1)	55/100/56	55/100/56	55/100/56
Operating temperature range	-55 to +105°C	-55 to +105°C	-55 to +105°C
Packing	Loose or taped	Loose or taped	Loose or taped

	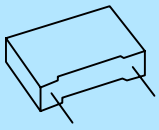	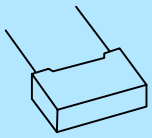	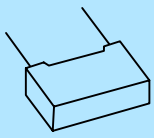	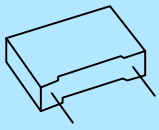	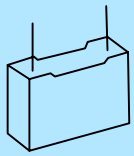
SERIES	**PULSE APPLICATION FOR TV, MONITORS, SMPS & ELECTRONIC LIGHTING** **KP R73**	**MKP R74**	**MKP R75**	**MMKP R76**	**MMKP R77**
Pitch	**7.5 to 37.5 mm**	**10 to 27.5 mm**	**7.5 to 37.5 mm**	**7.5 to 37.5 mm**	**10 to 27.5 mm**
Dielectric	Polypropylene	Polypropylene	Polypropylene	Polypropylene	Polypropylene
Electrodes	Film-foil	Single sided metallized film	Single sided metallized film	Double sided metallized film	Double sided metallized film
Capacitance range	100 pF to 1.5 μF	0.001 to 0.12 μF	0.001 to 22 μF	470pF to 10 μF	0.001 to 0.1 μF
Rated voltage	100 to 2000 Vdc	250 to 900 Vac	160 to 1250 Vdc	250 to 2000 Vdc	250 to 900 Vac
Available tolerance	±2.5 ±5 ±10 %	±5 ±10 %	±5 ±10 ±20 %	±2.5 ±5 ±10 %	±2.5 ±5 ±10 %
Pulse rise time (dV/dt)	2400 to 54000 V/μs	250 to 3000 V/μs	35 to 1300 V/μs	100 to 9500 V/μs	900 to 9500 V/μs
Climatic category (IEC 60068-1)	55/100/56	55/100/56	55/100/56	55/100/56	55/100/56
Operating temperature range	-55 to +105°C	-55 to +105°C	-55 to +105°C	-55 to +105°C	-55 to +105°C
Packing	Loose or taped	Loose or taped	Loose or taped	Loose or taped	Loose or taped

PRECISION CAPACITORS

	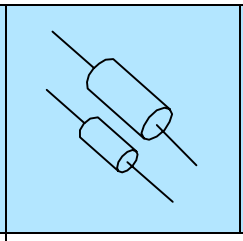	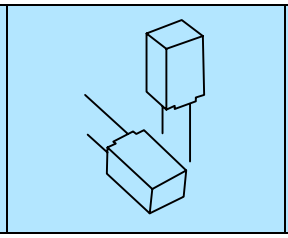	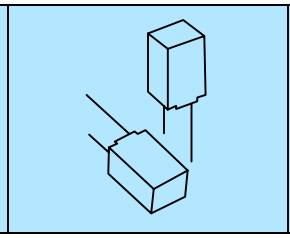	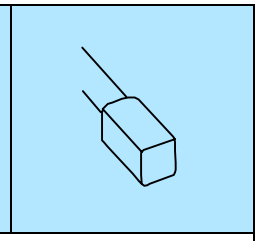
	FILTERING HIGH Q; TELECOM			
SERIES	**MKP A48**	**KP P12 (P02)**	**MKP P14 (P04)**	**KP-MKP P42**
Pitch	**Axial**	**5.08 mm**	**5.08 mm**	**7.18 to 14.3 mm**
Dielectric	Polypropylene	Polypropylene	Polypropylene	Polypropylene
Electrodes	Metallized film	Film-foil	Metallized film	Film-foil Metallized film*
Capacitance range	0.001 to 4.7 µF	22 to 8000 pF	5000 to 47000 pF	100 to 44200 pF 5001 to 432000 pF*
Rated voltage	160 to 250 Vdc	63 Vdc	63 Vdc	63 Vdc
Available tolerance	±1 to ±2.5 %	±0.625 to ±2.5 %	±0.625 to ±2.5 %	±1 to ±2.5 %
Pulse rise time (dV/dt)			10 to 50 V/µs	5 to 50 V/µs
Climatic cat. (IEC 60068-1)	55/085/56	55/085/56	55/085/56	55/085/56
Operating temp. range	-55 to +85°C	-55 to +85°C	-55 to +85°C	-55 to +85°C
Packing	Loose or taped	Taped (P12) Loose (P02)	Taped (P14) Loose (P04)	Loose or taped

INTERFERENCE SUPPRESSION CAPACITORS

	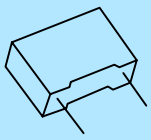	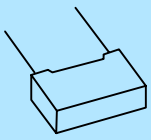	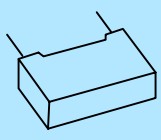	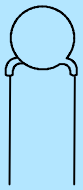	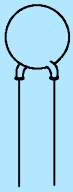	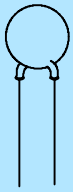
SERIES	**EN 132400** **(IEC60384-14 2nd Edition '95)** **MKT R.41 Y2 / X1 CLASS**	**EN 132400** **(IEC60384-14 2nd Edition '95)** **MKP R.46 X2 CLASS**	**EN 132400** **(IEC60384-14 2nd Edition '95)** **MKP R.49 X1 CLASS**	**EN 132400** **(IEC60384-14 2nd Edition '95)** **CER. DISC K1Y Y1/X1 CLASS**	**EN 132400** **(IEC60384-14 2nd Edition '95)** **CER. DISC K2Y Y2/X1 CLASS**	**EN 132400** **(IEC36084-14 2nd Edition '95)** **CER. DISC K3Y Y2/X1 CLASS**
Pitch	**10 to 37.5 mm**	**10 to 37.5 mm**	**10 to 27.5 mm**	**10 mm**	**5 to 7.5 mm**	**5 to 7.5 mm**
Dielectric	Polyester (250Vac) Polypropyl. (300Vac)	Polypropylene	Polypropylene	Ceramic	Ceramic	Ceramic
Electrodes	Metallized film	Metallized film	Metallized film	Silver plate	Silver plate	Silver plate
Capacitance range	0.001to0.1µF(250Vac) 0.001to1µF (300Vac)	0.01 to 4.7 µF	0.01 to 2.2 µF	100 to 4700pF	10 to 4700pF	10 to 10 000 pF
Rated voltage	250 Vac 300 Vac	275 Vac	310 Vac	440 Vac (Y1/X1)	250 Vac (Y2) 440 Vac (X1)	250 Vac (Y2) 440 Vac (X1)
Available tolerance	±10 ±20 %	±10 ±20 %	±10 ±20 %	±20 %	±10 ±20 %	±20 %
Pulse rise time	300 to 800 V/µs	100 to 500 V/µs	200 to 600 V/µs			
Climatic category (IEC 60068-1)	40/110/56	40/110/56	40/110/56	25/125/21	25/085/21	25/125/21
Operating temperature range	-40 to +110°C	-40 to +110°C	-40 to +110°C	-30 to +125°C	-30 to +85°C	-30 to +125°C
Approvals	ENEC-IMQ, CB; CSA C22.2 N°1; UL 1414; CCEE IEC 60384-14	ENEC-IMQ, CB; CSA C22.2 N°1 UL 1414; UL 1283; CCEE IEC60384-14	ENEC-IMQ; CSA C22.2 N°1; UL 1414; UL 1283	ENEC-FIMKO; cUL 1414 (250Vac)	ENEC-FIMKO; cUL 1414 (250Vac)	ENEC-FIMKO; cUL 1414 (250Vac)
Packing	Loose or taped	Loose or taped	Loose or taped	Loose or taped	Loose or taped	Loose or taped

EMI-RFI FILTERS

	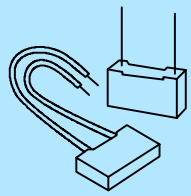	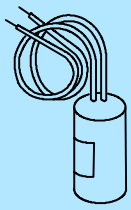	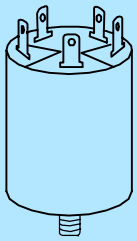	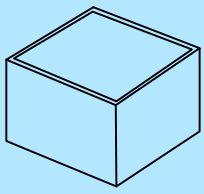	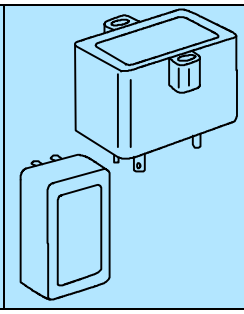
	RC SPARK SUPP.	**WHITE GOOD APPLIANCES**		**CONSUMER APPLIANCES**	
SERIES	**1.43**	**F.AT**	**F.NC**	**F.LH**	**F.AH/F.AA**
Filter type	Single-phase	XY	LC	LC - general purpose (i.e. printed circuit)	LC - general purpose
	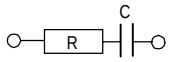	Not for new design	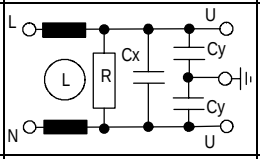	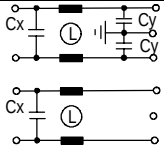	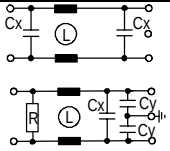
Rated voltage	250 to 630 Vdc 160 to 275 Vac; 50/60 Hz	250 V; 50/60 Hz	275V; 50/60Hz	250 V; 50/60 Hz	250 V; 50/60 Hz
Rated current range			10 to 16 A	0.5 to 6 A	0.5 to 10 A
Climatic category (IEC 60068-1)	40/100/56	25/085/21	25/100/21	25/085/21	25/085/21
Case	Plastic	Plastic	Plastic	Plastic; PCB mounting	Plastic; screw fixing or PCB mounting
Terminals	For printed circuits or flexible leads	Flexible leads with or without faston	Faston 6.3 × 0.8mm	For printed circuit	For printed circuit or faston 2.8 × 0.5mm
Approvals	EN 132400 only 275 Vac	EN 132400	EN 133200; UL 1283	VDE 0565-3	VDE 0565-3; UL 1283; CSA 22.2 N°8 (on certain models)

	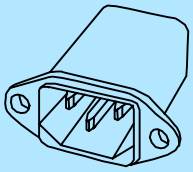	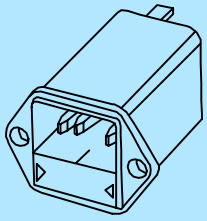	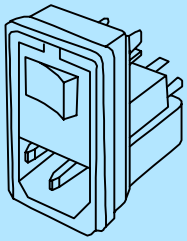	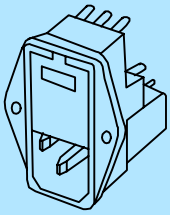	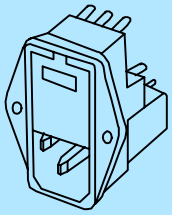
	CONSUMER APPLIANCES				
SERIES	**F.AN/F.BN**	**F.BP/F.BQ**	**F.MA/F.MB F.MC/F.MD**	**F.MF/F.MG**	**F.MH/F.MK F.ML/F.MM**
Filter type	Plug filter	Plug filter with fuse holders	Multifunction; fuse holders and main switch	Multifunction; fuse holders and voltage selector	Multifunction; fuse holders, main switch and voltage selector
	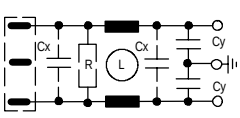	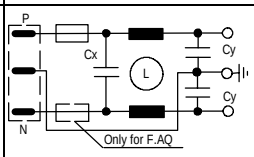	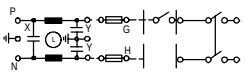	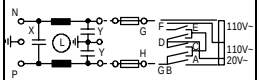	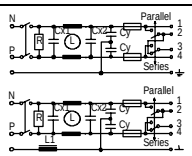
Rated voltage	250 V; 50/60 Hz	250 V; 50/60 Hz	250 V; 50/60 Hz	250 V; 50/60 Hz	250 V; 50/60 Hz
Rated current range	1 to 15 A	1 to 10 A	1 to 6 A	1 to 6 A	1 to 6 A
Climatic category (IEC 60068-1)	25/085/21	25/085/21	25/085/21	25/085/21	25/085/21
Case	Metal; screw fixing	Metal; screw fixing	Metal; screw or snap-in fixing	Metal; screw or snap-in fixing	Metal; screw fixing
Terminals	Faston 2.8 × 0.5mm or 6.3 × 0.8mm	Faston 6.3 × 0.8mm	Faston 6.3 × 0.8mm or 2.8 × 0.5mm	Faston 6.3 × 0.8mm or 2.8 × 0.5mm	Faston 6.3 × 0.8mm
Approvals	EN 133200; UL 1283; CSA 22.2 N°8 (on certain models)	EN 133200; UL 1283; CSA 22.2 N°8	VDE 0565-3; UL 1283; CSA 22.2 N°8	VDE 0565-3; UL 1283; CSA 22.2 N°8	VDE 0565-3; UL 1283; CSA 22.2 N°8

EMI-RFI FILTERS

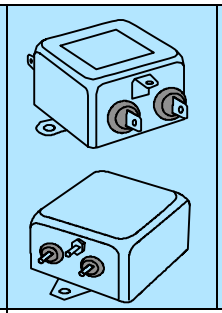
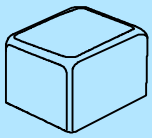
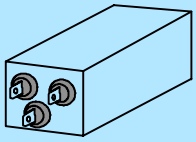
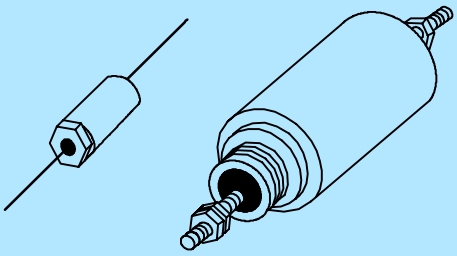

SERIES	PROFESSIONAL APPLIANCES			FEED THROUGH		
	F.AI/F.AM F.AK/F.AR/ F.AS	**F.AM.AV**	**F.LLE2** (AI/AS/AN/FP types)	**AF- -060 AF- -100** Film dielectric	**AK- -A00 AD- -170** Ceramic dielectric	**F.LL.DU F.LL.DH** Film dielectric
Filter type	LC - single or double stage	LC - single or double stage for printed circuit	LC - double stage	C/LC/CL/PI/T/2PI/2T configuration		PI configuration
	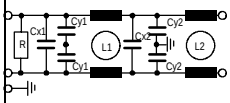	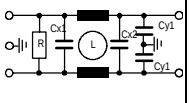	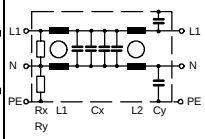	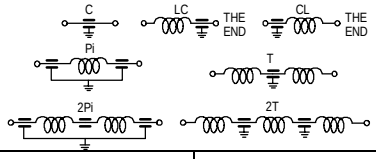		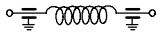
Rated voltage	250 V; 50/60 Hz	250 V; 50/60 Hz	250 V; 50/60 Hz	100 to 630 Vdc	80 to 600 Vdc	350 to 750 Vdc 250 to 440 Vac
Rated current range	0.5 to 40 A	3.3 to 16 A	6 to 63 A	1 to 30 A	0.06 to 25 A	16 to 300 A
Climatic category (IEC 60068-1)	25/085/21	25/085/21	25/085/21	55/125/56		40/085/56
Case	Metal; screw fixing	Metal; PCB mounting	Metal	Metal; screw fixing		Metal; screw fixing
Terminals	Faston 6.3 × 0.8mm Flexible leads Screws M4	For printed circuit	Faston 6.3 × 0.8mm	Wire or tag		Screws
Approvals	VDE 0565-3; UL 1283; CSA 22.2 N°8 (on certain models)	VDE 0565-3; UL 1283; CSA 22.2 N°8 (on certain models)	UL 1283 (on certain models)	BS 9121F0020 (AFCL100) BS 9121F0021 (AFCL060) UL 1283 (on certain models)	BS 9121F0008	UL 1283 (on certain models)
				Meets requirements of MIL-F-15733		

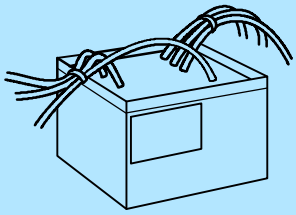
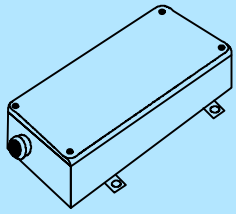

SERIES	THREE-PHASE	
	F.LL.D3 (xx type)	**F.TR/F.LL.D3**
Filter type	Chokes	Standard and custom designed filters, various cabinets, various circuities
Rated voltage	Max 440 V; 50/60 Hz	Max 600 V (PH-PH); 50/60 Hz
Rated current range	75 to 150 A	3 to 450 A
Climatic category (IEC 60068-1)	25/085/21	25/085/21
Case	Metal; screw fixing	Metal; screw fixing
Terminals	Flexible leads	Clamp, screws, wires upon request
Approvals		VDE 0565-3; UL 1283; CSA 22.2 N°8 (on certain models)

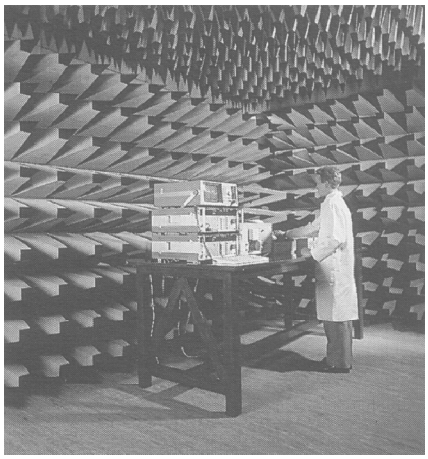

Arcotronics has designers, production departments and suitable laboratory facilities in Italy, Germany and Great Britain to assist and advise customers on EMC problems.
Capital investment by Arcotronics has provided screened rooms in Italy and Germany and a large anechoically lined screened room in Great Britain.
This General short-form is a brief summary of the whole filter range produced in Arcotronics plants.
Custom made filters designed according to special customers' requirements represent one of the most important and strong point of Arcotronics Technical Service.

March 2003

METALLIZED POLYPROPYLENE A.C. CAPACITORS

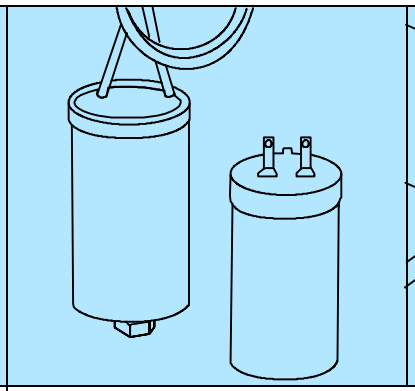
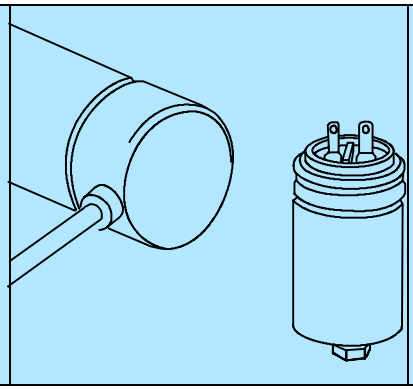
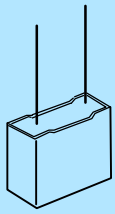

SERIES	MOTOR RUN APPLICATIONS		
	MKP C.27 C27.4 - C27.6 - C27.7	**MKP C.87** C87.0 - C87.8	**MKP C.24**
Dielectric	Polypropylene		
Electrodes	Metallized self-healing film		
Capacitance range	1 to 100 μF	1 to 80 μF	0.5 to 14 μF
Rated voltage	150 to 500 Vac	275 to 500 Vac	400 to 450 Vac
Available tolerance	±5 ±10 %	±5 ±10 %	±5 ±10 %
Operating temperature range	-25 to +100°C	-25 to +85°C	-25 to +85°C
Operating frequency	50 to 60 Hz	50 to 60 Hz	50 to 60 Hz
Fail safe device	NO	YES	NO
Case	Plastic	Aluminium	Plastic
Approvals	VDE; UL	VDE, UL	VDE
Recognized	Countries partecipating in CB scheme	Countries partecipating in CB scheme	Countries partecipating in CB scheme
Reference standards	EN 60252 - UL 810 construction only	EN 60252 - UL 810	EN 60252

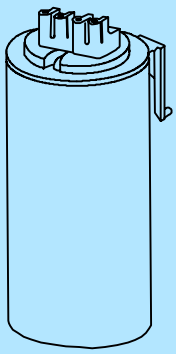
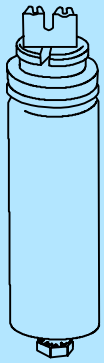

SERIES	LIGHTING APPLICATIONS	
	MKP C.3B	**MKP C.95** C95.0 - C95.4
Dielectric	Polypropylene	
Electrodes	Metallized self-healing film	
Capacitance range	2 to 50 μF	2 to 60 μF
Rated voltage	250 Vac	250 to 450 Vac
Available tolerance	±5 ±10 %	±4 ±10 %
Operating temperature range	-25 to +85°C	-25 to +100°C
Operating frequency	50 to 60 Hz	50 to 60 Hz
Fail safe device	NO	YES
Case	Plastic	Aluminium
Approvals	ENEC 03	ENEC 03 - IMQ - UL
Reference standards	EN 61048/A2 - EN 61049	EN 61048/A2 - EN 61049 - UL 810

CAPACITORS FOR POWER FACTOR CORRECTION

	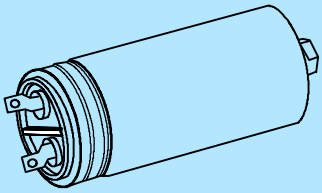	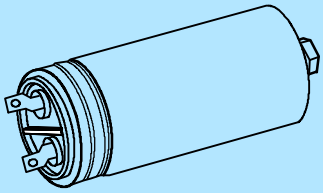	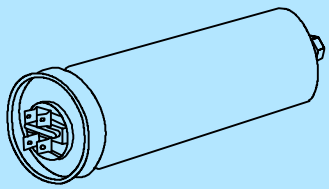
SINGLE-PHASE	**General purpose continuous use**	**General purpose and filtering**	**High reliability continuous use**
SERIES	**MKP C.93**	**MKP C.93-2In**	**C.20G**
Dielectric	Polypropylene		
Electrodes	Metallized self-healing film		Double Metallized paper
Capacitance range	13.7 to 105 μF	13.7 to 105 μF	10.6 to 83 μF
Rated voltage (A.C.)	230 to 525 Vac	230 to 525 Vac	400 to 1000 Vac
Rated RMS current	7.5 to 13 A	up to 18 A	18 to 30 A
Rated power	0.83 to 4.17 kvar	0.83 to 4.17 kvar	0.83 to 4.17 kvar
Climatic category	-25/D	-25/D	-25/D
Operating temperature range	-25 to 55°C	-25 to 55°C	-25 to 70°C
Pulse rise time	30V/μs	35V/μs	100V/μs
Ageing test (capacitance decrease within 5%)	80 000 hours	80 000 hours	130 000 hours
Fail safe device	YES	YES	YES
Approvals	IMQ; UL	IMQ; UL	
Reference standard	IEC 60831 - EN60831 - UL 810	IEC 60831 - EN60831 - UL 810	IEC 60831 - EN60831

	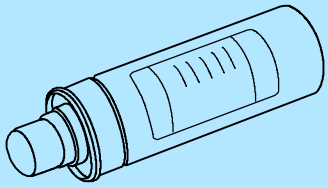	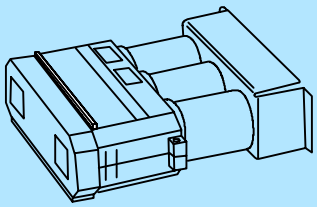	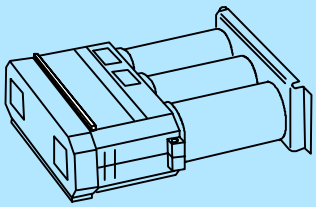
ASSEMBLED THREE-PHASE	**General purpose**	**Modular**	**Modular**
SERIES	**MKP C.9T**	**MKP C.88**	**C.21**
Dielectric	Polypropylene		
Electrodes	Metallized self-healing film		Double metallized paper
Rated voltage (A.C.)	400 to 800 Vac	230 to 690 Vac	400 to 750 Vac
Rated RMS current	up to 47 A	up to 25 A	up to 31 A
Rated power	1 to 25 kvar	1 to 12.5 kvar	5 to 10 kvar
Climatic category	-25/D	-25/D	-25/D
Operating temperature range	-25 to 55°C	-25 to 55°C	-25 to 55°C
Pulse rise time	25V/μs	30V/μs	100V/μs
Ageing test (capacitance decrease within 5%)	50 000 hours	80 000 hours	130 000 hours
Fail safe device	YES	YES	YES
Approvals		IMQ	
Reference standard	IEC 60831 - EN60831	IEC 60831 - EN60831	EN60831 - EN60831

POWER FACTOR CORRECTION CABINETS AND BANKS

	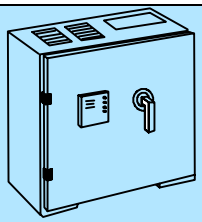	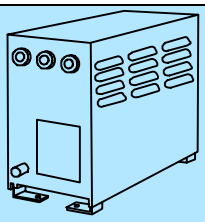	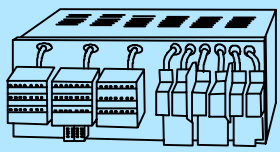
EQUIPMENTS	**Automatic power compensation**	**Direct-on line equipments**	**Modular racks 19”**
SERIES	**C.94 - C.92**	**C.9B - C.9D**	**C.91**
Rated voltage (A.C.)	230 to 690 Vac	230 to 700 Vac	230 to 690 Vac
Rated power	7.5 to 1200 kvar	7.5 to 100 kvar	12.5 to 100 kvar
Operating frequency	50 to 60 Hz	50 to 60 Hz	50 to 60 Hz
Operating temperature range	0 to 40°C	0 to 70°C	-25 to +55°C
Approvals	CESI INSTITUTE		
Reference standard	IEC 60439 - EN60439	IEC 60439 - EN60439	IEC 60439 - EN60439

CAPACITORS FOR POWER ELECTRONICS

	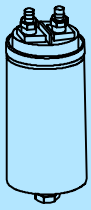	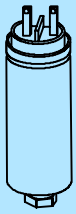	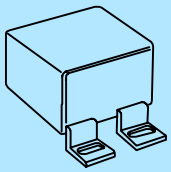	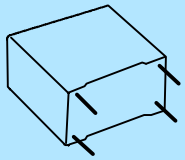
DRY TECHNOLOGY	**COMMUTATION**	**SNUBBER**	**SNUBBER & SWITCHING**	**SNUBBER & SWITCHING**
SERIES	**MKP 1.44/A**	**MKP 1.44/B**	**MKP C.4BS C.4BT**	**MKP C.4AS C.4AT**
Dielectric	Polypropylene			
Electrodes	Metallized self-healing film			
Capacitance range	1 to 400 µF	0.022 to 5 µF	0.047 to 60 µF	0.01 to 33 µF
Rated voltage (D.C.)	400 to 2000 Vdc	850 to 3000 Vdc	250 to 3000 Vdc	250 to 3000 Vdc
Rated voltage (A.C.)	250 to 900 Vac	500 to 1000 Vac	160 to 750 Vac	160 to 750 Vac
Available tolerance	±5 ±10 %	±5 ±10 %	±5 ±10 %	±5 ±10 %
Rated RMS current	5 to 60 A	4 to 25A	8 to 33 A	3 to 22 A
Pulse rise time	20 to 500 V/µs	250 to 750 V/µs	20 to 1100 V/µs	15 to 1850 V/µs
Climatic category (DIN 40040)	GPD	GPD	GPD	GPD
Operating temperature range	-40 to +85°C	-40 to +85°C	-40 to +85°C	-40 to +85°C

	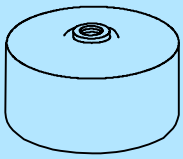	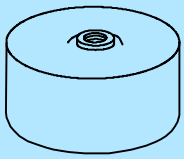	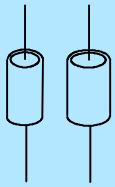	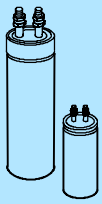
DRY TECHNOLOGY	**GTO SNUBBER**	**CLAMPER**	**SNUBBER & SWITCHING**	**HARMONICS FILTERS**
SERIES	**MKP C.4DC**	**MKP C.4DR**	**MKP C.4C - C.4G C.4H - C.4M**	**MKP 1.44/3**
Dielectric	Polypropylene			
Electrodes	Metallized self-healing film			
Capacitance range	0.5 to 6 µF	1 to 220 µF	0.010 to 40 µF	50 to 600 µF
Rated voltage (D.C.)	850, 1000, 1400 Vdc	400 to 1500 Vdc	250 to 3000 Vdc	400 to 1200 Vdc
Rated voltage (A.C.)	500 to 700 Vac	160 to 500 Vac	160 to 750 Vac	250 to 550 Vac
Available tolerance	±5 ±10 %	±5 ±10 %	±5 ±10 %	±10 %
Rated RMS current	30 to 70 A	25 to 74 A	5 to 12 A	30 to 90 A
Pulse rise time	380 to 1000 V/µs	40 to 400 V/µs	1 to 2100 V/µs	5 to 30 V/µs
Operating temperature range	-40 to +85°C	-40 to +85°C	-40 to +85°C	-40 to +70°C

	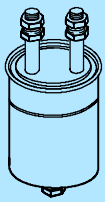		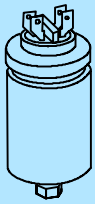
OIL IMPREGNATED TECHNOLOGY	**COMMUTATION & HARMONICS FILTERS**	**SNUBBER**	**GENERAL PURPOSE**
SERIES	**C.20A**	**C.20B**	**C.20F**
Dielectric	Polypropylene		
Electrodes	Double metallized paper		
Capacitance range	6.8 to 150 µF	0.1 to 10 µF	0.22 to 47 µF
Rated voltage (D.C.)	600 Vdc to 1100 Vdc	900, 1400, 1700, 2100, 3350 Vdc	600, 750, 900 Vdc
Rated voltage (A.C.)	420 Vac to 780 Vac	640, 990, 1200, 1480, 2320 Vac	420, 530, 640 Vac
Available tolerance	±10 ±20 %	±10 ±20 %	±10 ±20 %
Rated RMS current	18 to 80 A	18 to 80 A	10 to 18 A
Pulse rise time	50 to 500 V/µs	300 to 1800 V/µs	30 to 500 V/µs
Operating temperature range	-25 to +70°C	-25 to +70°C	-25 to +70°C
Fail safe device	YES	YES	YES

HOW COSMIC FORCES SHAPE OUR DESTINIES

("Did the War Cause the Italian Earthquake")

by Nikola Tesla

Previous Article Next Article

New York *American*, February 7, 1915

Every living being is an engine geared to the wheelwork of the universe. Though seemingly affected only by its immediate surrounding, the sphere of external influence extends to infinite distance. There is no constellation or nebula, no sun or planet, in all the depths of limitless space, no passing wanderer of the starry heaven, that does not exercise some control over its destiny—not in the vague and delusive sense of astrology, but in the rigid and positive meaning of physical science.

More than this can be said. There is no thing endowed with life—from man, who is enslaving the elements, to the humblest creature—in all this world that does not sway it in turn. Whenever action is born from force, though it be infinitesimal, the cosmic balance is upset and universal motion result.

Herbert Spencer has interpreted life as a continuous adjustment to the environment, a definition of this inconceivably complex manifestation quite in accord with advanced scientific thought, but, perhaps, not broad enough to express our present views. With each step forward in the investigation of its laws and mysteries our conceptions of nature and its phases have been gaining in depth and breadth.

In the early stages of intellectual development man was conscious of but a small part of the macrocosm. He knew nothing of the wonders of the microscopic world, of the molecules composing if of the atoms making up the molecules and of the dwindlingly small world of electrons within the atoms. To him life was synonymous with voluntary motion and action. A plant did not suggest to him what it does to us—that it lives and feels, fights for its existence, that it suffers and enjoys. Not only have we found this to be true, but we have ascertained that even matter called inorganic, believed to be dead, responds to irritants and gives unmistakable evidence of the presence of a living principle within.

Thus, everything that exists, organic or inorganic, animated or inert, is susceptible to stimulus from the outside. There is no gap between, no break of continuity, no special and distinguishing vital agent. The same law governs all matter, all the universe is alive. The momentous question of Spencer, "What is it that causes inorganic matter to run into organic forms!" has been answered. It is the sun's heat and light. Wherever they are there is life. Only in the boundless wastes of interstellar space, in the eternal darkness and cold, is animation suspended, and, possibly, at the temperature of absolute zero all matter may die.

MAN AS A MACHINE

This realistic aspect of the perceptible universe, as a clockwork wound up and running down, dispensing with the necessity of a hypermechanical vital principle, need not be in discord with our religious and artistic aspirations—those **undefinable** and beautiful efforts through which the human mind endeavors to free itself from material bonds. On the contrary, the better understanding of nature, the consciousness that our knowledge is true, can only be all the more elevating and inspiring.

It was Descartes, the great French philosopher, who in the seventeenth century, laid the first foundation to the mechanistic theory of life, not a little assisted by Harvey's epochal discovery of blood circulation. He held that animals were simply automata without consciousness and recognized that man, though possessed of a higher and distinctive quality, is incapable of action other than those characteristic of a machine. He also made the first attempt to explain the physical mechanism of memory. But in this time many functions of the human body were not as yet understood, and in this respect some of his assumptions were erroneous.

Great strides have since been made in the art of anatomy, physiology and all branches of science, and the workings of the man-machine are now perfectly clear. Yet the very fewest among us are able to trace their actions to primary external causes. lt is indispensable to the arguments I shall advance to keep in mind the main facts which I have myself established in years of close reasoning and observation and which may be summed up as follows:

1. The human being is a self-propelled automaton entirely under the control of external influences. Willful and predetermined though they appear, his actions are governed not from within, but from without. He is like a float tossed about by the waves of a turbulent sea.

2. There is no memory or retentive faculty based on lasting impression. What we designate as memory is but increased responsiveness to repeated stimuli.

3. It is not true, as Descartes taught, that the brain is an accumulator. There is no permanent record in the brain, there is no stored knowledge. Knowledge is something akin to an echo that needs a disturbance to be called into being.

4. All knowledge or form conception is evoked through the medium of the eye, either in response to disturbances directly received on the retina or to their fainter secondary effects and reverberations. Other sense organs can only call forth feelings which have no reality of existence and of which no conception can be formed

5. Contrary to the most important tenet of Cartesian philosophy that the perceptions of the mind are illusionary, the eye transmits to it the true and accurate likeness of external things. This is because light propagates in straight lines and the image cast on the retina is an exact reproduction of the external form and one which, owing to the mechanism of the optic nerve, can not be distorted in the transmission to the brain. What is more, the process must be reversible, that in to say, a form brought to consciousness can, by reflex action, reproduce the original image on the retina just as an echo can reproduce the original disturbance If this view is borne out by experiment an immense revolution in all human relations and departments of activity will be the consequence.

NATURAL FORCES INFLUENCE US

Accepting all this as true let us consider some of the forces and influences which act on such a wonderfully complex automatic engine with organs inconceivably sensitive and delicate, as it is carried by the spinning terrestrial globe in lightning flight through space. For the sake of simplicity we may assume that the earth's axis is perpendicular to the ecliptic and that the human automaton is at the equator. Let his weight be one hundred and sixty pounds then, at the rotational velocity of about 1,520 feet per second with which he is whirled around, the mechanical energy stored in his body will be nearly 5,780,000 foot pounds, which is about the energy of a hundred-pound cannon ball.

This momentum is constant as well as upward centrifugal push, amounting to about fifty-five hundredth of a pound, and both will probably be without marked influence on his life functions. The sun, having a mass 332,000 times that of the earth, but being 23,000 times farther, will attract the automaton with a force of about one-tenth of one pound, alternately increasing and diminishing his normal weight by that amount

Though not conscious of these periodic changes, he is surely affected by them.

The earth in its rotation around the sun carries him with the prodigious speed of nineteen miles per second and the mechanical energy imparted to him is over 25,160,000,000 foot pounds. The largest gun ever made in Germany hurls a projectile weighing one ton with a muzzle velocity of 3,700 feet per second, the energy being 429,000,000 foot pounds. Hence the momentum of the automaton's body is nearly sixty times greater. It would be sufficient to develop 762,400 horse-power for one minute, and if the motion were suddenly arrested the body would be instantly exploded with a force sufficient to carry a projectile weighing over sixty tons to a distance of twenty-eight miles.

This enormous energy is, however, not constant, but varies with the position of the automaton in relation to the sun. The circumference of the earth has a speed of 1,520 feet per second, which is either added to or subtracted from the translatory velocity of nineteen miles through space. Owing to this the energy will vary from twelve to twelve hours by an amount approximately equal to 1,533,000,000 foot pounds, which means that energy streams in some unknown way into and out of the body of the automaton at the rate of about sixty-four horse-power.

But this is not all. The whole`solar system is urged towards the remote constellation Hercules at a speed which some estimate at some twenty miles per second and owing to this there should be similar annual changes in the flux of energy, which may reach the appalling figure of over one hundred billion foot pounds. All these varying and purely mechanical effects are rendered more complex through the inclination of the orbital planes and many other permanent or casual mass actions.

This automaton, is, however subjected to other forces and influences. His body is at the electric potential of two billion volts, which fluctuates violently and incessantly. The whole earth is alive with electrical vibrations in which he takes part. The atmosphere crushes him with a pressure of from sixteen to twenty tons, according, to barometric condition. He receives the energy of the sun's rays in varying intervals at a mean rate of about forty foot pounds per second, and is subjected to periodic bombardment of the sun's particles, which pass through his body as if it were tissue paper. The air is rent with sounds which beat on his eardrums, and he is shaken by the unceasing tremors of the earth's crust. He is exposed to great temperature changes, to rain and wind.

What wonder then that in such a terrible turmoil, in which cast iron existence would seem impossible, this delicate human engine

should act in an exceptional manner? If all automata were in every respect alike they would react in exactly the same way, but this is not the case. There is concordance in response to those disturbances only which are most frequently repeated, not to all. It is quite easy to provide two electrical systems which, when subjected to the same influence, will behave in just the opposite way.

So also two human beings, and what is true of individuals also holds good for their large aggregations. We all sleep periodically. This is not an indispensable physiological necessity any more than stoppage at intervals is a requirement for an engine. It is merely a condition gradually imposed upon us by the diurnal revolution of the globe, and this is one of the many evidences of the truth of the mechanistic theory. We note a rhythm or ebb and tide, in ideas and opinions, in financial and political movements, in every department of our intellectual activity.

HOW WARS ARE STARTED

It only shows that in all this a physical system of mass inertia is involved which affords a further striking proof. If we accept the theory as a fundamental truth and, furthermore, extend the limits of our sense perceptions beyond those within which we become conscious of the external impressions, then all the states in human life, however unusual, can be plausibly explained. A few examples may be given in illustration.

The eye responds only to light vibrations through a certain rather narrow range, but the limits are not sharply defined. It is also affected by vibrations beyond, only in lesser degree. A person may thus become aware of the presence of another in darkness, or through intervening obstacles, and people laboring under illusions ascribe this to telepathy. Such transmission of thought is absurdly impossible.

The trained observer notes without difficulty that these phenomena are due to suggestion or coincidence. The same may be said of oral impressions, to which musical and imitative people are especially susceptible. A person possessing these qualities will often respond to mechanical shocks or vibrations which are inaudible.

To mention another instance of momentary interest reference may be made to dancing, which comprises certain harmonious muscular contractions and contortions of the body in response to a rhythm. How they come to be in vogue just now, can be satisfactorily explained by supposing the existence of some new periodic disturbances in the environment, which are transmitted through the air or the ground and may be of mechanical, electrical or other character.

Exactly so it is with wars, revolutions and similar exceptional states of society.

Though it may seem so, a war can never be caused by arbitrary acts of man.

It is invariably the more or less direct result of cosmic disturbance in which the sun is chiefly concerned.

In many international conflicts of historical record which were precipitated by famine, pestilence or terrestrial catastrophes the direct dependence of the sun is unmistakable. But in most cases the underlying primary causes are numerous and hard to trace.

In the present war it would be particularly difficult to show that the apparently willful acts of a few individuals were not causative. Be it so, the mechanistic theory, being founded on truth demonstrated in everyday experience, absolutely precludes the possibility of such a state being anything but the inevitable consequence of cosmic disturbance.

The question naturally presents itself as to whether there is some intimate relation between wars and terrestrial upheavals. The latter are of decided influence on temperament and disposition, and might at times be instrumental in accelerating the clash but aside from this there seems to be no mutual dependence, though both may be due to the same primary cause.

What can be asserted with perfect confidence is that the earth may be thrown into convulsions through mechanical effects such as are produced in modern warfare. This statement may be startling, but it admits of a simple explanation.

Earthquakes are principally due to two causes—subterranean explosions or structural adjustments. The former are called volcanic, involve immense energy and are hard to start. The latter are named tectonic; their energy is comparatively insignificant and they can be caused by the slightest shock or tremor. The frequent slides in the Culebra are displacements of this kind.

WAR AND THE EARTHQUAKE

Theoretically, it may be said that one might think of a tectonic earthquake and cause it to occur as a result of the thought, for just

preceding the release the mass may be in the most delicate balance. There is a popular error in regard to the energy of such displacements. In a case recently reported as quite extraordinary, extending as it did over a vast territory, the energy was estimated at 65,000,000,000,000 foot tons. Assuming even that the whole work was performed in one minute it would only be equivalent to that of 7,500,000 horse-power during one year, which seems much, but is little for a terrestrial upheaval. The energy of the sun's rays falling on the same area is a thousand times greater.

The explosions of mines, torpedoes, mortars and guns develop reactive forces on the ground which are measured in hundreds or even thousands of tons and make themselves felt all over the globe. Their effect, however, may be enormously magnified by resonance. The earth is a sphere of a rigidity slightly greater than that of steel and vibrates once in about one hour and forty-nine minutes.

If, as might well be possible, the concussions happen to be properly timed their combined action could start tectonic adjustments in any part of the earth, and the Italian calamity may thus have been the result of explosions in France. That man can produce such terrestrial convulsions is beyond any doubt, and the time may be near when it will be done for purposes good or apt.

JavaScript Tesla Coil Calculator Page

This is the original Javascript Calculator On-Line program written by Jerry Gore in 1997. It is useful for stand-alone equations. For a total design javascript program, I recommend JavaTC Designer.

Index of Equations

Transformer Impedence

Transformer Impedence Calculator

Transformer Volts	Transformer Milliamps	Impedence	Resonant Capacitor in Mfd

Enter your Transformer Volts and Milliamps to get the Capacitor value needed for your coil.
Example: I would enter 9000 volts and 45 milliamps for my neon sign transformer.
Note: If you used two transformers then simply double the milliamps (not volts), etc... also to convert Amps to Millamps multiply by 1000 (.045 Amps = 45 Milliamps).
Warning: Assumes 60 Cycles (The cycle rate of common household current in the U.S.A.)

Reactance of Capacitor Calculator

Frequency of Secondary Coil in Kilohertz	Reactance	Inductance Needed for Primary Coil in Microhenries

Enter the Frequency of your Secondary Coil to get the Inductance needed for your Primary Coil.
Example: I would enter 190 as my secondary frequency in kilohertz.
Note: To convert megahertz to kilohertz multiply by 1000 (0.190 Mhz = 190.0 Khz).
Warning: Capacitor value is taken from equation One!

Length of Wire AND Frequency of Coil

Frequency of Coil in Kilohertz	Length of Wire in Feet

Enter the desired Frequency OR Length of wire and get the other.
Example: I entered 1295 for length of wire and found that my coil runs at about 190 kilohertz.

Flat Spiral Pancake Primary

(A) Average Radius in Inches	(W) Width of Coil in Inches	Number of Turns in the Winding	Inductance in Microhenries

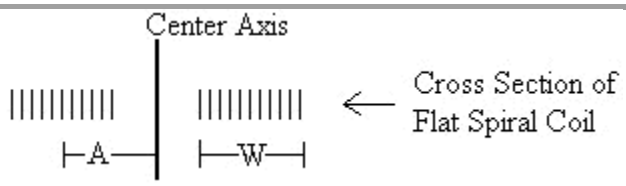

Enter :
(A) the Average Radius as measured from the central axis to the middle of the winding,
(W) the Width of the coil,
and the Number of Turns to get the Inductance of your Flat Spiral Pancake Primary Coil.

Number of Turns for Helical Primary

Inductance in Microhenries	Radius in Inches	Height in Inches	Number of Turns Needed

Enter your desired Inductance in Microhenries, Radius (from center axis to edge), and Height to get the number of turns needed for your Helical Primary.

Plate Type or Rolled Capacitors

The capacitance value identifies a plate capacitor.
For rolled capacitors, multiply the capacitance by 2.

Dielectric Constant K	Area of Plate in Inches	Distance Between Plates in Inches	Number of Plates	Capacitance in Microfarads

Enter:
1) Dielectric constant (K) of the material used (Glass = 4 to 10, Polyethlene = 2 to 2.3 depending on purity).
2) The Area of a single plate (width times height).
3) Distance between plates (thickness of the glass, etc...).
4) The number of plates used in the capacitor.
This will give you the capacitance of your Plate Type capacitor. Multiply result by 2 for a rolled capacitor.

Jar or Bottle Type Capacitors

Dielectric Constant K	Jar Radius in Inches	Height of Jar Portion Used in Inches	Thickness of Jar Wall in Inches	Capacitance in Microfarads

Enter:
1) Dielectric constant (K) of the material used (Glass = 4 to 10).
2) The Jar Radius (center axis to edge of jar).
3) Jar Height that is actually used (the height of the salt water in the jar).
4) The Jar Thickness (the thickness of the glass used).
This will give you the capacitance of a single Jar or Bottle that makes up your capacitor.

Capacitance of a Sphere in Space

Radius of Sphere in Feet	Capacitance of Sphere in Picofarads

Enter the desired Capacitance of your Terminal Sphere OR the actual Size of the Terminal Sphere.
Note: Radius means from the center point of a circle to the edge. A 3 foot diameter sphere would have a radius of 1.5 feet.

Capacitance of a Toroid

Outside Diameter of Toroid in Inches	Diameter of Cross Section (Cord) in Inches	Capacitance in Picofarads

Enter the Outside diameter of the Toroid and the cord (cross section) to obtain the capacitance in picofarads.
Note: This equation is accurate for toroids up to 6 feet in diameter.
This equation courtesy of Bert Pool.

JavaTC 9.1

JavaScript Tesla Coil Designer

For Classic Dual-Tuned Resonant Transformers

Copyright © 2002 by Barton B. Anderson

Updated 3/14/02

Application Notes JavaTC Reference Equations Use with E-Tesla 6

(example: bart85)

Enter password:

WIRE TABLE	REFERENCE (For Round Copper Magnet Wire) (inches)			
Awg ---- Bare Wire -------	Insulation --------	Insulation	--------- Insulation ---	Winding Tension
Size ----- Diameter ----	(Single Build) ----	(Heavy Build) ----	(Tripple Build) -------	(PSI)
0000 --------	0.4600 ----------	0.0120 -----------	0.0239 ----------	0.0359 ---------- n/a.....

* * * * * * * * * * SECONDARY CIRCUIT DESIGN * * * * * * * * * *

Enter Secondary Coil and Top Terminal Dimensions

Secondary Diameter (inches)	Secondary Height (inches)	Bare Wire Diameter (inches)	Insulation Thickness (inches)	Spacing Between Turns (inches)
Toroid **MAJOR** Diameter (inches)	Toroid **MINOR** Diameter (inches)	Sphere Diameter (inches)	Top Terminal Reduction (percent)	

Primary Circuit Design

Number of Turns:	
Turns Per Inch:	
Length of Wire **(ft):**	
H/D Aspect Ratio:	
Circumference **(inch):**	
Radius **(inch):**	
Total Wire Diameter **(inch):**	
DC Resistance **(ohms):**	
Reactance - XL **(ohms):**	
Weight of Wire **(lbs):**	

Inductance - Ls **(mH):**	
Medhurst - **K:**	
Self Capacitance - **Medhurst (pF):**	
Skin Depth - Sd **(inch):**	
Self Resonant Frequency - Fr **(kHz):**	
Toroid Capacitance **(pF):**	
Sphere Capacitance **(pF):**	
Total Resonator Capacitance - **(pF):**	
Loaded Resonant Frequency - Fr(loaded) **(kHz):**	

* * * * * * * * * * PRIMARY CIRCUIT DESIGN * * * * * * * * * *

Enter Primary Dimensions and Actual Primary Cap Size

Inner Diameter (inches)	Wire Diameter (inches)	Wire Spacing edge to edge (inches)	Number of Turns	Angle 0 to 90 in degrees	Primary Cap Size (uF)	Primary Height Above/Below Secondary (inches)
				%		

Primary Frequency (kHz) **(kHz) Secondary Frequency**

Transfomer / Power Design

Primary Outer Diameter **(inches):**	
Outer Primary Height from Inner Turn **(inches):**	
Primary Length **(inches):**	
Primary Length **(feet):**	
Primary to Secondary Spacing **(inches):**	
Primary Inductance - **Lp (uH):**	
Primary||Secondary Mutual Inductance - **Mu (uH):**	
Primary||Secondary Coupling Coefficient - **K:**	

The mutual inductance and the coupling coefficient are close approximations.
For design purposes, this is great to know.
However, to ensure accuracy, download and run Paul Nicholson's ACMI program.

* * * * * * * * * TRANSFORMER / POWER DESIGN * * * * * * * * *

Enter Transfomer Rated and Applied Values Here

Rated Vin	Rated Vout	Rated mA	Hertz	Applied Vin

Spark Gap Design

Rated Transformer Power - **W (watts):**	
Transformer Impedence - **Z (ohms):**	
Effective Output Voltage - **EffectiveVout_volts (volts):**	
Effective Input Power - **eW (watts):**	
Transformer Resonant Capacitor README **(uF):**	
Power Factor Correction Capacitor (for reference) **PFC (uF):**	
Voltage Across Cap -**Vp (volts):**	
Peak - Peak Voltage across cap - **Vp-p (volts):**	
Primary Tank Energy - **J (joules):**	
Primary Instantaneous Amps - **Ip (amps):**	

* * * * * * * * * * * ROTARY SPARKGAP DESIGN * * * * * * * * * * *

Enter Spark Gap Data Here

Number of Stationary Gaps	Number of Rotating Electrodes	Motor RPM	Electrode Diameter (inches)	Disc Diameter (inches)

Email Design

Presentations per Revolution **PPR:**	
Breaks per Second - **BPS:**	
Rotational Speed - **(ips):**	
Gap Conduction Rate - **GCR (ms):**	
Time it takes to charge Cp to 99.9% of Vp - **(ms):**	
RC Time Constant **:**	

% of Vp charge at gap conduction - **(%):**	
Effective Cp Voltage - **eVp (volts):**	
Effective Primary Tank Energy -**eJ (Joules):**	
Effective Peak Output Voltage - **eVout (volts):**	
Spark Length for NST (John Freau) - **(inches):**	
Spark Length for NST (John Freau) - **(feet):**	

Prodigal Genius

BIOGRAPHY OF NIKOLA TESLA

1994 Brotherhood of Life, Inc.,
110 Dartmouth, SE, Albuquerque,
New Mexico 87106 USA

"SPECTACULAR" is a mild word for describing the strange experiment with life that comprises the story of Nikola Tesla, and "amazing" fails to do adequate justice to the results that burst from his experiences like an exploding rocket. It is the story of the dazzling scintillations of a superman who created a new world; it is a story that condemns woman as an anchor of the flesh which retards the development of man and limits his accomplishment--and, paradoxically, proves that even the most successful life, if it does not include a woman, is a dismal failure.

Even the gods of old, in the wildest imaginings of their worshipers, never undertook such gigantic tasks of world-wide dimension as those which Tesla attempted and accomplished. On the basis of his hopes, his dreams, and his achievements he rated the status of the Olympian gods, and the Greeks would have so enshrined him. Little is the wonder that so-called practical men, with their noses stuck in profit-and-loss statements, did not understand him and thought him strange.

The light of human progress is not a dim glow that gradually becomes more luminous with time. The panorama of human evolution is illumined by sudden bursts of dazzling brilliance in intellectual accomplishments that throw their beams far ahead to give us a glimpse of the distant future, that we may more correctly guide our wavering steps today. Tesla, by virtue of the amazing discoveries and inventions which he showered on the world, becomes one of the most resplendent flashes that has ever brightened the scroll of human advancement.

Tesla created the modern era; he was unquestionably one of the world's greatest geniuses, but he leaves no offspring, no legatees of his brilliant mind, who might aid in administering that world; he created fortunes for multitudes of others but himself died penniless, spurning wealth that might be gained from his discoveries. Even as he walked among the teeming millions of New York he became a fabled individual who seemed to belong to the far-distant

future or to have come to us from the mystical realm of the gods, for he seemed to be an admixture of a Jupiter or a Thor who hurled the shafts of lightning; an Ajax who defied the Jovian bolts; a Prometheus who transmuted energy into electricity to spread over the earth; an Aurora who would light the skies as a terrestrial electric lamp; a Mazda who created a sun in a tube; a Hercules who shook the earth with his mechanical vibrators; a Mercury who bridged the ambient realms of space with his wireless waves--and a Hermes who gave birth to an electrical soul in the earth that set it pulsating from pole to pole.

This spark of intellectual incandescence, in the form of a rare creative genius, shot like a meteor into the midst of human society in the latter decades of the past century; and he lived almost until today. His name became synonymous with magic in the intellectual, scientific, engineering and social worlds, and he was recognized as an inventor and discoverer of unrivaled greatness. He made the electric current his slave. At a time when electricity was considered almost an occult force, and was looked upon with terror-stricken awe and respect, Tesla penetrated deeply into its mysteries and performed so many marvelous feats with it that, to the world, he became a master magician with an unlimited repertoire of scientific legerdemain so spectacular that it made the accomplishments of most of the inventors of his day seem like the work of toy-tinkers.

Tesla was an inventor, but he was much more than a producer of new devices: he was a discoverer of new principles, opening many new empires of knowledge which even today have been only partly explored. In a single mighty burst of invention he created the world of power of today; he brought into being our electrical power era, the rock-bottom foundation on which the industrial system of the entire world is builded; he gave us our mass-production system, for without his motors and currents it could not exist; he created the race of robots, the electrical mechanical men that are replacing human labor; he gave us every essential of modern radio; he invented the radar forty years before its use in World War II; he gave us our modern neon and other forms of gaseous-tube lighting; he gave us our fluorescent lighting; he gave us the high-frequency currents which are performing their electronic wonders throughout the industrial and medical worlds; he gave us remote control by wireless; he helped give us World War II, much against his will--for the misuse of his

superpower system and his robot controls in industry made it possible for politicians to have available a tremendous surplus of power, production facilities, labor and materials, with which to indulge in the most frightful devastating war that the maniacal mind could conceive. And these discoveries are merely the inventions made by the master mind of Tesla which have thus far been utilized--scores of others remain still unused.

Yet Tesla lived and labored to bring peace to the world. He dedicated his life to lifting the burdens from the shoulders of mankind; to bringing a new era of peace, plenty and happiness to the human race. Seeing the coming of World War II, implemented and powered by his discoveries, he sought to prevent it; offered the world a device which he maintained would make any country, no matter how small, safe within its borders--and his offer was rejected.

More important by far, however, than all his stupendously significant electrical discoveries is that supreme invention--Nikola Tesla the Superman--the human instrument which shoved the world forward with an accelerating lunge like an airplane cast into the sky from a catapult. Tesla, the scientist and inventor, was himself an invention, just as much as was his alternating-current system that put the world on a superpower basis.

Tesla was a superman, a self-made superman, invented and designed specifically to perform wonders; and he achieved them in a volume far beyond the capacity of the world to absorb. His life he designed on engineering principles to enable him to serve as an automaton, with utmost efficiency, for the discovery and application of the forces of Nature to human welfare. To this end he sacrificed love and pleasure, seeking satisfaction only in his accomplishments, and limiting his body solely to serving as a tool of his technically creative mind.

With our modern craze for division of labor and specialization of effort to gain efficiency of production in our industrial machine, one hesitates to think of a future in which Tesla's invention of the superman might be applied to the entire human race, with specialization designed for every individual from birth.

The superman that Tesla designed was a scientific saint. The inventions that this scientific martyr produced were designed for the peace, happiness and security of the human race, but they have been applied to create scarcity, depressions and devastating war. Suppose the superman invention were also developed and prostituted to the purposes of war-mongering politicians? Tesla glimpsed the possibilities and suggested the community life of the bee as a threat to our social structure unless the elements of individual and community lives are properly directed and personal freedom protected.

Tesla's superman was a marvelously successful invention--for Tesla--which seemed, as far as the world could observe, to function satisfactorily. He eliminated love from his life; eliminated women even from his thoughts. He went beyond Plato, who conceived of a spiritual companionship between man and woman free from sexual desires; he eliminated even the spiritual companionship. He designed the isolated life into which no woman and no man could enter; the self-suficient individuality from which all sex considerations were completely eliminated; the genius who would live entirely as a thinking and a working machine.

Tesla's superman invention was a producer of marvels, and he thought that he had, by scientific methods, succeeded in eliminating love from his life. That abnormal life makes a fascinating experiment for the consideration of the philosopher and psychologist, for he did not succeed in eliminating love. It manifested itself despite his conscientious efforts at suppression; and when it did so it came in the most fantastic form, providing a romance the like of which is not recorded in the annals of human history.

Tesla's whole life seems unreal, as if he were a fabled creature of some Olympian world. A reporter, after writing a story of his discoveries and inventions, concluded, "His accomplishments seem like the dream of an intoxicated god." It was Tesla's invention of the polyphase alternating-current system that was directly responsible for harnessing Niagara Falls and opened the modern electrical superpower era in which electricity is transported for hundred of miles, to operate the tens of thousands of mass-production factories of industrial systems. Every one of the tall Martian-like towers of the electrical transmission lines that stalk across the earth, and whose wires carry

electricity to distant cities, is a monument to Tesla; every powerhouse, every dynamo and every motor that drives every machine in the country is a monument to him.

Superseding himself, he discovered the secret of transmitting electrical power to the utmost ends of the earth without wires, and demonstrated his system by which useful amounts of power could be drawn from the earth anywhere merely by making a connection to the ground; he set the entire earth in electrical vibration with a generator which spouted lightning that rivaled the fiery artillery of the heavens. It was as a minor portion of this discovery that he created the modern radio system; he planned our broadcasting methods of today, forty years ago when others saw in wireless only the dot-dash messages that might save ships in distress.

He produced lamps of greater brilliance and economy than those in common use today; he invented the tube, fluorescent and wireless lamps which we now consider such up-to-the-minute developments; and he essayed to set the entire atmosphere of the earth aglow with his electric currents, to change our world into a single terrestrial lamp and to make the skies at night shine as does the sun by day.

If other first-magnitude inventors and discoverers may be considered torches of progress, Tesla was a conflagration. He was the vehicle through which the blazing suns of a brighter tomorrow focused their incandescent beams on a world that was not prepared to receive their light. Nor is it remarkable that this radiant personality should have led a strange and isolated life. The value of his contributions to society cannot be overrated. we can now analyze, to some extent, the personality that produced them. He stands as a synthetic genius, a self-made superman, the greatest invention of the greatest inventor of all times. But when we consider Tesla as a human being, apart from his charming and captivating social manners, it is hard to imagine a worse nightmare than a world inhabited entirely by geniuses.

When Nature makes an experiment and achieves an improvement it is necessary that it be accomplished in such a way that the progress will not be lost with the individual but will be passed on to future generations. In man, this requires a utilization of the social values of the race, cooperation

of the individual with his kind, that the improved status may be propagated and become a legacy of all. Tesla intentionally engineered love and women out of his life, and while he achieved gigantic intellectual stature, he failed to achieve its perpetuation either through his own progeny or through disciples. The superman he constructed was not great enough to embrace a wife and continue to exist as such. The love he sought to suppress in his life, and which he thought was associated only with women, is a force which, in its various aspects, links together all members of the human race.

In seeking to suppress this force entirely Tesla severed the bonds which might have brought to him the disciples who would, through other channels, have perpetuated the force of his prodigal genius. As a result, he succeeded in imparting to the world only the smallest fraction of the creative products of his synthetic superman.

The creation of a superman as demonstrated by Tesla was a grand experiment in human evolution, well worthy of the giant intellect that grew out of it, but it did not come up to Nature's standards; and the experiment will have to be made many times more before we learn how to create a super race with the minds of Teslas that can tap the hidden treasury of Nature's store of knowledge, yet endowed too with the vital power of love that will unlock forces, more powerful than any which we now glimpse, for advancing the status of the human race.

There was no evidence whatever that a superman was being born

when the stroke of midnight between July 9 and 10, in the year 1856, brought a son, Nikola, to the home of the Rev. Milutin Tesla and Djouka, his wife, in the hamlet of Smiljan, in the Austro-Hungarian border province of Lika, now a part of Yugoslavia. The father of the new arrival, pastor of the village church, was a former student in an oficers' training school who had rebelled against the restrictions of Army life and turned to the ministry as the field in which he could more satisfactorily express himself. The mother, although totally unable to read or write, was nevertheless an intellectually brilliant woman, who without the help of literal aids became really well educated.

Both father and mother contributed to the child a valuable heritage of culture developed and passed on by ancestral families that had been community leaders for many generations. The father came from a family that contributed sons in equal numbers to the Church and to the Army. The mother was a member of the Mandich family whose sons, for generations without number, had, with very few exceptions, become ministers of the Serbian Orthodox Church, and whose daughters were chosen as wives by ministers.

Djouka, the mother of Nikola Tesla (her given name in English translation would be Georgina), was the eldest daughter in a family of seven children. Her father, like her husband, was a minister of the Serbian Orthodox Church, Her mother, after a period of failing eyesight, had become blind shortly after the seventh child was born; so Djouka, the eldest daughter, at a tender age was compelled to take over the major share of her mother's duties. This not alone prevented her from attending school: her work at home so completely consumed her time that she was unable to acquire even the rudiments of reading and writing through home study. This was a strange situation in the cultured family of which she was a member. Tesla, however, always credited his unlettered mother rather than his erudite father with being the source from which he inherited his inventive ability. She devised many household labor-saving instruments. She was, in addition, a very practical individual, and her well-educated husband wisely left in her hands all business matters involving both the church and his household.

An unusually retentive memory served this remarkable woman as a good substitute for literacy. As the family moved in cultured circles she absorbed by ear much of the cultural riches of the community. She could repeat, without error or omission, thousands of verses of the national poetry of her country--the sagas of the Serbs--and could recite long passages from the Bible. She could narrate from memory the entire poetical- philosophical work Gorski ffenac (Mountain fireath), written by Bishop Petrovich Njegosh. She also possessed artistic talent and a versatile dexterity in her fingers for expressing it. She earned wide fame throughout the countryside for her beautiful needlework. According to Tesla, so great were her dexterity and her patience that she could, when over sixty, using only her fingers, tie three knots in an eyelash.

The remarkable abilities of this clever woman who had no formal education were transmitted to her five children. The elder son, Dane Tesla, born seven years before Nikola, was the family favorite because of the promise of an outstanding career which his youthful cleverness indicated was in store for him. He foreshadowed in his early years the strange manifestations which in his surviving brother were a prelude to greatness.

Tesla's father started his career in the military service, a likely choice for the son of an oficer; but he apparently did not inherit his father's liking for Army life. So slight an incident as criticism for failure to keep his brass buttons brightly polished caused him to leave military school. He was probably more of a poet and philosopher than a soldier. He wrote poetry which was published in contemporary papers. He also wrote articles on current problems which he signed with a pseudonym, "Srbin Pravicich." This, in Serb, means "Man of Justice." He spoke, read and wrote Serbo-Croat, German and Italian. It was probably his interest in poetry and philosophy that caused him to be attracted to Djouka Mandich. She was twenty-five and Milutin was two years older. He married her in 1847. His attraction to the daughter of a pastor probably influenced his next choice of a career, for he then entered the ministry and was soon ordained a priest.

He was made pastor of the church at Senj, an important seaport with facilities for a cultural life. He gave satisfaction, but apparently he achieved success among his parishioners on the basis of a pleasing personality and an understanding of problems rather than by using any great erudition in theological and ecclesiastical matters.

A few years after he was placed in charge of this parish, a new archbishop, elevated to head of the diocese, wished to survey the capabilities of the priests in his charge and offered a prize for the best sermon preached on his oficial visit. The Rev. Milutin Tesla was bubbling over, at the time, with interest in labor as a major factor in social and economic problems. To preach a sermon on this topic was, from the viewpoint of expediency, a totally impractical thing to do. Nobody, however, had ever accused the Rev. Mr. Tesla of being practical, so doing the impractical thing was quite in harmony with his nature. He chose the subject which held his greatest interest; and

when the archbishop arrived, he listened to a sermon on "Labor."

Months later Senj was surprised by an unanticipated visit from the archbishop, who announced that the Rev. Mr. Tesla had preached the best sermon, and awarded him a red sash which he was privileged to wear on all occasions. Shortly afterward he was made pastor at Smiljan, where his parish then embraced forty homes. He was later placed in charge of the much larger parish in the nearby city of Gospic. His first three children, Milka, Dane and Angelina, were born at Senj. Nikola and his younger sister, Marica, were born at Smiljan.

Tesla's early environment, then, was that of an agricultural community in a high plateau region near the eastern shore of the Adriatic Sea in the Velebit Mountains, a part of the Alps, a mountain chain stretching from Switzerland to Greece. He did not see his first steam locomotive until he was in his `teens, so his aptitude for mechanical matters did not grow out of his environment.

Tesla's homeland is today called Yugoslavia, a country whose name means "Land of the Southern Slavs." It embraces several former separate countries, Serbia, Bosnia, Croatia, Montenegro, Dalmatia and also Slovenia. The Tesla and Mandich families originally came from the western part of Serbia near Montenegro. Smiljan, the village where Tesla was born, is in the province of Lika, and at the time of his birth this was a dependent province held by the Austro-Hungarian Empire as part of Croatia and Slovenia.

Tesla's surname dates back more than two and a half centuries. Before that time the family name was Draganic (pronounced as if spelled Drag'-a-nitch). The name Tesla (pronounced as spelled, with equal emphasis on both syllables), in a purely literal sense, is a trade name like Smith, firight or Carpenter. As a common noun it describes a woodworking tool which, in English, is called an adz. This is an axe with a broad cutting blade at right angles to the handle, instead of parallel as in the more familiar form. It is used in cutting large tree trunks into squared timbers. In the Serbo-Croat language, the name of the tool is tesla. There is a tradition in the Draganic family that the members of one branch were given the nickname "Tesla" because of an inherited trait which caused practically all of them to have very large, broad and protruding front

teeth which greatly resembled the triangular blade of the adz.

The name Draganic and derivatives of it appear frequently in other branches of the Tesla family as a given name. When used as a given name it is frequently translated "Charlotte," but as a generic term it holds the meaning "dear" and as a surname is translated "Darling."

The majority of Tesla's ancestors for whom age records are available lived well beyond the average span of life for their times, but no definite record has been found of the ancestor who, Tesla claimed, lived to be one hundred and forty years of age. (His father died at the age of fifty-nine, and his mother at seventy-one.)

Although many of Tesla's ancestors were dark eyed, his eyes were a gray-blue. He claimed his eyes were originally darker, but that as a result of the excessive use of his brain their color changed. His mother's eyes, however, were gray and so are those of some of his nephews. It is probable, therefore, that his gray eyes were inherited, rather than faded by excessive use of the brain.

Tesla grew to be very tall and very slender--tallness was a family and a national trait. When he attained full growth he was exactly two meters, or six feet two and one-quarter inches tall. while his body was slender, it was built within normal proportions. His hands, however, and particularly his thumbs, seemed unusually long.

Nikola's older brother Dane was a brilliant boy and his parents gloried in their good fortune in being blessed with such a fine son. There was, however, a difference of seven years in the two boys' ages, and since the elder brother died as the result of an accident at the age of twelve, when Nikola was but five years old, a fair comparison of the two seems hardly possible. The loss of their first-born son was a great blow to his mother and father; the grief and regrets of the family were manifest in idealizing his talents and predicting possibilities of greatness he might have realized, and this situation was a challenge to Nikola in his youth.

The superman Tesla developed out of the superboy Nikola. Forced to rise above the normal level by an urge to carry on for his dearly beloved departed brother, and also on his

own account to exceed the great accomplishment his brother might have attained had he lived, he unconsciously drew upon strange resources within. The existence of these resources might have remained unsuspected for a lifetime, as happens with the run of individuals, if Nikola had not felt the necessity for creating a larger sphere of life for himself.

He was aware as a boy that he was not like other boys in his thoughts, in his amusements and in his hobbies. He could do the things that other lads his age usually do, and many things that they could not do. It was these latter things that interested him most, and he could find no companions who would share his enthusiasms for them. This situation caused him to isolate himself from contemporaries, and made him aware that he was destined for an unusual place if not great accomplishments in life. His boyish mind was continually exploring realms which his years had not reached, and his boyhood attainments frequently were worthy of men of mature age.

He had, of course, the usual experience of unusual incidents that fall to the lot of a small boy. One of the earliest events which Tesla recalled was a fall into a tank of hot milk that was being scalded in the process used by the natives of that region as a hygienic measure, anticipating the modern process of pasteurizing.

Shortly afterward he was accidentally locked in a remote mountain chapel which was visited only at widely separated intervals. He spent the night in the small building before his absence was discovered and his possible hiding place determined.

Living close to Nature, with ample opportunity for observing the flight of birds, which has ever filled men with envy, he did what many another boy has done with the same results. An umbrella, plus imagination, offered to him a certain solution of the problem of free flight through the air. The roof of a barn was his launching platform. The umbrella was large, but its condition was much the worse for many years of service; it turned inside out before the flight was well started. No bones were broken, but he was badly shaken up and spent the next six weeks in bed. Probably, though, he had better reason for making this experiment than most of the others who have tried it. He revealed that practically all his life he experienced a

peculiar reaction when breathing deeply. When he breathed deeply he was overcome by a feeling of lightness, as if his body had lost all weight; and he should, he concluded, be able to fly through the air merely by his will to do so. He did not learn, in boyhood, that he was unusual in this respect.

One day when he was in his fifth year, one of his chums received a gift of a fishing line, and all the boys in the group planned a fishing trip. On that day he was on the outs with his chums for some unremembered reason. As a result, he was informed he could not join them. He was not permitted even to see the fishing line at close range. He had glimpsed, however, the general idea of a hook on the end of a string. In a short time he had fashioned his own interpretation of a hook. The refinement of a barb had not occurred to him and he also failed to evolve the theory of using bait when he went off on his own fishing expedition. The baitless hook failed to attract any fish but, while dangling in the air, much to Tesla's surprise and satisfaction it snared a frog that leaped at it. He came home with a bag of nearly two dozen frogs. It may have been a day on which the fish were not biting, but at any rate his chums came home from the use of their new hook and line without any fish. His triumph was complete. When he later revealed his technique, all the boys in the neighborhood copied his hook and method, and in a short time the frog population of the region was greatly depleted.

The contents of birds' nests always excited Tesla's curiosity. He rarely disturbed their contents or occupants. On one occasion, however, he climbed a rocky crag to investigate an eagle's nest and took from it a baby eagle which he kept locked in a barn. A bird on the wing he considered fair prey for his sling shot, with which he was a star performer.

About this time he became intrigued with a piece of hollow tube cut from a cane growing in the neighborhood. This he played with until he had evolved a blow gun and later, by making a plunger and plugging one end of the tube with a wad of wet hemp, a pop gun. He then undertook the making of larger pop guns, and contrived one in which the end of the plunger was held against the chest and the tube pulled energetically toward the body. He engaged in the manufacture of this article for his chums, as a five-year-old businessman. When a number of window panes happened to

get broken accidentally by getting in the way of his hemp wad, his inventive proclivities in this field were quickly curbed by the destruction of the pop guns and the administration of the parental rod.

Tesla started his formal education by attending the village school in Smiljan before he reached his fifth birthday. A few years later his father received his appointment as pastor of a church in the nearby city of Gospic, so the family moved there. This was a sad day for young Tesla. He had lived close to Nature, and loved the open country and the high mountains among which he had thus far spent all of his life. The sudden transition to the artificialities of the city was a very definite shock to him. He was out of harmony with his new surroundings.

His advent into the city life of Gospic, at the age of seven, got off to an unfortunate start. As the new minister in town, his father was anxious to have everything move smoothly. Tesla was required to dress in his best clothes and attend the Sunday services. Naturally, he dreaded this ordeal and was very happy when assigned the task of ringing the bell summoning the worshipers to the service and announcing the close of the ceremonies. This gave him an opportunity to remain unseen in the belfry while the parishioners, their daughters and dude sons were arriving and departing.

Thinking he had waited long enough after the close of the service for the church to be cleared on this first Sunday, he came downstairs three steps at a time. A wealthy woman parishioner wearing a skirt with a long train that fashionably dragged along the ground, and who had come to the service with a retinue of servants, remained after the other parishioners to have a talk with the new pastor. She was just making an impressive exit when Tesla's final jump down the stairs landed him on the train, ripping this dignity-preserving appendage from the woman's dress. Her mortification and rage and his father's anger came upon him simultaneously. Parishioners loitering outside rushed back to revel in the spectacle. Thereafter no one dared be pleasant to this youngster who had enraged the wealthy dowager who domineered it over the social community. He was practically ostracized by the parishioners, and continued so until he redeemed himself in a spectacular manner.

Tesla felt strange and defeated in his ignorance of city ways. He met the situation first by avoidance. He did not care to leave his home. The boys of his age were neatly dressed every day. They were dudes and he did not belong. Even as a child Tesla was meticulously careful in dress. At the earliest moment, however, he would slip work clothes over his dress clothes and go wandering in the woods or engage in mechanical work. He could not enjoy life if limited to the activities in which he could engage while dressed up. Tesla, however, possessed ingenuity, and there was rarely a situation in which he was not able to use it. He also possessed knowledge of the ways of Nature. These gave him a distinct superiority over the city boys.

About a year after the family moved to Gospic a new fire company was organized. It was to be supplied with a pump which would replace the useful but inadequate bucket brigade. The members of the new organization obtained brightly colored uniforms and practiced marching for parades. Eventually the new pump arrived. It was a man-power pump to be operated by sixteen men. A parade and demonstration of the new apparatus was arranged. Almost everyone in Gospic turned out for the event and followed to the river front for the pump demonstration. Tesla was among them. He paid no attention to the speeches but was all eyes for the brightly painted apparatus. He did not know how it worked but would have loved to take it apart and investigate the insides.

The time for the demonstration came when the last speaker, finishing his dedicatory address, gave the order to start the pumping operation that would send a stream of water shooting skyward from the nozzle. The eight men regimented on either side of the pump bowed and rose in alternate unison as they raised and lowered the bars that operated the pistons of the pump. But nothing else happened, not a drop of water came from the nozzle!

Oficials of the fire company started feverishly to make adjustments and, after each attempt, set the sixteen men oscillating up and down at the pump handles, but each time without results. The lines of hose between the pump and the nozzle were straightened out, they were disconnected from the pump and connected again. But no water came from the far end of the hose to reward the efforts of the perspiring firemen.

Tesla was among the usual group of urchins that always manages to get inside the lines on such occasions. He tried to see everything that was going on from the closest possible vantage point and undoubtedly got on the nerves of the vexed oficials when their repeated efforts were frustrated by continuous failures. As one of the oficials turned for the tenth time to vent his frustration on the urchins and order them away from his range of action, Tesla grabbed him by the arm.

"I know what to do, Mister," said Tesla. "you keep pumping."

Dashing for the river, Tesla peeled his clothes off quickly and dove into the water. He swam to the suction hose that was supposed to draw the water supply from the river. He found it kinked, so that no water could flow into it, and flattened by the vacuum created by the pumping. When he straightened out the kink, the water rushed into the line. The nozzlemen had stood at their post for a long time, receiving a continuous repetition of warnings to be prepared each time an adjustment was made, but, as nothing happened on these successive occasions, they had gradually relaxed their attention and were giving little thought to the direction in which the nozzle was pointed. When the stream of water did shoot skyward, down it came on the assembled oficials and townspeople. This item of unexpected drama excited the crowd at the other end of the line near the pump, and to give vent to their joy they seized the scantily dressed Tesla, boosted him to the shoulders of a couple of the firemen, and led a procession around the town. The seven-year-old Tesla was the hero of the day.

Later on Tesla, in explaining the incident, said that he had had not the faintest idea of how the pump worked; but as he watched the men struggle with it, he got an intuitive flash of knowledge that told him to go to the hose in the river. On looking back to that event, he said, he knew how Archimedes must have felt when, after discovering the law of the displacement of water by floating objects, he ran naked through the streets of Syracuse shouting "Eureka!

At the age of seven Tesla had tasted the pleasures of public acclaim

for his ingenuity. And further, he had done something which the dudes, the boys of his age in the city, could not do

and which even their fathers could not do. He had found himself. He was now a hero, and it could be forgotten that he had jumped on a woman's skirt and ripped the train off.

Tesla never lost an opportunity to hike through the nearby mountains where he could again enjoy the pleasures of his earlier years spent so close to Nature. On these occasions he would often wonder if there was still operating a crude water wheel which he made and installed, when he was less than five years old, across the mountain brook near his home in Smiljan.

The wheel consisted of a not too well-smoothed disk cut from a tree trunk in some lumbering operations. Through its center he was able to cut a hole and force into it a somewhat straight branch of a tree, the ends of which he rested in two sticks with crotches which he forced into the rock on either bank of the brook. This arrangement permitted the lower part of the disk to dip in the water and the current caused it to rotate. To the lad there was a great deal of originality employed in making this ancient device. The wheel wobbled a bit but to him it was a marvelous piece of construction, and he got no end of pleasure out of watching his water wheel obtain power from the brook.

This experiment undoubtedly made a life-long impression on his young plastic mind and endowed him with the desire, ever afterward manifested in his work, of obtaining power from Nature's sources which are always being dissipated and always being replenished.

In this smooth-disk water wheel we find an early clue to his later invention of the smooth-disk turbine. In his later experience he discovered that all water wheels have paddles--but his little water wheel had operated without paddles.

Tesla's first experiment in original methods of power production was made when he was nine years old. It demonstrated his ingenuity and originality, if nothing else. It was a sixteen-bug-power engine. He took two thin slivers of wood, as thick as a toothpick and several times as long, and glued them together in the form of a cross, so they looked like the arms of a windmill. At the point of intersection they were glued to a spindle made of another thin sliver of wood. On this he slipped a very small pulley

with about the diameter of a pea. A piece of thread acting as a driving belt was slipped over this and also around the circumference of a much larger but light pulley which was also mounted on a thin spindle. The power for this machine was furnished by sixteen May bugs (June bugs in the United States). He had collected a jar full of the insects, which were very much of a pest in the neighborhood. With a little dab of glue four bugs were afixed, heading in the same direction, to each of the four arms of the windmill arrangement. The bugs beat their wings, and if they had been free would have flown away at high speed. They were, however, attached to the cross arms, so instead they pulled them around at high speed. These, being connected by the thread belt to the large pulley, caused the latter to turn at low speed; but it developed, Tesla reports, a surprisingly large torque, or turning power.

Proud of his bug-power motor and its continuous operation--the bugs did not cease flying for hours--he called in one of the boys in the neighborhood to admire it. The lad was a son of an Army oficer. The visitor was amused for a short time by the bug motor, until he spied the jar of still unused May bugs. Without hesitation he opened the jar, fished out the bugs--and ate them. This so nauseated Tesla that he chased the boy out of the house and destroyed the bug motor. For years he could not tolerate the sight of May bugs without a return of this unpleasant reaction.

This event greatly annoyed Tesla because he had planned to add more spindles to the shaft and stick on more fliers until he had more than a one-hundred-bug-power motor.

TESLA'S years in school were more important for the activities in which he engaged in after-school hours than for what he learned in the classroom. At the age of ten, having finished his elementary studies in the Normal School, Tesla entered the college, called the Real Gymnasium, at Gospic. This was not an unusually early age to enter the Real Gymnasium, as that school corresponds more to our grammar school and junior high school than to our college.

One of the requirements, and one to which an unusually large percentage of the class time was devoted throughout the four years, was freehand drawing. Tesla detested the subject almost to the point of open rebellion, and his marks were accordingly very low, but not entirely owing to a lack of ability.

Tesla was left-handed as a boy, but later became ambidextrous. Left-handedness was a definite handicap in the freehand-drawing studies, but he could have done much better work than he actually produced and would have gotten higher marks if it were not for a piece of altruism in which he engaged. A student whom he could excel in drawing was striving hard for a scholarship. Were he to receive the lowest marks in freehand drawing, he would be unable to obtain the scholarship. Tesla sought to help his fellow student by intentionally getting the lowest rating in the small class.

Mathematics was his favorite subject and he distinguished himself in that study. His unusual proficiency in this field was not considered a counterbalancing virtue to make amends for his lack of enthusiasm for freehand drawing. A strange power permitted him to perform unusual feats in mathematics. He possessed it from early boyhood, but had considered it a nuisance and tried to be rid of it because it seemed beyond his control.

If he thought of an object it would appear before him exhibiting the appearance of solidity and massiveness. So greatly did these visions possess the attributes of actual objects that it was usually dificult for him to distinguish between vision and reality. This abnormal faculty functioned in a very useful fashion in his school work with mathematics.

If he was given a problem in arithmetic or algebra, it was immaterial to him whether he went to the blackboard to work it out or whether he remained in his seat. His strange faculty permitted him to see a visioned blackboard on which the problem was written, and there appeared on this blackboard all of the operations and symbols required in working out the solution. Each step appeared much more rapidly than he could work it out by hand on the actual slate. As a result, he could give the solution almost as quickly as the whole problem was stated.

His teachers, at first, had some doubts about his honesty, thinking he had worked out some clever deceit for getting the right answers. In due time their skepticism was dispelled and they accepted him as a student who was unusually apt at mental arithmetic. He would not reveal this power to anyone and would discuss it only with his mother, who in the past had encouraged him in his efforts to banish it. Now that the power had demonstrated some definite usefulness, though, he was not so anxious to be completely rid of it, but desired to bring it under his complete control.

Work that Tesla did outside school hours interested him much more than his school work. He was a rapid reader and had a memory that was retentive to the point, almost, of infallibility. He found it easy to acquire foreign languages. In addition to his native Serbo-Croat language he became proficient in the use of German, French and Italian. This opened to him great stores of knowledge to which other students did not have access, yet this knowledge, apparently, was of little use to him in his school work. He was interested in things mechanical but the school provided no manual training course. Nevertheless, he became proficient in the working of wood and metals with tools and methods of his own contriving.

In the classroom of one of the upper grades of the Real Gymnasium models of water wheels were on exhibition. They were not working models but nevertheless they aroused Tesla's enthusiasm. They recalled to him the crude wheel he had constructed in the hills of Smiljan. He had seen pictures of the magnificent Niagara Falls. Coupling the power possibilities presented by the majestic waterfalls and the intriguing possibilities he saw in the models of the water wheels, he aroused in himself a passion to accomplish a grand achievement. Waxing eloquent on the subject, he told his father, "Some day I am going to America and harness Niagara Falls to produce power." Thirty years later he was to see this prediction fulfilled.

There were many books in his father's library. The knowledge in those books interested him more than that which he received in school and he wished to spend his evenings reading them. As in other matters, he carried this to an extreme, so his father forbade him to read them, fearing that he would ruin his eyes in the poor light of tallow candles then used for illumination. Nikola sought to

circumvent this ruling by taking candles to his room and reading after he was sent to bed, but his violation of orders was soon discovered and the family candle supply was hidden. Next he fashioned a candle mould out of a piece of tin and made his own candles. Then, by plugging the keyhole and the chinks around the door, he was able to spend the night hours reading volumes purloined from his father's bookshelves. Frequently, he said, he would read through the entire night and feel none the worse for the loss of sleep. Eventual discovery, however, brought paternal discipline of a vigorous nature. He was about eleven years old at this time.

Like other boys of his age he played with bows and arrows. He made bigger bows, and better, straighter shooting arrows, and his marksmanship was excellent. He was not willing to stop at that point. He started building arbalists. These could be described as bow-and-arrow guns. The bow is mounted on a frame and the string pulled back and caught on a peg from which it is released by a trigger. The arrow is laid on the midpoint of the bow, its end against the taut string. The bow lies horizontal on the frame whereas in ordinary manual shooting the bow is held in vertical position. For this reason the device is sometimes called the crossbow. In setting an arbalist the beam is placed against the abdomen and the string pulled back with all possible force. Tesla did this so often, he said, that his skin at the point of pressure became calloused until it was more like a crocodile's hide. When shot into the air the arrows from his arbalist were never recovered, for they went far out of sight. At close range they would pass through a pine board an inch thick.

Tesla got a thrill out of archery not experienced by other boys. He was, in imagination, riding those arrows which he shot out of sight into the blue vault of the heavens. That sense of exhilaration he experienced when breathing deeply gave him such a feeling of lightness he convinced himself that in this state it would be relatively easy for him to fly through the air if he only could devise some mechanical aid that would launch him and enable him to overcome what he thought was only a slight remaining weight in his body. His earlier disastrous jump from the barn roof had not disillusioned him. His conclusions were in keeping with his sensations; but a twelve-year-old lad exploring this dificult field alone cannot be condemned too severely for not discovering that our senses sometimes deceive us, or

rather that we sometimes deceive ourselves in interpreting what our senses tell us.

In breathing deeply he was overventilating his lungs, taking out some of the residual carbon dioxide which is chemical "ashes," and largely inert, and replacing it with air containing a mixture of equally inert nitrogen and very active oxygen. The latter being present in more than normal proportions immediately began to upset chemical balances throughout the body. The reaction on the brain produces a result which does not differ greatly from alcohol intoxication. A number of cults use this procedure to induce "mystical" or "occult" experiences. How was a twelve-year-old boy to know all these things? He could see that birds did an excellent job in flying. He was convinced that some day man would fly, and he wanted to produce the machine that would get him off the ground and into the air.

The big idea came to him when he learned about the vacuum--a space within a container from which all air had been exhausted. He learned that every object exposed to the air was under a pressure of about fourteen pounds per square inch, while in a vacuum objects were free of such pressure. He figured that a pressure of fourteen pounds should turn a cylinder at high speed and he could arrange to get advantage of such pressure by surrounding one half of a cylinder with a vacuum and having the remaining half of its surface exposed to air pressure. He carefully built a box of wood. At one end was an opening into which a cylinder was fitted with a very high order of accuracy, so that the box would be airtight; and on one side of the cylinder the edge of the box made a right-angle contact. On the cylinder's other side the box made a tangent, or flat, contact. This arrangement was made because he wanted the air pressure to be exerted at a tangent to the surface of the cylinder--a situation that he knew would be required in order to produce rotation. If he could get that cylinder to rotate, all he would have to do in order to fly would be to attach a propeller to a shaft from the cylinder, strap the box to his body and obtain continuous power from his vacuum box that would lift him through the air. His theory of course was fallacious, but he had no means of knowing that at the time.

The workmanship on this box was undoubtedly of a very high order, considering it was made by a self-instructed twelve-year-old mechanic. When he connected his vacuum pump, an

ordinary air pump with its valves reversed, he found the box was airtight, so he pulled out all the air, watching the cylinder intently while doing so. Nothing happened for many strokes of the pump except that it made his back lame to pull the pump handle upward while he created the most "powerful" possible vacuum. He rested for a moment. He was breathing deeply from exertion, overventilating his lungs, and getting that joyous, dizzy, light-as-air feeling which was a highly satisfactory mental environment for his experiment.

Suddenly the cylinder started to turn--slowly! His experiment was a success! His vacuum-power box was working! He would fly!

Tesla was delirious with joy. He went into a state of ecstasy. There was no one with whom he could share this joy, as he had taken no one into his confidence. It was his secret and he was forced to endure its joys alone. The cylinder continued to turn slowly. It was no hallucination. It was real. It did not speed up, however, and this was disappointing. He had visualized it turning at a tremendous speed but it was actually turning extremely slowly. His idea, at least, he figured, was correct. With a little better workmanship, perhaps he could make the cylinder turn faster. He stood spellbound watching it turn at a snail's pace for less than half a minute--and then the cylinder stopped. That broke the spell and ended for the time his mental air flights.

He hunted for the trouble and quickly located what he was sure was the cause of the dificulty. Since the vacuum, he theorized, is the source of power, then, if the power stops, it must be because the vacuum is gone. His pump, he felt sure, must be leaking air. He pulled up the handle. It came up easily and that meant very definitely he had lost the vacuum in the box. He again pumped out the air--and again when he reached a high vacuum the cylinder started to turn slowly and continued to do so for a fraction of a minute. When it stopped he again pumped a vacuum and again the cylinder turned. This time he continued to operate the pump and the cylinder continued to turn. He could keep it turning as long as he desired by continuing to pump the vacuum.

There was nothing wrong with his theory, as far as he could see. He went over the pump very carefully, making

improvements which would give him a high vacuum, and studied the valve to make that a better guard of the vacuum in the box. He worked on the project for weeks but despite his best efforts he could get no better results than the slow movement of the cylinder.

Finally the truth came to him in a flash--he was losing the vacuum in the box because the air was leaking in around the cylinder on that side where the flat board was tangent to the surface of the cylinder. As the air flowed into the box it pulled the cylinder around with it very slowly. When the air stopped flowing into the box the cylinder stopped turning. He knew now his theory was wrong. He had supposed that even with the vacuum being maintained, and no air leaking in, the air pressure would be exerted at a tangent to the surface of the cylinder and the pressure would produce motion in the same way as pushing on the rim of a wheel will cause it to turn. He discovered later, however, that the air pressure is exerted at right angles to the surface of the cylinder at all points, like the direction of the spokes of a wheel, and therefore it could not be used to produce rotation in the way he planned.

This experiment, nevertheless, was not a total loss, even though it greatly disheartened him. The knowledge that the air leaking into a vacuum had actually produced even a small amount of rotation in a cylinder remained with him and led directly, many years later, to his invention of the "Tesla turbine," the steam engine that broke all records for horsepower developed per pound of weight--what he called "a power house in a hat."

Nature seemed to be constantly engaged in staging spectacular demonstrations for young Tesla, revealing to him samples of the secret of her mighty forces.

Tesla was roaming in the mountains with some chums one winter day after a storm in which the snow fell moist and sticky. A small snowball rolled on the ground quickly gathered more snow to itself and soon became a big one that was not too easy to move. Tiring of making snowmen and snow houses on level stretches of ground, the boys took to throwing snowballs down the sloping ground of the mountain. Most of them were duds--that is, they got stalled in the soft snow before they accumulated additional volume. A few rolled a distance, grew larger and then bogged down and stopped. One, however, found just the right conditions; it

rolled until it was a large ball and then spread out, rolling up the snow at the sides as if it were rolling up a giant carpet, and then suddenly it turned into an avalanche. Soon an irresistible mass of snow was moving down the steep slope. It stripped the mountainside clean of snow, trees, soil and everything else it could carry before it and with it. The great mass landed in the valley below with a thud that shook the mountain. The boys were frightened because there was snow above them on the mountain that might have been shaken into a downward slide, carrying them along buried in it.

This event made a profound impression on Tesla and it dominated a great deal of his thinking in later life. He had witnessed a snowball weighing a few ounces starting an irresistible, devastating movement of thousands of tons of inert matter. It convinced him that there are tremendous forces locked up in Nature that can be released in gigantic amounts, for useful as well as destructive purposes, by the employment of small trigger forces. He was always on the lookout for such triggers in his later experiments.

Tesla even as a boy was an original thinker and he never hesitated to think thoughts on a grand scale, always carrying everything to its largest ultimate dimension as a means of exploring the cosmos. This is demonstrated by another event that took place the following summer. He was wandering alone in the mountains when storm clouds started to fill the sky. There was a flash of lightning and almost immediately a deluge of rain descended on him.

There was implanted in his thirteen-year-old mind on that occasion a thought which he carried with him practically all his life. He saw the lightning flash and then saw the rain come down in torrents, so he reasoned that the lightning flash produced the downpour. The idea become firmly fixed in his mind that electricity controlled the rain, and that if one could produce lightning at will, the weather would be brought under control. Then there would be no dry periods in which crops would be ruined; deserts could be turned into vineyards, the food supply of the world would be greatly increased, and there would be no lack of food anywhere on the globe. why could he not produce lightning?

The observation and the conclusions drawn from it by young Tesla were worthy of a more mature mind, and it would

require a genius among the adults to have evolved the project of controlling the world's weather through such means. There was, however, a flaw in his observation. He saw the lightning come first and the rain afterward. Further investigation would have revealed to him that the order of events was reversed higher in the air. It was the rain that came first and the lightning afterward up in the cloud. The lightning, however, arrived first because it made the trip from the cloud in less than 1/100,000 of a second, while the raindrops required several seconds to fall to the ground.

At this time there was planted in Tesla's mind the seed of a project which matured more than thirty years later when, in the mountains of Colorado, he actually produced bolts of lightning, and planned later to use them to bring rain. He never succeeded in convincing the U.S. Patent Ofice of the practicability of the rain-making plan.

Tesla, as a boy, knew no limits to the universe of his thinking; and as a result he built an intellectual realm suficiently large to provide ample space in which his more mature mind could operate without encountering retarding barriers.

Tesla finished his course at the Real Gymnasium in Gospic in 1870,

at the age of fourteen. He had distinguished himself as a scholar. In one grade, however, his mathematics professor gave him less than a passing mark for his year's work. Tesla felt an injustice had been done him, so he went to the director of the school and demanded that he be given the strictest kind of examination in the subject. This was done in the presence of the director and the professor, and Tesla passed it with an almost perfect mark.

His fine work at school and the recognition by the towns-people that he possessed a broader scope of knowledge than any other youth in town led the trustees of the public library to ask him to classify the books in their possession and make a catalogue. He had already read most of the books in his father's extensive library, so he was pleased to have close access to a still larger collection and undertook the task with considerable enthusiasm. He had scarcely begun work on this project when it was interrupted by a long intermittent illness. When he felt too depressed

to go to the library he had quantities of the books brought to his home, and these he read while confined to his bed. His illness reached a critical stage and physicians gave up hope of saving his life.

Tesla's father knew that he was a delicate child and, having lost his other son, tried to throw every possible safeguard around this one. He was greatly pleased over his son's brilliant accomplishments in almost every activity in which he engaged, but he recognized as a danger to Nikola's health the great intensity with which he tackled projects. Nikola's trend toward engineering was to him a dangerous development, as he thought work in that field would make too heavy demands upon him, not only because of the nature of the work but in the extended years of study in which he would have to engage. If, however, the boy entered the ministry, it would not be necessary for him to extend his studies beyond the Real Gymnasium which he had just completed. For this reason his father favored a career for him in the Church.

Illness threw everything into a somber aspect. When the critical stage of his illness was reached and his strength was at its lowest ebb, Nikola manifested no inclination to help himself get better by developing an enthusiasm for anything. It was in this stage of his illness that he glanced listlessly at one of the library books. It was a volume by Mark Twain. The book held his interest and then aroused his enthusiasm for life, enabling him to pass a crisis, and his health gradually returned to normal. Tesla credited the Mark Twain book with saving his life, and when, years later, he met Twain, they became very close friends.

At the age of fifteen Tesla, in 1870, continued his studies at the Higher Real Gymnasium, corresponding to our college, at Karlovac (Carlstadt) in Croatia. His attendance at this school was made possible by an invitation from a cousin of his father's, married to a Col. Brankovic, whose home was in Karlovac, to come and live with her and her husband, a retired Army oficer, while attending school. His life there was none too happy. Scarcely had he arrived when he contracted malaria from the mosquitoes in the Karlovac lowlands, and he was never free from the malady for years afterward.

Tesla relates that he was hungry all during the three years he spent at Karlovac. There was plenty of deliciously prepared food in the home, but his aunt held the theory that because his health seemed none too rugged he should not eat heavy meals. Her husband, a gruff and rugged individual, when carving a second helping for himself, would sometimes try to slip a healthy slice of meat onto Tesla's plate; but the Colonel was always overruled by his wife, who would take back the slice and carve one to the thinness of a sheet of paper, warning her husband, "Niko is delicate and we must be very careful not to overload his stomach."

His studies at Karlovac interested him, however, and he completed the four-year course in three years, tackling the school work with a dangerous enthusiasm, partly as an escape mechanism to divert his attention from the none too pleasing conditions where he was living. The lasting favorable impression which Tesla carried away from Karlovac concerned his professor of physics, a clever and original experimenter, who amazed him with the feats he performed with laboratory apparatus. He could not get enough of this course. He wanted to devote his whole time henceforth to electrical experimenting. He knew he would not be satisfied in any other field. His mind was made up; he had selected his career.

His father wrote to him shortly before his graduation advising him not to return home when school was closed but to go on a long hunting trip. Tesla, however, was anxious to get home--to surprise his parents with the good news that he had completed his work at the Higher Real Gymnasium a year ahead of schedule, and to announce his decision to make the study of electricity his life work. Greatly worried, his parents, who at that moment were making strenuous efforts to protect his health, were doubly alarmed. first, there was his violation of the instruction sent him not to return to Gospic. The reason for this advice they had not disclosed--an epidemic of cholera was raging. And second, there was his decision to enter on a career which they feared would make dangerous demands on his delicate health. On returning home, he found his plan definitely opposed. This made him very unhappy. In addition, he would shortly have to face a situation which was even more repugnant than entering upon a career in the Church, and that was the compulsory three-years' service in the Army. Those two powerful factors were operating against

him and seeking to thwart him in his burning desire to start immediately unraveling the mystery and harnessing the great power of electricity.

Nothing, he thought, could exceed the dificulty of the predicament in which he found himself. In this, however, he was mistaken, for he was soon to face a much more serious problem. On the very day after his arrival home, while these issues were still red hot, he became ill with cholera. He had come home malnourished because of the inadequate amount of food to which he had been limited and the strain of his intense application to his studies. Besides, he was still suffering from malaria. Then came the cholera. Now all other problems became secondary to the immediate one of maintaining life itself against the deadly scourge. His physical condition made the doctors despair of saving him. Nevertheless, he survived the crisis, but it left him in a thoroughly weakened and run-down condition. For nine months he lay in bed almost a physical wreck. He had frequent sinking spells and from each successive one it seemed harder to rally him.

Life held no incentive for him. If he survived he would be forced to enter the Army and, if nothing happened to prevent him from finishing that term of something worse than slavery, he would be forced to study for the ministry. He did not care whether he survived or not. Left to his own decision, he would not have rallied from earlier sinking spells; but the decision was not left to him. Some force stronger than his own consciousness carried him through, but it had to succeed in spite of him and not because of any assistance he was giving. The sinking spells came on with startling regularity, each one with increasing depth. It seemed a miracle that he had come out of the last one, and now with less reserve strength he was sinking into another and edging rapidly into unconsciousness. His father entered his room and tried desperately to rouse him and stir him to a more cheerful and hopeful attitude in which he could help himself and do more than the doctors could do for him, but without results.

"I could--get well--if you--would let me--study electrical--engineering," said the prostrate young man in a hardly audible whisper. He had scarcely enough energy left for even this effort; and having made the speech, he seemed to be dropping over the edge of nothingness. His father,

bending intently over him and fearing the end had come, seized him.

"Nikola," he commanded, "you cannot go. you must stay. you will be an engineer. Do you hear me? you will go to the best engineering school in the world and you will be a great engineer. Nikola, you must come back, you must come back and become a great engineer."

The eyes of the prostrate figure opened slowly. Now there was a light shining in the eyes where before they presented a death-like glaze. The face moved a little, very little, but the slight change this movement made seemed to be in the direction of a smile. It was a smile, a weak one, and he was able to keep his eyes open although it was very apparently a struggle for him to do so.

"Thank God" said his father. "you heard me, Nikola. you will go to an engineering school and become a great engineer. Do you understand me?"

There was not enough energy for voice but the smile became a little more definite.

Another crisis in which he had escaped death by the narrowest margin had been passed. His rise out of this situation seemed almost miraculous. It seemed to him, Tesla later related, that from that instant he felt as if he were drawing vital energy from his loved ones who surrounded him; and this he used to rally himself out of the shadow.

He was again able to whisper. "I will get well," he said weakly. He breathed deeply, as deep as his frail tired frame would permit, of the oxygen which he had found so stimulating in the past. It was the first time he had done so in the nine months since he became ill. With each breath he felt reinvigorated. He seemed to get stronger by the minute.

In a very short time he was taking nourishment and within a week he was able to sit up. In a few days more he was on his feet. Life now would be glorious. He would be an electrical engineer. Everything he dreamed of would come true. As the days passed he recovered his strength at a remarkably rapid rate and his hearty appetite returned. It was now early summer. He would prepare himself to enter the fall term at an engineering school.

But there was something he had forgotten, everyone in the family had forgotten, in the stress of his months of illness. It was now brought sharply to his and their attention. An Army summons--he must face three years' military servitude! was his remarkable recovery to be ruined by this catastrophe, which seemed all the worse now that his chosen career seemed otherwise nearer? Failure to respond to a military summons meant jail--and after that the service in addition. How would he solve this problem?

There is no record of what took place. This spot in his career Tesla glossed over with the statement that his father considered it advisable for him to go off on a year's hunting expedition to recover his health. At any rate, Nikola disappeared. He left with a hunting outfit and some books and paper. where he spent the year, no one knows--probably at some hideaway in the mountains. In the meantime, he was a fugitive from Army service.

For any ordinary individual this situation would be a most serious one. For Tesla it had all the gravity associated with ordinary cases, plus the complication that his family on his father's side was a traditional military family whose members had won high rank and honors in Army activities, and many of whom were now in the service of Austria-Hungary. For a member of that family to become equivalent to a "draft dodger" and a "conscientious objector," both, was a serious blow to its prestige, and could provoke a scandal if word of the situation got into circulation. Tesla's father used this circumstance and the fact of NikoIa's delicate health as talking points to induce his relatives in Army positions to use their influence to enable his son to escape conscription and avoid punishment for failing to respond to the Army call. In this he was successful, apparently, but required considerable time in which to make the arrangements.

Hiding in the mountains and with a year's time to kill, on this enforced vacation Tesla was able to indulge in working out totally fantastic plans for some gigantic projects. One of the plans was for the construction and operation of an under-ocean tube, connecting Europe and the United States, by which mail could be transported in spherical containers moved through the tube by water pressure. He discovered early in his calculations that the friction of the water on the walls of the tube would require such a tremendous

amount of power to overcome it that it made the project totally impracticable. Since, however, he was working on the project entirely for his own amusement, he eliminated friction from the calculations and was then able to design a very interesting system of high-speed intercontinental mail delivery. The factor which made this interesting project impracticable--the drag of the water on the sides of the tube--Tesla was later to utilize when he invented his novel steam turbine.

The other project with which he amused himself was drawn upon an even larger scale and required a still higher order of imagination. He conceived the project of building a ring around the earth at the Equator, somewhat resembling the rings around the planet Saturn. The earth ring, however, was to be a solid structure whereas Saturn's rings are made up of dust particles.

Tesla loved to work with mathematics, and this project gave him an excellent opportunity to use all of the mathematical techniques available to him. The ring which Tesla planned was to be a rigid structure constructed on a gigantic system of scaffolding extending completely around the earth. Once the ring was complete, the scaffolding was to be removed and the ring would stay suspended in space and rotating at the same speed as the earth.

Some use might be found for the project, Tesla said, if someone could find a means of providing reactionary forces that could make the ring stand still with respect to the earth while the latter whirled underneath it at a speed of 1,000 miles per hour. This would provide a high-speed "moving" platform system of transportation which would make it possible for a person to travel around the earth in a single day.

In this project, he admitted, he encountered the same problem as did Archimedes, who said "Give me a fulcrum and a lever long enough and I will move the earth." "The fulcrum in space on which to rest the lever was no more attainable than was the reactionary force needed to halt the spinning of the hypothetical ring around the earth," said Tesla. There were a number of other factors which he found necessary to ignore in this project, but ignore them he did so that they would not interfere with his mathematical practice and his cosmical engineering plans.

With his health regained, and the danger of punishment by the Army removed, Tesla returned to his home in Gospic to remain a short time before going to Graumltz, where he was to study electrical engineering as his father had promised he could do. This marked the turning point in his life. Finished with boyhood dreams and play, he was now ready to settle down to his serious life work. He had played at being a god, not hesitating to plan refashioning the earth as a planet. His life work was to produce accomplishments hardly less fantastic than his boyhood dreams.

TESLA entered manhood with a definite knowledge that nameless forces were shaping for him an unrevealed destiny. It was a situation he had to feel rather than be able to identify and describe in words. His goal he could not see and the course leading to it he could not discern. He knew very definitely the field in which he intended to spend his life, and using such physical laws as he knew he decided to plan a life which, as an engineering project, would be operated under principles that would yield the highest index of efficiency. He did not, at this time, have a complete plan of life drawn up, but there were certain elements which he knew intuitively he would not include in his operations, so he avoided all activities and interests that would bring them in as complications. It was to be a single-purpose life, devoted entirely to science with no provisions whatever for play or romance.

It was with this philosophy of life that Tesla in 1875, at the age of 19, went to Graumltz, in Austria, to study electrical engineering at the Polytechnic Institute. He intended henceforth to devote all his energies to mastering that strange, almost occult force, electricity, and to harness it for human welfare.

His first effort to put this philosophy to a practical test almost resulted in disaster despite the fact that it worked successfully. Tesla completely eliminated recreation and plunged into his studies with such enthusiastic devotion that he allowed himself only four hours' rest, not all of which he spent in slumber. He would go to bed at eleven o'clock and read himself to sleep. He was up again in the small hours of the morning, tackling his studies.

Under such a schedule he was able to pass, at the end of the first term, his examinations in nine subjects--nearly twice as many as were required. His diligence greatly impressed the members of the faculty. The dean of the technical faculty wrote to Tesla's father, "your son is a star of first rank." The strain, however, was affecting his health. He desired to make a spectacular showing to demonstrate to his father in a practical way his appreciation of the permission he gave to study engineering. When he returned to his home at the end of the school term with the highest marks that could be awarded in all the subjects passed, he expected to be joyfully received by his father and praised for his good work. Instead, his parent showed only the slightest enthusiasm for his accomplishment but a great deal of interest in his health, and criticized Nikola for endangering it after his earlier narrow escape from death. Unknown to Tesla until several years afterward, the professor at the Polytechnic Institute had written to his father early in the term, asking him to take his son out of the school, as he was in danger of killing himself through overwork.

On his return to the Institute for the second year he decided to limit his studies to physics, mechanics and mathematics. This was fortunate because it gave him more time in which to handle a situation that arose later in his studies, and was to lead to his first and perhaps greatest invention.

Early in his second year at the Institute there was received from Paris a piece of electrical equipment, a Gramme machine, that could be used as either a dynamo or motor. If turned by mechanical power it would generate electricity, and if supplied with electricity it would operate as a motor and produce mechanical power. It was a direct-current machine.

When Prof. Poeschl demonstrated the machine, Tesla was greatly impressed by its performance except in one respect--a great deal of sparking took place at the commutator. Tesla stated his objections to this defect.

"It is inherent in the nature of the machine," replied Prof. Poeschl. "It may be reduced to a great extent, but as long as we use commutators it will always be present to some degree. As long as electricity flows in one direction,

and as long as a magnet has two poles each of which acts oppositely on the current, we will have to use a commutator to change, at the right moment, the direction of the current in the rotating armature."

"That is obvious," Tesla countered. "The machine is limited by the current used. I am suggesting that we get rid of the commutator entirely by using alternating current."

Long before the machine was received, Tesla had studied the theory of the dynamo and motor, and he was convinced that the whole system could be simplified in some way. The solution of the problem, however, evaded his grasp, nor was he at all sure the problem could be solved--until Prof. Poeschl gave his demonstration. The assurance then came to him like a commanding flash.

The first sources of current were batteries which produced a small steady flow. When man sought to produce electricity from mechanical power, he sought to make the same kind the batteries produced: a steady flow in one direction. The kind of current a dynamo would produce when coils of wire were whirled in a magnetic field was not this kind of current--it flowed first in one direction and then in the other. The commutator was invented as a clever device for circumventing this seeming handicap of artificial electricity and making the current come out in a one-directional flow.

The flash that came to Tesla was to let the current come out of the dynamo with its alternating directions of flow, thus eliminating the commutator, and feed this kind of current to the motors, thus eliminating the need in them for commutators. Many another scientist had played with that idea long before it occurred to Tesla, but in his case it came to him as such a vivid, illuminating flash of understanding that he knew his visualization contained the correct and practical answer. He saw both the motors and dynamos operating without commutators, and doing so very efficiently. He did not, however, see the extremely important and essential details of how this desirable result could be accomplished, but he felt an overpowering assurance that he could solve the problem. It was for this reason that he stated his objections to the Gramme machine with a great deal of confidence to his professor. what he did not expect was to draw a storm of criticism.

Prof. Poeschl, however, deviated from his set program of lectures and devoted the next one to Tesla's objections. With methodical thoroughness he picked Tesla's proposal apart and, disposing of one point after another, demonstrated its impractical nature so convincingly that he silenced even Tesla. He ended his lecture with the statement: "Mr. Tesla will accomplish great things, but he certainly never will do this. It would be equivalent to converting a steady pulling force like gravity into rotary effort. It is a perpetual motion scheme, an impossible idea."

Tesla, although silenced temporarily, was not convinced. The professor had paid him a nice compliment in devoting a whole lecture to his observation, but, as is so often the case, the compliment was loaded with what was expected by the professor to be a crushing defeat for the one whom he complimented. Tesla was nevertheless greatly impressed by his authority; and for a while he weakened in his belief that he had correctly understood his vision. It was as clear-cut and definite as the visualizations that came to him of the solutions of mathematical problems which he was always able to prove correct. But perhaps, after all, he was in this case a victim of a self-induced hallucination. All other things Prof. Poeschl taught were solidly founded on demonstrable fact, so perhaps his teacher was right in his objections to the alternating-current idea.

Deep down in his innermost being, however, Tesla held firmly to the conviction that his idea was a correct one. Criticism only temporarily submerged it, and soon it came bobbing back to the surface of his thinking. He gradually convinced himself that, contrary to his usual procedure, Prof. Poeschl had in this case demonstrated merely that he did not know how to accomplish a given result, a defficiency which he shared with everyone else in the world, and therefore could not speak with authority on this subject. And, in addition, Tesla reasoned, the closing remark with which Prof. Poeschl believed he had clinched his argument--"It would be equivalent to converting a steady pulling force like gravity into a rotary effort--was contradicted by Nature, for was not the steady pulling force of gravity making the moon revolve around the earth and the earth revolve around the sun?

"I could not demonstrate my belief at that time," said Tesla, "but it came to me through what I might call

instinct, for lack of a better name. But instinct is something which transcends knowledge. we undoubtedly have in our brains some finer fibers which enable us to perceive truths which we could not attain through logical deductions, and which it would be futile to attempt to achieve through any wilful effort of thinking."

His enthusiasm and confidence in himself restored, Tesla tackled the problem with renewed vigor. His power of visualization--the ability to see as solid objects before him the things that he conceived in his mind, and which he had considered such a great annoyance in childhood--now proved to be of great aid to him in trying to unravel this problem. He made an elastic rebound from the intellectual trouncing administered by his Professor and was tackling the problem in methodical fashion.

In his mind he constructed one machine after another, and as he visioned them before him he could trace out with his finger the various circuits through armature and field coils, and follow the course of the rapidly changing currents. But in no case did he produce the desired rotation. Practically all the remainder of the term he spent on this problem. He had passed so many examinations during the first term that he had plenty of time to spend on this problem during the second.

It seemed, however, that he was doomed to fail in this project, for at the term's end he was no nearer the solution than he was when he started. His pride had been injured and he was fighting on the defensive side. He did not know that those seeming failures in his mental and laboratory experiments were to serve later as the raw material out of which yet another vision was to be created.

A radical change had taken place in Tesla's mode of life while at Graumltz. The first year he had acted like an intellectual glutton, overloading his mind and nearly wrecking his health in the process. In the second year he allowed more time for digesting the mental food of which he was partaking, and permitted himself more recreation. About this time Tesla took to card-playing as a means of relaxation. His keen mental processes and highly developed powers of deduction enabled him to win more frequently than he lost. He never retained the money he won but returned it to the losers at the end of the game. When he lost, however, this procedure was not reciprocated by the other

players. He also developed a passion for billiards and chess, in both of which he became remarkably proficient.

The fondness for card-playing which Tesla developed at Graumltz got him into an embarrassing situation. Toward the end of the term his father sent him money to pay for his trip to Prague and for the expenses incident to enrolling as a student at the university. Instead of going directly to Prague, Tesla returned to Gospic for a visit to the family. Sitting in at a card game with some youths of the city, Tesla found his usual luck had deserted him, and he lost the money set aside for his university expenses. He confessed to his mother what he had done. She did not criticize him. Perhaps the fates were using this method for protecting him from overwork that might ruin his health, she reasoned, since he needed rest and relaxation. Losses of money were much easier to handle than loss of health. Borrowing some money from a friend, she gave it to Tesla with the words, "Here you are. Satisfy yourself." Returning to the game, he experienced a change in luck and came out of it not only with the money his mother had given him but practically all of the university expense money he had previously lost. These winnings he did not return to the losers as was his previous custom. He returned home, gave his mother the money she had advanced him, and announced that he would never again indulge in card-playing.

Instead of going to the University of Prague in the fall of 1878 as he had planned, Tesla accepted a lucrative position that was offered him in a technical establishment at Maribor, near Graumltz. He was paid sixty florins a month and a separate bonus for the completed work, a very generous compensation compared with the prevailing wages. During this year Tesla lived very modestly and saved his earnings.

The money he had saved at Maribor enabled him to pay his way through a year at the University of Prague, where he extended his studies in mathematics and physics. He continued experimenting with the one big challenging alternating-current idea that was occupying his mind. He had explored, unsuccessfully, a large number of methods and, though his failures gave support to Prof. Poeschl's contention that he would never succeed, he was unwilling to give up his theory. He still had faith that he would find the solution of his problem. He knew electrical science was young and growing, and felt deep within his consciousness

that he would make the important discovery that would greatly expand the infant science to the powerful giant of the future.

It would have been a pleasure to Tesla to have continued his studies, but it now was necessary for him to make his own living. His father's death, following Tesla's graduation from the University at Prague, made it necessary for him to be self-supporting. Now he needed a job. Europe was extending an enthusiastic reception to Alexander Graham Bell's new American invention, the telephone, and Tesla heard that a central station was to be installed in Budapest. The head of the enterprise was a friend of the family. The situation seemed a promising one.

Without waiting to ascertain the situation in Budapest, Tesla, full of youthful hope and the self-assurance which is typical of the untried graduate, traveled to that city, expecting to walk into an engineering position in the new telephone project. He quickly discovered, on his arrival, that there was no position open; nor could one be created for him, as the project was still in the discussion stage.

It was, however, urgently necessary for financial reasons, that he secure immediately a job of some kind. The best he could obtain was a much more modest one than he had anticipated. The salary was so microscopically small he would never name the amount, but it was suficient to enable him to avoid starvation. He was employed as draftsman by the Hungarian Government in its Central Telegraph Ofice, which included the newly developing telephone in its jurisdiction.

It was not long before Tesla's outstanding ability attracted the attention of the Inspector in Chief. Soon he was transferred to a more responsible position in which he was engaged in designing and in making calculations and estimates in connection with new telephone installations. When the new telephone exchange was finally started in Budapest in 1881, he was placed in charge of it.

Tesla was very happy in his new position. At the age of twenty-five he was in full charge of an engineering enterprise. His inventive faculty was fully occupied and he made many improvements in telephone central-station apparatus. Here he made his first invention, then called a telephone repeater, or amplifier, but which today would be

more descriptively called a loud speaker--an ancestor of the sound producer now so common in the home radio set. This invention was never patented and was never publicly described, but, Tesla later declared, in its originality, design, performance and ingenuity it would make a creditable showing alongside his better-known creations that followed. His chief interest, however, was still the alternating-current motor problem whose solution continued to elude him.

Always an indefatigable worker, always using up his available energy with the greatest number of activities he could crowd into a day, always rebelling because the days had too few hours in them and the hours too few minutes, and the seconds that composed them were of too short duration, and always holding himself down to a five-hour period of rest with only two hours of that devoted to sleep, he continually used up his vital reserves and eventually had to balance accounts with Nature. He was forced finally to discontinue work.

The peculiar malady that now affected him was never diagnosed by the doctors who attended him. It was, however, an experience that nearly cost him his life. To doctors he appeared to be at death's door. The strange manifestations he exhibited attracted the attention of a renowned physician, who declared medical science could do nothing to aid him. One of the symptoms of the illness was an acute sensitivity of all of the sense organs. His senses had always been extremely keen, but this sensitivity was now so tremendously exaggerated that the effects were a form of torture. The ticking of a watch three rooms away sounded like the beat of hammers on an anvil. The vibration of ordinary city trafic, when transmitted through a chair or bench, pounded through his body. It was necessary to place the legs of his bed on rubber pads to eliminate the vibrations. Ordinary speech sounded like thunderous pandemonium. The slightest touch had the mental effect of a tremendous blow. A beam of sunlight shining on him produced the effect of an internal explosion. In the dark he could sense an object at a distance of a dozen feet by a peculiar creepy sensation in his forehead. His whole body was constantly wracked by twitches and tremors. His pulse, he said, would vary from a few feeble throbs per minute to more than one hundred and fifty.

Throughout this mysterious illness he was fighting with powerful desire to recover his normal condition. He had before him a task he must accomplish--he must attain the solution of the alternating-current motor problem. He felt intuitively during his months of torment that the solution was coming ever nearer, and that he must live in order to be there when it crystallized out of his unconscious mind. During this period he was unable to concentrate on this or any other subject.

Once the crisis was past and the symptoms diminished, improvement came rapidly and with it the old urge to tackle problems. He could not give up his big problem. It had become a part of him. working on it was no longer a matter of choice. He knew that if he stopped he would die, and he knew equally well that if he failed he would perish. He was enmeshed in an invisible web of intangible structure that was tightening around him. The feeling that it was bringing the solution nearer to him--just beyond his finger tips--was cause for both regret and rejoicing. That problem when solved would leave a tremendous vacancy in his life, he feared.

yet in spite of his feeling of optimism it was still a tremendous problem without a solution.

When the acute sensitivity reduced to normal, permitting him to resume work, he took a walk in the city park of Budapest with a former classmate, named Szigeti, one late afternoon in February, 1882. while a glorious sunset overspread the sky with a flamboyant splash of throbbing colors, Tesla engaged in one of his favorite hobbies--reciting poetry. As a youth he had memorized many volumes, and he was now pleased to note that the terrific punishment his brain had experienced had not diminished his memory. One of the works which he could recite from beginning to end was Goethe's Faust.

The prismatic panorama which the sinking sun was painting in the sky reminded him of some of Goethe's beautiful lines:

"The glow retreats, done is the day of toil"

"It yonder hastes, new fields of life exploring"

"Ah, that no wing can lift me from the soil"

"Upon its track to follow, follow soaring"

Tesla, tall, lean and gaunt, but with a fire in his eye that matched the flaming clouds of the heavens, waved his arms in the air and swayed his body as he voiced the undulating lines. He faced the color drama of the sky as if addressing the red-glowing orb as it flung its amorphous masses of hue, tint and chrome across the domed vault of heaven.

Suddenly the animated figure of Tesla snapped into a rigid pose as if he had fallen into a trance. Szigeti spoke to him but got no answer. Again his words were ignored. The friend was about to seize the towering motionless figure and shake him into consciousness when instead Tesla spoke.

"Watch me!" said Tesla, blurting out the words like a child bubbling over with emotion: "Watch me reverse it." He was still gazing into the sun as if that incandescent ball had thrown him into a hypnotic trance.

Szigeti recalled the image from Goethe that Tesla had been reciting: "The glow retreats . . . It yonder hastes, new fields of life exploring" a poetic description of the setting sun, and then his next words-- "watch me! watch me reverse it." Did Tesla mean the sun? Did he mean that he could arrest the motion of the sun about to sink below the horizon, reverse its action and start it rising again toward the zenith?

"Let us sit and rest for a while," said Szigeti. He turned him toward a bench, but Tesla was not to be moved.

"Don't you see it?" expostulated the excited Tesla. "See how smoothly it is running? Now I throw this switch--and I reverse it. See! It goes just as smoothly in the opposite direction. watch! I stop it. I start it. There is no sparking. There is nothing on it to spark."

"But I see nothing," said Szigeti. "The sun is not sparking. Are you ill?"

"you do not understand," beamed the still excited Tesla, turning as if to bestow a benediction on his companion. "It is my alternating-current motor I am talking about. I have solved the problem. Can't you see it right here in front of

me, running almost silently? It is the rotating magnetic field that does it. See how the magnetic field rotates and drags the armature around with it? Isn't it beautiful? Isn't it sublime? Isn't it simple? I have solved the problem. Now I can die happy. But I must live, I must return to work and build the motor so I can give it to the world. No more will men be slaves to hard tasks. My motor will set them free, it will do the work of the world."

Szigeti now understood. Tesla had previously told him about his attempt to solve the problem of an alternating-current motor, and he grasped the full meaning of the scientist's words. Tesla had never told him, however, about his ability to visualize objects which he conceived in his mind, so it was necessary to explain the vision he saw, and that the solution had come to him suddenly while they were admiring the sunset.

Tesla was now a little more composed, but he was floating on air in a frenzy of almost religious ecstasy. He had been breathing deeply in his excitement, and the overventilation of his lungs had produced a state of exhilaration.

Picking up a twig, he used it as a scribe to draw a diagram on the dusty surface of the dirt walk. As he explained the technical principles of his discovery, his friend quickly grasped the beauty of his conception, and far into the night they remained together discussing its possibilities.

The conception of a rotating magnetic field was a majestically beautiful one. It introduced to the scientific world a new principle of sublime grandeur whose simplicity and utility opened a vast new empire of useful applications. In it Tesla had achieved the solution which his professor had declared was impossible of attainment.

Alternating-current motors had heretofore presented what seemed an insoluble problem because the magnetic field produced by alternating currents changed as rapidly as the current. Instead of producing a turning force they churned up useless vibration.

Up to this time everyone who tried to make an alternating-current motor used a single circuit, just as was in direct current. As a result the projected motor proved to be like a single-cylinder steam engine, stalled at dead center, at the top or bottom of the stroke.

what Tesla did was to use two circuits, each one carrying the same frequency of alternating-current, but in which the current waves were out of step with each other. This was equivalent to adding to an engine a second cylinder. The pistons in the two cylinders were connected to the shaft so that their cranks were at in angle to each other which caused them to reach the top or bottom of the stroke at different times. The two could never be on dead center at the same time. If one were on dead center, the other would be off and ready to start the engine turning with a power stroke.

This analogy oversimplifies the situation, of course, for Tesla's discovery was much more far-reaching and fundamental. what Tesla had discovered was a means of creating a rotating magnetic field, a magnetic whirlwind in space which possessed fantastically new and intriguing properties. It was an utterly new conception. In direct-current motors a fixed magnetic field was tricked by mechanical means into producing rotation in an armature by connecting successively through a commutator each of a series of coils arranged around the circumference of a cylindrical armature. Tesla produced a field of force which rotated in space at high speed and was able to lock tightly into its embrace an armature which required no electrical connections. The rotating field possessed the property of transferring wirelessly through space, by means of its lines of force, energy to the simple closed circuit coils on the isolated armature which enabled it to build up its own magnetic field that locked itself into the rotating magnetic whirlwind produced by the field coils. The need for a commutator was completely eliminated.

Now that this magnificent solution of his most dificult scientific problem was achieved, Tesla's troubles were not over; they were just beginning; but, during the next two months, he was in a state of ecstatic pleasure playing with his new toy. It was not necessary for him to construct models of copper and iron: in his mental workshop he constructed them in wide variety. A constant stream of new ideas was continuously rushing through his mind. They came so fast, he said, that he could neither utilize nor record them all. In this short period he evolved every type of motor which was later associated with his name.

He worked out the design of dynamos, motors, transformers and all other devices for a complete alternating-current system. He multiplied the effectiveness of the two-phase system by making it operate on three or more alternating currents simultaneously. This was his famous polyphase power system.

The mental constructs were built with meticulous care as concerned size, strength, design and material; and they were tested mentally, he maintained, by having them run for weeks--after which time he would examine them thoroughly for signs of wear. Here was a most unusual mind being utilized in a most unusual way. If he at any time built a "mental machine," his memory ever afterward retained all of the details, even to the finest dimensions.

The state of supreme happiness which Tesla was enjoying was destined soon, however, to end. The telephone central station by which he was employed, and which was controlled by Puskas, that friend of the family, was sold. When Puskas returned to Paris, he recommended Tesla for a job in the Paris establishment with which he was associated, and Tesla gladly followed up his opportunity. Paris, he reasoned, would be a wonderful springboard from which to catapult his great invention on the world.

The budding superman Tesla came to Paris light in baggage but with his head filled to bursting with his wonderful discovery of the rotating magnetic field and scores of significant inventions based on it. If he had been a typical inventor, he would have gone among people wearing a look indicating that he knew something important, but maintaining absolute secrecy concerning the nature of his inventions. He would be fearful that someone would steal his secret. But Tesla's attitude was just the reverse of this. He had something to give to the world and he wanted the world to know about it, the whole fascinating story with all the revealing technical details. He had not then learned, and never did learn, the craft of being shrewd and cunning. His life plan was on a secular basis. He cared less for the advantages of the passing moment, more for the ultimate goal; and he wanted to give his newly discovered polyphase system of alternating-current to the human race that all men could benefit from it. He knew there was a fortune in his invention. How he could extract this fortune he did not know. He knew that there was a higher law of compensation under which he would derive adequate benefits

from the gift to the world of his discovery. The method by which this would work out did not interest him nearly so much as the necessity for getting someone to listen to the details of his fascinating invention.

Six feet two inches tall, slender, quiet of demeanor, meticulously neat in dress, full of self-confidence, he carried himself with an air that shouted, "I defy you to show me an electrical problem I can't solve"--an attitude that was consistent with his twenty-five years, but also matched by his ability.

Through Puskas's letter of recommendation he obtained a position with the Continental Edison Company, a French company organized to make dynamos, motors and install lighting systems under the Edison patents.

He obtained quarters on the Boulevard St. Michel, but in the evenings visited and dined at the best cafes as long as his salary lasted. He made contact with many Americans engaged in electrical enterprises. wherever he could get a patient ear, among those who had an understanding of electrical matters, he described his alternating-current system of dynamos and motors.

Did someone steal his invention? Not the slightest danger. He could not even give it away. No one was even slightly interested. The closest approach to a nibble was when Dr. Cunningham, an American, a foreman in the plant where Tesla was employed, suggested formation of a stock company.

With his great alternating-current-system invention pounding at his brain and demanding some way in which it could be developed, it was a hardship for him to be forced to work all day on direct-current machines. Nowadays, though, his health was robust. He would arise shortly after five o'clock in the morning, walk to the Seine, swim for half an hour, and then walk to Ivry, near the gates of Paris, where he was employed, a trip that required an hour of lively stepping. It was then half-past seven. The next hour he spent in eating a very substantial breakfast which never seemed suficient to keep his appetite from developing into a disturbing factor long before noon.

The work to which he was assigned at the Continental Edison Company factory was of a variegated character, largely that of a junior engineer. In a short time he was given a

traveling assignment as a "trouble shooter" which required him to visit electrical installations in various parts of France and Germany. Tesla did not relish "trouble shooting" but he did a conscientious job and studied intensely the dificulties he encountered at each powerhouse. He was soon able to present a definite plan for improving the dynamos manufactured by his company. He presented his suggestions and received permission to apply them to some machines. When tested they were a complete success. He was then asked to design automatic regulators, for which there was a great need. These too gave an excellent performance.

The company had been placed in an embarrassing position and was threatened with heavy loss through an accident at the railroad station in Strassburg in Alsace, then in Germany, where a powerhouse and electric lights had been installed. At the opening ceremony, at which Emperor fiilliam I was present, a short circuit in the wiring caused an explosion that blew out one of the walls. The German government refused to accept the installation. Tesla was sent, early in 1883, to put the plant in working order and straighten out the situation. The technical problem presented no dificulties but he found it necessary to use a great deal of tact and good judgment in handling the mass of red tape extruded by the German government as precaution against further mishaps.

Once he got the job well under way he gave some time to constructing an actual two-phase alternating-current motor embodying his rotary-magnetic-field discovery. He had constructed so many in his mind since that never-to-be-forgotten day in Budapest when he made his great invention. He had brought materials with him from Paris for this purpose and found a machine shop near the Strassburg station where he could do some of the work. He did not have as much time available as he had expected, and, while he was a clever amateur machinist, nevertheless the work took time. He was very fussy, making every piece of metal exact in dimensions to better than the thousandth of an inch and then carefully polishing it.

Eventually there was a miscellaneous collection of parts in that Strassburg machine shop. They had been constructed without the aid of working drawings. Tesla could project before his eyes a picture, complete in every detail, of every part of the machine. These pictures were more vivid than any blueprint and he remembered exact dimensions which

he had calculated mentally for each item. He did not have to test parts through partial assembly. He knew they would fit.

From these parts Tesla quickly assembled a dynamo, to generate the two-phase alternating current which he needed to operate his alternating-current motor, and finally his new induction motor. There was no difference between the motor he built and the one which he visualized. So real was the visualized one that it had all the appearance of solidity. The one he built in the machine shop presented no elements of novelty to him. It was exactly as he had visualized it a year before. He had mentally experimented with its exact counterpart and with many variations of it during the months that had passed since the great vision came to him while rhapsodizing the sunset sky in Budapest.

The assembly completed, he started up his power generator. The time for the great final test of the validity of his theory had arrived. He would close a switch and if the motor turned his theory would be proven correct. If nothing happened, if the armature of his motor just stood still, but vibrated, his theory was not correct and he had been feeding his mind on hallucinations, based on fantasy not on fact.

He closed the switch. Instantly the armature turned, built up to full speed in a flash and then continued to operate in almost complete silence. He closed the reversing switch and the armature instantly stopped and as quickly started turning in the opposite direction. This was complete vindication of his theory.

In this experiment he had tested only his two-phase system; but he needed no laboratory demonstration to convince him that his three-phase systems for generating electricity and for using this current for transmission and power production would work even better, and that his single-phase system would work almost as well. With this working model he would now be able to convey to the minds of others the visions he had been treasuring for so long.

This test meant much more to Tesla than just the successful completion of an invention; it meant a triumph for his method of discovering new truths through the unique mental processes he used of visualizing constructs long before they were produced from materials. From these results he

drew an unbounded sense of self-confidence; he could think and work his way to any goal he set.

There was good reason for Tesla's self-assurance. He had just passed his twenty-seventh birthday. It seemed to him only yesterday that Prof. Poeschl had seemingly so completely vanquished him for saying that he could operate a motor by alternating current. Now he had demonstrably accomplished what the learned professor said could never be done.

Tesla now had available a completely novel type of electrical system utilizing alternating current, which was much more flexible and vastly more efficient than the direct-current system. But now that he had it, what could he do with it? The executives of the Continental Edison Company by whom he was employed had continually refused to listen to his alternating-current theories. He felt it would be useless to try to interest them in even the working model. He had made many friends during his stay in Strassburg, among them the Mayor of the city, M. Bauzin, who shared his enthusiasm about the commercial possibilities of the new system and hoped it would result in the establishment of a new industry that would bring fame and prosperity to his city.

The Mayor brought together a number of wealthy Strassburgers. To them the new motor was shown in operation, and the new system and its possibilities described, by both Tesla and the Mayor. The demonstration was a success from the technical viewpoint but otherwise a total loss. Not one member of the group showed the slightest interest. Tesla was dejected. It was beyond his comprehension that the greatest invention in electrical science, with unlimited commercial possibilities, should be rejected so completely.

M. Bauzin assured him that he would undoubtedly receive a more satisfactory reception for his invention in Paris. Delays of oficialdom in finally accepting the completed installation at the Strassburg station, however, postponed his return to Paris until the spring of 1884. Meanwhile, Tesla looked forward with pleasurable expectancy to a triumphant return to Paris. He had been promised a substantial compensation if he was successful in handling the Strassburg assignment; also, that he would be similarly compensated for the improvements in design of motors and

dynamos, and for the automatic regulators for dynamos. It was possible that this would supply him with enough cash to build a full-size demonstration set for his polyphase alternating-current system, so that the tremendous advantages of his system over direct current could be shown in operation. Then he would have no trouble raising the needed capital.

When he got back to the company's ofices in Paris and asked for a settlement of his Strassburg and automatic-regulator accounts, he was given what in modern terminology is called the "runaround." To use fictitious names, as Tesla told the story, the executive, Mr. Smith, who gave him the assignments, now told him he had no jurisdiction over financial arrangements; that was all in the hands of the executive, Mr. Brown. Mr. Brown explained that he administered financial matters but had no authority to initiate projects or to make payments other than those directed by the chief executive, Mr. Jones. Mr. Jones explained that such matters were in the hands of his department executives, and that he never interfered with their decisions, so Tesla must see the executive in charge of technical matters, Mr. Smith. Tesla traveled this vicious circle several times with the same result and finally gave up in disgust. He decided not to renew his offer of the alternating-current system nor to show his motor in operation, and resigned his position immediately.

Tesla was undoubtedly entitled to an amount in excess of $25,000 for the regulators he designed and for his services in Strassburg. Had the executives been endowed with even a smattering of horse sense, or the ordinary garden variety of honesty, they would have made an attempt to settle for $5,000, at the least. Tesla, hard pressed for cash, would undoubtedly have accepted such an amount, although with a feeling that he was being cheated in a large way.

Such an offer would probably have held Tesla on the payroll of the company and preserved for it the possession of the world's greatest inventor and one who at the time had definitely demonstrated he was an extremely valuable employee.

For a paltry few thousand dollars they lost not only a man who would have saved them many times that amount every year, but they also lost an opportunity to obtain world

control of the greatest and most profitable electrical invention ever made.

One of the administrators of the company, Mr. Charles Batchellor, Manager of the works, who was a former assistant and close personal friend of Thomas A. Edison, urged Tesla to go to the United States and work with Edison. There he would have a chance to work on improvements to the Edison dynamos and motors. Tesla decided to follow Mr. Batchellor's suggestion. He sold his books and all other personal possessions except a few articles which he expected to take with him. He assembled his very limited financial resources, purchased tickets for his railroad trip and transatlantic journey to New York. His baggage consisted of a small bundle of clothes carried under his arm and some other items stuffed into his pockets.

The final hours were busy ones and, as he was about to board the train, just as it was ready to pull out of the station, he discovered his package of baggage was missing. Reaching quickly for his wallet, which contained his railroad and steamship tickets and all his money, he was horrified to discover that that too was missing. There was some loose change in his pocket, how much he did not know--he did not have time to count it. His train was pulling out. what should he do? If he missed this train, he would also miss the boat--but he could not ride on either without tickets. He ran alongside the moving train, trying to make up his mind. His long legs enabled him to keep up with it without dificulty at first, but now it was gaining speed. He finally decided to jump aboard. The loose change he discovered was suficient to take care of the railroad fare, with a negligible remainder. He explained his situation to the skeptical steamship oficials and, when no one else showed up to claim his reservations on the ship up to the time of sailing, he was permitted to embark.

To one as fastidious as Tesla, a long steamship journey without adequate clothing was a trying experience. He had expected to encounter annoyances when getting along with the minimum amount of clothing which he planned carrying with him, but when even that limited layout was lost the annoyance became hardship. Coupled with this was the memory of disappointment and resentment over his recent experiences.

The ship offered little to interest him. He explored it thoroughly and in doing so made some contacts with members of the ship's company. There was unrest among the crew. There was unrest in Tesla also. He extended sympathy to members of the crew in their claimed unjust treatment. The grievances affecting the crew had built up one of those situations in which a small spark can cause a large explosion. The spark flew somewhere on the ship while Tesla was below decks in the crew's quarters. The captain and oficers got tough and, with some loyal members of the crew, decided to settle the trouble with belaying pins as clubs. It quickly became a battle royal. Tesla found himself in the middle of a fight which when anyone saw a head he hit it.

Had Tesla not been young as well as tall and strong, his useful career might have ended at this point. He had long arms in proportion to his six feet two inches of height. The fist at the end of his arm could reach as far as a club in the hands of an adversary, and his height enabled him to tower over the other fighters so his head was not easy to reach. He struck hard and often, never knowing for or against which side he was fighting. He was on his feet when the fight was over, something which could not be said of a score of the crew members. The oficers had subdued what they called a mutiny, but they too carried indications that they had been through a battle. Tesla was definitely not invited to sit at the captain's table during the voyage.

He spent the remainder of his journey nursing scores of bruises and sitting in meditation at the stern of the ship, which too slowly made its way to New York. Soon he would set foot on the "land of golden promise" and meet the famous Mr. Edison. He was destined to learn that it was really a "land of golden promise"--but also to discover something that would open his eyes about the fulfillment of promises.

when Tesla stepped out of the Immigration Ofice at Castle Garden, Manhattan, in the summer of 1884, his possessions consisted of four cents, a book of his own poems, a couple

of technical articles he had written, calculations for designing a flying machine, and some mathematical work done in an effort to solve an extremely dificult integral. He had Mr. Batchellor's letter introducing him to Mr. Edison, and the address of a friend. In this letter to Edison, Batchellor wrote: "I know two great men and you are one of them; the other is this young man."

Lacking carfare, Tesla had to walk the several miles to his friend's home. The first person he spoke to, seeking traveling directions, was a policeman, a gruff individual. The way he supplied the information suggested to Tesla that he was willing to start a fight on the subject. Although Tesla spoke English very well, all he understood of the policeman's lingo was the direction in which he pointed his club.

while walking in what he believed was the right direction, wondering how he would be able to contrive a meal and lodgings out of four cents should he be unable to locate his friend, he passed a shop in which he could see a man working on an electrical machine that seemed to him familiar. He entered just as the man was about to give up as impossible the task of repairing the device.

"Let me do it," said Tesla, "I will make it operate." And without more ado he tackled the job. It proved to be a dificult task but eventually the machine was working again.

"I need a man like you to handle these blankety-blank foreign machines," said the man. "Do you want a job?"

Tesla thanked him and told him he was on his way to another job, whereupon the man handed him twenty dollars. Tesla had expected no compensation for doing what he considered a slight favor, and said so, but the man insisted his work was worth that much, and he was glad to pay it. Never was Tesla more thankful for a windfall. He was now assured of food and lodgings for the time being. With the aid of walking directions, this time more graciously given, he located his friend and was a guest at his home overnight. The next day he went to Edison's New York headquarters, then on South Fifth Avenue (now West Broadway).

The introduction by Mr. Batchellor gave him ready access to Mr. Edison, who was busily engaged in problems in connection with his new generating station and electric-

light system--the former located in downtown Pearl Street and serving a relatively small radius of territory.

Tesla was favorably impressed by Edison on their first meeting. He marveled that a man so limited in education could accomplish so much in so technical a field as electricity. It caused Tesla to wonder if all the time he had spent in gaining an education of very broad scope had not been wasted. would he have been further ahead if he had started his practical work on the basis of experience, as Edison had done? He definitely decided, however, before many days had passed, that the time and effort he had spent on his education constituted the wisest kind of an investment.

Edison, for his part, was none too favorably impressed by Tesla. Edison was an inventor who got his results by trial-and-error methods. Tesla calculated everything mentally and solved his problems before doing any "work" on them. As a result, the two great men spoke an entirely different technical language. There was one more very important difference. Edison belonged to the direct-current and Tesla to the alternating-current school of thought. The electricians of that day could, and did, become highly emotional over their differences of opinion on this subject. Discussions roused all the fervor of a religious or political debate, and everything unpleasant was associated with the adherents on the other side of the discussion. The least unpleasant thought applied to an opponent was that he was of a low order of mentality. When Tesla enthusiastically described his polyphase system and told Edison he believed alternating-current was the only practical kind of current to use in a power-and-lighting system, Edison laughed. Edison was using direct current in his system. He told Tesla very bluntly he was not interested in alternating-current; there was no future to it and anyone who dabbled in that field was wasting his time; and besides, it was a deadly current whereas direct current was safe. Tesla did not yield any ground in the discussion--nor could he make any progress in his effort to get Edison to listen to a presentation of his polyphase power system. On technical grounds, they were worlds apart.

Nevertheless, because of Batchellor's statement on the valuable work he had done on the Edison direct-current machines in Europe, Tesla was, without much formality, given a job on Edison's staff--doing minor routine work. A

few weeks later he had an opportunity to demonstrate his ability. Edison had installed one of his electric-light plants on the steamship Oregon, the fastest and most up-to-date passenger ship of that time. The installation worked well for many months but finally both dynamos went out of commission. It was impossible to remove the dynamos and install new ones, so it was necessary to repair the old ones in some way--but this, Edison had been told, was impossible without taking them to the shop. The scheduled sailing date of the ship had passed and Edison was being placed in an embarrassing position over the accumulating days of delay caused by his machines.

Edison asked Tesla if he would go to the ship and see what could be done about the situation. This was in the afternoon. Taking such instruments as he thought he would need, Tesla went aboard the Oregon. He found that short circuits had caused some of the armature coils to be burned out; and open circuits had developed elsewhere on the machines.

Calling on members of the crew to assist him, Tesla worked through the night and by 4 am had both machines running as well as they did the day they were newly installed. walking back to the shop on lower Fifth Avenue at 5 am, in the dim early dawn he met a group of men just leaving. In it were Edison, Batchellor, who had returned from Paris in the meantime, and several others who had finished their night's work and were returning to their homes.

"Here is our Parisian running around nights," said Edison.

"Am just coming back from the Oregon," Tesla replied. "Both machines are operating."

Edison, amazed, shook his head and turned away without another word. On rejoining the group he said to Batchellor, loud enough for the keen-eared Tesla to hear him, "Batchellor, this is a damn good man."

Thereafter Tesla's status on the staff was raised several levels and he was given closer contact with design and operating problems. He found the work interesting and applied himself to it more than eighteen hours a day, from 10:30 am until 5 am, every day including Sundays. Edison, observing his industry, told him, "I have had many hard-working assistants but you take the cake." Tesla observed

many ways in which the dynamos could be improved in design to operate more efficiently. He outlined his plan to Edison, and stressed the increased output and lower cost of operating that would result from the changes he suggested. Edison, quick to appreciate the value of increased efficiency, replied, "There's fifty thousand dollars in it for you if you can do it."

Tesla designed twenty-four types of dynamos, eliminating the long-core field magnets then in use and substituting the more efficient short cores, and provided some automatic controls, on which patents were taken out. Months later, when the task was finished, and some of the new machines built and tested and found measuring up to his promises, Tesla asked to be paid the $50,000. Edison replied, "Tesla, you don't understand our American humor." Tesla was shocked to discover that what he thought was a specific promise was being tossed aside merely as a standard practical joke of the day. He received not a penny of compensation from the new designs and inventions, or for the tremendous amount of overtime, beyond the none too generous weekly pay. He resigned his job immediately. This was in the spring of 1885.

In the period of less than a year which he spent with Edison, Tesla had developed a good reputation in electrical circles; so when he was free he was offered an opportunity to capitalize on it. A group of promoters offered to form a company under his name. This looked like a possible chance to bring out his alternating-current system, and he eagerly entered into the project. But when he urged his plan, the promoters informed him they were not interested in alternating-current. what they wanted him to develop was a practical arc light for street and factory illumination. In about a year he developed the desired lamp, took out several patents on his invention, and its manufacture and use were under way.

From a technical point of view the venture was a success, but Tesla himself suffered another painful financial experience in connection with it. He had been paid a comparatively small salary during the period of development. According to the agreement, he was to receive his principal compensation in the form of shares of stock in the company. He received a beautifully engraved stock certificate, and then, by some manipulations he did not understand, he was forced out of the company and aspersions

were cast upon his ability as an engineer and an inventor. When he sought to convert the certificate into cash, he found that the shares of newly organized companies of undemonstrated power to earn dividends possess very slight value. His opinion of financial men in both the Old World and the New was taking on a decidedly uncomplimentary bias.

Now came the most unpleasant experience of Tesla's life. He was without a source of income, and from the spring of 1886 to the spring of 1887 he was forced to work as a day laborer. "I lived," he said, "through a year of terrible heartaches and bitter tears, my suffering being intensified by material want." Business conditions were none too good in the country. Not only did he have difficulty in getting anyone to listen to his alternating-current project, but even in his effort to earn room and board as a laborer he had tremendous competition, and found it none too easy to secure the most menial tasks at almost starvation wages. He would never discuss this period of his life, probably because it was so unpleasant that he banished all thoughts of it from his memory. Some electrical repair work and even ditch digging at $2 a day were among the jobs he tackled. He resented the utter waste of his abilities more than the personal degradation involved. His education, he said, seemed a mockery.

During the winter of early 1887, while engaged in ditch digging, he attracted the attention of the foreman of the gang who, too, was being forced by circumstances to work below his accustomed level. The foreman was impressed by Tesla's story of his inventions and his great hopes for his alternating-current system. Through this foreman, Tesla said, he was introduced to Mr. A. K. Brown of the Western Union Telegraph Company who put up some of his own money and interested a friend in joining him in Tesla's project.

These two gentlemen organized and financed the Tesla Electric Company, and in April, 1887, established a laboratory at 33-35 South Fifth Avenue (now West Broadway), near Bleecker Street, not far from the shop of the Edison Company. Edison had turned down Tesla's alternating-current idea--and now Tesla was his neighbor with a laboratory of his own, starting to develop the competing idea. Within this small area was to be fought the great battle of the electrical industry over the question of whether direct or alternating current should be used. Edison, already famous, was wholeheartedly committed to direct current; his

powerhouses were operating in several cities and, in addition, he had the support of the famous financier, J. P. Morgan. Tesla, on the other hand, was unknown and had only very modest financial support. The direct current was technically simple, whereas alternating-current was technically complex. Tesla knew, however, that in these complexities were unlimited possibilities for usefulness.

Tesla's dark days were over. yet he was soon to discover that the acceptance or rejection of the alternating-current system was not based on technical facts but upon financial considerations, emotional reactions and prejudices, and that human nature was a bigger factor than scientific truths. Nevertheless, in a short time, he would see some of his greatest hopes and dreams realized, and success in large measure reward his efforts.

Once he had achieved something resembling fair conditions under which to carry on his work, the rising star of Tesla's genius shot across the electrical heavens like a meteor. As soon as the newly organized Tesla Electric Company opened its South Fifth Avenue laboratories he started the construction of a variety of pieces of dynamo electric machinery. It was not necessary for him to do any calculating, or work out blueprints. Everything was crystal clear in his mind down to the finest detail of each piece of apparatus. As a result he very quickly produced the working units with which he demonstrated the principles of his polyphase alternating-current system. The single piece of apparatus he had built while in Strassburg, the first model of the induction motor, supplied the physical proof he needed that all the remainder of his calculations were correct.

The apparatuses built in his new laboratory were identical with those which he conceived during the two months in Budapest following the remarkable revelation of the principle of the revolving magnetic field. He did not make the slightest change, he said, in the machines he had mentally constructed at that time. When the machines were physically constructed not one of them failed to operate as he had anticipated. Five years had elapsed since he evolved the designs. In the meantime he had not committed a line to paper--yet he had remembered perfectly every last detail.

Tesla produced as rapidly as the machines could be constructed three complete systems of alternating-current

machinery--for single-phase, two-phase and three-phase currents--and made experiments with four- and six-phase currents. In each of the three principal systems he produced the dynamos for generating the currents, the motors for producing power from them and transformers for raising and reducing the voltages, as well as a variety of devices for automatically controlling the machinery. He not only produced the three systems but provided methods by which they could be interconnected, and modifications providing a variety of means of using each of the systems. A few months after opening the laboratory he submitted his two-phase motor to Prof. fi. A. Anthony, of Cornell University, for testing. Prof. Anthony reported that it had an efficiency equal to that of the best direct-current motors.

Tesla now not only constructed the machines which he visualized but he worked out the basic mathematical theory underlying all of the apparatus. The mathematical theory was so basic that it covered not only the principles applying to machinery for operation at 60 cycles per second, which is the frequency now in standard use, but applied equally well to the whole range of low- and high-frequency currents. With Edison direct current, it had not been found practicable to work with potentials higher than 220 volts on distribution systems; but with alternating-current it was possible to produce and transmit currents of many thousands of volts, thus permitting economical distribution, and these could be reduced to the lower voltages for customer use.

Tesla sought to obtain a single patent covering the entire system and all of its constituent dynamos, transformers, distribution systems and motors. His patent attorneys, Duncan, Curtis&Page, filed the application for this patent October 12, 1887, six months after the laboratory opened and five and a half years after Tesla had made his rotary magnetic-field invention.

The Patent Ofice, however, objected to considering such an "omnibus" application and insisted it be broken down to seven separate inventions, with individual applications filed on each. Two groups of separate applications were filed, on November 30 and December 23 respectively. These inventions were so original and covered such a virgin field of electrical science that they encountered practically no dificulties in the Patent Ofice and within about six months

the patents were issued. (They were numbered 381,968; 381,969; 381,970; 382,279; 382,280; 382,281 and 382,282. These covered his single and polyphase motors, his distribution system and polyphase transformers. In April of the following year, 1888, he applied for and was later granted five more patents, which included the four-and three-wire three-phase systems. These were numbered 390,413; 390,414; 390,415; 390,721; and 390,820. Within the year he applied for and was granted eighteen more: 401,520; 405,858; 405,859; 416,191; 416,192; 416,193; 416,194; 416,195; 418,248; 424,036; 433,700; 433.701; 433,702; 433,703; 445,207; 445,067; 459,772 and 464,666.)

As a succession of fundamental patents started to issue from the Patent Ofice to Tesla, the attention of the electrical engineering profession was drawn to this practically unknown inventor. The significance of his epoch-making discoveries was quickly grasped and he was invited to deliver a lecture before the American Institute of Electrical Engineers on May 16, 1888. This invitation was evidence that he had "arrived." Tesla accepted the invitation and put his whole heart into preparing the lecture which, he felt, would enable him to tell the electrical world the magnificent story of his complete alternating-current system and the tremendous advantages it possessed over direct-current.

This lecture became a classic of the electrical engineering field. In it Tesla presented the theory and practical application of alternating-current to power engineering. This, with his patents, described the foundation, in the matter of circuits, machines and operation, and theory, upon which almost the entire electrical system of the country was established and is still operating today. No new development of anything even slightly approaching comparable magnitude has been made in the field of electrical engineering down to the present time.

Tesla's lecture, and the inventions and discoveries which he included in it, established him before the electrical engineering profession as the father of the whole field of alternating-current power system, and the outstanding inventor in the electrical field.

It is not easy to visualize the tremendous burst of electrical development and progress that came out of Tesla's laboratory in the few months after he established

it. He produced a tidal wave of advancement which carried the electrical world into the opening of the new power age in one grand surge--although it took several years, naturally, for the commercial exploitation to get under way. The world of electrical engineering was amazed, bewildered and mystified by the host of discoveries thrown into its midst in rapid succession from the Tesla laboratory, and was filled with admiration for the prodigious new genius who had flared up within its ranks.

Tesla's power system, employing high voltage for transmission, released electrical powerhouses using direct current from functioning as purely local enterprises, capable of serving an area within a radius of one mile at the very most. His motors used alternating-current that could be economically transmitted hundreds of miles, and he provided an economical two- and three-phase system for transmission lines.

The stupendous changes which the Tesla alternating-current inventions and discoveries brought about in the electrical industry can be realized by considering the handicap under which the direct-current powerhouses of the Edison system had operated up to that time. Electricity was generated in powerhouses by relatively small-size dynamos, and the current then distributed to customers over copper conductors laid in conduits under the streets. Some of the electrical energy fed into these conductors at the powerhouse did not arrive as electricity at the far end of the line but was converted along the route to useless heat by the resistance of the conductors.

Electrical energy is composed of two factors, the current, or amount of electricity, and the voltage, or the pressure under which the current is moved. Resistance losses were undergone by the current regardless of the voltage. One ampere of current experienced a definite loss caused by resistance and this loss was the same whether the pressure was 100, or 1,000 or 100,000 volts. If the current value remained fixed, then the amount of energy transported over a wire varied with the voltage. There is, for example, 100,000 times as much energy transported over a wire carrying a current of one ampere at 100,000 volts as there is when the current is one ampere and the pressure is one volt.

If the amount of current carried by a wire is doubled, the heat losses are increased four fold; if the current is tripled, these losses are increased nine fold, and if the current is increased four fold, the losses rise sixteen fold. This situation put definite limits to the amount of current which could be loaded on to conductors.

In addition there is an accompanying drop in pressure. In a half-mile-long conductor, of the size adopted and under the average currents carried, there would be a drop of about 30 volts. To compensate for this, to some extent, the dynamos were designed to generate 120 volts instead of the standard 110 volts for which lamps were designed. Near the powerhouse the customers would get excess voltage--and a half-mile away their current would be delivered at 90 volts. The early Edison carbon lamps were none too brilliant at 110 volts and gave much less than satisfactory illumination at 90 volts.

As a result of this situation the generation and distribution of direct-electric current became very much of a localized matter. The Edison powerhouse could serve an area less than a mile in diameter. In order to give service to a large city it would be necessary to have a powerhouse in every square mile, or even closer if a uniformly satisfactory current were to be supplied. Outside large cities the situation became even more dificult. This was a severe handicap if electricity was to become the universal power source.

Tesla's alternating-current power system, which Edison so emphatically rejected when it was offered to him, freed electricity from its bondage to local isolation. Not alone were his alternating-current motors more simple and flexible than the direct-current machines, but it was possible by a highly efficient method of using transformers, which consisted of two coils of wire around an iron core, to step up the voltage and simultaneously step down the current in a proportionate amount, or use the process in reverse. The amount of energy involved, however, would remain practically unchanged.

Copper wire entails a heavy investment when it is bought by the mile. The diameter of the wire sets the limit to the amount of current it will carry. With the Edison direct-current system there was no practical way for transforming an electric current. The voltage remained fixed and when

the current was increased to the carrying capacity of the wire no further expansion was possible on that circuit.

With the Tesla system the amount of energy a wire would transport would be increased tremendously by increasing the voltage and letting the current remain fixed below the carrying limit of the circuit. A very small wire could carry a thousand or more times as much electrical energy in the Tesla polyphase alternating system as it could in the Edison direct-current system.

By using Tesla's alternating-current system electricity could be delivered economically at vast distances from the powerhouse. It would be possible, if desired, to burn coal at the mouth of a mine for generating electricity, and deliver the current cheaply at distant cities, or to generate electricity where water power was available and transmit it to distant points where it could be used.

Tesla rescued the electrical giant from the apron strings of the powerhouse and gave it geographical freedom, the opportunity to expand into the wide-open spaces and work its magic. He laid the foundation for our present superpower system. A development of such magnitude was bound to be loaded with dynamite, and action was sure to follow as soon as someone set a match to the fuse.

TESLA'S spectacular lecture and demonstration before the American Institute of Electrical Engineers in New York focused on his work the attention of the electrical fraternity throughout the world. There was no doubt in the mind of the vast majority of electrical engineers that Tesla's discoveries created a new epoch in the electrical industry. But what could be done about it? There were few manufacturers who could take advantage of it. His discoveries were in the same predicament as a ten-pound diamond. No one would question the value of the stone but who would be in a position to purchase it or make any use of it?

Tesla had given no specific thought to commercializing his work at this time. He was in the midst of a program of experimental work which was far from complete and he desired to finish it before engaging in another line of activity. He expected that there would be no alternative to establishing his own company and engaging in the manufacture of his dynamos, motors and transformers. Such a course would take him away from the original experimental work which greatly fascinated him, and which he did not wish to interrupt. Commercializing his inventions, therefore, was a problem that could be postponed, as far as he was concerned, at least as long as the present financing of his work continued.

George Westinghouse, head of the Westinghouse Electric Company in Pittsburgh, was a man of vision. He was already famous as an inventor of numerous electrical devices but principally for his air brake for trains, and had made a fortune out of the exploitation of his own inventions. He recognized the tremendous commercial possibilities presented by Tesla's discoveries and the vast superiority of the alternating- over the direct- current system. He was a practical man of business and was not limited in his choice between the two systems.

Edison, head of the Edison General Electric Company, on the other hand, was under a limitation. Edison's invention was the incandescent electric lamp. Having developed this project, he was faced with finding some way to use it commercially. In order to sell his lamps to the public it was necessary to make the electricity available for lighting them. This necessitated the building of powerhouses and distribution systems. Another kind of electric lamp was already available--the arc lamp--in which he was but slightly interested. The Edison system powerhouses were standardized on low-voltage direct current. At that time direct-current motors were in use, and most technical men believed it was not at all likely there would ever be a practical alternating-current motor. The direct-current system, therefore, offered a number of advantages of a practical nature from Edison's viewpoint.

Westinghouse had no pet project comparable to the incandescent lamp around which he had to throw protecting conditions such as direct-current limitations, so he could look at the Tesla alternating-current discoveries from an unbiased and purely objective point of view. He reached his

decision a month after Tesla's lecture. Having done this, he forwarded a brief note to Tesla, making an engagement to see him in the latter's laboratory.

The two inventors had not previously met but each of them was well acquainted with the other's work. Westinghouse, born in 1846, was ten years older than Tesla. He was a short, stout, bearded, impressive-looking individual, and had a habit of directness in conducting his affairs that amounted almost to bluntness. Tesla, thirty-two years old, was tall, dark, handsome, slender and suave. They made a strongly contrasting pair as they stood in Tesla's laboratory, but they had three things in common: they both were inventors, engineers and loved electricity. Tesla had in his laboratory dynamos, transformers, and motors with which he could demonstrate his discoveries and models in actual operating conditions. Here Westinghouse was right at home and quickly became completely sold on the inventor and his inventions.

So favorably impressed was Westinghouse that he decided to act quickly. The story was related to the author by Tesla.

"I will give you one million dollars cash for your alternating-current patents, plus royalty," Westinghouse blurted at the startled Tesla. This tall, suave gentleman, however, gave no outward sign that he had almost been bowled over by surprise.

"If you will make the royalty one dollar per horsepower, I will accept the offer," Tesla replied.

"A million cash, a dollar a horsepower royalty," Westinghouse repeated.

"That is acceptable," said Tesla.

"Sold," said Westinghouse. "you will receive a check and a contract in a few days."

Here was a case of two great men, each possessed with the power of seeing visions of the future on a gigantic panorama, and each with complete faith in the other, arranging a tremendous transaction with utter disregard of details.

The amount involved was unquestionably a record one, for that time, for an invention. while Tesla liked to think of his complete polyphase system as a single invention, he was, nevertheless, selling about twenty inventions on which patents were already issued, and about as many more still to issue. With a total of forty patents involved in the transaction, most of them strongly basic in nature, he received, therefore, about $25,000 per patent. Westinghouse thereby obtained a record-breaking bargain by buying the patents in wholesale quantities.

Westinghouse arranged with Tesla to come to Pittsburgh "at a high salary" for a year, to act as consultant in the commercial application of his inventions. The generous offer made by the Pittsburgh magnate for the purchase of his patents made it unnecessary for Tesla to have any more worries about having to devote a major portion of his time to exploiting his inventions commercially through his own company. He could afford, therefore, to give this year of his time.

The apparatus which Tesla demonstrated to Westinghouse when the latter visited his laboratory, and which worked so beautifully, was designed for operation with a current of 60 cycles. Tesla's investigation had demonstrated that this was the frequency at which the greatest efficiency of operation could be achieved. At higher frequencies there was a saving in the amount of iron required; but the drop in efficiency, and design dificulties that developed, were not compensated for by the very small saving in cost of metal. At lower frequencies the amount of iron required increased, and the apparatus grew in size faster than increased efficiency justified.

Tesla went to Pittsburgh and expected to clear up all problems in less than a year. Here, though, he encountered engineers who faced the problem of producing a motor with a design that would insure, first, certainty of smooth and reliable operation; second, economy of operation; third, economy in use of materials; fourth, ease of manufacture; as well as other problems. Tesla had these problems in mind but not with the urgency with which the engineers faced them. In addition he was quite adamant in the choice of 60 cycles as the standard frequency for alternating current while engineers, who had experience on 133 cycles, were not so sure that the lower frequency would be best for the Tesla motors. At any rate there was conflict between the

inventor, interested mainly in principles, and engineers interested in practical design problems. Very definite problems were encountered in making the Tesla motor work on a single-phase current in small sizes. In this type of design, artifices had to be incorporated in the motor to achieve some of the characteristics of a two-phase current from the single-phase current that was supplied to operate it.

Tesla was thoroughly disgusted with the situation. He felt his advice concerning his own invention was not being accepted, so he quit Pittsburgh. Westinghouse was sure the situation would work itself out. Seeking to persuade Tesla to remain, he offered him, Tesla revealed many years later, twenty-four thousand dollars a year, one third of the net income of the company and his own laboratory, if he would stay on and direct the development of his system. Tesla, now wealthy and anxious to return to original research, rejected the offer.

Development work proceeded after Tesla left, and soon practical designs were produced for all sizes of motors and dynamos, and their manufacture started. Tesla was happy to note that the 60-cycle standard, his emphatic choice, but which had been questioned on the ground it was less practical in small units, had been adopted as the standard frequency.

On returning to his New York laboratory, Tesla declared that he had not made a single worth-while contribution to electrical science during the year he spent at Pittsburgh. "I was not free at Pittsburgh," he explained; "I was dependent and could not work. To do creative work I must be completely free. When I became free of that situation ideas and inventions rushed through my brain like a Niagara." During the following four years he devoted a large fraction of his time to further developments of his polyphase power system, and applied for, and was granted, forty-five patents. Those granted in foreign countries would bring the total to several times this number.

The ideas of the two giants among inventors--Edison and Tesla--were meeting in head-on battle. Out of the laboratories of the two geniuses, within sight of each other in South Fifth Avenue in New York, had come world-shaking developments.

There had been considerable conflict between Edison, who adhered strictly to direct current, and those who supported the claims for alternating current. The Thomson-Houston Company and the Westinghouse Electric Company had extensively developed this field for series electric lighting and arc lighting before the Tesla power system was developed. Edison had engaged in many tilts at these competitors, attacking alternating-current as unsafe because of the high voltages used. The advent of the Tesla system added fuel to the fire.

It was Tesla's belief that when the New York State Prison authorities adopted high-voltage alternating current for electrocution of condemned prisoners, the Edison interests had engineered the project to discredit alternating current. There is no doubt about the aid the prison authorities' choice gave the direct-current group; but their decision was undoubtedly based on the fact that direct current could not, by any practical means, be produced at the high voltages required, whereas alternating-current potentials could be very easily increased. Direct current is just as deadly, at the same voltage and amperage, as alternating current. In this "war of the currents," however, as in other wars, appeal to the emotions, instead of to simple facts, were the governing influences.

The task of putting the United States on an electrical power basis--which is what George Westinghouse undertook when he began to exploit the Tesla patent--was a gigantic one requiring not only engineering talent but capital. The Westinghouse Electric Company experienced a tremendous expansion in the volume of its business, but the upward surge came at a time when the country was going into a stage of commercial and financial depression; and Westinghouse soon found himself in dificulties.

This was, in addition, an era in which competing giant financial interests were battling for control of the industrial structure of the country through control of capital. It was a time of mergers, a period when the financial interests were building larger units of production by uniting smaller companies in related fields, frequently forcing these combinations without regard to what the owners of the companies desired.

One merger, internally initiated and arranged by mutual consent, brought together the Thomson-Houston Company and the Edison General Electric Company, the two biggest competitors of Westinghouse Electric, to form the present General Electric Company. This was a challenge to competing financial interests.

Westinghouse had expanded his business at a very rapid rate in exploiting the Tesla patents. Because his financial structure thereby lost a certain amount of flexibility, he became vulnerable to financial operators and soon found himself in the toils of a merger that involved uniting several other small companies with his organization. Financial interests that had stepped into the situation demanded that the Westinghouse Electric Company be reorganized as a step toward bringing about a merger with it of the U. S. Electric Company and the Consolidated Electric Light Company, the new unit to be known as the Westinghouse Electric and Manufacturing Company.

Before this reorganization would be consummated the financial advisers, in strategic positions, insisted that Westinghouse jettison some of his plans and projects which they considered inadvisable or a detriment to getting the new company onto a new foundation that would be sounder from a financial point of view.

One of the requirements was that Westinghouse get rid of the contract with Tesla calling for royalty payments of $1 per horsepower on all alternating-current articles sold under his patents. (No documentary evidence exists concerning this contract. The author located two sources of information. One was in complete agreement with the story here related. The other states that the million-dollar payment was advance royalties and Tesla so described it to him, declaring no further royalties were paid.) The financial advisers pointed out that if the business which Westinghouse expected the company would do under the Tesla patents in the ensuing year was anywhere near as great as estimated, the amount to be paid out under this contract would be tremendous, totaling millions of dollars; and this, at the time of reorganization, appeared a dangerous burden, imperiling the stability which they were trying to attain for the new organization.

Westinghouse strenuously objected to the procedure. This patent-royalty payment, he insisted, was in accordance with

usual procedures and would not be a burden on the company, as it was included in costs of production, was paid for by the customers, and did not come out of the company's earnings. Westinghouse, himself an inventor of first magnitude, had a strong sense of justice in his dealings with inventors.

The financial advisers, however, were not to be overruled. They nailed Westinghouse on the spot by insisting that the million dollars he had paid Tesla was more than adequate compensation for an invention, and that by making such an exorbitant payment he had imperiled the financial structure of his company and jeopardized his bankers' interest. Any further imperiling of the reorganization by any effort to retain the royalty contract would, it was argued, result in the withdrawing of support that would save the company.

The situation boiled down to the common "Either-Or" technique.

Westinghouse was required to handle the negotiations with Tesla. No situation could be more embarrassing to him. Nevertheless, Westinghouse was a realist among realists. He never hesitated to face facts squarely and with a blunt directness. "I will give you one million dollars cash for your alternating-current patents, plus royalty": he had been both brief and blunt when he purchased the patents from Tesla. Now he was faced with the problem of undoing the situation into which he had entered with such brevity. Then money talked and he held the money. Now Tesla held the dominant position; he held a perfectly valid contract worth many millions, and he could go to court to force compliance with its terms. Edison's successful suit against infringers of his electric-light patent, bringing disaster to many companies that violated his patent property rights, had caused the whole industrial world to hold a new and wholesome respect for patent rights.

Westinghouse had no reason for believing that Tesla would show the slightest inclination to relinquish his contract or permit its terms to be changed to provide a smaller rate of royalty. He knew that Tesla's pride had been hurt by the disagreement with the Pittsburgh engineers, and that he might not now be in a conciliatory mood. On the other hand, Westinghouse knew that he had succeeded in having Tesla's ideas adopted. His greatest comfort came from the fact that he had entered into the contract with good faith--and with

the same good faith he was trying to handle a much less satisfactory situation. Perhaps he could offer Tesla an executive position in the company in lieu of the contract. There would be mutual advantages in such an arrangement.

There is no means of fixing the definite value of the contract Tesla held. His patents covered every department of the new alternating-current power system, and royalties could be collected on powerhouse equipment and motors. At that time the electric power industry had barely started; no one could look into the future and see the tremendous volume of business that would be developed. (The latest data available indicate that in 1941 there was 162,000,000 horsepower of electrical generating machinery in operation in the United States, practically all of it for alternating current. Assuming a uniform growth from 1891 to 1941, the installed horsepower in 1905, when the first Tesla patents would have expired, would have been about twenty million. This figure is, apparently, too high.

According to a census of central stations in the United States conducted by T. Commerford Martin (Electrical World, March 14, 1914) the horsepower of generators in operation in 1902 was 1,620,000 and in 1907 the figure had risen to 6,900,000. On a pro rata, per-year basis, this would make the figure for 1905, the year when Tesla's first patents expired, 5,000,000. During this period many manufacturers who had been using steam power installed dynamos in their factories and operated isolated plants. These would not be included in the central-station figures and, if added, would bring the total horsepower to perhaps 7,000,000. Tesla would have been entitled to $7,000,000 royalties on this equipment, on the basis of his $1-per-horsepower arrangement. In addition he would have been entitled to royalties on motors that used the power generated by these dynamos. If only three quarters of the current generated were used for power, this would have entitled him to additional royalties of $5,000,000, or a total of $12,000,000.)

It would be a tough job for any executive, no matter how shrewd or clever, to talk a man out of a contract that would net him many millions of dollars, or induce him to accept a reduction in rates amounting to millions.

Westinghouse called on Tesla, meeting him in the same South Fifth Avenue laboratory where he had purchased the patents

four years before. Without preliminaries or apologies Westinghouse explained the situation.

"your decision," said the Pittsburgh magnate, "determines the fate of the Westinghouse Company."

"Suppose I should refuse to give up my contract; what would you do then?" asked Tesla.

"In that event you would have to deal with the bankers, for I would no longer have any power in the situation," Westinghouse replied.

"And if I give up the contract you will save your company and retain control so you can proceed with your plans to give my polyphase system to the world?" Tesla continued.

"I believe your polyphase system is the greatest discovery in the field of electricity," Westinghouse explained. "It was my efforts to give it to the world that brought on the present difficulty, but I intend to continue, no matter what happens, to proceed with my original plans to put the country on an alternating-current basis."

"Mr. Westinghouse," said Tesla, drawing himself up to his full height of six feet two inches and beaming down on the Pittsburgh magnate who was himself a big man, "you have been my friend, you believed in me when others had no faith; you were brave enough to go ahead and pay me a million dollars when others lacked courage; you supported me when even your own engineers lacked vision to see the big things ahead that you and I saw; you have stood by me as a friend. The benefits that will come to civilization from my polyphase system mean more to me than the money involved. Mr. Westinghouse, you will save your company so that you can develop my inventions. Here is your contract and here is my contract--I will tear both of them to pieces and you will no longer have any troubles from my royalties. Is that suficient?"

Matching his actions to his words Tesla tore up the contract and threw it in the waste basket; and Westinghouse, thanks to Tesla's magnificent gesture, was able to return to Pittsburgh and use the facilities of the reorganized company, which became the present Westinghouse Electric and Manufacturing Company, to make good his

promise to Tesla to make his alternating-current system available to the world.

Probably nowhere in history is there recorded so magnificent a sacrifice to friendship as that involved in Tesla's stupendous gift to Westinghouse of $12,000,000 in unpaid royalties, although Westinghouse personally received only indirect benefits from it.

It is also probable that the failure to pay Tesla these royalties resulted in one of the greatest handicaps to scientific and industrial progress which the human race has experienced. A few years later Tesla, still an intellectual giant far from the peak of his greatest growth, still pouring forth a profusion of inventions and discoveries of first magnitude, equal in importance to his first efforts which put the world on an electrical power basis, found himself without funds with which to develop his discoveries, with the result that many of them have been lost.

Nearly fifty years after this majestic relinquishment of wealth on the altar of friendship, during which time Tesla had had opportunity to see the United States and the world as a whole wax wealthy out of the power he had made available, he was called on to respond, with a speech, to honorary citation by the Institute of Immigrant Welfare. Tesla, then about eighty, was unable to appear in person. He had experienced decades of poverty in which he faced ridicule for his failure to develop inventions which he declared he had made, and had been forced to move frequently from hotel to hotel, owing to inability to pay his bills. In spite of these experiences he developed no rancor toward Westinghouse in whose behalf he sacrificed his $12,000,000 in royalties. Instead, he retained his original warm friendship. This is indicated by a statement in the speech he sent to the Institute to be read at its dinner held in the Hotel Biltmore, May 12, 1938:

"George Westinghouse was, in my opinion, the only man on this globe who could take my alternating-current system under the circumstances then existing and win the battle against prejudice and money power. He was a pioneer of imposing stature, one of the world's true noblemen of whom America may well be proud and to whom humanity owes an immense debt of gratitude."

when Tesla left the Westinghouse plant at Pittsburgh in 1889 to return to his laboratory in New York, he entered a new world. The magnificent polyphase system which he had already produced was but a small sample of the greater wonders that still remained to be revealed, and he was anxious to start exploring the new realm.

He was not approaching an entirely unknown realm in which he would have to feel his way in darkness in the hope of stumbling upon something of value, although anyone else at that time would have been in that position. On that fateful afternoon in February in Budapest in 1882, when he was given the vision of the rotating magnetic field, there had come with it an illumination that revealed to him the whole cosmos, in its infinite variations and its myriad of forms of manifestations, as a symphony of alternating currents. For him, the harmonies of the universe were played on a scale of electrical vibrations of a vast range in octaves. In one of the lower octaves was a single note, the 60-cycle-per second alternating current, and in one of the higher octaves was visible light with its frequency of billions of cycles per second.

Tesla had in mind a course of experimentation in which he would explore this region of electrical vibration between his alternating current and light waves. He would increase the frequency of the alternating current through the unknown intervening regions. If one note in a lower octave produced such a magnificent invention as the rotating magnetic field and the polyphase system, who could imagine the glorious possibilities that lay hidden on other notes in higher octaves? And there were thousands of octaves to be explored. He would construct an electrical harmonium by producing electrical vibrations in all frequencies, and study their characteristics. He would then, he hoped, be able to understand the motif of the cosmic symphony of electrical vibrations that pervaded the entire universe.

Tesla, at the age of thirty-three, was now wealthy. He had received $1,000,000 from the Westinghouse Company for his first crop of inventions. Of this, $500,000 went to A. K. Brown and his associate who had financed his experiments. Still greater inventions were to follow. He would never

need money. He would, he then believed, have royalties in the millions from his alternating-current patents. He could spend as freely as he wished, penetrating the secrets of Nature and applying his discoveries to human welfare. It was his responsibility to be so engaged. He knew he was gifted as no other man had been blessed with vision, talent and ability; and he in turn would endow the world with supernal treasures of scientific knowledge which he would extract from the secret recesses of the universe and, through the activities of his mighty mind, transform into agencies to brighten the lives, lighten the labors and increase the happiness of the human race.

was he a superegoist in his attitude? If so, he was not activated by selfish motives. To him it mattered not what he thought, so long as he remained objective in his thinking and his thoughts could be translated into demonstrable facts. what if he did consider himself greater than other men: did not this viewpoint conform to the facts? Suppose he did consider himself a man of destiny. Could he not bring evidence to support the contention? It was not necessary for Tesla actually to see an event occur in order to enjoy its realization. Had he not as a youth declared that he would make a practical alternating-current motor, only to be told by his professor that the goal was impossible of attainment--and had he not already accomplished this "impossibility"? Had he not taken the direct-current dynamos of Edison, whom all the world looked upon as a great genius, and had he not greatly improved their design and operation; and in addition, had he not produced a vastly superior system for producing, distributing and using electricity? To all of these inquiries Tesla could answer in the afirmative without going beyond the bounds of modesty concerning his achievements.

His attitude was not that of an egoist. It was an attitude of supreme faith in himself and in the vision that had been given him. To a man of ability, with such supreme faith in himself, and necessary financial resources to advance his purposes, the world of accomplishments is without limits. This was the picture of Tesla as he returned to his laboratory in lower Fifth Avenue, New York, in the latter part of 1889.

Tesla had studied a wide range of frequencies of alternating current in order to select the frequency at

which his polyphase system would operate most efficiently. His calculations indicated important changes in characteristics and effects as the frequency of the current was increased; and his observations with the electrical machinery he built confirmed his calculations. He noted that ever smaller quantities of iron were required as the frequencies were increased, and he now wished to explore the very high frequencies at which unusual effects should be produced without any iron in the magnetic circuit.

When, back in Budapest following his rotating magnetic-field discovery, he had played with mental calculations of the properties of alternating currents all the way from the very lowest frequency up to that of light, no one had yet explored this region. James Clerk Maxwell, at Cambridge University, England, had, however, nine years before, in 1873, published his beautiful presentation on an electromagnetic theory of light, and his equations indicated that there was a vast range of electro-magnetic vibrations above and below visible light--vibrations of much longer and much shorter wavelengths. while Tesla was engaged in making models of his polyphase system in 1887, too, Professor Heinrich Hertz, in Germany, put the Maxwell theory to test in the range of waves a few meters long. He was able to produce such waves by the spark discharge of an induction coil, and was able to absorb such waves from space and change them back to a small spark at some distance from the coil.

Hertz's work gave support to Tesla's theory that there was an interesting discovery to be made on almost every note of the whole gamut of vibrations between the known ones of the electrical current and those of light. Tesla felt sure that if he could continually increase the frequency of electrical vibrations until they equaled that of light, he would be able to produce light by a direct and highly efficient process instead of the extremely wasteful process used in the Edison incandescent lamp, in which the useful light waves were a very small fraction of the wasted heat waves emitted in the process, and only five per cent of the electrical energy was effectively utilized.

Tesla started his investigations by building rotary alternating-current dynamos with up to 384 magnetic poles, and with these devices he was able to generate currents up to 10,000 cycles per second. He found that these high-frequency currents presented many fascinating possibilities

for even more efficient power transmission than his very practical 60-cycle polyphase system. He therefore carried on a parallel line of research into transformers for raising and lowering the voltage of such currents.

High-frequency alternating-current dynamos, similar to those designed by Tesla in 1890, were subsequently developed by F. W. Alexanderson into the high-power wireless transmitters which put transatlantic wireless transmission, more than two decades later, on such a sound practical basis that the Government would not permit control of it to go to a foreign country and preserved for the United States its predominant position in world wireless.

The high-frequency current transformers which Tesla developed proved to be spectacular performers. They contained not a trace of iron; as a matter of fact, the presence of iron was found to interfere with their operation. They were air-core transformers and consisted merely of concentric primary and secondary coils. The voltages he was able to produce with these transformers, which became known as Tesla coils, were very high. In the early experiments he attained potentials that would spark across a couple of inches of air, but in a short time he made tremendous progress and was producing flaming discharges. In working with these voltages he encountered dificulties in insulating his apparatus, and so he developed the technique that is now in universal use in high-tension apparatus: that of immersing the apparatus in oil and excluding all air from the coils, a discovery of great commercial importance.

There was a limit, however, above which the use of rotary generators of high-frequency currents was not practicable, so Tesla set about the task of developing a different type of generator. There was nothing novel about the basic idea he employed. In rotary dynamos, current is generated by moving a wire in a circle past a number of magnetic poles in succession. The same effect can be attained by moving the wire back and forth with an oscillating motion in front of one magnetic pole. No one, however, had as yet produced a practical reciprocating dynamo. Tesla produced one that was extremely practical for his particular purpose; but otherwise it had little utility, and he later felt that he could have employed much better the time he spent on it. It was an ingenious single-cylinder engine without valves, and

could be operated by compressed air or steam. It was supplied with ports like a small two-cycle marine engine. A rod extended from the piston through the cylinder head at either end, and at each end of the rods was attached a flat coil of wire which, by the reciprocating action of the piston, was caused to move back and forth through the field of an electromagnet. The magnetic field through its cushioning effect served as a flywheel.

Tesla was able to obtain a speed of 20,000 oscillations per minute, and to maintain such a remarkable degree of constancy in operation that he proposed the maintenance of equally constant speed of operation for his 60-cycle polyphase system and the use of synchronous motors, geared down to the proper extent, as clocks which would furnish correct time wherever alternating current was available. This proposal furnished the foundation for our modern electric clocks. As with many another of his practical and useful suggestions, he did not take out a patent on the idea, and gained no financial advantage from it.

In working with his polyphase system, Tesla gained a thorough understanding of the part played by the two factors, capacity and inductance, in alternating-current circuits; the former acting like a spring and the latter like a storage tank. His calculations indicated that with currents of suficiently high frequency it would be possible to produce resonance with relatively small values of inductance and capacity. Producing resonance is tuning a circuit electrically. The mechanical effects analogous to electrical resonance are the causing of a pendulum to swing through a wide arc by giving it a series of very light but equally timed touches, or the destruction of a bridge by soldiers marching in unison over it. Each small vibration re-enforces its predecessors until tremendous effects are built up.

In a tuned electrical circuit a condenser supplies the capacity and a coil of wire supplies the inductance. A condenser ordinarily consists of two parallel metal plates separated from each other a short distance by an insulating material. Each plate is connected to either end of the inductance coil. The size of the condenser and the coil is determined by the frequency of the current. The coil-condenser combination and the current are tuned to each other. The current can be pictured as flowing into the condenser until it is fully charged. It then flows

elastically into the inductance coil, which stores the energy by building up its magnetic field. When the current ceases to flow in the coil, the magnetic field collapses and gives back to the coil the energy previously used in building up the magnetic field, thus causing a current to flow back into the condenser to charge it up to overflowing again, so that it is ready to repeat the process. This flow back and forth between the condenser and coil takes place in step with the periodic reversal of the alternating current which supplies the energy when resonance is established. Each time it takes place, the charging current comes along at the right instant to give it a boost, so that the oscillations build up to tremendous values.

Tesla, in discussing this plan of electrical tuning of circuits in a lecture, given several years later, said:

The first question to answer then is whether pure resonance effects are producible. Theory and experiment show that such is impossible in nature for, as the oscillations become more vigorous, the losses in vibrating bodies and environing media rapidly increase, and necessarily check the vibrations, which would otherwise go on increasing forever. It is a fortunate circumstance that pure resonance is not producible for, if it were, there is no telling what dangers might lie in wait for the innocent experimenter. But, to a certain degree, resonance is producible, the magnitude of the effects being limited by the imperfect conductivity and imperfect elasticity of the media, or, generally stated, frictional losses. The smaller these losses the more striking are the effects.

Tesla applied the electrical tuning principles to his coils and discovered that he was able to produce tremendous resonance effects and build up very high voltages. The tuning principles he developed in 1890 are those which have made our modern radio, and the development of the earlier art, "wireless," possible. He had been working with, and demonstrating, these principles before others who received credit had begun to learn the first lessons in electricity.

Seeking a new source of high-frequency currents, higher than could be produced by any mechanical apparatus, Tesla made use of a discovery that had been made the year in which he was born, by Lord Kelvin, in England, in 1856, and for which no use had thus far been found. Up to the time of Kelvin's discovery it had been believed that when a

condenser was discharged the electricity flowed out of one plate into the other, like water being poured from a glass, thus establishing equilibrium. Kelvin showed that the process was far more interesting and complex; that its action was like the bobbing up and down that takes place when a weighted stretched spring is released. The electricity, he showed, rushes from one plate into the other and then back again, the process continuing until all of the stored up energy is used up in overcoming frictional losses. The back-and-forth surges take place at a tremendously high frequency, hundreds of millions a second.

The combination of condenser discharges and tuned circuits opened a new realm in electrical science as significant and as important as Tesla's polyphase system. He worked out remarkably simple and automatic methods for charging the condensers by low voltage (direct and alternating currents), and discharging them through his new air-core transformers, or Tesla coils, to produce currents of enormously high voltages that oscillated at the tremendously high frequency of the condenser discharge. The properties of these currents were unlike anything that had been seen before. He was again pioneering in an entirely new field, with tremendous possibilities. He labored feverishly in his laboratory; and as he lay in bed at night for his five-hours' rest, which included two hours of sleep, he formulated new experiments.

Tesla announced the heating effect of high-frequency currents on the body in 1890 and proposed their use as a therapeutic device. In this he was a pioneer, but soon had many imitators here and abroad who claimed to be originators. He made no effort to protect his discovery or prevent the pirating of his invention. When the same observation was made thirty-five years later in laboratories using vacuum-tube oscillators as the source of the high-frequency currents, it was hailed as a new discovery and developed as a modern wonder. Tesla's original discovery is, however, the basis of a vast array of very recent electronic applications in which high-frequency currents are used to produce heat for industrial purposes.

When he gave his first lecture on the subject before the American Institute of Electrical Engineers at Columbia College, in May, 1891, he was able to produce spark discharges five inches long, indicating a potential of

about 100,000 volts, but, more important, he was able to produce phenomena which included, electrical sheets of flame, and a variety of new forms of illumination--electric lamps the like of which had never been seen before, nor dreamed of in the wildest imagination of any experimenter.

This lecture produced a sensation in engineering circles. He was already famous in this field for the astounding revelations he had made before the same organization on that earlier occasion when he described his discovery of the polyphase alternating current system. That discovery was an intellectual accomplishment of bewildering brilliance, made impressive by the tremendous commercial importance of the discovery. The experiments with the high-frequency and high-potential currents, however, were spectacular; the crackling of the high-voltage sparks, the flashing of the high-potential sheets of electrical flame; the brilliant bulbs and tubes of electrical fire, the amazing physical effects he produced with the new currents, made a profound emotional appeal to the startled beholders.

The man who could produce these two pioneering developments within two years must be more than a genius! The news of his new accomplishment flashed quickly throughout the world, and Tesla's fame now rested on a double foundation.

The world-wide fame that came to him at this time was unfortunate. Tesla would have been entirely superhuman had he not derived a great deal of satisfaction out of the hero-worshiping adulation that now came to him. It was only five years ago that he had been hungry and penniless in the streets of New York, competing with equally hungry hordes of unemployed for the few existent jobs calling for brute labor, while his head bulged with important inventions which he was anxious to give to the world. No one would listen to him then--and now the intellectual elite of the nation were honoring him as an unrivaled genius.

Tesla was a spectacular figure in New York in 1891. A tall, dark, handsome, well-built individual who had a flair for wearing clothes that gave him an air of magnificence, who spoke perfect English but carried an atmosphere of European culture which was worshiped at that time, he was an outstanding personality to all who beheld him. Hidden behind his quiet, self-effacing demeanor, and an extreme modesty that manifested itself as an exaggerated shyness, was the mind of a genius which had worked electrical

wonders that fired the imagination of all and exceeded the understanding of the vast majority of the population. In addition Tesla was a young man, not yet thirty-five, who had recently received a million dollars and was a bachelor.

A bachelor with a million dollars, culture and fame, could not avoid being a shining mark in New York in the early years of the gay nineties. Many were the designing matrons with marriageable daughters who cast envious eyes in the direction of this eligible young man. The social leaders looked upon him as a fascinating decoration for their salons. The big men of business looked upon him as a good man to know. The intellectuals of the day found his almost unbelievable accomplishments a source of inspiration.

Except at formal dinners Tesla always dined alone, and never under any circumstances would he dine with a woman at a two-some dinner. No matter how much a woman might gush over him or strive to gain his favor, Tesla, in most adamant fashion, maintained a thoroughly impersonal attitude. At the Waldorf-Astoria and at Delmonico's he had particular tables which were always reserved for him. They occupied secluded positions in the dining rooms because when he entered either room he was the cynosure of all eyes and did not enjoy being on exhibition.

In spite of all of the adulation that was heaped upon him, Tesla had but one desire--to continue his laboratory experiments undisturbed by outside distractions. There was a tremendous empire of new knowledge to be explored. He was fired with a potential of enthusiasm for the work that was as high as the voltage of the currents with which he was working, and new ideas were coming to him with almost the rapidity of the cycles in his high-frequency current.

There were three broad fields in which he wished to develop applications which were now clearly outlined in his mind: a system of wireless power transmission that would excel his own polyphase system, a new type of illumination, and the wireless transmission of intelligence. He wished to work on them all simultaneously. They were not separate and isolated subjects but all closely intermeshed, all notes on that vast cosmic scale of vibration represented by his beloved alternating currents. He did not wish to play on one note at a time, as would a violinist; he preferred to play as a pianist, striking many notes at once and weaving them into beautiful chords. Where it possible to occupy the

position of leader and simultaneously play all of the instruments in a great symphony orchestra, he would have been still better pleased. The instruments in his orchestra, however, would be electrical devices oscillating in tune with their energizing currents or with their environment. To the extent that he was unable to realize his most expansive desires, he was under mental pressure that drove him to a working pace which no individual of ordinary strength could withstand without a resulting complete physical breakdown.

The spectacular lecture and demonstration on high-frequency and high-potential currents which he gave before the American Institute of Electrical Engineers in February, 1891, at Columbia College, created as profound a sensation as did his earlier one. Each opened an entirely new realm of scientific investigation and practical discoveries. The discoveries contained in either lecture would have been suficient to stand as the fruit of a lifetime's work and bring lasting fame. Two such events in rapid succession seemed almost unbelievable--yet Tesla seemed to be scarcely well launched on his career, with more important work still to come.

Requests that he give lectures came from learned societies throughout this country and Europe, but he begged to be excused because of the tremendous pressure on his time which his work entailed. Equally insistent were the social demands that were being made upon him. Social groups sought in every way to honor him, and incidentally to shine in his reflected glory. Tesla was not vulnerable to the importunings of the socialites who sought him merely as a scintillating satellite, but the clever "lion hunters" of that day soon discovered his Achilles' heel--an intelligent interest in his accomplishments and a sympathetic ear for his dreams of wonders still to come.

With this technique in successful operation, Tesla was captured and soon completely lionized. He was guest of honor at a continuous round of functions and he met the social obligations involved in them by staging, in return, elaborate dinners at the Waldorf-Astoria followed by demonstration parties at his laboratory on South Fifth Avenue. Tesla never did a halfway job on anything. When he staged a dinner he left nothing to chance in the matter of cuisine, service and decorations. He sought rare fish and fowl, meats of surpassing excellence, and choicest liquors

and exquisite wines of the best vintages. His dinners were the talk of the town and having been a guest at a Tesla dinner was a mark of social distinction, proof of membership in the inner group of the elite within Ward MacAllister's "400." At these dinners Tesla presided as a most meticulous host, or more accurately, as an old-world absolute monarch, for he would sample all food brought to the dining room; and rarely did an event pass without the grandiose host sending back some sauce or wine of unquestioned excellence as unworthy of his guests.

Following each of these meals Tesla would escort his guests to his laboratory below Washington Square; and here his demonstrations were even more spectacular than his dinners. He had a flair for the dramatic; and the strange-looking devices with which his laboratory was furnished provided a grotesque and bizarre background for the fantastic displays of seemingly unearthly forces that with invisible fingers set objects whirling, caused globes and tubes of various shapes to glow resplendently in unfamiliar colors as if a section of a distant sun were suddenly transplanted into the darkened room, and crackling of fire and hissing sheets of flame to issue from monster coils to the accompaniment of sulfurous fumes of ozone produced by the electrical discharges that suggested this magician's chamber was connected directly with the seething vaults of hell. Nor was this illusion dispelled when Tesla would permit hundreds of thousands of volts of electricity to pass through his body and light a lamp or melt a wire which he held.

The amazing feat of harmlessly passing through his body currents of tremendously high voltage and high frequency was one which Tesla evolved by his mental experiments long before he had an opportunity to test them in his laboratory. The low-frequency alternating currents, such as are now used on home-lighting circuits, would, he knew from unpleasant experiences, produce a painful shock if passed through the body. When light waves impinged on the body, however, no such painful sensation was produced. The only difference between the electric currents and light waves, he reasoned, was a matter of frequency, the electric currents oscillating at the rate of 60 per second and the light waves at billions per second.

Somewhere between these two extremes the shock-producing property of electromagnetic vibrations must disappear; and

he surmised the point would be near the lower end of the gap. Damage done to the body by electric shock he divided into two factors, one--the destruction of tissues by the heating effect which increased or diminished as the amperage of the current was raised or lowered; and two--the sensation of acute pain which varied with the number of alternations of the current, each alternation producing a single stimulus which was transmitted by the nerves as a pain.

Nerves, he knew, could respond to stimuli up to a rate of about 700 per second, but were unable to transmit impulses received at a more rapid rate. In this respect they acted very much like the ear, which is unable to hear air vibrations above a frequency of about 15,000 per second, and the eye, which is blind to color vibrations of a frequency higher than that in violet light.

When he constructed his high-frequency alternating-current dynamos, he had frequencies up to 20,000 per second with which to test his theory; and by finger tests across the terminals he was able to demonstrate that the nerves were unable to perceive the individual vibrations at this rapid rate. The amperage, which carried the tissue-destroying power, was still too high in the output of these machines to pass safely through his body, even though the sensation of pain was lacking.

By passing these currents through his newly invented air-core transformers, he could increase their voltage ten-thousand fold and reduce the amperage proportionately. The current density would thereby be reduced below the point at which it would injure tissues. He would then have a current which would not produce sensation and would not harm the tissues. He cautiously tested the theory by passing the currents through two fingers, then his arm, next from hand to hand through his body and finally from his head to his feet. If a spark jumped to or from his body, there was a pin-prick sensation at the point of contact, but this could be eliminated by holding a piece of metal to and from which the spark could jump while the current passed through the tissues without producing any sensation.

The energy content of these currents, which is proportionate to the current multiplied by the voltage, could be very high and produce spectacular effects such as melting metal rods, exploding lead disks, and lighting

incandescent or vacuum-tube lamps after passing painlessly through his body.

The European scientific societies were persistent in their efforts to induce Tesla to accept their invitations to lecture before them, and finally he acceded. He set extravagantly high standards for the contents of his lectures, and their preparation entailed a tremendous amount of labor. All of the material had to be entirely new. He would never repeat an experiment previously presented. Every technical statement had to be tested at least twenty times to insure complete accuracy. His lectures would last two or three hours; and every minute of the time was crowded with new and awe-inspiring demonstrations of his constant stream of discoveries. He used a great array of devices fashioned by himself and built in his own laboratories to illustrate his talks. A Tesla lecture, therefore, was an extremely important event in the scientific world and a most impressive occasion to those who were fortunate enough to be able to attend.

Tesla arranged to give a lecture before the Institution of Electrical Engineers in London on February 3, 1892, and one before the International Society of Engineers in Paris on February nineteenth. His decision to give the European lectures was influenced to some extent by the fact that they would afford him an opportunity to visit his home in Gospic, for recent letters had indicated that his mother's health was failing.

The lecture before the Institution of Electrical Engineers was a great success. English engineering journals, as will be seen, had been niggardly in extending recognition to Tesla for priority in the discovery of the rotating magnetic field, and had belittled the practical value of his polyphase alternating-current system, but in this attitude they were not representative of the great body of engineers, who were most generous in their praise and enthusiasm; and the attitude of the engineers was shared by the English scientists.

When Tesla arrived in London he was entertained at many places by famous men. At the Royal Institution, where the immortal Michael Faraday had carried on his fundamental researches in magnetism and electricity, Sir James Dewar, and a committee of equally famous scientists, sought to prevail upon Tesla to repeat his lecture before that

organization. Tesla could be plain stubborn in sticking to his plans, and in this case was exhibiting his usual firmness. The famous Scottish scientist matched Tesla's stubbornness with an equal persuasive persistence. He escorted Tesla to Faraday's chair, an almost sacred relic to English science, seated him in this throne, and then brought out an almost equally precious heirloom, a portion of a bottle of whiskey, the remainder of Faraday's personal supply, untouched for nearly a quarter of a century. Out of this he poured a generous half glass for Tesla. Sir James won. Tesla relented and gave the lecture the following evening.

Lord Rayleigh, the eminent English physicist, was chairman of the meeting at the Royal Institution, which was attended by the elite of the scientific world and a generous representation of the nobility of the realm. Rayleigh, after witnessing the performance of Tesla's experiments, which were none the less awe inspiring to scientists than to laymen, showered words of praise on the inventor.

Rayleigh declared that Tesla possessed a great gift for the discovery of fundamental scientific principles, and urged that he concentrate his efforts on some one big idea.

Tesla, in his conversation after the meeting, disclaimed ability as a great discoverer; but in this he was merely being modest, for he knew that he was unique among men in his ability to discover fundamental truths. He did, however, give very serious consideration to Rayleigh's suggestion that he concentrate on some one big idea. It is doubtful, however, whether Rayleigh's suggestion was good advice. Tesla's mind had a range that was cosmic in magnitude and adjusted to broad slashing advances through unknown regions. Rayleigh's advice was like suggesting to an explorer who had unique ability for penetrating an unknown continent and opening it to civilization that he settle down and cultivate a homestead, since that would give more definite and specific returns for efforts expended.

Two weeks later Tesla gave his scheduled lecture before the Physical Society in Paris and repeated it before the International Society of Electrical Engineers. This was his second visit to Paris since he had quit his job with the Continental Edison Company in that city eight years before. Immediately after leaving the Westinghouse Company in the

autumn of 1889--at which time, too, he completed his U.S. citizenship requirements--he had made a brief visit to Paris to attend the International Exposition. In the meantime, the fame of his polyphase system had spread to Europe; and to this was added the glory for his spectacular work with the new high-frequency currents. He was given a hero's reception in Paris, as well as in London.

It would be interesting to know what thoughts passed through the minds of the executives of the Continental Edison Company as they observed the tremendous contributions to science and industry by the engineer whose services they had lost through their penny-wise tactics when they were offered in 1883, and could undoubtedly have purchased for a relatively small amount, the polyphase system for which Westinghouse paid Tesla $1,000,000 five years later.

A tesla lecture was an avalanche of new and fascinating electrical knowledge. He completely overwhelmed his listeners with a wealth of spectacular original experiments, and as a result almost every individual contribution lost its identity in the dazzling concentration of the whole galaxy of startling developments.

In the 1892 lectures, entitled "Experiments with Alternating Currents of High Potential and High Frequency," Tesla described many of his discoveries which are only coming into general use today and are being hailed as modern inventions. Among these are the "neon" and other gas-filled lamps, and phosphorescent lamps. Many of the discoveries described are still unutilized, including, as will be seen, the carbon or metallic-button incandescent lamp, requiring but a single wire connection; and still others, which he later discovered, were rich producers of the mysterious X-rays.

The transcript of these lectures runs to 40,000 words. Scores of pieces of apparatus were used and usually several experiments were performed with each. He described "wireless" lamps, glowing glass tubes that required no wire connection for their operation. He described motors which operated on one wire, and "wireless" or "no wire" motors. But perhaps the most important development he described was the sensitive electronic tube--the original of all our modern radio and other electronic tubes--which, he

predicted, was the device that would permit receiving wireless telegraph messages across the Atlantic. Of all these discoveries we shall presently have more to say in detail.

It had been Tesla's intention to make a short visit to his early home in Gospic when his lectures were out of the way, but circumstances forced him to make the trip sooner than he expected. Returning to his hotel after delivering the second Paris lecture, he received word that his mother was gravely ill. He rushed to the railroad station, arriving in time to board a train just about to pull out. He telegraphed ahead for special transportation facilities to shorten his trip, and succeeded in reaching Gospic in time to see his mother alive. He arrived in the afternoon and she died that night.

The great anxiety from which Tesla suffered during his sleepless rush from Paris to Gospic caused a patch of hair on the right side of his head to turn white over night. Within a month its jet black color was restored naturally.

Almost immediately after his mother's death, Tesla contracted an illness which incapacitated him for many weeks. When he recovered, he visited his sister Marica, in Plaski, for two weeks. From there he went to Belgrade, the capital of Serbia, where he arrived in May and was received as a national hero.

During the weeks of enforced physical inactivity imposed on him by his illness, Tesla took stock of himself and became thoroughly dissatisfied with the manner in which he had been conducting his life. No human being could feel anything but a pleasurable reaction in response to the adulation that had been heaped upon him during the past two years. Tesla, however, prided himself upon his wisdom in having so designed his life that he would not become a victim of human frailties, but would function far above the normal human level of physical limitations and intellectual activities. Now Tesla saw, in retrospect, that insofar as he had adhered to his superman plan of life, he had succeeded in achieving his goal of producing the works of a superman at a rate which astounded the world. When, however, he submitted to the first blandishments of the lion hunters after his New York lecture in May, 1891, he observed, social activities had cut into his available time and had interfered with his creative activities. He had let

the "man magnificent" supersede his "superman," and two years of valuable time had been largely lost. In addition, he had spent that totally unproductive year at the Westinghouse plant. At the close of that period, he had vowed he would never again work for anyone. He now vowed that he would put an end to the vacuous social activities into which he had been inveigled.

It was not easy for Tesla to live up to his good resolutions, for his European trip had greatly enhanced his fame and triumphant celebrations were scheduled on his reappearance in New York. Nevertheless, he rejected all invitations. He returned to the Hotel Gerlach, where he lived a solitary existence. With a pent-up reserve of physical energy owing to his long abstinence from his heavy daily routine of work, he plunged with great vigor into his new program which was to open up new and enchanting realms of scientific wonders.

THE first public application of Tesla's polyphase alternating-current system was made at the Chicago World's Fair, the Columbian Exposition, which opened in 1893 to celebrate the four-hundredth anniversary of the discovery of America. This was the first world's fair for which electric lighting was a possibility, and the architects availed themselves of the opportunities it afforded for obtaining spectacular effects in illuminating the grounds and buildings at night, as well as for interior lighting during the day. The Westinghouse Electric Company secured the contract for installing all power and lighting equipment at the Fair, and took full advantage of this opportunity to use the Tesla system and demonstrate its great versatility. It supplied all the current used for lighting and power.

while the Chicago World's Fair was in reality a monument to Tesla, he had, in addition, a personal exhibition in which he demonstrated his most recent inventions. One of his exhibits was a spinning egg, made of metal. The egg was shown lying on top of a small velvet-covered circular platform. When Tesla closed a switch the egg stood on its small end and rotated at a high speed as if by magic. The "magic" phase of this feat appealed to a public which, however, grasped little of the explanation that it

illustrated the principle of the rotating magnetic field produced by the polyphase alternating currents. In other of his exhibits, glass tubes suspended in space or held in his hands lighted up in an equally "magical" fashion.

But his most spectacular feat was to let 1,000,000 volts pass through his body. This was alternating current of very high frequency as well as high voltage. He had discovered means of producing such currents. Eight years had passed since Edison, attacking high-voltage alternating current as deadly, had refused to become interested in Tesla's polyphase system. Now the Tesla system was providing the electricity for the great world's fair and the Edison direct-current system was ignored. The final gesture of victory was for Tesla to answer Edison's charge that alternating current was deadly by passing the highest voltage of it ever produced through his own body for many minutes without the slightest sign of harm. This bit of showmanship endeared Tesla to the public and brought him a tremendous burst of world-wide fame. Unfortunately, however, it obscured his more important work with polyphase currents.

The next great achievement to be attained by his polyphase system was the harnessing of Niagara Falls. (Before this was done, and even before the opening of the Chicago fair, the practicability of his system was demonstrated in Europe; but this had been undertaken without his knowledge. A practical test of the transmission of polyphase alternating current at 30,000 volts was made between a hydroelectric station at Lauffen and the City of Frankfurt, the current being used to furnish electricity at a fair held at the latter city. This installation was built in 1891. The current was used to light incandescent and arc lamps and also to operate a Tesla motor.) In 1886 a charter had been granted for developing power at the Falls. The project made slow progress and was taken over by a New York group which organized the Cataract Construction Company, of which Edward Dean Adams was made president. Mr. Adams' company desired to develop power on the largest scale possible. The total energy supply available in the Falls had been variously estimated from 4,000,000 to 9,000,000 horsepower. Mr. Adams organized the International Niagara Commission for the purpose of ascertaining the best means of harnessing the Falls, and made Lord Kelvin, the famous English scientist, its chairman. A prize of $3,000 was offered for the most practical plan submitted.

Tesla had predicted nearly thirty years before, as a boy, that he would someday harness Niagara Falls. Here was the opportunity. In the meantime, he had made it possible to fulfil his boyhood boast by completing the series of inventions which made it possible to change the hydraulic power of the Falls into electrical energy.

The prize-offer plan adopted by Mr. Adams did not, however, set well with Mr. Westinghouse when he was urged to submit a proposal. He replied, "These people are trying to get one hundred thousand dollars' worth of information for three thousand dollars. When they are ready to talk business we will submit our plans." This adamant attitude of Westinghouse was one handicap for the Tesla alternating-current plan. The second big handicap was the fact that Lord Kelvin had declared himself in favor of the use of direct current.

About twenty plans were submitted in the contest but none of them was accepted by the commission, and no prize was awarded. The big electrical companies, Westinghouse, Edison General Electric and Thomson-Houston, did not submit plans. This took place in 1890.

Original developers of the Falls planned to use locally the mechanical power provided by water wheels; but the only practical plan was, clearly, the generation of electricity by dynamos driven by water wheels, and the distribution of the current throughout the district. There was a good additional market for it at Buffalo, a large industrial city about twenty-two miles distant. There was always the hope, too, that the current could be transmitted to New York City and serve the rich intervening territory. If direct current were used, its transmission twenty-two miles to Buffalo was totally unfeasible. The Tesla alternating-current system, however, made the transmission to Buffalo extremely practicable and the delivery of the current to New York City a possibility.

In due time the Cataract Construction Company decided that the hydroelectric system was the only feasible one, and proposals and bids were asked on a power system consisting of three generating units, each of 5,000 horsepower, from the Westinghouse Electric Company and the General Electric Company. Each one submitted a proposal to install a Tesla polyphase generating system. The General Electric Company,

successor to the Edison General Electric Company, having in the meantime secured a license to use the Tesla patents, proposed to install a three-phase system, and Westinghouse a two-phase system. The first proposal concerned the building of the powerhouse. A second proposal on which bids were asked concerned the transmission line between Niagara Falls and Buffalo and a distribution system in the latter city.

Bids were asked for early in 1893, and in October of that year Mr. Adams announced that the Westinghouse plan for the powerhouse and the General Electric plan for the transmission line were accepted. The latter included a transformation of the two-phase current from the generators into three-phase current to be transmitted to Buffalo. This change indicated the flexibility of the Tesla polyphase system.

Westinghouse completed the powerhouse and in 1895 it stood ready to deliver 15,000 horsepower; the most gigantic piece of electrical engineering conceived or accomplished up to that time. In 1896 General Electric completed the transmission and distribution system, and electrical power extracted from Niagara Falls, without in any way impairing the beauty of the spectacle they presented, was delivered to industries through the Falls and Buffalo areas. So successful was this installation that the Westinghouse Company installed seven additional generating units, bringing the output to 50,000 horsepower. A second equivalent powerhouse, also using alternating current, was later built by the General Electric Company. Today, the powerhouses at Niagara Falls are linked directly with the electric power system in New York City, all using the Tesla system.

Dr. Charles F. Scott, Professor Emeritus of Electrical Engineering at wale University, and former president of the American Institute of Electrical Engineers, who was a Westinghouse engineer when that company was developing the Tesla system, in a memorial review of Tesla's accomplishments, (Published in Electrical Engineering, August 1943, pp. 351-555.) describes the Niagara development and its results:

The simultaneous development of the Niagara project and the Tesla system was a fortuitous coincidence. No adequate method of handling large power was available in 1890; but

while the hydraulic tunnel was under construction, the development of polyphase apparatus justified the oficial decision of May 6, 1893, five years and five days after the issuing of Tesla's patents, to use his system. The Polyphase method brought success to the Niagara project; and reciprocally Niagara brought immediate prestige to the new electric system.

Power was delivered in August 1895 to the first customer, the Pittsburgh Reduction Company (now Aluminum Company of America) for producing aluminum by the Hall process, patented in the eventful year 1886. . . .

In 1896 transmission from Niagara Falls to Buffalo, 22 miles, was inaugurated. Compare this gigantic and universal system capable of uniting many power sources in a superpower system, with the multiplicity of Lilliputian "systems" which previously supplied electrical service. As Mr. Adams aptly explained: "Formerly the various kinds of current required by different kinds of lamps and motors were generated locally; by the Niagara-Tesla system only one kind of current is generated, to be transmitted to places of use and then changed to the desired form."

The Niagara demonstration of current for all purposes from large generators led immediately to similar power systems in New York City--for the elevated and street railways and for the subway; for steam railway electrification; and for the Edison systems, either by operating substations for converting alternating current to direct current or by changing completely to A.C. service.

The culminating year 1896 inaugurated two far reaching developments for the extension of polyphase power, one commercial and one engineering. By exchange of patent rights, the General Electric Company obtained license rights under Tesla patents, later made impregnable by nearly a score of court decisions. Also the Parsons turbine, accompanied by its foremost engineer, was transplanted to America and enabled George Westinghouse to bring to fruition by a new method the ideal of his first patent, a "rotary steam engine." The acme of the reciprocating engine came in the early 1900's; a century's development produced the great engines that drove 5,000 to 7,500 kilowatt alternators for New York's elevated and subway. But the rapidly growing steam turbine of different types soon doomed the engine to obsolescence; single units

with the capacity of a score of the largest engines are now supplying power to the metropolis. Single powerhouses now supply more power than all of the thousands of central stations and isolated plants of 1890.

Prof. Scott concludes: "The evolution of electric power from the discovery of Faraday in 1831 to the initial great installation of the Tesla polyphase system in 1896 is undoubtedly the most tremendous event in all engineering history."

Lord Kelvin, who had originally favored direct current for Niagara, later conceded, but only after the system was in operation, that alternating current had many more advantages for long-distance distribution systems, and declared, "Tesla has contributed more to electrical science than any man up to his time."

There should never have been the slightest shadow of doubt concerning the credit due to Tesla not only for discovering the rotating magnetic field but also for inventing the first practical alternating-current motor, the polyphase system of alternating currents, dynamos for generating them, a variety of motors for converting the currents into power, a system of polyphase transformers for raising and lowering voltages, and economical methods for transmitting electrical power for long distances. Nevertheless, credit for priority has unjustly been given to and taken by others. Tesla succeeded in establishing his claims; but in the meantime, however, damage was done by raising these unfair claims, and to this day the electrical engineering profession, and public service and major electrical industries, have never extended to Tesla the credit to which he is entitled. If they had done so, the name of Tesla would carry at least as much fame as the names Edison and Westinghouse.

Tesla, as we have seen, made his rotating magnetic field invention in 1882, and within two months evolved the complete power system, including all the apparatus which he later patented. In 1883 he described his invention to oficials of the Continental Edison Company. In 1884 he demonstrated his motor to the mayor of Strassburg and others. In this same year he described the invention to Thomas A. Edison. In 1885 he sought to have the promoters of the Tesla Arc Light Company develop his system. In 1887 he secured financial backing and built a series of the

dynamos and motors which were tested by Prof. Anthony of Cornell University. On October 12, 1887, the first patent applications covering his basic inventions were revealed to the Patent Ofice. The patents were granted on various dates in the early months of 1888. On May 16, 1888, he presented a demonstration and description of his basic inventions before the American Institute of Electrical Engineers in New York. So much for the record.

The first complication arose when Prof. Galileo Ferraris, a physicist in the University of Turin, presented a paper on "Rotazioni elettrodynamiche" (Electrodynamic Rotation) before the Turin Academy in March, 1888. This was six years after Tesla made his discovery, five years after he demonstrated his motor and six months after he had applied for patents on his system. Prof. Ferraris had been carrying on researches in the field of optics. The problem that particularly interested him was polarized light. In this period it was considered necessary to build mechanical models to demonstrate all scientific principles. It was not very dificult to devise models to demonstrate the nature of plane-polarized light, but circularly polarized light presented a more dificult problem.

Prof. Ferraris gave some thought to this problem in 1885, but made no progress until 1888 when he turned to alternating currents for a solution. In that period light was erroneously thought of as a continuously undulating wave in the ether. Prof. Ferraris took the continuously alternating current as an analogue of the plane-polarized light wave. For a mechanical analogue of the circularly polarized light wave he visualized a second train of waves 90 degrees out of step with the first, giving a right-angle vector to the component that should manifest itself by rotation. This paralleled the solution at which Tesla had arrived six years earlier.

In arranging a laboratory demonstration Prof. Ferraris used a copper cylinder suspended on a thread to represent the light waves, and caused two magnetic fields to operate on it at right angles to each other. When the currents were turned on, the cylinder rotated, wound up the thread on which it was suspended and raised itself. This was an excellent model of rotary polarized light waves. The model bore no resemblance to a motor, nor did the Turin scientist have any intention that it should be so considered. It was

a laboratory demonstration in optics, using an electrical analogy.

Prof. Ferraris' next experiment mounted the copper cylinder on a shaft and divided each of his two coils into two parts, placing one on either side of the copper cylinder. The device worked up to a speed of 900 revolutions per minute--and beyond this point lost power so rapidly it ceased to operate entirely. He tried iron cylinders but they did not work nearly so well as the copper ones. Prof. Ferraris predicted no future for the device as a power source, but he did predict it would find usefulness as the operating principle for a meter for measuring current.

Prof. Ferraris thus demonstrated that he failed by a wide margin to grasp the principle which Tesla developed. The Italian scientist found that the use of the magnetic iron cylinder interfered with the operations of his device, whereas Tesla, following the correct theory, utilized iron cores for the magnetic field of his motor, used an iron armature, and obtained an efficiency of about 95 per cent in his first motor, which had a rating of about a quarter horsepower. The efficiency of Ferraris' device was less than 25 per cent.

It was Prof. Ferraris' belief that he had performed an important service to science by demonstrating that the rotating magnetic field could not be used on any practical basis for producing mechanical power from alternating current. He never deviated from this conclusion, nor did he ever claim that he had anticipated Tesla's discovery of a practical means for utilizing the rotating field for producing power. Knowing that his process was entirely different from Tesla's, he never advanced a claim to independent discovery of the alternating-current motor. He even conceded that Tesla had arrived at his discovery of the rotating magnetic field entirely independently of him, and that Tesla could not in any way have known of his work before publication.

A description of Prof. Ferraris' experiments, however, was published in The Electrician, in London, May 25, 1888 (page 86). This was accompanied by the statement:

Whether the apparatus devised by Prof. Ferraris will lead to the discovery of an alternating current motor is a question we do not pretend to prophesy, but as the

principle involved may also have other applications, notably in the construction of meters for measuring the supply of electricity . . .

A year before this time Prof. Anthony had already tested Tesla's alternating-current motors in the United States and reported that they attained an order of efficiency equal to that of direct-current motors; and Tesla's U.S. patents had been publicly announced several months previously.

It was obvious that the editors of this London publication were not keeping up to date on developments in the United States.

Tesla responded quickly, informing the editors of their oversight and submitting an article describing his motors and the results obtained with them.

No great enthusiasm was exhibited by the editors of The Electrician. They receded to only the least possible extent from their stand in favor of Ferraris by publishing an editorial note:

Our issue of the 25th of May contained an abstract of a paper by Prof. Galileo Ferraris describing a method of producing a revolving resultant magnetic field by means of a pair of coils with the axes at right angles and traversed by alternating currents, and we drew attention to the possibility that the principle of the apparatus might be applied to the construction of an alternating current motor. The paper by Mr. Nikola Tesla, which appears in our columns this week, contains a description of such a motor, founded on exactly the same principle. (VoI. XX, p. 165, June 15, 1888.)

No attention was drawn to the fact that Ferraris had reached the conclusion that the principle could never be used for making a practical motor, whereas Tesla had produced such a motor.

This attitude toward the American development did not disappear from the London engineering journals. Later the Electrical Review (London: Vol. XXVIII, p. 291, March 6, 1891) published an editorial which opened with the statement:

For several years past, from the days of Prof. Ferraris' investigations, which were followed by those of Tesla and Zipernowski and a host of imitators, we have periodically heard of the question of alternating current motors being solved.

At this time the Westinghouse Company was already commercially exploiting the successful and practical Tesla polyphase system in the United States. Not one word of credit to Tesla appeared in the London engineering press.

A letter of protest dated March 17, 1891, was forwarded by Tesla, and this was published some weeks later (p. 446) by the Review. He said in part:

In all civilized countries patents have been obtained almost without a single reference to anything which would have in the least degree rendered questionable the novelty of the invention. The first published essay--an account of some laboratory experiments by Prof. Ferraris--was published in Italy six or seven months after the date of filing my application for the foundation patents. . . . yet in your issue of March 6, I read: "For several years past, from the days of Prof. Ferraris' investigations, which were followed by those of Tesla and Zipernowski and a host of imitators, we have periodically heard of the question of alternating current motors being solved.

No one can say that I have not been free in acknowledging the merit of Prof. Ferraris, and I hope that my statement of facts will not be misinterpreted. Even if Prof. Ferraris' essay would have anticipated the date of filing of my application, yet, in the opinion of all fair minded men, I would have been entitled to the credit of having been the first to produce a practical motor; for Prof. Ferraris denies in his essay the value of the invention for the transmission of power. . . .

Thus in the most essential features of the system--the generators with two or three currents of differing phase, the three wire system, the closed coil armature, the motors with direct current in the field, etc.,--I would stand alone, even had Prof. Ferraris' essay been published many years ago. . . .

Most of these facts, if not all, are perfectly well known in England; yet according to some papers, one of the

leading English electricians does not hesitate to say that I have worked in the direction indicated by Prof. Ferraris, and in your issue above referred to it seems I am called an imitator.

Now, I ask you where is that well known English fairness. I am a pioneer and I am called an imitator. I am not an imitator. I produce original work or none at all.

This letter was published; but the Electrical Review neither expressed regret for the misstatement nor extended recognition to Tesla.

Charles Proteus Steinmetz, later to achieve fame as the electrical wizard of the General Electric Company, came to the support of Tesla. In a paper presented before the American Institute of Electrical Engineers, he said: "Ferraris built only a little toy, and his magnetic circuits, so far as I know, were completed in air, not in iron, though that hardly makes any difference."(Transactions, A.I.E.E., VoI. VIII, p. 591, 1891.)

Other American engineers likewise rallied to Tesla's support.

An industrial exposition, as already mentioned, was held at Frankfurt, Germany, in 1891. The United States Navy sent Carl Hering, an electrical engineer who had done much writing for technical journals, as observer to report on any developments that would be of interest to the Navy. Hering, unfortunately, had not informed himself of the inventions embodied in the Tesla patents before going abroad.

The outstanding new development at the Frankfurt exposition was the first public application of Tesla's system. The grounds and building were lighted by electricity brought to the city by a long-distance transmission line over which electricity was carried from the hydroelectric station at Lauffen by three-phase alternating current carried at 30,000 volts. There was exhibited a two-horsepower motor operated by the three-phase current.

Hering recognized the significance of the new development, and sent back enthusiastic reports describing it as of German origin. In his article in the Electrical World

(N.Y.), he waxed enthusiastic about the work of Dolivo Dobrowolsky in designing the three-phase motor and its associated system, hailing it as an outstanding scientific discovery and of tremendous commercial importance. The impression was given that all other inventors had missed the main point, and that Dobrowolsky had achieved the grand broad accomplishment that would set the pace for future power developments. Nor was Hering the only one to whom this impression was communicated.

Ludwig Gutman, an American electrical engineer, a delegate to the Frankfurt Electrical Congress, in a paper on "The Inventor of the Rotary field System," delivered before that body, slammed back at Dobrowolsky. He stated:

As we have enjoyed in America several years' experience with this system represented by the Tesla motors I must oppose the assertion lately made by Herr von Dobrowolsky at a meeting of the Electrotechnische Zesellschaft held here in Frankfurt. The gentleman said: "I believe I am able to assert that the motor problem for large and small works has been by this completely solved." This assertion goes most likely too far. The problem was already solved, theoretically and electrically, in 1889. (Electrical World, N.Y.: Oct. 17, 1891)

Dobrowolsky, in a paper published in the Electrotechnische Zeitschrift (p. 149-150; 1891), reduced his claim to that of having produced the first practical alternating-current motor; and he asserted that in the Tesla two-phase motor there were field pulsations amounting to 40 per cent, while in his three-phase motor, in operation at the Frankfurt exposition, these were greatly reduced.

Even this reduced claim of Dobrowolsky's was quickly smashed. It drew fire from an American and an English source, and also from the chief engineer of the project of which his motor was a part.

Dr. Michael I. Pupin, of the Department of Engineering, Columbia University, analyzing Dobrowolsky's claim, (Ibid., Dec. 26, 1891) demonstrated that he had failed to comprehend the basic principles of the Tesla system, and that the three-phase system which he claimed as his own was included in Tesla's inventions.

C. E. L. Brown, the engineer in charge of the pioneering Lauffen-Frankfurt 30,000-volt transmission system and its three-phase generating system, including the Dobrowolsky motor, settled definitely and completely the question of credit for the whole system. In a letter published in the Electrical World (Nov. 7, 1891), he concluded with the statement: "The three phase current as applied at Frankfurt is due to the labors of Mr. Tesla and will be found clearly specified in his patents."

Mr. Brown wrote letters to other technical publications to this same effect, and in them criticized Mr. Hering for failing to give Tesla his due credit, and for diverting it to Dobrowolsky.

These criticisms finally brought a response from Mr. Hering. This appeared in the Electrical World, Feb. 6, 1892:

As Mr. C. E. L. Brown, in communications to the Electrical World and other journals, seems determined to insist that I have neglected the work of Mr. Tesla on rotary current I wish to state there is no one more willing than myself to give Mr. Tesla due credit for his work, and I have always considered him to be an original inventor of the rotary field system and first to reduce it to practice, and I believe I so stated in my articles. If I have at any time failed to give him credit for the extent to which he developed it, it has been because Mr. Tesla has been too modest (or perhaps prudent) to let the world know what he has accomplished. When the articles which have caused this discussion were being written Mr. Tesla's patents were not accessible to me. Just where Mr. Dobrowolsky's improvements begin I have not been able to ascertain. . . .

Dobrowolsky, though he may have been an independent inventor, admits Tesla's work is prior to his . . . The modesty of both of these gentlemen would, I feel sure, lead to a clear understanding. Regarding the subject of priority it may be of interest here to say that in a conversation with Prof. Ferraris last summer that gentleman told me with very becoming modesty that, although he had experimented with the rotary field several years before Tesla's work was published he did not think it was possible that Tesla could have known of his work and he therefore believed Tesla invented it entirely independently. He also stated that Tesla developed it much further than he (Ferraris) did.

Thus the scientists and engineers in the United States, Germany and Italy gave Tesla clear and unquestioned credit for being the sole inventor of the magnificent polyphase electrical system in all of its details. French and British journals then fell in line.

Thus, by 1892, there was universal acclaim for Tesla as the unquestioned inventor of the alternating-current motor and the polyphase system in engineering circles. There was none, therefore, to dispute his claim or to seek to rob him of credit when his fame reached the public through the operation of his system at the World's Fair in Chicago in 1893, and later when his system made possible the harnessing of Niagara Falls.

In due time, however, there came many who claimed to have made improvements on Tesla's inventions; and widespread efforts were made to exploit these "improvements." The Westinghouse Company, now owners of the Tesla patents, undertook to defend the patents and to prosecute infringers. As a result about twenty suits were carried to the courts, and, in every one of them, decisions gave a decisive victory to Tesla.

A sample of the sweeping decisions that were handed down is that of Judge Townsend in the United States Circuit Court of Connecticut in September, 1900, when, passing judgment on the first group of basic patents, he said in part:

It remained to the genius of Tesla to capture the unruly, unrestrained and hitherto opposing elements in the field of nature and art and to harness them to draw the machines of man. It was he who first showed how to transform the toy of Arago into an engine of power; the "laboratory experiment" of Bailey into a practically successful motor; the indicator into a driver; he first conceived the idea that the very impediments of reversal in direction, the contra-indications of alternations might be transformed into power-producing rotations, a whirling field of force.

what others looked upon as only invincible barriers, impassable currents and contradictory forces he seized, and by harmonizing their directions utilized in practical motors in distant cities the power of Niagara.

The resentments and antagonisms engendered by the unvarying series of successful decisions caused individuals who were adversely affected to vent their antagonisms on Tesla although he had not in ten years held any personal interests in the patents.

The situation that developed is well described by B. A. Behrend, later vice-president of the American Institute of Electrical Engineers:

It is a peculiar trait of ignorant men to go always from one extreme to another, and those who were once the blind admirers of Mr. Tesla, exalting him to an extent which can be likened only to the infatuated praise bestowed on victims of popular admiration, are now eagerly engaged in his derision. There is something deeply melancholy in the prospect, and I can never think of Nikola Tesla without warming up to my subject and condemning the injustice and ingratitude which he has received alike at the hands of the public and of the engineering profession. (Western Electrician, Sept., 1907)

With the scientific and engineering worlds, and the courts, extending to him a clear title to the honor of being the great pioneer discoverer and inventor of the principles and machines that created the modern electrical system, Tesla stands without a rival as the genius who gave the world the electrical power age that made our mass-production industrial system possible. The name Tesla should, therefore, in all right and justice, be the most famous name in the engineering world today.

RETURNING to his laboratory in March, 1893, after his European and American lectures, Tesla banished all social activities from his life program, and, bursting with energy, pitched headlong into experimental work in connection with his wireless system. He made repeated experiments in working out the refinement of his principle of tuning circuits to resonance with each other. He built more than one hundred coils covering a wide range of electrical tuning characteristics. He also built numerous oscillators for producing high-frequency currents, and condensers and inductances for tuning both sending and receiving coils to any desired frequency or wavelength.

He demonstrated that he could cause any one of hundreds of coils to respond selectively and powerfully to its particular wavelength emitted by an oscillator while all others remained inert; but he discovered that tuned electrical coils have, to a further extent, the same properties as tuned musical string, in that they vibrate not only to the fundamental note but also to a wide range of upper, and particularly lower, harmonics. This characteristic could be usefully employed in connection with the design of sending- and receiving-station antennas, but it militated against the sharp, exclusive response tuning of coils. At close range, and with the powerful currents Tesla used in his laboratory, the harmonics were a handicap--when greater distance separated sending and receiving coils, this trouble became a minor one.

It became obvious to Tesla that it was going to be dificult to arrange an early demonstration of his worldwide system of intelligence and of power, so he planned a compromise system in which he would use a smaller central transmitter and smaller relay stations at certain distances.

In an interview with Arthur Brisbane, the famous editor, Tesla announced in The world of July 22, 1894, the certainty of his plans. He said:

you would think me a dreamer and very far gone if I should tell you what I really hope for. But I can tell you that I look forward with absolute confidence to sending messages through the earth without any wires. I have also great hopes of transmitting electric force in the same way without waste. Concerning the transmission of messages through the earth I have no hesitation in predicting success. I must first ascertain exactly how many vibrations to the second are caused by disturbing the mass of electricity which the earth contains. My machine for transmitting must vibrate as often to put itself in accord with the electricity in the earth.

During the following winter he designed and built his transmitting station and a receiving station for this purpose. It worked well within the close range of the laboratory and between points in the city. Like the artist who is never willing to declare a picture finished but must continue to apply an unending series of slight improvements, Tesla continued to add refinements so that he would be assured of a perfect test in the spring, when he

planned to take his receiving set up the Hudson River on a small boat to test its response at extended distances.

with Tesla, as with Caesar, though, came tragedy on the Ides of March. For Tesla it was the unlucky 13th of March, 1895, when fire broke out during the night in the lower part of the building in which his laboratory was located and swept through the entire structure. The two floors on which his equipment was located dropped to the basement, their entire contents destroyed. Not a single article was saved. The major portion of Tesla's fortune was invested in the apparatus in that building. He carried no insurance on it. The loss was total.

The monetary loss was the least important factor in the shock which Tesla sustained. The apparatus and the countless experiments in scores of subjects with which they were associated were part of Tesla's self. His work of a lifetime was swept away. All of his records, papers, mementos, his famous world's Fair exhibit were gone. His laboratory, in which he had demonstrated his wonders to the elite and intelligentsia of New York, to the most famous men and women of the country and the world, was no more. And this tragedy had come just when he was ready to make his first distance demonstration of his wireless system.

Tesla was in a tough spot financially. The laboratory was the property of the Tesla Electric Company, owned by Tesla and A. K. Brown who had, with an associate, put up the funds to finance Tesla's demonstration of his polyphase alternating-current system prior to its sale to Westinghouse for $1,000,000. Some of that money was divided as cash among the associates, as stated; and the remainder had gone into the laboratory for further developments. The resources of the company were now wiped out and Tesla's individual resources were almost at the vanishing point. He was receiving some patent royalties from Germany on his polyphase motors and dynamos. This income would be adequate to take care of his living expenses but not suficient to enable him to maintain an experimental laboratory.

Mr. Adams, active head of the Morgan group that had developed the hydroelectric station at Niagara Falls, using Tesla's polyphase system, now came to the inventor's rescue. He proposed and arranged for the formation of a new company which would finance the continuation of Tesla's experiments, and he offered to subscribe one hundred

thousand dollars of the proposed half-million dollars of capital stock of the company.

with this support Tesla proceeded to set up a new laboratory. He secured quarters at 46 East Houston Street, and started operations there in July, 1895, four months after his South Fifth Avenue laboratory had been destroyed.

Adams paid forty thousand dollars as the first installment of his subscription. He took an active personal interest in Tesla's work, and spent a great deal of time in the laboratory. Knowing from the successful operation of the Niagara Falls plant that Tesla, technically, was extremely practical, Adams was deeply impressed by the plans for wireless transmission of intelligence and of power. He declared he was willing to go still further than his original plan of financial support, and he proposed that the plan include the taking in of his son as an active partner in Tesla's work.

Such an arrangement would amount to an alliance for Tesla with the powerful Morgan financial group. It was the support of J. P. Morgan that gave financial guidance to the formation of the General Electric Company and made possible the building of the fiaterside Station, the first big Edison powerhouse in New York, and it was a Morgan group that, by making possible the development of Niagara, had given the Tesla system a tremendous boost. The prestige that would come from a Morgan association would probably be even more potent than the actual monetary aid involved. with this alliance Tesla's financial future was assured. There would come to his aid, through it, the support of the world's greatest organizational genius and practical promotion powers. The tragedy of the fire that brought about this situation could yet prove a great blessing.

Tesla made his decision. what influenced him to reach the determination that guided him, no one ever learned. He rejected Mr. Adams' offer. From a practical point of view there is no way of explaining his action. But no one could ever successfully demonstrate that Tesla was practical in a commercial and financial sense.

with the forty thousand dollars that Adams subscribed, Tesla was able to keep actively engaged in research for about three years. He probably could have secured subscriptions of many times that amount if he had been

willing to put forth even a slight effort in that direction, but he was interested mainly in getting his experiments well under way rather than worrying about future financial needs. He had full faith that the future would bring him many millions of dollars as a token of the many billions of value he would give it through his inventions.

It took Tesla about a year to get his laboratory equipped and to build an array of experimental apparatus. Almost nothing that he used could be purchased in the market; everything had to be specially made by his workmen under his direction. In the spring of 1897 he was ready to make, on his wireless transmitter and receiver, the distance tests which had been interrupted by the fire two years before.

The success of these tests were announced by Tesla in an interview with a representative of the Electrical Review which was published in the issue of July 9, 1897, of that journal. It stated:

Nearly every telegraphic inventor has for years dreamed in his waking hours of the possibility of communicating without wires. From time to time there has appeared in the technical journals a reference to the experiments showing the almost universal belief among electricians that, some day, wires will be done away with. Experiments have been made attempting to prove the possibilities, but it has remained for Mr. Nikola Tesla to advance a theory, and experimentally prove it, that wireless communication is a possibility and by no means a distant possibility. Indeed, after six years of careful and conscientious work, Mr. Tesla has arrived at a stage where some insight into the future is possible.

A representative of the Electrical Review receives the assurance personally from Mr. Tesla who, by the way, is nothing if not conservative, that electrical communication without wires is an accomplished fact and that the method employed and the principles involved have nothing in them to prevent messages being transmitted and intelligibly received between distant points. Already he has constructed both a transmitting apparatus and an electrical receiver which at distant points is sensitive to the signals of the transmitter, regardless of earth currents or points of the

compass. And this has been done with a surprisingly small expenditure of energy.

Naturally, Mr. Tesla is averse to explaining all details of his invention, but allows it to be understood that he avails himself of what, for the present, may be termed the electrostatic equilibrium; that if this be disturbed at any point on the earth the disturbance can with proper apparatus be distinguished at a distant point and thus the means of signalling and reading signals becomes practicable once the concrete instruments are available. Mr. Tesla announced his belief in the possibilities, but he did so after having satisfied himself by actual test of apparatus designed by him. Much work has yet to be done, and he has since then given close attention and study to the problem.

Details are not yet available, for obvious reasons, and we now merely chronicle Mr. Tesla's statement that he has really accomplished wireless communication over reasonably long distances with small expenditure of energy and has only to perfect apparatus to go to any extent. Morse's 40 mile experiment in the old days was on a far less certain basis than the wireless possibilities of today.

Tesla's work with high frequency and high potential currents has been notable. As long ago as 1891 he foretold the present results, both as to vacuum tube lighting and intercommunication without wires. The former has in his hands assumed a condition capable of a public demonstration of the phenomena of the electrostatic molecular forces. Numberless experiments were carried out, and from what then was a startling frequency of 10,000 per second Mr. Tesla has advanced to what now is a moderate rate at 2,000,000 oscillations per second

This announcement recorded the birth of modern radio--radio as it is in use today--born on a boat traveling up the Hudson River, carrying the receiving set twenty-five miles from the Houston Street laboratory, a distance which was a small fraction of the range of the set but enough to demonstrate its capabilities. Such an accomplishment was worthy of a flamboyant smash announcement instead of Tesla's very modest statement and the even more conservative manner in which the Electrical Review treated the news. Tesla had to protect not only his patent rights, which would be jeopardized by premature disclosure, but also had to be on guard against invention invaders and

patent pirates, with whom he had previously had unpleasant experiences. The Electrical Review, naturally enough, was fearful of the consequences of "sticking its neck out" by too enthusiastic a reception before full details were available.

The fundamental patents on Tesla's system were issued on September 2, 1897, just two months after his announcement. They are numbered 645,576 and 649,621. In these patents he describes all the fundamental features of the radio broadcasting and receiving circuits in use today. Once patent protection was secured, Tesla did not long delay in letting the public in on his discoveries. His presentation took the form of a spectacular demonstration at Madison Square Garden.

wireless transmission of intelligence is a modern satisfaction of one of the oldest cravings of man, who has always sought the annihilation of distance by communication through space without material linkage over the intervening expanse. Early experimenters with the telephone, particularly, were enthusiastic seekers of a method of wireless electrical communication that would convey the voice through space in the manner in which the air conducted sound. David Edward Hughes had noted, in 1879, that when an electric spark was produced anywhere in his house he heard a noise in his telephone receiver. He traced the effect to the action of the carbon granules in contact with a metal disk in his telephone transmitter which acted as a detector of the space waves by sticking together slightly, reducing the resistance of the mass, and producing a click in the receiver.

Prof. A. E. Dolbear, of Tufts College, amplified this observation and set up, in 1882, a demonstration set using the principle but eliminating the telephone set. He used a spark coil for creating waves and a mass of carbon granules for detecting them. This is exactly the "wireless" system which Marconi "discovered" fourteen years later.

Edison, engaged by the Western Union Telegraph Company to break the monopoly which Bell held by his invention of the telephone, had succeeded, in 1885, in sending a message from a moving train by "wireless." A wire strung on the train paralleling a telegraph wire strung on poles along the track made it possible to bridge the intervening few feet by an inductive effect--the same effect which causes

annoyance by creating "cross talk," or a mixing of conversations over two telephone circuits located close to each other. fi. M. Preece, in England, made a similar experiment about the same time. The extremely short distances over which such systems worked prevented them from having any practical usefulness.

An entirely different type of wireless communication had been developed by Alexander Graham Bell in 1880 and 1881. This was given the name radiophone, but Bell insisted on calling it the photophone. The photophone transmitted the voice over a beam of light. The transmitter consisted of a very thin glass or mica mirror, which could be vibrated by the voice. This reflected a beam of light, usually sunlight, to a distant receiving device. The simple receiver consisted of a chemist's test tube, into which a selected material was placed. The top of the tube was closed by a cork through which two small rubber tubes were inserted, the other ends being placed in the ears. A very great variety of materials could be placed in the test tube as detectors. when the beam of light, vibrated by the voice, impinged on the material in the tube, an absorption of heat took place which set the air in the tube in vibration, thus reproducing the voice that was carried by the light beam. Bell also used selenium as a detector. It responded to the visible rays and produced an electrical effect. The experiments, obviously, were of little practical value as the basis for a system of wireless communication.

Michael Faraday, in London, had described in 1845 his theory of the relationship between light and the electromagnetic lines of force; and in 1862 James Clerk Maxwell published an analysis of Faraday's work which gave a mathematical basis for the theory that light waves were electromagnetic in nature, and that it was possible for such waves to exist very much shorter and very much longer than the known wavelength of visible light. This was a challenge to scientists to prove the existence of such waves.

Prof. Heinrich Hertz, at Bonn, Germany, from 1886 to 1888, undertook the search for the waves longer than light or heat. He produced them by the spark discharge of an induction coil and recaptured them from space, at short distances, in the form of a tiny spark that jumped the gap in a slotted ring of wire. Sir Oliver Lodge, in England,

was simultaneously seeking to measure equally small electrical waves in wire circuits.

This, then, had been the situation in the scientific world when Tesla began his work in 1889. The plan for wireless communication which he presented in 1892 and 1893, as will be described in a moment, shows how his magnificent concept and tremendously advanced knowledge towered mountain high over all contemporaries.

when Tesla left the Westinghouse plant in the fall of 1889, he had immediately turned to the next phase of his development of the alternating-current Weld--a new system of distributing energy by means of high-frequency alternating currents which would be a far more magnificent discovery than his polyphase system. within the next two years he had explored the principles by which energy could be distributed broadcast without the use of wires, and these he had demonstrated with powerful coils in his laboratory. The distribution of intelligence, later called "wireless," was but a single phase of the larger project.

Tesla described, in 1892, the first electronic tube designed for use as a detector in a radio system, and demonstrated its characteristics in his lectures in London and Paris in February and March of that year. (The tube, however, had been developed in 1890.) He described in February and March of the following year, 1893, his system of radio broadcasting, presenting its principles in detail, in lectures before the Franklin Institute in Philadelphia and at the convention of the National Electric Light Association held in St. Louis.

Tesla's electronic tube, his 1890 invention, was the ancestor of the detecting and amplifying tubes in use today. His demonstration of this tube is a matter of record in the archives of four societies before which he exhibited it in February and March of 1892--the Institute of Electrical Engineers and the Royal Society of London and the Physical Society of France and the International Society of Electrical Engineers in Paris. He stated in these lectures:

If there is any motion which is measurable going on in space, such a brush ought to reveal it. It is, so to speak, a beam of light, frictionless, devoid of inertia.

I think it may find practical applications in telegraphy. with such a brush it would be possible to send dispatches across the Atlantic, for instance, with any speed, since its sensitiveness may be so great the slightest changes will affect it.

The "brush" in Tesla's tube was a beam of electrons. The electron, however, had not yet been discovered. Nevertheless, Tesla gave an accurate description of its nature, demonstrating the remarkable accuracy of his interpretation of strange phenomena. So sensitive was this electronic beam that a small horseshoe magnet an inch wide at a distance of six feet caused movement of the electron beam in either direction, depending on the position in which the magnet was held.

If anyone approached the tube from a distance of many feet the beam, or brush, would swing to the opposite side of the tube. If one walked around the tube even at a distance of ten feet, the beam would move likewise, keeping its center end always pointed at the moving object. The slightest movement of a finger, or even the tensing of muscle, would bring a swinging response from the beam.

In the same 1892 lecture in which he described this first electronic tube, Tesla demonstrated lamps which were lighted without wire connections (wireless light) and also a motor which operated without wire connections to the energizing coils (wireless power); and he had again presented these developments at his exhibition at the Chicago Columbian Exposition early in 1893.

It was with all this experience behind him, giving him full assurance that his system was entirely practical and operative, that Tesla presented at the Franklin Institute and at the convention of the National Electric Light Association in February and March, 1893, a very cautious and conservative statement concerning his plan. Even at these 1893 lectures, Tesla could have staged a demonstration of wireless transmission of intelligence by placing one of his resonant coils, surmounted by one of his electronic "brush" tubes, or one of his low-pressure air lamps, in the lecture hall and causing it to respond to signals sent out by an energized coil of similar wavelength but located at a considerable distance from the building. The experiment was a standard procedure in his laboratory.

This, however, would be a purely local effect, whereas his radio transmission system was one planned on a world-wide basis requiring much more powerful apparatus than he had thus far built. To pass off a purely local effect as a demonstration of a world-wide system, even though the observed results would have been identical, would have been a case of intellectual dishonesty to which Tesla would not stoop; yet this demonstration of wireless would have been more spectacular and powerful than any staged by any other inventor in more than a half-dozen years following.

Describing his world-wide system at the 1893 National Electric Light Association meeting, he said:

In connection with resonance effects and the problems of transmission of energy over a single conductor, which was previously considered, I would say a few words on a subject which constantly fills my thoughts, and which concerns the welfare of all. I mean the transmission of intelligible signals, or, perhaps, even power, to any distance without the use of wires. I am becoming more convinced of the practicability of the scheme; and though I know full well that the great majority of scientific men will not believe that such results can be practically and immediately realized, yet I think that all consider the developments in recent years by a number of workers to have been such as to encourage thought and experiment in this direction. My conviction has grown so strong that I no longer look upon the plan of energy or intelligence transmission as a mere theoretical possibility, but as a serious problem in electrical engineering, which must be carried out some day.

The idea of transmitting intelligence without wires is the natural outcome of the most recent results of electrical investigations. Some enthusiasts have expressed their belief that telephony to any distance by induction through air is possible. I cannot stretch my imagination so far, but I do firmly believe that it is practical to disturb, by means of powerful machines, the electrostatic conditions of the earth, and thus transmit intelligible signals, and, perhaps, power. In fact, what is there against carrying out such a scheme?

We now know that electrical vibrations may be transmitted through a single conductor. why then not try to avail ourselves of the earth for this purpose? We need not be frightened by the idea of distance. To the weary wanderer

counting the mileposts, the earth may appear very large; but to the happiest of all men, the astronomer, who gazes at the heavens, and by their standards judges the magnitude of our globe, it appears very small. And so I think it must seem to the electrician; for when he considers the speed with which an electrical disturbance is propagated through the earth, all his ideas of distance must completely vanish.

A point of great importance would be first to know what is the capacity of the earth, and what charge does it contain if electrified. Though we have no positive evidence of a charged body existing in space without other oppositely electrified bodies being near, there is a fair probability that the earth is such a body, for by whatever process it was separated--and this is the accepted view of its origin--it must have retained a charge, as occurs in all processes of mechanical separation. . . .

If we can ever ascertain at what period the earth's charge, when disturbed, oscillates, with respect to an oppositely charged system or known circuit, we shall know a fact possibly of the greatest importance to the welfare of the human race. I propose to seek for the period by means of an electrical oscillator or a source of alternating currents.

One of the terminals of this source would be connected to the earth, as, for instance, to the city water mains, the other to an insulated body of large surface. It is possible that the outer conducting air strata or free space contains an opposite charge, and that, together with the earth, they form a condenser of large capacity. In such case the period of vibration may be very low and an alternating dynamo machine might serve for the purpose of the experiment. I would then transform the current to a potential as high as it would be found possible, and connect the ends of the high tension secondary to the ground and to the insulated body. By varying the frequency of the currents and carefully observing the potential of the insulated body, and watching for the disturbance at various neighboring points of the earth's surface, resonance might be detected.

Should, as the majority of scientific men in all probability believe, the period be extremely small, then a dynamo machine would not do, and a proper electrical oscillator would have to be produced, and perhaps it might not be possible to obtain such rapid vibrations. But

whether this be possible or not, and whether the earth contains a charge or not, and whatever may be its period of vibration, it is certainly possible--for of this we have daily evidence--to produce some electrical disturbance suficiently powerful to be perceptible by suitable instruments at any point on the earth's surface. . . .

Theoretically, then, it could not require a great amount of energy to produce a disturbance perceptible at a great distance, or even all over the surface of the globe. Now, it is quite certain that at any point within a certain radius of the sources, a properly adjusted self induction and capacity device can be set in action by resonance. But not only this can be done, but another source, s 1, similar to s, or any number of such sources, can be set to work in synchronism with the latter, and the vibration thus intensified and spread over a large area, or a flow of electricity produced to or from source s 1, if the same or of opposite phase to the source s.

I think that, beyond doubt, it is possible to operate electrical devices in a city, through the ground or pipe system, by resonance from an electrical oscillator located at a central point. But the practical solution of this problem would be of incomparably smaller benefit to man than the realization of the scheme of transmitting intelligence, or, perhaps, power, to any distance through the earth or environing medium. If this is at all possible, distance does not mean anything. Proper apparatus must first be produced, by means of which the problem can be attacked, and I have devoted much thought to this subject. I am firmly convinced it can be done, and I hope we shall live to see it done.

The lecture before the Franklin Institute contained a similar statement. An additional paragraph from it can be quoted:

If by means of powerful machinery, rapid variations of the earth's potential were produced, a grounded wire reaching up to some height would be traversed by a current which could be increased by connecting the free end of the wire to a body of some size. . . . The experiment, which would be of great scientific interest, would probably best succeed on a ship at sea. In this manner, even if it were not possible to operate machinery, intelligence might be transmitted quite certainly.

Tesla thus presented in these lectures the principles which he had learned in his laboratory experiments, during the previous three years, were necessary for successful wireless communication.

Several fundamental requirements were presented which will be understood by any non-technical person who has had even slight experience with radio receiving sets: 1. An antenna, or &aerial wire; 2. A ground connection; 3. An &aerial-ground circuit containing inductance and capacity; 4. Adjustable inductance and capacity (for tuning); 5. Sending and receiving sets tuned to resonance with each other; and 6. Electronic tube detectors. He had still earlier invented a loud speaker.

These embody the fundamental principles of radio, and are used in every sending and receiving set today.

Radio as it exists today is, therefore, the product of the genius of Nikola Tesla. He is the original inventor of the system as a whole and of all the principal electrical components. The man who, next to Tesla, is entitled to the greatest amount of credit is Sir Oliver Lodge, the great English scientist. Even Lodge, however, failed to grasp the fundamental picture that Tesla presented.

Lodge, early in 1894, had put a Hertz spark gap in a copper cylinder open at one end; and in this way he produced a beam of ultra-short-wave oscillations which could be transmitted in any direction. He did the same for the receiving set. Since the incoming waves could be received from only one direction, this receiving set was able to locate the direction from which the transmitted waves came. with this set he completely anticipated Marconi by two years. In the summer of that year, in a demonstration before the British Association for the Advancement of Science at Oxford, he sent Morse signals, with an improved set, between two buildings separated by several hundred feet.

It is little wonder, then, that Marconi, who started his studies of wireless in 1895, created no stir in the scientific circles in England when he came from Italy to London in 1896 with a wireless set that in every essential feature was the same as that demonstrated by Lodge in 1894. He used a parabolic reflector, so his set was little more

than an electrical searchlight. He did, however, bring an alternative feature to replace the parabolic beam reflector. This was a ground connection and antenna, or &aerial wire, for both sending and receiving set. This was exactly what Tesla had described in his plan published three years before.

when Hertz made his experiments to demonstrate the identical nature of light and longer electromagnetic waves, he intentionally sought to use the shortest waves it was practicable to produce. They were measured in inches--much less than a yard long. They were entirely satisfactory for his experiment. when the wireless experimenters copied his methods they took over the short-wave plan without ever asking a question as to what wavelength should be used for wireless communication; the thought seems not to have dawned on them that there were other wavelengths that could be produced and used--all except Tesla.

Tesla took the trouble, with the spirit of a real scientist to repeat exactly the experiments of Hertz; and he published his results, stating that he found a number of important differences and calling attention to the inadequacies of Hertz's experimental methods.

Having experimented with a wide gamut of wavelengths of high-frequency currents and studied the properties of each section of the spectrum, he knew that the short wavelengths were totally unsuitable for communication purposes. He knew that the useful wavelengths ranged from 100 meters to many thousands of meters. He knew that the combination of induction coil and Hertz ball-type spark-gap oscillator could never have any practical usefulness in producing the kind of electrical pulsations required. Even with the highly efficient apparatus available today, scientists have been unable to use in communication (except for special purposes) the ultra-short waves which Tesla in his wisdom condemned and Marconi, owing to his inexperience, tried to use.

The history of the succeeding years in wireless is the story of the failure of the short waves of Lodge and Marconi and their followers, and the shifting over to the longer waves described by Tesla; and the dropping of their crash method of signaling and its replacement by the refined and highly efficient method of tuning to each other the sending and receiving stations by the methods

discovered by Tesla; and adoption of Tesla's continuous waves.

In addition, these groping workers saw in wireless only a point-to-point or station-to-station method of signaling. None of them foresaw the broadcasting system which Tesla described in 1893. The system invented and discovered by Tesla is the one in use today; but who ever heard anyone giving Tesla the slightest credit?

NINE

TESLA was prolific in opening up vast new empires of knowledge. He showered his discoveries on the world at such a rapid rate and in such a nonchalant manner that he seems to have benumbed the minds of the scientists of his age. He was too busy to spend time developing the technical or commercial applications of each new discovery--there were too many other new and important revelations within his vision that must be brought to light. Discoveries were not happenstance events to him. He visualized them far in advance of their unfolding in the laboratory. He had a definite program of pioneering research in virgin fields of investigation; and when this was accomplished he would, he felt, have a long lifetime still ahead of him in which he could return to the practical utilization of those already revealed.

Meanwhile, he had found a whole new world of interesting effects in the discharges produced by his coils when energized with the currents of extremely high frequency. He built larger and larger coils and experimented with a variety of shapes as constructions. From the common cylindrical type of coil he developed the cone-shaped coil, and this development he carried still further by designing the flat helix, or pancake-shaped coil.

The extremely high-frequency currents furnished a mathematical paradise in which Tesla could develop his equations to his heart's content. Through his mathematical abilities and his strange power of visualization he could frequently make, very quickly, whole series of discoveries that it took a long time to catch up with in actual laboratory constructions. This was true of the phenomena of resonance, or tuned circuits.

Because of their relatively short wavelength, it was comparatively easy to build condensers for tuning the circuits. when a circuit is tuned the electric current that flows in it oscillates rhythmically, just as does a musical string which, when struck or plucked, vibrates and builds up loops of even lengths with motionless points between them. There may be only one of these loops, or there can be many.

Tesla did not invent the idea of electrical resonance. It was inherent in the mathematical description of the condenser discharge as developed by Lord Kelvin, and in the physical nature of alternating currents; but Tesla changed it from a buried mathematical equation to sparking physical reality. It is the analogy of acoustical resonance which is a natural property of matter. However, there were no practical circuits in which resonance could manifest itself until Tesla developed alternating currents, particularly the high-frequency currents. He put the master's touch to the research in this field by developing the principle of resonance in individual circuits through adjustment of capacity and inductance; the amplification of effects by inductive coupling of two tuned circuits, and the peculiar manifestations of resonance in a circuit tuned to a quarter of the wavelength of the energizing current. This latter development was a stroke of pure genius.

In the vibrating string, two loops measure a complete wavelength and one loop measures half a wavelength, since one of the loops is up when the other is down. Between the two loops is a nodal point which does not move. From the nodal point to the top of a loop is a quarter wavelength. Taking the quarter wavelength as a unit, one end is motionless and the other end swings through the greatest amplitude of vibration.

By tuning his coils to quarter wavelengths, one end of the coil, Tesla found, would be entirely inactive while the other end would swing through tremendous electrical activity. Here was a unique situation, one end of a small coil inert and the other end spouting a flood of sparks of hundreds of thousands or even millions of volts. In a physical analogy it seemed like the Niagara River reaching the edge of the precipice--and then its waters shooting mountain high in a gigantic fountain instead of falling into the chasm.

The quarter-wavelength coil is the electrical counterpart of the vibrating tine of the tuning fork, the ordinary clock pendulum, or the vibrating reed. Once accomplished, it was a simple thing--but its discovery was a work of genius. It was a development that could have come with certainty to a master mind working on broad principles, as Tesla was doing all his life, and only by the most improbable chance to those who without illumination were tinkering with gadgets and hoping to stumble on something out of which they could make a fortune.

A high-voltage coil with one dead end greatly simplified many problems. One of Tesla's big problems had been the finding of means to insulate the high-voltage secondary coil of transformers from the low-voltage primary which energized it. Tesla's discovery eliminated the voltage entirely from one end of the secondary so it could be connected directly to the primary or to the ground, while the other end continued to spout its lightning. It was for utilizing this situation that he developed the conical and pancake-shaped coils.

Tesla's laboratory was filled with a variety of coils. He discovered early in his researches that while operating a coil of a given wavelength, other coils in the laboratory, tuned either to this wavelength or one of its harmonics, would respond sympathetically by spouting a crown of sparks although not connected in any way to the operating coil.

Here was an example of transmission of energy to a distance through space. It was not necessary for Tesla to make a series of experiments to understand the implications of this situation. He was never lost in a new territory which he opened. His mind rose to such heights of understanding that he could survey a revealed world in a glance.

Tesla planned a spectacular demonstration of the new principle. He had his workmen string a wire on insulating supports on all four walls near the ceiling of the largest room in his laboratory. The wire was connected to one of his oscillators.

It was late at night when the installation was ready for the experiment. In order to make the test, Tesla prepared two tubes of glass about three feet long and a half-inch in

diameter. He sealed one end of each, slightly evacuated the air from the tubes and then sealed the other ends.

Tesla told the workmen he wanted the room completely darkened for the test, all lights out; and when he gave the signal he wanted the switch of his oscillator closed. "If my theory is correct," he explained, "when you close the switch these tubes will become swords of fire."

walking to the middle of the room Tesla gave orders to turn out all lights. The laboratory was in pitch darkness. A workman stood with his hand on the switch of the oscillator.

"Now!" shouted Tesla.

Instantly the great room was flooded with brilliant but weird blue-white light and the workmen beheld the tall, slim figure of Tesla in the middle of the room waving vigorously what looked like two flaming swords. The two glass tubes glowed with an unearthly radiance, and he would parry and thrust with them as if he were in a double fencing match.

To the workmen in the laboratory, it was a common experience for Tesla to perform spectacular feats; but this went beyond all limits. He had previously lighted his electric vacuum lamps but they were always connected to coils that supplied them with electricity. Now they lighted without being connected to any source of electricity.

This demonstration, made in 1890, led to Tesla's adopting the technique as the permanent method of lighting his laboratories. The loop around the ceiling was always energized; and if anyone wished a light at any position, it was only necessary to take a glass tube and place it in any convenient location.

when tesla undertook the development of a new kind of electric light, he went to the sun for his model. He saw in the photo- sphere, or outer gaseous layer of the sun, light being created by the vibration of molecules. That was the theory then prevalent; and he sought to use the same method.

In the tremendous burst of revelation which he received in the park at Budapest as he gazed into the flaming orb of

the setting sun, there had flashed into his mind, as we have seen, not only the marvelous invention of the rotary magnetic field and the many uses of multiple alternating currents, but also the grand generalization that everything in Nature operated on the principle of vibrations that corresponded to alternating currents. The host of inventions and discoveries which he made in all succeeding years had their roots, too, in that sublime experience.

In the sun, it was believed, light was created when the molecules were vibrated by heat. Tesla sought to improve on this method by vibrating the molecules by electrical forces. The sparks and electrical flames created by his high-voltage coils were associated, he believed, with molecular vibrations in the air. If he could bottle the gases of the air and set them in vibration electrically, they should produce light without heat, since the energy was supplied by cold electric currents.

Sir fiilliam Crookes, who, long before Edison, produced an incandescent electric light by sealing an electrically heated wire in a vacuum tube, had carried out an extended series of experiments in conducting electricity through the gases in glass vessels under a variety of conditions ranging from atmospheric pressure to the highest vacuum obtainable, and had produced some strange effects. Crookes used the high-voltage current produced by the old-fashioned induction coil.

Tesla expected that when he bottled the strange effects he had observed with his currents of extremely high frequency, he would produce manifestations radically different from those found by Crookes, or Geissler, who also worked in this field. In this he was not disappointed.

Four types of an entirely new kind of electric light were produced by Tesla, using electrically activated molecules of gas: 1. Tubes in which a solid body was rendered incandescent; 2. Tubes in which phosphorescent and fluorescent materials were caused to luminesce; 3. Tubes in which rarefied gases became luminous, and 4. Tubes in which luminosity was produced in gases at ordinary pressures.

Like Crookes, Tesla passed his high-frequency currents through gases at all pressures, from lowest-pressure vacuum to normal atmospheric pressure, and obtained brilliant luminous effects exceeding anything previously attained. He

substituted for air in his tubes other gases, including mercury vapor, and observed the peculiar color and other effects they yielded.

Noting the variety of colors the various gases, and even air, showed under different pressures, Tesla suspected that not all of the energy radiated was given off as visible light, but that some of it emanated as black light. Testing this hypothesis, he placed sulphide of zinc and other phosphorescent and fluorescent materials in his tubes and caused them to glow. In these experiments (they were made in 1889) Tesla laid the foundation for our most recently developed type of highly efficient lamps used in fluorescent lighting which are generally believed to have been invented in recent years. This system of utilizing the wasted ultra-violet or invisible black light by changing it to visible light by means of phosphorescent substances is Tesla's invention. Roentgen was using similar tubes, but of plain glass and the fluorescent substance on a table in his laboratory when, a half-dozen years later, he discovered X-rays. Tesla invented, also, the neon-tube type of lamp, and even bent his tubes to form letters and geometrical shapes, as is done in neon-tube signs. This is true in spite of some antecedent and concurrent laboratory experiments by Crookes and J. J. Thompson, neither of whom developed any lamps or practical applications.

Tesla had discovered early in 1890 that his high-frequency currents had properties so different from the ordinary induction-coil, or spark-coil, currents, that he was able to light his tubes just as well, and sometimes even better, with only one wire connecting them with the high-tension transformer, the return circuit being effected wirelessly through space.

In working with types of lamps consisting of tubes in the center of which there was a conducting wire, and with the tube filled with air under a partial vacuum, Tesla discovered that the gas would serve as a better conductor of the high-frequency current than the wire. From this observation he was able to develop many spectacular experiments which appeared to violate the most fundamental laws of electricity. He was able to short circuit lamps and other apparatus with heavy bars of metal which, with ordinary currents, would completely deprive the devices of electricity so they would be unable to operate. However, with his high-frequency currents, the lamps would light and

the devices operate just as if the short-circuiting bar were not present.

One of his startling experiments consisted of placing a long glass tube partially evacuated of its air inside a slightly longer copper tube with a closed end. A slit was cut in the copper tube in its central section so the tube inside would be seen. when the copper tube was connected in the high-frequency circuit, the air in the tube was brilliantly illuminated; but no evidence could be found of any current flowing through the short-circuiting copper shell. The electricity preferred to pass through the glass tube, by induction, to the enclosed partially evacuated air, pass through the low-pressure air for the full length of the tube, and then pass out the other end by induction, rather than traverse the complete metal path in the surrounding metal tube.

we have then, [said Tesla], as far as we can now see, in the gas a conductor which is capable of transmitting electric impulses of any frequency which we may be able to produce. Could the frequency be brought high enough, then a queer system of distribution, which would be likely to interest gas companies, might be realized; metal pipes filled with gas--the metal being the insulator and the gas the conductor--supplying phosphorescent bulbs, or perhaps devices not yet invented.

This remarkable conductivity of gases, including the air, at low pressures, later led Tesla to suggest, in a published statement in 1914, a system of lighting on a terrestrial scale in which he proposed to treat the whole earth, with its surrounding atmosphere, as if it were a single lamp.

The atmosphere is under the greatest pressure at the surface of the earth, owing to the weight of the overlying air. As we go higher in the air there are increasing amounts below us and less above, so, the greater the elevation, the lower is the pressure of the air.

At higher altitudes the gases in the atmosphere are in the same condition as the air in the partially evacuated tubes he prepared in his laboratory, Tesla explained, and therefore it would serve as an excellent conductor of high-frequency currents. The aurora borealis is a natural example of the effect Tesla sought, and it is produced by

Nature as Tesla planned; but this was not known when he evolved his idea.

The flow of a suficient amount of the electricity in the right form through the upper regions of the atmosphere would cause the air to become luminous. The whole earth would be transformed into a giant lamp, with the night sky completely illuminated. It would be unnecessary, he pointed out, to use any lamps along streets, roads or other outdoor areas, except during periods in which storms or low clouds prevailed. Ocean travel would be made safer and more pleasant, for the sky over the whole ocean would be illuminated, making the night as bright as day.

The methods by which Tesla intended to conduct his high-frequency currents to the upper air have not been published. when he outlined the project, he stated that the plan did not present any dificulties that could not be handled in a practical way. This meant that he had definite means for accomplishing his purpose.

The air, he stated, possesses a high degree of conductivity for high-frequency currents at an altitude of 35,000 feet, but could be used effectively at lower altitudes. The accuracy of Tesla's prediction with respect to the conductivity of the upper air is attested by one of the problems encountered today in the operation of airplanes at altitudes even lower than 25,000 feet. The ignition system, carrying high-voltage currents to the spark plugs in the airplane engines, which explodes the gas in the cylinders, has been giving trouble at the higher altitudes because the electricity escapes with a great deal of freedom into the surrounding air. At lower altitudes the air is an excellent insulator, especially for direct current and low-frequency currents, but, as Tesla discovered, at the higher altitudes where low pressures prevail it becomes an excellent conductor for the high-frequency currents. The wires leading to spark plugs become surrounded by a corona, or electrical halo, which indicates the escape of the current. This interferes with the efficiency, if it does not entirely prevent the operation, of devices employing high-frequency or high-potential currents, such as radio apparatus. (Since Tesla discovered that metal wires and rods which act as excellent conductors for direct and low-frequency currents can act as excellent insulators for his high-frequency currents, it is obvious that the common suggestion made for delivering a current to the upper air

by means of metal cables suspended from balloons is entirely impractical.)

This proposal by Tesla to transform the earth into a giant lamp was again referred to by him in the twenties. At this time he was without funds for carrying on experimental work, and, as he never announced details until after he had tested them in practice, he withheld a disclosure of his methods. He was hopeful, however, that he would soon secure money enough to permit him to test his plan.

The author bombarded Tesla with questions in an effort to learn the general plan he had in mind. Tesla was adamant.

"If I should answer three more of your questions you would know as much about my plan as I do," he replied.

"Nevertheless, Dr. Tesla," I replied, "I am going to outline in my article the only plan that appears to me to be feasible under our known physical laws, and you can deny or afirm it. your molecular bombardment tubes are prolific producers of ultra-violet and X-rays and could produce a powerful beam of this radiation which would ionize the air through great distances. when these rays pass through the air they ionize it, making it a good conductor of electricity of all kinds at suficiently high voltages. By producing such a beam on a high mountain and directing it upward this would provide a conducting path through the air to any height desired. you could then send your high-frequency currents to the upper air without leaving the ground."

"If you publish that," said Tesla, "it must appear as your plan, not mine."

The article was published with the foregoing speculation in it; but neither afirmation nor denial was forthcoming from the inventor, and nothing more can be said in its favor. Tesla may have had a simpler and more practical plan in mind. (Since completing this volume the author has learned that Tesla planned to install a bank of powerful ultra-violet lamps on top of his tower at wardencliff (cf. p. 207), and had the upper Platform designed to receive them.)

There was one other plan which Tesla discussed on a number of occasions when considering terrestrial electrical conditions, and which he may have had in mind in this

connection. He pointed out that the earth is a good conductor of electricity and the upper air is also a good conductor, while the intervening lower stratum of air is an insulator for many kinds of current. This combination provides what is known as a condenser, a device which will store and discharge electricity. By charging the earth, the upper air would become charged by induction. when our spinning earth was so transformed into a terrestrial Leyden jar, it could be alternately charged and discharged, so that a current would flow both in the upper air and in the ground, producing the electrical flow which would cause the upper air to become self-luminous. Tesla, however, never became quite so specific in applying the condenser plan to this problem as the preceding sentence indicates. His plan may still exist in his papers, which, at the present writing, are sealed against inspection except by Government oficials.

Out of the almost empty space in a six-inch vacuum tube Tesla succeeded in extracting at least five epoch-making discoveries. Tesla's lamp was more prolific in producing wonders than the Aladdin's lamp of the Arabian Nights. He gave his "magic" lamp to science fifty years ago. This magic talisman was Tesla's carbon-button lamp which, apart from the other discoveries that came of it, was in itself, just as a lamp, a brilliant scientific discovery--and still remains unused. Edison developed the practical incandescent filament electric lamp and was entitled to, and receives, a tremendous amount of credit for his accomplishment. Tesla invented an absolutely original type of lamp, the incandescent-button lamp, which gives twenty times as much light for the same amount of current consumed; and his contribution remains practically unknown.

The carbon-button type of lamp was described by Tesla in his lecture before the American Institute of Engineers in New York in May, 1891, and further developments were presented in the lectures which he gave in England and France in February and March, 1892. In his New York lecture he said:

Electrostatic effects are in many ways available for the production of light. For instance, we may place a body of some refractory material in a closed, and preferably in a more or less air exhausted, globe, connect it to a source of high, rapidly alternating potential, causing the molecules of the gas to strike it many times a second at

enormous speeds, and in this way, with trillions of invisible hammers, pound it until it gets incandescent. Or we may place a body in a very highly exhausted globe, and by employing very high frequencies and potentials maintain it at any desired degree of incandescence.

He made a vast number of experiments with this carbon-button lamp and gave a description of the most significant ones in his lecture before the English and French scientific societies in the spring of 1892. It was, however, only one of the many new types of lamps and other important developments which he included in this spectacular presentation of his work.

The carbon-button lamps were of very simple construction. Basically they consisted of a spherical glass globe three to six inches in diameter, in the center of which was a piece of solid refractory material mounted on the end of a wire which protruded through the globe and served as a single-wire connection with the source of high-frequency currents. The globe contained rarefied air.

when the high-frequency current was connected with the lamp, molecules of the air in the globe, coming in contact with the central button, became charged and were repelled at high velocity to the glass globe where they lost their charge and were then repelled back at equally high velocity, striking the button. Millions of millions of such processes each second caused the button to become heated to incandescence.

In these simple glass globes Tesla was able to produce extremely high temperatures, the upper limit of which seemed to be determined by the amount of current used. He was able to vaporize carbon directly into a gas, observing that the liquid state was so unstable it could not exist. Zirconia, the most heat-resistant substance known, could be melted instantly. He tried diamonds and rubies as buttons--and they too were vaporized. when using the device as a lamp it was not his desire to melt the substances; but he always carried experiments to their upper and lower limits. Carborundum, he observed, was so refractory that it was possible when using buttons made of this material (calcium carbide) to run the lamps at higher current densities than was possible with other substances. Carborundum did not vaporize so readily, nor did it make deposits on the inside of the globe.

Tesla thus evolved a technique in operating the lamps whereby the incandescent button transferred its heat energy to the molecules of the very small amount of gas in the tube so that they became a source of light, thus causing the lamps to function like the sun, the button being the massive body of the sun and the surrounding gas like the photosphere, or atmospheric light-emitting layer, of that body.

Tesla had a keen sense of dramatic values, but quite apart from this he undoubtedly enjoyed a unique satisfaction when he was able to light this miniature sun in the currents that he passed through his body--high-frequency currents of hundreds of thousands of volts. with one hand grasping a terminal of his high-frequency transformer and the other holding aloft this bulb containing an incandescent miniature sun which he had created--posing like the Statue of Liberty--he was able to make his new lamp radiate its brilliant illumination. Here, you might say, was the superman manifesting his ultramundane accomplishments. In addition, there was a satisfaction which was associated purely with the plane of ordinary mortals. Edison had laughed at his plan for developing the alternating-current system, and had declared that these currents were not only useless but deadly. Surely, this was an adequate answer; Tesla would let Nature make his replies.

Observing this working model of the incandescent sun which he could hold in his hand, Tesla was quick to see many of the implications of its phenomena. Every electrical wave that surged through the tiny central bead caused a shower of particles to radiate from it at tremendous velocity and strike the surrounding glass globe, only to be reflected back to the bead. The sun, Tesla reasoned, is an incandescent body that carries a high electrical charge and it, too, will emit vast showers of tiny particles, each carrying great energy because of its extremely high velocity. In the case of the sun, and other stars like it, there was no glass globe to act as a barrier, so the showers of particles continued out into the vast realms of surrounding space.

All space was filled with these particles and they were continually bombarding the earth, blasting matter wherever they struck, just as they did in his globes. He had seen this process take place in his globes, where the most

refractory carbon beads could be shattered into atomic dust by the bombardment of the electrified particles.

He sought to detect these particles striking the earth: one of the manifestations of this bombardment, he declared, was the aurora borealis. The records of the experimental methods by which he detected these rays are not available; but he published an announcement that he had detected them, measured their energy, and found that they moved with tremendously high velocities imparted to them by the hundreds of millions of volts potential of the sun.

Neither the scientists nor the general public in the early nineties were in a mood for such fantastic figures, or for any claim that the earth was bombarded by such destructive rays. It would be describing the situation in very conservative fashion to state that Tesla's report was not taken seriously.

when, however, the French physicist, Henri Becquerel, in 1896, discovered the mysterious rays emitted by uranium, and subsequent investigations, culminating with the discovery by Pierre and Marie Curie, in Paris, of radium, whose atoms were exploding spontaneously without apparent cause, Tesla was able to point to his cosmic rays as the simple cause of the radioactivity of radium, thorium, uranium and other substances. And he predicted that other substances would also be found to be made radioactive by bombardment with these rays. The victory for Tesla, however, was only temporary, for the scientific world did not accept his theory. Nevertheless, Tesla was a better prophet than he knew, or anyone else suspected.

Thirty years later Dr. Robert A. Millikan rediscovered these rays, believing them to be vibratory in character like light, and was followed by Dr. Arthur H. Compton, who proved the existence of cosmic rays consisting of high-velocity particles of matter, just as Tesla described them. They started by finding energies of ten million volts; and today the energies are far up in the billions and even trillions of electron volts. And these and other investigators describe these rays as shattering atoms of matter producing showers of debris--just as Tesla predicted.

In 1934, Frederick Joliot, son-in-law of the Curies, discovered that artificial radioactivity was produced in

ordinary materials by bombarding them with particles in just the manner which Tesla described. Joliot received the Nobel Prize for his discovery; no one gives any credit to Tesla.

Tesla's molecular-bombardment lamp was the ancestor of another very modern development--the atom-smashing cyclotron. The cyclotron, developed by E. O. Lawrence, of the University of California, during the past twenty years, is a device in which electrified particles are whirled in a magnetic field in a circular chamber until they reach a very high velocity, and are then led out of the chamber in a narrow stream. The giant machine, with a magnet as high as a house, partially completed at present writing, will emit so powerful a beam of charged particles that, according to Prof. Lawrence, if allowed to impinge on a building brick they will totally disintegrate it. The smaller models were used to bombard a variety of substances to render them radioactive, to disintegrate them or transmute their atoms into those of other elements.

The small glass globe, six inches or less in diameter, holding Tesla's molecular-bombardment lamp produced exactly this same disintegrating effect on solid matter, probably with a more intensified effect than any atom-smashing cyclotron now in existence despite their tremendous size. (Even small ones weigh twenty tons.)

In describing one of the experiments with his lamp, one in which a ruby was mounted in a carbon button, Tesla said:

It was found, among other things, that in such cases, no matter where the bombardment began, just as soon as a high temperature was reached there was generally one of the bodies which seemed to take most of the bombardment upon itself, the other, or others, being thereby relieved. This quality appeared to depend principally on the point of fusion, and on the facility with which the body was "evaporated," or, generally speaking, disintegrated--meaning by the latter term not only the throwing off of atoms, but likewise of larger lumps. The observation made was in accordance with generally accepted notions. In a highly exhausted bulb electricity is carried off from the electrode by independent carriers, which are partly atoms, or molecules, of the residual atmosphere, and partly the atoms, molecules, or lumps thrown off from the electrode. If the electrode is composed of bodies of different

character, and if one of these is more easily disintegrated than the others, most of the electricity supplied is carried off from that body, which is then brought to a higher temperature than the others, and this the more, as upon an increase of the temperature the body is still more easily disintegrated.

Substances which resisted melting in temperatures attainable in laboratory furnaces of that day were easily disintegrated in Tesla's simple-lamp disintegrator, which provided a powerful beam of disintegrating particles by having them concentrated from all directions by a spherical reflector (the globe of his lamp), a kind a three-dimension burning glass, but operating with electrified particles instead of heat rays. It accomplished the same effect as the heavy atom disintegrators of today, but much more efficiently in a globe so light in weight it almost floated off in air. Its simplicity and efficiency is further increased by the fact that it causes the substance that is being disintegrated to supply the particles by which the disintegration is effected.

There is one more very modern discovery of great importance embodied in Tesla's molecular-bombardment lamp--the point electron miscroscope, which provides magnifications of a million diameters, or ten to twenty times more powerful than the better known electron microscope which in turn is capable of magnifications up to fifty times greater than the optical microscope.

In the point electron microscope, electrified particles shoot out in straight lines from a tiny active spot on a piece of substance kept at a high potential, and reproduce on the spherical surface of a glass globe the pattern of the microscopically small area from which the particles are issuing. The size of the glass sphere furnishes the only limit to the degree of magnification that can be obtained; the greater the radius, the greater the magnification. Since electrons are smaller than light waves, objects too small to be seen by light waves can be tremendously enlarged by the patterns produced by the emitted electrons.

Tesla produced on the surface of the spherical globe of his lamp phosphorescent images of what was taking place on the disintegrating button when he used extremely high vacuum. He described this effect in his lectures in the spring of 1892, and his description will stand with hardly a change

in a word for a description of the million-magnification point electron microscope. Quoting from his lecture:

To the eye the electrode appears uniformly brilliant, but there are upon it points constantly shifting and wandering about, of a temperature far above the mean, and this materially hastens the process of deterioration. . . . Exhaust a bulb to a very high degree, so that with a fairly high potential the discharge cannot pass--that is, not a luminous one, for a weak invisible discharge occurs always, in all probability. Now raise slowly and carefully the potential, leaving the primary current no more than for an instant. At a certain point, two, three or half a dozen phosphorescent spots will appear on the globe. These places of the glass are evidently more violently bombarded than the others, this being due to the unevenly distributed electric density, necessitated, of course, by sharp projections, or, generally speaking, irregularities of the electrode. But the luminous patches are constantly changing in position, which is especially well observed if one manages to produce very few, and this indicates that the configuration of the electrode is rapidly changing.

It would be an act of simple justice if in the future scientists would extend credit to Tesla for being the one who discovered the electron microscope. There is no reduction in the glory due him because he did not specifically describe the electron, then unknown, in its operations, but assumed the effect was due to electrically charged atoms.

when Tesla studied the performance of various models of this and his other gaseous lamps, he observed that the output of visible light changed under various operating conditions. He knew they gave off both visible and invisible rays. He used a variety of phosphorescent and fluorescent substances for detecting the ultra-violet or black light. Usually, the changes in the visible and ultra-violet light about balanced each other; as one increased the other decreased, with the remainder of the energy accounted for by heat losses. In his molecular-bombardment lamp he found, he reported in his 1892 lectures, "visible black light and a very special radiation." He was experimenting with this radiation which, he reported, produced shadowgraph pictures on plates in metal containers, in his laboratory when it was destroyed by fire in March, 1895.

This "very special radiation" was not further described at that time in published articles; but when Prof. fiilhelm Konrad Roentgen, in Germany, in December, 1895, announced the discovery of X-rays, Tesla was able immediately to reproduce the same results by means of his "very special radiation," indicating that these and X-rays had very similar properties although produced in somewhat different ways. Immediately upon reading Roentgen's announcement, Tesla forwarded to the German scientist shadowgraph pictures produced by his "very special radiation." Roentgen replied: "The pictures are very interesting. If you would only be so kind as to disclose the manner in which you obtained them."

Tesla did not consider that this situation gave him any priority in the discovery of X-rays, nor did he ever advance any claims; but he immediately started an extensive series of investigations into their nature. while others were trying to coax out of the type of tube used by Roentgen enough X-rays to take shadow photographs through such thin structures as the hands and feet held very close to the bulb, Tesla was taking photographs through the skull at a distance of forty feet from the tube. He elsewhere described at this time an unidentified type of radiation coming from a spark gap, when a heavy current was passed, that was not a transverse wave like light, or Hertzian waves, and could not be stopped by interposing metal plates.

Tesla, thus, in one lecture reporting his investigations covering a period of two years, offered to the world--in addition to his new electric vacuum lamps, his highly efficient incandescent lamp, and his high-frequency and high-potential currents and apparatus--at least five outstanding scientific discoveries: 1. Cosmic rays; 2. Artificial radioactivity; 3. Disintegrating beam of electrified particles, or atom smasher; 4. Electron microscope; and 5. "Very special radiation" (X-rays).

At least four of these innovations, when "rediscovered" up to forty years later, won Nobel Prizes for others; and Tesla's name is never mentioned in connection with them.

Yet Tesla's lifetime work was hardly well started!

TEN

TESLA had a remarkable ability for carrying on simultaneously a number of widely different lines of scientific research. while pursuing his studies of high-frequency electrical oscillations with all of their ramifications from vacuum lamps to radio, he was also investigating mechanical vibrations; and he had a rare foresight into the many useful applications to which they could be put, and which have since been realized.

Tesla never did things by halves. Almost everything he attempted went off like a flash of lightning with a very satisfactory resounding clap of thunder following. Even when he did not so plan events, they appeared to fashion themselves into spectacular climaxes. In 1896 while his fame was still on the ascendant he planned a nice quiet little vibration experiment in his Houston Street laboratory. Since he had moved into these quarters in 1895, the place had established a reputation for itself because of the peculiar noises and lights that emanated from it at all hours of the day and night, and because it was constantly being visited by the most famous people in the country.

The quiet little vibration experiment produced an earthquake, a real earthquake in which people and buildings and everything in them got a more tremendous shaking than they did in any of the natural earthquakes that have visited the metropolis. In an area of a dozen square city blocks, occupied by hundreds of buildings housing tens of thousands of persons, there was a sudden roaring and shaking, shattering of panes of glass, breaking of steam, gas and water pipes. Pandemonium reigned as small objects danced around rooms, plaster descended from walls and ceilings, and pieces of machinery weighing tons were moved from their bolted anchorages and shifted to awkward spots in factory lofts.

"It was all caused, quite unexpectedly, by a little piece of apparatus you could slip in your pocket," said Tesla.

The device that precipitated the sudden crisis had been used for a long time by Tesla as a toy to amuse his

friends. It was a mechanical oscillator, and was used to produce vibrations. The motor-driven device that the barber straps on his hand to give a patron an "electric massage" is a descendant of Tesla's mechanical oscillator. There is, of course, nothing electric about an "electric massage" except the power used to produce vibrations which are transmitted through the barber's fingers to the scalp.

Tesla developed in the early nineties a mechanical-electrical oscillator for the generation of high-frequency alternating currents. The driving engine produced on a shaft simple reciprocating motion that was not changed to rotary motion. Mounted on either end of the shaft was a coil of many turns of wire that moved back and forth with high frequency between the poles of electromagnets, and in this way generated high-frequency alternating currents.

The engine was claimed by Tesla to have a very high efficiency compared to the common type of engine, which changed reciprocating to rotary motion by means of a crank shaft. It had no valves or other moving parts, except the reciprocating piston with its attached shaft and coils, so that mechanical losses were very low. It maintained such an extremely high order of constancy of speed, he stated, that the alternating current generated by the oscillator could be used to drive clocks, without any pendulum or balance-wheel control mechanisms, and they would keep time more accurately than the sun.

This engine may have had industrial possibilities but Tesla was not interested in them. To him it was just a convenient way of producing a high-frequency alternating current constant in frequency and voltage, or mechanical vibrations, if used without the electrical parts. He operated the engine on compressed air and also by steam at 320 pounds and also at 80 pounds pressure.

while perfecting this device, he had opportunity to observe interesting effects produced by vibration. These were objectionable in the engine when it was used as a dynamo, so he adopted suitable measures to eliminate or suppress them. The vibrations as such, however, interested him. Although they were detrimental to the machine, he found their physiological effects were, at times, quite pleasant. Later he built a small mechanical oscillator driven by compressed air which was designed for no other purpose than to produce vibrations. He built a platform insulated from

the floor by rubber and cork. He then mounted the oscillator on the under side of the platform. The purpose of the rubber and cork under the platform was to keep the vibrations from leaking into the building and thereby reducing the effect on the platform. Visitors found this vibrating platform one of the most interesting of the great array of fascinating and fantastic exhibits with which he dazzled the society folk who flocked to his laboratory.

Great hopes were entertained by Tesla of applying these vibrations for therapeutic and health-improving effects. He had opportunity to observe, through his own experience and that of his employees, that they produce some very definite physiological actions.

Samuel Clemens, better known to the public as "Mark Twain," and Tesla were close friends. Clemens was a frequent visitor to the Tesla laboratory. Tesla had been playing with his vibratory mechanism for some time, and had learned a good deal about the results that followed from varying doses of vibration, when one evening Clemens dropped in.

Clemens, on learning about the new mechanism, wanted to experience its vitalizing vibrations. He stood on the platform while the oscillator set it into operation. He was thrilled by the new experience. He was full of adjectives. "This gives you vigor and vitality," he exclaimed. After he had been on the platform for a while Tesla advised him: "you have had enough, Mr. Clemens. you had better come down now."

"Not by a jugfull," replied Clemens. "I am enjoying myself."

"But you had better come down, Mr. Clemens. It is best that you do so," insisted Tesla.

"you couldn't get me off this with a derrick," laughed Clemens.

"Remember, I am advising you, Mr. Clemens."

"I'm having the time of my life. I'm going to stay right up here and enjoy myself. Look here, Tesla, you don't appreciate what a wonderful device you have here to give a lift to tired humanity. . . . Clemens continued along this line for several minutes. Suddenly he stopped talking, bit

his lower lip, straightened his body and stalked stiffy but suddenly from the platform.

"Quick, Tesla! Where is it?" snapped Clemens, half begging, half demanding.

"Right over here, through that little door in the corner," said Tesla. "And remember, Mr. Clemens, I advised you to come down some time ago," he called after the rapidly moving figure.

The laxative effect of the vibrator was an old story to the members of the laboratory staff.

Tesla pursued his studies of mechanical vibrations in many directions. This was almost a virgin field for scientific research. Scarcely any fundamental research had been done in the field since Pythagoras, twenty-five hundred years before, had established the science of music through his study of vibrating strings; and many of the wonders with which Tesla had startled the world in the field of high-frequency and high-potential currents had grown out of his simple secret for tuning electrical circuits so that the electricity vibrated in resonance with its circuit. He now visualized mechanical vibrations building up resonance conditions in the same way, to produce effects of tremendous magnitude on physical objects.

In order to carry out what he expected to be some minor and very small-scale experiments, he screwed the base of one of his small mechanical oscillators to an iron supporting pillar in the middle of his laboratory and set it into oscillation. It had been his observation that it took some time to build up its maximum speed of vibration. The longer it operated the faster the tempo it attained. He had noticed that all objects did not respond in the same way to vibrations. One of the many objects around the laboratory would suddenly go into violent vibration as it came into resonance with the fundamental vibration of the oscillator or some harmonic of it. As the period of the oscillator changed, the first object would stop and some other object in resonance with the new rate would start vibrating. The reason for this selective response was very clear to Tesla, but he had never previously had the opportunity to observe the phenomenon on a really large scale.

Tesla's laboratory was on an upper floor of a loft building. It was on the north side of Houston Street, and the second house east of Mulberry Street. About three hundred feet south of Houston Street on the east side of Mulberry Street was the long, four-story red-brick building famous as Police Headquarters. Throughout the neighborhood there were many loft buildings ranging from five to ten stories in height, occupied by factories of all kinds. Sandwiched between them were the small narrow tenement houses of a densely packed Italian population. A few blocks to the south was Chinatown, a few blocks to the west was the garment-trades area, a short distance to the east was a densely crowded tenement-house district.

It was in this highly variegated neighborhood that Tesla unexpectedly staged a spectacular demonstration of the properties of sustained powerful vibrations. The surrounding population knew about Tesla's laboratory, knew that it was a place where strange, magical, mysterious events took place and where an equally strange man was doing fearful and wonderful things with that tremendously dangerous secret agent known as electricity. Tesla, they knew, was a man who was to be both venerated and feared, and they did a much better job of fearing than of venerating him.

Quite unmindful of what anyone thought about him, Tesla carried on his vibration and all other experiments. Just what experiment he had in mind on this particular morning will never be known. He busied himself with preparations for it while his oscillator on the supporting iron pillar of the structure kept building up an ever higher frequency of vibrations. He noted that every now and then some heavy piece of apparatus would vibrate sharply, the floor under him would rumble for a second or two--that a window pane would sing audibly, and other similar transient events would happen--all of which was quite familiar to him. These observations told him that his oscillator was tuning up nicely, and he probably wondered why he had not tried it firmly attached to a solid building support before.

Things were not going so well in the neighborhood, however. Down in Police Headquarters in Mulberry Street the "cops" were quite familiar with strange sounds and lights coming from the Tesla laboratory. They could hear clearly the sharp snapping of the lightnings created by his coils. If

anything queer was happening in the neighborhood, they knew that Tesla was in back of it in some way or other.

On this particular morning the cops were surprised to feel the building rumbling under their feet. Chairs moved across floors with no one near them. Objects on the oficers' desks danced about and the desks themselves moved. It must be an earthquake! It grew stronger. Chunks of plaster fell from the ceilings. A flood of water ran down one of the stairs from a broken pipe. The windows started to vibrate with a shrill note that grew more intense. Some of the windows shattered.

"That isn't an earthquake," shouted one of the oficers, "it's that blankety-blank Tesla. Get up there quickly," he called to a squad of men, "and stop him. Use force if you have to, but stop him. He'll wreck the city."

The officers started on a run for the building around the corner. Pouring into the streets were many scores of people excitedly leaving near-by tenement and factory buildings, believing an earthquake had caused the smashing of windows, breaking of pipes, moving of furniture and the strange vibrations.

without waiting for the slow-pokey elevator, the cops rushed up the stairs--and as they did so they felt the building vibrate even more strongly than did police headquarters. There was a sense of impending doom--that the whole building would disintegrate--and their fears were not relieved by the sound of smashing glass and the queer roars and screams that came from the walls and floors.

Could they reach Tesla's laboratory in time to stop him? Or would the building tumble down on their heads and everyone in it be buried in the ruins, and probably every building in the neighborhood? Maybe he was making the whole earth shake in this way! would this madman be destroying the world? It was destroyed once before by water. Maybe this time it would be destroyed by that agent of the devil that they call electricity!

Just as the cops rushed into Tesla's laboratory to tackle--they knew not what--the vibrations stopped and they beheld a strange sight. They arrived just in time to see the tall gaunt figure of the inventor swing a heavy sledge hammer and shatter a small iron contraption mounted on the post in

the middle of the room. Pandemonium gave way to a deep, heavy silence.

Tesla was the first to break the silence. Resting his sledge hammer against the pillar, he turned his tall, lean, coatless figure to the cops. He was always selfpossessed, always a commanding presence--an effect that could in no way be attributed to his slender build, but seemed more to emanate from his eyes. Bowing from the waist in his courtly manner, he addressed the policemen, who were too out of breath to speak, and probably overawed into silence by their fantastic experience.

"Gentlemen," he said, "I am sorry, but you are just a trifle too late to witness my experiment. I found it necessary to stop it suddenly and unexpectedly and in an unusual way just as you entered. If you will come around this evening I will have another oscillator attached to this platform and each of you can stand on it. you will, I am sure, find it a most interesting and pleasurable experience. Now you must leave, for I have many things to do. Good day, gentlemen."

George Scherff, Tesla's secretary, was standing nearby when Tesla so dramatically smashed his earthquake maker. Tesla never told the story beyond this point, and Mr. Scherff declares he does not recall what the response of the cops was. Imagination must finish the finale to the story.

At the moment, though, Tesla was quite sincere in his attitude. He had no idea of what had happened elsewhere in the neighborhood as a result of his experiment, but the effect on his own laboratory had been sufficiently threatening to cause him to halt it suddenly. when he learned the details, however, he was convinced that he was correct in his belief that the field of mechanical vibrations was rich with opportunities for scientific investigation. we have no records available of any further major experiments with vibration in that laboratory. Perhaps the Police and Building Departments had offered some emphatic suggestions to him concerning experiments of this nature.

Tesla's observations in this experiment were limited to what took place on the floor of the building in which his laboratory was located, but apparently very little happened there until a great deal had happened elsewhere. The

oscillator was firmly fixed to a supporting column and there were similar supporting columns directly under it on each floor down to the foundations. The vibrations were transmitted through the columns to the ground. This section of the city is built on deep sand that extends down some hundreds of feet before bed rock is reached. It is well known to seismologists that earthquake vibrations are transmitted by sand with much greater intensity than they are by rock. The ground under the building and around it was, therefore, an excellent transmitter of mechanical vibrations, which spread out in all directions. They may have reached a mile or more. They were more intense, of course, near their source and became weaker as the distance increased. However, even weak vibrations that are sustained can build up surprisingly large effects when they are absorbed by an object with which they are in resonance. A distant object in resonance can be thrown into strong vibration whereas a much nearer object not in resonance will be left unaffected.

It was this selective resonance that was, apparently, operating in Tesla's experiment. Buildings other than his own came into resonance with the increasing tempo of his oscillator long before his own building was affected. After the pandemonium was under way for some time elsewhere and the higher frequencies were reached, his immediate surroundings started to come into resonance.

when resonance is reached the effects follow instantly and powerfully. Tesla knew this, so when he observed dangerous resonance effects developing in his building he realized he had to act fast. The oscillator was being operated by compressed air supplied by a motor-driven compressor that fed the air into a tank, where it was stored under pressure. Even if the motor were shut off, there was plenty of air in the tank to keep the oscillator going for many minutes--and in that time the building could be completely wrecked and reduced to a pile of debris. with the vibrations reaching this dangerous amplitude, there was no time to try to disconnect the vibrator from the air line or to do anything about releasing the air from the tank. There was time for only one thing, and Tesla did that. He grabbed the near-by sledge hammer and took a mighty swing at the oscillator in hopes of putting it out of operation. He succeeded in his first attempt.

The device was made of cast iron and was of rugged construction. There were no delicate parts that could be easily damaged. Tesla has never published a description of the device, but its construction was principally that of a piston which moved back and forth inside a cast-iron cylinder. The only way to stop it from operating was to smash the outer cylinder. Fortunately, that is what happened from the first blow.

As Tesla turned around after delivering this lucky blow and beheld the visiting policemen, he could not understand the reason for their visit. The dangerous vibrations had developed in his building only within the preceding minute, and the policemen would not have had time to plan a visit in connection with them, he figured, so they must have come for some other less critical purpose, and therefore he proposed to dismiss them until a more opportune moment.

Tesla related this experience to me when I asked the inventor's opinion of a plan that I had suggested some time previously to Elmer Sperry, Jr., son of the famous inventor of many gyroscope devices. when a heavy gyroscope, such as is used in stabilizing ships, is forced to turn on its axis, it transmits a powerful downward thrust through the bearings in which the supporting gimbal is mounted. If a battery of such gyroscopes were mounted in regions where severe earthquakes take place it would transmit thrusts to the ground at equally timed intervals and build up resonance vibrations in the strata of the earth that would cause earthquake strains to be released while they were of small magnitude, thus producing very small earthquakes instead of letting the strains build up to large magnitudes which, when they let go, would cause devastating earthquakes.

The idea made a strong appeal to Tesla; and in his discussion, after telling me of the experience here related, he further declared that he had so far developed his study of vibrations that he could establish a new science of "telegeodynamics" which would deal not only with the transmission of powerful impulses through the earth to distant points to produce effects of large magnitude--in addition, he could use the same principles to detect distant objects. In the later thirties, before the outbreak of the war, he declared that he could apply these principles for the detection of submarines or other ships

at a distance, even though they were lying at anchor and no engines operating on them.

His system of telegeodynamics, using mechanical vibrations, Tesla declared, would make it possible to determine the physical constant of the earth and to locate ore deposits far beneath the surface. This latter prediction has since been fulfilled, for many oil fields have been discovered by studying the vibrations reflected from sub-surface strata.

"So powerful are the effects of the telegeodynamic oscillator," said Tesla in reviewing the subject in the thirties, "that I could now go over to the Empire State Building and reduce it to a tangled mass of wreckage in a very short time. I could accomplish this result with utmost certainty and without any dificulty whatever. I would use a small mechanical vibrating device, an engine so small you could slip it in your pocket. I could attach it to any part of the building, start it in operation, allow it twelve to thirteen minutes to come to full resonance. The building would first respond with gentle tremors, and the vibrations would then become so powerful that the whole structure would go into resonant oscillations of such great amplitude and power that rivets in the steel beams would be loosened and sheared. The outer stone coating would be thrown off and then the skeleton steel structure would collapse in all its parts. It would take about 2.5 (This figure may have been .25 or 2.5 horsepower. The notes are old and somewhat indistinct. Memory favors the latter figure.) horsepower to drive the oscillator to produce this effect"

Tesla developed his inventions to the point at which they were spectacular performers before they were demonstrated to the public. when presented, the performance always greatly exceeded the promise. This was the case with his first public demonstration of "wireless," but he complicated the situation by coupling with his radio invention another new idea--the robot.

Tesla staged his demonstration in the great auditorium of Madison Square Garden, then on the north side of Madison Square, in September, 1898, as part of the first annual Electrical Exhibition. He had a large tank built in the center of the arena and in this he placed an iron-hulled boat a few feet long, shaped like an ark, which he operated by remote control by means of his wireless system.

Extending upward from the center of the roof of the boat was a slender metal rod a few feet high which served as an antenna, or &aerial, for receiving the wireless wave. Near the bow and stern were two small metal tubes about a foot high surmounted by small electric lamps. The interior of the hull was packed with a radio receiving set and a variety of motor-driven mechanisms which put into effect the operating orders sent to the boat by wireless waves. There was a motor for propelling the boat and another motor for operating the servo-mechanism, or mechanical brain, that interpreted the orders coming from the wireless receiving set and translated them into mechanical motions, which included steering the boat in any direction, making it stop, start, go forward or backward, or light either lamp. The boat could thus be put through the most complicated maneuvers.

Anyone attending the exhibition could call the maneuver for the boat, and Tesla, with a few touches on a telegraph key, would cause the boat to respond. His control point was at the far end of the great arena.

The demonstration created a sensation and Tesla again was the popular hero. It was a front-page story in the newspapers. Everyone knew the accomplishment was a wonderful one, but few grasped the significance of the event or the importance of the fundamental discovery which it demonstrated. The basic aspects of the invention were obscured by the glamor of the demonstration.

The Spanish American war was under way. The success of the U.S. Navy in destroying the Spanish fleets was the leading topic of conversation. There was resentment over the blowing up of the U.S.S. Maine in Havana Harbor. Tesla's demonstration fired the imagination of everyone because of its possibilities as a weapon in naval warfare.

waldemar Kaempffert, then a student in City College and now Science Editor of the New York Times, discussed its use as a weapon with Tesla.

"I see," said Kaempffert, "how you could load an even larger boat with a cargo of dynamite, cause it to ride submerged, and explode the dynamite whenever you wished by pressing the key just as easily as you can cause the light on the bow to shine, and blow up from a distance by wireless even the largest of battleships." (Edison had

earlier designed an electric torpedo which received its power by a cable that remained connected with the mother ship.)

Tesla was patriotic, and was proud of his status, which he had acquired in 1889, as a citizen of the United States. He had offered his invention to the Government as a naval weapon, but at heart he was opposed to war.

"you do not see there a wireless torpedo," snapped back Tesla with fire flashing in his eyes, "you see there the first of a race of robots, mechanical men which will do the laborious work of the human race.

The "race of robots" was another of Tesla's original and important contributions to human welfare. It was one of the items of his colossal project for increasing human energy and improving the efficiency of its utilization. He visualized the application of the robot idea to warfare as well as to peaceful pursuits; and out of the broad principles enunciated, he developed an accurate picture of warfare as it is being carried on today with the use of giant machines as weapons--the robots he described.

"This evolution," he stated in an article in the Century Magazine of June, 1900, "will bring more and more into prominence a machine or mechanism with the fewest individuals as an element of warfare. . . . Greatest possible speed and maximum rate of energy delivery by the war apparatus will be the main object. The loss of life will become smaller. . . ."

Outlining the experiences that led him to design the robots, or automatons, as he called them, Tesla stated:

I have by every thought and act of mine, demonstrated, and do so daily, to my absolute satisfaction that I am an automaton endowed with power of movement, which merely responds to external stimuli beating upon my sense organs, and thinks and moves accordingly. . . .

with these experiences it was only natural that, long ago, I conceived the idea of constructing an automaton which would mechanically represent me, and which would respond, as I do myself, but, of course, in a much more primitive manner, to external influences. Such an automaton evidently had to have motive power, organs for locomotion, directive

organs, and one or more sensitive organs so adapted as to be excited by external stimuli.

This machine would, I reasoned, perform its movements in the manner of a living being, for it would have all of the chief elements of the same. There was still the capacity for growth, propagation, and, above all, the mind which would be wanting to make the model complete. But growth was not necessary in this case since a machine could be manufactured full-grown, so to speak. As to capacity for propagation, it could likewise be left out of consideration, for in the mechanical model it merely signified a process of manufacture.

whether the automaton be of flesh and bone, or of wood and steel, mattered little, provided it could perform all the duties required of it like an intelligent being. To do so it would have to have an element corresponding to the mind, which would effect the control of its movements and operations, and cause it to act, in any unforeseen case that might present itself, with knowledge, reason, judgement and experience. But this element I could easily embody in it by conveying to it my own intelligence, my own understanding. So this invention was evolved, and so a new art came into existence, for which the name "telautomatics" has been suggested, which means the art of controlling the movements and operations of distant automatons.

In order to give the automaton an individual identity it would be provided with a particular electrical tuning, Tesla explained, to which it alone would respond when waves of that particular frequency were sent from a control transmitting station; and other automatons would remain inactive until their frequency was transmitted. This was Tesla's fundamental radio tuning invention, the need for which other radio inventors had not yet glimpsed although Tesla had described it publicly a half-dozen years earlier.

Tesla not only used in the control of his automaton the long waves now used in broadcasting--which are very different from the short waves used by Marconi and all others; for those could be interfered with by the imposition of an intervening object--but he was explaining the use, through his system of tuning, of the spectrum of allocations for individual stations that now appears on the dials of radio receiving sets. He continued:

By the simple means described the knowledge, experience, judgement--the mind, so to speak--of the distant operator were embodied in that machine, which was thus enabled to move and perform all of its operations with reason and intelligence. It behaved just like a blindfolded person obeying directions received through the ear.

The automatons so far constructed had "borrowed minds," so to speak, as each formed merely part of the distant operator who conveyed to it his intelligent orders; but this art is only in the beginning.

I purpose to show that, however impossible it may now seem, an automaton may be contrived which will have its "own mind," and by this I mean that it will be able, independently of any operator, left entirely to itself, to perform, in response to external influences affecting its sensitive organs, a great variety of acts and operations as if it had intelligence.

It will be able to follow a course laid out or to obey orders given far in advance; it will be capable of distinguishing between what it ought and ought not to do, and of making experiences or, otherwise stated, of recording impressions which will deffinitely affect its subsequent actions. In fact I have already conceived such a plan.

Although I evolved this invention many years ago and explained it to my visitors very frequently in my laboratory demonstrations, it was not until much later, long after I had perfected it, that it became known, when, naturally enough, it gave rise to much discussion and to sensational reports.

But the true significance of this new art was not grasped by the majority, nor was the great force of the underlying principle recognized. As nearly as I could judge from the numerous comments which then appeared, the results I had obtained were considered as entirely impossible. Even the few who were disposed to admit the practicability of the invention saw in it merely an automobile torpedo, which was to be used for the purpose of blowing up battleships, with doubtful success. . . .

But the art I have evolved does not contemplate merely the change of direction of a moving vessel; it affords means of

absolutely controlling in every respect, all the innumerable translatory movements, as well as the operations of all the internal organs, no matter how many, of an individualized automaton.

Tesla, in an unpublished statement, prepared fifteen years later, recorded his experience in developing automata, and his unsuccessful effort to interest the war Department, and likewise commercial concerns, in his wirelessly controlled devices.

The idea of constructing an automaton, to bear out my theory, presented itself to me early but I did not begin active work until 1893, when I started my wireless investigations. During the succeeding two or three years, a number of automatic mechanisms, actuated from a distance by wireless control, were constructed by me and exhibited to visitors in my laboratory.

In 1896, however, I designed a complete machine capable of a multitude of operations, but the consummation of my labors was delayed until later in 1897. This machine was illustrated and described in my article in the Century Magazine of June 1900, and other periodicals of that time and, when first shown in the beginning of 1898, it created a sensation such as no other invention of mine has ever produced.

In November 1898, a basic patent on the novel art was granted to me, but only after the Examiner-in-Chief had come to New York and witnessed the performance, for what I claimed seemed unbelievable. I remember that when later I called on an oficial in Washington, with a view of offering the invention to the Government, he burst out in laughter upon my telling him what I had accomplished. Nobody thought then that there was the faintest prospect of perfecting such a device.

It is unfortunate that in this patent, following the advice of my attorneys, I indicated the control as being effected through the medium of a single circuit and a well-known form of detector, for the reason that I had not yet secured protection on my methods and apparatus for individualization. As a matter of fact, my boats were controlled through the joint action of several circuits and interference of every kind was excluded. Most generally I employed receiving circuits in the form of loops, including

condensers, because the discharges of my high tension transmitter ionized the air in the hall so that even a very small &aerial would draw electricity from the surrounding atmosphere for hours.

Just to give an idea, I found, for instance, that a bulb 12" in diamater, highly exhausted, and with one single terminal to which a short wire was attached, would deliver well on to one thousand successive flashes before all charge of the air in the laboratory was neutralized. The loop form of receiver was not sensitive to such a disturbance and it is curious to note that it is becoming popular at this late date. In reality it collects much less energy than the aerials or a long grounded wire, but it so happens that it does away with a number of defects inherent to the present wireless devices.

In demonstrating my invention before audiences, the visitors were requested to ask any questions, however involved, and the automaton could answer them by signs. This was considered magic at that time but was extremely simple, for it was myself who gave the replies by means of the device.

At the same period another larger telautomatic boat was constructed. It was controlled by loops having several turns placed in the hull, which was made entirely water tight and capable of submergence. The apparatus was similar to that used in the first with the exception of certain special features I introduced as, for example, incandescent lamps which afforded a visible evidence of the proper functioning of the machine and served for other purposes.

These automata, controlled within the range of vision of the operator, were, however, the first and rather crude steps in the evolution of the Art of Telautomatics as I had conceived it. The next logical improvement was its application to automatic mechanisms beyond the limits of vision and at great distances from the center of control, and I have ever since advocated their employments as instruments of warfare in preference to guns. The importance of this now seems to be recognized, if I am to judge from casual announcements through the press of achievements which are said to be extraordinary but contain no merit of novelty whatever.

In an imperfect manner it is practicable, with the existing wireless plants, to launch an aeroplane, have it follow a certain approximate course, and perform some operation at a distance of many hundreds of miles. A machine of this kind can also be mechanically controlled in several ways and I have no doubt that it may prove of some usefulness in war. But there are, to my best knowledge, no instrumentalities in existence today with which such an object could be accomplished in a precise manner. I have devoted years of study to this matter and have evolved means, making such and greater wonders easily realizable.

As stated on a previous occasion, when I was a student at college I conceived a flying machine quite unlike the present ones. The underlying principle was sound but could not be carried into practice for want of a prime-mover of suficiently great activity. In recent years I have successfully solved this problem and am now planning aerial machines devoid of sustaining planes, ailerons, propellers and other external attachments, which will be capable of immense speeds and are very likely to furnish powerful arguments for peace in the near future. Such a machine, sustained and propelled entirely by reaction, can be controlled either mechanically or by wireless energy. By installing proper plants it will be practicable to project a missile of this kind into the air and drop it almost on the very spot designated which may be thousands of miles away. But we are not going to stop at this.

Tesla is here describing--nearly fifty years ago--the radio-controlled rocket, which is still a confidential development of world war II, and the rocket bombs used by the Germans to attack England. The rocket-type airship is a secret which probably died with Tesla, unless it is contained in his papers sealed by the Government at the time of his death. This, however, is unlikely, as Tesla, in order to protect his secrets, did not commit his major inventions to paper, but depended on an almost infallible memory for their preservation.

"Telautomata," he concluded, "will be ultimately produced, capable of acting as if possessed of their own intelligence and their advent will create a revolution. As early as 1898 I proposed to representatives of a large manufacturing concern the construction and public exhibition of an automobile carriage which, left to itself, would perform a great variety of operations involving something akin to

judgment. But my proposal was deemed chimerical at that time and nothing came from it."

Tesla, at the Madison Square Garden demonstration in 1898 which lasted for a week, presented to the world, then, two stupendous developments, either of which alone would have been too gigantic to have been satisfactorily assimilated by the public in a single presentation. Either one of the ideas dimmed the glory of the other.

This first public demonstration of wireless, the forerunner of modern radio, in the amazing stage of development to which Tesla carried it, at this early date, was too tremendous a project to be encompassed within a single dramatization. In the hands of a competent public-relations councillor, or publicity man, as he was called in those days (but the employment of one was utterly abhorrent to Tesla), this demonstration would have been limited to the wireless aspect alone, and would have included just a simple two-way sending-and-receiving set for the transmission of messages by the Morse dots and dashes. Suitably dramatized, this would have been a suficient thrill for one show. At a subsequent show he could have brought in the tuning demonstration which would have shown the selective response of each of a series of coils, indicated by his strange-looking vacuum-tube lamps. The whole story of just the tuning of wireless circuits and stations to each other was too big for any one demonstration. An indication of its possibilities was all the public could absorb.

The robot, or automaton, idea was a new and an equally stupendous concept, the possibilities of which were not lost, however, on clever inventors; for it brought in the era of the modern labor-saving device--the mechanization of industry on a mass-production basis.

Using the Tesla principles, John Hays Hammond, Jr. developed an electric dog, on wheels, that followed him like a live pup. It was motor operated and controlled by a light beam through selenium cells placed behind lenses used for eyes. He also operated a yacht, entirely without a crew, which was sent out to sea from Boston harbor and brought back to its wharf by wireless control.

A manless airplane was developed toward the close of the First world war. It rose from the ground, flew one hundred

miles to a selected target, dropped its bombs, and returned to its home airport, all by wireless control. It was also developed so that on a signal from a distant radio station the plane would rise into the air, choose the proper direction, fly to a city hundreds of miles away and set itself down in the airport at that city. This Tesla-type robot was developed in the plant of the Sperry Gyroscope Company, where Elmer Sperry invented a host of amazing mechanical robots controlled by gyroscopes, such as the automatic pilots for airplanes and for ships.

All of the modern control devices using electronic tubes and electric eyes that make machines seem almost human and enable them to perform with superhuman activity, dependability, accuracy and low cost, are children of Tesla's robot, or automaton. The most recent development, in personalized form, was the mechanical man, a metal human monster giant, that walked, talked, smoked a cigarette, and obeyed spoken orders, in the exhibit of the Westinghouse Electric and Manufacturing Company at the New York world's Fair. Robots have been used, as well, to operate hydroelectric powerhouses and isolated substations of powerhouses.

In presenting this superabundance of scientific discovery in a single demonstration, Tesla was manifesting the superman in an additional role that pleased him greatly--that of the man magnificent. He would astound the world with a superlative demonstration not only of the profundity of the accomplishments of the superman, but, in addition, of the prolific nature of the mind of the man magnificent who could shower on the world a superabundance of scientific discoveries.

ELEVEN

TESLA was now ready for new worlds to conquer. After presenting to the public his discoveries relating to wireless signaling or the transmission of intelligence, as he called it, Tesla was anxious to get busy on the power phase: his projected world-wide distribution of power by wireless methods.

Again Tesla was faced with a financial problem or, to state the matter simply, he was broke. The $40,000 which was paid for the stock of the Nikola Tesla Company by Adams had been spent. The company had no cash on hand; but it held patents worth many millions if they had been handled in a practical way. A gift of $10,000 from John Hays Hammond, the famous mining engineer, had financed the work leading up to the Madison Square Garden wireless and robot demonstration.

Tesla had built ever larger and more powerful oscillators in his Houston Street laboratory. when he constructed one that produced 4,000,000 volts he reached beyond the limits in which high voltage could be handled within a city building. The sparks jumped to the walls, floors and ceilings. He needed a larger open space. He wanted to build vastly larger coils. He dreamed of a tremendous structure he would like to build somewhere in the open country spaces. He felt certain his wireless patents would prove tremendously valuable in a short time, and he would then have all the money he needed to build his laboratory. But he had already progressed to the point at which further advancement demanded the use of such a building--and he was broke. A loan of $10,000 offered by his friend Crawford, of the dry goods firm of Simpson and Crawford, took care of immediate needs.

Leonard E. Curtis, of the Colorado Springs Electric Company, a great admirer of Tesla, when he heard of Tesla's plan to conduct experiments on a gigantic scale, invited him to locate his laboratory at Colorado Springs, where he would provide him with the necessary land and all the electric power he needed for his work.

Col. John Jacob Astor, owner of the waldorf-Astoria, held his famous dining-room guest in the highest esteem as a personal friend, and kept in close touch with the progress of his investigations. when he heard that his researches were being halted through lack of funds, he made available to Tesla the $30,000 he needed in order to take advantage of Curtis' offer and build a temporary plant at Colorado Springs. Tesla arrived in Colorado in May, 1899, bringing with him some of his laboratory workers, and accompanied by an engineering associate, Fritz Lowenstein.

while Tesla was making experiments on natural lightning and other subjects in his mountain laboratory, the construction work on his high-power transmitting apparatus was being

rushed. He gave his personal supervision to even the finest details of every piece of apparatus. He was working in a virgin field. None had gone before him to pave the way or gain experience that would be helpful to him in designing his experiments or his machines. He was entirely on his own, working without human guidance of any kind, exploring a field of knowledge far beyond that which anyone else had reached. He had previously astonished the world in developing a system of power transmission in which pressures of tens of thousands of volts were used; now he was working with millions of volts, and no one knew what would happen when such tremendous potentials were produced. He believed, however, that he would make his own magnificent polyphase system obsolete by creating a better one.

In about three months after his arrival at Colorado Springs the building with its fantastic shapes, towers and masts was completed, and the giant oscillator with which the principal experiment was to be made was ready for operation.

The wild, rugged, mountainous terrain of Colorado, in which Tesla set up his laboratory, is a natural generator of tremendous electrical activity, producing lightning discharges of a magnitude and intensity probably not equaled anywhere else on earth. Overwhelming bolts from both earth and sky flashed with frightening frequency during the almost daily lightning storms. Tesla made a very detailed study of natural lightning while his apparatus, which would imitate it, was being constructed. He learned a great deal about the characteristics of the various kinds of discharges.

The gods of the natural lightning may have become a bit jealous of this individual who was undertaking to steal their thunder, as Prometheus had stolen fire, and sought to punish him by wrecking his fantastic looking structure. It was badly damaged, and narrowly escaped destruction, by a bolt of lightning, not one that made a direct hit but one that struck ten miles away.

The blast hit the laboratory at the exact time, to the split second, that Tesla predicted it would. It was caused by a tidal wave of air coming from a particular type of lightning discharge. Tesla tells the story in an unpublished report. He stated:

I have had many opportunities for checking this value by observation of explosions and lightning discharges. An ideal case of this kind presented itself at Colorado Springs in July 1899 while I was carrying on tests with my broadcasting power station which was the only wireless plant in existence at that time.

A heavy cloud had gathered over Pikes Peak range and suddenly lightning struck at a point just ten miles away. I timed the flash instantly and upon making a quick computation told my assistants that the tidal wave would arrive in 48.5 seconds. Exactly with the lapse of this time interval a terrific blow struck the building which might have been thrown off the foundation had it not been strongly braced. All the windows on one side and a door were demolished and much damage done in the interior.

Taking into account the energy of the electric discharge and its duration, as well as that of an explosion, I estimated that the concussion was about equivalent to that which might have been produced at that distance by the ignition of twelve tons of dynamite.

The experimental station which Tesla erected was an almost square barnlike structure nearly one hundred feet on each side. The sides were twenty-five feet high, and from them the roof sloped upward toward the center. From the middle of the roof rose a skeleton pyramidal tower made of wood. The top of this tower was nearly eighty feet above the ground. Extensions of the slanting roof beams extended outward to the ground to serve as flying buttresses to reinforce the tower. Through the center of the tower extended a mast nearly two hundred feet high, at the top of which was mounted a copper ball about three feet in diameter. The mast carried a heavy wire connecting the ball with the apparatus in the laboratory. The mast was arranged in sections so that it could be disjointed and lowered.

There were many pieces of apparatus in the building, and many forms and sizes of his Tesla coils, or high-frequency current transformers. The principal device was his "magnifying transmitter." This was merely a very large Tesla coil. A circular fence-like wall seventy-five feet in diameter was built in the large central room of the structure, and on this were wound the turns of the giant primary coil of the magnifying transmitter. The secondary

was a coil about ten feet in diameter, of about seventy-five turns of wire wound on a cylindrical skeletonized framework of wood. It had a vertical length of about ten feet and was mounted in the center of the room several feet above the floor. In the center of this coil was the bottom part of the mast. The roof above this portion of the room could be slid outward in two sections, so that no material came within a long distance of the mast and its wire conductor within the lower third of the distance above the ground.

One of the first problems Tesla sought to solve when he began his researches in the mountains of Colorado was whether the earth was an electrically charged body. Nature is usually very generous in her response when scientists ask her, in their experiments, questions of first magnitude. Tesla not only received a very satisfactory answer to his question but in addition a revelation of tremendous importance, an unveiling of a secret of Nature's operations which places in the hands of man a means of manipulating electrical forces on a terrestrial scale.

It was desirable for Tesla to learn whether the earth was electrically charged for the same reason that a violinist would want to know whether the strings of his instrument lay loose and inert across the bridge or whether they were tense and taut so that they would produce a musical note if plucked, or a football player would want to know if the pigskin were inflated or limp.

If the earth were uncharged, it would act as a vast sink into which electricity would have to be flowed in tremendous amounts to bring it to the state in which it could be made to vibrate electrically. An uncharged earth would somewhat complicate Tesla's plans. He quickly discovered that the earth is charged to an extremely high potential and is provided with some kind of a mechanism for maintaining its voltage. It was while determining this fact that he made his second big discovery.

Tesla made the first announcement of his discovery shortly after his return to New York in an amazing article in the Century of June, 1900, but the story is best told by Tesla in an article in the Electrical world and Engineer, May 5, 1904:

In the middle of June, while preparations for other work were going on, I arranged one of my receiving transformers with the view of determining in a novel manner, experimentally, the electrical potential of the globe and studying its periodic and casual fluctuations. This formed part of a plan carefully mapped out in advance

A highly sensitive, self restorative device, controlling a recording instrument, was included in the secondary circuit, while the primary was connected to the ground and the secondary to an elevated terminal of adjustable capacity. The variations of electrical potential gave rise to electrical surgings in the primary; these generated secondary currents, which in turn affected the sensitive device and recorder in proportion to their intensity.

The earth was found to be, literally, alive with electrical vibrations, and soon I was deeply absorbed in this interesting investigation. No better opportunity for such observations as I intended to make could be found anywhere.

Colorado is a country famous for the natural displays of electric force. In that dry and rarefied atmosphere the sun's rays beat on objects with fierce intensity. I raised steam to a dangerous pressure, in barrels filled with concentrated salt solution and the tinfoil coating of some of my elevated terminals shrivelled in the fiery blaze. An experimental high tension transformer, carelessly exposed to the rays of the setting sun, had most of its insulating compound melted and was rendered useless.

Aided by the dryness and rarefaction of the air, the water evaporates as in a boiler, and static electricity is generated in abundance. Lightning discharges are, accordingly, very frequent and sometimes of inconceivable violence. On one occasion approximately 12,000 discharges occurred within two hours, and all in the radius of certainly less than 50 kilometers [about 30 miles] from the laboratory. Many of them resembled gigantic trees of fire with the trunks up or down. I never saw fireballs, but as a compensation for my disappointment I succeeded later in determining the mode of their formation and producing them artificially.

In the latter part of the same month I noticed several times that my instruments were affected stronger by discharges taking place at great distances than by those

near by. This puzzled me very much. what was the cause? A number of observations proved that it could not be due to differences in the intensity of individual discharges and I readily ascertained that the phenomenon was not the result of a varying relation between the periods of my receiving circuits and those of the terrestrial disturbances.

One night as I was walking home with an assistant, meditating over these experiences, I was suddenly staggered by a thought. Years ago when I wrote a chapter of my lecture before the Franklin Institute and the National Electric Light Association, it had presented itself to me, but I dismissed it as absurd and impossible. I banished it again. Nevertheless, my instinct was aroused and somehow I felt that I was nearing a great revelation.

It was on the 3rd of July [1899]--the date I shall never forget--when I obtained the first decisive experimental evidence of a truth of overwhelming importance for the advancement of humanity.

A dense mass of strongly charged clouds gathered in the west and toward evening a violent storm broke loose which, after spending much of its fury in the mountains, was driven away with great velocity over the plains. Heavy and long persistent arcs formed almost in regular time intervals. My observations were now greatly facilitated and rendered more accurate by the experiences already gained. I was able to handle my instruments quickly and I was prepared. The recording apparatus being properly adjusted, its indications became fainter and fainter with increasing distance of the storm, until they ceased altogether.

I was watching in eager expectation. Surely enough, in a little while the indications again began, grew stronger and stronger, and, after passing through a maximum, gradually decreased and ceased once more. Many times, in regularly recurring intervals, the same actions were repeated until the storm which, as evident from simple computations, was moving with nearly constant speed, had retreated to a distance of about 300 kilometers [about 180 miles]. Nor did these strange actions stop then, but continued to manifest themselves with undiminished force.

Subsequently similar observations were also made by my assistant, Mr. Fritz Lowenstein, and shortly afterward several admirable opportunities presented themselves which

brought out, still more forcibly and unmistakably, the true nature of the wonderful phenomenon. No doubt whatever remained: I was observing stationary waves.

As the source of the disturbances moved away the receiving circuit came successively upon their nodes and loops. Impossible as it seemed, this planet, despite its vast extent, behaved like a conductor of limited dimensions. The tremendous significance of this fact in the transmission of energy by my system had already become quite clear to me.

Not only was it practicable to send telegraphic messages to any distance without wires, as I recognized long ago, but also to impress upon the entire globe the faint modulations of the human voice, far more still, to transmit power, in unlimited amounts to any terrestrial distance and almost without loss.

To get a more familiar picture of the problem that Tesla tackled in seeking to determine if the earth were charged and if it could be set into electrical vibration, one can visualize the difference between a bath tub that is empty and one that contains water. The uncharged earth would be like an empty tub; the charged earth like one containing water. It is easy to produce waves in the tub containing the water. By placing one's hand in the water and moving it back and forth, lengthwise, a short distance at the right rhythm, the water is soon rushing back and forth in a wave whose amplitude grows at a tremendously rapid rate until, if the hand motion is continued, the water may splash as high as the ceiling.

The earth can be visualized as an extremely large container holding a fluid; and in the center is a small plunger arrangement which can be moved tip and down a short distance in the proper rhythm. The waves travel to the edge of the container and are reflected back to the center, from which they again go outward re-enforced by the movement of the plunger.

The reaction between the outgoing and incoming waves, both in resonance with the medium in which they are traveling, causes stationary waves to be produced on the water, the surface having the appearance of a single series of waves frozen in a fixed position.

In Tesla's experiments the lightning discharges that played the part of the plunger causing the waves were moving rapidly to the eastward, and they carried the whole series of fixed, or stationary, waves with them. The measuring device remained fixed so the wave series, with its loops and nodes, moved past it, causing the measured potentials to rise and fall.

The experiment not only demonstrated that the earth was filled with electricity, but that this electricity could be disturbed so that rhythmic vibrations could be struck, resonance could be produced, causing effects of tremendous magnitude. Soldiers marching in unison across a bridge and wrecking it by the resulting vibration would again be a case in point.

Tesla produced the spectacular effects of extremely high potentials and high frequency by producing electrical resonance in his circuits--by tuning the electricity--and now he had discovered that he would be able to produce, easily, the same effect in the earth as if it were a single condenser and coil combined, a pure electrical resonating unit, by charging and discharging it rhythmically with his high-frequency, high-potential oscillations.

In this magnificent experiment Tesla the superman was at his best; the boldness of his undertaking fired the imagination, and the success he achieved should have earned for him undying fame.

Eventually, the giant coils with their banks of condensers and other apparatus in, the Colorado laboratory were ready for use in full-scale experiments. Every piece of equipment was thoroughly inspected and tested by Tesla and the moment had finally arrived for the critical test of the highest voltage experiment that had ever been made. He expected to top his own earlier records one hundred times over, and to produce tens of thousands of times higher voltages than ever had been produced in the high-voltage transmission lines at Niagara Falls.

There was not the faintest shadow of doubt in Tesla's mind as to whether his giant oscillator would work. He knew it would work, but he also knew that he was going to produce millions of volts and tremendously heavy currents; and neither he nor anyone else knew how these terrific explosions of electrical energy would act. He knew that he

had planned the experiment so that the first bolts of man-made lightning ever created would shoot from the top of the 200-foot-tall mast.

Tesla asked Kolman Czito, who had worked with him for many years in his laboratories in New York, to preside at the switch-board through which current was brought into the laboratory from the powerhouse of the Colorado Springs Electric Company by an overhead transmission line two miles long.

"when I give you the word," said Tesla to Czito, "you close the switch for one second--not longer."

The inventor took a position near the door of the laboratory from which he could view the giant coil in the center of the great barnlike room--but not too close to it, for a stray bolt of his own lightning might inflict a painful burn. From the point where he stood he could look upward toward the open roof and see the three-foot copper ball on top of the slender 200-foot mast that had its base in the center of the cagelike secondary coil. A quick visual survey of the situation, and Tesla gave the signal--"Now."

Czito jammed home the switch and as quickly pulled it out. In that brief interval the secondary coil was crowned with a mass of hairlike electrical fire, there was a crackling sound in various parts of the room and a sharp snap far overhead.

"Fine," said Tesla, "the experiment is working beautifully. we will try it again in exactly the same way. Now!"

Again Czito jammed home the switch for a second and opened it. Again the plumes of electrical fire came from the coil, minor sparks crackled in all parts of the laboratory and the very sharp snap came through the open roof from far overhead.

"This time," said Tesla, "I am going to watch the top of the mast from the outside. when I give you the signal I want you to close the switch and leave it closed until I give you the signal to open it." So saying, he started for the near-by open door.

Reaching a point outside from which he could see the copper ball on top of the needlelike mast, Tesla called through the door, "Czito, close the switch--Now!"

Czito again jammed the switch closed and jumped back--but held his arm extended to yank open the blades quickly should he receive an emergency signal. Nothing much had happened on the quick-contact closing, but now the apparatus would be given an opportunity to build up its full strength and no one knew what to expect. He knew that the apparatus would draw a very heavy current through a primary coil that looked like a "short circuit," and he knew that short circuits could be very destructive if the current was allowed to continue to flow. The switchboard could become a scene of interesting activity if any thing let go. Czito expected the quick flash and explosive blast of a short circuit a second or two after the switch was closed. Several seconds passed with no short circuit.

As soon as the switch was closed there came again the same crackling sound, the same snap high in the air that he had heard before. Now it was followed by a tremendous upsurge of sound. The crackling from the coil swelled into a crescendo of vicious snaps. From above the roof the original staccato snap was followed by a sharper one--and by another that was like the report of a rifle. The next was still louder. They came closer together like the rattle of a machine gun. The bang high in the air became tremendously louder; it was now the roar of a cannon, with the discharges rapidly following each other as if a gigantic artillery battle was taking place over the building. The sound was terrifying and the thunder shook the building in most threatening fashion.

There was a strange ghostly blue light in the great barnlike structure. The coils were flaming with masses of fiery hair. Everything in the building was spouting needles of flame, and the place filled with the sulphurous odor of ozone, fumes of the sparks, which was all that was needed to complete the conviction that hell was breaking loose and belching into the building.

As Czito stood near the switch he could feel and see the sparks jump from his fingers, each pricking like a needle stuck into his flesh. He wondered if he would be able to reach for the switch and turn off the power that was creating this electrical pandemonium--would the sparks

become longer and more powerful if he approached the switch? Must this head-splitting racket go on forever? It's getting worse, that tremendous ear-wrecking bang, bang, bang overhead. why doesn't Tesla stop it before it shakes down the building? Should he open the switch of his own accord? Maybe Tesla has been hit, perhaps killed, and can't give orders to open the switch!

It seemed to Czito that the demonstration had been going on for an hour but as a matter of fact it had lasted thus far for only a minute; nevertheless, a tremendous amount of activity had been crowded into that short space of time.

Outside stood Tesla, properly attired in cutaway coat and black derby hat for the auspicious occasion, his slender six-foot-two figure bearing signs of close relationship to the mastlike rod sticking out of his bizarre barnlike structure. His height was increased by a one-inch-thick layer of rubber on the soles and heels of his shoes, used as electrical insulation.

As he gave the switch-closing "Now" signal to Czito, he turned his eyes heavenward to the ball on top of the mast. He had hardly spoken when he saw a short hairlike spark dart from the ball. It was only about ten feet long, and thin. Before he had time to be pleased, there was a second and a third and a fourth spark, each longer, brighter and bluer than its predecessor.

"Ah!" ejaculated Tesla, forgetting to close his mouth that was widely opened for a shout. He clenched his hands for joy and raised them skyward toward the top of the mast.

More sparks! Longer and longer! Ten, twenty, thirty, forty, fifty, sixty, seventy, eighty feet. Brighter and bluer! Not thread-like sparks now but fingers of fire. Wriggling rods of flame that lashed viciously into the heavens. The sparks were now as thick as his arm as they left the ball.

Tesla's eyes almost popped out of his head as he saw full-fledged bolts of lightning darting into the air, accompanied by a barrage of tremendous crashes of thunder. Those lightning bolts were now half again the length of the building, more than 135 feet long, and the thunder was being heard in Cripple Creek fifteen miles away.

Suddenly--silence!

Tesla rushed into the building.

"Czito! Czito! Czito! why did you do that? I did not tell you to open the switch. Close it again quickly!"

Czito pointed at the switch. It was still closed. He then pointed at the voltmeter and ammeter on the switchboard. The needles of both of them registered zero.

Tesla sized up the situation instantly. The incoming wires carrying power to the laboratory were "dead."

"Czito," he snapped, "call up the powerhouse quickly. They must not do that. They have cut off my power".

The telephone call was put through to the powerhouse. Tesla grabbed the phone and shouted into it:

"This is Nikola Tesla. you have cut off my power! you must give me back power immediately! you must not cut off my power."

"Cut off your power, nothing," came the gruff reply from the other end of the line. "you've thrown a short circuit on our line with your blankety-blank-blank experiments and wrecked our station. you've knocked our generator off the line and she's now on fire. you won't get any more power!"

Tesla had built his apparatus substantially, so that it would be able to carry the tremendously heavy currents he expected to draw off the line. while his own equipment was able to stand what amounted to a heavy short circuit, he had overloaded the generator at the Colorado Springs Electric Company powerhouse, which tried manfully to carry the added burden--but the heavy surge of current was too much for the dynamo that was not designed to stand such heavy overloads. Its wires became hotter and hotter, and finally the insulation took fire and the copper wire in the armature coils melted like wax, opening its circuits so that it ceased to generate electricity.

The powerhouse had a second, standby, generator which was started up in a short time. Tesla was insistent that he be supplied with current from this machine as soon as it was running, but his demand was refused. In the future, he was told, he would be supplied with current from a dynamo

operated independently from the one supplying the Company's regular customers. The independent dynamo, he was told, would be the one that was already burned out--and he would get no service until it was repaired. Tesla offered to pay the cost of an extra-special rush job on the repairs if he were permitted to handle the work. Alternating-current dynamos were no mystery to him. Taking his workers from the laboratory to the powerhouse he soon had the repair job under way, and in less than a week the dynamo was again operating.

A lightning stroke produces its spectacular pyrotechnics and earthvibrating effects with less than a nickel's worth of electricity--at a five-cent-a-kilowatt hour rate, which is somewhat less than the average household rate for current. It consists of tremendously heavy currents, many thousands of amperes at millions of volts, but it lasts only a few millionths of a second. If supplied with this "nickel's worth" of current continuously, the lightning flash would last indefinitely.

Tesla, in his Colorado Springs laboratory, was pumping a steady flow of current worth, at the above rate, about $15.00 an hour into the earth. In an hour he charged the earth with several hundred times as much electrical energy as is contained in a single lightning stroke. Owing to resonance phenomena, he could build up electrical effects in the earth greatly exceeding those of lightning since it was only necessary, once resonance was established, to supply energy equal to frictional losses, in order to maintain this condition.

In describing his work with the giant oscillator, Tesla, using conservative estimates of his results, stated in his article in the Century Magazine of June, 1900:

However extraordinary the results shown may appear, they are but trifling compared with those attainable by apparatus designed on these same principles. I have produced electrical discharges the actual path of which, from end to end, was probably more than 100 feet long; but it would not be dificult to reach lengths 100 times as great.

I have produced electrical movements occurring at the rate of approximately 100,000 horsepower, but rates of one, five or ten million horsepower are easily practicable. In these

experiments effects were developed incomparably greater than ever produced by any human agencies, and yet these results are but an embryo of what is to be.

The method used by Tesla to set the earth in electrical oscillation is the electrical counterpart of the mechanical device previously described, the plunger bobbing up and down at the right rhythm that created the stationary waves in the water.

Tesla used a stream of electrons which were pumped into and drawn out of the earth at a rapid rhythmic rate. At the time the experiments were made, the electron still was not known to be the fundamental atom of electricity, so the operation was spoken of simply as the flow of electricity.

The pumping operation was carried on at a rate of 150,000 oscillations per second. These would produce electrical pulsations with a wavelength of 2,000 meters (about 6,600 feet).

when the moving waves expanded outward from Colorado Springs, they traveled in all directions in ever increasing circles until they passed over the bulge of the earth, and then in ever smaller circles and with increasing intensity converged on the diametrically opposite point of the earth, a trifle to the west of the two French Islands, Amsterdam and St. Paul, in the area between the Indian and Antarctic Oceans midway between the southern tip of Africa and the southwest corner of Australia. Here a tremendous electrical south pole was built up, marked by a wave of great amplitude that rose and fell in unison with Tesla's apparatus at its north pole in Colorado Springs. As this wave fell, it sent back an electrical echo which produced the same effect at Colorado Springs. Just as it arrived back at Colorado Springs, the oscillator was working to build up a wave that would re-enforce it and send it back more powerfully than before to the antipode to repeat the performance.

If there were no losses in this operation--if the earth were a perfect electrical conductor, and there were no other sources of resistance--this resonance phenomenon would build up to a destructive action of gigantic proportions, even with the charging source of only about 300 horsepower which Tesla used. Voltages of gigantic magnitudes would be built up. Charged particles of matter

would be hurled outward from the earth with vast energies, and eventually even the solid matter of the earth would be affected and the whole planet disintegrated. Pure resonance, however, is not attainable. Tesla frequently stressed the fortunate nature of this fact; for otherwise disastrous results could be produced by small amounts of energy. The electrical resistance of the globe would prevent the attainment of pure resonance; but practical resonance can be attained with safety by supplying continuously the amount of energy lost in resistance--and this supplies perfect control of the situation.

with the earth set in electrical oscillation, a source of energy is provided at all spots on the earth. This could be drawn off and made available for use by a suitable simple apparatus which would contain the same elements as the tuning unit in a radio set, but larger (a coil and a condenser), a ground connection and metal rod as high as a cottage. Such a combination would absorb, at any point on the earth's surface, energy from the waves rushing back and forth between the electrical north and south poles created by the Tesla oscillators. No other equipment would be needed to supply light to the home, provided with Tesla's simple vacuum-tube lamps, or to produce heating effects. (For the operation of ordinary-type motors, a frequency changer would be needed. Tesla, indeed, developed ironless motors that would operate on high-frequency currents, but they could not compete in efficiency with motors operated on low-frequency currents. Frequency transformation, however, is now a very practical operation.)

The apparatus that Tesla used to charge the earth is very simple in principle. In its elementary form it consists of a circuit containing a large coil and condenser of the correct electrical dimensions to give it the desired frequency of oscillation, a source of electric current for energizing the circuit, and a step-up transformer, also tuned, for increasing the voltage.

The current of a few hundred volts obtained from the powerhouse was stepped up by an ordinary iron box transformer to more than 30,000 volts and at this potential was fed into a condenser which, when filled, discharged into the coil connected across its terminals. The rate of the back-and-forth surge of current from condenser into coil and coil back to condenser, in endless repetition, is determined by the capacity of the condenser for holding

current and the length, or inductance, of the coil through which the discharge must travel. An arc between the joint terminals of condenser and coil completed the free oscillating path of the high-frequency current.

In an oscillating circuit the current is at zero value at the start of each cycle, rises to a high value and drops to zero again at the end of each half cycle. The voltage does the same. Both build up to high values at the midpoint of each half cycle.

The coil through which the current flows is surrounded by a magnetic field produced by the current. with heavy current flows, these fields can become very extensive and of high intensity, particularly at the midpoint in each half cycle.

The primary coil, or energizing circuit of Tesla's oscillator, consisted of a number of turns of heavy wire mounted on a circular fence eighty feet in diameter in the great hall of his laboratory. In the space within this fenced enclosure the magnetic field built up to a crescendo of intensity with each half cycle of the current in the primary coil. As the magnetic circles of force moved to the center of the enclosure, they became more concentrated and built up a high density of energy in space in this region.

Centered in this area was another coil perfectly tuned to vibrate electrically in resonance with the crescendo of energy in which it was immersed 300,000 times per second. This coil--about ten feet in diameter, consisting of nearly one hundred turns on a cagelike frame about ten feet high--in responding resonantly, built up potentials with maximum values of more than 100,000,000 volts. No scientist has ever succeeded in building up currents with even one tenth of this potential since that time.

when the first surge of magnetic energy crashed into this coil, it caused a downward avalanche of electrons from the coil into the earth, thereby inflating the earth electrically and raising its potential. The next surge of magnetic energy was of the opposite polarity and caused a tidal wave of electrons from the earth to rush through the coil and upward to the terminal of the coil, which was the metal ball mounted on the mast 200 feet high.

The downward flood of electrons was spread over the wide area of the earth but the return upward flood was

concentrated on a small metal ball on top of the mast, upon which tremendously high potentials developed. The electrons on the ball were under explosive electrical pressure and were forced to escape. They made a spearpoint of attack on the surrounding air, broke a small opening, and through this rushed uncounted billions of billions of electrons, their mad stampede rendering their path through the air incandescent for a distance of scores of feet--in other words, producing a flash of lightning.

Having thus succeeded in making the earth oscillate as if it were a piece of laboratory apparatus, Tesla would now proceed to test the practical applications of his unique method of worldwide power transmission. (In describing the mode of transmission of his oscillating currents through the earth, Tesla claimed the path of the discharge was from his station directly through the center of the earth and in a straight line to the antipode, the return being by the same route, and that the current on this straight-line path traveled at its normal velocity--the speed of light. This flow, he declared, produced an accompanying surface flow of current, which was in step at the starting point and when they rejoined at the antipode; and this necessitated higher velocities in flowing over the surface of the earth. The surface velocities would be infinite at each of the antipodes, and would decrease rapidly until at the equatorial region of this axis it would travel at the normal velocity of the currents.)

The full story of Tesla's accomplishments at Colorado Springs has never been told and never will be told. He carried the records, engraved on his almost infallible memory, with him when he died. Fritz Lowenstein, a competent electrical engineer, interested in high-frequency currents, was his assistant at Colorado Springs. Tesla, however, took neither Lowenstein nor anyone else into his confidence.

It was not necessary for Tesla to write the detailed records of experiments which scientists and engineers make, as routine, of their laboratory tests. He possessed a most remarkable memory, supplemented by his strange power of visualizing again, in their full aspects of reality, any past events. He needed no reference books, for he could quickly derive any desired formula from basic concepts; and he even carried a table of logarithms in his head. For these reasons there is a great lack of written records on

his experiments, and what is recorded is mostly of a minor nature.

Fundamental facts of great importance that he intended to develop later in a practical manner were stored in the archives of his mind to await the time when he would be able to present a practical working model of the inventions based on his discoveries. He had no fear that he would be anticipated by others because he was so far in advance of his contemporaries that he could safely bide his time for developing his ideas.

It was Tesla's intention to make the development of his discoveries a one-man job. He was completely confident, at this time, of his ability to live a century and a quarter, and to be actively engaged in creative experimental work up to at least his one-hundredth birthday, at which time he would give serious thought to the task of writing his biography and a complete record of his experimental work. Up to almost his eightieth year he adhered to this plan without doubt as to its ultimate consummation.

As a result of this most unfortunate design, technical details are lacking concerning the principal discoveries made at Colorado Springs. By piecing together the fragmentary material published in a number of publications, however, it appears evident that Tesla, in addition to experiments with his gigantic current movements, as a means of establishing world-wide broadcasts and making a number of detectors for such use, tested his power transmission system at a distance of twenty-six miles from his laboratory and was able to light two hundred incandescent lamps, of the Edison type, with electrical energy extracted from the earth while his oscillator was operating. These lamps consumed about fifty watts each; and if two hundred were used in the test bank, the energy consumed would be 10,000 watts, or approximately thirteen horsepower.

Transmission of thirteen horsepower wirelessly through the earth for a distance of twenty-six miles can be accepted as a very adequate demonstration of the practicability of Tesla's plan. He claimed an efficiency of higher than 95 per cent for this method of energy transmission; so he could, undoubtedly, with a 300 horsepower oscillator, operate more than a dozen such test demonstrations simultaneously anywhere on the globe. with respect to the latter point he stated, "In this new system it matters

little--in fact, almost nothing--whether the transmission is effected at a distance of a few miles, or of a few thousand miles."

"while I have not as yet," he stated in the Century article of June, 1900, "actually effected a transmission of a considerable amount of energy, such as would be of industrial importance, to a great distance by this new method, I have operated several model plants under exactly the same conditions which will exist in a large plant of this kind, and the practicability of the system is thoroughly demonstrated."

Tesla was insistent, in his latter decades, on the existence, the actuality, the importance and availability of many undisclosed discoveries which he made at Colorado Springs. The author urged upon Tesla two or three times the desirability of making a disclosure, against the ever present danger of an accident that might cause them to be lost to the world; and when the inventor was unimpressed by this possibility, he was asked to permit the author to do something that would bring about their practical development. Tesla was courteously appreciative of the interest manifested, but he was very emphatic in his insistence that he would handle his own affairs as he saw fit, and that he expected shortly to have adequate funds to develop his inventions.

Tesla returned to New York, in the fall of 1899, broke once more, but with the knowledge that his efforts had greatly enriched humanity with important scientific discoveries. yet even more important was the new attitude his work had made possible: man had achieved a method through which he could control his gigantic planet, could look upon this heavenly body from the godlike vantage point in which he could view it as a piece of laboratory apparatus to be manipulated as he willed.

The pictures which Tesla brought back to New York showing the gigantic electrical discharges from his oscillator, and the stories he related of his experiences, created a tremendous impression in his circle of friends. It was then that Robert Underwood Johnson, one of the editors of the Century Magazine, at whose home in Madison Avenue, in the exclusive Murray Hill section, Tesla was a frequent and informal visitor, requested the inventor to write an article telling of his accomplishments.

when the article was written, Johnson returned it, telling Tesla he had served a mess of cold philosophical stones instead of a dish of hot throbbing facts. The inventor had made but scant reference to his recent astounding accomplishments, but developed instead a philosophical system in which the progress of humanity was viewed as purely a mechanical process, activated by the sources of energy available. Three times the article went back to Tesla and was as many times rewritten, despite the high literary quality of the work on each occasion.

The article, which carried the title "The Problem of Increasing Human Energy," created a sensation. Among those whose interest it aroused was J. Pierpont Morgan--a most fortunate circumstance for Tesla. The great financier had a soft spot for geniuses, and Tesla was a perfect example of the species.

Morgan the financier was famous, but Morgan the philanthropist, a greater personality, was to the general public non-existent, so carefully guarded against publicity were his benefactions. In this he was not always completely successful for there are, of necessity, two parties to a benefficence, the giver and the receiver; and the pride and gratitude of the latter can develop into a weak spot in the shell of secrecy.

Tesla was invited to Morgan's home and quickly became a favorite with the family. His record of accomplishment which promised still greater achievements in the future, his pleasant personality, his high moral standards of conduct, his celibate manner of life and his manner of subordinating himself to his work, his boylike enthusiasm, were factors that caused him to be admired not only by Morgan but by all others who knew him well.

Morgan made inquiries of Tesla concerning his financial structure. There were, in those days, a limited number of strong financial groups who were playing a terrestrial game of chess with the world's economic resources; the discoveries of a genius like Tesla might well have a profound effect on the destinies of one or more of these groups, and it would be well for an operator in this field to know more of the inventor's commitments. Undoubtedly, it was a source of surprise and satisfaction to Morgan when he

learned that Tesla was a lone operator and now entirely without funds needed to carry on his researches.

Morgan knew well the inestimable value of Tesla's polyphase alternating-current system. The Niagara development was a Morgan enterprise, and gigantic plans were being builded on its already proven success. The man who laid the scientific and engineering foundation for this new and profitable industrial electrical era was broke and engaged in developing a new source of power distribution. He had supplanted Edison's half-mile power pygmy with a giant having a thousand-mile range, and now he was working on a system which experiments had shown could distribute power wirelessly to the ends of the earth with but a small fraction of the losses of the Edison system in distributing power by wire for half a mile, and could even send current around the earth cheaper than his own alternating-current system could distribute it at a distance of one hundred miles. The economic implications of this development staggered the imagination. what effect would it have on the chess game being played by the world's financial groups?

would the new wireless-distribution-of-power system fit into the existing economic and financial structure? Could it be usefully applied without derangements of greater magnitude than the benefits it would produce? If it were adopted for development, who would be best suited to control it? Could it be controlled in a practical way when any spot on earth would be an outlet for an unlimited reservoir of power for anyone who cared to tap it with a simple device? How could compensation be collected for the service rendered?

These were some of the most obvious aspects of Tesla's world power system that would instantly present themselves to the practical mind of Morgan. In addition, Tesla was proposing a world-wide broadcasting system for distributing news, entertainment, knowledge, and a host of other interesting items. Morgan could well understand the practical aspects of wireless communication in which a charge could be made for transmitting messages from point to point, which was a part of the Tesla system--but, to the inventor's way of thinking, only a minor part compared to the more important broadcasting and power-distribution systems.

A Morgan would understand that ingenious minds could work out some method for placing such world-wide services on a practical profit-paying basis; but this whole new Tesla development had a fantastical aspect that was upsetting to so-called "practical" minds not accustomed to thinking first-magnitude thoughts. The new system might prove more important than the polyphase system which went as a record-breaking bargain to Westinghouse for $1,000,000. Westinghouse was then the most powerful competitor of the Edison system which Morgan had backed, and particularly of the General Electric Company whose financing Morgan had arranged. Although Westinghouse secured a monopoly, means were found for causing him to share it, by a license agreement, with the General Electric Company, so the Morgan company had equal opportunities to exploit the rich market.

History might now be repeating itself with the same inventor, who now had a hypersuperpower system to supplant his own superpower system. In this case Morgan could place himself in a position to seize the monopoly of world power.

The group holding a monopoly control over such a system could develop it, or not develop it, as it saw fit; it could be developed to produce a profit by supplanting or supplementing the satisfactory wire distribution system, or it could be put on the shelf to prevent it from interfering with the existing system. A monopoly of it could prevent any other group from securing it and using it as a club to force concessions from those controlling existing enterprises. Ownership of the Tesla world-power and world-broadcasting patents might well prove an extremely profitable investment even if a very high price were paid for them.

But there was also a more subtle viewpoint. without a strong backing by a powerful source of capital, a world-wide system such as Tesla proposed could never be brought into operating existence. If a powerful group had an opportunity to get in on the ground floor and secure monopoly control and failed to do so, and let it become apparent that this was done intentionally, the effect of such a decision could easily result in scaring off any other groups and effectually preventing anyone from ever backing the system.

Morgan, however, in his contacts with Tesla, brought no commercial or practical aspects into the situation. His

interest was entirely that of a patron seeking to aid a genius to express his creative talents. He made gifts to Tesla to which there were no strings attached. The inventor could use the money as he saw fit. No definite information is available as to the amount of those contributions, but an authoritative source, close to Tesla, fixes the amount which he received within a very short period at $150,000. Later contributions, spread over a long period of years, are believed to have brought the total to double this amount.

Tesla made no secret of Morgan's support. He stated, in the article in the Electrical world and Engineer, published March 5, 1904, describing his wireless power work up to that time:

"For a large part of the work which I have done so far I am indebted to the noble generosity of Mr. J. Pierpont Morgan, which was all the more welcome and stimulating, as it was extended at a time when those, who have since promised most, were the greatest of doubters."

when Morgan made his first contribution, the rumor got into circulation that he was financially interested in the enterprise upon which Tesla now embarked. The resulting situation contained some elements of usefulness for Tesla because of the tremendous prestige of the financier. when, however, Tesla later found himself critically in need of funds, and it became apparent that Morgan was not financially involved in the project and apparently was not coming to the rescue of the inventor, then the reaction set in and the situation became distinctly and definitely unsatisfactory.

In 1900, however, Tesla had $150,000 on hand and a gigantic idea to be put into operation. The world-shaking superman, riding his tidal wave of fame and popularity, set to work.

THE year 1900 marked to Tesla not only the opening of a new century but also the beginning of the world-superpower and radio-broadcasting era. With the encouragement of J. P. Morgan to spur him on--if he could accommodate any more spurring than his own inner drive furnished--and with $150,000 in cash from the same source, he was set to embark

upon a gigantic venture, the building of a world wireless-power and a world broadcasting station.

The cash on hand would be totally inadequate to finance the project to completion, but this did not deter him from making a start. He needed a laboratory both to replace the Houston Street establishment, which had become entirely inadequate, and to include equipment of the type employed at Colorado Springs, but designed for use in the actual world-broadcasting process. The location was determined as the result of an arrangement he made with James S. Warden, manager and director of the Suffolk County Land Company, a lawyer and banker from the West who had acquired two thousand acres of land at Shoreham, in Suffolk County, Long Island, about sixty miles from New York. The land was made the basis of a real-estate development under the name Wardencliff.

Tesla visualized a power-and-broadcasting station which would employ thousands of persons. He undertook the establishment, eventually, of a Radio City, something far more ambitious than the enterprise in Rockefeller Center in New York which bears this name today. Tesla planned to have all wavelength channels broadcast from a single station, a project which would have given him a complete monopoly of the radio-broadcasting business. What an opportunity near-sighted businessmen of his day overlooked in not getting in on his project! But in that day Tesla was about the only one who visualized modern broadcasting. Everyone else visualized wireless as being useful only for sending telegraphic communications between ship and shore and across the ocean.

Mr. Warden saw possibilities of a sort in Tesla's plan, however, and offered him a tract of two hundred acres, of which twenty acres were cleared, for his power station, with the expectation that the two thousand men who would shortly be employed in the station would build homes on convenient sites in the remainder of the 2,000-acre tract. Tesla accepted.

Stanford White, the famous designer of many churches and other architectural monuments throughout the country, was one of Tesla's friends. He now disclosed to the famous architect his vision of an industrial "city beautiful" and sought his co-operation in realizing his dream. Mr. White was enthusiastic about the idea and, as his contribution to

Tesla's work, offered to underwrite the cost of designing the strange tower the inventor sketched, and all of the architectural work involved in the general plan for the city. The actual work was done by W. D. Crow, of East Orange, N. J., one of Mr. White's associates, who later became famous as a designer of hospitals and other institutional buildings.

It was a fantastic-looking tower, with strange structural limitations, which Mr. Crow found himself designing. Tesla required a tower, about 154 feet high, to support at its peak a giant copper electrode 100 feet in diameter and shaped like a gargantuan doughnut with a tubular diameter of twenty feet. (This was later changed to a hemispherical electrode.)

The tower would have to be a skeletonized structure, built almost entirely of wood, metal to be reduced to an utter minimum and any metal fixtures employed to be of copper. No engineering data were available on wood structures of this height and type.

The structure Tesla required had a large amount of "sail area," or surface exposed to wind, concentrated at the top, creating stresses that had to be provided for in a tower that itself possessed only limited stability. Mr. Crow solved the engineering problems and then the equally diffcult task of incorporating esthetic qualities in such an edifice.

When the design was completed another diffculty was encountered. None of the well-known builders could be induced to undertake the task of erecting the tower. A competent framer, associated with Norcross Bros., who were a large contracting firm in those days, finally took over the contract, although he, too, expressed fears that the winter gales might overturn the structure. (It stood, however, for a dozen years. When the Government, for military reasons decided it was necessary to remove this conspicuous landmark during the First World War, heavy charges of dynamite were necessary in order to topple it, and even then it remained intact on the ground like a fallen Martian invader out of Wells' War of the Worlds.) The tower was completed in 1902, and with it a large low brick building more than 100 feet square which would provide quarters for the powerhouse and laboratory. While the structures were being built, Tesla commuted every day

from the Waldorf-Astoria to Wardencliff, arriving at the near-by Shoreham station shortly after eleven am and remaining until three-thirty. He was always accompanied by a man servant, a Serbian, who carried a heavy hamper filled with food. When the laboratory transferred from Houston Street was in full operation at Wardencliff, Tesla rented the Bailey cottage near the Long Island Sound shore and there made his home for a year.

The heavy equipment, the dynamos and motors, that Tesla desired for his plant were of an unusual design not produced by manufacturers, and he encountered many vexatious delays in securing such material. He was able to carry on a wide range of high-frequency current and other experiments in his new laboratory, but the principal project, that of setting up the worldwide broadcasting station, lagged. Meanwhile, he had a number of glass blowers making tubes for use in transmitting and receiving his broadcast programs. This was a dozen years before De Forest invented the form of radio tube now in general use. The secret of Tesla's tubes died with him.

Tesla seemed to be entirely fearless of his high-frequency currents of millions of volts. He had, nevertheless, the greatest respect for the electric current in all forms, and was extremely careful in working on his apparatus. When working on circuits that might come "alive," he always worked with one hand in his pocket, using the other to manipulate tools. He insisted that all of his workers do likewise when working on the 60-cycle low-frequency alternating-current circuits, whether the potential was 50,000 or 110 volts. This safeguard reduced the possibility of a dangerous current finding a circuit through the arms across the body, where there was chance that it might stop the action of the heart.

In spite of the great care which he manifested in all of his experimental work, he had a narrow escape from losing his life at the Wardencliff plant. He was making experiments on the properties of small-diameter jets of water moving at high velocity and under very high pressures, of the order of 10,000 pounds per square inch. Such a stream could be struck by a heavy iron bar without the stream being disrupted. The impinging bar would bounce back as if it had struck another solid iron bar--a strange property for a mechanically weak substance like water. The cylinder holding the water under high pressure was a heavy

one made of wrought iron. Tesla was unable to secure a wrought-iron cap for the upper surface, so he used a heavier one of cast iron, a more brittle metal. One day when he raised the pressure to a point higher than he had previously used, the cylinder exploded. The cast-iron cap broke and a large fragment shot within a few inches of his face as it went on a slanting path upward and finally crashed through the roof. The high-pressure stream of water had peculiar destructive effects on anything with which it came in contact, even tough, strong metals. Tesla never revealed the purpose or the results of these high-pressure experiments.

Tesla's insistence on the utmost neatness in his laboratory almost resulted in a tragedy through a case of thoughtlessness on the part of an assistant. Arrangements were being made for installing a heavy piece of machinery which was to be lag bolted to the thick concrete floor. Holes had been drilled in the concrete. The plan called for pouring molten lead into these holes and screwing the heavy bolts into the metal when it cooled. As soon as the holes were drilled, a young assistant starting cleaning up the debris. He not only swept up the stone chips and dust: he got a mop and thoroughly washed that area of the floor, thoughtlessly letting some of the water get into the holes. He then dried the floor. In the meantime Tesla and George Scherff, who was his financial secretary but also served in any way in which he could be helpful, were melting the lead which would hold the lag screws in the holes in the floor. Scherff took the first large ladleful of lead from the furnace and started across the laboratory to where the holes had been drilled, followed shortly by Tesla bearing another ladle.

Scherff bent down--and as he poured the hot liquid metal into one of the holes an explosion followed instantly. The molten lead was blown upward into his face in a shower of searing hot drops of liquid metal. The water which the assistant used to swab the floor had settled into the holes and, when the melted lead come in contact with it, it was changed to steam which shot the lead out of the hole like a bullet out of the barrel of a rifle. Both men were showered with drops of hot metal and dropped their ladles. Tesla, being several feet away, was only slightly injured; but Scherff was very seriously burned about the face and hands. Drops of the metal had struck his eyes and so severely

burned them that it was feared for a while that his sight could not be saved.

However, despite the almost unlimited possibilities for accidents in connection with the vast variety of experiments which Tesla conducted in totally unexplored fields, using high voltages, high amperages, high pressures, high velocities and high temperatures, he went through his entire career with only one accident in which he suffered injury. In that a sharp instrument slipped, entered his palm and penetrated through the hand. The accident to Scherff was the only one in which a member of his staff was injured, with the exception of a young assistant who developed X-ray burns. He had probably been exposed to the rays from one of Tesla's tubes which, unknown to Tesla and everyone else, had been producing them even before Roentgen announced their discovery. Tesla had given them another name and had not fully investigated their properties. This was probably the first case of X-ray burns on record.

Tesla was an indefatigable worker, and it was hard for him to understand why others were incapable of such feats of endurance as he was able to accomplish. He was willing to pay unusually high wages to workers who were willing to stick with him on protracted tasks but never demanded that anyone work beyond a reasonable day's labor. On one occasion a piece of long-awaited equipment arrived and Tesla was anxious to get it installed and operating as quickly as possible. The electricians worked through twenty-four hours, stopping only for meals, and then for another twenty-four hours. The workers then dropped out, one by one, picking out nooks in the building in which to sleep. While they took from eight to twelve hours' sleep, Tesla continued to work; and when they came back to the job Tesla was still going strong and worked with them through his third sleepless twenty-four-hour period. The men were then given several days off in which to rest up; but Tesla, apparently none the worse for his seventy-two hours of toil, went through his next day of experiments, accomplishing a total of eighty-four hours without sleep or rest.

The plant at Wardencliff was intended primarily for demonstrating the radio-broadcasting phase of his "World System"; the power-distribution station was to be built at Niagara Falls.

Tesla at this time published a brochure on his "World System" which indicates the remarkable state of advancement he had projected in the wireless art, now called radio, while other experimenters were struggling to acquire familiarity with rudimentary devices. At that time, however, his promises seemed fantastic. The brochure contained the following description of his system and his objectives:

The World System has resulted from a combination of several original discoveries made by the inventor in the course of long continued research and experimentation. It makes possible not only the instantaneous and precise wireless transmission of any kind of signals, messages or characters, to all parts of the world, but also the interconnection of the existing telegraph, telephone, and other signal stations without any change in their present equipment. By its means, for instance, a telephone subscriber here many call up any other subscriber on the Globe. An inexpensive receiver, not bigger than a watch, will enable him to listen anywhere, on land or sea, to a speech delivered, or music played in some other place, however distant. These examples are cited merely to give an idea of the possibilities of this great scientific advance, which annihilates distance and makes that perfect conductor, the Earth, available for all the innumerable purposes which human ingenuity has found for a line wire. One far reaching result of this is that any device capable of being operated through one or more wires (at a distance obviously restricted) can likewise be actuated, without artificial conductors and with the same facility and accuracy, at distances to which there are no limits other than those imposed by the physical dimensions of the Globe. Thus, not only will entirely new fields for commercial exploitation be opened up by this ideal method of transmission, but the old ones vastly extended.

The World System is based on the application of the following important inventions and discoveries:

1. The Tesla Transformer. This apparatus is, in the production of electrical vibrations, as revolutionary as gunpowder was in warfare. Currents many times stronger than any ever generated in the usual ways, and sparks over 100 feet long have been produced by the inventor with an instrument of this kind.

2. The Magnifying Transmitter. This is Tesla's best invention--a peculiar transformer specially adapted to excite the Earth, which is in the transmission of electrical energy what the telescope is in astronomical observation. By the use of this marvelous device he has already set up electrical movements of greater intensity than those of lightning and passed a current, suffcient to light more than 200 incandescent lamps, around the Globe.

3. The Tesla Wireless System. This system comprises a number of improvements and is the only means known for transmitting economically electrical energy to a distance without wires. Careful tests and measurements in connection with an experimental station of great activity, erected by the inventor in Colorado, have demonstrated that power in any desired amount can be conveyed clear across the Globe if necessary, with a loss not exceeding a few per cent.

4. The Art of Individualization. This invention of Tesla is to primitive tuning what refined language is to unarticulated expression. It makes possible the transmission of signals or messages absolutely secret and exclusive both in active and passive aspect, that is, non-interfering as well as non-interferable. Each signal is like an individual of unmistakable identity and there is virtually no limit to the number of stations or instruments that can be simultaneously operated without the slightest mutual disturbance.

5. The Terrestrial Stationary Waves. This wonderful discovery, popularly explained, means that the Earth is responsive to electrical vibrations of definite pitch just as a tuning fork to certain waves of sound. These particular electrical vibrations, capable of powerfully exciting the Globe, lend themselves to innumerable uses of great importance commercially and in many other respects.

The first World System power plant can be put in operation in nine months. With this power plant it will be practical to attain electrical activities up to ten million horsepower and it is designed to serve for as many technical achievements as are possible without undue expense. Among these the following may be mentioned:

1. Interconnection of the existing telegraph exchanges of offces all over the World;

2. Establishment of a secret and non-interferable government telegraph service;

3. Interconnection of all the present telephone exchanges or offces all over the Globe;

4. Universal distribution of general news, by telegraph or telephone, in connection with the Press;

5. Establishment of a World System of intelligence transmission for exclusive private use;

6. Interconnection and operation of all stock tickers of the world;

7. Establishment of a world system of musical distribution, etc.;

8. Universal registration of time by cheap clocks indicating the time with astronomical precision and requiring no attention whatever;

9. Facsimile transmission of typed or handwritten characters, letters, checks, etc.;

10. Establishment of a universal marine service enabling navigators of all ships to steer perfectly without compass, to determine the exact location, hour and speed, to prevent collisions and disasters, etc.;

11. Inauguration of a system of world printing on land and sea;

12. Reproduction anywhere in the world of photographic pictures and all kinds of drawings or records.

Thus, more than forty years ago, Tesla planned to inaugurate every feature of modern radio, and several facilities which have not yet been developed. He was to continue, for another twenty years, to be the only "wireless" inventor who had yet visualized a broadcasting service.

While at work on his Wardencliff radio-broadcasting plant, Tesla was also evolving plans for establishing his world power station at Niagara Falls. So sure was he of the

successful outcome of his efforts that he stated in a newspaper interview in 1903 that he would light the lamps of the coming international exposition in Paris with power wirelessly transmitted from the Falls. Circumstances, however, prevented him from making good this promise. His diffculties and his plans were outlined in a statement published in the Electrical World and Engineer, March 5, 1904:

The first of these central plants would have been already completed had it not been for unforeseen delays which, fortunately, have nothing to do with its purely technical features. But this loss of time, while vexatious, may, after all, prove to be a blessing in disguise. The best design of which I know has been adopted, and the transmitter will emit a wave complex of a total maximum activity of 10,000,000 horsepower, one percent of which is amply suffcient to "girdle the globe." This enormous rate of energy delivery, approximately twice that of the combined falls of Niagara, is obtainable only by the use of certain artifices, which I shall make known in due course.

For a large part of the work which I have done so far I am indebted to the noble generosity of Mr. J. Pierpont Morgan, which was all the more welcome and stimulating, as it was extended at a time when those, who have since promised most, were the greatest of doubters. I have also to thank my friend Stanford White, for much unselfish and valuable assistance. This work is now far advanced, and though the results may be tardy, they are sure to come.

Meanwhile, the transmission of energy on an industrial scale is not being neglected. The Canadian Niagara Power Company have offered me a splendid inducement, and next to achieving success for the sake of the art, it will give me the greatest satisfaction to make their concession financially profitable to them. In this first power plant, which I have been designing for a long time, I propose to distribute 10,000 horsepower under a tension of 10,000,000 volts, which I am now able to produce and handle with safety.

This energy will be collected all over the globe preferably in small amounts, ranging from a fraction of one to a few horsepower. One of the chief uses will be the illumination of isolated homes. It takes very little power to light a dwelling with vacuum tubes operated by high frequency

currents and in each instance a terminal a little above the roof will be suffcient. Another valuable application will be the driving of clocks and other such apparatus. These clocks will be exceedingly simple, will require absolutely no attention and will indicate rigorously correct time. The idea of impressing upon the earth American time is fascinating and very likely to become popular. There are innumerable devices of all kinds which are either now employed or can be supplied and by operating them in this manner I may be able to offer a great convenience to the whole world with a plant of no more than 10,000 horsepower. The introduction of this system will give opportunities for invention and manufacture such as have never presented themselves before.

Knowing the far reaching importance of this first attempt and its effect upon future development, I shall proceed slowly and carefully. Experience has taught me not to assign a term to enterprises the consummation of which is not wholly dependent on my own abilities and exertions. But I am hopeful that these great realizations are not far off and I know that when this first work is completed they will follow with mathematical certitude.

When the great truth accidentally revealed and experimentally confirmed is fully recognized, that this planet, with all its appalling immensity, is to electric current virtually no more than a small metal ball and that by this fact many possibilities, each baffling the imagination and of incalculable consequence, are rendered absolutely sure of accomplishment; when the first plant is inaugurated, and it is shown that a telegraphic message, almost as secret and non-interferable as a thought, can be transmitted to any terrestrial distance, the sound of the human voice, with all its intonations and inflections, faithfully and instantly reproduced at any point of the globe, the energy of a waterfall made available for supplying light, heat or motive power, anywhere on sea, or land, or high in the air--humanity will be like an ant heap stirred up with a stick: See the excitement coming.

The Niagara Falls plant was never built; and diffculties, soon enough, were encountered at the Wardencliff plant not only in securing desired equipment but also finances.

Tesla's greatest oversight was that he neglected to invent, so to speak, a device for making the unlimited quantities

of money that were necessary to develop his other inventions. As we have seen, he was utterly lacking in the phase of personality that made possible the securing of financial returns directly from his inventions. An individual with his ability could have made millions out of each of a number of Tesla's minor inventions. If he had taken the trouble, for example, to collect annual royalties on twenty or more different kinds of devices put out by as many manufacturers employing his Tesla coil for medical treatments, he would have had ample income to finance his World Wireless System.

His mind, however, was too fully occupied with fascinating scientific problems. He had, at times, nearly a score of highly skilled workmen constantly employed in his laboratory developing the electrical inventions he was continuing to make at a rapid rate. Armed guards were always stationed around the laboratory to prevent spying on his inventions. His payroll was heavy, his bank balance became dangerously low, but he was so immersed in his experimental work that he continuously put off the task of making an effort to repair his finances. He soon found himself facing judgments obtained by creditors on accounts upon which he could not make payments. He was forced, in 1905, to close the Wardencliff laboratory.

The fantastic tower in front of the laboratory was never completed. The doughnut-shaped copper electrode was never built because Tesla changed his mind and decided to have a copper hemisphere 100 feet in diameter and 50 feet high built on top of the 154-foot cone-shaped tower. A skeleton framework for holding the hemispherical plates was built, but the copper sheeting was never applied to it. The 300-horsepower dynamos and the apparatus for operating the broadcasting station were left intact, but they were eventually removed by the engineering firm that installed them and had not been paid.

Tesla opened an offce at 165 Broadway, in New York, where for a while he tried to contrive some means for reviving his project. Thomas Fortune Ryan, the well-known financier, and H. O. Havemeyer, the leading sugar refiner, aided him with contributions of $10,000 and $5,000 respectively. Instead of using these to open another laboratory, he applied them to paying off the debts on his now defunct World Wireless System. He paid off every penny due to every creditor.

When it became apparent that Tesla was in financial diffculties, many who had assumed that Morgan was financially involved as an investor in his project were disillusioned. When specific inquiries revealed that the great financier held no interest whatever in the enterprise, the rumor got into circulation that Morgan had withdrawn his support; and when no reason for such action could be learned the rumor expanded to carry the story that Tesla's system was impracticable. As a matter of fact, Morgan continued to make generous personal contributions to Tesla almost up to the time of his own death; and his son did so to a lesser extent for a short time.

Tesla made no effort to combat the growing rumors.

If Tesla could have tolerated a business manager, and had placed the development of his patents in the hands of a businessman, he could have established as early as 1896 a practical ship-to-shore, and probably a trans-oceanic wireless service; and these would have given him a monopoly in this field. He was asked to rig up a wireless set on a boat to report the progress of the international yacht race for Lloyds of London in 1896, but he refused the offer, which was a lucrative one, on the grounds that he would not demonstrate his system publicly on less than a world-wide basis because it could be confused with the amateurish efforts being made by other experimenters. If he had accepted this offer--and he could have met the requirements without the least technical diffculty--he undoubtedly would have found his interests diverted to some extent into a profitable commercial channel that might have made a vast, and favorable, change in the second half of his life.

Tesla, however, could not be bothered with minor, even though profitable projects. The superman, the man magnificent, was too strong in him. The man who had put industry on an electrical power basis, the man who had set the whole earth in vibration, could not fill a minor role of carrying messages for hire. He would function in his major capacity or not at all; he would be a Jupiter, never a Mercury.

George Scherff, who was engaged by Tesla as bookkeeper and secretary when he opened his Houston Street laboratory, was a practical individual. He managed, as far as was humanly possible, to keep the inventor disentangled in his contacts

with the business world. The more he knew Tesla, the better he liked him; and the more respect he had for his genius and his ability as an inventor, the more he became conscious of the fact that this genius was totally lacking in business ability.

Scherff was understandably distressed by a situation in which an enterprise was continuously spending money but never receiving any. He sought to protect as far as possible the $40,000 which Tesla received from Adams as an investment in the enterprise; and it was stretched to cover more than three years of great activity. Scherff wanted Tesla to work out plans for deriving an income from his inventions. Each new development which Tesla produced was studied by Scherff and made the basis for a plan for manufacture and sale of a device. Tesla uniformly rejected all the suggestions. "This is all small-time stuff," he would reply. "I cannot be bothered with it."

Even when it was pointed out to him that many manufacturers were using his Tesla coils, selling great numbers of them and making plenty of money out of them, his interest could not be aroused to enter this profitable field, nor to permit Scherff to arrange to have a sideline set-up which could be conducted without interfering with his research work. Nor could he be induced to bring suits to protect his invention and seek to make the manufacturers pay him royalties. He admitted, however, "If the manufacturers paid me twenty-five cents on each coil they sold I would be a wealthy man."

When Lloyds of London made their request that he set up a wireless outfit on a boat and report the international yacht races of 1896, by his new wireless system, and offered a generous honorarium, Scherff became insistent that the offer be accepted; and he urged Tesla to drop all other work temporarily and use the publicity he would get from the exploit as a means of floating a commercial company for transmitting wireless messages between ship and shore and across the ocean, pointing out that money would be made both in manufacturing the apparatus and in transmitting messages. The company, Scherff suggested, could be operated by managers to produce an income and Tesla could return to his work of making inventions and always have plenty of money to pay for the cost of his researches.

Scherff can look back today, as he sits on the porch of his Westchester home, and decide, through a retrospect of fifty years, that his plan was basically sound, with the Radio Corporation of America, its extensive manufacturing facilities and its worldwide communication system, its tremendous capital system and earnings, as evidence in support of the claim.

Tesla's reply to the proposal was, as usual, "Mr. Scherff, that is small-time stuff. I cannot be bothered with it. Just wait until you see the magnificent inventions I am going to produce, and then we will all make millions."

Tesla's millions never came. Scherff remained with him until the Wardencliff laboratory closed, owing to the lack of income, which he had been trying to circumvent. Scherff then established a lucrative connection with the Union Sulphur Co. but he still continued, without taking compensation, to give Tesla one day a week of his time and keep his business affairs disentangled as far as possible. Tesla was meticulously careful about paying everyone who performed any service for him, but this was counterbalanced by an active faculty for contracting bills without waiting to see if he had funds on hand to meet them. Money was an annoying anchor that always seemed to be dragging and hindering his research activities--something that was too mundane to merit the time and attention he should be giving to more important things.

Scherff, tight-lipped and businesslike, cannot be induced to talk of Tesla's affairs. If he were, instead, a loquacious philosopher, he might be induced to smile over the frailties of human nature, and the strange pranks which fate can play on individuals, as he thinks of Tesla, who, on the basis of a single invention, might have become an individual Radio Corporation of America and failed to do so, and who passed up equal chances on two hundred other inventions, any one of which could have produced a fortune. And for contrast, he can recall occasions in recent decades when it was necessary to make modest loans to the great Tesla to permit him to meet the need for current personal necessities. But Scherff refuses to permit any close questions or discussion about these incidents.

THIRTEEN

WHEN his World Wireless System project crashed, Tesla turned again to a project to which he had given considerable thought at the time he was developing his polyphase alternating-current system: that of developing a rotary engine which would be as far in advance of existing steam engines as his alternating-current system was ahead of the direct-current system, and which could be used for driving his dynamos.

All of the steam engines in use in powerhouses at that time were of the reciprocating type; essentially the same as those developed by Newcomer and Watt, but larger in size, better in construction and more effcient in operation.

Tesla's engine was of a different type--a turbine in which jets of steam injected between a series of disks produced rotary motion at high velocity in the cylinder on which these disks were mounted. The steam entered at the outer edge of the disks, pursued a spiral path of a dozen or more convolutions, and left the engine near the central shaft.

When Tesla informed a friend in 1902 that he was working on an engine project, he declared he would produce an engine so small, simple and powerful that it would be a "powerhouse in a hat." The first model, which he made about 1906, fulfilled this promise. It was small enough to fit into the dome of a derby hat, measured a little more than six inches in its largest dimension, and developed thirty horsepower. The power-producing performance of this little engine vastly exceeded that of every known kind of prime mover in use at that time. The engine weighed a little less than ten pounds. Its output was therefore three horsepower per pound. The rotor weighed only a pound and a half, and its light weight and high power yield gave Tesla a slogan which he used on his letterheads and envelopes--"Twenty horsepower per pound."

There was nothing new, of course, in the basic idea of obtaining circular motion directly from a stream of moving fluid. Windmills and water wheels, devices as old as history, performed this feat. Hero, the Alexandrian writer, about 200 bc, described, but he did not invent, the first turbine. It consisted of a hollow sphere of metal mounted on an axle, with two tubes sticking out of the sphere at a tangent to its surface. When water was placed in the sphere

and the device was suspended in a fire, the reaction of the steam coming out of the tubes caused the device to rotate.

Tesla's ingenious and original development of the turbine idea probably had its origin in that amusing and unsuccessful experiment he made when, as a boy, he tried to build a vacuum motor and observed its wooden cylinder turn slightly by the drag of the air leaking into the vacuum chamber. Later, too, when as a youth he fled to the mountains to escape military service and played with the idea of transporting mail across the ocean through an underwater tube, through which a hollow sphere was to be carried by a rapidly moving stream of water, he had discovered that the friction of the water on the walls of the tube made the idea impracticable. The friction would slow down the velocity of the stream of water so that excessive amounts of power would be required to move the water at a desired speed and pressure. Conversely, if the water moved at this speed, the friction caused it to try to drag the enclosing tube along with it.

It was this friction which Tesla now utilized in his turbine. A jet of steam rushing at high velocity between disks with a very small distance separating them was slowed down by the friction--but the disks, being capable of rotation, moved with increasing velocity until it was almost equal to that of the steam. In addition to the friction factor, there exists a peculiar attraction between gases and metal surfaces; and this made it possible for the moving steam to grip the metal of the disks more effectively and drag them around at high velocities. The first model which Tesla made in 1906 had twelve disks five inches in diameter. It was operated by compressed air, instead of steam, and attained a speed of 20,000 revolutions per minute. It was Tesla's intention eventually to use oil as fuel, burning it in a nozzle and taking advantage of the tremendous increase in volume, in the change from a liquid to burned highly expanded gases, to turn the rotor. This would eliminate the use of boilers for generating steam and give the direct process proportional increased effciency.

Had Tesla proceeded with the development of his turbine in 1889 when he returned from the Westinghouse plant, his turbine might perhaps have been the one eventually developed to replace the slow, big, lumbering reciprocating engines then in use. The fifteen years, however, which he

devoted to the development of currents of high potential and high frequency, had entailed a delay which gave opportunity for developers of other turbine ideas to advance their work to a stage which now was effective in putting Tesla in the status of a very late starter. In the meantime, turbines had been developed which were virtually windmills in a box. They consisted of rotors with small buckets or vanes around the circumference which were struck by the incoming steam jet. They lacked the simplicity of the Tesla turbine; but by the time Tesla introduced his type, the others were well entrenched in the development stage.

Tesla's first tiny motor was built in 1906 by Julius C. Czito, who operated at Astoria, Long Island, a machine shop for making inventor's models. He also built the subsequent 1911 and 1925 models of the turbine, and many other devices on which Tesla worked up to 1929. Mr. Czito's father had been a member of Tesla's staff in the Houston Street laboratories, from 1892 to 1899, and at Colorado Springs.

Mr. Czito's description of the first model is as follows:

The rotor consisted of a stack of very thin disks six inches in diameter, made of German silver. The disks were one thirty-second of an inch thick and were separated by spacers of the same metal and same thickness but of much smaller diameter which were cut in the form of a cross with a circular center section. The extended arms served as ribs to brace the disks.

There were eight disks and the edgewise face of the stack was only one-half inch across. They were mounted on the center of a shaft about six inches long. The shaft was nearly an inch in diameter in the mid section and was tapered in steps to less than half an inch at the ends. The rotor was set in a casing made in four parts bolted together.

The circular chamber where the rotor turned was accurately machined to allow a clearance of one sixty-fourth of an inch between the casing and the face of the rotor. Mr. Tesla desired an almost touching fit between the rotor face and the casing when the latter was turning. The large clearance was necessary because the rotor attained tremendously high speeds, averaging 35,000 revolutions per minute. At this speed the centrifugal force generated by

the turning movement was so great it appreciably stretched the metal in the rotating disks. Their diameter when turning at top speed was one thirty-second of an inch greater than when they were standing still.

A larger model was built by Tesla in 1910. It had disks twelve inches in diameter, and with a speed of 10,000 revolutions per minute it developed 100 horsepower, indicating a greatly improved effciency over the first model. It developed more than three times as much power at half the speed.

During the following year, 1911, still further improvements were made. The disks were reduced to a diameter of 9.75 inches and the speed of operation was cut down by ten per cent, to 9,000 revolutions per minute--and the power output increased by ten per cent, to 110 horsepower!

Following this test, Tesla issued a statement in which he declared:

I have developed 110 horsepower with disks nine and three quarter inches in diameter and making a thickness of about two inches. Under proper conditions the performance might have been as much as 1,000 horsepower. In fact there is almost no limit to the mechanical performance of such a machine. This engine will work with gas, as in the usual type of explosion engine used in automobiles and airplanes, even better than it did with steam. Tests which I have conducted have shown that the rotary effort with gas is greater than with steam.

Enthusiastic over the success of his smaller models of the turbine, operated on compressed air, and to a more limited extent by direct combustion of gasoline, Tesla designed and built a larger, double unit, which he planned to test with steam in the Waterside Station, the main powerhouse of the New York Edison Company.

This was a station which had originally been designed to operate on the direct-current system developed by Edison--but it was now operating throughout on Tesla's polyphase alternating-current system.

Now Tesla, invading the Edison sanctum to test a new type of turbine which he hoped would replace the types in use, was definitely in enemy territory. The fact that he had

Morgan backing, and that the Edison Company was a "Morgan company," had no nullifying effect on the Edison-Tesla feud.

This situation was not softened in any way by Tesla's method of carrying on his tests. Tesla was a confirmed "sun dodger"; he preferred to work at night rather than in the daytime. Powerhouses, not from choice but from necessity, have their heaviest demands for current after sunset. The day load would be relatively light; but as darkness approached, the dynamos started to groan under the increasing night load. The services of the workers at the Waterside Station were made available to Tesla for the setting up and tests of his turbine with the expectation that the work would be done during the day when the tasks of the workers were easiest.

Tesla, however, would rarely show up until five o'clock in the afternoon, or later, and would turn a deaf ear to the pleas of workers that he arrive earlier. He insisted that certain of the workers whom he favored remain after their five-o'clock quitting time on the day shift to work with him on an overtime basis. Nor did he maintain a conciliatory attitude toward the engineering staff or the offcials of the company. The attitudes, naturally, were mutual.

The turbine Tesla built for this test had a rotor 18 inches in diameter which turned at a speed of 9,000 revolutions per minute. It developed 200 horsepower. The overall dimensions of the engine were--three feet long, two feet wide and two feet high. It weighed 400 pounds.

Two such turbines were built and installed in a line on a single base. The shafts of both were connected to a torque rod. Steam was fed to both engines so that, if they were free to rotate, they would turn in opposite directions. The power developed was measured by the torque rod connected to the two opposing shafts.

At a formal test, to which Tesla invited a great many guests, he issued a statement in which he said, as reported, in part:

It should be noted that although the experimental plant develops 200 horsepower with 125 pounds at the supply pipe and free exhaust it could show an output of 300 horsepower

with full pressure of the supply circuit. If the turbine were compounded and the exhaust were led to a low pressure unit carrying about three times the number of disks contained in the high pressure element, with connection to a condenser affording 28.5 to 29.0 inches of vacuum the results obtained in the present high pressure machine indicate that the compounded unit would give an output of 600 horsepower without great increase of dimensions. This estimate is very conservative.

Tests have shown that when the turbine is running at 9,000 revolutions per minute under an inlet pressure of 125 pounds to the square inch and with free exhaust 200 brake horsepower are developed. The consumption under these conditions of maximum output is 38 pounds of saturated steam per horsepower per hour, a very high effciency when we consider that the heat drop, measured by thermometers, is only 130 B.T.U. and that the energy transformation is effected in one stage. Since three times the number of heat units are available in a modern plant with superheat and high vacuum the utilization of these facilities would mean a consumption of less than 12 pounds per horsepower hour in such turbines adapted to take the full drop.

Under certain conditions very high thermal effciencies have been obtained which demonstrate that in large machines based on this principle steam consumption will be much lower and should approximate the theoretical minimum thus resulting in the nearly frictionless turbine transmitting almost the entire expansive energy of the steam to the shaft.

It should be kept in mind that all of the turbines which Tesla built and tested were single-stage engines, using about one-third of the energy of the steam. In practical use, they were intended to be installed with a second stage which would employ the remaining energy and increase the power output about two or three fold. (The two types of turbines in common use each have a dozen and more stages within a single shell.)

Some of the Edison electric camp, observing the torque-rod tests and apparently not understanding that in such a test the two rotors remain stationary--their opposed pressures staging a tug of war measured as torque--circulated the story that the turbine was a complete failure; that this turbine would not be practical if its effciency had been

increased a thousand fold. It was stories such as these that contributed to the imputation that Tesla was an impractical visionary. The Tesla turbine, however, used as a single-stage engine, functioning as a pygmy power producer, in the form in which it was actually tested, anticipated by more than twenty-five years a type of turbine which has been installed in recent years in the Waterside Station. This is a very small engine, with blades on its rotor, known as a "topping turbine," which is inserted in the steam line between the boilers and the ordinary turbines. Steam of increased pressure is supplied, and the topping turbine skims this "cream" from the steam and exhausts steam that runs the other turbines in their normal way.

The General Electric Company was developing the Curtis turbine at that time, and the Westinghouse Electric and Manufacturing Company was developing the Parsons turbine; and neither company showed the slightest interest in Tesla's demonstration.

Further development of his turbine on a larger scale would have required a large amount of money--and Tesla did not possess even a small amount.

Finally he succeeded in interesting the Allis Chalmers Manufac-

turing Company of Milwaukee, builders of reciprocating engines and turbines, and other heavy machinery. In typical Tesla fashion, though, he manifested in his negotiations such a lack of diplomacy and insight into human nature that he would have been better off if he had completely failed to make any arrangements for exploiting the turbine.

Tesla, an engineer, ignored the engineers on the Allis Chalmers staff and went directly to the president. While an engineering report was being prepared on his proposal, he went to the Board of Directors and "sold" that body on his project before the engineers had a chance to be heard. Three turbines were built. Two of them had twenty disks eighteen inches in diameter and were tested with steam at eighty pounds pressure. They developed at speeds of 12,000 and 10,000 revolutions per minute, respectively, 200 horsepower. This was exactly the same power output as had been achieved by Tesla's 1911 model, which had disks of half this diameter and was operated at 9,000 revolutions

under 125 pounds pressure. A much larger engine was tackled next. It had fifteen disks sixty inches in diameter, was designed to operate at 3,600 revolutions per minute, and was rated at 500 kilowatts capacity, or about 675 horsepower.

Hans Dahlstrand, Consulting Engineer of the Steam Turbine Department, reports, in part:

We also built a 500 kw steam turbine to operate at 3,600 revolutions. The turbine rotor consisted of fifteen disks 60 inches in diameter and one eighth inch thick. The disks were placed approximately one eighth inch apart. The unit was tested by connecting to a generator. The maximum mechanical effciency obtained on this unit was approximately 38 per cent when operating at steam pressure of approximately 80 pounds absolute and a back pressure of approximately 3 pounds absolute and 100 degrees F superheat at the inlet.

When the steam pressure was increased above that given the mechanical effciency dropped, consequently the design of these turbines was of such a nature that in order to obtain maximum effciency at high pressure, it would have been necessary to have more than one turbine in series.

The effciency of the small turbine units compares with the effciency obtainable on small impulse turbines running at speeds where they can be directly connected to pumps and other machinery. It is obvious, therefore, that the small unit in order to obtain the same effciency had to operate at from 10,000 to 12,000 revolutions and it would have been necessary to provide reduction gears between the steam turbine and the driven unit.

Furthermore, the design of the Tesla turbine could not compete as far as manufacturing costs with the smaller type of impulse units. It is also questionable whether the rotor disks, because of light construction and high stress, would have lasted any length of time if operating continuously.

The above remarks apply equally to the large turbine running at 3,600 revolutions. It was found when this unit was dismantled that the disks had distorted to a great extent and the opinion was that these disks would ultimately have failed if the unit had been operated for any length of time.

The gas turbine was never constructed for the reason that the company was unable to obtain suffcient engineering information from Mr. Tesla indicating even an approximate design that he had in mind.

Tesla appears to have walked out on the tests at this stage. In Milwaukee, however, there was no George Westinghouse to save the situation. Later, during the twenties, the author asked Tesla why he had terminated his work with the Allis Chalmers Company. He replied: "They would not build the turbines as I wished"; and he would not amplify the statement further.

The Allis Chalmers Company later became the pioneer manufacturers of another type of gas turbine that has been in successful operation for years.

While the Dahlstrand report may appear to be severely critical of the Tesla turbine and to reveal fundamental weaknesses in it not found in other turbines, such is not the case. The report is, in general, a fair presentation of the results; and the description of apparent weaknesses merely offers from another viewpoint the facts which Tesla himself stated about the turbine in his earlier test--that when employed as a single-stage engine it uses only about a third of the energy of the steam, and that to utilize the remainder, it would have to be compounded with a second turbine.

The reference to a centrifugal force of 70,000 pounds resulting from the high speed of rotation of the rotor, causing damage to the disks, refers to a common experience with all types of turbines. This is made clear in a booklet on "The Story of the Turbine," issued during the past year by the General Electric Company, in which it is stated:

It [the turbine] had to wait until engineers and scientists could develop materials to withstand these pressures and speeds. For example, a single bucket in a modern turbine travelling at 600 miles per hour has a centrifugal force of 90,000 pounds trying to pull it from its attachment on the bucket wheel and shaft. . . .

In this raging inferno the high pressure buckets at one end of the turbine run red hot while a few feet away the large buckets in the last stages run at 600 miles per hour

through a storm of tepid rain--so fast that the drops of condensed steam cut like a sand blast.

Dahlstrand reported that diffculties were encountered in the Tesla turbine from vibration, making it necessary to re-enforce the disks. That this diffculty is common to all turbines is further indicated by the General Electric booklet, which states:

Vibration cracked buckets and wheels and wrecked turbines, sometimes within a few hours and sometimes after years of operation. This vibration was caused by taking such terrific amounts of power from relatively light machinery--it some cases as much as 400 horsepower out of a bucket weighing but a pound or two. . . .

The major problems of the turbine are four--high temperatures, high pressures, high speeds and internal vibration. And their solution lies in engineering, research and manufacturing skill.

These problems are still awaiting their final solution, even with the manufacturers who have been building turbines for forty years; and the fact that they were encountered in the Tesla turbine, and so reported, is not a final criticism of Tesla's invention in the earliest stages of its development.

There have been whisperings in engineering circles during the past year or two to indicate a revival of interest in the Tesla turbine and the possibility that the makers of the Curtis and Parsons types may extend their lines to include the Tesla type for joint operation with the others. The development of new alloys, which can now almost be made to order with desired qualities of mechanical stability under conditions of high temperature and great stresses, is largely responsible for this turn of events.

It is a possibility that if the Tesla turbine were constructed with the benefft of two or more stages, thus giving it the full operating range of either the Curtis or the Parsons turbine, and were built with the same beneffts of engineering skill and modern metallurgical developments as have been lavished on these two turbines, the vastly greater simplicity of the Tesla turbine would enable it to manifest greater effciencies of operation and economies of construction.

FOURTEEN

THE highest honor which the world can confer upon its scholars is the Nobel Prize founded by Alfred B. Nobel, the Swedish scientist who gained his wealth through the invention of dynamite. Five awards are made annually, and each carries an honorarium of about $40,000 in normal times.

An announcement came from Sweden, in 1912, that Nikola Tesla and Thomas A. Edison had been chosen to share the 1912 award in physics. The awards, however, were never made; and the prize went instead to Gustav Dalen, a Swedish scientist.

The full story of what took place is not known. The correspondence on the subject is not available. It is definitely established that Tesla refused to accept the award. Tesla was very much in need of money at this time and the $20,000, which would have been his share of the divided award, would have aided him to continue his work. Other factors, however, had a more potent influence.

Tesla made a very definite distinction between the inventor of useful appliances and the discoverer of new principles. The discoverer of new principles, he stated in conversation with the author, is a pioneer who opens up new fields of knowledge into which thousands of inventors flock to make commercial applications of the newly revealed information. Tesla declared himself a discoverer and Edison an inventor; and he held the view that placing the two in the same category would completely destroy all sense of the relative value of the two accomplishments.

It is quite probable that Tesla was also influenced by the fact that the Nobel Prize in physics had been awarded to Marconi three years earlier, a situation that greatly disappointed him. To have the award go first to Marconi, and then to be asked to share the award with Edison, was too great a derogation of the relative value of his work to the world for Tesla to bear without rebelling.

Tesla was the first, and probably the only, scientist to refuse this famous prize.

One of the highest honors in the engineering world, too, is the Edison Medal, founded by unnamed friends of Thomas A. Edison, and awarded each year by the American Institute of Electrical Engineers, at its annual convention, for outstanding contribution to electrical art and science. Usually, the recipients are very happy to receive the award; but in 1917, when the committee voted to present the medal to Tesla, a different situation developed.

The chairman of the Edison Medal committee was B. A. Behrend, who had been one of the first electrical engineers to grasp the tremendous significance of Tesla's alternating-current discoveries and their far-reaching importance to every department of the electrical industry. A few outstanding engineers were able, at the beginning, to understand the intricacies of new alternating-current procedures which Tesla's discoveries made of immediate practical importance; but it was Behrend who developed a beautiful, simple mathematical technique, known as the "circle diagram," which made it possible to work out problems of designing alternating-current machinery with great ease, and also to understand the complex phenomena that were taking place within such devices. He published innumerable articles on the subject in the technical journals and wrote the standard textbook on the subject, The Induction Motor. Fame and fortune came to Behrend. He achieved recognition as one of the outstanding electrical engineers, and was later elected vice-president of the American Institute of Electrical Engineers. So important was his work to the commercial world that he was considered a probable recipient of the Edison Medal.

Behrend had started publishing articles on his circle diagram discovery in 1896 but he did not meet Tesla until 1901, when Tesla required a particular type of motor for his World Wireless plant being built at Wardencliff, L. I., and the task of designing it was assigned to the engineering department of a manufacturing company of which Behrend was in charge. After Tesla and Behrend met, a very close personal friendship developed between the two men. Behrend was one of the few who thoroughly understood Tesla's work; and the inventor, lonely in the absence of individuals with minds of his own caliber, greatly appreciated Behrend's friendship.

Behrend believed, therefore, that he was rendering Tesla a token of his highest appreciation when he managed to maneuver the award of the Edison Medal to him; and he was quite happy to carry out the mission of bearing the good news to the inventor. The announcement, however, did not make Tesla happy. He did not want the Edison Medal, he would not receive it!

Behrend, greatly surprised at Tesla's rebuff, asked him if he would not explain the situation that caused it.

"Let us forget the whole matter, Mr. Behrend. I appreciate your good will and your friendship but I desire you to return to the committee and request it to make another selection for a recipient. It is nearly thirty years since I announced my rotating magnetic field and alternating-current system before the Institute. I do not need its honors and someone else may find them useful."

It would have been impossible for Behrend to deny that the Institute had indeed failed, over this long period, to honor the man whose discoveries were responsible for creating the jobs held by probably more than three quarters of the members of the Institute, while honors had been distributed to many others for relatively minor accomplishments. Still, using the privilege of friendship, Behrend pressed for a further explanation.

"You propose," Tesla replied, "to honor me with a medal which I could pin upon my coat and strut for a vain hour before the members and guests of your Institute. You would bestow an outward semblance of honoring me but you would decorate my body and continue to let starve, for failure to supply recognition, my mind and its creative products which have supplied the foundation upon which the major portion of your Institute exists. And when you would go through the vacuous pantomime of honoring Tesla you would not be honoring Tesla but Edison who has previously shared unearned glory from every previous recipient of this medal."

Behrend, however, after several visits, finally prevailed upon Tesla to accept the medal.

Custom requires that the recipient of a medal deliver a formal address. On the occasions, a quarter of a century

earlier, when Tesla was invited to address the Institute, he had had ample laboratory facilities, and had invested a great deal of time, effort, thought and money in the preparation of his lectures. For them, however, he was awarded no honors. Now he was without laboratory facilities and without adequate financial resources, although his more mature mind was as filled with ideas and unborn inventions as it had ever been. He was not required to present a demonstration lecture. In this matter, however, Tesla was a victim of his own past performances; and there was an expectancy that he would emerge from the comparative oblivion which had enshrouded him for more than a decade, and come, like a master magician, bearing some wondrous new gifts of invention to the world.

Tesla attended some of the meetings of the convention, and Behrend, none too certain about what the medalist might do, took him in tow following the afternoon session and escorted him to the Hotel St. Regis, where Tesla now made his home, and where both donned their formal dress for the evening's ceremonies.

The first event on the evening's program was a private dinner at the Engineers' Club, tendered by the Institute to the medalist, who was the guest of honor, and attended by previous recipients of the Edison Medal, as well as members of the committee and the offcers of the Institute. It was a gala occasion and represented an unusual concentration of the world's greatest electrical engineering talent. Tesla could be relied upon to lend brilliance to any such occasion, but, while his sparkling conversation added to the gayety of the group, he was distinctly ill at ease.

The Engineers' Club, on the south side of 40th Street, between Fifth and Sixth Avenues, faces Bryant Park, the eastern third of which is occupied by the classical building of the New York Public Library, facing Fifth Avenue from 40th to 42nd Streets. The United Engineering Societies Building, an imposing structure on the north side of 39th, stands almost back-to-back with the Engineers' Club. By stepping a few feet across an alley, it is possible to go from one building to the other.

Following the dinner in the Engineers' Club, the brilliant group at the medalist's dinner made their way across the alley and proceeded through the crowded lobby of the Engineering Societies Building, which was abuzz with the

multitudinous activities associated with a convention. The party entered the elevators which carried them to the large auditorium on the fifth floor where the medal presentations were to take place.

The auditorium was crowded with an audience that had come largely from formal dinners held as part of the convention program. The floor and gallery were filled to capacity. The buzz of animated conversation died down as there filed onto the stage the outstanding figures of the electrical world, in "tails" and white ties, who were to serve as the "wax works" of the ceremonies and to take some part in the presentation.

As the wax works took their previously assigned chairs, the stage was set for the opening of the ceremonies. But the opening did not take place according to schedule. There was consternation in the group as it was discovered that the chair reserved for the chief participant in the event was empty.

Tesla was missing!

The side hall, leading off the stage, and the anterooms were searched, but there was no sign of him. Members of the committee slipped out to retrace their steps through the lobby and back to the Club dining room. A man as tall as Tesla could not be hidden in any group, yet there was not a sign of him in either building.

The delay in opening the meeting in the auditorium was embarrassing--but the ceremonies could not be started without Tesla, and where was he?

It seemed hardly possible that an imposing figure like Tesla, his height exaggerated by the streamlined contours of his swallow-tailed formal evening dress, and in the almost worshipful custody of a score of outstanding intellects, could vanish without any of them observing his going.

Behrend rushed back from the Club to the auditorium, hopeful that Tesla had preceded him; but he found that such was not the case. All the washrooms in both buildings had been searched; he was concealed in none of them. No one could offer a theory to account for his disappearance.

None but Behrend knew of Tesla's aversion to accepting the Edison Medal, yet even he had not the slightest knowledge of what had become of the famous inventor. He recalled noting the shadowy walks of Bryant Park opposite the Club as he and Tesla stepped from the taxicab earlier in the evening, and he wondered if Tesla had retreated there for some quiet meditation before the ceremony. He hurried out of the Club.

As Behrend stepped into Bryant Park, the last faint glimmerings of dusk were visible in the high sky; but in the park the shades of night were gathering and here and there could be heard the faint twitterings of birds. The twittering of the birds brought, like a flash, to Behrend's mind the scene he had observed in Tesla's apartment at the Hotel St. Regis. In the room which Tesla had arranged as a reading room and offce was a roll-top desk, and on top of this were four neat circular baskets, in two of which pigeons were nestled. Before they left the apartment Tesla went to the window, which was kept open at all times, whistled softly, and two more pigeons quickly flew into the room. Just before leaving for the dinner Tesla fed the pigeons, and having done so slipped a paper bag filled with something into his pocket. The possible significance of this latter act did not occur to Behrend until he heard the twittering of the birds in the park.

With all possible speed Behrend rushed out of the park, down 40th Street toward Fifth Avenue, and up the steps to the plaza of the Library. Here he beheld a sight that amazed him almost beyond belief in what his eyes told him. Here was the missing man. He had recalled that Tesla regularly visited the Library, St. Patrick's Cathedral, or other places to feed the pigeons.

In the center of a large thin circle of observers stood the imposing figure of Tesla, wearing a crown of two pigeons on his head, his shoulders and arms festooned with a dozen more, their white or pale-blue bodies making strong contrast with his black suit and black hair, even in the dusk. On either of his outstretched hands was another bird, while seemingly hundreds more made a living carpet on the ground in front of him, hopping about and pecking at the bird seed he had been scattering.

It was Behrend's impulse to rush in, shoo the birds away and, seizing the missing man, rush him back to the

auditorium. Something caused him to halt. Such an abrupt action seemed almost sacrilegious. As he hesitated momentarily, Tesla caught sight of him and slowly shifted the position of one hand to raise a warning finger. As he did so, however, he moved slowly toward Behrend; and as he came close, some of the birds flew from Tesla's shoulders to Behrend's. Apparently sensing a disturbing situation, though, all the birds flew to the ground.

Appealing to Tesla not to let him down, nor to embarrass those who were waiting at the meeting, Behrend prevailed upon the inventor to return to the auditorium. Little did Behrend know how much more the pigeons meant to Tesla than did the Edison Medal; and little could anyone have suspected the fantastic secret in Tesla's life, of which the outer manifestation was his faithful feeding of his feathered friends. To Behrend it was just another, and in this case very embarrassing, manifestation of the nonconformity of genius. Of this, more later.

Returning to the auditorium, Behrend explained in a quick aside to the president that Tesla had been temporarily ill, but that his condition was now quite satisfactory. The opening of the meeting had been delayed about twenty minutes.

In his presentation speech, Behrend pointed out that by an extraordinary coincidence, it was exactly 29 years ago, to the very day and hour, that Nikola Tesla presented his original description of his polyphase alternating-current system. He added:

Not since the appearance of Faraday's "Experimental Researches in Electricity" has a great experimental truth been voiced so simply and so clearly as this description of Mr. Tesla's great discovery of the generation and utilization of polyphase alternating currents. He left nothing to be done by those who followed him. His paper contained the skeleton even of the mathematical theory.

Three years later, in 1891, there was given the first great demonstration, by Swiss engineers, of the transmission of power at 30,000 volts from Lauffen to Frankfort by means of Mr. Tesla's system. A few years later this was followed by the development of the Cataract Construction Company, under the presidency of our member, Mr. Edward D. Adams, and with the aid of the engineers of the Westinghouse Company. It is

interesting to recall here tonight that in Lord Kelvin's support to Mr. Adams, Lord Kelvin recommended the use of direct current for the development of power at Niagara Falls and for its transmission to Buffalo.

The due appreciation or even enumeration of the results of Mr. Tesla's invention is neither practicable nor desirable at this moment. There is a time for all things. Suffce it to say that, were we to seize and eliminate from our industrial world the results of Mr. Tesla's work, the wheels of industry would cease to turn, our electric cars and trains would stop, our towns would be dark, our mills would be dead and idle. Yes, so far reaching is this work, that it has become the warp and woof of industry. . . . His name marks an epoch in the advance of electrical science. From that work has sprung a revolution in the electrical art.

We asked Mr. Tesla to accept this medal. We did not do this for the mere sake of conferring a distinction, or of perpetuating a name; for so long as men occupy themselves with our industry, his work will be incorporated in the common thought of our art, and the name of Tesla runs no more risk of oblivion than does that of Faraday, or that of Edison.

Nor indeed does this Institute give this medal as evidence that Mr. Tesla's work has its offcial sanction. His work stands in no need of such sanction.

No, Mr. Tesla, we beg you to cherish this medal as a symbol of our gratitude for a new creative thought, the powerful impetus, akin to revolution, which you have given to our art and to our science. You have lived to see the work of your genius established. What shall a man desire more than this? There rings out to us a paraphrase of Pope's lines on Newton:

"Nature and Nature's laws lay hid in night:

"God said, Let Tesla be, and all was light."

No record remains of Tesla's acceptance speech. He did not prepare a formal address. He had intended to make but a brief response, but instead he became involved in anecdotal narration and a preview of the future of electrical science

which, in the absence of the limiting influence of a written copy, became quite lengthy.

It is doubtful if anyone in the audience, or on the stage, grasped the full significance of Behrend's words when he said, "We asked Mr. Tesla to accept this medal." And fewer still were the members of the Institute who had any conception of the extent or importance of Tesla's contribution to their science. His major inventions had been announced thirty years before. The majority of the engineers present belonged to the younger generation; and they had been taught from textbooks that almost completely omitted mention of Tesla's work.

FIFTEEN

THE announcement by Tesla in his latter years that attracted the greatest amount of attention concerned his discovery of what has briefly, but not too accurately, been termed a death ray. Earlier reports had come from Europe of the invention of death rays, beams of radiation that would cause airships on which they impinged to burst into flame, the steel bodies of tanks to melt and the machinery of ships to stop operating, but all gave indications of being part of the game of diplomatic buncombe.

The prelude to Tesla's death-ray announcement came several years in advance, in the form of a declaration that he had made discoveries concerning a new form of power generation which, when applied, would make the largest existing turbine-dynamo units in the powerhouses look like pygmies. He made this announcement in interviews with the press in 1933, and declared that he was also working on a new kind of generator for the production of radiation of all kinds and in the greatest intensities. He made similar announcements the following year.

Both of these announcements were entitled to receive the most serious consideration, even though they were not accompanied by experimental evidence, and revealed no technical details.

When Tesla was talking as a scientist he was opposed to wars on moral, economic and all practical and theoretical grounds. But, like most scientists, when he stopped thinking as a scientist and let his emotions rule his thoughts, he found exceptions in which he felt some wars and situations were justifiable. As a scientist he was unwilling to have the discoveries of scientists applied to the purposes of war makers, but when the emotional phase of his nature took the ruling position he was willing to apply his genius to devising measures that would prevent wars by supplying protective devices.

This attitude is exemplified in the following statement, which he had prepared in the twenties but did not publish:

At present many of the ablest minds are trying to devise expedients for preventing a repetition of the awful conflict which is only theoretically ended and the duration and main issues of which I correctly predicted in an article printed in the Sun of December 20, 1914. The League is not a remedy but, on the contrary, in the opinion of a number of competent men, may bring about results just the opposite. It is particularly regrettable that a punitive policy was adopted in framing the terms of peace because a few years hence it will be possible for nations to fight without armies, ships or guns, by weapons far more terrible, to the destructive action and range of which there is virtually no limit. Any city at any distance whatever from the enemy can be destroyed by him and no power on earth can stop him from doing so. If we want to avert an impending calamity and a state of things which may transform this globe into an inferno, we should push the development of flying machines and wireless transmission of energy without an instant's delay and with all the power and resources of the nation.

Tesla saw preventive possibilities in his new invention which embodied "death-ray" characteristics, and which was made several years after the foregoing statement was written. He saw it providing a curtain of protection which any country, no matter how small, could use as a defense against invasion. While he might offer it as a defensive weapon, however, there would be nothing to stop military men from using it as a weapon of offense.

Tesla never gave the slightest hint concerning the principles under which his device operated.

There are indications, at any rate, that Tesla was working on a high-potential direct-current system for generating and transmitting electricity to long distances. Direct current at very high voltages can be transmitted much more effciently than alternating current. There has been no practical way of generating direct current at high voltages. It was because of this that Tesla's polyphase alternating-current system was adopted for our present nationwide superpower system, since it made the use of high voltages practicable. But, despite its effciencies, it entailed certain losses which could be eliminated if direct current of suffciently high voltage could be obtained. Such a system would supersede his alternating-current system but not displace it.

Direct current, perhaps at several million volts potential, would be used to transmit current for long distances, perhaps clear across the continent, providing a kind of express transmission system, to which the existing alternating-current system would be tied for local distribution. In addition to the direct-current transmission system, he appears to have worked out a high-voltage direct-current generator and a new type of direct-current motor which would operate without a commutator.

The inventions were starting to dam up in Tesla's mind like water in a reservoir to which there was no outlet.

Just as he developed his alternating-current system into the high-frequency, high-potential field of power distribution by wireless, which he demonstrated at Colorado Springs, so he appears to have carried his direct-current system forward and linked it with his alternating-current wireless distribution system, so that he could use both in a super-interlocking system. As this remained unapplied, he further evolved it and produced a plan for operating with it what appears to be a beam system of wireless transmission of energy which might involve the use of a stream of particles such as are used in the atom-smashing cyclotron.

As time passed from the latter twenties, through the latter thirties, the hints which Tesla would drop about his work became more complicated, and so ambiguous that they aroused skepticism rather than respect. He would not reveal the nature of his discoveries until he had secured patents, and

he would not apply for patents until he had made actual working models, and he could not make the working models because he had no money. Samuel Insull, the public utilities magnate, had for many years made frequent and generous contributions to Tesla. They were usually applied to outstanding debts and were not large enough to enable him to engage in laboratory research work.

Tesla, however, never exhibited the slightest outward sign of bitterness over the situation. Instead, he always appeared in the rle of confirmed optimist, always maintaining a spirit of hopefulness that he would achieve by his own efforts the money he needed to carry out his elaborated plans. This is indicated in a letter he wrote to B. A. Behrend, who had induced him to accept the Edison Medal, and who was probably in his confidence to a greater extent than anyone else:

"I am hard at work on those discoveries of mine, I told you about, from which I hope to derive a sum in eight figures (not counting the cents, of course) enabling me to erect that wireless power plant at my own expense. And what I shall accomplish by that other invention I came specially to see you about, I do not dare to tell you. This is stated in all seriousness."

The invention about which he dared not speak was probably his direct-current generating and transmitting system.

In an interview given in 1933, he said his power generator was of the simplest kind--just a big mass of steel, copper and aluminum, comprising a stationary and a rotating part, peculiarly assembled. He was planning, he said, to generate electricity and transmit it to a distance by his alternating system; but the direct-current system could also be employed if the heretofore insuperable diffculties of insulating the transmission line could be overcome.

A year later he had developed the beam-transmission plan; and he made an ambiguous statement concerning it which was reported in the press as news of a "death ray" since the description seemed to fit into the same mold as those wild and improbable statements that had come out of Europe some years before. A writer in the New York World-Telegram described Tesla's plan as "nebulous." This drew a reply from Tesla July 24, 1934) in which the following paragraphs appeared:

Still another item which has interested me is a report from Washington in the World Telegram of July 13, 1934, to the effect that scientists doubt the death ray effects. I am quite in agreement with these doubters and probably more pessimistic in this respect than anybody else, for I speak from long experience.

Rays of the requisite energy cannot be produced, and, then again, their intensity diminishes with the square of the distance. Not so the agent I employ, which will enable us to transmit to a distant point more energy than is possible by any other kind of ray.

We are all fallible, but as I examine the subject in the light of my present theoretical and experimental knowledge I am filled with deep convictions that I am giving to the world something far beyond the wildest dreams of inventors of all time.

This is the first written statement by Tesla in which he mentions his "ray"; but I had, as already noted, obtained some confidential statements from him, during the preceding year or so, concerning results he hoped to achieve through his new discovery, the nature of which he kept as a well-protected secret. Three years later, in 1937, Tesla permitted me to write a news story for the New York Herald Tribune on his new power-and-ray discovery. In it I stressed the usefulness of the discovery for delivering power to ships for travel across the ocean, thus eliminating the need for carrying fuel supplies, rather than its use as a weapon for defense or offense.

On this occasion I tried to get him to reveal some technical details, but he successfully parried every question and gave no information beyond the statement that the transmitting plant on shore was one which he would be able to erect at a cost of about $2,000,000, and the energy would be transmitted by a ray or beam of infinitesimally small cross section, one hundred thousandth of a centimeter in diameter. To other newspapers which copied my story he gave the figure as one millionth of a square centimeter.

Later, I wrote a somewhat critical review of his plan and sought to draw him out by reviewing the properties of electro-magnetic radiation in all parts of the spectrum. Finding none that possessed any known characteristics

needed to make his ray practical, I also reviewed the properties of all known particles of matter, and stated that none of these would serve his purpose with the possible exception of the unelectrified particle, the neutron. He made no revealing response to the article.

At his birthday dinner in 1938, at the Hotel New Yorker, Tesla described briefly his combination wireless-power transmission and death ray, adding little to what has already been stated; and in a later part of his speech he declared that he had developed a method for interplanetary communication, in which he would be able to transmit not only communication signals of small strength but energies involving thousands of horsepower.

On this occasion I asked him if he would be specific concerning the effects produced, and whether they would be visible from the earth; for example--could he produce an effect on the moon suffciently large to be seen by an astronomer watching the moon through a high-power telescope? To this he replied that he would be able to produce in the dark region of the thin crescent new moon an incandescent spot that would glow like a bright star so that it could be seen without the aid of a telescope.

It would appear probable that Tesla proposed to use for this purpose the beam he described in connection with his wirelesspower "death ray." The limitation of the destructive effects of the beam, which he visualized as two hundred miles, was due to the fact that the beam had a straight-line trajectory. Tesla stated that the curvature of the earth set a limit on the distance of operation, so the two-hundred-mile span of operation gave an indication of the greatest practical height of a tower from which the beam could be directed. He expected to use potentials of about 50,000,000 volts in his system, but whether of direct or alternating current is unknown.

The only written statement by Tesla on this subject is in his manuscript of the talk which was delivered, in absentia, some months later before the Institute of Immigrant Welfare in response to its honorary citation. In this was included the following paragraph:

"To go to another subject: I have devoted much of my time during the year past to perfecting of a new small and compact apparatus by which energy in considerable amounts

can now be flashed through interstellar space to any distance without the slightest dispersion. I had in mind to confer with my friend, George E. Hale, the great astronomer and solar expert, regarding the possible use of this invention in connection with his own researches. In the meantime, however, I am expecting to put before the Institute of France an accurate description of the device with data and calculations and claim the Pierre Gutzman Prize of 100,000 francs for means of communication with other worlds, feeling perfectly sure that it will be awarded to me. The money, of course, is a trifling consideration, but for the great historical honor of being the first to achieve this miracle I would be almost willing to give my life."

SELF-MADE SUPERMAN

SIXTEEN

IT WAS during a period when he was most busily occupied with his experiments with high-frequency and high-potential currents, from 1892 to 1894, that Tesla had found time to give serious thought to yet another type of problem, matter and energy; and from it he derived what he described as a new physical principle. This he developed to the point at which he was able to propound a new dynamic theory of gravity.

While this principle guided much of his thinking, he did not make any announcements concerning it until close to the end of his life. Such disclosures as have been made, however, leave this much obvious: Tesla considered his theory wholly inconsistent with the theory of relativity, and with the modern theory concerning the structure of the atom and the mutual interconversion of matter and energy. Tesla continuously attacked the validity of Einstein's work; and until two or three years before his death, he ridiculed the belief that energy could be obtained from matter.

These antagonisms were most unfortunate, as they placed Tesla in conflict with modern experimental physics. This was totally unnecessary, for Tesla could undoubtedly have adhered to his principle and interpreted it so that it was

not inconsistent with the modern theories. The antagonism was probably attributable to psychological factors rather than scientific inconsistencies.

The only statement Tesla has made concerning his principle and his theory is that contained in the lecture he prepared for delivery before the Institute of Immigrant Welfare (May 12, 1938). In this he stated:

During the succeeding two years [1893 and 1894] of intense concentration I was fortunate enough to make two far reaching discoveries. The first was a dynamic theory of gravity, which I have worked out in all details and hope to give to the world very soon. It explains the causes of this force and the motions of heavenly bodies under its influence so satisfactorily that it will put an end to idle speculation and false conceptions, as that of curved space. . . .

Only the existence of a field of force can account for the motions of the bodies as observed, and its assumption dispenses with space curvature. All literature on this subject is futile and destined to oblivion. So are all attempts to explain the workings of the universe without recognizing the existence of the ether and the indispensable function it plays in the phenomena.

My second discovery was of a physical truth of the greatest importance. As I have searched the entire scientific records in more than a half dozen languages for a long time without finding the least anticipation, I consider myself the original discoverer of this truth, which can be expressed by the statement: There is no energy in matter other than that received from the environment.

On my 79th birthday I made a brief reference to it, but its meaning and significance have become clearer to me since then. It applies rigorously to molecules and atoms as well as to the largest heavenly bodies, and to all matter in the universe in any phase of its existence from its very formation to its ultimate disintegration

Tesla's mind was inflexible in the matter of his attitude toward relativity and the modern theories. Had he published his principle and theory of gravity at the beginning of the century it would, without doubt, have then received very serious consideration and perhaps general acceptance,

although it is diffcult to make an intelligent surmise without knowledge of his postulates. If published, it might have had some influence on Einstein's thinking. The field of force which Tesla mentions as being necessary to explain the movements of the planets might have been his contribution to eliminating the need for the ether which was accomplished by Einstein's theory. The two theories might have been merged, in which case there probably would have resulted a harmonious development of the thinking of the two geniuses.

In this latter case Tesla could very well have shaped his thinking to see a consistency between his theory that there is no energy in matter other than that received from its environment, and the modern viewpoint that all matter consists of energy into which it is convertible; for when matter is converted to energy, the energy returns to the environment from whence it came when the particles were formed.

There appears to be a frustration involved in Tesla's attitude which could have been resolved by early publication of his theory. If this had taken place, Tesla's powerful intellect and his strange ability to solve problems would have been brought to bear on the problems of atomic physics and he, in turn, would have received tremendous benefits from the application of the newer knowledge in the fields in which he was supreme.

Tesla's ability to generate tremendously high voltages would have been of great assistance in the task of "smashing the atom." Other scientists, even today, are struggling to produce currents with a potential of 5,000,000 volts, whereas Tesla, forty years ago, had generated potentials of 135,000,000 volts.

The inconsistency between Tesla's principle and the picture of the atom consisting of a small complex nucleus surrounded by planetary electrons--which inconsistency was more existent in Tesla's mind than in Nature--caused him to develop an antagonism to all scientific developments which called for a picture that differed from the billiard-ball type of atom in vogue in the eighteen-eighties. To him, a smashed atom was like a smashed billiard ball.

The electron, however, had a real existence to Tesla. He accepted it as a kind of sub-atom, a fourth state of

matter, as described by Sir William Crookes, who discovered it. Tesla visualized it as associated with but not a part of the atom. The electric charge it carried was entirely distinct from the electron. Electricity, to him, was a fluid much more highly attenuated than any known form of matter, and with highly specific properties of its own for which it was not dependent upon matter. The charge on the electron was due to a surface layer of electricity covering it, and it could receive many layers, giving it multiple charges, all of which could be dissipated. These statements were similar to those which he had published a half-century before.

According to the modern theory, on the other hand, the electrical nature of the electron, described as its charge, is a characteristic inherent in the nature of the energy crystallized about a point which gives the electron its existence, and the electron is one of the particles, or units of energy, of which the atom is composed.

In discussing articles by scientists in the field of atomic physics, Tesla would register his protests that their theories were untenable and the claims unfounded; and he was particularly emphatic when experiments in which energy emissions from atoms were recorded.

"Atomic power is an illusion," he frequently declared. He furnished several written statements in which he said that with his currents of several million volts he had, countless times, smashed uncounted billions of atoms--and he knew that no emission of energy accompanied the process.

On one occasion Tesla took me to task rather severely for my failure to publish his statements. I replied: "I withheld them in order to protect your reputation. You are making too great a virtue of consistency. It is not necessary that you adhere to the theories you held as a youth, and I am convinced that deep down in your heart you hold newer theories that are in harmony with scientific developments in other fields, but because you have disagreed with, and attacked some modern theories, you feel you must be consistent and attack them all. I am convinced that in the development of your death-ray device your thinking was along the lines of the modern theory of the structure of the atom and the nature of matter and energy."

Tesla thereupon let me know in no uncertain terms that he held very definite ideas concerning efforts on the part of others to do his thinking for him. This conversation took place about 1935; and I did not hear from him for many months. I observed, however, that in his later conversations he was much less dogmatic concerning modern theories, and a few years later he stated that he was planning an apparatus which would make possible a definite testing of the modern theory of atomic structure, with the expectation that his new power system and energy beam would release atomic energy more effectively than any device then in use by physicists.

Having endorsed, finally, the belief that man will be able to smash, transmute, create or destroy atoms, and control vast amounts of energy, he waxed poetic on the subject. He extended man's control over atoms and energy to a cosmic scale, and saw him shaping the universe according to our desires. In an unpublished article, entitled "Man's Greatest Achievement," he wrote:

There manifests itself in the fully developed being--Man--a desire mysterious, inscrutable and irresistible: to imitate nature, to create, to work himself the wonders he perceives. Inspired to this task he searches, discovers and invents, designs and constructs, and covers with monuments of beauty, grandeur and awe, the star of his birth. He descends into the bowels of the globe to bring forth its hidden treasures and to unlock its immense imprisoned energies for his use. He invades the dark depths of the ocean and the azure regions of the sky. He peers into the innermost nooks and recesses of molecular structure and lays bare to his gaze worlds infinitely remote. He subdues and puts to his service the Werce, devastating spark of Prometheus, the titanic forces of the waterfall, the wind and the tide. He tames the thundering bolt of Jove and annihilates time and space. He makes the great Sun itself his obedient toiling slave. Such is his power and might that the heavens reverberate and the whole earth trembles by the mere sound of his voice.

What has the future in store for this strange being, born of a breath, of perishable tissue, yet immortal, with his powers fearful and divine? What magic will be wrought by him in the end? What is to be his greatest deed, his crowning achievement?

Long ago he recognized that all perceptible matter comes from a primary substance, or a tenuity beyond conception, filling all space, the Akasa or luminiferous ether, which is acted upon by the life-giving Prana or creative force, calling into existence, in never ending cycles, all things and phenomena. The primary substance, thrown into infinitesimal whirls of prodigious velocity, becomes gross matter; the force subsiding, the motion ceases and matter disappears, reverting to the primary substance.

Can Man control this grandest, most awe-inspiring of all processes in nature? Can he harness her inexhaustible energies to perform all their functions at his bidding, more still cause them to operate simply by the force of his will?

If he could do this, he would have powers almost unlimited and supernatural. At his command, with but a slight effort on his part, old worlds would disappear and new ones of his planning would spring into being. He could fix, solidify and preserve the ethereal shapes of his imagining, the fleeting visions of his dreams. He could express all the creations of his mind on any scale, in forms concrete and imperishable. He could alter the size of this planet, control its seasons, guide it along any path he might choose through the depths of the Universe. He could cause planets to collide and produce his suns and stars, his heat and light. He could originate and develop life in all its infinite forms.

To create and to annihilate material substance, cause it to aggregate in forms according to his desire, would be the supreme manifestation of the power of Man's mind, his most complete triumph over the physical world, his crowning achievement, which would place him beside his Creator, make him fulfill his ultimate destiny.

Tesla, in his eighties, was still manifesting the superman complex, and on even more elaborate a scale than when in his twenties. In his earlier dreams his visions were terrestrial, but in later life they were extended to embrace the entire universe.

Even on the cosmic scale, however, Tesla spoke in terms of matter and energy. These two entities, according to his reasoning, were suffcient to explain all observed

phenomena, a situation which militated against the discovery of any new agencies.

The civilizations of the ancient world knew nothing of electricity and magnetism; the controlled manifestations of these two phases of a single force-entity have provided us with a new civilization and a new cultural outlook on life, as well as broadened horizons within the life sphere. There is no reason why we should not look forward to the discovery of new forces which are as different from electricity as electricity is from the winds of the air and the waves of the ocean. If inadequate explanations of vital phenomena are accepted as satisfactory, embracing extravagant extensions of known forces, the way is closed to the discovery of unknown forces and the opening of any new realms of knowledge. This was the limitation which the science of the last quarter of the past century placed upon itself; and Tesla's philosophy was a product of that period. It was diffcult for him to reshape it in his later years.

The memory departments of most individuals' brains are like offce filing systems, an excellent dumping ground for everything that comes along--but try to find a filed item later. Tesla's powers of memorizing were prodigious. A quick reading of a page gave him a permanent record of it; he could always recall before his eyes a photographic record of it to be read, and could study at his convenience. Study, for Tesla, was a far different process than for the average person. He had no need for a reference library; he could consult in his mind any page of any textbook he had read, any formula, equation, or item in a table of logarithms, and it would flash before his eyes. He could recite scores of books, complete from memory. The saving in time which this made possible in research work was tremendous.

This strange faculty of vision was supernormal but entirely natural and was due, probably, to a structural characteristic in his brain which provided a direct channel between the memory and the visual areas of his cerebral hemispheres. It provided him with a very useful new sense.

The human brain is made up of two sections, the right and left sides, each of which, in some of its phases, is a complete brain; and both halves function together as a single unit. There are many layers in the brain parallel

with its surface, each connected to the others by complex nerve fibers, like threads sewing together the layers of an onion. The outer layer seems to be directly associated with our consciousness. The surface is divided into specialized areas, There is a band across the mid-section of each hemisphere from ear to ear over the top of the brain, devoted to the senses, and here are separate areas for the sensory faculties--sight, hearing, taste, smell--while near by are regions for the motor or muscular activities of the various parts of the body. The back lobe of the brain appears to be the home of the memory and the front lobe of some higher faculties of integration, the nature of which we do not as yet understand.

In normal processes of seeing, the eye forms a picture of an object on the retina, a screen on the back of the eyeball. The retina is supplied with thousands of nerve endings all packed together like stalks of asparagus in a bunch. The tip ends are provided with photosensitive processes, and when light strikes any one of them it transmits over the optic nerve a signal to the brain which is recorded as a visual response in the sight area of each half of the brain. By cooperation of all the nerve endings, the complete picture seen is transmitted. The actual seeing, then, is done in the brain and not in the eye. When an object is seen by the brain, a record of that visual experience is transmitted from the sight area of the brain to the memory center in the back part of the brain; and similar records are sent by all other sensory centers. Ordinarily this is a one-way process, the stimuli going in the direction of the memory and nothing coming back to the sensory area. If this were not so, our sense areas of the brain would be continuously reenacting old experiences and mixing them with the new, incoming experiences, causing annoying confusion.

The memory area contains a complete record of all sensory experiences we have had. In our thinking processes we use some little-understood mechanism for connecting together items stored in the memory area to produce useful combinations or relationships, or, in other words, new ideas. The memory appears to function on a subconscious level but we seem to be able to activate fibers that reach down to the desired strata at the right point to connect the memory level with the consciousness level. In this way we can recall experiences, but this experience of memory is

far different from the original experience of sight out of which the original memory record was made.

If, however, in this process of recollection, the nerve fiber linking the sight area of the brain and the memory area were to be activated, then we would see again by the sharp processes of vision the object which caused the memory record we are trying to recollect.

The act of creative thinking seems to consist of assembling two or more memory records of sensory experiences into a combination which possesses entirely new characteristics that were not apparent in the component parts. If the nerve linkage just referred to were to operate in a two-way process with the visual area, then we would be able to see the new creation as if it were a really existing object seen by the eye, although the whole operation was limited to the brain.

This process is hypothetically the one which took place in Tesla's brain and gave him tremendously greater powers of creative work than are possible to the ordinary individual. Was this conceivably a new in-vention made by Mother Nature and tried out by her on Tesla?

Tesla himself never understood the neurological, or physiological, processes underlying this strange faculty. To him it was an absolutely real experience to see in front of him as solid objects the subjects of his creative thoughts. He believed that the image of the thing he saw was sent back from the brain along the optic nerve to the eye, and that it existed as a picture on the retina where, by some suitable means, it could be seen by others--or that by means of adequate amplifying devices, such as are used in television, it could be projected on a screen. He even proposed such devices. (The apparent flaw in his reasoning followed on his mistake in thinking that he was doing this supernormal seeing with his eye, whereas the process was confined to his brain; and the reflex action from the memory centers stopped at the visual centers instead of, as he believed, being continued forward through the optical nerve to the retina.)

Tesla described his experience with this strange faculty in an interview with M. K. Wisehart, published under the title "Making Your Imagination Work for You" in the American Magazine, April, 1921. He stated:

During my boyhood I had suffered from a peculiar affliction due to the appearance of images, which were often accompanied by strong flashes of light. When a word was spoken, the image of the object designated would present itself so vividly to my vision that I could not tell whether what I saw was real or not. . . . Even though I reached out and passed my hand through it, the image would remain fixed in space.

In trying to free myself from these tormenting appearances, I tried to concentrate my thoughts on some peaceful, quieting scene I had witnessed. This would give me momentary relief; but when I had done it two or three times the remedy would begin to lose its force. Then I began to take mental excursions beyond the small world of my actual knowledge. Day and night, in imagination, I went on journeys--saw new places, cities, countries, and all the time I tried hard to make these imaginary things very sharp and clear in my mind. I imagined myself living in countries I had never seen, and I made imaginary friends, who were very dear to me and really seemed alive.

This I did constantly until I was seventeen, when my thoughts turned seriously to invention. Then, to my delight, I found I could visualize with the greatest facility. I needed no models, drawings, or experiments. I could picture them all in my mind. . . .

By that faculty of visualizing, which I learned in my boyish efforts to rid myself of annoying images, I have evolved what is, I believe, a new method of materializing inventive ideas and conceptions. It is a method which may be of great usefulness to any imaginative man, whether he is an inventor, businessman or artist.

Some people, the moment they have a device to construct or any piece of work to perform, rush at it without adequate preparation, and immediately become engrossed in details, instead of the central idea. They may get results, but they sacrifice quality.

Here, in brief, is my own method: After experiencing a desire to invent a particular thing, I may go on for months or years with the idea in the back of my head. Whenever I feel like it, I roam around in my imagination and think

about the problem without any deliberate concentration. This is a period of incubation.

Then follows a period of direct effort. I choose carefully the possible solutions of the problem. I am considering, and gradually center my mind on a narrowed field of investigation. Now, when I am deliberately thinking of the problem in its specific features, I may begin to feel that I am going to get the solution. And the wonderful thing is, that if I do feel this way, then I know I have really solved the problem and shall get what I am after.

The feeling is as convincing to me as though I already had solved it. I have come to the conclusion that at this stage the actual solution is in my mind subconsciously, though it may be a long time before I am aware of it consciously.

Before I put a sketch on paper, the whole idea is worked out mentally. In my mind I change the construction, make improvements, and even operate the device. Without ever having drawn a sketch I can give the measurements of all parts to workmen, and when completed all these parts will fit, just as certainly as though I had made the actual drawings. It is immaterial to me whether I run my machine in my mind or test it in my shop.

The inventions I have conceived in this way have always worked. In thirty years there has not been a single exception. My first electric motor, the vacuum tube wireless light, my turbine engine and many other devices have all been developed in exactly this way.

That Tesla believed his mental visualizations brought images from his brain to the back of his eye is indicated by some statements he made in his famous lecture before the National Electric Light Association convention at St. Louis, in March, 1893, when announcing his discovery of radio. These statements about vision had no relationship to the subject of the lecture, and the fact that he interjected them indicated that his experiences with this strange power had a powerful influence on his inventive thinking. He said:

It can be taken as a fact, which the theory of the action of the eye implies, that for each external impression, that is for each image produced on the retina, the ends of the visual nerves, concerned in the conveyance of the

impressions to the mind, must be under a peculiar stress or in a vibratory state. It now does not seem improbable that, when by the power of thought an image is evoked, a distinct reflex action, no matter how weak, is exerted upon certain ends of the visual nerves, and therefore upon the retina. Will it ever be within human power to analyze the condition of the retina, when disturbed by thought or reflex action, by the help of some optical or other means of such sensitiveness that a clear idea of its state might be obtained? If this were possible, then the problem of reading one's thoughts with precision, like the characters of an open book, might be much easier to solve than many problems belonging to the domain of positive physical science, in the solution of which many, if not the majority, of scientific men implicitly believe.

Helmholtz has shown that the fundi of the eye are themselves luminous, and he was able to see in total darkness the movements of his arm by the light of his own eyes. This is one of the most remarkable experiments recorded in the history of science, and probably only a few men could satisfactorily repeat it, for it is very likely that the luminosity of the eyes is associated with uncommon activity of the brain and great imaginative power. It is fluorescence of brain action, as it were.

Another fact having a bearing on this subject, which has probably been noted by many, since it is stated in popular expressions, but which I cannot recollect to have found chronicled as a positive result of observation is that, at times, when a sudden idea or image presents itself to the intellect, there is a painful sensation of luminosity produced in the eye observed even in broad daylight.

Forty years later Tesla was still interested in the possibility of capturing a photographic record of thoughts. He stated in interviews that if his theory were correct--that thoughts are recorded on the retina--it should be possible to photograph what is revealed on this screen in the eye, and project enlarged images of it.

There is nothing illogical about Tesla's reasoning concerning his strange faculty of visualizing and the possibility of finding a corresponding image on the retina. There is a bare possibility that in an extreme case, as was his, a reflex arc may have extended from the brain to the retina; but the probability that it did not is stronger. If

he had possessed the ability to take others into his confidence in his experiments, he would have been able to stage some simple tests in the laboratory of an ophthalmologist which would have given him some definite experimental evidence to support or dispose of his theories, as far as photographic thought images were concerned.

About 1920 tesla had prepared, although he never published, an announcement of what he declared was "An Astounding Discovery." It involved factors which he called "cosmic"; but it likewise presented situations which the practicers of voodoo in Haiti, and other intellectually unveneered portions of the human race, would receive with perfect understanding. Since Tesla, one of the most highly civilized individuals, could evolve this conception, it is probable that other supercultured individuals or groups could find it in harmony with their ideas and experiences.

It involves, however, a situation in which the soulless "matter and energy" automaton (to which status we have seen Tesla relegate human beings) is able to judge ethical values, and, like a pontiff presiding over a court of morals, inflict punishment for transgressions.

Here is Tesla's description of his "astounding discovery":

While I have failed to obtain any evidence in support of the contentions of psychologists and spiritualists, I have proved to my complete satisfaction the automatism of life, not only through continuous observation of individual actions, but even more conclusively, through certain generalizations. These amount to a discovery which I consider of the greatest moment to human society and on which I shall briefly dwell.

I got the first inkling of this astounding truth when I was still a very young man, but for many years I interpreted what I noted simply as coincidences. Namely, whenever either myself or a person to whom I was attached, or a cause to which I was devoted, was hurt by others in a particular way, which might be best popularly characterized as the most unfair imaginable, I experienced a singular and undefinable pain which, for want of a better term, I have qualified as "cosmic," and shortly thereafter, and invariably, those who have inflicted it came to grief. After many such cases I confided this to a number of

friends, who had the opportunity to convince themselves of the truth of the theory which I have gradually formulated and which may be stated in the following words.

Our bodies are of similar construction and exposed to the same external influences. This results in likeness of response and concordance of the general activities on which all our social and other rules and laws are based. We are automata entirely controlled by the forces of the medium, being tossed about like corks on the surface of the water, but mistaking the resultant of the impulses from the outside for free will.

The movements and other actions we perform are always life-preservative and though seemingly quite independent from one another, we are connected by invisible links. So long as the organism is in perfect order it responds accurately to the agents that prompt it, but the moment there is some derangement in any individual, his self-preservative power is impaired.

Everybody understands, of course, that if one becomes deaf, has his eyesight weakened, or his limbs injured, the chances for his continued existence are lessened. But this is also true, and perhaps more so, of certain defects in the brain which deprive the automaton, more or less, of that vital quality and cause it to rush into destruction.

A very sensitive and observant being, with his highly developed mechanism all intact, and acting with precision in obedience to the changing conditions of the environment, is endowed with a transcending mechanical sense, enabling him to evade perils too subtle to be directly perceived. When he comes in contact with others whose controlling organs are radically faulty, the sense asserts itself and he feels the "cosmic" pain.

The truth of this has been borne out in hundreds of instances and I am inviting other students of nature to devote attention to this subject, believing that, through combined and systematic effort, results of incalculable value to the world will be attained.

Tesla's uncommunicative nature concerning his own intimate experiences has undoubtedly deprived the world of many interesting stories. He was unquestionably an abnormal individual, and of a type that does have what are known as

"psychic experiences." He was emphatic in his denial that he ever had experiences of that sort; yet he has related incidents that clearly belong in the psychic category. He seemed to be fearful that an admission of psychic experiences would cause him to be misunderstood as supporting spiritualism, or theories that something operates in life other than matter and energy.

Whenever he was asked for his philosophy of life, he would elaborate a theory that the human body is a meat machine which responds to external forces.

One evening in New York, as Tesla and the author sat in the lobby of the Hotel Governor Clinton, the inventor discussed his meat-machine theory. It was a materialistic philosophy typical of the Victorian era. We are, he held, composed of only those things which are identified in the test tube and weighed in the balance. We have only those properties which we receive from the atoms of which our bodies are constructed. Our experiences, which we call life, are a complex mixture of the responses of our component atoms to the external forces of our environment.

Such a philosophy has the virtue of simplicity and brevity of presentation; and it lends itself readily to being propounded with a positiveness that reacts on the propounder, and transforms his attitude into one of dogmatism in which emphatically expressed opinion is often confused with and substituted for factual evidence.

"I don't believe a word of your theory," I replied to Tesla's exposition, "and, thank God, I am convinced you don't believe a word of it either. The strongest proof I have that your theory is totally inadequate is that Tesla exists. Under your theory we could not have a Tesla. Tesla possesses a creative mind and, in his accomplishments, stands high above all other men. If your theory were correct, we would either all be geniuses like Tesla or we would all be mental mediocrities living in these meat machines you describe, all responding in the same way to the uniform, inanimate and uncreative external forces."

"But we are all meat machines," replied Tesla, "and it happens that I am a much more sensitive machine than other people and I receive impressions to which they are inert, and I can both understand and interpret these impressions. I am simply a finer automaton than others," he insisted.

"This difference, which you admit between yourself and others, Dr. Tesla, completely disproves your theory, from my viewpoint," I responded. "Your sensitiveness would be a purely random incident. In the integration of this randomness, with respect to all individuals, all of us would probably once, possibly very much more frequently, rise to the height of manifesting genius as you have done all your life. Even though the strokes of genius would manifest intermittently, all such individuals would receive the permanent rating as geniuses. Genius does not manifest, even intermittently, in all of us, so your meat-machine theory appears, to me, untenable, If you were really frank with me, you would tell me of many experiences you have had, strange experiences, that you could not explain, that do not fit into your meat-machine theory, and which you have been afraid to discuss with anyone for fear they would misunderstand you and perhaps ridicule you. I, however, will not find these experiences strange and beyond understanding, and one of these days you will open up and tell me about them."

As happened whenever I disagreed with him, after that evening I did not see Tesla for a while. In due time, however, I had a great many telephone conversations with him. Our discussion seemed to have brought about a change in his attitude toward me; and the next time I saw him he confided, "Mr. O'Neill, you understand me better than anyone else in the world." I mention this to indicate the correctness of my belief that there was another Tesla hidden within that synthetic individual, the superman, which Tesla sought to pass off on the public as his real self.

I did not, at this time, know about Tesla's "astounding discovery," or of some of his experiences about which I later learned. Had I known of these, my discussion with him could have been more specific.

SEVENTEEN

ALTHOUGH Tesla thoroughly disbelieved in psychical phenomena, as previously indicated, he had many experiences which belong in this category; and he neither discredited nor disavowed their reality. Such paradoxes were common in all matters concerning him.

Tesla, for example, completely rejected telepathy as a phase of psychical phenomena, but he was firmly convinced that mind could communicate directly with mind. When asked about his belief in telepathy by a newspaper reporter in the early nineties, Tesla replied: "What is usually taken as evidence of the existence of telepathy is mere coincidence. But the working of the human mind through observation and reason interests and amazes me. And then he added the paradoxical statement: "Suppose I make up my mind to murder you. In an instant you would know it. Now, isn't that wonderful enough? By what process does the mind get at all this?"

Reduced to its simplest terms, this interview states: Psychical telepathy does not exist as a reality; but the transmission of thought from mind directly to mind is a wonderful phenomenon, worthy of scientific study.

The paradox here is due to the fact that, at the period in which Tesla was speaking, all psychical phenomena were supposed to be mediated by the intervention of spirits, or souls of the departed. Such a theory had no place in Tesla's philosophy, since he did not believe in immortality and felt that he could explain all phenomena in terms of matter and energy; and the spirit was supposed to lie beyond both of these categories. Thinking, however, was, according to Tesla's theories, something which resulted from the interaction of matter and energy in the brain; and as this process probably produced waves in the ether, there was no reason why the waves sent out by one mind should not be received by another, with resulting transfer of thought.

Tesla would not discuss anything bordering on psychical experiences outside the circle of his relatives, however. On one occasion, though, he probably saved the lives of three of his friends through a premonition; and he related the incident to his nephew, Sava N. Kosanovich, who thus retells it:

"I heard from Tesla that he had premonitions. He explained his in a mechanical way, saying he was a sensitive receiver

that registers any disturbance. He declared that each man is like an automaton which reacts to external impressions.

"He told me of one instance in which he had held a big party here in New York for some of his friends who planned to take a certain train for Philadelphia. He felt a powerful urge not to let the friends depart as planned and forcibly detained them so that they missed the train on which they had planned to travel. This train met with an accident in which there were a large number of casualties. This happened sometime in the 90's.

"When his sister Angelina was ill, and died, he sent a telegram in which he said: "I had a vision that Angelina was arising and disappearing. I sensed all is not well."

Tesla himself tells a most remarkable story of two supernormal events, in an unpublished manuscript. It records a situation in which, owing to overwork, his strange phenomenon of visualization disappeared, or died, and was reborn. In coming back, it grew up quickly by repeating the visualization of events of earliest childhood and successively re-enacting later events, until it brought him to the actual moment and capped the climax by then presenting a visualization of an event that had not yet taken place.

The story of this experience, as told by Tesla:

I will tell of an extraordinary experience which may be of interest to students of psychology. I had produced a striking phenomenon with my grounded transmitter and was endeavoring to ascertain its true significance in relation to the currents propagated through the earth. It seemed a hopeless undertaking and for more than a year I worked unremittingly but in vain. This profound study so entirely absorbed me that I became forgetful of everything else, even of my undermined health. At last, as I was on the point of breaking down, nature applied the preservative, inducing lethal sleep.

Regaining my senses, I realized with consternation that I was unable to visualize scenes from my life except those of infancy, the very first ones that had entered my consciousness. Curiously enough, these appeared before my vision with startling distinctness and afforded me welcome relief. Night after night, when retiring, I would think of

them and more and more of my previous existence was revealed. The image of my mother was always the principal figure in the spectacle that slowly unfolded, and a consuming desire to see her again gradually took possession of me.

This feeling grew so strong that I resolved to drop all work and satisfy my longing. But I found it too hard to break away from the laboratory and several months elapsed during which I succeeded in reviving all the impressions of my past life up to the spring of 1892.

In the next picture that came out of the mist of oblivion, I saw myself at the Hotel de la Paix in Paris just coming to from one of my peculiar sleeping spells caused by prolonged exertion of the brain. Imagine the pain and distress I felt when it flashed upon my mind that a dispatch was handed to me at that very moment bearing the sad news that my mother was dying.

It was especially remarkable that all during this period of partially obliterated memory I was fully alive to everything touching on the subject of my research. I could recall the smallest details and the least insignificant observations in my experiments and even recite pages of texts and complex mathematical formulae.

This was a prevision of the event which took place immediately after his Paris lecture, as described in an earlier chapter, in which he rushed home in time to see his mother just before she died.

The second incident also concerns the death of his mother, and is told in another connection in the same manuscript. He states:

For many years I have endeavored to solve the enigma of death and watched eagerly for every kind of spiritual indication. But only once in the course of my existence have I had an experience which, momentarily, impressed me as supernatural. It was at the time of my mother's death.

I had become completely exhausted by pain and long vigilance and one night was carried to a building about two blocks from our home. As I lay helpless there, I thought that if my mother died while I was away from her bedside she would surely give me a sign.

Two or three months before I was in London in company with my late friend, Sir William Crookes, when spiritualism was discussed and I was under full sway of these thoughts. I might not have paid attention to other men but was susceptible to his arguments as it was his epochal work on radiant matter, which I had read as a student, that made me embrace the electrical career.

I reflected that the conditions for a look into the beyond were most favorable, for my mother was a woman of genius and particularly excelling in the powers of intuition. During the whole night every fiber of my brain was strained in expectancy, but nothing happened until early in the morning when I fell into a sleep or perhaps a swoon, and saw a cloud carrying angelic figures of marvelous beauty, one of whom gazed upon me lovingly and gradually assumed the features of my mother. The apparition slowly floated across the room and vanished and I was awakened by an indescribably sweet song of many voices. In that instant a certitude, which no words can express, came upon me that my mother had just died. And that was true.

I was unable to understand the tremendous weight of the painful knowledge I received in advance and wrote a letter to Sir William Crookes while still under the domination of these impressions and in poor bodily health.

When I recovered I sought for a long time the external cause of this strange manifestation and to my great relief, I succeeded after many months of fruitless effort. I had seen the painting of a celebrated artist, representing allegorically one of the seasons in the form of a cloud with a group of angels which seem to actually float in the air, and this had struck me forcibly. It was exactly the same that appeared in my dream with the exception of my mother's likeness. The music came from the choir in the church nearby at the early mass of Easter morning, explaining everything satisfactorily in conformity to scientific facts.

This "scientific" explanation by Tesla is, of course, totally unscientific. It ignores the three principal facts: one, that he had what he identified at the time as a supernormal experience that brought with it a certitude that words could not describe; two, that this experience conveyed a revelation of his mother's death, which he

understood as such; and, three, that the event took place at the exact time of her death. The mechanism by which the phenomenon was produced utilized the memories stored in Tesla's mind (of the painting, for example) as the vehicle by which the information could be presented to him in understandable, though symbolic, form. In addition, there was the premonition given several months previously as the climax of an extended phenomenon involving his mother.

Tesla's efforts to explain away "scientifically" everything of a psychical or spiritual nature, and the inadequate explanations which were satisfactory to him for this purpose, are an indication of a conflict that was taking place within him in an effort to reconcile the purely materialistic "matter and energy" superman, into which he fashioned himself, with the underlying individual into which was born a great capacity for manifesting a deep spiritual insight into life, but which he suppressed.

One of the strangest luncheon parties Tesla ever staged was that given by him to a prize fighter, Fritzie Zivic. It was served in one of the private dining rooms of the Hotel New Yorker in 1940. Fritzie Zivic was scheduled to take part in a prize fight at Madison Square Garden for the welterweight championship, and the luncheon was held at noon on the day of the battle.

Fritzie was one of six brothers, all of whom were either professional prize fighters or wrestlers. They lived at Pittsburgh where their father conducted a beer saloon. They were all born in Pittsburgh, but were the sons of parents, natives of Yugoslavia, whose diffcult-to-pronounce Slavonic name was shortened to Zivic by the brothers for their professional activities.

Tesla had all six of the brothers as his guests. The only other guests were William L. Laurence, science writer of the New York Times, and the author.

Three very different types of individuals were gathered around the table. The six fighting brothers were all fine physical specimens. They averaged medium height but their powerful, chunky bodies, deep chests and broad shoulders made them seem rather short. All were clear eyed, had clear complexions and clean-cut features, were conservatively dressed in sack suits, and wore white linen collars. The two newspapermen presented an appearance in strong contrast

with the fighters, and in contrast with all the others was Tesla. Laurence, with his great mop of jet black hair combed straight back, looked more like a musician.

Tesla was seated at the head of the table. At his right sat Fritzie and next to him ranged three of his brothers. Opposite them sat two other brothers and Mr. Laurence. The author sat at the far end of the table.

Tesla did not arrange one of his famous duck dinners for this occasion--he had other plans. As soon as the party was seated, Tesla stood up. The broad, stocky Fritzie looked like a pygmy by comparison. Tesla was attired in a light-weight, tight-fitting, black, single-breasted sack suit which made him look more slender than usual. He had lost considerable weight in the preceding year, and this accentuated the sharp, bony contour which his face had taken on in his latter years. His face, of the ascetic type, now was crowned with thinning locks of silvery white hair. His long slender hands, delicately shaped, started to wave over the seated prize fighter, who smiled up at the strange figure towering above him.

"I am ordering for you a nice thick beefsteak, two inches thick, so that you will have plenty of strength tonight to win the championship by a . . . "

The fighter had both hands up, trying to interrupt the gesticulating figure of the scientist.

"No," protested Fritzie, "I am in training and I cannot eat a steak today."

"You listen to me," shouted the insistent voice of Tesla, whose swinging arms and swaying body made him appear to be going through the antics of a cheer leader at a football game. "I'll tell you how to train. You will train on beefsteak. I am going to get you a beefsteak two inches thick and dripping with blood so that you will be able to . . ."

The five brothers now joined Fritzie in his protest.

"He can't eat beefsteak today. He would lose the fight, Dr. Tesla," they chorused.

"No, he won't lose the fight," shot back Tesla. "You must think of the heroes of our national Serbian poetry. They were redblooded men and mighty fighters. You too must fight for the glory of Serbia, and you need beefsteak dripping in blood to do it!"

Tesla had worked himself into a fine frenzy and was waving his arms and punching his palms as if he were at the ringside at an exciting moment in the battle. His frenzy was lost on Fritzie and his brother pugilists. They were unmoved. Fritzie replied:

"I will win, Dr. Tesla. I will fight for the glory of Yugoslavia and when the referee gives me the decision and I speak into the microphone I will also say I fought for Dr. Tesla--but no beefsteak today, Dr. Tesla, please."

"All right, Fritzie, you can have whatever you want," Tesla agreed, "but your brothers will have their beefsteak."

"No, Dr. Tesla," replied the eldest brother, "if Fritzie cannot have beefsteak neither will we. We will eat whatever he eats."

Fritzie ordered scrambled eggs on toast, with bacon, and a glass of milk. The five brothers gave duplicate orders and the two newspapermen did likewise.

Tesla laughed heartily. "So that is what you do your fighting on today," he said between chuckles.

For himself, the blood-thirsty 83-year-old scientist ordered "A dish of hot milk"; and on this diet he managed to summon a tremendous amount of energy during the meal which he directed toward urging Fritzie to give his opponent "everything you've got" and "make it a knockout in the first round."

It was a strange dinner. Despite the greatly outnumbering pugilists with their hard set faces and chunky powerful bodies, the thin, bony faced, sharp featured, almost emaciated scientist with his sunken eyes, and his thin, silky silver hair, easily dominated the scene. Everyone was at ease despite the brothers' anticipation of Fritzie's impending battle and Tesla's enthusiasm. Yet, in spite of the fact that everyone was relaxed, there was an eerie kind of tenseness linking the peculiar assemblage. Once I became

conscious of the situation, I watched developments with interest. I had experienced such conditions previously but never under such circumstances as these.

Mr. Laurence, of the Times, was seated at my right. He began to act a bit restless while only halfway through the meal. Several times he looked under the table. He in turn rubbed his ankle, his knee, his calf. He shifted his position. He rubbed his elbow and later his forearm. I managed to catch his eye.

"Anything bothering you, Bill?" I asked, knowing full well what was happening.

"There is something strange going on here," he replied.

A couple of minutes later he again reached, and looked under the table.

"Feel anything?" I asked.

"Yes," he replied, seemingly a bit worried. "Something hot is touching me at different spots. I can feel the heat but I can't see anything that is doing it. Do you feel it, too?" he asked.

"Don't worry about it," I assured him. "I know what it is, and will tell you all about it later. Just make as close observations as you can now."

The phenomenon continued until the party broke up. On our way back to our offces, I explained to Mr. Laurence.

"You have often laughed at me for my gullibility in accepting the reality of the so-called psychic experiences," I said. "Now you have had one. As soon as that luncheon got well under way, after Dr. Tesla's fiery outburst had quieted down, I sensed a peculiar tenseness in the air around me. At times the atmosphere seemed webby to my face and hands, so I suspected something unusual might happen.

"That gathering was a perfect set-up for a psychic seance, and if it was held in the dark there is no telling what we might have observed. Here were six powerfully built men, closely in rapport with each other, all filled to the bursting point with vital energy waiting for an event that

would release an emotional outburst. In addition, we had Dr. Tesla staging an emotional outburst the like of which he probably never before exhibited throughout his life. He was supercharged with a different kind of vital energy. Just visualize Dr. Tesla as a medium acting as a co-ordinator, in some unknown way, to release these pent-up stores of vital energy which, again in an unknown manner, organized channels of conduction through which this energy was transferred from levels of high potential to levels of lower potential.

"In this case we were the levels of lower potential, for I had exactly the same experiences you had, with these energy-transfer channels in space making contact with various parts of my body and producing areas in which I, too, experienced a sensation of intense heat.

"You have read reports of seances in which the sitters reported that they experienced cool breezes. In these situations the action is the reverse of what we experienced, for in the seances energy was being drawn from the sitters to be organized by the so-called medium for the production of phenomena.

"Some kind of highly attenuated energy-bearing fluid was, in our experience today, drawn from the bodies of the fighters and fed into our bodies--and in the seances it is drawn from the bodies of the sitters and fed into that of the medium, or to a central collecting point. In a report which I have written on my seance observations, I have called this substance psynovial fluid, which is merely a convenient abbreviation for new psychic fluid.

"Now that you have had today's experience, you will understand why a few years ago I risked having Dr. Tesla figuratively massacre me when I told him he was using his meat-machine philosophy of human life to cover up a lot of strange experiences he has had, and about which he was afraid to talk. . . ."

Another strange supernormal experience came to Tesla a few days before he died, but he was probably totally unaware that the situation had any unusual aspects.

Early one morning he called his favorite messenger boy, Kerrigan, gave him a sealed envelope, and ordered him to

deliver it as quickly as possible. It was addressed to "Mr. Samuel Clemens, 35 South Fifth Ave., New York City."

Kerrigan returned in a short time with the statement that he could not deliver the message because the address was incorrect. There is no such street as South Fifth Ave., the boy reported; and in the neighborhood of that number on Fifth Ave. no one by the name of Clemens could be located.

Tesla became annoyed. He told Kerrigan: "Mr. Clemens is a very famous author who writes under the name Mark Twain, and you should have no trouble locating him at the address I gave you. He lives there."

Kerrigan reported to the manager of his office and told him of his diffculty. The manager told him: "Of course you couldn't find South Fifth Avenue. Its name was changed to West Broadway years ago, and you won't be able to deliver a message to Mark Twain because he has been dead for twenty-five years."

Armed with this information, Kerrigan returned to Tesla, and the reception accorded his announcements left him still further confused.

"Don't you dare to tell me that Mark Twain is dead," said Tesla. "He was in my room, here, last night. He sat in that chair and talked to me for an hour. He is having financial diffculties and needs my help. So you go right back to that address and deliver that envelope--and don't come back until you have done so." (The address to which he sent the messenger was that of Tesla's first laboratory!)

Kerrigan returned to his offce. The envelope, not too well sealed, was opened in the hope it would give some clue as to how the message could be delivered, The envelope contained a blank sheet of paper wrapped around twenty $5 bills! When Kerrigan tried to return the money, Tesla told him, with great annoyance, either to deliver the money or keep it.

The last two decades of Tesla's life were filled with many embarrassing situations concerning unpaid hotel bills, and it would seem that by some process of transference this situation was shifted to his perception of Mark Twain.

In view of Tesla's highly intensified abilities to see the subjects of his thoughts as materialized objects, the simpler theory would be that by his usual process he had summoned the vision of Mark Twain, Tesla and Mark Twain were very good friends, and the inventor had every reason for knowing that the heavy-thinking humorist was dead, Such being the case, how was he able to forget his death? An objective theory can be offered which may, or may not, contain the correct explanation.

Tesla's memory was filled with many recollections of Mark Twain, dating back to his early youth when he credited the reading of one of the humorist's books with having brought him out of a critical illness. Twenty years later, when Tesla related this incident, the humorist was so deeply affected he wept. A close friendship followed, filled with many pleasant incidents. Every incident concerning Mark Twain was laid down in Tesla's memory. How these records are filed in the brain we do not know, but we might assume, for the moment, that the arrangement is orderly enough, with the system based on a time sequence in which each successive incident is filed on an earlier one, the latest ones being on top. When Tesla started the process of visualizing Mark Twain in his room (and it probably operated on a subconscious level), he penetrated through the stack of memory records until he reached one that was satisfactory, and then concentrated so heavy a flow of vital energy in carrying this to the visualization center of his brain that it burned out, and destroyed, or narcotized, all later memory records that lay above it. As a result, after the visualization process was over, there was no record in Tesla's memory files of anything that happened in his relations with Mark Twain, following the pleasant record he had so strangely relived. All subsequent memory records were wiped out, including his memory of Mark Twain's death. It would then be perfectly logical for him to reach the conclusion that Mark Twain was still alive!

Several versions of this story are in circulation. They all have in common Tesla's belief that Mark Twain was still alive; that he himself had very recently been in communication with him, and sought to send him money to meet a diffcult situation.

Pirated, lied about, ignored, (Dr. W. H. Eccles concludes an obituary memorial, in Nature (London), February 13, 1943:--"Throughout his long life of 85 years Tesla seldom

directed attention to his own successes, never wrote up again his old work, and rarely claimed priority though continually pirated. Such reserve is particularly striking in a mind so rich in creative thought, so competent in practical achievement.") Tesla carried on his work during the latter decades, always hoping that he would be able to arrange matters so that he would be able to finance all the inventions he was treasuring in his mind. His pride would not permit him to admit financial embarrassment. He was forced frequently to leave hotels because of unpaid bills. His friend, B. A. Behrend, author of the book, The Induction Motor, which had clarified Tesla's theory for engineers, when visiting New York and finding the inventor moved from the hotel where he last found him, in each instance paid his bills, and caused Tesla's held baggage to be forwarded to him.

In the early thirties, when it seemed as if financial discouragements would "have him down," Tesla, however, appeared as optimistic as ever. He declared: "It is impossible for anyone to gain any idea of the inspiration I gain from my applied inventions which have become a matter of history, and of the force it supplies to urge me forward to greater achievements. I continually experience an inexpressible satisfaction from the knowledge that my polyphase system is used throughout the world to lighten the burdens of mankind and increase comfort and happiness, and that my wireless system, in all of its essential features, is employed to render a service to and bring pleasure to people in all parts of the earth."

When his wireless-power system was mentioned, he exhibited no sign of resentment over the collapse of his project but replied philosophically: "Perhaps I was a little premature. We can get along without it as long as my polyphase system continues to meet our needs. Just as soon as the need arises, however, I have the system ready to be used with complete success."

On his eightieth birthday he was asked if he expected actually to construct and operate his recently announced inventions, and in reply he quoted, in German, a stanza from Goethe's Faust:

"The God that in my bosom lives"

"Can move my deepest inmost soul,"

"Power to all my thought he gives"

"But outside he has no control."

It had been Tesla's intention to write his autobiography. He desired to have the story of his work recorded with a most meticulous regard for accuracy; and this, he felt, no one but himself could bring to it. He declared that he had no intention of starting work on this project until he had accomplished the application of all of his major discoveries. Several persons who proposed writing his biography received only a refusal of the requested co-operation. Kenneth Swezey, a writer on scientific subjects, maintained close contact with Tesla for a number of years, and it was expected that Tesla would co-operate with him in such a project. Swezey assembled seventy letters from leading scientists and engineers in all parts of the world as a surprise for Tesla on his seventy-fifth birthday, at which time the letters, bound in a memorial volume, were presented to him. These letters, reprinted in Yugoslavia, led to the establishment of the Tesla Institute in that country. Swezey was engaged in war work and expected, at the time of Tesla's death, to enter the Navy; otherwise he might have undertaken the task of writing Tesla's biography. Tesla, even up to his eighty-fourth year, expected to recover more robust health and to live beyond the century mark. It is probable, therefore, that he had not started work on his autobiography. Whether or not any parts of it have been written is impossible to ascertain at the present time. All Tesla's records were sealed by the Custodian of Alien Property, although Tesla was a citizen of the United States.

During the last half-dozen years of his life, Tesla, happily, was supplied with enough money to meet his immediate needs, thanks to the payment to him of an honorarium of $7,200 a year, by the Yugoslav government, as patron of the Tesla Institute, established in Belgrade. (The Society for the Foundation of the Tesla Institute at Belgrade was organized as Tesla neared his eightieth year. It enlisted support from the scholars, the government, commercial interests and the people as a whole. From the government and private sources an endowment was subscribed which was adequate to erect and equip a research laboratory and maintain it in operation as an institute. The Institute was opened in 1936, in commemoration of Tesla's eightieth

anniversary. A week of observance was held throughout Yugoslavia and formal celebrations were held at Belgrade on May 26, 27 and 28, at Zagreb on May 30, and at his native village, Smiljan, on June 2 and also on July 12.) Even with this income, however, and with a very limited range of activity (being confined largely to his room), during the last two years Tesla still managed to fall behind in his hotel bill. This was owing to his unlimited generosity. He was very generous in bestowing tips on all who performed the slightest service for him, and in responding to the slightest suggestion that anyone was in need of assistance.

During the latter part of 1942 he spent most of the time in bed, mentally active but physically weak. He permitted no visitors to come to his room, not even close associates of earlier years. He insisted to hotel employees that he was not ill and refused to listen to questions that he have a doctor visit him. He gave orders that even hotel employees were not to enter his room unless he summoned them.

On January 5, Tuesday morning, he permitted the maid to come to his room, and then gave orders to guard his room closely so that he would not be disturbed. This was done. It was not unusual for Tesla to give orders that he was not to be disturbed for protracted periods. Early Friday morning (January 8) a maid with a premonition, risking his displeasure, entered Tesla's room and found him dead. He looked peaceful, as if resting, with a suggestion of a smile on his gaunt bony face. The superman died as he had lived--alone.

The police were notified that Tesla had died alone and without medical attendance. The coroner declared his death due to natural causes incident to senility; and that he had died on the night of Thursday, January 7, 1943, some hours before the maid entered the room. Operatives from the Federal Bureau of Investigation came and opened the safe in his room and took the papers it contained, to examine them for a reported important secret invention of possible use in the war. The body was removed to Campbell's Funeral Parlors at Madison Avenue and 81st Street.

Funeral services were held at the Cathedral of St. John the Divine, on Tuesday, January 12, at 4 pm. Bishop Manning offered the opening sentences of the Burial Offce and Final Prayer. Following the services, the body was removed to

Ferncliff Cemetery at Ardsley, N. Y., and was later cremated.

AFTERGLOW

EIGHTEEN

DESPITE his celibate life, and his almost hermitlike existence in his own intellectual sphere, Tesla was, in his social contacts, a charming individual. The year he had spent digging ditches and doing hard manual labor, when he could get a job of any kind, and his experience during that time of sleeping in any shelter he could obtain and eating any kind of food he could manage to secure, undoubtedly made a tremendous and lasting, impression on him. The fact that he could never be induced to discuss this period would so indicate. Yet it probably softened him in a beneffcial way--by a going-through-the-mill process. But it had been a grievous insult to his personality to be valued only for the brute strength in his muscles; and this rankled ever after.

Once he had obtained funds through the founding of his laboratory and the sale of his patents to Westinghouse, he thereafter maintained an almost princely status. He knew how to wear clothes to increase the impressiveness of his appearance; his tallness gave him something of an advantage over others; his obvious physical strength brought him a respect that forbade any invasion of his attitude; his excellent English and the care he exercised to use the language correctly, and his command of a half-dozen other languages, established him as a scholar; and the first batch of his alternating-current inventions created for him in the mind of the public a reputation for outstanding scientific accomplishment. The fact that he always spoke of the value of his inventions to the world, and not of the greatness of his own accomplishment, endeared him to all who met him.

When Tesla was riding a tidal wave of popularity during the nineties, he was averse to publicity; but frequently well-known writers for the newspapers were able to break through the barriers and secure "feature" articles. An excellent description of him, keyed to the manner of the period, is contained in an article written by Franklin Chester, in the

Citizen of August 22, 1897. The portion referring to his personal appearance and activities follows:

So far as personal appearance goes no one can look upon him without feeling his force. He is more than six feet tall and very slender. Yet he possesses great physical power. His hands are large, his thumbs abnormally long, and this is a sign of great intelligence. His hair is black and straight, a deep shining black. He brushes it sharply from over his ears, so that it makes a ridge with serrated edges.

His cheekbones are high and prominent, the mark of the Slav: his skin is like marble that age has given the first searing of yellow. His eyes are blue, deeply set, and they burn like balls of fire. Those weird flashes of light he makes with his instruments seem also to shoot from them. His head is wedge shaped. His chin is almost a point.

Never was a human being filled with loftier ideals. Never did a man labor so unceasingly, so earnestly, so unselfishly for the benefft of the race. Tesla is not rich. He does not trouble himself about money. Had he chosen to follow in the footsteps of Edison he could be, perhaps, the richest man in the world, and Tesla is just 40 years old.

Tesla is, above all things, a serious man, undoubtedly the most serious man in New York. Yet he has a keen sense of humor and the most beautiful manners. He is the most genuinely modest of men. He knows no jealousy. He has never decried the accomplishments of another, never refused credit.

When he talks you listen. You do not know what he is saying, but it enthralls you. You feel the importance without understanding the meaning. He speaks the perfect English of a highly educated foreigner, without accent and with precision. He speaks eight languages equally well.

The daily life of this man has been the same, practically, ever since he has been in New York. He lives in the Gerlach, a very quiet family hotel, in 27th street, between Broadway and Sixth avenue. He starts for his laboratory before 9 o'clock in the morning, all day long he lives in his weird, uncanny world, reaching forth to capture new power to gain fresh knowledge.

No stranger ever sees him at his work. No one knows of his assistants. At rare intervals he presents some experiments in his laboratory, and there is no sacrifice that thousands of people would not make to gain admission to these.

Usually he works until 6 o'clock, but he may stay later. The absence of natural light does not trouble him. Tesla makes sunlight in his workshop.

At exactly 8 o'clock he enters the Waldorf. He is attired in irreproachable evening clothes. In the winter time he never wears an evening jacket, but always the coat with tails.

He finishes his dinner at exactly 10 o'clock, and leaves his hotel, either to go to his rooms to study or to return to his laboratory to work through the night.

Arthur Brisbane, who later became Hearst's famous editor, interviewed Tesla and published in The World, August 22, 1894, the longest story he had written on a famous person. He declared Tesla "Our Foremost Electrician--Greater Even than Edison," and included the following description of him:

He has eyes set very far back in his head. They are rather light. I asked him how he could have such light eyes and be a Slav. He told me that his eyes were once much darker, but that using his mind a great deal had made them many shades lighter. I have often heard it said that using the brain makes the eyes lighter in color. Tesla's confirmation of the theory through his personal experience is important.

He is very thin, is more than six feet tall, and weighs less than a hundred and forty pounds. He has very big hands. His thumbs are remarkably big, even for such big hands. They are extraordinarily big. This is a good sign. The thumb is the intellectual part of the hand. The apes have very small thumbs. Study them and you will notice this.

Nikola Tesla has a head that spreads out at the top like a fan. His head is shaped like a wedge. His chin is as pointed as an ice-pick. His mouth is too small. His chin, though not weak, is not strong enough. His face cannot be studied and judged like the faces of other men, for he is not a worker in practical fields. He lives his life up in

the top of his head, where ideas are born, and up there he has plenty of room. His hair is jet black and curly. He stoops--most men do when they have no peacock blood in them. He lives inside of himself. He takes a profound interest in his own work. He has that supply of self-love and self-confidence which usually goes with success. And he differs from most of the men who are written and talked about in the fact that he has something to tell.

Tesla had, to be sure, a sense of humor and enjoyed putting over a subtle joke. Before the period in which he became a regular diner at the Waldorf-Astoria, he dined nightly at Delmonico's, then the smartest hostelry in the city, and a gathering place for "The 400." Tesla was the most famous and spectacular figure among the famous patrons of the famous place, but he always dined alone. He could never be induced to join other groups and never had a guest of his own. After dining he would always return to work at his laboratory.

One evening some of his friends, believing that he was working too hard and should get some relaxation, induced him to join them in a game of billiards. They assumed he had neglected to learn how to play games, so, on arriving at the billiard room, they explained to him how to hold the cue, strike the balls, and other elements of the game. Tesla had not played billiards in a dozen years; but during his second year at Graumltz, when he was a year ahead in his studies and spent his evenings in the cafe's, he had become an expert billiardist. When the experts at Delmonico's gave him preparatory instruction, he asked some "dumb" questions, and made some intentional miscues. Taking on one of the players and still asking silly questions, he tried the most diffcult way of making shots--to demonstrate his purely amateur status--and made them, to the amazement of the experts. Several of them took him on that evening, and he defeated all of them with badly unbalanced scores. He declared the new game give him a wonderful opportunity to practice very abstract mathematical theories; and the experts at Delmonico's spread stories about the wonderful accomplishment of Scientist Tesla in mastering the game in a single evening and defeating the best players in the city. The story got into the newspapers. Tesla refused to play any more, declaring he was in danger of becoming so enthusiastic over the game that it would interfere with his researches.

This same man magnificent who graced the Waldorf-Astoria and Delmonico's was not averse, however, to visiting the Bowery, which was but a block away from his Houston Street laboratory. He repaired to a thirst-quenching emporium on that thoroughfare one afternoon shortly after a denizen of the Bowery, Steve Brodie, had achieved fame by jumping, or at least claiming to have jumped, off the Brooklyn Bridge. As Tesla raised his glass of whiskey he said to the bartender: "You know what Steve said as he was about to jump off the bridge--`Down he goes"'; and with that he downed his liquor in a gulp.

A near-by drinker, a little the worse for several, misunderstood Tesla's remark and got the impression he had heard Steve Brodie telling the final episode of his feat. He rushed up to Tesla to buy him a drink, and was joined by his friends. Tesla with a laugh shook them off and dashed out of the bar, while the misguided drinker started after him yelling, "Stop him, that's Steve." On the street the pedestrians misunderstood the thick-tongued drinker's shout and joined him in the chase, calling "Stop, thief!" Tesla's long legs rendered him a valuable service and he got a lead on the crowd, dashed into an alley, over a fence and climbed a fire escape on the back of his own building, reached his laboratory through a window, quickly donned a blacksmith's apron and started hammering a bar of metal. His pursuers, however, failed to trace him.

Tesla was idolized by the Serbians in New York. A great many of them could claim to be distant relatives through either the Tesla or Mandich side of the family, and those who could not claim this distinction revered him none the less, despite the fact he never accepted invitations to take part in their social or other functions.

One day an excited Serbian, a laborer, came to his apartment at the Waldorf-Astoria to beg his aid. He had gotten into a fight and pummeled a fellow Serbian, who had sworn out a warrant for his arrest. The visitor did not have any money but wanted to go to Chicago to escape arrest. Would Tesla please lend him the money for his railroad fare?

"So you assaulted a man and now want to run away to escape punishment," said Tesla. "You may run away from the law but you are not going to escape punishment; you are going to get it right now!" Seizing a cane and grasping the man by

the back of the neck, he ran him around the room, beating the dust out of the seat of his trousers until the man cried for mercy.

"Do you think you can be a better man in Chicago and keep out of fights?" Tesla asked him. The man was sure he could. He received the money for his railroad fare and a few dollars more.

So great was Tesla's popularity in the nineties that many persons came to dine in the Palm Room at the Waldorf just to catch a glimpse of the famous inventor. He arranged to leave his offce at six, but just before leaving he would telephone the order for his dinner to the headwaiter, always insisting that none less could serve him. The meal was required to be ready at eight o'clock. In the meantime he would go to his room and array himself in formal evening attire--white tie and tails. He dined alone, except on the rare occasions when he would give a dinner to a group to meet his social obligations.

Money was always a nuisance detail to Tesla. For about fifteen years, following 1888, he always had all he needed to meet his obligations; and he lived well. After about 1902 his financial road became quite rocky--but his fame was greater than ever, and likewise the need for maintaining his standard of living if he was to recoup his fortune. He continued to stage frequent large dinners at the Waldorf to repay his social obligations, and had diffculty in accustoming himself to a money deffciency. On one occasion, when a large party was assembled in a private dining room, the headwaiter whispered to him that a most excellent dinner was prepared and ready to serve as he had ordered it, but that the credit department insisted it could not be served until he paid for it in advance. "Get Mr. Morgan on the telephone in the manager's offce and I will be down there immediately," Tesla fumed. In a short time a more-than-adequate check was delivered to Tesla by a messenger. Many such occasions are reported to have arisen, but were always straightened out in the manager's offce, usually without any outside intervention.

The closest approach to home life which Tesla enjoyed came to him through Robert Underwood Johnson diplomat and poet, and one of the editors of the Century Magazine, whose home was in Madison Avenue in the fashionable Murray Hill district. Tesla and Johnson were very close friends. A love

of poetry was one of the several interests they had in common. Johnson wrote, and published in the Century, in April, 1895, a short poem on his visit to Tesla's laboratory. This led to a cooperative enterprise in which he paraphrased many pieces of Serbian poetry from literal translations made by Tesla, who could recite many thousands of lines of such material from memory. About forty pages of these translations, with an introductory note by Tesla, appeared in the next edition of Poems by Johnson.

Persons famous in all fields of activity were frequent guests in the Johnson home, and formal dinners were constantly being held for brilliant assemblages of personalities. Tesla was present as frequently as he could be induced to come, but he preferred to avoid all formal dinners as much as possible. He was, however, a very frequent informal visitor, arriving unexpected, and often at most unusual hours. It was not uncommon for Tesla to arrive at the Johnson home after midnight, after the family had retired, and for "Bob" and "Nick" to sit up for hours reveling in the exchange of a magnificent array of ideas. (Johnson and "Willie" K. Vanderbilt, were, as has been noted, the only individuals who rated the exchange of first names with Tesla.)

Tesla's visits to the Johnson home were always many hours long. He would arrive in a hansom cab, which he always required to wait for him to return to his hotel only a few blocks distant. The Johnson children learned to take advantage of this, and when he arrived early in the evening they would get his permission to use the cab for a drive through Central Park while he chatted at home.

Tesla enjoyed the opera and at one time attended the performances quite frequently. William K. Vanderbilt's box was always available to him, as likewise were those of many other patrons of the Metropolitan. He occasionally attended the theatre. His favorite actress was Elsie Ferguson who, he declared, knew how to dress and was the most graceful woman he had ever seen on the stage. He gradually dropped both the theatre and opera in favor of the movies, but was an infrequent attendant even at those. He would not witness a tragedy but enjoyed comedy and the lighter aspects of entertainment.

One of his close friends was Rear Admiral Richmond Pearson Hobson, the Spanish American War hero. In later years,

Hobson was the only person who was able to cajole Tesla into breaking a long vigil at his intellectual pursuits for a session at the movies.

Tesla did not subscribe to any religion. Early in life he severed his relations with the Church and did not accept its doctrines. At his seventy-fifth birthday dinner he declared that that which is called the soul is merely one of the functions of the body, and that when the activities of the body cease, the soul ceases to exist.

It is difficult for a man to appear as a hero to his secretary, but to Miss Dorothy F. Skerritt, who served Tesla in this capacity for many years until he closed his offce when he was seventy, he remained a saintly superman. Her description of Tesla, at this age, records him as possessing the same magnetic personality that so impressed writers thirty years earlier. She wrote:

As one approached Mr. Tesla he beheld a tall, gaunt man. He appeared to be an almost divine being. When about 70 he stood erect, his extremely thin body immaculately and simply attired in clothing of a subdued coloring. Neither scarf pin nor ring adorned him. His bushy black hair was parted in the middle and brushed back briskly from his high broad forehead, deeply lined by his close concentration on scientific problems that stimulated and fascinated him. From under protruding eyebrows his deepset, steel gray, soft, yet piercing eyes, seemed to read your innermost thoughts. As he waxed enthusiastic about fields to conquer and achievements to attain his face glowed with almost ethereal radiance, and his listeners were transported from the commonplaces of today to imaginative realms of the future. His genial smile and nobility of bearing always denoted the gentlemanly characteristics that were so ingrained in his soul.

Until the last, Tesla was meticulously careful about his clothes. He knew how to dress well and did so. He declared to a secretary, in 1910, that he was the best-dressed man on Fifth Avenue and intended to maintain that standard. This was not because of personal vanity. Neatness and fastidiousness in clothes were entirely in harmony with every other phase of his personality. He did not maintain a large wardrobe and he wore no jewelry of any kind. Good clothes fitted in very nicely with his courtly bearing. He observed, however, that in the matter of clothes the world

takes a man at his own valuation, as expressed in his appearance, and frequently eases his way to his objective through small courtesies not extended to less prepossessing individuals.

He was partial to the waisted coat. No matter what he wore, however, it carried an air of quiet elegance. The only type of hat he wore was the black derby. He carried a cane and wore, usually, gray suede gloves.

Tesla paid $2.50 a pair for his gloves, wore them for a week and then discarded them even though they still appeared as fresh as when they came from the maker. He standardized his style of ties and always wore the four-in-hand. The design motive was of minor importance but the colors were limited to a combination of red and black. He purchased a new tie every week, paying always one dollar.

Silk shirts, plain white, were the only kind Tesla would wear. As with other articles of his clothing, such as pajamas, his initials were always embroidered on the left chest.

Handkerchiefs he purchased in large numbers because he never sent them to the laundry. After their first use they were discarded. He liked a good quality of linen and purchased a standard package brand. His collars were never laundered, either. He never wore one more than once.

Tesla always wore high-laced shoes, except on formal occasions. He required a long narrow shoe and insisted on a last that had a neatly tapered square-toe effect. His shoes were undoubtedly made to order, for the tops extended halfway up his calf, a style that could not be purchased in merchant shoe stores. His tallness in all probability made this additional support at the ankles desirable.

The single use of articles, such as handkerchiefs and collars, extended to napkins. Tesla had a germ phobia, and it acted like so much sand in the social machinery of his life. He required that the table he used in the dining room of his hotel be not used by others. A fresh table cloth was required for every meal. He also required that a stack of two dozen napkins be placed on the left side of the table. As each item of silverware and each dish was brought to him--and he required that they be sterilized by heat before leaving the kitchen--he would pick each one up, interposing

a napkin between his hand and the utensil, and use another napkin to clean it. He could then drop both napkins on the floor. Even for a simple meal, he usually ran through the full stock of napkins. Flies were his pet abomination. A fly alighting on his table was adequate cause for removing everything from the table and making an entirely new start with the meal.

Tesla was fortunate in that the headwaiter at the Waldorf-Astoria, during the period he was living there, Mr. Peterson, was afterward headwaiter at the Hotel Pennsylvania, where he later lived for several years. A story was in circulation to the effect that both at the Waldorf and at the Pennsylvania a special chef was employed to prepare Tesla's meals, but Mr. Peterson states that this story was untrue.

In his earlier years, for dinner, he greatly enjoyed fine thick steaks, preferably the filet mignon, and it was not unusual for him to consume two or three at a sitting. Later his preference turned to lamb, and he would frequently order a roast saddle of it. While the saddle was usually large enough to serve a party of several persons, as a rule he ate of it only the central portion of the tenderloin. A crown of baby lamb chops was another favorite dish. He also relished roast squab with nut stuffng. In fowl, however, his choice was roast duck. He required that it be roasted under a smothering of celery stalks. This method of preparing the duck was of his own devising. He very often made it the central motif around which a dinner was designed when entertaining friends, and on such occasions he would go to the kitchen to superintend its preparation. Duck so prepared was nevertheless delicious. Of the duck he ate only the meat on either side of the breast bone.

With the passing decades, Tesla shifted away from a meat diet. He substituted fish, always boiled, and finally eliminated the meat entirely. He later almost entirely eliminated the fish and lived on a vegetarian diet. Milk was his main standby, and toward the end of his life it was the principal item of diet, served warm.

As a youth he drank a great deal of coffee, and, while he gradually became aware that he suffered unfavorable influences from it, he found it a diffcult habit to break. When he finally made the decision to drink no more of it, he adhered to his good intentions but was forced to

recognize the fact that the desire for it remained. He combated this by ordering with each meal a pot of his favorite coffee, and having a cup of it poured so that he would get the aroma. It required ten years for the aroma of the coffee to transform itself into a nuisance so that he felt secure in no longer having it served. Tea and cocoa he also considered injurious.

He was a heavy smoker in his youth, mostly of cigars. A sister who seemed fatally ill, when he was in his early twenties, said she would try to get better if he would give up smoking. He did so immediately. His sister recovered, and he never smoked again.

Tesla drank whiskey, for this he considered a very beneffcial source of energy and an invaluable means for prolonging life. It was responsible, he believed, for the longevity enjoyed by many of his ancestors. It would enable him, he declared early in the century, to live to one hundred and fifty. When prohibition came along with the First World War, he denounced it as an intolerable interference with the rights of citizens. Nevertheless, he promptly gave up the use of whiskey and all other beverages except milk and water. He declared, however, that the elimination of whiskey would reduce his expectation of life to one hundred and thirty years.

Stimulants were not necessary to help him to think, Tesla said. A brisk walk he found much better as an aid for concentration. He seemed to be in a dream when walking. Even one whom he knew very well he would pass at close range and not see, though he might appear to be looking directly at him. His thoughts were usually miles away from where he was. It was this practice, apparently, which was responsible for the accident, in 1937, when he was struck and severely injured by a taxicab. As a matter of fact, he had stated in an interview two years earlier that he would probably be killed by a truck or taxicab while jaywalking.

Tesla's weight, stripped, was 142 pounds, and, except during brief periods of illness, hardly varied a pound from 1888 to about 1926, when he intentionally reduced his weight five pounds.

One of Tesla's indulgences, over many years, was scalp massages. He would visit a barbershop three times a week and have the barber rub his scalp for half an hour. He was

insistent upon the barber placing a clean towel on his chair but, strangely enough, he did not object to the use of the common shaving mug and brush.

Tesla always claimed that he never slept more than two hours a night. His retiring time, he said, was five am, and he would arise at ten am after spending only two hours in sleep, three hours being too much. Once a year, he admitted, he would sleep for five hours--and that would result in building up a tremendous reserve of energy. He never stopped working, he claimed,--even when asleep. Tesla laughed at Edison's claim that he slept only four hours a night. It was a regular practice with Edison, he said, to sit down in his laboratory and doze off into a three-hour nap about twice a day. It is possible that Tesla, too, obtained some sleep in a similar fashion, perhaps without being conscious of the fact. Hotel employees have related that it was quite common to see Tesla standing transfixed in his room for hours at a time, so oblivious to his surroundings that they were able to work around his room without his being, apparently, aware of their presence.

Tesla always provided his offce with a separate washroom which no one but himself was permitted to use. He would wash his hands on the slightest pretext. When he did so, he required that his secretary hand him a freshly laundered towel each time to dry them.

He went to extremes to avoid shaking hands. He usually placed his hands behind his back when anyone approached who he feared might make an effort to shake hands, and this frequently led to embarrassing moments. If by chance a visitor to his offce should catch him off guard and shake his hand, Tesla was so upset that he would be unable to pay attention to the visitor's mission and frequently would dismiss him before it was completely stated; and immediately he would rush to the washroom and scour his hands. Workmen eating their lunch with dirty hands almost nauseated him.

Pearls, too, were one of Tesla's phobias. If a woman guest at a dinner party to which he was invited wore pearls, he was unable to eat. Smooth round surfaces, in general, were an abomination to him; it had even taken him a long time to learn to tolerate billiard balls.

Tesla never knew the experience of having a headache. In spite of a number of cases of serious illness, in his independent years he was never attended by a doctor.

There were reasons for practically all of Tesla's phobias, not all of them generally known. His germ phobia can be traced back to his two serious illnesses early in life, both of which were probably cholera, a disease constantly prevalent in his native land, caused by a germ transmitted by impure drinking water and by contact between individuals.

Tesla was not oblivious of his idiosyncrasies; he was quite aware of them and of the friction which they caused in his daily life. They were an essential part of him, however, and he could no more have dispensed with them than he could his right arm. They were probably one of the consequences of his solitary mode of life or, possibly, a contributing cause of it.

6NINETEEN

Tesla's mind always seemed to be under an explosive pressure. An avalanche of ideas was forever straining for release. He seemed to be unable to keep up with the flood of his own thoughts. He never had suffcient facilities to keep his accomplishments equal to his projects. If he had an army of adequately trained assistants, he would still be insuffciently equipped. As a result, those associated with him always experienced a sense of "drive"; yet he was a most generous employer both in the matter of wages paid and the number of hours of work required. He frequently demanded overtime work but always paid generously for it.

Nevertheless, Tesla was not an easy man to work for. He was most meticulously neat in his personal affairs and required all workers to be the same. He was an excellent mechanic and set extremely high standards, by his own accomplishments, for all work done in his shops. He greatly admired cleverness in his assistants, frequently rewarding them with extra compensation for diffcult jobs well done,

but was extremely impatient with stupidity and carelessness.

Although Tesla maintained a staff of draughtsmen, he never used them in his own design work on machines, and tolerated them only because of unavoidable contacts with other organizations. When having machines constructed for his own use, he would give individual instruction on each part. The workman scheduled to do the machinework would be summoned to Tesla's desk, where the inventor would make an almost microscopically small sketch in the middle of a large sheet of paper. No matter how detailed the piece of work, or its size, the sketch was always less than one inch in its largest dimensions. If Tesla made the slightest slip of the pencil in drawing the sketch, he would not make an erasure but would start over on another sheet of paper. All dimensions were given verbally. When the drawing was finished, the workman was not permitted to take it with him to the shop to guide him in his work. Tesla would destroy the drawing and require the machinist to work from memory. Tesla depended entirely on his memory for all details, he never reduced his mentally completed plans to paper for guidance in construction--and he believed others could achieve this ability if they would make suffcient effort. So he sought to force them to try by insisting on their working without drawings.

All those who worked with Tesla greatly admired him for his remarkable ability to keep track of a vast number of finest details concerning every phase of the many projects he had under way simultaneously. No employee was ever given any more information than was absolutely essential for completing a project. No one was ever told the purposes for which a machine or article was to be used. Tesla claimed that Edison received more ideas from his associates than he contributed, so he himself bent over backward to avoid this situation. He felt that he was the richest man in the world in the matter of ideas and needed none from anyone else; and he intended to prevent all from contributing any.

Tesla was probably very unfair to Edison in this respect. The two men were entirely different and distinct types. Tesla was totally lacking in the university type of mind; that is, the mind which is adapted to cooperate with others in acquiring knowledge and conducting research. He could neither give nor receive, but was entirely adequate to his own requirements. Edison had more of the cooperative, or

executive, type of mind. He was able to attract brilliant associates and to delegate to them major portions of his inventive research projects. He had the ability to act as a catalyzer, to stimulate them to creative mental activities, and thus multiply his own creative abilities. If Tesla had possessed this ability, his record of accomplishment would have been tremendously magnified.

The inability to work with others, the inability to share his plans, was the greatest handicap from which Tesla suffered. It completely isolated him from the rest of the intellectual structure of his time and caused the world to lose a vast amount of creative thought which he was unable to translate into complete inventions. It is a duty of a master to train pupils who will carry on after him--but Tesla refused to accept this responsibility. Had Tesla, in his most active period, associated with him a half-dozen brilliant young scientists, they would have been in a position to link him with the engineering and scientific worlds from which, despite his eminence and his outstanding accomplishments, he was to a great extent isolated because of his unusual personal characteristics. His fame was so secure that the success of his assistants could not have detracted from it; but the master would have shone more brightly in the brilliant accomplishments of his pupils. He might well have attracted some practical young men who could have aided him by assuming the burden of making practical application of some of the minor but important inventions from which he could have earned suffcient profit to pay the cost of maintaining his laboratories. Many scores of important inventions have undoubtedly been lost to the world because of Tesla's intellectual hermit characteristics. Undoubtedly, he indirectly inspired many young men to become inventors.

Tesla responded powerfully to personal idiosyncrasies in individuals with whom he worked. When his reaction was unfavorable, he was unable to tolerate the presence of the person within eyeshot. When carrying on his experimental work at the Allis Chalmers plant in Milwaukee, for example, he did not increase his popularity by insisting that certain workers be dropped from the crew working on the turbine because he did not like their looks. Since, as noted earlier, he had already antagonized the engineers in that plant by going over their heads to the president and board of directors, the turbine job went forward in something less than a cooperative atmosphere.

Tesla was thoroughly impractical throughout, too, in handling money matters. When he was working on the Union Sulphur Company turbine project, a ship was made available for his use, free, during the day; but if he worked after six pm it would cost him $20 per hour. He never showed up at the ship until six o'clock. Every night, in addition, he had to hand out $10 for suppers for the crew. In the course of a year these costs totaled about $12,000, which must have cut heavily into the retainer he received. Nor were these his only additional expenses. Almost every night he handed a $5 tip to his principal assistants among the crew, and once a week to all members of the crew. These manifestations of generosity were not, of course, a total loss to Tesla; they might rather be classed as necessities, for he was very dictatorial in directing his assistants.

Inquiries among the employees at hotels where he lived revealed that he had a reputation for acting in a most cavalier manner toward the servants. He was almost cruel in the manner in which he ordered them around, but would make immediate compensation by the generous tips he bestowed.

He was always, however, very considerate of women, and even men, on his offce staff. If any one of them did an unusually fine piece of work, everyone on the staff was informed of it. Criticism was always delivered privately to the individual involved.

Tesla had a standing rule that every messenger boy who came to his offce was to receive a tip of twenty-five cents, and he set aside a fund of $10 a week for this purpose.

If necessity required that he keep his staff of young women secretaries and typists working overtime for several hours, he would provide them with a dinner at Delmonico's. He would hire a cab for the girls and would follow them in another cab. After making arrangements to pay the bill, and paying the tip in advance, he would leave.

Tesla timed his arrival at the offce so that he entered at the stroke of noon. He required that his secretary should be standing immediately inside the door to receive him and take his hat, cane and gloves. His offces were opened by nine o'clock each morning, so all routine matters would be handled before his arrival. Before Tesla arrived, all the shades in the offce had to be drawn so that no outdoor

light was admitted and night conditions were simulated. The inventor, as remarked, was a "sun dodger." He appeared to be at his best at night and at some kind of disadvantage in daylight; at any rate, he preferred the night for work and what he called his recreation.

The only time Tesla would permit the shades of his offce to be raised was when a lightning storm was raging. The various offces he leased faced on open spaces. The 8 West 40th Street offce was on the south side of Bryant Park, in the east end of which was the low-roofed structure that housed the New York Public Library. From his windows on the twentieth floor, he could look beyond the city roof scape below him and obtain a broad view of the sky.

When the rumbles of distant thunder announced that the fireworks of the sky would presently be flashing, it was not only permissible to raise the shades--it was obligatory. Tesla loved to watch lightning flash. The black mohair couch would be drawn close to the windows so that he could lie on it, completely relaxed, while his vision commanded a full view of the northern or the western sky. He was always talking to himself, but during a lightning storm he would become eloquent. His conversation on such occasions was never recorded. He wished to be a lone observer of this gorgeous spectacle, and his secretaries were quite willing that he should be so accommodated. By finger measurements and counting seconds he was able to calculate the distance, length and voltage of each flash.

How thrilled Tesla must have been by these tremendous sparks, many times longer than he had been able to produce in his Colorado Springs laboratory! He had successfully imitated Nature's electrical fireworks, but he had not as yet exceeded her performance.

The ancient Romans sublimated their frustrations by the forces of Nature by creating the mental concept of their mightiest god, Jupiter, as one endowed with the power of creating lightning and hurling his bolts at earth. Tesla had refused to accept frustration; but, like the ancient Romans, he too set up a mental concept, a superman not inferior to the Romans' ruling god, who would control the forces of Nature. Yes, Tesla thoroughly enjoyed a lightning storm. From his mohair couch, he used to applaud the lightning; he approved of it. He may even have been a little bit jealous.

Tesla never married; no woman, with the exception of his mother and his sisters, ever shared the smallest fraction of his life. He idolized his mother and admired his sisters for their intellectual accomplishments. One of his sisters, Marica, exhibited unusual ability as a mathematician and had greater ability than his own for memorizing long passages from books. He attributed to his mother most of his abilities as an inventor, and he continuously spoke in praise of her ability to contrive useful gadgets for the household, often regretting that she had not been born into an environment in which she would have been able to manifest to a larger world her many creative talents. He was not unaware of the values which a woman could bring into a man's life, for he had ever before him the vast contributions which his mother made to his father's welfare and happiness. However, he lived instead a blueprint life, one which he had planned in his early youth, one designed along engineering lines, with all of the time and energies available to be directed to invention and none to be dissipated on emotional projects.

From the romantic point of view, Tesla as a young man was not unattractive. He was too tall and slender to pose as the physical Adonis, but his other qualifications more than compensated for this possible defect. He was handsome of face, had a magnetic personality, but was quiet, almost shy; he was soft spoken, well educated and wore clothes well in spite of inadequate funds with which to keep up a wardrobe. However, he avoided romantic encounters, or any situations that would lead up to them, just as assiduously as other young men sought them. He would not permit his thoughts to wander into romantic channels, and with thoughts successfully controlled, action control became a problem of vanishing magnitude. He did not develop an antagonism to women; he solved the problem, instead, by idealizing them.

A typical instance of how he avoided romance is furnished by an incident that occurred in Paris when he returned to that city to give a lecture on his alternating-current system after he had become world famous. His wonderful discoveries were the principal topic of conversation of the day, and he was the cynosure of all eyes wherever he went. The situation was entirely pleasant to Tesla. Less than ten years before, the executives the Continental Edison Company, in that city, had not alone rejected the

alternating-current system he had offered them but had cheated him of his just earnings. Now he was returning to that city after receiving recognition and wealth in the United States and fame throughout the world. He was in Paris as a returned hero and the world was at his feet.

As he sat in an outdoor cafe; with a young male friend, amidst a chattering, fashionably dressed crowd, a graceful, gorgeously gowned young woman, with a stylishly coiffured crown of red hair, whom he instantly recognized as Sarah Bernhardt, the famous French actress--the "divine Sarah"--swung close to his table and when a few feet away very auspiciously dropped a tiny lace handkerchief.

Tesla was on his feet in an instant. He recovered the handkerchief, and with his hat in his other hand, bowing low from the waist, he handed the wisp of lace to the beautiful tragedienne, saying: "Mademoiselle, your handkerchief." Without even an upward glance at her graciously smiling face, he returned to his chair and resumed his conversation about his experiments on a world wireless system of power transmission.

When a newspaper reporter once asked Tesla why he had not married, his reply, as contained in the published interview was:

I have planned to devote my whole life to my work and for that reason I am denied the love and companionship of a good woman; and more, too.

I believe that a writer or a musician should marry. They gain inspiration that leads to finer achievement.

But an inventor has so intense a nature, with so much in it of wild, passionate quality that, in giving himself to a woman, he would give up everything, and so take everything from his chosen field: It is a pity, too; sometimes we feel so lonely.

In my student days I have known what it was to pass forty-eight hours at a stretch at a gaming table, undergoing intense emotion, that which most people believe is the strongest that can be known, but it is tame and insipid compared with that sublime moment when you see the labor of weeks fructify in a successful experiment that proves your theories. . . .

"Many times has Nikola Tesla known that supreme happiness," said the interviewer, "and he is likely to know it often again. It is impossible that his life work can be finished at forty. It would seem that his powers are only reaching their maturity."

Tesla was not unappreciative of the activities of the many women who showed a sincere interest in his welfare, and who tried to make life tolerable and pleasant for an obviously none-too-well-adjusted scientist projected into a social world from which he would have been only too willing to escape. He spoke glowingly of the first Mrs. Clarence Mackay (e Duer), Mrs. Jordan L. Mott, and of the beauty of Lady Ribblesdale (the former Mrs. John Jacob Astor). He admired the energetic idealism of Miss Anne Morgan; but never was the situation brightened by a single tint of romance.

He was impressed by the tall, graceful and charming Miss Marguerite Merington, a talented pianist and writer on musical subjects, who was a frequent dinner guest at the Johnson home.

"Why do you not wear diamonds and jewelry like other women?" Tesla undiplomatically asked Miss Merington, one evening.

"It is not a matter of choice with me," she replied, "but if I had enough money to load myself with diamonds I could think of better ways of spending it."

"What would you do with money if you had it?" the inventor continued.

"I would prefer to purchase a home in the country, except that I would not enjoy commuting to the suburbs," Miss Merington replied.

"Ah! Miss Merington, when I start getting my millions I will solve that problem. I will buy a square block here in New York and build a villa for you in the center and plant trees all around it. Then you will have your country home and will not have to leave the city."

Tesla was most generous in the distribution of his always still-to-be-gotten millions; none of his friends would ever

have lacked anything they desired if he had had suffcient funds with which to satisfy their wishes. His promises, however, were always to be fulfilled--"When I start getting my millions."

Tesla had, as might be expected, very definite ideas about how women should dress. He also had clear-cut ideas about the feminine figure. He disliked the big "hefty" type and utterly detested fat women. The super-upholstered type, flashily dressed and heavily jeweled, that wasted time in hotel lobbies, were his pet abomination. He liked women trim, slim, graceful and agile.

One of his secretaries, well proportioned and a graceful blonde, wore to the offce one day a dress that was in the very latest style. It was a summer dress made from a pretty print. The prevailing style called for an extremely low waist line, well down on the hips, several inches below its natural location. This gave a relatively short skirt and from the neck to the hips the dress was almost a plain cylinder. The style was very new, and was enjoying an intense but brief wave of popularity. The secretary was an excellent seamstress and had made the dress herself, an accomplishment of which she was justly proud.

Tesla summoned the secretary. She breezed into his sanctum not expecting, but hoping, that he would say something nice about her new dress.

"Miss," he said, "what is that you are wearing? You cannot wear that on this errand on which I wish you to go. I wished to have you take a note to a very important banker down town, and what would he think if someone from my offce should come to him wearing such a monstrosity of a gown? How can you be such a slave to fashion? Whatever the fashion designers say is the style you buy and wear. Miss, you have good sense and good taste, so why did you let the saleslady in the store force a dress like this on you? Now if you were also very clever like my sister who makes all her own dresses you would not be forced to wear any such abominable style as this, then you too could make your own clothes and you could wear sensible gowns. You should always follow nature in the design of your clothes. Do not let a style designer deform nature for you, for then you become hideous instead of attractive. Now, Miss, you get into a cab, so not many people will see you, and go to your

home and get into a sensible dress and return as soon as you can so you can take this letter down town for me."

Tesla never addressed any of his woman employees by either their Christian names or surnames. The only form of address he used to them was "Miss." As he spoke it, it sounded like "Meese," and he could make it very expressive. When he addressed the secretary wearing the gown of which he disapproved, it sounded like "Meeeeeeesssse." It could also be an abrupt, abbreviated expletive.

When a young woman on his office staff left his employ to get married, Tesla preached this sermonette to the remaining members:

"Do not marry too young. When you marry too young, men marry you mostly for your beauty and ten years later when your beauty is gone, they tire of you and become interested in someone else."

Tesla's attitude toward woman was paradoxical; he idealized woman--put her up on a pedestal--and yet he also viewed women in a purely objective and materialistic way, as if no spiritual concepts were involved in their make-up. This was undoubtedly an outward expression of the conflict that was taking place within his own life, between the normal healthy attitude toward female companionship, and the coldly objective planning of his life under which he refused to share the smallest fraction of his life with any woman.

Only the finest type of women could approach within friendship distance of Tesla, and such individuals were idealized by him without the least diffculty; he could desex them mentally so that the vector or emotional attraction was eliminated. To the remainder he did not bother to apply this process. They had no attraction for him.

Out of the welter of human affairs, however, he visioned the rising of a superior breed of human beings, few in number but of vastly elevated intellectual status, while the remainder of the race leveled itself on a merely productive and reproductive plane, which, however, could represent a considerable improvement over existing conditions. He sought to fashion an idealism out of purely materialistic concepts of human nature. This was a hold-

over from the materialistic, agnostic views which were fashionable and prevalent among scientists in the formative period of his youth. This phase of his attitude was not particularly hard to break down in his latter years; but the phase which represented an engineering approach to the solution of problems of the human race was more firmly held, although he was willing to admit that spiritual factors had a real existence and should be considered in such planning.

His views concerning women received their only expression in published form in the article written for Collier's, in 1924, by John B. Kennedy, from an interview with Tesla. On this occasion, he said:

The struggle of the human female toward sex equality will end up in a new sex order, with the females superior. The modern woman, who anticipates in merely superficial phenomenon the advancement of her sex, is but a surface symptom of something deeper and more potent fomenting in the bosom of the race.

It is not in the shallow physical imitation of the men that women will assert first their equality and later their superiority, but in the awakening of the intellect of women.

But the female mind has demonstrated a capacity for all the mental acquirements and achievements of men, and as generations ensue that capacity will be expanded; the average woman will be as well educated as the average man, and then better educated, for the dormant faculties of her brain will be stimulated into an activity that will be all the more intense because of centuries of repose

Women will ignore precedent and startle civilization with their progress.

The acquisition of new fields of endeavor by women, their gradual usurpation of leadership, will dull and finally dissipate feminine sensibilities, will choke the maternal instinct so that marriage and motherhood may become abhorrent and human civilization draw closer and closer to the perfect civilization of the bee.

The significance of this lies in the principle dominating the economy of the bee--the most highly organized and

intelligently coordinated system of any form of non-rational animal life--the all governing supremacy of the instinct for immortality which makes divinity out of motherhood.

The center of all bee life is the queen. She dominates the hive, not through hereditary right, for any egg may be hatched into a reigning queen, but because she is the womb of the insect race.

There are vast desexualized armies of workers whose sole aim and business in life is hard work. It is the perfection of communism, of socialized, cooperative life wherein all things, including the young, are the common property of all.

Then there are the virgin bees, the princess bees, the females which are selected from the eggs of the queen when they are hatched and preserved in case an unfruitful queen should bring disappointment to the hive. And there are the male bees, few in number, unclean in habit, tolerated only because they are necessary to mate with the queen. . . .

The queen returns to the hive, impregnated, carrying with her tens of thousands of eggs--a future city of bees, and then begins the cycle of reproduction, the concentration of the teeming life of the hive in unceasing work for the birth of the new generation.

Imagination falters at the prospect of a human analogy to this mysterious and superbly dedicated civilization of the bee; but when we consider how the human instinct for race perpetuation dominates life in all its normal and exaggerated and perverse manifestations, there is ironic justice in the possibility that this instinct, with the intellectual advance of women, may be finally expressed after the manner of the bee, though it will take centuries to break down the habits and customs of peoples that bar the way to such a simply and scientifically ordered civilization.

If Tesla had been even half as well informed in the biological sciences as he was in the physical sciences, he probably would not have seen a possible solution of human problems in the social structure adapted to the limitations of an insect species which can never hope to utilize tools, and draw upon natural forces vastly exceeding their own

energy sources, to work out their destiny. And more important is the fact that the bees can never hope to use advanced intellectual powers to improve their biological status, as can the human race. With a better knowledge of biological sciences he might have discovered that the physiological processes that control perpetuation of the individual are indissolubly linked to the processes that control the perpetuation of the race, and that by utilizing as much biological knowledge and spiritual insight, in designing a superman, as he utilized materialistic engineering principles, he might have designed himself as a more complete and potent superman, better adjusted to merging his intellectual creations into the current life of the race through a better understanding of human affairs.

Tesla tried to convince the world that he had succeeded in eliminating love and romance from his life; but he did not succeed. That failure (or perhaps from another aspect it was a success), is the story of the secret chapter of Tesla's life.

TWENTY

THE most obvious outward characteristic of Tesla's life was his proclivity for feeding pigeons in public places. His friends knew he did it but never knew why. To the pedestrians on Fifth Avenue he was a familiar figure on the plazas of the Public Library at 42nd Street and St. Patrick's Cathedral at 50th Street. When he appeared and sounded a low whistle, the blue- and brown- and white-feathered flocks would appear from all directions, carpet the walks in front of him and even perch upon him while he scattered bird seed or permitted them to feed from his hand.

During the last three decades of his life, it is probable that not one out of tens of thousands who saw him knew who he was. His fame had died down and the generation that knew him well had passed on. Even when the newspapers, once a year, would break out in headlines about Tesla and his latest predictions concerning scientific wonders to come, no one associated that name with the excessively tall, very lean man, wearing clothes of a bygone era, who almost daily appeared to feed his feathered friends. He was just one of the strange individuals of whom it takes a great many of varying types to make up a complete population of a great metropolis.

When he started the practice, and no one knows just when that was, he was always dressed in the height of fashion and some of the world's most famous figures could frequently be seen in his company and joining him in scattering the bird seed, but there came a time when he paid less attention to his clothes, and those he wore became more and more old fashioned.

Fifth Avenue after midnight is a far different thoroughfare than the busy artery of human and vehicular traffic it is during the day. It is deserted. One can walk for blocks and meet no one except a policeman. On several occasions the author, by chance, met Tesla on an after-midnight walk up Fifth Avenue, going toward the library. Usually Tesla was quite willing to have one walk with him and chat upon a street encounter during the day, but on these after-midnight occasions he was definite about his desire to be left alone. "You will leave me now," he would say, bringing an abrupt end to a conversation hardly begun. The natural assumption was that Tesla was engaged on a definite line of thought and did not wish his mind to be diverted from its concentration on some knotty scientific problem. How far this was from the truth! And, as I learned much later, what a sacred significance these midnight pilgrimages to feed the pigeons--which would come to his call, even from their nocturnal roost--had for him!

It was hard for almost everyone to understand why Tesla, engaged in momentous scientific developments, working twice as many hours as the average individual, could see his way clear to spend time scattering bird seed. The Herald Tribune, in an editorial, once stated: "He would leave his experiments for a time and feed the silly and inconsequential pigeons in Herald Square."

It was a routine procedure in Tesla's offce, however, for one of his secretaries to go down town on a given day each week and purchase three pounds each of rape, hemp and canary seed. This was mixed in his offce, and each day he took a small paper bag filled with the seed and started on his rounds.

If, on any day, he was unable to make his pigeon-feeding rounds, he would call a Western Union messenger boy, pay him his fee, plus a dollar tip, and send him to feed the birds.

In addition to feeding the birds in the streets, Tesla took care of pigeons in his rooms in the various hotels in which he made his home. He usually had basket nests for from one to four pigeons in his room and kept a cask of seed on hand to feed them. The window to the room in which he kept these nests was never closed.

Tesla became quite ill in his 40th Street offce, one day in 1921. He was unable to work and lay upon his couch. As the symptoms became more alarming and there was a possibility that he might not be able to return to his room in the Hotel St. Regis, he summoned his secretary to give her an "important" message. As he spoke the important message, he required the secretary to repeat each phrase after him to make sure that no errors would be made. This required repetition was a usual procedure with him; but in this case he was so ill, practically prostrate, that he seemed hardly to have energy enough to speak the message a single time.

"Miss," he whispered, "Call Hotel St. Regis--"

"Yes sir," she responded, "Call Hotel St. Regis--"

"Get the housekeeper on the fourteenth floor--"

"Get the housekeeper on the fourteenth floor--"

"Tell her to go to Mr. Tesla's room--"

"Tell her to go to Mr. Tesla's room--"

"And feed the pigeon today--"

"And feed the pigeon today--"

"The white female with touches of light gray in its wings--"

"The white female with touches of light gray in its wings--"

"And to continue doing this--"

"And to continue doing this--"

"Until she receives further orders from me--"

"Until she receives further orders from me--"

"There is plenty of feed in Mr. Tesla's room."

"There is plenty of feed in Mr. Tesla's room."

"Miss," he pleaded, "this is very important. Will you repeat the whole message to me so I can be sure you have it correct."

"Call Hotel St. Regis; get the housekeeper on the fourteenth floor. Tell her to go to Mr. Tesla's room and feed the pigeon today, the white female with touches of light gray on its wings, and continue doing this until she receives further orders from me. There is plenty of feed in Mr. Tesla's room."

"Ah, yes," said Tesla, his eyes brightening as he spoke, "the white one with touches of light gray in its wings. And if I am not here tomorrow, you will repeat that message then and every day until you get my further orders. Do it now, Miss--it is very important."

Tesla's orders were always carried out to the letter and this one particularly, since he had placed such unusual emphasis on it. His secretary and the members of his staff felt that his illness must be more serious than it seemed to be, since at a time when he had a great many very serious problems on his hands and he appeared to be on the verge of a siege of illness, the more pressing situations were completely forgotten and his only thought was of a pigeon. He must be delirious, so they thought.

Some months later Tesla failed one day to show up at his offce, and when his secretary telephoned to his hotel, the inventor informed her that he was all right, but that his pigeon was ill and he dared not leave the room for fear she would need him. He remained in his room for several days.

About a year later Tesla came to his offce earlier than usual one day, and apparently very much disturbed. He carried a small bundle in a tender manner on his bent arm. He telephoned to Julius Czito, a machinist on whom he frequently depended to perform unusual tasks, and asked him to come to the offce. Czito lived in the suburbs. He told him briefly that the bundle contained a pigeon that had

died in his room at the hotel, and that he desired to have it properly buried on Czito's property where the grave could be cared for. Czito, in relating the incident years afterward, said he was tempted, on leaving the offce, to drop the package in the first garbage can he found; but something caused him to desist and he took it to his home. Before he could perform the burial, Tesla telephoned to his home and asked him to return the package the next morning. How Tesla disposed of it is not known.

In 1924 Tesla's financial condition fell to a very low level. He was completely broke. He was unable to pay his rent and there were some judgments against him for other unpaid bills. A deputy sheriff appeared at his offce one afternoon to seize everything in the offce to satisfy a judgment. Tesla managed to talk the sheriff into delaying seizure. When the offcial had gone he took stock of his situation. He had not paid his secretaries' wages for two weeks and he now owed them for another fraction of a week. He was entirely without funds in the bank. A search of his safe disclosed that the only object of negotiable value was the heavy gold Edison Medal presented to him by the American Institute of Electrical Engineers in 1917.

"Miss, and Miss," he said, addressing the secretaries. "This medal contains about one hundred dollars' worth of gold. I will have it cut in half and give each of you one-half, or one of you can take all of it and I will later pay the other."

The two young women, Miss Dorothy F. Skerritt and Miss Muriel Arbus, refused to permit him either to damage or part with the medal, and offered instead to aid him with the meager amounts of cash they had in their purses, which offer he refused with thanks. (A few weeks later the girls received their back salaries, at $35 per week, and an additional two weeks' salary.)

A search of the cash drawer revealed a little over $5.00--all the money he possessed.

"Ah! Miss," he said, "that will be enough to buy the bird seed. I am all out of seed, so will you go down town in the morning and purchase some and deliver it to my hotel."

Again calling his trusted aide, Czito (whom he was forced to leave unpaid to the extent of $1,000), he put up to him

the problem of vacating the offce immediately. Within a few hours the entire contents of the offces were stored in a near-by offce building.

A short time later he was forced to leave his apartment in the Hotel St. Regis. His bill had been unpaid for some time, but the immediate cause was associated with pigeons. He had been spending more time in his hotel room, which also became his offce, and devoted more time to feeding pigeons. Great flocks of them would come to his windows and into the rooms, and their dirt on the outside of the building became a problem to the management and on the inside to the maids. He sought to solve the problem by putting the birds in a hamper and having George Scherff take them to his Westchester home. Three weeks later, when first given their freedom, they returned, one making the trip in half an hour. Tesla was given his choice of ceasing to feed the pigeons or leaving the hotel. He left.

He next made his home at the Hotel Pennsylvania. He remained there a few years and the same situation, both as to bills and pigeons, developed. He moved to the Hotel Governor Clinton--and in about a year went through the same experience. He next moved to the Hotel New Yorker, in 1933, where he spent the final ten years of his life.

After midnight one night in the fall of 1937, Tesla started out from the Hotel New Yorker to make his regular pilgrimage to the Cathedral and the Library to feed the pigeons. In crossing a street a couple of blocks from the hotel an accident happened, how is unknown. In spite of his agility, he was unable to avoid contact with a moving taxicab, and was thrown heavily to the ground. He raised no question as to who was at fault, refused medical aid, and asked merely to be taken to his hotel in another cab.

Arriving at the hotel, he went to bed and had scarcely got under the covers when he telephoned for his favorite messenger boy, Kerrigan, from a near-by Western Union offce, gave him the package of bird seed and directed him to complete the task which he had started and the accident interrupted.

The next day, when it was apparent that he would be unable to take his usual daily walks for some time to come, he hired the messenger for six months to feed the pigeons every day. Tesla's back had been severely wrenched in the

accident, and three ribs broken, but the full extent of his injuries will never be known for, in keeping with his almost lifelong custom, he refused to consult a doctor. Pneumonia developed but for this he also refused medical aid. He was bedridden for some months, and was unable to carry on his practice of feeding pigeons from his window; and soon they failed to come.

In the spring of 1938 he was able to get up. He at once resumed his pigeon-feeding walks on a much more limited scale, but frequently had a messenger act for him.

This devotion to his pigeon-feeding task seemed to everyone who knew him like nothing more than the hobby of an eccentric scientist, but if they could have looked into Tesla's heart, or read his mind, they would have discovered that they were witnessing the world's most fantastic, yet tender and pathetic love affair.

Tesla, as a self-made superman, suffered from the limitations of his maker. Endowed with an intelligence above the average in both quality and quantity, and with some supernormal faculties, he was able to erect a superman higher in stature than himself; but the greater height was attained by sacrificing other dimensions, and in this diminution of breadth and thickness existed a deffciency.

When he was a youth and his mind was in its most plastic and formative stage, he adopted, as we have seen, the then prevalent agnostic and materialistic view of life. Today science has emancipated itself from slavery to either an antagonistic mysticism or materialism, and is willing to consider both as harmonious parts of a comprehensive approach to the understanding of Nature, but is conscious that it has not yet learned how to manipulate or control the more intangible factors upon which the mystics have builded their structures of knowledge. Vast realms of human experience have been rejected in all ages by scientists, of whatever name, who failed to fit them in logical arrangement in their inadequate and too simplified natural philosophies. By rejecting the phenomena that lay beyond their intellectual abilities, the scientists and philosophers did not eliminate them nor prevent their manifestations. The phenomena so rejected, however, were given an academic home by the ecclesiasts, who accepted them without understanding, or hope of understanding, and thus incarcerated them in the foundation of the religious

mysteries where they served a useful purpose, for upon an unknown it is possible to build a greater unknown.

The mystical experiences of the saints, of whatever faith, are demonstrations of forces which are natural functions of the phenomenon of life, expressed in varying degree in step with the expanding unfoldment of the individual toward an advanced state of evolution.

Tesla was an individual in an advanced state of development, and there came to him experiences which he refused to accept as experiments; accepting the benefits which came to him but which transported them. This was true, for example, in the case of the burst of revelation which came to him revealing scores of tremendously valuable inventions--while he strolled in the park at Budapest, and which differed only in degree and type, but not in fundamental nature, from the blinding light which came to Saul on the road to Damascus, and to others to whom illumination has come by similar processes.

His materialistic concepts made him intellectually blind to the strange phenomenon by which revelation, or illumination, had come to him, but made him more keenly appreciative of the value of that which was revealed. It must not be understood that this revelation was a happenstance phenomenon of the moment, for Tesla, endowed by Nature with an intellect capable of vast unfoldment, had exerted almost superhuman efforts to achieve that which was revealed to him, and the effort was not unassociated with the result.

In a contrary direction, Tesla suppressed a tremendously large or important realm of his life by the planned elimination of love and romance from his thoughts and experience. Just as his efforts to discover the physical secrets of Nature built up forces that penetrated to the plane of revelation, so did his equally tremendous effort to suppress love and romance build up forces, beyond his control, that were operating to express themselves. There was a parallel situation in his philosophy of natural phenomena, in that he suppressed all spiritual aspects of Nature and confined himself to the purely materialistic aspects.

Two forces, one of love and romance in his personal nature, and the other the spiritual aspects of Nature in his

philosophy, as applied to his work, were incarcerated in a limbo of his personality, seeking an outlet into the paradise of expression and manifestation. And they obtained that outlet, expressing their nature by the form of the manifestation; but Tesla failed to recognize them. Tesla, rejecting the love of woman and thinking that he had engineered a complete elimination of the problem of love, failed to excise from his nature the capacity to love, and when this capacity expressed itself, it did so by directing its energies through a channel he left unguarded in planning the self-made superman.

The manifestation of these united forces of love and spirituality resulted in a fantastic situation, probably without parallel in human annals. Tesla told me the story; but if I did not have a witness who assured me that he heard exactly what I heard, I would have convinced myself that I had had nothing more tangible than a dream experience. It was the love story of Tesla's life. In the story of his strange romance, I saw instantly the reason for those unremitting daily journeys to feed the pigeons, and those midnight pilgrimages when he wished to be alone. I recalled those occasions when I had happened to meet him on deserted Fifth Avenue and, when I spoke to him, he replied, "You will now leave me." He told his story simply, briefly and without embellishments, but there was still a surging of emotion in his voice.

"I have been feeding pigeons, thousands of them, for years; thousands of them, for who can tell--

"But there was one pigeon, a beautiful bird, pure white with light gray tips on its wings; that one was different. It was a female. I would know that pigeon anywhere.

"No matter where I was that pigeon would find me; when I wanted her I had only to wish and call her and she would come flying to me. She understood me and I understood her.

"I loved that pigeon.

"Yes," he replied to an unasked question. "Yes, I loved that pigeon, I loved her as a man loves a woman, and she loved me. When she was ill I knew, and understood; she came to my room and I stayed beside her for days. I nursed her back to health. That pigeon was the joy of my life. If she

needed me, nothing else mattered. As long as I had her, there was a purpose in my life.

"Then one night as I was lying in my bed in the dark, solving problems, as usual, she flew in through the open window and stood on my desk. I knew she wanted me; she wanted to tell me something important so I got up and went to her.

"As I looked at her I knew she wanted to tell me--she was dying. And then, as I got her message, there came a light from her eyes--powerful beams of light.

"Yes," he continued, again answering an unasked question, "it was a real light, a powerful, dazzling, blinding light, a light more intense than I had ever produced by the most powerful lamps in my laboratory.

"When that pigeon died, something went out of my life. Up to that time I knew with a certainty that I would complete my work, no matter how ambitious my program, but when that something went out of my life I knew my life's work was finished.

"Yes, I have fed pigeons for years; I continue to feed them, thousands of them, for after all, who can tell--"

There was nothing more to say. We parted in silence. The talk took place in a corner of the mezzanine in the Hotel New Yorker. I was accompanied by William L. Laurence, science writer of the New York Times. We walked several blocks on Seventh Avenue before we spoke.

No longer was there any mystery to the midnight pilgrimages when he called the pigeons from their niches in the Gothic tracery of the Cathedral, or from under the eaves of the Greek temple that houses the Library--pursuing, among the thousands of them . . . "For after all, who can tell . . .?"

It is out of phenomena such as Tesla experienced when the dove flew out of the midnight darkness and into the blackness of his room and flooded it with blinding light, and the revelation that came to him out of the dazzling sun in the park at Budapest, that the mysteries of religion are built. But he comprehended them not; for, if he had not suppressed the rich mystical inheritance of his ancestors

that would have brought enlightenment, he would have understood the symbolism of the Dove.

ACKNOWLEDGMENTS

MUCH valuable aid has been received from many sources in the preparation of this volume. For this helpful co-operation my thanks are due to:

Sava N. Kosanovic, Minister of State of Yugoslavia, and Tesla's nephew, for making available books, family records, transcripts of records, pictures, and for correcting the manuscript of many chapters; and to his secretary, Miss Charlotte Muzar;

Miss Dorothy Skerritt and Miss Muriel Arbus, Tesla's secretaries; and George Scherff and Julius C. Czito, business associates;

Mrs. Margaret C. Behrend, for the privilege of reading correspondence between her husband and Tesla; and to Dr. W. B. Earle, Dean of Engineering, Clemson Agricultural College, for pictures and other material from the Behrend Collection in the college library;

Mrs. Agnes Holden, daughter of the late Robert Underwood Johnson, ambassador, and editor of the Century Magazine; Miss Marguerite Merington; Mrs. Grizelda M. Hobson, widow of the late Rear Admiral Hobson; Waldemar Kaempffert, Science Editor of the New York Times; Professor Emeritus Charles F. Scott, Department of Electrical Engineering, Yale University; Hans Dahlstrand, of the Allis Chalmers Manufacturing Co.; Leo Maloney, Manager of the Hotel New Yorker; and W. D. Crow, architect of the Tesla tower, for reminiscences, data, or helpful conversations concerning their contacts with Tesla;

Florence S. Hellman, Chief of the Bibliographic Division, Library of Congress; Olive E. Kennedy, Research Librarian of the Public Information Center, National Electric Manufacturers Association; A. P. Peck, Managing Editor of

the Scientific American; Myrta L. Mason, and Charles F. Pflaging, for bibliographic aid;

G. Edward Pendray and his associates in the Westinghouse Electric and Manufacturing Co., and C. D. Wagoner and his associates in the General Electric Co., for correcting, or reading and making helpful suggestions in connection with many chapters;

William L. Laurence, science writer of the New York Times, and Bloyce Fitzgerald, for exchange of data;

Randall Warden; William Spencer Bowen, President of the Bowen Research Corp.; G. H. Clark, of the Radio Corporation of America; Kenneth M. Swezey, of Popular Science; Mrs. Mabel Fleischer and Carl Payne Tobey, who have aided in a variety of ways;

Colliers--The National Weekly; The American Magazine; the New York World-Telegram and the General Electric Co., for permission to quote copyrighted material, for which credit is given where quoted; and

Peggy O'Neill Grayson, my daughter, for extended secretarial service.

To all the foregoing I extend my sincere thanks.

John J. O'Neill

Freeport, L. I.

New York

July 15, 1944

OCCULT ETHER PHYSICS:

TESLA'S HIDDEN SPACE PROPULSION SYSTEM AND THE CONSPIRACY TO CONCEAL IT

By
William Lyne

SECOND REVISED EDITION

The truth can flow from lies, but lies cannot flow from the truth.

Arthur Schopenhauer

Dedicated to my sons Angus Lyne and Matthew Olay

Preface Nikola Tesla's Original 1875 Plan 1
Introduction 4
Chapter I: The Occult Ether Theory and Electropulsion 10
Characteristics of Basic Ether Particles 10
The Cause of the "Inverse Square" Law of Gravity 16
Microhelical "Tubes of Force" 17
The ZPR 18
An Old Wooden Box and a German Inertial Guidance System 19
Low and High Frequency Waves and Tesla's Wireless Transmission of Energy 24
Tesla's TELEFORCE Discoveries 27
Chapter II: Exploring the Nature of the Ether 29
The Early Background 29
J. J. Thomson's "Electromagnetic Momentum" 30
Tesla Shows Up 31
Cosmic Motion and Local Momentum 35
Local Momentum and Celestial Movement 36
Chapter III: Observations 42
Rub-a-Dub-Dub, Seven Folks in a Hot Tub 44
Comparison to Other Sightings 47
Ether and "Ponderable Matter" 48
Orbiting Planets and Satellites 53
Chapter IV: Historical Development of the Theory 54
Rotatory Motion and the "Screw Effect" 54
An Electrostatic Charge Carried Around 56
Chapter V: Tesla and the Good Old Boy's Club 62
Tesla's Dynamic Theory of Gravity 67
Tesla's Secrecy 73
The Nature of Electricity 75
CONCLUSION 78
Chapter VI: Free Energy Massacre; The Atomic Hydrogen Process 81
Smokescreens from Academia 88
Another Astounding Proof and More Hydrogen Methods 93
How Does it Work? 96
Appropriate Use of the Process 101
Atomic Hydrogen Furnace, Etc 102
Free Energy Surprise 104
Conclusion 105
References for the Atomic Hydrogen Process 106

There is much consternation today about the words "cult" and "occult", and what they mean. Many are worried that their own organizations, groups, or religions may fall into this category. Since the word "occult" merely refers to "secret" or "hidden", it is used by doctors to describe unknown bacteria as being "occult". As for a religion, philosophy, organization or other group activity, it is a "cult" if it utilizes "secret teachings", made known only to a select few initiates or "priests". Is it possible that an entire area of physics has been declared virtually "occult" and "off-limits" to the public or to private individuals, by a powerful group, so that all science education or data generally available to the public has been "screened" to eliminate references to it? Is it possible that the actual science involved in "electro-propulsion", has heen replaced with a "bogus science", which has been promoted and promulgated to the extent that no one except the 'esoteric elite' knows the truth? And if so, has the "occult" science become the exclusive province of a very few specially selected corporate/government "priests"?

I began studying this controversy—including the science involved—when I was but a child of eight years, in 1946, after interviewing oil field pumpers who had seen silvery "flying disks" in the remote oil fields in the west Texas and southern New Mexico desert. At the age of 13, I spent a couple of days visiting with family friends and their neighbor, astrophysicist Dr. Lincoln La Paz, in Albuquerque, New Mexico. La Paz was then employed by the U.S. government to help cover up Nazi flying saucer technology brought to New Mexico after WWII. My early convictions were later corroborated when I acquired a piece of hardware from a 1943 German flying saucer at Sandia Base where La Paz worked.

Since the truth about electropropulsion is based on "ether" (A.K.A. "aether") physics, which has been collected, hidden away, or declared "national security secrets", or intentionally obliterated by false propaganda which is so intense that the general public remains unaware of the facts which are right under their noses, I have dubbed the ether physics ultimately connected to electro-propulsion, "Occult Ether Physics". This book is dedicated to the rediscovery of, examination of, and the integration of these secrets into the public knowledge.

The high priests of this occult knowledge are the elite owners of the coercive monopolist corporate banking, industrial, mineral and related interests, who in turn allow the initiation of certain scientists, military and

government officials into their secret teachings only insofar as it is necessary, to execute and maintain a conspiracy of giant proportions, so that the technology can be classified as a "state secret" which can be controlled and enforced by means of unconstitutional "national security laws", military and civilian legal authority, and police. These measures are intended to protect the archaic technology and resources controlled by the elite, from the competition of a truly free market society.

Because of the last 76 or more years of progressively intensifying false propaganda and manipulation of knowledge and science, a majority of scientists ridicule the concepts of the existence of an ether and of flying saucers, as if such thinking belonged in the category of a "flat earth" theory and the "little green men" from outer space babblings, but the reverse is true. The proponents of Relativism and the *Big Bang* (the "Big Bangers") want you to believe that the universe is finite, so that, if you go "too far", you will "fall off the universe", rather than off a "flat earth". What's the difference? Flat earth...finite universe...they're both dumb theories.

And what do the "little green men" lies have to do with exclusively man-made electric flying machines, and technology based on sound and well-established electrical science and physics, but which, like the existence of the ether, has been tucked away in secret vaults, to keep you from using it, while you are being fed false and useless "theories"? These range from "curved space", "time travel", "Big Bang", and "alien abduction" stories, to "parallel universe", "interdimensional travel", and any other outrageously incredible stories, concocted by government spooks, national security personnel, and secret agents in the "UFOlogy" and "pseudo-debunker" communities ("pseudo-debunkers" in my vernacular, are official government spokesmen or scientific know-it-alls whose job it is to completely deny the existence of flying saucers, or to ridicule their other covert government counterparts, the UFOlogists, new-agers, or paranormalists).

Before you decide there is no ether, or no flying saucers, or before you believe the often-told "prime-time" lies that aliens are "here", or that time-travel is possible, you should ask yourself whether or not your thinking on these subjects has been conditioned by Big Brother's Biggest Lies. If you believe in relativism, I should point out that "time- travel" is an integral part of that, which is a very incredible impossibility which makes the so-called "science" you rely on a worthless piece of pseudo-intellectual crap concocted by someone who wanted to sabotage your mind

on behalf of the self-appointed high priests of "Occult Ether Physics".

Is your thinking a barometer of thought-control mediocrity? Are you so out of control of your own metaphysical concepts and epistemology, that you have to get your thinking from the "canned goods" section of NASA (NAZIA), courtesy of the CIA's *Office of Scientific Intelligence* ("OSI")? Is your education a TV dinner, prepared by a Secret Government, so you'll never discover the real food for thought?

For those of you who may be unfamiliar with my more complete exposition of the whys, wherefores, whos, and other facts concerning the huge volume of false propaganda designed and disseminated on behalf of the coercive monopolist corporate state, to conceal flying saucer electropropulsion and other advanced and "free energy" technology, you should read my prior book, *Space Aliens From the Pentagon,* copyright Wm. R Lyne, 1993, ISBN 0-9637467-0-7; 1995 2nd ed., ISBN 0-9637467-1-5; 1999 3rd revised ed., ISBN 0-9637467-7-4.

The flying saucer is a product of Nikola Tesla's life work, his most fundamentally important invention, for which all his other inventions were in pursuit of, though you probably have never heard this fact from anyone else. How do I know? I have documented it in many years of research, tracing Tesla's developments and his own words uttered and published during his lifetime, in scattered, sparse yet sufficient sources, as he placed a crowning achievement on top the work of the world's greatest scientific minds of the nineteenth century, who were Tesla's inspirations. It was supposedly proved, on May 29, 1919, "...that we live in a curved four-dimensional space-time". Albert Einstein said a massive body spinning in space "...would drag space and time around with it...", the origin of so-called "frame-dragging" and "space curvature". "Gravity is no longer a mysterious force acting at a distance but the result of an object trying to travel in a straight line through space curved by the presence of material bodies" (Gary Taubes, *Relativists in Orbit,* Discover, March, 1997).

Even such theories...Relativistic bromides interlaced with such phrases as "the 'fabric' of 'space-time'", "space curvature", and "frame-dragging", although off-the-wall flaky, suggest the existence of an ether, albeit an erroneous concept of the ether.

Since 1919, Nikola Tesla's electropropulsive discoveries have been concealed by government suppression, theft, and ridicule, while "science" has become a pseudo-scientific mathematical shell-game which bears little new fruit, and less resemblance to reality. It is time for the truth.

INTRODUCTION: NIKOLA TESLA'S ORIGINAL 1875 PLAN

Tesla's original vision, in his 1870's student days, of his "ideal flying machine", was of an electropulsive one, the realization of which is why he said he originally entered the field of electrical science in 1875 in the first place. This was the problem which he had assigned to himself as his main lifelong work. (Frank Parker Stockbridge, *The Tesla Turbine.* The World's Work, march, 1912, pp. 543-48.)

Originally anticipating that the electrical power needs for an electropropulsive craft would be too great for an on-board power plant (since his ship was to be devoid of sustaining planes), he initially embarked on developing his "wireless transmission of power" system, so as to transmit the anticipated power needed from ground-based power generators and stations. Some of these earlier Tesla ideas turned out to be unnecessary for his flying machine, so he turned them for intended commercial purposes. Since his conception of the ether was of a relatively low-density one, and his conception of the electromagnetic force not nearly so much stronger than the gravitational one, his later discovery that his prior anticipation of greater electrical power needs than actually required, led to changes in his electropropulsive craft, and produced plenty of surplus "spin-off' technology.

During the 1920's, at a time when he was in great need of money to complete his electropropulsive ship, he unsuccessfully attempted to interest the U.S. government in some of this surplus "spin off' technology. In an unpublished article prepared but never published, Tesla said: "...we should push the development of flying machines and wireless transmission of energy without an instant's delay and with all the power and resources of the nation". The immediate association here is between "flying machines" (not "aeroplanes") and "wireless transmission of energy". Tesla had piles of patents which produced him no money, because the Morgans and Rockefellers had declared them off limits. No one could borrow money from the banks to put one of these systems into practice, and anyone who was foolish enough to do so on their own money could expect the wrath of the gods to come down on them like lightening bolts from Zeus.

Due to his imminent discovery that his on-board power needs would not be so great, and a failure to interest anyone in the development of his wireless energy transmission system, Tesla obtained a patent in 1913 on a remarkable turbine he had invented about 1909. This was probably in view of encouraging developments and awareness which showed that the

electromagnetic interaction is 10^{40} times stronger than the gravitational interaction (George Gamow, *Gravity,* Anchor Books, N.Y. [1962], p. 138). According to Hendrick Lorenz, the electrical attractive force is 2 x 10^{39} times stronger than the gravitational attractive force.

The change in Tesla's strategy seems to have occurred between his 1915 test of an electropropulsive missile using wireless energy projected to it by a power beam from the ground, and his 1934 birthday announcement. These new developments were probably spurred on by the mother of invention, since without a wireless energy system, the prior conception would be rather useless. The power monopolists could fight that off forever, so Tesla was left to his own devices, unable to count on anyone else.

The earlier misconceptions were still somewhat in Tesla's mind when he developed the turbine commercially under the Tesla Propulsion Company slogan, "20 Horsepower Per Pound", with the undisclosed intention of also using the turbine to drive one of his specially designed high frequency alternators to power the ship. After having developed such a light and powerful turbine, which could turn upwards of 30,000 rpm., with a twenty pound unit producing over 200 brake horsepower on gasoline, he also designed and received a patent in 1928 for a new kind of "VTOL"-type propellor-driven airplane, to be powered by two turbines mounted in tandem, which would counteract the torque of the prop, and eliminate the need for the stabilizing props that helicoptors have on their back fuselages. This aircraft, if built, would have had a superior weight-to-horsepower ratio—perhaps three-to-one—and would have been very fast in level flight, taking off vertically.

Tesla, on seeing the innefficient use of heavier aircraft engines then in use, and the requirements of more cumbersome aircraft with greater wing area, apparently wished to commercialize on the turbine by designing and patenting the new airplane, which specifically used his turbine, to raise needed capital to complete his more expensive electropropulsive project. In his experiences with prior patents, he had learned that a patent would be worthless unless he could get the needed capital to carry the project out before the patent period expired, and that the disclosure in a patent would allow others to do so only 17 years after a patent might be granted to him, during which time his invention could languish for lack of funding on his part, because the monolithic financial interests were set against him.

While in the initial stages of development, Tesla seemed quite unaware of the true power of "the force", until his early field tests of 1915 proved that it was "tremendous". In the years 1893 and 1894, Tesla had "completely worked out" his *Dynamic Theory of Gravity,* that is, at least in "theory". Inherent to that theory, was his electropropulsion system, yet in the formative and theoretical stages. To publish his theory however, would have been tantamount to disclosing the basic technology as well, which would have allowed his competitors with the money and resources, to complete and take credit for the most important work of Tesla's life, and the greatest invention of mankind. Tesla lacked the necessary money, and could not raise it. He could not protect himself by patent, until he completed and tested a working model of large enough scale to impress the aircraft industry and the government. Fatefully, it was during this time of greatest financial need, when he still had the physical stamina to carry the project out, that he was run ragged by bill collections and foreclosures, at the behest of J.P. Morgan and his cohorts, all with the intent of crushing Tesla because he kept coming up with new electric power systems which made his prior systems obsolete. Since the systems would have ruined Morgan and Rockefeller, and since any invention which Tesla marketed for great profit would have allowed him the resources to build his energy systems, he had to be crushed. Tesla never seemed to fully realize that Morgan's pseudo-philantropism was nothing more than a scheme to compromise Tesla's contract with himself, and a way of falsely inducing Tesla's reliance on others rather than on his own self-reliance. This treatment set Tesla back emotionally as well as financially and technically, and reduced him at one point to a heap of groveling nerves, literally begging Morgan to make good on his promises, to no avail, but like all truly tragic figures, there was a *peripides*—a reassertion of the tragic hero's excellent and untarnished Arturian powers—before he passed heroically into the oblivion of death, as his discoveries, like the sword *Excalibur,* sank beneath the waters of the lake of'national security' lies, to the inurement of corporate greed, coercion and extortion.

The only power that Tesla seemed to have left, was that of withholding his discoveries from the world, to protect his secrets from the pilfering paws of the looters, unless he could receive the compensation and credit which he deserved, but that didn't matter, because they got it all before his corpse was cool, and never paid him so much as a dime for his trouble.

After becoming aware of the true power of "the force"—one hundred

billion thousand trillion thousand trillion times stronger than gravity—Tesla began to pursue the idea of an "on-board" power system for a manned craft to be used for transportation, with his "wireless transmission of power" to be relegated to a robotic, remote controlled, electropropulsive "missile", for use in warfare, with electric power to be transmitted to missiles from the ground. After a long period of silence following his field testing of a working model of the electrically propelled missile in 1915, Tesla began referring to the propelling force as "tremendous" in his later announcements which began in the '30's. "Tremendous" does not mean something which reacts feebly, to barely get off the ground, but to something which rises with great and astounding force, such as the way I saw a flying saucer perform in 1953...only ten years after Tesla's death. If "tremendous" meant something like an airplane or conventional rocket—as the CIA/NASA misinformationists have idiotically attempted to misconstrue—then what would be the word to describe a force which propels a flying saucer at 9,000 mph in three seconds?

The words "means of propulsion", used by Tesla in his 1940 interview with William L. Laurence of the *New York Times,* are of the utmost importance for those interested in understanding both the misinformational conspiracy, as well as the scanty documentation of Tesla's concealed discoveries. In their context, these words denoted an on-board electropropulsive means to be used on his "ideal" flying machine, either manned or unmanned, controlled "mechanically" by a pilot on board, or "remotely by wireless energy" by a controller from the ground. It did not refer to a "projectile" such as a "pellet" or "bullet", which had no "propulsion system", and was merely "repelled" by a gun of some sort, and it did not refer to any kind of "airplane"—hence "flying machine"—since his machine was to have no wings, ailerons, propellors, or outer appurtenances of any kind. "Propulsion" here means an on-board system for perpetuation of motion, by electromagnetic means, supplied with electrical power by either on-board generator, or by electrical energy and control signals transmitted by power beam from the ground. The idea of interplanetary travel appealed to Tesla, with the idea that, so long as the electrical energy for propulsion could be transmitted from the earth, a space ship would require no fuel tanks.

In a letter to his friend and financial supporter B.A. Behrend in the 1930's, Tesla referred cryptically to his electropropulsive discovery: "What I shall accomplish by that other invention I came specially to see

you about, I do not dare to tell you. This is stated in all seriousness." Tesla apparently was inferring a plan to discover "other worlds" in outer space with his electrical machines.

Tesla realized that all solid bodies contain "electrical content", and that they behave as resonant cavities, which interact electromagnetically with rapidly varying electrostatic forces and ether to determine their gravitational interactions and movements in space. These theories were tested and confirmed to some degree in his 1899 Colorado Springs experiments. The U.S. government never gave Tesla the time of day, and his great electropropulsive discovery slipped into the eager hands of the Nazi elite, when Wernher von Braun acquired and began development of the "p2" project at Los Alamos, New Mexico in 1936, taking the project back to Germany in the fall of 1937, where it was developed at Peenemunde in the Baltic, until these secrets and others were traded to American corporations and the U.S. government in exchange, under *Operation Paperclip,* just after the armistice, for amnesty for many war criminals, along with an agreement for several thousand people to work for the U.S. government and American corporations. Anyone having important technical information was protected.

The REAL Cover-up

Ever since Tesla's saucer discovery came under the control of the U.S. government in 1945, there has been in effect a false propaganda program—originally developed by the *RSHA Amt VI (Reichsicherheithaupt Amt VI*—which translates to "National Security Agency Division 6"—the organization within the Gestapo which was invested with the highest secrets of the German Reich, and which controlled in Nazi Germany the equivalent to our own UFOlogy, new age, and pseudo-sceptic misinformation dissemination network). The government simply employed the whole Nazi saucer counterintelligence apparatus, and it was some of the original Nazi misinformationists, employed at Holloman A.F.B., New Mexico, who designed and implemented the 1947 "Roswell Hoax". Though shadowed with ostensible military and "national security" vestiges, this cover-up has been protracted on behalf of a coercive monopolist corporate state, even since the acquisition of the secrets by the Nazis in 1936, for if the technology had gotten even into the hands of private Germans at that time, the Nazi state's days would have been ever much more so shortly numbered.

Can you imagine the effect of this kind of transportation in private hands? It would allow the common man to go everywhere in the world, to visit all the places which he cannot presently even afford the airline fare to. Yet a small, privately-owned flying saucer would cost less than an automobile to build, would use practically no fuel, would travel thousands of miles per hour, would last a long time, and would require practically no maintenance.

Can you imagine the effect it would have on totalitarian communist, fascist, or corporate state governments and 'favored' economic interests? Can you see the bottom drop out of the candy-assed real estate market, when it suddenly became possible to live anywhere, even places where there were no roads? Can you see the problems along the borders of countries, when saucers fly across and back without checking through "customs"? The main problems, as you can see, are with the paranoid and criminal fears of power crazy authorities, who would suddenly lose a lot of the power necessary for them to keep their "jobs", protecting and maintaining the interests of the coercive elite.

These considerations are the ones which indicate the perpetrators of any "cover-up". There is much talk on TV programs, radio talk shows, newspapers, books, magazines, and videos about a "...cover-up of our government doing business with the aliens for fifty years". If you can see it on prime-time TV every night of the week, the only "cover-up" which can be presumed, is one which is opposite to the one they pretend to be telling you about. Such programs <u>are</u> the cover-up. The volume of these lies is so great that it is almost incredible, considering the fact that they are evidence of our own government covertly acting behind the scenes to lie to us. Whenever government is involved in broadcasting such trashy BIG LIES to every household in America, it is good cause to ask, "What else are they lying to us about?"

This book, along with my prior one, is dedicated to the objective of bringing this secret technological and socio-economic dictatorship to an end.

CHAPTER I: THE OCCULT ETHER THEORY AND ELECTROPULSION

The theory which I espouse in this book is based on what can be corroborated throughout the words and developments of Nikola Tesla and their logically construed implications, in combination with other special information linked to that, as presented here and in my prior book, *Space Aliens From the Pentagon.* This theory is close to Tesla's *Dynamic Theory of Gravity,* and I like to think that it even makes some corrections that Tesla himself made or would have made, had he lived long enough.

Like most theories, this theory is incomplete, may contain errors, and will require further development, tests, corrections, and revisions, either by myself of by others in the future. I have stated here my basic thinking on the subject up to this time, which has progressed somewhat since my prior book, using my own terminology involving "Omni Matter" (A.K.A., "the Ether"). If you will notice in my title to this chapter, I have already created another new word—"Electropulsion"—to shorten the word "Electropropulsion".

Since this book is for the greatly uninformed public, as well as for the researcher, I will make an effort to couch it in layman's terms—for I am myself a layman—and will provide some illustrations where helpful, to give a reasonable grasp of my concepts, rather than a "quantum mechanical" mathematical orgy, which is usually combined with pages of dull equations and numbers which proceed logically from the contradictory and unproven illogical premises which are so prized by that ilk. It is as if to say, "Hey! Look at me Ma, I can do lots of math!" "Ether Physics", by its very nature and name, is subatomic physics, which to me means "sub-protonic" and "sub-electronic". I am not so concerned with sub-atomic nuclear particles per se, but rather with what I believe are the finite building blocks of the proton and electron, which exist within the ether in simpler form. I will leave all the quarks, muons, mesons, leptons, etc., to the "Relativistic Quantum Mechanics" (hence, "R.Q.M.s"), and their "elegant equations".

Characteristics of Basic Ether Particles

My basic ether particle is called the "Omni", which has a positive nucleus—a "protette" called an "Omnion"—and a negative sub-

electron—an "electrette" called an "Omnitron". As you may have noticed, this scheme is a scaled-down version of the basic hydrogen atom, with its proton and electron. Like most atoms, the Omni is normally neutral and in equilibrium, but is much smaller, being ultra-fine. Due to its tiny size and neutrality, it can pass easily through "solid bodies" (except the solid bodies are actually passing by and through it), yet it behaves like a solid in respect to high frequency electromagnetic radiation of specific range, from the infra-red through the visible light frequencies, which disturb its equilibrium, yet, though we can feel it, it appears to be transparent and invisible to the naked eye.

Like hydrogen gas, there is some elasticity, due to the compressibility of the magnetic fields, so it is an "elastic solid" as Faraday said. Due to the tiny Omni size, so-called "empty space" is actually packed almost solid with this very fine matter, which oscillates at such high frequencies—well beyond that of x-rays—yet the tiny size and normal neutrality allows it to penetrate "solid mass"—which is mostly "space"(which is also saturated with Omni which must be moved through by a mass to make room for more Omni).

Since interstellar 'space' is equivalent to a vacuum containing little gaseous matter—such as a Lenard tube in which charges easily move—the Omni in interstellar space is highly conductive, with charges moving freely from body to body, along magnetic lines of force.

Omni-packed space is also omnidirectionally interpenetrated by ultra-fine radiation, which is normally in equilibrium, called "Zero Point Radiation" ("ZPR"). This ZPR constantly "twangs" the electron clouds of atomic matter, creating the illusion of "electron orbits", which are in fact standing waves in the undulating layers of electronic clouds surrounding atoms and molecules. Since the matter with which these electron clouds are associated is in constant motion, the clouds are currents, since a "charge carried around is a current". The driving force behind the currents is the motion, which, so long as uniform, is "force-free". Any lost momentum is 'made up' by the ZPR.

The Omni has an almost balanced charge-to-mass ratio ("1:1"), and responds to both positive and negative impulses. Electrostatic generators provide a good example of the electrical behavior of the Omni. At sufficiently high voltages, the positive and negative dynamic sub-charges are separated by magnetic fields and condensed to form electrons and protons. There is some unknown underlying reason why these charges are of specific magnitude, which is yet to be explained, but the quantum

theory practically admits that there are subdivisions of basic electrical charges, and that electrons are not "indivisible". This the basic bone of contention, since if electrons *are* divisible, Relativism must fall. The "basic charge" which has been perceived as that of the electron, appears to be time-related, since electrical current moves at the same speed as light, therefore, the electron charge is probably the quantity of charge accumulated from a discrete number of Omni over some discrete unit of time, which reflects in turn the distance traveled through space of a proton during that time, with the charges actually circulating between the Omni and matter.

High voltage force—either in electrical discharges or in radiation—is necessary to break the Omnion-Omnitron bond. The same principle applies to electropulsion. Strong, high voltage, high frequency negative pulses are necessary to penetrate the negative Omnitronic cloud barriers, to react with the positive Omnions, to cause the "inertia resistance" of the Omni to be "asserted", so as to access its mass to be pulled against, to propel a space ship through Omni-packed space, using a microhelical "screwing" force of rotating electromagnetic tubules around irrotational, vacuous Omni cores. The tubules are the product of the rotation imparted by magnetic flux to electrical currents, which are consolidated by changes in momentum.

The great number of Omni per volume of space represents a much greater density of positive matter than normal 'solid' mass possesses, hence the Omni function as "virtually stationary anchors" which an electropulsive craft can lock onto to propel itself through space. The Omni 'anchors' are in fact dynamic relative to earth, with a relative velocity of thousands of miles per hour which represents the ultimate velocity of the earth through the ether at any given time. Since the "accessing" electropulsive force, when in effect, is transmitted at near the velocity of light however, the comparative difference in velocity between the Omni and the earth is almost insignificant It is practically "as if the earth is stationary relative to the ether, except for the effects of so-called gravity. To an effect which travels at 186,000 miles per second, a body traveling at about 20 miles per second is *virtually* "at rest".

The difference in density between liquid hydrogen and the Omni, for example, is relative to the difference in size between the hydrogen atom and the tiny Omni, as well as to the volume of space actually occupied by the Omnion in relation to its Omnitron. It can be assumed that a tiny Omnion, being a subdivision of the proton, has a much

greater density per unit of space, due to the relative lack of space between the Omni, which assemble to form protons, much like the space between bricks which is filled with mortar. This 'mortar' is probably some of Tesla's "insulative fluid" which "wets" positive bodies and •particles', as a "perfect fluid". Just as the magnitude of the electron charge may be time-relative, the magnitude of the proton may be likewise, being composed of a discrete number of Omnions accumulated over a discrete period of time.

While the Omni is invisible to the eye—because its period of vibration is beyond the visible frequencies—it is not imperceptible. As we move, we can feel the Omni accelerating, decelerating, or changing directions within our bodies. When running, we feel the resistance ("inertia") created within our body, to changes in momentum, as the Omni tubules are forced in different directions or in accelerating or decelerating pathways through the atoms and molecules of our body. Once we reach a constant velocity, we can feel how the microhelices—created by the constant-pitch spins of the Omnitrons—'bore' through the Omni, creating the "momentum" which tends to carry us along in level and straight lines. Once in constant velocity, we must supply only whatever energy is lost through wind or mechanical friction, or erratic movement, in order to maintain constant velocity. We can also see the effects of the Omni in the behavior of everyday objects—the way they resist changes in movement, fall, accelerate, gain momentum, tumble, roll, collide, shatter, bounce, or come to rest. I analogize a solid mass to a flock of geese, maintaining its "formation" ("shape"), as it flies through the "air" ("Omni"):

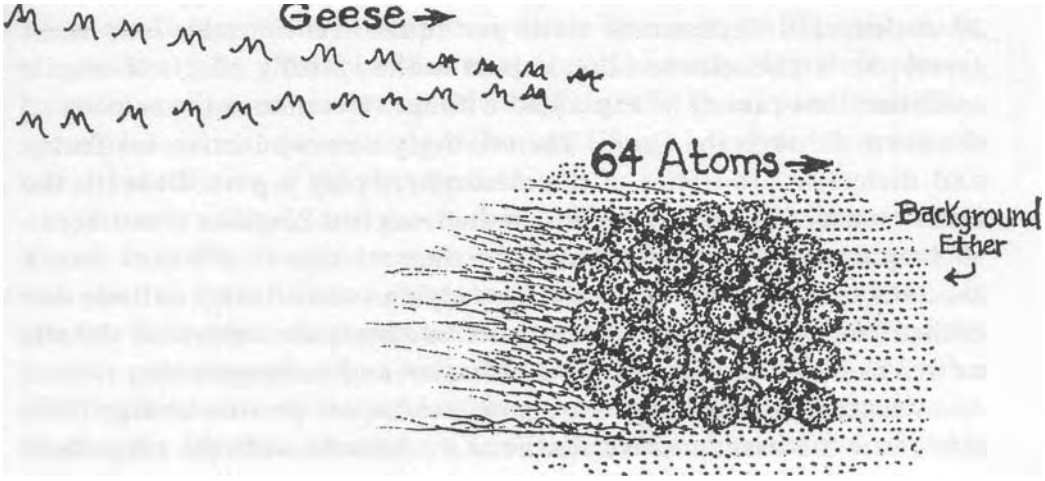

The earth and everything on it is moving through ether-filled space, at tremendous speed. In addition, the earth spins and orbits, which gradually changes the microhelical patterns relative to the polarity of an interpenetrating "etheric wind". The magnitude of the so-called "force of gravity", measured from the center of mass of a body, is greater at sea level than on top Mt. Everest, where the distance between its center and that of the earth is greater, but this statement—based on Newton's law—-fails to tell us "why" gravity exists, what forces create it, or why the force varies "directly proportional to the masses, and inversely proportional to the square of the distance between (the centers of the) two bodies". Even Newton explicitly admitted that his laws failed to address causes, and only claimed to mathematically describe effects.

"Electrical content" is inherent to all solid matter. Atoms contain nuclei composed of positive protons and neutral neutrons, composed of protons and electrons. Around these nuclei are negative "electrons". All matter which contains electrostatic charges and is in motion, represent "electric charges carried around", hence currents, which create magnetic fields. Since magnetic fields impart rotation to electromagnetic fields, this creates rotatory microhelical electromagnetic tubules within bodies, around irrotational vacuous ether cores. These tubules are aligned by the relative motion of a body, along the axis of a uniform or changing movement, and create momentum by "boring through" the ether. Since at any given time the pitch and diameter of a microhelix is constant, it is not a "vortex", which involves a logarithmic spiral, either inward or outward. Each time the velocity or direction changes, the microhelical pitch and orientation resists, then adjusts to the new momentum.

The earth has a minimum negative surface charge of approximately 20 esu/cnr (20 electrostatic units per square centimeter). This is an atmospheric phenomenon due in part to the ionizing effects of cosmic radiation, but cannot be explained without reference to the velocity of the earth through the Omni. The relatively non-conductive, insulative and dielectric properties of the atmosphere play a part. Beneath the earth's surface charge, the semi-conductive crust contains a vast ocean of surplus electrons. The earth's surface charge is more or less a constant, due to earth's surface area, varying somewhat by altitude due to the changes in atmospheric pressure and moisture content of the air, as well as the incidence of cosmic radiation and its frequencies.

All atoms—including hydrogen—possess net positive charge. This is because the basic positive charge of a proton exceeds the magnitude

of the basic negative charge of an electron. Hydrogen, with its single proton and single electron, has the highest charge-to-mass ratio and the lowest gravity of all elements. As one moves up the periodic chart of elements, progressively increasing in complexity above hydrogen, elements possess progressively lower charge-to-mass ratios, since the comparative ratios of electrons match the number of only the protons in the nuclei. Since the neutrons are not negative, they add to the positive mass relative to the electron, but contribute nothing to electrical charge, and the ratio of neutrons increases up the chart. This leaves an excess positive mass of the earth, the semi-conductive surface of which is capable of receiving and maintaining a large negative charge surplus, mostly brought to earth by the thousands of lightening bolts per second, and retained due to the dielectric and insulative properties of the atmosphere.

The constant electrical discharges from the atmosphere are driven by the cosmic motion of the earth, which converts the electrostatic charges to currents. This was confirmed by H.A. Rowland's experiment. Since atmospheric gases are insulators, the mostly alkaline, semi-conductive crust of the earth is largely an electron donor material, which maintains a large reservoir of negative charges insulated by the atmosphere. Cosmic rays striking the rarified light gases of the ionosphere, maintain its positive charge. The effects of gravity also help, since helium and hydrogen, both light, electropositive gases, gravitate to the ionosphere. Between the ionosphere, c. 620 miles above, and the earth's surface, there is a gradient of c. 150 volts/meter, totaling about 176 million volts, creating a considerable electric field, but the electric field extends far beyond the ionosphere. This electric field creates electrical displacement in the Omni within its reach, which is the cause of gravity. The effects of the electric field on the Omni is almost instantaneous, since near the speed of light, as the Omni pass from "free space" into mass, where the gravitational force is exerted downward, toward the source of the electric field.

There is no significant gravitational effect of earth's field above this electric field. Since earth's magnetic field encompasses the moon, so does the electric field. When a "sub-ion" (the Omni) is placed within an electric field, the sub-negative charge (Omnitron) is attracted by the positive pole (ionosphere) and repelled by the negative pole (earth). The effect of these attractive/repulsive forces is to "displace" each Omni, and to place the dielectric atmosphere and the Omni within a strain, so that,

near the earth, the Omnitronic clouds around each Omnion are forced eccentrically upward, while the neutral zone would be over 300 miles from earth.

The Cause of the Apparent "Inverse Square" Law of Gravity

As earth spins, the surface velocity— and atmospheric velocity with it—at any point varies according to its distance from earth's center. An object sitting at sea level moves through the Omni slower than a body on top Mt Everest The voltage potential between the atmospheric gases at higher altitude and the ionosphere is lower, but the voltage potential between the atmosphere and the surface of Mt. Everest is higher. Accordingly, for an object at sea level, the displacement of the Omnitronic cloud is greater, due to the greater total electric field strength. The increase in velocity offsets the increase in field effects on the Omni so that the gravitational force is more or less equalized between low and high altitude for objects on the earth, but the gravitational effects decrease for airborne objects beyond the earth's surface charges above Mt. Everest

The differences in these electrical potentials illustrates why there are differences in relative displacement of the Omnitronic clouds, within both earth's "gravity field", and within bodies moving within that field, with a degree of displacement which is directly proportional to difference in so-called "gravitational force" and the dielectric strain.

This comparison shows that a body at a higher altitude and velocity has a lower gravity because the electric field has a lower displacing influence on the Omnitronic cloudlets, and vice-versa. This is pertinent to electropulsion, because we must diminish, reverse, magnify and otherwise control this displacement in order to instantly synthesize and control inertia, momentum, and "gravity". The displacement influences the momentum because it affects the vibrating microhelical tubules and the way they "bore" through etheric space. Since the electric field is somewhat blocked out inside solid bodies, the tubules tend to drop to concentric rotation, thus transferring a downward force to the mass of which they are a part. "Gravity" is a product of the resistance to this change in displacement. The reason why a moving sphere when charged experiences an increase in its "virtual mass"—that is, an increase in the work required to move it, but not in its gravity— is because the "Faraday cage" effect of the increased charges tends to increase the

resistance to the movement of the Omni through the mass, affecting the negative charges on the Omni.

Since the electric field and its displacing influence is altered by the difference in dielectric constant within and without solid bodies, the microhelical tubules tend to drop to concentric rotation, thus transferring a downward force to the mass of which they are a part. "Gravity" is a product of the resistance to this change in displacement.

Microhelical Tubes of Force

Due to the cosmic motion of earth, electrostatic, molecular charges become currents, which create magnetic fields within ponderable bodies. The currents and fields in atomic or molecular "domains" are unified by momentum or magnetic fields. As a body moves through the ether/Omni field with the earth, there is an "etheric wind" effect, which "blows through" mass constantly from a regularly changing direction. Since Omnitrons are "sub-electrons", they also resonate. As the electric content forms pathways through the Omni within the body, the resonant motions of the molecular currents form magnetic fields which impart the microhelical rotation of the plane of polarization around irrotational Omni cores. These microhelical "tubes" have "pitch" which is determined by the rate of linear movement per second, in conjunction with the diameters of their rotations (or "waves") at near the speed of light. These tiny waves have spherical fronts, which can combine to form larger spherical waves.

The microhelical tubes of electromagnetism, having pitch, function like drills, tending to bore straight paths at a constant pitch and linear velocity, around the irrotational vacuous Omni cores (consistent with Newton's laws for inertia and momentum). Any change in direction or velocity is met by a resistance ("inertia"). Since all mass is already in motion, it always has momentum. The inertia exhibited by a body at rest relative to earth, is really a product of its momentum, so this inertia is really momentum. Inertia is therefore a resistance of a body to change in its state of momentum. The two words are used in different ways, to define "relative changes" in velocity and/or orientation.

Since the Omni near the spinning earth are subjected to the stronger negative charges and the positive mass of the earth, the Omnions are attracted downward, while the Omnitrons around them are repelled upward, forming eccentric 'cloudlets'. For a body ("at rest") at

sea level, as the Omni enter its surface, the effects on the Omni of the electric field of the earth is altered by the change in dielectric constant, forcing the microhelical tubes in the mass to jump downward to a more concentric rotation, since the density and rigidity of the Omni resists such a change. Since the electromagnetic tubes are part of the mass, a downward force is created by the downward pressure of the Omitrons, which we call "gravity". The effect is similar to a water hose carrying a high pressure stream of water. The helical force of the water creates a gyroscopic stability and tends to straighten it out into a line, with a regular precession. The "straightening" action is analogical to the so-called "gravity force". This is true no matter which direction the solid body is moving through the ether, because of the relative speed of the electromagnetic interaction at virtually the speed of light, and the polarity of earth's electric field.

Gravity, therefore, is the product of a body's reaction to the Omni's resistance to a change in its momentum, transferred to a mass due to its difference in dielectric constant, and its constantly changing movement, orientation and velocity as it moves through universal etheric space.

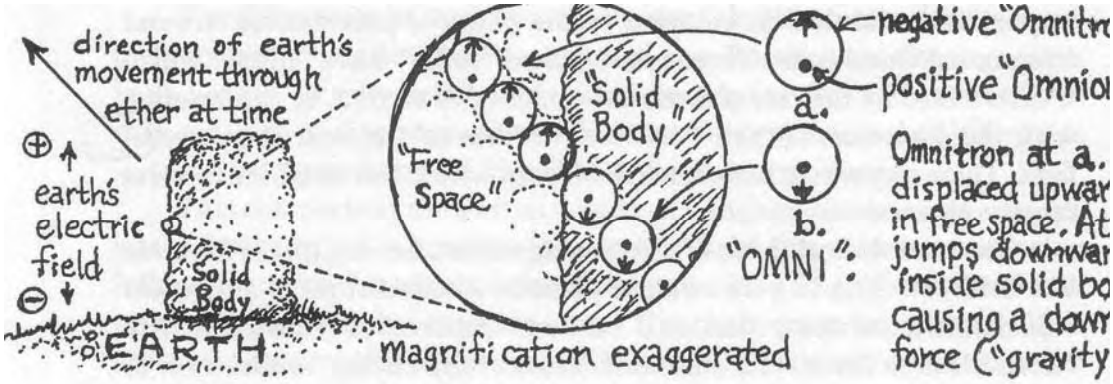

The ZPR

In addition to the Omni Matter, all space is omnidirectionally interpenetrated by ubiquitous Zero Point Radiation ("ZPR"), of extremely high frequencies, power, and density. One scientist has attributed so-called "blackbody radiation" to the ZPR (T.H. Boyer, *Derivation of Blackbody Radiation Spectrum Without Quantum Assumptions,* Phys. Rev. 182 [5], pp. 1374-83 [1969]). Boyer also found that a nonlinear dipole can absorb energy from particular modes of the ZPR spectrum *(Random Electrodynamics: The theory of classical*

electrodynamics with classical electromagnetic zero-point radiation, Phys. Rev. D 11 [4], pp. 790-808 [1975]). Another scientist claimed to measure the energy density of ZPR at 10^{94} gram/cm^3, for individual fluctuations of random ZPR, on the scale of the Planck length (10^{-33} cm.), by means of a standard radiation detector, the frequency response of which was specially altered to extend into the super high frequency spectrum involved (J.A. Wheeler, *Geometrodynamics,* Academic Press, N.Y. [1962]). In my last chapter, I detail the extraction of ZPR energy in the atomic hydrogen process.

These particular researches of 1962 to 1975 are *ex post facto,* coming long after Tesla's great discoveries. They merely re-confirm that, in order for such intense, super high frequency radiation to pass through space, it would require a space literally packed with an even finer ether, consisting of dense, super high frequency, ultrafine bundles of positive mass, surrounded by sub-electronic negative charges. This combination, like the continously interlinked tetrahedronal silicon dioxide atoms which make up solid quartz crystals, is capable of reacting to and conducting electromagnetic radiation from the infinitely fine in frequency, to the coarsest frequencies, simultaneously in all directions ("omnidirectionally"). This dense matter behaves as a solid to lower frequency radiation between the x-ray spectrum down to the lower infra-red, yet behaves as an all-pervading, interpenetrating and all-wetting "perfect fluid", in respect to (the atomic content of) moving solid bodies, the atomic structures of which contain so much room that they are mostly "space".

Electropulsion utilizes externally projected IR-to visible frequency radiation, of very high voltage, to cause the Omni to assert its "inertia resistance", combined with low frequency internal waves to create the (polarized) rotatory electromagnetic tubules, which instantaneously synthesize momentum, by boring through the ether-filled space, to propel a spacecraft through it.

An Old Wooden Box and a German Inertial Guidance System

In 1979, at a Santa Fe flea market, I examined an old wooden box belonging to an elderly Pojoaque man who was employed as a workman in 1937 at a secret project called "p2", which was run by Wernher von Braun. The man had built the box to hold tools used in his job there. He had carved, in "New Mexico folk style", a "map" showing the highways,

the location and name of the project, the symbol for the project (a triangle with a dot in its center, which is a symbol for the Prussian Illuminati of which von Braun was a member), and the date of the project. Pojoaque—where the man lived—is prominently shown as a large "P" with a zia sign around it. Below is my drawing of the old box:

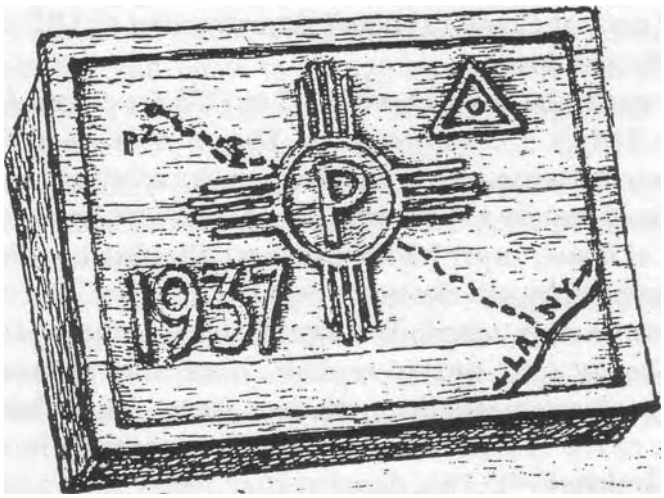

The following weekend, in the spring of 1979, I went to an Albuquerque salvage company—"King's Surplus City"—on east Central, where I often bought military surplus things related to my research and inventing, and was pleased to find a very unusual pile of material all stacked in a separate little pile. On top the pile was a device which I immediately recognized as a type of navigational "compass" which would be required on the early flying saucers I had witnessed during my back yard sleepouts in Kermit, Texas, between 1949-53, which turned in increments of multiples of thirty degrees. The device showed thirty-degree increments, and had 14 contacts—twelve for each of the directions, and two for the six-volt motor which rotated the compass ring—and the label showed it was manufactured in Nazi Germany by Lizt on Oct. 1, 1943, in lot 127-178 (52 devices), for a project named "KT-p2" ("Kreisel Teller - p2", which meant "Gyrating Saucer - p2"). The device was called a "Peiltochterkompass" (a "polar slave compass"), which was controlled by signals from a "Meisterkreiselkompass" (a "master gyro-compass"), which means that the device was half of an inertial guidance system.

Photos of the device are shown below:

The letters "p2", which designated the 1937 Los Alamos project run by von Braun, were incorporated into the official secret name-designation for the Nazi flying saucer project in 1943 Germany.

As explicitly detailed in *Space Aliens,* I saw the original reels of gun camera films made during WWII over northern Germany, in 1957, later in the afternoon of the same day that Major Donald Kehoe carried out his hoax on national TV. Some of the films had been made by some of the same men then present, since my Air Force Intelligence group was attached to the original U.S. Army Eighth Air Force group which had conducted those particular bombings in B-17 bombers. Those films showed what were apparently manned "flying turtles"—small electropulsive craft—which flew at high speeds around the bombers, in order to draw fire and interfere with their missions.

In the spring of 1945, as the Russians closed in on Berlin, General

George Patton took a special armored group deep into Russian-encircled territory, to the Nazi rocket center at Peenemunde on the Baltic. Attached to this group, disguised as "tank commanders", were Army intelligence officers specially vested with the task of retrieving all flying saucer materials and/or destroying the same at the Peenemunde project, along with retrieval of any technical drawings, etc. of strategic importance at the project, before it could be captured by the Russians. On discovering 200 celestial guidance systems (A.K.A., "inertial" guidance systems) deep underground in a salt cave, General Patton was infuriated on being ordered to destroy these systems by his superiors, being unaware of the fact that the technical drawings and specifications for the systems were already in American possession.

Development of the systems was imperative for the flying saucer, since a magnetic compass would be worthless due to the "Faraday cage" effect of the electric field surrounding the saucer, which would block out the magnetic field of the earth. The master gyro was calibrated to true north prior to takeoff, and would continue to hold that position during flight, so that the "slave" compass would have that as a reference, in order to actuate the six-volt motor and turn the geared compass heading ring to reflect the correct direction of flight. This particular type of Peiltochterkompass was used on a circular ship which could turn peripherally—in 360 degrees, frontwards, sideways, backwards, etc., in increments or multiples of 30 degrees—while other devices were used on some of the latest types of German "V" ("Vergetungswaffen", or "Revenge-weapons") rockets, which carried neutron bomb warheads, and were fired from underwater from special small submarines which were towed behind the latest "Electro-U-Boats" used in the final "Stalemate" which I detailed in *Space Aliens.*

Subsequent to my purchase, security agents learned of my possession of it and knowledge of what it was, so they went to Mark King, son of the owner of King's Surplus City, and grilled him. He showed them the bill of sale from Sandia Base, pursuant to his purchase of the small pile of salvage from a Sandia Base employee who usually brought salvage from that base to sell to him. As it turned out, the man had stolen a pile of classified salvage and sold it for his own profit, using a 'double-receipt' process intended to cover his tracks, but the security people put the man under surveillance, caught him doing it again, and charged, convicted and jailed him. They could not get the device back from me, because I was an "innocent purchaser", and because it would

confirm the still-classified purpose of the device, in violation of security procedures. I had purchased an inertial guidance system from a 1943 Nazi flying saucer, which has subsequently been brought to Sandia Base in late 1945 under Operation Paperclip, along with what was later to be over 116 flying saucer scientists and over 15,000 German personnel who were brought to New Mexico, as part of a special secret "deal" which was cut pursuant to the Stalemate.

As to the question of what "p2" meant scientifically, a similar designation was used by Nikola Tesla to denote "potentials", "plates", or "primaries". The drawing which follows is derived from information contained in Tesla's 1890's lectures and excerpted on pages 70-73, and provides the best clues I have found as to how Tesla created his "p2":

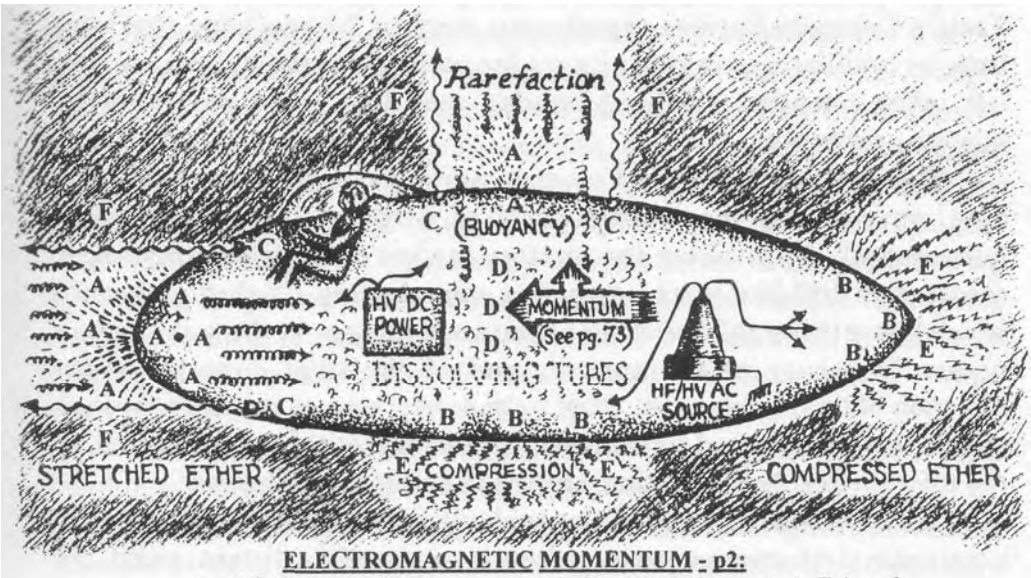

ELECTROMAGNETIC MOMENTUM - p2:

A - D.C. Potential - Carriers exchange in Brush (negative corona) - Tubes of Force enter conductors which are attached firmly to ship's structure
B - A.C. Potential - Carriers compressed - Tubes of Force exit blocked
C - Tesla Bulbs polarize Tubes of Force - space rendered conductive
D - Trapped Tubes of Force Dissolved - Momentum imparted at 10^{40} x fg
E - Compressed Carriers - Blocked Tubes - (positive A.C. corona)
F - Random Tubes of Force in free space

Both the D.C. 'brush' electrode and the A.C. 'compression' electrode would draw the ether carriers through the mass of the ship and its contents, creating the microhelical tubes which bored away around the ether. The electrode on the left would be assisted by the special Tesla bulbs, so that, when paired with the opposite A.C. electrode, it would

increase the pitch angle of the microhelices, accelerating the ether through the mass and propelling the ship.

Low and High Frequency Electromagnetic Waves
And Tesla's Wireless Transmission of Energy

Low frequency electromagnetic waves can pass through solid bodies, and tend to "hug the earth", while high frequency waves don't penetrate solid bodies, causing a "skin effect" on them, and don't "hug the earth", but tend rather to travel outward away from the earth in straight lines. Nikola Tesla, in his *Colorado Springs Experiments,* was the first person to investigate high voltage waves of high and low frequency, and their terrestrial, atmospheric, and solid-body effects. The scope of Tesla's Colorado Springs experiments were so far-reaching, that very little or nothing was said in science journals about them, because they left other scientists so dumbfounded that they were paralyzed by miscomprehension.

Many of Tesla's tests in Colorado were related to electropulsion. A long wave affects the internal mass of a space ship, "synthesizing momentum", by invoking the rotatory motion of electromagnetism, to create the drill-like electromagnetic microhelices ("tubes of force") which "bore through" the ether as the mass moves. At the same time, a higher frequency at the opposite end of the ship, opposite to the direction of travel, causes the ether to be accelerated as it passes through the mass of the ship and its contents, with an increased angle of pitch, so the microhelical boring action propels the ship through space.

Low frequency waves also make it possible to project forceful longitudinal electromagnetic pulses to a specific, distant point, by sending the wave along a conductor or polarized atmospheric "carrier beam" of U.V. or higher frequency radiation. The high voltage long wave, carried directionally to a distant point by the carrier beam, can in turn carry additional higher frequency waves superimposed on it, to deliver the high frequency exciting energy, at the powerful long-wave peaks. This was the basis for Tesla's "Transmission of Electrical Energy Without Wires" inventions, as well as his "energy beam" and "death ray" inventions, as the same system can be used for all three. The manipulation of these wave characteristics is inextricably involved in electropulsion, stimulated by Tesla's study of the works of 19th century "ether physicists", and his own brilliant creative intuitions of the

rotating magnetic field, in Budapest Hungary, in 1882. This rotating magnetic field discovery was involved in his electropulsion discovery, because Tesla realized that the rotatory force of magnetic fields could be used to synthesize the rotating "tubes of force", the naturally occurring phenomena in solid bodies spoken of by Faraday and Maxwell and known to Tesla, to propel a ship through space. The tubes had also been discussed in 1881, by J.J. Thomson in England, but Thomson had never related the tubes specifically to the ether until after Nikola Tesla had connected the tubes to his intended electropulsion.

Tesla discovered that by using a low frequency beam-directed pulse, he could cause, at the quarter wavelength, the eruption of a large electromagnetic pulse which could, by carrying a much higher exciting wave, excite the atmospheric gases in a region, to explosively expand them, followed by a tremendous implosion and the absorption of a great amount of heat in the area, causing immediate freezing. This process would create an initial explosive shock wave followed by the implosive return wave, similar to nuclear detonation. For example, by using a low frequency of 60 cps, with a wavelength of 3,100 miles, directed by carrier-beam, a pulse could be made to erupt at one-quarter wavelength-—775 miles, corrected to 751 miles by velocity factor. By superimposing an exciting frequency of say 50 megahertz or so, the atmospheric gases could be excited to cause a "cold implosion" which absorbs heat. By altering the wavelength and the direction of propagation, the results could be delivered to any terrestrial point.

The Tesla ion bulb, fundamental to Tesla's "beams", is a solid aluminum hemisphere, enclosed in a glass vacuum envelope, excited by high voltage D.C. applied to the center of the hemispherical end. A polarized beam is emitted normal to the flat face center. The frequency is determined by the voltage. The ion beam polarizes, concentrates, and guides a spherical, long wave front, amplified by Tesla's "extra coil", to a distant target, which amplifies a higher frequency wave front superimposed upon it, which will "ring" in-the target area at one-quarter wavelength, in fact ring many times.

Outside the bulb, in close proximity to the beam, the high voltage alternating current ("power wave") of low frequency, is emitted by a ring-shaped electrode, and is directed along the beam's atmospherically created conductive path, and is projected toward the distant target where the one-quarter wave peak delivers it at its "point" of greatest potential. This idea of Tesla's may have been stimulated by Maxwell's

concept that conductivity actually occurs in the dielectrics surrounding a conductor, with the 'conductor' serving only to "guide" the current. The June 30,1908 Siberian explosion/implosion at Tungushka, was probably a risky test or inadvertent result of Tesla's giant Wardenclyffe oscillator, and may have been a hidden reason as to why the project was never completed. It should also be pointed out that this method involved the absorption of energy "from the environment", since heat moves from hot to cold. This was yet another great energy discovery. Tesla's method "opened up" the atmosphere to this possibility, consistent with what he said about nuclear energy coming from "the environment".

The Tungushka explosion may also have been the impetus for a "very tempting offer" made to Tesla years before by V.I. Lenin, mentioned in retrospect in a November 29,1934 letter from Tesla to J.P. Morgan (microfilm, Library of Congress). The Lenin offer would have been between 1917 and 1934, and was mentioned unsuccessfully in attempt to tantalize Morgan). Tesla's "particle beam" weapon was hinted at in the following illustration:

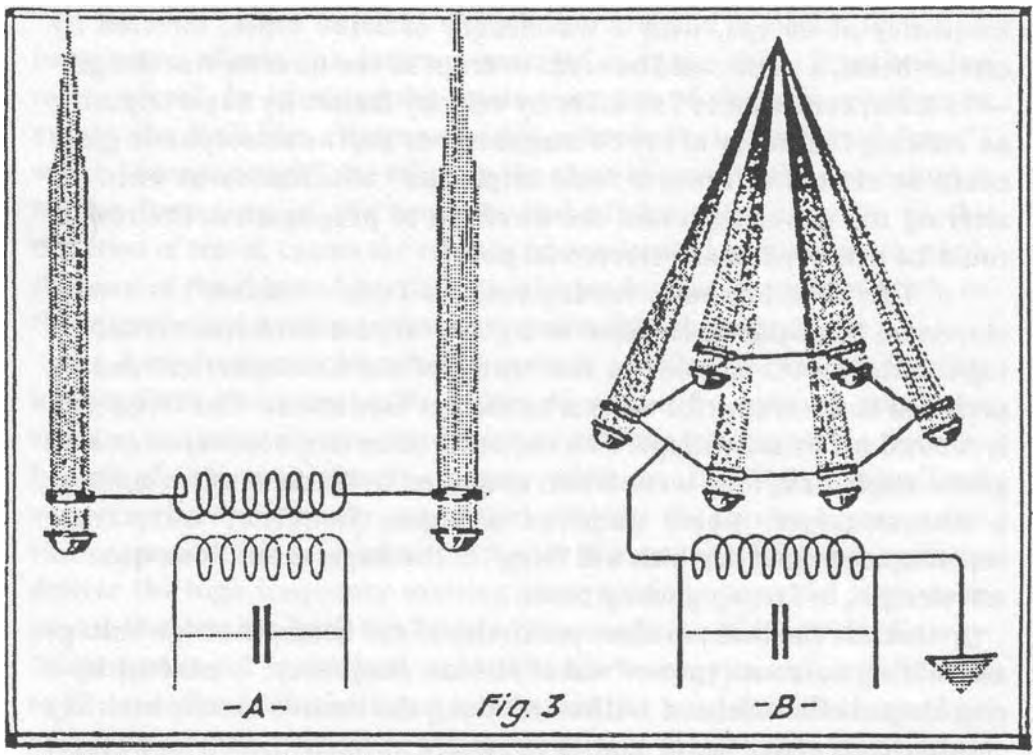

This illustration, from a July 11, 1934 *New York Times* article, shows several of the special solid aluminum Tesla bulbs which, as Tesla stated in 1940 (see page 27), no longer required vacuum. The current is placed on the beams by means of the ring-shaped electrodes near each bulb, fed with currents from the coils.

Tesla's TELEFORCE Discoveries

Tesla's Teleforce discoveries, evolved between 1900 and 1940, consisted of a "new" way to produce rays in free air without a vacuum, a "new" way to create a "very great electrical force", a "new" way of "magnifying" the force, and a "new" means of electro-propulsion (William L. Laurence, *New York Times,* Sept. 22,1940,11, p. 7). These four "new" discoveries—all of which could work together—were actually a juxtaposition of and different application of Tesla's devices already tested separately in the Colorado Springs experiments or later in New York or Wardenclyffe, with the exception that by 1915, he had tested the electropulsive missile powered by beam-projected electrical energy, and had tested a small, one-man electropulsive prototype in which he ventured out his hotel window at night over New York City in experimental test flights, and which served as an experimental basis for a much larger and more ambitious set of space ships which he had designed, which were repeatedly rejected by the U.S. government, probably because they thought he was nuts.

Even the Nazis were skeptical that the Tesla electro-propulsive technology might work, being unconvinced until Wernher von Braun had actually tested the concepts at Los Alamos in 1936 and 1937, and obtained the final approval of Hitler. Almost immediately after von Braun's return to Germany in late 1937, construction was begun on large "cigar-shaped" ships, using at first the iron pressure hulls of U-boats, which were already equipped with a hermetically sealable system carrying diesel generators for use in the atmosphere, and batteries for use in outer space. With the huge difference between the strength of the electromagnetic interaction and gravity, weight was apparently no object.

Since Tesla had actually received offers from the Russians prior to that time, I had considered the possibility that he had knowingly or unknowingly cooperated somehow with the Nazis in their Los Alamos experiments, through some of the unidentified laboratories he said he was working with, which is a very real possibility.

In looking for a probable Nazi spy, there was one who had wormed his way into Tesla's most intimate confidences, who was later convicted and imprisoned for his espionage activities in America, but the exact nature of his activities, other than the dissemination of Nazi propaganda, was never specified in the public records. This connection was the most

probable explanation for how Tesla's electropulsive discoveries found their way to the Nazi "p2" project, with all elements coinciding perfectly in time. The fact that von Braun's pre-war New Mexico adventures have been subsequently concealed from the public by the Secret Government, a degree of secrecy which cannot be explained except by reference to the Nazi flying saucer projects, is compelling.

The fact that I was a personal friend to an American rocket scientist named Peter van Dresser, who was angered by Dr. Robert Goddard's pre-war work with von Braun, and who was present in New Mexico since the '20's and was intimately familiar with the 1930's liaisons to von Braun's secret Los Alamos activities, left little remaining to be proven, since there is no longer any security basis for concealing such liaisons, if "rocket research" was the only thing von Braun's pre-war American presence involved. He had already been appointed as the Peenemunde project research leader, and had been promoted by Hitler and Himmler to *Ubersturmbannfuehrer* in the SS, and was given a "leave of absence" by Hitler to make the venture to America.

Dr. Robert Goddard, whose New Mexico laboratory was at Mescalero, with his launch area at Eden Valley, near Roswell, far to the south, was not involved in any known pre-WWH research at Los Alamos, and probably knew nothing of von Braun's secret project there.

One of the most telling pieces of evidence regarding the intentional misinterpretation of Tesla's discoveries—especially just after Tesla's death in Jan., 1943, at which point all Tesla's papers and apparati fell into the hands of the FBI—is the obvious meaning of the name for his system—"TELEFORCE"—which means "force at a distance", in the context of the four listed parts of the system to be used together, being clearly applicable to flying saucer propulsion, once I pointed out the fraud, and correctly interpreted the statement in 1993.

I have to hand it to the spooks, for doing such a good job of concealing the connection between the flying saucer and the only man who could have invented it—and whom the public should most readily accept as the inventor who rightfully deserved the credit for it—even though he never had a fair opportunity of giving his greatest discovery to the world, for lack of money to build a working model of sufficiently developed potential to impress us. The reason why he never had the money was because of the secret "bill of attainder" placed on his name by the greedy monopolists who were and still are afraid of technological freedom and a truly free market of ideas, goods, and services.

CHAPTER II: EXPLORING THE NATURE OF THE ETHER

The Early Background

In 1997, after many years of research and thought regarding the qualities of the ether, I decided to see what others had actually said, before completing this book. Some of the material available to me was second-hand information, being what someone said someone else had said. I wanted to make sure these "repeated statements" were accurate. After some difficulty, I accessed a copy of the classic, *A History of the Theories of the Aether and Electricity,* by Sir Edmund Whittaker (1951 revised and enlarged second edition, Vols. I and II). The 1910 first edition of this book was probably the most comprehensive book ever published on ether theory as it existed in 1910, but the 1951 revision merely clarified "acceptable" ether physics. The first edition was printed in Scotland, under the title *A History of the Theories of the Ether and Electricity, front the age of Descartes to the close of the nineteenth century.* The second edition incorporated "new material" related to quantum mechanics. Classical theory was in Vol. I, while Vols. II and III gave the origins of relativity and quantum theory up to 1926. Neither the 1910 first edition nor the 1951 revision mentioned Tesla, but the chronological sequence appeared to be "skewered' in the revised edition, with little or no attempt to point out what the scientists were actually aiming at in terms of electropulsion. Though information regarding Nikola Tesla was omitted, there is much valuable related information.

In his preface, Whittaker stated that where space is now considered "emptiness"—except for its property of propagating electromagnetic waves—the development of quantum electrodynamics referred to a vacuum with a new status as the location of 'zero point' oscillations of the electromagnetic fields and zero point fluctuations of electric charge and current, as well as a polarization conforming to that of a dielectric constant, which is non-unity (i.e., which contains energy). This implies awareness of the ZPR, but quantum theory inherently excludes the possibility of "zero-point" fluctuations, since all such waves are always regarded as possessing one-half "quantum".

Whittaker said that an alleged failure by ether theory proponents to observe the earth's motion relative to the ether, caused the downfall of the theory, but the facts show that the relativists, backed by corporate publishing interests, hastily dug the grave and threw the dirt over the

corpse of ether theory while it was still alive, for the wrong reasons. Much of the error was due to focusing on the weakest proponents who believed that a portion of the ether is "carried along" by the earth, and that an optical aberration would have to be observed at some point away from the earth, in order for an ether to exist. It was asserted that the failure of this observation was the "death" of "the" ether theory. By advertising ether theory's weakest and most erroneous proponents and ideas, the media made the RQM's hasty funeral of ether theory easy, and paved the way for the gullible public's acceptance of relativism.

I concluded that Whittaker's 1951 edition intentionally skewered important facts concerning electropulsion, which I have attempted to straighten out for you in this book. I now feel more comfortable with my version of Tesla's theory, than I did prior to reading Whittaker's book, but that was only because I knew what I was looking for. The facts I found are almost exactly as I said in my second edition of *Space Aliens.*

By reorganizing Whittaker's material into more proper order, I discovered much "new" ("old") documentation, that 19th century scientists were in pursuit of electropropulsion, and that there were interesting similarities between the thinking of certain scientists of the era and my own, which could eliminate some erroneous concepts about what they actually said, and shows similarities to what I observed on numerous occasions in the behavior of electropulsive "flying saucers", since the "proof of the pudding" is when it flies across the dinner table. It was my intent to examine known theory leading up to Tesla, to see what he contributed to their discoveries, and to determine what happened since that time to obscure, misinterpret and ultimately conceal it. To this end, I present for you a brief history and documentation of pertinent ether physics.

J.J. Thomson's "Electromagnetic Momentum"

Returning to the concept of the "carry-along" ether, Max Planck, originator of quantum mechanics, conscribed to this form of ether theory in part, saying that the ether had to be irrotational, carried along at the same velocity as earth near its surface, and compressible and subject to gravity like the atmosphere, in order for the theory to be true. At best, Planck's beliefs showed a weak mechanical conceptualization, something unexpected from one purportedly so adept at "mechanics".

J.J. Thomson (1856-1942), discoverer of the electron, conscribed to

a different and more plausible ether theory. Thomson had theorized—based on Maxwell's earlier theory—that a charged spherical conductor moving in a straight line must produce displacement currents in the medium (Phil. Mag. xi [1881], p. 229). In 1893, twelve years later, he claimed to have discovered "electromagnetic momentum", saying "...in an electromagnetic field there is stored in every unit volume an amount of mechanical momentum, proportional to the vector product of the electric and magnetic vectors". (J.J. Thomson, Recent Researches in Elect. And Mag. [1893], p. 13.) Thomson also was said to have developed the theory of moving tubes of force—which harked back to Faraday's earlier work—saying in 1891 that molecular structure is closely connected with tubes of electrostatic force, with magnetism regarded as a secondary force. He stated that "...the aether itself is the vehicle of mechanical momentum, of amount (1/4*pi*C) [DB] per unit volume." (Phil. Mag. xxxi [1891], p. 149; Recent Researches in Elect. and Mag. [1893], chap. 1.)

Tesla Shows Up

It is interesting to note that these "discoveries" by Thomson however, although following his initial speculations based on Maxwell's theory, also followed Tesla's lecture before the American Institute of Electrical Engineers at Columbia College, N.Y., on May 20, 1891, in which he described experiments in which he had earlier pre-empted Thomson's work with experimental verification, together with a demonstration of techniques and machinery built by him which obtained frequencies and voltages which W. Thomson (Lord Kelvin) had said earlier in England, were "impossible to achieve". In that sense, the "good old boys" in Britain should have admitted that Tesla's work was prior, after having acquiesced in the admission without rebuttal, that "they" were unable to create the equipment to produce the required frequencies to investigate and to experimentally verify these phenomena.

J.J. Thomson's theory, which linked electromagnetism with momentum in a mathematical and unified way, on paper, somewhat repeated Tesla's earlier lecture of 1891, proven by his earlier experiments, but Tesla's theory was different from Thomson's, whose theory was incorrect. Thomson's electromagnetic momentum could be created instantaneously only with Tesla's contrivances, which existed before Thomson's "discovery", only in Tesla's laboratory, so there is no

way that Thomson could have reduced "his" theory to practice or experimentally verified it.

Though the facts show that Thomson was prior to Tesla in *attempting* to publish a valid theory, Tesla could not publish prior to perfection of his invention, which was not a factor affecting Thomson. Tesla was first to prove his theory by experimental results. Tesla remained more than a gentleman about it, deferring often to Thomson, though Thomson even attempted later to dishonestly claim Tesla's alternating current and high frequency discoveries. Thomson's earlier work (Phil. Mag. xi [1881], p. 229), concerning a charged spherical conductor, moving in a straight line, had commanded Tesla's respect and probably influenced his work, but Tesla's 1884 discovery of the rotating magnetic field had already beaten them all to the punch, and documentation shows that he had arguments with his "learned professors" in Graz, who said he must be "crazy", from his 1870's student days, to prove it.

It must have worked a horrible hardship on Tesla, to remain silent about his complete theory, which he could not publish without giving away his technology, before he could perfect a working model to get patent protection. It was like the Wardenclyffe tower, turning in the wind of incompleteness for lack of money, created by having been falsely induced into building an expensive system which would exhaust his energy and financial resources to the point of bankruptcy.

In respect to momentum, I would analogize it as follows: When a body is held by a spinning or arcing arm, it contains the changing tubes of force created by angular momentum. When released, it moves in a straight line vector, corresponding to the state of the tubes of force at the time of release. While held by the arm, centrifugal force was created by the tendency of the tubes to move in a straight line, or at least to continue whatever transverse or complex pattern of movement of the tubes which then existed, which created the resistance to change by the tubes at any moment. Once released, "something" (the microhelical tubes of force, as they then existed) determined its direction of movement and velocity, which in a vacuum would be force-free. These facts are consistent with Tesla's (Thomson's, Faraday's, Maxwell's) "tubes of force", which I will explain later in greater detail.

Most of Thomson's 1881 work harked back to Maxwell, and before him, Faraday, who had stated in 1831 that movement of an electrostatically charged body is equivalent to a current, which was

described as a tube of force created by movement and momentum (Faraday, Experimental Res. Sec. 1644; Maxwell, Treatise, Secs. 768-70).

In his consideration of the nature of "ponderable matter", Faraday had suggested that an atom may be nothing more than a field of force—electric, magnetic and gravitational—surrounding a point-centre, which is completely penetrable (Bence Jones' Life of Faraday, ii, p. 178). Fresnel later stated, 'Upon considering the aberration of the stars, I am disposed to believe that the luminiferous aether pervades the substance of all material bodies with little or no resistance, as freely perhaps as the wind passes through a grove of trees'. Fresnel's concept presupposed that the ether surrounding the earth was unaffected by earth's motion, and generally agrees with what is actually observed, except for his failure to consider how the earth's dynamic electric field affects the ether.

Along with his c.1831 theory of an (elastic) solid electric ether, and lines of magnetic force, Faraday considered all space as "filled".

Wm. Thomson (A.K.A. Lord Kelvin) (1824-1907), at age 17, based on Faraday's earlier announcements, introduced into mathematical science the idea of electric action at a distance by means of a continuous ether. In 1846, he analogized electric phenomena with mechanical elasticity. It was his early concept that material atoms move through the ether 'without displacing it or compressing it' *(letter,* FitzGerald to Heaviside, 4 Feb. 1889), concepts later to be adopted by Tesla in saying that the ether 'behaves as a fluid to solid bodies, and as a solid to light and heat'.

About 1853, Bernhard Riemann (1826-66) conceived an ether which resisted compression and changes of orientation (Ann. D. Phvs. cxii [1867], p. 237; Riemann's Werke, 2e Aufl., p. 288; Phil. Ma2. xxxiv [1867], p. 368).

Riemann thought the resistance to compression caused gravitational and electrostatic effects, while the resistance to changes in orientation caused optical and magnetic phenomena, but he failed to develop these concepts further. These early Riemann insights were however very influential on later thinkers. He conceived a stationary ether based on the generally accepted assumption that, as the earth moved through space, the ability of one to see a star with a steady image disproved a dynamic ether. As to the propagation of electric action through space, Riemann proposed a new equation in which voltage changes outward from charges with a velocity C, but he also failed to follow up with a proper consideration of the properties of the ether, because he died too

damned young. Riemann's insights were verified almost 50 years later, ten years longer than his entire lifetime.

Years later, Maxwell, after reading Faraday's 1831 Experimental Researches in Electricity (3 Vols.), formed a mechanical conception of the electromagnetic field, connecting Faraday's magnetic lines of force and electrical ideas with the mathematical analogies of Wm. Thomson, carrying Faraday's concepts a step further (I have always liked to say that Maxwell "put the math to Faraday", because Faraday couldn't do much math, though he is recognized as the greatest "experimental philosopher" in history, a former Irish bookbinder's journeyman who got his early education from the books he was binding, and who at age 21 happened to write a letter to chemistry professor Sir Humphrey Davy in 1812 and so impressed him that the following spring he was appointed a chair at the Royal Institution, and the rest is history). A sort of electrician's Mozart, Faraday like none other, was almost always right from the beginning, in the middle, and long after his death, with so many remarkable insights and observations which were made without resort to tiresome pages of math, lucky for Maxwell, who made his own contributions in the process.

Faraday had stated that induced magnetism in iron exists only within the iron, was zero in external free ether, and was the basis for electrical induction. Maxwell's "electric displacement in a dielectric" was analogous to the magnetic induction B, which he said may have a value different from zero even in the free ether. According to Maxwell, there is a displacement (i.e., an electric movement away from equilibrium position) wherever there is electric force, whether "material bodies" are present or not (thus carrying his electric displacement into the ether) (Maxwell, Scientific Papers i, p. 451; p. 526).

It had occurred to me that since the earth and bodies "at rest" on it are in uniform motion (or uniformly *changing* motion) in respect to a stationary ether, that there were differences in electric displacement of ether in the space within solid bodies and space within the free ether, due to the polarization of the ether by the electric field of the earth, and the differences in dielectric constant between the two. I deduced from this that the constant movement of bodies through a stationary ether-filled space, carrying their charges with them, creates the displacement currents.

Maxwell had represented Faraday's lines of magnetic force (vectors of magnetic induction) as the velocity of an incompressible fluid, based

on Faraday's suggestion years earlier that there may be a "dynamical condition" similar to electric current, and that the 'physical lines of magnetic force are currents' of this "fluid". This agrees with Faraday's "dynamical condition" of the electric field 'carried along' by the earth, equivalent to a current, producing the earth's magnetic field and gravitation, by effects on the stationary ether within earth's dynamic electric field. It also implies that magnetic lines of force are the "equal and opposite" reaction to electrical current as Faraday stated, and *vice-versa,* though magnetic fields are more the secondary effect of electric currents. The magnetic field is equally important however, in its creation of the rotatory motion imparted to electricity, which is responsible for the microhelical "tubes of force" which create the momentum which maintains the perpetual motion of celestial bodies in the universe, and guides electric currents through the ether forever. And this sounds very much like it must have been Tesla's theory as well.

Cosmic Motion and Local Momentum

The earth orbits the sun at approximately 18.5 miles per second (66,600 mph). The solar system is orbiting the center of the Milky Way much faster, and the Milky Way orbits the Magellanic Clouds much faster, and so fourth. This hierarchy of velocity increases from the moon, to the earth, the Milky Way, etc., although these pale into insignificance relative to electromagnetic velocity, since movement of force is time-relative. In all, the earth's velocity and polarity relative to the ether continually varies according to its rotation, orbital position, and galactic cycle. When between the sun and the Milky Way's center, for example, it moves slower than when to the "outside". As the earth rotates each day, its polarity of movement through the ether rotates 15.2 degrees per hour, with a rotational surface velocity at the equator of approximately 1,041 mph. This continuous change in polarity is so gradual that it is sensually imperceptible, but probably contributes to modulating the gravity force (and may even influence our emotional states!).

According to W.B. Morton (Phil. Mag. xli [1896], p. 488), an increase in charge of a body increases its "virtual mass", which increases the work required to move it by amount $2e^2/3ac^2$. This was in correction of J.J. Thomson's figure. Such a case suggests a dynamo consisting of large, insulated conductive balls on the end of a shaft, which are alternately charged and discharged to alternately increase and decrease

their masses, thus rotating the shaft. But this possibility appears to be a fantasy, since the "increase in work required to move the ball" (in Thomson's theory) is related to an increase in the resistance to the penetration by the ether, caused by the presence of the extra charges, which according to Faraday created a "Faraday cage" effect which shuts out the magnetic lines of force. Without the magnetic lines of force—or with suppressed or diminished lines of force—the rotation of the tubes of force by the magnetic field are diminished or stopped, resulting in a diminution or elimination of momentum. Such propositions give ample food for thought.

If Tesla had continued to increase the earth's charge with his gadgetry, he could have thrown the earth's timing off, slowed it down, and possibly caused it to drift toward the sun. Being aware of these facts, he later addressed them and even listed them as future technical possibilities, which also corroborated his developments in the field of electropulsion, in case anybody noticed.

Local Momentum and Celestial Movement

It's an odd thing, momentum. If a body is in motion relative to earth, its momentum is in the direction of motion, yet as a body at rest on a spot on earth, it still had momentum along the spot's ultimate motion relative to the ether. The motion is compound, but the ultimate momentum of a body is truly a vector which represents all the forces acting upon it.

The earth rotates at over 1,041 mph at the equator, so there is that momentum, but the earth's orbital speed and path around the sun means that the earth's more general path is in the direction of its orbit. As the earth's rotating surface would appear to a distant observer to be moving backwards from its direction of orbital motion over a period of a day, it is always moving toward its orbital path because its orbital speed (over 66,600 mph) is greater than its rotational speed. All the rotation does is periodically diminish and increase the speed of our "spot" on the earth's surface, and gradually rotate its orientation once every 24 hours, as it moves through space. With its compound movement and momentum—of the earth, the solar system, the Milky Way, etc.—we have a more complex pattern of movement, and since a body which is in constant, compound, gradual, ever-changing motion relative to the ether, some interesting effects are bound to be found. These effects are not, as

described by Newton's laws, due to an attractive force acting at a distance, through an empty space.

Due to the relatively gradual orbiting and rotating changes in respect to the earth's motion relative to the ether-field, a relatively small amount of "externally acting" force ("gravity) would have to be ever-present in order for Newton's laws to apply even on the purely descriptive level, except for the local ether phenomenon I will specify in further detail, which insures "force-free" perpetual motion, *despite* the gravitational effects. While I agree with that part of Einstein's theory that says gravity is not due to the direct action of one object to another, I disagree with the part that says it is due to the idea that a body "wraps" space around itself and "curves it". Without an ether, there is nothing to curve, and with it, there is no Relativity theory.

In early 1995, in exchange for a copy *of Space Aliens,* I received a copy of Eric Lerner's *The Big Bang Never Happened,* and was pleased to find there are some in the academic world of physics (or astrophysics), who share at least in part, my own views on the Big Bang Theory, although they don't go so far as I do in saying the theory was created and promoted by the coercive energy monopolists, because of its apparent intent to negate the free energy available from the ether, due to what I call the "Law of Conservation of Perpetual Motion". I also find Lerner's book refreshing, not to mention useful in charting some of my ideas on a more cosmic scale.

Lerner's unsung hero is Hannes Alfven, a Norwegian astrophysicist and cosmographer, whose earlier "academic burial" by the Relativists was somewhat reversed in 1970 by a Nobel Prize awarded to him for his development of magneto-hydrodynamics and his concept of frozen lines of magnetic force, a theory later repudiated in part by Alfven himself. Alfven had in a way replaced the word "ether" with "plasma", and strongly disagreed with the Relativist's misuse of mathematical theory, which he said 'must always be the servant of physical understanding and close observation, rather than its master'. He claimed giant currents through space, from the sun through the planets, along magnetic lines of force, actually transfer angular momentum to the planets. This discovery, together with his work on cosmic MHD events, places Alfven's work very close to Tesla's Dynamic Theory of Gravity.

The appearance of such books as Lerner's is a positive development, which represent dissent which seems intolerable to the Relativists. The Big Bang Theory is in decline among scientists, despite all the NASA

false propaganda in the press and mass media attempting to perpetuate and support it. I recommend Lerner's book, even though he has not yet evoked an affirmative support for ether theory, but has dared to challenge Relativism and the Big Bang cosmology.

The actual course that a particular spot on earth takes through the universe is naturally more complex than that of the sun, since the earth represents a smaller cycle within the larger. Relative to the ether-field, the entire interrelated movements of the solar system and Milky Way takes our spot in a generally wavy path, along which our velocity relative to the ether periodically accelerates and decelerates.

The same principles of momentum which apply to the cosmos must also apply to the motion of immediately local bodies, except that the effects are skewered by the presence of earth's pesky electric, magnetic, and so-called "gravity" fields. What Alfven had touch upon in his long-unrecognized discovery of giant electric and magnetic currents through space, are similar to unrecognized forces operative on a local scale as well. As our planet hurls through space at 70,000 mph, and us with it, there are things happening on a super-microscopic scale of utmost importance, which play all-important parts in this giant panorama.

The big question—the one which those who invented the Big Bang cosmography sought prematurely to put to rest—is how can everything stay in perpetual motion under the Relativist theory, without violating the law of conservation of energy...and thereby also refuting the Relativist theory? The still-born theories of Tesla were still knawing at their throats, along with those of Alfven, so they wanted to obscure all truly competing theories, and enshrine themselves in the annals of science for all time. Their method was to fabricate a scenario in which one original giant explosion was the 'origin' from which all we see is but an effect which will eventually "run down", like a car which is out of gas.

The missing ideas are how universal processes are continually self-replenished. Through an interplay of natural strong and weak forces and matter, perpetual motion is conserved. Strong forces overcome weaker forces. Cosmic radiation travels through the ether, until it reacts with plasma, forming matter. When matter concentrates, its forces concentrate. In contact with other, less concentrated matter, stronger, cosmic forces within the space it occupies are unleashed, producing transmutations and eventually more cosmic radiation, which travels through space until absorbed and converted by plasma or other mass, into more mass or radiation of lower frequency, and the process

continues, ad infinitum.

The rigid thinker must have a simplistic answer as to "where matter comes from", "where it is going", "what is the purpose of life", or "what keeps everything going", etc. Sometimes we must accept reality, and discard phony theories which attempt to give us a simplistic answer for what we either must admit that we just don't know, or should consider some questions too stupid to ask. The facts concerning the existence of universal matter, forces, vast distances, massive bodies and events, and perpetual motion, are irreducible primaries or "first laws" about reality, which we must accept before we can progress with answering particular questions related to the more useful aspects of existence.

Since the orbital speed of earth around the sun is greater than the speed of earth's rotation, our spot never moves "backward" relative to the ether. Since the orbital speed of the Milky Way is greater than the orbital speed of the solar system or rotational speed of the earth, our spot continues in a generally "wavy-wavy" path in which we accelerate and decelerate over a one-day short cycle, while the entire earth moves in a wavy path over a 365-day longer cycle, and so fourth. There are still larger and larger cycles of motion over time, in which the solar system orbits the Milky Way, the Milky Way orbits the Magellanic Clouds, and so on. As can be seen from these cyclical movement, the universe is an unlimited system of interrelated systems which move in gear-like precision, rather than in an *explosive* pattern *ala* the Big Bang. Universal movement is in an orderly, cyclical pattern of circles (or ellipses), within circles, representing mechanical oscillations which are related to smaller and larger electromagnetic ones. The exceptions to this—the occasional cosmic explosion, such as that of a supernova—are the exceptions which prove rather than disprove the rule. Even the occasional comet follows a cyclical pattern, while the debris from cosmic events eventually falls into patterns. Though such explosions on our scale are gigantic, they are like minor ripples in a pond on a cosmic scale, and should not be allowed to warp our perspective.

If last week a remote controlled telescope—such as the Hubbell—showed a movement which when compared to an earlier measurement of a few years ago indicated a movement away from a distant part of the universe, just remember that this is only an observation of movement which is part of a much larger pattern of oscillation over a much longer period of time, in which the movement will later appear to be going the other way, from our point of view, if we could make an observation

millions of years or longer into the future. Because of the circuitous pattern of movement which we observe in relation to earth at the present, and the larger structures in "our vicinity" of the universe, we have good reason to believe that all such movements are cyclical, and to extrapolate ourselves into the time when the appearance would be quite different. The theory that the earth and other celestial bodies are the result of the Big Bang are ludicrous. The universe has no age, as it has always existed, and always will exist. The whole theory about how planets "were created" is erroneous.

Life forms would not only have to have existed at one time on Mars, but on all other planets and stars, at some time. In fact, the planets grew from smaller bodies as a result of life forms, which convert interstellar radiation into solid mass. There is no depth to which we can drill on earth, or otherwise produce direct evidence to the contrary, where we will not find matter which was in its past part of living things. This theory of course makes the planet "too old" for the Big Bangers, as it would take a much longer time to reach its present state, and would throw their "calendar"—on which the high priests of "Big Bangery" have placed the earth's "birth date"—off.

For example, one of the components of chlorophyll is iron. This iron along with carbon deposits and other elements results from photosynthesis. If strata of the earth, thousands of feet, even miles thick, are composed of the decayed and metamorphosed remains of plant and animal life, the original biomass represents a conversion ultimately of radiation through photosynthesis, and into the many elements and minerals composing the strata, which can be easily traced to this process, such as iron, calcium, phosphorus, sulfur, nitrogen, carbon, hydrogen, oxygen, and helium. Such elements accumulate through the cosmically-driven forces of life forms. There is probably a constant of universal mathematical proportionality between life forms and inorganic ones.

The ether, the medium which conducts the ZPR, can be converted into any form of matter or energy. It is possible to precipitate any element out of the ether, using proper technology. The ether contains the building blocks of what we call "solid matter", the proof of which enhances this possibility.

Nikola Tesla eventually realized the ether's use in his discovery of the "tremendous propelling force". His electropulsive technology works, and that is more important that splitting hairs...or atoms.

Only an ether which is intimately involved with momentum, could

explain such a tremendous propulsion force such as that which I observed in 1953. This propulsive force was nothing more than a force which exists in nature, which in the hands of man becomes an article of will, once the physical processes capable of synthesizing and manipulating it become known.

From the rate and manner of acceleration, in conjunction with the probable mass of the ship I observed, it was immediately apparent that the entire volume of the ship, if filled with conventional rocket or jet fuel, would have been consumed in the three seconds required for it to accelerate to c.9,000 mph and disappear at infinity, except for the existence of Tesla's technology which electromagnetically canceled inertia and synthesized a new momentum instantaneously.

What is inertia? Inertia is the momentum which a body 'at rest' already possesses because it is in a state of uniform motion, but which to us appears to be at rest. Tesla's technology uses the electromagnetic interaction, which is 10^{40} times stronger than gravity, to create a "tremendous propelling force" which instantaneously reprograms the atoms and molecules of a ship with new micro helical tubes of force along a new trajectory, and destroys the " memory" of the tubes of force which created its prior inertia/momentum.

Electropulsion is a "free energy" process in which energy existing in the environment—"gravity" and momentum—are overcome by and replaced with the naturally stronger force of electromagnetism, to perform a greater amount of work during a given time, which theoretically is 10^{40} times more work, using a smaller amount of "input energy" to trigger the change. If "energy" is "the ability to do work", and "work" is the "movement of mass through a distance", then a stronger force will do more work over a given time period. A change of form of energy from a weaker to a stronger force (which exists in the environment) will use "environmental energy" to do more work in a new way.

The process which makes electropulsion possible, is the dynamism of the universe, which naturally exchanges weaker and stronger forces to conserve perpetual motion, with any lost momentum being resupplied by the ZPR.

CHAPTER III: OBSERVATIONS

With Tesla's theory and the background of older research and theories held temporarily in abeyance, let's look at what has been directly observed either by myself of by those closely associated with me.

What I began observing in 1946, and have continued ever since, are man-made electro-propulsive flying machines which can hover, turn on a dime at high speed without flying apart, and accelerate almost instantaneously to at least 9,000 mph, without readily audible sound or sonic boom. The ship I observed in 1953, in broad daylight, hovering at about 300 feet distance, about 250 feet above ground level, precessed at a high angle—about 45 degrees—and a low rate of about two precessions per second. Soon after I spotted it, it began to move away directly due west, quickly accelerating to about 800 mph, at which time it did two absolutely square turns—a right angle turn straight down and another right angle turn back to level flight—then accelerated to a point of infinity above the horizon in three seconds. The ship was constructed as if it were two 50-foot diameter stainless steel woks joined together clamshell fashion. It had concentric "striations"—grooves in its surface which appeared to be about one inch wide all over its surface—which gave its bottom half the appearance of a giant "spun-metal" wok, as it precessed with the sun's rays playing on its bright metallic surface. The sun was about ten degrees above the horizon at the time.

As it precessed, it gave off a sparkling, "rainbow-colored" electrical corona, like a metallic surface which was being electrified with high voltage Tesla currents. On the shadow side of the bottom away from the sun, as the ship precessed, there appeared a soft, 'cloudy', infra-red glow, which indicated the possible presence of microwaves, while the general "rainbow" corona was apparently of high voltage electricity. As the ship began accelerating, the rainbow corona formed a sparkling, scintillating trail behind the ship, which also showed a "texture" of lines in the trail which appeared to indicate the frequency of the pulses. Since the lines appeared to be "about" five feet apart at "about" 200 mph, the frequency could have been 60 cycles per second—a frequency which is very low, with the approx. 5-foot-spaced pulses coming at the quarter wavelength. This rough guess is based on what "200 m.p.h." looked like from our vantage point. (Note: In Tesla's time, "microwaves" were those of only a few feet or inches, such as those he measured coming from the earth during his 1899 Colorado Springs Experiments. The

"internal" frequency possibly used with this ship—the penetrating long waves, oriented along the direction of acceleration, to polarize the "tubes of force" necessary for the propulsive force to act on the ether—were apparent from the outside, as the pulsing effect graphically illustrated by five-foot spaces left in the scintillating ion trail.

Consistent with the observed behavior, the electro-propulsive system appeared to instantly synthesize in an internal atomic way, inertia and momentum, things which normally create problems in acceleration and turning, but which the system overcame as shown by the evidence of the square, right angle turns. The system appeared to have very little to do with "gravity", even though it also revealed that gravity is apparently due to the same kinds of electromagnetic mechanisms. These observations were taken at face value, as proof of certain facts concerning the nature of the ether, gravity, inertia, momentum, and "electropulsion".

I had observed whole squadrons of saucers at night, between 1947-53, during which time I slept outdoors in our back yard. The squadrons arrived over our town from the direction of New Mexico (about ten miles from the southern New Mexico border), and departed back in that direction after their night-time maneuvers. (Note: The ship involved in the 1953 sighting flew due east, toward the northern tip of Ft. Bliss, near El Paso, Texas. Ft. Bliss was the location of Headquarters, U.S. Army Ordinance, where Weniher von Braun was appointed research director in the summer of 1945. The ordinance headquarters was subsequently moved, along with von Braun's main base of operation, to Redstone Arsenal, Alabama, about 1951.)

The night squadron saucers turned in angles of 30 degrees or multiples (30, 60, 90,120, 180, etc. degrees). That meant they had the same navigation and control system as the 1943-vintage German saucers which my Peiltochterkompass was used on.

My observations, together with all the written information on the Peiltochterkompass, and an analysis of the device itself, revealed quite a lot about the German "Kreisel Teller- p2" and its propulsion system:

1. The ships were electrically propelled;
2. The propulsion system created an electric field around the saucers which necessitated the development of an inertial guidance system and compass, since a magnetic compass would be useless due to the "Faraday cage" effect;
3. The ships were circular, discus-shaped craft, which turned in

twelve *peripheral* directions of the compass, plus "up" and "down";

4. The ships used a horizontally oriented master gyro-compass ("Meisterkreiselkompass"), calibrated prior to take-off to true north, as the frame of reference with which to navigate the ship using an electromagnetic slave compass, which was interconnected to stepping switches which also actuated the ship's bi-polar propulsion electrodes;

5. the system canceled the normal effects of gravity, inertia, and momentum, and instantly synthesized momentum in the chosen direction, without disturbing the operation of the master gyro, which continued to maintain its heading during flights, apparently because of an 'internal' inertia/momentum within the ship's outer shell;

6. the instant turns showed an incompressible ether which is integrally locked with mass in the phenomena of inertia, momentum, and gravity.

Since the 1953 daylight sighting, I have seen many other electropulsive craft, but one of the best sightings I made was on a moonlit night while soaking in a hot tub.

Rub-a-Dub-Dub. Seven Folks in a Hot Tub

On a Wednesday evening, January 24, 1996, at approximately 7:00 PM, I sat in a hot tub with seven other people, at the *Ten Thousand Waves Japanese Bath House,* located on the western slopes of the Sangre de Christos Mountains, in the Hyde Park vicinity above Santa Fe, New Mexico. As I steamed in the tub, conversation between a couple from Denver and myself drifted from the dangers of fluoride to "What do you do?", to which I answered, "I write some". Asked what I had written, I answered "A book called Space Aliens from the Pentagon."

A beautiful woman on my right exclaimed "I have your book. I'm a friend of Alex and Rex. I love your book so much, and so do they." I thanked her and we exchanged introductions, and then I said, "I see saucers up here almost every time I'm here after dark...and as a matter of fact, there's one right there" (pointing out a flashing aircraft flying slowly easterly about 15 degrees to the lower left of the crescent moon, at a distance of about 10,000 feet from us).

A heckler across the tub said "Aww, that's a plane", to

which I responded, "There's another one...and if they're planes, why have they parked? The flashing lights mask an underlying glow. The eye recoils from a flash, and never has time to recover before another flash. When they move faster, they glow brighter, which is why they are going so slowly."

No sooner had I spoken, than the stationary ship on the left quit flashing, and turned into a dark, glowing green shape like a football field surrounded by a track. Around the "track" was a dark strip, with a purple corona outside that, produced by the Tesla coils. I could see the curvature of its bottom as it moved, flying in a large circle, as I followed it with my Outstretched arm and index finger, and my fellow hot-tubbers oggled in jaw-dropped amazement. The following is a black-and-white photo of a painting I did of the saucer, as seen from the bottom:

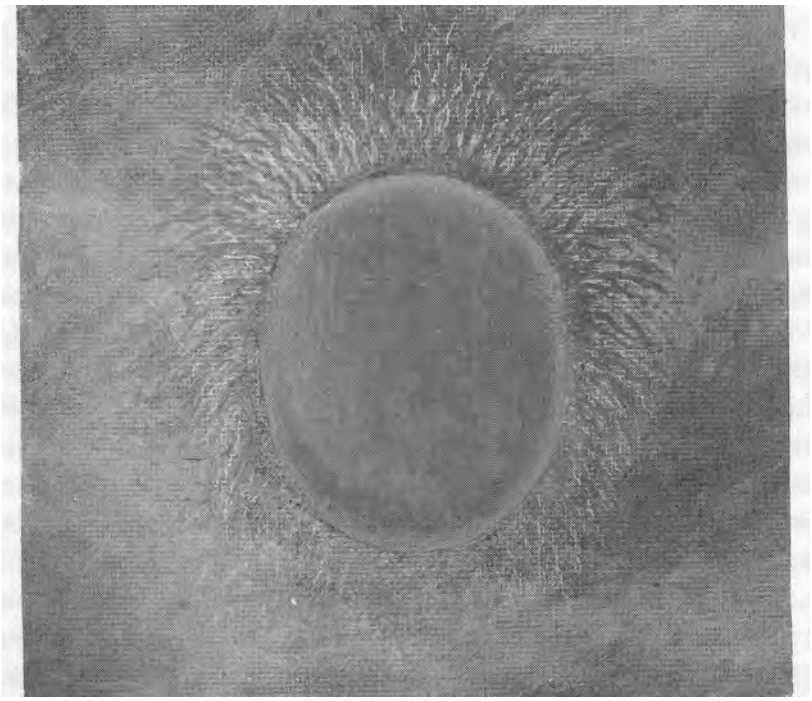

It returned to its starting point, skidded to a halt, and began flashing again. This took approximately ten seconds. Since the ship appeared about one-half to three-quarters of an inch at arm's length (about 2 feet), at the 10,000-foot distance, it was around 400 feet long and 250 feet wide. Since the diameter of the circle from

top to bottom was about 30 degrees, its speed was about 2,000 miles per hour (the speed didn't surprise me, since I clocked the one I saw in 1953 over our back yard at minimum of 9,000 mph when it departed). I almost missed it, because I didn't have my glasses, and because it appeared to have been "stealth-ized"—designed to be concealed by the night sky, by controlling its emissions to be a dark green and purple, so as to more closely match the light value and blend into the night sky. The main 'give-away' was the color differences.

Others in the tub—most of whom didn't need glasses—saw it more sharply than I, yet wouldn't have seen it at all if I had not pointed it out to them. I probably would not have seen it myself, had I not been observing the flashing ships beforehand, with the moon so close above, creating some back-lighting which helped to define the darker silhouette when it developed. Moreover, the real reason I saw it, was my own preconscious mental self-conditioning.

I was amazed at its large size, since, when flashing, it appeared much smaller. When I finally looked back to the other side of the tub, the heckler was gone, the on-cue saucer demo being apparently too much for him. If the saucer crew had been listening to my words, their performance couldn't have been more perfectly timed. Bravo! Do they also have some computer software that reads lips? It is my theory that the government jerks have chosen that particular location to do some "testing", because of the titillating availability of the numerous private hot tubs open to the night sky, occupied by private nude couples of all sexual persuasions, ready to be video taped by them. I can just see them trading the tapes among themselves, another good reason to "...keep the secret", to avoid prosecution.

It was the first time I had seen the green-glowing type reported years ago by astronomer Clyde Tombaugh, discoverer of the planet Pluto. It was the second most graphic demonstration of saucer technology I have witnessed. If I had not spotted it, none of us would have seen anything extraordinary, excluding the beautiful lady next to me who liked my book, and was a strong competition to the saucers. Incidentally, the female breast shape may be "natures most nearly-perfect shape for a flying saucer design". Hmmm...maybe the "cigar-shaped" ships were dreamed up

by a woman. The "green-glowing" type was apparently the result of research designed to make the ships less visible in the night sky, since the early models—such as the "foo-fighters" ("Fliegende Schildkrote" ["Flying Turtle"] and "Kugelblitz" ["Ball Lightning"]) glowed brightly. The oblong design (as distinguished from the circular or 'peripheral' saucers) comports with what I call the "linear type" in my book. According to a friend who is an expert spectrographer, the green corona indicated atomic absorption, which I presume to be 'stealth' technology used to suppress the white light spectrum. He seemed to think sodium based coating, while I think maybe chromium, because it appeared to be a veridian ("chrome") green. The soft, 'cloudy' green also indicated positive corona, as distinguished from the 'hairy' negative (purple) corona around the outer periphery.

Comparison to Other Siehtings

The hot tub sighting was not a clear, "daylight", "close-range" sighting, like the first good sighting which I had personally made on a bright, late summer afternoon in West Texas, in 1953, within 300 feet, right over our back yard, in Kermit, Texas, as our family and friends were having an ice cream party. I had been the last in my family and neighborhood to see a saucer in a close-up daylight sighting, since three had appeared on two consecutive days, June 1st and 2nd 1950, while I was unfortunately in the Davis Mountains about 120 miles to the west. My father has seen more of them than I, and was once held in his car for 15-30 minutes, on the night of Nov. 2, 1957, just south of Levelland, Texas, by one of the 200-foot-long, egg-shaped chingas, which had scared the livin' daylights out of him. The thing hovered within ten feet of his car top, killed his engine, and burned out all his lights, yet failed to burn out a single fuse in any of the car's circuits. The saucer's electric field was so strong that it arrested current flow, and was strong enough to cancel the magnetic fields in the generator and circuits. The white-hot tungsten filaments were the weakest points in the circuits, and the saucer's pulse currents apparently subjected them to magnetic and electric shear forces which broke them apart.

My father had to drive back to Levelland in the dark, spend the

night in a motel, then drive home to Odessa, Texas at dawn's first light. He arrived home about 7:00 AM, had a quick breakfast, and left for Sewell Ford to have his lights fixed, saying nothing about the saucer. I turned on the TV for the morning news as he left, and realized that he had been one of the several drivers held by the ship (or ships) that night. I drove to Sewell Ford, and questioned him about it as the mechanic fixed the lights. He asked how I knew about it, and I told him it was on the news. He said he didn't want to be called "crazy". This was what I call "anti-paranoia". It was reasonable to fear ridicule created by government propaganda.

Later, in 1963, I had the opportunity to discuss the matter more fully with the sheriff of Hockley County, while working in Brownfield, Texas, as a graphic artist, doing advertising art for a manufacturing and publishing operation which had contact with the soil conservation district with which the sheriff was affiliated. The ship seen by my father matched in shape, appearance, and performance, the type observed by deputy Lonnie Zamora, near Soccorro, New Mexico. Zamora had at first described the crew of the ships as typical G.Ls in grey-green Air Force jump suits, but later altered his story, saying they were "...about the size of children". This was after the security spooks 'leaned' on him.

Saucers can be seen almost any night in the area where I live, and are very profuse in an even more obvious way around the Cheyenne Mountain area to the south of Colorado Springs, where the underground NORAD complex is located. With the several direct observations, or reports from those in my family or from my close friends as "proof of the pudding" kept firmly in mind, let's see what more can be found in ether theory history to reflect on them.

The Ether and "Ponderable Matter"

In 1879, James Clerk Maxwell (1831-1879) said that the velocity of the solar system relative to the ether could be determined by observing the retardation of the eclipses of Jupiter's satellites. The observed behavior—in which the light of a star can be viewed with a steady image as the earth moves through space—indicates a stationary ether relative to a moving earth, solar system, and other bodies. The ether is ultrafine, yet very dense, and composed of positive and negative electric matter, which pervades all so-called "free space", as well as the space "occupied"

by "mass"—which the old ether physicists called "ponderable matter"—because it is mostly "space". Since the ether is stationary, it is the ponderable bodies' which move through it, just as Fresnel said, rather than vice-versa.

The ether is transparent, because of its ultra fine, high frequency structure, which does not refract or reflect visible light, because its ultra-fine size is too tiny to react to such low frequency radiation. To momentively "access" the ether in a propulsive way, high voltage pulses are required. This is in accord with J.J. Thomson's "electromagnetic momentum" theory, and was confirmed by the tests conducted by Nikola Tesla by 1891 (later detailed in his 1891 lecture before the A.I.E.E., Columbia College, N.Y.). Tesla's tests confirmed a reaction which was more than the feeble ionic reaction of light gases such as the misinformational 1950's "patents" of T. Townsend Brown later attempted to induce the gullible public to believe was the correct technology. After his tests, Tesla stated that the ether became a 'solid state' medium to "light and heat" (visible and infrared light), and could be accessed by subjecting it to "sufficiently high voltage and frequency".

The ether becomes more apparent when there is a sudden change in the *direction of motion, rate of acceleration, or velocity* of a body. The movement of a charged body, equivalent to a current, creates a new degree of electrical displacement of the ether through which it moves, and influences the resistance to changes in velocity through the affected ether by the protons and electrons composing the body itself. The increased work required to move the sphere—caused by an increased "resistance" called "inertia", must be reflected by the increase in its tendency to remain in motion which is called "momentum", which demonstrates a rearrangement of the manner of movement of or displacement of the positive and negative charges which correspond to the motion. Therefore, once in motion at a constant velocity, though a charged body requires more conventional work to set it in that motion, its momentum would be increased by the increased charges, consistent with an increase of its "virtual mass". It is clear that both inertia and momentum are caused by the same thing, which is a persistence by the configuration of reaction patterns in the atomic and electric structure of mass to maintain their present states. Just as changing magnetic fields or electric fields are required for inductance, the creation of such changing fields by changing motion are the basis for inertia and momentum.

All bodies are in motion, and within all bodies, protons and electrons are also in motion, because "elasticity" and vibratory motion occurs in "ponderable matter" and in the ether. The ether sets up certain patterns of motion in the electrons and protons (and atoms and molecules) in ponderable matter passing through it.

As the earth passes through the ether, its rapidly varying electrostatic forces reach out for some distance and polarize the negative electrical components of the ether, and affects bodies within its reach, creating what we call "gravity".

The stationary ether, appearing to move through an earth-bound body, due to the earth's motion through it, undergoes a change in electrical displacement, due to the difference in dielectric constant between the space outside the body and the space within the body. The electrical displacement in the ether outside the body prior to entry, and the electrical displacement as it enters and passes through the body, changes due to the change in dielectric constant, and affects the "electric content" (protons and electrons, electric charges and fields, and magnetic fields) within the body. These changes in turn cause the changes in electric displacement of the ether—a downward thrust on the body's atoms, away from the pre-existing "equilibrium position", which the atoms would occupy in the absence of gravity—just as Maxwell said. The "equilibrium position" for the electrical particles of ponderable matter vary according to the dielectric constant. A change in dielectric constant results in a change in the equilibrium position, through an electric displacement, which eventually may result in a new equilibrium position. The time-relative aspect of gravity is due to the inertia of a falling body at any stage of its fall, which forces the gradual increase in pitch of its micro helical tubules.

In summary, inside an earth-bound body at rest relative to the earth, there is a difference in polarization and displacement effects, from those which exist outside the body in free space. Since earth's electric field is graduated through the intermediate space, between the negative at earth's surface, and the positive at the ionosphere, the dielectric properties are subjected to graduated strains. The effects of electrical displacement and gravity vary accordingly, somewhat like Newton's "inverse square" law. It is here that a difference between the "force of gravity" and the effects of inertia and momentum become apparent.

Traditionally, inertia has always been considered (according to Newton's *First Law of Motion)* the tendency of a body "at rest" or in

"constant velocity" relative to the earth, to continue its state of rest or constant velocity, unless acted upon by an external force. Since all bodies at rest relative to the earth are already moving at the same "constant velocity" of the earth however, only *changes in movement* relative to the earth are at issue, and any such changes affect the patterns of flow within mass of the tubes of force, as it moves through the ether, at any given time. Since only a body which moves in respect to the earth has been traditionally said to have "momentum" ("the product of a body's mass and velocity"), this rule is wrong, since all bodies "at rest" relative to earth already have "momentum" as well as "inertia".

Momentum and inertia are due to the exact same "tendency", which relates ultimately to a frame of reference to the universal ether, but for convenience—since we don't have an absolute "fix" on the ether yet—we use the moving earth as a frame of reference from which to measure a body's *rate of change* relative to the ether, as the earth maintains its relatively constant velocity. There is a special case on earth, because the ether within the reach of earth's electric field has been "conditioned"—that is, its dielectric constant has been subjected to electric strain. This comports with Tesla's statements concerning the effects of "rapidly varying electrostatic forces" emanating from earth.

The earth has momentum within the sun's frame of reference, just as a moving car has momentum within the earth's frame of reference. Some physicists have mistakenly applied a "field of influence' idea, thinking this "field of gravitational influence" somehow isolates a body from references outside this field. I believe that earth's "gravitational field" is a product of its moving electric field (a "current") as it influences the ether within it, and that the so-called "gravity field" extends no further than earth's electric field.

Momentum is due to the setting up inside a body, of micro helical tubular vibrations of atomic structures, composed of electrical particles—-electrons and protons—as the body passes through the ultra fine ether. The micro helical rotation of these tubules are the product of the *magnetic rotation of the plane of polarization* identified by Faraday. Any variance from earth's uniform motion results in a resistance to change in micro helical pitch, since the rotating tubes of force spin around so much of the irrotational ether cores ("Onmi") over a given period of time, and a change in motion requires them to rotate around a commensurately greater or lesser quantity of Omni, depending on whether the change is an acceleration or deceleration. The tubules

possess electromagnetic force which is locked into the discrete flow pattern between the Omni and the tubules, which are coupled to the 'ponderable matter' structure which is the recipient of the momentum. It is probable that the linkage between matter and the ether is effected by a current—perceived as "electric charge"— which passes through the matter constantly at a rate which is commensurate to the relative velocity difference.

Though the flow patterns of the microhelical tubules are always gradually changing—because of the continual reorientation of the earth as it moves in its "uniformly compound" changing ways, these changes are sensually imperceptible because they are gradual over time, with effects which are virtually constant. Though the changes are too slow to sense, the action of the tides is probably related to them.

The natural gravity force is always normally toward the earth, which is negatively charged, within earth's electric/gravity field, due to the polarity of that field, since the negative component of the ether in free space is electrically displaced upward by the repulsion of like charges, while the inertial characteristics of the more massive positive component is forced and attracted downward, and is more resistant to changes in displacement. As the ether enters a body at rest on earth, its displacement changes because of the change in dielectric constant, just as Maxwell said. As the dielectric constant of the body changes, the electric displacement of the ether within the entrained atomic structure of the body changes, creating a downward force as each of the negative electrical components of the ether move downward, creating an increased attractive force on protons above, and an increased repulsive force on electrons below.

The moving ether particles create the gravity force, similar to how an inverted aerodynamic airfoil creates a down-force on an airplane. Due to the greater velocity of the electromagnetic interaction at *C* however, this down-force is irrespective to the direction of earth's movement relative to the ether, since the interaction between the electrical components of matter and the ether at C, is due to the conditioning of the ether by earth's electric field, which is vertically polarized, and creates the same proximate effect on mass over time, irrespective as to earth's orientation relative to the ether. Though the velocity of earth relative to the ether is thousands of miles per hour, it is not fast enough to "outrun" the electromagnetic interaction.

Orbiting Planets and Satellites

The concept that a satellite in orbit around earth is "held" in orbit by "earth's field of gravity", seems false. The logical implication of my analysis is that the orbital path taken by a body is because it "sees" that path as one of least resistance, *as if it were a straight and level path.* Since for a given radius above earth the ether is displaced to a certain degree, an orbiting body would experience an accelerating force which would be met by inertia, if it were to move upward, and a decelerating force which would be met by momentum, if it were to move downward, so its path in force-free constant velocity remains at a constant radius or level of etheric displacement, as the path of least resistance.

Since the determinative factor which limits a body's motion is the reactance of its internal electrical content with the ether at its particular degree of displacement by earth's electric field, at a given altitude, an orbiting body "sees" its orbital path along a path of like displacement, as a straight and level path, even though it is a straight and orbiting path. This path is rather concentric to the earth at a certain altitude. This is similar to how Einstein said that *space and time* are "wrapped" around a large spinning body as it moves through space, except Einstein believed in no ether, without which "empty space" would have nothing to "wrap".

One of the revealing facts obviated by films of astronauts floating in the so-called "gravity-free" space of an orbiting space station, is the contradictory assertion that the space station is "held" in orbit by earth's gravity. If the earth's gravity exerted sufficient force to hold the station in orbit, the internal environment would not be "gravity free", but would pull the astronauts down to the floor, instead of allowing them to float all around inside, as we've seen so many times on TV. Yet, there is sufficient elasticity within the internal masses of the astronauts' bodies, between electrical content and the ether, to allow movement in that manner. Maxwell said this elasticity resides in the magnetic fields.

CHAPTER IV: HISTORICAL DEVELOPMENT OF THE THEORY

Rotatory Motion and the "Screw Effect"

Wm. Thomson (Lord Kelvin) first asserted that magnetism possesses a "rotatory" character related to heat or the thermal motions of a body (Proc. R.S. viii [1856], p. 150). Nikola Tesla made many references to Wm. Thomson, pointing to his work as a prelude to his own discoveries and applications which especially intensified in 1892. A review of the work of the world's major minds leading up to Tesla's breakthrough is necessary to show just what Tesla discovered and what it meant in respect to ether physics and physics in general.

Around 1870, Thomson had conducted experiments which seemed to indicate that "gravitational action" could be induced by spheroidal bodies oscillated by electrical currents or mechanical pulses (F. Guthrie Phil. Mag. xli [1871], p. 405). The surface pulsations could cause attractions or repulsions in respect to other bodies, as verified by Thomson. Tesla was aware of Thomson's work during his student days in Graz, Austria, beginning 1875, when he was 19. Thomson's work undoubtedly served as the spark of inspiration for Tesla in his early conception of an "ideal flying machine" which would be propelled by electricity acting upon the ether. This explains Tesla's continual references to Thomson, such as demonstrating during his 1892 London lecture, a 'luminous wire' sign powered by a Tesla coil, which said "WILLIAM THOMSON".

At first, Thomson found that ponderomotive forces act between two solid bodies immersed in an incompressible fluid, when one of the bodies is immobilized and made to oscillate with a force which acts along a line between its center and that of a much larger sphere which is free. The free sphere was attracted to the smaller (immobilized) sphere, if its density was greater than the fluid, while a sphere of less density than the fluid was repelled or attracted, according to the ratio of its distance to the vibrator in relation to a certain quantity (Phil. Mag, xli [1871], p. 405; Letter, Thomson to F. Guthrie, p. 427.)

Thomson's experiments were analogical ones, for which he had evoked praise from his contemporaries even when he was still a teenager, although his refusal to believe anyone's assertions unless he could build an analogical model to prove them often led to the consternation of those of his contemporaries, such as Maxwell, who relied often on

mathematical equations. The sphere experiments were designed to use mechanical and electrical wave methods to construct a model to probe the gravitational, inertial and momentive reactions of solid bodies in the ether.

The Faraday effect—the rotation of the plane of polarization of radiation in a dielectric medium (such as the atmosphere, space, and certain solid materials) in a magnetic field—stated that the angle of rotation of radiation is proportional to the magnetic field strength and the length of the path in the medium in the field. These early experimenters knew there was a connection between the rotatory motion and momentum, and sought to find it.

The rotatory (versus the linear) character of magnetic phenomena was strengthened by Thomson's experimentally verified conclusions on the magnetic rotation of light. This rotatory character not only influenced Tesla's discovery of the rotating magnetic field, but is also fundamental to inertia and momentum, as I will later explain, since movement of a charged body constitutes a current which creates a magnetic field which creates the rotatory motion which "bores" through the ether like a drill to create momentum.

Thomson's system was later investigated by C.A. Bjerknes between 1877 and 1910. Bjerknes showed that when two spheres immersed in an incompressible fluid were pulsated, they exerted a mutual attraction which obeyed Newton's inverse square law if the pulsations were in phase, while if the phases differed by a half wave, the spheres repelled. At one quarter wave difference, there was no action. Where pulses were non-instantaneous at distances greater than a quarter wavelength, attractions and repulsions were reversed (Repertorium d. Mathematik I [Leipzig, 1877], p. 268; Proc. Camb. Phil. Soc. iii [1879], p. 276; iv [1880], p. 29).

The publishings of these researches and experiments in the physical journals of Europe were available to Nikola Tesla, during his student days at the Polytechnic Institute in Graz, Austria, and at the University of Prague, in Czechoslovakia. Tesla could read and understand all these pertinent journals in their original languages.

Around 1878, George Francis FitzGerald (1851-1901) (Phil Trans. clxxi [1880], p. 691; FitzGerald's Scientific Writings, p. 45) compared magnetic force and velocity in a quasi-elastic solid, based on a model devised earlier by James MacCullagh (1809-47) (Brit. Assoc. Rep., [1835]), whose model was the only one which could propagate waves

with the properties of light—obviously analogous to the electromagnetic theory of light—as shown by MacCullagh's ether equation of motion and ether theory which made it feasible to extend ether concepts to represent optical phenomena, along with magnetic and electric interaction.

An Electrostatic Charge Carried Around

In 1879, Edwin H. Hall (Amer. Jour. Math, ii [1879], p. 287) a student in Baltimore, repeated an experiment suggested by H. A. Rowland, his professor, whose original experiment with a gold-foil-covered ebonite disk in a magnetic field showed that electric charges on a disk were carried around with it as it was rotated (Ann, d. Phys, clviii [1876], p. 487). In Hall's experiment, a gold leaf strip in which a current was flowing, was placed into a magnetic gap. This produced an electromotive force at right angles to the magnetic field and the current, which was proportional to the product of the two. Called the "Hall Effect", it was already inherent in the three previous effects discovered much earlier by Faraday.

Faraday had discovered induction, by forcing a conductor through a magnetic field, cutting the lines of magnetic force and producing a current in the conductor. The second of Faraday's triad was production of a magnetic field in an unmagnetized iron core, by forcing a current-carrying conductor through a gap between the poles of a core. Faraday's third effect was the generation of a current. Though Hall's effect was inherent in the fact that it was the reverse of the force required by Faraday to push the conductor through a magnetic field. Hall's work completed the triad of effects, by bringing it into consciousness. This effect is the basis for MHD (Magneto-Hydrodynamic) generators, and electropropulsion, through the special means which would finally be brought into fruition by the work of Tesla.

Since the galvanometer needle in Hall's experiment was deflected only when the magnetic field arose or collapsed, the physical thrust created was a vector product which had already been expressly suggested in Maxwell's Treatise (1862), almost 15 years earlier (derived from Maxwell's analysis relative to Faraday's work of c. 1845), though Maxwell failed to follow up with experiment (because he died), the equations are still used.

Though it was said by Whittaker that the Hall effect, like the magnetic rotation of light, occurs only in ponderable bodies and not in

the "free ether", this statement was patently false, since the effect actually depends on the conductivity of a medium. This was a definite lie on Whittaker's part, probably "required" under the 1951 revision. The fact that the effect occurs in "ponderable bodies" and "conductive media" however, is all-important for electropropulsion, since it shows the reaction between such bodies and media and the underlying "etheric framework" which is accessed in the process.

Since the "natural media" (the ether and the atmosphere) so often referred to by Tesla in his patents become conductive under the influence of electromagnetic radiation of sufficiently high voltage and frequency, the effects in the free ether, dependent upon proper conditions, can affect the ether within a ponderable body, so as to move the body through the free ether. The most startling proof that the Hall effect works in the free ether, was Tesla's "transmission" of electrical energy through space by high frequency oscillations, as detailed in his 1892 Lecture before the Institute of Electrical Engineers, London.

Since an electric field 'displaces' the ether—which is the basis for MHD pumping (especially when pulsed)—the effect actually showed an operable "electromotive force" ("emf"), or "electro-propulsive force", between ponderable bodies and the ether, by means of electromagnetic action. The high voltage and high frequency are required by the ether's great density and ultra-fineness. The moment Tesla had succeeded in *transmitting* electrical energy by means of high voltage, high frequency currents—"radio waves"—the ether was "accessed". Tesla's work at that point had already verified experimentally everything that Maxwell had mathematically analyzed as being the electromagnetic nature of light.

Though it was strongly implied, the literature available to me failed to explicitly state the idea that inertia and momentum are the products of an electromagnetic rotatory force which acts within bodies, upon a dense, incompressible ether which permeates all bodies and all space. Neither was it specified that a pulsating sphere or other ponderable body can be electrically propelled through the ether, without the presence of another sphere or other ponderable body to pull against—except in the statements of Nikola Tesla and his "flivver"/"model T" electropulsive "ideal electric flying machine".

In 1884, the year Tesla discovered the rotating magnetic field, J.J. Thomson attempted to determine the field produced by a moving electrified sphere, and the mathematical development of Maxwell's

theory accelerated. It was naturally easier to solve such problems from the known behaviors of simple geometric forms—planes, spheres, and cylinders (J.J. Thomson, Proc. Lond. Math. Soc. xv [1884], p. 197).

The possibility that the ether was composed of stationary positive charges carrying their own 'sub-electronic' negative charges which were elastic, and could be displaced, had apparently evaded the thinking of Thomson. Although he had assumed that displacement currents must occur in the ether, he had earlier thought this was due to the magnetic effects of moving charges, though he failed to show how the displacement currents occurred, or what their effects were in terms of inertia and momentum.

There was already a sort of battle brewing between the proponents of classical electrodynamics, and the proponents led by Maxwell of an electromagnetic theory of light. To the former, conductivity occurred in metal wires, etc., while with Maxwell, it occurred in the surrounding dielectrics and ether-filled space, with the conductors serving only to "guide" the action. Tesla appeared to fit more into the Faraday/Maxwell camp. FitzGerald had unified the two views by arguing validly that Maxwell's unification was valid because radiation could be generated by purely electrical means.

Along this line, Thomson (1884) first considered a charged sphere moving uniformly in a straight line. He assumed that the electric charges were uniformly distributed, with an electric field the same in all directions, no matter what position the sphere was in, the same as if it were at rest. This assumption proved true so long as the velocity of the sphere and the velocity of light were neglected.

In 1889, Wm. Thomson (Proc. Roy. Irish Acad. i [30 Nov. 1889], p. 340), stated, "Rotational vortex-cores must be discarded; and we must have nothing but irrotational revolution and vacuous cores." By this, Thomson meant that the vacuous "ether", inside rotating tubes of electromagnetism, did not rotate, presumably because of its density, but also because, if the cores rotated along with the rotating tubes of electromagnetic force, it would neutralize the electro-mechanical action by which momentum is created.

FitzGerald found a purported error in Thomson's work, saying that the required "circuital condition" was not satisfied unless the moving charges on the sphere were considered as current, combined with the displacement and convection currents due to the motion. In correcting Thomson's error, FitzGerald went overboard in concluding that the

magnetic force due to the displacement currents of the moving sphere, had no resultant effect. In this conclusion, FitzGerald seemed to have forgotten the "Faraday cage" and "magneto-optical" effects, since a moving charged sphere would constitute a current by his own admission, and all currents create magnetic fields, which cause the rotation of electromagnetic radiation and light in the surrounding ether as a resultant effect.

In 1888, Oliver Heaviside showed that the electrostatic and electromagnetic units "vanished" inside the sphere. This was the opposite to Faraday's experiment in which electrostatic charges placed inside a stationary, closed vessel, "appeared" on the outside. Apparently, movement of the sphere—which increases its momentum—appeared to Heaviside to force the charges back inside. Heaviside's conception of the "spherical" symmetry of charges during movement was disproved by G.C.F. Searle in 1896 (Phil. Trans, clxxxvii [1896], p. 675). Searle found that a moving "point charge" system is not a sphere, but an *oblate spheroid,* with a polar axis along its direction of motion. What Whittaker failed to point out, was the importance of this finding, a connection between inertia, momentum, current, surface charges "vanishing" and "reappearing", and an electromagnetic polarity along the direction of momentum, as well as an electro-mechanical link to the ether, since the displacement of the electric lines and polarity correspond to the movement, consistent to my thinking that the tubules create momentum inside a moving body. The "vanishing" electrostatic/electromagnetic units are 'occupied' internally by the microhelices, in perpetuating the movement of the body through the ether.

During this time, Nikola Tesla had not tarried. He had already shown that the "circuitous condition" could be met in a totally new way. In his lecture before the A.I.E.E. at Columbia College, N.Y., May 20, 1891, he demonstrated his years-old technology, and stated that he connected "one terminal" to a lamp and the other to "an insulated body of the required size. In all cases the insulated body serves to give off the energy into the surrounding space, and is *equivalent to a return wire."* In this lecture, Tesla also demonstrated "electromagnetic momentum" which J.J. Thomson was accredited with discovering in 1893 (J.J. Thomson, Recent Researches in Elect. And Mag., [1893],p. 13).

In the same year as Searle's finding (1896), W.B. Morton (Phil. Mag, xli |1896], p. 488) similarly showed that the surface density of a charged body is unaltered by motion, but the lines of force no longer

leave the surface perpendicularly. He also found that the energy of the surrounding field is greater when in motion than when at rest. Since greater work is required to create a given velocity for a charged sphere, than for an uncharged one, and since the sphere can even move in a way which lessens the work, a connection between moving charges and an ether was verified. This was considered true because the charges increased the "virtual mass" of the sphere, and the self-induction of convection currents is formed when the charges are set in motion by movement of the sphere, but neither of these explanations seemed to explicitly note that a force between a moving charged mass and the space through which it moves must have an ether framework to push or pull against, or that a current is caused to flow between matter and the ether due to the movement.

J. Larmor (Phil. Trans, clxxxvi [1895], p. 697) suggested that the inertia of ponderable matter may be ultimately proven to be of this nature, since atoms were constituted of systems of electrons. The only objection to this was an inconsistency with the alleged "indivisibility" of the electron. This "indivisibility" I believe is due to a deceptive "apparent effect", produced by measuring instruments which measure only "whole" electrons, because they use only "whole protons", rather than ether particles. An "undivided electron" is the "equal and opposite" response to a "whole" positive charge. This is similar to Werner Heisenberg's "uncertainty principle", in that exact measurement of less than a whole electron is made impossible by the instruments of measurement.

If a greater "virtual mass" effect (W.B. Morton, supra) is created electrically, which increases or decreases the ease of movement of a body through the "free ether", and increases the total energy of the moving system, then a link between ponderable bodies and the etheric framework was proven, and the means for creating the imbalance of forces necessary for electro-propulsion—the use of moving charges in a specific way to synthesize the currents of a moving system—was just a matter of time and money for Nikola Tesla.

There were implications in the works of Faraday, Maxwell, Wm. Thomson, J.J. Thomson, MacCullagh, Morton, Searle, Heaviside, Hall, and FitzGerald, of a distinct relationship between momentum and the movement of charges connected to mass, through an interpenetrating gaseous, dynamic, neutral, ultra-fine ether existing in all space and ponderable matter, upon which electromagnetic ponderomotive forces

act. Once the equilibrium of the ether and ZPR was "disturbed" by the moving system, the 'displacement' could be rectified only by an equal and opposite reaction, which was a flow of current between the moving system and the ether. Thomson had accepted the principle that the ether itself is the vehicle of mechanical momentum. The Hall effect had shown that an electromotive thrust is produced along a third axis as a result of a current and magnetic field at right angles, and though it was alleged that this thrust could not be produced "in the free ether", but only in ponderable matter, the works of Heaviside, Searle, and Morton showed that the moving charges could either increase or decrease the normal ease of movement of a body, proving the feasibility for electro-propulsion.

Since electrical processes are reversible, Tesla's method consisted of using Hall's MHD method to cause a flow of current between a 'stationary' system (relative to earth) and the ether—as if it were a "dynamic" system—since it mimicked the currents of a moving system, and created a disturbance in the ether which could only be rectified by movement of the system. Once the current commenced to flow, the magnetic fields thus created, imparted the rotatory force which created the micro helical tubes of force which 'drilled' their way around the irrotational ether cores, and synthesized the momentum which propelled the system through the ether.

Nikola Tesla's statement (Lecture before the Institute of Immigrant Welfare, May 12,1938), that he had his *Dynamic Theory of Gravity* "all worked out" by 1893, and some 'available' documentation of Tesla's work of 1891 or earlier shows that he was already ahead of the European field led by J.J. Thomson, Searle, Morton, and Larmor, whose statements dated from the later 1890's.

As for his 1915 progress, Tesla stated in a Dec. 8,1915 *New York Times* article that his electro-propulsive "...manless airship..." would travel "...300 miles a second..." (1.08 million mph), "...without propelling engine or wings, sent by electricity to any desired point on the globe...".

The Sept. 22, 1940 *New York Times* article by Wm. L. Laurence completed the documentation, by stating that Tesla had already tested his four-part *Teleforce* system, which included "...a new method for producing a tremendous electrical propelling force...", as used on his electrical aircraft.

CHAPTER V: TESLA AND THE GOOD OLD BOYS' CLUB

When Tesla popped into the picture, the British "Good Old Boy's Club" had been debating ether theory for quite some time, and the upstart Tesla must have hurt the pride of their linemen, by making an end run to make a touchdown.

In 1847, W. Thomson, in discussing the motion of a magnetizable body in a non-uniform field of force, said a charged body attracts a body having a greater specific inductive capacity than that of the surrounding medium, and repels a body with a lower specific inductive capacitance, to afford the path of best conductance to the lines of force.

Thomson had also stated that an electrode immersed in a fluid insulating medium (an experimental analogy to a body in ether-filled space), at "...sufficiently high frequency", would cause a gravitation of gases all around toward the electrode, but that the general opinion (of he and his European colleagues) was that it was "out of the question" that such frequencies could be reached. This last opinion was soon to be disproved by a close follower and admirer of Thomson's work.

In reiteration, another Thomson—J.J. Thomson—had claimed to have mathematically developed the theory of moving tubes of force (Phil. Mag, xxxi [1891], p. 149). For his *Recent Researches in Electricity and Magnetism* (1893, p. 13), his hypothesis was the "the aether is a storehouse of mechanical momentum", but was this correct? Isn't it more likely that the "storehouse" of "mechanical momentum" is in "ponderable matter" which reacts with the ether?

Nikola Tesla's lecture before the A.I.E.E. at Columbia College in 1891 was based on earlier experiments. He mentioned the "tubes of force" and disclosed some of his discoveries concerning ether and momentum. His Feb., 1892 lecture before the Institute of Electrical Engineers, London, at a time when the Good Old Boys were still debating whether an electromagnetic action could occur in the free ether, Tesla explained he planned to run motors at a distance by wireless energy, with equipment he had already built, and to extract free energy from the environment.

Four years later, Wm. Thomson stated his "inclination" to "speculate" that "alterations of electrostatic force due to rapidly changing electrification" are propagated by "condensational waves in the luminiferous aether" (Bottomley, Nature liii [1896], p. 268). This seemed to indicate that Thomson was just beginning to take Tesla

seriously.

In his 1892 London lecture for the Good Old Boys, Tesla had stated that the 'required' frequencies— which Thomson had said were "out of the question" to be produced—were "...much lower than one is apt to estimate at first", and continued (in pertinent part, emphasis mine): "We may cause the molecules of the gas to collide by the use of alternate electric impulses of high frequency, and so we may imitate the process of a flame; and from experiments with high frequencies which we are now able to obtain, I think the result is producible with impulses which are transmissible through a conductor." "...it appeared to me of great interest to demonstrate the rigidity of a gaseous column"..."with such low frequencies as, say 10,000 per second which I was able to obtain without difficulty from a specially constructed alternator." "...how must a gaseous medium behave under the influence of enormous electrostatic stresses which may be active in the interstellar space, and which may alternate with inconceivable rapidity?"

In this respect, Tesla seemed also to address the omnidirectional ZPR. His statements also show he was attempting to make up his mind as to the characteristics of the ether, such as whether it is rigid or fluidic, and under what circumstances it may change, and its static or dynamic nature, of high or low density, and so fourth: "What determines the rigidity of a body? It must be the speed and amount of moving matter. In a gas the speed may be considerable, but the density is exceedingly small, in a liquid the speed would be likely to be small, though the density may be considerable; and in both cases, the inertia resistance asserts itself. A body might move with more or less freedom through the vibrating mass, but as a whole it wouid be rigid."

This statement reflects Tesla's prior tests, since, prior to his 1892 lectures in London, he had performed tests between two electrified plates, stating that the "space" between became "solid state" when subjected to "sufficiently high voltages and frequencies". This addressed the issue of how "solid bodies" can pass through a dense, vibrating, interpenetrating mass of ether which, as a whole is *rigid.* This is the essence of how the "inertia resistance" of the underlying 'ether framework' can be summoned up by an electrified body which activates the ether with currents of "sufficiently high voltage and frequency". As the inertial resistance of the ether "asserts itself, the electrified body is propelled through the ether by MHD thrust, which is really the "microhelical drills" at work.

The "specially constructed alternator" of which Tesla spoke was a 32-inch diameter one, which if similar to the type used on the saucer I saw in 1953, was probably driven by one of Tesla's bladeless turbines. In the 1890's, Tesia said the alternator had produced up to 10 amps and 30 kilocycles. One of these alternators is shown below:

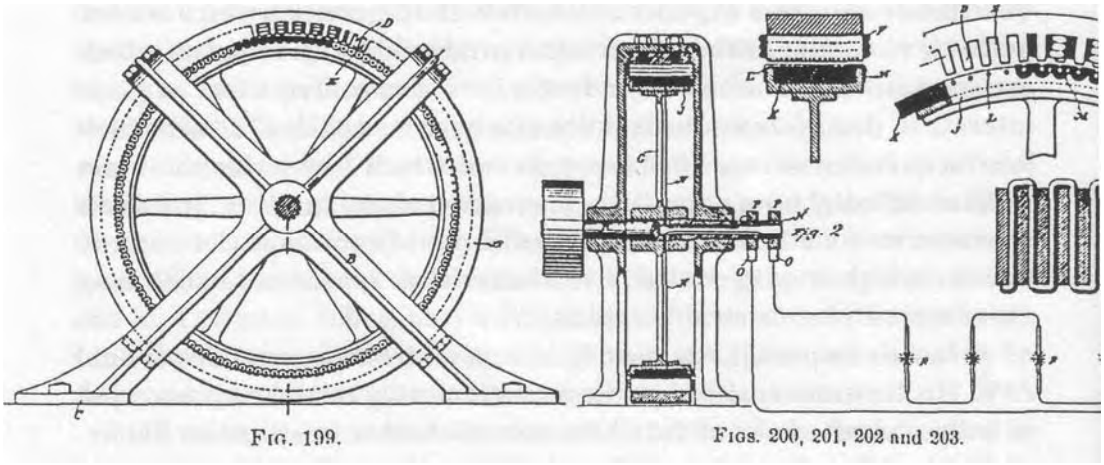

FIG. 199.

FIGS. 200, 201, 202 and 203.

The saucer I saw in 1953 exhibited precessional characteristics which could have been caused by the use of such an alternator, the output and rpms of which under the circumstances could have been varied with the power level of the saucer, as if it were being turned progressively faster by a turbine as the ship used more power to accelerate. The high angle and low frequency of the precessions would be consistent with the use of a high frequency, large diameter alternator, which was turned more slowly at hovering power, and increased in rpm for more power as the ship accelerated.

Since the alternator would likely have been attached ridigly to the airframe of the saucer, it could have caused the entire saucer to precess at hovering power, while the downward acceleration due to gravity was being balanced by the upward electropulsive acceleration, as the ship hovered in place above the earth. This phenomenon showed that the precession I observed in 1953 was either due to rotating internal machinery, or to the "virtual" angular momentum created by the electropulsive effects.

The balanced forces holding the ship in mid-air would have been equivalent to holding it on "gimbals of air", so that it precessed freely

according to the speed of the rotating alternator's angular momentum and mass. This would have required very little force, because the electropulsive forces reduced the ships inertia to almost zero. On the other hand, the rotatory force which a magnetic field imparts to electrical current, to create the microhelices, could be the cause of precession, as an "equal and opposite reaction", by collective rotatory precessive action imparted to all the atoms of the entire mass of the ship.

Tesla worked out the problem of how to counteract the tendency of the ship to rotate due to the torque of the alternator or turbine, by using two turbines or alternators, turned on parallel axes in the same direction or counter-rotated, as stated in his patent #1,655,114, *Apparatus for Aerial Transportation,* Jan. 3, 1928. In fact, a single alternator and turbine turning on separate , parallel axes, linked by a gear box, would accomplish the same thing.

As the ship accelerated to full speed and power, its low precessional rate and high precessional angle became a mere high-frequency wobble, as the ship shot to infinity in three seconds (which I estimated roughly 7.5 miles). This was consistent with the alternator being turned at a progressively higher speed. The rapid precessive wobble of the ship's periphery tended to blur its outline, something which has made it more difficult to obtain sharp definitions of the profiles of saucers in photographs and video. Coupled with this physical vibration may be the "Faraday effect" - the "magneto-optical effect" which tends to blur the outlines of objects subjected to intense electromagnetic fields. The extension of the ship's electric field also extends its magnetic field, and causes a rotation of the optical plane, so in addition to visual effects of the high frequency precessional oscillations, the optical plane is actually rotated to create the weird magneto-optical effects so often reported, and becomes distorted in the minds of the mystics, who think it is some sort of "time travel" or "interdimensional travel" effect, a "space-warpage" or "wrapping around" of "time and space" by a "rotating body" as it moves through space, *ala* Einstein, except saucers don't "revolve", as proven by my Peiltochterkompass, and Einstein was full of baloney.

The flying saucer may be powered by a Tesla alternator, a Tesla coil, or a combination of the two. Tesla stated that the required currents could be conveyed by conductor, which allows for the instantaneous control of a ship by means of high voltage stepping switches or relays. Since an on-board power generator is usually required anyway, the use of an alternator is more convenient than a spark gap, coil, and condenser

combination, since the necessary high frequency alternations can be easily stepped up to higher voltages by several closely linked "extra" coils, placed about the ship.

It is possible that a ball-shaped cockpit was used on some of the German *Kreisel Tellers* ("Gyrating Saucers") of the 1940's. The ball- shaped cockpit would have been pressurized, mounted on gimbals, and gyro-stabilized with a horizontally oriented *Meisterkreiselkompass* ("Master-gyro-compass"), which would not only gyro-stabilize the cockpit while the outer saucer precessed wildly, but would provide the polar compass heading for the slave compass:

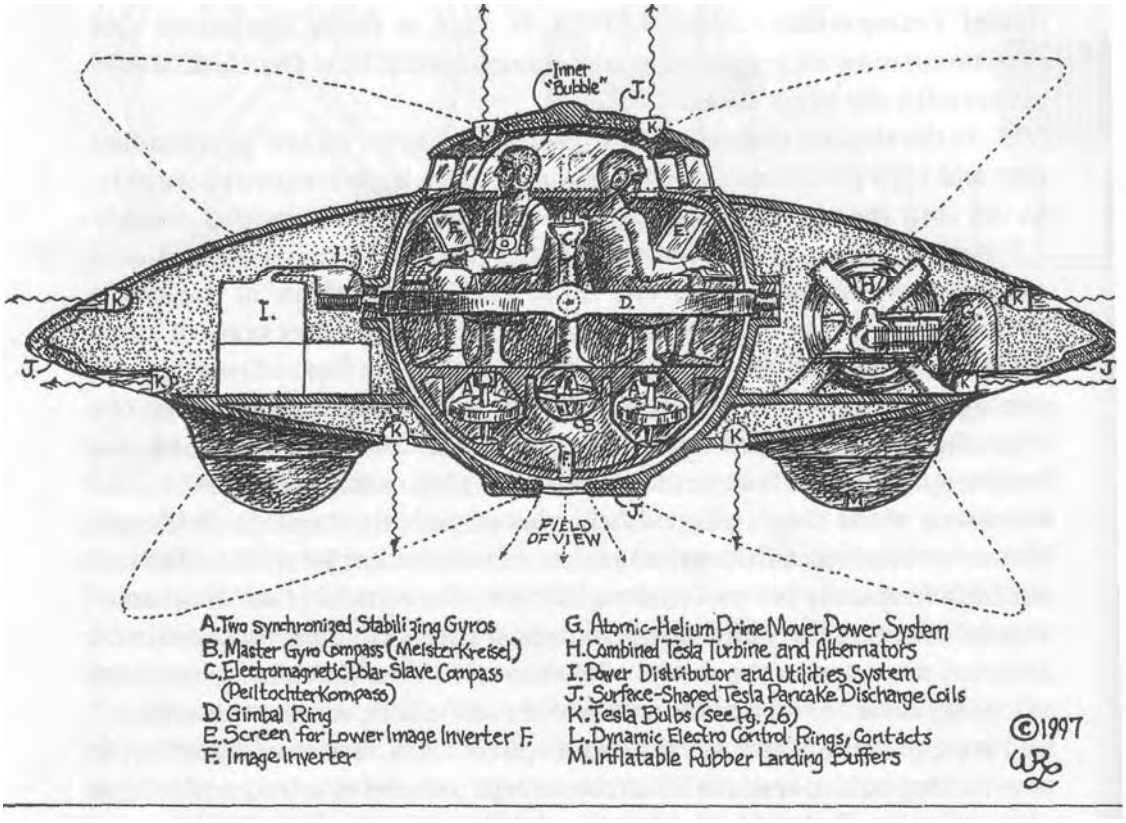

As the outer ship precessed because the alternator was bolted to the outer airframe—the inner cockpit would be gyro-stabilized, so the pilot and crew could have visibility of the outer environment. Even with a precessional angle of 45 degrees, the pilot would still be able to see where he was, and where he was going. I could not see the top of the saucer I saw in 1953, so can't say what the visibility system was.

TESLA'S DYNAMIC THEORY OF GRAVITY

According to Tesla's lecture prepared for the Institute of Immigrant Welfare (May. 12,1938), his *Dynamic Theory of Gravity* was one of two far reaching discoveries, which he "...worked out in all details", in the years 1893 and 1894. The 1938 lecture was less than five years before his death.

More complete statements concerning these discoveries can only he gleaned from scattered and sparse sources, because the papers of Tesla are concealed in government vaults for "national security" reasons. When I specifically asked for these papers at the "National Security Research Center"—now the "Robert J. Oppenheimer Research Center"—in 1979,1 was denied access because they were classified, even though on that same day I discovered the plans for the hydrogen bomb on an open shelf, and told a Harvard graduate student about it later in the day at a Santa Fe restaurant. The guy went to Los Alamos, copied the plans, and wrote an expose at Harvard.

In his 1938 lecture, Tesla said he was progressing with the work, and hoped to give the theory to the world "very soon", so it was clearly his intent to "give it to the world", as soon as he had completed his secret developments.

The "two great discoveries" to which Tesla referred, were:

1. The Dynamic Theory of Gravity - which assumed *afield of force* which accounts for the motions of bodies in space; assumption of this field of force dispenses with the concept of *space curvature (ala* Einstein); the ether has an indispensable function in the phenomena (of universal gravity, inertia, momentum, and movement of heavenly bodies, as well as all atomic and molecular matter); and,

2. Environmental Energy - the Discovery of a new physical Truth: there is no energy in matter other than that received from the environment.

The usual Tesla birthday announcement—on his 79th birthday (1935)—Tesla made a brief reference to the theory saying it applies to molecules and atoms as well as to the largest heavenly bodies, and to "...all matter in the universe in any phase of its existence from its very formation to its ultimate disintegration".

Those imbued with relativist theory often refer to "pure energy" in some "form", but there is no such thing, since "energy" is an abstract "ability" which is always in the future. Who's to say what "form" is "pure", and what form is not?

My favorite philosopher, Ayn Rand, said. "In reality, there are no contradictions. Things are what they are irrespective as to whether we know it or not. Check your premises." If the term "energy" is only a convenient abstraction, then it does not exist in physical form, and really describes the potential to perform work as a by-product of matter and electromagnetic radiation in perpetual motion, some of the force of which has been diverted through a path where it performs the desired work, as it goes on its merry way through the universe. Every change of form of either matter or radiation involves the "work" which induces the change, or the "work" which is induced *by* the change. Without work there is *no* change, but all work is ultimately the product of the universe in perpetual, self-sustaining motion, as a rule and not an exception.

As for Tesla's theory, we have hints, such as, that the earth is the "star of human birth". In poetic expressions, he hid scientific meanings in statements such as, that using the "thunderbolt of Jove" (the Indo-European sky god), man "annihilates time and space", an allusion to the use of electro-propulsion ("thunderbolts"), to travel so fast, that time and space are "annihilated". Where the government has stolen his papers, we must search for meaning elsewhere. In an article, *Man's Greatest Achievement* [1]. Tesla outlined his *Dynamic Theory of Gravity* in poetic form (as paraphrased by me):

- That the luminiferous ether fills all space
- That the ether is acted upon by the life-giving creative force
- That the ether is thrown into "infinitesimal whirls" ("micro helices") at near the speed of light, becoming ponderable matter
- That when the force subsides and motion ceases, matter reverts to the ether (a form of "atomic decay")

John J. O'Neill, *Prodigal Genius,* 1944, pp. 251-252

► That man can harness these processes, to:
-Precipitate matter from the ether
-Create whatever he wants with the matter and energy derived
-Alter the earth's size
-Control earth's seasons (weather control)
-Guide earth's path through the Universe, like a space ship
-Cause the collisions of planets to produce new suns and stars, heat, and light
-Originate and develop life in infinite forms

Tesla was referring to unlimited energy, derived from the environment. Several of his major free energy discoveries have been the exclusive stolen property of our Secret Government. The conversion of energy to a stronger force—electropulsion—used to control the much weaker gravity force, would accomplish more work in the same amount of time, and produce "over unity" results.

Some of Telsa's unusual conceptualization of the ether had been nonetheless expounded piecemeal, in his preceding 1890's lectures.[2] He later railed against the limited and erroneous theories of Maxwell, Hertz, Lorentz, and Einstein.

Tesla's ether was neither the "solid" ether with the "tenuity of steel" of Maxwell and Hertz, nor the half-hearted, entrained, gaseous ether of Lorentz. Tesla's ether consisted of "carriers immersed in an insulating fluid", which filled all space. Its properties varied according to relative movement, the presence of mass, and the electric and magnetic environment.

Tesla's ether was rigidified by rapidly varying electrostatic forces, and was thereby involved in gravitational effects, inertia, and momentum, especially in the space near earth, since, as explained by Tesla, the earth is "...like a charged metal ball moving through space", which creates the enormous, rapidly varying electrostatic forces which diminish in intensity with the square of the distance from earth, just like gravity. Since the direction of propagation radiates from the earth, the

---

[2] T. C. Martin, *Inventions, Researches and Writings of Nicola Tesla,* 1894, Chapter XXV - *Introduction - The Scope of the Tesla Lectures.*

so-called force of gravity is toward earth.

Tesla commenced to complete his *Dynamic Theory of Gravity* at the same approximate period of time that his experimental results and theories had been revealed in the three lectures, often illustrated with demonstrations using Tesla-invented equipment, as revealed in the following eight excerpts, in pertinent part (emphasis mine):

1. "The most probable medium filling the space is one consisting of *independent carriers immersed in an insulating fluid".*

2. "In his experiments he dwells first on some phenomena produced by *electrostatic force, which he considers in the light of modern theories to be the most important force in nature for us to investigate.*"

3. *"He illustrates how mechanical motions are produced by a varying electrostatic force acting through a gaseous medium."*

4. "One of the *most interesting results* arrived at in pursuing these experiments, is *the demonstration of the fact that a gaseous medium upon which vibration is impressed by rapid changes of electrostatic potential, is rigid* "

5. "If through this medium enormous electrostatic stresses are assumed to act, which vary rapidly in intensity, it would allow the motion of a body through it, yet it would be rigid and elastic, although the fluid itself might be devoid of these properties".

6. "...on the assumption that the independent carriers are of any configuration such that the fluid resistance to motion in one direction is greater than in another, a stress of that nature would cause the carriers to arrange themselves in groups, since they would *turn to each other their sides of the greatest electrical density,* in which position the *fluid resistance to approach would be smaller than to receding.*"

7. "If in a medium of the above characteristics a brush would be formed by a steady potential, an exchange of the carriers would go on continuously, and there would be less carriers per unit volume in the brush than in the space at some distance from the electrode, this corresponding to rarefaction".

8. "If the potentials were rapidly changing, the result would be very different; the higher the frequency of the pulses, the slower would be the exchange of carriers; finally, the motion of translation through measurable space would cease and, with a sufficiently high frequency and intensity of the stress, the carriers would be drawn towards the electrode, and compression would result."

The eight above excerpts are further reducible to the following four statements pertinent to electro-propulsion technology:

1. Mechanical motions can be produced by varying electrostatic force acting through a gaseous (ether) medium, which thereby becomes rigidified, yet allows solid bodies to pass through.
2. Under influence of stress in one direction (under the polarizing influence of light or heat), the carriers may group together, forming tubes of force, creating greater ease of movement in that direction.
3. When a (D.C.) brush is created by a steady potential, a continuous exchange of carriers is created corresponding to ether rarefaction, as the tubes of force are drawn into the conductor.
4. With a sufficiently high frequency and stress intensity in the opposite direction, carrier exchange is blocked by ether compression, forcing the tubes of force to dissolve in the conductors of the ship, imparting electromagnetic momentum. The system, using the two kinds of potentials (D.C. and A.C.), is known as "p2".

The steady potential of the brush creates the required exchange of carriers, 'ratifying' (stretching) the elastic, rigidified medium (composed of the carriers immersed in the insulating fluid) in advance of the ship, as the high frequency A.C. to the rear compresses them, blocking exchange from the rear, dissolving the tubes of force (my "microhelices"), creating instant momentum, normal to the surface (which is at right angles to the electric and magnetic fields).

In 1884, John Henry Poynting's theorem had been that the flux of energy at any place is represented by the vector product of the electric and magnetic forces, multiplied by C/4*PI. [3] This implied that forces in a conductor could be transformed there into other forms. In 1893, J. J. Thomson stated practically the same thing, saying "...the aether is itself the vehicle of mechanical momentum, of amount (1/4*PI*C) (D*B) per unit volume. [4]

(Using e.-s. Units for D and E
and e.-m. Units for B and H.)

---

[3] *Phil Trans.* clxxv (1884), p. 343.

4 *Recent Researches in Elect, and Mag.* (1893), p. 13.

E = electrical force
D = electrical displacement
H = magnetic force
B = magnetic induction

Heinrich Hertz's theory [5] was that two systems of varying current **should** exert a ponderomotive force on each other due to the variations. Tesla's disagreement was apparently based on the fact that he proved that the "ponderomotive force" is due not to mere "varying currents", but to rarefaction and compression of the ether carriers, respectively, produced by *different kinds of currents* (D.C., A.C., rapidly varying electrostatic).

J. J. Thomson[6] had extensively developed the theory of the moving tubes of force, both magnetic and electric, saying that the magnetic effect was a secondary one created by the movement of electric tubes, and assumed:

- that tubes exist everywhere in space, either in closed circuits or terminating on atoms;
- that electric force becomes perceivable only when electric tubes have greater tendency to lie in one direction;
- that in a steady magnetic field, positive and negative tubes may move in opposite directions with equal velocity;
- that a beam of light is a group of electric tubes moving at C at right angles to their length (providing a good explanation for polarization of the plane of rotation).

Tesla said his "dirigible torpedo" would fly at a maximum 300 miles per second, perhaps since its forward velocity would be some maximum fraction of C. Thomson's later publishings on this subject followed Tesla's 1891 lectures before the Royal Society in London, and appear to shed light on Tesla's work, stating:

- that a ponderomotive force is exerted on a conductor carrying electric current, consisting of a transfer of mechanical momentum from the agent which exerts the force to the body which

[5] *Ann. d. Phys.* Xxxi (1887), p. 421; *Hertz's Electric Waves,* translated by D.E. Jones, p. 29.

[6] *Recent Researches in Elect. And Mag.* (1893), p. 13.

experiences it;

- ► that, if moving tubes entering a conductor are dissolved in it, mechanical momentum is given to the conductor;
- ► that such momentum must be at right angles to the tube and to the magnetic induction;
- ► that momentum stored in a unit volume of the field is proportional to the vector product of electric and magnetic vectors.

"Thomson's" *Electromagnetic Momentum* hypothesis was later developed by H. Poincare[7] and by M. Abraham[8].

By 1910, it was said[9] that the consequence of these pronouncements left three alternatives:

1. Modify the theory to reduce to zero the resultant force on an element of free aether (as with Maxwell, Hertz, and Einstein);
2. Assume the force sets aether in motion (as with Helmholtz);
3. Accept the principle that aether is the vehicle of mechanical momentum of amount [D-B] per unit volume (as with Poynting and J. J. Thomson).

Whittaker's greatest error was in omitting Tesla's theory entirely. After Tesla's experiments verified it, right in front of the esteemed members of the "Royal Academy", the "three (later) alternatives" were moot, and a new law existed, that of Tesla.

Tesla's Secrecy

Due to his pacifist sympathies, Tesla originally contemplated giving his electric flying machine to the Geneva Convention or League of Nations, for use in 'policing the world' to prevent war. Later disillusioned after WWI with the collapse of the League, he said he'd "...underestimated man's combative capacity".[10]

[7] *Archives Ne erl* (2) v (1900), p. 252.

[8] *Gott, Nach.,* 1902, p. 20.

[9] Sir Edmund **Whittaker,** *A History of the Theories of the Aether and Electricity,* **1910,** Edinborough.

[10] *New York Times,* July 10,1934.

In 1919, his reason for increased secrecy emerged in an interview with Frederick M. Kerby, for *Resolution* magazine, while discussing a "three-hour" airplane between New York and London: "...we have here the appalling prospect of a war between nations at a distance of thousands of miles, with weapons so destructive and demoralizing that the world could not endure them. That is why there must be no more war" With the government's spurning of his defense suggestions, Tesla's only recourse was to withhold his secrets from the world, and to dissuade discovery in their direction.

In 1929, Tesla ridiculed Heinrich Hertz's 1887-89 experiments purportedly proving the Maxwellian "structureless" ether filling all space, "of inconceivable tenuity yet solid and possessed of rigidity incomparably greater than the hardest steel". Tesla's arguments were to the contrary, saying he had always believed in a "gaseous" ether in which he had observed waves more akin to sound waves. He recounted how he had developed a "new form of vacuum tube" in 1896 (which I call the "Tesla bulb"), "...capable of being charged to any desired potential, and operated it with effective pressures of about 4,000,000 volts." He described how purplish coronal discharges about the bulb when in use, verified the existence of "particles smaller than air", and a gas so light that an earth-sized volume would weigh only 1/20 pound. He further said sound waves moved at the velocity of light through this medium.[11]

Tesla mentioned using his special tube to investigate cosmic rays[12], saying that when its emanations were impinged upon a target material, radioactive emissions resulted, and that radioactive bodies were simply "targets" continuously bombarded by "infinitesimal bullets projected from all parts of the universe", without which "all radioactivity would cease." His description of these "bullets" was similar to the ZPR.

On Apr. 15,1932[13], Tesla said Einstein's theory regarding changing matter into force, and force into matter, was "absurd". He compared this to the difference between body and mind, saying force is a

[11] *New York Herald Tribune,* Sept. 22,1929, pp. 1,29.

[12] Letter, *New York Times,* Feb. 6,1932, p. 16, col. 8.

13 Nikola Tesla Papers, Rare Books and Manuscript Library, Columbia University.

"...function of matter", and that, just as a mind could not exist without a body, "...without matter, there can be no force."

On Sept. 11, 1932 *(New York Herald Tribune),* Tesla derided the Maxwellian/Hertzian ether, while saying that higher frequency waves "...follow the curvature of the earth and bend around obstacles", yet in an Apr. 8,1934 *New York Times* letter, said that short waves for "power purposes" of the 'wireless art', were inappropriate, and that power will travel in "long waves". His 1929 attack on the Maxwellian/Hertzian ether theory—39 years afterward, during the advent of Relativism—seemed relevant only to his concealed theory, not to disclose it or promote it, but to conceal it.

THE NATURE OF ELECTRICITY

What were the old ether physicists referring to when they attempted to describe "an incompressible, perfect fluid"? What would a "perfect fluid" do? It would be able to "wet" everything it came into contact with, such as protons, and could flow everywhere without resistance. One "fluid"—the ether—could flow everywhere, and because of its density and ultra-fineness, nothing could stop it, and it felt ao resistance, but only matter felt resistance, depending on the circumstances. Another fluid—electricity—could flow in certain places, and wet only certain things, but often met resistance.

In order to understand the ether, we must get to know electricity more intimately. Just like water, a proton will hold only so much electricity on its surface, but the 'surface' of the proton is probably similar to the outer area of a ball-shaped swarm of hovering mechanical bees, powered by the ZPR, with a denser agglomeration of "bees" toward the 'ball's' center. If this swarm of bees is subjected to a wave of rainy mist (the etheric 'wind'), the bees must all turn to face into the etheric wind to maintain their formation. The 'water' droplets—electric sub-charges carried by the etheric wind—tend to agglomerate around the front side. Each bee, as he flaps his wings, will get wet only so much, so that excess 'water' is thrown off and carried to the next bee, or the next swarm of bees, by the etheric wind, and so forth, so that a 'current' of droplets continues to flow through the ball of bees due to its motion through the etheric wind, and transfers momentum between masses.

The 'water' tends to come off in larger drops, which have formed from smaller droplets accumulated on each bee. As in fluid mechanics.

the 'drop' size is the result of cohesiveness of the electric 'fluid', the surface area of each 'bee', and the space between each bee, all of which influences the final size of each larger 'drop' (the "electron") which accumulates enough to form it. If one were to mathematically analyze the flow of "drops" (i.e., "quanta") per mass unit, they would have an average rate of the flow of charges/cm^3 of etheric wind, for the momentum, as determined by the "current" flow rate.

Much like the bees, as a body (its many electrons, atoms, and molecules, with plenty of 'space' within and between) sits at rest on the earth, it moves at fantastic speed through the universal ether field, due to the earth's revolution, orbit, and other motions.

In his 1891 A.I.E.E. lecture at Columbia College, Tesla said in pertinent part (emphasis mine): "What is electricity, and what is magnetism? "...We are now confident that electric and magnetic phenomena are attributable to the ether, and we are perhaps justified in saying that the effects of static electricity are effects of ether in motion", "...we may speak of electricity or of an electric condition, state or effect", "...we must distinguish two such effects, opposite in character neutralizing each other", "...for in a medium of the properties of the ether, we cannot possibly exert a strain, or produce a displacement or motion of any kind, without causing in the surrounding medium an equivalent and opposite effect." "...its condition determines the positive and negative character." "We know that it acts like an incompressible fluid;" "...the electro-magnetic theory of light and all facts observed teach us that electric and ether phenomena are identical." "The puzzling behavior of the ether as a solid to waves of light and heat, and as a fluid to the motion of bodies through it, is certainly explained in the most natural and satisfactory manner by assuming it to be in motion, as Sir William Thomson has suggested." "Nor can anyone prove that there are transverse ether waves emitted from an alternate current machine; to such slow disturbances, the ether, if at rest, may behave as a true fluid." In his statements, Tesla was balancing the various arguments in preparation for his decision: "...Electricity, therefore, cannot be called ether in the broad sense of the term; but nothing would seem to stand in the way of calling electricity ether associated with matter, or bound ether; or, in other words, that the so-called static charge of the molecule is ether associated in some way with the molecule."

"...It cannot differ in density, ether being incompressible: it must, therefore, be under some strain or in motion, and the latter is the most

probable." Tesla therefore believed in an ether which was in motion relative to earth, because the earth is in motion.

The thing which Tesla had realized, was that ether possesses electric charges which are deposited on atoms. In supporting the "dynamic" ether concept, he was supporting the "stationary ether" concept, since the "motion" he referred to was "apparent" motion of the ether perceived by an observer on earth, relative to a stationary ether.

The importance of cosmic motion to the electromagnetic effects of static charges was brought up by Tesla in his lecture: "About fifteen years ago, Prof. Rowland demonstrated a most interesting and important fact, namely, that a static charge carried around produces the effects of an electric current." "...and conceiving the electrostatically charged molecules in motion, this experimental fact gives us a fair idea of magnetism. We can conceive lines or tubes of force which physically exist, being formed of rows of directed moving molecules; we can see that these lines must be closed, that they must tend to shorten and expand, etc. It likewise explains in a reasonable way, the most puzzling phenomenon of all, permanent magnetism, and, in general, has all the beauties of the Ampere theory without possessing the vital defect of the same, namely, the assumption of molecular currents. Without enlarging further upon the subject, I would say, that I look upon all electrostatic, current and magnetic phenomena as being due to electrostatic molecular forces."

In these statements, Tesla showed he was aware that any "stationary" locale on earth is actually in fantastic motion ("70,000 mph"). The electrostatic charges "carried around" are currents between atoms and the ether, which produce magnetism. The phenomena of 'permanent magnetism' or 'cosmically induced' magnetism are apparently due to electrostatic charges 'carried around' by cosmic motion, in the universal ether field.

Since no one can hold an atom or molecule perfectly still—because it is in fantastic motion—all atoms and molecules carry currents producing magnetic fields. Since a magnetic field is the product of a current, no one can produce a magnetic field without electricity, moving through or along a conductor, or as electrostatic charges in local or cosmic motion.

Tesla's *Dynamic Theory of Gravity* and MHD method of Spacial Electropulsion brought a cosmic crowning achievement to the works of Faraday, Wm. Thomson, J. J. Thomson, and Edmund Hall.

CONCLUSION

The ether is a universal medium, which fills all space. It appears to be "dynamic" relative to an earth moving thousands of miles per hour through space. The ether is normally electrically neutral, ultra-fine, and penetrates all solid matter. There is also an ultra high frequency, ubiquitous radiation, normally in equilibrium, called Zero Point Radiation ("ZPR"), which interpenetrates the ether, and represents electromagnetic radiation in its finest, densest form, which, in conjunction with the ether, conserves universal perpetual motion.

The ether in conjunction with the ZPR, is the source of all matter and force. "Energy" does not exist in physical form, but is "the ability to do work", which is equal to "force over time". The word "energy" is a convenient fiction, like "time", which is an arbitrary measurement of the rate of motion of matter through ether-filled space. All events occur in the present, and the "past" and "future" are merely metaphors.

Electromagnetic disturbances in the ether extract "energy" from the ZPR, which is explainable only by an ether theory. This "free energy", which is virtually unlimited, is universally at work, created by the perpetual motion of matter, and the perpetual exchange of stronger and weaker forces, through which the equilibrium of the universe is maintained, the sum total of all processes equaling zero.

Since all solid matter is continually hurling through space, always in motion, it is always subjected to the "etheric wind" and ZPR interactions. These effects are not perceived except during changes in the orientation of mass or its velocity. All mass and space have dielectric properties. Differences in dielectric properties cause changes in the electromagnetic displacement within mass and the etheric wind. Earth's electric field creates dielectric displacement effects within ether and mass within earth's electric field. The difference between the dielectric displacement within a mass and the dielectric displacement outside the mass in the etheric wind, creates a down-force in the direction of the negative polarity, as the etheric wind 'blows' through a mass. This is called "gravity".

Since all mass is in motion, all mass has momentum, even when apparently "at rest" relative to earth. Momentum is a body's resistance to change in its state of motion. Since inertia is also the resistance of a body to changes in its momentum, inertia and momentum are due to the same thing, the resistance of electromagnetic micro helical tubules to

changes in velocity (and relative "pitch"), direction, and lateral motions or orientation. Since all space and mass is composed only of "electric content", momentum/inertia is electromagnetic in nature, and can be electromagnetically synthesized.

All mass contains electrostatic charges, which when "carried around" in the ether/ZPR-filled space by celestial or 'local' movement, constitute currents. These currents actually flow between mass and the ether, and are integral to the mechanism by which momentum is imparted to mass in motion. The currents create magnetic fields as their equal-and-opposite counterparts, and give a rotatory motion to combined, bi-directional electric and magnetic fields and currents, around irrotational vacuous ether cores. This rotatory electromagnetic action creates momentum, as the force-free "screw-type" reaction within mass, creating its motion relative to the ether cores, from which the mechanical force is transferred to the atomic mass with which the electromagnetism is associated.

Since these phenomena are electromagnetic in nature, they are synthesized by recreation of the electromagnetic conditions which a body would exhibit due to a particular kinetic state. Just as electromagnetic waves of low frequency can penetrate a body, waves of higher frequencies—above LR. and below U.V.—can cause the ether to "assert its inertia resistance".

The technology involves high voltage D.C. 'brush' currents, high frequency currents, rapidly varying electrostatic forces, and light/heat beams. The rapidly varying electrostatic forces "rarify" (stretch) the ether carriers, as the light/heat beams polarize the medium in the desired direction, as the D.C. brush currents induce the exchange of carriers, creating a vacuum in that direction, inducing motion. At the opposite end of the ship, high frequency currents draw the carriers through the ship, and creates a compression of the ether, as it penetrates the solid mass and synthesizes the rotatory micro helical tubules, which whirl around the ether cores along the polar axis, at a pitch corresponding to a particular rate of momentum. Since the strength of the electromagnetic interaction is 10^{40} time greater than the gravitational interaction, that much more work can theoretically be done in the same time, using the same "energy".

Since "seeing is believing", and I have seen, I believe. The behavior of man-made flying saucers proves the existence of these "free energy" inventions of Nikola Tesla, which show that he was right in his

opposition to Relativism, and that the prevalent theories taught in the scientific institutions of the world are patently fraudulent.

Consistent with the idea that "dynamite comes in small packages", this small book, along with my prior book, *Space Aliens From the Pentagon,* initiates the rediscovery, reconstruction and publication of Nikola Tesla's *Dynamic Theory of Gravity* and related *electropulsion* technology, the greatest invention of mankind.

The Secret Government—a fraudulently concealed, unconstitutional, corporate-state entity—has heretofore controlled electropulsion technology by concealing it and other advanced free energy technology, on behalf of international, coercive, corporate-state monopolists. Electropulsive ships are concealed through "special effects", and "stealth technology" (also based on Nikola Tesla's inventions)—as they fly and hover in the sky, and by "psycho-political" means—the dissemination of false "alien" and "extraterrestrial origin" propaganda—-through "UFOlogy" groups led by covert government agents. While official government spokesmen deny the existence of flying saucers, covert government agents, posing as "skeptics", "UFOlogists", and "paranormalists", engage the public's attention in a phony debate. The "skeptics" ridicule the UFOlogists and paranormalists, lumping them together with rational witnesses, as if "...to see a flying saucer" is as ridiculous as "...to see a ghost or alien". This phony debate based on false logic fits nicely into the overall cover-up system, designed to conceal "advanced human technology", not "alien" technology.

The grip of this secret socio-economic dictatorship, depends on coercively extorted income, by forcing us to buy archaic fuel and power-—which funds their control of our communications, political and monetary decisions, enforcement of unjust laws, regulations, and procedures expanding its powers, while limiting or excluding our individual human rights, and denying our access to information, materials, and technology which is ours because we paid for it with our taxes. Our access to the truth is necessary for our independence and survival as a free people.

Despite the confusion, concealment, BIG LIES, and judicial and socio-economic abuse by the corporate state, we can resurrect the TRUTH, determine the correct technology, circumvent obstructions, and use our creative ingenuity to build these ships for ourselves, to free our society from the Secret Fascist Corpocracy.

Chapter VI: FREE ENERGY MASSACRE:
The Atomic Hydrogen Process
©1996, WM. R LYNE

What better way to end a book on "Occult Ether Physics", than with a chapter on another concealed "free energy" process, which appears to extract energy from the ether—using similar techniques on the same substance that makes Tesla's electro-propulsion possible?

In *SPACE ALIENS,* I specified a free energy process in which helium is made to produce 460,000 calories/gram-atom, by simple spark discharge, which is based on data from numerous generally available texts and scientific encyclopedias. This is the highest energy output I know of from a noble gas, and the same gas can be used *ad infinitum,* the only input energy being that required for spark discharges. Since helium is inappropriate for the average "Joe", and since the output is probably more than you could handle, I will more appropriately show you how to perform another free energy process, using that most easily accessible gas, hydrogen. I will also give you the explanation for the heat produced in so-called "cold fusion", and a few other free energy processes, all closely related to the atomic hydrogen process and occult ether physics.

Over the years, the "Relativistic Quantum Mechanics" (hence, "RQMs") concealed every process or reaction which could show the invalidity of their theories, "...in the interest of national security". Their false theories actually became one of the most important means by which, from the standpoint of the government's secret agencies, that "national secrets" were concealed, while at the same time, from the standpoint of the controlling corporate fascists, all 'dangerously efficient' technology which would destroy their iron grip on us, could be concealed. According to deceitful relativist quantum mechanics, all energy coming out of a reaction, must go into the reaction, only from a "non-ether" source recognized by them, *and only in the discrete "quanta" permitted by their misapplication of Max Planck's earlier quantum theory.* The basic idea of Planck's original quantum mechanical theory, was that energy levels of atoms must change in whole number integers (1,2,3, etc.), called "quanta", which are based on the basic charge of a single electron, which assumes only certain assigned energy levels in different atoms and molecules, and is used to define the magnitude of all of the smallest, intermediate, and largest possible energy changes of atoms and molecules. All atomic energy changes must

conform to the permissible whole number equivalents or multiples of these quanta. Accordingly, energy absorbed by an atom must fit this stringent criterion. Despite what I consider to be obvious attempts to conceal basic physical data conflicting with this principle—as misinterpreted by the Relativists and incorporated into their theory, as if it were exclusively their theory and not that published earlier by Planck—the process I am about to discuss with you has glaring inconsistencies in it, even as described and mis-measured by the Relativists. It is said by them that the process of dissociating diatomic hydrogen molecules into separate atoms as atomic hydrogen, requires the absorption of 109,000 cal./gram molecule ("1.9 k.cal./gram molecule"). Yet, in taking the basic hydrogen atom and considering all its discrete 'quanta'—whether in the atomic or molecular state—it appears to me that there is no state of the hydrogen atom or molecule in which such energy could be "stored", even when using the RQMs' theories, especially in view of their irrational statement that the energy is still possessed by the molecule after it has already been released! It is their contention that an independent hydrogen atom can only exist as such because it has absorbed an abnormally large amount of heat, despite the fact that by their own criteria the atom has no mechanism, identifiable by them by which it could do so. When two such hydrogen atoms come together with the presence of sufficient initiation energy, the great amount of heat said by the Relativists to be stored in the hydrogen atom is liberated. The RQMs never directly measured the amount of dissociation energy necessary to bring the hydrogen atom from the diatomic to the atomic state, because they didn't know how to do so, but because their theory said that "all reactions are reversible", they said the dissociation energy was the same as the energy released on recombination of hydrogen atoms. Then to make matters worse, they defined the atomic hydrogen (ground) state as if it were an excited state, and the molecular state as if it were the ground state.

Realistically, the atomic hydrogen reaction can only be satisfactorily explained by reference to, construction of, or re-construction of, an ether theory. While it may be arguable that the "binding energy" between the two atoms of the molecule somehow 'includes' this energy in some undefined and mysterious way, this argument actually supports an ether theory, because the binding energy must somehow be exchanged with the energy which is released when the molecule forms, consistent with the equal and opposite reaction rule. Otherwise, one is

expected to believe a kind of backwards Orwellian *doublethink* kind of thing that the RQMs have perpetrated, since "...everything is like *relative,* man." This kind of latitude is permitted only for them, while those who disagree are held to a higher standard.

The doublethink features of Relativism stem from the fact that Albert Einstein was a Kaballist-Existentialist—and an *Illuminist*—whose epistemology was a *Platonist* one. In philosophy, there are two basic epistemologies—theories of the origin, nature and limits of human knowledge—representing the two basic categories into which the epistemologies of all philosophies must fall, and which are supposed to explain how one knows something according to a particular philosophy...by *what means* they know it...if in fact, they do "know" it. Since he who asserts something has the burden of proving it, rather than one who disbelieves it, the *means* by which it is purportedly known, may come into question. No one is legally, morally, or 'spiritually' obligated to believe anything, without reason, or a *valid means* of knowing it to be "true". All epistemologies are classified as either *Platonist,* or *Aristotelian.*

The "Platonist Epistemology" is so named because of the theory illustrated by the *cave analogy,* in the ancient Greek Philosopher, Plato's book, *The Republic.* In Plato's *cave analogy,* an observer inside a cave, facing the inner wall at night, sees only the shadows cast upon the wall by such things as a passing caravan, projected by a fire burning beyond a road along which a caravan is passing. According to Plato, man cannot *know* reality, but sees only a *'shadow'* of reality, because there is a 'higher world' of 'perfect forms', which exist only 'in heaven'. It therefore becomes obvious how this epistemology follows religious thinking, and that many religions have been influenced by it as somehow adding 'scientific credence' to their religious ideas, which are based on faith rather than reason. The same reasoning has been used by scientific, philosophical, economic, political, and 'spiritual' con-artists for centuries, and every totalitarian philosophy ever known has relied upon this fallacious 'reasoning' which is identical to the Platonist epistemology. One wonders how the viewer in Plato's cave would draw the line between 'knowing' a shadow, and a "shadow of a shadow", since a shadow might also have a 'higher form', under this theory.

The "Aristotelian Epistemology" in the meanwhile—based on the ancient Greek philosopher Aristotle's theory—holds that the senses are valid, scientific tools of cognition, which we can rely upon, to detect the

facts of perceivable reality, and that we can, by relying upon the facts so perceived, know reality and determine other, perhaps unperceivable facts of reality.

As can be seen from a comparison of these two epistemologies and their implications, the philosophies and endeavors based on the Platonist Epistemology are mystical flaky, and/or totalitarian, while the philosophies and endeavors relying on the Aristotelian Epistemology are more rational and objective, especially when applied to the natural sciences. It can also be seen that the use of a Platonist Epistemology by a physicist should be considered unforgivable, while Einstein's theory, built upon this fatally flawed epistemology, has been popularized by the communication monopoly controlled by the power-elite, because it makes a potentially inquisitive and questioning society dumber and easier to control. Einstein's image is continually built up as if that of an ultimate and infallible creature who should be regarded as a 'god'. This propaganda not only protects the false theory, but also aids in concealment of valid theory and advanced technology which would end the reign of a world-wide power structure of corporate-statists, who think society already has all the technology it 'needs', else the elite's 'grip' on the world, held in place by their archaic technology which exploits mineral, industrial, and banking interests owned by them, might be torn loose.

I would have very little quarrel with a quantum theory of atomic energy levels, were it extended to include an ether theory, as it *should* have been logically construed, but I take issue with its present development, limitation, and misapplication by the RQMs. My position is that they *already have* applied it to an ether theory, that this application is well concealed, and that this book is needed to begin the reconstruction of these concealed truths, for use by the public. While Planck said his quantum theory applied to a "system", he didn't say the Relativist's "system"—which came into existence after his theory—was the only system it could be applied to. Since a rationally extended quantum mechanical theory would not exclude an ether, my "RQM" label distinguishes between the relativistic misinterpreters of quantum mechanics, and what could be called the "Integrated Reality Mechanics" ("IRMs").

The atomic hydrogen reaction first came to my attention in 1964, when I was studying industrial processes at Sam Houston State University, in Huntsville, Texas, the year after taking an introductory

course in college physics. While reviewing various welding processes in a textbook, my eyes fixed on an older process called "atomic hydrogen welding". By that time, the process was already considered "obsolete". To me, the process seemed valuable, not only because it produces such high temperatures—above 3400° F.—enough to melt tungsten—the highest temperatures producible by man—but is also "self-shielding", and can be used to weld diverse metals, often without flux, with a concentrated flame producing little heat distortion, when welding thin metal. In the process, 'normal' diatomic H2 is shot through an electric arc which dissociates it into "atomic" hydrogen, H1. This atomic hydrogen recombines at the (welded) metal surface, producing the very high heat Though the process interested me then, and always has, I have never seen an atomic hydrogen welding unit for sale, for the 31 years hence. Industry's obvious excuse for laying the valuable process aside was that it had been 'replaced' by 'better' processes, such as *Heliarc,* TIG, and MIG welding, though they rarely mention "plasma arc welding", which has also almost disappeared from the market. Since plasma arc welding is merely an extension of the atomic hydrogen process, using a specially redesigned torch, the 'mysterious' reasons are undoubtedly the same.

The process simmered in the inner recesses of my mind for a few years until 1976, when I rekindled my interest in the process for possible use in welding stainless steel and reducing and fusing platinum metal compounds, because hydrogen reduces such compounds (which must also be shielded from oxygen) to metals. The atomic hydrogen process does not rely upon the combustion of hydrogen with oxygen in the air, but upon the "atomic" energy released when atomic hydrogen recombines to form the 'normal', diatomic hydrogen. I still had some unanswered questions, since the various welding data at my disposal failed to mention sufficient specific details. If Nikola Tesla was right, then I am right, that the energy comes from the ether.

Because I knew of no source from which to purchase an atomic hydrogen torch, I decided to build one, but my information was inadequate for proper construction. In the torch I made, the hydrogen gas entered the arc concentrically, around both electrodes, instead of passing through the arc at a right angle. I also used the wrong kind of arc transformer, so it didn't work as well as it should have.

Despite the disappointment, I knew the torch would work better if I corrected the problems, so I kept the torch in my barn until better

information and sufficient time was available. I excited the curiosity of the industrial spooks, when I rented a large tank of hydrogen at a local welder's supply, and this probably contributed to the sudden acceleration of the CIA-maintained judicial harassment I endured between 1974 and 1992 (18 years). They apparently assumed I was exploring the process for its energy potential, rather than for just welding, and they were correct. My torch is shown below:

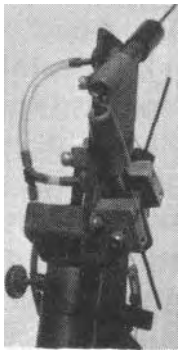

In the '70s, I had acquired an old English inorganic chemistry textbook[1], purchased from Los Alamos Scientific Laboratory salvage for S.25, which contained a halftone photo of a '30s-vintage atomic hydrogen welding torch, along with some basic data. The torch shown was different from the one I constructed, in that it used a high voltage arc transformer, and had no mechanism to strike the arc electrodes together to start the arc, because the high voltage made it unnecessary. It also showed the gas passing at right angle through the arc. In this old textbook, it was stated at page 170 (emphasis mine), as follows: *"Langmuir (1912) discovered that hydrogen at low pressure in contact with a tungsten wire heated by an electric current is dissociated to some extent into atoms:".... 'This absorbs a large amount of energy, about 100 kcal Per gram-molecule. ""... The atomic hydrogen formed is chemically very active. Atomic hydrogen is formed when an electric arc between tungsten electrodes is allowed to burn in hydrogen at atmospheric pressures (Fig 106)".*

The text continued:

"Atomic-hydrogen blown out of the arc by a jet of molecular hydrogen across the arc, forms an intensely hot flame, capable of melting tungsten (m. Pt. 3400 °). This flame obtains its heat from recombination of hydrogen atoms to H2."

"Hydrogen being set free in a chemical reaction is often more reactive than hydrogen gas."

"...the activity of such nascent (newborn) hydrogen, in the act of liberation from Us compounds, is due to the hydrogen being in the atomic state."

The following is a copy of "fig. 106":

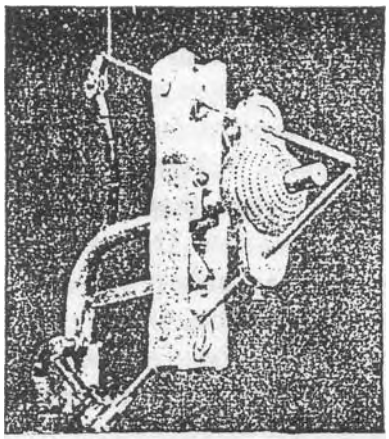

FIG. 106.—The atomic hydrogen blowpipe.

In checking this data in a more recent Van Nostrand's Encyclopedia of Science[2], at page 1311 it was stated in pertinent part:

"Hydrogen molecules dissociate to atoms endothermically at high temperatures (heat of dissociation about 103 cal/gram mole) in an electric-arc, or by irradiation." "...the hydrogen atoms recombine at the metal surface to provide heat required for welding."

I was surprised to find this in the Van Nostrand encyclopedia, but I also found that in 1910, the D. Van Nostrand Company published a book by Haller and Cunningham, entitled *The High Frequency Coil,* (The construction of a Tesla Coil for the advanced amateur. 119 pages), so there is a record of sorts, of Van Nostrand's association with Tesla.

It seemed odd to me that it was later suggested that the 103 calories of dissociation energy absorbed from a very brief exposure to the arc is the same heat as that "...required for welding" as described, and I believed it to be more reasonable that the excess heat had to come from "elsewhere". The dissociation energy would be analogical to a slice of bread (@4 cal. gram), and the gross output would be equivalent to 60 loaves of bread (@1814 cal. lb.), calorie-wise. There was too much disparity between the two, with plenty of suspicious omissions and confusions, in an obvious attempt to cover up the truth in between.

The older text showed the clearer construction of a device, and the newer text showed that only 103 cal./gram mole were required for dissociation, while the older text showed that 100,000 cal./gram mole were liberated on recombination. Only by jumping back and forth between the two sources was I able to put a complete documentation together, and discover the conflicts.

It was apparent from the newer text, that the writers intended for us to believe that the final 100 k.cal./gram molecule heat—later upped to 109 k.cal/gram molecule—was absorbed from the arc, but the 103 cal./gram molecule dissociation heat figure showed a net 108,897 cal./gram molecule unexplained. If there are about 65 cubic centimeters per mole of hydrogen at its critical volume, it seemed highly unlikely that sufficient energy to weld could be absorbed from the 'dissociating arc', during the time required for 65 cubic centimeters of gas to pass from the orifice and through the arc.

109,000 cal./gram mole equals 432.6 BTU/gram mole— roughly the heat energy contained in 60 loaves of bread—the "extra heat energy" which they have asked us to believe is 'stored' in an amount of atomic hydrogen which weighs l/28th of an ounce, during its brief passage through the arc! How could the transformer produce that much energy, especially when it uses only half what it does in conventional welding processes? It seems more likely that excess heat could be stored in molecules than in 'almost naked' atomic hydrogen atoms. What ever happened to Bohr's little atom! It got bigger, and bigger, and .....

Between the older text (1921-1950, from the first and sixth editions) and the newer (1976) Norton science encyclopedia, it was obvious that science was much more straightforward in the pre-National Security Act days, and that in the newer text, there was a reflection of the fishy

attempts, brought on by the national security laws and the firmer establishment of the RQMs, to conceal certain scientific knowledge which had been discovered all the way back in 1912 by Langmuir. Aside from the discrepancies between older measurements, regarding the comparable outputs between the combustion of gasoline and the combustion of molecular hydrogen, and the output from the atomic hydrogen process, to the newer text, there was a failure, so far as I could determine, to state under appropriate references (or any others I could find), some important facts concerning atomic hydrogen, and even misrepresentations of the actual comparative outputs of gasoline and hydrogen combustion, through gobbledegook—the "badge of fraud"—of which I spoke in *Space Aliens.* Norton apparently was forced by circumstances to rely on some 'scientists' who represented the fossil fuel cartels and other conflicting interests, while the older text was relatively free of such influences.

For example, in the newer text, at page 1311, energy from the combustion of hydrogen was stated at 29,000 calories per gram (52,200 BTU/lb). In the older text, this value was given at 62,100 BTU per pound of hydrogen, with a comparative value for gasoline ("petroleum") at 19,800 BTU per pound (stretched to 20,825 BTU per pound in the newer encyclopedia). These figures roughly comported with those in the encyclopedia for n-Heptane ("gasoline") at 19,314 BTU/lb, and hydrogen at 51,571.4 BTU/lb, which are more or less repeated at page 1137, with n-Heptane at 10,737.2 cal./gram, and Hydrogen at 28,669.6 cal./gram, yet nowhere in the newer text was the total output from atomic hydrogen given that I could find, and nowhere in the newer or older texts was it affirmatively stated that the hydrogen was not "consumed" in the process.

The corrected figure (52,200 BTU/lb) shows, in a comparison between the combustion of "normal hydrogen" (to form H_2O or water) and gasoline (to form CO_2), that hydrogen has a yield of roughly 2.7 times that of gasoline, by weight. Then we come to a comparison between gasoline and atomic hydrogen. Though the two can be compared BTU-for-BTU and pound-for-pound, showing atomic hydrogen's phenomenal output, the real measure of the atomic hydrogen process is gleaned only from a comparison between the "input energy"—103 cal./gram molecule-~and the net output. The "input energy" would be "unity" for the process, because the process does not 'consume' the hydrogen, but only returns it to its associated state as H_2. The dissociation energy,

subtracted from the gross output, would be the net output:

109,000 cal/gram mole (gross heat output)
Minus - 103 cal/gram mole (dissociation energy = "Unity")
Leaves - 108,897 cal/gram mole (net output - "Over-Unity"
because the hydrogen didn't have that
much calorific energy in the first place,
and was not 'consumed' in the second place)

In the atomic hydrogen process, hydrogen is not really a "fuel", but rather a "medium" used in the extraction of and conversion of energy from the ether, by transforming invisible radiation and electrical energy into infrared (heat) radiation. The energy required to pump the recombined hydrogen to a holding tank, before being recycled and shot back across the arc and into the reaction chamber once again, is not considered in this computation. This energy should be negligible, since the dissociation energy is barely more than a thousandth of the gross output, and there is probably a way to make the process work without a pump anyway.

The manipulators of information have both lied and made the direct comparison between atomic hydrogen and gasoline as difficult as possible, but I have waded through a multi-step mathematical, physical, chemical and unitary process to get to the truth. Atomic hydrogen produces over 109 k.cal./gram molecule, which is 109,000 k.cal./kilo. Minus the 103 cal./gram mole endothermic dissociation energy, and a net of 108,897 k.cal./kilo is left. A kilo equals 2.205 lbs., so a pound equals 453.51 grams. You must divide the net cal./kilo by lb./kilo to get cal./lb., then multiply this times °F/°C (1.8) to get °F/lb. This is then divided by grams/lb. to get 196,015 BTU/lb. The gross is 196.200 btu/lb. In comparison to 19,314 BTU/lb for n-Heptane, atomic hydrogen has 10.5 times the energy per pound (of H1 per gal. of H_2O). There is an easier mathematical process, but this shows more clearly what I did.

No wonder the process "went out of use". With this process, a home consumer would pay nothing for fuel, because he could produce a small amount of hydrogen in his basement, any time he needed it, and could use it over and over, *ad infinitum.* He could heat his house, drive his car, and use it for "home-industrial", uses. In a motor cruiser on the ocean, one would never have to worry about where the "next gallon" of fuel was coming from, or what it would "cost", because like sunshine, the heat

from atomic hydrogen is "free", except, unlike sunshine, you could produce as much as you want, any time, day or night, summer or winter, rain or shine; the farmer would no longer be dependent upon the oil cartels for his energy, and could run his machinery and heat his barns "free". He could tell the fuel suppliers and the banks to screw themselves. People in the far Alaskan north could heat large spaces without huge expense. "Northern industry" would thrive again. The population control Nazis will hate me.

It is obvious that the reason corporations like ARCO went so heavily into producing solar energy equipment in the early '70s, was so they could control and ultimately raise the cost of (free) solar energy, to make it "competitive" with gasoline and other fossil fuels.

There are many ways used in contemporary texts to confuse facts, but the most effective way is by complete omission. Such facts could not have been concealed by "accident" or mere "oversight", because they are too phenomenal. Only by plowing through a tortuous mathematical process and confusing units and other factors was the true motive for such concealment revealed for certain, but tell me why I'm not surprised?

Conservatively speaking, the atomic hydrogen process bears a 10.5-to-1 ratio to n-Heptane. Would you care for 315 miles per gallon? How about 550,000 miles? It all depends on how many times you recycle it. The figures for n-Heptane are grossly confusing, as one might expect, since it is shown only by comparison by weight that hydrogen combustion has a 2.7-to-l ratio to n-Heptane. This deception was effected by playing around with differing heat and weight units, pressures, and volumes, and the difference between the centigrade and Fahrenheit scales. The "109,000 cal./gram molecule" figure for atomic hydrogen was omitted from the newer text, though one might have been able to extrapolate it from some complex data stated in other areas where the inquisitive person is not expected to look. There was a total absence in the new text or other "new" data available to me, of a direct comparison of energy outputs between combustion of petroleum and hydrogen, much less the atomic hydrogen process.

I have never seen a direct comparison by any of the thousands of Ph.D.s in chemistry or physics, who should have become aware of these facts during their cursory studies. To make these figures even more ludicrous, with BTU ("British Thermal Units"), one would expect the weight to be shown in kilos under the metric system, instead of the non-

metric "pounds". These machinations clearly appear to rely upon the well-founded assumption that all scientists who know, are controlled and don't say, and those who aren't controlled, will be considered "quacks" if they try. to say. Again, its the usual case of "Those who know, can't say, and those who say, will be presumed not to know."

Another stupid trick used is to compare "system weights", under the false assumption that the user of hydrogen would have to use only the systems they present, raising the "comparable" weight of hydrogen to gasoline, using cumbersome cryogenic bottles or hydride storage tanks, etc., when the simple figures clearly show that one-third the amount by weight of hydrogen would be needed for a comparable combustion process. Whenever hydride systems are mentioned, there is an obvious omission of the *liquid* hydride system developed by Dr. Gerald Schafflander of California, the promotion for which Schafflander and associates were abusively prosecuted by the SEC, as previously stated in *Space Aliens.* Yet, the atomic hydrogen process would be more than adequate—even fantastic—with only a pound of hydrogen, and one could carry an extra 25 lbs of Dr. Schafflander's liquid hydride in the trunk. Below is a direct comparison between the BTU/lb for combustion of gasoline and molecular hydrogen, and the atomic hydrogen process, respectively:

Gasoline combustion (n-Heptane)	19,314 BTU/lb
Hydrogen combustion (H_2 + O)	52,200 BTU/lb
Atomic hydrogen (H_2<--->2H)	196,200 BTU/lb

Note that the atomic hydrogen process does not involve a "consumption" of the hydrogen, yet even if it did, the ratio between atomic hydrogen and gasoline is still 10.5-to-one. Take into consideration also that all the best methods for obtaining over a hundred miles per gallon (even *hundreds* of miles per gallon) of gasoline in automobile engines, utilize the vaporization of gasoline and mixture of it with air prior to combustion, something which is easier to do with hydrogen, because it is in a *gaseous* state at normal temperatures and pressures. Also consider that while n-Heptane is a 'purer' gasoline, it hasn't been available for years, and most "gasoline" is a dilute mixture with water and various additives, with only about 50% n-Heptane, so I'm being as kind as I can be to "gasoline".

If a pound of gasoline could propel a car 30 miles, the consumption

would be 666.6 BTU/mile. On the same scale, a pound of atomic hydrogen would yield 315 miles. Then you could repeat it, over and over and over. A pound of hydrogen could conceivably supply all your energy needs for your whole life, and you could produce another 100 pounds of it electrolytically, right in your basement, from tap water! Is this free energy, or what?!

Though the facts of this "secret" hydrogen process are "hidden in plain sight", one must beware of the disinformation, as well as the common mistakes created by "scientists" who have been duped by the RQMs. For example, in the 1976 Norton Encyclopedia, 5th Edition, page 1311, most of the pertinent facts about hydrogen are shown. The "109,000 cal./gram molecule" for recombined hydrogen, reported in an older text, was not shown directly, though the following facts which *were* shown, are of particular note:

Heat of vaporization at 20.4° K	107 cal/gram
Energy released upon combustion	29,000 cal/gram
Heat of combustion at 25°C	63,317.4 cal/gram mole - gross
Heat of combustion at 25 °C	*57,791.6* cal/gram mole - net

ANOTHER ASTOUNDING PROOF AND MORE HYDROGEN METHODS

The Norton encyclopedia was in its 5th edition, and the "103 cal./gram mole" dissociation energy did not appear to be a typo or misprint, and should have been corrected by that time if discovered. How many books would I have to search to find such a 'misprint', especially since I didn't expect to find the anomaly because of the obvious concealment? Yet, in *Physical Chemistry* (1965) by E. A. Moelwyn-Hughes of Cambridge (Pergamon Press, London), at page 418, appeared the following:

"The Spectroscopic evaluation of the dissociation energy

The energy of dissociation, D_e of a diatomic molecule is the difference between the potential energy of the atoms when infinitely separated, and their energy when the atoms are at rest at the equilibrium separation."

Notice that the "at rest" state of the *molecules,* is couched in language that makes you think that the "infinitely separated" atomic hydrogen *atoms* represents the "excited state" for the *element.* In layman's terms, the RQMs simply made the statement that the dissociation and recombination energies *had* to be the same, because their theories depended upon them being the same. Then they measured the dissociation energy backwards, by measuring the recombination energy, and stating the measurement as *if it were* the dissociation energy. The statements are supplanted by a lot of RQM gobbledegook, with a "spectroscopic evaluation" thrown in like some snake oil, because the spectroscope purportedly "can't lie". There is also in the same *text,* at page 417, the following obtuse statement:

"...In kilocalories per mole, D_e is 109."

If hydrogen atoms exothermically release energy when they combine to form molecules, the potential energy has been lost by the molecules, yet they attribute the "potential energy" to the hydrogen *molecules*—backwards—to evade their duty to draw the logical conclusion. This lie is shown by a graph ("fig. 4") purporting to show the "potential energy of the hydrogen *molecule* in the *ground electronic state."* This clearly misrepresents, by a Ph.D. in physics of the "Royal Society", that hydrogen in the "atomic state" is not in a ground state, but in an excited state. In this 1965 physical chemistry text from England, the heat energy generated on recombination of the hydrogen atom is given as 109,000 cal./gram mole, then misrepresented as the "potential energy" of the "ground state hydrogen molecules" which have just formed! But the "ground state" of hydrogen is the atomic state, with the electron at its *lowest level of energy,* so the RQMs are hoist by their own petards, since there is no way the ground state atoms could "store" the 109,000 cal./gram molecule. Where, exactly would this energy "reside"? Concurrently, this same figure is falsely equated with the heat generated exothermally when two hydrogen atoms—each in its "excited state"—come together to form a molecule. Since the heat energy is released on recombination, the molecules lack the potential energy already released. The potential energy of the separate atoms in their ground states, is greater than that of the molecules, because the heat energy is released from the entrained ether and converted ZPR—not from the hydrogen *atoms*—when they combine to form molecules.

This is hereby unmasked as Orwellian doublethink. Since when is the potential energy of the atom of an element measured from its molecular state? This is exactly like saying that a truck sitting at the bottom of a hill has more "potential energy" than one sitting at the top, because of the energy required to drive it up to the top of the hill! What a strange way to define "potential energy". It is like saying an empty gas can has the potential energy of the gas that it takes to fill it up!

The unique thing about the hydrogen atom, is that it is "born" at the top of the hill! Its astounding properties lie in its ability to perform as a "doorway" between the ether and the world of more familiar atomic matter.

The relativist statements have been unwittingly accepted as correct, because there is no ether or Zero Point Radiation possible under their theories, and the molecules have to have more energy than the atoms separately, because "$E = MC^2$". The RQMs have misrepresented and concealed this process in which separate atoms—with lower *MASS*—possess more "atomic" energy than the molecules! Ha! These facts on hydrogen show that E equals *MUCH MORE THAN* MC^2.

Under relativism and quantum mechanics, "solid" matter is thought erroneously to be the most "compact", "stored" form of "atomic energy", because the energy is supposed to be released by the "smashing" and destruction, or fusing together of atoms, which Tesla said was false. It is clearly shown by the atomic hydrogen reaction that Tesla was right and the relativists and Einstein were wrong, because the hydrogen atoms have more potential energy in a separate atomic state than they do in the diatomic molecular state! This can only be either because when separate, the atoms "gather" energy from the ZPR, and eject it from the ether when recombined! In either case, the energy is not stored by the atoms, and no longer possessed by the molecules after release, unless there is an even greater lie hiding in the relativist bushes.

This perverse potential energy fallacy is also a way to confuse the diatomic hydrogen *molecules* with the nascent atomic hydrogen *atoms* produced by the hydrolysis of water. The energy of hydrolysis is equated with the energy of dissociation, and the energy of combustion with the energy of recombination, yet the information presented here shows that by combining the hydrolysis of water, in which atomic hydrogen is produced directly, with the atomic hydrogen recombination process, instead of the combustion process—and perhaps throwing the oxygen away—that at least 10.5 times as much energy as the hydrolytic input

can be produced, in still a third astounding hydrogen free energy process. This is true because the atomic hydrogen process without question releases at least 3.75 times the BTUs by weight, as ordinary hydrogen does in the combustion process. Even the relativists agree that the "energy of combustion" equals at least the "energy of hydrolysis" (even though it is well known that the industrial production of hydrogen by electrolysis is generally 120% efficient). Production of atomic hydrogen directly by hydrolysis, which cuts out a separate dissociation operation, is yet another exciting possibility. It does not expend the electrical equivalent of 109,000 cal./gram molecule (to produce only 65 cubic centimeters of hydrogen gas).

HOW DOES IT WORK?

As a "welding process", this process was 'obsolesced' by MIG and TIG welding, neither of which can compare to its welding efficiency and uses. Since the welding process was its only "public" use in the years past, the "new" processes allowed industry to toss the "obsolete" process onto the junk heap (except for their own 'secret' use of it). The "new" processes were promoted by U-Know-Who, motivating their welding suppliers and the electric power companies at their own levels. More archaic tanks, transformers, gauges, torches, electrodes, gases, fluxes, and electric power, etc., etc., to be sold at a hefty profit. If people generate their own hydrogen for welding at home, how much equipment, supplies and power will they buy?

How does the atomic hydrogen obtain its energy, if not from the "ether"? No wonder establishment science doesn't want you to know there is an ether. If we are to believe the "law of conservation of energy", as interpreted by establishment (relativistic, ether-excluding) 'science', this process is impossible, yet using data available from 'standard' texts, I have shown that the input energy of 103 cal./gram molecule is somehow either 'magnified' to 109,000 cal./gram molecule of hydrogen—a multiplication of over 1,058 times—or that, by use of hydrogen as a "medium", that the 103 calories is 'seed' energy (called the "activation energy"), triggering the atomic hydrogen's apprehension of a net 108,897 cal./gram molecule, from the "ether".

An equally phenomenal "atomic helium" process (reported in *Space Aliens)* is 4.6 times this output. It can be conducted the same way, and produces the same kind of electrical energy and radiation-to-heat energy

transformation, in which "mass" is only a "medium" used in the process. The same principles are shared by the Atomic Hydrogen Process, by Josef Papp's *Method and Means of Converting Atomic Energy into Utilizable Kinetic Energy* (Patent No. 3,670,494, of June 20, 1972), and several other discoveries mentioned here. If these processes used as much electrical energy as they produced, and electrical energy was the end product sought, what would be the use of the processes, right? At the comparable 30 mpg for n-Heptane, helium could produce 42.86 times as much, or about 1285.8 miles per pound.

According to *Van Nostrand's Scientific Encyclopedia,* 5th ed., Van Nostrand Reinhold Co. (1976), simple electron bombardment of helium gas, in a special chamber, excites the helium atom to a temporarily radioactive isotope of extremely short half-life. In this state, the helium atom unpairs its electrons, promotes one electron to the 2s state (in which state it remains for only a very short time), and afterward releases 460,000 cal/gram-atom (per gram of helium), on collapse of the excited atom back to its ground state. The heat is in the form of photons. This is similar to the process for atomic hydrogen, as illustrated by my drawing shown on page 102. It is my theory that while the electron clouds are in the excited (expanded) state, they gather and convert energy from the ZPR.

Apparently, as the hydrogen passes through the arc, the electric and magnetic fields, plus heat, provide the activation energy triggering the molecule's 'apprehension' of an additional 108,897 cal./gram molecule of endothermic dissociation energy. Just exactly could this be possible? Since each hydrogen atom is composed of a proton and an electron (each with a pair of purportedly equal and opposite charges) one would expect the binding force between the molecules to be very weak, but when the atoms are separated they purportedly expand greatly in size—because negative ions are larger than the non-metal atoms from which they are formed—encompassing a greater volume of *Omni Matter* (my term for the "ether"). On recombination, the atoms shrink in volume, as the excess 'gathered' energy is squeezed out of the ether as free (heat) energy. The "endothermic" dissociation absorbs only 103 cal/gram molecule, yet on recombination, the atoms "exothermically" yield a net 108,897 cal/gram molecule. How exactly does this occur?

As stated in *Space Aliens,* it is my theory that all space is packed solid with bumper-to-bumper "Omni Particles" (A.K.A., "the ether"). This elusive yet dense and ultra fine, absolutely transparent matter, is

meanwhile being omnidirectionally interpenetrated by something called Zero Point Radiation ("ZPR"), of such high frequency and voltage, that it is difficult to measure or comprehend. This radiation is in (non-relativistic) equilibrium, therefore referred to as "Zero Point" radiation.

The facts proven by the atomic hydrogen process, explained by the involvement of the Omni Matter and the ZPR, are forbidden by relativity and quantum mechanics, in which a simple harmonic oscillator cannot have a stationary state of zero kinetic energy, because the ground state still has one half quantum of energy and the appropriate motion, yet by relativity's 'other' rules, the principles of kinetic energy has no applicability to electromagnetic radiation (the ZPR). Since relativity also rejects the existence of an ether, there is nothing in so-called "empty space" to contain such radiant energy, and the atomic hydrogen process would have to create its energy from "nothing", therefore violating the law of conservation of energy, as misinterpreted by the relativists, who see all energy functions as part of the 'winding down' products of an "original" BIG BANG.

You can forget what the relativists said. The equilibrium of the ZPR can be upset by disturbances created in the Omni Matter—which I divide into Omnions (ultra-fine, positive "subprotonic" particles) and Omnitrons ("sub-electronic" charges carried by the Omnions—all of which the ZPR interpenetrates. Unidirectional vibrations (disturbances) in the Omni Matter cause it to accumulate transferred force from the ZPR, throwing Omni Matter out of equilibrium, and restoring equilibrium to the ZPR. The Omni Matter's excess force is then transferred through the atomic hydrogen atoms (or other temporarily excited, enlarged atoms encompassing it) into the atomic mass frequencies, during disturbance, thus restoring equilibrium to the Omni Matter. This transferred force is not "energy created from nothing", but only represents a change in the "form" of some of the infinite energy (force overtime), already existing in 'space' in other forms (such as the ZPR, or as "sub-electronic" charges).

Whenever H_2 is dissociated to 2H (H1), and the single electron clouds enlarge to encompass more Omni Matter (affected by a greater ZPR), there is a reaction with and transfer of force from exothermic atomic sources, through the molecules, into stripped Omnions which were entrapped to bind the atoms together. This exothermic energy is sufficient to throw the Omnions within the electron clouds, and concentrated in the space between the atoms, beyond their electronic

quantum boundaries, so that the additional energy needed to dissociate the atoms is regained from the surrounding Omni Matter and ZPR, restoring the equilibrium of the Omni Matter. With the recombination of the atomic hydrogen to form 2H, the converted ZPR radiant energy, and sub-electronic charges—which I call Omnitrons—is ejected (squeezed out) from the atoms, as heat or other interconverted radiant energy- of lower frequency, as the electron clouds shrink with the addition of positive charge carried by the Omnions. The reason the electron cloud density of the hydrogen molecule is more concentrated in the area around the space between the atoms, is because of the entrained Omnions' presence there. Otherwise, the two negative charges carried by the two atoms would cause mutual repulsion. Actually, since heat is infrared-spectrum radiation, the process can be conceived as a means of converting the ZPR from an ultra-penetrating positive ('cold') spectrum radiation, to a mass-reactive infrared (heat) spectrum radiation, and that is the proximate "source" of the so-called "free energy", in the form of exothermic heat radiation. The ZPR is an analog to sunshine, except it penetrates all matter all the time and is not affected by day or night, so it can be converted to usable energy all the time with the appropriate technology, such as the atomic hydrogen process.

Incidentally, this same atomic hydrogen process, as first published here and now, is also the apparent source of the anomalous exothermic heat produced in aqueous cavitation, as well as in the so-called "cold fusion" process, which are two other free energy processes which are based on the atomic hydrogen process. In addition, it is the phenomenon which was apparently responsible for the cavitation-based, powerful fuelless pumping action produced by the "Hydro Vacuo Motor" of John Ernst Worrell Keely, in c. 1870..

The atomic hydrogen atoms have single, unpaired electrons in enlarged shells. These atoms are in Mendeleev's Group I-a, and all the atoms in that group have unpaired outer electrons, and are photo-reactive to and transmute when exposed to ultraviolet light, as do all the atoms of elements below atomic number 19. Some of these elements transmute in visible and infrared light, and all of them can be used to transmute ZPR into usable free energy. This photo-reactivity creates temporary, artificial-radioactivity-producing isotopes of short half-life, with the emission of photon energy restoring equilibrium to the atoms as they return to their ground states. The energy for these radioactive emissions comes from the ether, not from the atoms themselves. The

atoms can be analogized by certain crystals, described by the *Raman Effect,* in which light passing through the crystals is "stepped down" to lower frequencies. The infrared spectrum light produced by the atomic hydrogen process is thermically reactive with normal atomic and molecular matter, because of its longer wavelengths.

The transfer of force from the ZPR, via the Omni Matter, through the dissociated H, atoms, is apparently the kind of thing somewhat cryptically spoken of by Tesla, when he stated: "There is no energy in matter other than that received from the environment."[4]

In so-called "cold fusion", the electrolytic cell produces "nascent hydrogen", just like in the atomic hydrogen process, and the recombination of the monoatomic hydrogen to 2H releases heat, the product claimed. This atomic hydrogen process also proves Tesla's theory that "atomic energy" comes from the environment, not from 'smashing' atoms. It proves that "mass" does not even enter into the equation, and that Einstein's "$E = MC^2$" is wrong. Einstein's theory says this process as I describe it could only be possible if the hydrogen were 'annihilated', converting its "mass" into heat, and otherwise, is impossible. But the hydrogen is still hydrogen, before, during, and after the process, and Einstein was wrong, wrong, wrong! It defies relativism, Heisenberg's "uncertainty" principle, misinterpreted quantum mechanics, and the BIG BANG!

Perhaps this or a similar process was also what Leland Anderson referred to in his eulogy of Tesla, when he mentioned his "plucking" thermal units "...right out of the thin air". After all, the hydrogen atoms when in the 2H molecular form are smaller, therefore "compressed". Compression of a gas releases heat radiation, usually thought to originate with the energy endothermically absorbed during decompression, but in the case of hydrogen, the change is effected by the natural, physical process of recombination to 2H. The molecular atoms can be 'decompressed' by a slight application of heat of dissociation, because the strong binding force between the atoms created by the Omnions, is more easily weakened by a small amount of exothermic energy sufficient to separate the atoms, so that the Omnions regain their Omnitronic charges from the surrounding ether and ZPR. Hydrogen atoms have the highest charge-to-mass ratio known, a ratio which almost completely neutralizes the protons. 'Decompression' of the electron clouds occur during dissociation, because there is less positive mass within the clouds to pull the clouds down toward the protons. As the

protons dissociate with application of the 103 cal/gram molecule, this allows the greatly expanded electron clouds of the atoms to encompass a larger volume or Omnions, carrying sub-electronic Omnitronic charges equal to 108,897 cal/gram molecule, from the only source available, the ZPR and Omni Matter (A.K.A., "ether"). Since there is no great cooling activity in the proximate area of dissociation, the 'heat' can only come from the Omni Matter and ZPR, and is ultimately a conversion of energy in the form of random, 'cold' ZPR, and Omnitronic charges, into a coherent, utilizable form of heat radiation. This process, though it can be thermally triggered, is not merely a thermal process, because the net energy released is not converted originally from thermal energy, but from ZPR and Omnitrons, into infrared (thermal) radiation.

Amazingly, the raw data for this process came from ordinary science books, though the oldest text was produced in England, and would be practically unavailable to the average American experimenter. The full magnitude and output comparable to petroleum was only obviated by conversion of weights, measures, units and temperature scales, into a consistent picture, to obtain the total net outputs. Most physicist or chemists would refuse to believe the results, even if they had calculated them themselves, and would insist that they had erred. This is indeed an inverted BIG LIE, which is told very small, and often. The BIG LIE consists of a denial that there is an ether, the distortion of quantum mechanics, and the exaggeration and minimalization of other incompatible measurements, to create a false overall picture. This is then backed up by a vacuum of information, in publicly available texts and other sources, created via the National Security Act, by the Fuel/Power Cartels.

APPROPRIATE USE OF THE PROCESS

Now that we are beginning to understand our atomic-hydrogen, free energy system, and the great magnitude of its output, what are its most appropriate and immediately applicable uses?

The most direct, appropriate use of this technology appears to be to provide heat for homes, as well as for home-industrial heating purposes, such as in agriculture. A secondary use would be to produce heat for steam to drive turbine-powered electric generators, or for motive power for cars, trucks, boats, trains and planes. This system would be excellent if coupled with a refrigerant-driven, closed-loop

turbo-electric generator, to provide electric power for electro-propulsive flying saucers, the ultimate in private transportation.

Since the net output is heat, the first order of business is a special heat exchanger, to transfer heat to water or other media, or to produce steam for turbine power. The heat in the reaction chamber of the atomic hydrogen furnace must be quickly removed by the exchanger to prevent a buildup of heat sufficient to melt the reactor surfaces which receive and catalyze the recombining gas atoms. The simplified design shown below is merely a proposal.

Years ago, German metallurgists developed a hydrogen furnace which used a copper crucible in a closed system which created the "hydrogen environment" required for reduction of the platinum group compounds. To withstand the high temperatures required for the reductions, the copper crucible was cooled from below by water, which removed the heat fast enough to prevent melting of the copper, as platinum metals were melted in it with the torch from above. The occlusion of oxygen prevented oxidation of the crucible and the platinum metals, and insured reduction of the platinum compounds by the hydrogen. This idea, together with over 45 years familiarity and use of pyro-technology and over 34 years of welding, has influenced the design of this (simplified version) atomic hydrogen furnace:

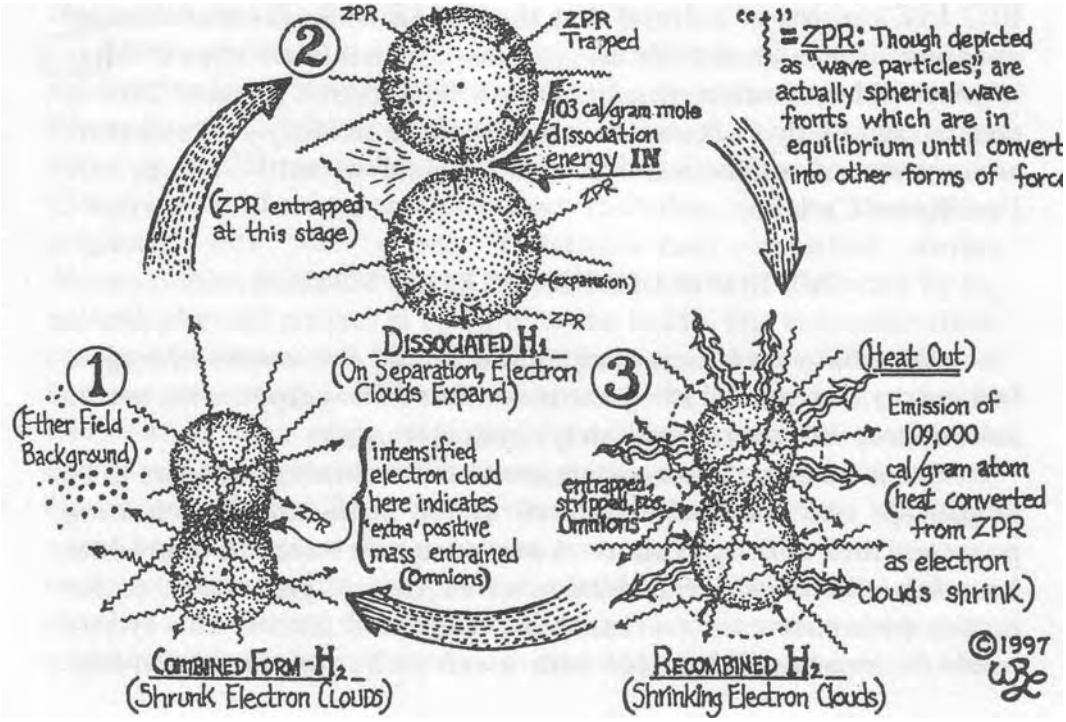

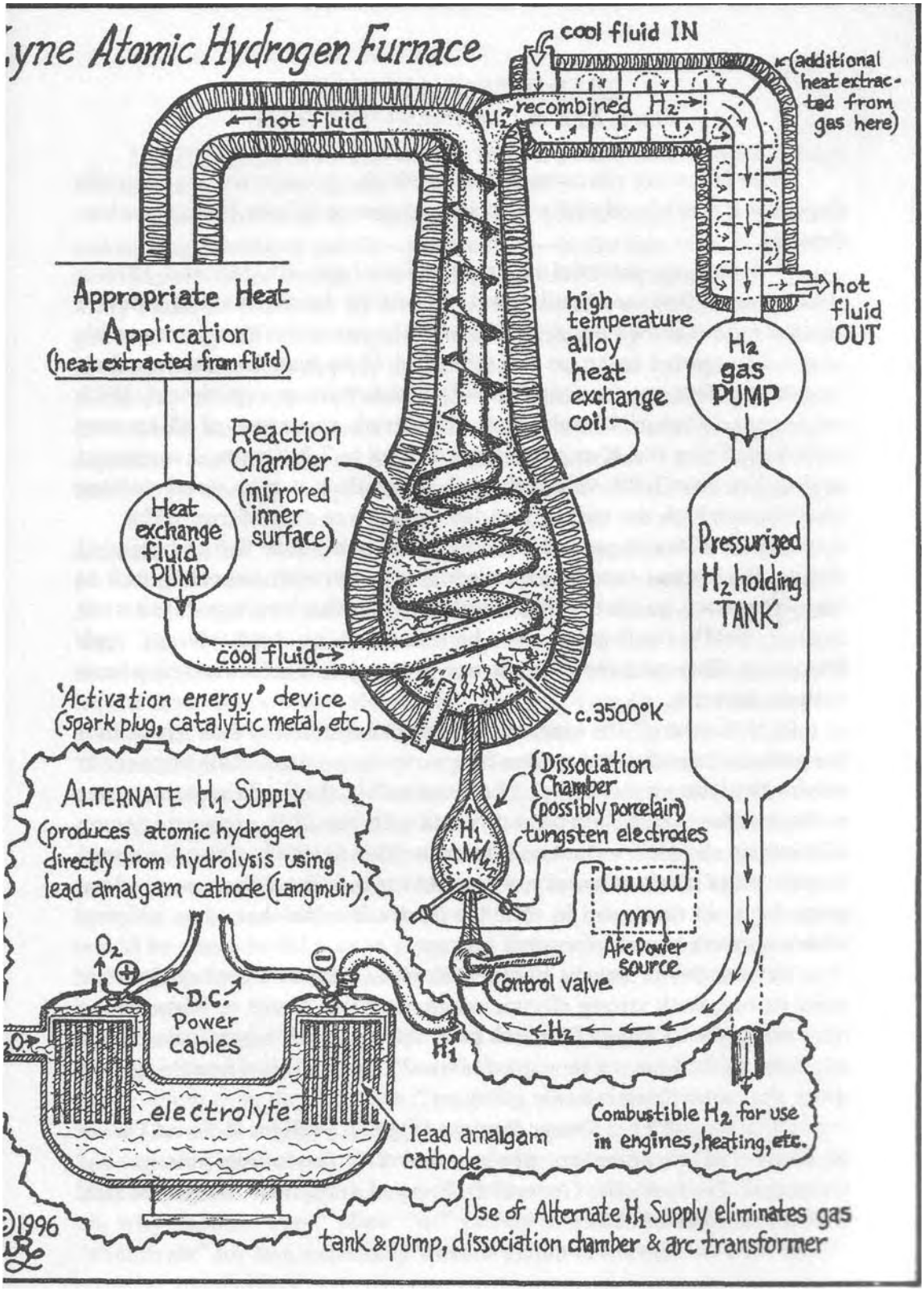
yne Atomic Hydrogen Furnace
cool fluid IN
(additional heat extracted from gas here)
recombined H_2
H_2
hot fluid
Appropriate Heat Application
(heat extracted from fluid)
high temperature alloy heat exchange coil
hot fluid OUT
H_2 gas PUMP
Reaction Chamber
(mirrored inner surface)
Heat exchange fluid PUMP
Pressurized H_2 holding TANK
cool fluid
'Activation energy' device
(spark plug, catalytic metal, etc.)
c.3500°K
Dissociation Chamber
(possibly porcelain)
tungsten electrodes
ALTERNATE H_1 SUPPLY
(produces atomic hydrogen directly from hydrolysis using lead amalgam cathode (Langmuir).
H_1
O_2
D.C. Power cables
Arc Power source
Control valve
H_2
H_1
electrolyte
lead amalgam cathode
Combustible H_2 for use in engines, heating, etc.
©1996
Use of Alternate H_1 Supply eliminates gas tank & pump, dissociation chamber & arc transformer

FREE ENERGY SURPRISE

Ether, ZPR *&* "Environmental" Energy

The following concerns a device which appears to unequivocally disproves Einstein's relativity theories and proves Nikola Tesla's nuclear theories.

Based on material in *Space Aliens* (pgs. vii, 185 and 187), a researcher invited me to collaborate in a 50/50 development of a device (similar to that shown on page vii), with the provision that I not use his name. I suggested using an iron pipe and 15 kv transformer, based on Tesla's use of an iron "antenna" in a Colorado Springs experiment. With an approx. .1 amp/120 volt input (12 watts), an output of 48 kw was achieved. Since the K-capture level of iron is 7,110 volts, I suggested tuning the two 7,500-volt legs to 7,110 with a variac (total voltage 14,220), at which the output jumped to 66 kw, a gain of over 38%.

With 120 v/.l amps/60 cps/14.22 kv going into the ungrounded device, the output (on the same leads) is apparently superimposed at high frequency, so that, while maintaining the high voltage 'excitation electric field', the output can be extracted by high voltage high frequency filter and rectifier, thence reduced to usable electric power with an inverter.

In "K-capture", the innermost "K-orbit" electron of iron drops into the nucleus, converting a proton into an extra neutron. This appears to render the iron unstable (i.e., "radioactive" in the Tesla sense), so that it disturbs the equilibrium of and reacts with the ZPR, converting some of it into an electrical output, via the iron. This device has also been said to transmute zinc to mercury, when used in a different way to produce great heat. At this point in time the device is somewhat of an enigma, which appears to produce great energy.

As the device runs it hums, with no arcing, as a cool shaft of air exits its top, with strong electric/magnetic fields about it. Some ozone appears to be forming. This was probably (part of) what Tesla meant when he said "I have a new use for iron", and "...it is when things are quiet that something is really going on".

For a copy of *Free Energy Surprise* (© 1997, William R. Lyne,), a set of plans and documentary photos send $10. (including postage) to: Creatopia Productions, General Delivery, Lamy, New Mexico 87540; Tel/Fax (505) 466-3022.

CONCLUSION

196,200 BTUs is a lot of energy from a pound of hydrogen. I have to pinch myself. Then repeat it 10,000 times.

When this kind of "atomic energy" hit a small segment of the unknowing American public—the welders—in the late '40s, there were newspaper stories saying that the trans-Atlantic voyages of the Queen Mary could be powered by a hunk of radioactive material the size of a golf ball. They told their exaggerated stories that way when they wanted us to get hooked and pay for it, but today's "nuclear reactors" produce electricity at the same efficiency level as coal and gas-fired generators (38%), and we still have to deal with the inevitable problems of greater expense, entrenched, archaic, stagnant "nuclear" and fossil fuel technology, nuclear decay, waste, and probable devastation ala *Cernobyl.* The stumbling blocks to the use of hydrogen are actually illusions, created by the corporate-state coercive monopolists—*CommuNazis (A.K.A., IllumiNazis).* The atomic hydrogen process was discovered in 1912 by Langmuir, and was developed as a "welding process" in the '30s. The DOE 'scientists' at Los Alamos said the use of hydrogen involves heavy, cumbersome cryogenic tanks and equipment, until a liquid hydride system developed by Dr. Gerald Schafflander of California, was pointed out by me, in a letter to the New Mexican in 1980, totally ridiculing their phony efforts in 1979. Then Schafflander and associates were prosecuted by the SEC, because the liquid hydride stored hydrogen in something like "rock salt"—which cracked out at about 70° C. DOE scientists mention only the heavier, more cumbersome, solid metallic hydride systems. Schafflander's lighter liquid hydride system, which uses solar-voltaics to generate the hydrogen, would be a wonderful way to store and deliver hydrogen for the atomic hydrogen process. Goodbye, oil cartels, hello atomic hydrogen, it's pay-back time!

By the way, the reason my "cold fusion" process (using my weird. lead-based cathode) which I tested back in 1980, worked so well (see *Space Aliens from the Pentagon* [5], pg. 198), was because Langmuir, back in 1912, said a lead amalgam cathode produced "nascent (atomic) hydrogen". Cold fusionists, throw away your palladium cathodes and get lead amalgam! Watch the price of water rise to $1.40 per gallon. After all, why should "they" allow "us" to buy a whole gallon of pure H2O "chemicals" for less, especially when a gallon is enough for a lifetime?

References:
1. J. R. Partington (Emeritus Prof. Of Chem., Univ. Of London), A Text-Book of Inorganic Chemistry, (Sixth Edition, 1953), Macmillan & Co. Ltd., London

2. Van Nostrand's Scientific Encyclopedia, Fifth Edition (Edited by Douglas M. Considine), Van Nostrand Reinhold Company (1976)

3. E. A. Moelwyn-Hughes, Physical Chemistry (Second Revised Edition), Pergamon Press, London (1965)

4. Nikola Tesla, Lecture Before the Institute of Immigrant Welfare, May 12,1938

5. William R. Lyne, Space Aliens From the Pentagon, (First Edition, 1993; Second Edition, 1995), Creatopia Productions, General Delivery, Lamy, New Mexico 87540

William Lyne was born in Big Spring, Texas in 1938 and raised in west Texas oil boom towns, two years in the Bay Area of northern California during WW II, and the southeast Texas Big Thicket country. He has a B.S. in Fine Arts and Industrial Arts (1965) from Sam Houston State University, Huntsville, Texas, and an M.F.A. in Studio Arts (1969) from the University of Texas at Austin. He has been living in New Mexico for the past 27 years, and resides just to the south of Santa Fe, in the little railroad town of Lamy, with his 13-year-old son Angus.

In 1993, he published *Space Aliens From the Pentagon: Flying Saucers are Man-Made Electrical Machines.* In 1995, a revised and expanded second edition of this book was issued. The result has been the illegal dissemination of a vast quantity of false government propaganda, via covert intelligence agents in the "UFOlogy" community, to overcome the effects of the book.

Military Suspected in TWA Crash

Electrmagnetic pulses from military ships or aircraft might have caused the July 1996 crash of flight TWA-800.

ROBIN McKIE reports

Extracted from The Press, (Christchurch, New Zealand) Saturday July 4 1998, Weekend Section, pg 18

Investigators of the TWA-800 aircraft disaster are studying the possibility that it was caused by electromagnetic pulses from military craft. If the theory is proved, ,ilitary aircraft would be regarded as a threat to all civilian flights.

On July 17, 1996, the jumbo jet exploded en route from New York to Paris. All 230 passengers and crew were killed. The same day, 10 United Stated Navy ships and Air Force planes are known to have been operating aound Long Island.

Experts say powerful radar or radio bursts from any of these could have burnt out circuits on the Boeing 747, caused rudders or airfoils to move suddenly, or triggered fuel explosions. This idea is feasible, says James Hall, chairman of the US National Transportation Safety Board.

He said his investigative team was working "to determine the effects of electromagnetic interference and high-intensity radiated fields on 747s", and hoped to report later this year -- although his investigation is being hampered because servicemen cannot give evidence "for security reasons".

Missiles, bombs, and mechanical failure were suspected as causes after the TWA-800 disaster. The safety board's inquiry intoo the accident has yet to make an official ruling, but the first two suggestions have been rejected after an 18-month FBI investigation. In November, James Kallstrom, the agency's assistant directoor, said streaks seen by witnesses were pieces of the plane breaking away, not a missile heading toward it.

"Following 16 months of unprecedented investigation. we must now report that no evidence has been found which would indicate that a criminal act was the cause."

It was then though that a catastrophic technical failure in the 747 was responsible. Safety board inspectors say they suspect an electrical spark in the central fuel tank of the 25-year-old jumbo caused it to explode. But they are still unable to pinpoint the source of the spark.

Now a group of experts say it may have been triggered by an electromagnetic pulse from one of the military craft in the vicinity of the TWA-800 at the time of the accident.

The prime exponent of this theory is Elaine Scarry, whose 18-page investigation, The Fall of TWA-800, was published in the New York Review of Books a few weeks ago. Her analysis is detailed and convincing.

Far more startling, however, is the follow-up correspondence generated between Scarry and NTSB chairman Hall, which will be published in the next issue of the New York Review of Books . In one letter, Hall acknowledges for the first time that an American military craft coiuld have been responsible, albiet inadvertently, for the destruction of a civilian airliner and the deaths of its passengers, including 16 high school students from rural Pennsylvania and holiday-makers returning to France and Italy.

"Work is under way to examine threats that may have resulteed from an external surface or airborne (high-intensity radiated field) source. This is a challenging undertaking that involves an understanding of military emitters, as well as considerable number of civilian transmitters near the accident site. We hope to complete these activities within the next six months," Hall wrote in a letter dated May 27.

In her original investigation, Scarry points out that an electromagnetic field, such as that produced by military planes or ships on exercise, can directly burn out circuits. At high enough levels "it can even generate an electrical spark", she writes.

This knowledge suggests several different scenarios, of which the first two are considered more likely. First, vapour in the plane's fuel tanks could have been ignited directly by sparks generated in voltage lines that were swept by electromagnetic fields produced by military craft.

Second, a pulse could have knocked out instruments, causing the 747 to spin out of control. "Once a plane starts to fall, tearing metal anywhere on the body of the place can generate sparks and thise sparks might have ignited an explosion on the central fuel tank," she writes. As part of her evidence, she quotes a 1984 Nasa report which revealed that electromagnetic pulses produced during military flights often have inadvertent effects on civilian aircraft. "The exclusion of this subject from the TWA-800 inquiry would be understandable if some other cause had quickly come forward as an explanation," Martin Schooman, author of the Nasa report, says. "But that didn't happen. The possibility of a high-intensity radiation field event must be given very careful consideration."

The final answer to the mystery, Scarry says, lies with the servicemen who were operating ships and aircraft near the accident zone but who have forbidden to give evidence for security reasons.

"A democracy requires the military to be held within a civil frame and the military to be accountable to civilians."

--Observer.

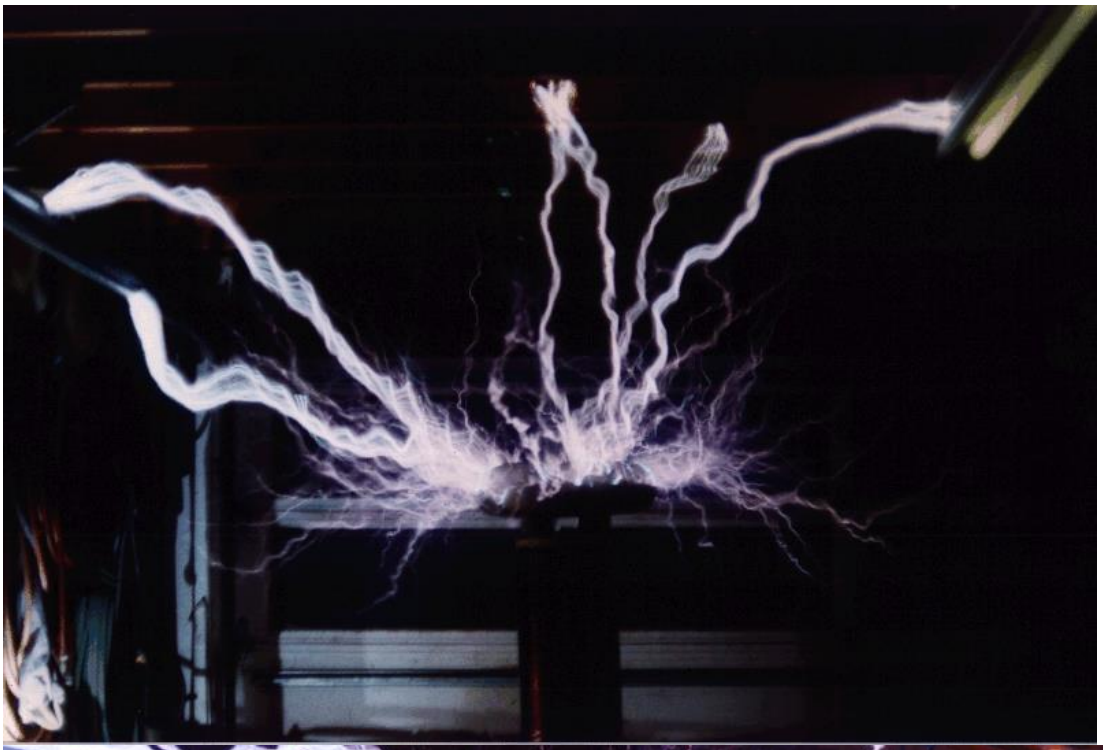

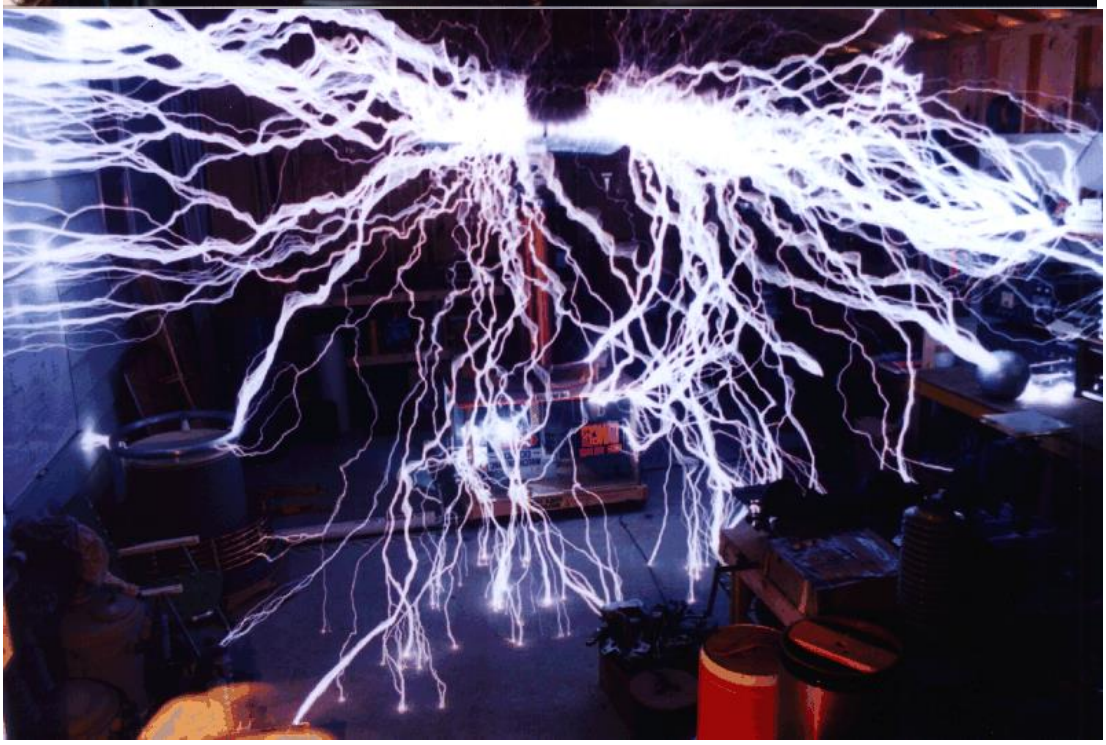

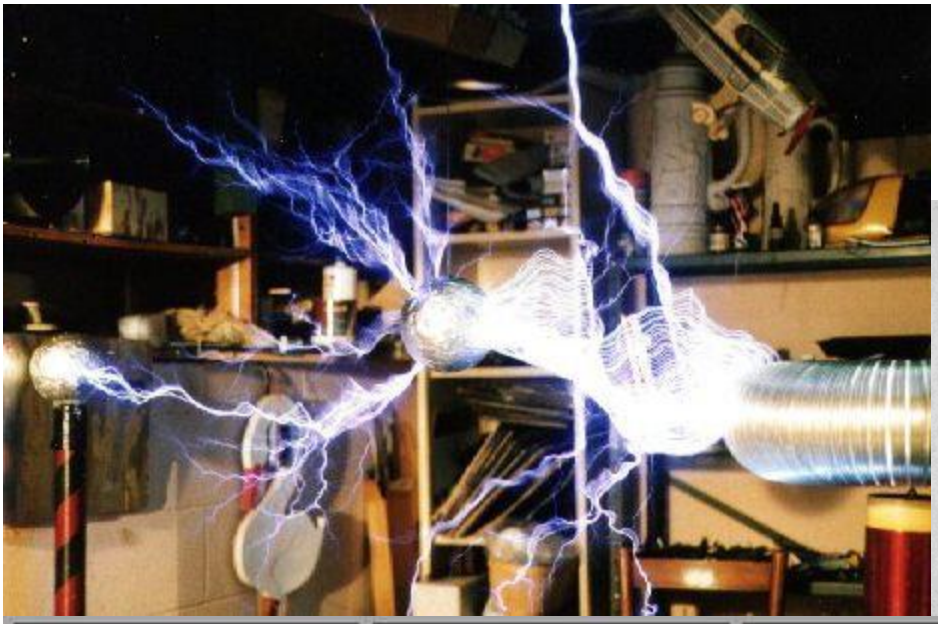

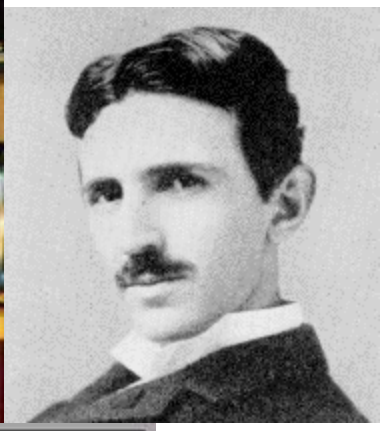

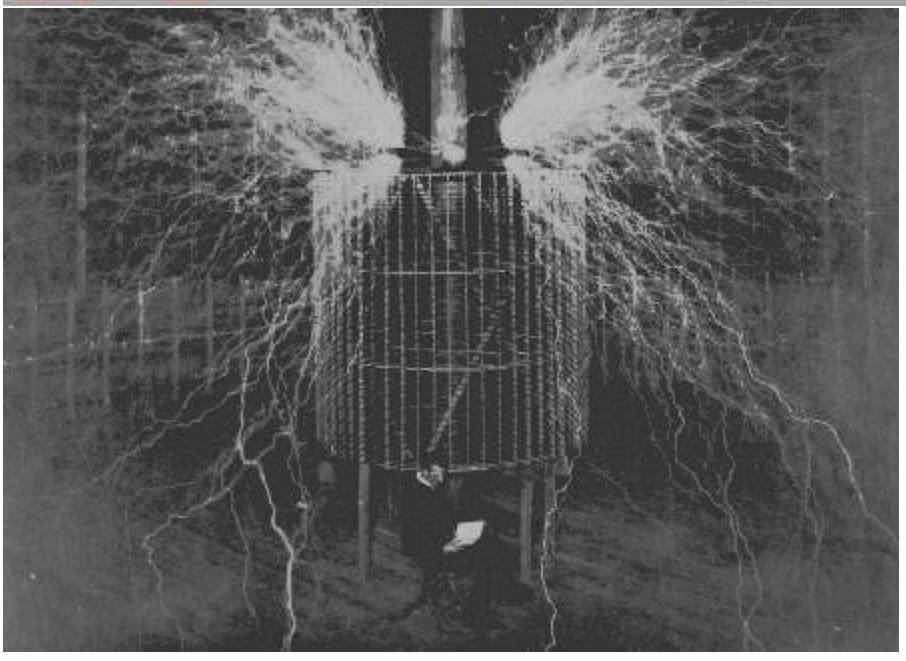

942C 30P15K
.15MFD±10%
2000VDC CDET.

MMC Capacitor

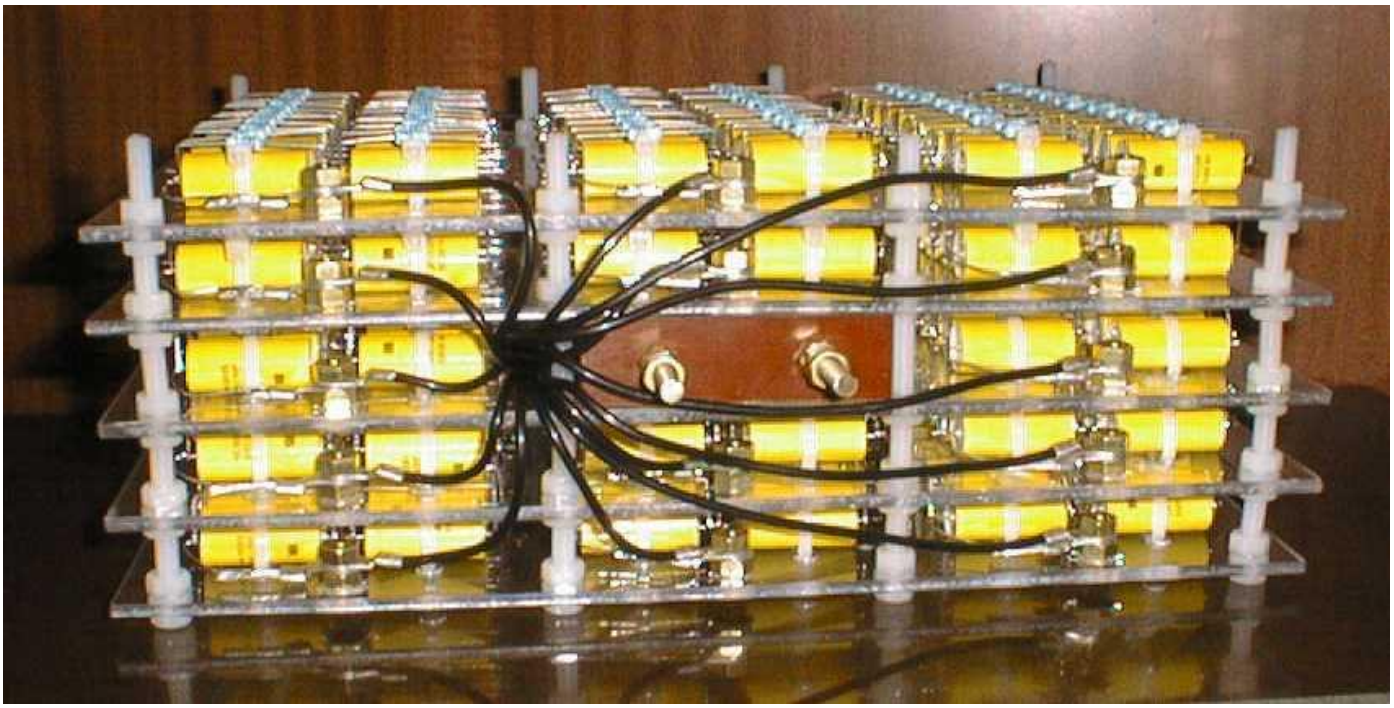

MMC Capacitor Power Handling Calculations

Capacitor Energy per Bang

$E_{CAP} = 0.5\ C_o\ (V_P / N_{LINE})^2$

Where:
E_{CAP} = Energy Stored in Single Capacitor per Bang (Joules)
C_o = Capacitance of a Single Capacitor (Farads)
V_P = Gap Firing Voltage (Volts)
N_{LINE} = Number of Capacitors per String

Internal Resistance of a Single Capacitor

$R_{CAP} = TANd / (2\ p\ C_o\ F)$

Where:
R_{CAP} = Internal Real Resistance of a Single Capacitor (Ohms)
TANd = Dissipation Factor
C_o = Capacitance of a Single Capacitor (Farads)
F = Fundamental Frequency of Primary Circuit (Hz)

F (kHz)	TANd
10	0.0004
50	0.0008
100	0.0010
200	0.0016
300	0.0024
400	0.0040

Power Dissipation per Small Capacitor

$W_o = K_{SYNC}\ BPS\ E_{CAP}\ R_{CAP} / (R_{CAP} + R_{PRI})$

Where:
W_o = Power Dissipation per Small Capacitor (Watts)
K_{SYNC} = 1 for Synchronous Gap or 0.5 for Non-Synchronous Gap
BPS = Bangs per Second
E_{CAP} = Energy Stored in Single Capacitor per Bang (Joules)
R_{CAP} = Internal Real Resistance of a Single Capacitor (Ohms)
R_{PRI} = Primary Circuit Equivalent Resistance (~3 Ohms)

Temperature Rise of Small Capacitor

$T_o = W_o\ K_o$

Where:
T_o = Temperature Rise of Small Capacitor (° C)
W_o = Power Dissipation per Small Capacitor (Watts)
K_o = Small Capacitor Thermal Dissipation Factor (° C / Watt)

Lead Spacing (mm)	K_o
5	250
7.5	167
10	133
15	83
22.5	67
27.5	40
37.5	33

Reliability

T_o (° C)	Reliability
0 - 5	Very Good
5 - 10	Good
10 -15	?
> 15	Bad

Life Expectancy

$L_{LIFE} = 10^6 ((V_{ACcap} N_{LINE}) / V_{AC})^{15}$

Where:
L_{LIFE} = Life Expectancy of Capacitor (Hours)
V_{ACcap} = AC Voltage Rating of a Single Capacitor (VAC)
N_{LINE} = Number of Capacitors per String
V_{AC} = RMS Voltage of Primary Charging Transformer (VAC)

Example:

Total Primary Capacitance = 28nF
Fundamental Frequency = 100 kHz
Firing Voltage = 21000 Volts (15000 VAC)
BPS = 120
Gap = Non-Synchronous
Primary Capacitor = 7 strings of 14 x 56nF small caps whose lead spacing is 27.5 mm and the AC voltage rating is 630 VAC.

How reliable would this be and how long should it last?

$E_{CAP} = 0.5 C_o (V_P / N_{LINE})^2$
$E_{CAP} = (0.5) (56 \times 10^{-9}) (21000 / 14)^2$
$E_{CAP} = 0.063$ Joule

$R_{CAP} = TANd / (2 p C_o F)$
$R_{CAP} = 0.0010 / (2 p (56 \times 10^{-9}) 100000)$
$R_{CAP} = 0.02842$ Ohm

$W_o = K_{SYNC} BPS E_{CAP} R_{CAP} / (R_{CAP} + R_{PRI})$
$W_o = (0.5) (120) (0.063) (0.02842) / (0.02842 + 3)$
$W_o = 0.0355$ Watt

$T_o = K_o W_o$
$T_o = 40 \times 0.0355$
$T_o = 1.42$ ° C

$L_{LIFE} = 10^6 ((V_{ACcap} N_{LINE}) / V_{AC})^{15}$
$L_{LIFE} = 10^6 ((630 \times 14) / 15000)^{15}$
$L_{LIFE} = 347$ Hours

The reliability should be "Very Good".

The Life Expectancy is 347 Hours.

This is my MMC (Multiple Miniature Capacitor) array. The array is made up of 60 capacitors made by CDE(Cornell Dubilier), with each capacitor rated at .15 uF @ 2kVDC. Their part number is 942C20P15K.

I have made 4 panels, each panel containing 15 capacitors in series. The value of each panel is ~.01uF @ 30kVDC.

The panels are assembled in parallel using 1/4-20 brass all-thread or if I use a panel individually I just use 1/4-20 bolts fot the terminals.

The Motionless Electromagnetic Generator,

Extracting Energy from a Permanent Magnet with Energy-Replenishing from the Active Vacuum

from Thomas E. Bearden, Ph.D. James C. Hayes, Ph.D. James L. Kenny, Ph.D. Kenneth D. Moore, B.S. Stephen L. Patrick, B.S.

*"**..This one works beautifully and produces** **COP=5.0**..." has said Tom Bearden*

Created on 10-06-00 - ***JLN Labs*** - Last update 04-08-02

All informations in this page are published free and are intended for private/educational purposes and not for commercial applications

The MEG diagrams published in these pages are currently under test by JL Naudin and may be subject to modifications after that they have been published on this site. They are the result of some attempts of a private and fully independant replication by the author. These diagrams are not the original MEG diagrams being tested by the Bearden's teamwork or some accredited labs.

Disclaimer: The author assumes no liability for any incidental, consequential or other liability from the use of this information. All risks and damages, incidental or otherwise, arising from the use or misuse of the information contained herein are entirely the responsibility of the user. Although careful precaution has been taken in the preparation of this material, I assume no responsibility for omissions or errors in the diagrams or measurement datas published here.

United States Patent *6,362,718*
Patrick , et al. **March 26, 2002**

US Patent *6,362,718* : Motionless Electromagnetic Generator

See the **full MEG patent with diagrams (15 pages)**

Abstract

An electromagnetic generator without moving parts includes a permanent magnet and a magnetic core including first and second magnetic paths. A first input coil and a first output coil extend around portions of the first magnetic path, while a second input coil and a second output coil extend around portions of the second magnetic path. The input coils are alternatively pulsed to provide induced current pulses in the output coils. Driving electrical current through each of the input coils reduces a level of flux from the permanent magnet within the magnet path around which the input coil extends. In an alternative embodiment of an electromagnetic generator, the magnetic core includes annular spaced-apart plates, with posts and permanent magnets extending in an alternating fashion between the plates. An output coil extends around each of these posts. Input coils extending around portions of the plates are pulsed to cause the induction of current within the output coils.

Inventors: **Patrick Stephen L**; **Bearden Thomas E.**; **Hayes James C.**; **Moore Kenneth D.**; **Kenny James L.**
Appl. No.: **656313**
Filed: **September 6, 2000**

4 July, 2001 : Message from Tom Bearden (Circulate Widely)

This review by Myron Evans is fantastic, and it places EM energy from the vacuum very solidly into the literature. It will be published in the forthcoming three volumes of M.W. Evans, ed., Modern Nonlinear Optics, Second Edition, Wiley, 2001.

I have the permission of Myron Evans to post the paper until the publication of the book toward the end of this year.

Cheers,

Tom Bearden

The Link Between the Sachs and O(3) Theories of Electrodynamics by M.W. Evans (PDF document 409 Kb)
Website address: http://www.cheniere.org/references/index.html

---

Foundations of Physics Letters, Vol. 14., No. 1, 2001

EXPLANATION OF THE MOTIONLESS ELECTROMAGNETIC GENERATOR WITH O(3) ELECTRODYNAMICS

P. K. Anastasovski, T. E. Bearden, C. Ciubotariu, W. T. Coffey, L. B. Crowell, G. J. Evans, M. W. Evans, R. Flower, A. Labounsky, B. Lehnert, M. Mészáros, P. R. Molnar, J. K. Moscicki, S. Roy, and J.P. Vigier.

Institute for Advanced Study, Alpha Foundation - Institute of Physics, 11 *Rutafa Street, Building H - Budapest, H-1165, Hungary*

The MEG paper : Extracting Energy from a Permanent Magnet with Energy-Replenishing from the Active Vacuum, *a PDF document (69 pages 1,29 MB), by T.E. Bearden*

MEG patent status, manufacturing update. Literature update. ***October 30, 2001***

- **The Motional Electromagnetic Generator (MEG)** *from Thomas Bearden*
- **Don't confuse COP with efficiency**, ***an explanation by Tom Bearden (25 Feb 2002)***
- **Information letter from Tom Bearden** **(posted on 12-10-00)**
- 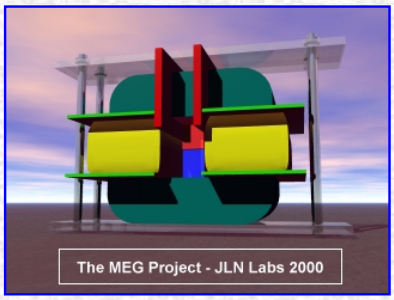

The MEG project *by J-L Naudin* **(updated 03-27-02)**

-

- **Good advices for the MEG builders : The MEG Notes** by *Jon Flickinger*
- **The MEG v4.0 with the cross-flux magnetic gates setup** *by JL Naudin*
- **Throughts about the MEG principle (part1)** *by Cyril Smith* **(updated 11-01-00)**
- **Throughts about the MEG principle (part 2)** *by Cyril Smith* **(updated 11-12-00)**
- **The MEG, Why its works, The simple explanation...** *by Dave Squires* **(updated 11-09-00)**
- 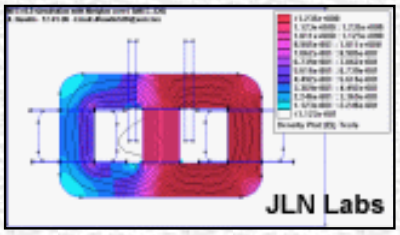

MEG : See an animation with a simulated model
- **The Magnetic Transistor Theory** *by Dave Squires* **(updated 11-05-00)**
- **The Magnetic Amplifier Experiment v1.0** *by J-L Naudin*

Interesting papers and documents about the project **:**

- **The MEG paper : Extracting Energy from a Permanent Magnet with Energy-Replenishing from the Active Vacuum,** *a PDF document (69 pages 1,29 MB), by T.E. Bearden*
- **The MEG paper** *by T.E. Bearden (alternate site)*
- **Giant Negentropy from the Common Dipole** *By T. E. Bearden (PDF Format 86 KB)*

- **On Extracting Electromagnetic Energy from the Vacuum** *By T. E. Bearden (PDF Format 160 KB)*

Link to the main Tom Bearden Web site : **http://www.cheniere.org/**

The Worldwide MEG replications (03-29-02)

Interesting patents to explore which have some similarities or interesting characteristics :

- **Electromagnetic switches by A.T.Starr (1957) : US2802170**
- **Magnetic frequency changer by H.T.Mortimer (1959) : US2883604**
- **Flux switching transformer by D.S Toffolo (1963) : US3087108**
- **Transformer in combination with permanent magnet by C.S.Garron (1968) : US3368141**
- **"Dispositif statique générateur de courant électrique" by P. Galley (1975) : FR2312135**
- **Electromagnetic generator by E.V. deRivas (1977) : US4006401**
- **Electromagnetic convertor with stationary variable-reluctance members by F.B.Richardson (1978) : US4077001**
- **Procedures and devices for energy production by H. Kunel (1982) : DE3024814**
- **Energy converter having a magnetic-core intermediate store by W. Volkrodt (1986) : DE3501076**
- **Magnetic Amplifier by D.Bramanti (1987) : US4675615**
- **Apparatus for release of Magnetostatic Energy of permament magnets by A.Boday (1997) : CA2172240**
- **Static magnet dynamo generating electromotive force based on changing flux density of an open magnetic path by A.Keiichiro (1999) : US5926083**

METHODS FOR CONTROLLING THE PATH OF MAGNETIC FLUX FROM A PERMANENT MAGNET AND DEVICES INCORPORATING THE SAME

http://l2.espacenet.com/dips/viewer?PN=WO0007285&CY=ep&LG=en&DB=EPD

Patent Number:	**WO0007285**
Publication date:	**2000-02-10**
Inventor(s):	FLYNN CHARLES J
Applicant(s)::	**MAGNETIC REVOLUTIONS LIMITED L (US)**

Abstract : A permanent magnet device (110) includes a permanent magnet (112) having North and South pole faces with a first pole piece (114) positioned adjacent one pole face thereof and a second pole piece (116) positioned adjacent the other pole face thereof so as to create at least two potential magnetic flux paths (130, 132). First control coils (122, 124) are positioned along one flux path (130) and second control coils (126, 128) is positioned along the other flux path (132), each coil being connected to a control circuit (not shown) for controlling the energization thereof. The control coils (122, 124, 126, 128) may be energized in a variety of ways to achieve desirable motive and static devices, including linear reciprocating devices, linear motion devices, rotary motion devices and power conversion.

Link to the Flynn's web site : About the **Flynn's Parallel Path Technology**

January 20th, 2001 : Interesting papers and patents :

- **"Overunity device installed in Minuteman Missile - patented by Westinghouse"** ***by Tom Bearden***
- **H. Andreatta, "High Power Switching Amplifier Wherein Energy is Transferred to a Tuned Circuit During Both Half Cycles," U.S. Patent No. 3,239,771, Mar. 8, 1966;**
- **Tom L. Dennis, Jr., "Highly Efficient Semiconductor Switching Amplifier," U.S. Patent No. 3,239,772, Mar. 8, 1966;**
- **Heber J. Morrison, "Square Wave Driven Power Amplifier," U.S. Patent No. 3,815,030, June 4, 1974.**

Email : **JNaudin509@aol.com**

Stay in touch with JLN Labs on your mobile phone

Return to the JLN Labs home page

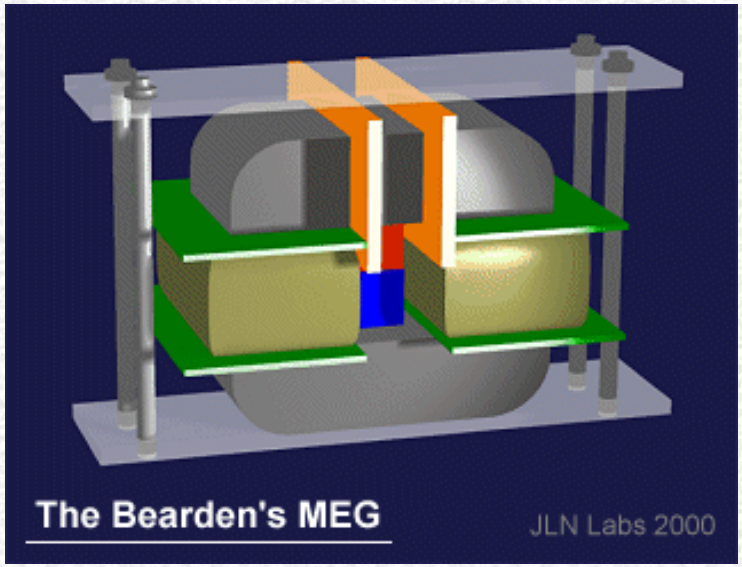

The Motionless Electromagnetic Generator,

Extracting Energy from a Permanent Magnet with Energy-Replenishing from the Active Vacuum

from Thomas E. Bearden, Ph.D. James C. Hayes, Ph.D. James L. Kenny, Ph.D. Kenneth D. Moore, B.S. Stephen L. Patrick, B.S.

"..This one works beautifully and produces COP=5.0..." *say Tom Bearden*

Created on 10-06-00 - ***JLN Labs*** - Last update 06-27-01

Sujet : The Motionless Electromagnetic Generator
Date : 06/10/00 07:54:41
From: xxxxxxxxxxx (Tom Bearden)

Dear Jean-Louis,

Information on our Motionless Electromagnetic Generator has now been publicly released, in the form of our paper, "The Motionless Electromagnetic Generator: Extracting Energy from a Permanent Magnet with Energy-Replenishing from the Active Vacuum," carried on public DoE website ***http://www.ott.doe.gov/electromagnetic/papersbooks.html*** .

Thus you may furnish the information to whomever you wish, since it is now publicly released and can be freely downloaded. It is a long paper (69 pages) and does take a little time to download.

We are encouraging web site managers who so wish, to place a pointer to the paper if they wish to. As you are aware, ***this one works beautifully and produces COP=5.0****. Our patent application has been filed and so full patent coverage is retained; we have been in patent-pending status for some time prior to the public release. We expect to force the patent by direct demonstration and independent government-certified test laboratory testing and certification to NIST, IEEE, and U.S. Government test standards.*

The system uses an extension to the work-energy theorem: In a replenishing potential environment, when energy is removed from the potential in a different form, the potential is simply replenished by the giant entropy process (my paper on the giant negentropy process is on the same DoE website). Use of a permanent magnet simply uses its magnetostatic scalar potential to evoke and sustain the giant negentropy mechanism. This sustains the continuous flow of the magnetic vector potential, and the device separates the magnetic B-field from the magnetic vector potential A.

The giant negentropy mechanism continuously replenishes the A-potential as fast as energy is extracted from it. Thus it is rather like dipping bucket after bucket of water from the same spatial volume in a rushing river, with the river instantly filling the hole up each time a dip is made. In this case we must pay only for the switching costs, since the giant negentropy mechanism continually replenishes the magnetic dipole sustaining the magnetic vector potential energy flow. Note that we do not destroy the source dipole, as every conventional closed current loop electrical system does. As Whittaker showed in 1903, once the dipolarity is established, the giant negentropy process continues so long as the dipole exists. Dipoles in original matter, e.g., have been pouring out copious energy by this process for some 15 billion years, so the energy is absolutely inexhaustible and copious.

There are 23 illustrations in the Magnetic Energy Ltd. paper on the DoE website.

Very best wishes,
Tom Bearden

You may download the MEG document at : http://www.ott.doe.gov/pdfs/MEGpaper.pdf (now removed)

Note (10-26-00) : The MEG Paper has been removed from the DoE site, but you may download it :

- http://www.cseti.org/bearden/MEGpaper.pdf

Note (11-21-00) : The MEG Paper has been removed from the Cseti web site, but you may also download it at :

- **The Motionless Electromagnetic Generator: Extracting Energy from a Permanent Magnet with Energy-Replenishing from the Active Vacuum,** *a PDF document (69 pages 1,29 MB), explanations and test results by T.E. Bearden (* **Alternate site** *)*

The MEG paper : Extracting Energy from a Permanent Magnet with Energy-Replenishing from the Active Vacuum, *a PDF document (69 pages 1,29 MB), by T.E. Bearden*

The MEG paper *by T.E. Bearden (alternate site)*

If you don't have the Adobe Acrobat reader you may download it freely at : Get Acrobat Reader

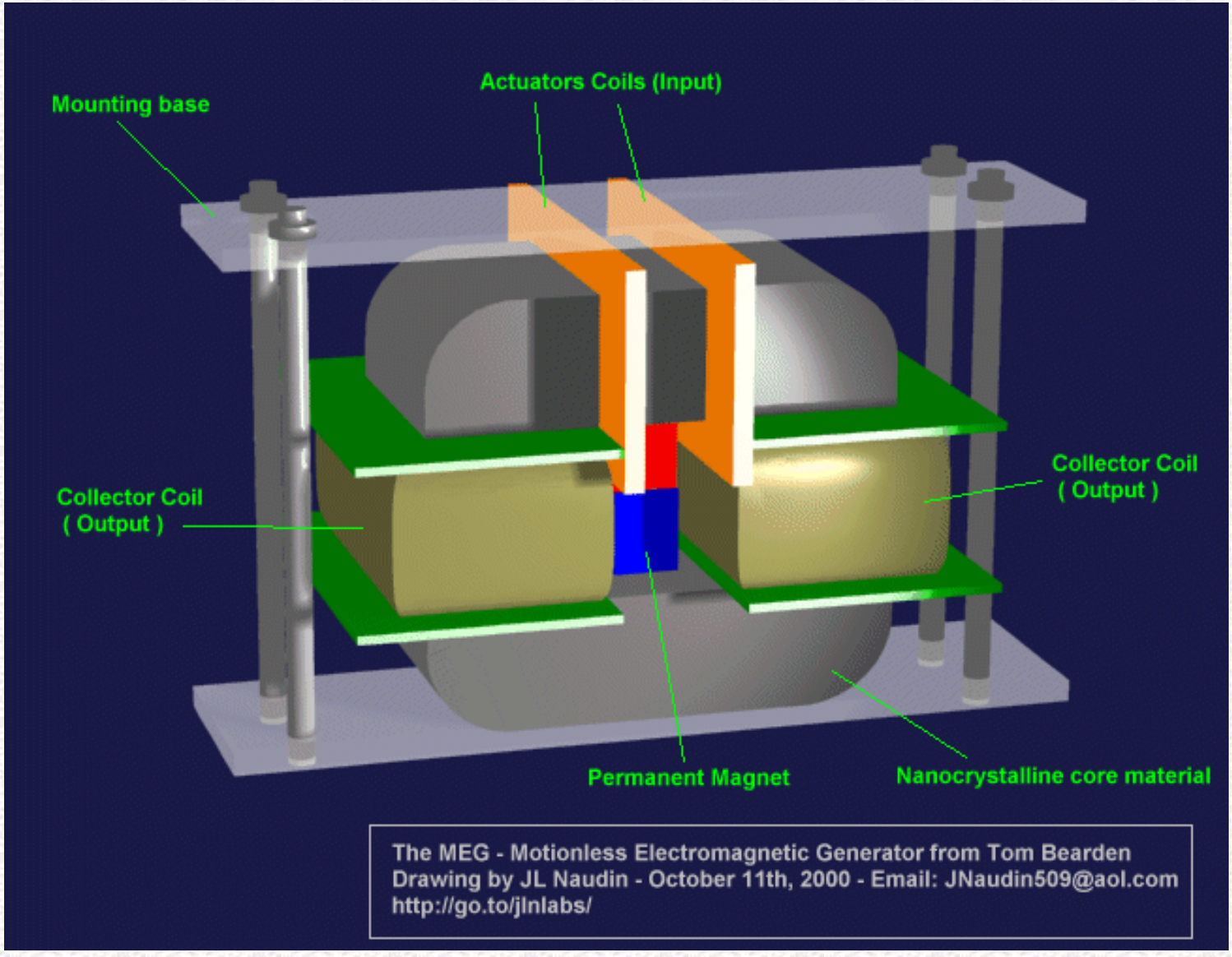

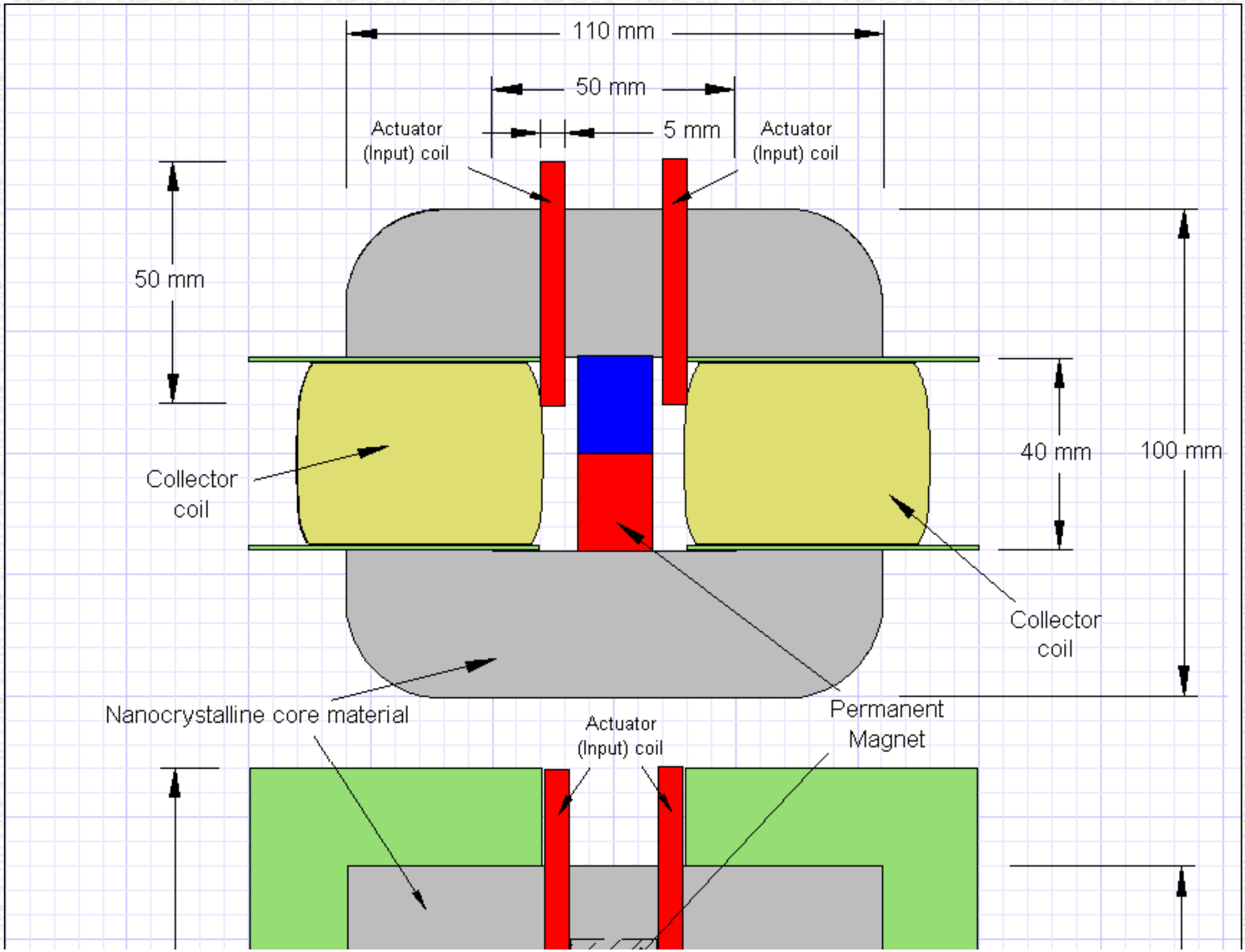
110 mm
50 mm
5 mm
Actuator
(Input) coil
Actuator
(Input) coil
50 mm
Collector
coil
40 mm
100 mm
Collector
coil
Nanocrystalline core material
Permanent
Magnet
Actuator
(Input) coil

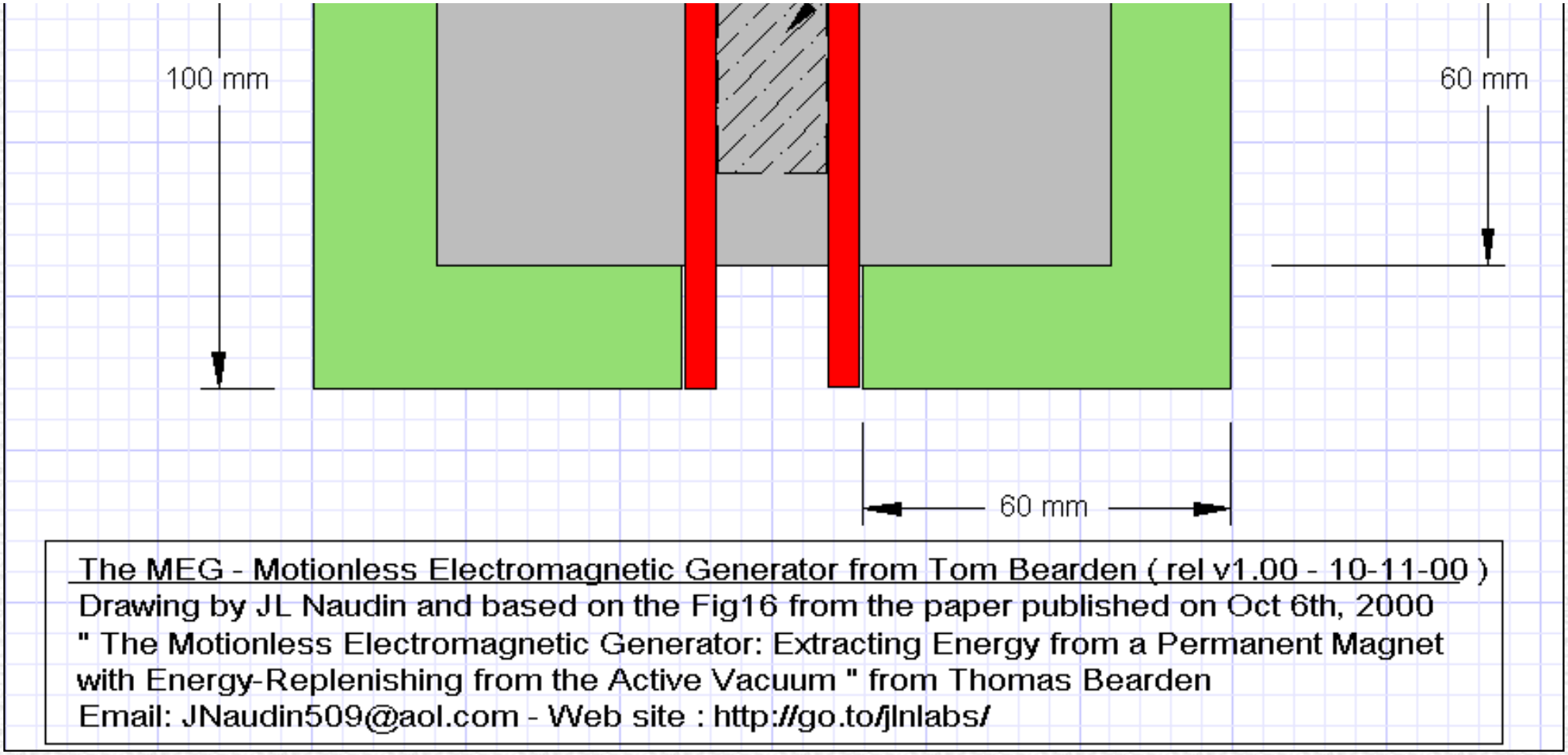

The MEG - Motionless Electromagnetic Generator from Tom Bearden (rel v1.00 - 10-11-00)
Drawing by JL Naudin and based on the Fig16 from the paper published on Oct 6th, 2000
" The Motionless Electromagnetic Generator: Extracting Energy from a Permanent Magnet with Energy-Replenishing from the Active Vacuum " from Thomas Bearden
Email: JNaudin509@aol.com - Web site : http://go.to/jlnlabs/

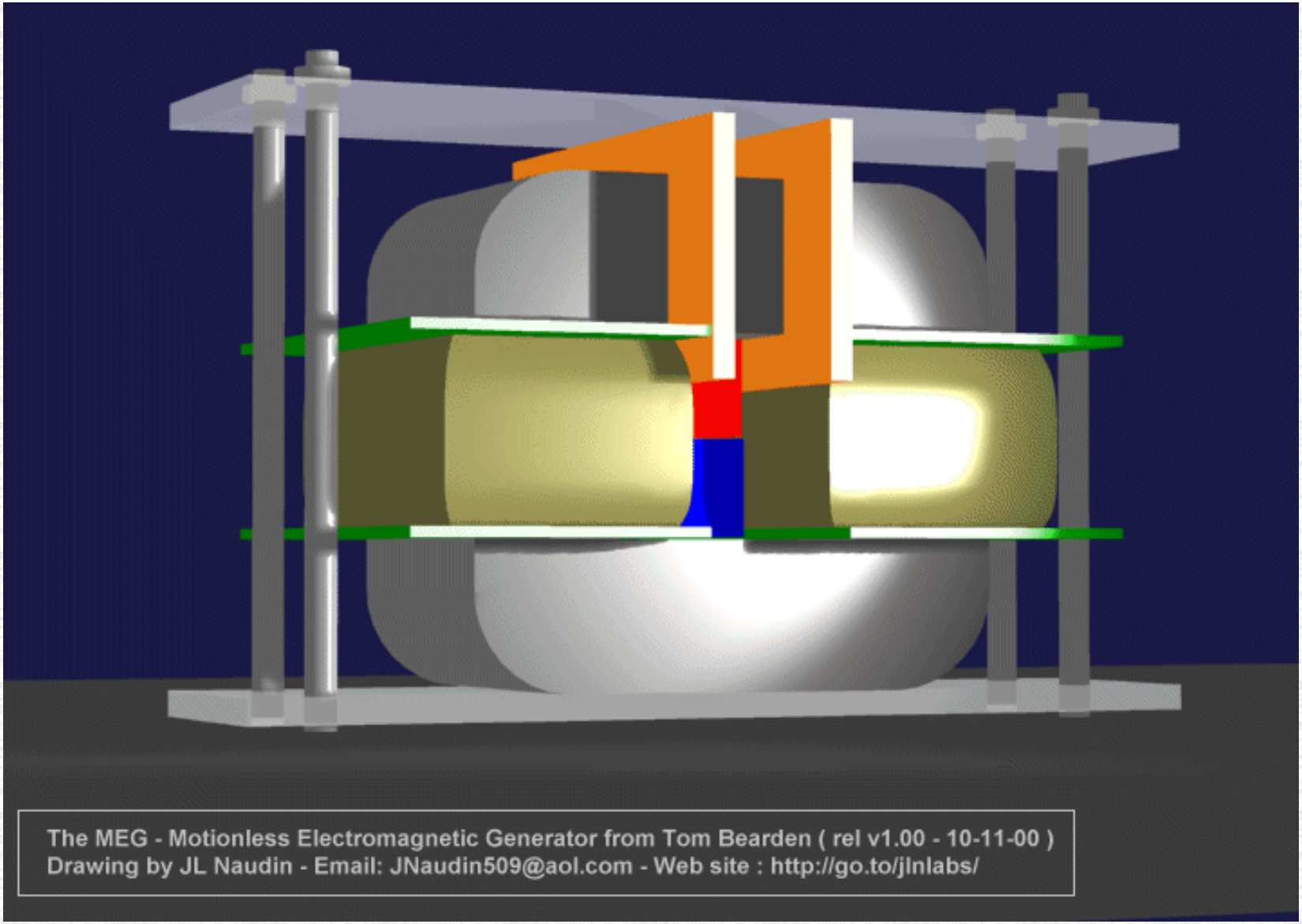

Some technical infos :

Fe-based Nanocrystalline Toroidal Core for Current Transformers :
Characteristics: Nanocrystalline alloy has similar features of high initial permeability and temperature stability, less gravity and packing factor than that of Permalloy. Under the same conditions of core size and performance, it is lighter (about 1/3 lighter) and cheaper than that of Permalloy.

Nanocrystalline Magnetic Core :
Characteristics: High saturation magnetic induction (1.25T), high permeability, high inductance (ten times higher than that of ferrite), low loss, small volume, light in weight, high electric interference resistance, good frequency performance and high temperature stability.

For more infos about the Nanocrystalline material see :

- **NANOCRYSTALLINE SOFT MAGNETIC ALLOYS FOR APPLICATION IN ELECTRICAL AND ELECTRONIC DEVICES by V.R. Ramanan ABB-Electric Systems Technology Institute**

Nanocrystalline magnetic material suppliers :

- **BFiOTiLAS : Magnetics Components: Softcores material**
- **MAGNETEC :** Tape wound core based on the new nanocrystalline softmagnetic material called **NANOPERM**

Interesting patents to explore which have some similarities or interesting characteristics :

- **Electromagnetic switches by A.T.Starr (1957) : US2802170**
- **Magnetic frequency changer by H.T.Mortimer (1959) : US2883604**
- **Flux switching transformer by D.S Toffolo (1963) : US3087108**
- **Transformer in combination with permanent magnet by C.S.Garron (1968) : US3368141**
- **Electromagnetic generator by E.V. deRivas (1977) : US4006401**
- **Electromagnetic convertor with stationary variable-reluctance members by F.B.Richardson (1978) : US4077001**
- **Procedures and devices for energy production by H. Kunel (1982) : DE3024814**
- **Energy converter having a magnetic-core intermediate store by W. Volkrodt (1986) : DE3501076**
- **Magnetic Amplifier by D.Bramanti (1987) : US4675615**
- **Apparatus for release of Magnetostatic Energy of permament magnets by A.Boday (1997) : CA2172240**
- **Static magnet dynamo generating electromotive force based on changing flux density of an open magnetic path by A.Keiichiro (1999) : US5926083**

4 July, 2001 : Message from Tom Bearden (Circulate Widely)

This review by Myron Evans is fantastic, and it places EM energy from the vacuum very solidly into the literature. It will be published in the forthcoming three volumes of M.W. Evans, ed., Modern Nonlinear Optics, Second Edition, Wiley, 2001.

I have the permission of Myron Evans to post the paper until the publication of the book toward the end of this year.

Cheers,

Tom Bearden

The Link Between the Sachs and O(3) Theories of Electrodynamics by M.W. Evans (PDF document 409 Kb)

Website address: http://www.cheniere.org/references/index.html

---

Foundations of Physics Letters, Vol. 14., No. 1, 2001

EXPLANATION OF THE MOTIONLESS ELECTROMAGNETIC GENERATOR WITH 0(3) ELECTRODYNAMICS

P. K. Anastasovski, T. E. Bearden, C. Ciubotariu, W. T. Coffey, L. B. Crowell, G. J. Evans, M. W. Evans, R. Flower, A. Labounsky, B. Lehnert, M. Mészáros, P. R. Molnar, J. K. Moscicki, S. Roy, and J.P. Vigier.

Institute for Advanced Study, Alpha Foundation - Institute of Physics, 11 *Rutafa Street, Building H - Budapest, H-1165, Hungary*

The MEG paper : Extracting Energy from a Permanent Magnet with Energy-Replenishing from the Active Vacuum, *a PDF document (69 pages 1,29 MB), by T.E. Bearden*

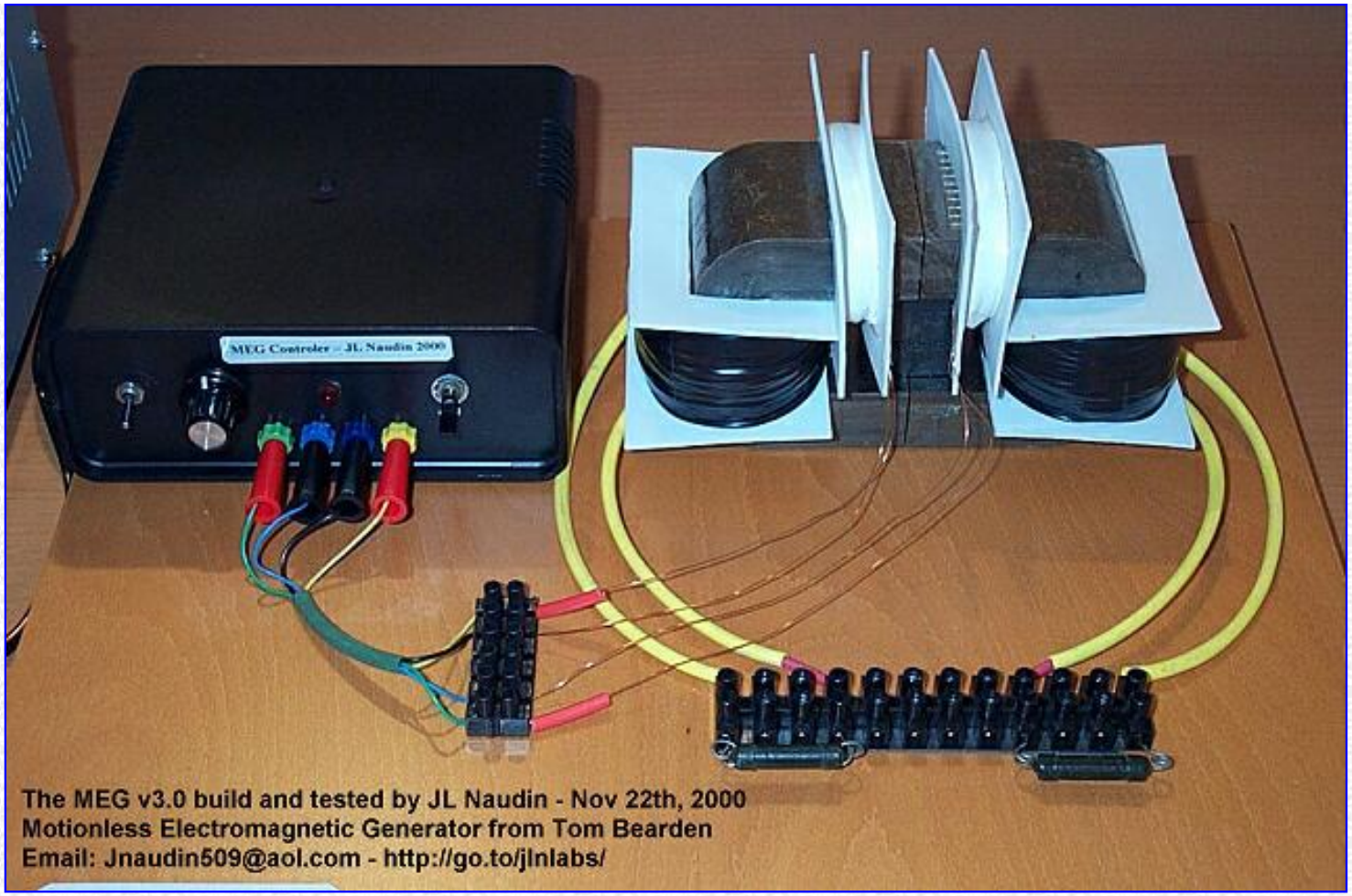

The MEG v3.0 build by JL Naudin - November 22th, 2000

See : The MEG v3.0 ***build by J-L Naudin, with diagrams and tests reports***

Return to the MEG project home page

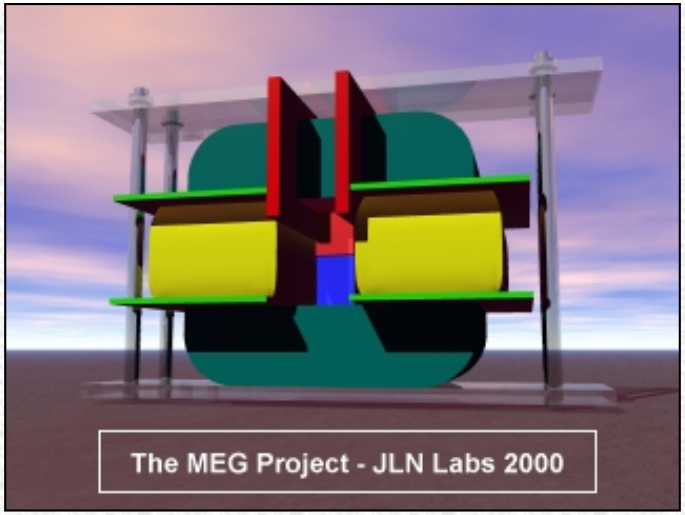

The Motionless Electromagnetic Generator Project

The MEG Project

*"**..This one works beautifully and produces COP=5.0...**" has said Tom Bearden*

Created on 11-18-00 - ***JLN Labs*** - Last update 03-27-02

All informations in this page are published free and are intended for private/educational purposes and not for commercial applications

The MEG diagrams published in these pages are currently under test by JL Naudin and may be subject to modifications after that they have been published on this site. They are the result of some attempts of a private and fully independant replication by the author. These diagrams are not the original MEG diagrams being tested by the Bearden's teamwork or some accredited labs.

Disclaimer: The author assumes no liability for any incidental, consequential or other liability from the use of this information. All risks and damages, incidental or otherwise, arising from the use or misuse of the information contained herein are entirely the responsibility of the user. Although careful precaution has been taken in the preparation of this material, I assume no responsibility for omissions or errors in the diagrams or measurement datas published here.

United States Patent ***6,362,718***
Patrick , et al. **March 26, 2002**

US Patent *6,362,718* : Motionless Electromagnetic Generator (MEG)

See the **full MEG patent with diagrams (15 pages)**

Abstract

An electromagnetic generator without moving parts includes a permanent magnet and a magnetic core including first and second magnetic paths. A first input coil and a first output coil extend around portions of the first magnetic path, while a second input coil and a second output coil extend around portions of the second magnetic path. The input coils are alternatively pulsed to provide induced current pulses in the output coils. Driving electrical current through each of the input coils reduces a level of flux from the permanent magnet within the magnet path around which the input coil extends. In an alternative embodiment of an electromagnetic generator, the magnetic core includes annular spaced-apart plates, with posts and permanent magnets extending in an alternating fashion between the plates. An output coil extends around each of these posts. Input coils extending around portions of the plates are pulsed to cause the induction of current within the output coils.

Inventors:	**Patrick Stephen L**; **Bearden Thomas E.**; **Hayes James C.**; **Moore Kenneth D.**; **Kenny James L.**
Appl. No.:	**656313**
Filed:	**September 6, 2000**

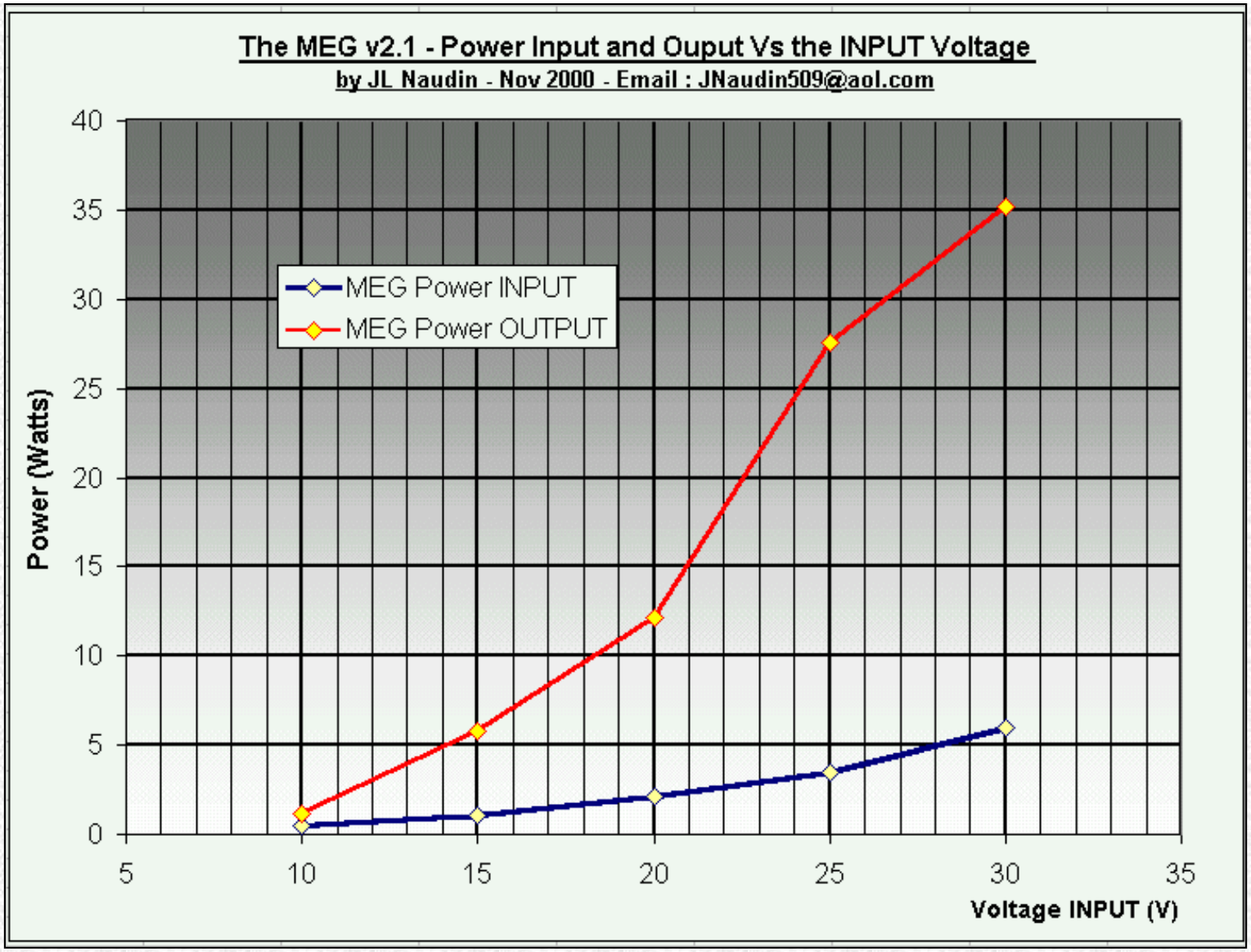
The MEG v2.1 - Power Input and Ouput Vs the INPUT Voltage
by JL Naudin - Nov 2000 - Email : JNaudin509@aol.com
MEG Power INPUT
MEG Power OUTPUT
Power (Watts)
0
5
10
15
20
25
30
35
40
5
10
15
20
25
30
35
Voltage INPUT (V)

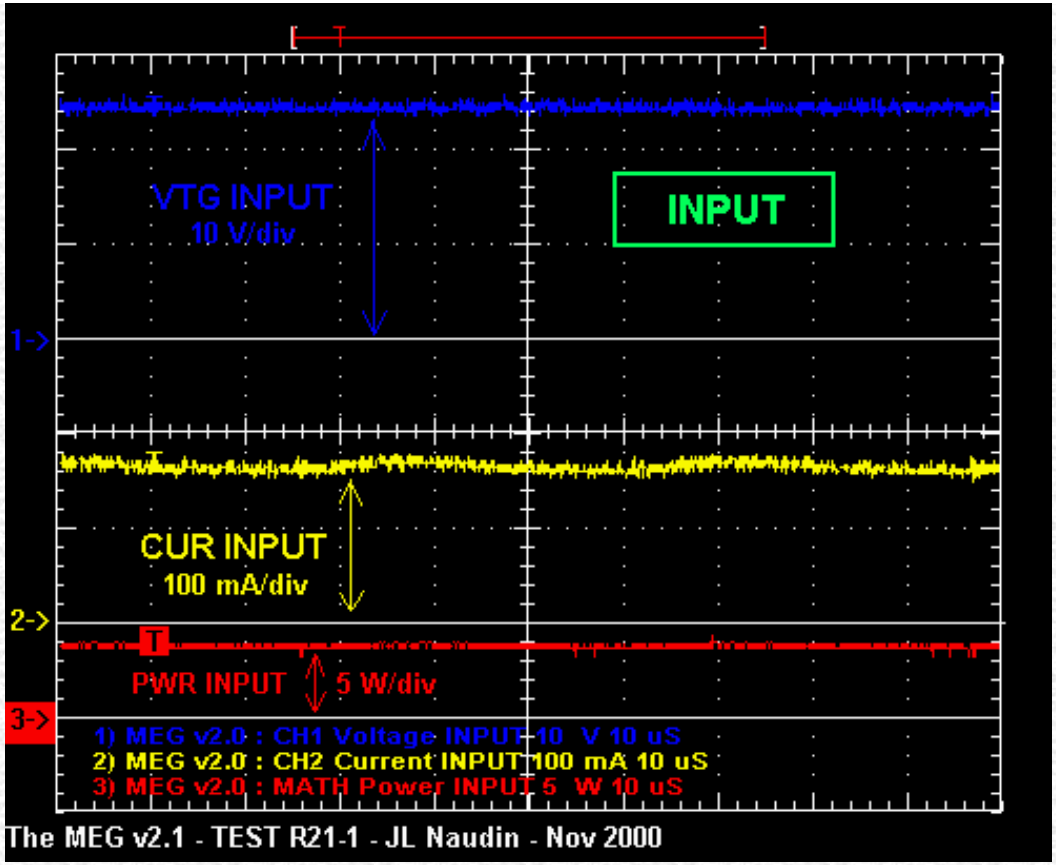

The TOTAL MEG INPUT at the DC input of the control board

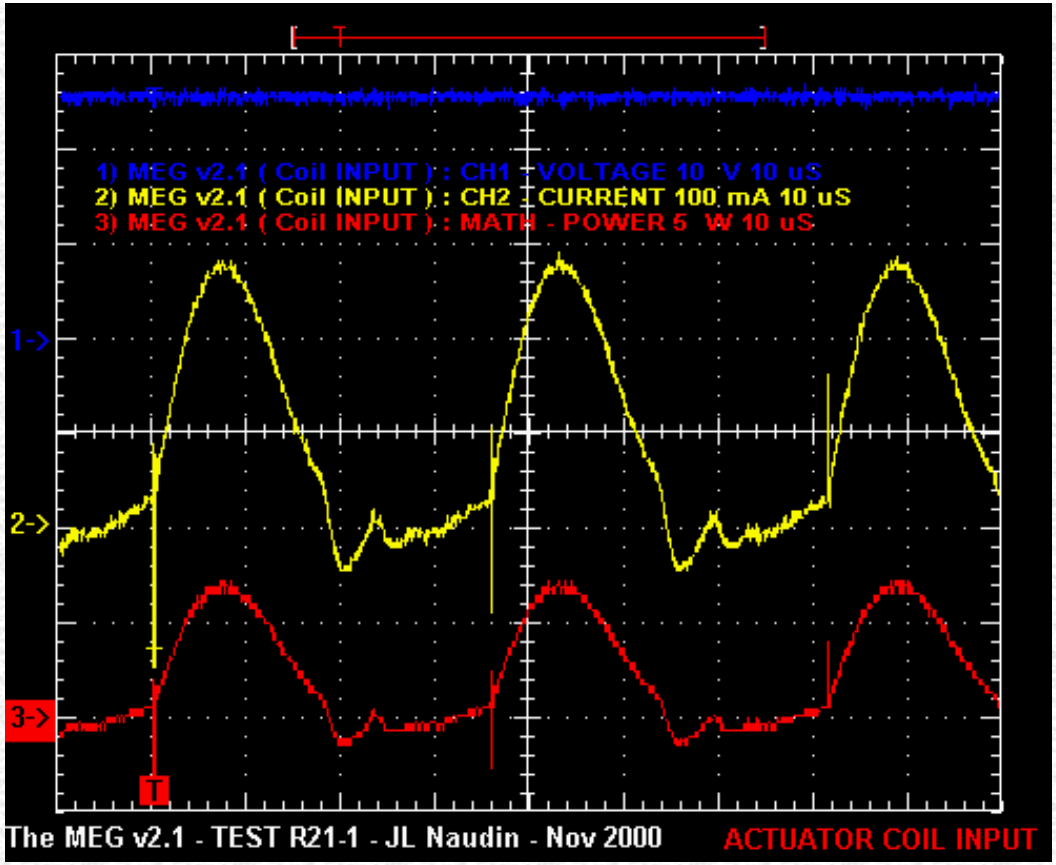

The ACTUATOR COIL INPUT (Primary coil)

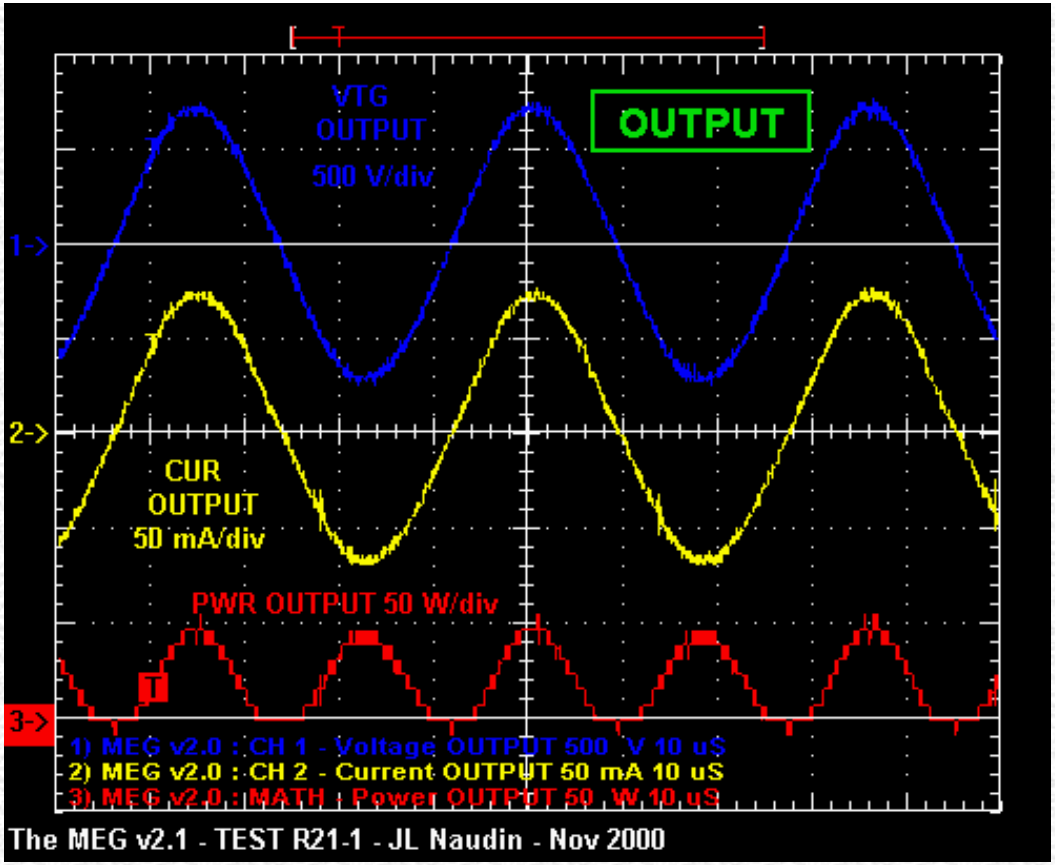

Above : The MEG v2.1 OUTPUT (Secundary coil)

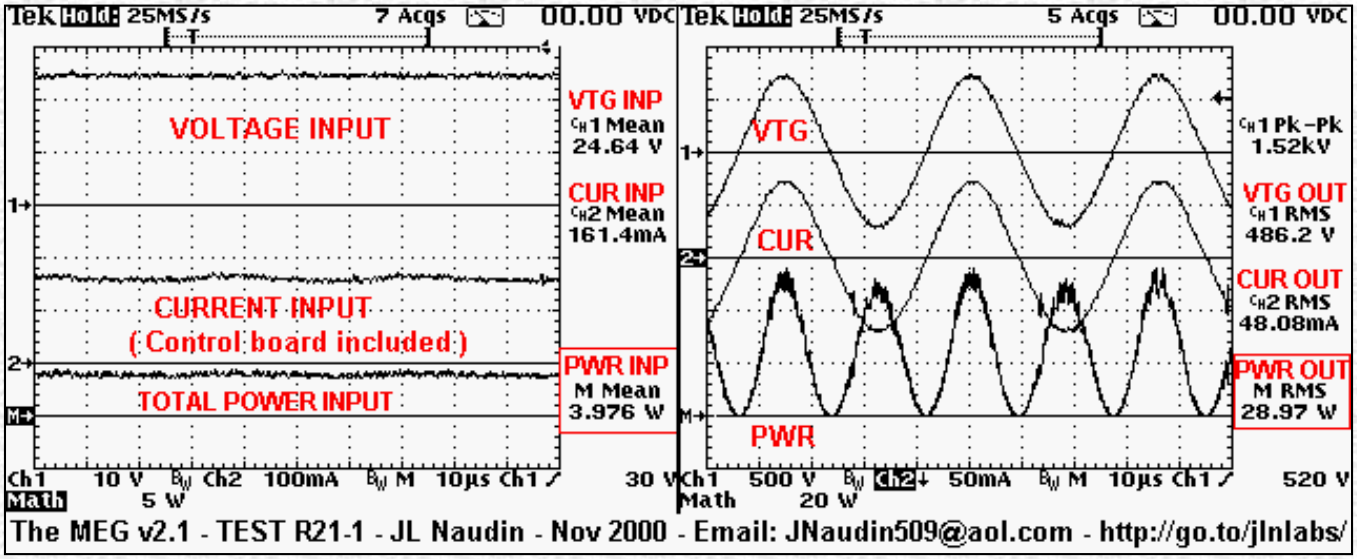

On the Left : The Voltage, the Current and the Power INPUT (measured at the DC input of the MEG control board)
On the Right : The Voltage, the Current and the Power OUTPUT

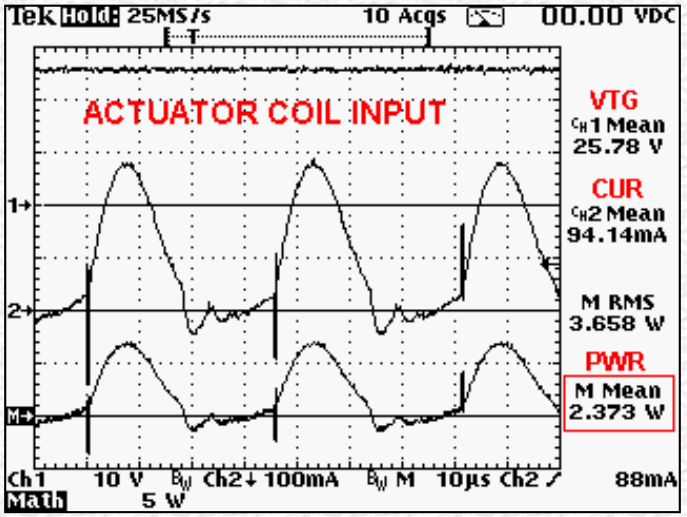

The ACTUATOR COIL INPUT

Note from Jean-Louis Naudin **: The current has been measured with a 10 ohms ceramic and non inductive resistor (with a Tektronix THS720P oscilloscope, the probe used is a 1/10 and scope setup for the CH2 is 1000mA/V), the same resistor and the same method of measurement has been used for input and also the output.**

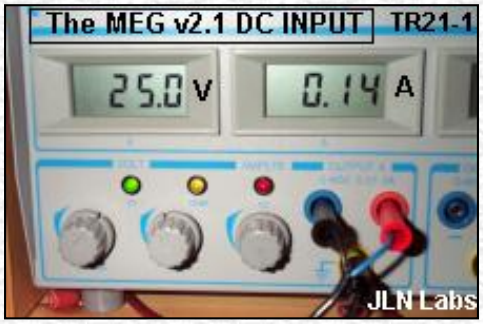

Above :The MEG v2.1 Input at the DC power supply
See : The MEG v2.1 diagram

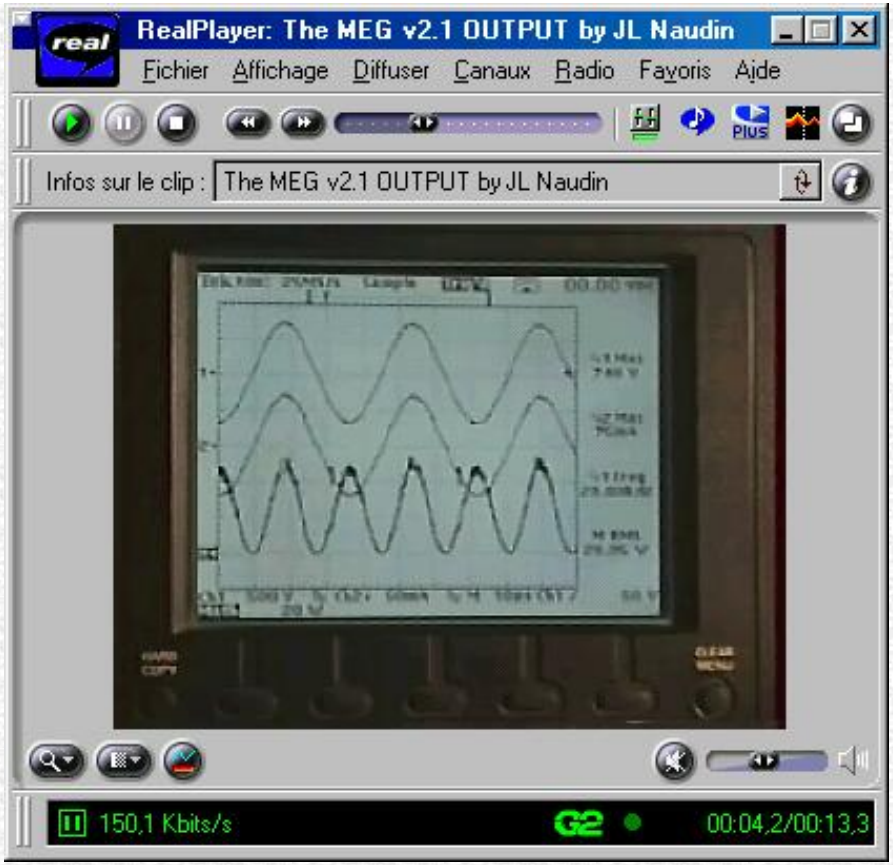

Video of the test done on 11-16-00 (228 Kb), you need to have real player FREE

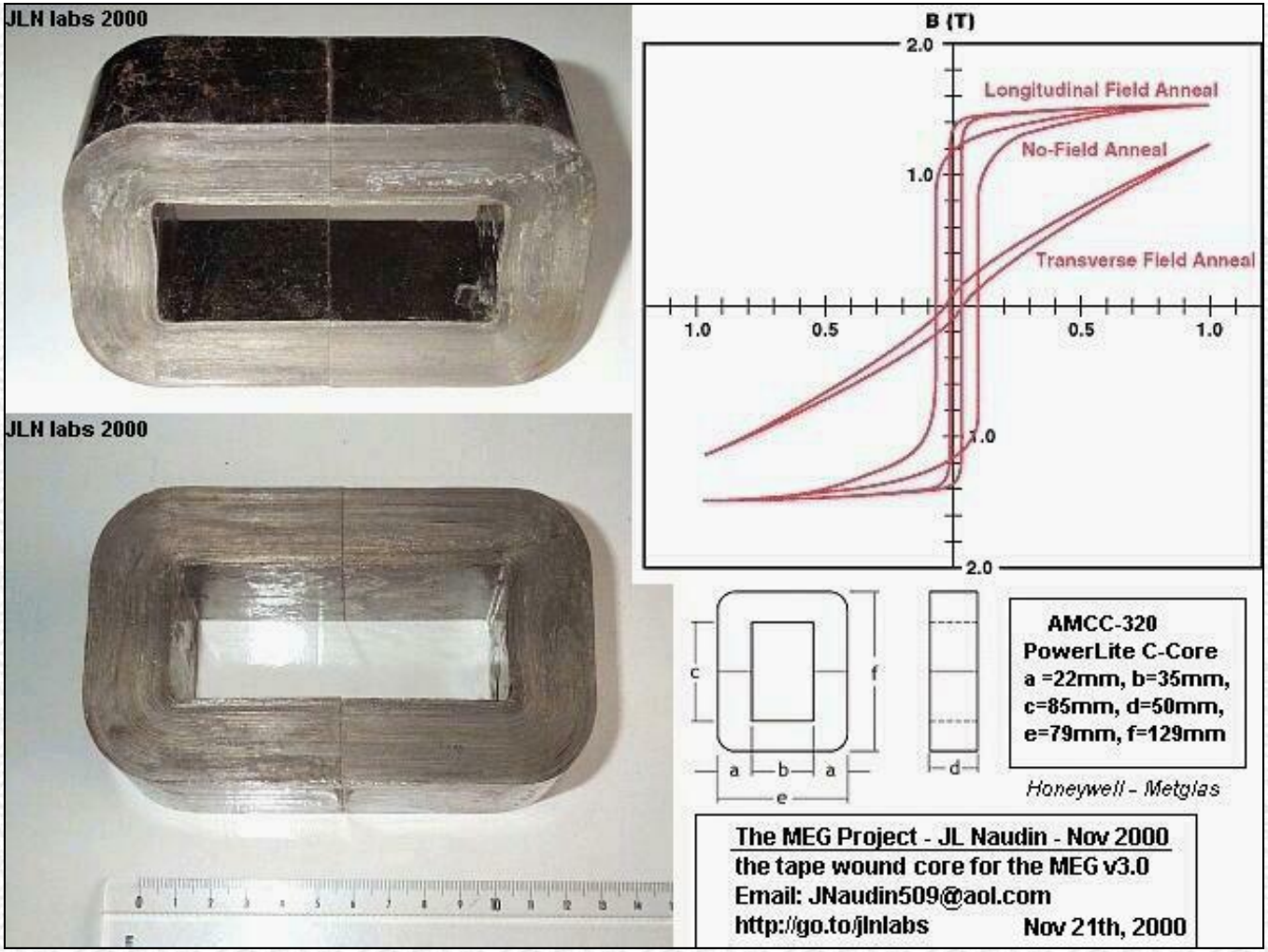

The PowerLite™ C-Cores (*Honeywell*) are manufactured with the METGLAS amorphous alloy.

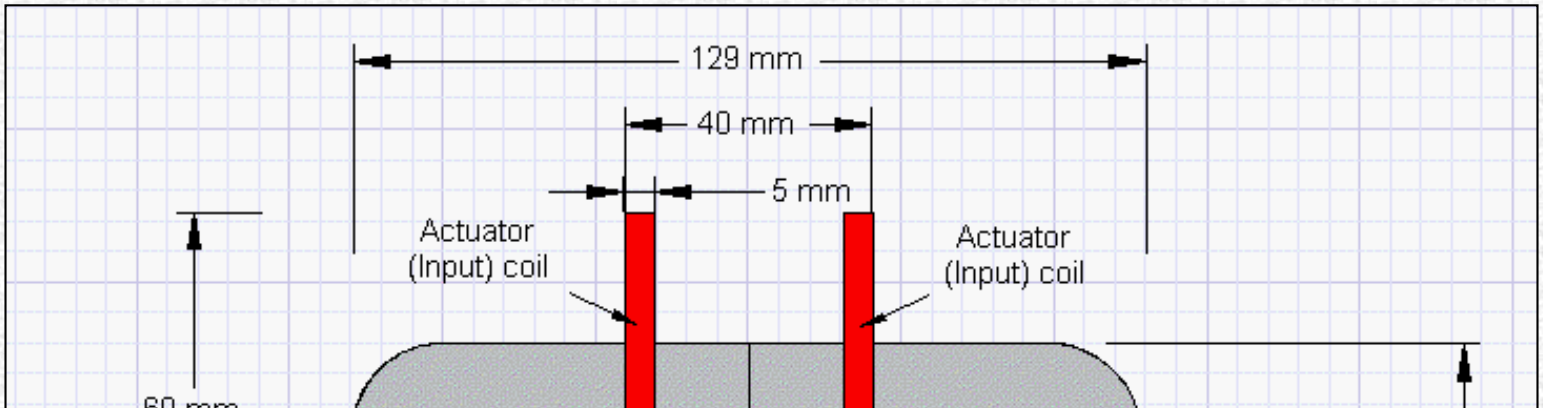

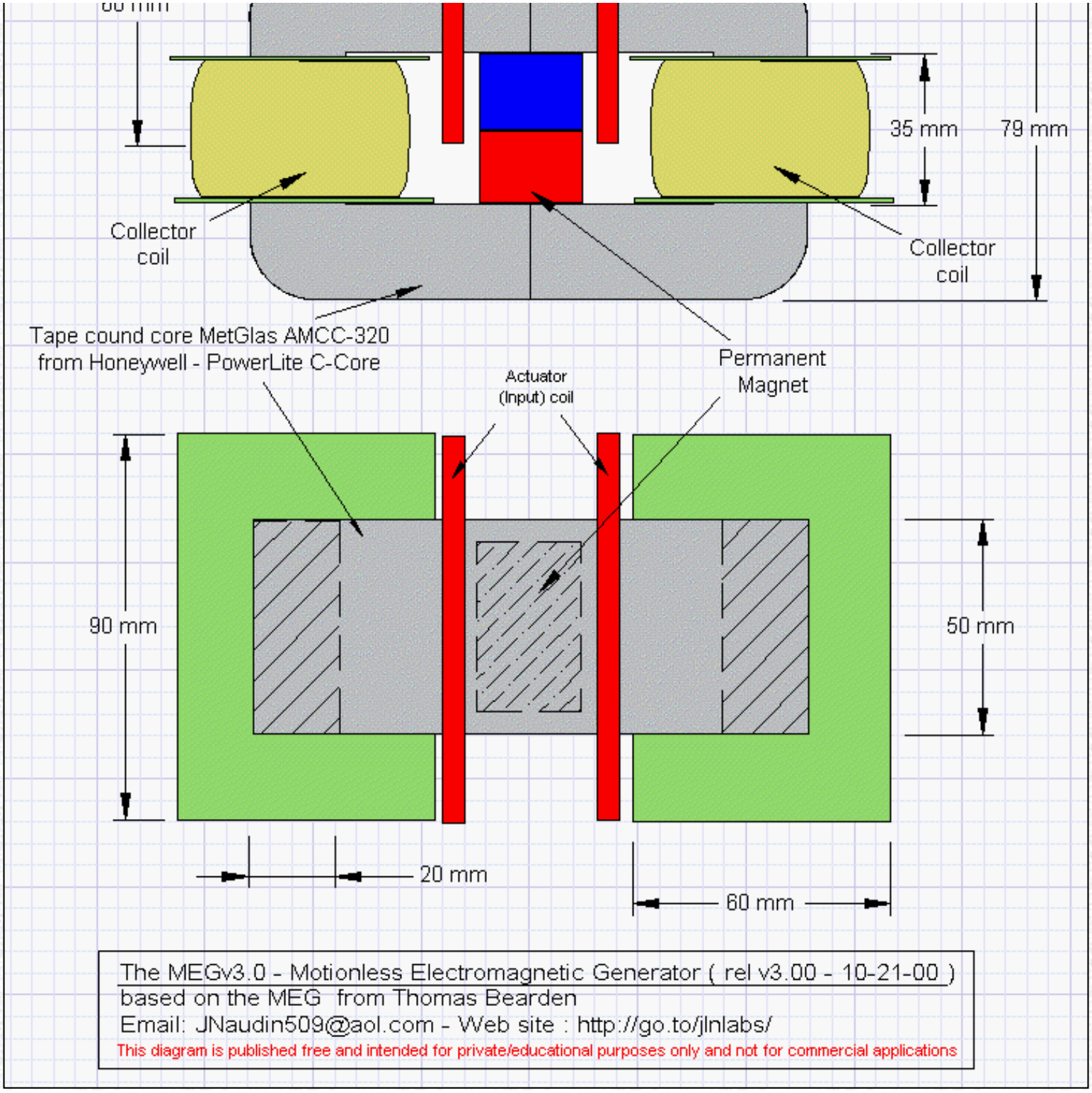
35 mm
79 mm
Collector coil
Collector coil
Tape cound core MetGlas AMCC-320 from Honeywell - PowerLite C-Core
Actuator (Input) coil
Permanent Magnet
90 mm
50 mm
20 mm
60 mm
The MEGv3.0 - Motionless Electromagnetic Generator (rel v3.00 - 10-21-00)
based on the MEG from Thomas Bearden
Email: JNaudin509@aol.com - Web site : http://go.to/jlnlabs/
This diagram is published free and intended for private/educational purposes only and not for commercial applications

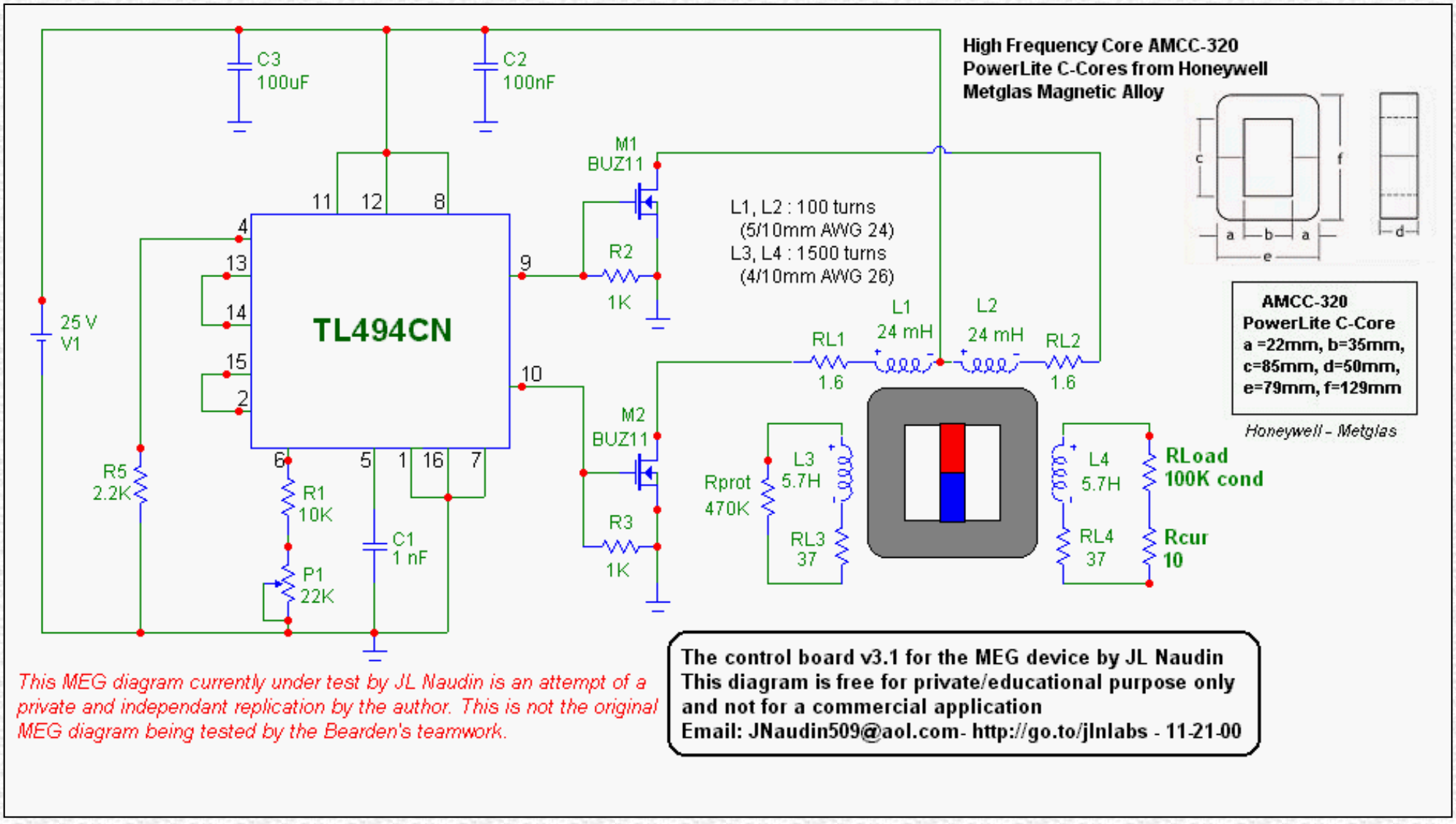
C3
100uF
C2
100nF
M1
BUZ11
11
12
8
4
13
14
15
2
9
10
TL494CN
R2
1K
L1, L2 : 100 turns
(5/10mm AWG 24)
L3, L4 : 1500 turns
(4/10mm AWG 26)
High Frequency Core AMCC-320
PowerLite C-Cores from Honeywell
Metglas Magnetic Alloy
c
f
a
b
a
d
e
AMCC-320
PowerLite C-Core
a =22mm, b=35mm,
c=85mm, d=50mm,
e=79mm, f=129mm
Honeywell - Metglas
25 V
V1
L1
24 mH
L2
24 mH
RL1
1.6
RL2
1.6
M2
BUZ11
R3
1K
R5
2.2K
6
5
1
16
7
R1
10K
P1
22K
C1
1 nF
Rprot
470K
L3
5.7H
RL3
37
L4
5.7H
RL4
37
RLoad
100K cond
Rcur
10
This MEG diagram currently under test by JL Naudin is an attempt of a private and independant replication by the author. This is not the original MEG diagram being tested by the Bearden's teamwork.
The control board v3.1 for the MEG device by JL Naudin
This diagram is free for private/educational purpose only and not for a commercial application
Email: JNaudin509@aol.com- http://go.to/jlnlabs - 11-21-00

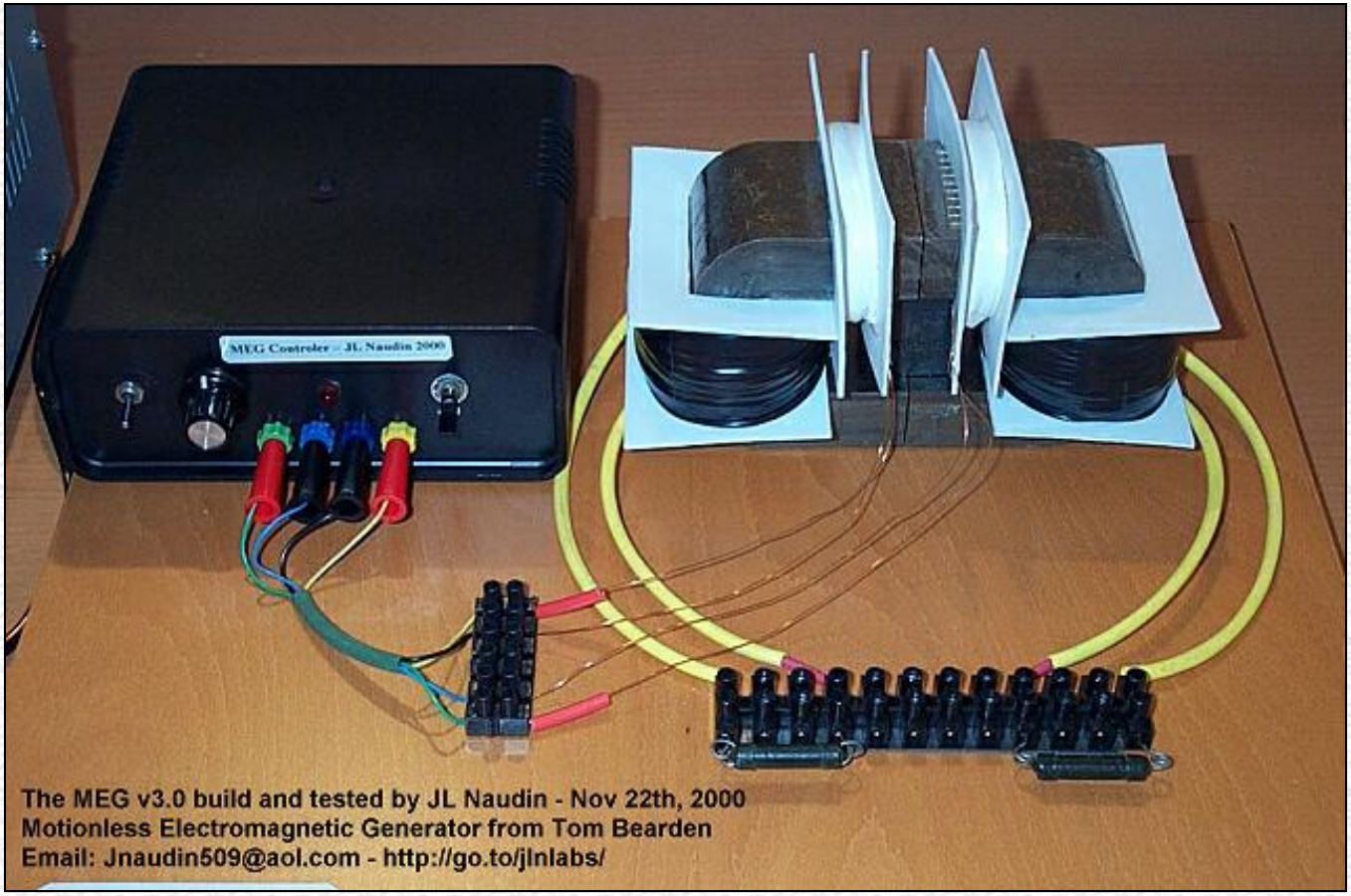
MEG Controler - JL Naudin 2000
The MEG v3.0 build and tested by JL Naudin - Nov 22th, 2000
Motionless Electromagnetic Generator from Tom Bearden
Email: Jnaudin509@aol.com - http://go.to/jlnlabs/

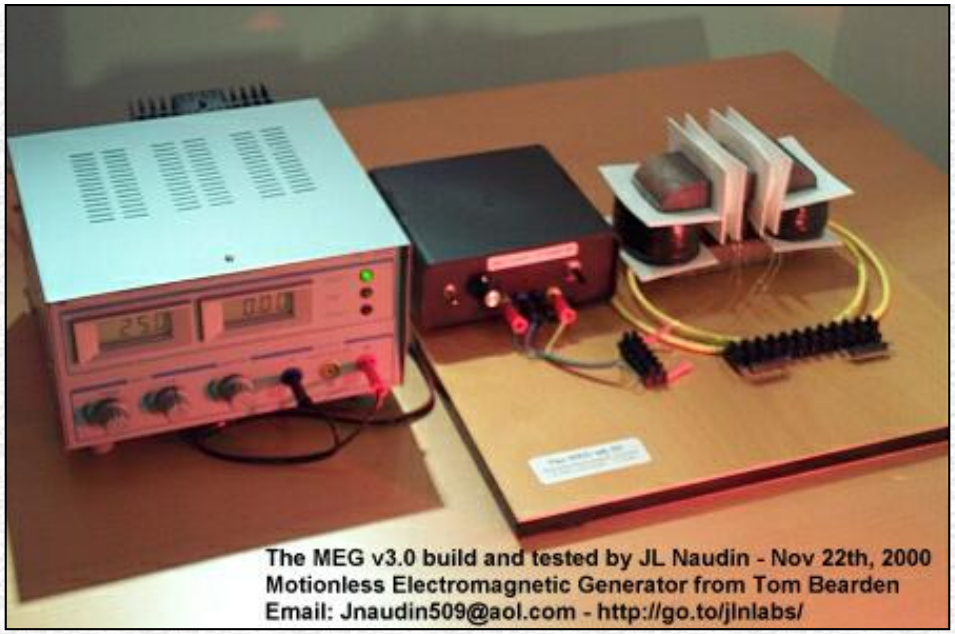
The MEG v3.0 build and tested by JL Naudin - Nov 22th, 2000
Motionless Electromagnetic Generator from Tom Bearden
Email: Jnaudin509@aol.com - http://go.to/jlnlabs/

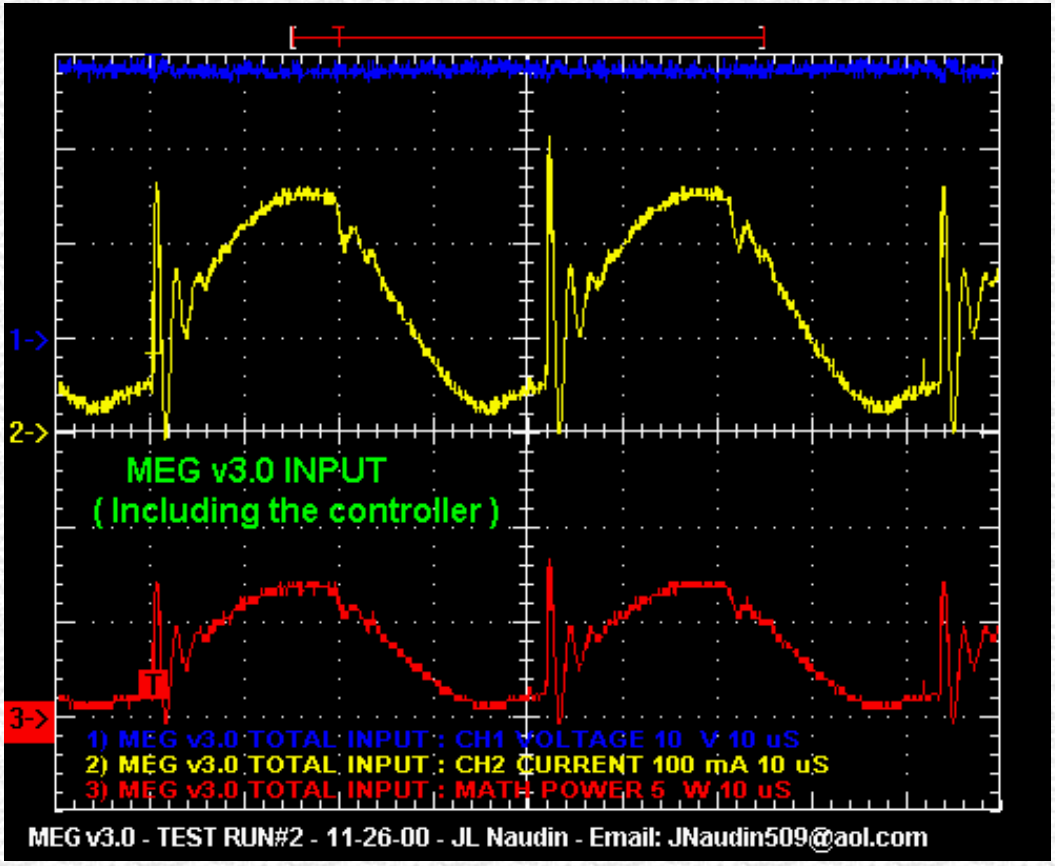
1->
2->
MEG v3.0 INPUT
(Including the controller)
3->
1) MEG v3.0 TOTAL INPUT : CH1 VOLTAGE 10 V 10 uS
2) MEG v3.0 TOTAL INPUT : CH2 CURRENT 100 mA 10 uS
3) MEG v3.0 TOTAL INPUT : MATH POWER 5 W 10 uS
MEG v3.0 - TEST RUN#2 - 11-26-00 - JL Naudin - Email: JNaudin509@aol.com

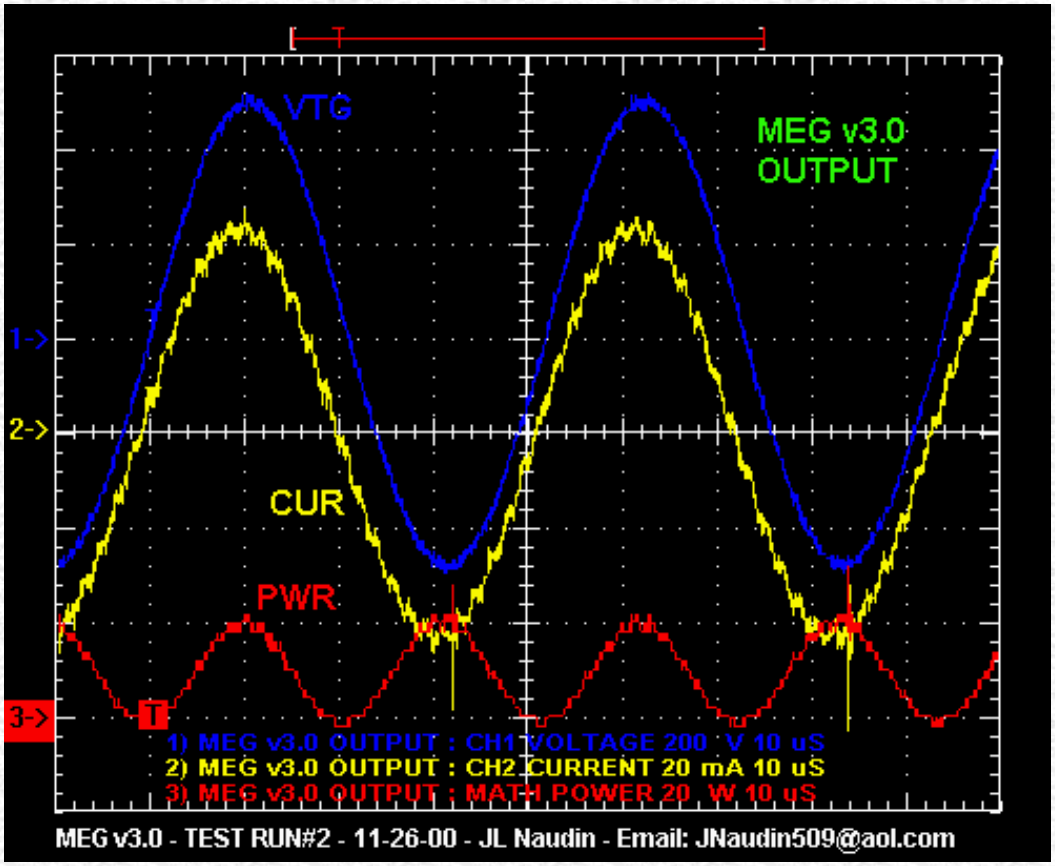
VTG
MEG v3.0
OUTPUT
1->
2->
CUR
PWR
3->
1) MEG v3.0 OUTPUT : CH1 VOLTAGE 200 V 10 uS
2) MEG v3.0 OUTPUT : CH2 CURRENT 20 mA 10 uS
3) MEG v3.0 OUTPUT : MATH POWER 20 W 10 uS
MEG v3.0 - TEST RUN#2 - 11-26-00 - JL Naudin - Email: JNaudin509@aol.com

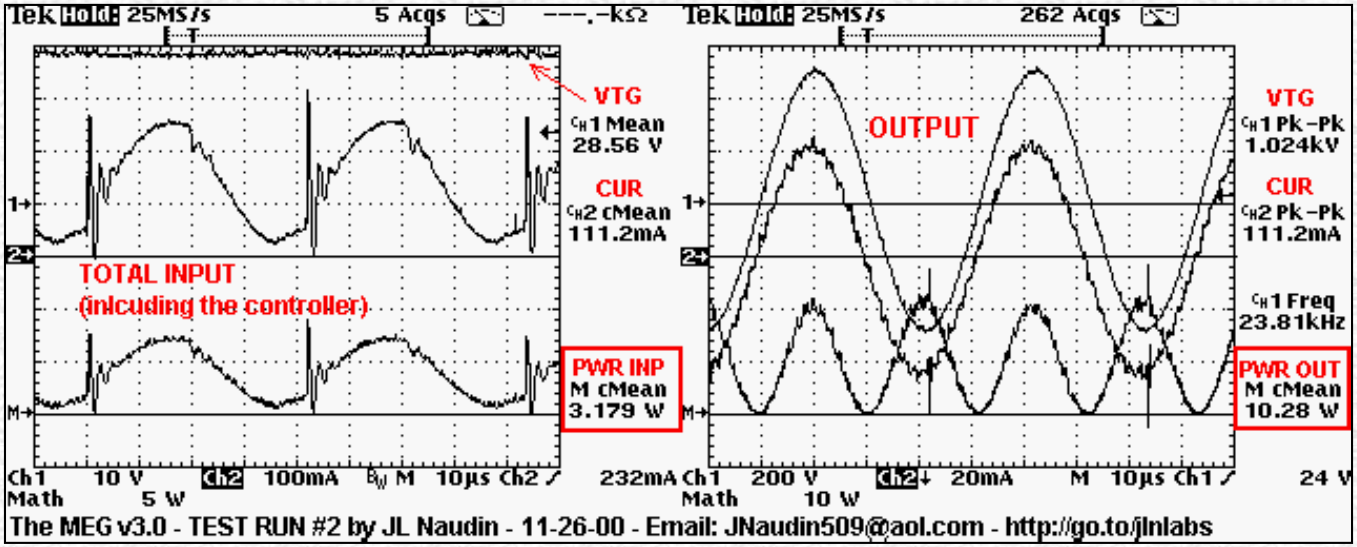
Tek Hold: 25MS/s
5 Acqs
VTG
CH1 Mean
28.56 V
CUR
CH2 cMean
111.2mA
TOTAL INPUT
(inlcuding the controller)
PWR INP
M cMean
3.179 W
Ch1 10 V Ch2 100mA BW M 10µs Ch2
Math 5 W
232mA
Tek Hold: 25MS/s
262 Acqs
OUTPUT
VTG
CH1 Pk-Pk
1.024kV
CUR
CH2 Pk-Pk
111.2mA
CH1 Freq
23.81kHz
PWR OUT
M cMean
10.28 W
Ch1 200 V Ch2 20mA M 10µs Ch1
Math 10 W
24 V
The MEG v3.0 - TEST RUN #2 by JL Naudin - 11-26-00 - Email: JNaudin509@aol.com - http://go.to/jlnlabs

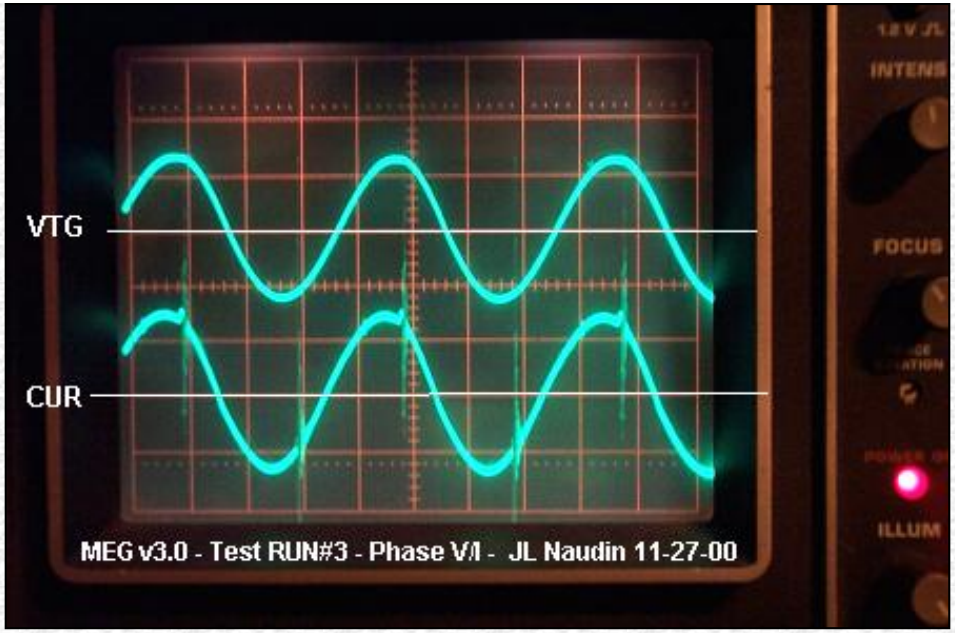

The phase between Voltage and Current at the MEG Output has also been checked with an analog oscilloscope (PM3215 2x50 Mhz Philips).

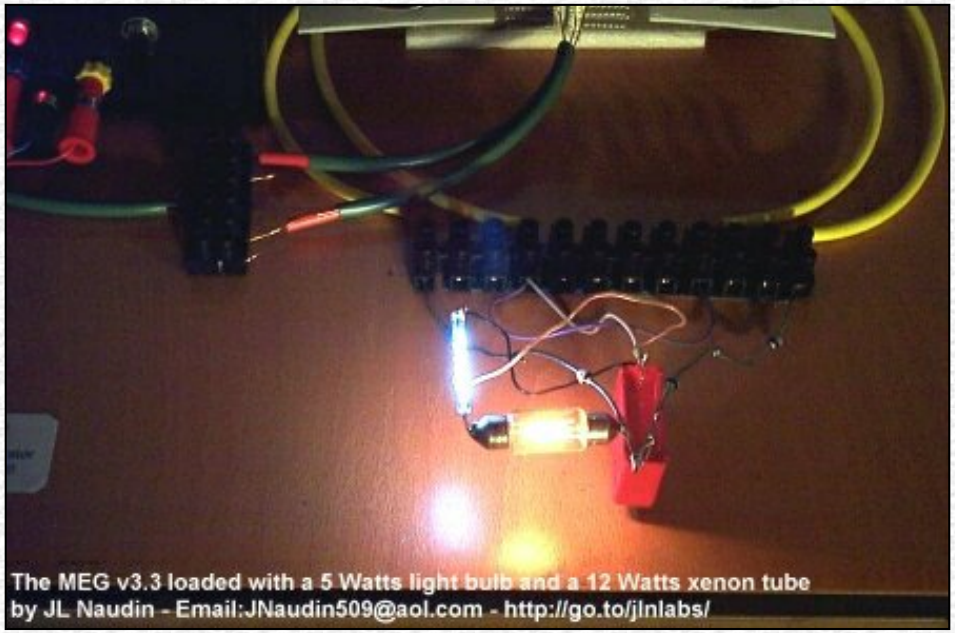

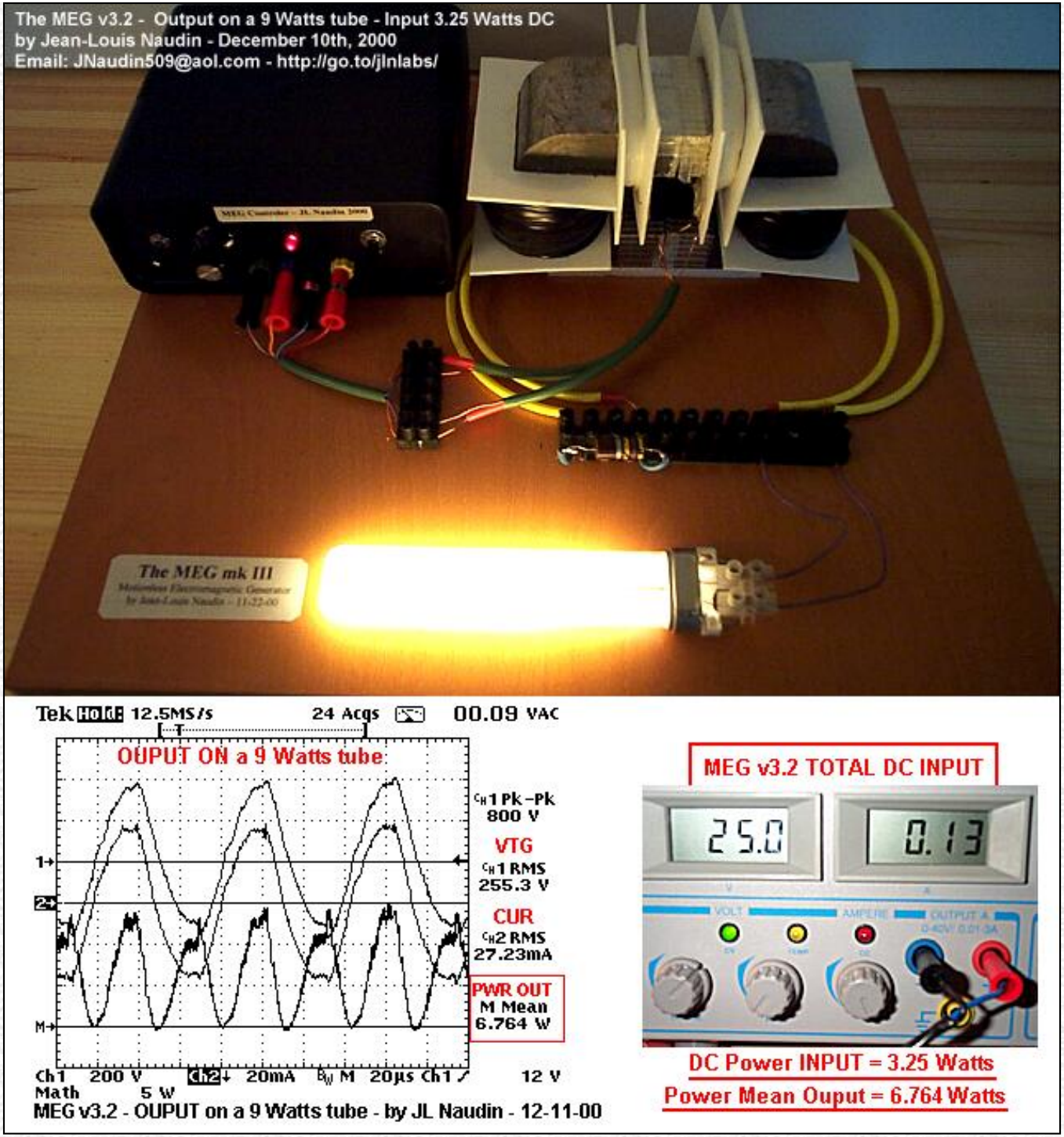

Notes : It is interesting to notice that the measured power required by the MEG electronic control board (TL494, BUZZ11, LED...) is 1.75 Watts (without

a load connected at the MEG Outputs). When the output is loaded with the 9 W lamp, the DC power input is 3.25 Watts. So, the real power used by the lamp is 3.25 - 1.75 = 1.5 Watts at the INPUT with a measured OUTPUT = 6.76 Watts

MEG Project status (by JLN on 12-06-00) :

You will find below the only facts about my MEG units that I am able to say today :

- The Output (V/I) signals are really measured by the scope and this has also been checked by various methods (analog and digital scopes and multimeters), but unfortunately measurement artifacts remain possible,
- the voltage and current are in phase as shown in my scope pictures above,
- a "conditionned" RLoad (100 Kohms, non inductive carbon, 5Watts) or a MOV (Metal Oxide Varistor) is REQUIRED for getting the output datas measured above,
- the working frequency and the output voltage must be high (about 20kHz and >1KV peak-to-peak loaded) ,
- the working frequency must be tuned so as to get a pure sine wave and the max amplitude at the output (>1KV peak-to-peak loaded),
- the switching signal is a squared pulse at 50% DTC,
- the two primary coils must be switched alternatively (see the MEG animated simulation).
- I have used ferrite magnets and an interesting effect that I have observed is :
when the magnet is added and with actuators coils set in the cross-flux magnetic gates configuration, the output signal increases significantly,
- the Rload warms up quikly when the MEG is switched on,
- in most of cases the "apparent" power measured seems greater than the heat dissipated by Joule's effect in the RLoad,
most of the power is radiated in EM form :
* With an electronic Teslameter, I have measured 2.8 milli-Tesla (at 16KHz) with the probe very close to the RLoad,
* With an E-Field Strength meter in AC mode, the E-Field = 1250 V/m at 50 cm far from the RLoad,
* With a gamma counter : No gamma radiation has yet been detected
So be carefull if you work close to the MEG transformer because of the strong EM generated.

Not yet checked :
- core saturation effect by the magnet,
- flipping of the hysteresis curves by the actuator coils,
- calorimetric output measurements on the RLoad Vs the Input but in the most of case the "apparent" power measured seems greater than the heat dissipated by Joule's effect in the RLoad and this makes me pessimistic about the calorimetric tests results.

Conclusion (on 12-06-00) :
My MEG replication seems to be really close to the original device presented in the Bearden's MEG paper and I think that I have been able to replicate and measure the same signals at the Input/Output of the device. I have not used the original electronic and core diagrams from the Bearden's teamwork (because I don't have them..), so may be there are some important differences between the setups. The purpose of this project seems to be achieved : the replication of the MEG signals measured at its output is in line with the original papers and the inventors claims.

Now, the BEST verification to do is to convert the "apparent" power measured in useable power such as : light, heat, mechanical energy (in motors).... and also, of course, to close the loop... This has not yet been done today.

Good advices for the MEG builders : The MEG Notes by *Jon Flickinger*

Technical datasheets :

- **The TL494, Pulse-Width-Modulation (Pwm) Control Circuit from Texas Instrument**
  The BUZ11 MosFet N-Channel transistor from Intersil

- **AMORPHOUS METALS Magnetic Materials METGLAS®**
  Magnetic Alloy 2605SA1 (Iron-based) Longitudinal Field Anneal Typical Core.
  http://metglas.com:80/products/page5_1_2_4_1.htm
  http://metglas.com:80/products/page5_1_2.htm
  http://metglas.com:80/products/page5_1_2_4.htm

See also the :

- **Previous tests results about the MEG v2.0**
- **The Motional Electromagnetic Generator (MEG)** *from Thomas Bearden*

January 20th, 2001 : Interesting papers and patents :

- **"Overunity device installed in Minuteman Missile - patented by Westinghouse"** ***by Tom Bearden***
- **H. Andreatta, "High Power Switching Amplifier Wherein Energy is Transferred to a Tuned Circuit During Both Half Cycles," U.S. Patent No. 3,239,771, Mar. 8, 1966;**
- **Tom L. Dennis, Jr., "Highly Efficient Semiconductor Switching Amplifier," U.S. Patent No. 3,239,772, Mar. 8, 1966;**
- **Heber J. Morrison, "Square Wave Driven Power Amplifier," U.S. Patent No. 3,815,030, June 4, 1974.**

***Interesting papers and documents about the project* :**

- **The MEG paper : Extracting Energy from a Permanent Magnet with Energy-Replenishing from the Active Vacuum,** *a PDF document (69 pages 1,29 MB), by T.E. Bearden*

- **Giant Negentropy from the Common Dipole** *By T. E. Bearden (PDF Format 86 KB)*

- **On Extracting Electromagnetic Energy from the Vacuum** *By T. E. Bearden (PDF Format 160 KB)*

Some technical infos *:*

Fe-based Nanocrystalline Toroidal Core for Current Transformers :
Characteristics: Nanocrystalline alloy has similar features of high initial permeability and temperature stability, less gravity and packing factor than that of Permalloy. Under the same conditions of core size and performance, it is lighter (about 1/3 lighter) and cheaper than that of Permalloy.

Nanocrystalline Magnetic Core :
Characteristics: High saturation magnetic induction (1.25T), high permeability, high inductance (ten times higher than that of ferrite), low loss, small volume, light in weight, high electric interference resistance, good frequency performance and high temperature stability.

For more infos about the Nanocrystalline material see :

- **NANOCRYSTALLINE SOFT MAGNETIC ALLOYS FOR APPLICATION IN ELECTRICAL AND ELECTRONIC DEVICES by V.R. Ramanan ABB-Electric Systems Technology Institute**

Magnetic material suppliers :

- **The PowerLite™ C-Cores** (***Honeywell***) are manufactured with the METGLAS amorphous alloy.
- **BFiOTiLAS : Magnetics Components: Softcores material**
- **MAGNETEC :** Tape wound core based on the new nanocrystalline softmagnetic material called **NANOPERM**

For more informations, please contact : **JNaudin509@aol.com**

Return to the MEG project home page

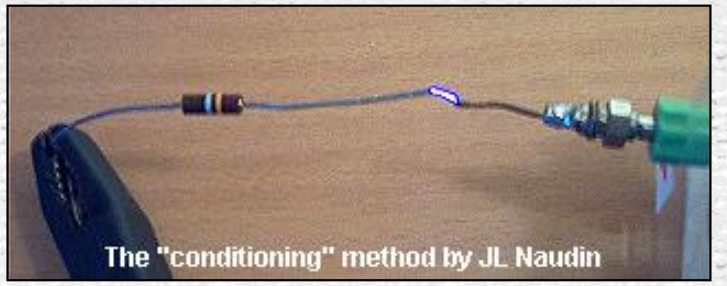

Method for "conditionning" a carbon resistor

by Jean-Louis Naudin

Created on 11-24-00 - ***JLN Labs*** - Last update 12-08-00

You will find below a method for building yourself a non-linear resistor with a common old carbon composite resistor. This component has some interesting characteristics such as a high resistance in DC and a low resistance at AC High Voltage (>1KV)....

Material required :

- **A brand new pure carbon and non inductive resistor, the value must be greater than 100 Kohms or more.**
- **A 20kV pulsed DC HV power supply (at 80 KHz) (see the diagram at the bottom)**

Procedure :

1. **Connect one side of this brand new carbon resistor on the 0 Volt side and the other side at about 6 mm from the HV output so as to get a spark gap,**
2. **Switch on the HV power supply and adjust the spark gap so as to get the max spark distance,**
3. **You will observe that the yellow color bar will began progressively orange, this indicate the warm up of the resistor,**
4. **You will notice that the spark will vanish after about 1 minutes,**
5. **Switch off the power supply and check the value of this conditionned RLoad, the value must be now about 300 K... If this is not the case run the step 2 again,**
6. **Your "conditionned resistor" is now ready to be used for your tests…**

In the pictures below, I have used a 220K 1/2 carbon resistor for a demonstration purpose, but I recommend you to use a 100 Kohms 5 Watts carbon resistor for your testing.

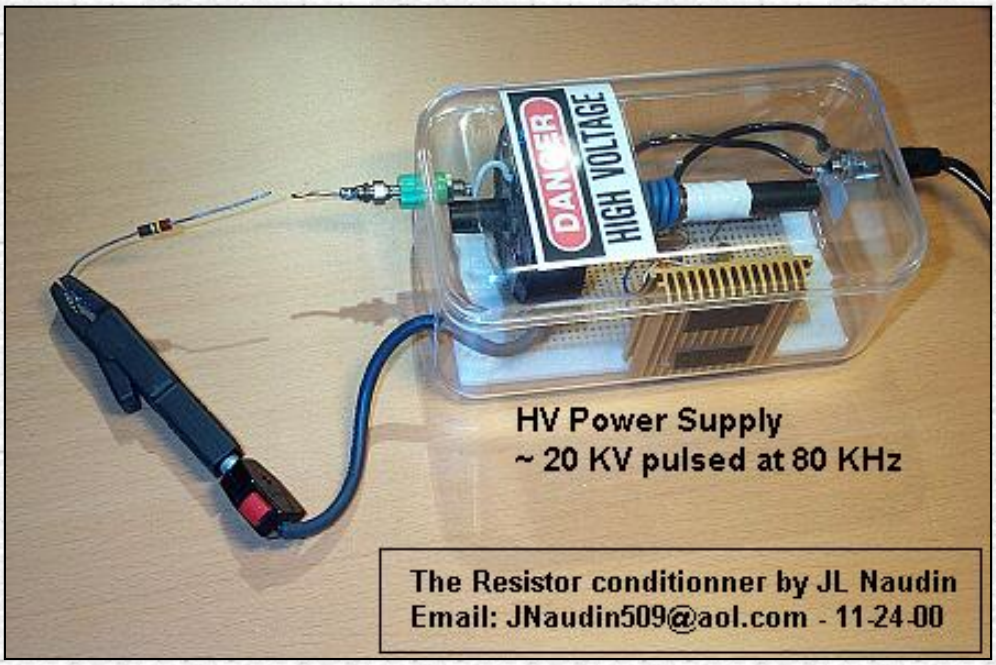

The HV power supply arrangement used as the resistor conditionner

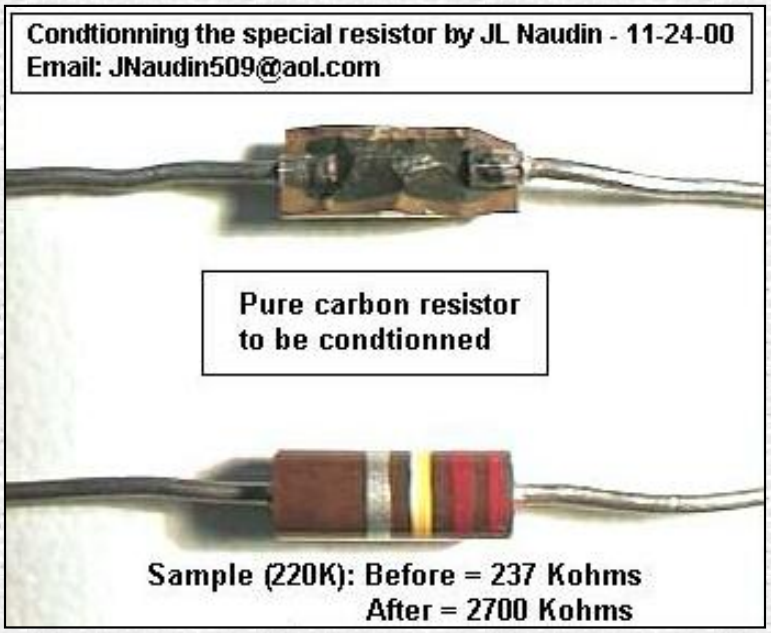

Above, you see that the resistor is made with carbon (no wire)

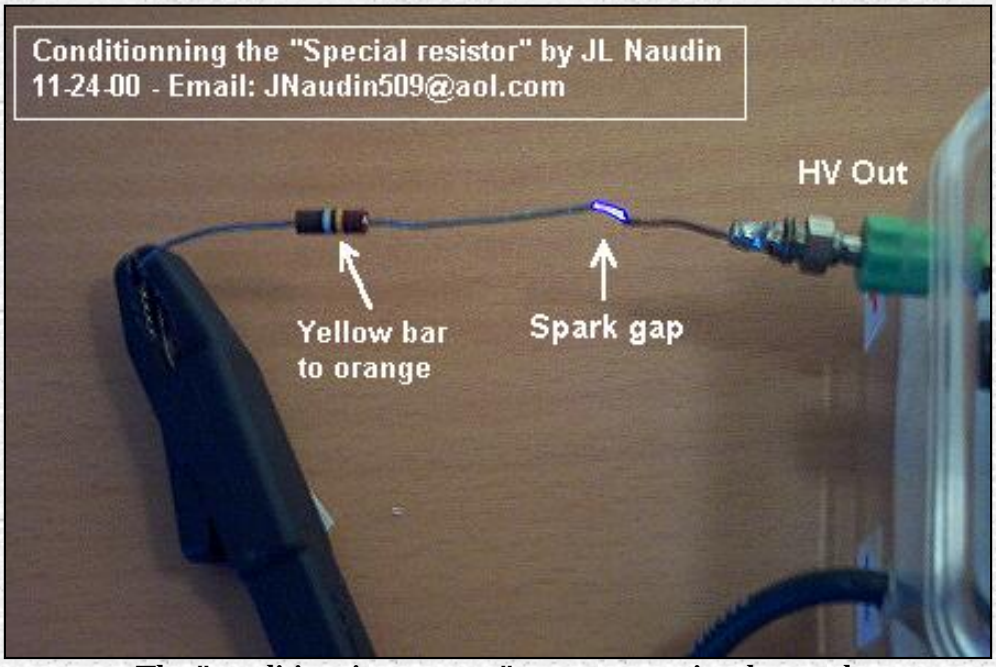

The "conditionning process", you may notice the spark and the change of the color bar of the resistor.

The pictures above see the change of the resistor value after the process

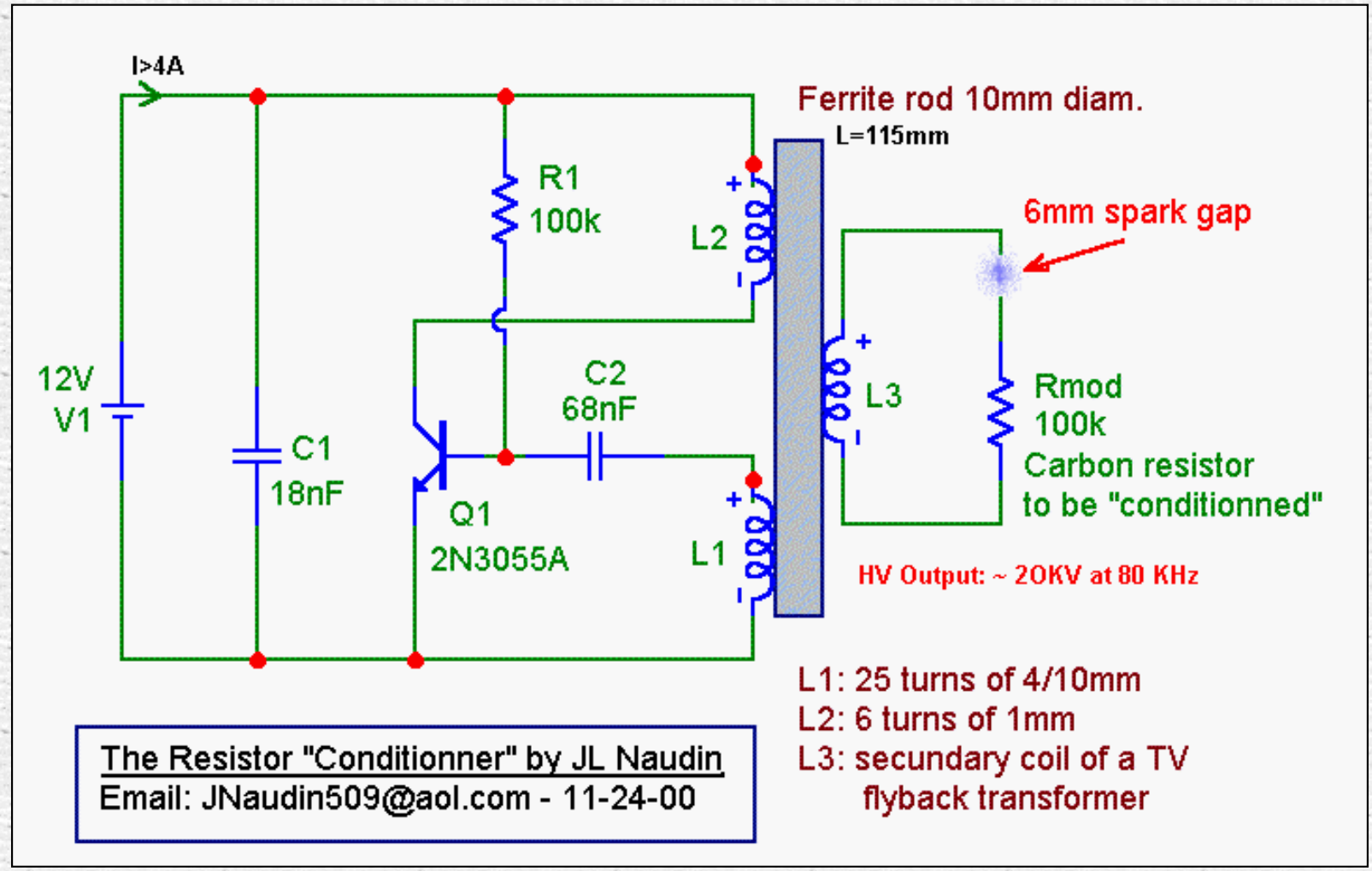

For more informations, you may write me directly at : **Jnaudin509@aol.com**

All informations in this page are published free and are intended for private/educational purposes and not for commercial applications

Disclaimer: The author assumes no liability for any incidental, consequential or other liability from the use of this information. All risks and damages, incidental or otherwise, arising from the use or misuse of the information contained herein are entirely the responsibility of the user. Although careful precaution has been taken in the preparation of this material, I assume no responsibility for omissions or errors in the diagrams or measurement datas published here.

Return to the MEG project home page

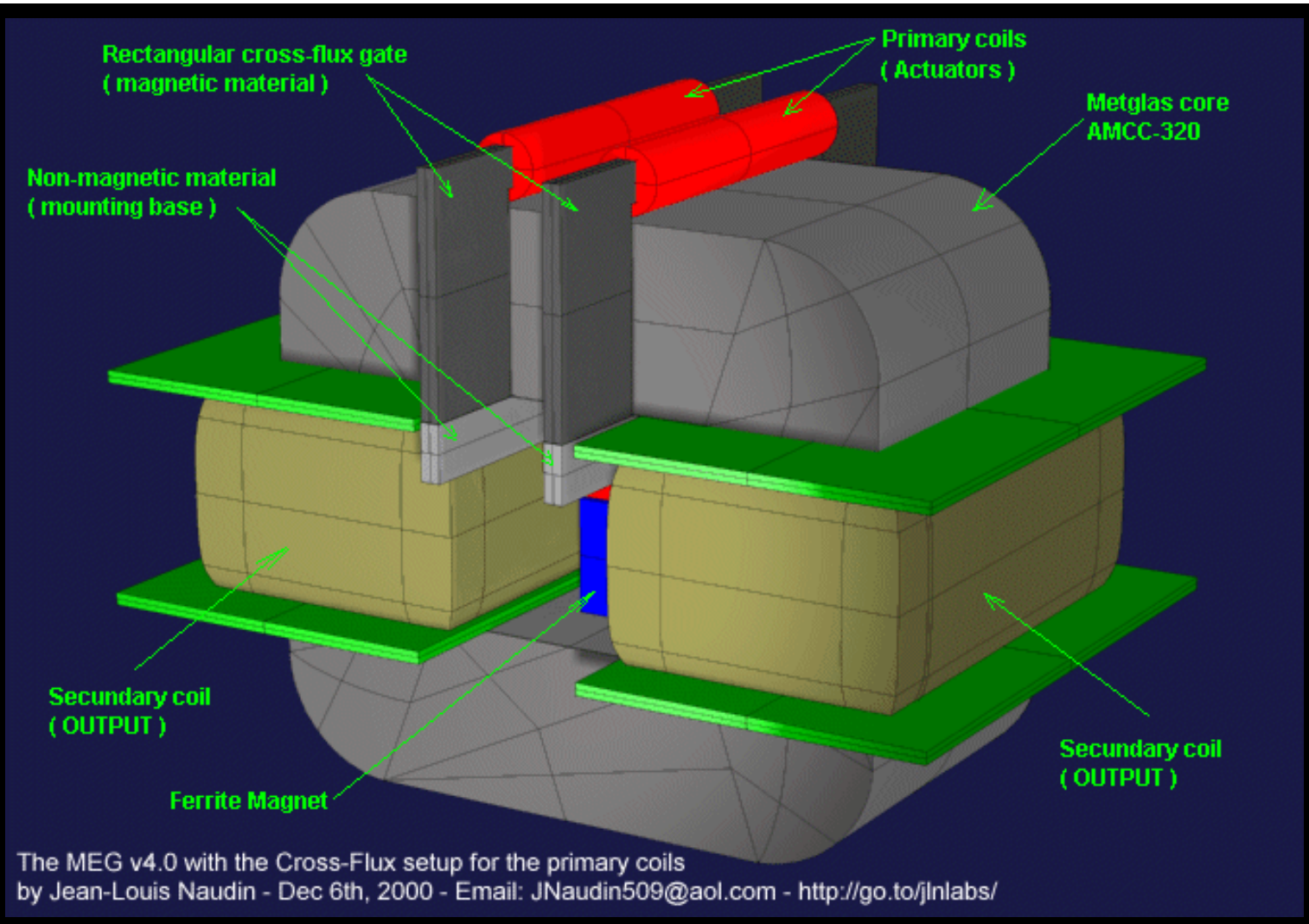
Rectangular cross-flux gate
(magnetic material)
Primary coils
(Actuators)
Metglas core
AMCC-320
Non-magnetic material
(mounting base)
Secundary coil
(OUTPUT)
Ferrite Magnet
Secundary coil
(OUTPUT)
The MEG v4.0 with the Cross-Flux setup for the primary coils
by Jean-Louis Naudin - Dec 6th, 2000 - Email: JNaudin509@aol.com - http://go.to/jlnlabs/

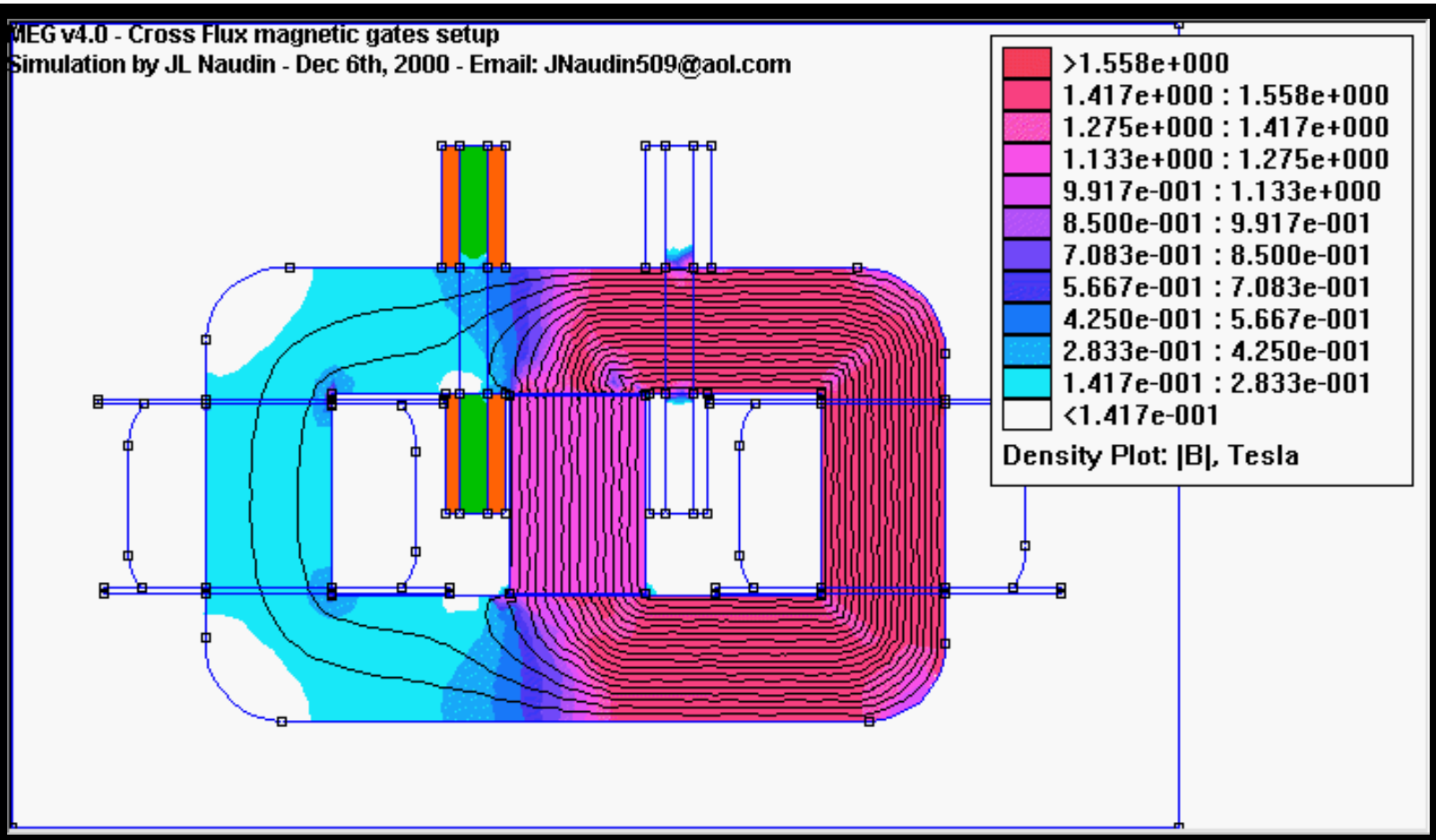

The MEG v4.0 with the Cross-Flux magnetic gates setup

Return to the MEG project page

--- In jlnlabs@y..., Jon Flickinger <jonfli@i...> wrote:
To All,

This information is to all those presently involved in or thinking about an attempted MEG replication. I'm expressing opinions that I've come to from the results I've obtained after spending many lab hours with many variations in topology and circuitry. In no way am I de-potentializing the MEG (pun intended) but simply trying to share what I've learned about the device for the good of the whole!

IMHO, it is a waste of time to attempt power measurements of the MEG standard load resistors (that is, any linear resistive device) if one expects to see any excess energy. The output loads must be resistive (non-reactive) and nonlinear. The resistance must decrease with increasing voltage and the power must be calculated from the output voltage and current. Those of you powering up your MEG for the first time with pure resistive loads, will find the waveforms do not match Bearden's nor JLN's! Only with nonlinear loads and a properly "tuned" MEG will you see the near half sine current waveform in your primary coils.

With nonlinear loads and a properly setup MEG, you will measure COP's >1 with the proper measurement tools and techniques. In general, the MEG seems to like voltage build up in the secondary windings before supplying current to the load!

If so, this would seem to align with Tom Bearden's public disclose of this device! The problem now lies in the utilization of this excess power to do some useful work. It would appear to me that the MEG can be run with lower secondary voltages and properly designed loads and still yield COP's >1. In fact, this should be a focal point for anyone doing this project.

Suggestions-

1) A common nonlinear load device to try would be various voltage rated MOV's or transient absorbers.

I used Panasonic ZNR10K621U's for **COP's ranging from 1.75 to 5** depending on coil turns and supply voltage. Ask JLN how he "conditioned" his carbon load resistor as I don't know. (***JLN Answer, see at :*** http://jnaudin.free.fr/html/negres.htm)

2) Use a higher spec'd device for Vds than the BUZ11. With only a 50 v rating for Vds, this device avalanches on the primary turn off flyback phase and results in abnormal heating. Use a device with a Vds >200 volts and an Id >4 amps.

3) The power supply can also be a constant current source and will actually provide some measure of safety if disaster strikes in the switching circuitry!

4) I can't stress strongly enough the safety issues regarding the high output voltages one will encounter on the secondaries! USE CAUTION! Be sure your measurement devices connected to any portion of the secondaries are capable of withstanding the voltages you will encounter.

5) **NEVER POWER UP A MEG WITHOUT LOADS CONNECTED AS THE OPEN CIRCUIT VOLTAGES CAN BE LETHAL AND DESTRUCTIVE!**

I can now understand why the MEG presents certain problems in achieving a self-running state and it may not be necessary as Tom Bearden has recently tried to point out!

If anyone should experience valid COP's >1 with standard linear loads, please speak out!

Regards,

Jon Flickinger
--- End forwarded message ---

Return to the MEG project home page

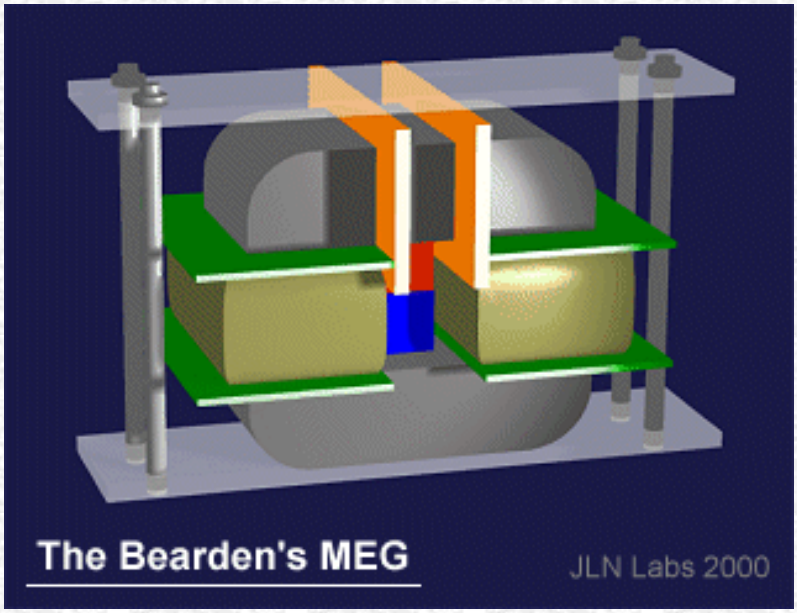

The Motionless Electromagnetic Generator Project

The MEG v2.0 built by JL Naudin

Created on 10-29-00 - ***JLN Labs*** - Last update 11-17-00

All informations in this page are published free and are intended for private/educational purposes and not for commercial applications

See the lastest tests results of MEG v2.1

The new tests on the enhanced MEG control board v2.0 are very encouraging because I have been able to reproduce the exact waves shapes used in the original Bearden's MEG presented in his technical paper : "The Motionless Electromagnetic Generator: Extracting Energy from a Permanent Magnet with Energy-Replenishing from the Active Vacuum, *a PDF document (69 pages 1,29 MB), explanations and tests results by T.E. Bearden* ***see page 67*****..**

The new MEG control board v2.0 is now fully in line with the original Bearden's MEG comparing to my previous version (see the test of the v 1.0)....

MEG v2.0 : TEST RUN#1 (11-07-00)

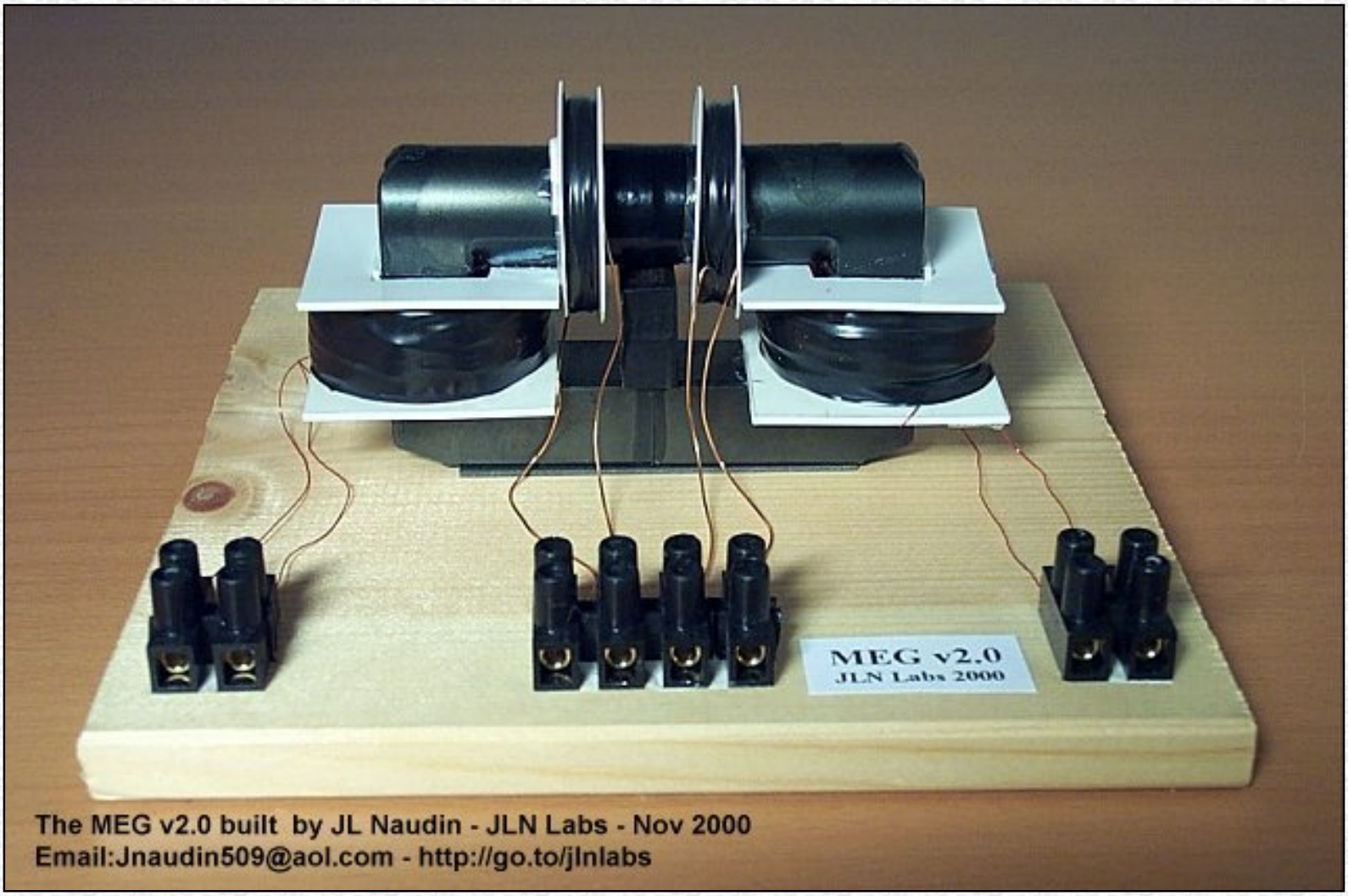
MEG v2.0
JLN Labs 2000
The MEG v2.0 built by JL Naudin - JLN Labs - Nov 2000
Email:Jnaudin509@aol.com - http://go.to/jlnlabs

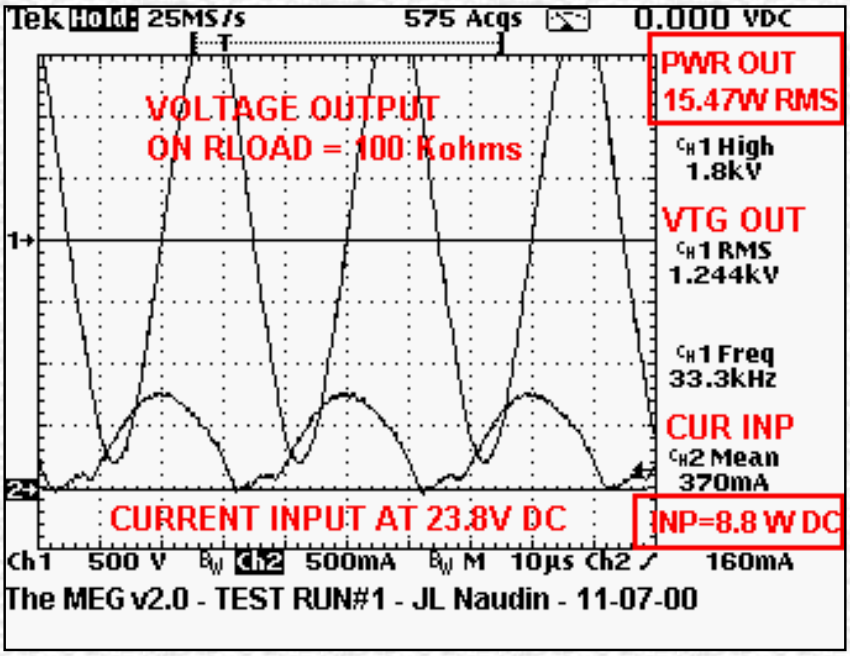
Tek Hold: 25MS/s
575 Acqs
0.000 VDC
VOLTAGE OUTPUT
ON RLOAD = 100 Kohms
PWR OUT
15.47W RMS
Ch1 High
1.8kV
VTG OUT
Ch1 RMS
1.244kV
Ch1 Freq
33.3kHz
CUR INP
Ch2 Mean
370mA
CURRENT INPUT AT 23.8V DC
INP=8.8 W DC
Ch1 500 V BW Ch2 500mA BW M 10µs Ch2 160mA
The MEG v2.0 - TEST RUN#1 - JL Naudin - 11-07-00

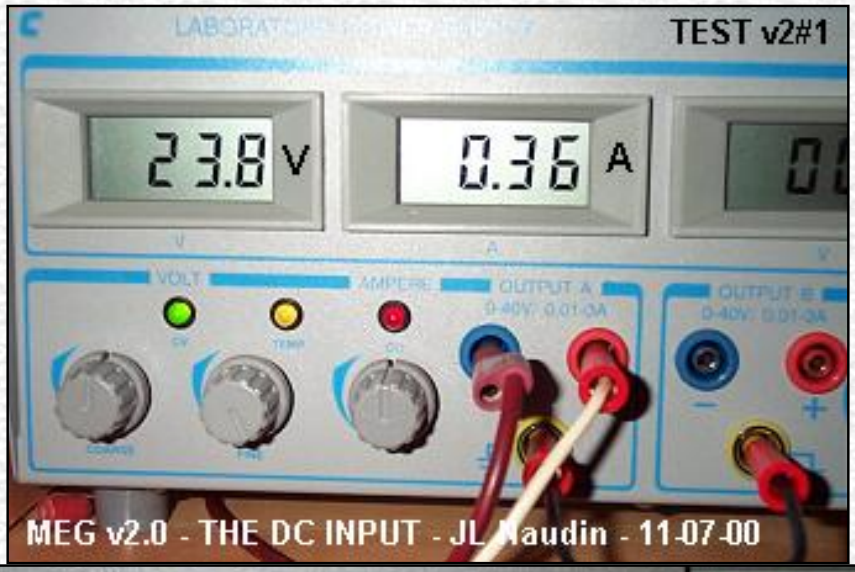
TEST v2#1
23.8 V
0.36 A
MEG v2.0 - THE DC INPUT - JL Naudin - 11-07-00

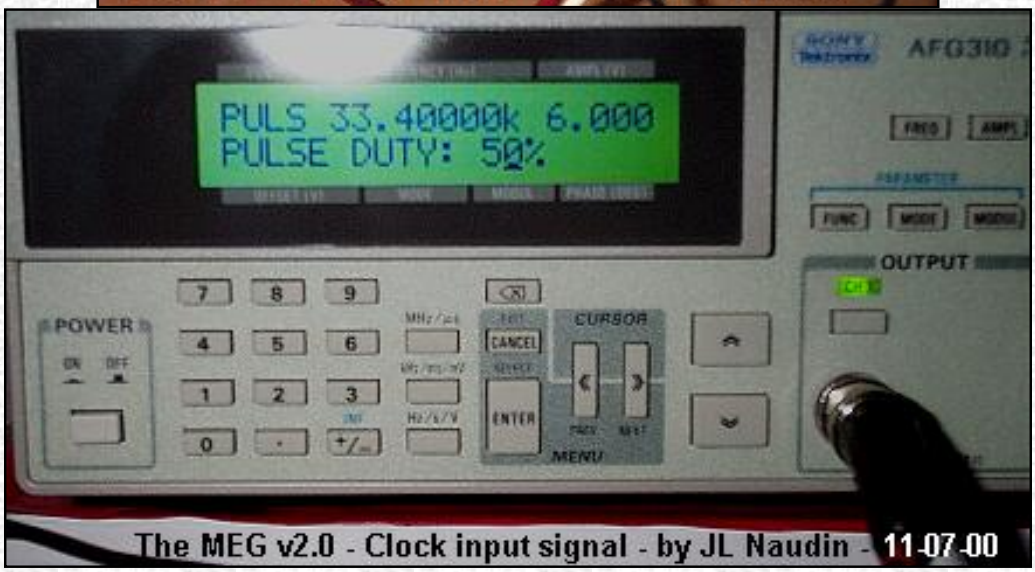
PULS 33.40000k 6.000
PULSE DUTY: 50%
AFG310
POWER
CURSOR
CANCEL
ENTER
MENU
OUTPUT
The MEG v2.0 - Clock input signal - by JL Naudin - 11-07-00

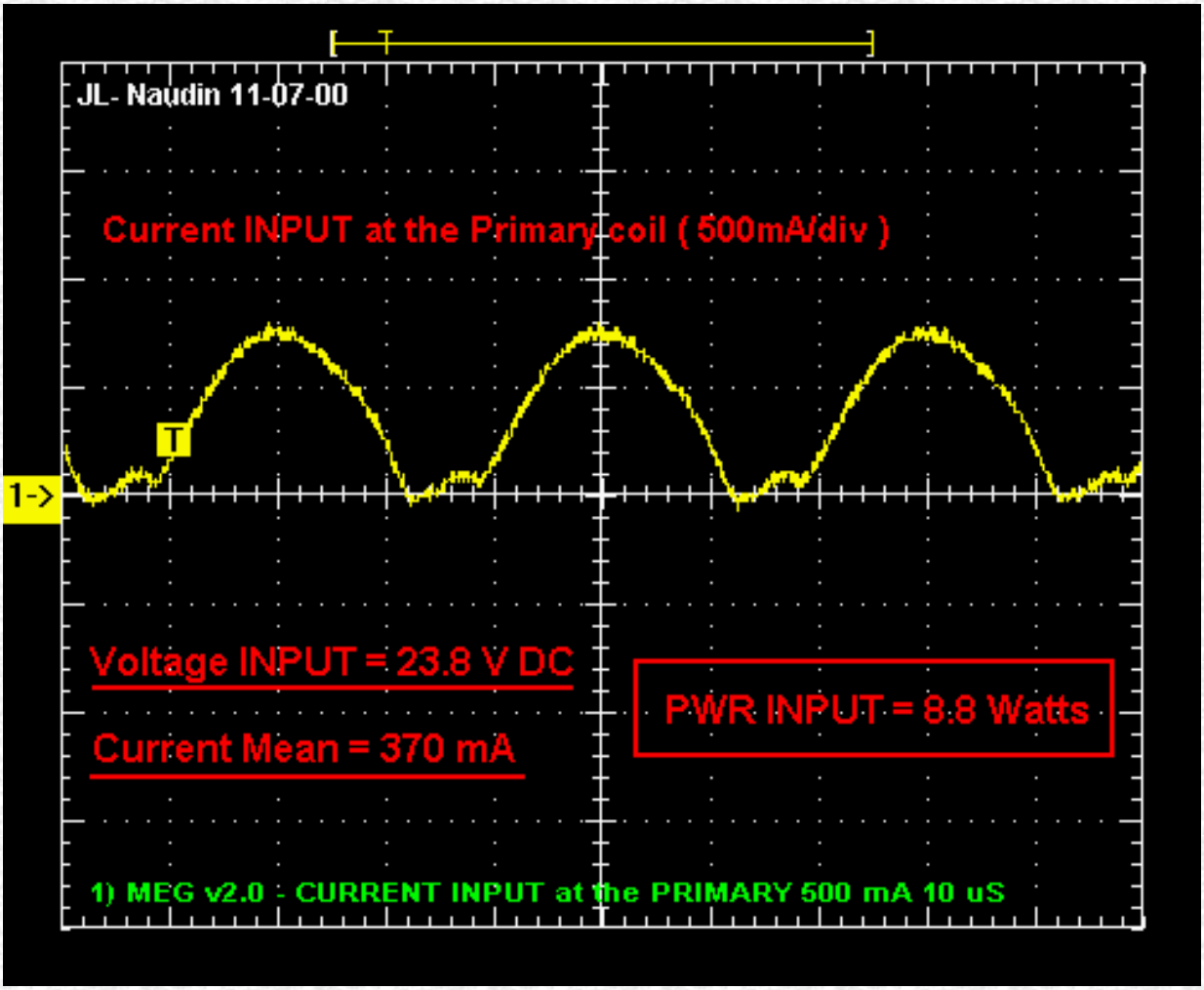
JL- Naudin 11-07-00
Current INPUT at the Primary coil (500mA/div)
T
1->
Voltage INPUT = 23.8 V DC
Current Mean = 370 mA
PWR INPUT = 8.8 Watts
1) MEG v2.0 - CURRENT INPUT at the PRIMARY 500 mA 10 uS

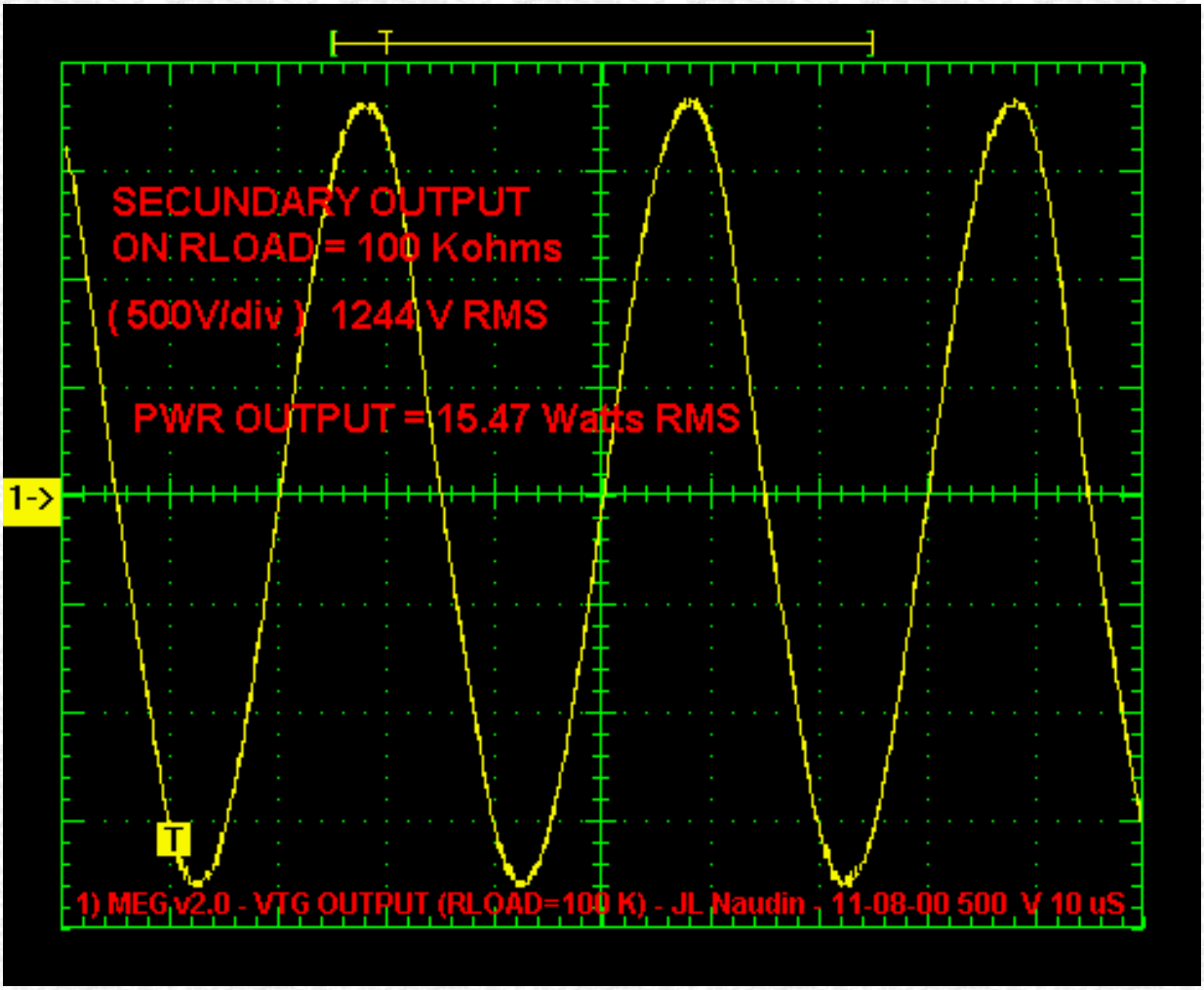

The measured COP is 1.75

Additional Notes 11-08-00 : After some tests about different MEG v2.0 setup, I have found that the Maximum power output can be obtained quickly by simply connecting one side of the secundary coil to ground. So, with one side of the output coil grounded, the COP reach its maximum instantaneously (about 1.75) when the power is swichted on (this avoid that the RLoad carbon resistor connected at the output begins too hot).

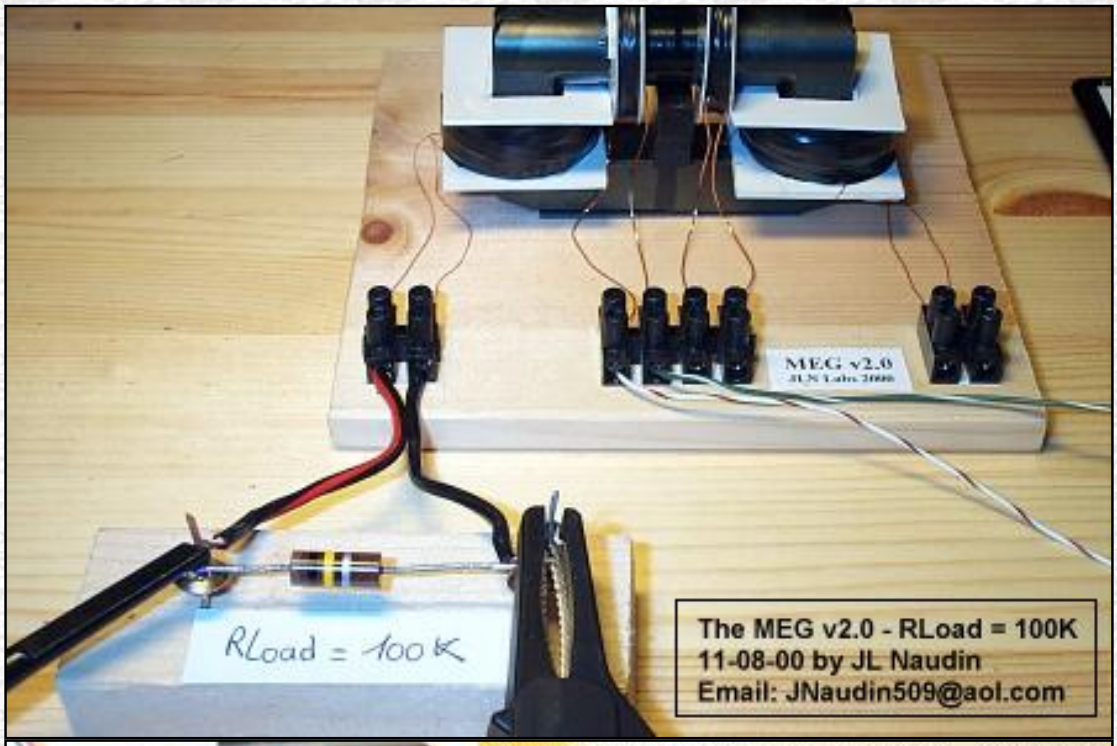
MEG v2.0
RLoad = 100K
The MEG v2.0 - RLoad = 100K
11-08-00 by JL Naudin
Email: JNaudin509@aol.com

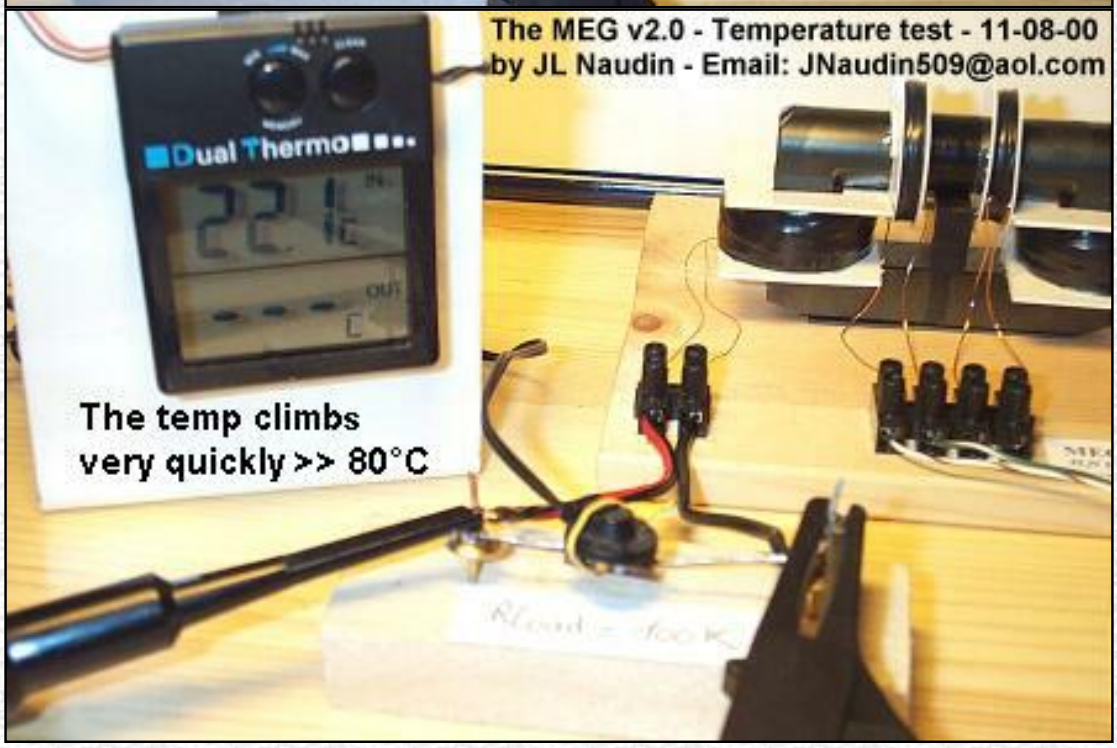
The MEG v2.0 - Temperature test - 11-08-00
by JL Naudin - Email: JNaudin509@aol.com
Dual Thermo
The temp climbs
very quickly >> 80°C

Video of the test done on 11-09-00 (983 Kb), you need to have

MEG Project update (11-13-00) **: I am trying to close the loop, but at this moment, I have not yet succeed in this way. There are many losses during the step-down phase of the output voltage and thus the device stops after a while...**

Important note (11-16-00) **:** ***After many tests at long run period, the two secundary coils have been broken due to some sparks inside the windings generated by the presence of the High Voltage. Its seems that the High Voltage output climbs very quickly at a high value (> 3KV) at certain frequencies. So, be carefull if you do some tests. I am also currently searching for a Nanocrystalline tape wound core for the next version of the MEG v3.0.***

Reference document :

- **The Motionless Electromagnetic Generator: Extracting Energy from a Permanent Magnet with Energy-Replenishing from the Active Vacuum,** *a PDF document (69 pages 1,29 MB), by T.E. Bearden* (**Removed from the CSeti site on 11-21-00** -> **Alternate site**)

See also :

- **Next tests results of the MEG v2.1**
- **Previous tests results of the MEG v1.0**

Email : **JNaudin509@aol.com**
or send email to the JLN Lab's eGroup **at : jlnlabs@egroups.com if you are a team member.**

Return to the MEG project home page

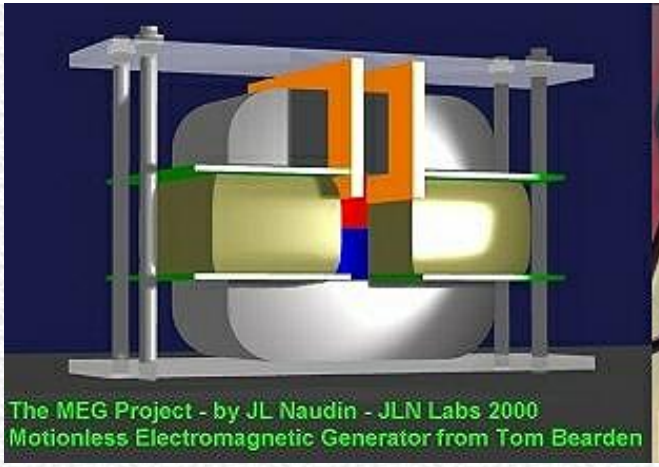

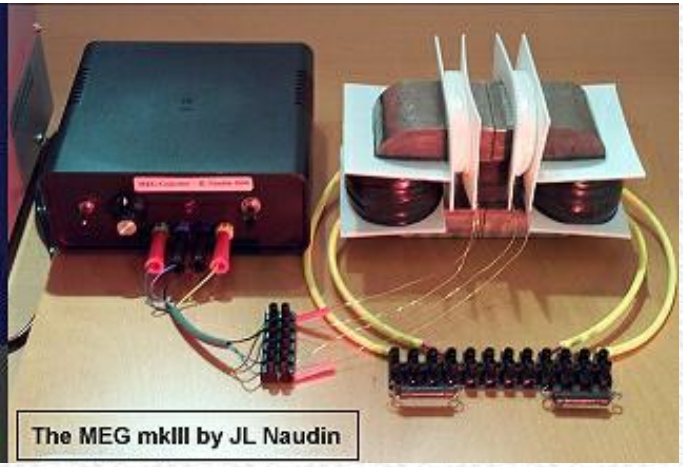

The Motionless Electromagnetic Generator Project

The MEG v1.0 built by JL Naudin

Created on 10-29-00 - ***JLN Labs*** - Last update 11-07-00

All informations in this page are published free and are intended for private/educational purposes and not for commercial applications

See the lastest results : TEST #5 (11-05-00) on MEG v1.0f

See the MEG v2.0 tests results

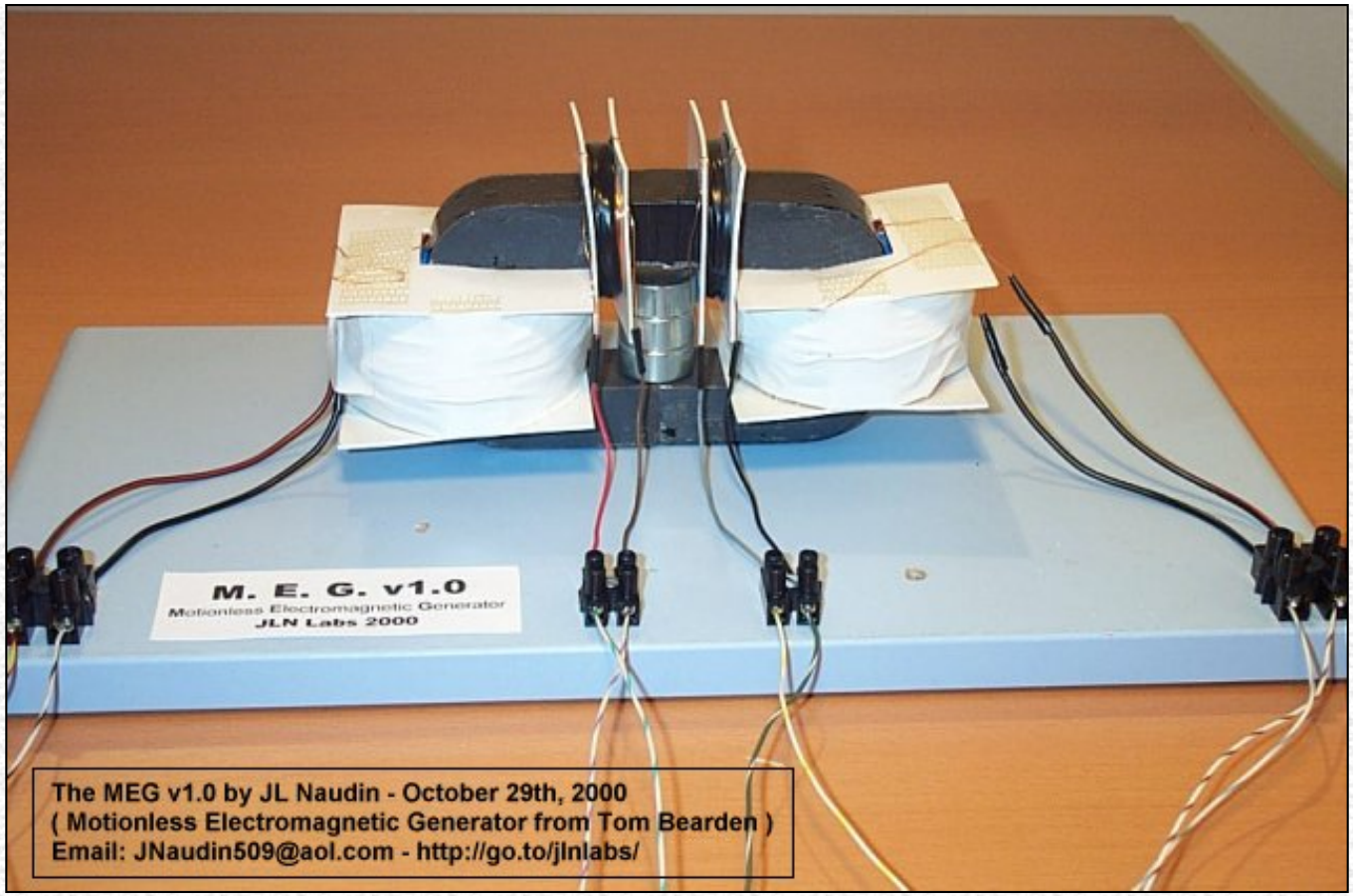

The MEG v1.0 build by JL Naudin - October 29th, 2000

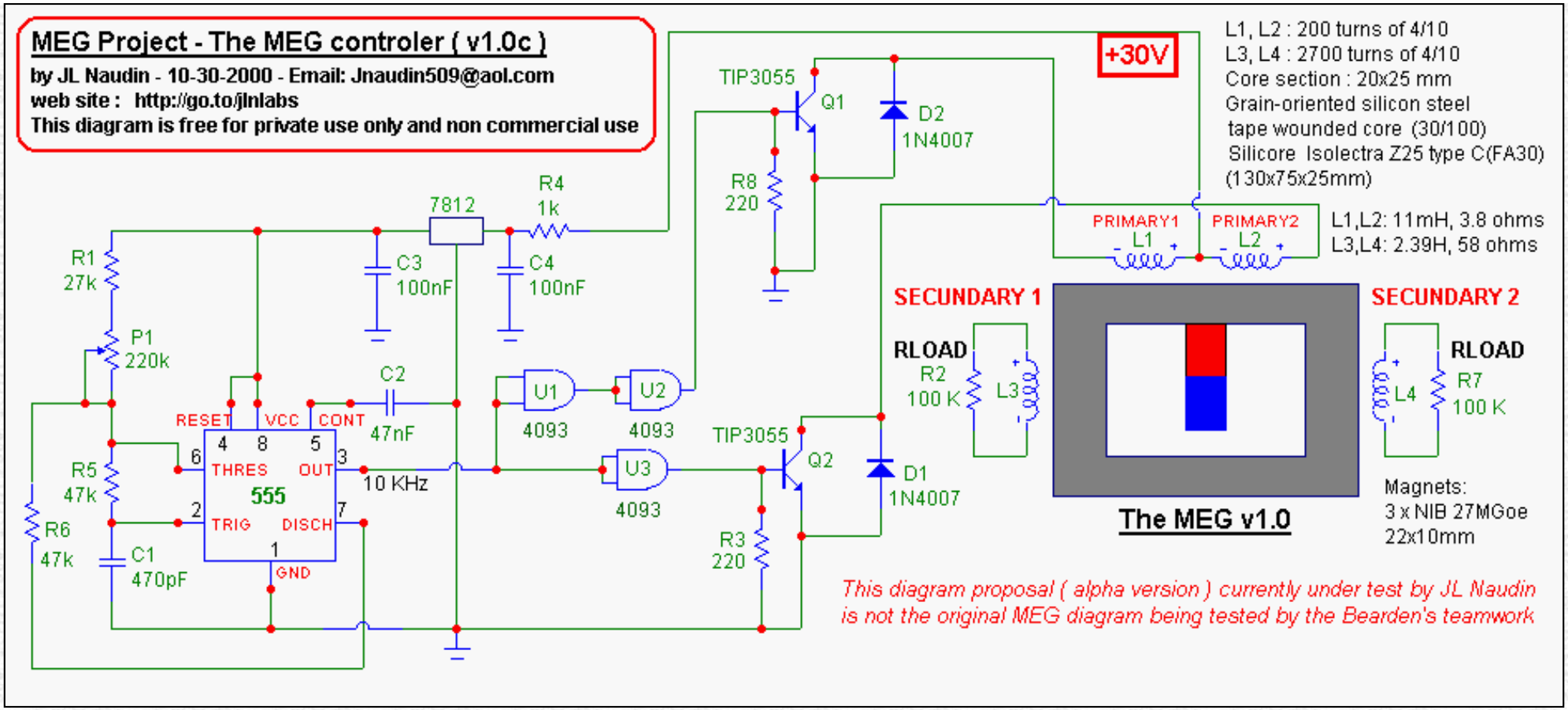
MEG Project - The MEG controler (v1.0c)
by JL Naudin - 10-30-2000 - Email: Jnaudin509@aol.com
web site : http://go.to/jlnlabs
This diagram is free for private use only and non commercial use
+30V
L1, L2 : 200 turns of 4/10
L3, L4 : 2700 turns of 4/10
Core section : 20x25 mm
Grain-oriented silicon steel
tape wounded core (30/100)
Silicore Isolectra Z25 type C(FA30)
(130x75x25mm)
PRIMARY1
PRIMARY2
L1,L2: 11mH, 3.8 ohms
L3,L4: 2.39H, 58 ohms
SECUNDARY 1
SECUNDARY 2
RLOAD
R2
100 K
L3
L4
R7
100 K
Magnets:
3 x NIB 27MGoe
22x10mm
The MEG v1.0
TIP3055
Q1
Q2
D1
D2
1N4007
R8
220
R3
220
R1
27k
P1
220k
R4
1k
R5
47k
R6
47k
C1
470pF
C2
47nF
C3
100nF
C4
100nF
7812
555
RESET
VCC
CONT
THRES
OUT
TRIG
DISCH
GND
10 KHz
U1
U2
U3
4093
This diagram proposal (alpha version) currently under test by JL Naudin
is not the original MEG diagram being tested by the Bearden's teamwork

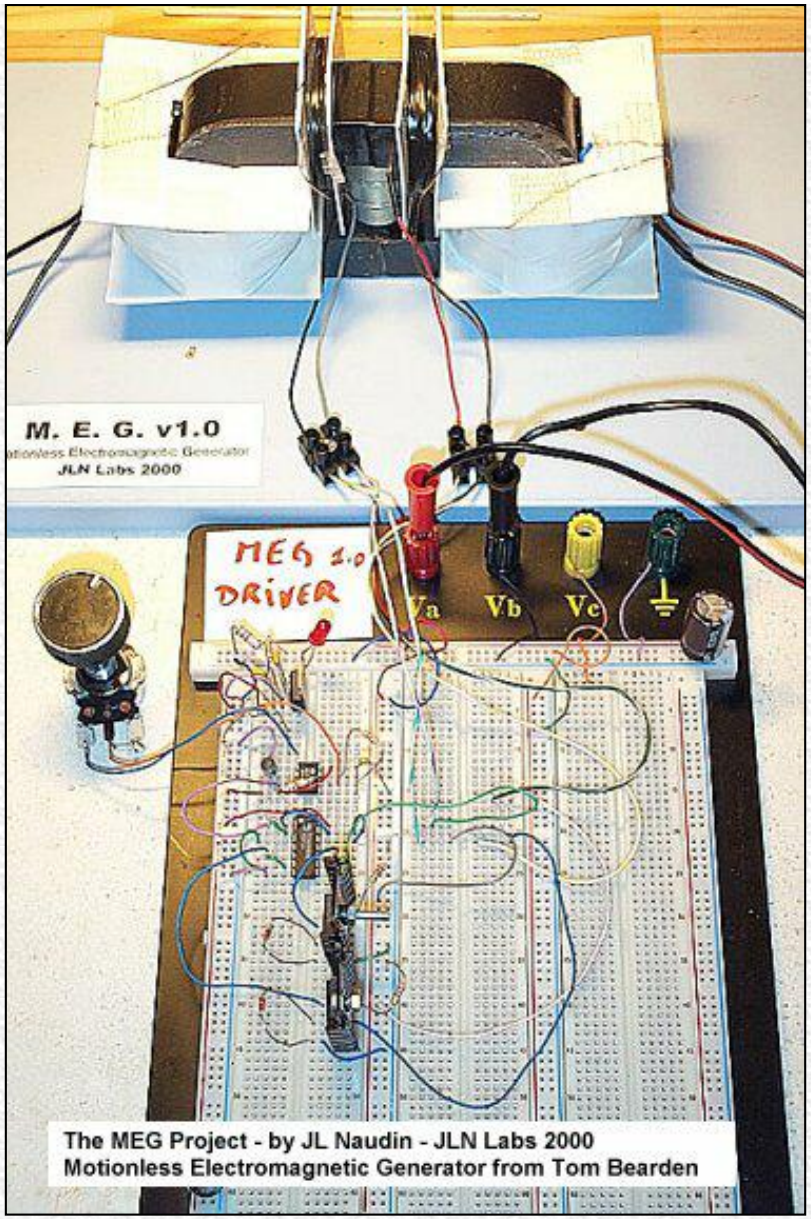

TEST #1 (11-01-00) :

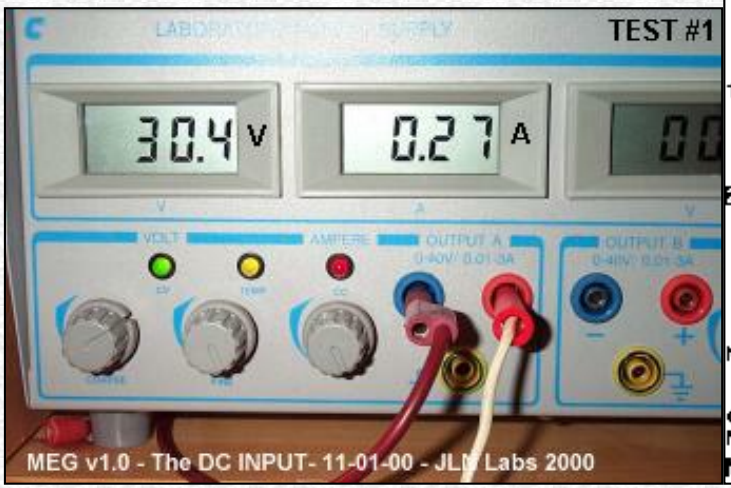

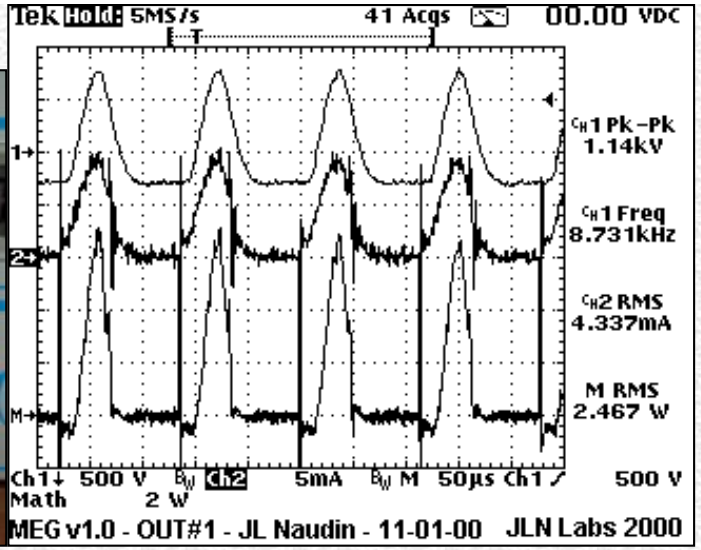

TEST #2 (11-01-00) : I have replaced the 555 oscillator by a programmable function generator, for a fine tuning of the clock pulse (period and duty cycle). The primary coils are now used in free run mode.

MEG Project - The MEG controler (v1.0d)

by JL Naudin - 11-01-2000 - Email: Jnaudin509@aol.com
web site : http://go.to/jlnlabs
This diagram is free for private use only and non commercial use

This diagram proposal (alpha version) currently under test by JL Naudin is not the original MEG diagram being tested by the Bearden's teamwork

L1, L2 : 200 turns of 4/10
L3, L4 : 2700 turns of 4/10
Core section : 20x25 mm
Grain-oriented silicon steel
tape wounded core (30/100)
Silicore Isolectra Z25 type C(FA30)
(130x75x25mm)

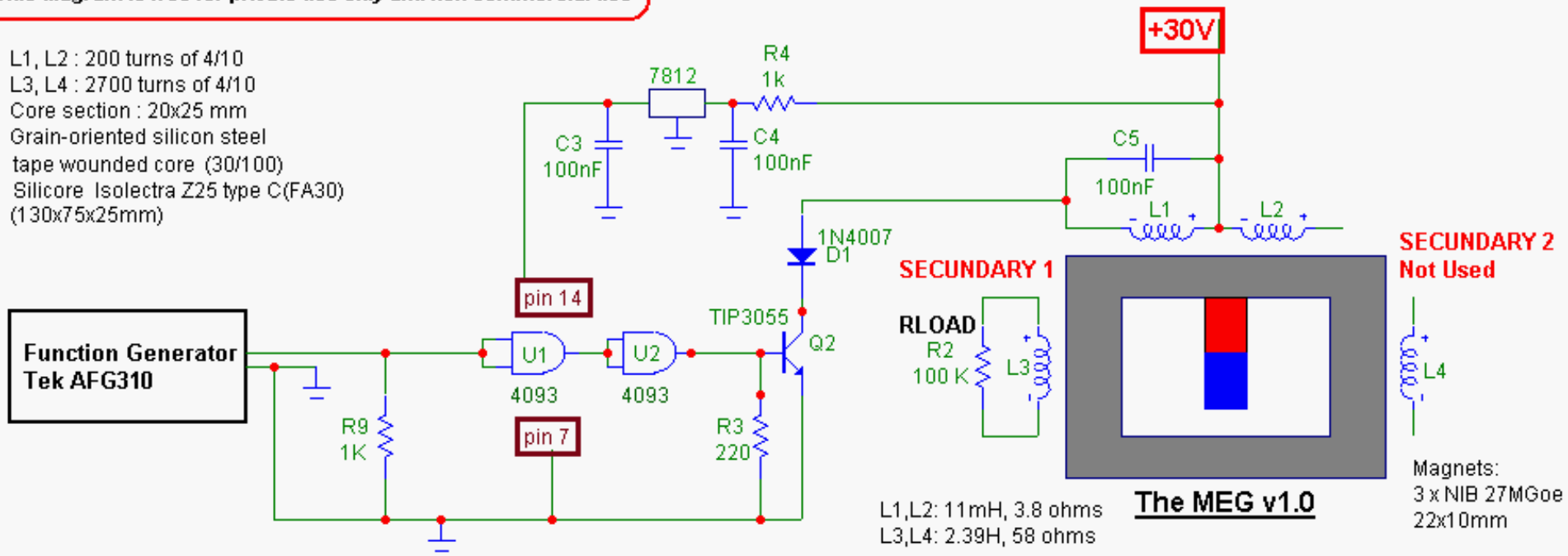

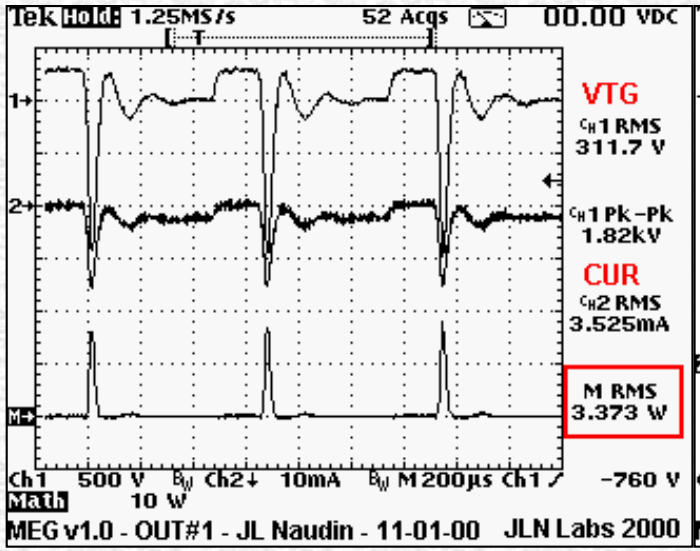

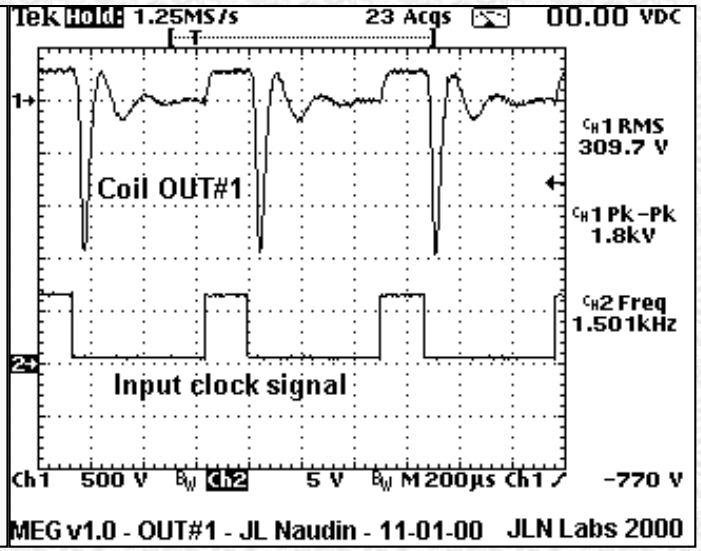

Total Power Input : 3.64 Watts (DC)

JLN's Comments **: Now, the MEG circuit v1.0d begins to be interesting comparing to the previous version used in the TEST #1. The total power input measured at the DC power supply is now 3.64 Watts, while the power OUTPUT is 3.37 Watts RMS, this gives an efficiency of 93%... The working frequency is now 1.5KHz Vs the 40KHz used on the original Bearden's MEG. This major difference is due to the use of grain oriented silicon steel material Vs to the Nanocrystalline material used for the core. The latest results are now encouraging, and worth to be explored deeply. May be a COP >1 can be reach with a fine tuning....More to come.**

TEST #3 (11-02-00) on MEG v1.0d

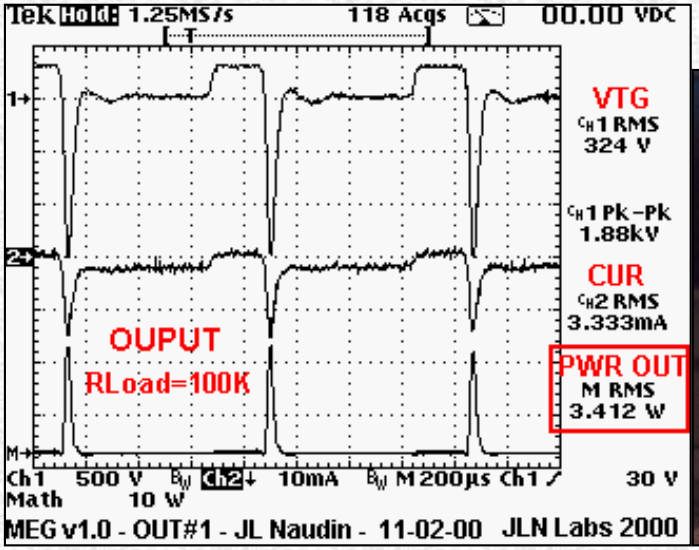

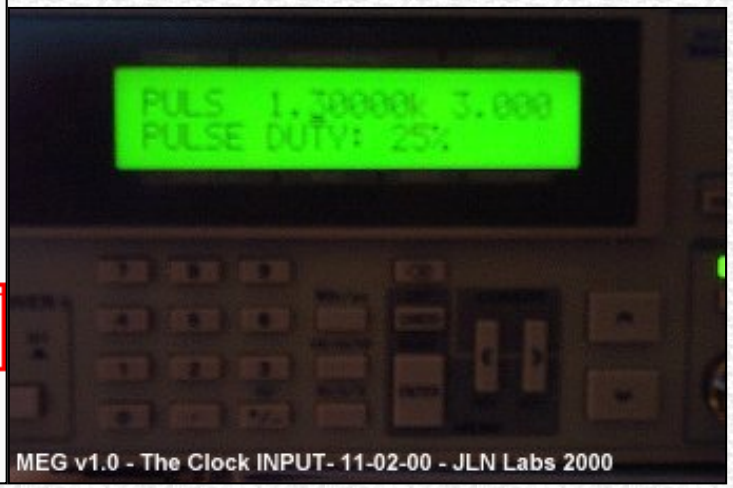

The RMS Power OUTPUT is 3.412 Watts (clock set at 1.3 KHz, squared pulse, duty cycle: 25%)

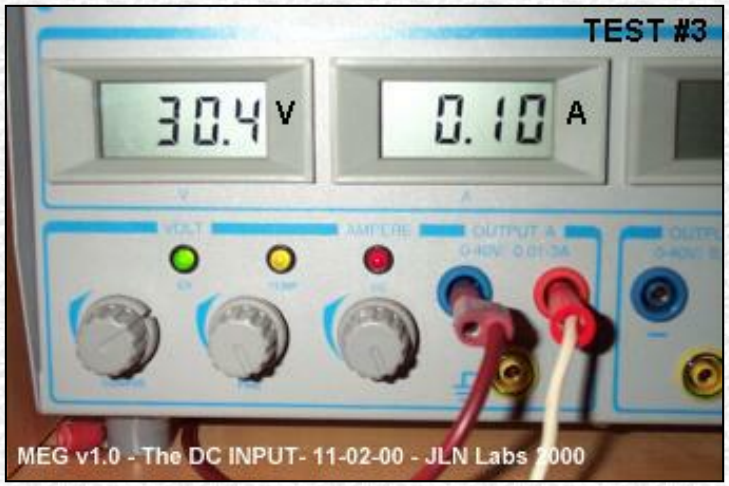

Total Power Input : 3.04 Watts (DC)

TEST #4 (11-02-00 and 11-04-00) on MEG v1.0e

The MEG v1.0e has the same design of the 1.0d version, only the resonant capacitors C5 (100nF) and been changed to C5=100nF+10nF= 110nF, this allow to reduce the working frequency for a better transition of the Weiss domains in the grain-oriented silicon steel core. Now, the working frequency has dropped to 890 Hz. The primary coil #2 (L2) and the secundary coil #2 (L4) have not been used during the tests #3 and #4. This is the best setup (frequency, duty cycle) that I have found today.

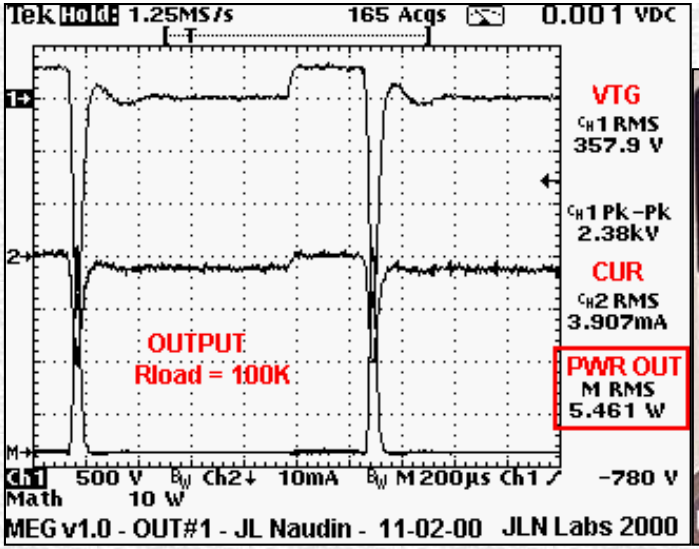

The RMS Power OUTPUT measured is 5.461 Watts (clock set at 890 Hz, squared pulse, duty cycle: 25%)

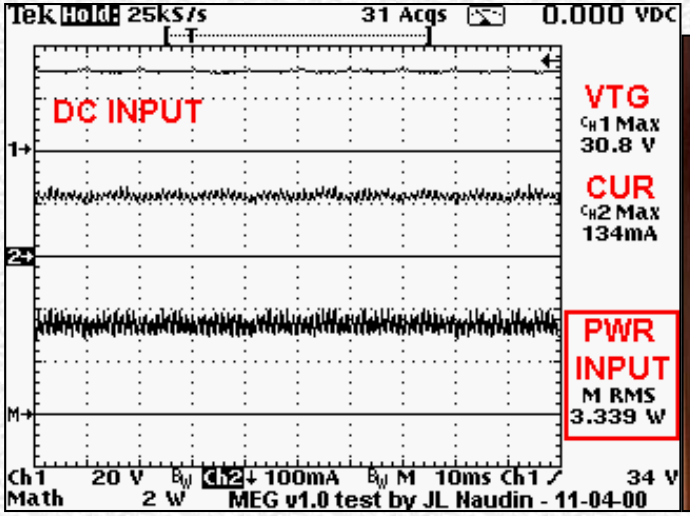

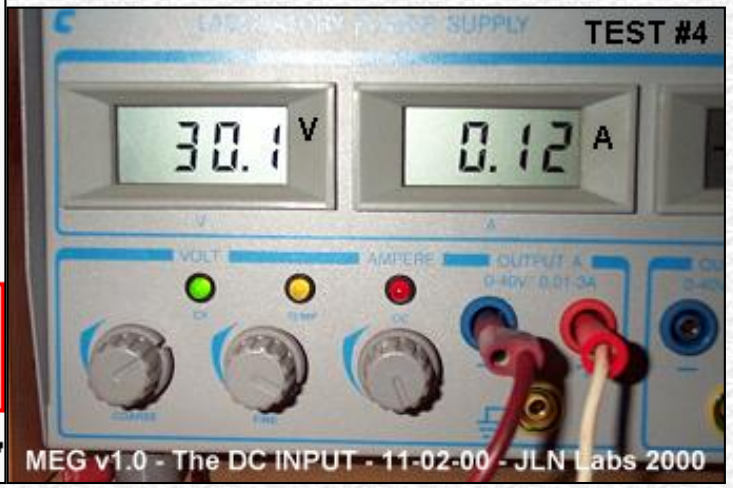

Total Power Input : 3.612 Watts (DC) mesured at the power supply control panel and 3.339 Watts RMS (DC) mesured at the input of the MEG controller with the scope

The 5W Load Resistor warm up quickly (44.4°C) during the test.

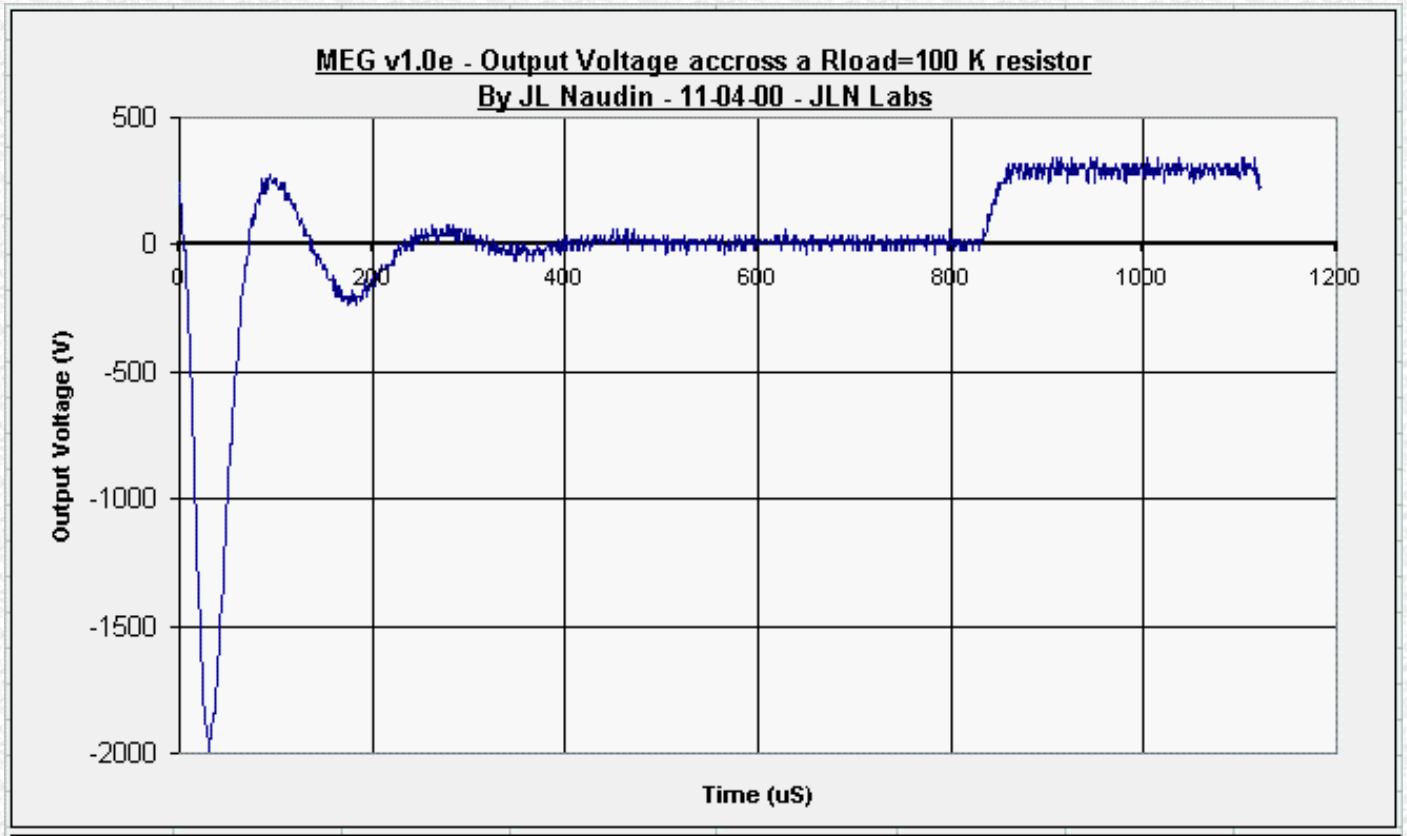

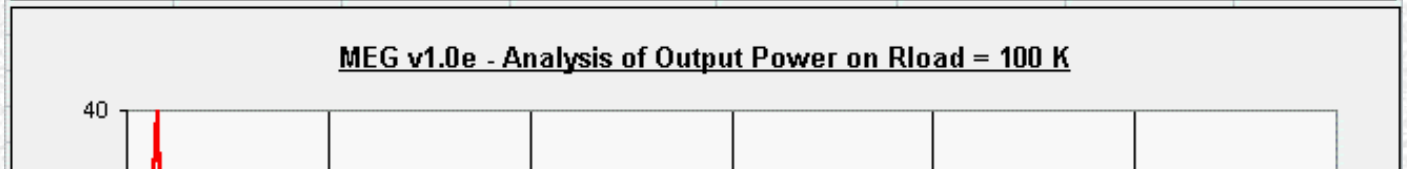

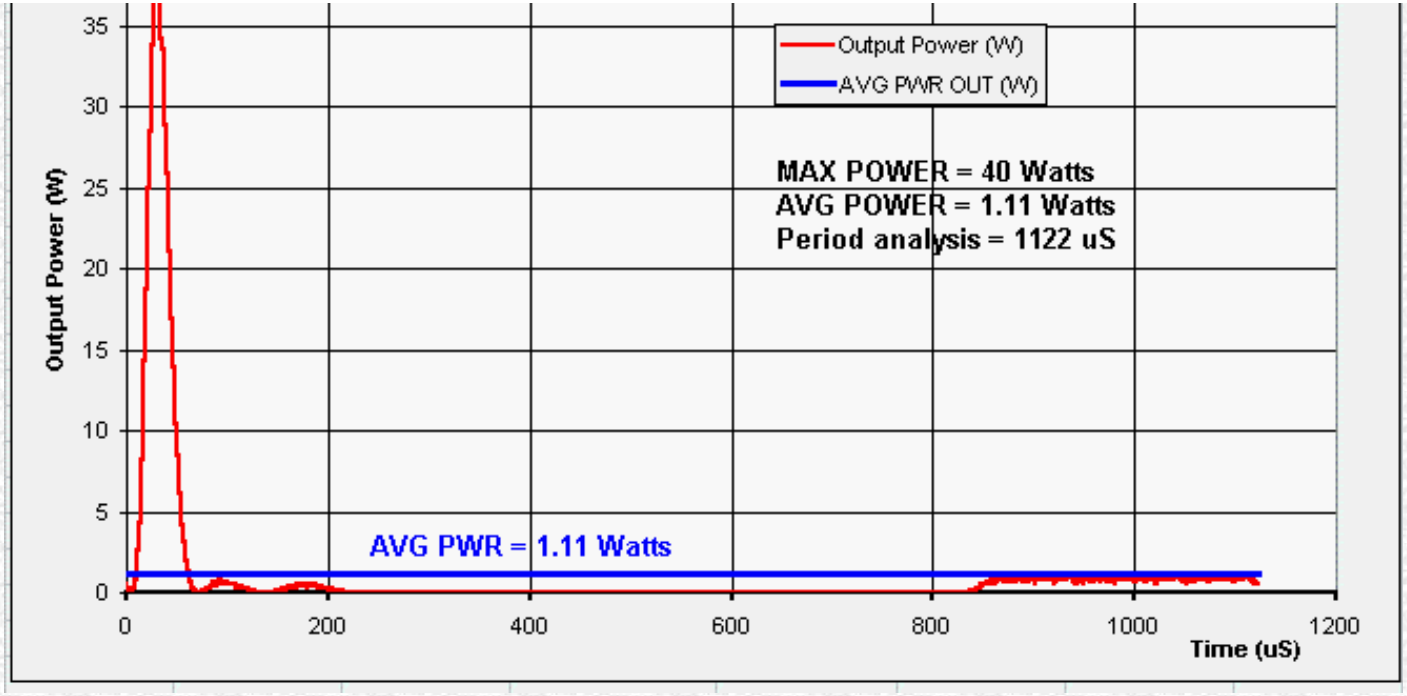

TEST #5 (11-05-00) on MEG v1.0e

The new tests on the enhanced MEG control board v1.0f are very encouraging because I have been able to reproduce the exact waves shapes used in the original Bearden's MEG presented in his technical paper : "The Motionless Electromagnetic Generator: Extracting Energy from a Permanent Magnet with Energy-Replenishing from the Active Vacuum," page 67...

See below the scope signal measured at the actuator coil (Primary) and also at a loaded output coil (Secundary).

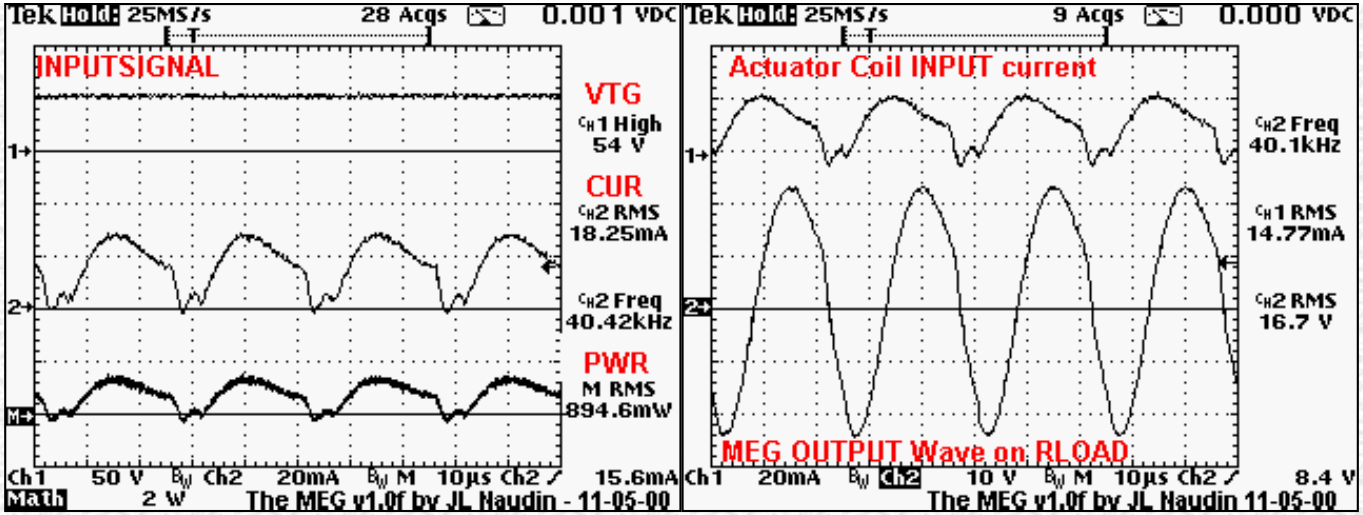

The Actuator Waves Shapes and the Output Waves signal on the MEG v1.0f

The new MEG control board v1.0f seems now fully in line with the original Bearden's MEG comparing to my previous version... Now, this electronic control board v1.0f must be improved for giving more power output....

See the MEG v2.0 tests results

Email : **JNaudin509@aol.com**
***or send email to the JLN Lab's eGroup* at : jlnlabs@egroups.com if you are a team member.**

Return to the MEG project home page

Posted on 12-10-00

Dear All,

You will find below some informations sent by Tom Bearden.

Best Regards
Jean-Louis Naudin

Sujet :	**Information**
Date :	Sat, 9 Dec 2000 01:36:27 -0600
From: xxxxxx (Tom Bearden) To: Jnaudin509@aol.com (Jean-Louis Naudin)	

Dear Jean-Louis:

Some fellows in your discussion groups raised the question of my use of energy flow (Poynting diverged component versus Heaviside nondiverged component) but made an error in their questioning. The correction is important for the free energy researcher, for it reveals a gigantic source of free energy around every little EM circuit, once we pay a little to get the circuit in operation. In other words, scientists should have harnessed more of that already enormous energy flow right under their noses around every circuit anyway, and should have given us free, cheap, clean electrical power.

To understand EM energy flow around EM circuits, I strongly suggest one put aside the textbooks' interpretations until one checks the original applicable papers of Heaviside and of Poynting, who independently and essentially simultaneously discovered the flow of energy through space in the 1880s. The concept of the flow of energy through space was not present in physics until then. Also note that Maxwell was already dead, having passed on from stomach cancer in 1879. Several of my papers (e.g., Dark Matter or Dark Energy?, published in Journal of New Energy) give the appropriate references one should check.

First, there is an enormous energy flow (trillions of times greater than what you input to the shaft of a generator, and than the chemical energy in a battery) pouring out of the terminals of every generator or battery. The enormity of this energy flow is easily shown, and measurements can be made of actual collection of energy from it by intercepting charges placed in it. Particularly see John D. Kraus, Electromagnetics, Fourth Edn., McGraw-Hill, New York, 1992, Figure 12-60, a and b, p. 578. Kraus shows a good drawing of the huge energy flow filling all space around the two conductors of a transmission line, with almost all of that energy flow not intercepted by the circuit at all and thus not diverged into the circuit to power it, but just "wasted."

Kraus also shows the "equi-divergence" contours in this energy flow, with measurements of the energy flow that can be collected by (diverged around) a unit point static charge placed at any point on each contour. So yes, that vast energy flow filling all space surrounding the circuit is real, it is known, but it

has been arbitrarily discarded from accountability in energy measurements in circuits because no one has been able to explain the source of it before. We explain it in "Giant Negentropy from the Common Dipole", published in Journal of New Energy.

Note that, at any point in one of Kraus' contours, if you place 100 unit point static coulombs of intercepting charge at that same point instead of the unit point static charge that is "standard", you will diverge continuously around that charge some 100 times as much energy flow as the magnitude shown by Kraus. In short, then you multiply the value of energy interception at each point on that contour by 100. Since we are describing a steady state condition, this means that now we are collecting 100 times as much energy "statically" (actually "continuously and steadily) at each point in the divergence zone around the charge.

You can do that sort of thing at each and every point in space surrounding the circuit, out to an almost infinite radius. None of that vast energy flow that is in that surrounding space is hitting the circuit and entering it. Also, you really can collect energy from that wasted but enormous energy flow.

Only a tiny, tiny portion of that surrounding external energy flow moves right along the surface of the conductors, strikes the surface charges in the circuit conductors and components, and is thereby diverged into the conductors to power up (potentialize) the Drude electrons and the circuit. That tiny "diverged" portion of the energy flow that enters the circuit is the Poynting component, not the losses. The respondent thus got it exactly reversed. Here is Poynting's own words:

"This paper describes a hypothesis as to the connexion between current in conductors and the transfer of electric and magnetic inductions in the surrounding field. The hypothesis is suggested by the mode of transfer of energy in the electromagnetic field, resulting from Maxwell's equations investigated in a former paper ("Phil. Trans.," vol. 175, pp. 343-361, 1884). It was there shown that according to Maxwell's electromagnetic theory the energy which is dissipated in the circuit is transferred through the medium, always moving perpendicularly to the plane containing the lines of electric and magnetic intensity, and that it comes into the conductor from the surrounding insulator, not flowing along the wire." [J.H. Poynting, "On the connexion between electric current and the electric and magnetic inductions in the surrounding field," Proc. Roy. Soc. Lond., Vol. 38, 1984-85, p. 168].

So your respondent was in error when he spoke of that little "dip" in the flow as what was "wasted" and the "losses". He got it exactly reversed.

Here is the straightforward way to deal with it. Simply separate the entire energy flow vector into two vector components: a very large component vector parallel to the conductor and a very small vertical component vector pointing vertically into the wire from outside. The combination (the sum vector) is the entire energy flow that is almost parallel to the wires but not quite (see quote from Heaviside). The parallel flow component vector is the Heaviside energy flow that completely misses the conductors and roars off into space and is lost. The tiny vertical flow component is the Poynting energy flow component that enters the circuit and powers it by potentializing the Drude electrons, and then being dissipated by the excited electrons in the circuit's loads and losses. This small vertical component is the tiny energy flow portion that Poynting assumed from the outset, and he never even considered the enormous parallel

component.

The problem was that, if one estimated the magnitude of the sum vector energy flow or the Heaviside parallel component, the startling amount of energy pouring out of the terminals was so vast that it staggered the imagination. In the 1880s, if you tried to state that a "one watt nominal circuit" actually was pouring out trillions of joules per second, almost all of which missed the circuit entirely and roared off into space and was lost, you would have been tarred and feathered and drummed out of science as a total lunatic. Heaviside had not the slightest notion of what could possibly be furnishing such a mind-staggering energy flow! So Heaviside -- who did include that NONDIVERGED vast component in his theory (while Poynting completely omitted it), was extremely cautious and spoke only of the "angle" of the energy flow and the "angles" of the components. Here are his exact words:

"It [the energy transfer flow] takes place, in the vicinity of the wire, very nearly parallel to it, with a slight slope towards the wire... . Prof Poynting, on the other hand, holds a different view, representing the transfer as nearly perpendicular to a wire, i.e., with a slight departure from the vertical. This difference of a quadrant can, I think, only arise from what seems to be a misconception on his part as to the nature of the electric field in the vicinity of a wire supporting electric current. The lines of electric force are nearly perpendicular to the wire. The departure from perpendicularity is usually so small that I have sometimes spoken of them as being perpendicular to it, as they practically are, before I recognized the great physical importance of the slight departure. It causes the convergence of energy into the wire." Oliver Heaviside, Electrical Papers, Vol. 2, 1887, p. 94.

As you can see, that slight "dip" is due to the vertical convergence of the Poynting energy component into the wire, and that is of course known in electrodynamics and appears in the texts.

Now when you measure energy in circuits, you actually measure energy dissipation. All the energy that is dissipated from or in a circuit, must have entered the circuit in the first place. So if you measure all the energy that a circuit dissipates, that is equal to all the energy that actually entered the circuit via the Poynting component. In short, we always "measure" Poynting's entering energy component as it is exiting, in the many places and components where it exits, etc.

We are NEVER measuring the remaining vast energy flow component, which Heaviside exposed and which the Kraus diagram illustrates very well.

And there the matter rested until Lorentz (the greatest electrical scientist of his day) entered the picture. Lorentz understood both components, but he also had not the foggiest notion of where on earth such an enormous energy flow could be coming from. He also would have been attacked and destroyed if he had actually advocated that huge "Heaviside" nondiverged component.

Unable to solve the vexing problem, Lorentz simply got rid of it. He reasoned that Heaviside's vast parallel component was "physically insignificant" (Lorentz's term) since it did not interact with the circuit and did not power anything, and therefore it could just be arbitrarily discarded from all accountability. So Lorentz simply integrated the entire energy flow vector around an assumed closed surface surrounding any volume element of interest. Voila! The Heaviside nondiverged component of

the energy flow vector passes straight through, positive (let us say) going into the surface and thus negative coming out of it. Hence the Lorentz closed surface integration procedure discards the enormous Heaviside nondiverged component. It does not eliminate the actual huge energy flow, but just arbitrarily discards any further accountability of it. On the other hand, the Lorentz procedure does retain the DIVERGED component, so it retains Poynting's component.

Electrodynamicists have just continued that very practice to this day, and have never resolved the "Heaviside component" problem. They do not usually bring it out as clearly as has Kraus, but even Kraus does not point out the startling fact that this proves that the shaft input to a generator cannot possibly be producing all that energy flow. Electrodynamicists continue to avoid the Heaviside flow component problem, because their model eliminates the vacuum interaction with the source dipole formed in the generator. Energy extracted from the vacuum by the broken 3-symmetry of that source dipole is what pours out both the Heaviside and Poynting energy flow components, as I discuss in my paper, "Dark Matter or Dark Energy?" in Journal of New Energy.

However, this integration procedure has caused the great confusion that some electrodynamicists and particularly many engineers are unaware that there is a dramatic difference between the entire EM "energy flow" per se that is connected with the circuit, and the Poynting energy flow component that is connected with the circuit. About half think those are one and the same thing, including authors of some of the textbooks.

Anyway, my paper, "Giant Negentropy of the Common Dipole", just published in Journal of New Energy, points out the rigorous and surprising solution of the Heaviside-Lorentz problem, and gives the precise source and of the enormous size of that discarded but still present nondiverged EM energy flow around every EM circuit.

In an AIAS group paper, Anastasovski, P. K; Bearden, T. E; Ciubotariu, C; Coffey, W. T.; Crowell, L. B; Evans, G. J; Evans, M. W; Flower, R; Jeffers, S; Labounsky, A; Lehnert, B; Meszaros, M; Molnar, P. R; Vigier, J P; Roy, S. "Classical electrodynamics without the Lorentz condition: Extracting energy from the vacuum," Physica Scripta 61(5), May 2000, p.513-517, I gave several ways of possibly extracting (diverging into the circuit and using) more of that Heaviside energy flow. The simplest and proven way (COP = 18) is the Bohren experiment which simply places the intercepting "unit point charge" into resonance. Thus the Bohren resonating charge sweeps out a greater geometrical reaction cross section area in the impinging energy flow, and collects more of the otherwise "missing a static charge" energy flow adjacent to a static collecting charge.

If -- after it has passed the circuit -- you retroreflect the Heaviside energy flow component back across the same circuit, you will get an additional Poynting collection by the surface charges, and get more energy. If you iterate this retroreflection, you get an overunity process, IF you do not use the common closed current loop circuit which uses half of the collected energy to destroy the dipole faster that one can power the load. Instead, one might adapt Tesla's "one wire circuit" between two widely separated capacitors connected by a long conductor. The best way, of course, is Letokhov's "negative absorption of the medium" which is excess emission from optically active, highly scattering media.

In the Physica Scripta you may also be interested in some of the more than a dozen ways suggested for extracting energy from the vacuum.

Best wishes,
Tom Bearden

Return to the MEG Project page

Throughts about the MEG principle

By Cyril Smith

created on 11-01-00 - ***JLN Labs*** - last update on 11-01-00

Subject :	**MEG thoughts**
Date :	30/10/00 22:49:12 Paris, Madrid
From: cyrilsmith@camelot64.fsnet.co.uk (Cyril Smith)	

Hi All,

I have re-read Bearden's paper in the light of the latest information.

There are some aspects I agree with, sort of. Like his decomposition of any scalar potential into a set of harmonic EM wavepairs travelling in opposite directions, one being the phase conjugate of the other. Anyone who has studied transmission lines, and in particular standing waves, will appreciate this. However my views on EM waves as bunches of sub photon particles leads me to the view that the scalar potential at a point in space comes from these particle beams arriving from opposite directions, carrying the EM wave pattern: even DC as in electrostatics involves a non random pattern. The pattern is imposed by the boundary conditions. But even with no pattern the particles are there in random fashion, and I see this as the giant negentropy source.

Bearden emphasises the different fields, the B field in the core and the A field outside it. He then talks about the coil extracting energy separately from these fields, as though the two forms of extraction are different. But in my book the only way the coil can extract energy from the B field is via the A field, Bearden does not seemed to have made that link. So I have misgivings about Bearden's explanation, but I am prepared to believe that the device does work.

Having given some thought to the way the new exotic materials behave as giant Barkhausen jumps, tiny input H creates giant B change by way of all the dipoles in the sample reversing direction, and the way the domain wall travels through the material at some relatively low velocity (cf the velocity of light), I have come up with a suggestion for a magnetic OU device which might be similar to the MEG.

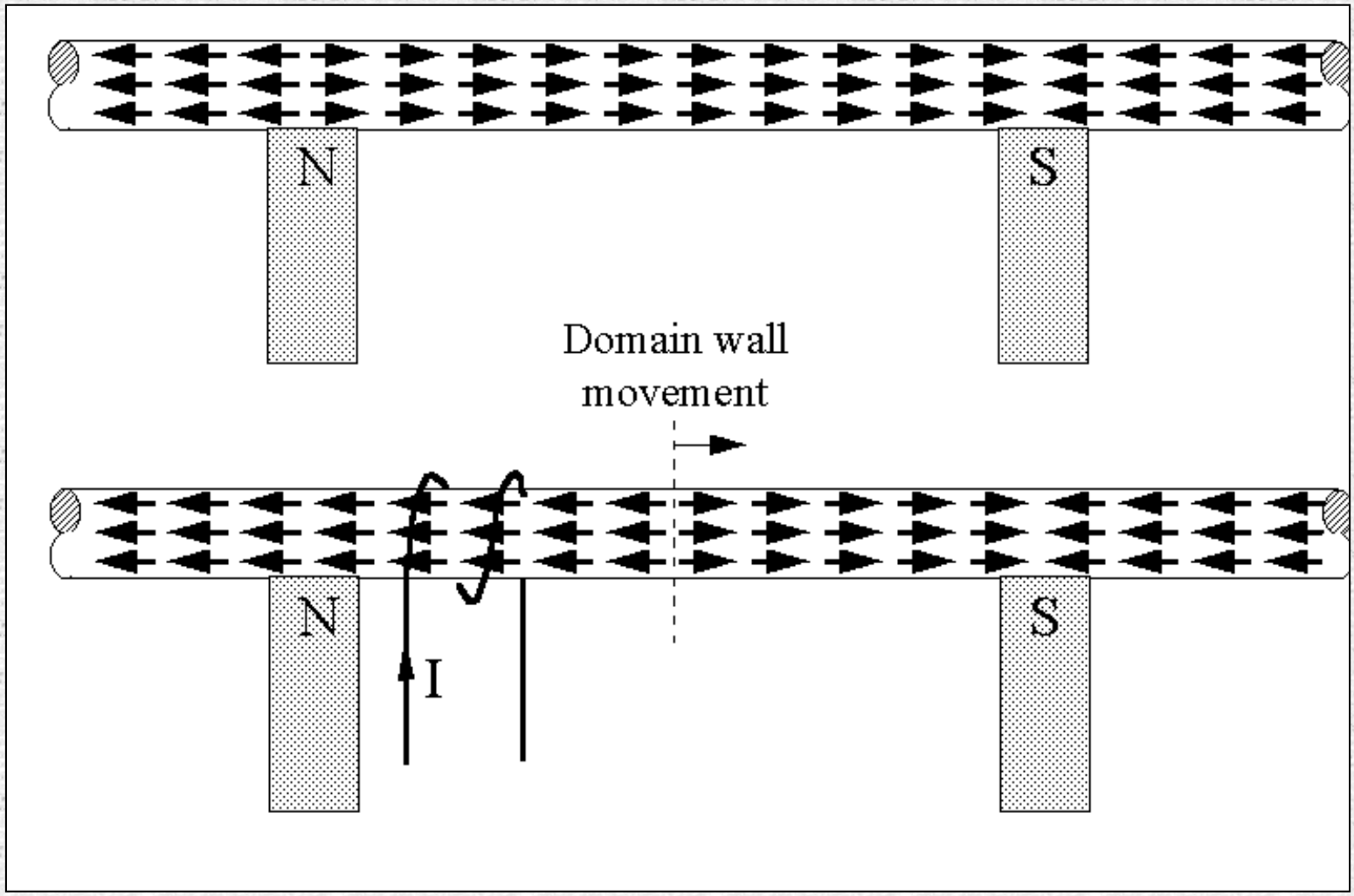

In the first gif the top drawing shows the MEG core straightened out, the arrows showing the atomic dipole orientations due to the PM. The bottom drawing shows the dipoles switching polarity as a result of current in the drive coil on the left. There is a domain wall travelling left to right. When it reaches the magnet on the right the core is completely magnetised in the one direction, the inductor is fully charged. We could discharge the inductor and regain the input energy, but we are interested in OU so we want some form of reflected wavefront to augment the discharge. Unlike EM waves which can travel through each other without interference, we cannot have domain walls travelling in opposite directions in the same sample. So let's try two samples.

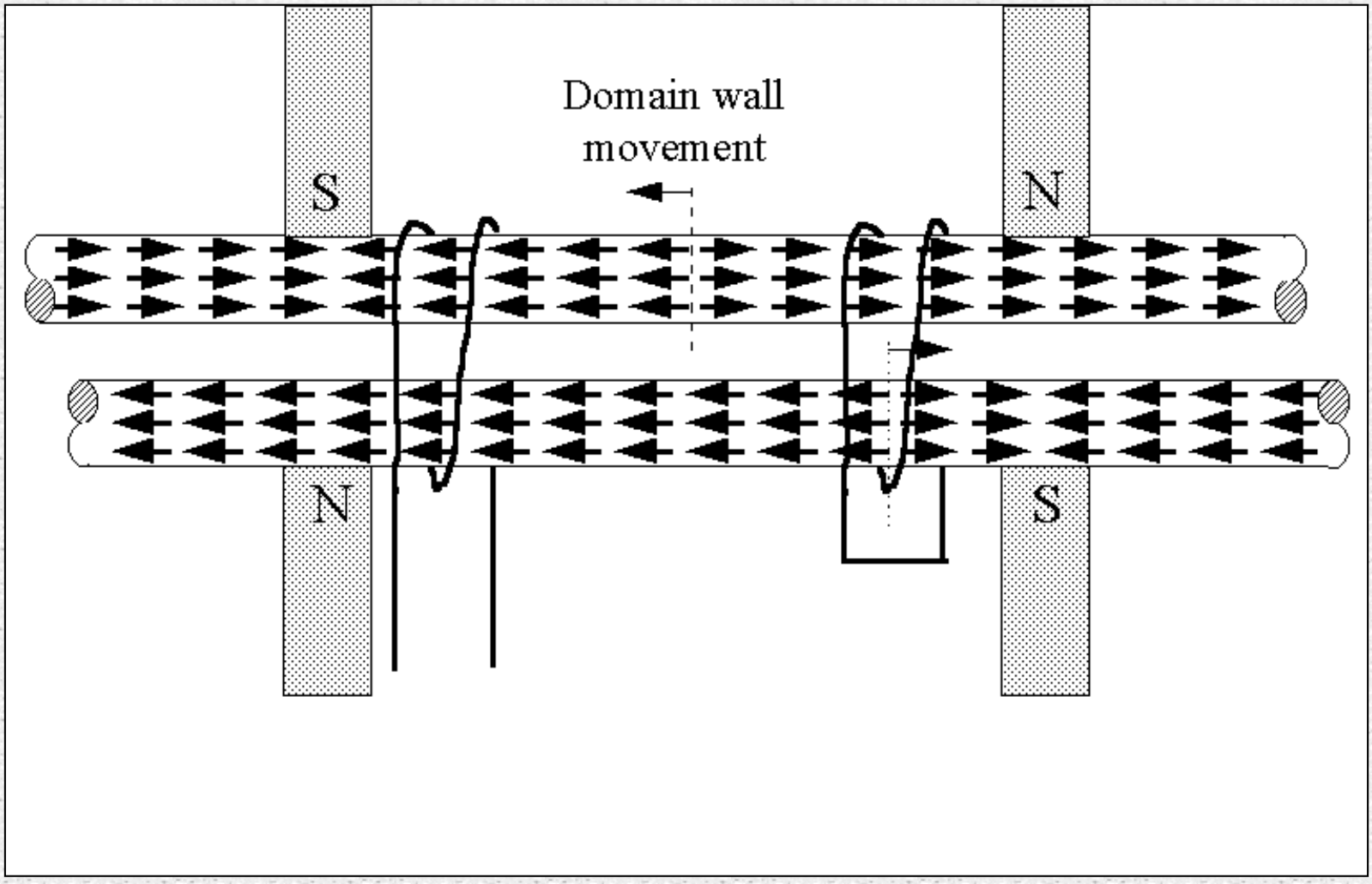

The second gif shows two cores with coils wound round both. Current in the coil on the left sends the wavefront down one core only because the other is already saturated in that polarity. The wavefront is shown having reached the other coil. When this wavefront reaches the shorted coil on the right the Lenz reaction from induced currents causes the dipoles in the other core to switch, thus sending a domain wall wavefront back along the second core. If the first coil is discharged in synchronism with the arrival of the return wavefront the energy extracted will be greater than the energy input, since there will be greater flux change.

Although shown as long rods, the same argument applies to the ring core MEG situation, you just have to juggle the manner in which coils wound on each segment are interconnected.

Any comments?

Cyril Smith

Sujet :	**MEG**
Date :	01/11/00 17:40:55 Paris, Madrid
From: cyrilsmith@camelot64.fsnet.co.uk (Cyril Smith)	
To: JNaudin509@aol.com	

Hi All, Jean Louis,

I have looked at the magnetic vector potential at a fixed point on a core, and how it changes when a domain wall is approaching.

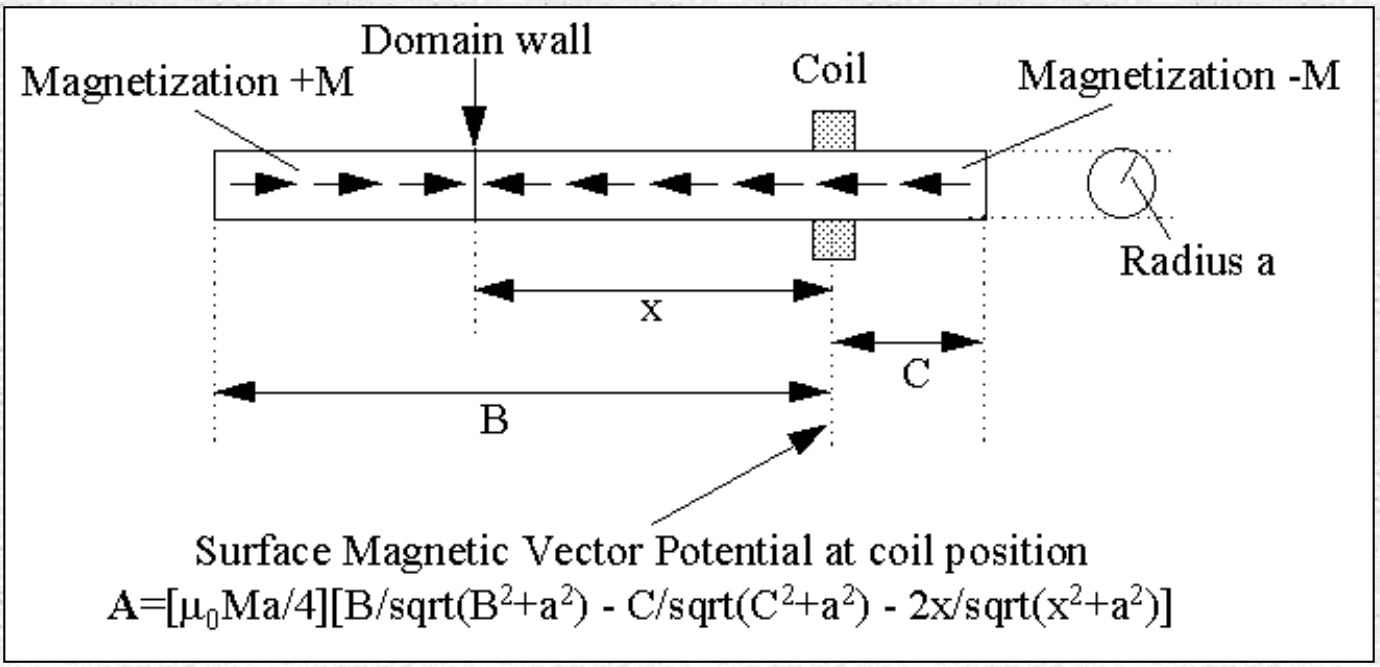

The gif above shows a cylindrical core of radius a and length B+C, with a coil positioned at station C from one end. A domain wall is at distance x from the coil. I give the formula for calculating vector magnetic potential A at the coil position, and of course the A field lines form closed circles around the core. It is a simple matter to increment the wall along at the wall velocity to produce a plot of A v. time, then to differentiate A to get E whose closed line integral is the induced voltage. The formula ought to apply to a ring core using arc dimensions in place of the linear ones.

I have played with this on a spreadsheet to plot the induced voltage impulse. A core whose radius is small cf its length gives a narrow impulse something like a gaussian pulse. The 1/2 amplitude width of the gaussian is approximately 4a/v seconds where v is the domain velocity. An interesting observation, increasing the radius a increases the width of the pulse, but the peak voltage remains constant.

Regards

Cyril Smith

cyrilsmith@camelot64.fsnet.co.uk

Read the next paper from Cyril Smith

Return to the MEG project home page

Throughts about the MEG principle (Part 2)

By Cyril Smith

created on 11-12-00 - ***JLN Labs*** - last update on 11-12-00

Subject :	**MEG Theory and thoughts**
Date :	12/11/00 11:28:51 Paris, Madrid
From:	*cyrilsmith@camelot64.fsnet.co.uk (Cyril Smith)*

Hi All,

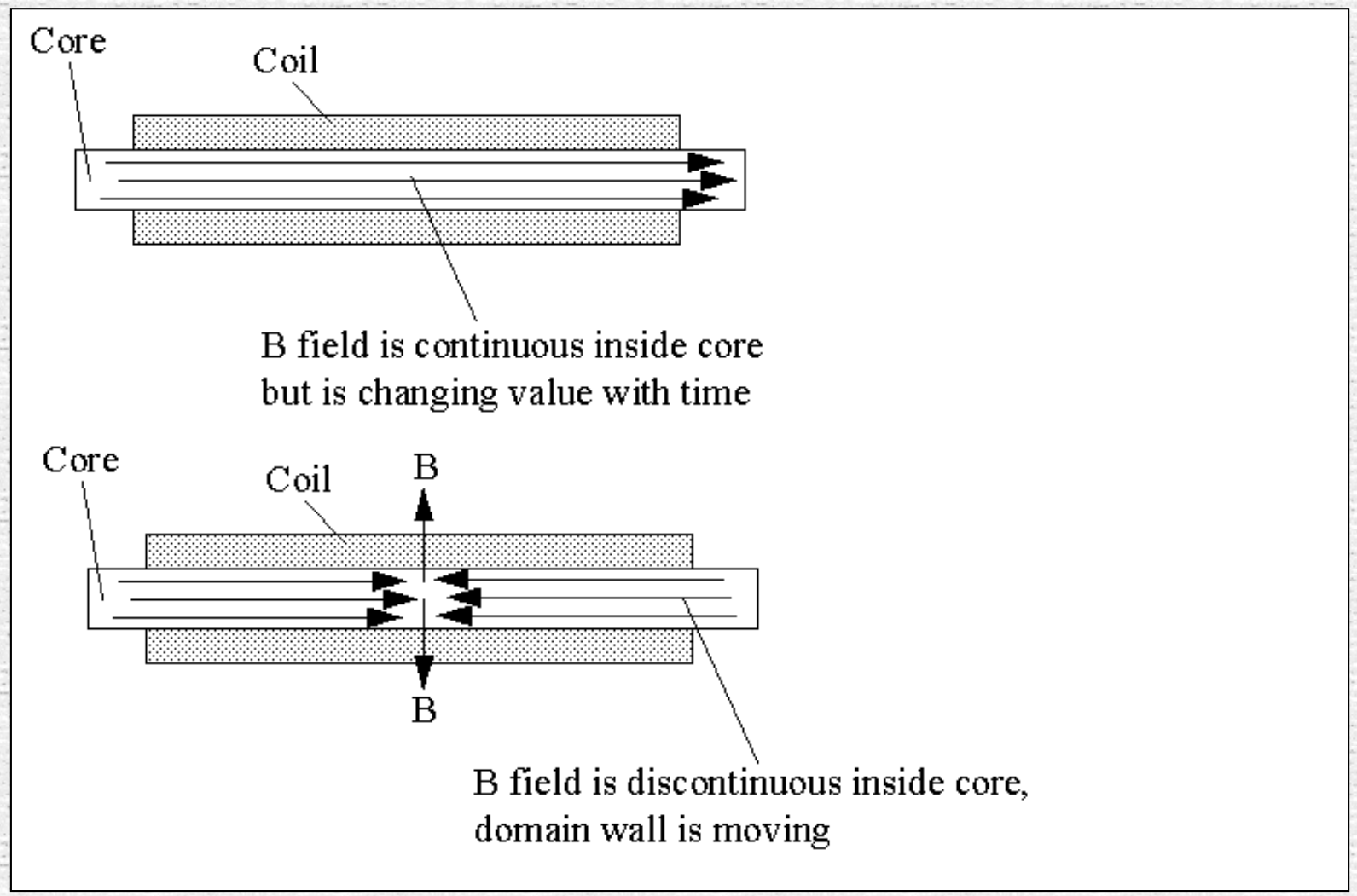

Cross Flux MEG. I can't see how cross flux will work with the exotic nanoperm and metglas materials. In my simple mind these get their terrific BH characteristics because they are highly anisotropic, the atomic dipoles are all aligned in the one direction. Thus they would have no useful BH characteristic in the cross flux direction, they would simply look like air. There is no internal mechanism for cross flux control. Statements like Fred has turned up "when a material is saturated in one direction it is not saturated in other orthogonal directions" are true only for isotropic materials. Remember the atomic magnetic dipoles are fixed in the crystal lattice, they do not wiggle about. They

can and do flip polarity and it is this feature which accounts for permeability. Imagine say 360 co-located dipoles each one aligned 1 degree different to its neighbour. We have a net dipole moment of zero. Now apply a slowly increasing magnetising force along say the 0 degree axis. First the 180 degree dipole will switch, then the 179 and 181 degree ones, then the 178 and 182 ones and so on. You will see that the net magnetisation gradually increases until saturation is reached where there are no more dipoles available. Plot magnetisation*munought against magnetising force and you have B v. H, in the chosen 0 degree direction.

There will be no magnetisation in the 90 degree direction. Now apply a slowly increasing magnetising force in this new direction, keeping the original 0 degree H force present. Again you will see dipoles switching direction to give 90 degree magnetisation, but some of these were contributing to the 0 degree magnetisation, so this value will fall. Thus you can only get the 90 degree magnetisation at the expense of 0 degree magnetisation. This is the cross flux control mechanism. If all the dipoles are fixed in the one alignment there is no cross flux control available. GO steel will not be highly anisotropic, so here there will be some cross flux control.

Now to the non cross flux MEG. Something Dave D said about flux lines leaving the core rang some bells. It strikes me that flux lines can and must leave the core, even a complete magnetic circuit like a ring core. In the MEG the flux lines from the magnet do so. And it is obvious to me that if you wound two identical coils on opposite limbs of a ring core, passed current through these in cancelling mode, you would have flux lines leaving the core. This would simply be two banana shaped electromagnets placed in parallel, the ring core would have N and S poles opposite each other.

And going back to my description of the domain wall moving along the core, opposite sides of the wall have opposite polarity, so the wall is a magnetic pole. The flux must escape radially from the core at this point. This raises an interesting debate concerning transfromer action. In the attached gif the top picture shows the usual interpretation for transformer induction. The B lines through the core are continuous, they change with time to induce voltage in the coil. This is the induction theory we all love or hate. My second picture shows what I believe is happening inside an anisotropic core like metglas, nanoperm and others. I show here just one domain wall because that is what happens in the MEG. The B field can not be continuous through the core because the magnetisation each side of the wall is of opposite polarity. So the B lines escape. Now to get the voltage induced in the core we need something different from our usual formulae. Maybe this is the route to understanding ou.

I gave a formula for the A field due to a domain wall, and this could be used for the induced voltage if the domain velocity is known (you would have to integrate over the length of the coil). The domain velocity can be controlled by the driving waveform (after all it is possible for the wall to be held stationary with suitable DC, it doesn't just move by itself). So at low frequencies, and for coils wound over significant lengths of the core (which you would normally do for power transformers), the B induction would be seen to obey normal transformer rules. But at higher frequencies there will be a velocity limit set by the material. I have seen on Aspden's site an analysis for the Hans Coler machine where he equates domain velocity to stress waves (acoustic velocity) in the material. I bow to Aspden's superior knowledge, and would point out that the 40kHz frequency for Bearden's MEG is not

unreasonable for this velocity.

Finally I have available some ferrite ring and C cores. Some of the ring cores are square loop (with the magnetostriction effect which can shatter the core of driven at mechanical resonance). Others are not. I will experiment with the MEG coil configuration, and with the core placed between my two big slab magnets. When I get time, which will probably be into December.

Best regards

Cyril Smith

cyrilsmith@camelot64.fsnet.co.uk

Sujet :	**MEG**
Date :	12/11/00 11:28:07 Paris, Madrid
From: cyrilsmith@camelot64.fsnet.co.uk (Cyril Smitht	

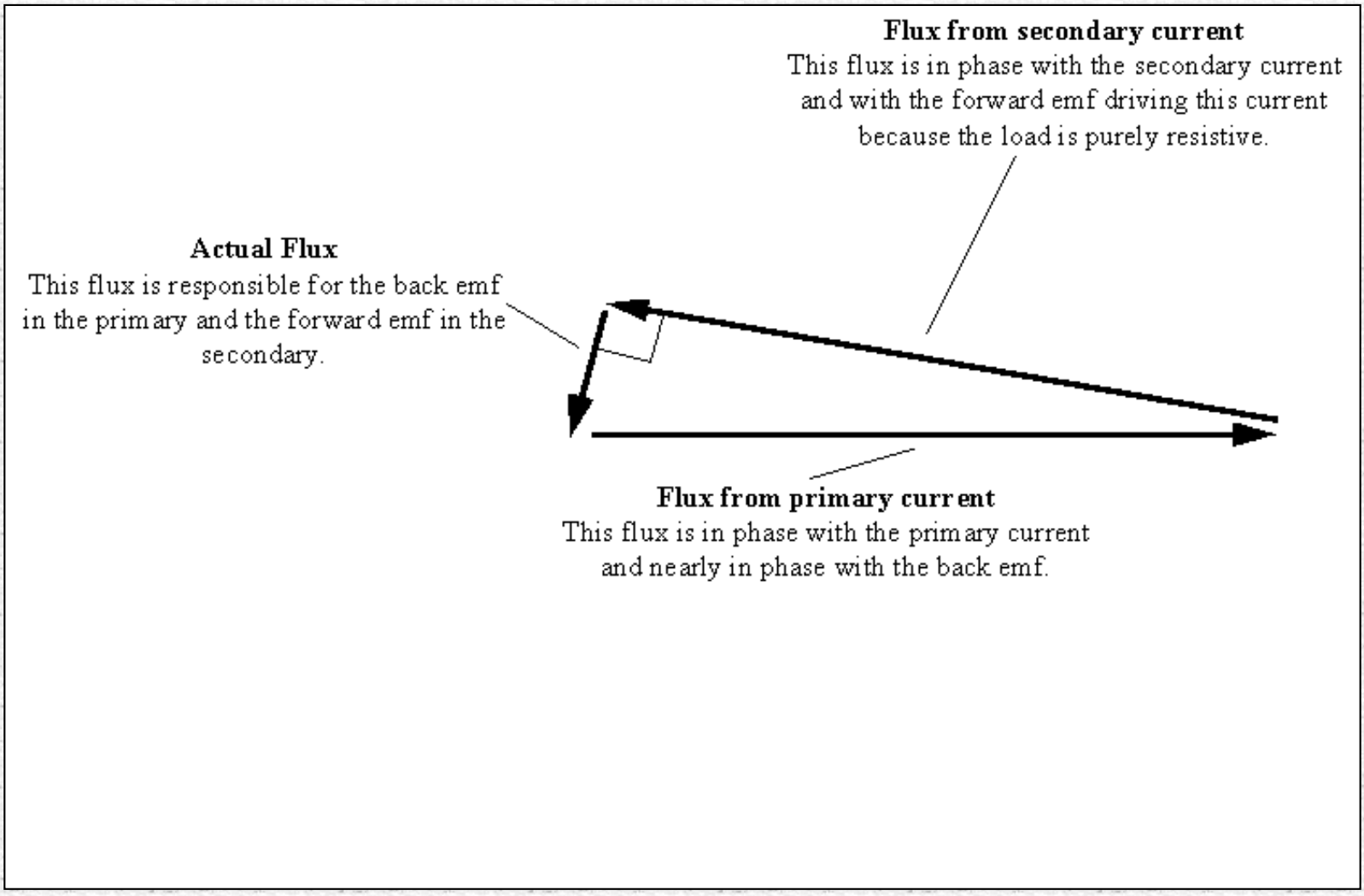

The gif above shows the phasor diagram for a transformer. The fluxes from the primary and secondary currents almost cancel, but not quite. What remains is the actual flux in the core which drives the emf's. The secondary current (and flux vector) is in phase with the induced emf (because the load is

resistive). The primary current (and flux vector) is almost in phase with the induced emf, so the primary impedance as seen by the input source is almost resistive: the small phase angle here is the inductive component needed to "create" the actual flux. As you reduce the load resistance you get greater primary and secondary current, so these two flux vectors get bigger (assuming the source can drive the increased power). But you can't do this ad infinitum. The power transfer limit is reached, not by the core's ability to carry the flux (for a given voltage the flux swing is constant, independant of the power transferred), but by the copper losses.

The above is for classical transformer design. With the MEG, I am not so sure that classical procedures apply, as you will see from my other mails.

Regards

Cyril Smith

cyrilsmith@camelot64.fsnet.co.uk

Read the previous paper from Cyril Smith

Return to the MEG project home page

MEG Theory

Why it Works, The Simple Explanation

By Dave Squires 11-08-2000

Consider the physical layout of the MEG. You have a stack of neodymium magnets in the center of a rectangular toroidal core. The magnets touch each side of the core on the inside. We have no coils on the core yet.

What does the magnet flux do?

The flux from the magnets will divide equally between each leg of the core. So we have half the flux flowing on the right and half on the left. See picture below of an FEMM simulation of this.

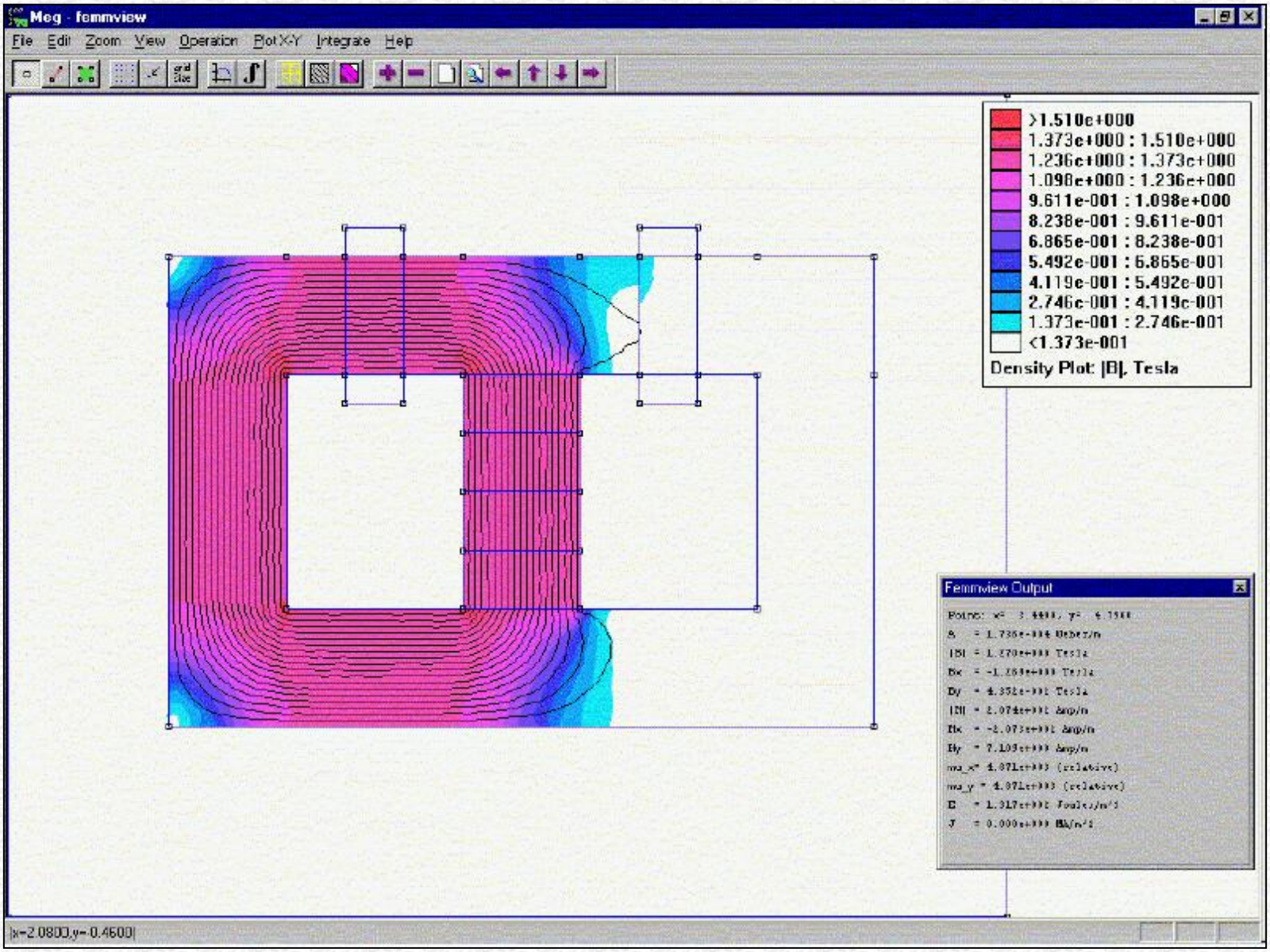

We now place coils on this core. We use two control coils on the top on each side of the magnet stack. And we wind two output coils on each vertical leg on opposite sides. The output coils are not shown on the FEMM simulation pictures.

OK, it is set up. Now we want to switch all the magnet flux to one side by opposing the magnet flux with the opposite control coil. How much flux will the coil need to generate to do this? Well, the answer of course is half the magnet flux since that is what is flowing in that leg. The other control coil is in the off condition, and open circuited, so no current can be induced in it and hence no back-flux generated. The core must not be allowed to reach magnetic saturation or more energy will be

required to force the flux to the other side.

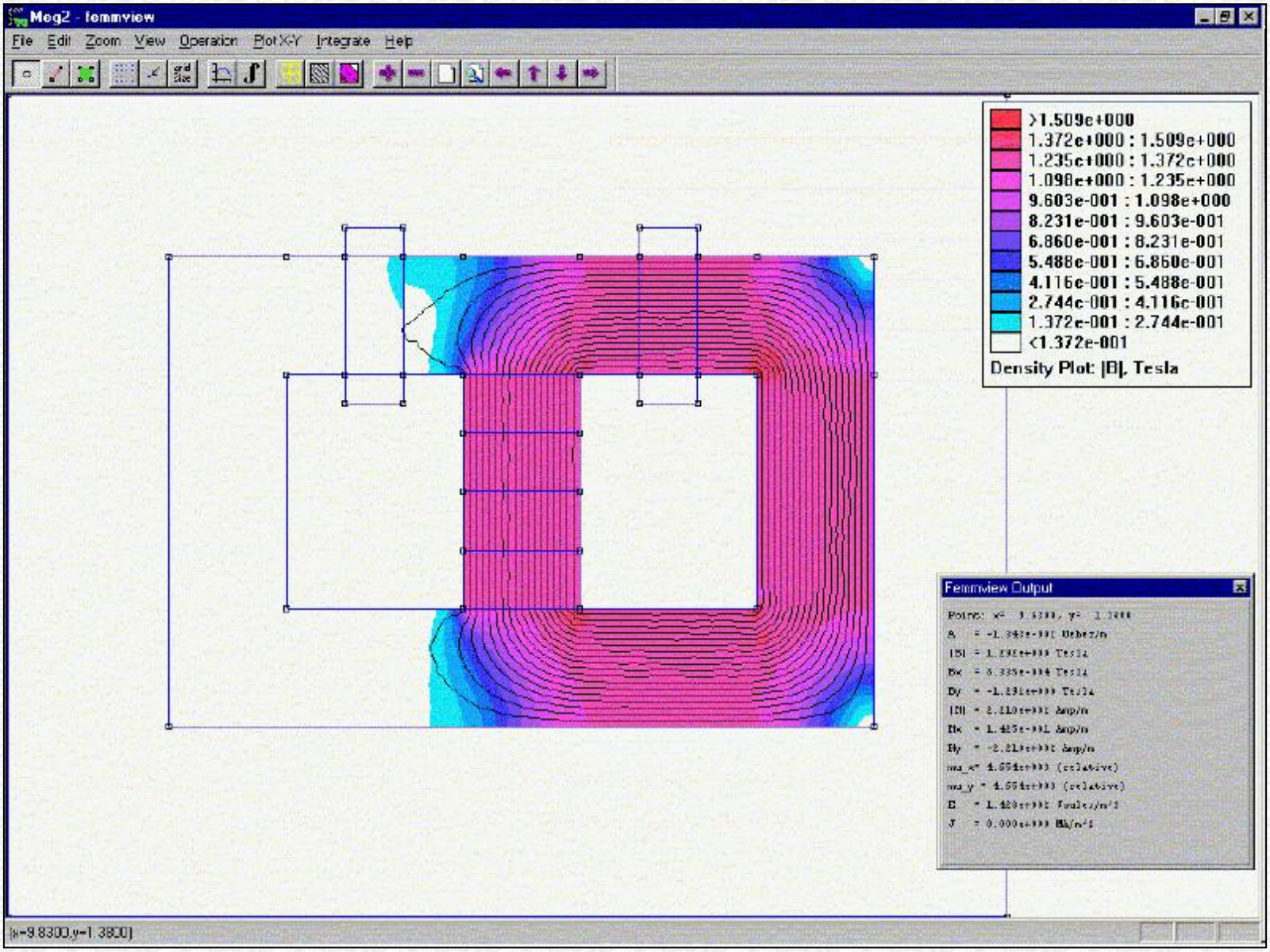

Then we turn off the control coil and what happens?

Remember both control coils are now off. The magnet flux will return to its original starting condition of half the flux flowing on each side as in the first picture. Does the magnet need any help to do this? No, of course not. When we did this we also removed half the magnet flux from the other leg when the control coil was on. The first half cycle we only see half the normal induction level in each output coil because at the start we only switch half the magnet flux into one leg and out of the other. So the total change is Bmag/2.

Now on subsequent cycles we let the magnet flux return to its original steady state and let the magnet do the work. Both control coils are off while this happens. Just when the magnet flux reaches its equilibrium point we turn on the other coil and keep the flux change going the other way. Each coil only needs to always switch half the magnet flux not all of it. After the first half cycle we see a 100% change of the magnet flux in each output coil on each cycle for an input power that is half the output. This assumes that we are activating the control coils for half of each cycle. This means we have a theoretical maximum COP of 2.0. We are using the magnet stack as a flux battery and "letting" it do half the work. See the next picture for the second half cycle. These FEMM pictures model the settled state after switching is complete at the zero crossing of the output sinewave.

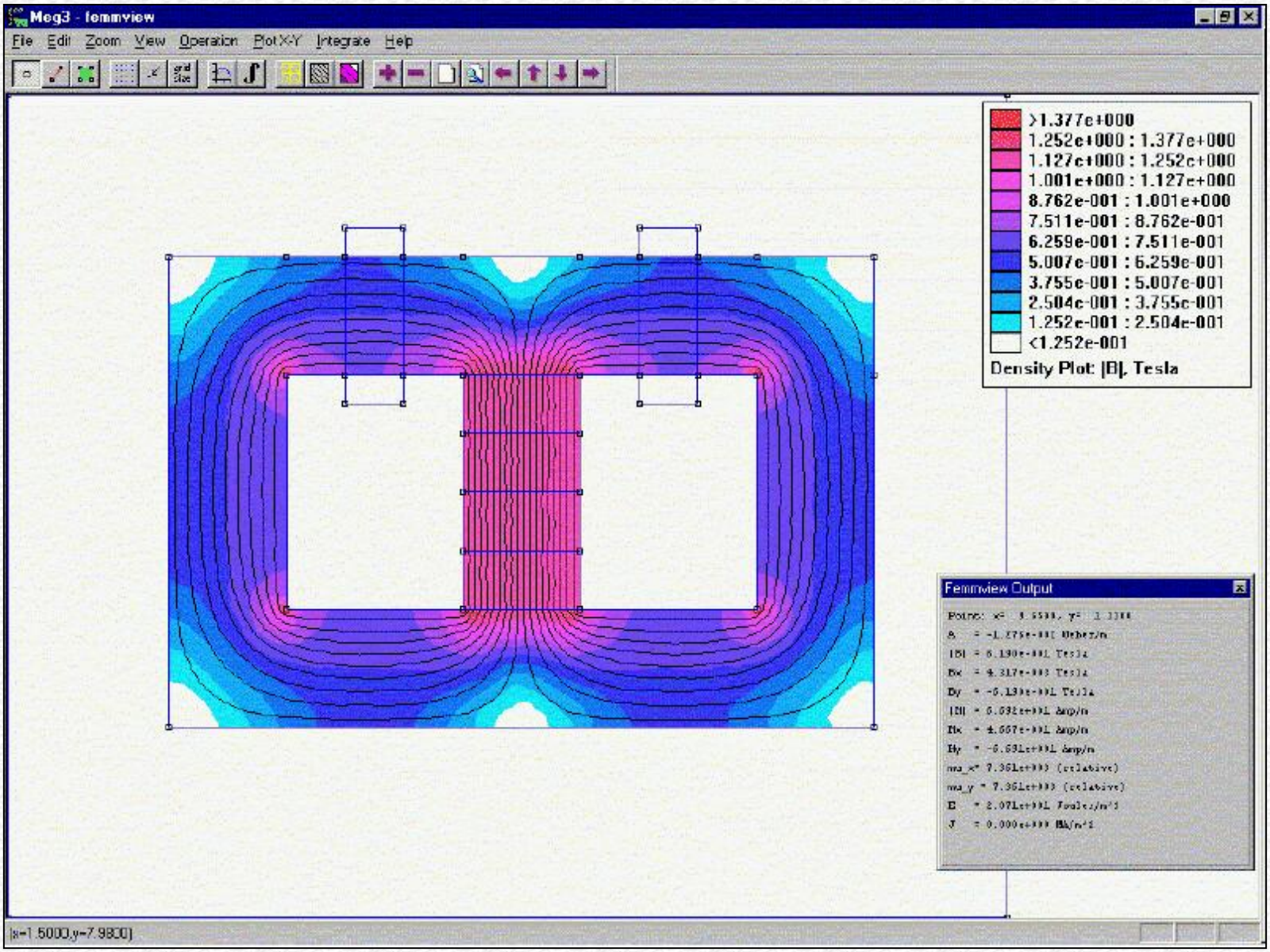

Now how can we improve it further? Faster switching using more exotic core materials could help. The higher the rate of change of the flux (dB/dt) the more output we get. So higher frequency operation is favored. The Bearden MEG claimed a COP of 5.0. It is very possible that the use of the particular nano-crystalline core material and operating at 40Khz can give a COP of 5.0. Also, changing the duty cycle might help to reduce the input power.

Jean-Louis Naudin has seen a COP of 1.75 using standard grain oriented silicon steel. This tends to confirm my hypothesis above. Core losses might prevent reaching a COP of 2.0 with this material. So at minimum, so far, you can get an OU solid state generator with a gain of 1.75. Just this alone could allow you to reduce your utility bill by about half if you put these devices between your breaker panel and your appliances. You could cascade them also to use 100 watts to get 15KW. It would only take about 9 stages to do this. What Jean-Louis has shown will do the job all by itself with no refinement. You just need bigger magnets, core section, and coils.

Power Gain Factors When Cascading Stages
This table is generated assuming you start with 100 watts input to stage 1 and size each stage appropriately to handle the power generated.

Stage Power Gain Power Output

1 1.75 175watts
2 3.06 306watts
3 5.36 536watts
4 9.38 938watts
5 16.41 1,641watts
6 28.72 2,872watts
7 50.27 5,027watts
8 87.96 8,796watts
9 153.94 15,934watts

What this means is you could create a power system to provide all your household power needs with only 100 watts drawn from the power grid. The only real reason to use the power grid is for the right frequency for all your present appliances. Done with an oscillator you could use a battery or hand crank generator to start it up and then run off a capacitor bank for the first stage. If the magnetic transistor idea proves out then one stage or two stages might be sufficient.

Dave Squires (11-08-00) mailto:djsquires@plix.com

Return to the MEG project home page

Magnetic Transistor Theory

By Dave Squires
Date: 11-03-2000

To make any transistor you need a material region where you can control a great amount of the flow of something with a small amount of something. This gives gain or amplification. For a magnetic amplifier the goal would be to use a small amount of input current to switch a large amount of magnetic flux into an output coil. A strong rare earth permanent magnet would be used to serve as a magnetic battery or permanent source of magnetic flux.

If any core material the amount of coil flux required to switch the magnet flux would be equal to the magnet flux. The H or magnetic potential required to reach this flux level is determined by the permeability, the shape of the BH curve, the number of coil turns, the coil length, and the coil current. The equation is stated as follows.

H = NI/L -- where N is the number of turns, I is the coil current and L is the coil length in meters.

The magnetic flux density, B, is written as:
$B = \mu_a H$; where μ_a is the permeability and H is the magnetomotive force or potential as shown above.

μ_a here is the absolute permeability and not the relative permeability.
Relative permeability is expressed as,
$\mu_r = \mu_a/\mu_0$ where μ_0 is the permeability of vacuum

So the absolute permeability we need is:

$$\mu_a = \mu_r \mu_0$$

Substituting in the equation for B we get,

$$B = \mu_r \mu_0 H$$

Then substituting for H we get,

$$B = \mu_r \mu_0 NI/L$$

For the case where we will be switching a constant magnetic flux from a permanent magnet the magnetic flux density B will then be constant as long as the same core cross section is maintained.
Now let's assume that we will use two different core materials in the magnetic circuit. We will use a core material of relative permeability μ_{r1} for one core and μ_{r2} for the other core. Also, let's assume that N and L could be different for the general case. So we have N_1, N_2, L_1, and L_2.

Now since the magnetic flux density B will be constant we can set two equation equal to each other as follows.

$B_1 = B_2$ and then substituting the expanded formulas for each we get,

$$\mu_{r1} \mu_0 N_1 I_1 / L_1 = \mu_{r2} \mu_0 I_2 / L_2$$

If we then solve for I_2 we get

$$I_2 = \frac{\mu_{r1} \mu_0 N_1 I_1 / L_1}{\mu_{r2} \mu_0 N_2 / L_2} = \frac{\mu_{r1} \mu_0 N_1 I_1 L_2}{\mu_{r2} \mu_0 N_2 L_1}$$

As you can see μ_0 will cancel out and the result for the general case reduces to,

$$I_2 = I_1 \frac{\mu_{r1} N_1 L_2}{\mu_{r2} N_2 L_1}$$

So it can be seen that if the number of coil turns and the coil lengths were equal the output current would be the ratio of the control coil relative permeability μ_{r1} to the output coil core permeability μ_{r2} times the input current. The equation for this special case would reduce to,

$$I_2 = I_1 \frac{\mu_{r1}}{\mu_{r2}}$$

Now we must keep in mind that we need a changing magnetic field to cause any induction in the output coil. So the control coils in a magnetic transistor device must be constantly switched with a periodic waveform of some kind. The rate of change of the flux or dB/dt must be as fast as possible to get the maximum output from the output coil. Also, the cores must never go much past the saturation point. The material can be made to traverse its BH curve just up to the knee of the curve for the material, but should remain on the steep slope portion so that extra H is not wasted with little change in B. Even going around the knee of the curve would waste energy with little benefit unless the knee is sharp.

It can also be seen from the above special case that if the material is uniform in permeability that there is no gain and you have a 1:1 transformer. Of course this is the ideal case where core losses are not taken into account. When core losses are subtracted the output current is less than the input current by some small amount of 1% to 5%.

The objective is to use as small as possible an input control current to control a large flux from a strong permanent magnet. It is obvious we need to match the magnet's B field for the given core cross section to be able to switch the magnet flux completely. The control coil would operate in blocking mode with opposing flux to do this. It would then have its permeability approach 1 and look like an air gap. To get the smallest H to do this we need the highest permeability material we can find with a high enough saturation induction level capability. We also need a square loop BH curve with a small sharp knee to the curve. The more vertical the curve the better. Metglas 2605SA1 material from Honeywell Amorphous Metals fits this bill nicely. For the rest of the core we can use cheap M1 grain oriented silicon electrical steel. Metglas is expensive, but fortunately

we only need a small amount for the coil core.

One other item is that we must make sure that there is no coil wound on the same high permeability material that is allowed to conduct when switching the magnet flux with the control coil. If this is allowed then the Lenz's Law back flux reaction (counter EMF) will oppose the control coil equally with lower current and destroy the gain we want. Any power extracting coil must be wound on the lower permeability material so that higher current and power can be extracted to generate the equivalent Lenz's Law back reaction to the changing flux from the magnet.

It should be easy to see that saturation of any of the cores must be avoided. Otherwise flux will be lost outside the core. If this happens the required H is lowered and the gain will be reduced. Therefore it is desirable to keep all the flux contained inside the core at all times. Flux leakage will be detrimental to maximum efficiency.

Summary and Conclusions

1. A magnetic transistor can be made by using materials in the magnetic circuit that have widely differing relative permeabilities.
2. The gate or control area should use the highest permeability material so that a lower magnetomotive force H is required to generate the same magnetic flux density B in the magnetic circuit core. Lowered H means lower coil current and lower input power.
3. A constant cross section of core material for the control section and the lower permeability section should be maintained.
4. Magnetic saturation should be avoided in all core sections. The control gate core can be taken right up to saturation, but should not be pushed beyond it because the H requirement goes up rapidly and energy will be wasted lowering the efficiency.
5. The BH curves of the core materials should have square loop characteristics with low hysteresis. This means that a small H is required to get a large B field density.
6. The control coil section operates to oppose the magnet flux. When not required it must be open circuited and no current allowed to flow. It does not need be used to generate attractive mode flux to favor the magnet flux flow. There is no need to do this. The off core simply completes the magnetic circuit for the magnet through the control core.
7. The gain realized is the ratio of the control coil core relative permeability divided by the output coil core relative permeability.
8. Since the control coil current is so much lower small power MOSFETs or medium power bipolar transistors can be used for the switching controller.

Why this Should Work in the MEG

Lenz's Law back reaction says this must work.

Consider that the magnet flux is constant through all portions of the magnetic circuit. We just need a lower H value to switch the magnet flux because of the very high permeability material in the control coil core. We assume we must create a B field in the control coil core equal in magnitude to the magnet's B field in order to block it completely. Now we have switched the magnet flux into a different magnetic circuit by blocking the magnet flux and allowing it to flow into the opposite leg. The control coil there is off and no Lenz's Law back reaction is allowed from the "off" state control coil. One hundred percent of the magnet flux is switched to the opposite leg of the circuit. Now Lenz's Law says that while the flux in the output core is changing there will be a back reaction to oppose the change in flux that will be equal in magnitude. This assumes that maximum current is allowed to flow in the output coil. To get a B field of equal magnitude to the magnet flux you will need a much larger value of H due to the much lower permeability of the output coil core. A larger value of H means a larger current must be generated in the output coil to create this amount of back flux. So Lenz's Law is responsible for the OU gain we can achieve. OU factors in the range of 30x to 50x should be easily attainable. These are efficiencies of 3000% to 5000% minus some small core and copper losses. And the whole unit would be solid state increasing the reliability tremendously.

Dave Squires (11-03-00) djsquires@plix.com

Return to the MEG project home page

Throughts about the MEG principle

The Magnetic Amplifier Experiment

By Jean-Louis Naudin

created on 11-03-00 - ***JLN Labs*** **-** last update on 11-03-00

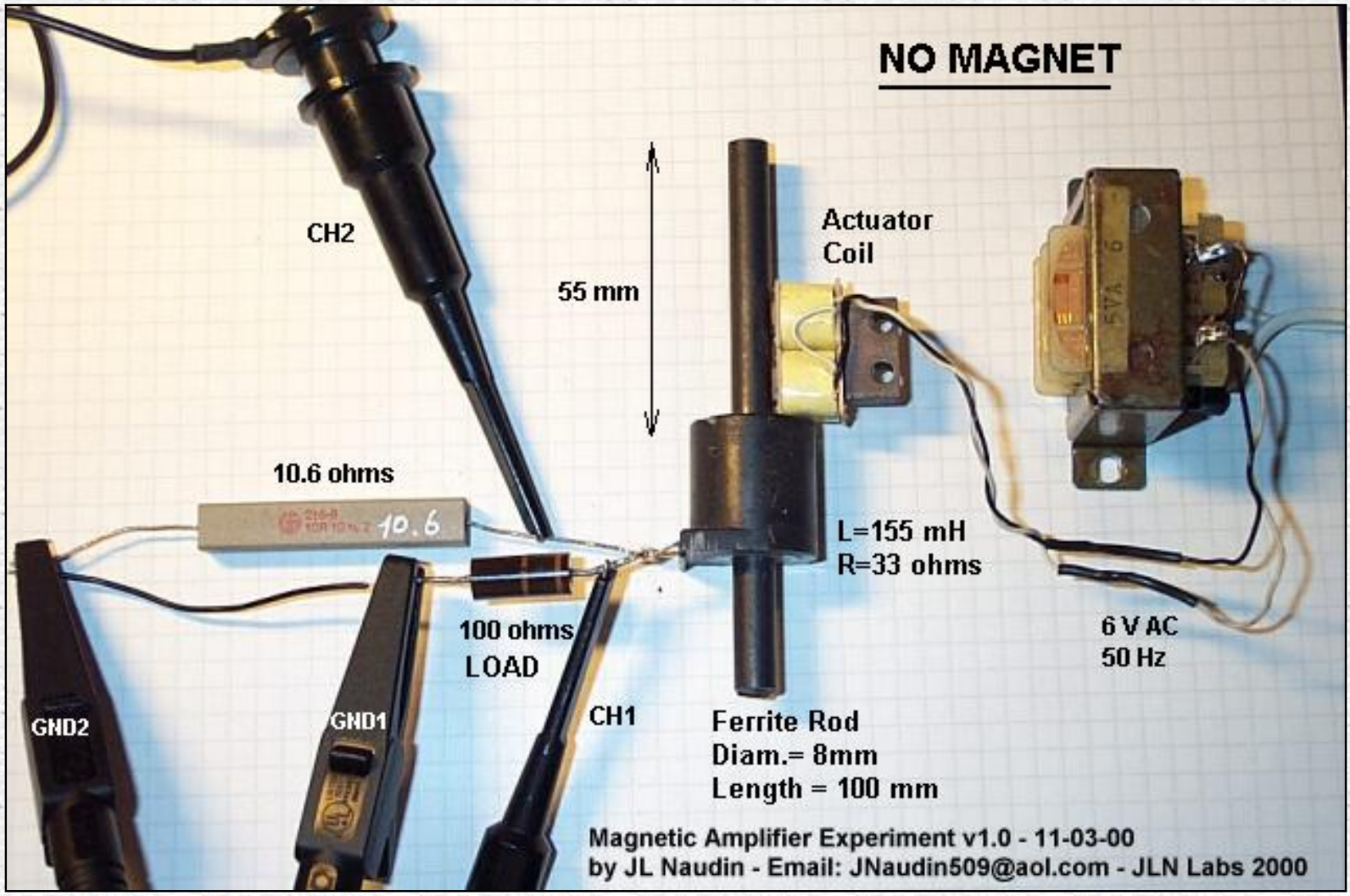

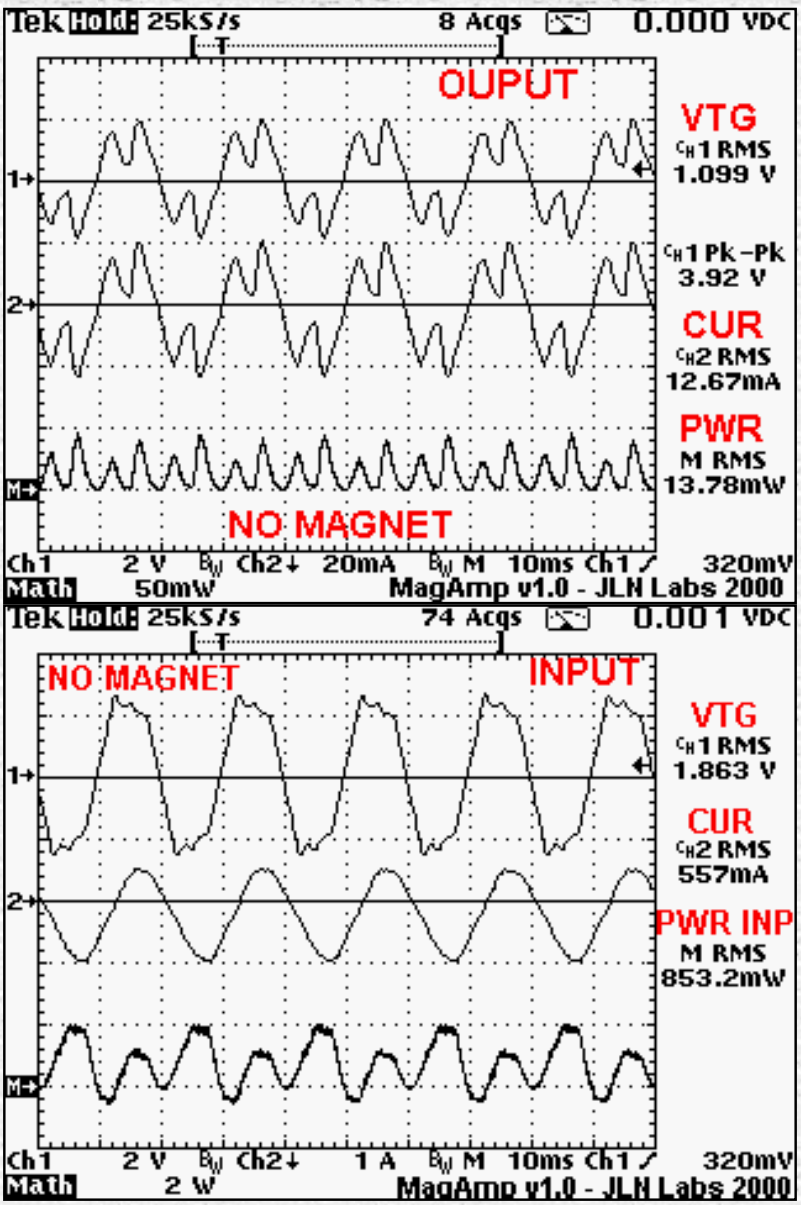

The power OUTPUT on a 100 ohms resistor is 13.78mW without magnet
The power INPUT is 853.2mW without magnet

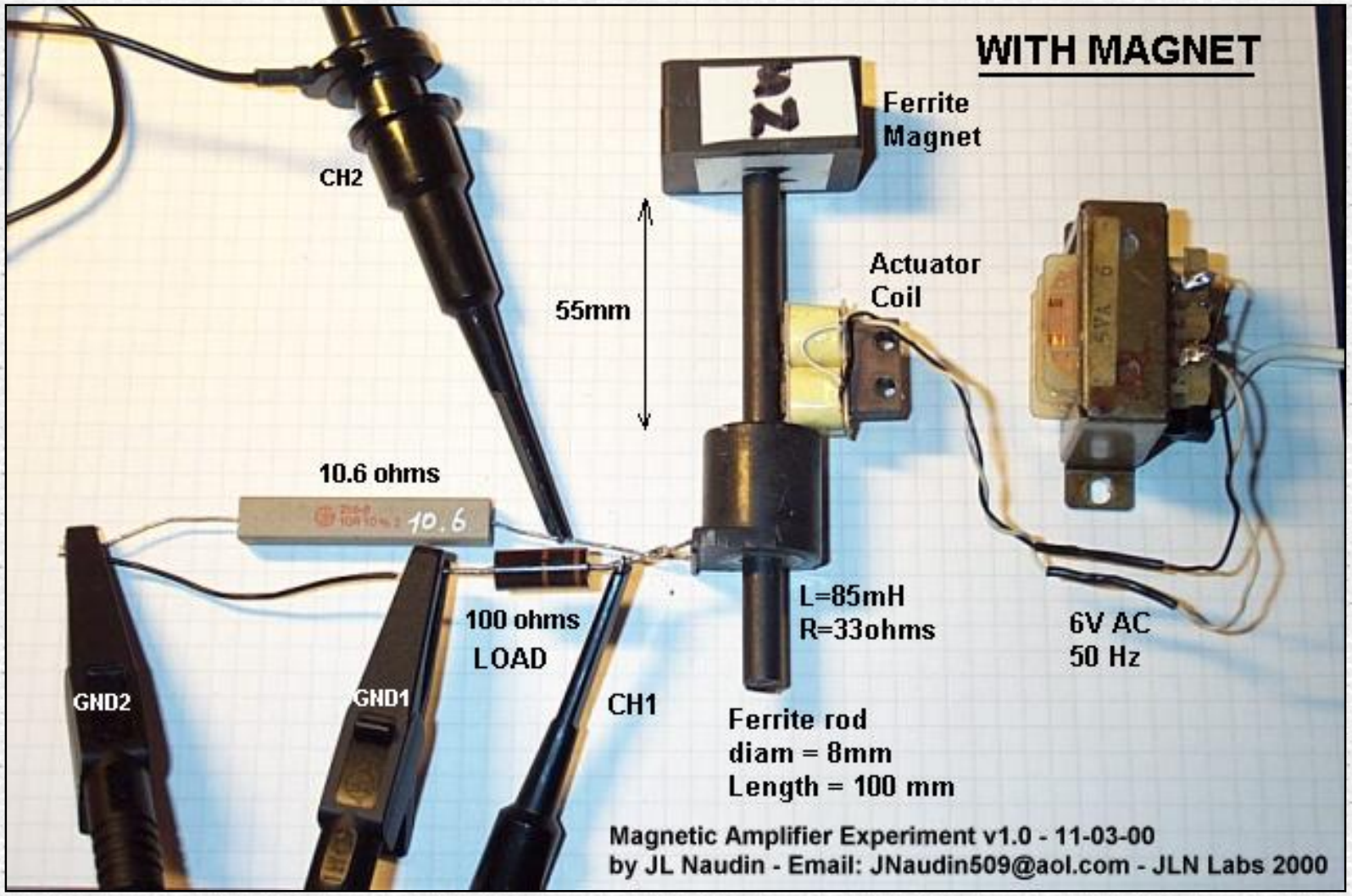
WITH MAGNET
Ferrite
Magnet
CH2
55mm
Actuator
Coil
10.6 ohms
10.6
100 ohms
LOAD
L=85mH
R=33ohms
6V AC
50 Hz
GND2
GND1
CH1
Ferrite rod
diam = 8mm
Length = 100 mm
Magnetic Amplifier Experiment v1.0 - 11-03-00
by JL Naudin - Email: JNaudin509@aol.com - JLN Labs 2000

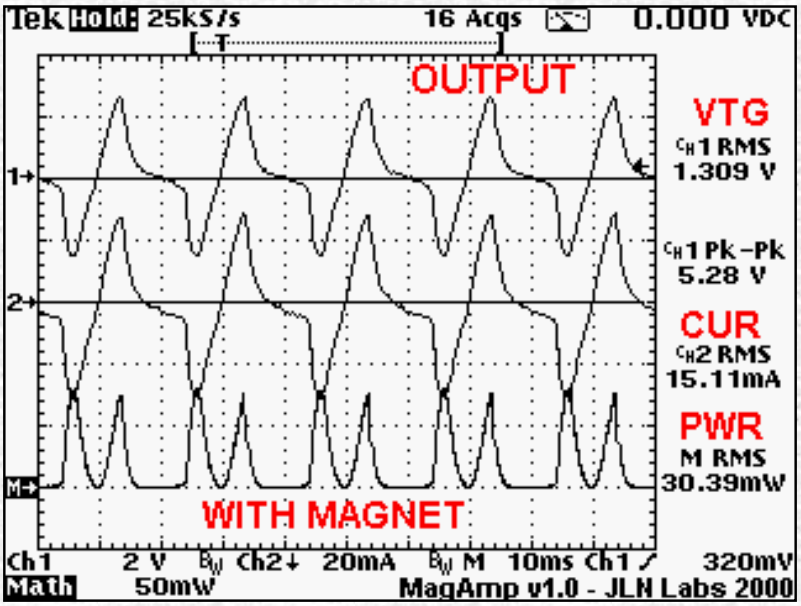
Tek Hold: 25kS/s
16 Acqs
0.000 VDC
OUTPUT
VTG
CH1 RMS
1.309 V
CH1 Pk-Pk
5.28 V
CUR
CH2 RMS
15.11mA
PWR
M RMS
30.39mW
WITH MAGNET
Ch1 2 V BW Ch2 20mA BW M 10ms Ch1 320mV
Math 50mW
MagAmp v1.0 - JLN Labs 2000

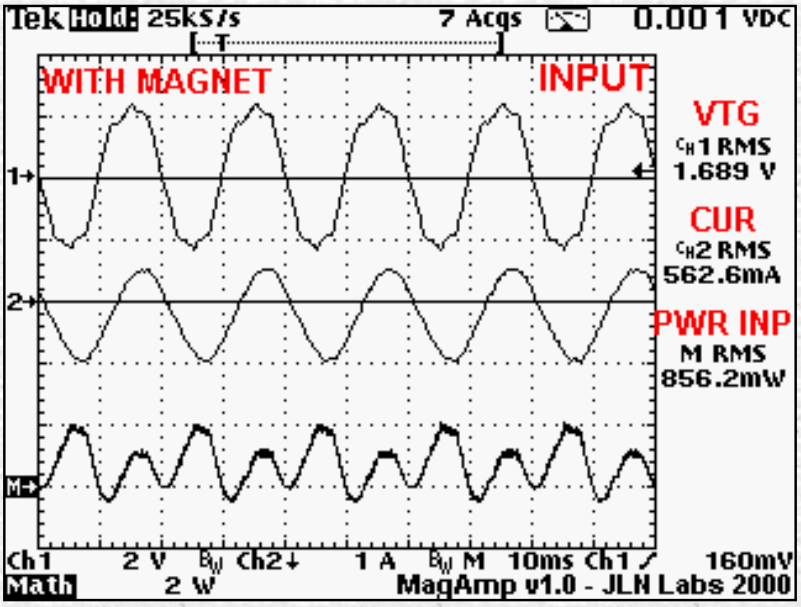

The power output on a 100 ohms resistor is 30.39mW with the magnet
The power INPUT is 856.2mW with the magnet

The power OUTPUT increase of 53.6% while the power INPUT increase of 0.35%
when the magnet is added at one side of the ferrite rod...

There is NO Overunity here, but only some food for thinking...

Return to the MEG project home page

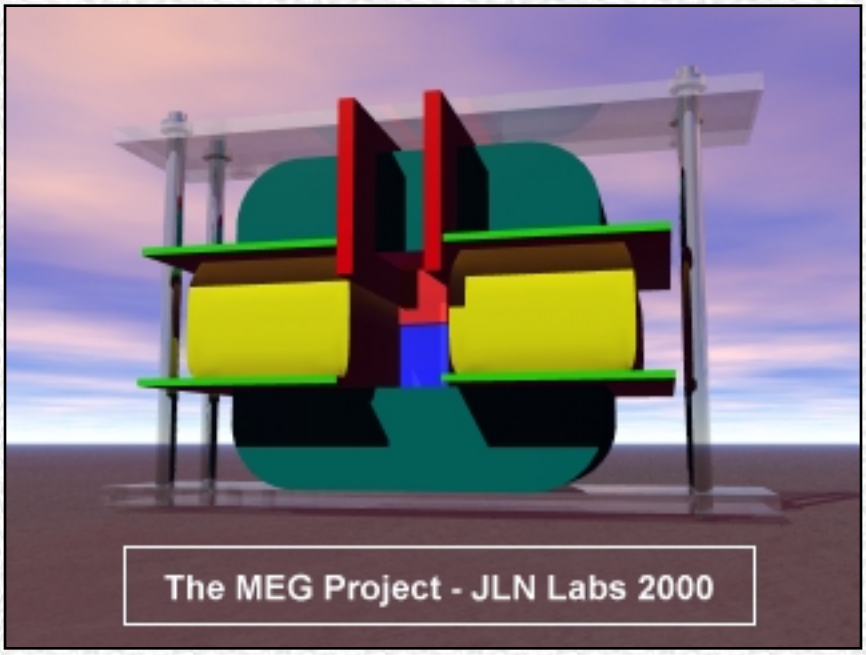

The Worldwide MEG replications

*created on March 28, 2002 - **JLN Labs** - Last update March 29, 2002*

All informations in this page are published free and are intended for private/educational purposes and not for commercial applications

---

- 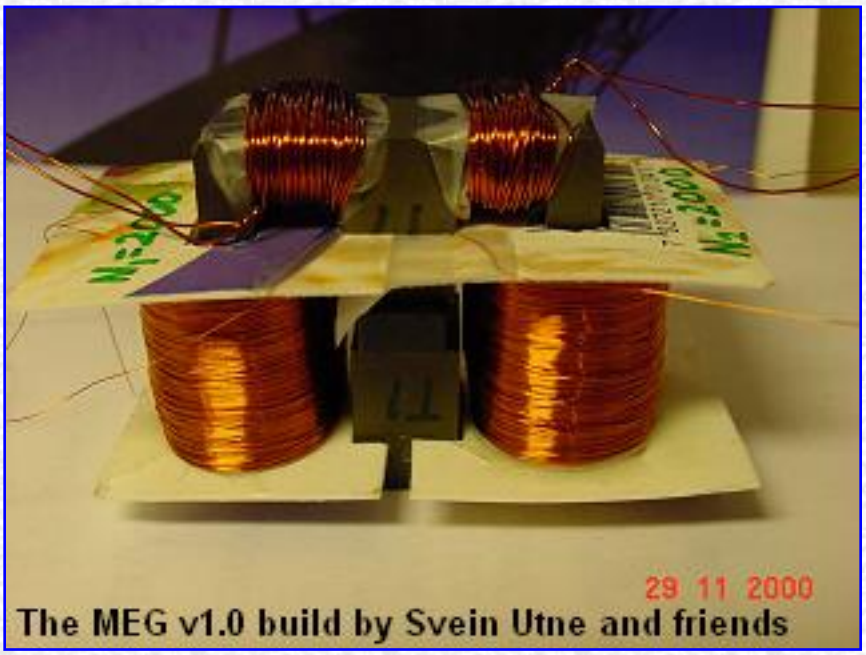

  The MEG v1.0 build by Swein Utne an friends

-

The MEG v1.0 build by Manfred Bauer

-

The MEG v1.0 build by Ben Thomas

Return to the MEG project home page

USPTO Patent Full-Text and Image Database

Searching 1996-2002...

Results of Search in 1996-2002 db for:
6362718: 1 patents.
*Hits **1** through **1** out of **1***

Jump To

Refine Search 6362718

	PAT. NO.	Title
1	6,362,718	Motionless electromagnetic generator

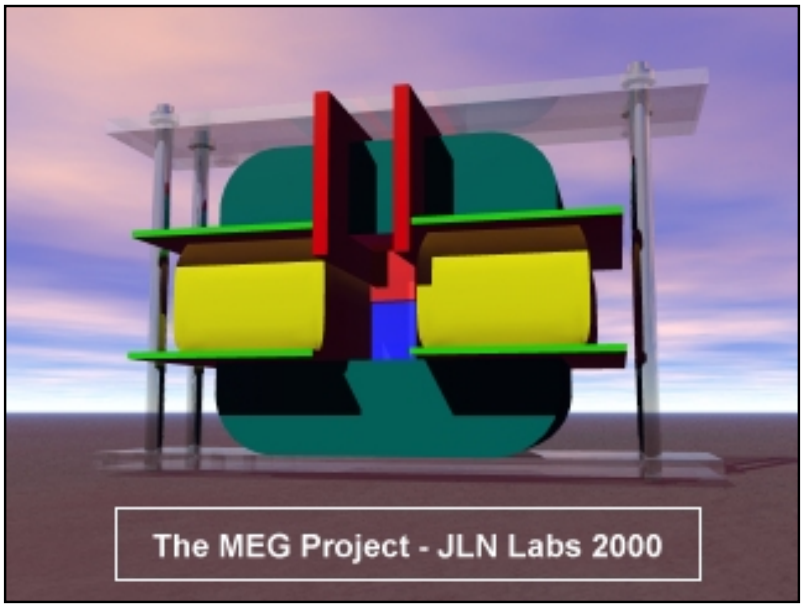

(This artwork is from Jean-Louis Naudin's Web)

The Motionless Electromagnetic Generator Project

The MEG Project

"..This one works beautifully and produces COP=5.0..." say Tom Bearden - (COP=5 is equal to an efficiency of 500%)

The MEG v1.0 build by Svein Utne and friends

Created on 19. November 2000 - Last updated 30. juli 2001

California Institute for Physics and Astrophysics

An Introduction to Zero-Point Energy

Quantum physics predicts the existence of an underlying sea of zero-point energy at every point in the universe. This is different from the cosmic microwave background and is also referred to as the electromagnetic quantum vacuum since it is the lowest state of otherwise empty space. This energy is so enormous that most physicists believe that even though zero-point energy seems to be an inescapable consequence of elementary quantum theory, it cannot be physically real, and so is subtracted away in calculations.

A minority of physicists accept it as real energy which we cannot directly sense since it is the same everywhere, even inside our bodies and measuring devices. From this perspective, the ordinary world of matter and energy is like a foam atop the quantum vacuum sea. It does not matter to a ship how deep the ocean is below it. If the zero-point energy is real, there is the possibility that it can be tapped as a source of power or be harnassed to generate a propulsive force for space travel.

Casimir Effects and the Quantum Vacuum Energy

There is growing interest in the nature of, and possibly even the manipulation of, the quantum vacuum. The vacuum stress predicted by Casimir in 1948 between conducting plates due to modification of the electromagnetic zero-point fluctuations has been confirmed by experiments. Agreement with theory at the five percent level has been obtained in a micron-range cavity (Lamoreaux, Phy. Rev. Lett., 78, 5, 1997; see also Lamoreaux, 1999). Thermodynamic analysis has also shown that it is apparently possible, in principle, to extract energy from the quantum vacuum. More specifically, no violation of thermodynamics appears to result from such a process involving the ZPF. Although numerous unsubstantiated claims of ZPF energy tapping gadgets may be found on the internet, no one has yet devised any radically new means to extract such energy on a practical scale. Only a very minute and impractical level may be achieved using Casimir plates (which is nonetheless important as a proof of principle; see for example the article ``Extracting electrical energy from the vacuum by cohesion of charged foliated conductors" by Robert Forward, Phys. Rev. B, Vol. 30, 1700, 1984; for more recent theoretical analyses see Cole, 1999, Amer. Inst. Physics Conf. Proc. No. 458, 960, 1999 and Cole & Puthoff, Phys. Rev. E, 48, 1562, 1993).

Fran De Aquino:**Superparticles from the Initial Universe and deduction of the Fine Structure Constant and Uncertainty Principle directly from the Gravitation Theory**. **(updated 30-03-01)**

Fran De Aquino - Physics Department, Maranhao State University,
S.Luis/MA,Brazil.

All information's in this page are published free and are intended for private/educational purposes and not for commercial applications

The MEG diagrams published in these pages are currently under test by JL Naudin and soon also by Svein Utne and may be subject to modifications after that they have been published on this site. They are the result of some attempts of a private and fully independent replication by the author. These diagrams are not the original MEG diagrams being tested by the Bearden's teamwork or some accredited labs.

Disclaimer: The author assumes no liability for any incidental, consequential or other liability from the use of this information. All risks and damages, incidental or otherwise, arising from the use or misuse of the information contained herein are entirely the responsibility of the user. Although careful precaution has been taken in the preparation of this material, I assume no responsibility for omissions or errors in the diagrams or measurement data published here.

Tom Bearden made shockwaves when he published his MEG in October 2000. The result was so unbelievable, that it was difficult to take it serious. Then JL Naudin tried to duplicate the result, and in the beginning of November Naudin started to get results that could be over unity. That is more power getting out then what is put

in to the system.

On 17. November, Naudin got results that showed 29 Watt out from less then 4 Watt in. The public interest was so over whelming that Naudin was drowning in emails and all sorts of questions, so he had to stop his open posting of his results, and also reduce his email activity. Now his latest results are restricted to only people that is taking an active part in MEG testing, and can share results from their own experiments.

With close contacts with people at SINTEF and The University of Trondheim we hope to be able to duplicate the results of Tom Bearden and JL Naudin, and we will share the result with you as the project develop.

One of the problem at the moment is to be sure there is no error in the measurements of power going in to the MEG and of that coming out. The input is DC between 10-30 Volt, so it should be possible to measure with high accuracy. The output is AC at high voltage of 500 till 1500 Volt (depending on input). At the moment there are still room for some error in this measurements, so it is inconclusive until some better test has been made.

Some researchers that we have contacted (that would like to be anonymous at present time) after more close study of the work done and published by Naudin is starting to believe Naudin is really getting over unity.

The final proof will be when there will be a closed loop. So the MEG is powered by its own output power, and still got some extra power. We are all waiting for Naudin to make this final step very soon.

We have sent Naudin some examples on how the step-down transformer can be built

You may look at it here: Page1 Page 2 Page 3 and Page 4 (about 80KB)

Can you find the error on page 4?

The MEG we are building in Trondheim has the following characteristics:

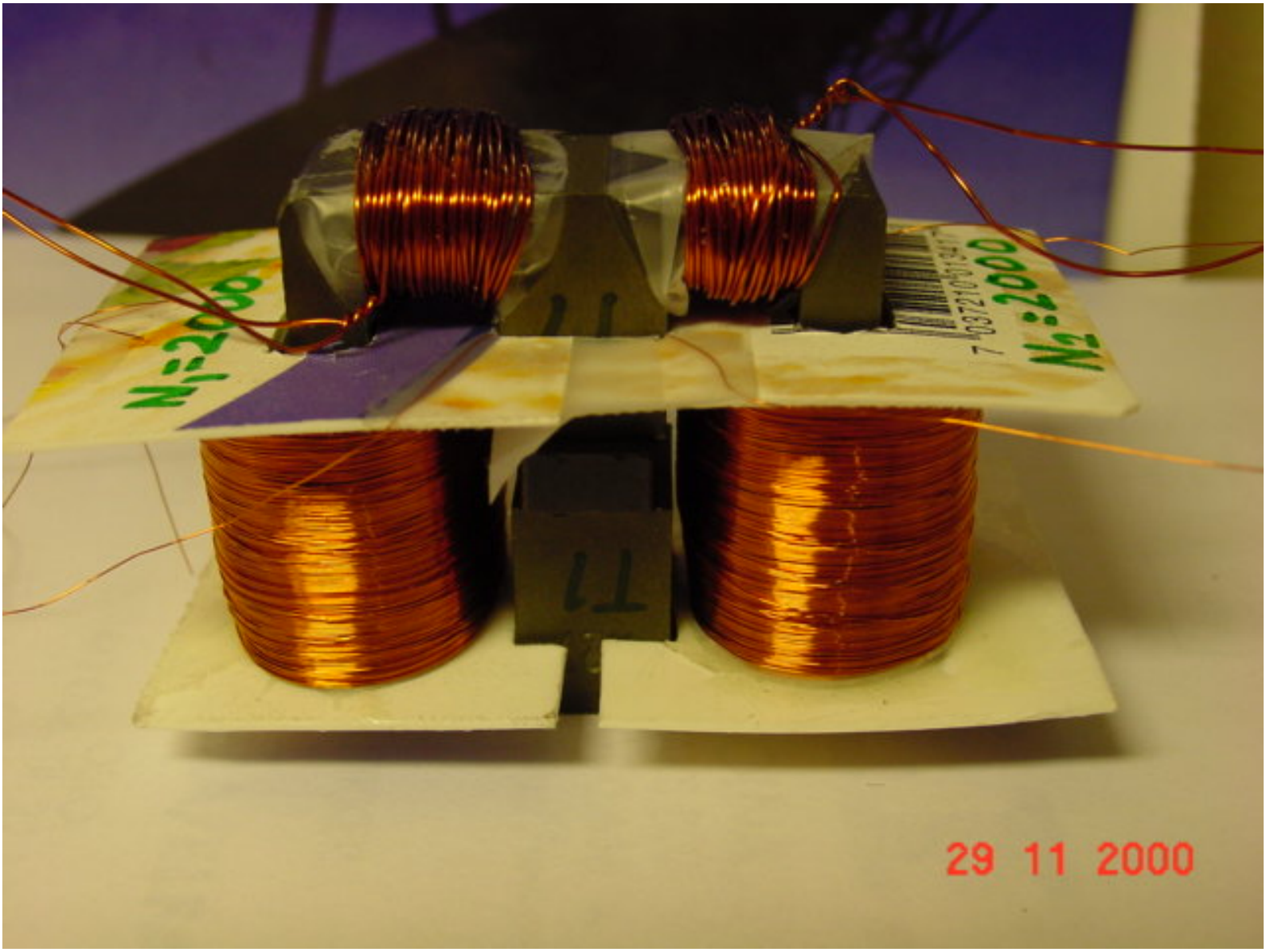

If you want to look at some pictures of the MEG parts before assemble

Primary coils 50 turns and the secondary coils 2000 turns

N2/N1 = 2000/50 = 40 The secondary coils wire is reduce to size 0.15mm to get more turns.

Now we have to make the electronics. I hope it will be done this weekend.

Rp=Primary resistance Rs=Secondary resistance

DC resistance [ohm]:
Rp1=0.3 Rp2=0.3
Rs1=130 Rs2=133

We started testing 3. December, and have already more then 90% efficiency.

We have already broken two transistors. Let it be a warning to others. We have up to 60Volt coming back in the primary coils. In the pictures below you will see some results with one transistor broken.

On the next picture you will see this back current that oscillate and die out. We are using only 50 turns in the primary coils. If we will make an other I think we will use 200 in the primary coil, to see if this (green line) will be more nice.

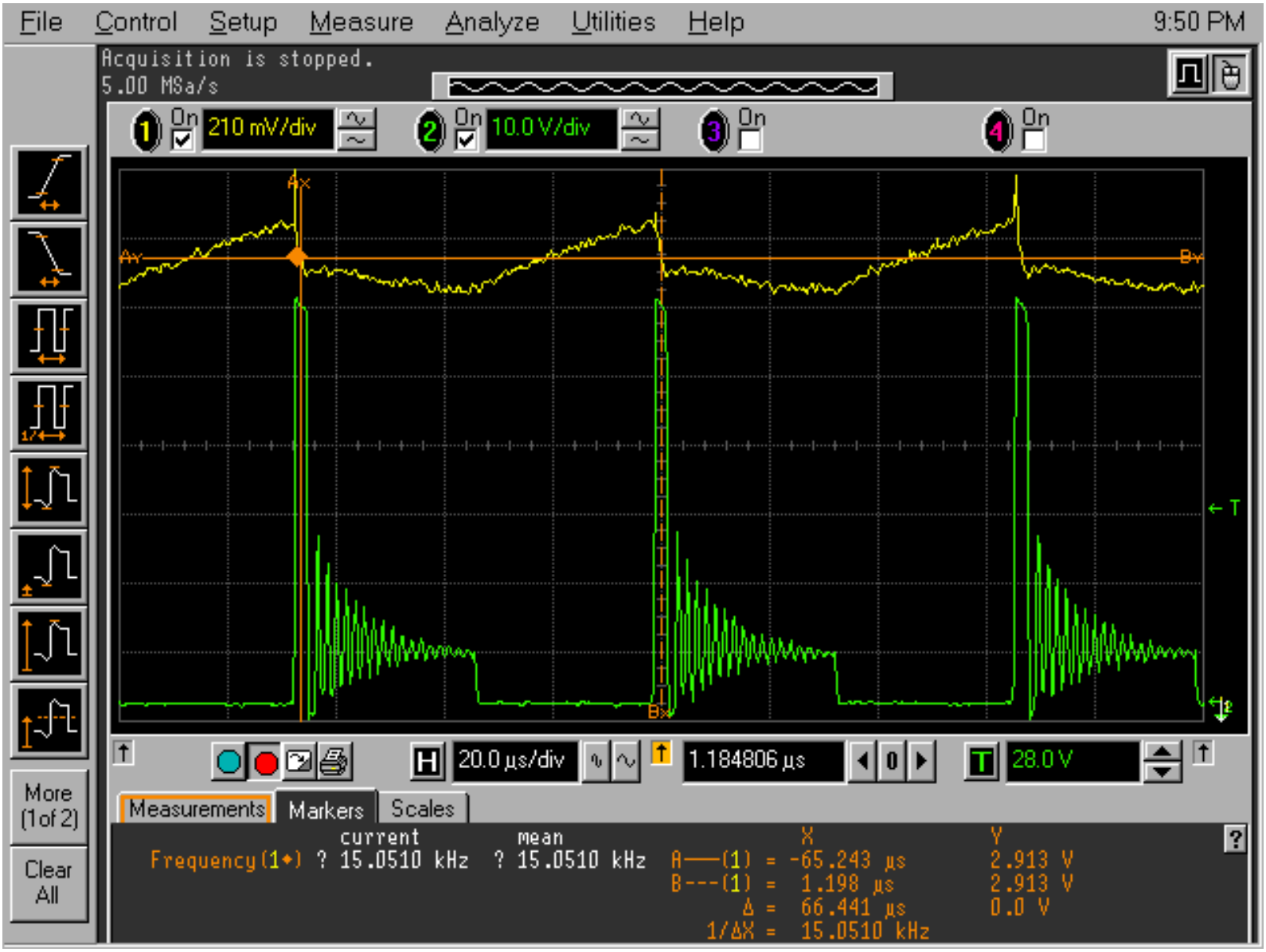

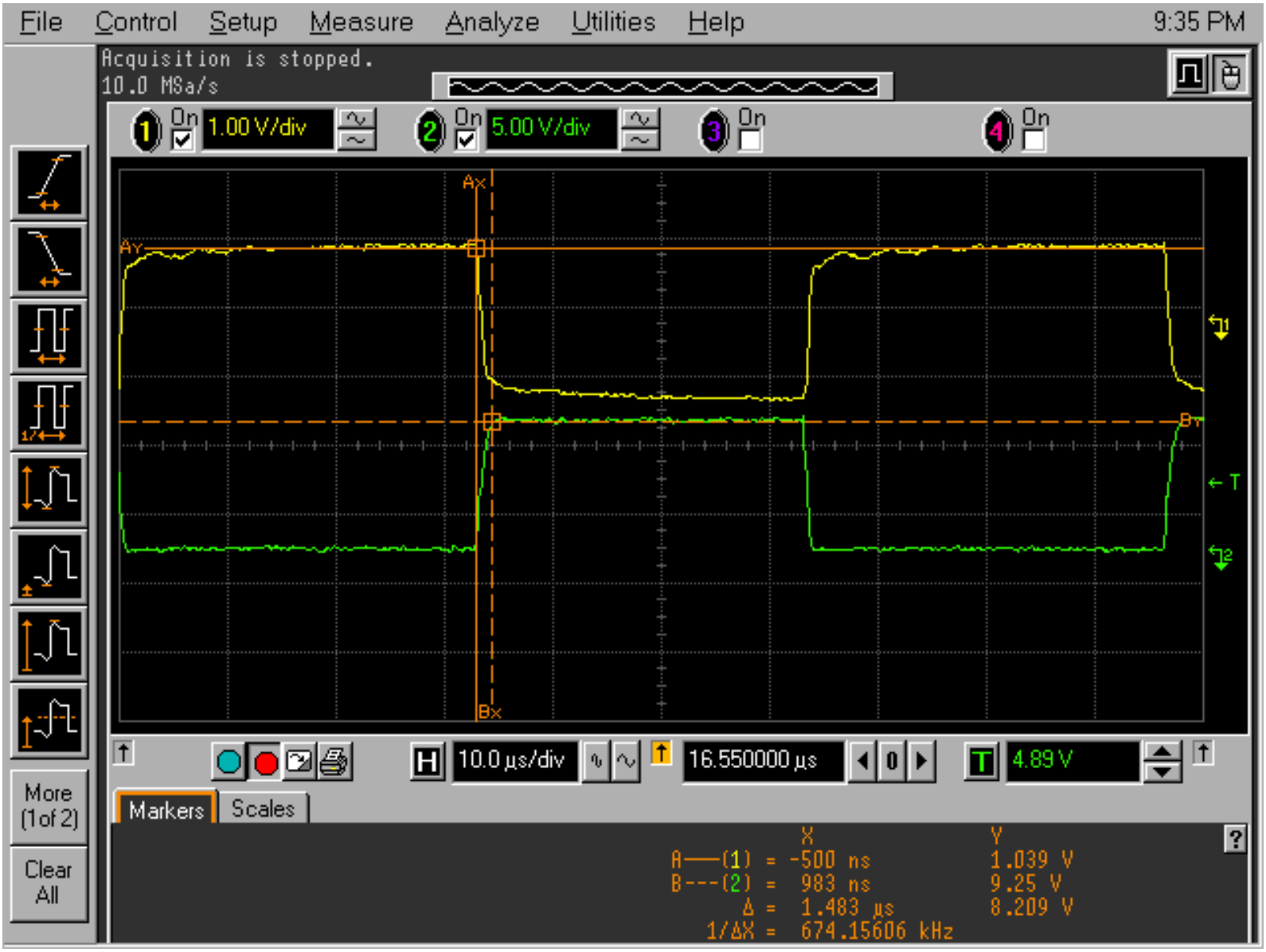
File Control Setup Measure Analyze Utilities Help 9:35 PM
Acquisition is stopped.
10.0 MSa/s
1 On 1.00 V/div
2 On 5.00 V/div
3 On
4 On
Ax
Ay
Bx
By
H 10.0 µs/div
16.550000 µs
0
T 4.89 V
More (1of 2)
Clear All
Markers
Scales
X Y
A——(1) = -500 ns 1.039 V
B---(2) = 983 ns 9.25 V
Δ = 1.483 µs 8.209 V
1/ΔX = 674.15606 kHz

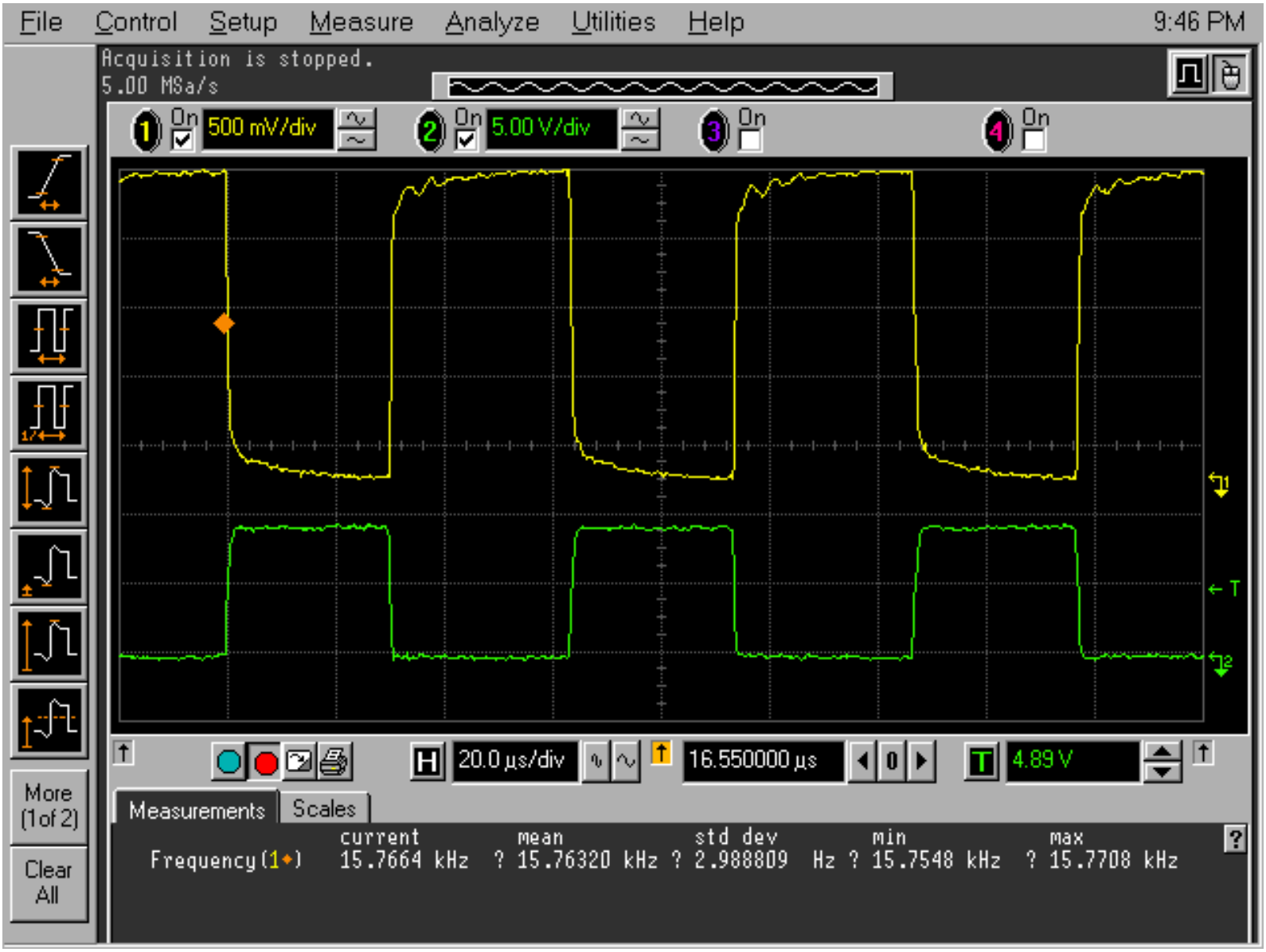

- Core and magnet information
- Some tips on how to wind the secondary coils to avoid sparking

---

Interesting papers and documents about the project **:**

You may download the MEG document at : http://www.ott.doe.gov/pdfs/MEGpaper.pdf

Note (10-26-00) : The MEG Paper has been removed from the DoE site, but you may download it :

- http://www.cseti.org/bearden/MEGpaper.pdf

Note (11-21-00) : The MEG Paper has been removed from the Cseti web site, but you may also

download it at :

- **The Motionless Electromagnetic Generator: Extracting Energy from a Permanent Magnet with Energy-Replenishing from the Active Vacuum,** *a PDF document (69 pages 1,29 MB), explanations and test results by T.E. Bearden (* **Alternate site** *)*

If you don't have the Adobe Acrobat reader you may download it freely at :

- **Giant Negentropy from the Common Dipole** *By T. E. Bearden (PDF Format 86 KB)*
- **On Extracting Electromagnetic Energy from the Vacuum** *By T. E. Bearden (PDF Format 160 KB)*
- **Thoughts about the MEG principle (part1)** ***by Cyril Smith***
- **Thoughts about the MEG principle (part 2)** ***by Cyril Smith***
- **The MEG, Why its works, The simple explanation...** ***by Dave Squires***
- 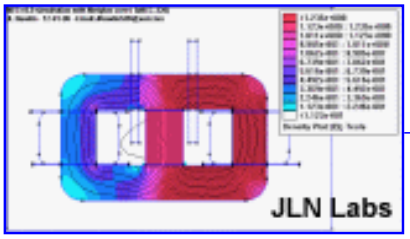

MEG : See an animation with a simulated model
- **The Magnetic Transistor Theory** ***by Dave Squires***
- **The Magnetic Amplifier Experiment v1.0** *by J-L Naudin*
- **QuickField Flux Density Simulation Animation of the MEG** *(25. November)*
- **The MEG v3.1 with 9Watts light bulb**
- ***The MEG v4.0 made by Naudin with the Cross-Flux magnetic gates setup*** (8. December)
- **The Sweet's Vacuum Triode Amplifier**

Mag Resonance of Elements at certain B

Some interesting info about resonant frequency of elements
at a certain magnetic field strength.

http://bmrl.med.uiuc.edu:8080/periodic/

http://bmrl.med.uiuc.edu:8080/MRITable/

http://bmrl.med.uiuc.edu:8080/MRITable/nmrcalc.html

Links to some other devices that might extract energy from the vacuum

Some technical infos *:*

Fe-based Nanocrystalline Toroidal Core for Current Transformers :
Characteristics: Nanocrystalline alloy has similar features of high initial permeability and temperature stability, less gravity and packing factor than that of Permalloy. Under the same conditions of core size and performance, it is lighter (about 1/3 lighter) and cheaper than that of Permalloy.

Nanocrystalline Magnetic Core :
Characteristics: High saturation magnetic induction (1.25T), high permeability, high inductance (ten times higher than that of ferrite), low loss, small volume, light in weight, high electric interference resistance, good frequency performance and high temperature stability.

For more infos about the Nanocrystalline material see :

- **NANOCRYSTALLINE SOFT MAGNETIC ALLOYS FOR APPLICATION IN ELECTRICAL AND ELECTRONIC DEVICES by V.R. Ramanan ABB-Electric Systems Technology Institute**

Nanocrystalline magnetic material suppliers :

- **BFiOTiLAS : Magnetics Components: Softcores material**
- **MAGNETEC :** Tape wound core based on the new nanocrystalline softmagnetic material called **NANOPERM**

Interesting patents to explore which have some similarities or interesting characteristics :

MEG Project status (by JLN on 12-06-00) :

You will find below the only facts about my MEG units that I am able to say today :

- The Output (V/I) signals are really measured by the scope and this has also been checked by various methods (analog and digital scopes and multimeters), but unfortunately measurement artifacts remain possible,
- the voltage and current are in phase as shown in my scope pictures above,
- a "conditionned" RLoad (100 Kohms, non inductive carbon, 5Watts) is REQUIRED for getting the output datas measured above,
- the working frequency and the output voltage must be high (about 20kHz and >1KV peak-to-peak loaded) ,
- the working frequency must be tuned so as to get a pure sine wave and the max amplitude at the output (>1KV peak-to-peak loaded),
- the switching signal is a squared pulse at 50% DTC,
- the two primary coils must be switched alternatively (see the MEG animated simulation).
- I have used ferrite magnets and an interesting effect that I have observed is :
when the magnet is added and with actuators coils set in the cross-flux magnetic gates configuration, the output signal increases significantly,
- the Rload warms up quikly when the MEG is switched on,
- in most of cases the "apparent" power measured seems greater than the heat dissipated by Joule's effect in the RLoad,
most of the power is radiated in EM form :
* With an electronic Teslameter, I have measured 2.8 milli-Tesla (at 16KHz) with the probe very close to the RLoad,
* With an E-Field Strength meter in AC mode, the E-Field = 1250 V/m at 50 cm far from the RLoad,
* With a gamma counter : No gamma radiation has yet been detected
So be carefull if you work close to the MEG transformer because of the strong EM generated.

Not yet checked :
- core saturation effect by the magnet,
- flipping of the hysteresis curves by the actuator coils,
- calorimetric output measurements on the RLoad Vs the Input but in the most of case the "apparent" power measured seems greater than the heat dissipated by Joule's effect in the RLoad and this makes me pessimistic about the calorimetric tests results.

Conclusion (on 12-06-00) :
My MEG replication seems to be really close to the original device presented in the Bearden's MEG paper and I think that I have been able to replicate and measure the same signals at the Input/Output of the device. I have not used the original electronic and core diagrams from the Bearden's teamwork (because I don't have them..), so may be there are some important differences between the setups. The purpose of this project seems to be achieved : the replication of the MEG signals measured at its output is in line with the original papers and the inventors claims.

Now, the BEST verification to do is to convert the "apparent" power measured in useable power such as : light, heat, mechanical energy (in motors).... and also, of course, to close the loop... This has not yet been done today.

A New Magnetic-Electric Device Can Power Home From Near Free Energy Source

THE POWER SOURCE OF THE FUTURE

ENERGY-EFFICIENT ELECTRICAL POWER ANYWHERE IN THE WORLD...

The Speed of Gravity - What the Experiments Say

There is no gravitational *pull* . . . only a *push*!

The popular belief is that neutrinos pass through matter without affecting it, but is there a way we might be able to take some of the energy in neutrinos, and converting it back to electricity?

This might also be of interest:

- JLN Labs - Jean-Louis Naudin
- LaFonte Research Group
- Electrogravity
- The Fran De Aquino Website
- The System-G from Fran De Aquino
- Engineering The Warp Drive
- The Self Accelerating Plasma Tube or (SAP Tube) by Stefan Marinov
- **Professor Stefan Marinov**: Famous Free Energy researcher (photo & "A Test of Marinov's Electrodynamics")
- Thestatica Machine go to PROTOTYPES
- Thestatica Machine **ORIGINAL PHOTOS (takes a long time to load)**
- Free Energy page with pictures of Finsrud's perpetual 'sculpture'
- Searl Effect Generator (SEG)
- Links related to Energy
- List of URLs
- Nucleon
- California Institute for Physics and Astrophysics
- The Disclosure Project

Reset July 30

Motionless Electromagnetic Generator

Send me an email at mbauer@execpc.com Last update 12/30/00

QUICK LINKS:

Back to my home page...

MEG replication efforts by JLNlabs

MEG relication efforts by Svein Utne

12/7/00

The core material I am using for my replication is a ferrite from FROST.
ATC-FROST choke cores

The cross sectional area is approximately 1 inch by 1 1/8 inches.

The magnet is a stack of rare earth grade 27 NIB magnets from Edmund Scientific.
Edmund Scientific

Many different primary and secondary windings have been wound with various turn ratios. Experiments have been performed using different combinations of windings, magnet orientations, load resistances, drive pulse timing and frequency, and drive voltage. Waveforms are monitored with several Tektronix oscilloscopes. Input power is monitored with digital volt/ammeters.
Photo of experimental breadboard

The control board is a close copy of the control circuit offered by J Naudin on his website. Several changes were incorporated for variable dead time control and different Mosfet driver transistors. Components are available from Digikey.com More circuit changes are forthcoming to fix the exponential decay of the drive voltage at the input of the Mosfet drivers. Currently, the TL494 PWM generator chip is not configured for active pulldown of the gate input of the Mosfet. With a Ciss of 1800 pf for the IRL540 Mosfets, and a pull down resistance of 1Kohm, a delay of several microseconds occurs between the PWM pulse turnoff and the Mosfet turnoff. By using the variable dead time control of the PWM chip, correct pulse width can be obtained, but that is only a temporary fix.
Schematic of original control board

The optimum configuration I have been able to obtain is 1200 Vpp output across a 100 Kohm resistive load. The output voltage is a pure sine wave. The primary is 100 turns, and a single secondary of 500 turns. Power supply input is 25.0 Vdc @ 130 Ma., not including the control board power. Operating frequency is 55 Khz, with minimum dead time control. *This is without magnets in the core.*

Power input is 3.25 watts. Output power is calculated at 1.80 watts. Efficiency is therefore 55%. No overunity seen yet.

Yes, an unloaded secondary produces several thousand volts and arcs over in the windings. This has been verified.

When magnets are added, slightly higher output voltage is obtained in one orientation, and slightly less output in the other orientation. Still no overunity seen. Efficiency still below 100%.

Price quotes for Metglas cores used by several replication efforts can be found at Eastern Components. The latest prices quoted for the AMCC-320 Honeywell metglas core is $162.00 US. The AMCC-125 core is $87.25 US. Single quantity, shipping extra. Off the shelf cores.
Eastern components

I will utilize the present ferrite cores I have to explore the theories proposed, and to develop procedures for constructing a newer version.

12/9/00

New information from J Naudin about cross flux switching of the permanent magnet.
Cross flux switching from JLNlabs

I am in the process of changing my design to incorporate the cross flux primary switch. I will try using a silicon steel transformer core as a starting point. The core was cut on a milling machine to fit across the ferrite core I am using. I'll try various winding configurations to optimize the performance.

12/12/00

I used a high speed cutoff wheel to cut the silicon steel core to the rough shape to fit over the ferrite core I am using. Brass hardware is used to hold the stack of plates together for finishing. Then, using a bench grinder, I was able to slowly widen the gap to fit snugly over the ferrite core. Here, I am using a scrap piece of ferrite as a width gauge during final grinding.

In this picture, here's how the bare cross flux cores fit over the ferrite cores. Note, the ferrite is very brittle and corners break off easily. These ferrite cores are only being used for show.

As a starting point for testing, I am using 250 turns of #22 gauge wire on each cross flux primary. This secondary coil only has 500 turns. Future experiments will use one of my other secondaries previously wound with more turns from other test runs.

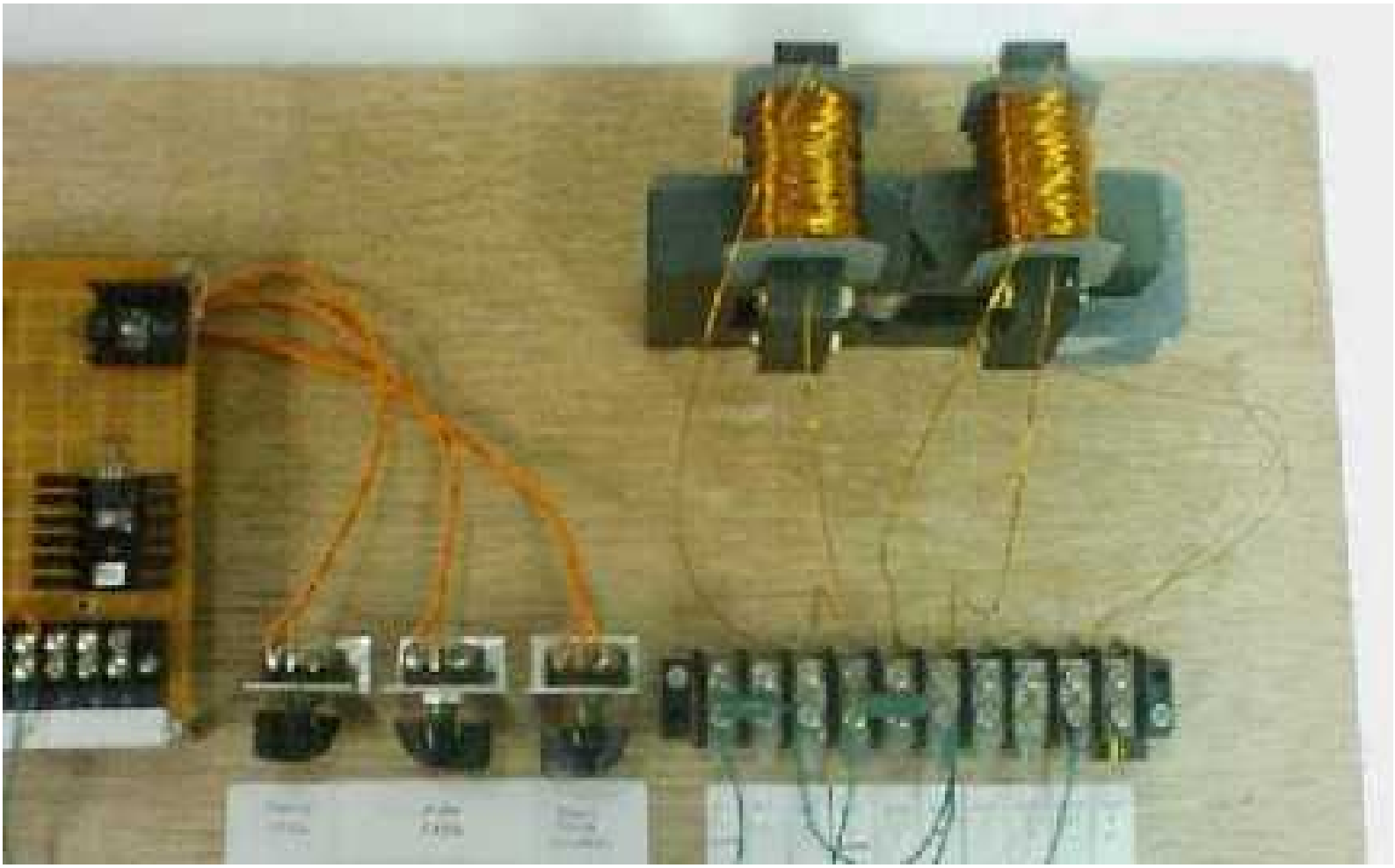

12/16/00

The cross flux principle seems to be a dead end for me at the moment. I did prove that the cross flux method almost got rid of the inductive coupling between primary and secondary windings. Secondary output was reduced from 1200 Vpp to 20 Vpp due to reduced coupling. The output didn't change with the magnet in the core or when it was out. So no permanent magnet flux switching occurred. It may be a problem with the core material being incorrect. I am resuming experimentation with the normal primary winding configuration, and try to get magnet flux switching to occur there.

12/19/00

The control board has had some improvements made. A transistor circuit to drive the mosfets has been added for better control of mosfet turnoff time. Additional noise suppression has been added to reduce measurement errors. Larger diameter wires in the interconnect harness were added to reduce resistance and switching losses.

The actual MEG unit itself fails to produce positive results due to lack of magnet flux switching. The magnet stack I use is the same diameter as the core material. (1 inch) Part of the permanent magnet flux seems to short circuit through the air rather than taking the long path through the core material. I will explore using a triple wide core (3 inch wide), with a 1 inch diameter magnet stack. This is to increase the core area to reduce the possibility of localized saturation. New primary and secondary coils will be needed.
Updated MEG control board schematic

12/23/00

A triple wide core of the same ferrite material is used with new windings. A secondary of 500 turns of #24 is used, with dual primaries of 100/150/200/250 turns. Multiple taps were used for trying different amp/turn investigations. Initial test without magnets, 25 vdc at 24 ma, gives 500 Vpp output into 100 Kohm. Optimum operating frequency is 50 Khz.

Here are a few pictures of the wider ferrite core and dual primary windings.

meg

MEG Version 1.0

By

Ben Thomas

L3-L4 Laminectomy mid April, bitch, starting to get back on feet. I will get back to the PP amplifier as soon as I can work in my shop. Hang Loose

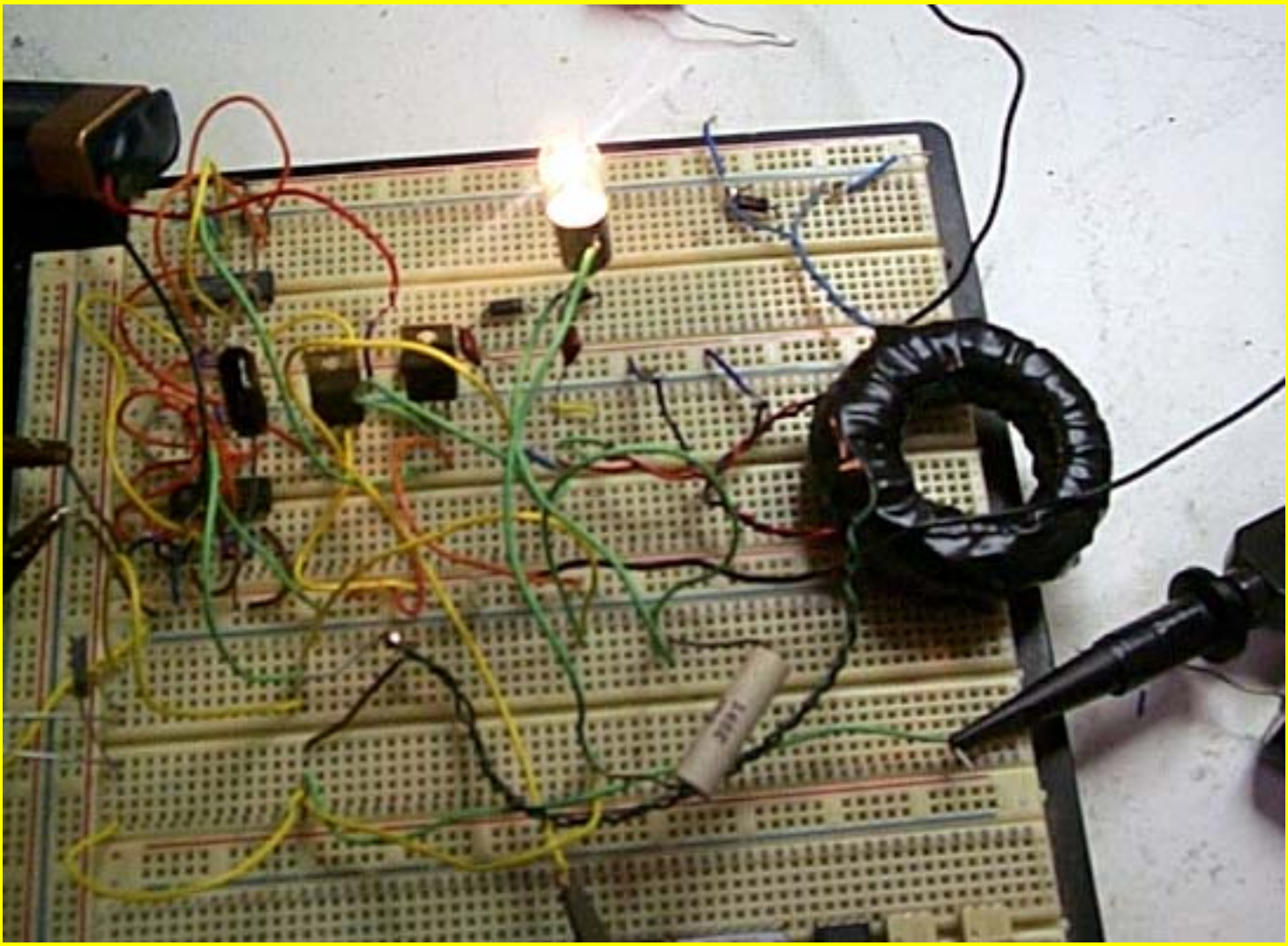

Whats next! Parallel Path pictures tonight. 04-04-02

Results up to now 3-31-02

The Coil

Test Rig and Results so far!

The "Over Efficient" Amplifier? Inside the MEG

Graphs, More Coming

MEG Version 2.0 Using Ferrite, Coil constrution, Bobbin, etc.

What's Next?

By

Ben Thomas

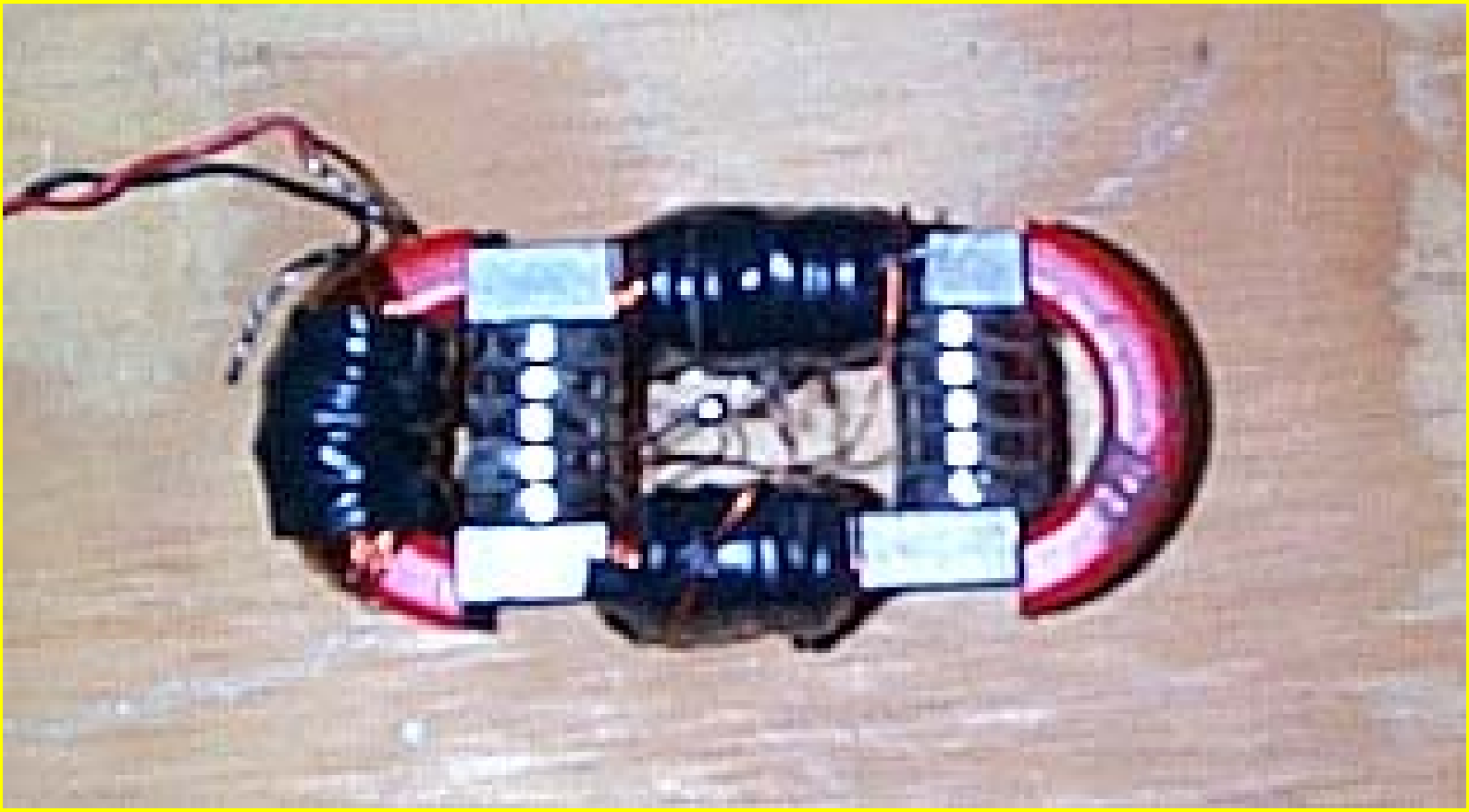

This is what I'll be working with next week. I'm not sure you can get gain in an active system (AC.) The fields in the magnets fight the fields in the electromagnets and reduce the gain to <1 no matter what you do. I must do some more tests to be sure but that is the first indication that I got from the first several test. I'll make no claims or until I can document what I say. Hang with me till I know for sure. I hope I'm wrong.

It's still fun

Ben K4ZEP

Power in vs. Power out

You make the call.

MEG V 1.0 is NOT Over Efficient in any conditions up to 10VDC. I suffer from the same problem most experimenters do in that they do NOT think out their instrumentation and properly document the results. Math will eat you up, poor memory is almost as bad. Couldn't sleep last night and re-thought out what was going on. Made the measurements and this is the result. I forgot how to do a PP to rms conversion and my "over efficient" enthusium took over. YOU MAKE THE CALL. Arrrghhhhh.

Information:

All AC measurements were made on calibrated scope. Load resistor is a 5-watt precision film 100-ohm resistor. Frequency of device is 113 kHz. Lamp is 6 VDC 150 Ma.

Formulas used:

DC watts. P=EI, DC power from the supply using the voltage and the current as indicated.

AC watts- P=AC=1/2 PP X.707= equivalent DC volts = P=E X E/R (E squared/R)

If you have 10V PP, it is equal to 3.53 Volts DC in a power equation.

Or 3.53 Volts DC will put the same heating power into a 100-ohm resistor as 10V PP AC.

Not shown is the loss in the core. Measured current without load and off resonance was linear as expected and could be lowered using a better core. At 10 VDC, the power into the core was

100 ma or about 1 Watt.

First comes the graph that you make your own decision about. The second picture is the scope of the device with the AC power into the 100-ohm resistor. The third picture is the device driving a LAMP. Calculated power shows this device is

only about 40% efficient driving that type of load. I might run a graph on it later but its problem is that it is NON linear in it's response to a linear AC waveform so it would appear to distort the indicated power calculations. A graph will be helpful to see what is going on in a lamp. I'll post it later if it is applicable to this discussion. The brilliance of the lamp, referenced to a similar DC situation would indicate more out than in but looks are a lousy way to make a living.

Note also I am only running this device up to 10 volts at this time due to lack of good heat sinks on the power FET's. Oh yes, Purple is AC power, Black is DC power.

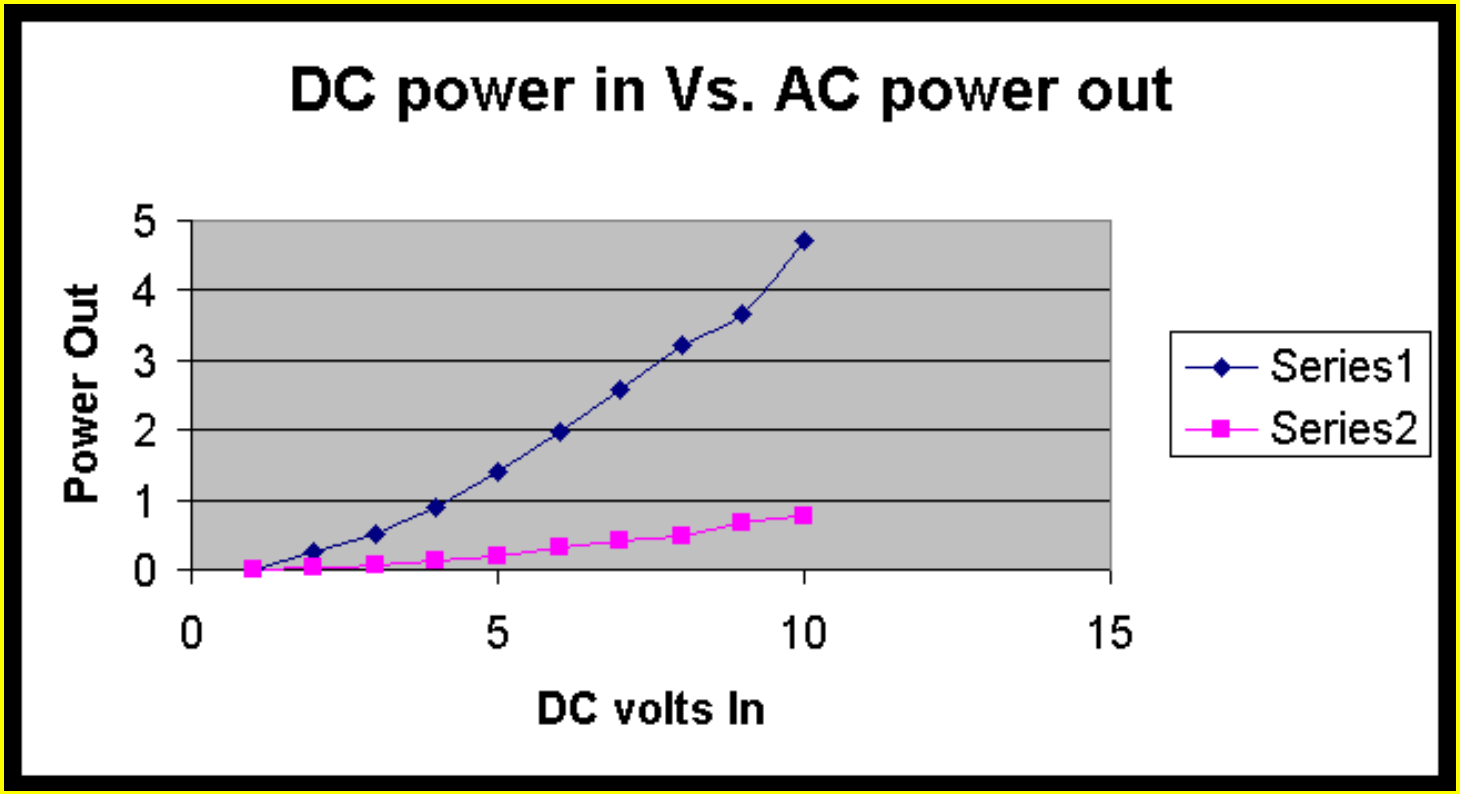

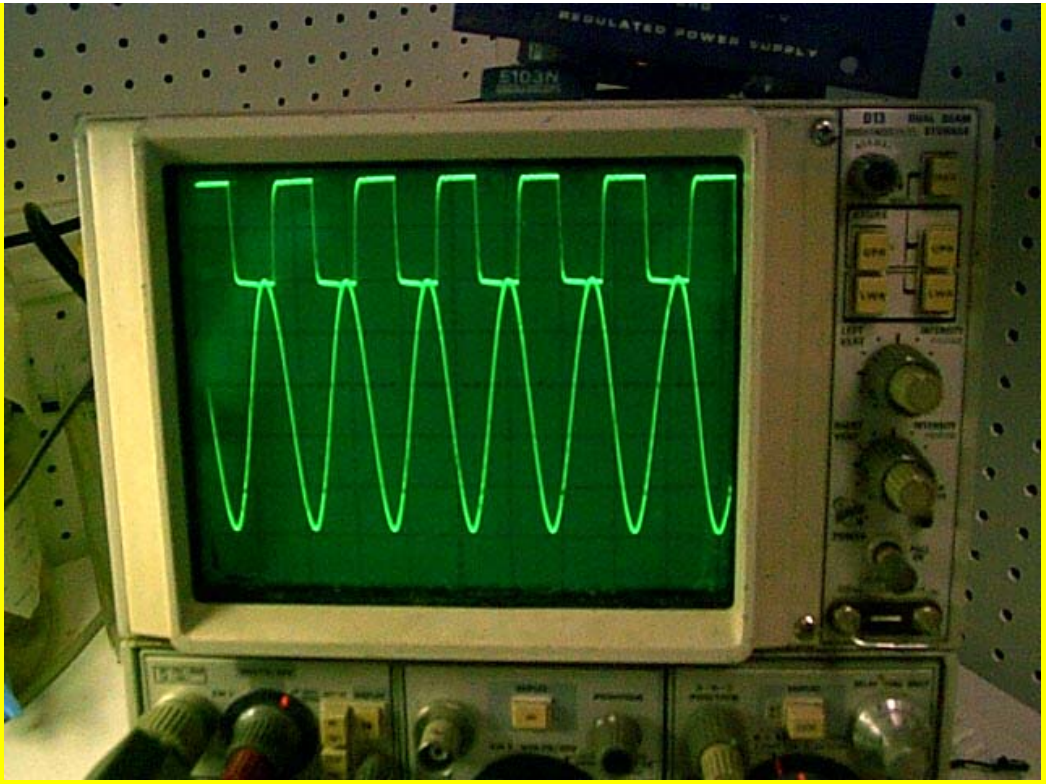
REGULATED POWER SUPPLY
5103N

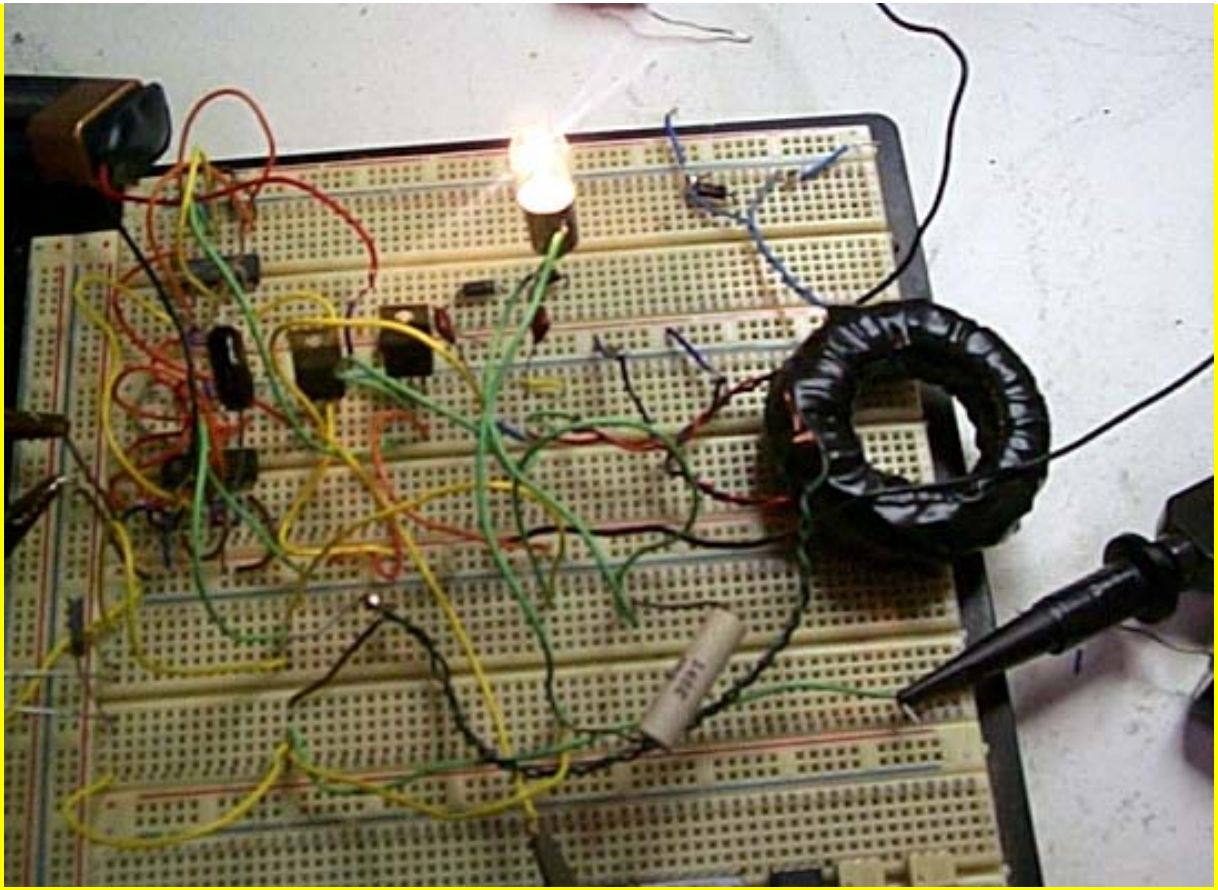

I'll post a decent schematic and drawing later. This should be able to be duplicated by any good electronics person. The patent information is NOT enough to do it. Some of the things I stumbled upon, some I thought out. Electronically there are some things you have to do, not complicated that makes it work properly. I will pass them along with the schematic. It will take a few days to do as I have to get up to speed on a new schematic editor. Please be patient. What a difference a day makes.

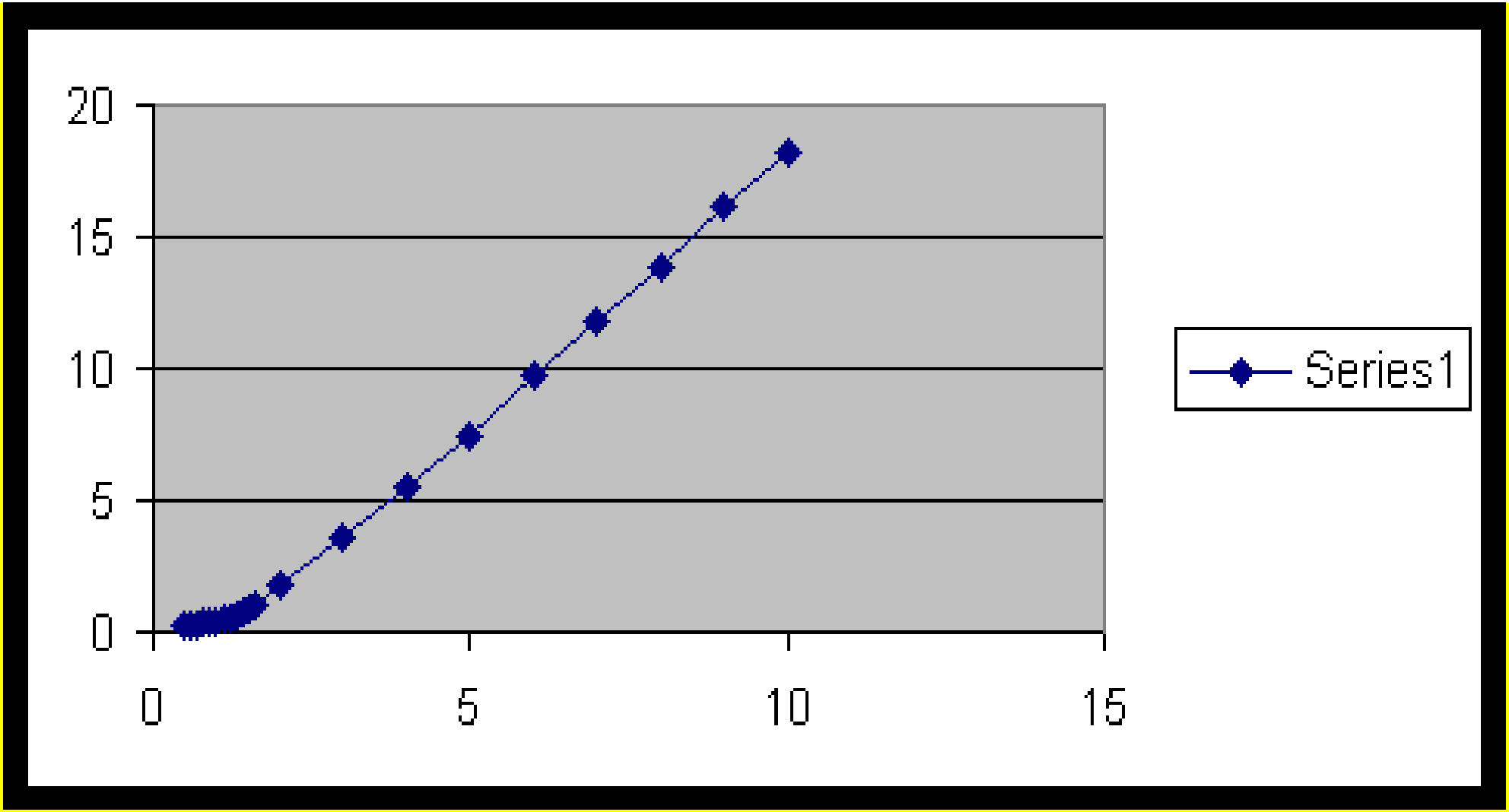

This is a graph of the Voltage in DC (measured to 3 places) vs AC Peak to Peak out, note it is absolutely linear! I have a poor transformer! ARrrggghhhh.

Thanks

Ben K4ZEP

The Coil

The coil toroid form is available from : http://www.antennex.com/palomar/page_7.htm There are 4 coils on this Torroid coil form.

2 EA, driver coils, 40 turns each of #26 enamel wire, .30 Ohms DC.

1 LV coil of 20 turns each of #26 enamel wire, .15 Ohms DC.

1-HV coil of 60 turns of #26 enamel wire, .45 Ohms DC.

The core form has a slot cut through it (bandsaw) the width of the magnet you plan to use, the magnet is then epoxy glued into place. Excitation windings are

the wound on the toroid all in the same direction using a home made bobbin to wind the specified number of turns on the form. If there is any interest, I'll put pictures of how I made the coil, the bobbin, etc.

The Test Board

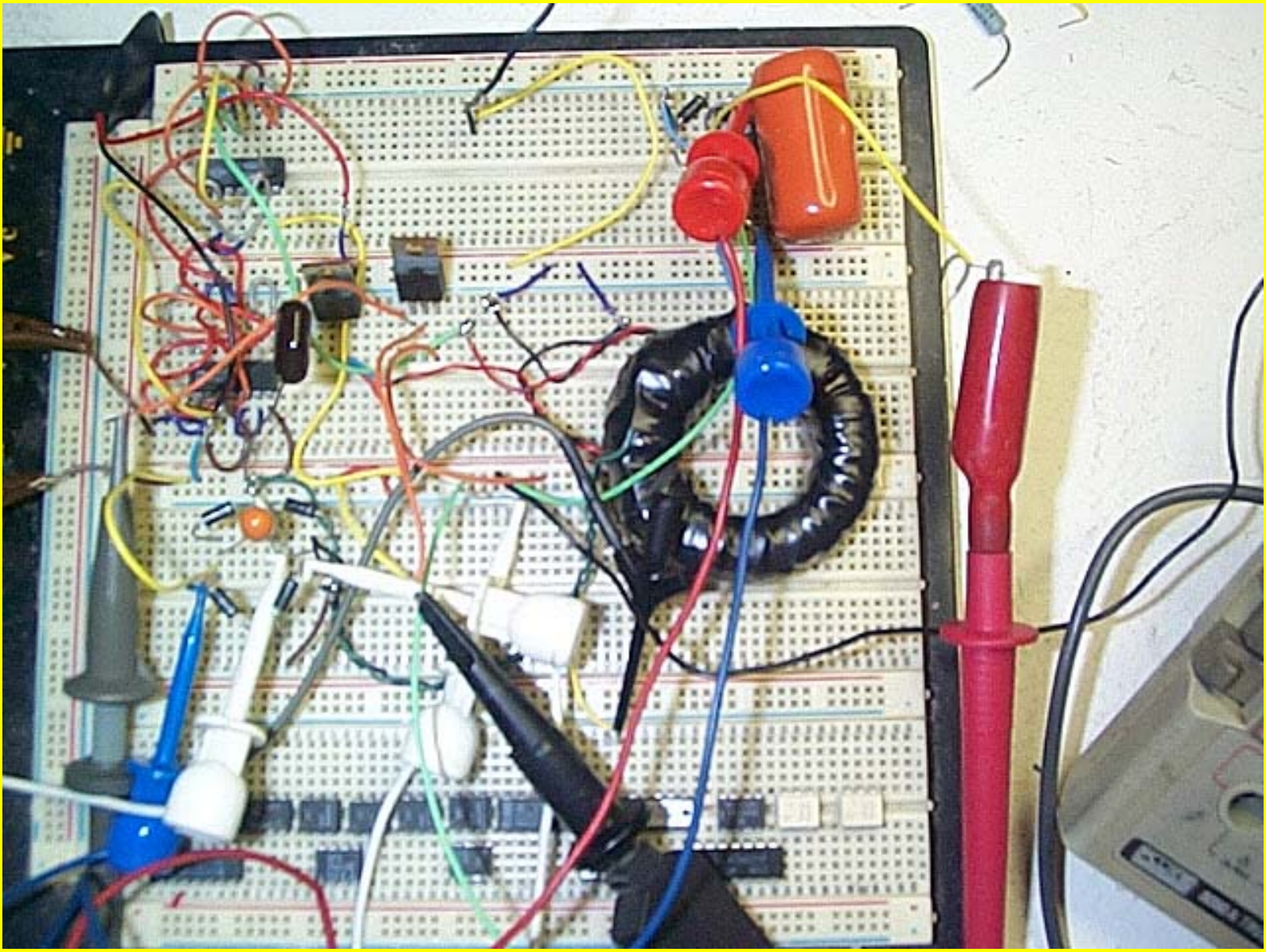

11:00 p.m. This is the test board so far today. The coil is in the mid-right, the two IRF 840's are in the center. The two chips above and below the Power FETS are the drivers. I am using quad sections to get the speed to drive the FET's with a rise time of about 20ns/volt. The device is VERY sensitive to frequency. My unit seems to work best with the frequency of 306Khz. I am driving the device with an external HP3310B function generator. The drive circuit pulls 2.6 Ma while running. I have run the output up to 10VDC to the drive coils. At this voltage, I pull .28Amps or 2.8 watts DC into the power fets . The two power supplies give the following output at that voltage. The low voltage supplies with a 4Kohm load, 3.2VDC at .7 Ma out. The high voltage supply puts out 11.87 VDC with a 15Kohm load or about .7 Ma out. Not much to brag about right

now but it is working as expected.

Things to do tomorrow.

1. Heat sink on the power FET's.
2. Self-run the driver section should occur at around 30 VDC into the output. This is where the turn selection was calculated. Power in the FETS has to be watched CAREFULLY! The circuit is so simple that there is no room for error. Got to look a lot more at the waveforms and try different combos on the switching coils.
3. Gradually work up to 75VDC on the output. Care must be taken to keep from blowing the outputs. Never turn off the drive with output drive connected in this configuration as one FET will be ON! Smoke!

Going to bed.

The Super Efficient Amplifier

By

Ben Thomas

Well gang, I have put about 20 hours on the bench building this MEG circuit. I have learned a lot and I'll try to pass on some of what I have learned.

First, let me say, what is shown in Patent #, 6,362,718 B1 is incomplete and does not work as shown. It is a good place to start but not a good place to finish. A lot of important information is left out such as (and I'm being picky!):

1. How do you convert the VERY HIGH VOLTAGE down to a usable source?

2. On sheet 3 of 5 of the drawings, how does the voltage get from a square wave in the primary to a nice sine wave as shown in Fig 6 E, F!
3. Also note, Fig 6G and 6 H show a problem in the switching and filtering circuit because of the artifact on the current trace.
4. Fig. 6 C does NOT address the high voltage spike (back EMF) developed in the circuit and which when it is operating correctly goes a LOT higher than indicated.

As I worked with the circuit, I slowly learned to appreciate what is going on! Lets start of with some general observations.

A. To make power, it TAKES power. Quit thinking about Ma and 10-30 volts. Start thinking AMPS an > 50 volts.
B. Think of the AC resistance of the coils; DO not worry about the DC resistance of the coils this is an ACTIVE device.
C. Think the circuit either works at any ratio of turns or it won't work at all.
D. THINK RESONANCE IN THE SECONDARY! THAT IS WHERE THE

SINE WAVES AND SUPER EFFECIENCY COMES FROM! When the secondary is at resonance the current drops in the primary, there is less heat in the primary circuit and the sucker starts to purrrrrr.

E. THINK OF WAYS TO USE THE BACK EMF pulse, this improves the circuit efficiency.

F. My device is almost 100% efficient (22 watts in, 21 watts out) at 22VDC @ 1.12 amps input, 103 kHz, 60VDC @ .35 amps DC out. It powers the driving circuitry with no fuss or bother with a simple regulator. Just as a afterthought I tried a standard 30 W. desk lamp I have on my workbench as a load and it drives it to about one half normal brightness. I can only test for a few seconds due to heating in the FET's. I fully expect it to go SUPER EFFICIENT (a term I have coined) at about 25VDC input and about 1.25 Amps into the INPUT coils. For the next few days, I am stalled till I can borrow from work a 40VDC 10 Amp. Programmable supply, A few dozen changes to the circuitry, add heat sinks to the power FETS and rewind the input coils with larger wire (I used #26 wire) as I had no idea what was required at the start. In the meantime, I'm going to add an on board square wave VCO. I have discovered a simple way to control the output by controlling the frequency around resonance.

First, some basic data:

Voltage to drivers=9vdc battery start, regulator run in complete circuit.

Current in drive circuit approximately. 3ma.

Voltage to driver coils 10VDC.

Current in driver coils about .36Amp/ 50% duty cycles each coil.

Voltage in 20-turn output coils 34VPP Sine wave AC. 103 kHz. No load.

Voltage into the100 ohm resistive load is 20V/PP.

The voltage and current seem to be linear in the input coils in a non-resonance condition. The voltage in the output coils is NOT linear but slightly logarithmic when resonance. I have a hunch the curve is indicative of the efficiency of the magnet/core/coil combination.

Note: If you do NOT have a load on the output coil, the voltage will rise to abnormal levels. Also, note, at 10VDC, the efficiency is low. It really takes off and the efficiency goes up dramatically at about 18-20 VDC input. The patent shows that the device is always "Super Efficient" I find that not to be the fact in my unit and there is (should be) a cross over point where it goes into this condition. I am using only 10VDC to the coils for this test as everything is stable and I don't have to use heat sinks on the FET's. I noted in someone's evaluation of the MEG and the patent that it was said, "you can't get a patent" unless you have a working model. NOT TRUE! I have seen more patents that obviously

did NOT, could NOT work than Carter has liver pills! I feel sorry for the suckers using a 450 turns on the output coils! The voltage there must be astronomical without a very controlled load! Arc over and shorting would be a very common affair. Oh well. Now to the pictures.

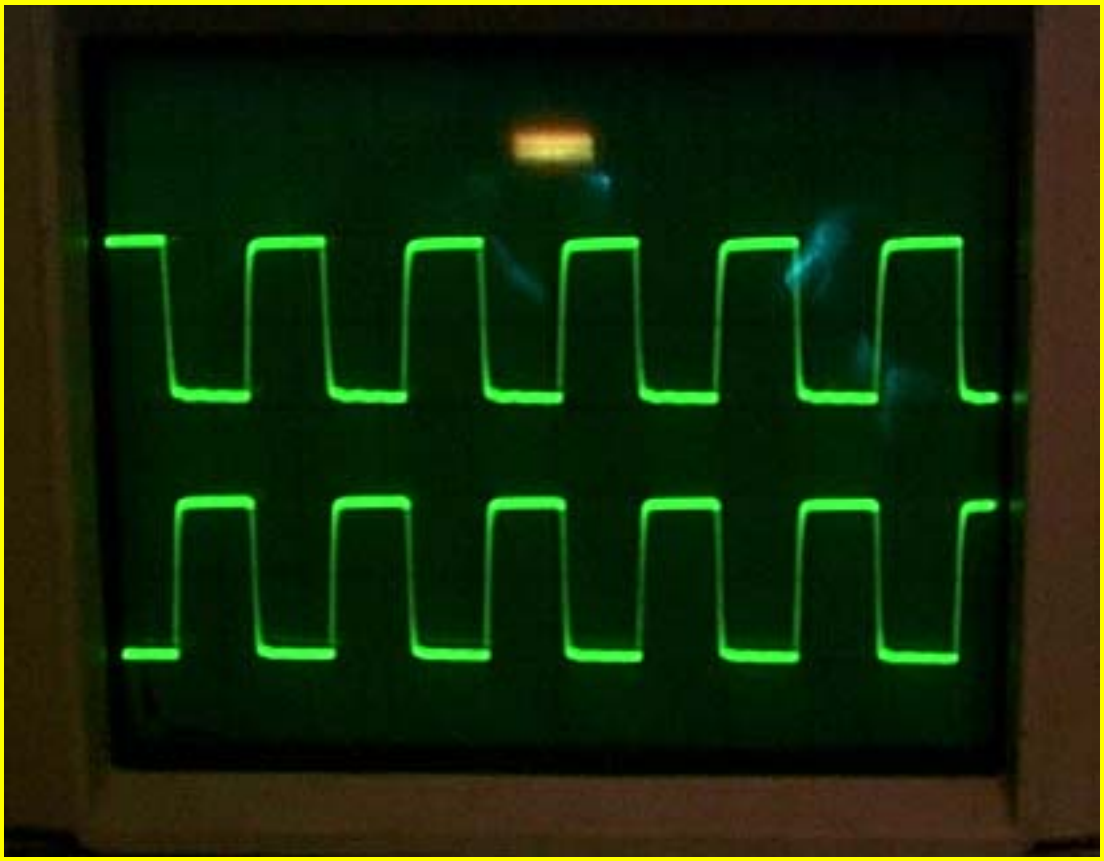

Wave1

This is the waveform to the gates of the FET's

5V/Div, 2us/div

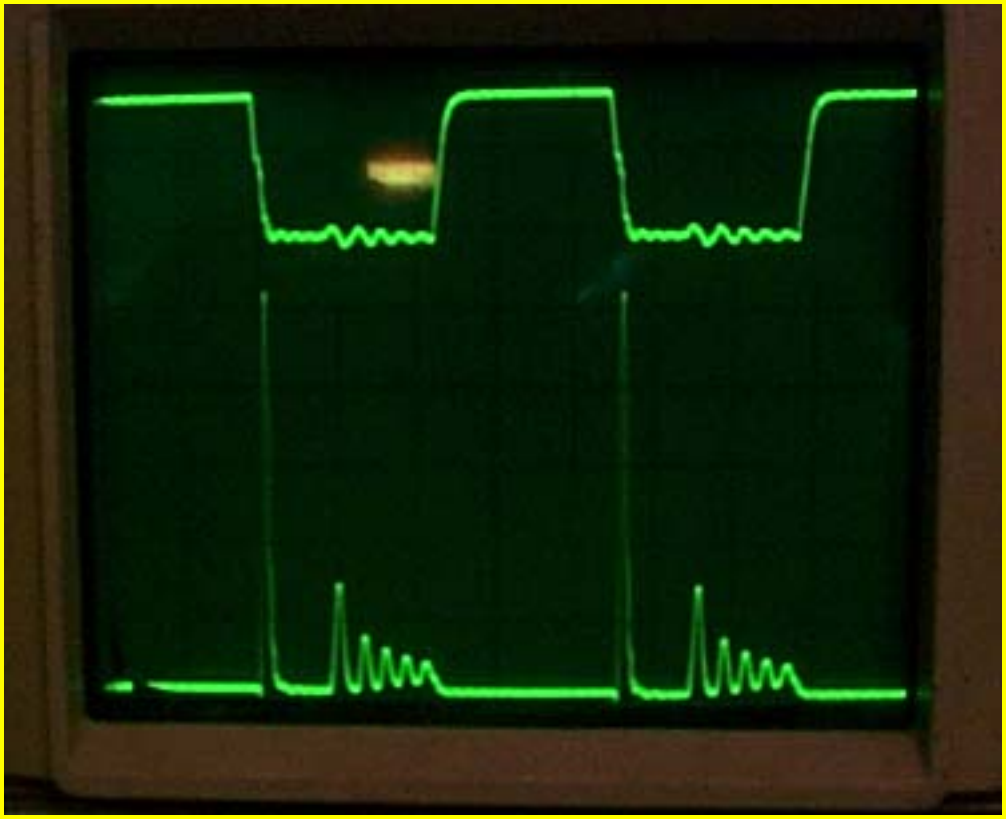

Wave2

This is the waveform to the gate at top and the waveform at the junction of the FET and Coil. Note the 260 V Back EMF Pulse!

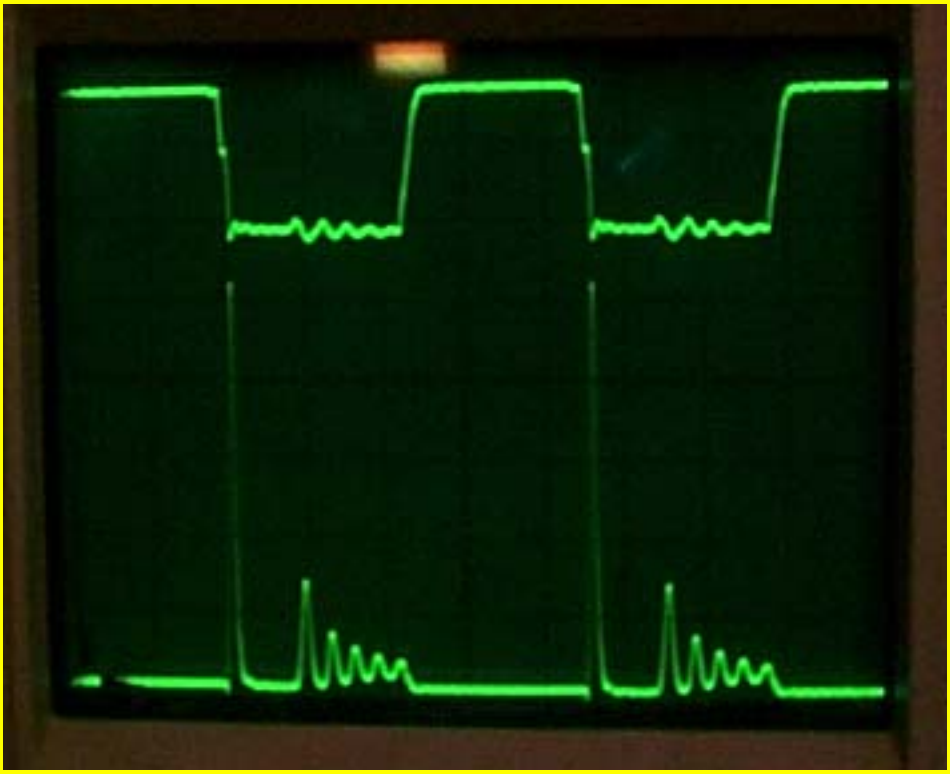

Wave 3

This is the same waveform on the second FET.

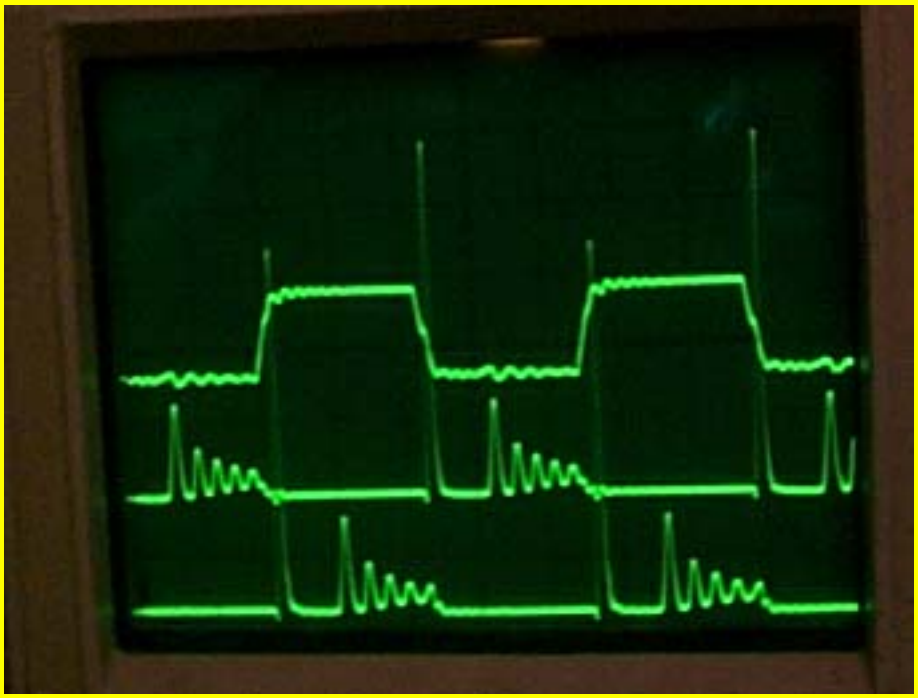

Wave 4

This is both junctions with reference to the first gate.

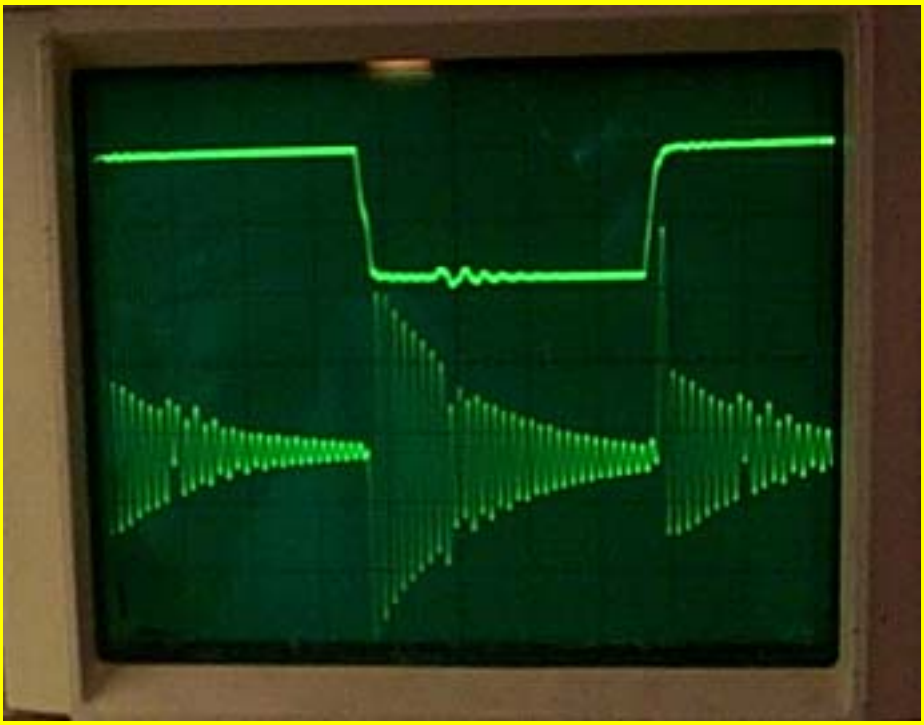

Wave5

First FET gate reference, frequency way low, note the ringing in the secondary coil!

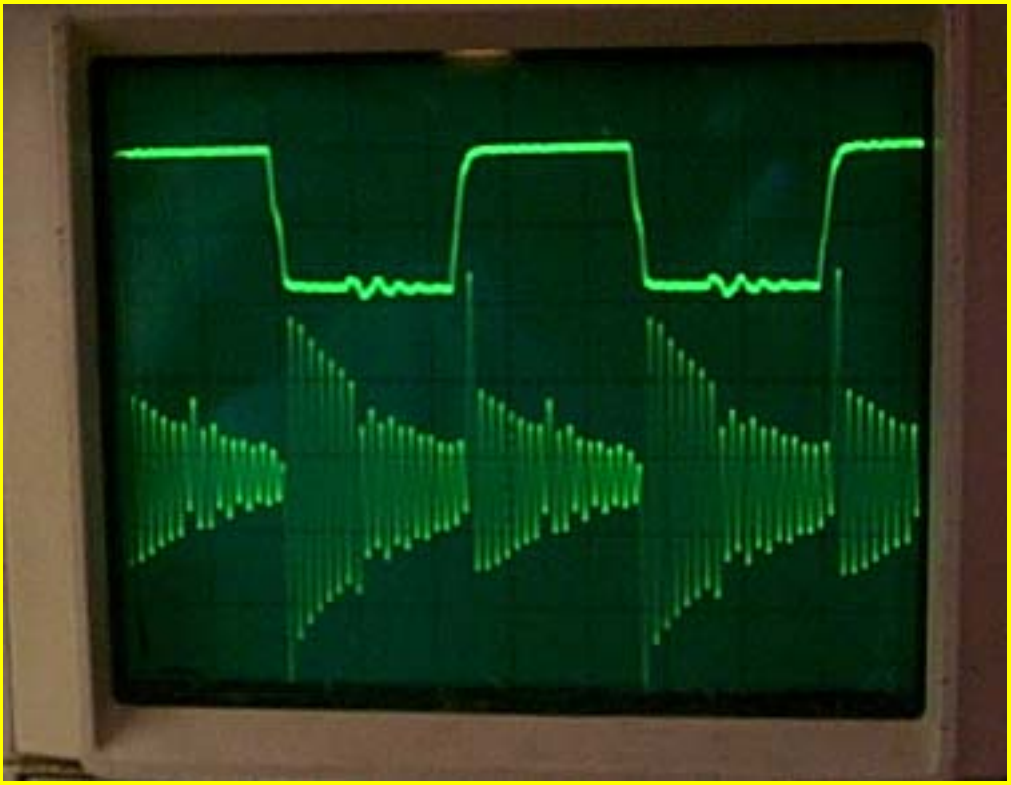

Wave6

This is at junction of FET and output coil no resonance cap.

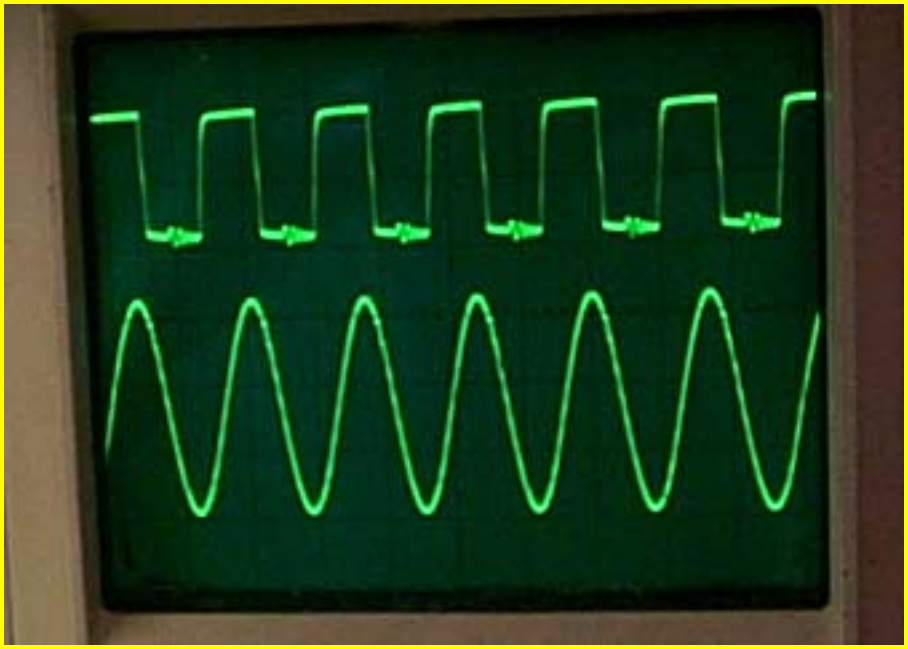

Wave7

This is output coil with Cap at resonance with virtually no load (scope probe only).

10V/div 34p/p no load.

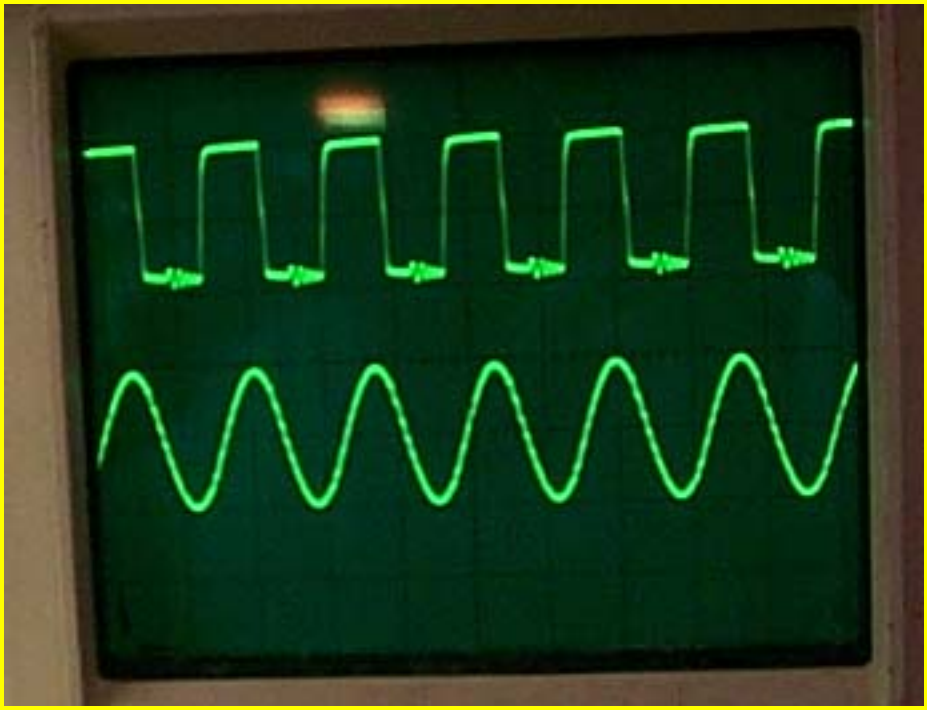

Same as above with 100 Ohm load. 20V/pp.

Well gang that's it for tonight. I'll post more in a few days. I'm kinda burnt out right now. When I have it in the self-run mode I will post schematics, etc. Things change so much every time I change something a schematic is not worth drawing.

Ben K4ZEP

Graphs

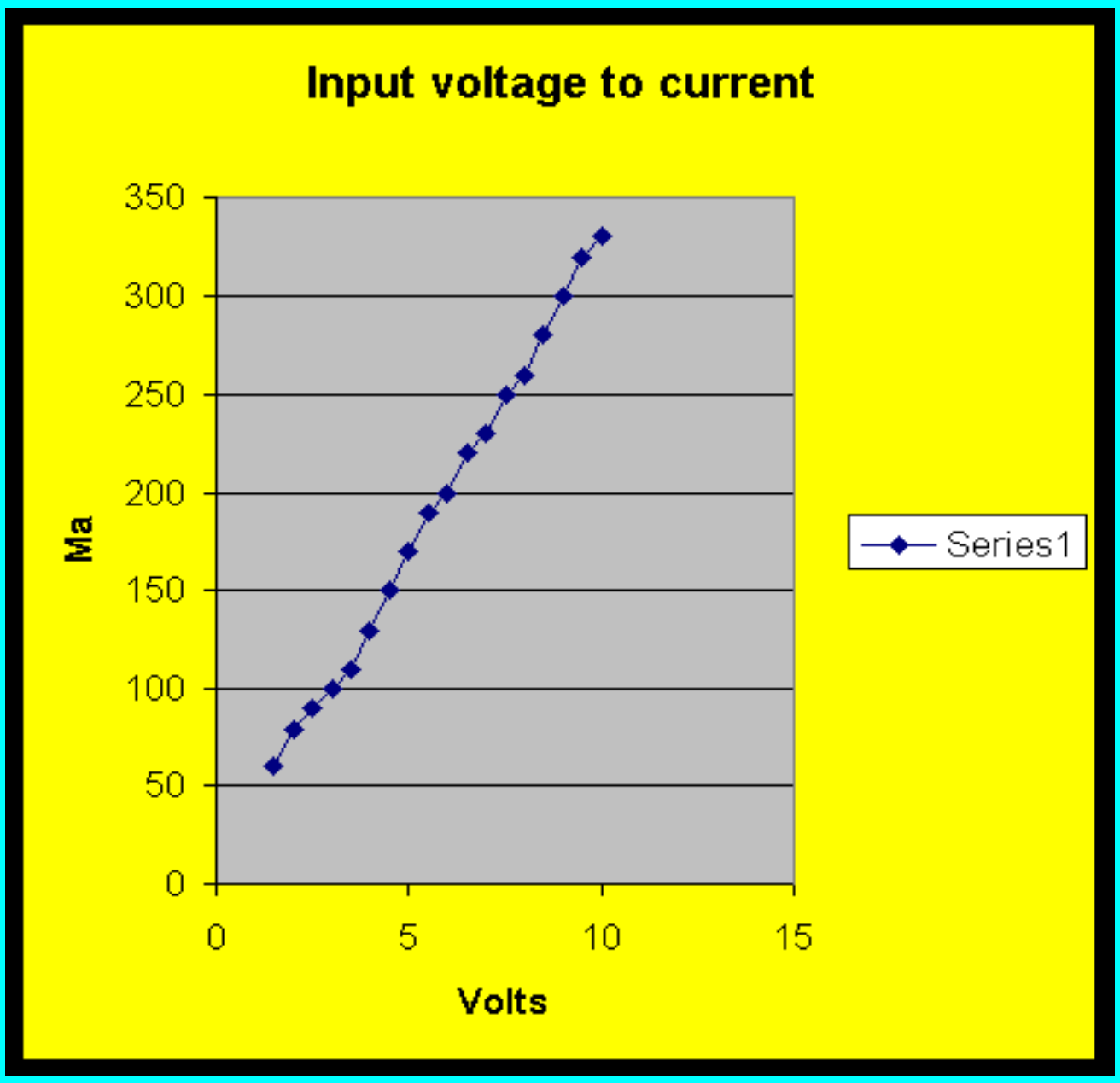

This is the input voltage to the coils vs. the input current. Note there is a little shift in the data due to the fact that the meter on the power supply is only accurate to 10Ma. But it obviously is linear!

Graphs

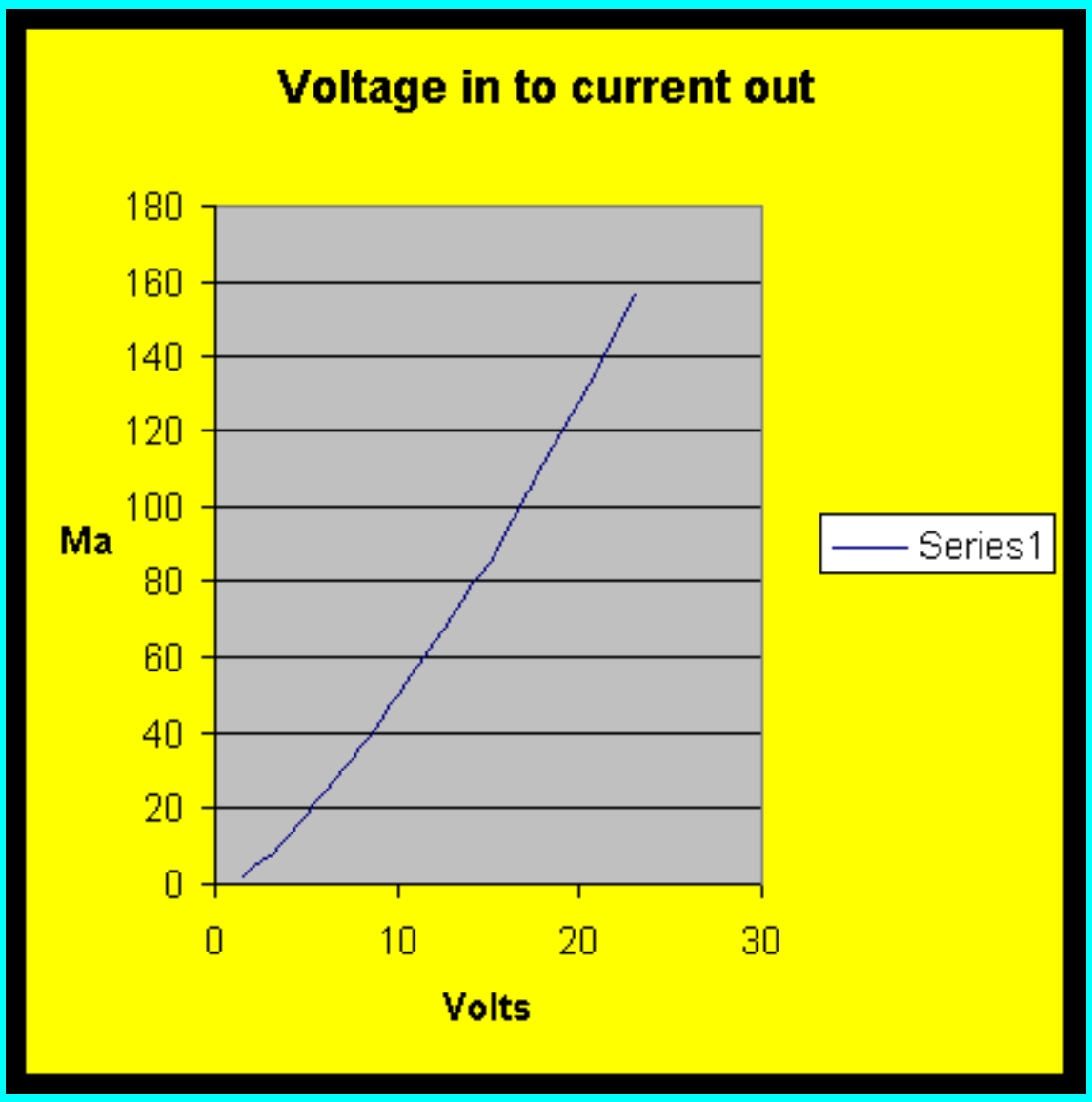

This is the graph of the output coil current after rectification with the shunt resistor in the meter being the load. It shows the same curve into a 100-ohm resistive load. NOTE IT IS NOT LINEAR and is starting to kick in at 26 volts.

The MEG Version 2.0

By

Ben Thomas

It will be a few days before I can get my heat sinks and power supply. To further my knowledge of what is going on, I am going to wind a new coil using a weak ferrite magnet to see how it responds to the same number of turns on the excitation side and the same number of turns on the secondary. I am not going to add a second HV secondary coil, as I do not need it to obtain the data I need.

Here is the progression of building a coil. The notch is cut on a band saw and then dressed up with a file for a snug fit and the magnet is then ready to be glued with epoxy into place.

Data:

Coil form is a **Core Size T130-2 available from:** http://www.antennex.com/palomar/page_7.htm

Primary is # 26 AWG, 40 turns each coil on each side of the magnet.

Secondary is #26 AWG, 40 turns wound single layer on the rest of the form.

A MEG COIL IS BORN

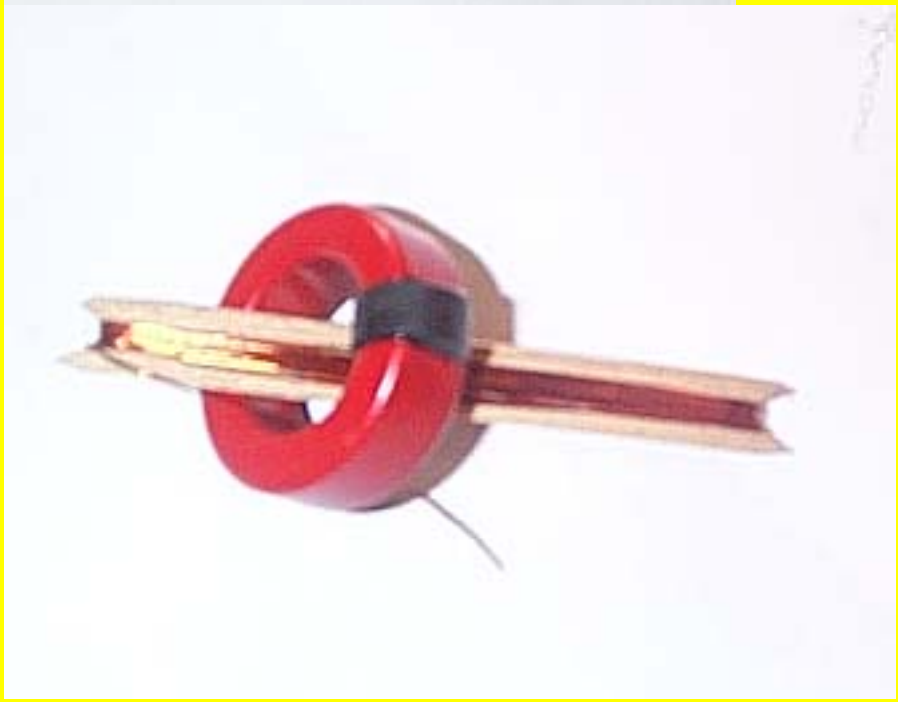

From left to right, you see the bobbin used to hold the wire you will put on the Torroid and the left shows a piece of tape holding the wire so you can wind the coil.

Here you have the second driver coil wound, and then it is taped up in preparation for the wires to be soldered on to it.

Here you have the finished driver coils on the left and the wound but not bound output coil on the right.

The finished coil, about 2 hours work counting putting it on the Web page.

Lets see if it works!

Ferrite SUCKS, I'll document it tomorrow, 3-31-02, I'm pooped, going to bed.

Ch. 4 Dup. for your files

THE LINK BETWEEN THE SACHS AND O(3) THEORIES OF ELECTRODYNAMICS

M. W. EVANS

CONTENTS

I. Introduction
II. The Non-Abelian Structure of the Field Tensor
III. The Covariant Derivative
IV. Energy from the Vacuum
V. The Curvature Tensor
VI. Generally Variant 4-Vectors
VII. Sachs Theory in the Form of a Gauge Theory
VIII. Antigravity Effects in the SachsTheory
IX. Some Notes on Quaternion-Valued Metrics
Acknowledgments
References

I. INTRODUCTION

In this volume, Sachs [I] has demonstrated, using irreducible representations of the Einstein group, that the electromagnetic field can propagate only in curved spacetime, implying that the electromagnetic field tensor can exist only when there is a nonvanishing curvature tensor $\kappa_{\mu\nu}$. Using this theory, Sachs has shown that the structure of electromagnetic theory is in general non-Abelian. This is the same overall conclusion as reached in O(3) electrodynamics [2], developed in the second chapter of this volume. In this short review, the features common to Sachs and O(3) electrodynamics are developed. The $\boldsymbol{B}^{(3)}$ field of O(3) electrodynamics is extracted from the quatemion-valued $B^{\mu\nu}$ equivalent in the Sachs theory; the most general form of the vector potential is considered in both theories, the covariant derivatives are compared in both theories, and the possibility of extracting energy from the vacuum is considered in both theories.

Modern Nonlinear Optics, Pun 2. Second Edition, Advances in Chemical Physics, Volume 119, Edited by Myron W. Evans. Series Editors I. Prigogine and Stuart A. Rice.
ISBN O-471-38931-5 © 2002 John Wiley & Sons, Inc.

II. THE NON-ABELIAN STRUCTURE OF THE FIELD TENSOR

The non-Abelian component of the field tensor is defined through a metric q^μ that is a set of four quatemion-valued components of a 4-vector, a 4-vector each of whose components can be represented by a 2 x 2 matrix. In condensed notation:

$$q^\mu = (q^{\mu 0}, q^{\mu 1}, q^{\mu 2}, q^{\mu 3}) \tag{1}$$

and the total number of components of q^μ is 16. The covariant and second covariant derivatives of q^μ vanish [I] and the line element is given by

$$ds = q^\mu(x) dx_\mu \tag{2}$$

which, in special relativity (flat spacetime), reduces to

$$ds = \sigma^\mu dx_\mu \tag{3}$$

where σ^μ is a 4-vector made up of **Pauli** matrices:

$$\sigma^\mu = \left(\begin{bmatrix} 1 & 0 \\ 0 & 1 \end{bmatrix}, \begin{bmatrix} 0 & 1 \\ 1 & 0 \end{bmatrix}, \begin{bmatrix} 0 & -i \\ i & 0 \end{bmatrix}, \begin{bmatrix} 1 & 0 \\ 0 & -1 \end{bmatrix} \right) \tag{4}$$

In the limit of special relativity

$$q^\mu q^{\nu *} - q^\nu q^{\mu *} \rightarrow \sigma^\mu \sigma^\nu - \sigma^\nu \sigma^\mu \tag{5}$$

where * denotes reversing the time component of the quaternion-valued q^μ. The most general form of the non-Abelian part of the electromagnetic field tensor in conformally curved spacetime is 1

$$F^{\mu\nu} = \frac{1}{8} QR(q^\mu q^{\nu *} - q^\nu q^{\mu *}) \tag{6}$$

To consider magnetic flux density components of $F^{\mu\nu}$, Q must have the units of weber and R, the scalar curvature, must have units of inverse square meters. In the flat spacetime limit, $R = 0$, so it is clear that the non-Abelian part of the field tensor, Eq. (6), vanishes in special relativity. The complete field tensor $F^{\mu\nu}$ vanishes [1] in flat spacetime because the curvature tensor vanishes. These considerations refute the Maxwell-Heaviside theory, which is developed in flat spacetime, and show that O(3) electrodynamics is a theory of conformally curved spacetime. Most generally, the Sachs theory is a closed field theory that, in principle, unifies ail four fields: gravitational, electromagnetic, weak, and strong.

There exist generally covariant four-valued 4-vectors that are components of q^{μ}, and these can be used to construct the basic structure of O(3) electrodynamics in terms of single-valued components of the quaternion-valued metric q^{μ}. Therefore, the Sachs theory can be reduced to O(3) electrodynamics, which is a Yang-Mills theory [3,4]. The empirical evidence available for both the Sachs and O(3) theories is summarized in this review, and discussed more extensively in the individual reviews by Sachs [1] and Evans [2]. In other words, empirical evidence is given of the instances where the Maxwell-Heaviside theory fails and where the Sachs and O(3) electrodynamics succeed in describing empirical data from various sources. The fusion of the O(3) and Sachs theories provides proof that the $8^{(3)}$ field [2] is a physical field of curved spacetime, which vanishes in flat spacetime (Maxwell-Heaviside theory [2]).

In Eq. (5), the product $q^{\mu}q^{\nu *}$ is quaternion-valued and noncommutative, but not antisymmetric in the indices μ and ν. The $\boldsymbol{B}^{(3)}$ field and structure of O(3) electrodynamics must be found from a special case of Eq. (5) showing that O(3) electrodynamics is a Yang-Mills theory and also a theory of general relativity [1]. The important conclusion reached is that Yang-Mills theories can be derived from the irreducible representations of the Einstein group. This result is consistent with the fact that all theories of physics must be theories of general relativity in principle. From Eq. (1), it is possible to write four-valued, generally covariant, components such as

$$q_X = (q_X^0, q_X^1, q_X^2, q_X^3) \tag{7}$$

which, in the limit of special relativity, reduces to

$$\sigma_x = (0, \sigma_x, 0, 0) \tag{8}$$

Similarly, one can write

$$q_Y = (q_Y^0, q_Y^1, q_Y^2, q_Y^3) \rightarrow (0, 0, \sigma_Y, 0) \tag{9}$$

and use the property

$$q_X q_Y^* - q_Y q_X^* \rightarrow \sigma_X \sigma_Y - \sigma_Y \sigma_X \tag{10}$$

in the limit of special relativity. The only possibility from Eqs. (7) and (9) is that

$$\begin{array}{ccc} q_X^1 q_Y^{2*} & q_Y^2 q_X^{1*} = 2iq_Z^3 & \\ & \downarrow & \\ \sigma_X \sigma_Y & \sigma_Y \sigma_X = 2i\sigma_Z & \end{array} \tag{11}$$

where q_x^1 is single valued. In a 2 x 2 matrix representation, this is

$$q_X^1 = \begin{bmatrix} 0 & q_X^1 \\ q_X^1 & 0 \end{bmatrix} \rightarrow \sigma_X = \begin{bmatrix} 0 & 1 \\ 1 & 0 \end{bmatrix} \tag{12}$$

Similarly

$$q_Y^{2*} = \begin{bmatrix} 0 & -iq_Y^2 \\ iq_Y^2 & 0 \end{bmatrix} \rightarrow \sigma_Y = \begin{bmatrix} o & -i \\ i & 0 \end{bmatrix} \tag{13}$$

$$q_Y^3 = \begin{bmatrix} q_Z^3 & 0 \\ 0 & -q_Z^3 \end{bmatrix} \rightarrow \sigma_Z = \begin{bmatrix} 1 & 0 \\ 0 & -1 \end{bmatrix} \tag{14}$$

Therefore, there exist cyclic relations with O(3) symmetry

$$\begin{aligned} q_X^1 q_Y^{2*} - q_Y^2 q_X^{1*} &= 2iq_Z^3 \\ q_Y^2 q_Z^{3*} - q_Z^3 q_Y^{2*} &= 2iq_X^1 \\ q_Z^3 q_X^{1*} - q_X^1 q_Z^{3*} &= 2iq_Y^2 \end{aligned} \tag{15}$$

and the structure of O(3) electrodynamics [2] begins to emerge. If the space basis is represented by the complex circular ((1),(2),(3)) then Eqs. (15) become

$$\begin{aligned} q_X^{(1)} q_Y^{(2)*} - q_Y^{(2)} q_X^{(1)*} &= 2iq_Z^{(3)} \\ q_Y^{(2)} q_Z^{(3)*} - q_Z^{(3)} q_Y^{(2)*} &= 2iq_X^{(1)} \\ q_Z^{(3)} q_X^{(1)*} - q_X^{(1)} q_Z^{(3)*} &= 2iq_Y^{(2)} \end{aligned} \tag{16}$$

These are cyclic relations between single-valued metric field components in the non-Abelian part [Eq. (6)] of the quaternion-valued $F^{\mu\nu}$. Equation (16) can be put in vector form

$$\begin{aligned} \boldsymbol{q}^{(1)} \times \boldsymbol{q}^{(2)} &= i\boldsymbol{q}^{(3)*} \\ \boldsymbol{q}^{(2)} \times \boldsymbol{q}^{(3)} &= i\boldsymbol{q}^{(1)*} \\ \boldsymbol{q}^{(3)} \times \boldsymbol{q}^{(1)} &= i\boldsymbol{q}^{(2)*} \end{aligned} \tag{17}$$

where the asterisk denotes ordinary complex conjugation in Eq. (17) and quaternion conjugation in Eq. (16).

Equation (17) contains vector-valued metric fields in the complex basis ((l),(2),(3)) [2]. Specifically, in O(3) electrodynamics, which is based on the

existence of two circularly polarized components of electromagnetic radiation [2]

$$\boldsymbol{q}^{(1)} = \frac{1}{\sqrt{2}}(\boldsymbol{ii} + \boldsymbol{j}) \exp(i\phi) \tag{18}$$

$$\boldsymbol{q}^{(2)} = \&(-\boldsymbol{ii} + \boldsymbol{j}) \exp(i\phi) \tag{19}$$

giving

$$\boldsymbol{q}^{(3)*} = \boldsymbol{k} \tag{20}$$

and

$$\boldsymbol{B}^{(3)} = \frac{1}{8} QR\boldsymbol{q}^{(3)} \tag{21}$$

Therefore, the $\boldsymbol{B}^{(3)}$ field [2] is proved from a particular choice of metric using the irreducible representations of the Einstein group [1]. It can be seen from Eq. (21) that the $\boldsymbol{B}^{(3)}$ field is the vector-valued metric field $\boldsymbol{q}^{(3)}$ within a factor $\frac{1}{8}$ QR. This result proves that $\boldsymbol{B}^{(3)}$ vanishes in flat spacetime, because $R = 0$ in flat spacetime. If we write

$$B^{(3)} = \frac{1}{8} QR \tag{22}$$

then Eq. (17) becomes the B cyclic theorem [2] of O(3) electrodynamics:

$$\boldsymbol{B}^{(1)} \times \boldsymbol{B}^{(2)} = iB^{(0)}\boldsymbol{B}^{(3)*} \tag{23}$$

Since O(3) electrodynamics is a Yang-Mills theory [3,4], we can write

$$\boldsymbol{q} = q^{(1)}\boldsymbol{i} + q^{(2)}\boldsymbol{j} + q^{(3)}\boldsymbol{k} \tag{24}$$

from which it follows [5] that

$$D^{\mu}(D_{\mu}\boldsymbol{q}) = \boldsymbol{0}; \quad D_{\mu}\boldsymbol{q} = \boldsymbol{0} \tag{25}$$

Thus the first and second covariant derivatives vanish [1].

The Sachs theory [I] is able to describe parity violation and spin-spin interactions from first principles [6] on a classical level; it can also explain

several problems of neutrino physics, and the Pauli exclusion principle can be derived from it classically. The quaternion form of the theory [1], which is the basis of this review chapter, predicts small but nonzero masses for the neutrino and photon; describes the Planck spectrum of blackbody radiation classically; describes the Lamb shifts in the hydrogen atom with precision equivalent to quantum electrodynamics, but without renormalization of infinities; proposes grounds for charge quantization; predicts the lifetime of the muon state; describes electron-muon mass splitting; predicts physical longitudinal and time-like photons and fields; and has bult-in ***P, C,*** and ***T*** violation.

To this list can now be added the advantages of O(3) over U(1) electrodynamics, advantages that are described in the review by Evans in Part 2 of this three-volume set and by Evans, Jeffers, and Vigier in Part 3. In summary, by interlocking the Sachs and O(3) theories, it becomes apparent that the advantages of O(3) over U(1) are symptomatic of the fact that the electromagnetic field vanishes in flat spacetime (special relativity), if the irreducible representations of the Einstein group are used.

III. THE COVARIANT DERIVATIVE

The covariant derivative in the Sachs theory [1] is defined by the spin-affine connection:

$$D^\rho = \partial^\rho + \Omega^\rho \tag{26}$$

where

$$\Omega_\mu = \frac{1}{4}(\partial_\mu q^\rho + \Gamma^\rho_{\tau\mu} q^\tau) q^*_\rho \tag{27}$$

and where $\Gamma^\rho_{\tau\mu}$ is the Christoffel symbol. The latter can be defined through the reducible metrics $g_{\mu\nu}$ as follows [1]:

$$\Gamma^\rho_{\mu\alpha} = \frac{1}{2} g^{\rho\lambda}(\partial_\mu g_{\lambda\alpha} + \partial_\alpha g_{\mu\lambda} - \partial_\lambda g_{\alpha\mu}) \tag{28}$$

In O(3) electrodynamics, the covariant derivative on the classical level is defined by

$$D_\mu = \partial_\mu - igA_\mu = \partial_\mu - igM^a A^a_\mu \tag{29}$$

where M^a are rotation generators [2] of the O(3) group, and where a is an internal index of Yang-Mills theory. The complete vector potential in O(3) electrodynamics is defined by

$$\boldsymbol{A} = A^{(1)}\boldsymbol{e}^{(2)} + A^{(2)}\boldsymbol{e}^{(1)} + A^{(3)}\boldsymbol{e}^{(3)} \tag{30}$$

where $e^{(1)}, e^{(2)}, e^{(3)}$ are unit vectors of the complex circular basis ((l),(2),(3)) [2]. If we restrict our discussion to plane waves, then the vector potential is

$$A^{(1)} = \frac{A^{(0)}}{\sqrt{2}} \text{ (ii i-j) exp } (i\phi) \tag{31}$$

where ϕ is the electromagnetic phase. Therefore, there are O(3) electrodynamics components such as

$$A_X^{(1)} = \frac{iA^{(0)}}{\sqrt{2}} e^{(i\phi)}; \quad A_Y^{(1)} = \frac{A^{(0)}}{\sqrt{2}} e^{(i\phi)} \tag{32}$$

In order to reduce the covariant derivative in the Sachs theory to the O(3) covariant derivative, the following classical equation must hold:

$$-igA_\mu = \frac{1}{4}(D_\mu q^\rho) q_\rho^* \tag{33}$$

This equation can be examined component by component, giving relations such as

$$-igA_X^{(1)} = -\frac{1}{4}(D_X q_Y^{(1)}) A_Y^{(1)} \tag{34}$$

where we have used

$$q_Y^{(1)} = -iq_X^{(1)} \tag{35}$$

Using [2]

$$g = \frac{\text{K}}{A^{(0)}} \tag{36}$$

we obtain

$$i\kappa q_X^{(1)} = \frac{1}{4}(D_X q_Y^{(1)}) q_Y^{(1)} = -\frac{i}{4}(D_X q_Y^{(1)}) q_X^{(1)} \tag{37}$$

so that the wavenumber κ is defined by

$$\kappa = -\frac{1}{4} D_X q_Y^{(1)} \tag{38}$$

Therefore, we can write

$$D_X q_Y^{(1)} = D_1 q^{1(1)} = \partial_1 q^{1(1)} + \Gamma_{\lambda 1}^1 q^{\lambda(1)} \tag{39}$$

and the wavenumber becomes the following sum:

$$\kappa = -\frac{1}{4}(\Gamma^1_{11}q^{1(1)} + \Gamma^1_{21}q^{2(1)}) \tag{40}$$

Using the identities

$$q^{1(1)} = q^{(1)}_x = \frac{i}{\sqrt{2}}e^{i\phi} \tag{41}$$

$$q^{2(1)} = q^{(1)}_Y = \frac{1}{\sqrt{2}}e^{i\phi} \tag{42}$$

the wavenumber becomes

$$\kappa = -\frac{1}{4}\left(\frac{i\Gamma^1_{11}}{\sqrt{2}}e^{i\phi} + \frac{\Gamma^1_{21}}{\sqrt{2}}e^{i\phi}\right) \tag{43}$$

Introducing the definition (28) of the Christoffel symbol, it is possible to write

$$\Gamma^1_{11} = \frac{1}{2}g^{1\lambda}(\partial_1 g_{\lambda 1} + \partial_1 g_{1\lambda} - \partial_1 g_{11})$$

$$= \frac{1}{2}g^{13}\partial_Z g_{11} + \cdots \tag{44}$$

so that

$$\kappa = -\frac{i}{8\sqrt{2}}g^{13}\partial_Z g_{11}e^{i\phi} + \cdots \tag{45}$$

This equation is satisfied by the following choice of metric:

$$g_{11} = \frac{1}{2};\ g^{13} = -8\sqrt{2}\,e^{-i\phi} \tag{46}$$

Similarly

$$\Gamma^1_{21} = \frac{1}{2}g^{1\lambda}(\partial_2 g_{\lambda 1} + \partial_1 g_{2\lambda} - \partial_\lambda g_{12})$$

$$= \frac{1}{2}g^{13}\partial_Z g_{12} + \cdots \tag{47}$$

so that the wavenumber can be expressed as

$$\kappa = \frac{i\kappa}{8\sqrt{2}}g^{13}g_{12}e^{i\phi} \tag{48}$$

an equation that is satisfied by the following choice of metric:

$$g_{12} = \frac{t}{2}; \quad g^{13} = -8\sqrt{2}\, e^{-i\phi} \tag{49}$$

Therefore, it is always possible to write the covariant derivative of the Sachs theory as an O(3) covariant derivative of O(3) electrodynamics. Both types of covariant derivative are considered on the classical level.

IV. ENERGY FROM THE VACUUM

The energy density in curved spacetime is given in the Sachs theory by the quaternion-valued expression

$$En_d = A^{\mu} j_{\mu}^{*} \tag{50}$$

where A^{μ} is the quaternion-valued vector potential and J_{μ}^{*} is the quaternion-valued 4-current as given by Sachs [I]. Equation (50) is an elegant and deeply meaningful expression of the fact that electromagnetic energy density is available from curved spacetime under all conditions; the distinction between field and matter is lost, and the concepts of "point charge" and "point mass" are not present in the theory, as these two latter concepts represent infinities of the closed-field theory developed by Sachs [1] from the irreducible representations of the Einstein group. The accuracy of expression (50) has been tested [1] to the precision of the Lamb shifts in the hydrogen atom without using renormalization of infinities. The Lamb shifts can therefore be viewed as the results of electromagnetic energy from curved spacetime.

Equation (50) is geometrically a scalar and algebraically quaternion-valued equation [1], and it is convenient to develop it using the identity [1]

$$q_{\gamma} q^{\kappa *} + q^{\kappa} q_{\gamma}^{*} = 2\sigma_0 \delta_{\gamma}^{\kappa} \tag{51}$$

with the indices defined as

$$\gamma = \kappa = \mu \tag{52}$$

to obtain

$$q^{\mu} q_{\mu}^{*} = \sigma_0 \delta^{\mu} \tag{53}$$

Using summation over repeated indices on the right-hand side, we obtain the following result:

$$q^{\mu} q_{\mu}^{*} = 4\sigma_0 \tag{54}$$

In the limit of flat spacetime

$$q^{\mu}q^{*}_{\mu} \rightarrow \sigma^{\mu}\sigma_{\mu} = 4\sigma_0 \tag{55}$$

where the right-hand side is again a scalar invariant geometrically and a quaternion algebraically.

Therefore, the energy density (50) assumes the simple form

$$A\mu J^{*}_{\mu} = 4A_0 J^{*}_0 \sigma_0 \tag{56}$$

A_0 and J^{*}_0 are magnitudes of A^{μ} and J^{*}_{μ}. In flat spacetime, this electromagnetic energy density vanishes because the curvature tensor vanishes. Therefore, in the Maxwell-Heaviside theory, there is no electromagnetic energy density from the vacuum and the field does not propagate through flat spacetime (the vacuum of the Maxwell-Heaviside theory) because of the absence of curvature. The $\boldsymbol{B}^{(3)}$ field depends on the scalar curvature R in Eq. (21), and so the $\boldsymbol{B}^{(3)}$ field and O(3) electrodynamics are theories of conformally curved spacetime. To maximize the electromagnetic energy density, the curvature has to be maximized, and the maximization of curvature may be the result of the presence of a gravitating object. In general, wherever there is curvature, there is electromagnetic energy that may be extracted from curved spacetime using a suitable device such as a dipole [7].

Therefore, we conclude that electromagnetic energy density exists in curved spacetime under all conditions, and devices can be constructed [8] to extract this energy density.

The quaternion-valued vector potential A^{μ} and the 4-current J^{*}_{μ} both depend directly on the curvature tensor. The electromagnetic field tensor in the Sachs theory has the form

$$F_{\mu\nu} = \partial_{\mu}A^{*}_{\nu} - \partial_{\nu}A^{*}_{\mu} + \frac{1}{8}QR(q_{\mu}q^{*}_{\nu} - q_{\nu}q^{*}_{\mu}) \tag{57}$$

where the quaternion-valued vector potential is defined as

$$\mathrm{A}, = \frac{Q}{4}q^{*}_{\gamma}\int(\kappa_{\rho\lambda}q^{\lambda} + q^{\lambda}\kappa^{+}_{\rho\lambda})\,dx^{\rho} \tag{58}$$

The most general form of the vector potential is therefore given by Eq. (58), and if there is no curvature, the vector potential vanishes.

Similarly, the 4-current J^{*}_{μ} depends directly on the curvature tensor $\kappa_{\rho\lambda}$ [1], and there can exist no 4-current in the Heaviside-Maxwell theory, so the 4-current cannot act as the source of the field. In the closed-field theory,

represented by the irreducible representations of the Einstein group [1], charge and current are manifestations of curved spacetime, and can be regarded as the results of the field. This is the viewpoint of Faraday and Maxwell rather than that of Lorentz. It follows that there can exist a vacuum 4-current in general relativity, and the implications of such a current are developed by Lehnert [9]. The vacuum 4-current also exists in O(3) electrodynamics, as demonstrated by Evans and others [2,9]. The concept of vacuum 4-current is missing from the flat spacetime of Maxwell-Heaviside theory.

In curved spacetime, both the electromagnetic and curvature 4-tensors may have longitudinal as well as transverse components in general and the electromagnetic field is always accompanied by a source, the 4-current J^*_μ. In the Maxwell-Heaviside theory, the field is assumed incorrectly to propagate through flat spacetime without a source, a violation of both causality and general relativity. As shown in several reviews in this three-volume set, Maxwell-Heaviside theory and its quantized equivalent appear to work well only under certain incorrect assumptions, and quantum electrodynamics is not a physical theory because, as pointed out by Dirac and many others, it contains infinities. Sachs [1] has also considered and removed the infinite self-energy of the electron by a consideration of general relativity.

The O(3) electrodynamics developed by Evans [2], and its homomorph, the SU(2) electrodynamics of Barrett [10], are substructures of the Sachs theory dependent on a particular choice of metric. Both O(3) and SU(2) electrodynamics are Yang-Mills structures with a Wu-Yang phase factor, as discussed by Evans and others [2,9]. Using the choice of metric (17), the electromagnetic energy density present in the O(3) curved spacetime is given by the product

$$En_d = \boldsymbol{A} \cdot \boldsymbol{j} \tag{59}$$

where the vector potential and 4-current are defined in the ((l),(2),(3)) basis in terms of the unit vectors similar to those in Eq. (2), and as described elsewhere in this three-volume set [2]. The extraction of electromagnetic energy density from the vacuum is also possible in the Lehnert electrodynamics as described in his review in the first chapter of this volume (i.e., here, in Part 2 of this three-volue set). The only case where extraction of such energy is not possible is that of the Maxwell-Heaviside theory, where there is no curvature.

The most obvious manifestation of energy from curved spacetime is gravitation, and the unification of gravitation and electromagnetism by Sachs [1] shows that electromagnetic energy emanates under all circumstances from spacetime curvature. This principle has been tested to the precision of the Lamb shifts of H as discussed already. This conclusion means that the electromagnetic field does not emanate from a "point charge," which in general relativity can be present only when the curvature becomes infinite. The concept of "point

charge" is therefore unphysical, and this is the basic reason for the infinite electron self-energy in the Maxwell-Heaviside theory and the infinities of quantum electrodynamics, a theory rejected by Einstein, Dirac, and several other leading scientists of the twentieth century. The electromagnetic energy density inherent in curved spacetime depends on curvature as represented by the curvature tensor discussed in the next section. In the Einstein field equation of general relativity, which comes from the reducible representations of the Einstein group [1], the canonical energy momentum tensor of gravitation depends on the Einstein curvature tensor.

Sachs [1] has succeeded in unifying the gravitational and electromagnetic fields so that both share attributes. For example, both fields are non-Abelian under all conditions, and both fields are their own sources. The gravitational field carries energy that is equivalent to mass [1 1], and so is itself a source of gravitation. Similarly, the electromagnetic field carries energy that is equivalent to a 4-current, and so is itself a source of electromagnetism. These concepts are missing entirely from the Maxwell-Heaviside theory, but are present in O(3) electrodynamics, as discussed elsewhere [2,10]. The Sachs theory cannot be reduced to the Maxwell-Heaviside theory, **but** can be reduced, as discussed already, to O(3) electrodynamics. The fundamental reason for this is that special relativity is an asymptotic limit of general relativity, but one that is never reached precisely [1]. So the Poincaré group of special relativity is not a subgroup of the Einstein group of general relativity.

In standard Maxwell-Heaviside theory, the electromagnetic field is thought of as propagating in a source-free region in flat spacetime where there is no curvature. If, however, there is no curvature, the electromagnetic field vanishes in the Sachs theory [1], which is a direct result of using irreducible representations of the Einstein group of standard general relativity. The empirical evidence for the Sachs theory has been reviewed in this chapter already, and this empirical evidence refutes the Maxwell-Heaviside theory. In general relativity [1], if there is mass or charge anywhere in the universe, then the whole of spacetime is curved, and all the laws of physics must be written in curved spacetime, including, of course, the laws of electrodynamics. Seen in this light, the O(3) electrodynamics of Evans [2] and the homomorphic SU(2) electrodynamics of Barrett [12] are written correctly in conformally curved spacetime, and are particular cases of Einstein's general relativity as developed by Sachs [1]. Flat spacetime as the description of the vacuum is valid only when the whole universe is empty.

From everyday experience, it is possible to extract gravitational energy from curved spacetime on the surface of the earth. The extraction of electromagnetic energy must be possible if the extraction of gravitational energy is possible, and the electromagnetic field influences the gravitational field and vice versa. The field equations derived by Sachs [1] for electromagnetism are complicated, but

can be reduced to the equations of O(3) electrodynamics by a given choice of metric. The literature discusses the various ways of solving the equations of O(3) electrodynamics [2,10], analytically, or using computation. In principle, the Sachs equations are solvable by computation for any given experiment, and such a solution would show the reciprocal influence between the electromagnetic and gravitational fields, leading to significant findings.

The ability of extracting electromagnetic energy density from the vacuum depends on the use of a device such as a dipole, and this dipole can be as simple as battery terminals, as discussed by Bearden [13] The principle involved in this device is that electromagnetic energy density $A^{\mu} J^{*}_{\mu}$ exists in general relativity under all circumstances, and electromagnetic 4-currents and 4-potentials emanate form spacetime curvature. Therefore, the current in the battery is not driven by the positive and negative terminals, but is a manifestation of energy from curved spacetime, just as the hydrogen Lamb shift is another such manifestation. A battery runs down because the chemical energy needed to form the dipole dissipates.

In principle, therefore, the electromagnetic energy density in Eq. (50) is always available whenever there is spacetime curvature; in other words, it is always available because there is always spacetime curvature.

V. THE CURVATURE TENSOR

The curvature tensor is defined in terms of covariant derivatives of the spin-affine connections Ω_{ρ}, and according to Section (III), has its equivalent in O(3) electrodynamics.

The curvature tensor is

$$\begin{aligned} \kappa_{\rho\lambda} &= -\kappa_{\lambda\rho} = \Omega_{\rho:\lambda} - \Omega_{\lambda:\rho} \\ &= \partial_{\lambda}\Omega_{\rho} - \partial_{\rho}\Omega_{\lambda} + \Omega_{\lambda}\Omega_{\rho} - \Omega_{\rho}\Omega_{\lambda} \end{aligned} \tag{60}$$

and obeys the Jacobi identity

$$D_{\gamma}\kappa_{\rho\lambda} + D_{\rho}\kappa_{\lambda\gamma} + D_{\lambda}\kappa_{\gamma\rho} \equiv 0 \tag{61}$$

which can be written as

$$D_{\mu}\tilde{\kappa}^{\mu\nu} \equiv 0 \tag{62}$$

where

$$\tilde{\kappa}^{\mu\nu} = \frac{1}{2}\varepsilon^{\mu\nu\rho\sigma}\kappa_{\rho\sigma} \tag{63}$$

is the dual of $\kappa_{\rho\sigma}$.

Equation (4) has the form of the homogeneous field equation of O(3) electrodynamics [2,10]. If we now define

$$\kappa^{\rho\lambda} = \Omega^{\rho;\lambda} - \Omega^{\lambda;\rho}$$
$$= (\partial^\lambda + \Omega^\lambda)\Omega^\rho - (\partial^\rho + \Omega^\rho)\Omega^\lambda \tag{64}$$

then

$$D_\rho \kappa^{\rho\lambda} = (\partial_\rho + \Omega_\rho)((\partial^\lambda + \Omega^\lambda)\Omega^\rho - (\partial^\rho + \Omega^\rho)\Omega^\lambda)$$
$$\equiv L^\lambda \neq 0 \tag{65}$$

has the form of the inhomogeneous field equation of O(3) electrodynamics with a nonzero source term L^λ in curved spacetime.

The curvature tensor can be written as a commutator of covariant derivatives

$$\kappa_{\mu\nu} = -\kappa_{\nu\mu} = -[D_\mu, D_\nu] = -[\partial_\mu + \Omega_\mu, \partial_\nu + \Omega_\nu]$$
$$= \Omega_{\mu;\nu} - \Omega_{\nu;\mu} \tag{66}$$

and is the result of a closed loop, or holonomy, in curved spacetime. This is the way in which a curvature tensor is also derived in general gauge field theory on the classical level [11]. If a field ϕ is introduced such that

$$\phi'(x) = S\phi(x) \tag{67}$$

under a gauge transformation, it follows that

$$\delta\phi = \Omega_\mu dx^\mu \phi \tag{68}$$

and that

$$\partial_\mu \phi' = S(\partial_\mu \phi) + (\partial_\mu S)\phi \tag{69}$$

The expression equivalent to Eq. (68) in general gauge field theory is [11]

$$\delta\psi = igM^a A^a_\mu dx^\mu \psi \tag{70}$$

where M^a are group rotation generators and A^a_μ are vector potential components with internal group indices a. Under a gauge transformation

$$(\partial_\mu + \Omega'_\mu)\phi' = S(\partial_\mu + \Omega_\mu)\phi \tag{71}$$

leading to the expression

$$\Omega'_\mu = S\Omega_\mu S^{-1} - (\partial_\mu S)S^{-1} \tag{72}$$

The equivalent equation in general gauge field theory is

$$A'_\mu = SA_\mu S^{-1} - \frac{i}{g}(\partial_\mu S)S^{-1} \tag{73}$$

Equations (72) and (73) show that the spin-affine connection Ω_μ and vector potential A_μ behave similarly under a gauge transformation. The relation between covariant derivatives has been developed in Section III.

VI. GENERALLY COVARIANT 4-VECTORS

The most fundamental feature of O(3) electrodynamics is the existence of the $B^{(3)}$ field [2], which is longitudinally directed along the axis of propagation, and which is defined in terms of the vector potential plane wave:

$$A^{(1)} = A^{(2)*} \tag{74}$$

From the irreducible representations of the Einstein group, there exist 4-vectors that are generally covariant and take the following form:

$$\begin{aligned} B_1^\mu &= (B_X^{(0)}, B_X^{(1)}, B_X^{(2)}, B_X^{(3)}) \\ B_2^\mu &= (B_Y^{(0)}, B_Y^{(1)}, B_Y^{(2)}, B_Y^{(3)}) \\ B_3^\mu &= (B_Z^{(0)}, B_Z^{(1)}, B_Z^{(2)}, B_Z^{(3)}) \end{aligned} \tag{75}$$

All these components exist in general, and the $B^{(3)}$ field can be identified as the $B_z^{(3)}$ component. In O(3) electrodynamics, these 4-vectors reduce to

$$\begin{aligned} B_1^\mu &= (0, B_X^{(1)}, B_X^{(2)}, 0) \\ B_2^\mu &= (0, B_Y^{(1)}, B_Y^{(2)}, 0) \\ B_3^\mu &= (B_Z^{(0)}, 0, 0, B_Z^{(3)}) \end{aligned} \tag{76}$$

so it can be concluded that O(3) electrodynamics is developed in a curved spacetime that is defined in such a way that

$$B^{(3)} = -igA^{(1)} \times A^{(2)} \tag{77}$$

In O(3) electrodynamics, there exist the cyclic relations (23), and we have seen that in general relativity, this cyclic relation can be derived using a particular choice of metric. In the special case of O(3) electrodynamics, the vector

$$B_3^\mu = (B_Z^{(0)}, B_Z^{(1)}, B_Z^{(2)}, B_Z^{(3)}) \tag{78}$$

reduces to

$$B_3^{\mu} = (B_Z^{(0)}, 0, 0, B_Z^{(3)}) \tag{79}$$

Similarly, there exists, in general, the 4-vector

$$A\,; \; = (A_Z^{(0)}, A_Z^{(1)}, A_Z^{(2)}, A_Z^{(3)}) \tag{80}$$

which reduces in O(3) electrodynamics to

$$A_3^{\mu} = (A_Z^{(0)}, 0, 0, A_Z^{(3)}) \tag{81}$$

and that corresponds to generally covariant energy-momentum.

The curved spacetime 4-current is also generally covariant and has components such as

$$\begin{aligned} j_1^{\mu} &= (j_X^{(0)}, j_X^{(1)}, j_X^{(2)}, j_X^{(3)}) \\ j_2^{\mu} &= (j_Y^{(0)}, j_Y^{(1)}, j_Y^{(2)}, j_Y^{(3)}) \\ j_3^{\mu} &= (j_Z^{(0)}, j_Z^{(1)}, j_Z^{(2)}, j_Z^{(3)}) \end{aligned} \tag{82}$$

which, in O(3) electrodynamics, reduce to

$$\begin{aligned} j_1^{\mu} &= (0, \; j_X^{(1)}, j_X^{(2)}, 0) \\ j_2^{\mu} &= (0, \; j_Y^{(1)}, j_Y^{(2)}, 0) \\ j_3^{\mu} &= (j_Z^{(0)}, 0, 0, j_Z^{(3)}) \end{aligned} \tag{83}$$

The existence of a vacuum current such as this is indicated in O(3) electrodynamics by its inhomogeneous field equation

$$D_{\mu} G^{\mu\nu} = J^{\nu} \tag{84}$$

which is a Yang-Mills type of equation [2]. The concept of vacuum current was also introduced by Lehnert and is discussed in his review (first chapter in this volume; i.e., in Part 2).

The components of the antisymmetric field tensor in the Sachs theory [1] are

$$\begin{aligned} B^3 &= F^{21} = -F^{12} = (B_Z^{(0)}, B_Z^{(1)}, B_Z^{(2)}, B_Z^{(3)}) \\ B^1 &= F^{32} = -F^{23} = (B_X^{(0)}, B_X^{(1)}, B_X^{(2)}, B_X^{(3)}) \\ B^2 &= F^{13} = -F^{31} = (B_Y^{(0)}, B_Y^{(1)}, B_Y^{(2)}, B_Y^{(3)}) \\ E^1 &= F^{01} = -F^{10} = (E_X^{(0)}, E_X^{(1)}, E_X^{(2)}, E_X^{(3)}) \\ E^2 &= F^{02} = -F^{20} = (E_Y^{(0)}, E_Y^{(1)}, E_Y^{(2)}, E_Y^{(3)}) \\ E^3 &= F^{03} = -F^{30} = (E_Z^{(0)}, E_Z^{(1)}, E_Z^{(2)}, E_Z^{(3)}) \end{aligned} \tag{85}$$

each of which is a 4-vector that is generally covariant. For example

$$B_Z^{\mu} B_{\mu Z} = \text{invariant} \tag{86}$$

So, in general, in curved spacetime, there exist longitudinal and transverse components under all conditions. In O(3) electrodynamics, the upper indices ((l),(2),(3)) are defined by the unit vectors

$$\begin{aligned} \boldsymbol{e}^{(1)} &= \frac{1}{\sqrt{2}}(\boldsymbol{i} - i\boldsymbol{j}) \\ \boldsymbol{e}^{(2)} &= \frac{1}{\sqrt{2}}(\boldsymbol{i} + i\boldsymbol{j}) \\ \boldsymbol{e}^{(3)} &= \boldsymbol{k} \end{aligned} \tag{87}$$

which form the cyclically symmetric relation [2]

$$\begin{aligned} \boldsymbol{e}^{(1)} \times \boldsymbol{e}^{(2)} &= i\boldsymbol{e}^{(3)*} \\ &\cdots \end{aligned} \tag{88}$$

where the asterisk in this case denotes complex conjugation. In addition, there is the time-like index (0). The field tensor components in O(3) electrodynamics are therefore, in general

$$\begin{aligned} F^{01} &= -F^{10} = (0, E_X^{(1)}, E_X^{(2)}, 0) \\ F^{02} &= -F^{20} = (0, E_Y^{(1)}, E_Y^{(2)}, 0) \\ F^{03} &= -F^{30} = (E_Z^{(0)}, 0, 0, E_Z^{(3)}) \\ F^{21} &= -F^{12} = (B_Z^{(3)}, 0, 0, B_Z^{(3)}) \\ F^{13} &= -F^{31} = (0, B_Y^{(1)}, B_Y^{(2)}, 0) \\ F^{32} &= -F^{23} = (0, B_X^{(1)}, B_X^{(2)}, 0) \end{aligned} \tag{89}$$

and the following invariants occur:

$$\begin{aligned} B_Y^{(1)} B_Y^{(2)} + B_Y^{(2)} B_Y^{(1)} &= B^{(0)2} \\ B_X^{(1)} B_X^{(2)} + B_X^{(2)} B_X^{(1)} &= B^{(0)2} \\ E_Y^{(1)} E_Y^{(2)} + E_Y^{(2)} E_Y^{(1)} &= E^{(0)2} \\ E_X^{(1)} E_X^{(2)} + E_X^{(2)} E_X^{(1)} &= E^{(0)2} \\ B_Z^{(0)2} - B_Z^{(3)2} &= E_Z^{(0)2} - E_Z^{(3)2} = 0 \end{aligned} \tag{90}$$

From general relativity, it can therefore be concluded that the $\boldsymbol{B}^{(3)}$ field must exist and that it is a physical magnetic flux density defined to the precision of the Lamb shift. It propagates through the vacuum with other components of the field tensor.

VII. SACHS THEORY IN THE FORM OF A GAUGE THEORY

The most general form of the vector potential can be obtained by writing the first **two** terms of Eq. (57) as

$$F_{\rho\gamma.1} = \partial_\rho A^*_\gamma - \partial_\gamma A^*_\rho \tag{91}$$

The vector potential is defined as

$$A^*_\gamma = \frac{Q}{4}\int_J (\kappa_{\rho\lambda} q^\lambda + q^\lambda \kappa^+_{\rho\lambda}) q^*_\gamma \, dx^\rho \tag{92}$$

and can be written as

$$A; = \$9; \int_J (\kappa_{\rho\lambda} q^\lambda + q^\lambda \kappa^+_{\rho\lambda}) \, dx^\rho \tag{93}$$

In order to prove that

$$\int 9; \, dx^\rho \simeq 9; \int dx^\rho \tag{94}$$

we can take examples, giving results **such as**

$$\begin{aligned} q^*_Z &= (-q^{(0)}_Z, q^{(1)}_Z, q^{(2)}_Z, q^{(3)}_Z) \\ &= (-q^{(0)}_Z, 0, 0, q^{(3)}_Z) \\ \int q^*_Z \, dX &= q^*_Z \int dX \end{aligned} \tag{95}$$

because q^*_z has no functional dependence on X. The overall structure of the field tensor, using irreducible representations of the Einstein group, is therefore

$$F_{\rho\gamma} = C(\partial_\rho q^*_\gamma - \partial_\gamma q^*_\rho) + D(q_\rho q^*_\gamma - q_\gamma q^*_\rho) \tag{96}$$

where C and *D* are coefficients. This equation has the structure of a quaternion valued non-Abelian gauge field theory. The most general form of the field tensor

and the vector potential is quaternion-valued. If the following constraint holds

$$\frac{D}{C^2} \equiv -ig \tag{97}$$

the structure of Eq. (96) becomes

$$F_{\rho\gamma} = \partial_\rho A^*_\gamma - \partial_\gamma A^*_\rho - ig[A^*_\rho, A^*_\gamma] \tag{98}$$

which is identical with that of gauge field theory with quaternion-valued potentials. However, the use of the irreducible representations of the Einstein group leads to a structure that is more general than that of Eq. (98). The rules of gauge field theory can be applied to the substructure (98) and to electromagnetism in curved spacetime.

VIII. ANTIGRAVITY EFFECTS IN THE SACHS THEORY

Sachs' equations (4.16) (in Ref. 1)

$$\begin{aligned} \frac{1}{4}(\kappa_{\rho\gamma}q^\lambda + q^\lambda\kappa^+_{\rho\lambda}) + \frac{1}{8}Rq_\rho &= kT_\rho \\ -\frac{1}{4}(\kappa^+_{\rho\gamma}q^{\lambda *} + q^{\lambda *}\kappa_{\rho\gamma}) + \frac{1}{8}Rq^*_\rho &= kT^*_\rho \end{aligned} \tag{99}$$

are 16 equations in 16 unknowns, as these are the 16 components of the quaternion-valued metric. The canonical energy-momentum $\mathbf{T}_\rho$ is also quaternion-valued, and the equations are factorizations of the Einstein field equation. If there is no linear momentum and a static electromagnetic field (no Poynting vector), then

$$\mathbf{T}_\rho = (\mathbf{T}^0_\rho, 0, 0, 0) \tag{100}$$

so we have the four components $\mathbf{T}^0_0, \mathbf{T}^0_1, \mathbf{T}^0_2$, and $\mathbf{T}^0_3$. The $\mathbf{T}^0_0$ component is a component of the canonical energy due to the gravitoelectromagnetic field represented by q^0_0. The scalar curvature R is the same with and without electromagnetism, and so is the Einstein constant k.

Considering $\mathbf{T}^0_0$ In Eq. (99), we obtain

$$k\mathbf{T}^0_0 = \frac{1}{8}Rq^0_0 + \frac{1}{4}(\kappa_{0\lambda}q^\lambda + q^\lambda\kappa^+_{0\lambda}) \tag{101}$$

and if we choose a metric such that all components go to zero except q^0_0, then

$$k\mathbf{T}^0_0 \to \frac{1}{8}Rq^0_0 \tag{102}$$

However, R also vanishes in this limit, so

$$\mathbf{T}_0^0 \rightarrow 0 \tag{103}$$

So, in order to produce antigravity effects, the gravitoelectromagnetic field must be chosen so that only q_0^0 exists in a static situation. Therefore, antigravity is produced by q_1^0, q_2^0, and q_3^0 all going to zero asymptotically, or by

$$q_0^0 \gg (q_1^0 \approx q_2^0 \approx q_3^0) \tag{104}$$

This result is consistent with the fact that the curvature tensor $\kappa_{0\lambda}$ must be minimized, which is a consistent result. The curvature is

$$\kappa_{\rho\lambda} = -\kappa_{\lambda\rho} = \Omega_{\rho;\lambda} - \Omega_{\lambda;\rho} \tag{105}$$

and is minimized if

$$\Omega_{\rho;\lambda} \approx \Omega_{\lambda;\rho} \tag{106}$$

If p = 0, then $\Omega_{0;\lambda} \approx \Omega_{\lambda;0}$. This minimization can occur if the spin–affine connection is minimized. We must now investigate the effect of minimizing $\kappa_{0\lambda}$ on the electromagnetic field

$$F_{\rho\gamma} = Q\left[\frac{1}{4}(\kappa_{\rho\lambda}q^{\lambda}q_{\gamma}^{*} + q_{\gamma}q^{\lambda *}\kappa_{\rho\lambda} + q^{\lambda}\kappa_{\rho\lambda}^{+}q_{\gamma}^{*} + q_{\gamma}\kappa_{\rho\lambda}^{+}q^{\lambda *}) + \frac{1}{8}(q_{\rho}q_{\gamma}^{*} - q_{\gamma}q_{\rho}^{*})R\right] \tag{107}$$

We know that $R \rightarrow 0$ and p = 0, so

$$F_{0\gamma} = Q\left[\frac{1}{4}(\kappa_{0\lambda}q^{\lambda}q_{\gamma}^{*} + \cdots)\right] \tag{108}$$

and the $F_{0\gamma}$ component must be minimized. This is the gravitoelectric component. Therefore, the gravitomagnetic component must be very large in comparison with the gravitoelectric component.

IX. SOME NOTES ON QUATERNION-VALUED METRICS

In the flat spacetime limit, the following relation holds:

$$q^{\mu}q^{\nu *} - q^{\nu}q^{\mu *} \rightarrow \sigma^{\mu}\sigma^{\nu} - \sigma^{\nu}\sigma^{\mu} \tag{109}$$

where

$$\sigma^{\mu} = \left(\begin{bmatrix} 1 & 0 \\ 0 & 1 \end{bmatrix}, \begin{bmatrix} 0 & 1 \\ 1 & 0 \end{bmatrix}, \begin{bmatrix} 0 & -i \\ i & 0 \end{bmatrix}, \begin{bmatrix} 1 & 0 \\ 0 & -1 \end{bmatrix} \right) \tag{110}$$

Therefore, the quaternion-valued metric can be written as

$$q^{\mu} = \left(\begin{bmatrix} q^{\mu 0} & 0 \\ 0 & q^{\mu 0} \end{bmatrix}, \begin{bmatrix} 0 & q^{\mu 1} \\ q^{\mu 1} & 0 \end{bmatrix}, \begin{bmatrix} 0 & -iq^{\mu 2} \\ iq^{\mu 2} & 0 \end{bmatrix}, \begin{bmatrix} q^{\mu 3} & 0 \\ 0 & -q^{\mu 3} \end{bmatrix} \right) \tag{111}$$

with components

$$\begin{aligned}
q^0 &= \left(\begin{bmatrix} q_0^0 & 0 \\ 0 & q_0^0 \end{bmatrix}, \begin{bmatrix} 0 & q_0^1 \\ q_0^1 & 0 \end{bmatrix}, \begin{bmatrix} 0 & -iq_0^2 \\ iq_0^2 & 0 \end{bmatrix}, \begin{bmatrix} q_0^3 & 0 \\ 0 & -q_0^3 \end{bmatrix} \right) \\
q_X &= \left(\begin{bmatrix} q_X^0 & 0 \\ 0 & q_X^0 \end{bmatrix}, \begin{bmatrix} 0 & q_X^1 \\ q_X^1 & 0 \end{bmatrix}, \begin{bmatrix} 0 & -iq_X^2 \\ iq_X^2 & 0 \end{bmatrix}, \begin{bmatrix} q_X^3 & 0 \\ 0 & -q_X^3 \end{bmatrix} \right) \\
q_Y &= \left(\begin{bmatrix} q_Y^0 & 0 \\ 0 & q_Y^0 \end{bmatrix}, \begin{bmatrix} 0 & q_Y^1 \\ q_Y^1 & 0 \end{bmatrix}, \begin{bmatrix} 0 & -iq_Y^2 \\ iq_Y^2 & 0 \end{bmatrix}, \begin{bmatrix} q_Y^3 & 0 \\ 0 & -q_Y^3 \end{bmatrix} \right) \\
q_z &= \left(\begin{bmatrix} q_Z^0 & 0 \\ 0 & q_Z^0 \end{bmatrix}, \begin{bmatrix} 0 & q_Z^1 \\ q_Z^1 & 0 \end{bmatrix}, \begin{bmatrix} 0 & -iq_Z^2 \\ iq_Z^2 & 0 \end{bmatrix}, \begin{bmatrix} q_Z^3 & 0 \\ 0 & -q_Z^3 \end{bmatrix} \right)
\end{aligned} \tag{112}$$

In the flat spacetime limit

$$\begin{aligned}
q^0 \to \sigma^0 &= \left(\begin{bmatrix} 1 & 0 \\ 0 & 1 \end{bmatrix}, 0, 0, 0 \right) \\
q_X \to \sigma_X &= \left(0, \begin{bmatrix} 0 & 1 \\ 1 & 0 \end{bmatrix}, 0, 0 \right) \\
q_Y \to \sigma_Y &= \left(0, 0, \begin{bmatrix} 0 & -i \\ i & 0 \end{bmatrix}, 0 \right) \\
q_Z \to \sigma_Z &= \left(0, 0, 0, \begin{bmatrix} 1 & 0 \\ 0 & -1 \end{bmatrix} \right)
\end{aligned} \tag{113}$$

This means that in the flat spacetime limit

$$\begin{aligned} &q_0^0 \rightarrow 1; \quad q_0^1 \rightarrow 0; \quad q_0^2 \rightarrow 0; \quad q_0^3 \rightarrow 0 \\ &q_X^0 \rightarrow 0; \quad q_X^1 \rightarrow 1; \quad q_X^2 \rightarrow 0; \quad q_X^3 \rightarrow 0 \\ &q_Y^0 \rightarrow 0; \quad q_Y^1 \rightarrow 0; \quad q_Y^2 \rightarrow 1; \quad q_Y^3 \rightarrow 0 \\ &q_Z^0 \rightarrow 1; \quad q_Z^1 \rightarrow 0; \quad q_Z^2 \rightarrow 0; \quad q_Z^3 \rightarrow 1 \end{aligned} \tag{114}$$

Checking with the identity:

$$q_\gamma q^{\kappa *} + q^\kappa q_\gamma^* = 2\sigma_0 \delta_\gamma^\kappa \tag{115}$$

then

$$\begin{aligned} q_X q^{X*} + q^X q_X^* &= 2\sigma_0 \delta_X^X = 2\sigma_0 \\ (q_X^0)^2 + (q_X^1)^2 + (q_X^2)^2 + (q_X^3)^2 &= \sigma_0 \end{aligned} \tag{116}$$

which is a property of quaternion indices in curved spacetime. In flat spacetime:

$$(q_X^1)^2 = \sigma_0 \tag{117}$$

that is

$$\begin{pmatrix} 1 & 0 \\ 0 & 1 \end{pmatrix} = \begin{pmatrix} 1 & 0 \\ 0 & 1 \end{pmatrix} \tag{118}$$

The reduction to O(3) electrodynamics takes place using products such as

$$\begin{aligned} q_X q_Y^* - q_Y q_X^* &= \begin{bmatrix} 0 & q_X^1 \\ q_X^1 & 0 \end{bmatrix} \begin{bmatrix} 0 & -iq_Y^2 \\ iq_Y^2 & 0 \end{bmatrix} - \begin{bmatrix} 0 & -iq_Y^2 \\ iq_Y^2 & 0 \end{bmatrix} \begin{bmatrix} 0 & q_X^1 \\ q_X^1 & 0 \end{bmatrix} \\ &= \begin{bmatrix} iq_X^1 q_Y^2 & 0 \\ 0 & -iq_Y^2 q_X^1 \end{bmatrix} \\ &= i \begin{bmatrix} q_Z^3 & 0 \\ 0 & q_Z^3 \end{bmatrix} \end{aligned} \tag{119}$$

that is

$$q_Z^3 = q_X^1 q_Y^2 \tag{120}$$

In flat spacetime, this becomes

$$1 = 1 \tag{121}$$

If the phases are defined as

$$q_X^1 = e^{i\phi}; \quad q_Y^{2*} = e^{-i\phi} \tag{122}$$

then the $\boldsymbol{B}^{(3)}$ field is recovered as

$$B^{(3)} = \frac{1}{8}QR \tag{123}$$

Applying Eq. (99), it is seen that T^{μ} has the same structure as q^{μ}:

$$\mathrm{T}^{\mu} = \left(\begin{bmatrix} \mathrm{T}^{\mu 0} & o \\ 0 & \mathrm{T}^{\mu 0} \end{bmatrix}, \begin{bmatrix} 0 & \mathrm{T}^{\mu 1} \\ \mathrm{T}^{\mu 1} & 0 \end{bmatrix}, \begin{bmatrix} 0 & -i\,\mathrm{T}^{\mu 2} \\ i\,\mathrm{T}^{\mu 2} & 0 \end{bmatrix}, \begin{bmatrix} \mathrm{T}^{\mu 3} & 0 \\ 0 & -\mathrm{T}^{\mu 3} \end{bmatrix} \right) \tag{124}$$

Therefore, the energy momentum is quaternion-valued. The vacuum current is

$$j_\gamma = \frac{Qk'}{4\pi}(\mathrm{T}^{:\rho}_{\rho} q^*_\gamma - q_\gamma \mathrm{T}^{:\rho *}_{\rho}) \tag{125}$$

where Q and $\kappa'/4\pi$ are constants. We may investigate the structure of the 4-current j_γ by working out the covariant derivative:

$$\mathrm{T}^{:\rho}_{\rho} = \partial^0 \mathrm{T}_0 + \partial^1 \mathrm{T}_1 + \partial^2 \mathrm{T}_2 + \partial^3 \mathrm{T}_3 + \Gamma^{\rho}_{0\rho}\mathrm{T}^0 + \Gamma^{\rho}_{1\rho}\mathrm{T}^1 + \Gamma^{\rho}_{2\rho}\mathrm{T}^2 + \Gamma^{\rho}_{3\rho}\mathrm{T}^3 \tag{126}$$

The partial derivatives and Christoffel symbols are not quaternion-valued, so we may write

$$\mathrm{T}^{:\rho}_{\rho} = (\partial^0 + \Gamma^{\rho}_{0\rho})\mathrm{T}_0 - (\partial^1 + \Gamma^{\rho}_{1\rho})\mathrm{T}_1 - (\partial^2 + \Gamma^{\rho}_{2\rho})\mathrm{T}_2 - (\partial^3 + \Gamma^{\rho}_{3\rho})\mathrm{T}_3 \tag{127}$$

Therefore the vacuum current in general relativity is defined by

$$\begin{aligned} j_\gamma = \frac{Qk'}{4\pi}(((\partial^0 + \Gamma^{\rho}_{0\rho})\mathrm{T}_0 - (\partial^1 + \Gamma^{\rho}_{1\rho})\mathrm{T}_1 \quad (\partial^2 + \Gamma^{\rho}_{2\rho})\mathrm{T}_2 - (\partial^3 + \Gamma^{\rho}_{3\rho})\mathrm{T}_3)q^*_\gamma \\ + q_\gamma((\partial^0 + \Gamma^{\rho}_{0\rho})\mathrm{T}_0 + (\partial^1 + \Gamma^{\rho}_{1\rho})\mathrm{T}_1 + (\partial^2 + \Gamma^{\rho}_{2\rho})\mathrm{T}_2 + (\partial^3 + \Gamma^{\rho}_{3\rho})\mathrm{T}_3)) \end{aligned} \tag{128}$$

This current exists under all conditions and is the most general form of the Lehnert vacuum current described elsewhere in this volume, and the vacuum

current in O(3) electrodynamics. In the Sachs theory, the existence of the electromagnetic field tensor depends on curvature, so energy is extracted from curved spacetime. The 4-current j_μ contains terms such as

$$\begin{aligned} j_{\gamma,0} &= \frac{Qk'}{4\pi}((\partial^0 + \Gamma^\rho_{0\rho})T_0 q^*_\gamma + q_\gamma(\partial^0 + \Gamma^\rho_{0\rho})T_0) \\ &= \frac{Qk'}{4\pi}(\partial^0 + \Gamma^\rho_{0\rho})\left(\begin{bmatrix} T^0_0 & 0 \\ 0 & T^0_0 \end{bmatrix} q^*_\gamma + q_\gamma \begin{bmatrix} T^0_0 & 0 \\ 0 & T^0_0 \end{bmatrix}\right) \end{aligned} \tag{129}$$

We may now choose $\gamma = 0, 1, 2, 3$ to obtain terms such as

$$\begin{aligned} j_{0.0} &= (\partial^0 + \Gamma^\rho_{0\rho})\left(-\begin{bmatrix} T^0_0 & 0 \\ 0 & T^0_0 \end{bmatrix}\begin{bmatrix} q^0_0 & 0 \\ 0 & q^0_0 \end{bmatrix} + \begin{bmatrix} q^0_0 & 0 \\ 0 & q^0_0 \end{bmatrix}\begin{bmatrix} T^0_0 & 0 \\ 0 & T^0_0 \end{bmatrix}\right) = 0 \\ j_{1.0} &= -(\partial^0 + \Gamma^\rho_{0\rho})\left(\begin{bmatrix} T^0_0 & 0 \\ 0 & T^0_0 \end{bmatrix}\begin{bmatrix} 0 & q^1_1 \\ q^1_1 & 0 \end{bmatrix} + \begin{bmatrix} 0 & q^1_1 \\ q^1_1 & 0 \end{bmatrix}\begin{bmatrix} T^0_0 & 0 \\ 0 & T^0_0 \end{bmatrix}\right) \\ &= -(\partial^0 + \Gamma^\rho_{0\rho})(q^1_1 T^0_0(\sigma_X + \sigma_0)) \\ &\neq 0 \end{aligned} \tag{130}$$

There are numerous other components of the 4-current density j_γ that are nonzero under all conditions. These act as sources for the electromagnetic field under all conditions. In flat spacetime, the electromagnetic field vanishes, and so does the 4-current density j_γ.

A check can be made on the interpretation of the quaternion-valued metric if we take the quatemion conjugate:

$$q^{\mu *} = \left(-\begin{bmatrix} q^{\mu 0} & 0 \\ 0 & q^{\mu 0} \end{bmatrix}, \begin{bmatrix} 0 & q^{\mu 1} \\ q^{\mu 1} & 0 \end{bmatrix}, \begin{bmatrix} 0 & iq^{\mu 2} \\ iq^{\mu 2} & 0 \end{bmatrix}, \begin{bmatrix} q^{\mu 3} & 0 \\ 0 & -q^{\mu 3} \end{bmatrix}\right) \tag{131}$$

which must reduce, in the f flat space-time limit, to:

$$\sigma^\mu = \left(\begin{bmatrix} 1 & 0 \\ 0 & 1 \end{bmatrix}, \begin{bmatrix} 0 & 1 \\ 1 & 0 \end{bmatrix}, \begin{bmatrix} 0 & -i \\ i & 0 \end{bmatrix} \begin{bmatrix} 1 & 0 \\ 0 & -1 \end{bmatrix}\right) \tag{132}$$

This means that the flat spacetime metric is

$$\begin{bmatrix} -1 & 0 & 0 & 0 \\ 0 & 1 & 0 & 0 \\ 0 & 0 & 1 & 0 \\ 0 & 0 & 0 & 1 \end{bmatrix} = -g^{\mu\nu} \tag{133}$$

which is the negative of the metric $g^{\mu\nu}$ of flat spacetime, that is, Minkowski spacetime.

If we define

$$q^{\mu *} = \left(\begin{bmatrix} q^{\mu 0} & 0 \\ 0 & q^{\mu 0} \end{bmatrix}, -\begin{bmatrix} 0 & q^{\mu 1} \\ q^{\mu 1} & 0 \end{bmatrix}, -\begin{bmatrix} 0 & -iq^{\mu 2} \\ iq^{\mu 2} & 0 \end{bmatrix}, -\begin{bmatrix} q^{\mu 3} & 0 \\ 0 & -q^{\mu 3} \end{bmatrix} \right) \tag{134}$$

then we obtain

$$g^{\mu\nu} \equiv g_{\mu\nu} = \begin{bmatrix} 1 & 0 & 0 & 0 \\ 0 & 0 & -1 & 0 \\ 0 & -1 & 0 & -1 \end{bmatrix} \tag{135}$$

in the flat spacetime limit. This is the usual Minkowski metric

To check on the interpretation given in the text of the reduction of Sachs to O(3) electrodynamics, we can consider generally covariant components such as

$$\begin{aligned} q_X &= (q_X^0, q_X^1, q_X^2, q_X^3) \to (\sigma^0, \sigma^1, \sigma^2, \sigma^3) \\ q_Y &= (q_Y^0, q_Y^1, q_Y^2, q_Y^3) \to (\sigma^0, \sigma^1, \sigma^2, \sigma^3) \\ q_Y^* &= (-q_Y^0, q_Y^1, q_Y^2, q_Y^3) \to (-\sigma^0, \sigma^1, \sigma^2, \sigma^3) \end{aligned} \tag{136}$$

It follows that

$$q_X q_Y^* - q_Y q_X^* \to \sigma_X \sigma_Y - \sigma_Y \sigma_X = 2i\sigma_Z \tag{137}$$

and that:

$$\begin{aligned} \sigma_X &= (0, \sigma_X, 0, 0) \\ \sigma_Y &= (0, 0, \sigma_Y, 0) \end{aligned} \tag{138}$$

Note that products such as $\sigma_X \sigma_Y$ must be interpreted as single-valued, because products such as

$$[0 \ \sigma_x \ 0 \ 0] \begin{bmatrix} 0 \\ 0 \\ \sigma_y \\ 0 \end{bmatrix} = \begin{bmatrix} 0 & 0 & 0 & 0 \\ 0 & 0 & 0 & 0 \\ 0 & 0 & 0 & 0 \\ 0 & 0 & 0 & 0 \end{bmatrix} \tag{139}$$

give a null matrix. Therefore, the quateion-valued product $q_X q_Y^*$ must also be interpreted as

$$q_X q_Y^* - q_Y q_X^* \to \sigma_X \sigma_Y - \sigma_Y \sigma_X = 2i\sigma_Z \tag{140}$$

as in the text.

Acknowledgments

The U.S. Department of Energy is acknowledged for its Website: http://www.ott.doe.gov/electromagnetic/. This website is reserved for the Advanced Electrodynamics Working Group.

References

1. M. Sachs, I 1th chapter in Part 1 of this three-volume set.
2. M. W. Evans, 2nd chapter in this volume (i.e.. Part 2 of this compilation).
3. M. W. Evans, *O(3) Electrodynamics*, Kluwer Academic, Dordrecht, 1999.
4. T. W. Barrett and D. M. Grimes, ***Advanced Electromagnetism***, World Scientific, Singapore, 1995.
5. A demonstration of this property in O(3) electrodynamics is given by Evans and leffers, 1st chapter *in* Parr 3 of this three-volume set; see also Ref(s).—by Vigier in Bibiography at end of that chapter.
6. M. W. Evans, J. P. Vigier. and S. Roy (eds.), ***The Enigmatic Photon,*** Kluwer Academic, Dordrecht, 1997. Vo. 4.
7. T. E. Bearden, ***Energy from the Active Vacuum.*** World Scientific, Singapore, in press.
8. T. E. Bearden, I lth and 12th chapters in this volume (i.e., Part 2).
9. M. W. Evans and S. Jeffers, 1 st chapter in Part 3 of thsi three-volume set; see also Ref(s).—by Vigier listed in that chapter.
10. T. W. Barren, in A. Lakhtakia (Ed.), ***Essays on the Formal Aspects Of Electromagnetic Theory,*** World Scientific. Singapore, 1993.
11. L. H. Ryder, Quantum ***Field Theory,*** 2nd ed., Cambridge Univ. Press. Cambridge, UK, 1987.
12. T. W. Barrett, ***Apeiron 7(1), (2000).***
13. T. E. Bearden et al., ***Phys. Scripta*** 61, 513 (2000).

The Tom Bearden Website

Foundations of Physics Letters, Vol. 14., No. 1, 2001

EXPLANATION OF THE MOTIONLESS ELECTROMAGNETIC GENERATOR WITH 0(3) ELECTRODYNAMICS

- Page 1
- Page 2
- Page 3
- Page 4
- Page 5
- Page 6
- Page 7
- Page 8

Foundations of Physics Letters. Vol. 14. *No.1*. 2001

EXPLANATION OF THE MOTIONLESS ELECTROMAGNETIC GENERATOR WITH 0(3) ELECTRODYNAMICS

**P. K. Anastasovski (1), T. E. Bearden (2), C. Ciub-
otariu (3), W. T. Coffey (4), L. B. Crowell (5), G.
J. Evans (6), M. W. Evans (7, 8), R. Flower (9), A. Labounsky (10), B. Lehnert (11), M. Mészáros (12), P. R. Molnar (12), J. K. Moscicki (13), S. Roy
(14), and J.P. Vigier (15)**

Institute for Advanced Study, Alpha Foundation
Institute of Physics, 11 *Rutafa Street, Building H*
Budapest, H-1165, Hungary

Also at:

(1) Faculty of Technology and Metallurgy, Department of Physics, University of Skopje, Republic of Macedonia; (2) CTEC Inc, Huntsville, Alabama; (3) Institute for Infor-
mation Technology, Stuttgart University, Stuttgart, Ger-
many; (4) Department of Microelectronics and Electrical Engineering, Trinity College, Dublin 2, Ireland; (5) Depart-
ment of Physics and Astronomy University of New Mexico, Albuquerque, New Mexico; (6) Ceredigion County Coun-
cil, Aberaeron, Wales, United Kingdom; (7) former Ed-

ward Davies Chemical Laboratories, University College of Wales, Aberystwyth SY32 INE, Wales, United Kingdom;
(8) sometime JRF, Wolfson College, Oxford; United Kingdom; (9) Applied Science Associates and Temple University Center for Frontier Sciences, Philadelphia, Pennsylvania; (10) The Boeing Company, Huntington Beach, California; (11) Alfvén Laboratory, Royal Institute of Technology, Stockholm, S-100 44, Sweden; (12) Alpha Foundation, Institute of Physics, 11 Rutafa Street, Building H, Budapest, H-1165, Hungary; (13) Smoluchowski Institute of Physics, Jagiellonian University, ul Reymonta 4, Krakow, Poland;
(14) Indian Statistical Institute, Calcutta, India; (15) Laboratoire de Gravitation et Cosmologie Relativistes, Université Pierre et Marie Curie, Tour 22-12, 4 ème étage, 4 Place Jussieu, 7525 Paris, Cedex 05, France.

0894-9875/01/0200-0087$19.500 © 2001 Plenum Publishing Corporation

http://cheniere.nii.net/references/found%20phys%20letters/no%201%202001/p02.jpg

Received 3 December 2000; revised 12 December 2000

Recently, Bearden *el al.* developed a device which is known as a motionless electromagnetic generator (MEG) and which produces a coefficient of performance (COP) far in excess of unity. The device has been independently replicated by Naudin. In this communication, the fundamental operational principle of the MEG is explained using a version of higher symmetry electrodynamics known as O(3) electrodynamics, which is based on the empirical existence of two circular polarization states of electromagnetic radiation, and which has been developed extensively in the literature. The theoretical explanation of the MEG with O(3) electrodynamics is straightforward: Magnetic energy is taken directly ex vacua and used to replenish the permanent magnets of the MEG device, which therefore produces a source of energy that, in theory, can be replenished indefinitely from the vacuum. Such a result is incomprehensible in U(1) Maxwell-Heaviside electrodynamics.

Key words: motionless electromagnetic generator, O(3) electrodynamics, energy from the vacuum.

1. INTRODUCTION

Bearden *et al.* [1] recently produced a device which they describe as a motionless electromagnetic generator (MEG), which outputs more energy than is input by the operator, and therefore produces a coefficient of performance (COP) well in excess of unity. The device has been replicated independently by Naudin [2] and is therefore reproducible and repeatable, meeting the requirements of scientific rigor. In this communication, a qualitative theoretical explanation is offered for the MEG using a version of higher-symmetry electrodynamics known as O(3) electrodynamics [3,4]. The latter theory has been developed from an empirical basis: the existence of two-circularly polarized states of electromagnetic radiation. In O(3) electrodynamics, there exists a vacuum current and vacuum energy [3,4]

$$En = \frac{1}{\mu_0} \int \mathbf{B}^{(3)} \cdot \mathbf{B}^{(3)} dV, \tag{1}$$

http://cheniere.nii.net/references/found%20phys%20letters/no%201%202001/p02.jpg (1 of 2) [5/2/2002 11:30:04 AM]

http://cheniere.nii.net/references/found%20phys%20letters/no%201%202001/p02.jpg

$$En = \frac{1}{\mu_0} \int \mathbf{B}^{(3)} \cdot \mathbf{B}^{(3)} dV, \tag{1}$$

where μ_0 is the vacuum permeability in S.I. units, and where $\mathbf{B}^{(3)}$ is a longitudinally directed and phaseless magnetic flux density which propagates in vacuum with the plane wave $\mathbf{B}^{(1)} = \mathbf{B}^{(2)^*}$ in such a way that

$$\mathbf{B}^{(1)} \times \mathbf{B}^{(2)} = iB^{(0)}\mathbf{B}^{(3)^*}, \quad \text{et cyclicum}, \tag{1a}$$

where $B^{(0)}$ is the scalar magnitude of $\mathbf{B}^{(3)}$ [3,4]. In this notation, $\mathbf{B}^{(3)}$ is a three vector and the dot denotes the usual scalar product, with the

http://cheniere.nii.net/references/found%20phys%20letters/no%201%202001/p02.jpg (2 of 2) [5/2/2002 11:30:04 AM]

http://cheniere.nii.net/references/found%20phys%20letters/no%201%202001/p03.jpg

upper star denoting the usual complex conjugate. In Sec. 2, Eq. (1) is derived from the field equations of O(3) electrodynamics, which are in turn derivable from fiber bundle theory, and have the structure of Yang-Mills field equations. In Sec. 3, the fundamental operational principle of the MEG is explained straightforwardly using Eq. (1).

2. DERIVATION OF EQ. (1)

The homogeneous and inhomogeneous field equations of O(3) electrodynamics are, respectively, [3,4]:

$$D_\mu \tilde{\mathbf{G}}^{\mu\nu} \equiv 0, \tag{2}$$

$$D_\mu \mathbf{H}^{\mu\nu} = \mathbf{J}^\nu, \tag{3}$$

where $\tilde{\mathbf{G}}^{\mu\nu}$ is an O(3) field tensor, and D_μ is the O(3) covariant derivative. In Eqs. (2) and (3), the Greek indices assume the standard values of 0, 1, 2, 3. In Eq. (3), the bold symbol $\mathbf{J}^\nu$ denotes a charge current twelve vector defined as:

$$\mathbf{J}^{\nu(i)} := \left(\rho, \mathbf{J}^{(i)}/c\right), \quad i = 1, 2, 3 \tag{4}$$

where c is the speed of light [3]. In O(3) electrodynamics, the field tensor $\mathbf{G}^{\mu\nu}$ is defined in the internal space ((1), (2), (3)) as the sum of three components [3]:

$$\mathbf{G}^{\mu\nu} := G^{(1)}_{\mu\nu}\mathbf{e}^{(1)} + G^{(2)}_{\mu\nu}\mathbf{e}^{(2)} + G^{(3)}_{\mu\nu}\mathbf{e}^{(3)}. \tag{5}$$

The field tensor $\mathbf{H}^{\mu\nu}$, which is a generalization of $\mathbf{G}^{\mu\nu}$ that includes magnetization and polarization, is similarly defined as:

$$\mathbf{H}^{\mu\nu} := H^{\mu\nu(1)}\mathbf{e}^{(1)} + H^{\mu\nu(2)}\mathbf{e}^{(2)} + H^{\mu\nu(3)}\mathbf{e}^{(3)}, \tag{6}$$

and the charge current 12-vector as

$$\mathbf{J}^\nu := J^{\nu(1)}\mathbf{e}^{(1)} + J^{\nu(2)}\mathbf{e}^{(2)} + J^{\nu(3)}\mathbf{e}^{(3)}, \tag{7}$$

where $\mathbf{e}^{(1)}, \mathbf{e}^{(2)}, \mathbf{e}^{(3)}$ are unit vectors in the basis ((1), (2), (3)). There-

http://cheniere.nii.net/references/found%20phys%20letters/no%201%202001/p03.jpg (1 of 2) [5/2/2002 11:30:10 AM]

http://cheniere.nii.net/references/found%20phys%20letters/no%201%202001/p03.jpg

where $\mathbf{e}^{(1)}, \mathbf{e}^{(2)}, \mathbf{e}^{(3)}$ are unit vectors in the basis ((1), (2), (3)). Therefore O(3) electrodynamics is a Yang-Mills gauge field theory [3] with internal space ((1), (2), (3)). For further details, see Refs. 3 to 8.

These equations are Yang-Mills equations and as such, are derivable from fiber bundle theory [5]. They form an extended Lie algebra [5] and as such, constitute a valid Lie algebra, meeting all the criteria of such an algebra. An extended Lie algebra is defined [5] as

$$E := L \oplus V, \tag{8}$$

http://cheniere.nii.net/references/found%20phys%20letters/no%201%202001/p03.jpg (2 of 2) [5/2/2002 11:30:10 AM]

http://cheniere.nii.net/references/found%20phys%20letters/no%201%202001/p04.jpg

where L and V are two Lie algebras in different spaces.

In vacuum (in the absence of matter), one can develop a special case of Eq. (3):

$$\partial^{\mu}\mathbf{G}^{\mu\nu} = 0, \quad \mathbf{J}^{\nu} = g\varepsilon_0 \mathbf{A}_{\mu} \times \mathbf{G}^{\mu\nu}, \tag{9}$$

where $\mathbf{J}^{\nu}$ is a conserved vacuum current. Here, the tensors $\mathbf{G}^{\mu\nu}$ and $\tilde{\mathbf{G}}^{\mu\nu}$ are dual to each other:

$$\partial^{\mu}\mathbf{G}^{\mu\nu} = \mathbf{0}, \tag{10a}$$

$$\tilde{\mathbf{G}}^{\mu\nu} = \frac{1}{2}\varepsilon^{\mu\nu\sigma\rho}\mathbf{G}_{\sigma\rho}. \tag{10b}$$

This concept is absent from Maxwell-Heaviside electrodynamics, in which the only vacuum current is the Maxwell displacement current. However, Lehnert [6] has developed a theory of electrodynamics based on a concept similar to $\mathbf{J}^{\nu}$ and has replicated the existence $\mathbf{B}^{(3)}$ [6] as one component out of many possible longitudinal components in vacua. Empirical evidence for the the $\mathbf{B}^{(3)}$ field is revised elsewhere [3-5], where it is demonstrated that O(3) electrodynamics explains anomalies that are not explicable with U(1) electrodynamics.

Equation (1) is arrived at by developing Eq. (9) as follows. The vacuum charge-current twelve-vector $\mathbf{J}^{\nu}$ is a physical charge-current density that gives rise to the energy

$$En = -\int \mathbf{J}^{\nu} \cdot \mathbf{A}_{\nu} dV, \tag{11}$$

where V is the radiation volume [3,4]. This equation represents the electromagnetic energy in the vacuum generated by the vacuum current J^3 in a volume V [3] and, when written out in full, is

$$En = -\int \mathbf{J}^{\nu} \cdot \mathbf{A}_{\nu} dV, \tag{12}$$

$$\mathbf{J}^{\nu} = J^{\nu(1)}\mathbf{e}^{(1)} + J^{\nu(2)}\mathbf{e}^{(2)} + J^{\nu(3)}\mathbf{e}^{(3)}, \tag{12a}$$

http://cheniere.nii.net/references/found%20phys%20letters/no%201%202001/p04.jpg (1 of 2) [5/2/2002 11:30:19 AM]

http://cheniere.nii.net/references/found%20phys%20letters/no%201%202001/p04.jpg

$$\mathbf{J}^{\nu} = J^{\nu(1)}\mathbf{e}^{(1)} + J^{\nu(2)}\mathbf{e}^{(2)} + J^{\nu(3)}\mathbf{e}^{(3)}, \tag{12a}$$

$$\mathbf{A}_{\nu} = A_{\nu}^{(1)}\mathbf{e}^{(1)} + A_{\nu}^{(2)}\mathbf{e}^{(2)} + A_{\nu}^{(3)}\mathbf{e}^{(3)}. \tag{12b}$$

The analogous term in U(1) electrodynamics is the starting point for the derivation [3] of the Lamb shift in H.

The three-vector magnetic field $\mathbf{B}^{(3)}$ is defined fundamentally in O(3) electrodynamics [3] as

$$\mathbf{B}^{(3)^{\bullet}} := -ig\mathbf{A}^{(1)} \times \mathbf{A}^{(2)}, \tag{13}$$

http://cheniere.nii.net/references/found%20phys%20letters/no%201%202001/p04.jpg (2 of 2) [5/2/2002 11:30:19 AM]

http://cheniere.nii.net/references/found%20phys%20letters/no%201%202001/p05.jpg

where g is a proportionality coefficient defined as

$$g = \frac{\kappa}{A^{(0)}}, \tag{14}$$

where κ is the wave-vector and $A^{(0)}$ is the scalar magnitude of $\mathbf{A}^{(1)} = \mathbf{A}^{(2)^*}$. For more details, see Refs. 3 and 5.

The energy term can therefore be developed as follows. In Eq. (12b), $A_\nu^{(1)} A_\nu^{(2)}$ and $A_\nu^{(3)}$ are each four-vectors:

$$A_\nu^{(1)} = \left(\phi^{(1)}, -c\mathbf{A}^{(1)}\right), \tag{15}$$

$$A_\nu^{(2)} = \left(\phi^{(2)}, -c\mathbf{A}^{(2)}\right), \tag{16}$$

$$A_\nu^{(3)} = \left(\phi^{(3)}, -c\mathbf{A}^{(3)}\right). \tag{17}$$

From Eq. (9), it follows that:

$$\mathbf{J}^{(1)^*} = -ig\varepsilon_0 \mathbf{A}_\mu^{(2)} \times \mathbf{G}^{\mu\nu(3)}, \tag{18}$$

$$\mathbf{J}^{(2)^*} = -ig\varepsilon_0 \mathbf{A}_\mu^{(3)} \times \mathbf{G}^{\mu\nu(1)}, \tag{19}$$

$$\mathbf{J}^{(3)^*} = -ig\varepsilon_0 \mathbf{A}_\mu^{(1)} \times \mathbf{G}^{\mu\nu(2)}. \tag{20}$$

Equation (11) for the energy is therefore

$$En = -ig\varepsilon_0 \int \mathbf{A}_\nu^{(2)} \times \mathbf{G}^{\mu\nu(3)} \cdot \mathbf{A}_\nu^{(1)} dV + \ldots. \tag{21}$$

We now use the vector identity

$$\mathbf{F} \cdot \mathbf{G} \times \mathbf{H} = \mathbf{G} \cdot \mathbf{H} \times \mathbf{F} \tag{22}$$

to obtain the non-zero result

$$En = -ig\varepsilon_0 \int \mathbf{G}^{\mu\nu(3)} \cdot \mathbf{A}_\nu^{(1)} \times \mathbf{A}_\mu^{(2)} dV + \ldots. \tag{23}$$

http://cheniere.nii.net/references/found%20phys%20letters/no%201%202001/p05.jpg (1 of 2) [5/2/2002 11:30:26 AM]

$$En = -ig\varepsilon_0 \int \mathbf{G}^{\mu\nu(3)} \cdot \mathbf{A}_\nu^{(1)} \times \mathbf{A}_\mu^{(2)} dV + \ldots, \tag{23}$$

which can be developed as

$$En = c^2 \varepsilon_0 \int \mathbf{B}^{(3)} \cdot \mathbf{B}^{(3)} dV \tag{24a}$$

$$= \frac{1}{\mu_0} \int \mathbf{B}^{(3)} \cdot \mathbf{B}^{(3)} dV \tag{24b}$$

http://cheniere.nii.net/references/found%20phys%20letters/no%201%202001/p06.jpg

where ε_0 is the vacuum permittivity in S.I. units, defined by

$$c^2 = \frac{1}{\mu_0 \varepsilon_0}. \tag{25}$$

We therefore arrive at Eq. (1), which is the energy from the vacuum due to the vacuum current $\mathbf{J}^{\nu}$, a current which is absent from Maxwell-Heaviside electrodynamics. The concept is however present in general relativity as shown by Sachs [7]. It has been shown [8] that the structure of the Sachs theory reduces to that of O(3) electrodynamics using a particular choice of metric. Therefore, there exists a foundation for O(3) electrodynamics in general relativity, and O(3) electrodynamics is a theory of conformally curved space-time. The Maxwell-Heaviside theory, on the other hand, is a theory of flat spacetime, in which there is no curvature tensor. Sachs has shown that in the theory of general relativity, the electromagnetic field cannot propagate through the vacuum. This result refutes the Maxwell-Heaviside theory, in which the field is assumed to propagate in a vacuum which is structurally equivalent to flat space-time.

3. QUALITATIVE EXPLANATION OF THE MEG, USING EQ. (24A)

The qualitative explanation of the MEG from Eq. (24a) is that the magnetic energy (24a) is transferred into the magnetic energy

$$En_S = \frac{1}{\mu_0} \int \mathbf{B} \cdot \mathbf{B} dV, \tag{26}$$

where $\mathbf{B}$ is the permanent magnetic field of the core of the MEG [1]. Therefore, the energy (Eq. 26) is continuously replenished from the vacuum, so that in the theory, the MEG takes energy from the vacuum, which is effectively an infinite source of energy. The MEG is therefore an important prototypical device for outputting more power than is inputted by the circuit. The independent replication by Naudin [2] demonstrates that the MEG meets the requirements of reproducibility and repeatability, and so is a working device that cannot be refuted

http://cheniere.nii.net/references/found%20phys%20letters/no%201%202001/p06.jpg (1 of 2) [5/2/2002 11:30:35 AM]

http://cheniere.nii.net/references/found%20phys%20letters/no%201%202001/p06.jpg

demonstrates that the MEG meets the requirements of reproducibility and repeatability, and so is a working device that cannot be refuted theoretically. It must be explained theoretically, as suggested for example in Sec. 2 of this communication. The fundamental principle of the MEG is that energy is drawn from a permanent magnet and converted into an electric current. The permanent magnetic energy (26) is not depleted because it is continuously replenished by the vacuum magnetic energy (24a).

This description is a simplified synopsis of the MEG, which is fully described elsewhere [1], but suffices to show that a coefficient of productivity much greater than unity can be produced if it is realized

http://cheniere.nii.net/references/found%20phys%20letters/no%201%202001/p06.jpg (2 of 2) [5/2/2002 11:30:35 AM]

http://cheniere.nii.net/references/found%20phys%20letters/no%201%202001/p07.jpg

that the energy [1] exists in the vacuum itself, and that electromagnetic energy can be taken from the vacuum. There is no vacuum current J^ν in the Maxwell-Heaviside theory, and therefore there is no equivalent of the energy (24a) in that theory. The current J^ν is conserved, and so Noether's theorem is not violated by the explanation offered in this communication. In order for the MEG to operate in conventional Maxwell-Heaviside electrodynamics, a source of electromagnetic energy would have to be inputted into the MEG by this source, and the coefficient of performance could not exceed unity. In a higher-symmetry electrodynamics such as O(3) electrodynamics, or in the electrodynamics developed by Lehnert [6], there is energy inherent in the vacuum *itself*, so no source, or transmitter, is needed in order for the MEG to output current indefinitely. The energy given to the core magnet of the MEG is taken from Eq. (1), and the MEG operates indefinitely in principle, and does not deplete, or run down, as an ordinary battery depletes. In higher symmetry electrodynamics, the positive and negative terminals of a battery act as a receiver of vacuum energy, and an ordinary battery runs down because the chemical energy needed to produce the positive and negative terminals is dissipated.

The MEG does not rely on such chemical energy, and in principle can take energy from the vacuum, via Eq. (1), indefinitely, and without a source, or transmitter, being present. The MEG does not violate Noether's theorem because the current $\mathbf{J}^\nu$ is conserved and acts as a reservoir of energy. The MEG therefore utilizes this energy in the same way as water is drawn from a faucet.

Acknowledgments. The U.S. Department of Energy is thanked for the web site *http://www.ott.doe.gov/electromagnetic*, which is reserved for the advanced electromagnetic working group.

REFERENCES

1. T. E. Bearden, in M. W. Evans, ed., and the Royal Swedish Academy, *Contemporary Optics and Electrodynamics*, a special topical issue in three parts of I. Prigogine and S. A. Rice, series eds., *Advances in Chemical Physics* **114**(2) (Wiley, New York, 2001), 2nd edn. of M. W. Evans and S. Kielich, eds., *Modern*

http://cheniere.nii.net/references/found%20phys%20letters/no%201%202001/p07.jpg (1 of 2) [5/2/2002 11:30:43 AM]

eds., *Advances in Chemical Physics* **114**(2) (Wiley, New York, 2001), 2nd edn. of M. W. Evans and S. Kielich, eds., *Modern Nonlinear Optics*, a special topical issue in three parts of I. Prigogine and S. A. Rice, series eds., *Advances in Chemical Physics* **85** (Wiley, New York, 1992, 1993, 1997).

2. Communicated in Ref. 1.
3. M. W. Evans, in Ref. 1, Vol. **114**(2).
4. M. W. Evans, J. P. Vigier, and S. Roy, *The Enigmatic Photon, Volume 4* (Kluwer Academic, Dordrecht, 1997).
5. M. W. Evans, *The Enigmatic Photon, Volume 5: O(3) Electrodynamics* (Kluwer Academic, Dordrecht, 1999).

6. B. Lehnert, in Ref. 1, Vol. **114**(2). B. Lehnert and S. Roy, *Extended Electromagnetic Theory* (World Scientific, Singapore, 1998).
7. M. Sachs, in Ref. 1, Vol. **114**(1) and in T.W. Barrett and D. M. Grimes, eds., *Advanced Electromagntism* (World Scientific, Singapore, 1995).
8. M.W. Evans, in Ref. 1, Vol. **114**(2).

The Motionless Electromagnetic Generator: Extracting Energy from a Permanent Magnet with Energy-Replenishing from the Active Vacuum

Thomas E. Bearden, Ph.D.
James C. Hayes, Ph.D.
James L. Kenny, Ph.D.
Kenneth D. Moore, B.S.
Stephen L. Patrick, B.S.

Magnetic Energy Limited
Huntsville, AL 35801

Special Note: Posting of this document on a DoE website does not imply approval or disapproval by the Department of Energy. This work is made available to illustrate innovative energy research by multiple researchers involving new concepts. Scientific method requires replication and independent test and verification, and an additional research prototype build-up for those purposes is presently underway by the authors.

BACKGROUND

Introduction

For about 10 years the inventors have been working together as a team, and exploring many avenues whereby electromagnetic energy might be extracted from various sources of potential, and eventually from the active vacuum itself. This has been very arduous and difficult work, since there were no guidelines for such a process whereby the electrical power system becomes an open dissipative system in the manner of Prigogine's theoretical models {17-19} but using determinism instead of statistics. There was also no apparent precedent in the patent database or in the scientific database.

Since the present "standard" U(1) electrodynamics model forbids electrical power systems with COP>1.0, we also studied the derivation of that model, which is recognized to contain flaws due to its 136-year old basis. We particularly examined how it developed, how it was changed, and how we came to have the Lorentz-regauged Maxwell-Heaviside equations model ubiquitously used today, particularly with respect to the design, manufacture, and use of electrical power systems.

Our approach was that the Maxwell theory is well-known to be a material fluid flow theory, since the equations are hydrodynamic equations. So in principle, anything that can be done with fluid theory can be done with electrodynamics, since the fundamental equations are the same mathematics and must describe consistent analogous functional behavior and phenomena. This means that EM systems with "electromagnetic energy winds" from their external "atmosphere" (the active vacuum) are in theory quite possible, analogous to a windmill in a wind.

The major problem was that the present classical EM model excluded such EM systems. We gradually worked out the exact reason for the *arbitrary* exclusion that resulted in the present restricted EM model, where and when it was done, and how it was done. It turned out that Ludvig Valentin Lorenz {55} symmetrically regauged Maxwell's equations in 1867, only two years after Maxwell's seminal publication in 1865, and Lorenz first made the arbitrary changes that limited the model to only those Maxwellian systems in equilibrium in their energy exchange with their external environment (specifically, in their exchange with the active vacuum). This is not a law of nature and it is not the case for the Maxwell-Heaviside theory prior to Lorenz's (and later H. A. Lorentz's) alteration of it. Thus *removing* this symmetrical regauging condition {31, 34-38} is required—particularly during the discharge of the system's excess potential energy (the excitation) in the load.

Later the great H. A. Lorentz, working independently and apparently unaware of Lorenz's previous 1867 work, independently regauged the Maxwell-Heaviside equations so they represented a system that was in equilibrium with its active environment.

Implications of the Arbitrarily Curtailed Electrodynamics Model

Initially an electrical power system is *asymmetrically* regauged by simply applying potential, so that the system's potential energy is nearly instantly changed. The well-known gauge freedom principle in gauge field theory assures us that any system's potential—and hence potential energy—can be freely changed in such fashion. In principle, this potential energy can then be freely discharged in loads to power them, without any further input from the operator. In short, there is absolutely no theoretical law or law of nature that prohibits COP>1.0 electrical power systems—else we have to abandon the successful modern gauge field theory.

But present electrical power systems do no such thing. However, all of them do accomplish the initial asymmetrical regauging by applying potential. So all of them do freely regauge their potential energy, and the only thing the energy input to the shaft of a generator (or the chemical energy available to a battery) accomplishes is the creation of the potentializing entity—the source dipole.

It follows that something the present systems perform in their discharge of their nearly-free[1] regauging energy must prevent the subsequent simple discharge of the energy to power the loads unless further work is done on the input section. In short, some ubiquitous feature in present systems must self-enforce the Lorentz symmetry condition (or a version of it) whenever the system discharges its free or nearly free excitation energy.

Lorentz's curtailment of the Maxwell-Heaviside equations greatly simplified the mathematics and eased the solution of the resulting equations, of course. But applied to the design of circuits—particularly during their excitation discharge—it also discarded the most interesting and useful class of Maxwellian systems, those exhibiting COP>1.0.

[1] In real systems, we have to pay for a little switching costs, e.g., but this may be minimal compared to the potential energy actually directed or gated upon the system to potentialize it.

Consequently, Lorentz[2] unwittingly discarded all Maxwellian systems with "net usable EM energy winds" during their discharge into their loads to power them. Thus all present systems—which have been designed in accord with the Lorentz condition—cannot use the electromagnetic energy winds that freely arise in them by simple regauging, due to some universal feature in the design of every power system that prevents such action.

We eventually identified the ubiquitous closed current loop circuit as the culprit which enforces a special kind of Lorentz symmetry during discharge of the system's excitation energy. With this circuit, the excitation-discharging system must destroy the source of its EM energy winds as fast as it powers its loads and losses, and thus faster than it actually powers its loads.

Also, as we stated and contrary to conventional notions, batteries and generators do not dissipate their available internal energy (shaft energy furnished to the generator, or chemical energy in the battery) to power their external circuits and loads, but only to restore the separation of their internal charges, thereby forming the source dipole connected to their terminals. Once formed, the *source dipole* then powers the circuit {16, 22}.

Some Overlooked Principles in Electrodynamics

We recovered a major fundamental principle from Whittaker's {1} profound but largely ignored work in 1903. Any scalar potential is *a priori* a set of EM energy flows, hence a set of "electromagnetic energy winds" so to speak. As shown by Whittaker, these EM energy winds pour in from the complex plane (the time domain) to any x, y, z point in the potential, and pour out of that point in all directions in real 3-space {1, 26, 43}.

Further, in conventional EM theory, electrodynamicists do not actually calculate or even use the *potential itself* as the unending set of EM energy winds or flows that it actually is, but only calculate and use its *reaction cross section with a unit point static charge at a point*. How much energy is diverged around a single standard unit point static coulomb, is then said to be the "magnitude of the potential" at that point. This is a non sequitur of first magnitude.[3]

E.g., just as the small "swirl" of water flow diverged to stream around an intercepting rock in a river bottom is not the river's own flow magnitude, and certainly is not the "magnitude of the river", neither is the standard reaction cross section of the potential a measure of the potential's actual "magnitude". Indeed, the potential's "magnitude" with respect to any local interception and extraction of energy from it, is limited only by one's ability to (1) intercept the flow and (2) diverge it into a circuit to power the circuit. The energy flows identically comprising the potential {1} replenish the withdrawn energy as fast as it can be diverged in practical processes, since the energy flows themselves move at the speed of light.

---

[2] Although Lorenz did this first, such was H.A. Lorentz's prestige that when he advanced symmetrical regauging, it was rather universally adopted by electrodynamicists, and is still used by them today. E.g., see J.D. Jackson, Classical Electrodynamics, 2nd Edition, Wiley, New York, 1975, p. 219-221; 811-812.

[3] E.g., just replace the assumed unit point static charge assumed at each point with *n* unit point static charges, and the collected energy around the new point charge will be *n* times the former collection. If the former calculation had yielded the actual magnitude of the potential at that point, its magnitude could not be increased by increasing the interception. But since the potential is actually a flow process, increasing the reaction cross section of the interception increases the energy collection accordingly.

Work-Energy Theorem In a Replenishing Potential Environment

We also came to better understand the conservation of energy law itself. Particularly, the present work-energy theorem assumes only a "single conversion" of energy into a different form, where such "conversion in form" due to a converting agent is what is considered "work" upon that agent. No "replenishing by a freely flowing energy river or process" is considered.

On the other hand, in a replenishing potential environment, a conversion in the form of the energy may increase the energy (e.g., the kinetic energy of an electron gas) of the converting agent, but all the field energy and potential energy input to that converting agent may be replenished, so that a *free regauging* occurs. In that case, the original energy can changed—e.g., into field energy form, which is not the kinetic energy of the electron gas—and yet a joule of work can have been done upon the electron gas to alter its potential energy by as much work as was done on it. Thus the work performed by this change in energy form with simultaneous replenishment of the original form, may increase the energy of the medium while retaining as much field energy and potential energy as was input, but just in different form.

This is a profound change to the implicit assumptions used in applying the work-energy theorem. In short, the present work-energy theorem (without replenishment) was found to be a special case of a much more general and extended *energy-conversion-of-form-with-intermediate work-performed-upon-the-converter* process. *Conversion of the form of energy* is rigorously what we call *work*. The energy is not consumed in the process, nor need it be "lost" in doing work upon the converter. So to speak, the well-established principle of gauge freedom has been arbitrarily overlooked in the conventional view of the work-energy theorem. As a short way of stating what we found, *the conventional form of the work-energy theorem applies only when there is no simultaneous regauging/replenishment involved*.

This extension of the work-energy theorem to a more general case has profound implications in physics. With the energy replenishing environment involved, the work-energy theorem becomes an energy-amplifying process. Energy can be freely amplified at will—anywhere, anytime—by invoking the extended energy-work process, if regauging accompanies the process simultaneously. Indeed, one joule of field energy or potential energy can do joule after joule of work on intermediary converters, increasing the kinetic energy etc. upon the converter medium, while retaining joule-for-joule of the input energy in differing field or potential forms. In this extended process, always after each joule of work on the converting agent there still remains a joule of field energy or potential energy of altered form.

The Extended Principles Permit COP>1.0 Electrical Power Systems

Gradually we realized that (1) electrodynamics without the arbitrary Lorentz regauging did permit asymmetrically self-regauging electrical power systems, freely receiving and converting electrical energy from their vacuum environment, (2) present systems are designed unwittingly to guarantee the re-imposition of symmetry during their excitation discharge, (3) this excitation symmetry is what must be and can be broken by proper system design, and (4) a magnetic system "powered" by a permanent magnet dipole's ongoing active processes {1, 26, 43} could readily be adapted so that the source dipole of the permanent magnet was not destroyed by the

circulating magnetic flux. We experimented on various buildups and prototypes, in this vein, for some years.

Patenting and Discovery Activity

In 1997 we filed a provisional patent application on the first prototype of real interest. We filed another formal patent application in 2000 after several years of experimentation in which we used multiple extraction of energy from the magnetostatic scalar potential formed between the poles of a permanent magnet. Here we reasoned that, in so doing, we would deplete the magnetic dipole, and our experiments sometimes seemed to indicate that a very slow depletion might indeed be happening.

Since our last formal patent application filing in 2000, additional build-ups and experiments have led us to the conclusion that it is not necessary to deplete the magnetic monopole. Instead, if one draws the energy *directly from the potentials* (primarily, from the magnetic vector potential) furnished by the magnetic dipole of the permanent magnets, one can essentially draw as much energy as desired, without affecting the dipole itself. And again, we found that any amount of energy can be withdrawn, so long as it is changed in form in the withdrawal. A giant negentropy mechanism—recently uncovered by Bearden {26} and further investigated by Evans and Bearden {43}— is associated with the magnet dipole, and in fact with any dipole as shown by Whittaker {1}. This negentropy mechanism {1, 26, 43}will replenish the magnetic vector potential energy to the permanent magnet dipole as fast as energy is withdrawn from it and into the circuit.

We hit upon the stratagem of using a highly specialized magnetic core material, nanocrystalline in nature and in special tape-wound layered structure, to try to extract the energy from the magnetic vector potential (**A**-potential) as a magnetic **B**-field (curl of the **A**-potential) that is locally restricted to the special nanocrystalline material which forms a closed magnetic flux path closed on both poles of the permanent magnet dipole. It turned out that the nanocrystalline material,[4] because of its nature and also its tape-wound layered construction, actually will perform this separation of **B**-field and **A**-potential energy which is heretofore unheard of in such a simple magnetic core mechanism and flux path material.

We point out that a tightly wound, very long coil does a similar thing, as does a good toroid, and these effects of separating **A**-potential from **B**-field are known. But to our knowledge, such effects have not previously been utilized in magnetic core materials themselves, in a flux path through space. Our experimental measurements showed the magnetic field to be missing in the space surrounding the closed-path flux-path material, but the **A**-potential was indeed present and did interact with coils in normal manner. We also showed that the **B**-field and associated magnetic flux were rigorously confined internally to the nanocrystalline material flux path.

This then led to very novel ramifications and phenomenology, which we have been intensely exploring since filing the previous patent when we were depleting the magnetic dipole of the permanent magnet or seemed to be. Now we have no depletion of the magnetic dipole, and also

[4] Obtained off-the-shelf as a commercial product from Honeywell.

we can now explain where the continuous "magnetic energy wind" comes from, what triggers and establishes it, and how to apply the resulting principles.

Consequently, rapid progress in non-depleting versions of our previous invention, as a full extension to both the previous invention and also to the previous process utilized (depletion of stored potential energy), has been accomplished.

Results of the Research

It is now clear—by fluid flow analogy and actual experiment—that we have found the perfect magnetic mechanism for (a) producing "magnetic energy winds" at will, furnished freely by nature in natural dipole processes only recently recognized {26} and clarified {43} in the literature, (b) producing a magnetic "windmill", so to speak, that freely extracts energy from these free winds provided by nature from these newly-understood processes, and (c) creating positive energy feedforward and feedback iterative interactions in a coil around a core, resulting from dual energy inputs to the coil from (1) actions in the core inside the coil (2) actions in the surrounding altered vacuum containing a continuously replenished field-free magnetic potential **A**, and hence comprising a separate source of energy that will react with a coil.

The ***iterative*** interactions occurring between the two interactions in the coil, add a third increase of energy from the resulting convergent energy gain (asymmetrical self-regauging) series. The additional amplification of the energy is given by the limit of the resulting convergent series for energy collection in the coil. In this novel new usage, the net result is that the coil is an *energy amplifying* coil, freely and continuously fed by excess input energy from an external active source.

It turns out that a multiplicity of such positive energy feedforward and feedback loops occur and exist between all components of the new process. The system becomes a true open system receiving excess energy from the free flow of energy established in its vacuum environment by the subprocesses of this invention's system process.

Consequently, we have experimentally established this totally new process and field, and also have experimentally established that it is not necessary to deplete the permanent magnet dipole after all. Now, direct replenishment energy from the active vacuum can readily be furnished to the permanent magnet with the new techniques being utilized.

THREE IMPORTANT PRINCIPLES AND MECHANISMS

We explain three very important principles/mechanisms necessary to comprehend the new process in a replenishing potential environment:

(1) The conservation of energy law states that *energy cannot be created or destroyed*. What is commonly not realized is that energy can be and is reused (changed in form) to do work, over and over, while being replenished (regauged) each time. If one has one joule of energy collected in one form, then in a replenishing potential environment one can change all that joule into a different form of energy, thereby performing one joule of work. However, one still has a replenished joule of energy remaining, by the conservation of energy law in such an environment, since the first joule was removed in different form. If one collects and holds

that remaining joule in its new form, and then changes the form of it yet again in the replenishing environment, one does another joule of work—and still has a joule of energy left, just in a yet different form. The process is infinitely repeatable, limited only by the ability to hold the changed form of the energy each time it is changed.

Further, only two energy forms are needed for endless iterative shifting of form—say, form **A** and form **B**, since **A** changed totally into **B** performs work upon the transforming medium equal to **A** energy dissipation, but yields **A**-equivalence amount of energy still remaining because of replenishment. The **B**-form energy can then be changed back from **B** to **A** yet again, wherein the same amount of work is done upon the transforming medium for the second time, and one *still* has a joule of energy remaining because of replenishment, now back in the original form. This process can be iterated. We call this the ***ping-pong principle*** and use the iterative work done by each replenished change of energy form to continually increase the excitation energy of a receiving entity, the Drude electron gas in the coil and its attached circuit. We accent that this is also a novel way to directly utilize free regauging energy.

Cyclic transform of the energy by "ping-pong" between two different forms of energy or energy states with replenishment, is all that is required to produce as much work as one wishes in the intermediary, from a single joule of operator-input energy, limited only by one's ability to hold the new form of energy after each transformation and not lose it (or not lose all of it). By letting this iterative ping-pong work be done upon the Drude electron gas, the energy of that gas is excited much more than by the energy we input, if the input energy were only used once to perform work (if its form were only changed once).

We stress that present electrical power systems deliberately use their collected energy only once, and do not take advantage of energy regauging by free replenishment from the potential environment. So engineers are totally unfamiliar with the ping-pong mechanism and do not apply it. In short, they simply do not use the ping-pong effect to dramatically increase the energy in the Drude electron gas in the external circuits connected to the generator or battery.

(2) The **A**-potential and the **B**-field are extraordinarily useful for just such "ping-pong" iterative change of energy form, from **B**-field energy to **A**-potential energy and vice versa, back and forth, repeatedly. That is precisely what happens in each coil of the process of the invention, and this results in dual inputs of energy—one in curl-free **A** form and one in **B** form—simultaneously to the coil. Quite simply, one can extract the energy from a volume of **A**-potential, in **B**-field form where the **B**-field energy is removed from the volume, and the **A**-potential beyond will instantly (at least at the speed of light) simply refill the volume, but with curl-free **A**-potential.

A similar effect is also demonstrated by the well-known Aharonov-Bohm effect {13, 15}, but only in very small effects, without the ping-pong effect, and not used in power systems. By analogy, we may compare this iterative process to "dipping several buckets of water in succession" from a mighty rushing river; the river refills the "hole" immediately after each dipping. We can continue to extract bucket after bucket of water from the same spatial

volume in the river, because of the continual replenishment of the extracted water by the river's flow.

Any change of **B**-field energy in the center of the coil, interacts with the coil magnetically since the coil's magnetic field is at its greatest strength in its precise center, and the center of the coil is in the center of the core flux path material. This magnetic interaction between core and coil produces voltage and current in the coil and therefore in a closed external loop containing the coil, and simultaneously produces an additional equal energy outside the coil in the form of field-free **A**-potential, which is absolutely permitted since the magnetic energy in **B**-form was "dissipated" (transformed) into **A**-potential energy, thereby causing the electrons in the wires to flow by doing work that built voltage and current, which was a change of form of the **B**-field energy. Simultaneously, the current electrons produce the **A**-potential energy around the coil and outside it, which is absolutely permissible since a change in form of the energy is again involved.

Since these changes in energy form occur at the speed of light, in a local coil they appear "instantaneous" though in reality they are not quite instant, but just very rapid. However, the work produced by each change of form of the energy in that rapid "ping-pong" between the several energy states, continually produces *work upon the Drude electrons*, producing momentum and motion in the Drude gas, thus resulting in voltage and current. In this way, the increased momentum and motion—involved in the currents flowing in the voltage drop of the coil and external loop—result in increased stored kinetic energy in the moving Drude gas, which is electromagnetic energy of different form.

As can be seen, because of the speed of the ping-pong energy state transformations, with each transformation doing work in the Drude electron gas to increase that gas's excitation and energy, a continuous "collection" of excess energy—caused purely by the change of form of the energy and not by "loss" or "disordering" of the energy—occurs in the Drude electron gas, resulting in increased voltage and current in the circuit containing the coil. This is simply a mechanism for a "regauging" or change of potential energy of the Drude electron gas system. The Drude electron gas system's increased excitation energy can then be dissipated "all at once" in conventional fashion in the external load, providing more energy dissipated as work in the load than was input to the coil originally.

Hence there is generated an *energy amplifying* action of the coil and its multiplicity of processes. There is no violation of the energy conservation laws, of the laws of physics, or of the laws of thermodynamics since this is an open system far from equilibrium with its source of potential energy (the magnetic dipole of the permanent magnet), which in turn continuously receives replenishment energy from the vacuum by a giant negentropy process only recently uncovered by one of the inventors {26} and clarified by Evans and Bearden{43}.

(3) The dissipation of the final collected regauging energy within the load can permissibly be greater than what we ourselves initially input[5], because of the iterative change of form of the energy with replenishment. Therefore the iterative interactive work done on the Drude electron gas provides more than one joule of work done on the gas—thereby increasing its potential energy by more than one joule—for each joule of energy input by the operator to the system process. The cumulated potential energy in the Drude electron gas is then discharged in loads in normal fashion. Note that, even here, the energy is not lost when dissipated from the load and outside the system, but just flows out of the load in a different form (e.g., as heat radiated from a resistor load). Again, this is no different from a windmill in a wind.

The various asymmetrical regaugings violate Lorentz's arbitrary symmetrical condition—specifically in the discharge or change of form of the energy. Hence, this process restores to electrodynamics one group of those missing Maxwellian systems arbitrarily discarded by first Lorenz and later Lorentz, more than a century ago.

THE PROCESS IS THEORETICALLY SUPPORTED

Several rigorous scientific papers {27-40} by the Alpha Foundation's Institute for Advanced Study (AIAS) have been published or are in the publication process, fully justifying that energy currents (energy winds) can readily be established in the vacuum, and that such energy winds do allow the extraction of EM energy from the vacuum.

Also Cole and Puthoff {54} have previously shown that there is no prohibition in thermodynamics which prevents EM energy being extracted from the vacuum and utilized to power practical systems.

In electrochemistry it has long been known {21} that there can be no current or movement in electrodes without the appearance of excess potential (regauging) called the *overpotential*.

Further, in the most advanced model in physics—gauge field theory—the freedom to change gauge (in electrodynamics, to change the potential) at will and freely, is an axiom of the theory. If we freely change the potential of a physical power system, we freely change its potential energy (in a real system, we may have to pay for a little switching energy losses).

It follows that we can also freely change the excess potential of that system—regauge it—yet again, by any means we choose, including discharging that excess potential energy in a load to do work. Thus gauge field theory has for decades already axiomized the rigorous basis for COP>1.0 electrical power systems—but the Maxwellian systems necessary to do it have remained neglected due to their arbitrary discard by the ubiquitous use of Lorentz symmetrical regauging.

That such COP>1.0 electrical power systems have not been previously designed or built is therefore not due to a prohibition of nature or a prohibition of the laws physics at all, but is due

[5] See references 9-11. Actually, the standard calculation of the Poynting energy flow is not the calculation of the total EM energy flow at all, but only a calculation of how much of the energy flow is intercepted by the surface charges of the circuit and thereby diverged into the conductors to power the Drude electrons.

to a characteristic used to design and build the systems themselves. Because of their ubiquitous closed current loop circuits, conventional power systems use half their collected energy to destroy their own source dipoles, which destroys any further use of energy from "the potential between the ends of the dipole" since both dipole and potential vanish. The potential of the source dipole, after all, is what potentializes the external circuit with additional excitation energy, to be utilized to power the system. In present systems, half that excitation energy is dissipated to destroy the dipole along with the source potential, and less than the remaining half is used to power the load. This rigorously limits such systems to COP<1.0.

In the present invention, we do not destroy the potentializing source dipole, which is the magnetic dipole of the permanent magnet. We include the vacuum interaction with the system, and we also include the broken symmetry of the source dipole in that vacuum exchange—a broken symmetry proven and used in particle physics for nearly a half century, but still inexplicably neglected in the conventional Lorentz-regauged subset of the Maxwell-Heaviside model.

Consequently, our work and this novel process are rigorously justified in both theory and experiment, but the principles and phenomenology are still not incorporated in the classical electrodynamics theory utilized to design and produce electrical power systems. These principles are indeed included in the new O(3) electrodynamics being developed by AIAS[6,7] that extends the present U(1) electrodynamics model, as shown by some 90 scientific papers carried by the U.S. Department of Energy on one of its scientific websites in Advanced Electrodynamics, and by an increasing number of publications in Foundations of Physics, Physica Scripta, Optik, etc.

We thus have invented a process which indeed is well-founded and justified, but the basis for it is not yet in the texts and university courses. It is our belief that this absence will be rapidly rectified in the universities, in both the physics and electrical engineering departments, upon the advent of practical self-powering electrical power systems freely regauging themselves and extracting energy from the magnetic dipole of a permanent magnet, with the energy being continuously replenished to the dipole from the active vacuum via the new giant negentropy {26, 43} process.

CONSIDERING THE PROCESS

A-Potential and Field-Free A-Potential

This invention relates generally to the field of electromagnetic power generation. Specifically it relates to a totally new field of extracting additional electromagnetic energy in usable form from a permanent magnet dipole's potential energy, in addition to the electromagnetic energy extracted from its magnetic field energy, wherein the excess potential

[6] The Alpha Institute's Institute for Advanced Study (AIAS).

[7] A private communication from Dr. Myron Evans, 30 Sept. 2000, rigorously confirms that the magnitudes of the vector potential and the 4-current do in fact provide EM energy from the vacuum, and determine its magnitude as well.

energy taken from the magnet dipole is continuously replenished to the permanent magnet dipole from the active vacuum that is a curved spacetime with an ongoing giant negentropy flow process {26, 43}.

With respect to the electrostatic scalar potential, electrodynamicists are familiar with the fact that unlimited energy can be extracted from a potential. The very simple equation

$$W = Øq \qquad [1]$$

gives the amount of energy W in joules, which is collected at any given point x, y, z from the electrostatic scalar potential—whose reaction cross section is given by Ø, in joules collected per point coulomb—by charges q in coulombs and located at point x, y, z. Note that as much intercepting charge q as desired can be used at any point to increase the energy collection at the point, and collection can be accomplished at as many points x, y, z as is desired.

So any amount of energy can be collected from any nonzero scalar potential, no matter how small the potential's reaction cross section, if sufficient intercepting charge q and collecting points x, y, z are utilized. In short, one can intercept and collect energy from a potential indefinitely and *in any amount*, and *in any form taken by the interaction*, because the potential is actually a set of EM energy flows in longitudinal EM wave form, as shown by Whittaker {1} in 1903 and further expounded by Bearden {24, 26}. Subsequently, Evans and Bearden {43} have more rigorously interpreted Whittaker's {1} work and extended the principle into power systems. Thus any energy diverged and "withdrawn" from the potential in a given local region of it, is immediately replenished to the potential and to that region from the complex plane (the time domain) by the potential's flowing EM energy streams {1, 26, 43}, as rapidly as the energy is deviated and withdrawn.

For the magnetic vector potential, some preliminary comments are necessary. First, for over a hundred years it has been erroneously advanced that the magnetic vector potential **A** is "defined" by the equation

$$\mathbf{B} = \nabla \times \mathbf{A} \qquad [2]$$

This is easily seen not to be a definition at all, since an equation says nothing about the nature of anything on its right or on its left, but merely states that the entire right side has the same magnitude as does the entire left side. For an expression to be a ***definition***, it must contain an identity (≡) sign rather than an equal (=) sign. Hence in seeing what is attempted to be defined, we rewrite equation [2] as

$$\mathbf{B} \equiv \nabla \times \mathbf{A} \qquad [3]$$

Now it is seen that it is the magnetic field **B** that is being defined as the curl of a swirling **A**-potential, which swirling component we will call $\mathbf{A}_C$ for the "**A** circulating" component of **A**. The curl of the circulating **A** is a magnetic field **B**, by identity [3]. There may of course be present additional **A**-potential that has zero curl, but that additional longitudinal $\mathbf{A}_L$-potential or $\mathbf{A}_L$-current does not produce a magnetic field **B** per se. However, it does interact with charges, which add the curl operator and produce **B**-field.

In 3-dimensions, the field-free $\mathbf{A}_L$ potential may be moving longitudinally, in which case it is identically an electrical potential "ϕ" that is moving longitudinally and hence no longer really a *scalar* potential ϕ but a vector potential Φ. If Φ translates without changing magnitude, there is no **E**-field and hence Φ is a field-free vector potential. Identity [3] still does not define **A**, but defines **B** in terms of **A** and the curl operator. Note particularly that, in identity [3], we may have additional Φ present as a curl-free, longitudinal magnetic vector potential $\mathbf{A}_L$ and we shall refer to this additional curl-free magnetic vector potential as $\mathbf{A}_L$ (for longitudinally translating **A** component without swirl).

General Relativistic Considerations

Rigorously we are using the Sachs unified field theory view that energy of whatever form represents a curvature in spacetime (ST). We argue that how we then observe or "see" the energy effects and label them, depends on the factors of physical interaction with that ST curvature. Thus interaction with magnetic charge produces magnetic energy aspects, while interaction with electrical charge produces electrical energy aspects, etc. Motion of either of the interactions lets us also "see" some of the magnetic energy as electrical energy, and some of the electrical energy as magnetic energy, etc.

However, when $\mathbf{A}_L$ interacts with electrical charge, the charge may swirl, in which case the swirling component of the Φ moving with the charge is an $\mathbf{A}_C$ component, and this $\mathbf{A}_C$ swirling component will produce a magnetic field **B** by identity [3].

As we stated, in the unified field theory approach being used {42, 44-46}, in spacetime all energy is simply a special curvature of that spacetime, regardless of the form of the energy. Hence one can readily visualize the energy being changed from a vector potential to a scalar potential and vice versa, depending simply upon whether the potential is moving or stationary with respect to the frame of the observer (the laboratory frame).

It is also a well-known facet of general relativity that any change of energy density in spacetime *a priori* is associated with a curvature of spacetime.[8] What has been neglected in general relativity (and arbitrarily discarded in electromagnetic theory long before general relativity was born) is the enormous EM energy flow filling the space around every EM circuit {24}, with almost all of it missing the circuit entirely, and not being intercepted and diverged into the circuit to power it.

This non-intercepted huge energy flow was recognized by Heaviside {10, 11}, not even considered by Poynting {9}, and arbitrarily discarded by Lorentz {51} as having "no physical significance" because it did not strike the circuit and power any part of it.[9] It is still arbitrarily discarded today, using Lorentz's discard method.

---

[8] That is, with the single exception of gravitational field energy, and even that exclusion has been challenged.

[9] This is rather like discarding all the wind on the ocean except for that tiny component of it that strikes the sails of one's own sailboat. It is true that the wind missing one's own boat has no further significance for that one boat, but it may of course be captured in the sails of an entire fleet of additional sailing vessels to power them quite nicely. Hence the statement of "no physical significance" is a non sequitur; "no physical significance to that one specific

Also, it is still largely unrecognized in Western science that pure general relativity contains no energy conservation equations {47, 48} of the kind encountered in electrodynamics and mechanics. This is easily seen by considered the impact of gauge freedom, which allows the potential energy of any region of spacetime to be *freely* changed at will. But this is also a form of freedom of spacetime curvature, hence the notion of *fixed* accountability of energy replenishment and dissipation is completely voided by gauge freedom.

The great scientist Hilbert {48} first pointed out this remarkable absence of energy conservation laws from general relativity, not long after Einstein published his theory.

It also appears that the ultimate energy interaction is the transduction of energy-form between the time-domain (complex plane) and 3-space. In fact, *all 3-spatial EM energy actually comes from time-like EM energy currents after 3-symmetry breaking* {1, 26, 43}.

Indefiniteness Is Associated with the A-Potential

A magnetic vector potential **A** produced by a current-carrying coil not tightly wound or closed (or very long), must possess both a swirl component $\mathbf{A}_C$ (from the circling of the coil in each turn of the coil) and a longitudinal component $\mathbf{A}_L$ from the longitudinal advance of the current between coils, since a coil is actually a helix and not a set of circles. It will also possess a magnetic field, both inside the coil and outside it.

Hence, considering both curled and curl-free types, the actual magnitude of **A** is always indefinite—and in fact the indefinite nature of the potential together with the freedom to change it at will is universally recognized by electrodynamicists {7, 14}. However, the prevailing argument that change of potential does not affect the system is a non sequitur.

Further, in 1904 E. T. Whittaker {2} showed that any electromagnetic field, wave, etc. can be replaced by two scalar potential functions, thus initiating that branch of electrodynamics called ***superpotential theory***. Whittaker's two scalar potentials were then extended by electrodynamicists such as Bromwich, Debye {3}, Nisbet {4} and McCrea {5} and shown to be part of vector superpotentials {6}, and hence connected with **A**.

Applying the Giant Negentropy Mechanism

So let us consider the **A**-potential most simply as being replaced with such a Whittaker {1, 2} decomposition. Then each of these scalar potentials—from which the **A** potential function is made—is decomposable into a set of harmonic phase conjugate wavepairs (of longitudinal EM waves). If one takes all the phase conjugate half-set, those phase conjugate waves are converging upon each point in the magnetic vector potential **A** from the imaginary plane (from the time domain). At that same point in **A**, the other waveset—comprised of the harmonic set of longitudinal EM waves in 3-space—is outgoing. The 4-conservation of EM energy requires that the incoming energy to the point from the complex plane is being transformed at the point (by the assumed unit point charge at that point) into real EM 3-space

---

circuit" is better—but even then is incorrect if additional "sails" (interceptors) are added to catch more of the available energy wind and diverge more of it into the circuit.

energy, and radiating outward from that point as real EM energy, in this case in the form of the magnetic vector potential **A** without curl since the curl operator is absent.

We have previously pointed out {22, 24, 26, 43} that this energy flow input from the complex plane to every point in the potential, with its output in real 3-space, is a more fundamental symmetry than is the usually assumed 3-symmetry in EM energy flow. Further, it is a giant negentropy and a continuous, sustained reordering of a fraction of the vacuum energy, and the reordering continues to expand in space at light speed so long as the source dipole for the potential exists.

What this means is that the **A** potential—in either of its components $\mathbf{A}_L$ and $\mathbf{A}_C$—is not to be thought of as having "fixed energy" since it consists of and identically is a myriad energy flow processes ongoing between the time-energy domain (the complex plane) and the real energy domain (real 3-space).

As is any potential including the electrostatic scalar potential ϕ between the poles of an electric dipole and the magnetostatic scalar potential Ø between the poles of a permanent magnet, the **A**-potential is an ongoing set of longitudinal EM energy flows between the time domain (imaginary plane) and real 3-space {1, 26, 43}.

We stress that the EM energy flows comprising the so-called "scalar" potential and all "vector" potentials, violate 3-flow symmetry in energy conservation, but rigorously obey 4-flow symmetry. There is no law of nature that requires that energy be conserved in 3-space! If we work in 4-space as is normal, then the laws of nature require that energy be conserved in 4-space, as is done by the potential. Imposing the arbitrary additional requirement of 3-flow energy conservation imposes a 3-symmetry-restoring operation which destroys or nullifies the giant negentropy 4-process[10] of the dipole {26}and results in system 3-equilibrium with the active vacuum. It results in design and production of electrical power systems exhibiting only COP<1.0. The ubiquitous closed current loop circuit design produces a circuit that deliberately (though unwittingly) re-imposes the 3-flow symmetry, kills the dipole and the giant negentropy process, requires at least as much continuous input energy by the operator as was utilized to kill the dipole, and has generated the gigantic burning of hydrocarbons and the pollution of the biosphere.

A Negative Resistance Process

Because of its giant negentropy process {26, 43}, any potential is an open EM energy flow system, freely receiving energy from the complex plane in its active vacuum environment, transducing that received reactive power (in electrical engineering terms) into real power, and outputting real EM energy flow in space in all directions at the speed of light {26, 43}.

The vacuum-dipole energy exchange process is negentropic {26, 43}, since there exists total 1:1 correlation between the inflowing longitudinal EM waves in the complex plane and the

[10] Which in turn destroys the ability of any observable to exist (in time). An observable is *a priori* a 3-space fragment of an ongoing 4-space interaction, torn out at one frozen moment of time. The fact that observables do not persist in time has profound impact upon the foundations of physics, but its implications remain to be explored.

outflowing EM waves in real 3-space {1, 26, 43}. The potential then may rigorously be regarded as a novel kind of *negative resistor*, constituting an automatic ongoing negative resistance process. By *negative resistance process* we mean that the spatial points occupied by the potential continuously

(1) receive EM energy in unusable form (in the form of longitudinal EM waves input from the complex plane, which is the continuous receipt of reactive power),

(2) transduce the absorbed/received energy into usable form (real energy in 3-space), and

(3) output the received and transduced EM energy as usable EM energy flow in 3-space.

Thus associated with and comprising any potential and any dipolarity—including the dipolarity of a permanent magnet—we have a novel, free source of EM energy from the vacuum's complex plane (reactive power input, in electrical engineering terms, with real power output). That is true whenever we have a potential of any kind, either **A** or ϕ, or a dipole of any kind, either electrical or magnetic, or a polarization. Further, any energy we divert (collect) from this potential by and upon intercepting charges, and hold it in the localized vicinity of the charge, is an energetic excitation of the perturbing charges.

Modeling the Transduction Mechanism

Charges can be thought of as rotating 720° in one "full rotation", being 360° rotation in the complex plane followed by 360° rotation in real 3-space. The charges in the source dipole thus absorb the incoming reactive power while rotating in complex space and are excited therein, then re-radiate this absorbed EM excitation energy in real 3-space during their subsequent 360° rotation in that 3-space. Further, all the energy diverted from the energy flows comprising the potential, is immediately replenished by the vacuum to the source dipole, by the stated giant negentropy mechanism {26, 43}.

Replenishment Via Giant Negentropy

It follows that we may collect energy from an **A**-potential of a permanent magnet by applying the curl operator to **A**, then withdrawing and holding the resulting $\mathbf{B} = \nabla \times \mathbf{A}$ magnetic field energy in a localized material flux path. That is the withdrawal of $\mathbf{A}_C$ energy from the overall **A** potential in space, which is the withdrawal of $\mathbf{A}_C$ energy from the magnetostatic potential outflow dynamics between the poles of the magnetic dipole of the permanent magnet. This withdrawal and sharp path localization of the $\mathbf{A}_C$ energy from the permanent magnet dipole's outpouring **A**-potential energy will be continuously replaced at light speed by the giant negentropy process {1, 26, 43} engendered in 4-space by the magnetic dipole of the permanent magnet. Hence an unlimited amount of energy may be withdrawn from the **A**-potential in space around the magnet in this fashion, and the withdrawn energy will be continuously replaced at light speed from the active vacuum via the giant negentropy process {1, 26, 43}. In real systems, the materials and components will impose physical limits so that only a finite amount of excess energy flow can be accomplished, but in real materials these limits still permit system COP>>1.0 {24}.

The foregoing discussion shows that, in a magnetic apparatus or process functioning as part of an overall electromagnetic power system, we may have one subprocess which continuously withdraws energy from the curled portion of **A** (i.e., holds and localizes the magnetic field **B** and confines it to a given path), and in that case the source (in this case the permanent magnet) of the **A**-potential will simply replenish—at light speed—all the **A** energy that was withdrawn and localized. The replenished **A** energy will not be localized, since under a given set of conditions only so much energy is withdrawn and held in the localized condition.

The principle is that, as energy is drawn from the vector potential and then contained and circulated in field form in a localized material region or path, the withdrawn **A**-potential energy in space outside that localized path is continually replenished from the permanent magnet dipolarity to the space surrounding the localized B-field energy path as the real EM energy flow output of the giant negentropy process {26, 43} engendered by the magnet dipole. Further, the energy drawn from the permanent magnet dipolarity is continually replenished from the surrounding vacuum by the input EM energy flow to the magnet dipolarity from the vacuum's complex plane in the ongoing giant negentropy process {1, 26, 43}.

Regauging Can Be Negentropic

Any increase of energy in the apparatus and process in the local spacetime constitutes (a) self-regauging by the process, whereby the process freely increases the potential energy of the system utilizing the process, and (b) concomitant curvature of spacetime and increase in that spacetime curvature due to the increase of local energy in the system process.

From the standpoint of gauge field theory, free asymmetrical regauging is permitted by gauge freedom and is rigorously allowed, in effect allowing the violation of classical equilibrium thermodynamics because the regauged system freely receives EM energy from an external active source, the active vacuum's complex plane in the evoked giant negentropy process.[11] From the standpoint of general relativity, the excess energy from spacetime is freely allowed, since all EM energy moves in curved spacetime {36, 39, 40, 41, 42, 45, 46} *a priori*, and simple conservation of EM energy as usually stated in classical equilibrium electrodynamics need not apply {47, 48} in a general relativistic situation.

Use of a Nanocrystalline "Energy-Converting" Material

A nanocrystalline material recently available on the commercial market was found and utilized in this process. When utilized as a closed flux path external to and closed upon the two poles of a permanent magnet, the special nanocrystalline material will contain all the $\mathbf{B} = \nabla \times \mathbf{A}$ field energy (curled potential energy) in the closed flux path containing the magnet itself, while the magnetic dipole of the permanent magnet continuously replenishes and maintains the

[11] It may be that we are defining the causative mechanism for gauge freedom as being pure entropy or pure negentropy, but we defer to the advanced theoreticians to determine the truth or falsity of such a question. If one considers Whittaker's process {1} in either direction—i.e., energy freely entering 3-space from the time-domain, and energy freely entering the time-domain from 3-space—the conjecture may have some merit.

external circulation of field-free **A**-potential energy filling the space around the nanocrystalline closed flux path containing the withdrawn magnetic field energy.

This performance can in fact be measured, since magnetic field detectors detect no magnetic field surrounding the flux path (or even around the magnet in the flux path at an inch or two away from it), and yet coils placed in the spatial flux path outside the core interact with the field-free **A**-potential that is still there. A coil placed around the flux path so that the flux path constitutes its core, interacts both with the field-free **A**-potential outside the material flux path core, and simultaneously interacts—via the magnetic field inside the coil—with the magnetic field flux energy inside the core.

Dual Interactions with Ping-Ponging Between Them

Further, the two simultaneous interactions also ***iteratively*** interact with each other, in a kind of iterative retroreflection and interception of additional energy, so that a net amplification of the electrical energy output by the dually interacting coil results. The fact that iterative retroreflection processes can increase the energy collection from a given potential and enable COP>1.0 has been previously pointed out {31}. In addition, multiple coils placed around the closed material flux path forming a common core of each and all of them, all exhibit such gains and also mutual interaction with each other, leading to further gain in the energy output by the coils and their interaction processes.

In short, the novel process of this invention takes advantage of the previously unknown giant negentropy process {1, 26, 43} ongoing to and from the permanent magnet's dipole and between the complex plane of the vacuum energy and real 3-space energy flows comprising the magnetic vector potential and the magnetostatic scalar potential, to provide a gain in the total amount of electromagnetic energy being diverted from (drawn from) the permanent magnet by the attached circuit, components, and their processes.

The total collectable energy now drawn from the magnet is the sum of (a) the magnetic field energy (curled **A**-potential energy) flowing in the flux path, (b) the magnetic energy in the uncurled **A**-potential energy flowing in the surrounding space, and (c) a further iterative "ping pong" gain component of energy caused by mutual and iterative interactions {31} of the multiple coils and their multiply interacting processes. Further, (d) additional energy can be intercepted and diverged (collected) from the flowing uncurled **A**-potential energy flowing in the surrounding space, and converted into output electrical energy as the outputs of coils, by simply adding additional interceptors (such as coils, for example, or spinning charges, etc.).

We have thus discovered a process for amplifying the circuit's ***available*** output energy extracted from a permanent magnet dipole's energy outflow, where the dipolarity is an open system and a negative resistor, freely receiving excess energy from the surrounding active vacuum, transducing the received energy into usable form, and outputting the energy as a continuous flow of usable excess electromagnetic energy . Thereby, additional energy may be intercepted in a system employing this process, and the process can be used in practical EM power systems and EM power system processes having COP>1.0 when used in open-loop mode, and self-powering when used in closed-loop mode.

Further, we may utilize a collector/interceptor (such as a common coil wound around the flux path through it so that said flux path constitutes a core) which interacts with both available components of energy flow and with iterative interactions mutually between the two basic interactions. Each turn of the coil constitutes a $\nabla\times$ operator, bathed by the flowing uncurled **A**-potential outside the line material. Hence the charges in the coil intercept the uncurled **A**-flow, and curl the energy intercepted to produce a curled **A**-flow, thus producing additional magnetic field $B = \nabla\times A$. This magnetic field is at its maximum in the exact center of the coil, which is in the exact center of the nanocrystalline core material with its retained $\mathbf{B} = \nabla\times\mathbf{A}$ field energy. Hence the coil interacts with two components of energy flow, being (1) the internal $\mathbf{B} = \nabla\times\mathbf{A}$ field energy retained in the nanocrystalline material in the coil's core, and (2) the external uncurled **A**-potential energy flow striking its outside surface charges and changed into additional magnetic field energy and into additional electrical current flowing in the coil and out of it. In addition, (3) iterative mutual interaction between the two basic interactions also occurs, increasing the energy gain and the coefficient of performance.

Any additional EM energy input into the core material and flux path increases the $\mathbf{B} = \nabla\times\mathbf{A}$ field energy flowing in the flux path, hence withdrawn from the vector potential **A** around the flux path, hence replenished from the permanent magnet dipole, and hence replenished to the magnet dipole from the complex plane, via the giant negentropy process {26, 43}. This increased energy collection in the magnetic flux in the core material passes back through the permanent magnet (which is in the path loop and completes it), altering the effective pole strength of the magnet and thereby increasing the magnitude of the giant negentropy process associated with said dipole of the permanent magnet. In turn, this increases the outflow of **A**-energy from the magnetic dipole, increasing both its output $\mathbf{B} = \nabla\times\mathbf{A}$ field energy in the flux path and its output uncurled **A**-flow energy in space outside the flux path. This further increases the spacetime curvature of the local space surrounding the flux path material, since the energy density of said local spacetime has increased.

Varying the Pole Strength of a Permanent Magnet

Hence the process is the first known process that deliberately and interactively alters the pole-strengths of the poles of a permanent magnet, utilizing said alteration to vary and increase the pole strength and hence the magnitude of the energy density flowing in the giant negentropy mechanism {26, 43}. From the general relativity view, it is the first known process that deliberately increases and structures the local curvature of spacetime, by electromagnetic means, so as to alter and increase the pole strength of a permanent magnet, using said pole strength alteration to increase the flow of energy into and out of the local spacetime, thereby increasing the curvature of said local spacetime and the resulting EM energy extracted therefrom.

Any extra uncurled **A**-flow energy increase outside the nanocrystalline flux path material, increases the interaction with this field-free **A**-flow energy of any coil around the flux path, thereby increasing the magnetic **B**-field flux inside the flux path, and so on.

Regenerative Energy Gain

In short, the mutual iterative interaction of each coil wound on the flux path of the special nanocrystalline material, with and between the two energy flows, results in special kinds of regenerative energy feedback and energy feedforward, and regauging of the energy of the system and the energy of the system process. This excess energy in the system and in the system process is thus a form of free and asymmetrical self-regauging, permitted by the well known gauge freedom of quantum field theory. Further, the excess energy from the permanent magnet dipole is continually replenished from the active vacuum by the stated giant negentropy process {1, 26, 43} associated with the permanent magnet's magnetic dipole due to its broken 3-symmetry {16} in its energetic exchange with the vacuum.

As a result, each coil utilized is an amplifying coil containing an amplifying regenerative process, compared to a normal coil in a normal flux path which does not hold localized the $\mathbf{B} = \nabla \times \mathbf{A}$ field energy within its core material, and does not simultaneously interact with both internal **B**-field flux energy and external excess field-free **A**-potential.

Open System Far from Equilibrium, Multiple Sub-processes, Curved Spacetime

The entire system process is thus a self-regauging regenerative system process and an energy-amplifying system process, where the excess energy is freely furnished from the local curved spacetime as energy flows from the magnetic dipole of the permanent magnet, and in turn freely replenished to the permanent magnet dipole by the giant negentropy process established in the active vacuum environment by the broken 3-symmetry of said magnetic dipole {16} and the concomitant locally curved spacetime.

The system process is thus an open electromagnetic process far from thermodynamic equilibrium {17-19} in its active environment (the active vacuum), freely receiving excess energy from said active environment via the broken 3-equilibrium of the permanent magnet dipole. In each coil, the coil is an open system freely receiving excess energy from its active environment (the active field-free **A**-potential flowing through the space occupied by the coil and surrounding it, and creating a local curved spacetime by is extra energy density, while also receiving energy from its internal environment, the **B**-field magnetic flux in the material flux path through the center of the coil and comprising its core, and also curving the local spacetime by means of the extra energy density of the local spacetime.

The system process is also a general relativistic process {38-42, 45, 46} whereby electromagnetic energy is utilized to curve local spacetime, and then the locally curved spacetime continuously acts back upon the system and process by furnishing excess energy to the system and process directly from the curved spacetime, with the excess energy being continually input to the system from the imaginary plane (time domain) {1, 26, 43}.

SUMMARY OF THE PROCESS FROM VARIOUS ASPECTS

We summarize the many aspects of the overall process as follows: Advantage is taken of the fact that:

1. The magnetic flux and magnetic vector potential **A** are freely and continuously furnished by a permanent magnet to a material flux path, and where the material flux path holds all curled vector potential **A** and thus all magnetic field inside the flux path, and where the permanent magnet freely furnishes additional field-free magnetic vector potential **A** to replenish the **B**-field (curled magnetic vector potential **A**) energy that was confined to the interior of the material flux path, and where multiple intercepting coils and processes are utilized with mutual iterative positive feedforward and positive feedback between the collectors and subprocesses to increase the energy collected and hence increase the COP of the system and system process.

2. A previously unrecognized giant negentropy mechanism is used as shown unwittingly by Whittaker {1} in 1903 but unrecognized until recently understood by Bearden {26} and further clarified by Evans and Bearden {43}, and the active vacuum continuously replenishes all magnetic vector potential **A** (both curled and field-free) that is continuously output by the permanent magnet into the material flux path and into space surrounding the material flux path. Further, the replenishment energy flow from the active vacuum is from the time-domain {1, 26, 43} and thus from the complex plane, constituting the continuous input of reactive power by the active vacuum environment via time-like energy flows. These time-like potentials and energy flows are known in extended electrodynamics {29, 30, 32, 33, 35, 36, 38, 39, 41} but have not previously been deliberately utilized in electromagnetic systems and particularly in electromagnetic power systems, even though shown by Whittaker {1} as early as 1903.

3. The field-free magnetic vector potential **A** is continually replenished and remaining (due to replenishment by the vacuum to the permanent magnet dipole and thence replenished from the magnet dipole to the space surrounding the material flux path) when a material flux path is utilized wherein the magnetic field associated with a permanent magnet's flux, through the flux path, is held internally and entirely in the material flux path, with the field-free magnetic vector potential **A** remaining in space surrounding the flux path.

4. A coil will interact with either a magnetic field (i.e., it will interact with the curl of the **A**-potential which curl is a magnetic field), or an **A**-potential where no magnetic field is present, or simultaneously with a combination of both a curled **A**-potential (with magnetic field **B**) and a field-free **A**-potential (without magnetic field **B**). Indeed, there is a "ping pong" reiterative interaction between the two processes, constituting positive feedforward from each to the other, and positive feedback from each to the other.

5. A simultaneous interaction of a coil with both a magnetic field (curl of **A**) and a field-free **A** potential produces electromagnetic energy in the form of voltage and current in an external circuit connected to the coil, and the net voltage and amperage (power) produced by the coil is a result of the summation of both simultaneous interactions with said coil and its Drude electrons and of the iterative "ping-pong" interactions between the two simultaneous interactions, and therefore the summation provides a greater coil output energy than is produced by the coil

from either the magnetic field (curled **A**) separately or the field-free **A**-potential separately. Further, the "ping-pong" iterative interaction adds additional energy collection and gain to the electrical power output of the coil.

6. Multiple coils are wound on the material flux path, where magnetic flux is input to the material flux path from a permanent magnet, and where the material flux path holds internally all curl of **A** (magnetic field) from the permanent magnet's flux, so that magnetic field and magnetic flux from the permanent magnet are inside the closed material flux path, and so that no magnetic field is outside the closed material flux path, and so that a field-free magnetic vector potential **A** replenishes the curled **A**-potential held in the material flux path, and where the replenished field-free magnetic vector potential **A** occupies the space outside the material flux path and flows through the surrounding space.

7. A broken 3-space symmetry exists of a magnetic dipole {16} of a permanent magnet, well-known in particle physics since 1957 but inexplicably not yet added into classical electrodynamics theory, wherein the broken symmetry of the magnetic dipole rigorously requires that the dipole continually absorb magnetic energy from the active vacuum in unusable form, and requires that the broken symmetry output (re-emit) the magnetic energy in usable form as real magnetic field energy in 3-space and real magnetic vector potential in 3-space. And where the receipt of unusable EM energy, transduction into usable form, and output of the usable EM energy, constitutes a true negative resistance process {26, 43}resulting from the ongoing giant negentropy process {26, 43} engendered by the broken symmetry of the magnetic dipole of the permanent magnet.

8. Whittaker's 1903 mathematical decomposition {1} of any scalar potential applies Whittaker decomposition to the magnetostatic scalar potential existing between the poles of the permanent magnet, revealing that the magnetostatic scalar potential of the permanent magnet is comprised of a set of harmonic longitudinal EM wavepairs, where each wavepair consists of a longitudinal EM wave and its phase conjugate replica wave.

9. The incoming half-set of Whittaker decomposition waves consists of the phase conjugate waves, which are all in the imaginary plane {26, 43} and continuously converging upon the magnetic charges of the permanent magnet dipole at the speed of light. The incoming, converging longitudinal EM waves are continuously absorbed from the imaginary plane by the magnetic charges (magnetic poles), so that the permanent magnet dipole is continuously replenished with time-like energy flow from the active vacuum environment, while continuously transducing the received time-like energy into 3-spatial energy, and outpouring real EM energy flow in the form of the longitudinal EM Whittaker waves {1} emitted in 3-space in all directions.

10. The other half-set of the Whittaker decomposition waves, consisting of outgoing real EM Whittaker longitudinal waves {1} in 3-space, is continuously and freely emitted from the permanent magnet dipole charges (poles) and continuously diverges outward in space in all directions from the permanent magnet dipole at the speed of light. Thus there is revealed and used a process for a natural, continuous source of magnetic energy from the vacuum: a continuous EM wave energy flow convergence of electromagnetic energy from the vacuum to the magnetic dipole, but in the imaginary plane and hence constituting a continuous energy input in the form of imaginary power {26, 43}, with the absorbed magnetic energy being transduced

into real power and re-emitted in real 3-space in all directions, whereby the absorption of energy from the vacuum from the imaginary plane (time domain) is in 4-flow equilibrium with the re-emission of the absorbed energy in 3-space, but not in 3-flow equilibrium, and where the outgoing real magnetic energy provides the surrounding magnetic field and the surrounding magnetic vector potential of the permanent magnetic dipole.

11. In this manner the broken 3-symmetry of the magnetic dipole (permanent magnet) allows the dipole to continuously receive reactive power from the vacuum's time domain, transduce the reactive power into real EM power in 3-space, and re-emit the absorbed energy as real magnetic energy pouring into space and consisting of both a magnetic field and a magnetic vector potential. Thus the permanent magnet, together with its Whittaker-decomposed {1} magnetostatic scalar potential between its poles, represents a dynamo and an energy transducer, continuously and freely receiving energy from an external source (the active vacuum) in the complex plane and transducing the received complex plane EM energy into real EM energy {26, 43}, and radiating the real EM energy into real space as real EM power. EM energy flow conservation in 3-space is permissibly violated due to the broken 3-symmetry of the magnetic dipole, but EM energy flow in 4-space is not violated and is rigorously conserved. There is no law of nature which requires energy conservation in three dimensions and 3-space; instead, energy conservation is required by the laws of nature and physics in 4-space. The additional condition usually assumed—that energy conservation is *also* always conserved in 3-space—is not required by nature, by physics, or by thermodynamics, and the additional 3-conservation requirement is removed by this process in any dipole, by the broken 3-symmetry of the dipole. It is this newly recognized giant negentropy process advanced by Bearden {26}and extended by Evans and Bearden {43} which is directly utilized by this new power system process, in conjunction with directing and interacting material flux paths, intercepting coils, separation of curl of the **A**-potential (i.e., the **B**-field) and the field-free **A**-potential (replenished from the vacuum), and interaction of a coil with a magnetic field and magnetic flux running through a material core through the coil, and with an external field-free magnetic potential reacting with the coil. The foregoing actions provide a magnetic system which receives—via the permanent magnet dipole—replenishment EM energy from the active vacuum to the dipole, and from the dipole to the circuit and the space surrounding it, to enable the permanent magnet to continuously furnish magnetic field and flux to a flux path in the process, and continuously furnish both the curl energy of the **A**-potential and the field-free energy of the **A**-potential replenished from the vacuum, and to have multiple coils interacting simultaneously with both curled **A**-potential and magnetic flux inside the coils, while also interacting simultaneously with field-free magnetic **A**-potential from the space in which the coil is embedded, such that excess energy is added to the interacting coils from the field-free **A**-potential in space, and where the field-free **A**-potential in space is continuously furnished by the permanent magnet dipole, and where the extra energy for the furnished field-free **A**-potential is continuously received by the permanent magnet dipole from the active vacuum exchange, via the process shown by Whittaker's decomposition {1}.

12. The difficulty heretofore experienced by designers, engineers, and scientists with using the magnetic energy continuously emitted to form the static field and magnetic scalar potential of a permanent magnet dipole, is that all schemes for using the magnetic energy have

relied on physical motion, or the input of energy to overcome the field of the permanent magnet, or other brute force methods. This invention provides a new process for a coil to extract excess EM energy from the magnetic vector potential energy in space from the permanent magnet, while simultaneously interacting with the magnetic field energy of the permanent magnet flowing through a flux path through the center of the coil but not in space surrounding the flux path. The Whittaker decomposition shows that when the system extracts EM energy from the magnetic vector potential **A** and magnetostatic scalar potential ϕ , the energy to continuously form and maintain the magnetic vector potential's vector current is continuously replenished from the vacuum by the convergent reactive EM power being input from the imaginary plane (time domain). Evans and Bearden {43} have also shown that, in the most general form of the vector potential deduced from the Sachs unified field theory, electromagnetic energy from the vacuum is given by the quaternion-valued canonical energy-momentum. Further, the most general form of the vector potential—i.e., flowing EM energy in vector potential form—has been shown by Evans and Bearden {43} to contain *longitudinal and time-like components (energy currents)*, in agreement with the simpler Whittaker decomposition {1} as a special case, but much richer in available structure than Whittaker's decomposition. Evans and Bearden {43} have also shown that the scalar potential is in general a part of the quaternion-valued vector potential, and can be defined only through suitable choice of metric for a given experimental setup. They have shown the energy current in vacuum in this more advanced treatment in O(3) electrodynamics, and it is this demonstrated vacuum EM energy current which continuously replenishes any excess energy drawn from the permanent magnet dipole's magnetostatic scalar potential to replenish the curl of the **A**-potential (the magnetic **B**-field energy) held inside the material flux path powered by the magnet and also to replenish the field-free **A**-potential filling space around the material flux path.

13. A special nanocrystalline material comprises the closed flux path powered by the permanent magnet, where the nanocrystalline material performs the highly special function of separating and retaining the curl energy of the **A**-potential (i.e., retaining the magnetic field energy) inside the material flux path along with the magnetic flux. The nanocrystalline material consists of coiled flat "tape" layers of material, with the layers acting in the fashion of a perfect toroid to retain all magnetic field (curled **A**-potential) inside the material, while having the curl-free **A**-potential filling all space outside the nanocrystalline material.

14. This special nanocrystalline material may be further considered in the manner of a "layered" magnetic flux path material, wherein the "layers" are a molecule in thickness, and wherein essentially all eddy currents are eliminated or reduced to completely negligible magnitude, and wherein as a result the nanocrystalline material does not dissipate magnetic energy from the flux path, and wherein as a result said nanocrystalline material does not produce eddy currents, and wherein as a result the nanocrystalline material does not exhibit heating since heat is scattered and dissipated energy, and no such scattering or dissipating of the magnetic flux energy occurs in the nanocrystalline material. Thus the system process is able to process significant power and energy without heating of the core flux path material at all, and without requiring cooling of the core material, these being characteristics having a remarkable advantage over other core materials subject to eddy currents, substantial heating, and the need for cooling.

15. The magnetic flux from a permanent magnet provides a source of magnetic flux energy to and within the nanocrystalline material in a flux path, such that the nanocrystalline material holds the magnetic field component (curl energy of the vector potential **A**) in the flux path while the flux path material itself is not further interacting with the field-free magnetic vector potential and its energy that fill the space around the closed material flux path, and where the field-free magnetic vector potential—in space external to the material flux path—geometrically follows the directions and turns of the material flux path but outside it.

16. Any coil immersed in the nanocrystalline material's magnetic vector potential in space, but not wound around a portion of said nanocrystalline flux path, will react to the magnetic vector potential and its energy. Each turn of a coil acts as a curl-operator, producing a magnetic field due to the received energy current from the magnetic vector potential. If an electrical current is passed through the coil, and if the magnetic flux produced by the electrical current in the coil is aligned with the magnetic flux that is produced by the coil's interaction with the magnetic vector potential from the nanocrystalline flux path material, then the two magnetic vector potentials will vectorially add, so that the magnetic field produced by the current through the coil will be augmented due to the curl-operation of the coil now acting upon an increased magnetic vector potential summation consisting of the vector sum of the curled magnetic vector potential and the field-free magnetic vector potential.

17. Any time-rate of change of a magnetic vector potential, either curled or curl-free, constitutes an electric field, which in an interacting pulsed coil produces pulsed voltage across the coil and pulsed current through the coil, and which produces current and power in a closed circuit loop consisting of the interacting coil and a connected external circuit. The excess magnetic energy is received by the circuit from the magnetic dipole of the permanent magnet (and replenished to the dipole from the time-like Whittaker energy currents from the active vacuum). The process transduces the excess magnetic energy into excess electrical energy, and outputs the excess electrical energy into electrical loads to power them, whereby the excess energy received and replenished from the active vacuum environment via the giant negentropy process of the permanent magnet dipole {26, 43} allows system COP to be greater than 1.0.

18. Further, with COP>1.0, a fraction of the output electrical energy from the process and system can be extracted and positively fed back to the operator input of the system and process (such as the electrical energy fed to a driver coil), with governing and clamping control of the positive feedback energy magnitude, so that the system process becomes a self-powering process freely powering itself and its loads, receiving all the energy from an external energy source due to its broken symmetry in its vacuum exchange and the resulting giant negentropy process (26, 43) thereof, and thus constituting an open system far from thermodynamic equilibrium with its active environment, freely self-regauging and powering itself and its load simultaneously by dissipation of energy freely received from its active environment.

19. The dual-action effect is increased in an interacting coil if the coil is wound around a portion of the nanocrystalline flux path, due to the permeability of the flux path as a magnetic core and the input of flux from the permanent magnet. In this case, the increased magnetic field produced inside the coil also interacts with the magnetic flux path core in its center, producing an increased change in the magnetic flux in the nanocrystalline material itself.

The coil interacting in such dual fashion thus has *iterative* "energy feedforward and feedback" between the two simultaneous processes, one process proceeding outward from inside, and the other proceeding inward from outside. A convergent series of summing energy additions (regaugings) thereby occurs in the coil, thus producing *energy amplification* in the coil.

20. The combined aforementioned actions result in the coil increasing its energy output due to receiving and transducing extra energy from the magnetic flux of the permanent magnet, the magnetic field of the permanent magnet, and an extra field-free magnetic potential **A** surrounding the flux path and continuously furnished by the permanent magnet. The production of one or more potentials is also the production of one or more regaugings. As is well-known from electrodynamics and from gauge field theory, gauge freedom is permitted freely and at will. In electrodynamics, regauging to change the potential of a system simultaneously changes (freely) the potential energy of the system. In the present process, this regauging is physically applied by (1) holding the curl of the **A**-potential inside the special nanocrystalline flux path material, (2) furnishing additional field-free magnetic vector potential **A** from the permanent magnet dipole, (3) continuously replenishing the potential and energy from the vacuum.

21. This process provides for a permissible gain in the magnetic energy output of the interacting coil(s) for a given amount of energy input by the (a) operator to the active coil (used similar to a "primary" coil in a transmitter), or (b) a clamped, governed positive energy feedback of a fraction of the energy output from one output coil back to the input coil. This additional magnetic field energy output is retained in the nanocrystalline flux path, and the additional magnetic vector potential energy output moves through space surrounding the coil. The system process of the invention thus is a new process for energy amplification, with the excess output energy being freely received from the vacuum and thence to the permanent magnet dipole, and thence from the permanent magnet dipole to the other parts of the system, via the giant negentropy process associated with the magnet dipole as shown by Evans and Bearden {43} and by Whittaker {1}.

22. Multiple coils wound around the special nanocrystalline material fluxpath will each and all exhibit regauging energy gain by the fore-described processes, with the energy continuously replenished from the vacuum to the source dipole and from the source dipole to process, via the process shown by Whittaker decomposition.

23. Any scalar potential such as the magnetostatic scalar potential between the poles of a permanent magnet, is a continually-replenished energy flow process {1, 26}, so that any system utilizing the output flow from the permanent magnet dipole and containing such permanent magnet dipole, is an open system far from equilibrium in the replenishing vacuum flux, as shown by the Whittaker decomposition {1} and more precisely expanded by Evans and Bearden {43}.

24. The entropy of any open system in disequilibrium with its vacuum environment, is *a priori* less than the entropy of the same system in equilibrium, and in fact the entropy of such an open system cannot even be computed, as is stated by Lindsay and Margenau {20} and as is well-known in physics.

25. This process, producing an open system in disequilibrium with a recognized continuous source of energy {17-19, 26, 43}, is permitted to perform any or several or all of five functions: (1) self-order, (2) self-oscillate, (3) output more energy than the operator inputs (the excess energy is freely received from the active environment), (4) power itself and its loads and losses (all the energy is freely received from the active environment), and (5) exhibit negentropy. The process specified by this invention permits all five functions. For example, by extracting some of the output energy from an output section (coil) used in a system employing the process, and feeding the extracted energy back to the input section (coil), the energy gain of the system permits it to become self-oscillating and hence self-powering, while obeying energy conservation, the laws of physics, and the laws of thermodynamics.

26. Multiple feedforward and feedback sub-loops exist between the various parts of a complete flux path loop and **A**-potential flow loop, so that regenerative energy collection gains are developed in the various subprocesses of the overall process. The result is an overall feedback summation and overall feedforward summation, whereby the system process regauges itself with **A**-potential flow energy from the magnetic dipole, and the regauged energy is continuously replenished and received from the active vacuum via the stated giant negentropy process.

27. The system process consists of a magnetic negative resistor process, where energy is received freely in unusable form (pure reactive power from the time domain of the spacetime vacuum), transduced into usable form, and output in usable form as real EM energy flow in 3-space {1, 26, 43}.

28. The system process is a permissible local energy gain process and a self-regauging process, freely increasing the process's and system's potential energy and receiving the regauging energy from the active vacuum via the giant negentropy process {26, 43}, and freely collecting and dissipating the excess regauging potential energy in loads.

29. The system process may be open-looped where the operator inputs some electrical energy and the system outputs more electrical energy than input by the operator, the excess energy being freely received from the permanent magnet dipole and from the vacuum to it via the giant negentropy process {26, 43}, with process transductions of the various energy forms between magnetic form and electrical form.

30. The system process may be close-looped and "self-powering", where a portion of the amplified energy output is extracted, rigidly clamped in magnitude, and positively fed back to the input. This replaces the operator input entirely, with all energy input to the system process being received from the vacuum through the permanent magnet dipolarity's Whittaker decomposition and constituting direct system application of the stated giant negentropy process {26, 43}.

31. The system process is a magnetic regenerative gain process, outputting more energy than the operator himself inputs, with the excess energy received from the active vacuum via the broken 3-symmetry of the dipole which initiates and sustains the giant negentropy process {26, 43}, whereby EM energy continuously flows into the system from the complex plane (time domain), is transduced into usable magnetic energy in real 3-space, and is then

transduced into ordinary electrical energy by the system process, thereby powering both the system and the loads.

32. In an embodiment using the process, all coils exhibit energy gain and increased performance, as does the overall system. All coils are energy amplifying coils, each with gain in energy output greater than 1.0 compared to the same coil without simultaneous but separate exposure to and interaction with separate inputs of field-free magnetic potential and magnetic field, and without iterative positive feedback between the two simultaneous interactions.

33. For power system processes, the combined process requires using at least one primary (active) coil in dual interaction with iterative feedback between the duals, and one secondary (passive) coil in dual interaction with iterative feedback between the duals, both on a common nanocrystalline flux path. The resulting "minimum configuration" embodiment produces a power system that is an open thermodynamic system, not in equilibrium with its external environmental energy source: to wit, the continuous inflow of EM energy from the complex plane of the active vacuum into the permanent magnet dipole, and the continuous outflow of real magnetic energy from the permanent magnet dipole, with the holding of the magnetic field energy and magnetic flux energy inside the nanocrystalline material in the closed magnetic flux path, and with excess field-free magnetic vector potential filling the surrounding space, as continuously furnished by the permanent magnet dipole and continuously replenished to the dipole by the active vacuum due to the dipole's broken 3-symmetry in its vacuum energy exchange and the giant negentropy 4-space energy flow operation {26, 43} initiated thereby.

34. This process permissibly violates 3-symmetry energy conservation, but rigorously obeys 4-symmetry energy conservation and thus is a process which has not previously been applied in electrical power systems. The basic excess energy input is received from an unusual source: the complex plane (time domain) of the locally curved and active spacetime (vacuum), as shown by the Whittaker decomposition {1} of the permanent magnet's magnetostatic scalar potential between its poles, and as further demonstrated in several AIAS papers {39-41, 43}, and as recognized by Bearden {26} and investigated more deeply by Evans and Bearden {43}. The energy into the nanocrystalline flux path material is input directly from the permanent magnet as magnet flux energy. From its dual interaction with two magnetic energy components, the active (driving) coil produces increased magnetic field flux in its center and thus in its interaction with the magnetic flux path and the magnetic flux in the flux path, and also produces increased magnetic flux back through the permanent magnet dipole, thereby altering the pole-strength of the permanent magnet, and also produces increased field-free **A**-potential in space surrounding the permanent magnet and surrounding the nanocrystalline flux path, and flowing geometrically in the direction taken by the nanocrystalline flux path. From its dual interaction with two magnetic vector potentials as well as two magnetic field components superposed, the passive (driven) coil produces increased EM field energy in the form of current and voltage out of the coil and into any conveniently attached external load for dissipation in the load by conventional means.

35. The process in this invention uses and applies an open system process for receiving excess energy from an external source (the permanent magnet flux and the permanent magnet **A**-potentials), and since the permanent magnet flux and permanent magnet **A**-potentials

are continuously replenished from the vacuum via the broken 3-symmetry of the magnet dipolarity via its Whittaker decomposition {1}, the process is allowed to be adapted in systems to (a) produce COP>1.0, and (b) be closed looped with clamped positive feedback from load output to input, so that the system powers itself and its load simultaneously.

36. The open system far from equilibrium process of this invention thus allows electromagnetic power systems to be developed that permissibly exhibit a coefficient of performance (COP) of COP>1.0. It allows electromagnetic power systems to be developed that permissibly (a) power themselves and their loads and losses, (b) self-oscillate, and (c) exhibit negentropy.

37. No laws of physics or thermodynamics are violated in such open dissipative systems exhibiting increased efficiency, and conservation of energy laws are rigorously obeyed. Classical equilibrium thermodynamics does not apply and is permissibly violated. Instead, the thermodynamics of open systems far from thermodynamic equilibrium with their active environment—in this case the active environment—rigorously applies {17-19}.

38. This appears to be the first magnetic process deliberately utilizing and separating special energy flow processes—associated in a curved spacetime with the permanent magnet's dipolarity—to provide true magnetic energy amplification, receiving the excess energy freely from the permanent magnet dipole, with said energy being continually replenished to the dipole from the imaginary plane in spacetime by the giant negentropy process {26, 43}.

39. This appears to be the first power system process which in open-loop mode receives electrical energy input by the operator or outside normal source, wherein the electrical energy input is transduced into magnetic energy flows, and wherein curled **A**-potential flow (magnetic field energy flow) is separated from field-free **A**-potential flow, and where dual and iterative "ping-pong" interactions of feedforward and feedback of energy occur in each active component, and wherein the feedforward and feedback ping pong interactions create local energy gain in each active component, and wherein the magnetic potential energy of the system is self-regauged and increased (receiving the excess by giant negentropy replenishment from the active vacuum), and where the increased magnetic energy flow is then re-transduced into electrical energy and output to power loads, and wherein the output energy powering the loads is greater than the input energy provided by the operator.

40. The foregoing system functions as before described, wherein the system process positively feeds back a clamped fraction of its electrical output to its electrical input, resulting in a regenerative, energy-amplifying, self-regauging open system process which powers itself and its loads, the powering energy being freely received from the active vacuum curved spacetime via the giant negentropy process {1, 26, 43}.

41. The process therefore appears to be the first process for an electrical power system which permissibly violates electromagnetic energy conservation in 3-space, due to the use of the recognized and proven broken 3-symmetry of the dipole {16}, but while rigorously conserving electromagnetic energy in 4-space {26, 43}. It therefore appears to be the first electrical power system process which enables the use of a clamped positive feedback from output to input in an electrical power system having COP>1.0 so that the system

continuously receives all the energy—to power its loads and losses—from the magnetic energy flow of a permanent magnet, with the energy flow being continually replenished to the permanent magnet by the energy circulation from the imaginary plane (as absorbed reactive power) and transduced into real power output by the magnet's dipole, and with the freely received magnetic flux energy from the dipole being separated into field energy and magnetic vector potential energy.

42. This appears to be the first COP>1.0 electrical power system process that deliberately takes useful advantage of the fact that any amount of energy can be intercepted and collected from a potential, regardless of its magnitude, if sufficient intercepting charges (in this case, magnetic charges, or pole-strengths) are utilized. In this case, coils utilized around the special nanocrystalline core material interact with the field-free magnetic vector potential filling the space occupied by the electron spins in the Drude electron gas in the coils, while simultaneously the produced magnetic field in the coil due to its curl operation interacts with the localized magnetic field flux in the nanocrystalline flux path and core, and vice versa. In this way, effectively the energy interception and collection is multiplied beyond what is obtained by a coil with a core operating in normal magnetic field coupled to its magnetic vector potential in space.

43. This appears to be the first magnetic process that is a proven true negative resistance process, where "negative resistance process" is defined as a process whereby electromagnetic energy is continuously and freely received in unusable form, converted into usable form, and continuously output in usable form.

44. This appears to be the first power system process which deliberately uses energy to perform more than one joule of work per joule of energy, by transforming a given amount of energy into a different form, thereby performing work in the same amount upon a receiving medium while retaining the energy in its new form, then transforming that energy back into the first form again, thereby again performing work in the same amount upon the receiving medium again while retaining the energy back in its original form, and so on in "ping-pong" iterative fashion. The fraction of the energy that is retained from one transformation to the other determines the increase in energy of the medium receiving the work and thus being excited with kinetic energy, and thereby determines the energy gain of the power system in the multiplicity of such regenerative processes used in the system.

45. This appears to be the first magnetic process for EM power systems which deliberately creates and uses curved local spacetime to provide continuous energy and action upon the process's active components and subprocesses. Sachs' unified field model {44-46} as implemented by one of its important subsets—O(3) electrodynamics per Evans {40) and Vigier—is implemented in the system to provide several specific local curvatures of spacetime, with excess energy being thereby regauged into the system and used to power loads, including a self-powering system which powers itself and its loads simultaneously, and also including an open-loop system wherein the operator inputs a little EM energy and obtains more EM energy being dissipated as work in the load.

RELATED ART

There is believed to be no prior art in such true magnetic negative resistor processes for

(1) utilizing curvatures of local spacetime to provide excess energy from spacetime input into the various active components of the system process,

(2) receiving EM energy from the spacetime vacuum in unusable reactive power form,

(3) having the permanent magnet dipole convert the received unusable EM energy into usable magnetic energy form,

(4) splitting the magnetic energy output of the permanent magnet into separate magnetic field flux and both curled and uncurled magnetic vector potential current, each traveling in a different spatial pathway,

(5) producing energy amplification by dual interaction of multiple simultaneous processes in a coil, with iterative feedforward and feedback between the simultaneous interactions,

(6) producing driving and driven coils both in curved spacetime and with their magnetic flux inside a nanocrystalline core inside said coils and with a field-free magnetic vector potential in the space in which the coil is embedded, and

(7) transducing the excess magnetic energy available for output, into electrical energy,

(8) outputting the excess energy as ordinary electrical energy—consisting of voltage and current—to power circuits and loads,

(9) permissibly exhibiting COP>1.0 while rigorously obeying energy conservation, the laws of physics, and the laws of thermodynamics, and

(10) being operated in either open-loop or closed loop operation, whereby in open-loop the operator inputs a lesser EM energy than is dissipated in the load, or whereby in closed loop operation a fraction of the output energy is positively fed back into the input to power the system and system process, while the remainder of the energy is dissipated in the load to power it.

(11) Using and applying the extended work-energy theorem for a replenishing potential environment.

This appears to be the first process to take advantage of the above listings of operations, functions, processes, and facts, whereby no heating or eddy current dissipation is produced in the cores of coils utilized in embodiments of the process, and whereby said process and embodiments output electrical power in loads without the need to cool the process components.

The closest *somewhat* related work would appear to be the several patents of Raymond C. Gelinas {52} in that these patents use the curl-free magnetic vector potential. All the Gelinas patents deal with communications and receivers and transmitters, have no application to electrical power systems, do not use additional EM energy extracted from a permanent magnet and replenished by the vacuum, do not use curved local spacetime, do not use the giant negentropy process, do not function as open systems far from equilibrium in their vacuum

exchange, do not use iterative "ping-pong" feedforward and feedback in their various components to achieve gain, do symmetrically regauge themselves so that their excitation discharge is symmetrical and not asymmetrical, do not function as negative resistors, are not self-powering, cannot produce COP>1.0, cannot self-operate in closed-loop form, and can and do produce only COP<1.0. They therefore have no application to the field of the present invention.

DESCRIPTION OF THE FIGURES AND SYSTEM OPERATION.

The process in this invention is described in a description below and in the process gain block diagram cited below and attached as separate sheets, which are intended to be read in conjunction with the following set of drawings, which include (1) the background Lenz reactions, Poynting and Heaviside energy flow operations, Heaviside energy flow component, giant negentropy operation, Whittaker's decomposition of the scalar potential, and creation and use of curved local spacetime utilized in the invention, and (2) the principles, the functional block diagram, a physical laboratory test and phenomenology device, and the process operation of the invention as well as typical measurements of a laboratory proof-of-principle device.

Figure **1** graphically shows Whittaker's decomposition {1, 29, 30} of the scalar potential into a harmonic set of phase conjugate longitudinal EM wavepairs. The 3-symmetry of EM energy flow is broken {16, 26} by the dipolarity of the potential, and 4-symmetry in energy flow without 3-flow symmetry is implemented {1, 26}.

Figure **2** expresses this previously unexpected functioning of the scalar potential—or any dipolarity, including the magnetic dipole of a permanent magnet—as a true negative resistor {23}, receiving energy in unusable form, transducing it into usable form, and outputting it in usable form.

Figure **3** shows the startling ramifications of this previously unsuspected process: an ongoing, free, negentropic reordering of a fraction of the local vacuum energy {26}, spreading at the speed of light in all directions from the moment of formation of the dipole, and continuing as long as the dipole and its broken 3-symmetry exists. We have previously stated {22, 25} that the energy input to the shaft of a generator, and the chemical energy of the battery, have nothing to do with powering the external circuit connected to the battery or the generator. Other than dissipation in internal losses, the available internal energy dissipated by the generator or battery does not add a single joule/sec of energy flow to the external circuit. Instead, the available internal energy is dissipated internally and only to force the internal charges apart, forming the internal source dipole connected to the terminals. The input energy to a generator and expended by it, and the chemical energy available by a battery and expended by it, thus are expended only to continuously reform the source dipole that the closed current loop circuit continuously destroys.

Once established, the source dipole applies the giant negentropy process {26, 43} shown in Figures **1**, **2**, and **3**. Energy is continuously received by the dipole charges from the surrounding active and negentropically reordered vacuum (curved spacetime), transduced into usable form, and output as real EM energy flow in 3-space. The receipt of this energy as reactive power freely received from the vacuum, does not yet appear in present classical electrodynamics

texts, which texts do not include the vacuum interaction, much less the broken symmetry of the source dipole in that vacuum exchange, even though such has been proven in particle physics since the 1950s. The present invention is believed to be the first applied process using this previously omitted process of easily extracting energy from the vacuum and outputting it in usable transduced form as real EM energy flow, via the giant negentropy process {26, 43}.

The transduced EM energy received from the vacuum by the source dipole, pours out of the terminals of the battery or generator and out through space surrounding the transmissions lines and circuits connected to the terminals (Figure **4**) as shown by Kraus {53}. As is well-known, the energy flow (Figure **4**) fills all space surrounding the external circuit conductors out to an infinite lateral radius away{53}. This is an *enormous* EM energy flow—when one includes the space-filling nondiverged component discovered by Heaviside {10, 11}. This neglected vast nonintercepted, nondiverged energy flow component was never even considered by Poynting {9}, and was arbitrarily discarded by Lorentz {51} as "of no physical significance".

Figure **5** shows that almost all that great EM energy flow pouring out of the terminals of the generator or battery and out through the surrounding space surrounding the transmission line conductors, misses the circuit entirely and is just wasted in conventional circuits having no iterative feedback and feedforward additional collection components and processes. In a simple circuit, for example, the arbitrarily discarded Heaviside nondiverged energy flow component may be some 10 trillion times in total rate of energy flow as the feeble Poynting component {9} that is intercepted by the surface charges in the circuit conductors and components, and diverged into the wires to power the Drude electrons and the loads and losses.

Figure **6** illustrates the negative resistor process diagrammatically. The source dipole and the associated scalar potential between its poles act as a true negative resistor, receiving enormous EM energy from the surrounding vacuum in unusable form (via the giant negentropy process shown in Figure **3**). The charges of the dipole absorb this unusable energy and transduce it into usable EM energy form, then re-radiate it as usable EM energy. This of course is precisely a negative resistor process.

Figure **7** shows the integration trick which Lorentz originated to discard the perplexing and enormous Heaviside non-diverged energy flow component, while retaining the diverged (Poynting) energy flow component. In short, Lorentz's procedure—still utilized by electrodynamicists to discard the embarrassing richness of EM energy poured out of every dipole and not intercepted and used by the attached external circuit—for over a century has specifically and ubiquitously diverted electrodynamicists' attention away from the process described in this invention.

We strongly iterate the following point: We have designed the process of this invention and its embodiments by and in accord with Sachs' unified field theory and the Evans-Vigier O(3) electrodynamics subset of it. Consequently, all energy in mass-free spacetime is general relativistic in nature, modeling, and interpretation. The general relativity interpretation applies at all times, including for the electrodynamics. Hence any local delta energy in spacetime is precisely of one and only one nature: a curvature of that local spacetime. A traveling EM wave thus becomes identically a traveling oscillation of a specialized curvature of spacetime. Further, wherever the wave exists, its energy *a priori* curves that part of the spacetime. So EM waves,

fields, potentials, and energy flows always involve and identically are spacetime curvatures, structures, and dynamics. We also accent that time is always part of it, since what exists prior to observation is spacetime, not space. Hence "energy currents in time" and "electromagnetic longitudinal waves in the time domain" are perfectly rational expressions and facts, albeit strange to the 136-year old classical electrodynamics stripped of its integration with general relativity.

Figure **8** shows the relationship between a linearly moving magnetic vector potential $\mathbf{A}_L$, a swirling or circulating $\mathbf{A}_C$, the implementation of the $\nabla\times$ operator by the interacting coil and its moving charges, and the resulting magnetic field **B**. $\mathbf{A}_L$ can also be defined as the vector potential $Ø_L$ if desired, where $Ø_L$ is a vector potential and no longer the familiar scalar potential ϕ since $Ø$ is in motion. If the coil is wound very tight and is very long (or closed such as in a very tight toroid), then the magnetic field **B** will be retained entirely inside the coil, while the field-free (curl-free) $\mathbf{A}_C$ will remain outside the coil. This illustrates one of the major unrecognized principles of the potential (such as **A**) being a flow process: What is usually considered to be the energy in the potential in a given volume of space, is actually the "reaction cross section" of the potential in that volume. Conventional electrodynamicists and electrical engineers do not calculate magnitudes of either fields or potentials, but only their *reaction cross sections*, usually for a unit point static charge assumed fixed at each point. We point out that this procedure calculates the divergence of energy from the potential, and hence the reaction cross section of the potential, but not the potential itself.

The energy so calculated—in this case, the curl of the **A** flow, being the magnetic field **B**—can in fact be diverted from the **A** potential flow through a volume of space into another different volume of space. The magnitude of the **A** potential flow will continue undiminished through the original volume of space, so long as the source dipole performing the giant negentropy process and thus providing the continuous EM energy flow represented by **A** remain unchanged. In the case used in the process of this invention, we diverge the magnetic field energy from the A-flow, while simultaneously retaining all the **A**-potential energy flowing through the space outside the tightly wound coil. This is in fact an "energy collecting amplification" subprocess, and is no more mysterious than diverting a tiny flow of water from a nearly infinite river of flowing water, and having the river flow on apparently undiminished. In short, we may deliberately use the *energy flow nature* of the potential **A** in order to simultaneously separate it into two flows of different energy form, curled and uncurled.

If we place a square pulse in the current of the coil in Figure **8**, we also invoke the Lenz law reaction (Figure **9**) to momentarily increase the current and hence the $\mathbf{A}_C$ and the action of $\nabla\times\mathbf{A}_C = \mathbf{B}$, so that additional $\mathbf{A}_C$ energy and additional **B** energy are obtained. In this way, the energy gain is increased by the Lenz law effect—which is a regauging effect deliberately induced in the invention process by utilizing square pulse inputs. Then when the trailing edge of the pulse appears and sharply cuts off the pulse, a second Lenz law gain effect (Figure **9**) is also produced, further increasing the energy gain in both $\mathbf{A}_C$ and in **B**. We use these two serial Lenz law effects to increase the potential energy of the system twice and also the collected field energy, thus allowing COP > 1.0 since during the regauging process the potential and the potential energy of the system are both increased freely, and so is the diversion of the increased

potential energy into **B**-field energy inside the coil. Both the changes increase the voltage drop across the coil and the current through it, translating the increased magnetic energy into usable electrical energy to power loads and losses.

Figure **10** shows the cross section of an input coil, one form of input device. The input can be from a separate signal generator, in which case the system runs "open loop" and requires continuous input power, but still provides COP>1.0. Or, a portion of the output power can be extracted, clamped in magnitude, and positively fed back to the input, in which case the system runs "closed loop" and the operator need furnish no external power input. In either case, the system is an open system far from thermodynamic equilibrium with its active vacuum environment, freely receiving energy from said active environment to the dipole in the permanent magnet, and from the dipole out into the nanocrystalline material core in the form of magnetic field energy **B**, and in the space outside the core in the form of field-free **A**-potential. As can be seen, the **B** field energy is confined to the core material inside the coil, and the **A**-potential outside the core is field-free **A**. Any change in the **B**-field inside the core, is also a change in the **B**-field inside the coil and the coil interacts with it to produce current and voltage. Any change in the **A**-potential outside the core, also interacts with the coil which applies the $\nabla\times$ operator, thereby producing voltage and current in the coil and also producing additional **B**-field in the core material. In turn, this changes the **B**-field in the core, which produces more voltage and current in the coil and additional **A**-potential outside the coil, and so on. Hence there are dual iterative retroreflective interactions which increase the performance of the coil, making it an ***energy amplifying*** coil, and which also increase the COP of the system process. The output of the input coil is thus the alteration and increase of the **B**-field flux and energy in the core material, and an increase and alteration in the field-free **A**-potential surrounding the coil and moving around the circuit in the space surrounding the nanocrystalline core material flux path.

Figure **11** shows the cross section of a typical output coil for either open-loop or closed-loop operation. The operation is identical to the operation of the input coil, except this coil outputs energy in the form of voltage and current to an external circuit, external load, etc., and also outputs energy from its reaction with the **A**-potential outside the flux path to the nanocrystalline flux path material in its core. The output coil receives its energy input from the field-free **A**-potential outside the nanocrystalline material flux path as well as from the **B**-field energy and magnetic flux inside the nanocrystalline flux path through its core.

Further, the dual interaction processes and their mutual iterative interactions provide gain in both the **A**-potential energy outside the core material and the **B**-field energy and magnetic flux energy inside the core material.

Further, all coils on the core material thus serve as both output and input coils, and also have mutual iterative interactions with each other around the loop, coupled by the field-free external **A**-potential and the **B**-field and magnetic flux in the nanocrystalline material flux path acting as the cores of the coils. These interactions also provide gain in the kinetic energy produced in the Drude electron gas due to the iterative summation work performed upon the electrons to increase their energy.

Further, these mutual iterative feedback and feedforward energy gains also change the flux back through the permanent magnet, alternating it, so that the pole strength of the magnet

alternates and increases. This in turn increases the dipolarity of the permanent magnet, which in turn increases the magnitude of the associated giant negentropy process {26, 43}. In turn this results in more energy received from the active vacuum by the permanent magnet, and also more energy output by said permanent magnet dipole to the core material and to the coils.

Thus we have described a system and process having a multiplicity of iterative feedbacks and feedforwards from each component and subprocess, to every other component and subprocess, all increasing the energy collected in the system and furnished to the load. In open loop operation, this results in COP>1.0 permissibly, since the excess energy is freely received from an external source. In closed loop operation, the COP concept does not apply except with respect to operational efficiency. In that case, the operational efficiency is increased because more energy is obtained from the broken symmetry of the permanent dipole, and therefore additional energy is provided to the loads, compared to what the same permanent magnet can deliver when such iterative feedback and feedforward actions in such multiplicity are not utilized. In closed loop operation, the system powers itself and its loads and losses simultaneously, with all the energy being freely supplied by the giant negentropy process of the permanent magnet dipole and the iterative asymmetrical self-regauging processes performed in the process.

Figure **12** is another view showing the major energy flows in an output coil section and subprocess, and the iterative dual inputs and interactions, of the basic scheme of operation of the process and its active component subprocesses.

Figure **13** is another view showing the major energy flows in an input coil section and subprocess, and the iterative dual inputs and interactions, of the basic scheme of operation of the process and its active component subprocesses.

Figure **14** is a diagrammatic block-diagram illustration of the components and processes in the system and system process, with the dual feedforward and feedbacks shown. It accents the overall system process gain due to the multiplicity of interactions and iterative interactions between the various system components and subprocesses, and further interactions with the dual local interactions and iterative feedforwards and feedbacks, thus providing a multiplicity of individual energy gain process and an overall energy gain process.

Figure **15** shows a type embodiment of the system and system process, perhaps at a home and powering a variety of home appliances and loads. The system as shown is "jump-started" initially in open-loop mode, and once in stable operation is disconnected from the jump starter (such as a battery) to run in closed-loop operational mode.

Figure **16** shows one of the former laboratory test build-ups embodying the process of the invention. This test prototype was used for proof-of-principle and phenomenology testing.

Figure **17** shows a simplified block diagram of a basic embodiment demonstrating the process. Many of these build-ups were built to test various core materials, observe phenomenology, etc. The "square C's" of the flux path halves right and left, as shown in this Figure **17**, were actually made as "half-circle C-shaped flux path halves" right and left in Figure **16** above.

Figure **18** shows the measurement of the input to the actuator coil of the test unit of Figure **16** operated in open-loop mode.

Figure **19** shows the measurement of the output of one of the output coils of the test unit of Figure **16** operated in open-loop mode.

Figure **20** shows the output power in watts as a function of the input potential in volts, thus indicating the output versus potentialization sensitivity. The circles indicate actual measurements, and the curve has been curve-fitted to them.

Figure **21** shows the COP of a single output coil's power divided by the input power, as a function of input potentialization. The circles indicate actual measurements, and the curve has been curve-fitted to them. The second coil had the same power output and COP simultaneously, so the net unit COP of the unit is double what is shown in the figure.

Figure **22** shows the projected unit output power sensitivity versus voltage input, expected for the next prototype build-up now in progress.

Figure **23** shows the projected unit COP versus input potentialization, expected for the next prototype build-up now in progress. We expect this type of unit to easily operate at the COP = 30 or COP = 40 level, with multiple kilowatt output power.

RAMIFICATIONS

Importance of the Process and Its Sub-Processes

A process has been provided whereby useful electromagnetic energy may be extracted from the dipole of a permanent magnet, via the giant negentropy process {26, 43} associated with the magnetic dipole. In that process, an outflow of EM energy is continuously furnished by the magnet dipole in all directions in 3-space, and the energy to the dipole is freely furnished from the time-domain of the active vacuum {1, 26, 43}. Whittaker {1} unwittingly showed this giant negentropy mechanism in 1903, but failed to recognize its implications. Recent recognition of the mechanism and its implications for electrical power systems was accomplished by one of the inventors, Bearden {26} and then more deeply examined by Evans and Bearden {43}.

By using the principle that essentially unlimited energy can be withdrawn from (collected from) a potential, and the withdrawn energy will be replaced by the potential's negative resistor action using the giant negentropy mechanism {1, 26, 43}, a practical approach to free energy sources for self-powering and COP>1.0 electrical power systems anywhere in the universe is provided.

By using the principle that iterative transformation of its form energy in a replenishing potential environment can be repeatedly reused to do work, so long as the form of the energy resulting at the completion of each work phase is retained and reprocessed, one joule of energy can be utilized to do many joules of work, as precisely permitted by the conservation of energy law with regauging. This is a major change to the work-energy theorem of electrodynamics, which implicitly has assumed only a single change of form of the energy, followed by loss (escape from the system) of all the energy in the new form. In short, *the present work-energy*

theorem is only a special case valid under those assumed special conditions. The invented process takes advantage of the extended work-energy theorem where one joule of energy—accompanied by retention of the new form of energy resulting from work—can do multiple joules of work in a replenishing potential environment.

By using the principle that one joule in "iterative form changing mode with retention" can do many joules of work upon a component of a system—to wit, upon the Drude electron gas in an electrical circuit, where the potential energy is increased by the increased kinetic energy of the electrons having the work done upon them—the extended work-energy theorem can be utilized to overpotentialize the receiving Drude electron gas, thereby regauging the system to add excess energy by gauge freedom and outputting more electrical energy to the load than is input to the system by the operator.

By then dissipating in loads this excess energy collected in the Drude electron gas in the output circuit, the invented process provides greater energy to be dissipated in the load than is input by the operator. The combination of processes thus allows an electromagnetic system freely functioning as an open system not in equilibrium with its active vacuum (due to the giant negentropy mechanism {26, 43}), hence permitted to exhibit COP>1.0. In this way, more work output can be accomplished by the system process than the work that the operator must perform upon the system to operate it.

By using the principle of governed, clamped positive feedback of a portion of the increased output back to the input, the system can be close-looped and can power itself and its load, with all the energy being furnished by self-regauging from the active vacuum as an external energy source, furnishing excess energy to the magnetic dipole's magnetostatic potential and associated magnetic vector potential, thereby replenishing energy withdrawn from said magnetic vector potential by the subprocesses in the overall system process.

One system operating in closed-loop mode can also have one fraction of its output devoted to "jump-starting" another such system in tandem, then switching the second system into self-powering closed-loop mode, then "jump-starting" another such system, which is then switched to self-powering, and so on. In that way, multiple systems can be "piggy-backed" so that an exceptionally large power system consisting of a group of such "piggy-backing" systems can be produced. In case of system failure, all can be started again in the same series, by furnishing only the initial small input required to jump-start the first system of the group. In this way, very large power systems such as necessary to power automobiles, trucks, ships, trains, etc. can be produced, and yet the back-up jump starting source—such as a storage battery—can be very small, e.g., a simple flashlight battery.

Implications for the Crisis in Oil Supplies Versus Energy Demands

The implications are that a total revolution in transportation, electrical power systems, backup power systems, etc. is at hand. In the process, the electrical power is obtained freely and cleanly from the vacuum, from permanent magnet dipoles continuously replenished from the active vacuum via the giant negentropy process.

A more significant fraction of the electrical power system can thus be decentralized, and degradation in case of system failure will be graceful and local. Yet full use can still be made of the existing power grids and power systems. As an example, arrays of self-powering electrical heater systems can be developed and used to heat the boilers in many standard power systems, thereby stopping the burning of hydrocarbons in those plants, and drastically reducing the pollution of the biosphere and the lungs of living creatures including humans. This would allow a graceful phase-in of new, clean, self-powering electrical power systems, reduction of hydrocarbon combustion for commercial electricity production, ready increase in electrical power to meet increasing world demands even in poor nations and developing countries, while capitalizing and using much of the present very large "sunk costs" investments in present large power systems. The core material fabrication is labor-intensive, so it is made in developing nations where such jobs are sorely needed and greatly benefit both the people and the nation. The dramatically increased use of and demand for these materials would thus stimulate substantial economic growth in those nations by providing many more jobs.

The conversion of power systems and replacement in a fraction of them, can proceed at a very rapid pace, since production and scale-up of systems utilizing this system process can be very rapid because, except for the cores, all fabrication, parts, techniques, tooling, etc. are simple and standard and very economical.

Particularly at this time of oil crisis and particularly a shortage of refining facilities, a very rapid and permanent solution to the oil crisis and the rapidly increasing demand for electricity—and also much of the problem of the present pollution of the biosphere by combustion byproducts, and of the present global warming enhancement by the emitted CO_2 from the hydrocarbon combustion—can be solved cheaply, economically, and quickly.

The steady reduction and eventual near-elimination of hydrocarbon combustion in commercial power systems and transport, and dramatic reduction in nuclear fuel rod consumption, etc. will result in cleaner, cheaper, more easily maintained power systems and a reduction in the acreage required for these power systems.

The gradual decentralization and localization of a substantial fraction of the presently centralized power grid will eliminate a significant fraction of power transmission costs, thereby lowering the price of electrical energy to the consumers.

The scale-up weight-per-kilowatt of systems using this system process will be sufficiently low to enable rapid development of electrically powered transport media such as automobiles etc. These will have weight about the same as now, carry a small battery as a back-up "jump-starter", and will have very agile performance suitable for modern driving in heavy traffic. With fuel costs zeroed, the cost to the citizens of owning and operating vehicles will be reduced. Costs to the trucking industry, e.g., will be dramatically reduced, since fuel is a major cost item. In turn, since most goods are moved via the trucking industry, the lower transport costs will mean more economical sales prices of the goods. These are very powerful and beneficial economic advantages of the new process.

Some Specific Advantages

The process allows electrical power systems having the following advantages:

1. The systems can have a high output power to weight ratio Second generation equipment will have a very high output power to weight ratio.
2. The systems can be highly portable for mobile applications.
3. The size and output of the systems are easily scalable, and piggy-backing is simple.
4. The systems will be rugged and reliable for use in hostile environments where conventional generators would fail or be extremely difficult to sustain. The systems can easily be environmentally shielded.
5. The systems can function effectively in very wide operating temperature ranges and can be used where conventional batteries and fuel cells cannot function. As an example, it can power a resistance heater to keep its own immediate environment continuously warm. It can also power electrostatic or magnetic cooling devices to keep the unit and its immediate environment cool in higher temperature environments.
6. The system will have an extremely long life cycle and high reliability, allowing it to be placed where frequent maintenance is not possible.
7. The system uses no fuel or fuel transport, packaging, storage, and disposal systems and needs no intermediate refining facilities and operations. The resulting overhead and financial savings are vast and significant.
8. Use of the systems in a combined centralized and decentralized electrical power system provides survival of electric power and graceful degradation, rather than catastrophic collapse, of electrical power in the presence of damage and destruction. This is particularly important since the greatest threat to America is now the threat of terrorist attacks against our cities, or against our fuel supplies, electrical power grids, etc.
9. The systems produce no harmful emission, harmful or radioactive byproducts, hazardous wastes, or biospheric pollutants. As usage is phased in world wide, a significant reduction of environmental pollutants and hazardous wastes will result, as will a cleaner biosphere.
10. The systems can produce AC or DC power directly by simple electrical additions, and provide shaft power simultaneously. Frequency can be changed by frequency conversion.
11. Coupled with normal electric motors, the systems can provide attractive power system alternatives for automobiles, tractors, trucks, aircraft, boats, ships, submarines, trains, and other vehicles, again without exhaust emissions, pollutants or harmful waste products and without fuel costs.
12. The systems can be developed in small-system sizes, rugged and efficient, to replace the motors of hosts of small engine devices such as garden tractors, lawnmowers, power saws, leaf blowers, etc. which are presently recognized to be very significant biospheric polluters.

The above descriptions provide illustrations of some of the presently envisioned preferred embodiments of this invention.

Extension and Adaptation of the Process

The process can be extended . For example, we have mentioned piggy-backing arrays of such systems for easily assembled, very large power plants.

As another example, conversion to furnish either DC or AC, or combinations of either, at whatever frequencies are required, is easily accomplished by standard conversion techniques and add-on systems.

As another example:

The process uses a multiplicity of positive energy feedforwards and feedbacks, and iterative change of the form of the energy between multiple states in a replenishing environment, to provide iterative gain by "ping-pong". As the number of feedback and feedforward operations are increased, it is possible to advance the system process into a region where the regenerative feeds produce an exponentially *increasing* curve of regauging energy and potential energy increase, with concomitant exponentially increasing curve of output energy. Material characteristics, saturation levels of cores, etc. provide "plateaus" where the exponentially rising output curve is leveled off and stabilized. By using spoiling and damping, such exponential increase in energy density of the system can be leveled off at specifically desired plateau regions, which can be easily adjusted at will, either manually or automatically in response to sensor inputs. By this means, these systems enable automatically self-regulating, self-adapting power grids and power systems, which automatically adjust their state and operation according to the exact needs and conditions, changes of these needs and conditions, etc. without impact upon supporting fuel, transport, refining, storage, etc. These "exponential but plateau-curtailed" systems are capable of producing very large power-per-pound levels, and sustaining them without overheating, limited only by the saturation level of the core materials. Such new adaptations of the fundamental system process of this invention can be developed in straightforward manner in the second generation.

The adaptations and alterations of the process are limited only by the ingenuity of the engineer and the particular needs of a given application. The process uses the laws of nature in a novel and extended manner, such as using one joule of input energy to cause many joules of output work to be done in the load. Many alternative subprocesses, embodiments, modifications and variations will be apparent to those skilled in the art of conventional electrical power systems and magneto-electric generators.

REFERENCES:

1. E. T. Whittaker, “On the Partial Differential Equations of Mathematical Physics,” Mathematische Annalen, Vol. 57, 1903, p. 333-355. Decomposes any scalar potential into a harmonic set of bidirectional EM longitudinal EM wavepairs, where each wavepair is comprised of a longitudinal EM wave and its phase conjugate replica wave. Dividing the

overall waveset into two half-sets, we have one half-set comprised of incoming longitudinal EM waves in the complex plane (the time domain) and a second half-set comprised of outgoing longitudinal EM waves in real 3-space. Hence the scalar potential represents a giant circulation of EM energy automatically established and maintained from the time-domain (complex plane) into the source dipole establishing the potential, with the absorbed complex energy being transduced and re-emitted by the dipole in all directions in 3-space as real longitudinal EM wave energy establishing the EM fields and potentials (and their energy) associated with the dipole.

2. "E. T. Whittaker, "On an Expression of the Electromagnetic Field Due to Electrons by Means of Two Scalar Potential Functions," Proc. Lond. Math. Soc., Series 2, Vol. 1, 1904, p. 367-372. The paper was published in 1904 and orally delivered in 1903. Shows that all EM fields, potentials, and waves are comprised of two scalar EM potential functions. Whittaker's method is well-known in the treatment of transverse electric and transverse magnetic modes of a cylindrical cavity or a waveguide. The Debye potentials and the Bromwich potentials are essentially radial components of the vector potentials of which Whittaker potentials are the real parts. Our further comment is that, since each of the scalar potentials used for the Whittaker functions has an internal Whittaker 1903 giant negentropic substructure and dynamics, then all present EM waves, fields, and potentials have—and are comprised of—vast internal longitudinal EM wave structures and dynamics.

3. P. Debye, Ann. Phys., Leipzig, Vol. 30, 1909, p. 57. Introduces a solution to Maxwell's equations in terms of two scalar potentials. These two scalar potentials are different from the two potentials utilized by E.T. Whittaker in 1904.

4. A. Nisbet, Physica, Vol. 21, 1955, p. 799. Extends the Whittaker and Debye two-potential solutions of Maxwell's equations to points within the source distribution. This is a full generalization of the vector superpotentials (for media of arbitrary properties, together with their relations to such scalar potentials as those of Debye.

5. W. H. McCrea, Proc. Roy. Soc. Lond. A, Vol. 240, 1957, p. 447. Gives the general properties in tensor form of superpotentials and their gauge transformations. His treatment is more concise than that of Nisbet, but entirely equivalent when translated into ordinary spacetime coordinates.

6. Melba Phillips, "Classical Electrodynamics," in Principles of Electrodynamics and Relativity, Vol. IV of Encyclopedia of Physics, edited by S. Flugge, Springer-Verlag, 1962. An excellent overview of superpotential theory.

7. J. D. Jackson, Classical Electrodynamics, Second Edition, Wiley, New York, 1975, p. 219-221; 811-812. In symmetrically regauging the Heaviside-Maxwell equations, electrodynamicists and gauge field theorists assume that the potential energy of any EM system can be freely changed at will (i.e., that the system can first be asymmetrically regauged, due to the principle of gauge freedom). The symmetrical regauging is actually two asymmetrical regaugings carefully chosen so that the net force field (emf)—available for excitation discharge of the excited system—is zero. In circuits, this means that the back emf (across the source dipole) is precisely equal and antiphased to the forward emf (across the

external circuit with its loads and losses). Jackson's book does not even address circuits, as he so states in J. D. Jackson, "Surface charges on circuit wires and resistors play three roles," American Journal of Physics, 64(7), July 1996, p. 855-870.

For operating EM systems, their initial potentialization (application of potential to the system to increase its potential energy available for further discharge) is asymmetrical *a priori* and universally used. Gauge field theory and its assumption of gauge freedom assures us of the validity of this theoretically work-free process of increasing the energy of the system. In real systems, a little switching cost etc. may be required, but minuscule in relation to the amount of extra potential energy that can be generated in the system at will.

As shown by Jackson 1975, for the conventional EM model electrodynamicists actually select only a subset of the Maxwellian systems and deliberately discard the remaining Maxwellian subset. Following Lorentz, the electrodynamicists arbitrarily select *two* asymmetrical regaugings but precisely such that none of the initial excess regauging energy—freely received in the system by its potentialization—can subsequently be dissipated to power loads without equally destroying the system potentialization represented by the source dipole. This inanity occurs because the *net force* is deliberately brought to zero, thus consisting of equal forward and back emfs—or mmfs in a magnetic circuit). This custom produces much simpler equations for that remaining *simpler* subset of Maxwellian systems which are in equilibrium in their exchange with the active vacuum during their dissipation of the free regauging energy.

Hence for more than a century it has been "customary" to *arbitrarily* discard all Maxwellian systems and subsystems which would *asymmetrically* regauge themselves during the discharge of their initial free excitation energy. This arbitrary, self-imposed condition is neither a law of nature nor a law of electrodynamics or thermodynamics. It is purely arbitrary.

It assumes that half the gauge freedom's excess potential energy be dissipated internally (against the source dipole's back emf) to destroy any further energetic activity of the system by destroying the source dipolarity (any excess potential on the system, and hence any excess potential energy).

The remaining half of the initial free gauge excitation energy is dissipated *usefully* in the system's external loads and losses. This means that the remaining half the excitation energy is dissipated *detrimentally* by the system to destroy its own energetic operation. Since any real system has losses, the net result is that *half* the gauge freedom potential energy of the excited system is used to destroy the source dipole itself and all potentialization of the system, and *less than half* is used to power the loads.

Since it requires as much additional energy to restore the source dipole as it required to destroy it, the operator then must furnish more energy to provide for continually restoring the dipole, than the system *permits* to be dissipated in the external loads.

The set of Maxwellian systems arbitrarily discarded by the ubiquitous Lorentz regauging are precisely those open dissipative Maxwellian systems not in thermodynamic equilibrium in their vacuum exchange. Those are precisely the Maxwellian systems which *do not* forcibly and symmetrically regauge themselves in accord with the Lorentz condition during their excitation discharge. Those *arbitrarily discarded* Maxwellian systems are thereby free

to dissipate their gauge freedom initial "free-excitation" energy primarily in the external loads and losses, with much less being dissipated in the source dipole to destroy it.

The performance of the *arbitrarily discarded* asymmetrically regauging Maxwellian systems is described by the thermodynamics of an open dissipative system not in equilibrium with its active environment, rather than by classical equilibrium thermodynamics. As is well-known in the thermodynamics of such systems (for which Prigogine received a Nobel Prize in 1977), such open dissipative systems—Maxwellian or otherwise—are permitted to (1) self-order, (2) self-oscillate or self-rotate, (3) output more energy (e.g., to do useful work) than the operator must input (the excess energy is freely received from the external environment, in this case the active vacuum), (4) power itself and its load(s) simultaneously (all the energy is freely received from the external environment, in this case the active vacuum), and (5) exhibit negentropy.

That our normal EM power systems do not exhibit COP>1.0 is purely a matter of the arbitrary design of the systems. They are all designed with closed current loop circuits, which can readily be shown to apply the Lorentz symmetrical regauging condition during their excitation discharge in the load. Hence all such systems—so long as the current in the loop is unitary (its charge carriers have the same m/q ratio)—can only exhibit COP<1.0 for a system with internal losses, or COP = 1.0 for a superconductive system with no internal losses.

8. Editorial, "The transfer of energy," The Electrician, Vol. 27, July 10, 1891, p. 270-272. This editorial points out that Poynting himself gave Heaviside priority for discovering EM energy flow through space.

9. J. H. Poynting, "On the transfer of energy in the electromagnetic field," Phil. Trans. Roy. Soc. Lond., Vol. 175, Part II, 1885, p. 343-361. Poynting got the direction of the flow wrong, which was later corrected by Heaviside. Further, Poynting considered only that very minor component of energy flow surrounding the circuit that actually strikes the circuit and enters it to power it. The enormous additional energy flow which is present but misses the circuit entirely and is usually wasted, was not considered by Poynting at all.

10. Oliver Heaviside, "On the Forces, Stresses, and Fluxes of Energy in the Electromagnetic Field," Phil. Trans. Roy. Soc. Lond., 183A, 1893, p. 423-480. This followed previous publications several years earlier by Heaviside; e.g. in The Electrician, beginning in 1885. Here Heaviside also credits Poynting with first discovering EM energy flow in space.

11. Oliver Heaviside, Electrical Papers, Vol. 2, 1887, p. 94. Quoting: *"It [the energy transfer flow] takes place, in the vicinity of the wire, very nearly parallel to it, with a slight slope towards the wire… . Prof. Poynting, on the other hand, holds a different view, representing the transfer as nearly perpendicular to a wire, i.e., with a slight departure from the vertical. This difference of a quadrant can, I think, only arise from what seems to be a misconception on his part as to the nature of the electric field in the vicinity of a wire supporting electric current. The lines of electric force are nearly perpendicular to the wire. The departure from perpendicularity is usually so small that I have sometimes spoken of them as being perpendicular to it, as they practically are, before I recognized the great physical importance of the slight departure. It causes the convergence of energy into the wire.*

12. Sir Horace Lamb, Hydrodynamics, 1879, p. 210. Quoting: *"There is an exact correspondence between the analytical relations above developed and certain formulae in Electro-magnetism… Hence, the vortex-filaments correspond to electric circuits, the strengths of the vortices to the strengths of the currents in these circuits, sources and sinks to positive and negative poles, and finally, fluid velocity to magnetic force."*

13. Y. Aharonov and D. Bohm, Significance of Electromagnetic Potentials in the Quantum Theory," Physical Review, Second Series, 115(3), Aug. 1, 1959, p. 485-491. Quoting, p. 485: *"…contrary to the conclusions of classical mechanics, there exist effects of potentials on charged particles, even in the region where all the fields (and therefore the forces on the particles) vanish."* Indeed, since the field is usually defined as the force per unit charge, then the field as defined does not exist until after the causative "field as a separate entity" interacts with a charged mass. Hence the field as defined is an effect, never the cause. Further, being an effect and an observable as defined, it does not exist in spacetime as such, since no observable does. *A priori*, any observable is the output (effect) of a ?/?t operation upon LLLT, yielding an LLL "frozen snapshot" at an instant in time, which snapshot itself does not exist in time but was only a 3-space fragment of what was existing in the ongoing interaction at that point in time. The field-free 4-potential, together with its structure and its dynamics, provides the *causes* existing in spacetime prior to their interaction with intermediaries to produce effects.

14. Ingram Bloch and Horace Crater, "Lorentz-Invariant Potentials and the Nonrelativistic Limit," American Journal of Physics, Vol. 49, No. 1, Jan. 1981 Quoting p. 67: "*[It is usually] "...assumed that the magnitude of potential energy is irrelevant, being arbitrary to the extent of an additive constant."* Our comment: Note that this "standard" assumption in classical electrodynamics is totally wrong, particularly when one considers (1) conservation of energy, and (2) gravitational effects. We have previously nominated this arbitrarily discarded extra potential energy as a solution to the "dark matter" problem in astrophysics, and as being responsible for the extra gravity holding together the arms of the distant spiral galaxies. See T. E. Bearden, "Dark Matter or Dark Energy?", Journal of New Energy, 4(4), Spring 2000, p. 4-11. This paper is also carried on U.S. Department of Energy website http://www.ott.doe/electromagnetic/papersbooks.html.

15. S. Olariu and I. Iovitzu Popescu, "The Quantum Effects of Electromagnetic Fluxes," Reviews of Modern Physics, 57(2), Apr. 1985, p. 339-436. Full discussion of the Aharonov-Bohm effect and hundreds of references. According to Nobelist Feynman, it required 25 years for quantum physicists to clearly face the Aharonov-Bohm issue of the primacy and separate action of the force-field-free potential. It has then required another equal period before physicists would accept it, even though it was experimentally demonstrated as early as 1960.

16. T. D. Lee., Particle Physics and Introduction to Field Theory, Harwood, New York, 1981. A discussion by Nobelist Lee of particle physics and its findings, including broken symmetry which includes the broken symmetry of a dipole. Quoting p. 184: *"... the discoveries made in 1957 established not only right-left asymmetry, but also the asymmetry of the positive and negative signs of electric charge. In the standard nomenclature, right-left asymmetry is*

referred to as P violation, or parity nonconservation. The asymmetry between opposite signs of electric charge is called C violation, or charge conjugation violation, or sometimes particle-antiparticle asymmetry." And again, p. 184: *"Since non-observables imply symmetry, these discoveries of asymmetry must imply observables."* Simply put, Lee has pointed out the rigorous basis for asserting that the arbitrarily assumed Lorentz symmetry of the Maxwellian system is broken by the source dipole—and in fact by any dipole. In turn, such broken symmetry in the dipole's energetic exchange with the active vacuum is thus well-known in particle physics, but still is not included at all in classical electrodynamics, particularly the models used to design and build EM power systems. The proven dipole broken symmetry rigorously means that part of the dipole's received virtual energy—continuously absorbed by the dipole charges from the active vacuum—is transduced into observable energy and re-emitted in real (observable) energy form. That this has been well-known in particle physics for nearly a half century, but is still missing from the classical EM model, is scientifically inexplicable and a foundations error of monumental magnitude. Once made, it is the *source dipole* that powers the circuit.

17. I. Prigogine, "Irreversibility as a symmetry-breaking process," Nature, Vol. 246, Nov. 9, 1973, p. 67-71. Quoting, p. 70: *"Entropy ...cannot in general be expressed in terms of observables such as temperature and density. This is only possible in the neighbourhood of equilibrium... It is only then that both entropy and entropy production acquire a macroscopic meaning."* Prigogine received a Nobel Prize in 1977 for his contributions to the thermodynamics of open systems, particularly with respect to open dissipative systems. What he is pointing out here is that, where equilibrium (and hence symmetry) is broken, the usual presumption of entropy and entropic production have no macroscopic meaning. For such systems, the often encountered challenge on classical equilibrium thermodynamics grounds is a non sequitur, and merely reveals the scientific ignorance of the challenger. In short, such a challenger would decry the windmill in the wind, denying that it can turn without the operator cranking it, because classical equilibrium thermodynamics forbids it. However, the windmill turns happily in the wind, without operator input at all, and in total violation of equilibrium thermodynamics because the windmill is not in equilibrium with its active environment, the active atmosphere. At the same time the windmill completely complies with the thermodynamics of open systems far from equilibrium, and energy conservation is rigorously obeyed. The windmill can "power itself and its load" since all the energy to power the windmill and power the load comes from the energy freely input by the wind.

    It is usually not realized that Maxwell's equations are purely hydrodynamic equations and fluid mechanics rigorously applies {12}. Anything a fluid system can do, a Maxwellian system is permitted to do, *a priori*. So "electrical energy winds" and "electrical windmills" are indeed permitted {1, 26, 28, 29, 30, 31, 32, 33, 34, 35, 36, 37, 38, 39, 40, 41} in the Maxwell-Heaviside model, prior to Lorentz's regauging of the equations to select only that subset of systems which can have no net "electrical energy wind" from the vacuum. Specifically, this arbitrary Lorentz symmetrical regauging—while indeed simplifying the resulting equations and making them much easier to solve—also arbitrarily discards all Maxwellian systems not in equilibrium with their active environment (the active vacuum). In

short, it chooses only those Maxwellian systems which never have any net "electrical energy wind from the vacuum". Putting it simply, it discards that entire set of Maxwellian systems which interact with energy winds in their surrounding active vacuum environment.

18. G. Nicolis and I. Prigogine, Exploring Complexity, Piper, Munich, 1987. A technical exposition of the thermodynamics of dissipative systems far from thermodynamic equilibrium.

19. Gregoire Nicolis, "Physics of far-from-equilibrium systems and self-organization," Chapter 11 in Paul Davies, Ed., The New Physics, Cambridge University Press, Cambridge, 1989, p. 316-347. A good overview of the thermodynamics of dissipative systems far from thermodynamic equilibrium.

20. Robert Bruce Lindsay and Henry Margenau, Foundations of Physics, Dover, NY, 1963, p. 217. When a system departs from equilibrium conditions, its entropy must *decrease*. Thus the energy of an open system not in equilibrium must always be greater than the energy of the same system when it is closed or in equilibrium, since the equilibrium state is the state of maximum entropy. Thus, broken
3-equilibrium is a broken 3-symmetry between the active vacuum and material systems, and it is a *negentropic* operation.

21. J. O'M Bockris, "Overpotential: a lacuna in scientific knowledge," Journal of Chemical Education, 48(6), June 1971, p. 352-358. Essentially *the overpotential is a shift in the Fermi level necessary to allow the electron in the electrode metal to have energies overlapping with vacant acceptor levels in molecules adjacent to the electrode in the solution*. It enables the transfer of electrons via quantum transfer (tunneling). Quoting p. 356: *"Unless a system exhibits an overpotential, there can be no net reaction."* [Emphasis in original]. We point out that an overpotential is an advantageous regauging (free change) of the potential energy of the local region where the overpotential appears.

22. T. E. Bearden, "On Extracting Electromagnetic Energy from the Vacuum," IC-2000 Proceedings, St. Petersburg, Russia, 2000 (in press). This paper is also published on Department of Energy website http://www.ott.doe.gov/electromagnetic/papersbooks.html

23. We define a ***negative resistor*** as any component or function or process that receives energy in unusable or disordered form and outputs that energy in usable, ordered form, where that is the *net* function performed. We specifically do not include "differential" negative resistors such as the tunnel diode, thyristor, and magnetron which dissipate and disorder more energy overall than they reorder in their "negative resistance" regimes.

24. T. E. Bearden, "Dark Matter or Dark Energy?", Journal of New Energy, 4(4), Spring 2000, p. 4-11. This paper is also carried on the aforementioned and listed U.S. Department of Energy website http://www.ott.doe.gov/electromagnetic/papersbooks.html.

25. T. E. Bearden, "The Unnecessary Energy Crisis: How to Solve It Quickly," Association of Distinguished American Scientists' Position Paper. This paper is also carried on Department of Energy website http://www.ott.doe.gov/electromagnetic/papersbooks.html.

26. T. E. Bearden, "Giant Negentropy from the Common Dipole," IC-2000 Proceedings, St. Petersburg, Russia, 2000 (in press). This paper is also carried on Department of Energy website http://www.ott.doe.gov/electromagnetic/papersbooks.html.

27. M. W. Evans, P. K. Anastasovski, T. E. Bearden *et al*., "Spontaneous Symmetry Breaking as the Source of the Electromagnetic Field," accepted by Foundations of Physics Letters (in press).

28. T. E. Bearden, "Extracting and Using Electromagnetic Energy from the Active Vacuum," in M.W. Evans (ed.), Contemporary Optics and Electrodynamics, Wylie, 29001, 3 Vols. (in press), comprising a Special Topic issue as vol. 114, I. Prigogine and S. A. Rice (series eds.), *Advances in Chemical Physics*, Wylie, ongoing.

29. M. W. Evans, P. K. Anastasovski, T. E. Bearden *et al*., "On Whittaker's Representation of the Classical Electromagnetic Field in Vacuo, Part II: Potentials Without Fields," submitted to Foundations of Physics, 2000 (in review).

30. M. W. Evans, P. K. Anastasovski, T. E. Bearden *et al*., "On Whittaker's F and G Fluxes, Part III: The Existence of Physical Longitudinal and Timelike Photons," Journal of New Energy, 4(3), Special Issue, Winter 1999, p. 68-71.

31. M. W. Evans, P. K. Anastasovski, T. E. Bearden *et al*., "Classical Electrodynamics Without the Lorentz Condition: Extracting Energy from the Vacuum," Physica Scripta, 61(5), may 2000, p. 513-517.

32. M. W. Evans, P. K. Anastasovski, T. E. Bearden *et al*., "Vacuum Energy flow and Poynting Theorem from Topology and Gauge Theory," submitted to Physica Scripta, 2000 (in review).

33. M. W. Evans, P. K. Anastasovski, T. E. Bearden *et al*., "The Effect of Vacuum Energy on the Atomic Spectra," Foundations of Physics Letters, 13(3), June 2000, p. 289-296.

34. M. W. Evans, P. K. Anastasovski, T. E. Bearden *et al*., "Operator Derivation of the Gauge Invariant Proca and Lehnert Equations: Elimination of the Lorenz Condition," Foundations of Physics, 39(7), 2000, p. 1123 (in press).

35. M. W. Evans, P. K. Anastasovski, T. E. Bearden *et al*., "Energy Inherent in the Pure Gauge Vacuum," submitted to Physica Scripta, 2000 (in review).

36. M. W. Evans, P. K. Anastasovski, T. E. Bearden *et al*., "Electromagnetic Energy from Curved Space-Time," submitted to Optik, 2000 (in review).

37. M. W. Evans, P. K. Anastasovski, T. E. Bearden *et al*., "Energy from the Vacuum," submitted to Physics Scripta, 2000 (in review).

38. M. W. Evans, P. K. Anastasovski, T. E. Bearden *et al*., "The Aharonov-Bohm Effect as the Basis of Electromagnetic Energy Inherent in the Vacuum," submitted to Optik, 2000 (in review).

39. M. W. Evans, P. K. Anastasovski, T. E. Bearden *et al*., "Longitudinal Modes in Vacuo of the Electromagnetic Field in Riemannian Spacetime," submitted to Optik, 2000 (in review).

40. M. W. Evans, P. K. Anastasovski, T. E. Bearden *et al*., "O(3) Electrodynamics from the Irreducible Representations of the Einstein Group," submitted to Optik, 2000 (in review).

41. "O(3) Electrodynamics," a review of 250 pages in M. W. Evans (Ed.), Contemporary Optics and Electrodynamics, a special topical issue of I. Prigogine and S. A. Rice (series Eds.), *Advances in Chemical Physics*, Wiley, New York, 2001, vol. 114(2) (in press), preprint of sections available on U.S. DOE website http://www.ott.doe.gov/electromagnetic/.

42. M. W. Evans, precise statement on the importance and implications of O(3) electrodynamics as a special subset of Sachs' unified field theory, 2000. Quoting: *"With respect to O(3): In 1992 it was shown (Physica B, 192, 227, 237 (1992)) that there exists a longitudinal component of free space electromagnetism, a component which is phaseless and propagates with the transverse components. Later this was developed into a Yang-Mills theory of electromagnetism with O(3) Lagrangian symmetry. This theory is homomorphic with Barrett's SU(2) electrodynamics and has far reaching implications in field theory in general. Recently it has been recognized to be a sub theory of the Sachs theory of electromagnetism, based on the irreducible representations of the Einstein group of general relativity. The Sachs theory produces a non-Abelian structure for the electromagnetic field tensor. The O(3) electromagnetism also has implications for the potential ability of extracting energy from the vacuum, and its topological implications are currently being investigated by Ranada. The O(3) electromagnetism has been tested extensively against empirical data, and succeeds in describing interferometric effects and physical optical effects where the conventional Maxwell Heaviside theory fails. Implicit in both the O(3) and Sachs theories of electromagnetism is the ability to extract electromagnetic energy from curved space-time."*

43. M. W. Evans and T. E. Bearden, "The Most General Form of the Vector Potential in Electrodynamics," submitted to Optik, 2000 (in review).

44. Fragments of Science: Festschrift for Mendel Sachs, Michael Ram (Ed.), World Scientific, Singapore, 1999.

45. Mendel Sachs, General Relativity and Matter, Reidel, 1982. Provides a great generalization of general relativity and electrodynamics reaching from the quarks and gluons to the entire universe. O(3) electrodynamics forms a very important subset of Sachs' theory, which means that general relativistic effects such as curved spacetime and EM energy from the curved spacetime vacuum can be engineered electromagnetically. The present invention does engineer curved spacetime to obtain excess energy from the active vacuum.

46. Mendel Sachs, "Relativistic Implications of Electromagnetic Field Theory," in T. W. Barrett and D. M. Grimes, eds., Advanced Electromagnetism, World Scientific, 1995, p. 551.

47. A. A. Logunov and Yu. M. Loskutov, "Nonuniqueness of the predictions of the general theory of relativity," Sov. J. Part. Nucl., 18(3), May-June 1987, p. 179-187.

48. D. Hilbert, Gottingen Nachrichten, Vol. 4, 1917, p. 21. Quoting: *"I assert... that for the general theory of relativity, i.e., in the case of general invariance of the Hamiltonian function, energy equations... corresponding to the energy equations in orthogonally invariant theories do not exist at all. I could even take this circumstance as the characteristic feature*

of the general theory of relativity." As Logunov and Loskutov pointed out, unfortunately this remark of Hilbert was evidently not understood by his contemporaries, since neither Einstein himself nor other physicists recognized the fact that in general relativity conservation laws for energy, momentum, and angular momentum are in principle impossible.

49. Henning F. Harmuth, "Extensions of Ohm's Law to Electric and Magnetic Dipole Currents," in Advanced Electromagnetism: Foundations, Theory and Applications, Eds. Terence W. Barrett and Dale M. Grimes, World Scientific, Singapore, 1995, p. 506-540.

50. J. R. Reitz, F. J. Milford, and R. W. Christy, "Foundations of Electromagnetic Theory, 3rd ed., Addison-Wesley, Reading, MA, 1980. For one thing, this book gives a thorough discussion of dipole currents, which is not covered well in most texts.

51. H. A. Lorentz, Vorlesungen über Theoretische Physik an der Universität Leiden, Vol. V, Die Maxwellsche Theorie (1900-1902), Akademische Verlagsgesellschaft M.B.H., Leipzig, 1931, "Die Energie im elektromagnetischen Feld," p. 179-186. Figure 25 on p. 185 shows the Lorentz concept of integrating the Poynting vector around a closed cylindrical surface surrounding a volumetric element. This is the procedure which arbitrarily selects only a small component of the energy flow associated with a circuit—specifically, the small Poynting component striking the surface charges and being diverged into the circuit to power it—and then treats that tiny component as the "entire" Poynting energy flow. Thereby Lorentz arbitrarily discarded all the vast Heaviside energy transport component which does not strike the circuit at all, and is just wasted.

52. Raymond C. Gelinas, "Apparatus and Method for Demodulation of a Modulated Curl-Free Magnetic Vector Potential Field," U.S. Patent No. 4,429,280, Jan. 31, 1984; — "Apparatus and method for Modulation of a Curl-Free Magnetic Vector Potential Field." U.S. Patent No. 4,429,288, Jan. 31, 1984; — "Apparatus and Method for Transfer of Information by Means of a Curl-Free Magnetic Vector Potential Field." U.S. Patent No. 4,432,098, Feb. 14, 1984; — "Apparatus and Method for Determination of a Receiving Device Relative to a Transmitting Device Utilizing a Curl-Free Magnetic Vector Potential Field." U.S. Patent No. 4,447,779, May 8. 1984; — "Apparatus and Method for Distance Determination Between a Receiving Device and a Transmitting Device Utilizing a Curl-Free Magnetic Vector Potential Field," U.S. Patent No. 4,605,897, 12 Aug 1986; — "Josephson Junction Interferometer Device for Detection of Curl-Free Magnetic Vector Potential Fields," U.S. Patent No. 4,491,795, 1 Jan 1985. All these Gelinas patents are assigned to Honeywell. All deal with communications, have no application to electrical power systems, do not use additional EM energy extracted from a permanent magnet and replenished by the vacuum, do not use curved local spacetime, do not use the giant negentropy process, do not function as open systems far from equilibrium in their vacuum exchange, symmetrically regauge themselves so that their excitation discharge is symmetrical and not asymmetrical, and produce only COP<1.0.

53. John D. Kraus, Electromagnetics, Fourth Edn., McGraw-Hill, New York, 1992. Figure 12-60, a and b, p. 578 shows a good drawing of the huge Poynting energy flow filling all space around the conductors, with almost all of it not intercepted, not diverged into the circuit, but just "wasted."

54. Daniel C. Cole and Harold E. Puthoff, “Extracting Energy and Heat from the Vacuum,” Physical Review E, 48(2), Aug. 1993, p. 1562-1565. Proves rigorously that there are no thermodynamics prohibitions against extracting and using energy from the active vacuum.

55. Ludvig Valentin Lorenz, "On the identity of the vibrations of light with electrical currents," Phil. Mag., Vol. 34, 1867, p. 287-301. In this paper Lorenz gave essentially what today is called the Lorentz symmetrical regauging.

FIGURES

The following figures (1-23) illustrate the major principles, process and subprocesses, functions, and test results of the process and its prototype embodiments.

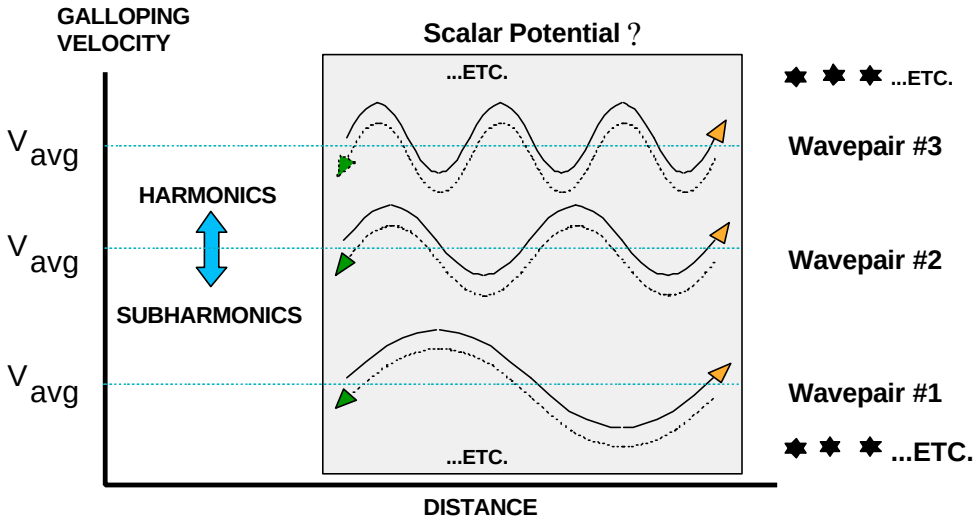

The Structure Is:

- **A harmonic set of longitudinal wavepairs.**
- **In each wavepair the two waves superpose spatially, but travel in opposite directions. The two are phase conjugates and time-reversed replicas of each other.**
- **The convergent wave set is in the imaginary plane, and hence is not observable.**
- **The charge's spin is 720 degrees, 320 in the real plane and 320 in the imaginary plane.**
- **Hence the charge receives the complex convergent EM energy, transduces it into real EM energy, and emits enormous energy at the speed of light in all directions.**
- **This produces the fields and potentials from the "source charge."**

Figure 1. The scalar potential is a harmonic set of phase conjugate longitudinal EM waves.

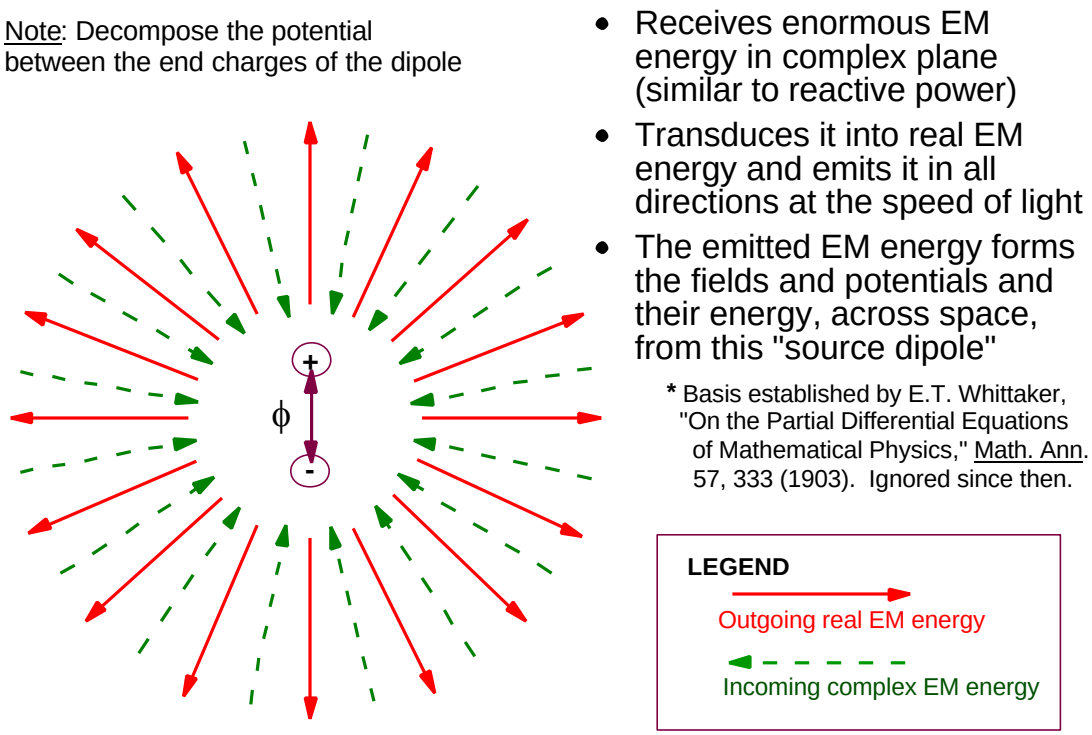

Figure 2. The dipole is a true negative resistor.

Broken 3-space symmetry initiates jump to 4-space symmetry between complex plane and real plane. Energy flow is now conserved in 4-space, but not in 3-space. This is the true negative resistor effect, and a negentropic reordering of the vacuum.

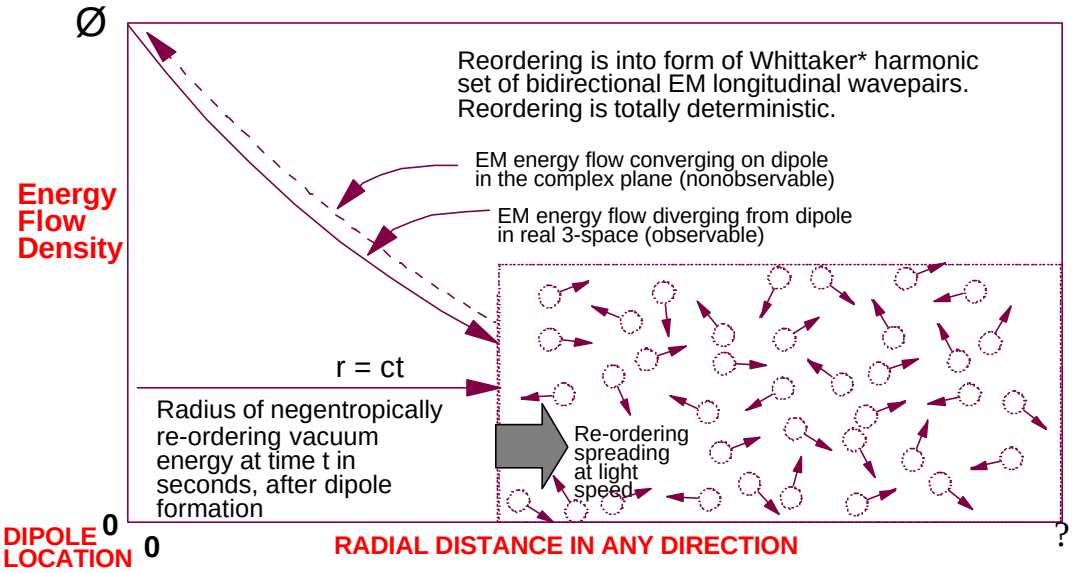

Figure 3. The dipole's broken 3-symmetry initiates a spreading giant negentropic reordering of a fraction of the vacuum's energy.

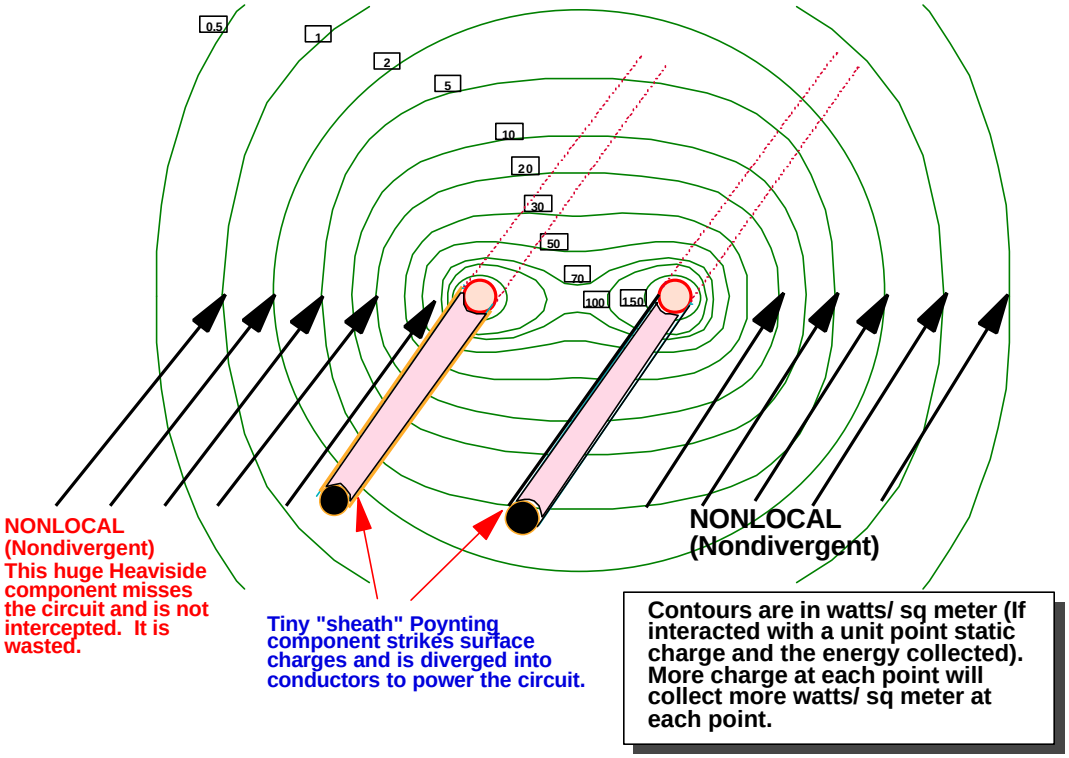

Figure 4. Energy flow contours surrounding a transmission line.

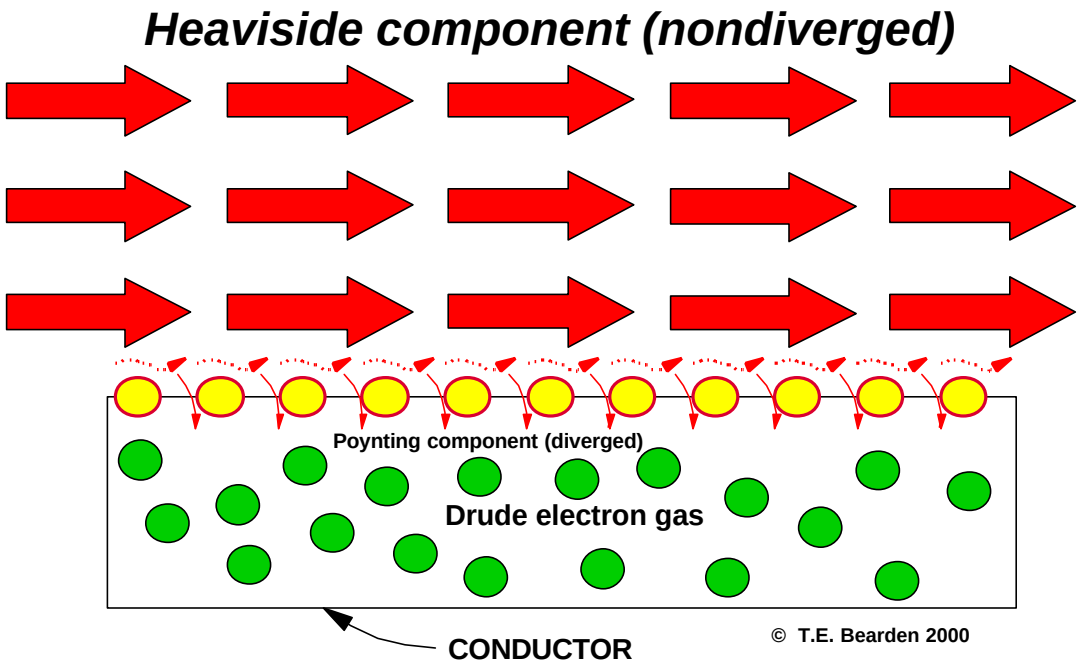

Figure 5. Heaviside and Poynting energy flow components. The Heaviside component is often 10 trillion times the Poynting component, but is simply wasted in ordinary single-pass energy flow circuits.

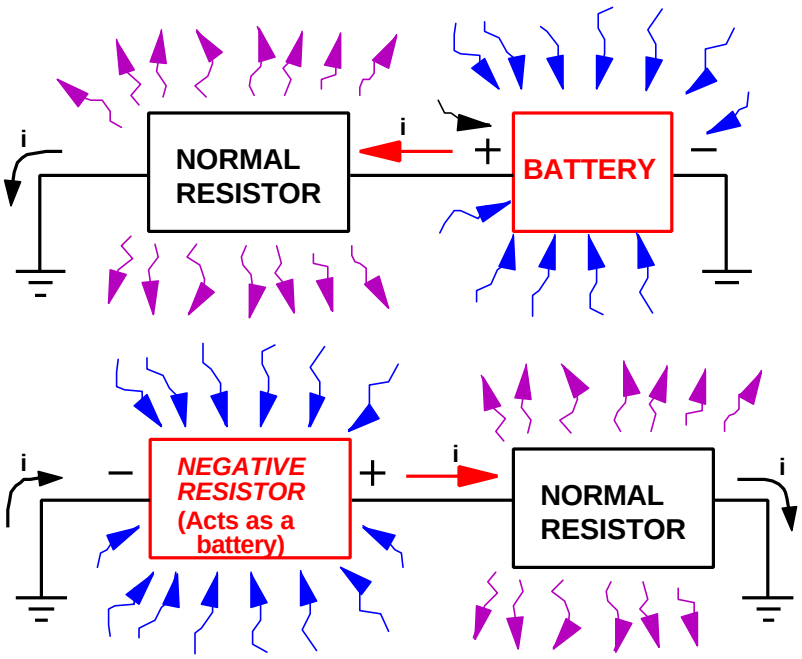

Figure 6. Negative resistance process vs. positive resistance process. A negative resistor receives energy in unusable form, transduces it, and outputs it in usable form. A positive resistor receives energy in usable form, and scatters it into unusable form.

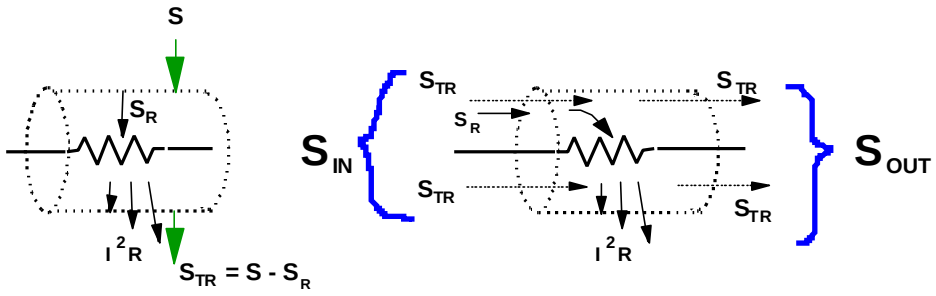

1a. Lorentz surface integration.

1b. Actual S in and S out.

See Panofsky & Phillips, Classical Electricity and Magnetism, 2nd. edn., Addison Wesley, 1962, p. 178-181.

Note: If the S-vector is integrated over the closed surface, then all nondiverged energy flow is zeroed, leaving only the very small component of the input S-flow that is powering the joule heating of the resistor. In short, only the small component of the S-flow that is equal in magnitude to the Poynting vector remains. This measures only the tiny portion of the S-flow that is intercepted and diverged into the conductors by their surface charges, powering the electrons and then dissipated out of the resistor as joule heating.

The Lorentz procedure arbitrarily discards the enormous Heaviside component that misses the circuit entirely and is wasted. This results in a non sequitur of first magnitude in energy flow theory .

Figure 7. Lorentz's integration trick to discard the enormous Heaviside non-diverged energy flow component.

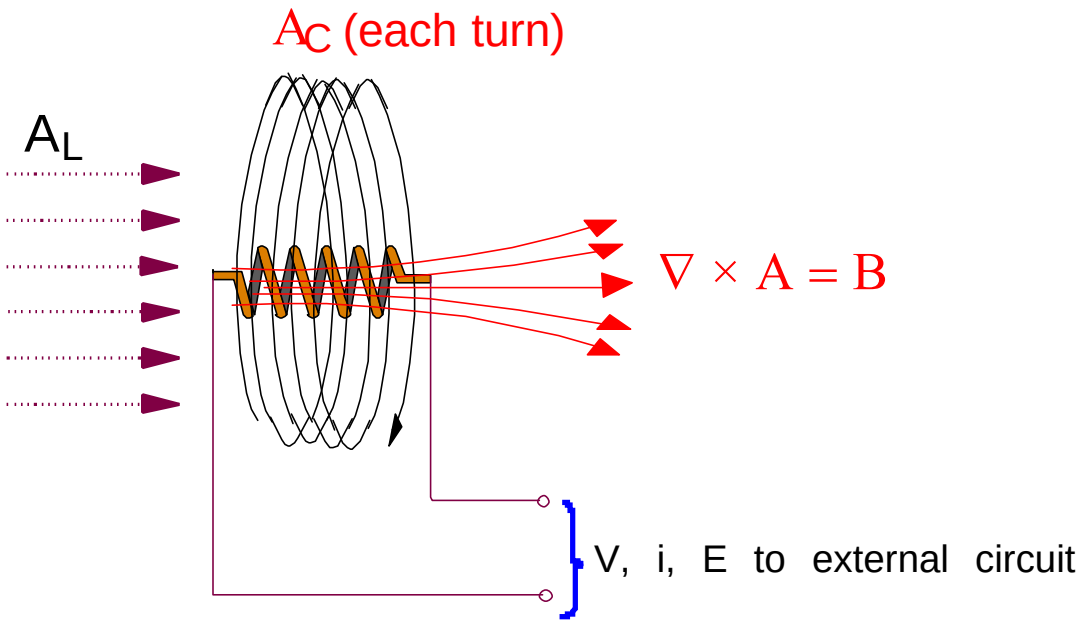

Figure 8. The A_L and A_C vector potentials, B-field, and $\nabla\times$ operator. The $\nabla\times$ operator operates on the A_C potential energy current, to produce normal B-field.

When a small current through the coil is suddenly broken, momentarily a surge of increased current and voltage ensues.

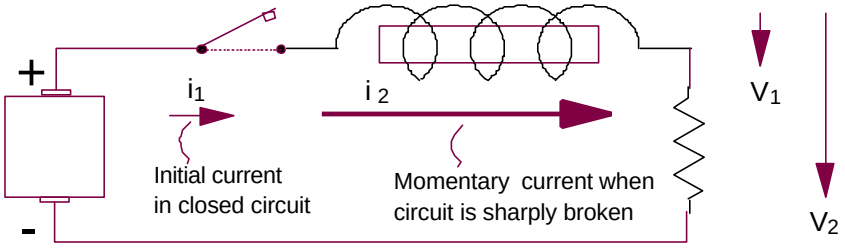

1a. Lenz's reaction is a suddenly increased effect which momentarily opposes a sudden change.

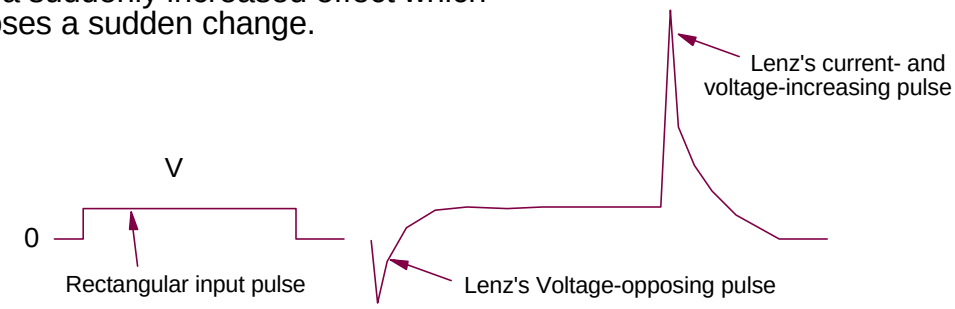

1b. Two successive Lenz's reactions to two interruptions by leading and trailing edges of a rectangular pulse.

Figure 9. Lenz's law reaction momentarily opposes a sudden change and increases the ongoing action which is to be changed.

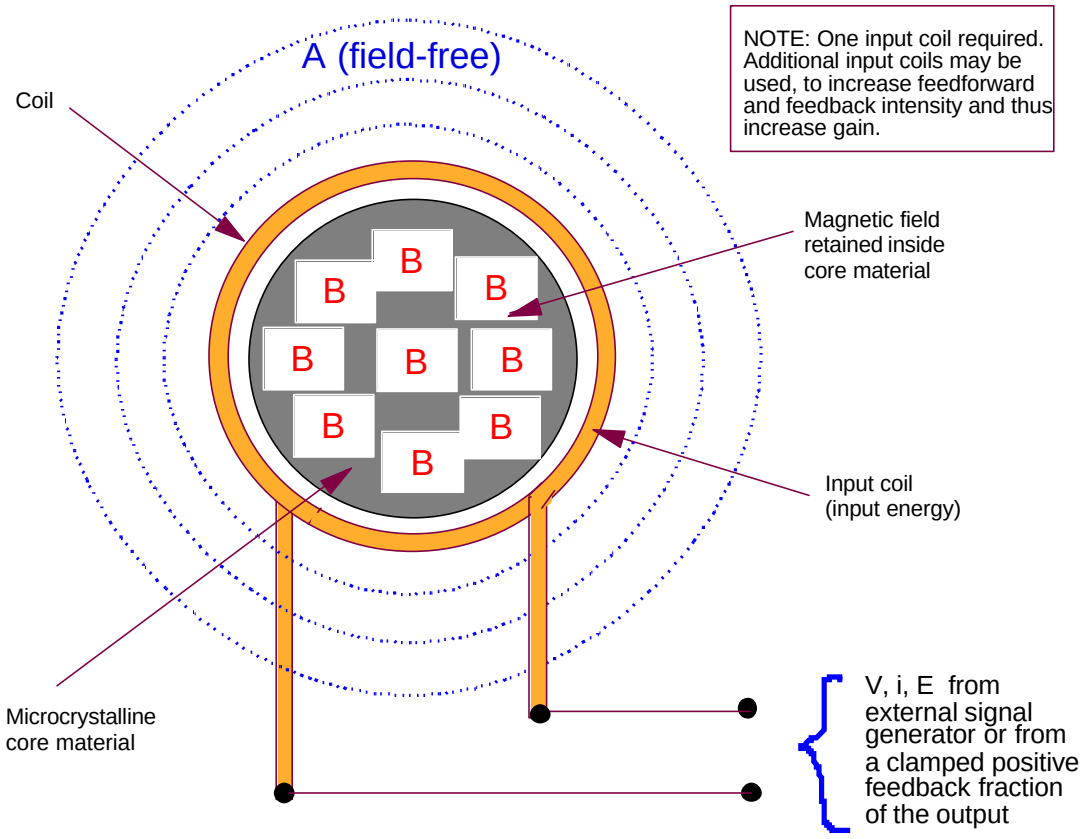

Figure 10. Input coil for either open-loop or closed-loop operation.

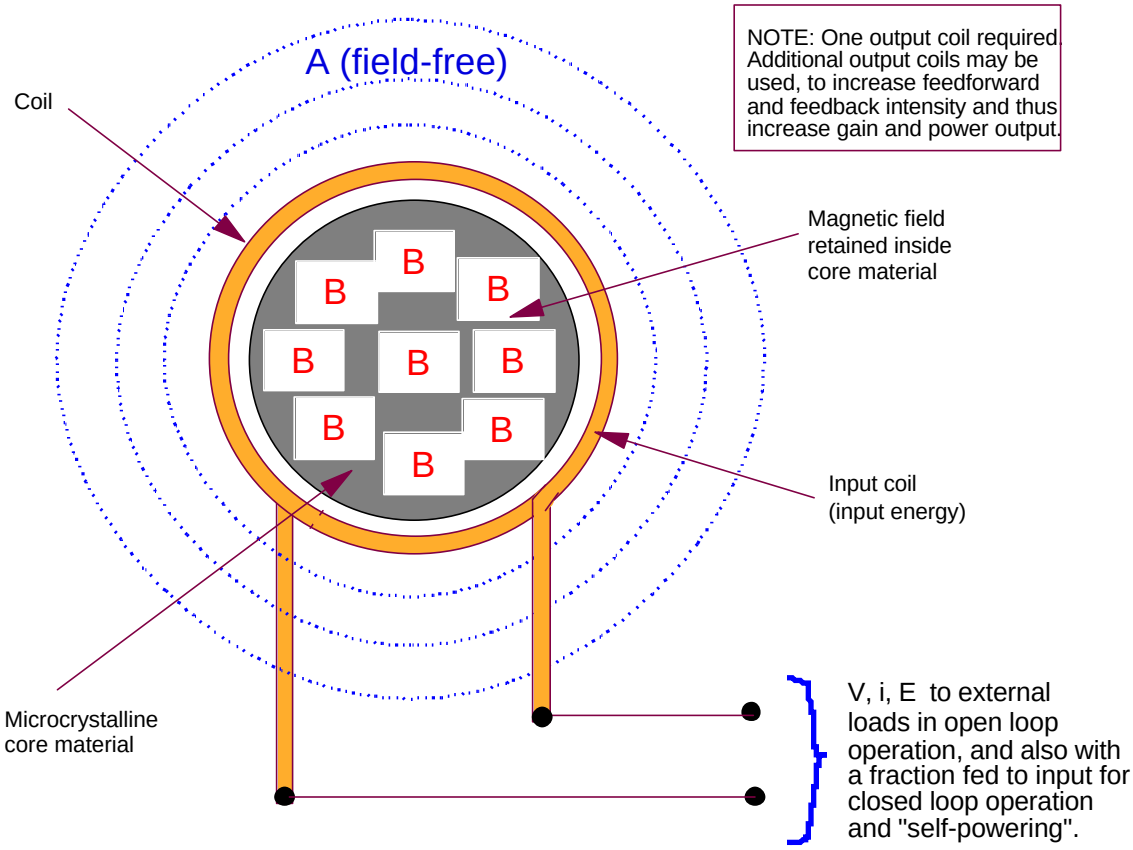

Figure 11. Output coil for either open-loop or closed-loop operation. Multiple output coils may be used in a variety of configurations.

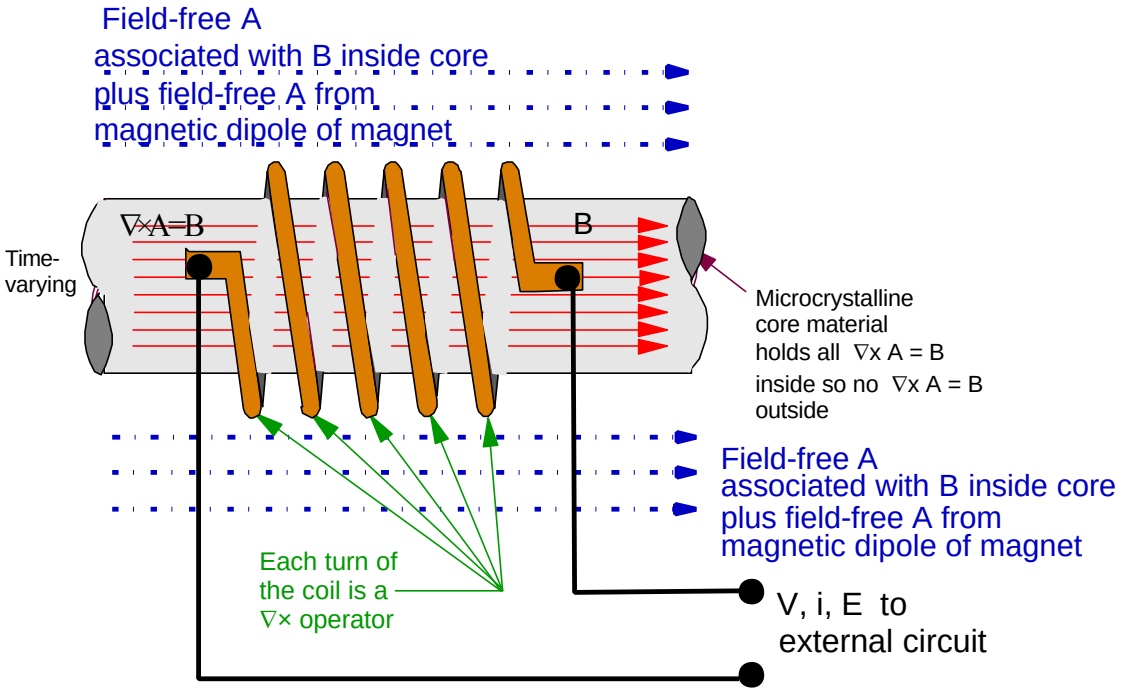

Figure 12. Basic scheme showing dual energy inputs and interactions with the coil. The output of each of these two interactions also "feeds forward" to the other interaction as an additional input to it, resulting in interative "pingpong" of additional energy collection in the circuit, providing energy gain.

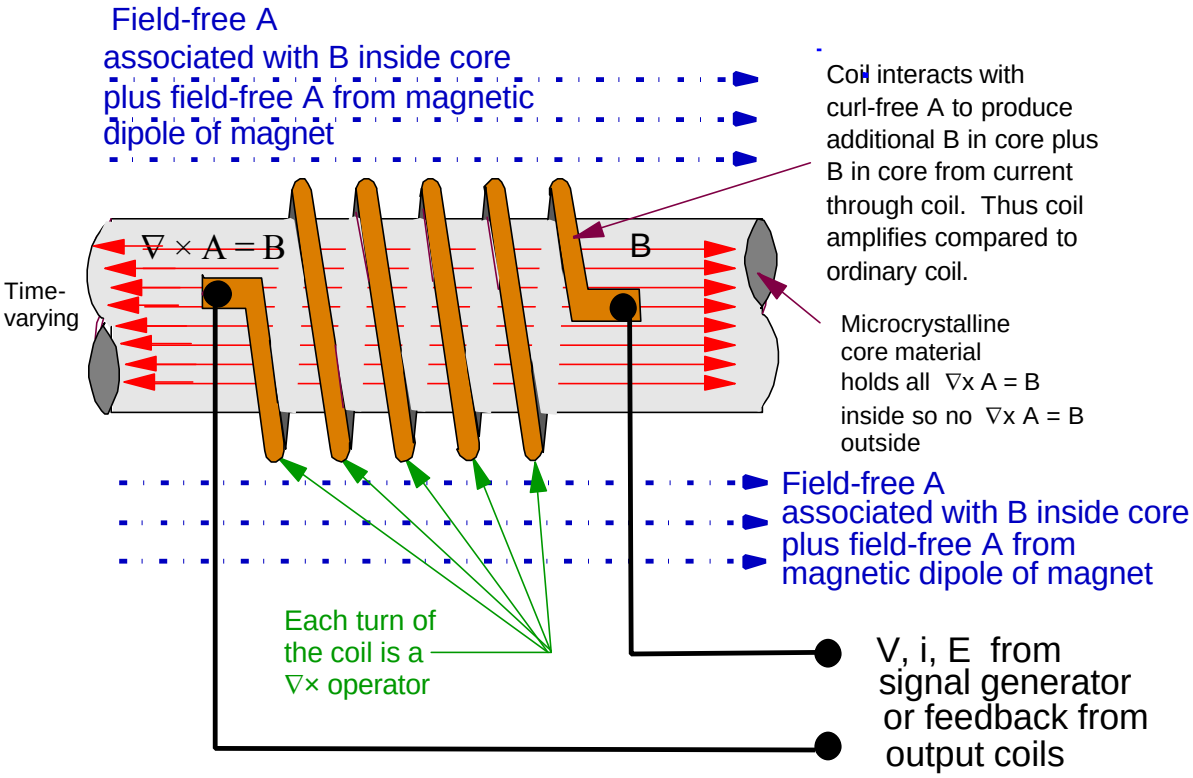

Figure 13. Dual energy inputs to the coil result in amplifying coil-core interaction. Not shown are the other feed loops providing extra curl-free A input from the surrounding space and extra B input in the core.

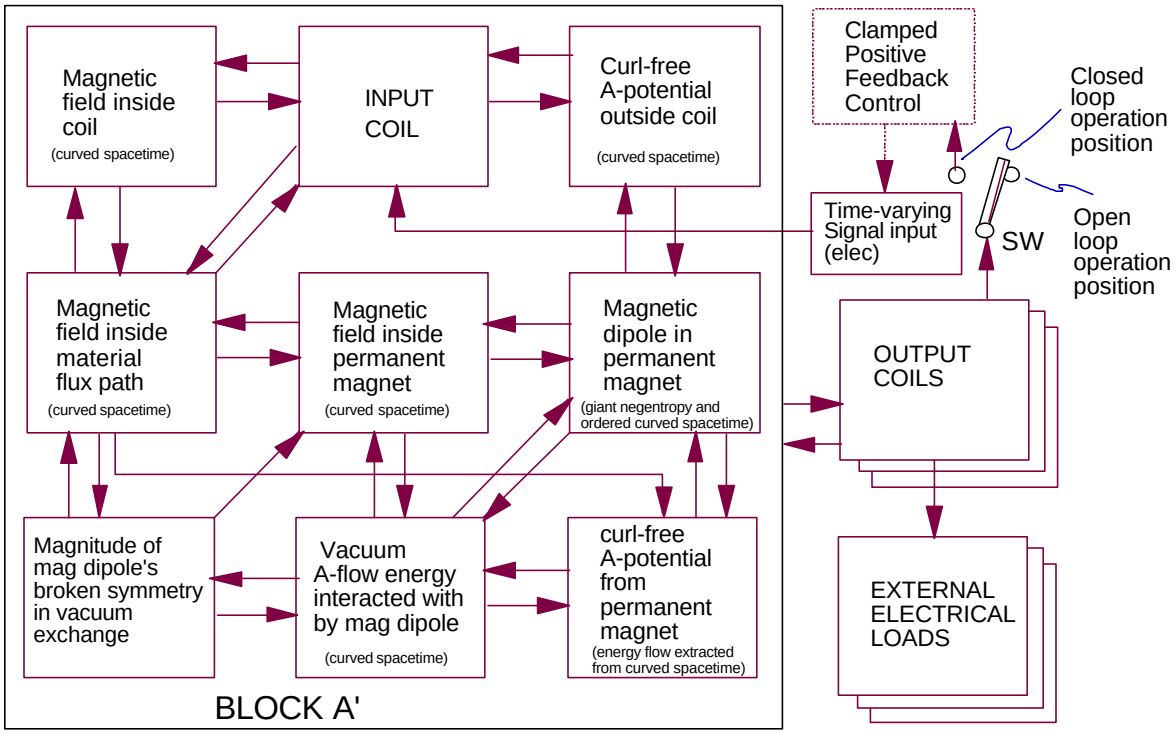

Figure 14. Energy gain process using feedforward and feedback subprocesses providing individual energy gain operations.

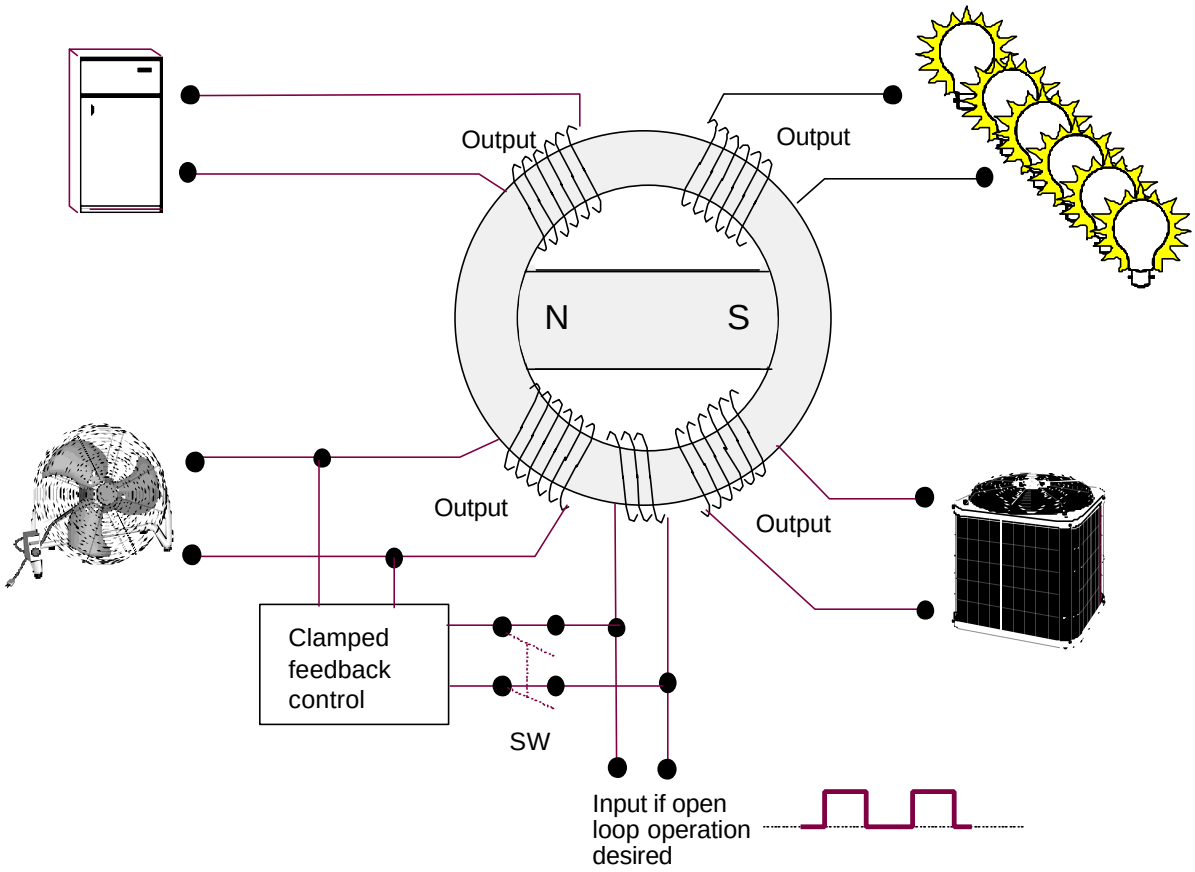

Figure 15. Typical embodiment system and application.

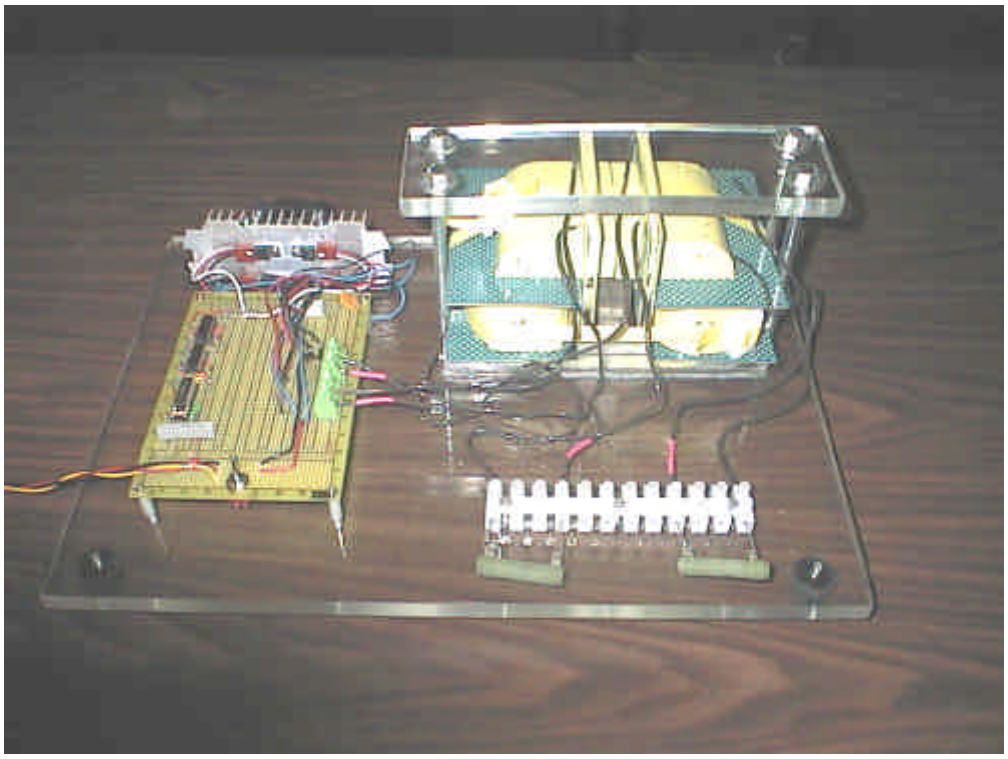

Figure 16. Motionless Electromagnetic Generator (laboratory experiment).

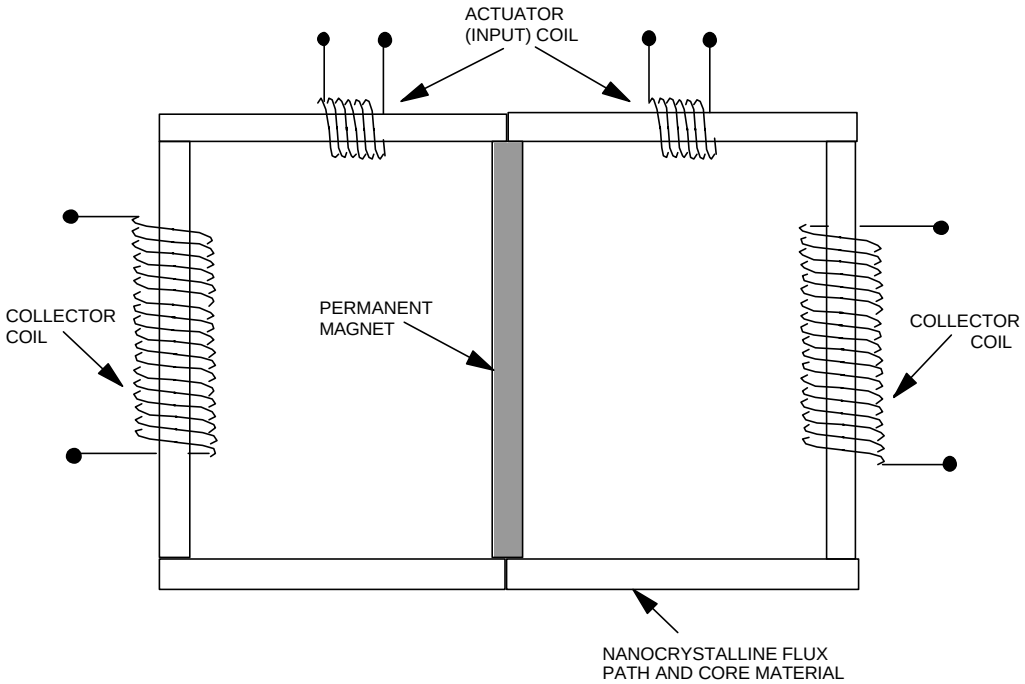

Figure 17. Diagram of laboratory test prototype.

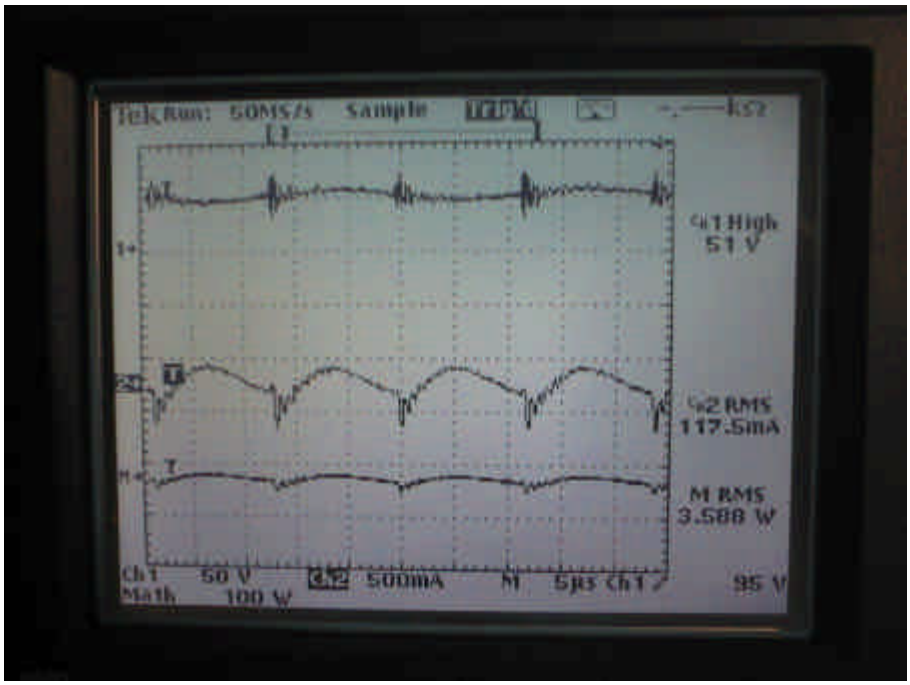

Figure 18. MEG Input measurements.

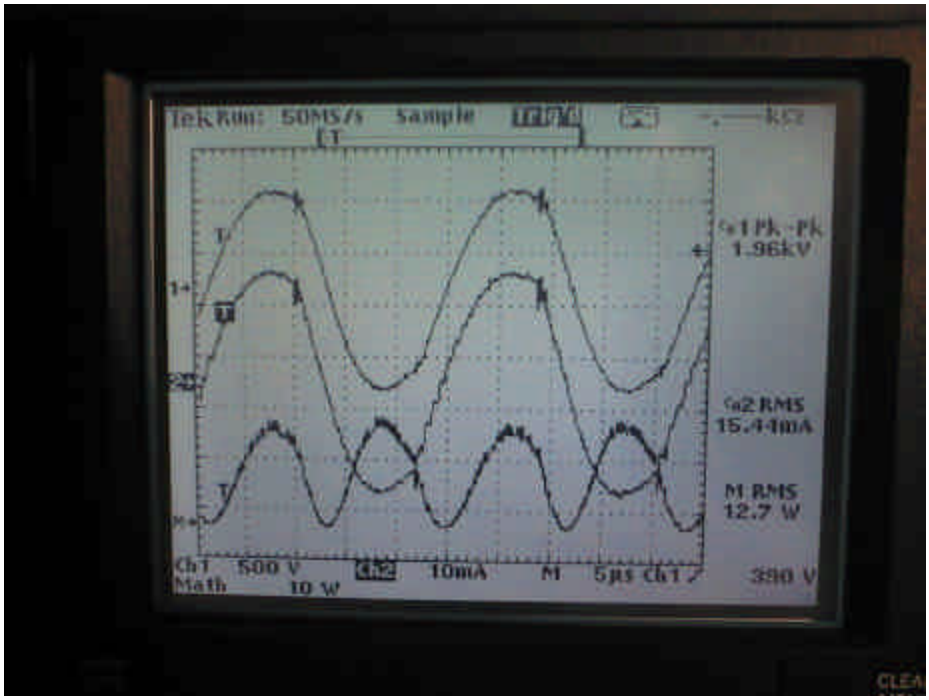

Figure 19. MEG output measurements.

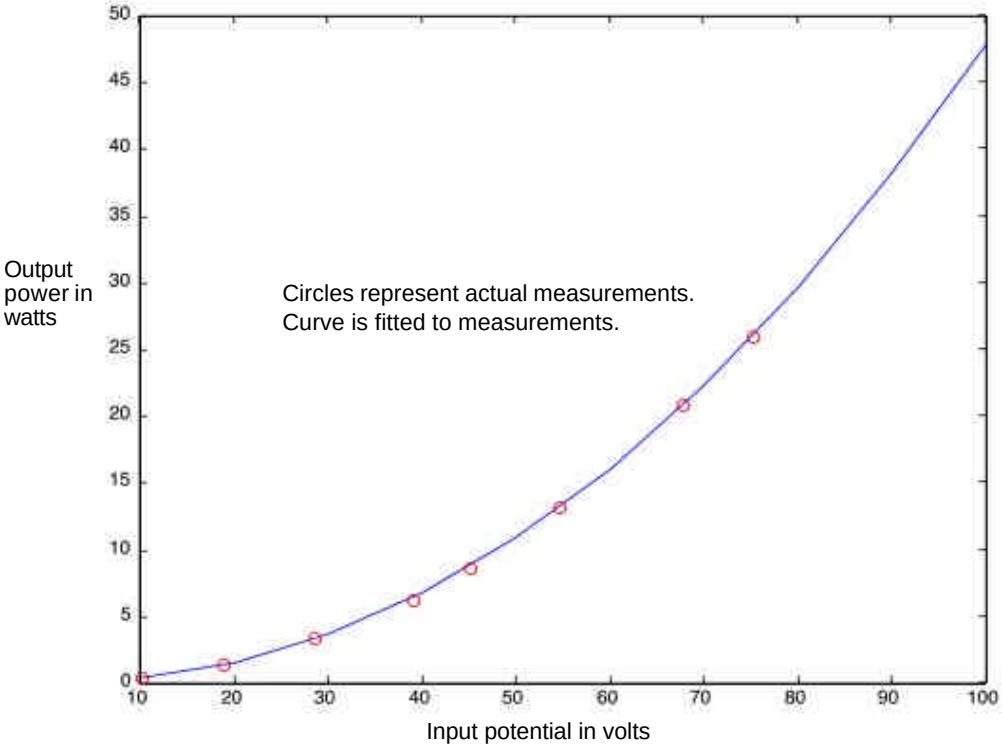

Figure 20. MEG prototype potentialization sensitivity.

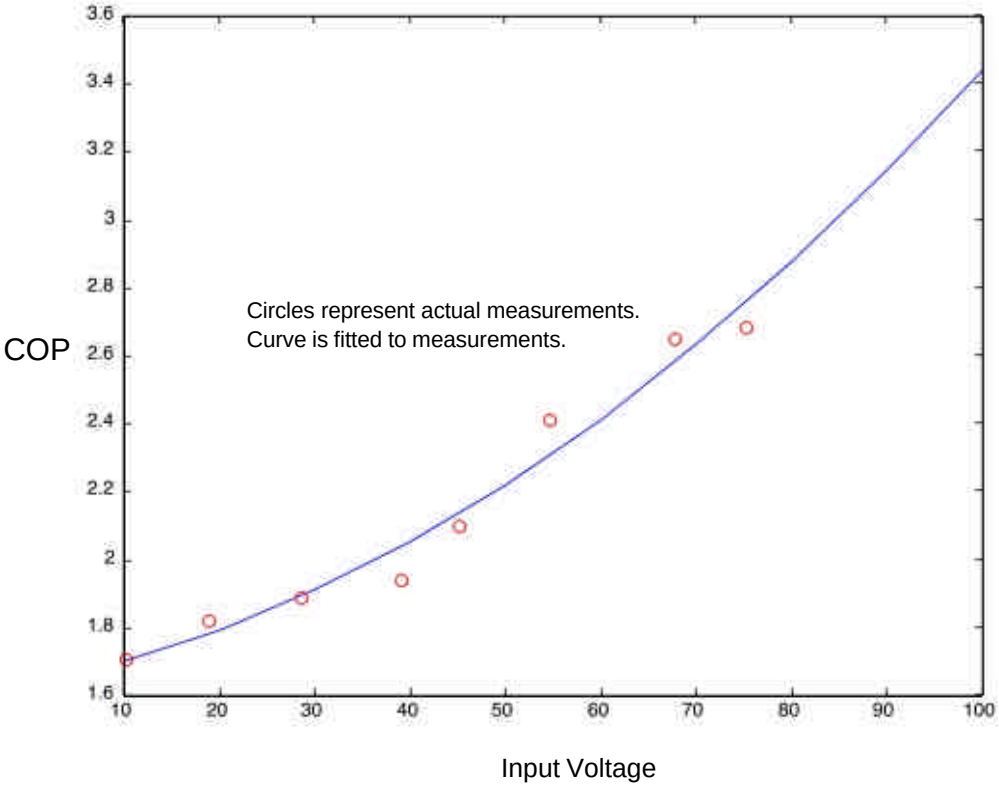

Figure 21. COP (power out versus power in), as a function of sensitivity (open loop prototype).

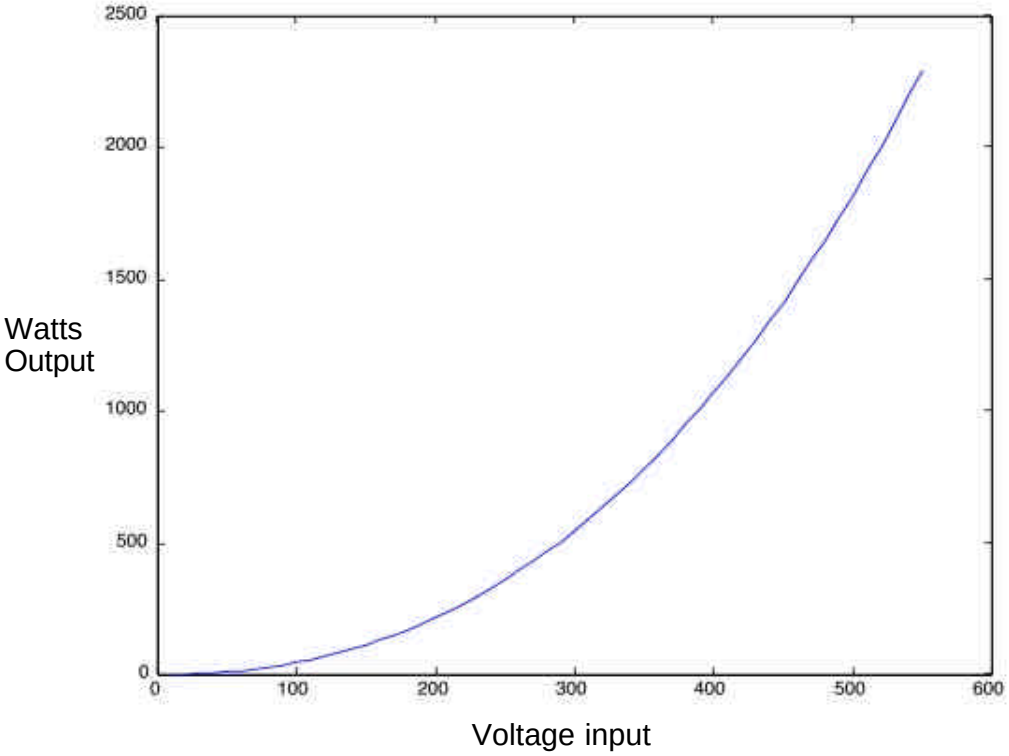

Figure 22. MEG projected sensitivity (test buildup in progress).

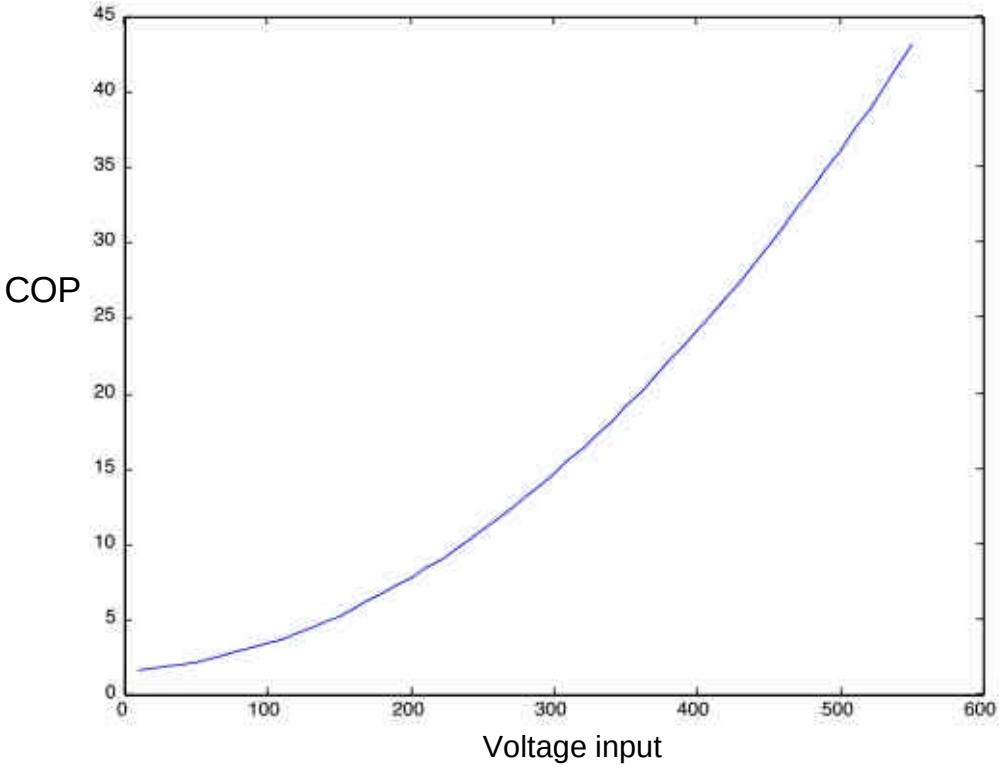

Figure 23. MEG projected COP versus input voltage (test buildup in process).

US006362718B1

(12) **United States Patent**
Patrick et al.

(10) **Patent No.: US 6,362,718 B1**
(45) **Date of Patent: Mar. 26, 2002**

(54) **MOTIONLESS ELECTROMAGNETIC GENERATOR**

(76) Inventors: **Stephen L. Patrick**, 2511 Woodview Dr. SE.; **Thomas E. Bearden**, 2211 Cove Rd., both of Huntsville, AL (US) 35801; **James C. Hayes**, 16026 Deaton Dr. SE., Huntsville, AL (US) 35803; **Kenneth D. Moore**, 1704 Montdale Rd., Huntsville, FL (US) 35801; **James L. Kenny**, 925 Tascosa Dr., Huntsville, AL (US) 35802

(*) Notice: Subject to any disclaimer, the term of this patent is extended or adjusted under 35 U.S.C. 154(b) by 0 days.

(21) Appl. No.: **09/656,313**

(22) Filed: **Sep. 6, 2000**

(51) **Int. Cl.**[7] **H01F 27/24**
(52) **U.S. Cl.** **336/214**
(58) **Field of Search** 363/16, 24, 25, 363/26, 56.06, 56.08, 133, 134; 336/15, 110, 155, 177, 180, 213, 214, 221, 222

(56) **References Cited**

U.S. PATENT DOCUMENTS

2,153,378 A		4/1939	Kramer	171/95
2,892,155 A		6/1959	Radus et al.	324/117
3,079,535 A		2/1963	Schultz	317/201
3,165,723 A		1/1965	Radus	340/174
3,228,013 A		1/1966	Olson et al.	340/174
3,254,268 A		5/1966	Radus et al.	317/14
3,316,514 A		4/1967	Radus et al.	335/291
3,368,141 A		2/1968	Subieta-Garron	323/44
3,391,358 A		7/1968	Bratkowski et al.	335/21
3,453,876 A		7/1969	Radus	73/141
3,517,300 A	*	6/1970	McMurray	
3,569,947 A		3/1971	Radus	340/174
3,599,074 A	*	8/1971	Adams	
4,006,401 A		2/1977	de Rivas	323/92
4,077,001 A		2/1978	Richardson	323/92
4,366,532 A		12/1982	Rosa et al.	363/69
4,482,945 A		11/1984	Wolf et al.	363/129
4,554,524 A		11/1985	Radus	337/3
4,853,668 A		8/1989	Bloom	336/214
4,864,478 A		9/1989	Bloom	363/16
4,904,926 A		2/1990	Pasichinskyj	323/362
5,011,821 A		4/1991	McCullough	505/1
5,221,892 A		6/1993	Sullivan et al.	323/362
5,245,521 A	*	9/1993	Spreen	363/37
5,327,015 A		7/1994	Hacket	505/211
5,335,163 A		8/1994	Seiersen	363/126
5,694,030 A	*	12/1997	Sato et al.	323/282

OTHER PUBLICATIONS

Raymond J. Radus, "Permanent–Magnet Circuit using a 'Flux–Transfer' Principle," Engineers' Digest, 24(1–6) Jan.–Jun. 1963, p. 86.

Robert O'Handley, Modern Magnetic Materials, Principles and Applications, John Wiley & Sons, Inc., 2000, pp. 456–468.

Robert C. Weast, Editor, CRC Handbook of Chemistry and Physics, 1978–1979, p. B–50.

Honeywell.com web site, "amorphous metals".

* cited by examiner

Primary Examiner—Matthew Nguyen
(74) *Attorney, Agent, or Firm*—Norman Friedland

(57) **ABSTRACT**

An electromagnetic generator without moving parts includes a permanent magnet and a magnetic core including first and second magnetic paths. A first input coil and a first output coil extend around portions of the first magnetic path, while a second input coil and a second output coil extend around portions of the second magnetic path. The input coils are alternatively pulsed to provide induced current pulses in the output coils. Driving electrical current through each of the input coils reduces a level of flux from the permanent magnet within the magnet path around which the input coil extends. In an alternative embodiment of an electromagnetic generator, the magnetic core includes annular spaced-apart plates, with posts and permanent magnets extending in an alternating fashion between the plates. An output coil extends around each of these posts. Input coils extending around portions of the plates are pulsed to cause the induction of current within the output coils.

29 Claims, 5 Drawing Sheets

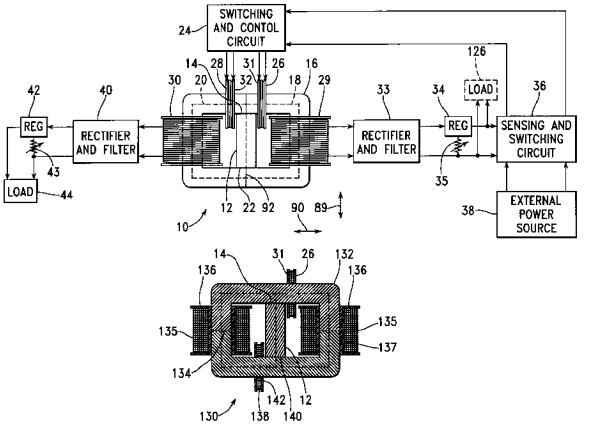

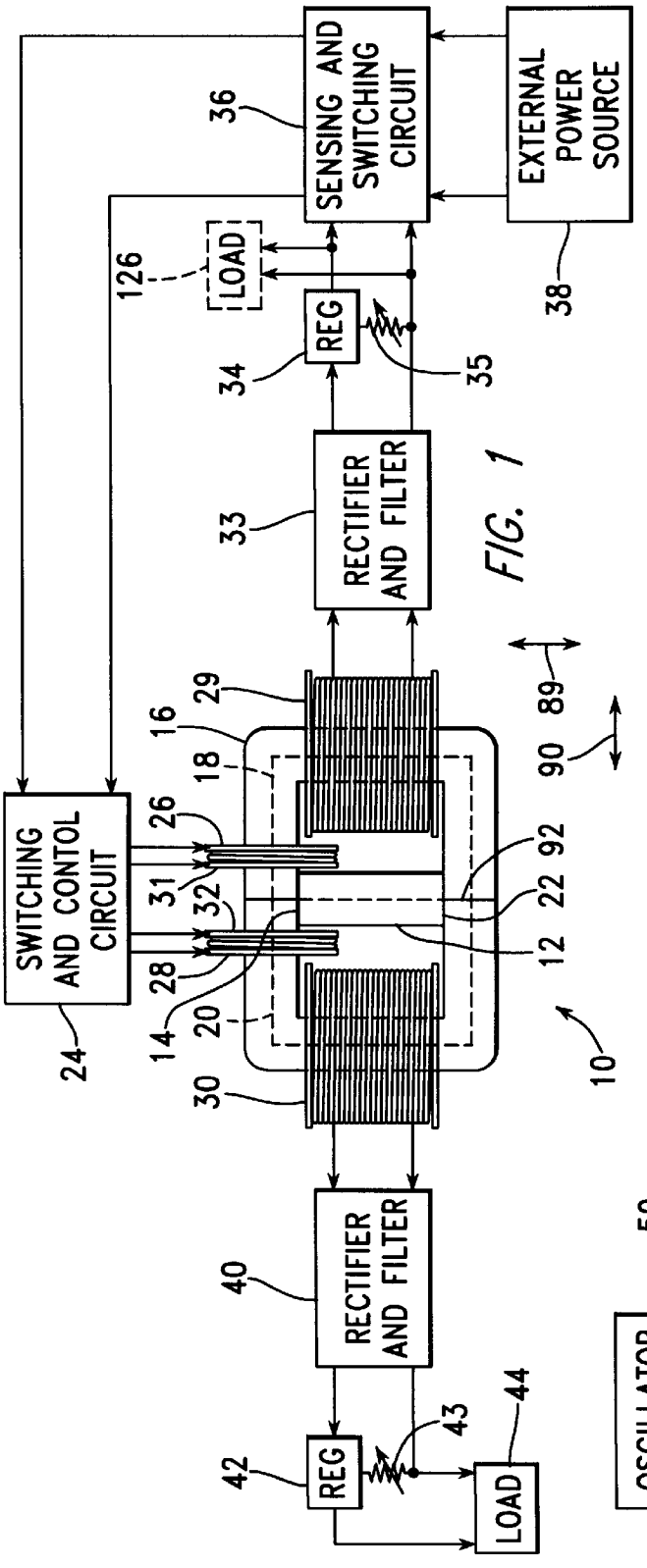

FIG. 1

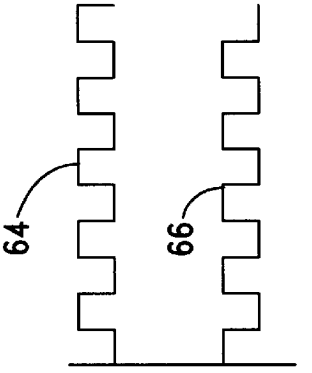

FIG. 3

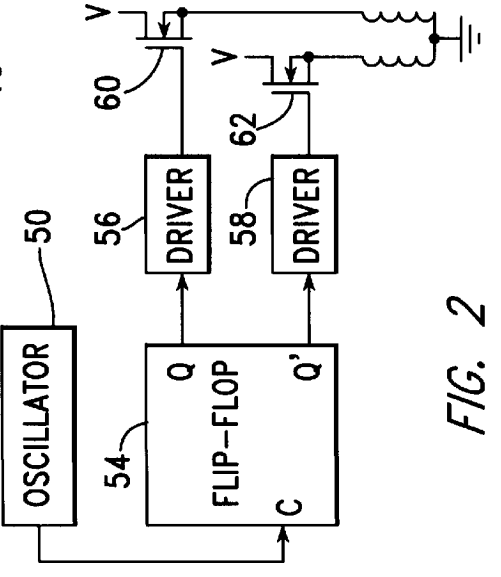

FIG. 2

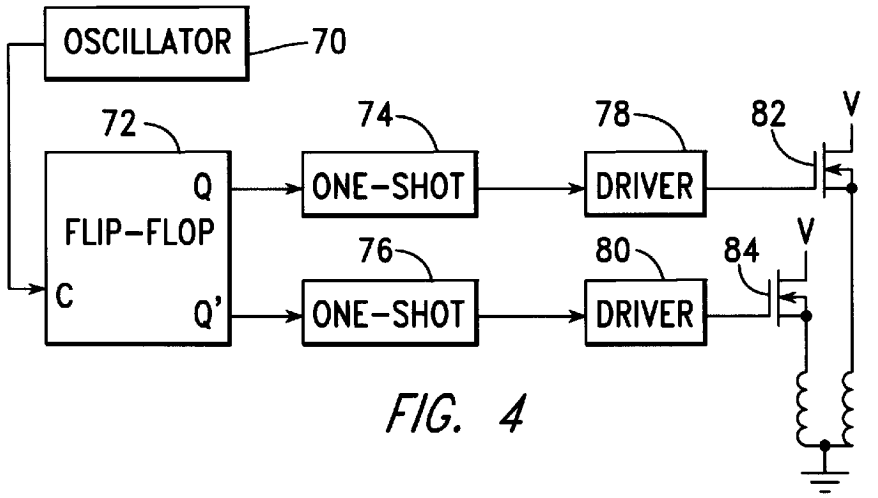

FIG. 4

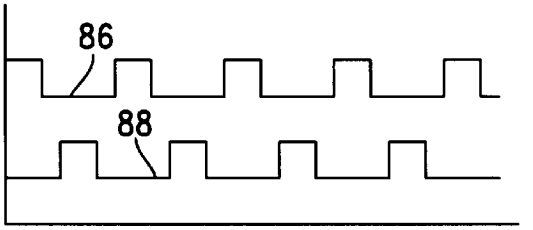

FIG. 5

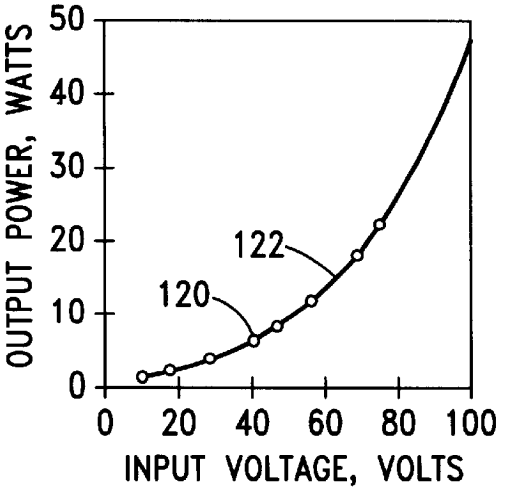

FIG. 7

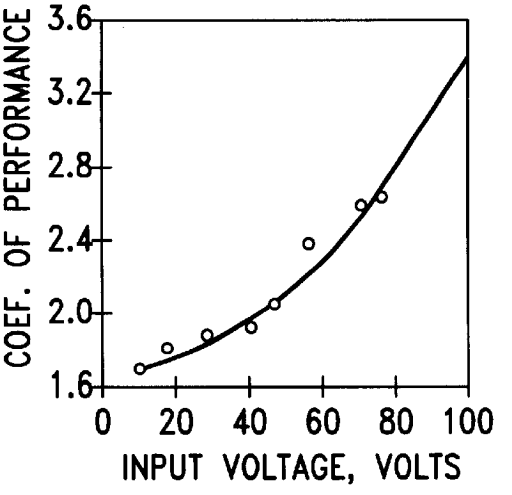

FIG. 8

FIG. 6A

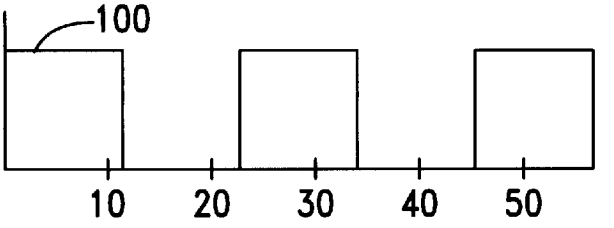

FIG. 6B

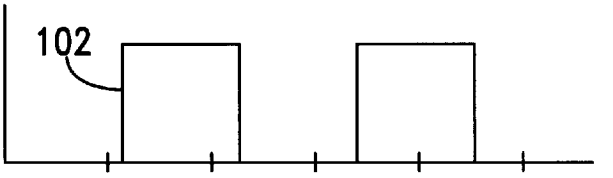

FIG. 6C

FIG. 6D

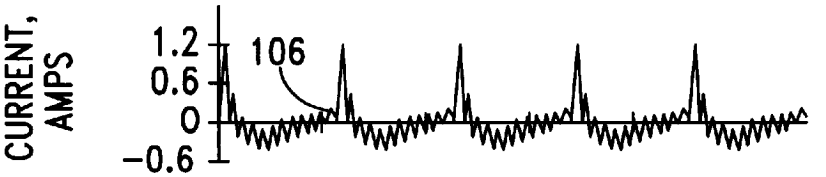

FIG. 6E

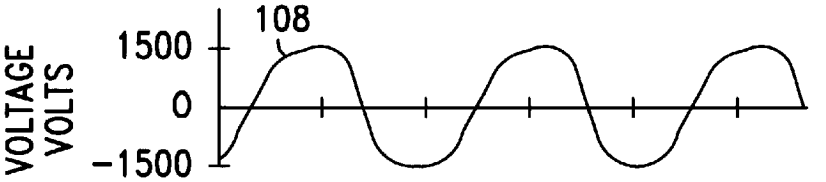

FIG. 6F

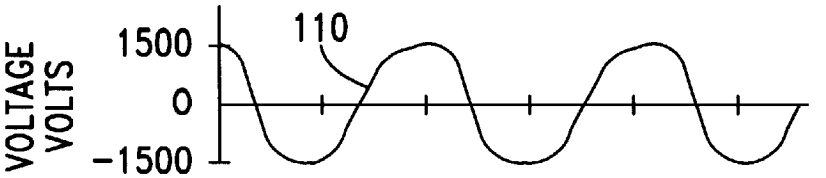

FIG. 6G

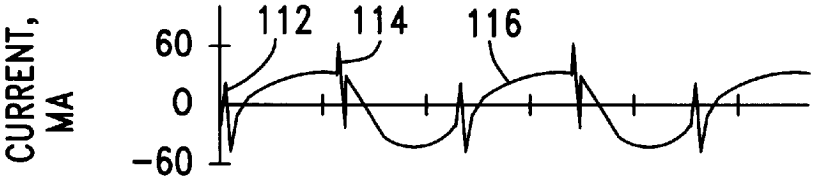

FIG. 6H

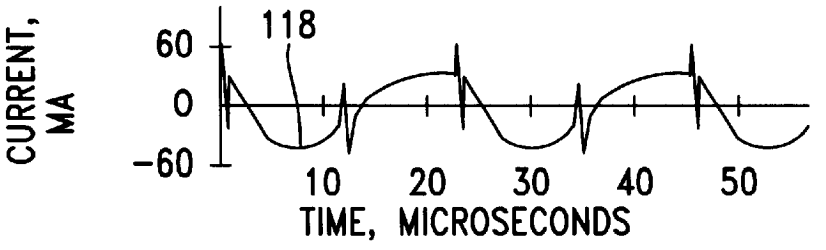

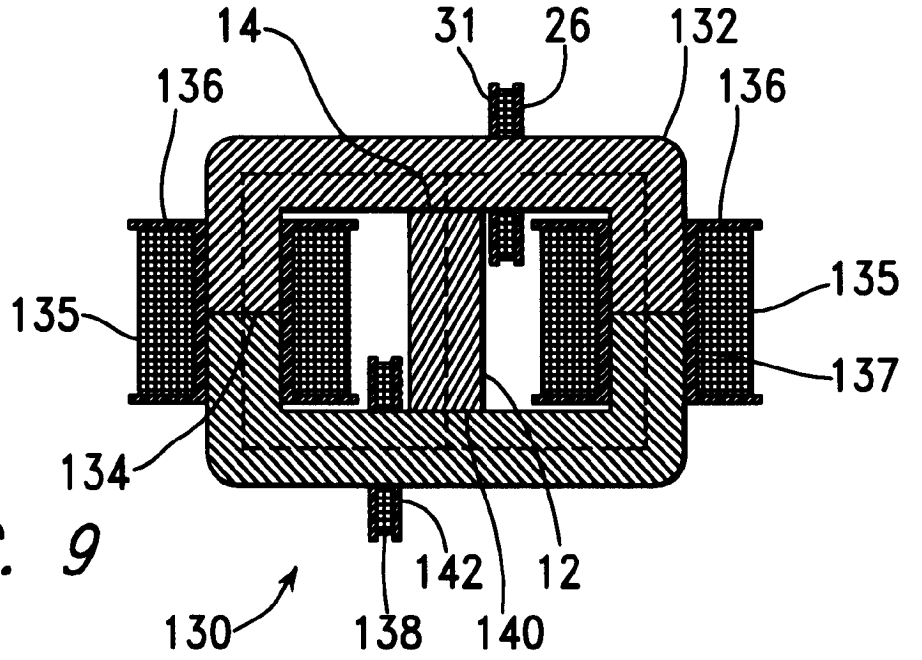
14
31
26
132
136
136
135
135
137
134
142
12
130
138
140

FIG. 9

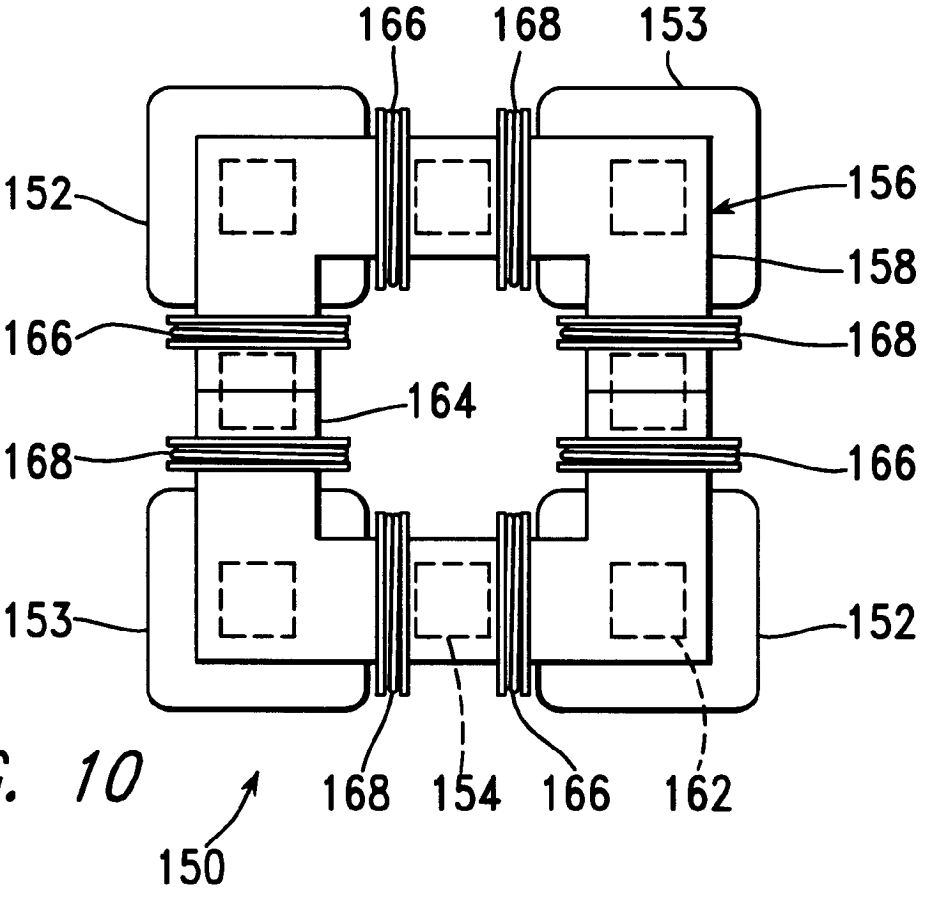
166
168
153
152
156
158
166
168
164
168
166
153
152
168
154
166
162
150

FIG. 10

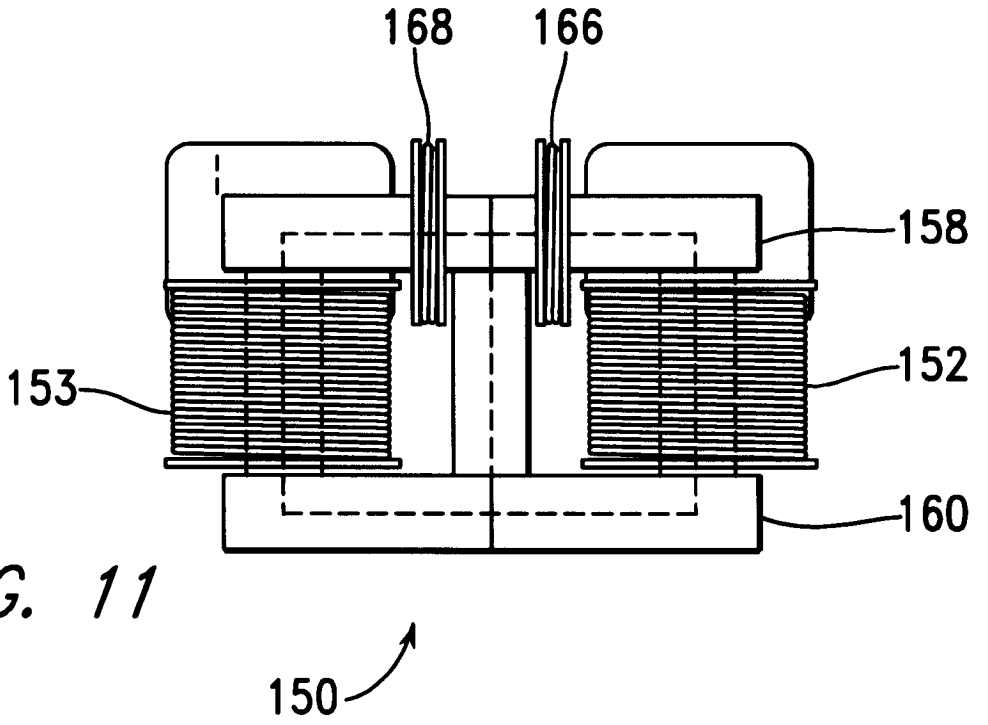

FIG. 11

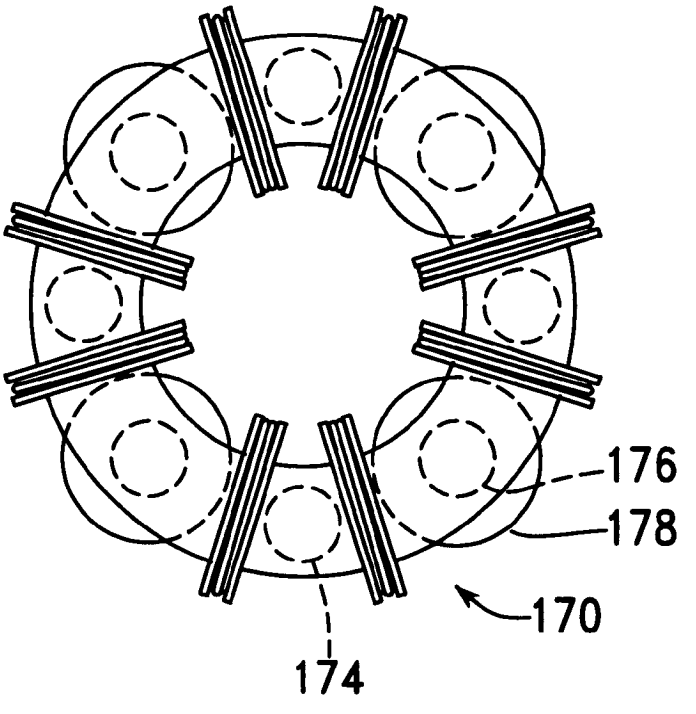

FIG. 12

MOTIONLESS ELECTROMAGNETIC GENERATOR

BACKGROUND INFORMATION

1. Field of Invention

This invention relates to a magnetic generator used to produce electrical power without moving parts, and, more particularly, to such a device having a capability, when operating, of producing electrical power without an external application of input power through input coils.

2. Description of the Related Art

The patent literature describes a number of magnetic generators, each of which includes a permanent magnet, two magnetic paths external to the permanent magnet, each of which extends between the opposite poles of the permanent magnet, switching means for causing magnetic flux to flow alternately along each of the two magnetic paths, and one or more output coils in which current is induced to flow by means of changes in the magnetic field within the device. These devices operate in accordance with an extension of Faraday's Law, indicating that an electrical current is induced within a conductor within a changing magnetic field, even if the source of the magnetic field is stationary.

A method for switching magnetic flux to flow predominantly along either of two magnetic paths between opposite poles of a permanent magnet is described as a "flux transfer" principle by R. J. Radus in *Engineer's Digest*, Jul. 23, 1963. This principle is used to exert a powerful magnetic force at one end of both the north and south poles and a very low force at the other end, without being used in the construction of a magnetic generator. This effect can be caused mechanically, by keeper movement, or electrically, by driving electrical current through one or more control windings extending around elongated versions of the pole pieces **14**. Several devices using this effect are described in U.S. Pat. Nos. 3,165,723, 3,228,013, and 3,316,514, which are incorporated herein by reference.

Another step toward the development of a magnetic generator is described in U.S. Pat. No. 3,368,141, which is incorporated herein by reference, as a device including a permanent magnet in combination with a transformer having first and second windings about a core, with two paths for magnetic flux leading from each pole of the permanent magnet to either end of the core, so that, when an alternating current induces magnetic flux direction changes in the core, the magnetic flux from the permanent magnet is automatically directed through the path which corresponds with the direction taken by the magnetic flux through the core due to the current. In this way, the magnetic flux is intensified. This device can be used to improve the power factor of a typically inductively loaded alternating current circuit.

Other patents describe magnetic generators in which electrical current from one or more output coils is described as being made available to drive a load, in the more conventional manner of a generator. For example, U.S. Pat. No. 4,006,401, which is incorporated herein by reference, describes an electromagnetic generator including permanent magnet and a core member, in which the magnetic flux flowing from the magnet in the core member is rapidly alternated by switching to generate an alternating current in a winding on the core member. The device includes a permanent magnet and two separate magnetic flux circuit paths between the north and south poles of the magnet. Each of the circuit paths includes two switching means for alternately opening and closing the circuit paths, generating an alternating current in a winding on the core member. Each

of the switching means includes a switching magnetic circuit intersecting the circuit path, with the switching magnetic circuit having a coil through which current is driven to induce magnetic flux to saturate the circuit path extending to the permanent magnet. Power to drive these coils is derived directly from the output of a continuously applied alternating current source. What is needed is an electromagnetic generator not requiring the application of such a current source.

U.S. Pat. No. 4,077,001, which is incorporated herein by reference, describes a magnetic generator, or dc/dc converter, comprising a permanent magnet having spaced-apart poles and a permanent magnetic field extending between the poles of the magnet. A variable-reluctance core is disposed in the field in fixed relation to the magnet and the reluctance of the core is varied to cause the pattern of lines of force of the magnetic field to shift. An output conductor is disposed in the field in fixed relation to the magnet and is positioned to be cut by the shifting lines of permanent magnetic force so that a voltage is induced in the conductor. The magnetic flux is switched between alternate paths by means of switching coils extending around portions of the core, with the flow of current being alternated between these switching coils by means of a pair of transistors driven by the outputs of a flip-flop. The input to the flip flop is driven by an adjustable frequency oscillator. Power for this drive circuit is supplied through an additional, separate power source. What is needed is a magnetic generator not requiring the application of such a power source.

U.S. Pat. No. 4,904,926, which is incorporated herein by reference, describes another magnetic generator using the motion of a magnetic field. The device includes an electrical winding defining a magnetically conductive zone having bases at each end, the winding including elements for the removing of an induced current therefrom. The generator further includes two pole magnets, each having a first and a second pole, each first pole in magnetic communication with one base of the magnetically conductive zone. The generator further includes a third pole magnet, the third pole magnet oriented intermediately of the first poles of the two pole electromagnets, the third pole magnet having a magnetic axis substantially transverse to an axis of the magnetically conductive zone, the third magnet having a pole nearest to the conductive zone and in magnetic attractive relationship to the first poles of the two pole electromagnets, in which the first poles thereof are like poles. Also included in the generator are elements, in the form of windings, for cyclically reversing the magnetic polarities of the electromagnets. These reversing means, through a cyclical change in the magnetic polarities of the electromagnets, cause the magnetic flux lines associated with the magnetic attractive relationship between the first poles of the electromagnets and the nearest pole of the third magnet to correspondingly reverse, causing a wiping effect across the magnetically conductive zone, as lines of magnetic flux swing between respective first poles of the two electromagnets, thereby inducing electron movement within the output windings and thus generating a flow of current within the output windings.

U.S. Pat. No. 5,221,892, which is incorporated herein by reference, describes a magnetic generator in the form of a direct current flux compression transformer including a magnetic envelope having poles defining a magnetic axis and characterized by a pattern of magnetic flux lines in polar symmetry about the axis. The magnetic flux lines are spatially displaced relative to the magnetic envelope using control elements which are mechanically stationary relative to the core. Further provided are inductive elements which

are also mechanically stationary relative to the magnetic envelope. Spatial displacement of the flux relative to the inductive elements causes a flow of electrical current. Further provided are magnetic flux valves which provide for the varying of the magnetic reluctance to create a time domain pattern of respectively enhanced and decreased magnetic reluctance across the magnetic valves, and, thereby, across the inductive elements.

Other patents describe devices using superconductive elements to cause movement of the magnetic flux. These devices operate in accordance with the Meissner effect, which describes the expulsion of magnetic flux from the interior of a superconducting structure as the structure undergoes the transition to a superconducting phase. For example, U.S. Pat. No. 5,011,821, which is incorporated herein by reference, describes an electric power generating device including a bundle of conductors which are placed in a magnetic field generated by north and south pole pieces of a permanent magnet. The magnetic field is shifted back and forth through the bundle of conductors by a pair of thin films of superconductive material. One of the thin films is placed in the superconducting state while the other thin film is in a non-superconducting state. As the states are cyclically reversed between the two films, the magnetic field is deflected back and forth through the bundle of conductors.

U.S. Pat. No. 5,327,015, which is incorporated herein by reference, describes an apparatus for producing an electrical impulse comprising a tube made of superconducting material, a source of magnetic flux mounted about one end of the tube, a means, such as a coil, for intercepting the flux mounted along the tube, and a means for changing the temperature of the superconductor mounted about the tube. As the tube is progressively made superconducting, the magnetic field is trapped within the tube, creating an electrical impulse in the means for intercepting. A reversal of the superconducting state produces a second pulse.

None of the patented devices described above use a portion of the electrical power generated within the device to power the reversing means used to change the path of magnetic flux. Thus, like conventional rotary generators, these devices require a steady input of power, which may be in the form of electrical power driving the reversing means of one of these magnetic generators or the torque driving the rotor of a conventional rotary generator. Yet, the essential function of the magnetic portion of an electrical generator is simply to switch magnetic fields in accordance with precise timing. In most conventional applications of magnetic generators, the voltage is switched across coils, creating magnetic fields in the coils which are used to override the fields of permanent magnets, so that a substantial amount of power must be furnished to the generator to power the switching means, reducing the efficiency of the generator.

Recent advances in magnetic material, which have particularly been described by Robert C. O'Handley in *Modern Magnetic Materials, Principles and Applications*, John Wiley & Sons, New York, pp. 456–468, provide nanocrystalline magnetic alloys, which are particularly well suited forth rapid switching of magnetic flux. These alloys are primarily composed of crystalline grains, or crystallites, each of which has at least one dimension of a few nanometers. Nanocrystalline materials may be made by heat-treating amorphous alloys which form precursors for the nanocrystalline materials, to which insoluble elements, such as copper, are added to promote massive nucleation, and to which stable, refractory alloying materials, such as niobium or tantalum carbide are added to inhibit grain growth. Most of the volume of nanocrystalline alloys is composed of randomly distributed crystallites having dimensions of about 2–40 nm. These crystallites are nucleated and grown from an amorphous phase, with insoluble elements being rejected during the process of crystallite growth. In magnetic terms, each crystallite is a single-domain particle. The remaining volume of nanocrystalline alloys is made up of an amorphous phase in the form of grain boundaries having a thickness of about 1 nm.

Magnetic materials having particularly useful properties are formed from an amorphous Co—Nb—B (cobalt-niobium-boron) alloy having near-zero magnetostriction and relatively strong magnetization, as well as good mechanical strength and corrosion resistance. A process of annealing this material can be varied to change the size of crystallites formed in the material, with a resulting strong effect on DC coercivity. The precipitation of nanocrystallites also enhances AC performance of the otherwise amorphous alloys.

Other magnetic materials are formed using iron-rich amorphous and nanocrystalline alloys, which generally show larger magnetization that the alloys based on cobalt. Such materials are, for example, Fe—B—Si—Nb—Cu (iron-boron-silicon-niobium-copper) alloys. While the permeability of iron-rich amorphous alloys is limited by their relatively large levels of magnetostriction, the formation of a nanocrystalline material from such an amorphous alloy dramatically reduces this level of magnetostriction, favoring easy magnetization.

Advances have also been made in the development of materials for permanent magnets, particularly in the development of materials including rare earth elements. Such materials include samarium cobalt, $SmCo_5$, which is used to form a permanent magnet material having the highest resistance to demagnetization of any known material. Other magnetic materials are made, for example, using combinations of iron, neodymium, and boron.

SUMMARY OF THE INVENTION

It is a first objective of the present invention to provide a magnetic generator which a need for an external power source during operation of the generator is eliminated.

It is a second objective of the present invention to provide a magnetic generator in which a magnetic flux path is changed without a need to overpower a magnetic field to change its direction.

It is a third objective of the present invention to provide a magnetic generator in which the generation of electricity is accomplished without moving parts.

In the apparatus of the present invention, the path of the magnetic flux from a permanent magnet is switched in a manner not requiring the overpowering of the magnetic fields. Furthermore, a process of self-initiated iterative switching is used to switch the magnetic flux from the permanent magnet between alternate magnetic paths within the apparatus, with the power to operate the iterative switching being provided through a control circuit consisting of components known to use low levels of power. With self-switching, a need for an external power source during operation of the generator is eliminated, with a separate power source, such as a battery, being used only for a very short time during start-up of the generator.

According to a first aspect of the present invention, an electromagnetic generator is provided, including a permanent magnet, a magnetic core, first and second input coils, first and second output coils, and a switching circuit. The permanent magnet has magnetic poles at opposite ends. The

magnetic core includes a first magnetic path, around which the first input and output coils extend, and a second magnetic path, around which the second input and output coils extend, between opposite ends of the permanent magnet. The switching circuit drives electrical current alternately through the first and second input coils. The electrical current driven through the first input oil causes the first input coil to produce a magnetic field opposing a concentration of magnetic flux from the permanent magnet within the first magnetic path. The electrical current driven through the second input coil causes the second input coil to produce a magnetic field opposing a concentration of magnetic flux from the permanent magnet within the second magnetic path.

According to another aspect of the present invention, an electromagnetic generator is provided, including a magnetic core, a plurality of permanent magnets, first and second pluralities of input coils, a plurality of output coils, and a switching circuit. The magnetic core includes a pair of spaced-apart plates, each of which has a central aperture, and first and second pluralities of posts extending between the spaced-apart plates. The permanent magnets each extend between the pair of spaced apart plates. Each permanent magnet has magnetic poles at opposite ends, with the magnetic fields of all the permanent magnets being aligned to extend in a common direction. Each input coil extends around a portion of a plate within the spaced-apart plates, between a post and a permanent magnet. An output coil extends around each post. The switching circuit drives electrical current alternately through the first and second pluralities of input coils. Electrical current driven through each input coil in the first plurality of input coils causes an increase in magnetic flux within each post within the first plurality of posts from permanent magnets on each side of the post and a decrease in magnetic flux within each post within the second plurality of posts from permanent magnets on each side of the post. Electrical current driven through each input coil in the second plurality of input coils causes a decrease in magnetic flux within each post within the first plurality of posts from permanent magnets on each side of the post and an increase in magnetic flux within each post within the second plurality of posts from permanent magnets on each side of the post.

BRIEF DESCRIPTION OF THE DRAWINGS

FIG. **1** is a partly schematic front elevation of a magnetic generator and associated electrical circuits built in accordance with a first version of the first embodiment of the present invention;

FIG. **2** is a schematic view of a first version of a switching and control circuit within the associated electrical circuits of FIG. **1**;

FIG. **3** is a graphical view of drive signals produced within the circuit of FIG. **2**;

FIG. **4** is a schematic view of a second version of a switching and control circuit within the associated electrical circuits of FIG. **1**;

FIG. **5** is a graphical view of drive signals produced within the circuit of FIG. **3**;

FIG. **6**A is a graphical view of a first drive signal within the apparatus of FIG. **1**;

FIG. **6**B is a graphical view of a second drive signal within the apparatus of FIG. **1**;

FIG. **6**C is a graphical view of an input voltage signal within the apparatus of FIG. **1**;

FIG. **6**D is a graphical view of an input current signal within the apparatus of FIG. **1**;

FIG. **6**E is a graphical view of a first output voltage signal within the apparatus of FIG. **1**;

FIG. **6**F is a graphical view of a second output voltage signal within the apparatus of FIG. **1**;

FIG. **6**G is a graphical view of a first output current signal within the apparatus of FIG. **1**;

FIG. **6**H is a graphical view of a second output current signal within the apparatus of FIG. **1**;

FIG. **7** is a graphical view of output power measured within the apparatus of FIG. **1**, as a function of input voltage;

FIG. **8** is a graphical view of a coefficient of performance, calculated from measurements within the apparatus of FIG. **1**, as a function of input voltage;

FIG. **9** is a cross-sectional elevation of a second version of the first embodiment of the present invention;

FIG. **10** is a top view of a magnetic generator built in accordance with a first version of a second embodiment of the present invention;

FIG. **11** is a front elevation of the magnetic generator of FIG. **10**; and

FIG. **12** is a top view of a magnetic generator built in accordance with a second version of the second embodiment of the present invention.

DETAILED DESCRIPTION OF THE INVENTION

FIG. **1** is a partly schematic front elevation of an electromagnetic generator **10**, built in accordance with a first embodiment of the present invention to include a permanent magnet **12** to supply input lines of magnetic flux moving from the north pole **14** of the magnet **12** outward into magnetic flux path core material **16**. The flux path core material **16** is configured to form a right magnetic path **18** and a left magnetic path **20**, both of which extend externally between the north pole **14** and the south pole **22** of the magnet **12**. The electromagnetic generator **10** is driven by means of a switching and control circuit **24**, which alternately drives electrical current through a right input coil **26** and a left input coil **28**. These input coils **26**, **28** each extend around a portion of the core material **16**, with the right input coil **26** surrounding a portion of the right magnetic path **18** and with the left input coil **28** surrounding a portion of the left magnetic path **20**. A right output coil **29** also surrounds a portion of the right magnetic path **18**, while a left output coil **30** surrounds a portion of the left magnetic path **20**.

In accordance with a preferred version of the present invention, the switching and control circuit **24** and the input coils **26**, **28** are arranged so that, when the right input coil **26** is energized, a north magnetic pole is present at its left end **31**, the end closest to the north pole **14** of the permanent magnet **12**, and so that, when the left input coil **28** is energized, a north magnetic pole is present at its right end **32**, which is also the end closest to the north pole **14** of the permanent magnet **12**. Thus, when the right input coil **26** is magnetized, magnetic flux from the permanent magnet **12** is repelled from extending through the right input coil **26**. Similarly, when the left input coil **28** is magnetized, magnetic flux from the permanent magnet **12** is repelled from extending through the left input coil **28**.

Thus, it is seen that driving electrical current through the right input coil **26** opposes a concentration of flux from the permanent magnet **12** within the right magnetic path **18**, causing at least some of this flux to be transferred to the left magnetic path **20**. On the other hand, driving electrical current through the left input coil **28** opposes a concentration

of flux from the permanent magnet **12** within the left magnetic path **20**, causing at least some of this flux to be transferred to the right magnetic path **18**.

While in the example of FIG. **1**, the input coils **26**, **28** are placed on either side of the north pole of the permanent magnet **12**, being arranged along a portion of the core **16** extending from the north pole of the permanent magnet **12**, it is understood that the input coils **26**, **28** could as easily be alternately placed on either side of the south pole of the permanent magnet **12**, being arranged along a portion of the core **16** extending from the south pole of the permanent magnet **12**, with the input coils **26**, **28** being wired to form, when energized, magnetic fields having south poles directed toward the south pole of the permanent magnet **12**. In general, the input coils **26**, **28** are arranged along the magnetic core on either side of an end of the permanent magnet forming a first pole, such as a north pole, with the input coils being arranged to produce magnetic fields of the polarity of the first pole directed toward the first pole of the permanent magnet.

Further in accordance with a preferred version of the present invention, the input coils **26**, **28** are never driven with so much current that the core material **16** becomes saturated. Driving the core material **16** to saturation means that subsequent increases in input current can occur without effecting corresponding changes in magnetic flux, and therefore that input power can be wasted. In this way, the apparatus of the present invention is provided with an advantage in terms of the efficient use of input power over the apparatus of U.S. Pat. No. 4,000,401, in which a portion both ends of each magnetic path is driven to saturation to block flux flow. In the electromagnetic generator **10**, the switching of current flow within the input coils **26**, **28** does not need to be sufficient to stop the flow of flux in one of the magnetic paths **18**, **20** while promoting the flow of magnetic flux in the other magnetic path. The electromagnetic generator **10** works by changing the flux pattern; it does not need to be completely switched from one side to another.

Experiments have determined that this configuration is superior, in terms of the efficiency of using power within the input coils **26**, **28** to generate electrical power within the output coils **29**, **30**, to the alternative of arranging input coils and the circuits driving them so that flux from the permanent magnet is driven through the input coils as they are energized. This arrangement of the present invention provides a significant advantage over the prior-art methods shown, for example, in U.S. Pat. No. 4,077,001, in which the magnetic flux is driven through the energized coils.

The configuration of the present invention also has an advantage over the prior-art configurations of U.S. Pat. Nos. 3,368,141 and 4,077,001 in that the magnetic flux is switched between two alternate magnetic paths **18**, **20** with only a single input coil **26**, **28** surrounding each of the alternate magnetic paths. The configurations of U.S. Pat. Nos. 3,368,141 and 4,077,001 each require two input coils on each of the magnetic paths. This advantage of the present invention is significant both in the simplification of hardware and in increasing the efficiency of power conversion.

The right output coil **29** is electrically connected to a rectifier and filter **33**, having an output driven through a regulator **34**, which provides an output voltage adjustable through the use of a potentiometer **35**. The output of the linear regulator **34** is in turn provided as an input to a sensing and switching circuit **36**. Under start up conditions, the sensing and switching circuit **36** connects the switching and control circuit **24** to an external power source **38**, which is, for example, a starting battery. After the electromagnetic generator **10** is properly started, the sensing and switching circuit **36** senses that the voltage available from regulator **34** has reached a predetermined level, so that the power input to the switching and control circuit **24** is switched from the external power source **38** to the output of regulator **34**. After this switching occurs, the electromagnetic generator **10** continues to operate without an application of external power.

The left output coil **30** is electrically connected to a rectifier and filter **40**, the output of which is connected to a regulator **42**, the output voltage of which is adjusted by means of a potentiometer **43**. The output of the regulator **42** is in turn connected to an external load **44**.

FIG. **2** is a schematic view of a first version of the switching and control circuit **24**. An oscillator **50** drives the clock input of a flip-flop **54**, with the Q and Q' outputs of the flip-flop **54** being connected through driver circuits **56**, **58** to power FETS **60**, **62** so that the input coils **26**, **28** are alternately driven. In accordance with a preferred version of the present invention, the voltage V applied to the coils **26**, **28** through the FETS **60**, **62** is derived from the output of the sensing and switching circuit **36**.

FIG. **3** is a graphical view of the signals driving the gates of FETS **60**, **62** of FIG. **2**, with the voltage of the signal driving the gate of FET **60** being represented by line **64**, and with the voltage of the signal driving FET **62** being represented by line **66**. Both of the coils **26**, **28** are driven with positive voltages.

FIG. **4** is a schematic view of a second version of the switching and control circuit **24**. In this version, an oscillator **70** drives the clock input of a flip-flop **72**, with the Q and Q' outputs of the flip-flop **72** being connected to serve as triggers for one-shots **74**, **76**. The outputs of the one-shots **74**, **76** are in turn connected through driver circuits **78**, **80** to drive FETS **82**, **84**, so that the input coils **26**, **28** are alternately driven with pulses shorter in duration than the Q and Q' outputs of the flip flop **72**.

FIG. **5** is a graphical view of the signals driving the gates of FETS **82**, **84** of FIG. **4**, with the voltage of the signal driving the gate of FET **82** being represented by line **86**, and with the voltage of the signal driving the gate of FET **84** being represented by line **88**.

Referring again to FIG. **1**, power is generated in the right output coil **29** only when the level of magnetic flux is changing in the right magnetic path **18**, and in the left output coil **30** only when the level of magnetic flux is changing in the left magnetic path **20**. It is therefore desirable to determine, for a specific magnetic generator configuration, the width of a pulse providing the most rapid practical change in magnetic flux, and then to provide this pulse width either by varying the frequency of the oscillator **50** of the apparatus of FIG. **2**, so that this pulse width is provided with the signals shown in FIG. **3**, or by varying the time constant of the one-shots **74**, **76** of FIG. **4**, so that this pulse width is provided by the signals of FIG. **5** at a lower oscillator frequency. In this way, the input coils are not left on longer than necessary. When either of the input coils is left on for a period of time longer than that necessary to produce the change in flux direction, power is being wasted through heating within the input coil without additional generation of power in the corresponding output coil.

A number of experiments have been conducted to determine the adequacy of an electromagnetic generator built as the generator **10** in FIG. **1** to produce power both to drive the switching and control logic, providing power to the input

coils **26**, **28**, and to drive an external load **44**. In the configuration used in this experiment, the input coils **26**, **28** had 40 turns of 18-gauge copper wire, and the output coils **29**, **30** had 450 turns of 18-gauge copper wire. The permanent magnet **12** had a height of 40 mm (1.575 in. between its north and south poles, in the direction of arrow **89**, a width of 25.4 mm (1.00 in.), in the direction of arrow **90**, and in the other direction, a depth of 38.1 mm (1.50 in.). The core **16** had a height, in the direction of arrow **89**, of 90 mm (3.542 in.), a width, in the direction of arrow **90**, of 135 mm (5.315 in.) and a depth of 70 mm (2.756 in.). The core **16** had a central hole with a height, in the direction of arrow **89**, of 40 mm (1.575 mm) to accommodate the magnet **12**, and a width, in the direction of arrow **90**, of 85 mm (3.346 in.). The core **16** was fabricated of two "C"-shaped halves, joined at lines **92**, to accommodate the winding of output coils **29**, **30** and input coils **26**, **28** over the core material.

The core material was a laminated iron-based magnetic alloy sold by Honeywell as METGLAS Magnetic Alloy 2605SA1. The magnet material was a combination of iron, neodymium, and boron.

The input coils **26**, **28** were driven at an oscillator frequency of 87.5 KHz, which was determined to produce optimum efficiency using a switching control circuit configured as shown in FIG. **2**. This frequency has a period of 11.45 microseconds. The flip flop **54** is arranged, for example, to be set and reset on rising edges of the clock signal input from the oscillator, so that each pulse driving one of the FETS **60**, **62** has a duration of 11.45 microseconds, and so that sequential pulses are also separated to each FET are also separated by 11.45 microseconds.

FIGS. **6**A–**6**H are graphical views of signals which simultaneously occurred within the apparatus of FIGS. **1** and **2** during operation with an applied input voltage of 75 volts. FIG. **6**A shows a first drive signal **100** driving FET **60**, which conducts to drive the right input coil **26**. FIG. **6**B is shows a second drive signal **102** driving FET **62**, which conducts to drive the left input coil **28**.

FIGS. **6**C and **6**D show voltage and current signals associated with current driving both the FETS **60**, **62** from a battery source. FIG. **6**C shows the level **104** of voltage V. While the nominal voltage of the battery was 75 volts, a decaying transient signal **106** is superimposed on this voltage each time one of the FETS **60**, **62** is switched on to conduct. The specific pattern of this transient signal depends on the internal resistance of the battery, as well as on a number of characteristics of the magnetic generator **10**. Similarly, FIG. **6**D shows the current **106** flowing into both FETS **60**, **62** from the battery source. Since the signals **104**, **106** show the effects of current flowing into both FETS **60**, **62** the transient spikes are 11.45 microseconds apart.

FIGS. **6**E–**6**H show voltage and current levels measured at the output coils **29**, **30**. FIG. **6**E shows a voltage output signal **108** of the right output coil **29**, while FIG. **6**F shows a voltage output signal **110** of the left output coil **30**. For example, the output current signal **116** of the right output coil **29** includes a first transient spike **112** caused when the a current pulse in the left input coil **28** is turned on to direct magnetic flux through the right magnetic path **18**, and a second transient spike **114** caused when the left input coil **28** is turned off with the right input coil **26** being turned on. FIG. **6**G shows a current output signal **116** of the right output coil **29**, while FIG. **6**H shows a current output signal **118** of the left output coil **30**.

FIG. **7** is a graphical view of output power measured using the electromagnetic generator **10** and eight levels of input voltage, varying from 10v to 75v. The oscillator frequency was retained at 87.5 KHz. The measurement points are represented by indicia **120**, while the curve **122** is generated by polynomial regression analysis using a least squares fit.

FIG. **8** is a graphical view of a coefficient of performance, defined as the ratio of the output power to the input power, for each of the measurement points shown in FIG. **7**. At each measurement point, the output power was substantially higher than the input power. Real power measurements were computed at each data point using measured voltage and current levels, with the results being averaged over the period of the signal. These measurements agree with RMS power measured using a Textronic THS730 digital oscilloscope.

While the electromagnetic generator **10** was capable of operation at much higher voltages and currents without saturation, the input voltage was limited to 75 volts because of voltage limitations of the switching circuits being used. Those skilled in the relevant art will understand that components for switching circuits capable of handling higher voltages in this application are readily available. The experimentally-measured data was extrapolated to describe operation at an input voltage of 100 volts, with the input current being 140 ma, the input power being 14 watts, and with a resulting output power being 48 watts for each of the two output coils **29**, **30**, at an average output current of 12 ma and an average output voltage of 4000 volts. This means that for each of the output coils **29**, **30**, the coefficient of performance would be 3.44.

While an output voltage of 4000 volts may be needed for some applications, the output voltage can also be varied through a simple change in the configuration of the electromagnetic generator **10**. The output voltage is readily reduced by reducing the number of turns in the output windings. If this number of turns is decreased from 450 to 12, the output voltage is dropped to 106.7, with a resulting increase in output current to 0.5 amps for each output coil **29**, **30**. In this way, the output current and voltage of the electromagnetic generator can be varied by varying the number of turns of the output coils **29**, **30**, without making a substantial change in the output power, which is instead determined by the input current, which determines the amount of magnetic flux shuttled during the switching process.

The coefficients of performance, all of which were significantly greater than 1, plotted in FIG. **8** indicate that the output power levels measured in each of the output coils **29**, **30** were substantially greater than the corresponding input power levels driving both of the input coils **26**, **28**. Therefore, it is apparent that the electromagnetic generator **10** can be built in a self-actuating form, as discussed above in reference to FIG. **1**. In the example of FIG. **1**, except for a brief application of power from the external power source **38**, to start the process of power generation, the power required to drive the input coils **26**, **28** is derived entirely from power developed within the right output coil **29**. If the power generated in a single output coil **29**, **30** is more than sufficient to drive the input coils **26**, **28**, an additional load **126** may be added to be driven with power generated in the output coil **29** used to generate power to drive the input coils **26**, **28**. On the other hand, each of the output coils **29**, **30** may be used to drive a portion of the input coil power requirements, for example with one of the output coils **26**, **28** providing the voltage V for the FET **60** (shown in FIG. **2**), while the other output coil provides this voltage for the FET **62**.

Regarding thermodynamic considerations, it is noted that, when the electromagnetic generator **10** is operating, it is an

open system not in thermodynamic equilibrium. The system receives static energy from the magnetic flux of the permanent magnet. Because the electromagnetic generator **10** is self-switched without an additional energy input, the thermodynamic operation of the system is an open dissipative system, receiving, collecting, and dissipating energy from its environment; in this case, from the magnetic flux stored within the permanent magnet. Continued operation of the electromagnetic generator **10** causes demagnetization of the permanent magnet. The use of a magnetic material including rare earth elements, such as a samarium cobalt material or a material including iron, neodymium, and boron is preferable within the present invention, since such a magnetic material has a relatively long life in this application.

Thus, an electromagnetic generator operating in accordance with the present invention should be considered not as a perpetual motion machine, but rather as a system in which flux radiated from a permanent magnet is converted into electricity, which is used both to power the apparatus and to power an external load. This is analogous to a system including a nuclear reactor, in which a number of fuel rods radiate energy which is used to keep the chain reaction going and to heat water for the generation of electricity to drive external loads.

FIG. **9** is a cross-sectional elevation of an electromagnetic generator **130** built in accordance with a second version of the first embodiment of the present invention. This electromagnetic generator **130** is generally similar in construction and operation to the electromagnetic generator **10** built in accordance with the first version of this embodiment, except that the magnetic core **132** of the electromagnetic generator **10** is built in two halves joined along lines **134**, allowing each of the output coils **135** to be wound on a plastic bobbin **136** before the bobbin **136** is placed over the legs **137** of the core **132**. FIG. **9** also shows an alternate placement of an input coil **138**. In the example of FIG. **1**, both input coils **26**, **28** were placed on the upper portion of the magnetic core **16**, with these coils **26**, **28** being configured to establish magnetic fields having north magnetic poles at the inner ends **31**, **32** of the coils **26**, **28**, with these north magnetic poles thus being closest to the end **14** of the permanent magnet **12** having its north magnetic pole. In the example of FIG. **9**, a first input coil **26** is as described above in reference to FIG. **1**, but the second input coil **138** is placed adjacent the south pole **140** of the permanent magnet **12**. This input coil **138** is configured to establish a south magnetic pole at its inner end **142**, so that, when input coil **138** is turned on, flux from the permanent magnet **12** is directed away from the left magnetic path **20** into the right magnetic path **18**.

FIGS. **10** and **11** show an electromagnetic generator **150** built in accordance with a first version of a second embodiment of the present invention, with FIG. **10** being a top view thereof, and with FIG. **11** being a front elevation thereof. This electromagnetic generator **150** includes an output coil **152**, **153** at each corner, and a permanent magnet **154** extending along each side between output coils. The magnetic core **156** includes an upper plate **158**, a lower plate **160**, and a square post **162** extending within each output coil **152**, **153**. Both the upper plate **158** and the lower plate **160** include central apertures **164**.

Each of the permanent magnets **154** is oriented with a like pole, such as a north pole, against the upper plate **158**. Eight input coils **166**, **168** are placed in positions around the upper plate **158** between an output coil **152**, **153** and a permanent magnet **154**. Each input coil **166**, **168** is arranged to form a magnetic pole at its end nearest to the adjacent permanent magnet **154** of a like polarity to the magnetic poles of the magnets **154** adjacent the upper plate **158**. Thus, the input coils **166** are switched on to divert magnetic flux of the permanent magnets **154** from the adjacent output coils **152**, with this flux being diverted into magnetic paths through the output coils **153**. Then, the input coils **168** are switched on to divert magnetic flux of the permanent magnets **154** from the adjacent output coils **153**, with this flux being diverted into magnetic paths through the output coils **152**. Thus, the input coils form a first group of input coils **166** and a second group of input coils **168**, with these first and second groups of input coils being alternately energized in the manner described above in reference to FIG. **1** for the single input coils **26**, **28**. The output coils produce current in a first train of pulses occurring simultaneously within coils **152** and in a second train of pulses occurring simultaneously within coils **153**.

Thus, driving current through input coils **166** causes an increase in flux from the permanent magnets **154** within the posts **162** extending through output coils **153** and a decrease in flux from the permanent magnets **154** within the posts **162** extending through output coils **152**. On the other hand, driving current through input coils **168** causes a decrease in flux from the permanent magnets **154** within the posts **162** extending through output coils **153** and an increase in flux from the permanent magnets **154** within the posts **162** extending through output coils **152**.

While the example of FIGS. **10** and **11** shows all of the input coils **166**,**168** deployed along the upper plate **158**, it is understood that certain of these input coils **166**, **168** could alternately be deployed around the lower plate **160**, in the manner generally shown in FIG. **9**, with one input coil **166**, **168** being within each magnetic circuit between a permanent magnet **154** and an adjacent post **162** extending within an output coil **152**, **153**, and with each input coil **166**, **168** being arranged to produce a magnetic field having a magnetic pole like the closest pole of the adjacent permanent magnet **154**.

FIG. **12** is a top view of a second version **170** of the second embodiment of the present invention, which is similar to the first version thereof, which has been discussed in reference to FIGS. **10** and **11**, except that an upper plate **172** and a similar lower plate (not shown) are annular in shape, while the permanent magnets **174** and posts **176** extending through the output coils **178** are cylindrical. The input coils **180** are oriented and switched as described above in reference to FIGS. **9** and **10**.

While the example of FIG. **12** shows four permanent magnets, four output coils and eight input coils it is understood that the principles described above can be applied to electromagnetic generators having different numbers of elements. For example, such a device can be built to have two permanent magnets, two output coils, and four input coils, or to have six permanent magnets, six output coils, and twelve input coils.

In accordance with the present invention, material used for magnetic cores is preferably a nanocrystalline alloy, and alternately an amorphous alloy. The material is preferably in a laminated form. For example, the core material is a cobalt-niobium-boron alloy or an iron based magnetic alloy.

Also in accordance with the present invention, the permanent magnet material preferably includes a rare earth element. For example, the permanent magnet material is a samarium cobalt material or a combination of iron, neodymium, and boron.

While the invention has been described in its preferred versions and embodiments with some degree of particularity, it is understood that this description has been

given only by way of example and that numerous changes in the details of construction, fabrication, and use, including the combination and arrangement of parts, may be made without departing from the spirit and scope of the invention.

What is claimed is:

1. An electromagnetic generator comprising:

a permanent magnet having magnetic poles at opposite ends;

a magnetic core including first and second magnetic paths between said opposite ends of said permanent magnet, wherein

said magnetic core comprises a closed loop,

said permanent magnet extends within said closed loop, and

said opposite ends of said permanent magnet are disposed adjacent opposite sides of said closed loop and against internal surfaces of said magnetic core comprising said closed loop;

a first input coil extending around a portion of said first magnetic path,

a second input coil extending around a portion of said second magnetic path,

a first output coil extending around a portion of said first magnetic path for providing a first electrical output;

a second output coil extending around a portion of said second magnetic path for providing a second electrical output; and

a switching circuit driving electrical current alternately through said first and second input coils, wherein

said electrical current driven through said first input coil causes said first input coil to produce a magnetic field opposing a concentration of magnetic flux from said permanent magnet within said first magnetic path, and

said electrical current driven through said second input coil causes said second input coil to produce a magnetic field opposing a concentration of magnetic flux from said permanent magnet within said second magnetic path.

2. An electromagnetic generator comprising:

a permanent magnet having magnetic poles at opposite ends;

a magnetic core including first and second magnetic paths between said opposite ends of said permanent magnet, wherein

said magnetic core comprises a closed loop,

said permanent magnet extends within said closed loop,

said opposite ends of said permanent magnet are disposed adjacent opposite sides of said closed loop, and

a first type of pole of said permanent magnet is disposed adjacent a first side of said closed loop;

a first input coil, disposed along said first side of said closed loop, extending around a portion of said first magnetic path,

a second input coil, disposed along said first side of said closed loop, extending around a portion of said second magnetic path,

a first output coil extending around a portion of said first magnetic path for providing a first electrical output;

a second output coil extending around a portion of said second magnetic path for providing a second electrical output; and

a switching circuit driving electrical current alternately through said first and second input coils, wherein

said electrical current driven through said first input coil causes said first input coil to produce a magnetic field opposing a concentration of magnetic flux from said permanent magnet within said first magnetic path, and additionally causes said first input coil to produce a magnetic field having said first type of pole at an end of said first input coil adjacent said permanent magnet, and

said electrical current driven through said second input coil causes said second input coil to produce a magnetic field opposing a concentration of magnetic flux from said permanent magnet within said second magnetic path, and additionally causes said second input coil to produce a magnetic field having said first type of pole at an end of said of said second input coil adjacent said permanent magnet.

3. An electromagnetic generator comprising:

a permanent magnet having magnetic poles at opposite ends;

a magnetic core including first and second magnetic paths between said opposite ends of said permanent magnet, wherein

said magnetic core comprises a closed loop,

said permanent magnet extends within said closed loop, and

said opposite ends of said permanent magnet are disposed adjacent opposite sides of said closed loop,

a first type of pole of said permanent magnet is disposed adjacent a first side of said closed loop, and

a second type of pole, opposite said first type of pole, of said permanent magnet is disposed adjacent a second side of said closed loop;

a first input coil extending around a portion of said first magnetic path, wherein said first input coil is disposed along said first side of said closed loop;

a second input coil extending around a portion of said second magnetic path wherein said second input coil is disposed along said second side of said closed loop;

a first output coil extending around a portion of said first magnetic path for providing a first electrical output;

a second output coil extending around a portion of said second magnetic path for providing a second electrical output; and

a switching circuit driving electrical current alternately through said first and second input coils, wherein

said electrical current driven through said first input coil causes said first input coil to produce a magnetic field opposing a concentration of magnetic flux from said permanent magnet within said first magnetic path, and additionally causes said first input coil to produce a magnetic field having said first type of pole at an end of said first input coil adjacent said permanent magnet, and

said electrical current driven through said second input coil causes said second input coil to produce a magnetic field opposing a concentration of magnetic flux from said permanent magnet within said second magnetic path, and additionally causes said second input coil to produce a magnetic field having said second type of pole at an end of said of said second input coil adjacent said permanent magnet.

4. An electromagnetic generator comprising:

a permanent magnet having magnetic poles at opposite ends;

a magnetic core including first and second magnetic paths between said opposite ends of said permanent magnet;

a first input coil extending around a portion of said first magnetic path,

a second input coil extending around a portion of said second magnetic path,

a first output coil extending around a portion of said first magnetic path for providing a first electrical output;

a second output coil extending around a portion of said second magnetic path for providing a second electrical output; and

a switching circuit driving electrical current alternately through said first and second input coils, wherein said electrical current driven through said first input coil causes said first input coil to produce a magnetic field opposing a concentration of magnetic flux from said permanent magnet within said first magnetic path, and wherein said electrical current driven through said second input coil causes said second input coil to produce a magnetic field opposing a concentration of magnetic flux from said permanent magnet within said second magnetic path, wherein a portion of electrical power induced in said first output coil provides power to drive said switching circuit.

5. The electromagnetic generator of claim **4**, wherein said switching circuit is driven by an external power source during a starting process and by power induced in said first output coil during operation after said starting process.

6. The electromagnetic generator of claim **2**, wherein said magnetic core is composed of a nanocrystalline magnetic alloy.

7. The electromagnetic generator of claim **6**, wherein said nanocrystalline magnetic alloy is a cobalt-niobium-boron alloy.

8. The electromagnetic generator of claim **6**, wherein said nanocrystalline magnetic alloy is an iron-based alloy.

9. The electromagnetic generator of claim **2**, wherein said changes in flux density within said magnetic core occur without driving said magnetic core to magnetic saturation.

10. The electromagnetic generator of claim **2**, wherein

said switching circuit drives said electrical current through said first input coil in response to a first train of pulses,

said switching circuit drives said electrical current through said second input coil in response to a second train of pulses, alternating with pulses within said first train of pulses, and

said pulses in said first and second trains of pulses are approximately 11.5 milliseconds in duration.

11. The electromagnetic generator of claim **2**, wherein said permanent magnet is composed of a material including a rare earth element.

12. The electromagnetic generator of claim **11**, wherein said permanent magnet is composed essentially of samarium cobalt.

13. The electromagnetic generator of claim **11**, wherein said permanent magnet is composed essentially of iron, neodymium, and boron.

14. An electromagnetic generator comprising:

a magnetic core including a pair of spaced-apart plates, wherein each of said spaced-apart plates includes a central aperture, and first and second pluralities of posts extending between said spaced-apart plates;

a plurality of permanent magnets extending individually between said pair of spaced-apart plates and between adjacent posts within said plurality of posts, wherein each permanent magnet within said plurality of permanent magnets has magnetic poles at opposite ends, wherein all magnets within said plurality of magnets are oriented to produce magnetic fields having a common direction;

first and second pluralities of input coils, wherein each input coil within said first and second pluralities of input coils extends around a portion of a plate within said spaced-apart plates between a post in said plurality of posts and a permanent magnet in said plurality of permanent magnets;

an output coil extending around each post in said first and second pluralities of posts for providing an electrical output;

a switching circuit driving electrical current alternatively through said first and second pluralities of input coils, wherein said electrical current driven through each input coil in said first plurality of input coils causes an increase in magnetic flux within each post within said first plurality of posts from permanent magnets on each side of said post and a decrease in magnetic flux within each post within said second plurality of posts from permanent magnets on each side of said post, and wherein said electrical current driven through input coil in said second plurality of input coils causes a decrease in magnetic flux within each post within said first plurality of posts from permanent magnets on each side of said post and an increase in magnetic flux within each post within said second plurality of posts from permanent magnets on each side of said post.

15. The electromagnetic generator of claim **14**, wherein

each input coil extends around a portion of a magnetic path through said magnetic core between said opposite ends a permanent magnet adjacent said input coil,

said magnetic path extends through a post within said magnetic core adjacent said input coil, and

driving electrical current through said input coil causes said input coil to produce a magnetic field opposing a concentration of magnetic flux within said magnetic path.

16. The electromagnetic generator of claim **14**, wherein said switching circuit is driven by an external power source during a starting process and by power induced in said output coils during operation after said starting process.

17. The electromagnetic generator of claim **14**, wherein said magnetic core is composed of a nanocrystalline magnetic alloy.

18. The electromagnetic generator of claim **2**, wherein a portion of electrical power induced in said first output coil provides power to drive said switching circuit.

19. The electromagnetic generator of claim **18**, wherein said switching circuit is driven by an external power source during a starting process and by power induced in said first output coil during operation after said starting process.

20. The electromagnetic generator of claim **3**, wherein a portion of electrical power induced in said first output coil provides power to drive said switching circuit.

21. The electromagnetic generator of claim **20**, wherein said switching circuit is driven by an external power source during a starting process and by power induced in said first output coil during operation after said starting process.

22. The electromagnetic generator of claim **3**, wherein said magnetic core is composed of a nanocrystalline magnetic alloy.

23. The electromagnetic generator of claim **22**, wherein said nanocrystalline magnetic alloy is a cobalt-niobium-boron alloy.

24. The electromagnetic generator of claim **22**, wherein said nanocrystalline magnetic alloy is an iron-based alloy.

25. The electromagnetic generator of claim **3**, wherein said changes in flux density within said magnetic core occur without driving said magnetic core to magnetic saturation.

26. The electromagnetic generator of claim **3**, wherein

said switching circuit drives said electrical current through said first input coil in response to a first train of pulses,

said switching circuit drives said electrical current through said second input coil in response to a second train of pulses, alternating with pulses within said first train of pulses, and

said pulses in said first and second trains of pulses are approximately 11.5 milliseconds in duration.

27. The electromagnetic generator of claim **3**, wherein said permanent magnet is composed of a material including a rare earth element.

28. The electromagnetic generator of claim **27**, wherein said permanent magnet is composed essentially of samarium cobalt.

29. The electromagnetic generator of claim **27**, wherein said permanent magnet is composed essentially of iron, neodymium, and boron.

* * * * *

Prodigal Genius

BIOGRAPHY OF NIKOLA TESLA

1994 Brotherhood of Life, Inc.,
110 Dartmouth, SE, Albuquerque,
New Mexico 87106 USA

"SPECTACULAR" is a mild word for describing the strange experiment with life that comprises the story of Nikola Tesla, and "amazing" fails to do adequate justice to the results that burst from his experiences like an exploding rocket. It is the story of the dazzling scintillations of a superman who created a new world; it is a story that condemns woman as an anchor of the flesh which retards the development of man and limits his accomplishment--and, paradoxically, proves that even the most successful life, if it does not include a woman, is a dismal failure.

Even the gods of old, in the wildest imaginings of their worshipers, never undertook such gigantic tasks of world-wide dimension as those which Tesla attempted and accomplished. On the basis of his hopes, his dreams, and his achievements he rated the status of the Olympian gods, and the Greeks would have so enshrined him. Little is the wonder that so-called practical men, with their noses stuck in profit-and-loss statements, did not understand him and thought him strange.

The light of human progress is not a dim glow that gradually becomes more luminous with time. The panorama of human evolution is illumined by sudden bursts of dazzling brilliance in intellectual accomplishments that throw their beams far ahead to give us a glimpse of the distant future, that we may more correctly guide our wavering steps today. Tesla, by virtue of the amazing discoveries and inventions which he showered on the world, becomes one of the most resplendent flashes that has ever brightened the scroll of human advancement.

Tesla created the modern era; he was unquestionably one of the world's greatest geniuses, but he leaves no offspring, no legatees of his brilliant mind, who might aid in administering that world; he created fortunes for multitudes of others but himself died penniless, spurning wealth that might be gained from his discoveries. Even as he walked among the teeming millions of New York he became a fabled individual who seemed to belong to the far-distant

future or to have come to us from the mystical realm of the gods, for he seemed to be an admixture of a Jupiter or a Thor who hurled the shafts of lightning; an Ajax who defied the Jovian bolts; a Prometheus who transmuted energy into electricity to spread over the earth; an Aurora who would light the skies as a terrestrial electric lamp; a Mazda who created a sun in a tube; a Hercules who shook the earth with his mechanical vibrators; a Mercury who bridged the ambient realms of space with his wireless waves--and a Hermes who gave birth to an electrical soul in the earth that set it pulsating from pole to pole.

This spark of intellectual incandescence, in the form of a rare creative genius, shot like a meteor into the midst of human society in the latter decades of the past century; and he lived almost until today. His name became synonymous with magic in the intellectual, scientific, engineering and social worlds, and he was recognized as an inventor and discoverer of unrivaled greatness. He made the electric current his slave. At a time when electricity was considered almost an occult force, and was looked upon with terror-stricken awe and respect, Tesla penetrated deeply into its mysteries and performed so many marvelous feats with it that, to the world, he became a master magician with an unlimited repertoire of scientific legerdemain so spectacular that it made the accomplishments of most of the inventors of his day seem like the work of toy-tinkers.

Tesla was an inventor, but he was much more than a producer of new devices: he was a discoverer of new principles, opening many new empires of knowledge which even today have been only partly explored. In a single mighty burst of invention he created the world of power of today; he brought into being our electrical power era, the rock-bottom foundation on which the industrial system of the entire world is builded; he gave us our mass-production system, for without his motors and currents it could not exist; he created the race of robots, the electrical mechanical men that are replacing human labor; he gave us every essential of modern radio; he invented the radar forty years before its use in World War II; he gave us our modern neon and other forms of gaseous-tube lighting; he gave us our fluorescent lighting; he gave us the high-frequency currents which are performing their electronic wonders throughout the industrial and medical worlds; he gave us remote control by wireless; he helped give us World War II, much against his will--for the misuse of his

superpower system and his robot controls in industry made it possible for politicians to have available a tremendous surplus of power, production facilities, labor and materials, with which to indulge in the most frightful devastating war that the maniacal mind could conceive. And these discoveries are merely the inventions made by the master mind of Tesla which have thus far been utilized--scores of others remain still unused.

Yet Tesla lived and labored to bring peace to the world. He dedicated his life to lifting the burdens from the shoulders of mankind; to bringing a new era of peace, plenty and happiness to the human race. Seeing the coming of World War II, implemented and powered by his discoveries, he sought to prevent it; offered the world a device which he maintained would make any country, no matter how small, safe within its borders--and his offer was rejected.

More important by far, however, than all his stupendously significant electrical discoveries is that supreme invention--Nikola Tesla the Superman--the human instrument which shoved the world forward with an accelerating lunge like an airplane cast into the sky from a catapult. Tesla, the scientist and inventor, was himself an invention, just as much as was his alternating-current system that put the world on a superpower basis.

Tesla was a superman, a self-made superman, invented and designed specifically to perform wonders; and he achieved them in a volume far beyond the capacity of the world to absorb. His life he designed on engineering principles to enable him to serve as an automaton, with utmost efficiency, for the discovery and application of the forces of Nature to human welfare. To this end he sacrificed love and pleasure, seeking satisfaction only in his accomplishments, and limiting his body solely to serving as a tool of his technically creative mind.

With our modern craze for division of labor and specialization of effort to gain efficiency of production in our industrial machine, one hesitates to think of a future in which Tesla's invention of the superman might be applied to the entire human race, with specialization designed for every individual from birth.

The superman that Tesla designed was a scientific saint. The inventions that this scientific martyr produced were designed for the peace, happiness and security of the human race, but they have been applied to create scarcity, depressions and devastating war. Suppose the superman invention were also developed and prostituted to the purposes of war-mongering politicians? Tesla glimpsed the possibilities and suggested the community life of the bee as a threat to our social structure unless the elements of individual and community lives are properly directed and personal freedom protected.

Tesla's superman was a marvelously successful invention--for Tesla--which seemed, as far as the world could observe, to function satisfactorily. He eliminated love from his life; eliminated women even from his thoughts. He went beyond Plato, who conceived of a spiritual companionship between man and woman free from sexual desires; he eliminated even the spiritual companionship. He designed the isolated life into which no woman and no man could enter; the self-suficient individuality from which all sex considerations were completely eliminated; the genius who would live entirely as a thinking and a working machine.

Tesla's superman invention was a producer of marvels, and he thought that he had, by scientific methods, succeeded in eliminating love from his life. That abnormal life makes a fascinating experiment for the consideration of the philosopher and psychologist, for he did not succeed in eliminating love. It manifested itself despite his conscientious efforts at suppression; and when it did so it came in the most fantastic form, providing a romance the like of which is not recorded in the annals of human history.

Tesla's whole life seems unreal, as if he were a fabled creature of some Olympian world. A reporter, after writing a story of his discoveries and inventions, concluded, "His accomplishments seem like the dream of an intoxicated god." It was Tesla's invention of the polyphase alternating-current system that was directly responsible for harnessing Niagara Falls and opened the modern electrical superpower era in which electricity is transported for hundred of miles, to operate the tens of thousands of mass-production factories of industrial systems. Every one of the tall Martian-like towers of the electrical transmission lines that stalk across the earth, and whose wires carry

electricity to distant cities, is a monument to Tesla; every powerhouse, every dynamo and every motor that drives every machine in the country is a monument to him.

Superseding himself, he discovered the secret of transmitting electrical power to the utmost ends of the earth without wires, and demonstrated his system by which useful amounts of power could be drawn from the earth anywhere merely by making a connection to the ground; he set the entire earth in electrical vibration with a generator which spouted lightning that rivaled the fiery artillery of the heavens. It was as a minor portion of this discovery that he created the modern radio system; he planned our broadcasting methods of today, forty years ago when others saw in wireless only the dot-dash messages that might save ships in distress.

He produced lamps of greater brilliance and economy than those in common use today; he invented the tube, fluorescent and wireless lamps which we now consider such up-to-the-minute developments; and he essayed to set the entire atmosphere of the earth aglow with his electric currents, to change our world into a single terrestrial lamp and to make the skies at night shine as does the sun by day.

If other first-magnitude inventors and discoverers may be considered torches of progress, Tesla was a conflagration. He was the vehicle through which the blazing suns of a brighter tomorrow focused their incandescent beams on a world that was not prepared to receive their light. Nor is it remarkable that this radiant personality should have led a strange and isolated life. The value of his contributions to society cannot be overrated. we can now analyze, to some extent, the personality that produced them. He stands as a synthetic genius, a self-made superman, the greatest invention of the greatest inventor of all times. But when we consider Tesla as a human being, apart from his charming and captivating social manners, it is hard to imagine a worse nightmare than a world inhabited entirely by geniuses.

When Nature makes an experiment and achieves an improvement it is necessary that it be accomplished in such a way that the progress will not be lost with the individual but will be passed on to future generations. In man, this requires a utilization of the social values of the race, cooperation

of the individual with his kind, that the improved status may be propagated and become a legacy of all. Tesla intentionally engineered love and women out of his life, and while he achieved gigantic intellectual stature, he failed to achieve its perpetuation either through his own progeny or through disciples. The superman he constructed was not great enough to embrace a wife and continue to exist as such. The love he sought to suppress in his life, and which he thought was associated only with women, is a force which, in its various aspects, links together all members of the human race.

In seeking to suppress this force entirely Tesla severed the bonds which might have brought to him the disciples who would, through other channels, have perpetuated the force of his prodigal genius. As a result, he succeeded in imparting to the world only the smallest fraction of the creative products of his synthetic superman.

The creation of a superman as demonstrated by Tesla was a grand experiment in human evolution, well worthy of the giant intellect that grew out of it, but it did not come up to Nature's standards; and the experiment will have to be made many times more before we learn how to create a super race with the minds of Teslas that can tap the hidden treasury of Nature's store of knowledge, yet endowed too with the vital power of love that will unlock forces, more powerful than any which we now glimpse, for advancing the status of the human race.

There was no evidence whatever that a superman was being born

when the stroke of midnight between July 9 and 10, in the year 1856, brought a son, Nikola, to the home of the Rev. Milutin Tesla and Djouka, his wife, in the hamlet of Smiljan, in the Austro-Hungarian border province of Lika, now a part of Yugoslavia. The father of the new arrival, pastor of the village church, was a former student in an oficers' training school who had rebelled against the restrictions of Army life and turned to the ministry as the field in which he could more satisfactorily express himself. The mother, although totally unable to read or write, was nevertheless an intellectually brilliant woman, who without the help of literal aids became really well educated.

Both father and mother contributed to the child a valuable heritage of culture developed and passed on by ancestral families that had been community leaders for many generations. The father came from a family that contributed sons in equal numbers to the Church and to the Army. The mother was a member of the Mandich family whose sons, for generations without number, had, with very few exceptions, become ministers of the Serbian Orthodox Church, and whose daughters were chosen as wives by ministers.

Djouka, the mother of Nikola Tesla (her given name in English translation would be Georgina), was the eldest daughter in a family of seven children. Her father, like her husband, was a minister of the Serbian Orthodox Church, Her mother, after a period of failing eyesight, had become blind shortly after the seventh child was born; so Djouka, the eldest daughter, at a tender age was compelled to take over the major share of her mother's duties. This not alone prevented her from attending school: her work at home so completely consumed her time that she was unable to acquire even the rudiments of reading and writing through home study. This was a strange situation in the cultured family of which she was a member. Tesla, however, always credited his unlettered mother rather than his erudite father with being the source from which he inherited his inventive ability. She devised many household labor-saving instruments. She was, in addition, a very practical individual, and her well-educated husband wisely left in her hands all business matters involving both the church and his household.

An unusually retentive memory served this remarkable woman as a good substitute for literacy. As the family moved in cultured circles she absorbed by ear much of the cultural riches of the community. She could repeat, without error or omission, thousands of verses of the national poetry of her country--the sagas of the Serbs--and could recite long passages from the Bible. She could narrate from memory the entire poetical- philosophical work Gorski ffenac (Mountain fireath), written by Bishop Petrovich Njegosh. She also possessed artistic talent and a versatile dexterity in her fingers for expressing it. She earned wide fame throughout the countryside for her beautiful needlework. According to Tesla, so great were her dexterity and her patience that she could, when over sixty, using only her fingers, tie three knots in an eyelash.

The remarkable abilities of this clever woman who had no formal education were transmitted to her five children. The elder son, Dane Tesla, born seven years before Nikola, was the family favorite because of the promise of an outstanding career which his youthful cleverness indicated was in store for him. He foreshadowed in his early years the strange manifestations which in his surviving brother were a prelude to greatness.

Tesla's father started his career in the military service, a likely choice for the son of an oficer; but he apparently did not inherit his father's liking for Army life. So slight an incident as criticism for failure to keep his brass buttons brightly polished caused him to leave military school. He was probably more of a poet and philosopher than a soldier. He wrote poetry which was published in contemporary papers. He also wrote articles on current problems which he signed with a pseudonym, "Srbin Pravicich." This, in Serb, means "Man of Justice." He spoke, read and wrote Serbo-Croat, German and Italian. It was probably his interest in poetry and philosophy that caused him to be attracted to Djouka Mandich. She was twenty-five and Milutin was two years older. He married her in 1847. His attraction to the daughter of a pastor probably influenced his next choice of a career, for he then entered the ministry and was soon ordained a priest.

He was made pastor of the church at Senj, an important seaport with facilities for a cultural life. He gave satisfaction, but apparently he achieved success among his parishioners on the basis of a pleasing personality and an understanding of problems rather than by using any great erudition in theological and ecclesiastical matters.

A few years after he was placed in charge of this parish, a new archbishop, elevated to head of the diocese, wished to survey the capabilities of the priests in his charge and offered a prize for the best sermon preached on his oficial visit. The Rev. Milutin Tesla was bubbling over, at the time, with interest in labor as a major factor in social and economic problems. To preach a sermon on this topic was, from the viewpoint of expediency, a totally impractical thing to do. Nobody, however, had ever accused the Rev. Mr. Tesla of being practical, so doing the impractical thing was quite in harmony with his nature. He chose the subject which held his greatest interest; and

when the archbishop arrived, he listened to a sermon on "Labor."

Months later Senj was surprised by an unanticipated visit from the archbishop, who announced that the Rev. Mr. Tesla had preached the best sermon, and awarded him a red sash which he was privileged to wear on all occasions. Shortly afterward he was made pastor at Smiljan, where his parish then embraced forty homes. He was later placed in charge of the much larger parish in the nearby city of Gospic. His first three children, Milka, Dane and Angelina, were born at Senj. Nikola and his younger sister, Marica, were born at Smiljan.

Tesla's early environment, then, was that of an agricultural community in a high plateau region near the eastern shore of the Adriatic Sea in the Velebit Mountains, a part of the Alps, a mountain chain stretching from Switzerland to Greece. He did not see his first steam locomotive until he was in his `teens, so his aptitude for mechanical matters did not grow out of his environment.

Tesla's homeland is today called Yugoslavia, a country whose name means "Land of the Southern Slavs." It embraces several former separate countries, Serbia, Bosnia, Croatia, Montenegro, Dalmatia and also Slovenia. The Tesla and Mandich families originally came from the western part of Serbia near Montenegro. Smiljan, the village where Tesla was born, is in the province of Lika, and at the time of his birth this was a dependent province held by the Austro-Hungarian Empire as part of Croatia and Slovenia.

Tesla's surname dates back more than two and a half centuries. Before that time the family name was Draganic (pronounced as if spelled Drag'-a-nitch). The name Tesla (pronounced as spelled, with equal emphasis on both syllables), in a purely literal sense, is a trade name like Smith, firight or Carpenter. As a common noun it describes a woodworking tool which, in English, is called an adz. This is an axe with a broad cutting blade at right angles to the handle, instead of parallel as in the more familiar form. It is used in cutting large tree trunks into squared timbers. In the Serbo-Croat language, the name of the tool is tesla. There is a tradition in the Draganic family that the members of one branch were given the nickname "Tesla" because of an inherited trait which caused practically all of them to have very large, broad and protruding front

teeth which greatly resembled the triangular blade of the adz.

The name Draganic and derivatives of it appear frequently in other branches of the Tesla family as a given name. When used as a given name it is frequently translated "Charlotte," but as a generic term it holds the meaning "dear" and as a surname is translated "Darling."

The majority of Tesla's ancestors for whom age records are available lived well beyond the average span of life for their times, but no definite record has been found of the ancestor who, Tesla claimed, lived to be one hundred and forty years of age. (His father died at the age of fifty-nine, and his mother at seventy-one.)

Although many of Tesla's ancestors were dark eyed, his eyes were a gray-blue. He claimed his eyes were originally darker, but that as a result of the excessive use of his brain their color changed. His mother's eyes, however, were gray and so are those of some of his nephews. It is probable, therefore, that his gray eyes were inherited, rather than faded by excessive use of the brain.

Tesla grew to be very tall and very slender--tallness was a family and a national trait. When he attained full growth he was exactly two meters, or six feet two and one-quarter inches tall. while his body was slender, it was built within normal proportions. His hands, however, and particularly his thumbs, seemed unusually long.

Nikola's older brother Dane was a brilliant boy and his parents gloried in their good fortune in being blessed with such a fine son. There was, however, a difference of seven years in the two boys' ages, and since the elder brother died as the result of an accident at the age of twelve, when Nikola was but five years old, a fair comparison of the two seems hardly possible. The loss of their first-born son was a great blow to his mother and father; the grief and regrets of the family were manifest in idealizing his talents and predicting possibilities of greatness he might have realized, and this situation was a challenge to Nikola in his youth.

The superman Tesla developed out of the superboy Nikola. Forced to rise above the normal level by an urge to carry on for his dearly beloved departed brother, and also on his

own account to exceed the great accomplishment his brother might have attained had he lived, he unconsciously drew upon strange resources within. The existence of these resources might have remained unsuspected for a lifetime, as happens with the run of individuals, if Nikola had not felt the necessity for creating a larger sphere of life for himself.

He was aware as a boy that he was not like other boys in his thoughts, in his amusements and in his hobbies. He could do the things that other lads his age usually do, and many things that they could not do. It was these latter things that interested him most, and he could find no companions who would share his enthusiasms for them. This situation caused him to isolate himself from contemporaries, and made him aware that he was destined for an unusual place if not great accomplishments in life. His boyish mind was continually exploring realms which his years had not reached, and his boyhood attainments frequently were worthy of men of mature age.

He had, of course, the usual experience of unusual incidents that fall to the lot of a small boy. One of the earliest events which Tesla recalled was a fall into a tank of hot milk that was being scalded in the process used by the natives of that region as a hygienic measure, anticipating the modern process of pasteurizing.

Shortly afterward he was accidentally locked in a remote mountain chapel which was visited only at widely separated intervals. He spent the night in the small building before his absence was discovered and his possible hiding place determined.

Living close to Nature, with ample opportunity for observing the flight of birds, which has ever filled men with envy, he did what many another boy has done with the same results. An umbrella, plus imagination, offered to him a certain solution of the problem of free flight through the air. The roof of a barn was his launching platform. The umbrella was large, but its condition was much the worse for many years of service; it turned inside out before the flight was well started. No bones were broken, but he was badly shaken up and spent the next six weeks in bed. Probably, though, he had better reason for making this experiment than most of the others who have tried it. He revealed that practically all his life he experienced a

peculiar reaction when breathing deeply. When he breathed deeply he was overcome by a feeling of lightness, as if his body had lost all weight; and he should, he concluded, be able to fly through the air merely by his will to do so. He did not learn, in boyhood, that he was unusual in this respect.

One day when he was in his fifth year, one of his chums received a gift of a fishing line, and all the boys in the group planned a fishing trip. On that day he was on the outs with his chums for some unremembered reason. As a result, he was informed he could not join them. He was not permitted even to see the fishing line at close range. He had glimpsed, however, the general idea of a hook on the end of a string. In a short time he had fashioned his own interpretation of a hook. The refinement of a barb had not occurred to him and he also failed to evolve the theory of using bait when he went off on his own fishing expedition. The baitless hook failed to attract any fish but, while dangling in the air, much to Tesla's surprise and satisfaction it snared a frog that leaped at it. He came home with a bag of nearly two dozen frogs. It may have been a day on which the fish were not biting, but at any rate his chums came home from the use of their new hook and line without any fish. His triumph was complete. When he later revealed his technique, all the boys in the neighborhood copied his hook and method, and in a short time the frog population of the region was greatly depleted.

The contents of birds' nests always excited Tesla's curiosity. He rarely disturbed their contents or occupants. On one occasion, however, he climbed a rocky crag to investigate an eagle's nest and took from it a baby eagle which he kept locked in a barn. A bird on the wing he considered fair prey for his sling shot, with which he was a star performer.

About this time he became intrigued with a piece of hollow tube cut from a cane growing in the neighborhood. This he played with until he had evolved a blow gun and later, by making a plunger and plugging one end of the tube with a wad of wet hemp, a pop gun. He then undertook the making of larger pop guns, and contrived one in which the end of the plunger was held against the chest and the tube pulled energetically toward the body. He engaged in the manufacture of this article for his chums, as a five-year-old businessman. When a number of window panes happened to

get broken accidentally by getting in the way of his hemp wad, his inventive proclivities in this field were quickly curbed by the destruction of the pop guns and the administration of the parental rod.

Tesla started his formal education by attending the village school in Smiljan before he reached his fifth birthday. A few years later his father received his appointment as pastor of a church in the nearby city of Gospic, so the family moved there. This was a sad day for young Tesla. He had lived close to Nature, and loved the open country and the high mountains among which he had thus far spent all of his life. The sudden transition to the artificialities of the city was a very definite shock to him. He was out of harmony with his new surroundings.

His advent into the city life of Gospic, at the age of seven, got off to an unfortunate start. As the new minister in town, his father was anxious to have everything move smoothly. Tesla was required to dress in his best clothes and attend the Sunday services. Naturally, he dreaded this ordeal and was very happy when assigned the task of ringing the bell summoning the worshipers to the service and announcing the close of the ceremonies. This gave him an opportunity to remain unseen in the belfry while the parishioners, their daughters and dude sons were arriving and departing.

Thinking he had waited long enough after the close of the service for the church to be cleared on this first Sunday, he came downstairs three steps at a time. A wealthy woman parishioner wearing a skirt with a long train that fashionably dragged along the ground, and who had come to the service with a retinue of servants, remained after the other parishioners to have a talk with the new pastor. She was just making an impressive exit when Tesla's final jump down the stairs landed him on the train, ripping this dignity-preserving appendage from the woman's dress. Her mortification and rage and his father's anger came upon him simultaneously. Parishioners loitering outside rushed back to revel in the spectacle. Thereafter no one dared be pleasant to this youngster who had enraged the wealthy dowager who domineered it over the social community. He was practically ostracized by the parishioners, and continued so until he redeemed himself in a spectacular manner.

Tesla felt strange and defeated in his ignorance of city ways. He met the situation first by avoidance. He did not care to leave his home. The boys of his age were neatly dressed every day. They were dudes and he did not belong. Even as a child Tesla was meticulously careful in dress. At the earliest moment, however, he would slip work clothes over his dress clothes and go wandering in the woods or engage in mechanical work. He could not enjoy life if limited to the activities in which he could engage while dressed up. Tesla, however, possessed ingenuity, and there was rarely a situation in which he was not able to use it. He also possessed knowledge of the ways of Nature. These gave him a distinct superiority over the city boys.

About a year after the family moved to Gospic a new fire company was organized. It was to be supplied with a pump which would replace the useful but inadequate bucket brigade. The members of the new organization obtained brightly colored uniforms and practiced marching for parades. Eventually the new pump arrived. It was a man-power pump to be operated by sixteen men. A parade and demonstration of the new apparatus was arranged. Almost everyone in Gospic turned out for the event and followed to the river front for the pump demonstration. Tesla was among them. He paid no attention to the speeches but was all eyes for the brightly painted apparatus. He did not know how it worked but would have loved to take it apart and investigate the insides.

The time for the demonstration came when the last speaker, finishing his dedicatory address, gave the order to start the pumping operation that would send a stream of water shooting skyward from the nozzle. The eight men regimented on either side of the pump bowed and rose in alternate unison as they raised and lowered the bars that operated the pistons of the pump. But nothing else happened, not a drop of water came from the nozzle!

Oficials of the fire company started feverishly to make adjustments and, after each attempt, set the sixteen men oscillating up and down at the pump handles, but each time without results. The lines of hose between the pump and the nozzle were straightened out, they were disconnected from the pump and connected again. But no water came from the far end of the hose to reward the efforts of the perspiring firemen.

Tesla was among the usual group of urchins that always manages to get inside the lines on such occasions. He tried to see everything that was going on from the closest possible vantage point and undoubtedly got on the nerves of the vexed oficials when their repeated efforts were frustrated by continuous failures. As one of the oficials turned for the tenth time to vent his frustration on the urchins and order them away from his range of action, Tesla grabbed him by the arm.

"I know what to do, Mister," said Tesla. "you keep pumping."

Dashing for the river, Tesla peeled his clothes off quickly and dove into the water. He swam to the suction hose that was supposed to draw the water supply from the river. He found it kinked, so that no water could flow into it, and flattened by the vacuum created by the pumping. When he straightened out the kink, the water rushed into the line. The nozzlemen had stood at their post for a long time, receiving a continuous repetition of warnings to be prepared each time an adjustment was made, but, as nothing happened on these successive occasions, they had gradually relaxed their attention and were giving little thought to the direction in which the nozzle was pointed. When the stream of water did shoot skyward, down it came on the assembled oficials and townspeople. This item of unexpected drama excited the crowd at the other end of the line near the pump, and to give vent to their joy they seized the scantily dressed Tesla, boosted him to the shoulders of a couple of the firemen, and led a procession around the town. The seven-year-old Tesla was the hero of the day.

Later on Tesla, in explaining the incident, said that he had had not the faintest idea of how the pump worked; but as he watched the men struggle with it, he got an intuitive flash of knowledge that told him to go to the hose in the river. On looking back to that event, he said, he knew how Archimedes must have felt when, after discovering the law of the displacement of water by floating objects, he ran naked through the streets of Syracuse shouting "Eureka!

At the age of seven Tesla had tasted the pleasures of public acclaim

for his ingenuity. And further, he had done something which the dudes, the boys of his age in the city, could not do

and which even their fathers could not do. He had found himself. He was now a hero, and it could be forgotten that he had jumped on a woman's skirt and ripped the train off.

Tesla never lost an opportunity to hike through the nearby mountains where he could again enjoy the pleasures of his earlier years spent so close to Nature. On these occasions he would often wonder if there was still operating a crude water wheel which he made and installed, when he was less than five years old, across the mountain brook near his home in Smiljan.

The wheel consisted of a not too well-smoothed disk cut from a tree trunk in some lumbering operations. Through its center he was able to cut a hole and force into it a somewhat straight branch of a tree, the ends of which he rested in two sticks with crotches which he forced into the rock on either bank of the brook. This arrangement permitted the lower part of the disk to dip in the water and the current caused it to rotate. To the lad there was a great deal of originality employed in making this ancient device. The wheel wobbled a bit but to him it was a marvelous piece of construction, and he got no end of pleasure out of watching his water wheel obtain power from the brook.

This experiment undoubtedly made a life-long impression on his young plastic mind and endowed him with the desire, ever afterward manifested in his work, of obtaining power from Nature's sources which are always being dissipated and always being replenished.

In this smooth-disk water wheel we find an early clue to his later invention of the smooth-disk turbine. In his later experience he discovered that all water wheels have paddles--but his little water wheel had operated without paddles.

Tesla's first experiment in original methods of power production was made when he was nine years old. It demonstrated his ingenuity and originality, if nothing else. It was a sixteen-bug-power engine. He took two thin slivers of wood, as thick as a toothpick and several times as long, and glued them together in the form of a cross, so they looked like the arms of a windmill. At the point of intersection they were glued to a spindle made of another thin sliver of wood. On this he slipped a very small pulley

with about the diameter of a pea. A piece of thread acting as a driving belt was slipped over this and also around the circumference of a much larger but light pulley which was also mounted on a thin spindle. The power for this machine was furnished by sixteen May bugs (June bugs in the United States). He had collected a jar full of the insects, which were very much of a pest in the neighborhood. With a little dab of glue four bugs were afixed, heading in the same direction, to each of the four arms of the windmill arrangement. The bugs beat their wings, and if they had been free would have flown away at high speed. They were, however, attached to the cross arms, so instead they pulled them around at high speed. These, being connected by the thread belt to the large pulley, caused the latter to turn at low speed; but it developed, Tesla reports, a surprisingly large torque, or turning power.

Proud of his bug-power motor and its continuous operation--the bugs did not cease flying for hours--he called in one of the boys in the neighborhood to admire it. The lad was a son of an Army oficer. The visitor was amused for a short time by the bug motor, until he spied the jar of still unused May bugs. Without hesitation he opened the jar, fished out the bugs--and ate them. This so nauseated Tesla that he chased the boy out of the house and destroyed the bug motor. For years he could not tolerate the sight of May bugs without a return of this unpleasant reaction.

This event greatly annoyed Tesla because he had planned to add more spindles to the shaft and stick on more fliers until he had more than a one-hundred-bug-power motor.

TESLA'S years in school were more important for the activities in which he engaged in after-school hours than for what he learned in the classroom. At the age of ten, having finished his elementary studies in the Normal School, Tesla entered the college, called the Real Gymnasium, at Gospic. This was not an unusually early age to enter the Real Gymnasium, as that school corresponds more to our grammar school and junior high school than to our college.

One of the requirements, and one to which an unusually large percentage of the class time was devoted throughout the four years, was freehand drawing. Tesla detested the subject almost to the point of open rebellion, and his marks were accordingly very low, but not entirely owing to a lack of ability.

Tesla was left-handed as a boy, but later became ambidextrous. Left-handedness was a definite handicap in the freehand-drawing studies, but he could have done much better work than he actually produced and would have gotten higher marks if it were not for a piece of altruism in which he engaged. A student whom he could excel in drawing was striving hard for a scholarship. Were he to receive the lowest marks in freehand drawing, he would be unable to obtain the scholarship. Tesla sought to help his fellow student by intentionally getting the lowest rating in the small class.

Mathematics was his favorite subject and he distinguished himself in that study. His unusual proficiency in this field was not considered a counterbalancing virtue to make amends for his lack of enthusiasm for freehand drawing. A strange power permitted him to perform unusual feats in mathematics. He possessed it from early boyhood, but had considered it a nuisance and tried to be rid of it because it seemed beyond his control.

If he thought of an object it would appear before him exhibiting the appearance of solidity and massiveness. So greatly did these visions possess the attributes of actual objects that it was usually dificult for him to distinguish between vision and reality. This abnormal faculty functioned in a very useful fashion in his school work with mathematics.

If he was given a problem in arithmetic or algebra, it was immaterial to him whether he went to the blackboard to work it out or whether he remained in his seat. His strange faculty permitted him to see a visioned blackboard on which the problem was written, and there appeared on this blackboard all of the operations and symbols required in working out the solution. Each step appeared much more rapidly than he could work it out by hand on the actual slate. As a result, he could give the solution almost as quickly as the whole problem was stated.

His teachers, at first, had some doubts about his honesty, thinking he had worked out some clever deceit for getting the right answers. In due time their skepticism was dispelled and they accepted him as a student who was unusually apt at mental arithmetic. He would not reveal this power to anyone and would discuss it only with his mother, who in the past had encouraged him in his efforts to banish it. Now that the power had demonstrated some definite usefulness, though, he was not so anxious to be completely rid of it, but desired to bring it under his complete control.

Work that Tesla did outside school hours interested him much more than his school work. He was a rapid reader and had a memory that was retentive to the point, almost, of infallibility. He found it easy to acquire foreign languages. In addition to his native Serbo-Croat language he became proficient in the use of German, French and Italian. This opened to him great stores of knowledge to which other students did not have access, yet this knowledge, apparently, was of little use to him in his school work. He was interested in things mechanical but the school provided no manual training course. Nevertheless, he became proficient in the working of wood and metals with tools and methods of his own contriving.

In the classroom of one of the upper grades of the Real Gymnasium models of water wheels were on exhibition. They were not working models but nevertheless they aroused Tesla's enthusiasm. They recalled to him the crude wheel he had constructed in the hills of Smiljan. He had seen pictures of the magnificent Niagara Falls. Coupling the power possibilities presented by the majestic waterfalls and the intriguing possibilities he saw in the models of the water wheels, he aroused in himself a passion to accomplish a grand achievement. Waxing eloquent on the subject, he told his father, "Some day I am going to America and harness Niagara Falls to produce power." Thirty years later he was to see this prediction fulfilled.

There were many books in his father's library. The knowledge in those books interested him more than that which he received in school and he wished to spend his evenings reading them. As in other matters, he carried this to an extreme, so his father forbade him to read them, fearing that he would ruin his eyes in the poor light of tallow candles then used for illumination. Nikola sought to

circumvent this ruling by taking candles to his room and reading after he was sent to bed, but his violation of orders was soon discovered and the family candle supply was hidden. Next he fashioned a candle mould out of a piece of tin and made his own candles. Then, by plugging the keyhole and the chinks around the door, he was able to spend the night hours reading volumes purloined from his father's bookshelves. Frequently, he said, he would read through the entire night and feel none the worse for the loss of sleep. Eventual discovery, however, brought paternal discipline of a vigorous nature. He was about eleven years old at this time.

Like other boys of his age he played with bows and arrows. He made bigger bows, and better, straighter shooting arrows, and his marksmanship was excellent. He was not willing to stop at that point. He started building arbalists. These could be described as bow-and-arrow guns. The bow is mounted on a frame and the string pulled back and caught on a peg from which it is released by a trigger. The arrow is laid on the midpoint of the bow, its end against the taut string. The bow lies horizontal on the frame whereas in ordinary manual shooting the bow is held in vertical position. For this reason the device is sometimes called the crossbow. In setting an arbalist the beam is placed against the abdomen and the string pulled back with all possible force. Tesla did this so often, he said, that his skin at the point of pressure became calloused until it was more like a crocodile's hide. When shot into the air the arrows from his arbalist were never recovered, for they went far out of sight. At close range they would pass through a pine board an inch thick.

Tesla got a thrill out of archery not experienced by other boys. He was, in imagination, riding those arrows which he shot out of sight into the blue vault of the heavens. That sense of exhilaration he experienced when breathing deeply gave him such a feeling of lightness he convinced himself that in this state it would be relatively easy for him to fly through the air if he only could devise some mechanical aid that would launch him and enable him to overcome what he thought was only a slight remaining weight in his body. His earlier disastrous jump from the barn roof had not disillusioned him. His conclusions were in keeping with his sensations; but a twelve-year-old lad exploring this dificult field alone cannot be condemned too severely for not discovering that our senses sometimes deceive us, or

rather that we sometimes deceive ourselves in interpreting what our senses tell us.

In breathing deeply he was overventilating his lungs, taking out some of the residual carbon dioxide which is chemical "ashes," and largely inert, and replacing it with air containing a mixture of equally inert nitrogen and very active oxygen. The latter being present in more than normal proportions immediately began to upset chemical balances throughout the body. The reaction on the brain produces a result which does not differ greatly from alcohol intoxication. A number of cults use this procedure to induce "mystical" or "occult" experiences. How was a twelve-year-old boy to know all these things? He could see that birds did an excellent job in flying. He was convinced that some day man would fly, and he wanted to produce the machine that would get him off the ground and into the air.

The big idea came to him when he learned about the vacuum--a space within a container from which all air had been exhausted. He learned that every object exposed to the air was under a pressure of about fourteen pounds per square inch, while in a vacuum objects were free of such pressure. He figured that a pressure of fourteen pounds should turn a cylinder at high speed and he could arrange to get advantage of such pressure by surrounding one half of a cylinder with a vacuum and having the remaining half of its surface exposed to air pressure. He carefully built a box of wood. At one end was an opening into which a cylinder was fitted with a very high order of accuracy, so that the box would be airtight; and on one side of the cylinder the edge of the box made a right-angle contact. On the cylinder's other side the box made a tangent, or flat, contact. This arrangement was made because he wanted the air pressure to be exerted at a tangent to the surface of the cylinder--a situation that he knew would be required in order to produce rotation. If he could get that cylinder to rotate, all he would have to do in order to fly would be to attach a propeller to a shaft from the cylinder, strap the box to his body and obtain continuous power from his vacuum box that would lift him through the air. His theory of course was fallacious, but he had no means of knowing that at the time.

The workmanship on this box was undoubtedly of a very high order, considering it was made by a self-instructed twelve-year-old mechanic. When he connected his vacuum pump, an

ordinary air pump with its valves reversed, he found the box was airtight, so he pulled out all the air, watching the cylinder intently while doing so. Nothing happened for many strokes of the pump except that it made his back lame to pull the pump handle upward while he created the most "powerful" possible vacuum. He rested for a moment. He was breathing deeply from exertion, overventilating his lungs, and getting that joyous, dizzy, light-as-air feeling which was a highly satisfactory mental environment for his experiment.

Suddenly the cylinder started to turn--slowly! His experiment was a success! His vacuum-power box was working! He would fly!

Tesla was delirious with joy. He went into a state of ecstasy. There was no one with whom he could share this joy, as he had taken no one into his confidence. It was his secret and he was forced to endure its joys alone. The cylinder continued to turn slowly. It was no hallucination. It was real. It did not speed up, however, and this was disappointing. He had visualized it turning at a tremendous speed but it was actually turning extremely slowly. His idea, at least, he figured, was correct. With a little better workmanship, perhaps he could make the cylinder turn faster. He stood spellbound watching it turn at a snail's pace for less than half a minute--and then the cylinder stopped. That broke the spell and ended for the time his mental air flights.

He hunted for the trouble and quickly located what he was sure was the cause of the dificulty. Since the vacuum, he theorized, is the source of power, then, if the power stops, it must be because the vacuum is gone. His pump, he felt sure, must be leaking air. He pulled up the handle. It came up easily and that meant very definitely he had lost the vacuum in the box. He again pumped out the air--and again when he reached a high vacuum the cylinder started to turn slowly and continued to do so for a fraction of a minute. When it stopped he again pumped a vacuum and again the cylinder turned. This time he continued to operate the pump and the cylinder continued to turn. He could keep it turning as long as he desired by continuing to pump the vacuum.

There was nothing wrong with his theory, as far as he could see. He went over the pump very carefully, making

improvements which would give him a high vacuum, and studied the valve to make that a better guard of the vacuum in the box. He worked on the project for weeks but despite his best efforts he could get no better results than the slow movement of the cylinder.

Finally the truth came to him in a flash--he was losing the vacuum in the box because the air was leaking in around the cylinder on that side where the flat board was tangent to the surface of the cylinder. As the air flowed into the box it pulled the cylinder around with it very slowly. When the air stopped flowing into the box the cylinder stopped turning. He knew now his theory was wrong. He had supposed that even with the vacuum being maintained, and no air leaking in, the air pressure would be exerted at a tangent to the surface of the cylinder and the pressure would produce motion in the same way as pushing on the rim of a wheel will cause it to turn. He discovered later, however, that the air pressure is exerted at right angles to the surface of the cylinder at all points, like the direction of the spokes of a wheel, and therefore it could not be used to produce rotation in the way he planned.

This experiment, nevertheless, was not a total loss, even though it greatly disheartened him. The knowledge that the air leaking into a vacuum had actually produced even a small amount of rotation in a cylinder remained with him and led directly, many years later, to his invention of the "Tesla turbine," the steam engine that broke all records for horsepower developed per pound of weight--what he called "a power house in a hat."

Nature seemed to be constantly engaged in staging spectacular demonstrations for young Tesla, revealing to him samples of the secret of her mighty forces.

Tesla was roaming in the mountains with some chums one winter day after a storm in which the snow fell moist and sticky. A small snowball rolled on the ground quickly gathered more snow to itself and soon became a big one that was not too easy to move. Tiring of making snowmen and snow houses on level stretches of ground, the boys took to throwing snowballs down the sloping ground of the mountain. Most of them were duds--that is, they got stalled in the soft snow before they accumulated additional volume. A few rolled a distance, grew larger and then bogged down and stopped. One, however, found just the right conditions; it

rolled until it was a large ball and then spread out, rolling up the snow at the sides as if it were rolling up a giant carpet, and then suddenly it turned into an avalanche. Soon an irresistible mass of snow was moving down the steep slope. It stripped the mountainside clean of snow, trees, soil and everything else it could carry before it and with it. The great mass landed in the valley below with a thud that shook the mountain. The boys were frightened because there was snow above them on the mountain that might have been shaken into a downward slide, carrying them along buried in it.

This event made a profound impression on Tesla and it dominated a great deal of his thinking in later life. He had witnessed a snowball weighing a few ounces starting an irresistible, devastating movement of thousands of tons of inert matter. It convinced him that there are tremendous forces locked up in Nature that can be released in gigantic amounts, for useful as well as destructive purposes, by the employment of small trigger forces. He was always on the lookout for such triggers in his later experiments.

Tesla even as a boy was an original thinker and he never hesitated to think thoughts on a grand scale, always carrying everything to its largest ultimate dimension as a means of exploring the cosmos. This is demonstrated by another event that took place the following summer. He was wandering alone in the mountains when storm clouds started to fill the sky. There was a flash of lightning and almost immediately a deluge of rain descended on him.

There was implanted in his thirteen-year-old mind on that occasion a thought which he carried with him practically all his life. He saw the lightning flash and then saw the rain come down in torrents, so he reasoned that the lightning flash produced the downpour. The idea become firmly fixed in his mind that electricity controlled the rain, and that if one could produce lightning at will, the weather would be brought under control. Then there would be no dry periods in which crops would be ruined; deserts could be turned into vineyards, the food supply of the world would be greatly increased, and there would be no lack of food anywhere on the globe. why could he not produce lightning?

The observation and the conclusions drawn from it by young Tesla were worthy of a more mature mind, and it would

require a genius among the adults to have evolved the project of controlling the world's weather through such means. There was, however, a flaw in his observation. He saw the lightning come first and the rain afterward. Further investigation would have revealed to him that the order of events was reversed higher in the air. It was the rain that came first and the lightning afterward up in the cloud. The lightning, however, arrived first because it made the trip from the cloud in less than 1/100,000 of a second, while the raindrops required several seconds to fall to the ground.

At this time there was planted in Tesla's mind the seed of a project which matured more than thirty years later when, in the mountains of Colorado, he actually produced bolts of lightning, and planned later to use them to bring rain. He never succeeded in convincing the U.S. Patent Ofice of the practicability of the rain-making plan.

Tesla, as a boy, knew no limits to the universe of his thinking; and as a result he built an intellectual realm suficiently large to provide ample space in which his more mature mind could operate without encountering retarding barriers.

Tesla finished his course at the Real Gymnasium in Gospic in 1870,

at the age of fourteen. He had distinguished himself as a scholar. In one grade, however, his mathematics professor gave him less than a passing mark for his year's work. Tesla felt an injustice had been done him, so he went to the director of the school and demanded that he be given the strictest kind of examination in the subject. This was done in the presence of the director and the professor, and Tesla passed it with an almost perfect mark.

His fine work at school and the recognition by the towns-people that he possessed a broader scope of knowledge than any other youth in town led the trustees of the public library to ask him to classify the books in their possession and make a catalogue. He had already read most of the books in his father's extensive library, so he was pleased to have close access to a still larger collection and undertook the task with considerable enthusiasm. He had scarcely begun work on this project when it was interrupted by a long intermittent illness. When he felt too depressed

to go to the library he had quantities of the books brought to his home, and these he read while confined to his bed. His illness reached a critical stage and physicians gave up hope of saving his life.

Tesla's father knew that he was a delicate child and, having lost his other son, tried to throw every possible safeguard around this one. He was greatly pleased over his son's brilliant accomplishments in almost every activity in which he engaged, but he recognized as a danger to Nikola's health the great intensity with which he tackled projects. Nikola's trend toward engineering was to him a dangerous development, as he thought work in that field would make too heavy demands upon him, not only because of the nature of the work but in the extended years of study in which he would have to engage. If, however, the boy entered the ministry, it would not be necessary for him to extend his studies beyond the Real Gymnasium which he had just completed. For this reason his father favored a career for him in the Church.

Illness threw everything into a somber aspect. When the critical stage of his illness was reached and his strength was at its lowest ebb, Nikola manifested no inclination to help himself get better by developing an enthusiasm for anything. It was in this stage of his illness that he glanced listlessly at one of the library books. It was a volume by Mark Twain. The book held his interest and then aroused his enthusiasm for life, enabling him to pass a crisis, and his health gradually returned to normal. Tesla credited the Mark Twain book with saving his life, and when, years later, he met Twain, they became very close friends.

At the age of fifteen Tesla, in 1870, continued his studies at the Higher Real Gymnasium, corresponding to our college, at Karlovac (Carlstadt) in Croatia. His attendance at this school was made possible by an invitation from a cousin of his father's, married to a Col. Brankovic, whose home was in Karlovac, to come and live with her and her husband, a retired Army oficer, while attending school. His life there was none too happy. Scarcely had he arrived when he contracted malaria from the mosquitoes in the Karlovac lowlands, and he was never free from the malady for years afterward.

Tesla relates that he was hungry all during the three years he spent at Karlovac. There was plenty of deliciously prepared food in the home, but his aunt held the theory that because his health seemed none too rugged he should not eat heavy meals. Her husband, a gruff and rugged individual, when carving a second helping for himself, would sometimes try to slip a healthy slice of meat onto Tesla's plate; but the Colonel was always overruled by his wife, who would take back the slice and carve one to the thinness of a sheet of paper, warning her husband, "Niko is delicate and we must be very careful not to overload his stomach."

His studies at Karlovac interested him, however, and he completed the four-year course in three years, tackling the school work with a dangerous enthusiasm, partly as an escape mechanism to divert his attention from the none too pleasing conditions where he was living. The lasting favorable impression which Tesla carried away from Karlovac concerned his professor of physics, a clever and original experimenter, who amazed him with the feats he performed with laboratory apparatus. He could not get enough of this course. He wanted to devote his whole time henceforth to electrical experimenting. He knew he would not be satisfied in any other field. His mind was made up; he had selected his career.

His father wrote to him shortly before his graduation advising him not to return home when school was closed but to go on a long hunting trip. Tesla, however, was anxious to get home--to surprise his parents with the good news that he had completed his work at the Higher Real Gymnasium a year ahead of schedule, and to announce his decision to make the study of electricity his life work. Greatly worried, his parents, who at that moment were making strenuous efforts to protect his health, were doubly alarmed. first, there was his violation of the instruction sent him not to return to Gospic. The reason for this advice they had not disclosed--an epidemic of cholera was raging. And second, there was his decision to enter on a career which they feared would make dangerous demands on his delicate health. On returning home, he found his plan definitely opposed. This made him very unhappy. In addition, he would shortly have to face a situation which was even more repugnant than entering upon a career in the Church, and that was the compulsory three-years' service in the Army. Those two powerful factors were operating against

him and seeking to thwart him in his burning desire to start immediately unraveling the mystery and harnessing the great power of electricity.

Nothing, he thought, could exceed the dificulty of the predicament in which he found himself. In this, however, he was mistaken, for he was soon to face a much more serious problem. On the very day after his arrival home, while these issues were still red hot, he became ill with cholera. He had come home malnourished because of the inadequate amount of food to which he had been limited and the strain of his intense application to his studies. Besides, he was still suffering from malaria. Then came the cholera. Now all other problems became secondary to the immediate one of maintaining life itself against the deadly scourge. His physical condition made the doctors despair of saving him. Nevertheless, he survived the crisis, but it left him in a thoroughly weakened and run-down condition. For nine months he lay in bed almost a physical wreck. He had frequent sinking spells and from each successive one it seemed harder to rally him.

Life held no incentive for him. If he survived he would be forced to enter the Army and, if nothing happened to prevent him from finishing that term of something worse than slavery, he would be forced to study for the ministry. He did not care whether he survived or not. Left to his own decision, he would not have rallied from earlier sinking spells; but the decision was not left to him. Some force stronger than his own consciousness carried him through, but it had to succeed in spite of him and not because of any assistance he was giving. The sinking spells came on with startling regularity, each one with increasing depth. It seemed a miracle that he had come out of the last one, and now with less reserve strength he was sinking into another and edging rapidly into unconsciousness. His father entered his room and tried desperately to rouse him and stir him to a more cheerful and hopeful attitude in which he could help himself and do more than the doctors could do for him, but without results.

"I could--get well--if you--would let me--study electrical--engineering," said the prostrate young man in a hardly audible whisper. He had scarcely enough energy left for even this effort; and having made the speech, he seemed to be dropping over the edge of nothingness. His father,

bending intently over him and fearing the end had come, seized him.

"Nikola," he commanded, "you cannot go. you must stay. you will be an engineer. Do you hear me? you will go to the best engineering school in the world and you will be a great engineer. Nikola, you must come back, you must come back and become a great engineer."

The eyes of the prostrate figure opened slowly. Now there was a light shining in the eyes where before they presented a death-like glaze. The face moved a little, very little, but the slight change this movement made seemed to be in the direction of a smile. It was a smile, a weak one, and he was able to keep his eyes open although it was very apparently a struggle for him to do so.

"Thank God" said his father. "you heard me, Nikola. you will go to an engineering school and become a great engineer. Do you understand me?"

There was not enough energy for voice but the smile became a little more definite.

Another crisis in which he had escaped death by the narrowest margin had been passed. His rise out of this situation seemed almost miraculous. It seemed to him, Tesla later related, that from that instant he felt as if he were drawing vital energy from his loved ones who surrounded him; and this he used to rally himself out of the shadow.

He was again able to whisper. "I will get well," he said weakly. He breathed deeply, as deep as his frail tired frame would permit, of the oxygen which he had found so stimulating in the past. It was the first time he had done so in the nine months since he became ill. With each breath he felt reinvigorated. He seemed to get stronger by the minute.

In a very short time he was taking nourishment and within a week he was able to sit up. In a few days more he was on his feet. Life now would be glorious. He would be an electrical engineer. Everything he dreamed of would come true. As the days passed he recovered his strength at a remarkably rapid rate and his hearty appetite returned. It was now early summer. He would prepare himself to enter the fall term at an engineering school.

But there was something he had forgotten, everyone in the family had forgotten, in the stress of his months of illness. It was now brought sharply to his and their attention. An Army summons--he must face three years' military servitude! was his remarkable recovery to be ruined by this catastrophe, which seemed all the worse now that his chosen career seemed otherwise nearer? Failure to respond to a military summons meant jail--and after that the service in addition. How would he solve this problem?

There is no record of what took place. This spot in his career Tesla glossed over with the statement that his father considered it advisable for him to go off on a year's hunting expedition to recover his health. At any rate, Nikola disappeared. He left with a hunting outfit and some books and paper. where he spent the year, no one knows--probably at some hideaway in the mountains. In the meantime, he was a fugitive from Army service.

For any ordinary individual this situation would be a most serious one. For Tesla it had all the gravity associated with ordinary cases, plus the complication that his family on his father's side was a traditional military family whose members had won high rank and honors in Army activities, and many of whom were now in the service of Austria-Hungary. For a member of that family to become equivalent to a "draft dodger" and a "conscientious objector," both, was a serious blow to its prestige, and could provoke a scandal if word of the situation got into circulation. Tesla's father used this circumstance and the fact of NikoIa's delicate health as talking points to induce his relatives in Army positions to use their influence to enable his son to escape conscription and avoid punishment for failing to respond to the Army call. In this he was successful, apparently, but required considerable time in which to make the arrangements.

Hiding in the mountains and with a year's time to kill, on this enforced vacation Tesla was able to indulge in working out totally fantastic plans for some gigantic projects. One of the plans was for the construction and operation of an under-ocean tube, connecting Europe and the United States, by which mail could be transported in spherical containers moved through the tube by water pressure. He discovered early in his calculations that the friction of the water on the walls of the tube would require such a tremendous

amount of power to overcome it that it made the project totally impracticable. Since, however, he was working on the project entirely for his own amusement, he eliminated friction from the calculations and was then able to design a very interesting system of high-speed intercontinental mail delivery. The factor which made this interesting project impracticable--the drag of the water on the sides of the tube--Tesla was later to utilize when he invented his novel steam turbine.

The other project with which he amused himself was drawn upon an even larger scale and required a still higher order of imagination. He conceived the project of building a ring around the earth at the Equator, somewhat resembling the rings around the planet Saturn. The earth ring, however, was to be a solid structure whereas Saturn's rings are made up of dust particles.

Tesla loved to work with mathematics, and this project gave him an excellent opportunity to use all of the mathematical techniques available to him. The ring which Tesla planned was to be a rigid structure constructed on a gigantic system of scaffolding extending completely around the earth. Once the ring was complete, the scaffolding was to be removed and the ring would stay suspended in space and rotating at the same speed as the earth.

Some use might be found for the project, Tesla said, if someone could find a means of providing reactionary forces that could make the ring stand still with respect to the earth while the latter whirled underneath it at a speed of 1,000 miles per hour. This would provide a high-speed "moving" platform system of transportation which would make it possible for a person to travel around the earth in a single day.

In this project, he admitted, he encountered the same problem as did Archimedes, who said "Give me a fulcrum and a lever long enough and I will move the earth." "The fulcrum in space on which to rest the lever was no more attainable than was the reactionary force needed to halt the spinning of the hypothetical ring around the earth," said Tesla. There were a number of other factors which he found necessary to ignore in this project, but ignore them he did so that they would not interfere with his mathematical practice and his cosmical engineering plans.

With his health regained, and the danger of punishment by the Army removed, Tesla returned to his home in Gospic to remain a short time before going to Graumltz, where he was to study electrical engineering as his father had promised he could do. This marked the turning point in his life. Finished with boyhood dreams and play, he was now ready to settle down to his serious life work. He had played at being a god, not hesitating to plan refashioning the earth as a planet. His life work was to produce accomplishments hardly less fantastic than his boyhood dreams.

TESLA entered manhood with a definite knowledge that nameless forces were shaping for him an unrevealed destiny. It was a situation he had to feel rather than be able to identify and describe in words. His goal he could not see and the course leading to it he could not discern. He knew very definitely the field in which he intended to spend his life, and using such physical laws as he knew he decided to plan a life which, as an engineering project, would be operated under principles that would yield the highest index of efficiency. He did not, at this time, have a complete plan of life drawn up, but there were certain elements which he knew intuitively he would not include in his operations, so he avoided all activities and interests that would bring them in as complications. It was to be a single-purpose life, devoted entirely to science with no provisions whatever for play or romance.

It was with this philosophy of life that Tesla in 1875, at the age of 19, went to Graumltz, in Austria, to study electrical engineering at the Polytechnic Institute. He intended henceforth to devote all his energies to mastering that strange, almost occult force, electricity, and to harness it for human welfare.

His first effort to put this philosophy to a practical test almost resulted in disaster despite the fact that it worked successfully. Tesla completely eliminated recreation and plunged into his studies with such enthusiastic devotion that he allowed himself only four hours' rest, not all of which he spent in slumber. He would go to bed at eleven o'clock and read himself to sleep. He was up again in the small hours of the morning, tackling his studies.

Under such a schedule he was able to pass, at the end of the first term, his examinations in nine subjects--nearly twice as many as were required. His diligence greatly impressed the members of the faculty. The dean of the technical faculty wrote to Tesla's father, "your son is a star of first rank." The strain, however, was affecting his health. He desired to make a spectacular showing to demonstrate to his father in a practical way his appreciation of the permission he gave to study engineering. When he returned to his home at the end of the school term with the highest marks that could be awarded in all the subjects passed, he expected to be joyfully received by his father and praised for his good work. Instead, his parent showed only the slightest enthusiasm for his accomplishment but a great deal of interest in his health, and criticized Nikola for endangering it after his earlier narrow escape from death. Unknown to Tesla until several years afterward, the professor at the Polytechnic Institute had written to his father early in the term, asking him to take his son out of the school, as he was in danger of killing himself through overwork.

On his return to the Institute for the second year he decided to limit his studies to physics, mechanics and mathematics. This was fortunate because it gave him more time in which to handle a situation that arose later in his studies, and was to lead to his first and perhaps greatest invention.

Early in his second year at the Institute there was received from Paris a piece of electrical equipment, a Gramme machine, that could be used as either a dynamo or motor. If turned by mechanical power it would generate electricity, and if supplied with electricity it would operate as a motor and produce mechanical power. It was a direct-current machine.

When Prof. Poeschl demonstrated the machine, Tesla was greatly impressed by its performance except in one respect--a great deal of sparking took place at the commutator. Tesla stated his objections to this defect.

"It is inherent in the nature of the machine," replied Prof. Poeschl. "It may be reduced to a great extent, but as long as we use commutators it will always be present to some degree. As long as electricity flows in one direction,

and as long as a magnet has two poles each of which acts oppositely on the current, we will have to use a commutator to change, at the right moment, the direction of the current in the rotating armature."

"That is obvious," Tesla countered. "The machine is limited by the current used. I am suggesting that we get rid of the commutator entirely by using alternating current."

Long before the machine was received, Tesla had studied the theory of the dynamo and motor, and he was convinced that the whole system could be simplified in some way. The solution of the problem, however, evaded his grasp, nor was he at all sure the problem could be solved--until Prof. Poeschl gave his demonstration. The assurance then came to him like a commanding flash.

The first sources of current were batteries which produced a small steady flow. When man sought to produce electricity from mechanical power, he sought to make the same kind the batteries produced: a steady flow in one direction. The kind of current a dynamo would produce when coils of wire were whirled in a magnetic field was not this kind of current--it flowed first in one direction and then in the other. The commutator was invented as a clever device for circumventing this seeming handicap of artificial electricity and making the current come out in a one-directional flow.

The flash that came to Tesla was to let the current come out of the dynamo with its alternating directions of flow, thus eliminating the commutator, and feed this kind of current to the motors, thus eliminating the need in them for commutators. Many another scientist had played with that idea long before it occurred to Tesla, but in his case it came to him as such a vivid, illuminating flash of understanding that he knew his visualization contained the correct and practical answer. He saw both the motors and dynamos operating without commutators, and doing so very efficiently. He did not, however, see the extremely important and essential details of how this desirable result could be accomplished, but he felt an overpowering assurance that he could solve the problem. It was for this reason that he stated his objections to the Gramme machine with a great deal of confidence to his professor. what he did not expect was to draw a storm of criticism.

Prof. Poeschl, however, deviated from his set program of lectures and devoted the next one to Tesla's objections. With methodical thoroughness he picked Tesla's proposal apart and, disposing of one point after another, demonstrated its impractical nature so convincingly that he silenced even Tesla. He ended his lecture with the statement: "Mr. Tesla will accomplish great things, but he certainly never will do this. It would be equivalent to converting a steady pulling force like gravity into rotary effort. It is a perpetual motion scheme, an impossible idea."

Tesla, although silenced temporarily, was not convinced. The professor had paid him a nice compliment in devoting a whole lecture to his observation, but, as is so often the case, the compliment was loaded with what was expected by the professor to be a crushing defeat for the one whom he complimented. Tesla was nevertheless greatly impressed by his authority; and for a while he weakened in his belief that he had correctly understood his vision. It was as clear-cut and definite as the visualizations that came to him of the solutions of mathematical problems which he was always able to prove correct. But perhaps, after all, he was in this case a victim of a self-induced hallucination. All other things Prof. Poeschl taught were solidly founded on demonstrable fact, so perhaps his teacher was right in his objections to the alternating-current idea.

Deep down in his innermost being, however, Tesla held firmly to the conviction that his idea was a correct one. Criticism only temporarily submerged it, and soon it came bobbing back to the surface of his thinking. He gradually convinced himself that, contrary to his usual procedure, Prof. Poeschl had in this case demonstrated merely that he did not know how to accomplish a given result, a defficiency which he shared with everyone else in the world, and therefore could not speak with authority on this subject. And, in addition, Tesla reasoned, the closing remark with which Prof. Poeschl believed he had clinched his argument--"It would be equivalent to converting a steady pulling force like gravity into a rotary effort--was contradicted by Nature, for was not the steady pulling force of gravity making the moon revolve around the earth and the earth revolve around the sun?

"I could not demonstrate my belief at that time," said Tesla, "but it came to me through what I might call

instinct, for lack of a better name. But instinct is something which transcends knowledge. we undoubtedly have in our brains some finer fibers which enable us to perceive truths which we could not attain through logical deductions, and which it would be futile to attempt to achieve through any wilful effort of thinking."

His enthusiasm and confidence in himself restored, Tesla tackled the problem with renewed vigor. His power of visualization--the ability to see as solid objects before him the things that he conceived in his mind, and which he had considered such a great annoyance in childhood--now proved to be of great aid to him in trying to unravel this problem. He made an elastic rebound from the intellectual trouncing administered by his Professor and was tackling the problem in methodical fashion.

In his mind he constructed one machine after another, and as he visioned them before him he could trace out with his finger the various circuits through armature and field coils, and follow the course of the rapidly changing currents. But in no case did he produce the desired rotation. Practically all the remainder of the term he spent on this problem. He had passed so many examinations during the first term that he had plenty of time to spend on this problem during the second.

It seemed, however, that he was doomed to fail in this project, for at the term's end he was no nearer the solution than he was when he started. His pride had been injured and he was fighting on the defensive side. He did not know that those seeming failures in his mental and laboratory experiments were to serve later as the raw material out of which yet another vision was to be created.

A radical change had taken place in Tesla's mode of life while at Graumltz. The first year he had acted like an intellectual glutton, overloading his mind and nearly wrecking his health in the process. In the second year he allowed more time for digesting the mental food of which he was partaking, and permitted himself more recreation. About this time Tesla took to card-playing as a means of relaxation. His keen mental processes and highly developed powers of deduction enabled him to win more frequently than he lost. He never retained the money he won but returned it to the losers at the end of the game. When he lost, however, this procedure was not reciprocated by the other

players. He also developed a passion for billiards and chess, in both of which he became remarkably proficient.

The fondness for card-playing which Tesla developed at Graumltz got him into an embarrassing situation. Toward the end of the term his father sent him money to pay for his trip to Prague and for the expenses incident to enrolling as a student at the university. Instead of going directly to Prague, Tesla returned to Gospic for a visit to the family. Sitting in at a card game with some youths of the city, Tesla found his usual luck had deserted him, and he lost the money set aside for his university expenses. He confessed to his mother what he had done. She did not criticize him. Perhaps the fates were using this method for protecting him from overwork that might ruin his health, she reasoned, since he needed rest and relaxation. Losses of money were much easier to handle than loss of health. Borrowing some money from a friend, she gave it to Tesla with the words, "Here you are. Satisfy yourself." Returning to the game, he experienced a change in luck and came out of it not only with the money his mother had given him but practically all of the university expense money he had previously lost. These winnings he did not return to the losers as was his previous custom. He returned home, gave his mother the money she had advanced him, and announced that he would never again indulge in card-playing.

Instead of going to the University of Prague in the fall of 1878 as he had planned, Tesla accepted a lucrative position that was offered him in a technical establishment at Maribor, near Graumltz. He was paid sixty florins a month and a separate bonus for the completed work, a very generous compensation compared with the prevailing wages. During this year Tesla lived very modestly and saved his earnings.

The money he had saved at Maribor enabled him to pay his way through a year at the University of Prague, where he extended his studies in mathematics and physics. He continued experimenting with the one big challenging alternating-current idea that was occupying his mind. He had explored, unsuccessfully, a large number of methods and, though his failures gave support to Prof. Poeschl's contention that he would never succeed, he was unwilling to give up his theory. He still had faith that he would find the solution of his problem. He knew electrical science was young and growing, and felt deep within his consciousness

that he would make the important discovery that would greatly expand the infant science to the powerful giant of the future.

It would have been a pleasure to Tesla to have continued his studies, but it now was necessary for him to make his own living. His father's death, following Tesla's graduation from the University at Prague, made it necessary for him to be self-supporting. Now he needed a job. Europe was extending an enthusiastic reception to Alexander Graham Bell's new American invention, the telephone, and Tesla heard that a central station was to be installed in Budapest. The head of the enterprise was a friend of the family. The situation seemed a promising one.

Without waiting to ascertain the situation in Budapest, Tesla, full of youthful hope and the self-assurance which is typical of the untried graduate, traveled to that city, expecting to walk into an engineering position in the new telephone project. He quickly discovered, on his arrival, that there was no position open; nor could one be created for him, as the project was still in the discussion stage.

It was, however, urgently necessary for financial reasons, that he secure immediately a job of some kind. The best he could obtain was a much more modest one than he had anticipated. The salary was so microscopically small he would never name the amount, but it was suficient to enable him to avoid starvation. He was employed as draftsman by the Hungarian Government in its Central Telegraph Ofice, which included the newly developing telephone in its jurisdiction.

It was not long before Tesla's outstanding ability attracted the attention of the Inspector in Chief. Soon he was transferred to a more responsible position in which he was engaged in designing and in making calculations and estimates in connection with new telephone installations. When the new telephone exchange was finally started in Budapest in 1881, he was placed in charge of it.

Tesla was very happy in his new position. At the age of twenty-five he was in full charge of an engineering enterprise. His inventive faculty was fully occupied and he made many improvements in telephone central-station apparatus. Here he made his first invention, then called a telephone repeater, or amplifier, but which today would be

more descriptively called a loud speaker--an ancestor of the sound producer now so common in the home radio set. This invention was never patented and was never publicly described, but, Tesla later declared, in its originality, design, performance and ingenuity it would make a creditable showing alongside his better-known creations that followed. His chief interest, however, was still the alternating-current motor problem whose solution continued to elude him.

Always an indefatigable worker, always using up his available energy with the greatest number of activities he could crowd into a day, always rebelling because the days had too few hours in them and the hours too few minutes, and the seconds that composed them were of too short duration, and always holding himself down to a five-hour period of rest with only two hours of that devoted to sleep, he continually used up his vital reserves and eventually had to balance accounts with Nature. He was forced finally to discontinue work.

The peculiar malady that now affected him was never diagnosed by the doctors who attended him. It was, however, an experience that nearly cost him his life. To doctors he appeared to be at death's door. The strange manifestations he exhibited attracted the attention of a renowned physician, who declared medical science could do nothing to aid him. One of the symptoms of the illness was an acute sensitivity of all of the sense organs. His senses had always been extremely keen, but this sensitivity was now so tremendously exaggerated that the effects were a form of torture. The ticking of a watch three rooms away sounded like the beat of hammers on an anvil. The vibration of ordinary city trafic, when transmitted through a chair or bench, pounded through his body. It was necessary to place the legs of his bed on rubber pads to eliminate the vibrations. Ordinary speech sounded like thunderous pandemonium. The slightest touch had the mental effect of a tremendous blow. A beam of sunlight shining on him produced the effect of an internal explosion. In the dark he could sense an object at a distance of a dozen feet by a peculiar creepy sensation in his forehead. His whole body was constantly wracked by twitches and tremors. His pulse, he said, would vary from a few feeble throbs per minute to more than one hundred and fifty.

Throughout this mysterious illness he was fighting with powerful desire to recover his normal condition. He had before him a task he must accomplish--he must attain the solution of the alternating-current motor problem. He felt intuitively during his months of torment that the solution was coming ever nearer, and that he must live in order to be there when it crystallized out of his unconscious mind. During this period he was unable to concentrate on this or any other subject.

Once the crisis was past and the symptoms diminished, improvement came rapidly and with it the old urge to tackle problems. He could not give up his big problem. It had become a part of him. working on it was no longer a matter of choice. He knew that if he stopped he would die, and he knew equally well that if he failed he would perish. He was enmeshed in an invisible web of intangible structure that was tightening around him. The feeling that it was bringing the solution nearer to him--just beyond his finger tips--was cause for both regret and rejoicing. That problem when solved would leave a tremendous vacancy in his life, he feared.

yet in spite of his feeling of optimism it was still a tremendous problem without a solution.

When the acute sensitivity reduced to normal, permitting him to resume work, he took a walk in the city park of Budapest with a former classmate, named Szigeti, one late afternoon in February, 1882. while a glorious sunset overspread the sky with a flamboyant splash of throbbing colors, Tesla engaged in one of his favorite hobbies--reciting poetry. As a youth he had memorized many volumes, and he was now pleased to note that the terrific punishment his brain had experienced had not diminished his memory. One of the works which he could recite from beginning to end was Goethe's Faust.

The prismatic panorama which the sinking sun was painting in the sky reminded him of some of Goethe's beautiful lines:

"The glow retreats, done is the day of toil"

"It yonder hastes, new fields of life exploring"

"Ah, that no wing can lift me from the soil"

"Upon its track to follow, follow soaring"

Tesla, tall, lean and gaunt, but with a fire in his eye that matched the flaming clouds of the heavens, waved his arms in the air and swayed his body as he voiced the undulating lines. He faced the color drama of the sky as if addressing the red-glowing orb as it flung its amorphous masses of hue, tint and chrome across the domed vault of heaven.

Suddenly the animated figure of Tesla snapped into a rigid pose as if he had fallen into a trance. Szigeti spoke to him but got no answer. Again his words were ignored. The friend was about to seize the towering motionless figure and shake him into consciousness when instead Tesla spoke.

"Watch me!" said Tesla, blurting out the words like a child bubbling over with emotion: "Watch me reverse it." He was still gazing into the sun as if that incandescent ball had thrown him into a hypnotic trance.

Szigeti recalled the image from Goethe that Tesla had been reciting: "The glow retreats . . . It yonder hastes, new fields of life exploring" a poetic description of the setting sun, and then his next words-- "watch me! watch me reverse it." Did Tesla mean the sun? Did he mean that he could arrest the motion of the sun about to sink below the horizon, reverse its action and start it rising again toward the zenith?

"Let us sit and rest for a while," said Szigeti. He turned him toward a bench, but Tesla was not to be moved.

"Don't you see it?" expostulated the excited Tesla. "See how smoothly it is running? Now I throw this switch--and I reverse it. See! It goes just as smoothly in the opposite direction. watch! I stop it. I start it. There is no sparking. There is nothing on it to spark."

"But I see nothing," said Szigeti. "The sun is not sparking. Are you ill?"

"you do not understand," beamed the still excited Tesla, turning as if to bestow a benediction on his companion. "It is my alternating-current motor I am talking about. I have solved the problem. Can't you see it right here in front of

me, running almost silently? It is the rotating magnetic field that does it. See how the magnetic field rotates and drags the armature around with it? Isn't it beautiful? Isn't it sublime? Isn't it simple? I have solved the problem. Now I can die happy. But I must live, I must return to work and build the motor so I can give it to the world. No more will men be slaves to hard tasks. My motor will set them free, it will do the work of the world."

Szigeti now understood. Tesla had previously told him about his attempt to solve the problem of an alternating-current motor, and he grasped the full meaning of the scientist's words. Tesla had never told him, however, about his ability to visualize objects which he conceived in his mind, so it was necessary to explain the vision he saw, and that the solution had come to him suddenly while they were admiring the sunset.

Tesla was now a little more composed, but he was floating on air in a frenzy of almost religious ecstasy. He had been breathing deeply in his excitement, and the overventilation of his lungs had produced a state of exhilaration.

Picking up a twig, he used it as a scribe to draw a diagram on the dusty surface of the dirt walk. As he explained the technical principles of his discovery, his friend quickly grasped the beauty of his conception, and far into the night they remained together discussing its possibilities.

The conception of a rotating magnetic field was a majestically beautiful one. It introduced to the scientific world a new principle of sublime grandeur whose simplicity and utility opened a vast new empire of useful applications. In it Tesla had achieved the solution which his professor had declared was impossible of attainment.

Alternating-current motors had heretofore presented what seemed an insoluble problem because the magnetic field produced by alternating currents changed as rapidly as the current. Instead of producing a turning force they churned up useless vibration.

Up to this time everyone who tried to make an alternating-current motor used a single circuit, just as was in direct current. As a result the projected motor proved to be like a single-cylinder steam engine, stalled at dead center, at the top or bottom of the stroke.

what Tesla did was to use two circuits, each one carrying the same frequency of alternating-current, but in which the current waves were out of step with each other. This was equivalent to adding to an engine a second cylinder. The pistons in the two cylinders were connected to the shaft so that their cranks were at in angle to each other which caused them to reach the top or bottom of the stroke at different times. The two could never be on dead center at the same time. If one were on dead center, the other would be off and ready to start the engine turning with a power stroke.

This analogy oversimplifies the situation, of course, for Tesla's discovery was much more far-reaching and fundamental. what Tesla had discovered was a means of creating a rotating magnetic field, a magnetic whirlwind in space which possessed fantastically new and intriguing properties. It was an utterly new conception. In direct-current motors a fixed magnetic field was tricked by mechanical means into producing rotation in an armature by connecting successively through a commutator each of a series of coils arranged around the circumference of a cylindrical armature. Tesla produced a field of force which rotated in space at high speed and was able to lock tightly into its embrace an armature which required no electrical connections. The rotating field possessed the property of transferring wirelessly through space, by means of its lines of force, energy to the simple closed circuit coils on the isolated armature which enabled it to build up its own magnetic field that locked itself into the rotating magnetic whirlwind produced by the field coils. The need for a commutator was completely eliminated.

Now that this magnificent solution of his most dificult scientific problem was achieved, Tesla's troubles were not over; they were just beginning; but, during the next two months, he was in a state of ecstatic pleasure playing with his new toy. It was not necessary for him to construct models of copper and iron: in his mental workshop he constructed them in wide variety. A constant stream of new ideas was continuously rushing through his mind. They came so fast, he said, that he could neither utilize nor record them all. In this short period he evolved every type of motor which was later associated with his name.

He worked out the design of dynamos, motors, transformers and all other devices for a complete alternating-current system. He multiplied the effectiveness of the two-phase system by making it operate on three or more alternating currents simultaneously. This was his famous polyphase power system.

The mental constructs were built with meticulous care as concerned size, strength, design and material; and they were tested mentally, he maintained, by having them run for weeks--after which time he would examine them thoroughly for signs of wear. Here was a most unusual mind being utilized in a most unusual way. If he at any time built a "mental machine," his memory ever afterward retained all of the details, even to the finest dimensions.

The state of supreme happiness which Tesla was enjoying was destined soon, however, to end. The telephone central station by which he was employed, and which was controlled by Puskas, that friend of the family, was sold. When Puskas returned to Paris, he recommended Tesla for a job in the Paris establishment with which he was associated, and Tesla gladly followed up his opportunity. Paris, he reasoned, would be a wonderful springboard from which to catapult his great invention on the world.

The budding superman Tesla came to Paris light in baggage but with his head filled to bursting with his wonderful discovery of the rotating magnetic field and scores of significant inventions based on it. If he had been a typical inventor, he would have gone among people wearing a look indicating that he knew something important, but maintaining absolute secrecy concerning the nature of his inventions. He would be fearful that someone would steal his secret. But Tesla's attitude was just the reverse of this. He had something to give to the world and he wanted the world to know about it, the whole fascinating story with all the revealing technical details. He had not then learned, and never did learn, the craft of being shrewd and cunning. His life plan was on a secular basis. He cared less for the advantages of the passing moment, more for the ultimate goal; and he wanted to give his newly discovered polyphase system of alternating-current to the human race that all men could benefit from it. He knew there was a fortune in his invention. How he could extract this fortune he did not know. He knew that there was a higher law of compensation under which he would derive adequate benefits

from the gift to the world of his discovery. The method by which this would work out did not interest him nearly so much as the necessity for getting someone to listen to the details of his fascinating invention.

Six feet two inches tall, slender, quiet of demeanor, meticulously neat in dress, full of self-confidence, he carried himself with an air that shouted, "I defy you to show me an electrical problem I can't solve"--an attitude that was consistent with his twenty-five years, but also matched by his ability.

Through Puskas's letter of recommendation he obtained a position with the Continental Edison Company, a French company organized to make dynamos, motors and install lighting systems under the Edison patents.

He obtained quarters on the Boulevard St. Michel, but in the evenings visited and dined at the best cafes as long as his salary lasted. He made contact with many Americans engaged in electrical enterprises. wherever he could get a patient ear, among those who had an understanding of electrical matters, he described his alternating-current system of dynamos and motors.

Did someone steal his invention? Not the slightest danger. He could not even give it away. No one was even slightly interested. The closest approach to a nibble was when Dr. Cunningham, an American, a foreman in the plant where Tesla was employed, suggested formation of a stock company.

With his great alternating-current-system invention pounding at his brain and demanding some way in which it could be developed, it was a hardship for him to be forced to work all day on direct-current machines. Nowadays, though, his health was robust. He would arise shortly after five o'clock in the morning, walk to the Seine, swim for half an hour, and then walk to Ivry, near the gates of Paris, where he was employed, a trip that required an hour of lively stepping. It was then half-past seven. The next hour he spent in eating a very substantial breakfast which never seemed suficient to keep his appetite from developing into a disturbing factor long before noon.

The work to which he was assigned at the Continental Edison Company factory was of a variegated character, largely that of a junior engineer. In a short time he was given a

traveling assignment as a "trouble shooter" which required him to visit electrical installations in various parts of France and Germany. Tesla did not relish "trouble shooting" but he did a conscientious job and studied intensely the dificulties he encountered at each powerhouse. He was soon able to present a definite plan for improving the dynamos manufactured by his company. He presented his suggestions and received permission to apply them to some machines. When tested they were a complete success. He was then asked to design automatic regulators, for which there was a great need. These too gave an excellent performance.

The company had been placed in an embarrassing position and was threatened with heavy loss through an accident at the railroad station in Strassburg in Alsace, then in Germany, where a powerhouse and electric lights had been installed. At the opening ceremony, at which Emperor fiilliam I was present, a short circuit in the wiring caused an explosion that blew out one of the walls. The German government refused to accept the installation. Tesla was sent, early in 1883, to put the plant in working order and straighten out the situation. The technical problem presented no dificulties but he found it necessary to use a great deal of tact and good judgment in handling the mass of red tape extruded by the German government as precaution against further mishaps.

Once he got the job well under way he gave some time to constructing an actual two-phase alternating-current motor embodying his rotary-magnetic-field discovery. He had constructed so many in his mind since that never-to-be-forgotten day in Budapest when he made his great invention. He had brought materials with him from Paris for this purpose and found a machine shop near the Strassburg station where he could do some of the work. He did not have as much time available as he had expected, and, while he was a clever amateur machinist, nevertheless the work took time. He was very fussy, making every piece of metal exact in dimensions to better than the thousandth of an inch and then carefully polishing it.

Eventually there was a miscellaneous collection of parts in that Strassburg machine shop. They had been constructed without the aid of working drawings. Tesla could project before his eyes a picture, complete in every detail, of every part of the machine. These pictures were more vivid than any blueprint and he remembered exact dimensions which

he had calculated mentally for each item. He did not have to test parts through partial assembly. He knew they would fit.

From these parts Tesla quickly assembled a dynamo, to generate the two-phase alternating current which he needed to operate his alternating-current motor, and finally his new induction motor. There was no difference between the motor he built and the one which he visualized. So real was the visualized one that it had all the appearance of solidity. The one he built in the machine shop presented no elements of novelty to him. It was exactly as he had visualized it a year before. He had mentally experimented with its exact counterpart and with many variations of it during the months that had passed since the great vision came to him while rhapsodizing the sunset sky in Budapest.

The assembly completed, he started up his power generator. The time for the great final test of the validity of his theory had arrived. He would close a switch and if the motor turned his theory would be proven correct. If nothing happened, if the armature of his motor just stood still, but vibrated, his theory was not correct and he had been feeding his mind on hallucinations, based on fantasy not on fact.

He closed the switch. Instantly the armature turned, built up to full speed in a flash and then continued to operate in almost complete silence. He closed the reversing switch and the armature instantly stopped and as quickly started turning in the opposite direction. This was complete vindication of his theory.

In this experiment he had tested only his two-phase system; but he needed no laboratory demonstration to convince him that his three-phase systems for generating electricity and for using this current for transmission and power production would work even better, and that his single-phase system would work almost as well. With this working model he would now be able to convey to the minds of others the visions he had been treasuring for so long.

This test meant much more to Tesla than just the successful completion of an invention; it meant a triumph for his method of discovering new truths through the unique mental processes he used of visualizing constructs long before they were produced from materials. From these results he

drew an unbounded sense of self-confidence; he could think and work his way to any goal he set.

There was good reason for Tesla's self-assurance. He had just passed his twenty-seventh birthday. It seemed to him only yesterday that Prof. Poeschl had seemingly so completely vanquished him for saying that he could operate a motor by alternating current. Now he had demonstrably accomplished what the learned professor said could never be done.

Tesla now had available a completely novel type of electrical system utilizing alternating current, which was much more flexible and vastly more efficient than the direct-current system. But now that he had it, what could he do with it? The executives of the Continental Edison Company by whom he was employed had continually refused to listen to his alternating-current theories. He felt it would be useless to try to interest them in even the working model. He had made many friends during his stay in Strassburg, among them the Mayor of the city, M. Bauzin, who shared his enthusiasm about the commercial possibilities of the new system and hoped it would result in the establishment of a new industry that would bring fame and prosperity to his city.

The Mayor brought together a number of wealthy Strassburgers. To them the new motor was shown in operation, and the new system and its possibilities described, by both Tesla and the Mayor. The demonstration was a success from the technical viewpoint but otherwise a total loss. Not one member of the group showed the slightest interest. Tesla was dejected. It was beyond his comprehension that the greatest invention in electrical science, with unlimited commercial possibilities, should be rejected so completely.

M. Bauzin assured him that he would undoubtedly receive a more satisfactory reception for his invention in Paris. Delays of oficialdom in finally accepting the completed installation at the Strassburg station, however, postponed his return to Paris until the spring of 1884. Meanwhile, Tesla looked forward with pleasurable expectancy to a triumphant return to Paris. He had been promised a substantial compensation if he was successful in handling the Strassburg assignment; also, that he would be similarly compensated for the improvements in design of motors and

dynamos, and for the automatic regulators for dynamos. It was possible that this would supply him with enough cash to build a full-size demonstration set for his polyphase alternating-current system, so that the tremendous advantages of his system over direct current could be shown in operation. Then he would have no trouble raising the needed capital.

When he got back to the company's ofices in Paris and asked for a settlement of his Strassburg and automatic-regulator accounts, he was given what in modern terminology is called the "runaround." To use fictitious names, as Tesla told the story, the executive, Mr. Smith, who gave him the assignments, now told him he had no jurisdiction over financial arrangements; that was all in the hands of the executive, Mr. Brown. Mr. Brown explained that he administered financial matters but had no authority to initiate projects or to make payments other than those directed by the chief executive, Mr. Jones. Mr. Jones explained that such matters were in the hands of his department executives, and that he never interfered with their decisions, so Tesla must see the executive in charge of technical matters, Mr. Smith. Tesla traveled this vicious circle several times with the same result and finally gave up in disgust. He decided not to renew his offer of the alternating-current system nor to show his motor in operation, and resigned his position immediately.

Tesla was undoubtedly entitled to an amount in excess of $25,000 for the regulators he designed and for his services in Strassburg. Had the executives been endowed with even a smattering of horse sense, or the ordinary garden variety of honesty, they would have made an attempt to settle for $5,000, at the least. Tesla, hard pressed for cash, would undoubtedly have accepted such an amount, although with a feeling that he was being cheated in a large way.

Such an offer would probably have held Tesla on the payroll of the company and preserved for it the possession of the world's greatest inventor and one who at the time had definitely demonstrated he was an extremely valuable employee.

For a paltry few thousand dollars they lost not only a man who would have saved them many times that amount every year, but they also lost an opportunity to obtain world

control of the greatest and most profitable electrical invention ever made.

One of the administrators of the company, Mr. Charles Batchellor, Manager of the works, who was a former assistant and close personal friend of Thomas A. Edison, urged Tesla to go to the United States and work with Edison. There he would have a chance to work on improvements to the Edison dynamos and motors. Tesla decided to follow Mr. Batchellor's suggestion. He sold his books and all other personal possessions except a few articles which he expected to take with him. He assembled his very limited financial resources, purchased tickets for his railroad trip and transatlantic journey to New York. His baggage consisted of a small bundle of clothes carried under his arm and some other items stuffed into his pockets.

The final hours were busy ones and, as he was about to board the train, just as it was ready to pull out of the station, he discovered his package of baggage was missing. Reaching quickly for his wallet, which contained his railroad and steamship tickets and all his money, he was horrified to discover that that too was missing. There was some loose change in his pocket, how much he did not know--he did not have time to count it. His train was pulling out. what should he do? If he missed this train, he would also miss the boat--but he could not ride on either without tickets. He ran alongside the moving train, trying to make up his mind. His long legs enabled him to keep up with it without dificulty at first, but now it was gaining speed. He finally decided to jump aboard. The loose change he discovered was suficient to take care of the railroad fare, with a negligible remainder. He explained his situation to the skeptical steamship oficials and, when no one else showed up to claim his reservations on the ship up to the time of sailing, he was permitted to embark.

To one as fastidious as Tesla, a long steamship journey without adequate clothing was a trying experience. He had expected to encounter annoyances when getting along with the minimum amount of clothing which he planned carrying with him, but when even that limited layout was lost the annoyance became hardship. Coupled with this was the memory of disappointment and resentment over his recent experiences.

The ship offered little to interest him. He explored it thoroughly and in doing so made some contacts with members of the ship's company. There was unrest among the crew. There was unrest in Tesla also. He extended sympathy to members of the crew in their claimed unjust treatment. The grievances affecting the crew had built up one of those situations in which a small spark can cause a large explosion. The spark flew somewhere on the ship while Tesla was below decks in the crew's quarters. The captain and oficers got tough and, with some loyal members of the crew, decided to settle the trouble with belaying pins as clubs. It quickly became a battle royal. Tesla found himself in the middle of a fight which when anyone saw a head he hit it.

Had Tesla not been young as well as tall and strong, his useful career might have ended at this point. He had long arms in proportion to his six feet two inches of height. The fist at the end of his arm could reach as far as a club in the hands of an adversary, and his height enabled him to tower over the other fighters so his head was not easy to reach. He struck hard and often, never knowing for or against which side he was fighting. He was on his feet when the fight was over, something which could not be said of a score of the crew members. The oficers had subdued what they called a mutiny, but they too carried indications that they had been through a battle. Tesla was definitely not invited to sit at the captain's table during the voyage.

He spent the remainder of his journey nursing scores of bruises and sitting in meditation at the stern of the ship, which too slowly made its way to New York. Soon he would set foot on the "land of golden promise" and meet the famous Mr. Edison. He was destined to learn that it was really a "land of golden promise"--but also to discover something that would open his eyes about the fulfillment of promises.

when Tesla stepped out of the Immigration Ofice at Castle Garden, Manhattan, in the summer of 1884, his possessions consisted of four cents, a book of his own poems, a couple

of technical articles he had written, calculations for designing a flying machine, and some mathematical work done in an effort to solve an extremely dificult integral. He had Mr. Batchellor's letter introducing him to Mr. Edison, and the address of a friend. In this letter to Edison, Batchellor wrote: "I know two great men and you are one of them; the other is this young man."

Lacking carfare, Tesla had to walk the several miles to his friend's home. The first person he spoke to, seeking traveling directions, was a policeman, a gruff individual. The way he supplied the information suggested to Tesla that he was willing to start a fight on the subject. Although Tesla spoke English very well, all he understood of the policeman's lingo was the direction in which he pointed his club.

while walking in what he believed was the right direction, wondering how he would be able to contrive a meal and lodgings out of four cents should he be unable to locate his friend, he passed a shop in which he could see a man working on an electrical machine that seemed to him familiar. He entered just as the man was about to give up as impossible the task of repairing the device.

"Let me do it," said Tesla, "I will make it operate." And without more ado he tackled the job. It proved to be a dificult task but eventually the machine was working again.

"I need a man like you to handle these blankety-blank foreign machines," said the man. "Do you want a job?"

Tesla thanked him and told him he was on his way to another job, whereupon the man handed him twenty dollars. Tesla had expected no compensation for doing what he considered a slight favor, and said so, but the man insisted his work was worth that much, and he was glad to pay it. Never was Tesla more thankful for a windfall. He was now assured of food and lodgings for the time being. With the aid of walking directions, this time more graciously given, he located his friend and was a guest at his home overnight. The next day he went to Edison's New York headquarters, then on South Fifth Avenue (now West Broadway).

The introduction by Mr. Batchellor gave him ready access to Mr. Edison, who was busily engaged in problems in connection with his new generating station and electric-

light system--the former located in downtown Pearl Street and serving a relatively small radius of territory.

Tesla was favorably impressed by Edison on their first meeting. He marveled that a man so limited in education could accomplish so much in so technical a field as electricity. It caused Tesla to wonder if all the time he had spent in gaining an education of very broad scope had not been wasted. would he have been further ahead if he had started his practical work on the basis of experience, as Edison had done? He definitely decided, however, before many days had passed, that the time and effort he had spent on his education constituted the wisest kind of an investment.

Edison, for his part, was none too favorably impressed by Tesla. Edison was an inventor who got his results by trial-and-error methods. Tesla calculated everything mentally and solved his problems before doing any "work" on them. As a result, the two great men spoke an entirely different technical language. There was one more very important difference. Edison belonged to the direct-current and Tesla to the alternating-current school of thought. The electricians of that day could, and did, become highly emotional over their differences of opinion on this subject. Discussions roused all the fervor of a religious or political debate, and everything unpleasant was associated with the adherents on the other side of the discussion. The least unpleasant thought applied to an opponent was that he was of a low order of mentality. When Tesla enthusiastically described his polyphase system and told Edison he believed alternating-current was the only practical kind of current to use in a power-and-lighting system, Edison laughed. Edison was using direct current in his system. He told Tesla very bluntly he was not interested in alternating-current; there was no future to it and anyone who dabbled in that field was wasting his time; and besides, it was a deadly current whereas direct current was safe. Tesla did not yield any ground in the discussion--nor could he make any progress in his effort to get Edison to listen to a presentation of his polyphase power system. On technical grounds, they were worlds apart.

Nevertheless, because of Batchellor's statement on the valuable work he had done on the Edison direct-current machines in Europe, Tesla was, without much formality, given a job on Edison's staff--doing minor routine work. A

few weeks later he had an opportunity to demonstrate his ability. Edison had installed one of his electric-light plants on the steamship Oregon, the fastest and most up-to-date passenger ship of that time. The installation worked well for many months but finally both dynamos went out of commission. It was impossible to remove the dynamos and install new ones, so it was necessary to repair the old ones in some way--but this, Edison had been told, was impossible without taking them to the shop. The scheduled sailing date of the ship had passed and Edison was being placed in an embarrassing position over the accumulating days of delay caused by his machines.

Edison asked Tesla if he would go to the ship and see what could be done about the situation. This was in the afternoon. Taking such instruments as he thought he would need, Tesla went aboard the Oregon. He found that short circuits had caused some of the armature coils to be burned out; and open circuits had developed elsewhere on the machines.

Calling on members of the crew to assist him, Tesla worked through the night and by 4 am had both machines running as well as they did the day they were newly installed. walking back to the shop on lower Fifth Avenue at 5 am, in the dim early dawn he met a group of men just leaving. In it were Edison, Batchellor, who had returned from Paris in the meantime, and several others who had finished their night's work and were returning to their homes.

"Here is our Parisian running around nights," said Edison.

"Am just coming back from the Oregon," Tesla replied. "Both machines are operating."

Edison, amazed, shook his head and turned away without another word. On rejoining the group he said to Batchellor, loud enough for the keen-eared Tesla to hear him, "Batchellor, this is a damn good man."

Thereafter Tesla's status on the staff was raised several levels and he was given closer contact with design and operating problems. He found the work interesting and applied himself to it more than eighteen hours a day, from 10:30 am until 5 am, every day including Sundays. Edison, observing his industry, told him, "I have had many hard-working assistants but you take the cake." Tesla observed

many ways in which the dynamos could be improved in design to operate more efficiently. He outlined his plan to Edison, and stressed the increased output and lower cost of operating that would result from the changes he suggested. Edison, quick to appreciate the value of increased efficiency, replied, "There's fifty thousand dollars in it for you if you can do it."

Tesla designed twenty-four types of dynamos, eliminating the long-core field magnets then in use and substituting the more efficient short cores, and provided some automatic controls, on which patents were taken out. Months later, when the task was finished, and some of the new machines built and tested and found measuring up to his promises, Tesla asked to be paid the $50,000. Edison replied, "Tesla, you don't understand our American humor." Tesla was shocked to discover that what he thought was a specific promise was being tossed aside merely as a standard practical joke of the day. He received not a penny of compensation from the new designs and inventions, or for the tremendous amount of overtime, beyond the none too generous weekly pay. He resigned his job immediately. This was in the spring of 1885.

In the period of less than a year which he spent with Edison, Tesla had developed a good reputation in electrical circles; so when he was free he was offered an opportunity to capitalize on it. A group of promoters offered to form a company under his name. This looked like a possible chance to bring out his alternating-current system, and he eagerly entered into the project. But when he urged his plan, the promoters informed him they were not interested in alternating-current. what they wanted him to develop was a practical arc light for street and factory illumination. In about a year he developed the desired lamp, took out several patents on his invention, and its manufacture and use were under way.

From a technical point of view the venture was a success, but Tesla himself suffered another painful financial experience in connection with it. He had been paid a comparatively small salary during the period of development. According to the agreement, he was to receive his principal compensation in the form of shares of stock in the company. He received a beautifully engraved stock certificate, and then, by some manipulations he did not understand, he was forced out of the company and aspersions

were cast upon his ability as an engineer and an inventor. When he sought to convert the certificate into cash, he found that the shares of newly organized companies of undemonstrated power to earn dividends possess very slight value. His opinion of financial men in both the Old World and the New was taking on a decidedly uncomplimentary bias.

Now came the most unpleasant experience of Tesla's life. He was without a source of income, and from the spring of 1886 to the spring of 1887 he was forced to work as a day laborer. "I lived," he said, "through a year of terrible heartaches and bitter tears, my suffering being intensified by material want." Business conditions were none too good in the country. Not only did he have difficulty in getting anyone to listen to his alternating-current project, but even in his effort to earn room and board as a laborer he had tremendous competition, and found it none too easy to secure the most menial tasks at almost starvation wages. He would never discuss this period of his life, probably because it was so unpleasant that he banished all thoughts of it from his memory. Some electrical repair work and even ditch digging at $2 a day were among the jobs he tackled. He resented the utter waste of his abilities more than the personal degradation involved. His education, he said, seemed a mockery.

During the winter of early 1887, while engaged in ditch digging, he attracted the attention of the foreman of the gang who, too, was being forced by circumstances to work below his accustomed level. The foreman was impressed by Tesla's story of his inventions and his great hopes for his alternating-current system. Through this foreman, Tesla said, he was introduced to Mr. A. K. Brown of the Western Union Telegraph Company who put up some of his own money and interested a friend in joining him in Tesla's project.

These two gentlemen organized and financed the Tesla Electric Company, and in April, 1887, established a laboratory at 33-35 South Fifth Avenue (now West Broadway), near Bleecker Street, not far from the shop of the Edison Company. Edison had turned down Tesla's alternating-current idea--and now Tesla was his neighbor with a laboratory of his own, starting to develop the competing idea. Within this small area was to be fought the great battle of the electrical industry over the question of whether direct or alternating current should be used. Edison, already famous, was wholeheartedly committed to direct current; his

powerhouses were operating in several cities and, in addition, he had the support of the famous financier, J. P. Morgan. Tesla, on the other hand, was unknown and had only very modest financial support. The direct current was technically simple, whereas alternating-current was technically complex. Tesla knew, however, that in these complexities were unlimited possibilities for usefulness.

Tesla's dark days were over. yet he was soon to discover that the acceptance or rejection of the alternating-current system was not based on technical facts but upon financial considerations, emotional reactions and prejudices, and that human nature was a bigger factor than scientific truths. Nevertheless, in a short time, he would see some of his greatest hopes and dreams realized, and success in large measure reward his efforts.

Once he had achieved something resembling fair conditions under which to carry on his work, the rising star of Tesla's genius shot across the electrical heavens like a meteor. As soon as the newly organized Tesla Electric Company opened its South Fifth Avenue laboratories he started the construction of a variety of pieces of dynamo electric machinery. It was not necessary for him to do any calculating, or work out blueprints. Everything was crystal clear in his mind down to the finest detail of each piece of apparatus. As a result he very quickly produced the working units with which he demonstrated the principles of his polyphase alternating-current system. The single piece of apparatus he had built while in Strassburg, the first model of the induction motor, supplied the physical proof he needed that all the remainder of his calculations were correct.

The apparatuses built in his new laboratory were identical with those which he conceived during the two months in Budapest following the remarkable revelation of the principle of the revolving magnetic field. He did not make the slightest change, he said, in the machines he had mentally constructed at that time. When the machines were physically constructed not one of them failed to operate as he had anticipated. Five years had elapsed since he evolved the designs. In the meantime he had not committed a line to paper--yet he had remembered perfectly every last detail.

Tesla produced as rapidly as the machines could be constructed three complete systems of alternating-current

machinery--for single-phase, two-phase and three-phase currents--and made experiments with four- and six-phase currents. In each of the three principal systems he produced the dynamos for generating the currents, the motors for producing power from them and transformers for raising and reducing the voltages, as well as a variety of devices for automatically controlling the machinery. He not only produced the three systems but provided methods by which they could be interconnected, and modifications providing a variety of means of using each of the systems. A few months after opening the laboratory he submitted his two-phase motor to Prof. fi. A. Anthony, of Cornell University, for testing. Prof. Anthony reported that it had an efficiency equal to that of the best direct-current motors.

Tesla now not only constructed the machines which he visualized but he worked out the basic mathematical theory underlying all of the apparatus. The mathematical theory was so basic that it covered not only the principles applying to machinery for operation at 60 cycles per second, which is the frequency now in standard use, but applied equally well to the whole range of low- and high-frequency currents. With Edison direct current, it had not been found practicable to work with potentials higher than 220 volts on distribution systems; but with alternating-current it was possible to produce and transmit currents of many thousands of volts, thus permitting economical distribution, and these could be reduced to the lower voltages for customer use.

Tesla sought to obtain a single patent covering the entire system and all of its constituent dynamos, transformers, distribution systems and motors. His patent attorneys, Duncan, Curtis&Page, filed the application for this patent October 12, 1887, six months after the laboratory opened and five and a half years after Tesla had made his rotary magnetic-field invention.

The Patent Ofice, however, objected to considering such an "omnibus" application and insisted it be broken down to seven separate inventions, with individual applications filed on each. Two groups of separate applications were filed, on November 30 and December 23 respectively. These inventions were so original and covered such a virgin field of electrical science that they encountered practically no dificulties in the Patent Ofice and within about six months

the patents were issued. (They were numbered 381,968; 381,969; 381,970; 382,279; 382,280; 382,281 and 382,282. These covered his single and polyphase motors, his distribution system and polyphase transformers. In April of the following year, 1888, he applied for and was later granted five more patents, which included the four-and three-wire three-phase systems. These were numbered 390,413; 390,414; 390,415; 390,721; and 390,820. Within the year he applied for and was granted eighteen more: 401,520; 405,858; 405,859; 416,191; 416,192; 416,193; 416,194; 416,195; 418,248; 424,036; 433,700; 433.701; 433,702; 433,703; 445,207; 445,067; 459,772 and 464,666.)

As a succession of fundamental patents started to issue from the Patent Ofice to Tesla, the attention of the electrical engineering profession was drawn to this practically unknown inventor. The significance of his epoch-making discoveries was quickly grasped and he was invited to deliver a lecture before the American Institute of Electrical Engineers on May 16, 1888. This invitation was evidence that he had "arrived." Tesla accepted the invitation and put his whole heart into preparing the lecture which, he felt, would enable him to tell the electrical world the magnificent story of his complete alternating-current system and the tremendous advantages it possessed over direct-current.

This lecture became a classic of the electrical engineering field. In it Tesla presented the theory and practical application of alternating-current to power engineering. This, with his patents, described the foundation, in the matter of circuits, machines and operation, and theory, upon which almost the entire electrical system of the country was established and is still operating today. No new development of anything even slightly approaching comparable magnitude has been made in the field of electrical engineering down to the present time.

Tesla's lecture, and the inventions and discoveries which he included in it, established him before the electrical engineering profession as the father of the whole field of alternating-current power system, and the outstanding inventor in the electrical field.

It is not easy to visualize the tremendous burst of electrical development and progress that came out of Tesla's laboratory in the few months after he established

it. He produced a tidal wave of advancement which carried the electrical world into the opening of the new power age in one grand surge--although it took several years, naturally, for the commercial exploitation to get under way. The world of electrical engineering was amazed, bewildered and mystified by the host of discoveries thrown into its midst in rapid succession from the Tesla laboratory, and was filled with admiration for the prodigious new genius who had flared up within its ranks.

Tesla's power system, employing high voltage for transmission, released electrical powerhouses using direct current from functioning as purely local enterprises, capable of serving an area within a radius of one mile at the very most. His motors used alternating-current that could be economically transmitted hundreds of miles, and he provided an economical two- and three-phase system for transmission lines.

The stupendous changes which the Tesla alternating-current inventions and discoveries brought about in the electrical industry can be realized by considering the handicap under which the direct-current powerhouses of the Edison system had operated up to that time. Electricity was generated in powerhouses by relatively small-size dynamos, and the current then distributed to customers over copper conductors laid in conduits under the streets. Some of the electrical energy fed into these conductors at the powerhouse did not arrive as electricity at the far end of the line but was converted along the route to useless heat by the resistance of the conductors.

Electrical energy is composed of two factors, the current, or amount of electricity, and the voltage, or the pressure under which the current is moved. Resistance losses were undergone by the current regardless of the voltage. One ampere of current experienced a definite loss caused by resistance and this loss was the same whether the pressure was 100, or 1,000 or 100,000 volts. If the current value remained fixed, then the amount of energy transported over a wire varied with the voltage. There is, for example, 100,000 times as much energy transported over a wire carrying a current of one ampere at 100,000 volts as there is when the current is one ampere and the pressure is one volt.

If the amount of current carried by a wire is doubled, the heat losses are increased four fold; if the current is tripled, these losses are increased nine fold, and if the current is increased four fold, the losses rise sixteen fold. This situation put definite limits to the amount of current which could be loaded on to conductors.

In addition there is an accompanying drop in pressure. In a half-mile-long conductor, of the size adopted and under the average currents carried, there would be a drop of about 30 volts. To compensate for this, to some extent, the dynamos were designed to generate 120 volts instead of the standard 110 volts for which lamps were designed. Near the powerhouse the customers would get excess voltage--and a half-mile away their current would be delivered at 90 volts. The early Edison carbon lamps were none too brilliant at 110 volts and gave much less than satisfactory illumination at 90 volts.

As a result of this situation the generation and distribution of direct-electric current became very much of a localized matter. The Edison powerhouse could serve an area less than a mile in diameter. In order to give service to a large city it would be necessary to have a powerhouse in every square mile, or even closer if a uniformly satisfactory current were to be supplied. Outside large cities the situation became even more dificult. This was a severe handicap if electricity was to become the universal power source.

Tesla's alternating-current power system, which Edison so emphatically rejected when it was offered to him, freed electricity from its bondage to local isolation. Not alone were his alternating-current motors more simple and flexible than the direct-current machines, but it was possible by a highly efficient method of using transformers, which consisted of two coils of wire around an iron core, to step up the voltage and simultaneously step down the current in a proportionate amount, or use the process in reverse. The amount of energy involved, however, would remain practically unchanged.

Copper wire entails a heavy investment when it is bought by the mile. The diameter of the wire sets the limit to the amount of current it will carry. With the Edison direct-current system there was no practical way for transforming an electric current. The voltage remained fixed and when

the current was increased to the carrying capacity of the wire no further expansion was possible on that circuit.

With the Tesla system the amount of energy a wire would transport would be increased tremendously by increasing the voltage and letting the current remain fixed below the carrying limit of the circuit. A very small wire could carry a thousand or more times as much electrical energy in the Tesla polyphase alternating system as it could in the Edison direct-current system.

By using Tesla's alternating-current system electricity could be delivered economically at vast distances from the powerhouse. It would be possible, if desired, to burn coal at the mouth of a mine for generating electricity, and deliver the current cheaply at distant cities, or to generate electricity where water power was available and transmit it to distant points where it could be used.

Tesla rescued the electrical giant from the apron strings of the powerhouse and gave it geographical freedom, the opportunity to expand into the wide-open spaces and work its magic. He laid the foundation for our present superpower system. A development of such magnitude was bound to be loaded with dynamite, and action was sure to follow as soon as someone set a match to the fuse.

TESLA'S spectacular lecture and demonstration before the American Institute of Electrical Engineers in New York focused on his work the attention of the electrical fraternity throughout the world. There was no doubt in the mind of the vast majority of electrical engineers that Tesla's discoveries created a new epoch in the electrical industry. But what could be done about it? There were few manufacturers who could take advantage of it. His discoveries were in the same predicament as a ten-pound diamond. No one would question the value of the stone but who would be in a position to purchase it or make any use of it?

Tesla had given no specific thought to commercializing his work at this time. He was in the midst of a program of experimental work which was far from complete and he desired to finish it before engaging in another line of activity. He expected that there would be no alternative to establishing his own company and engaging in the manufacture of his dynamos, motors and transformers. Such a course would take him away from the original experimental work which greatly fascinated him, and which he did not wish to interrupt. Commercializing his inventions, therefore, was a problem that could be postponed, as far as he was concerned, at least as long as the present financing of his work continued.

George Westinghouse, head of the Westinghouse Electric Company in Pittsburgh, was a man of vision. He was already famous as an inventor of numerous electrical devices but principally for his air brake for trains, and had made a fortune out of the exploitation of his own inventions. He recognized the tremendous commercial possibilities presented by Tesla's discoveries and the vast superiority of the alternating- over the direct- current system. He was a practical man of business and was not limited in his choice between the two systems.

Edison, head of the Edison General Electric Company, on the other hand, was under a limitation. Edison's invention was the incandescent electric lamp. Having developed this project, he was faced with finding some way to use it commercially. In order to sell his lamps to the public it was necessary to make the electricity available for lighting them. This necessitated the building of powerhouses and distribution systems. Another kind of electric lamp was already available--the arc lamp--in which he was but slightly interested. The Edison system powerhouses were standardized on low-voltage direct current. At that time direct-current motors were in use, and most technical men believed it was not at all likely there would ever be a practical alternating-current motor. The direct-current system, therefore, offered a number of advantages of a practical nature from Edison's viewpoint.

Westinghouse had no pet project comparable to the incandescent lamp around which he had to throw protecting conditions such as direct-current limitations, so he could look at the Tesla alternating-current discoveries from an unbiased and purely objective point of view. He reached his

decision a month after Tesla's lecture. Having done this, he forwarded a brief note to Tesla, making an engagement to see him in the latter's laboratory.

The two inventors had not previously met but each of them was well acquainted with the other's work. Westinghouse, born in 1846, was ten years older than Tesla. He was a short, stout, bearded, impressive-looking individual, and had a habit of directness in conducting his affairs that amounted almost to bluntness. Tesla, thirty-two years old, was tall, dark, handsome, slender and suave. They made a strongly contrasting pair as they stood in Tesla's laboratory, but they had three things in common: they both were inventors, engineers and loved electricity. Tesla had in his laboratory dynamos, transformers, and motors with which he could demonstrate his discoveries and models in actual operating conditions. Here Westinghouse was right at home and quickly became completely sold on the inventor and his inventions.

So favorably impressed was Westinghouse that he decided to act quickly. The story was related to the author by Tesla.

"I will give you one million dollars cash for your alternating-current patents, plus royalty," Westinghouse blurted at the startled Tesla. This tall, suave gentleman, however, gave no outward sign that he had almost been bowled over by surprise.

"If you will make the royalty one dollar per horsepower, I will accept the offer," Tesla replied.

"A million cash, a dollar a horsepower royalty," Westinghouse repeated.

"That is acceptable," said Tesla.

"Sold," said Westinghouse. "you will receive a check and a contract in a few days."

Here was a case of two great men, each possessed with the power of seeing visions of the future on a gigantic panorama, and each with complete faith in the other, arranging a tremendous transaction with utter disregard of details.

The amount involved was unquestionably a record one, for that time, for an invention. while Tesla liked to think of his complete polyphase system as a single invention, he was, nevertheless, selling about twenty inventions on which patents were already issued, and about as many more still to issue. With a total of forty patents involved in the transaction, most of them strongly basic in nature, he received, therefore, about $25,000 per patent. Westinghouse thereby obtained a record-breaking bargain by buying the patents in wholesale quantities.

Westinghouse arranged with Tesla to come to Pittsburgh "at a high salary" for a year, to act as consultant in the commercial application of his inventions. The generous offer made by the Pittsburgh magnate for the purchase of his patents made it unnecessary for Tesla to have any more worries about having to devote a major portion of his time to exploiting his inventions commercially through his own company. He could afford, therefore, to give this year of his time.

The apparatus which Tesla demonstrated to Westinghouse when the latter visited his laboratory, and which worked so beautifully, was designed for operation with a current of 60 cycles. Tesla's investigation had demonstrated that this was the frequency at which the greatest efficiency of operation could be achieved. At higher frequencies there was a saving in the amount of iron required; but the drop in efficiency, and design dificulties that developed, were not compensated for by the very small saving in cost of metal. At lower frequencies the amount of iron required increased, and the apparatus grew in size faster than increased efficiency justified.

Tesla went to Pittsburgh and expected to clear up all problems in less than a year. Here, though, he encountered engineers who faced the problem of producing a motor with a design that would insure, first, certainty of smooth and reliable operation; second, economy of operation; third, economy in use of materials; fourth, ease of manufacture; as well as other problems. Tesla had these problems in mind but not with the urgency with which the engineers faced them. In addition he was quite adamant in the choice of 60 cycles as the standard frequency for alternating current while engineers, who had experience on 133 cycles, were not so sure that the lower frequency would be best for the Tesla motors. At any rate there was conflict between the

inventor, interested mainly in principles, and engineers interested in practical design problems. Very definite problems were encountered in making the Tesla motor work on a single-phase current in small sizes. In this type of design, artifices had to be incorporated in the motor to achieve some of the characteristics of a two-phase current from the single-phase current that was supplied to operate it.

Tesla was thoroughly disgusted with the situation. He felt his advice concerning his own invention was not being accepted, so he quit Pittsburgh. Westinghouse was sure the situation would work itself out. Seeking to persuade Tesla to remain, he offered him, Tesla revealed many years later, twenty-four thousand dollars a year, one third of the net income of the company and his own laboratory, if he would stay on and direct the development of his system. Tesla, now wealthy and anxious to return to original research, rejected the offer.

Development work proceeded after Tesla left, and soon practical designs were produced for all sizes of motors and dynamos, and their manufacture started. Tesla was happy to note that the 60-cycle standard, his emphatic choice, but which had been questioned on the ground it was less practical in small units, had been adopted as the standard frequency.

On returning to his New York laboratory, Tesla declared that he had not made a single worth-while contribution to electrical science during the year he spent at Pittsburgh. "I was not free at Pittsburgh," he explained; "I was dependent and could not work. To do creative work I must be completely free. When I became free of that situation ideas and inventions rushed through my brain like a Niagara." During the following four years he devoted a large fraction of his time to further developments of his polyphase power system, and applied for, and was granted, forty-five patents. Those granted in foreign countries would bring the total to several times this number.

The ideas of the two giants among inventors--Edison and Tesla--were meeting in head-on battle. Out of the laboratories of the two geniuses, within sight of each other in South Fifth Avenue in New York, had come world-shaking developments.

There had been considerable conflict between Edison, who adhered strictly to direct current, and those who supported the claims for alternating current. The Thomson-Houston Company and the Westinghouse Electric Company had extensively developed this field for series electric lighting and arc lighting before the Tesla power system was developed. Edison had engaged in many tilts at these competitors, attacking alternating-current as unsafe because of the high voltages used. The advent of the Tesla system added fuel to the fire.

It was Tesla's belief that when the New York State Prison authorities adopted high-voltage alternating current for electrocution of condemned prisoners, the Edison interests had engineered the project to discredit alternating current. There is no doubt about the aid the prison authorities' choice gave the direct-current group; but their decision was undoubtedly based on the fact that direct current could not, by any practical means, be produced at the high voltages required, whereas alternating-current potentials could be very easily increased. Direct current is just as deadly, at the same voltage and amperage, as alternating current. In this "war of the currents," however, as in other wars, appeal to the emotions, instead of to simple facts, were the governing influences.

The task of putting the United States on an electrical power basis--which is what George Westinghouse undertook when he began to exploit the Tesla patent--was a gigantic one requiring not only engineering talent but capital. The Westinghouse Electric Company experienced a tremendous expansion in the volume of its business, but the upward surge came at a time when the country was going into a stage of commercial and financial depression; and Westinghouse soon found himself in dificulties.

This was, in addition, an era in which competing giant financial interests were battling for control of the industrial structure of the country through control of capital. It was a time of mergers, a period when the financial interests were building larger units of production by uniting smaller companies in related fields, frequently forcing these combinations without regard to what the owners of the companies desired.

One merger, internally initiated and arranged by mutual consent, brought together the Thomson-Houston Company and the Edison General Electric Company, the two biggest competitors of Westinghouse Electric, to form the present General Electric Company. This was a challenge to competing financial interests.

Westinghouse had expanded his business at a very rapid rate in exploiting the Tesla patents. Because his financial structure thereby lost a certain amount of flexibility, he became vulnerable to financial operators and soon found himself in the toils of a merger that involved uniting several other small companies with his organization. Financial interests that had stepped into the situation demanded that the Westinghouse Electric Company be reorganized as a step toward bringing about a merger with it of the U. S. Electric Company and the Consolidated Electric Light Company, the new unit to be known as the Westinghouse Electric and Manufacturing Company.

Before this reorganization would be consummated the financial advisers, in strategic positions, insisted that Westinghouse jettison some of his plans and projects which they considered inadvisable or a detriment to getting the new company onto a new foundation that would be sounder from a financial point of view.

One of the requirements was that Westinghouse get rid of the contract with Tesla calling for royalty payments of $1 per horsepower on all alternating-current articles sold under his patents. (No documentary evidence exists concerning this contract. The author located two sources of information. One was in complete agreement with the story here related. The other states that the million-dollar payment was advance royalties and Tesla so described it to him, declaring no further royalties were paid.) The financial advisers pointed out that if the business which Westinghouse expected the company would do under the Tesla patents in the ensuing year was anywhere near as great as estimated, the amount to be paid out under this contract would be tremendous, totaling millions of dollars; and this, at the time of reorganization, appeared a dangerous burden, imperiling the stability which they were trying to attain for the new organization.

Westinghouse strenuously objected to the procedure. This patent-royalty payment, he insisted, was in accordance with

usual procedures and would not be a burden on the company, as it was included in costs of production, was paid for by the customers, and did not come out of the company's earnings. Westinghouse, himself an inventor of first magnitude, had a strong sense of justice in his dealings with inventors.

The financial advisers, however, were not to be overruled. They nailed Westinghouse on the spot by insisting that the million dollars he had paid Tesla was more than adequate compensation for an invention, and that by making such an exorbitant payment he had imperiled the financial structure of his company and jeopardized his bankers' interest. Any further imperiling of the reorganization by any effort to retain the royalty contract would, it was argued, result in the withdrawing of support that would save the company.

The situation boiled down to the common "Either-Or" technique.

Westinghouse was required to handle the negotiations with Tesla. No situation could be more embarrassing to him. Nevertheless, Westinghouse was a realist among realists. He never hesitated to face facts squarely and with a blunt directness. "I will give you one million dollars cash for your alternating-current patents, plus royalty": he had been both brief and blunt when he purchased the patents from Tesla. Now he was faced with the problem of undoing the situation into which he had entered with such brevity. Then money talked and he held the money. Now Tesla held the dominant position; he held a perfectly valid contract worth many millions, and he could go to court to force compliance with its terms. Edison's successful suit against infringers of his electric-light patent, bringing disaster to many companies that violated his patent property rights, had caused the whole industrial world to hold a new and wholesome respect for patent rights.

Westinghouse had no reason for believing that Tesla would show the slightest inclination to relinquish his contract or permit its terms to be changed to provide a smaller rate of royalty. He knew that Tesla's pride had been hurt by the disagreement with the Pittsburgh engineers, and that he might not now be in a conciliatory mood. On the other hand, Westinghouse knew that he had succeeded in having Tesla's ideas adopted. His greatest comfort came from the fact that he had entered into the contract with good faith--and with

the same good faith he was trying to handle a much less satisfactory situation. Perhaps he could offer Tesla an executive position in the company in lieu of the contract. There would be mutual advantages in such an arrangement.

There is no means of fixing the definite value of the contract Tesla held. His patents covered every department of the new alternating-current power system, and royalties could be collected on powerhouse equipment and motors. At that time the electric power industry had barely started; no one could look into the future and see the tremendous volume of business that would be developed. (The latest data available indicate that in 1941 there was 162,000,000 horsepower of electrical generating machinery in operation in the United States, practically all of it for alternating current. Assuming a uniform growth from 1891 to 1941, the installed horsepower in 1905, when the first Tesla patents would have expired, would have been about twenty million. This figure is, apparently, too high.

According to a census of central stations in the United States conducted by T. Commerford Martin (Electrical World, March 14, 1914) the horsepower of generators in operation in 1902 was 1,620,000 and in 1907 the figure had risen to 6,900,000. On a pro rata, per-year basis, this would make the figure for 1905, the year when Tesla's first patents expired, 5,000,000. During this period many manufacturers who had been using steam power installed dynamos in their factories and operated isolated plants. These would not be included in the central-station figures and, if added, would bring the total horsepower to perhaps 7,000,000. Tesla would have been entitled to $7,000,000 royalties on this equipment, on the basis of his $1-per-horsepower arrangement. In addition he would have been entitled to royalties on motors that used the power generated by these dynamos. If only three quarters of the current generated were used for power, this would have entitled him to additional royalties of $5,000,000, or a total of $12,000,000.)

It would be a tough job for any executive, no matter how shrewd or clever, to talk a man out of a contract that would net him many millions of dollars, or induce him to accept a reduction in rates amounting to millions.

Westinghouse called on Tesla, meeting him in the same South Fifth Avenue laboratory where he had purchased the patents

four years before. Without preliminaries or apologies Westinghouse explained the situation.

"your decision," said the Pittsburgh magnate, "determines the fate of the Westinghouse Company."

"Suppose I should refuse to give up my contract; what would you do then?" asked Tesla.

"In that event you would have to deal with the bankers, for I would no longer have any power in the situation," Westinghouse replied.

"And if I give up the contract you will save your company and retain control so you can proceed with your plans to give my polyphase system to the world?" Tesla continued.

"I believe your polyphase system is the greatest discovery in the field of electricity," Westinghouse explained. "It was my efforts to give it to the world that brought on the present difficulty, but I intend to continue, no matter what happens, to proceed with my original plans to put the country on an alternating-current basis."

"Mr. Westinghouse," said Tesla, drawing himself up to his full height of six feet two inches and beaming down on the Pittsburgh magnate who was himself a big man, "you have been my friend, you believed in me when others had no faith; you were brave enough to go ahead and pay me a million dollars when others lacked courage; you supported me when even your own engineers lacked vision to see the big things ahead that you and I saw; you have stood by me as a friend. The benefits that will come to civilization from my polyphase system mean more to me than the money involved. Mr. Westinghouse, you will save your company so that you can develop my inventions. Here is your contract and here is my contract--I will tear both of them to pieces and you will no longer have any troubles from my royalties. Is that suficient?"

Matching his actions to his words Tesla tore up the contract and threw it in the waste basket; and Westinghouse, thanks to Tesla's magnificent gesture, was able to return to Pittsburgh and use the facilities of the reorganized company, which became the present Westinghouse Electric and Manufacturing Company, to make good his

promise to Tesla to make his alternating-current system available to the world.

Probably nowhere in history is there recorded so magnificent a sacrifice to friendship as that involved in Tesla's stupendous gift to Westinghouse of $12,000,000 in unpaid royalties, although Westinghouse personally received only indirect benefits from it.

It is also probable that the failure to pay Tesla these royalties resulted in one of the greatest handicaps to scientific and industrial progress which the human race has experienced. A few years later Tesla, still an intellectual giant far from the peak of his greatest growth, still pouring forth a profusion of inventions and discoveries of first magnitude, equal in importance to his first efforts which put the world on an electrical power basis, found himself without funds with which to develop his discoveries, with the result that many of them have been lost.

Nearly fifty years after this majestic relinquishment of wealth on the altar of friendship, during which time Tesla had had opportunity to see the United States and the world as a whole wax wealthy out of the power he had made available, he was called on to respond, with a speech, to honorary citation by the Institute of Immigrant Welfare. Tesla, then about eighty, was unable to appear in person. He had experienced decades of poverty in which he faced ridicule for his failure to develop inventions which he declared he had made, and had been forced to move frequently from hotel to hotel, owing to inability to pay his bills. In spite of these experiences he developed no rancor toward Westinghouse in whose behalf he sacrificed his $12,000,000 in royalties. Instead, he retained his original warm friendship. This is indicated by a statement in the speech he sent to the Institute to be read at its dinner held in the Hotel Biltmore, May 12, 1938:

"George Westinghouse was, in my opinion, the only man on this globe who could take my alternating-current system under the circumstances then existing and win the battle against prejudice and money power. He was a pioneer of imposing stature, one of the world's true noblemen of whom America may well be proud and to whom humanity owes an immense debt of gratitude."

when Tesla left the Westinghouse plant at Pittsburgh in 1889 to return to his laboratory in New York, he entered a new world. The magnificent polyphase system which he had already produced was but a small sample of the greater wonders that still remained to be revealed, and he was anxious to start exploring the new realm.

He was not approaching an entirely unknown realm in which he would have to feel his way in darkness in the hope of stumbling upon something of value, although anyone else at that time would have been in that position. On that fateful afternoon in February in Budapest in 1882, when he was given the vision of the rotating magnetic field, there had come with it an illumination that revealed to him the whole cosmos, in its infinite variations and its myriad of forms of manifestations, as a symphony of alternating currents. For him, the harmonies of the universe were played on a scale of electrical vibrations of a vast range in octaves. In one of the lower octaves was a single note, the 60-cycle-per second alternating current, and in one of the higher octaves was visible light with its frequency of billions of cycles per second.

Tesla had in mind a course of experimentation in which he would explore this region of electrical vibration between his alternating current and light waves. He would increase the frequency of the alternating current through the unknown intervening regions. If one note in a lower octave produced such a magnificent invention as the rotating magnetic field and the polyphase system, who could imagine the glorious possibilities that lay hidden on other notes in higher octaves? And there were thousands of octaves to be explored. He would construct an electrical harmonium by producing electrical vibrations in all frequencies, and study their characteristics. He would then, he hoped, be able to understand the motif of the cosmic symphony of electrical vibrations that pervaded the entire universe.

Tesla, at the age of thirty-three, was now wealthy. He had received $1,000,000 from the Westinghouse Company for his first crop of inventions. Of this, $500,000 went to A. K. Brown and his associate who had financed his experiments. Still greater inventions were to follow. He would never

need money. He would, he then believed, have royalties in the millions from his alternating-current patents. He could spend as freely as he wished, penetrating the secrets of Nature and applying his discoveries to human welfare. It was his responsibility to be so engaged. He knew he was gifted as no other man had been blessed with vision, talent and ability; and he in turn would endow the world with supernal treasures of scientific knowledge which he would extract from the secret recesses of the universe and, through the activities of his mighty mind, transform into agencies to brighten the lives, lighten the labors and increase the happiness of the human race.

was he a superegoist in his attitude? If so, he was not activated by selfish motives. To him it mattered not what he thought, so long as he remained objective in his thinking and his thoughts could be translated into demonstrable facts. what if he did consider himself greater than other men: did not this viewpoint conform to the facts? Suppose he did consider himself a man of destiny. Could he not bring evidence to support the contention? It was not necessary for Tesla actually to see an event occur in order to enjoy its realization. Had he not as a youth declared that he would make a practical alternating-current motor, only to be told by his professor that the goal was impossible of attainment--and had he not already accomplished this "impossibility"? Had he not taken the direct-current dynamos of Edison, whom all the world looked upon as a great genius, and had he not greatly improved their design and operation; and in addition, had he not produced a vastly superior system for producing, distributing and using electricity? To all of these inquiries Tesla could answer in the afirmative without going beyond the bounds of modesty concerning his achievements.

His attitude was not that of an egoist. It was an attitude of supreme faith in himself and in the vision that had been given him. To a man of ability, with such supreme faith in himself, and necessary financial resources to advance his purposes, the world of accomplishments is without limits. This was the picture of Tesla as he returned to his laboratory in lower Fifth Avenue, New York, in the latter part of 1889.

Tesla had studied a wide range of frequencies of alternating current in order to select the frequency at

which his polyphase system would operate most efficiently. His calculations indicated important changes in characteristics and effects as the frequency of the current was increased; and his observations with the electrical machinery he built confirmed his calculations. He noted that ever smaller quantities of iron were required as the frequencies were increased, and he now wished to explore the very high frequencies at which unusual effects should be produced without any iron in the magnetic circuit.

When, back in Budapest following his rotating magnetic-field discovery, he had played with mental calculations of the properties of alternating currents all the way from the very lowest frequency up to that of light, no one had yet explored this region. James Clerk Maxwell, at Cambridge University, England, had, however, nine years before, in 1873, published his beautiful presentation on an electromagnetic theory of light, and his equations indicated that there was a vast range of electro-magnetic vibrations above and below visible light--vibrations of much longer and much shorter wavelengths. while Tesla was engaged in making models of his polyphase system in 1887, too, Professor Heinrich Hertz, in Germany, put the Maxwell theory to test in the range of waves a few meters long. He was able to produce such waves by the spark discharge of an induction coil, and was able to absorb such waves from space and change them back to a small spark at some distance from the coil.

Hertz's work gave support to Tesla's theory that there was an interesting discovery to be made on almost every note of the whole gamut of vibrations between the known ones of the electrical current and those of light. Tesla felt sure that if he could continually increase the frequency of electrical vibrations until they equaled that of light, he would be able to produce light by a direct and highly efficient process instead of the extremely wasteful process used in the Edison incandescent lamp, in which the useful light waves were a very small fraction of the wasted heat waves emitted in the process, and only five per cent of the electrical energy was effectively utilized.

Tesla started his investigations by building rotary alternating-current dynamos with up to 384 magnetic poles, and with these devices he was able to generate currents up to 10,000 cycles per second. He found that these high-frequency currents presented many fascinating possibilities

for even more efficient power transmission than his very practical 60-cycle polyphase system. He therefore carried on a parallel line of research into transformers for raising and lowering the voltage of such currents.

High-frequency alternating-current dynamos, similar to those designed by Tesla in 1890, were subsequently developed by F. W. Alexanderson into the high-power wireless transmitters which put transatlantic wireless transmission, more than two decades later, on such a sound practical basis that the Government would not permit control of it to go to a foreign country and preserved for the United States its predominant position in world wireless.

The high-frequency current transformers which Tesla developed proved to be spectacular performers. They contained not a trace of iron; as a matter of fact, the presence of iron was found to interfere with their operation. They were air-core transformers and consisted merely of concentric primary and secondary coils. The voltages he was able to produce with these transformers, which became known as Tesla coils, were very high. In the early experiments he attained potentials that would spark across a couple of inches of air, but in a short time he made tremendous progress and was producing flaming discharges. In working with these voltages he encountered dificulties in insulating his apparatus, and so he developed the technique that is now in universal use in high-tension apparatus: that of immersing the apparatus in oil and excluding all air from the coils, a discovery of great commercial importance.

There was a limit, however, above which the use of rotary generators of high-frequency currents was not practicable, so Tesla set about the task of developing a different type of generator. There was nothing novel about the basic idea he employed. In rotary dynamos, current is generated by moving a wire in a circle past a number of magnetic poles in succession. The same effect can be attained by moving the wire back and forth with an oscillating motion in front of one magnetic pole. No one, however, had as yet produced a practical reciprocating dynamo. Tesla produced one that was extremely practical for his particular purpose; but otherwise it had little utility, and he later felt that he could have employed much better the time he spent on it. It was an ingenious single-cylinder engine without valves, and

could be operated by compressed air or steam. It was supplied with ports like a small two-cycle marine engine. A rod extended from the piston through the cylinder head at either end, and at each end of the rods was attached a flat coil of wire which, by the reciprocating action of the piston, was caused to move back and forth through the field of an electromagnet. The magnetic field through its cushioning effect served as a flywheel.

Tesla was able to obtain a speed of 20,000 oscillations per minute, and to maintain such a remarkable degree of constancy in operation that he proposed the maintenance of equally constant speed of operation for his 60-cycle polyphase system and the use of synchronous motors, geared down to the proper extent, as clocks which would furnish correct time wherever alternating current was available. This proposal furnished the foundation for our modern electric clocks. As with many another of his practical and useful suggestions, he did not take out a patent on the idea, and gained no financial advantage from it.

In working with his polyphase system, Tesla gained a thorough understanding of the part played by the two factors, capacity and inductance, in alternating-current circuits; the former acting like a spring and the latter like a storage tank. His calculations indicated that with currents of suficiently high frequency it would be possible to produce resonance with relatively small values of inductance and capacity. Producing resonance is tuning a circuit electrically. The mechanical effects analogous to electrical resonance are the causing of a pendulum to swing through a wide arc by giving it a series of very light but equally timed touches, or the destruction of a bridge by soldiers marching in unison over it. Each small vibration re-enforces its predecessors until tremendous effects are built up.

In a tuned electrical circuit a condenser supplies the capacity and a coil of wire supplies the inductance. A condenser ordinarily consists of two parallel metal plates separated from each other a short distance by an insulating material. Each plate is connected to either end of the inductance coil. The size of the condenser and the coil is determined by the frequency of the current. The coil-condenser combination and the current are tuned to each other. The current can be pictured as flowing into the condenser until it is fully charged. It then flows

elastically into the inductance coil, which stores the energy by building up its magnetic field. When the current ceases to flow in the coil, the magnetic field collapses and gives back to the coil the energy previously used in building up the magnetic field, thus causing a current to flow back into the condenser to charge it up to overflowing again, so that it is ready to repeat the process. This flow back and forth between the condenser and coil takes place in step with the periodic reversal of the alternating current which supplies the energy when resonance is established. Each time it takes place, the charging current comes along at the right instant to give it a boost, so that the oscillations build up to tremendous values.

Tesla, in discussing this plan of electrical tuning of circuits in a lecture, given several years later, said:

The first question to answer then is whether pure resonance effects are producible. Theory and experiment show that such is impossible in nature for, as the oscillations become more vigorous, the losses in vibrating bodies and environing media rapidly increase, and necessarily check the vibrations, which would otherwise go on increasing forever. It is a fortunate circumstance that pure resonance is not producible for, if it were, there is no telling what dangers might lie in wait for the innocent experimenter. But, to a certain degree, resonance is producible, the magnitude of the effects being limited by the imperfect conductivity and imperfect elasticity of the media, or, generally stated, frictional losses. The smaller these losses the more striking are the effects.

Tesla applied the electrical tuning principles to his coils and discovered that he was able to produce tremendous resonance effects and build up very high voltages. The tuning principles he developed in 1890 are those which have made our modern radio, and the development of the earlier art, "wireless," possible. He had been working with, and demonstrating, these principles before others who received credit had begun to learn the first lessons in electricity.

Seeking a new source of high-frequency currents, higher than could be produced by any mechanical apparatus, Tesla made use of a discovery that had been made the year in which he was born, by Lord Kelvin, in England, in 1856, and for which no use had thus far been found. Up to the time of Kelvin's discovery it had been believed that when a

condenser was discharged the electricity flowed out of one plate into the other, like water being poured from a glass, thus establishing equilibrium. Kelvin showed that the process was far more interesting and complex; that its action was like the bobbing up and down that takes place when a weighted stretched spring is released. The electricity, he showed, rushes from one plate into the other and then back again, the process continuing until all of the stored up energy is used up in overcoming frictional losses. The back-and-forth surges take place at a tremendously high frequency, hundreds of millions a second.

The combination of condenser discharges and tuned circuits opened a new realm in electrical science as significant and as important as Tesla's polyphase system. He worked out remarkably simple and automatic methods for charging the condensers by low voltage (direct and alternating currents), and discharging them through his new air-core transformers, or Tesla coils, to produce currents of enormously high voltages that oscillated at the tremendously high frequency of the condenser discharge. The properties of these currents were unlike anything that had been seen before. He was again pioneering in an entirely new field, with tremendous possibilities. He labored feverishly in his laboratory; and as he lay in bed at night for his five-hours' rest, which included two hours of sleep, he formulated new experiments.

Tesla announced the heating effect of high-frequency currents on the body in 1890 and proposed their use as a therapeutic device. In this he was a pioneer, but soon had many imitators here and abroad who claimed to be originators. He made no effort to protect his discovery or prevent the pirating of his invention. When the same observation was made thirty-five years later in laboratories using vacuum-tube oscillators as the source of the high-frequency currents, it was hailed as a new discovery and developed as a modern wonder. Tesla's original discovery is, however, the basis of a vast array of very recent electronic applications in which high-frequency currents are used to produce heat for industrial purposes.

When he gave his first lecture on the subject before the American Institute of Electrical Engineers at Columbia College, in May, 1891, he was able to produce spark discharges five inches long, indicating a potential of

about 100,000 volts, but, more important, he was able to produce phenomena which included, electrical sheets of flame, and a variety of new forms of illumination--electric lamps the like of which had never been seen before, nor dreamed of in the wildest imagination of any experimenter.

This lecture produced a sensation in engineering circles. He was already famous in this field for the astounding revelations he had made before the same organization on that earlier occasion when he described his discovery of the polyphase alternating current system. That discovery was an intellectual accomplishment of bewildering brilliance, made impressive by the tremendous commercial importance of the discovery. The experiments with the high-frequency and high-potential currents, however, were spectacular; the crackling of the high-voltage sparks, the flashing of the high-potential sheets of electrical flame; the brilliant bulbs and tubes of electrical fire, the amazing physical effects he produced with the new currents, made a profound emotional appeal to the startled beholders.

The man who could produce these two pioneering developments within two years must be more than a genius! The news of his new accomplishment flashed quickly throughout the world, and Tesla's fame now rested on a double foundation.

The world-wide fame that came to him at this time was unfortunate. Tesla would have been entirely superhuman had he not derived a great deal of satisfaction out of the hero-worshiping adulation that now came to him. It was only five years ago that he had been hungry and penniless in the streets of New York, competing with equally hungry hordes of unemployed for the few existent jobs calling for brute labor, while his head bulged with important inventions which he was anxious to give to the world. No one would listen to him then--and now the intellectual elite of the nation were honoring him as an unrivaled genius.

Tesla was a spectacular figure in New York in 1891. A tall, dark, handsome, well-built individual who had a flair for wearing clothes that gave him an air of magnificence, who spoke perfect English but carried an atmosphere of European culture which was worshiped at that time, he was an outstanding personality to all who beheld him. Hidden behind his quiet, self-effacing demeanor, and an extreme modesty that manifested itself as an exaggerated shyness, was the mind of a genius which had worked electrical

wonders that fired the imagination of all and exceeded the understanding of the vast majority of the population. In addition Tesla was a young man, not yet thirty-five, who had recently received a million dollars and was a bachelor.

A bachelor with a million dollars, culture and fame, could not avoid being a shining mark in New York in the early years of the gay nineties. Many were the designing matrons with marriageable daughters who cast envious eyes in the direction of this eligible young man. The social leaders looked upon him as a fascinating decoration for their salons. The big men of business looked upon him as a good man to know. The intellectuals of the day found his almost unbelievable accomplishments a source of inspiration.

Except at formal dinners Tesla always dined alone, and never under any circumstances would he dine with a woman at a two-some dinner. No matter how much a woman might gush over him or strive to gain his favor, Tesla, in most adamant fashion, maintained a thoroughly impersonal attitude. At the Waldorf-Astoria and at Delmonico's he had particular tables which were always reserved for him. They occupied secluded positions in the dining rooms because when he entered either room he was the cynosure of all eyes and did not enjoy being on exhibition.

In spite of all of the adulation that was heaped upon him, Tesla had but one desire--to continue his laboratory experiments undisturbed by outside distractions. There was a tremendous empire of new knowledge to be explored. He was fired with a potential of enthusiasm for the work that was as high as the voltage of the currents with which he was working, and new ideas were coming to him with almost the rapidity of the cycles in his high-frequency current.

There were three broad fields in which he wished to develop applications which were now clearly outlined in his mind: a system of wireless power transmission that would excel his own polyphase system, a new type of illumination, and the wireless transmission of intelligence. He wished to work on them all simultaneously. They were not separate and isolated subjects but all closely intermeshed, all notes on that vast cosmic scale of vibration represented by his beloved alternating currents. He did not wish to play on one note at a time, as would a violinist; he preferred to play as a pianist, striking many notes at once and weaving them into beautiful chords. Where it possible to occupy the

position of leader and simultaneously play all of the instruments in a great symphony orchestra, he would have been still better pleased. The instruments in his orchestra, however, would be electrical devices oscillating in tune with their energizing currents or with their environment. To the extent that he was unable to realize his most expansive desires, he was under mental pressure that drove him to a working pace which no individual of ordinary strength could withstand without a resulting complete physical breakdown.

The spectacular lecture and demonstration on high-frequency and high-potential currents which he gave before the American Institute of Electrical Engineers in February, 1891, at Columbia College, created as profound a sensation as did his earlier one. Each opened an entirely new realm of scientific investigation and practical discoveries. The discoveries contained in either lecture would have been suficient to stand as the fruit of a lifetime's work and bring lasting fame. Two such events in rapid succession seemed almost unbelievable--yet Tesla seemed to be scarcely well launched on his career, with more important work still to come.

Requests that he give lectures came from learned societies throughout this country and Europe, but he begged to be excused because of the tremendous pressure on his time which his work entailed. Equally insistent were the social demands that were being made upon him. Social groups sought in every way to honor him, and incidentally to shine in his reflected glory. Tesla was not vulnerable to the importunings of the socialites who sought him merely as a scintillating satellite, but the clever "lion hunters" of that day soon discovered his Achilles' heel--an intelligent interest in his accomplishments and a sympathetic ear for his dreams of wonders still to come.

With this technique in successful operation, Tesla was captured and soon completely lionized. He was guest of honor at a continuous round of functions and he met the social obligations involved in them by staging, in return, elaborate dinners at the Waldorf-Astoria followed by demonstration parties at his laboratory on South Fifth Avenue. Tesla never did a halfway job on anything. When he staged a dinner he left nothing to chance in the matter of cuisine, service and decorations. He sought rare fish and fowl, meats of surpassing excellence, and choicest liquors

and exquisite wines of the best vintages. His dinners were the talk of the town and having been a guest at a Tesla dinner was a mark of social distinction, proof of membership in the inner group of the elite within Ward MacAllister's "400." At these dinners Tesla presided as a most meticulous host, or more accurately, as an old-world absolute monarch, for he would sample all food brought to the dining room; and rarely did an event pass without the grandiose host sending back some sauce or wine of unquestioned excellence as unworthy of his guests.

Following each of these meals Tesla would escort his guests to his laboratory below Washington Square; and here his demonstrations were even more spectacular than his dinners. He had a flair for the dramatic; and the strange-looking devices with which his laboratory was furnished provided a grotesque and bizarre background for the fantastic displays of seemingly unearthly forces that with invisible fingers set objects whirling, caused globes and tubes of various shapes to glow resplendently in unfamiliar colors as if a section of a distant sun were suddenly transplanted into the darkened room, and crackling of fire and hissing sheets of flame to issue from monster coils to the accompaniment of sulfurous fumes of ozone produced by the electrical discharges that suggested this magician's chamber was connected directly with the seething vaults of hell. Nor was this illusion dispelled when Tesla would permit hundreds of thousands of volts of electricity to pass through his body and light a lamp or melt a wire which he held.

The amazing feat of harmlessly passing through his body currents of tremendously high voltage and high frequency was one which Tesla evolved by his mental experiments long before he had an opportunity to test them in his laboratory. The low-frequency alternating currents, such as are now used on home-lighting circuits, would, he knew from unpleasant experiences, produce a painful shock if passed through the body. When light waves impinged on the body, however, no such painful sensation was produced. The only difference between the electric currents and light waves, he reasoned, was a matter of frequency, the electric currents oscillating at the rate of 60 per second and the light waves at billions per second.

Somewhere between these two extremes the shock-producing property of electromagnetic vibrations must disappear; and

he surmised the point would be near the lower end of the gap. Damage done to the body by electric shock he divided into two factors, one--the destruction of tissues by the heating effect which increased or diminished as the amperage of the current was raised or lowered; and two--the sensation of acute pain which varied with the number of alternations of the current, each alternation producing a single stimulus which was transmitted by the nerves as a pain.

Nerves, he knew, could respond to stimuli up to a rate of about 700 per second, but were unable to transmit impulses received at a more rapid rate. In this respect they acted very much like the ear, which is unable to hear air vibrations above a frequency of about 15,000 per second, and the eye, which is blind to color vibrations of a frequency higher than that in violet light.

When he constructed his high-frequency alternating-current dynamos, he had frequencies up to 20,000 per second with which to test his theory; and by finger tests across the terminals he was able to demonstrate that the nerves were unable to perceive the individual vibrations at this rapid rate. The amperage, which carried the tissue-destroying power, was still too high in the output of these machines to pass safely through his body, even though the sensation of pain was lacking.

By passing these currents through his newly invented air-core transformers, he could increase their voltage ten-thousand fold and reduce the amperage proportionately. The current density would thereby be reduced below the point at which it would injure tissues. He would then have a current which would not produce sensation and would not harm the tissues. He cautiously tested the theory by passing the currents through two fingers, then his arm, next from hand to hand through his body and finally from his head to his feet. If a spark jumped to or from his body, there was a pin-prick sensation at the point of contact, but this could be eliminated by holding a piece of metal to and from which the spark could jump while the current passed through the tissues without producing any sensation.

The energy content of these currents, which is proportionate to the current multiplied by the voltage, could be very high and produce spectacular effects such as melting metal rods, exploding lead disks, and lighting

incandescent or vacuum-tube lamps after passing painlessly through his body.

The European scientific societies were persistent in their efforts to induce Tesla to accept their invitations to lecture before them, and finally he acceded. He set extravagantly high standards for the contents of his lectures, and their preparation entailed a tremendous amount of labor. All of the material had to be entirely new. He would never repeat an experiment previously presented. Every technical statement had to be tested at least twenty times to insure complete accuracy. His lectures would last two or three hours; and every minute of the time was crowded with new and awe-inspiring demonstrations of his constant stream of discoveries. He used a great array of devices fashioned by himself and built in his own laboratories to illustrate his talks. A Tesla lecture, therefore, was an extremely important event in the scientific world and a most impressive occasion to those who were fortunate enough to be able to attend.

Tesla arranged to give a lecture before the Institution of Electrical Engineers in London on February 3, 1892, and one before the International Society of Engineers in Paris on February nineteenth. His decision to give the European lectures was influenced to some extent by the fact that they would afford him an opportunity to visit his home in Gospic, for recent letters had indicated that his mother's health was failing.

The lecture before the Institution of Electrical Engineers was a great success. English engineering journals, as will be seen, had been niggardly in extending recognition to Tesla for priority in the discovery of the rotating magnetic field, and had belittled the practical value of his polyphase alternating-current system, but in this attitude they were not representative of the great body of engineers, who were most generous in their praise and enthusiasm; and the attitude of the engineers was shared by the English scientists.

When Tesla arrived in London he was entertained at many places by famous men. At the Royal Institution, where the immortal Michael Faraday had carried on his fundamental researches in magnetism and electricity, Sir James Dewar, and a committee of equally famous scientists, sought to prevail upon Tesla to repeat his lecture before that

organization. Tesla could be plain stubborn in sticking to his plans, and in this case was exhibiting his usual firmness. The famous Scottish scientist matched Tesla's stubbornness with an equal persuasive persistence. He escorted Tesla to Faraday's chair, an almost sacred relic to English science, seated him in this throne, and then brought out an almost equally precious heirloom, a portion of a bottle of whiskey, the remainder of Faraday's personal supply, untouched for nearly a quarter of a century. Out of this he poured a generous half glass for Tesla. Sir James won. Tesla relented and gave the lecture the following evening.

Lord Rayleigh, the eminent English physicist, was chairman of the meeting at the Royal Institution, which was attended by the elite of the scientific world and a generous representation of the nobility of the realm. Rayleigh, after witnessing the performance of Tesla's experiments, which were none the less awe inspiring to scientists than to laymen, showered words of praise on the inventor.

Rayleigh declared that Tesla possessed a great gift for the discovery of fundamental scientific principles, and urged that he concentrate his efforts on some one big idea.

Tesla, in his conversation after the meeting, disclaimed ability as a great discoverer; but in this he was merely being modest, for he knew that he was unique among men in his ability to discover fundamental truths. He did, however, give very serious consideration to Rayleigh's suggestion that he concentrate on some one big idea. It is doubtful, however, whether Rayleigh's suggestion was good advice. Tesla's mind had a range that was cosmic in magnitude and adjusted to broad slashing advances through unknown regions. Rayleigh's advice was like suggesting to an explorer who had unique ability for penetrating an unknown continent and opening it to civilization that he settle down and cultivate a homestead, since that would give more definite and specific returns for efforts expended.

Two weeks later Tesla gave his scheduled lecture before the Physical Society in Paris and repeated it before the International Society of Electrical Engineers. This was his second visit to Paris since he had quit his job with the Continental Edison Company in that city eight years before. Immediately after leaving the Westinghouse Company in the

autumn of 1889--at which time, too, he completed his U.S. citizenship requirements--he had made a brief visit to Paris to attend the International Exposition. In the meantime, the fame of his polyphase system had spread to Europe; and to this was added the glory for his spectacular work with the new high-frequency currents. He was given a hero's reception in Paris, as well as in London.

It would be interesting to know what thoughts passed through the minds of the executives of the Continental Edison Company as they observed the tremendous contributions to science and industry by the engineer whose services they had lost through their penny-wise tactics when they were offered in 1883, and could undoubtedly have purchased for a relatively small amount, the polyphase system for which Westinghouse paid Tesla $1,000,000 five years later.

A tesla lecture was an avalanche of new and fascinating electrical knowledge. He completely overwhelmed his listeners with a wealth of spectacular original experiments, and as a result almost every individual contribution lost its identity in the dazzling concentration of the whole galaxy of startling developments.

In the 1892 lectures, entitled "Experiments with Alternating Currents of High Potential and High Frequency," Tesla described many of his discoveries which are only coming into general use today and are being hailed as modern inventions. Among these are the "neon" and other gas-filled lamps, and phosphorescent lamps. Many of the discoveries described are still unutilized, including, as will be seen, the carbon or metallic-button incandescent lamp, requiring but a single wire connection; and still others, which he later discovered, were rich producers of the mysterious X-rays.

The transcript of these lectures runs to 40,000 words. Scores of pieces of apparatus were used and usually several experiments were performed with each. He described "wireless" lamps, glowing glass tubes that required no wire connection for their operation. He described motors which operated on one wire, and "wireless" or "no wire" motors. But perhaps the most important development he described was the sensitive electronic tube--the original of all our modern radio and other electronic tubes--which, he

predicted, was the device that would permit receiving wireless telegraph messages across the Atlantic. Of all these discoveries we shall presently have more to say in detail.

It had been Tesla's intention to make a short visit to his early home in Gospic when his lectures were out of the way, but circumstances forced him to make the trip sooner than he expected. Returning to his hotel after delivering the second Paris lecture, he received word that his mother was gravely ill. He rushed to the railroad station, arriving in time to board a train just about to pull out. He telegraphed ahead for special transportation facilities to shorten his trip, and succeeded in reaching Gospic in time to see his mother alive. He arrived in the afternoon and she died that night.

The great anxiety from which Tesla suffered during his sleepless rush from Paris to Gospic caused a patch of hair on the right side of his head to turn white over night. Within a month its jet black color was restored naturally.

Almost immediately after his mother's death, Tesla contracted an illness which incapacitated him for many weeks. When he recovered, he visited his sister Marica, in Plaski, for two weeks. From there he went to Belgrade, the capital of Serbia, where he arrived in May and was received as a national hero.

During the weeks of enforced physical inactivity imposed on him by his illness, Tesla took stock of himself and became thoroughly dissatisfied with the manner in which he had been conducting his life. No human being could feel anything but a pleasurable reaction in response to the adulation that had been heaped upon him during the past two years. Tesla, however, prided himself upon his wisdom in having so designed his life that he would not become a victim of human frailties, but would function far above the normal human level of physical limitations and intellectual activities. Now Tesla saw, in retrospect, that insofar as he had adhered to his superman plan of life, he had succeeded in achieving his goal of producing the works of a superman at a rate which astounded the world. When, however, he submitted to the first blandishments of the lion hunters after his New York lecture in May, 1891, he observed, social activities had cut into his available time and had interfered with his creative activities. He had let

the "man magnificent" supersede his "superman," and two years of valuable time had been largely lost. In addition, he had spent that totally unproductive year at the Westinghouse plant. At the close of that period, he had vowed he would never again work for anyone. He now vowed that he would put an end to the vacuous social activities into which he had been inveigled.

It was not easy for Tesla to live up to his good resolutions, for his European trip had greatly enhanced his fame and triumphant celebrations were scheduled on his reappearance in New York. Nevertheless, he rejected all invitations. He returned to the Hotel Gerlach, where he lived a solitary existence. With a pent-up reserve of physical energy owing to his long abstinence from his heavy daily routine of work, he plunged with great vigor into his new program which was to open up new and enchanting realms of scientific wonders.

THE first public application of Tesla's polyphase alternating-current system was made at the Chicago World's Fair, the Columbian Exposition, which opened in 1893 to celebrate the four-hundredth anniversary of the discovery of America. This was the first world's fair for which electric lighting was a possibility, and the architects availed themselves of the opportunities it afforded for obtaining spectacular effects in illuminating the grounds and buildings at night, as well as for interior lighting during the day. The Westinghouse Electric Company secured the contract for installing all power and lighting equipment at the Fair, and took full advantage of this opportunity to use the Tesla system and demonstrate its great versatility. It supplied all the current used for lighting and power.

while the Chicago World's Fair was in reality a monument to Tesla, he had, in addition, a personal exhibition in which he demonstrated his most recent inventions. One of his exhibits was a spinning egg, made of metal. The egg was shown lying on top of a small velvet-covered circular platform. When Tesla closed a switch the egg stood on its small end and rotated at a high speed as if by magic. The "magic" phase of this feat appealed to a public which, however, grasped little of the explanation that it

illustrated the principle of the rotating magnetic field produced by the polyphase alternating currents. In other of his exhibits, glass tubes suspended in space or held in his hands lighted up in an equally "magical" fashion.

But his most spectacular feat was to let 1,000,000 volts pass through his body. This was alternating current of very high frequency as well as high voltage. He had discovered means of producing such currents. Eight years had passed since Edison, attacking high-voltage alternating current as deadly, had refused to become interested in Tesla's polyphase system. Now the Tesla system was providing the electricity for the great world's fair and the Edison direct-current system was ignored. The final gesture of victory was for Tesla to answer Edison's charge that alternating current was deadly by passing the highest voltage of it ever produced through his own body for many minutes without the slightest sign of harm. This bit of showmanship endeared Tesla to the public and brought him a tremendous burst of world-wide fame. Unfortunately, however, it obscured his more important work with polyphase currents.

The next great achievement to be attained by his polyphase system was the harnessing of Niagara Falls. (Before this was done, and even before the opening of the Chicago fair, the practicability of his system was demonstrated in Europe; but this had been undertaken without his knowledge. A practical test of the transmission of polyphase alternating current at 30,000 volts was made between a hydroelectric station at Lauffen and the City of Frankfurt, the current being used to furnish electricity at a fair held at the latter city. This installation was built in 1891. The current was used to light incandescent and arc lamps and also to operate a Tesla motor.) In 1886 a charter had been granted for developing power at the Falls. The project made slow progress and was taken over by a New York group which organized the Cataract Construction Company, of which Edward Dean Adams was made president. Mr. Adams' company desired to develop power on the largest scale possible. The total energy supply available in the Falls had been variously estimated from 4,000,000 to 9,000,000 horsepower. Mr. Adams organized the International Niagara Commission for the purpose of ascertaining the best means of harnessing the Falls, and made Lord Kelvin, the famous English scientist, its chairman. A prize of $3,000 was offered for the most practical plan submitted.

Tesla had predicted nearly thirty years before, as a boy, that he would someday harness Niagara Falls. Here was the opportunity. In the meantime, he had made it possible to fulfil his boyhood boast by completing the series of inventions which made it possible to change the hydraulic power of the Falls into electrical energy.

The prize-offer plan adopted by Mr. Adams did not, however, set well with Mr. Westinghouse when he was urged to submit a proposal. He replied, "These people are trying to get one hundred thousand dollars' worth of information for three thousand dollars. When they are ready to talk business we will submit our plans." This adamant attitude of Westinghouse was one handicap for the Tesla alternating-current plan. The second big handicap was the fact that Lord Kelvin had declared himself in favor of the use of direct current.

About twenty plans were submitted in the contest but none of them was accepted by the commission, and no prize was awarded. The big electrical companies, Westinghouse, Edison General Electric and Thomson-Houston, did not submit plans. This took place in 1890.

Original developers of the Falls planned to use locally the mechanical power provided by water wheels; but the only practical plan was, clearly, the generation of electricity by dynamos driven by water wheels, and the distribution of the current throughout the district. There was a good additional market for it at Buffalo, a large industrial city about twenty-two miles distant. There was always the hope, too, that the current could be transmitted to New York City and serve the rich intervening territory. If direct current were used, its transmission twenty-two miles to Buffalo was totally unfeasible. The Tesla alternating-current system, however, made the transmission to Buffalo extremely practicable and the delivery of the current to New York City a possibility.

In due time the Cataract Construction Company decided that the hydroelectric system was the only feasible one, and proposals and bids were asked on a power system consisting of three generating units, each of 5,000 horsepower, from the Westinghouse Electric Company and the General Electric Company. Each one submitted a proposal to install a Tesla polyphase generating system. The General Electric Company,

successor to the Edison General Electric Company, having in the meantime secured a license to use the Tesla patents, proposed to install a three-phase system, and Westinghouse a two-phase system. The first proposal concerned the building of the powerhouse. A second proposal on which bids were asked concerned the transmission line between Niagara Falls and Buffalo and a distribution system in the latter city.

Bids were asked for early in 1893, and in October of that year Mr. Adams announced that the Westinghouse plan for the powerhouse and the General Electric plan for the transmission line were accepted. The latter included a transformation of the two-phase current from the generators into three-phase current to be transmitted to Buffalo. This change indicated the flexibility of the Tesla polyphase system.

Westinghouse completed the powerhouse and in 1895 it stood ready to deliver 15,000 horsepower; the most gigantic piece of electrical engineering conceived or accomplished up to that time. In 1896 General Electric completed the transmission and distribution system, and electrical power extracted from Niagara Falls, without in any way impairing the beauty of the spectacle they presented, was delivered to industries through the Falls and Buffalo areas. So successful was this installation that the Westinghouse Company installed seven additional generating units, bringing the output to 50,000 horsepower. A second equivalent powerhouse, also using alternating current, was later built by the General Electric Company. Today, the powerhouses at Niagara Falls are linked directly with the electric power system in New York City, all using the Tesla system.

Dr. Charles F. Scott, Professor Emeritus of Electrical Engineering at wale University, and former president of the American Institute of Electrical Engineers, who was a Westinghouse engineer when that company was developing the Tesla system, in a memorial review of Tesla's accomplishments, (Published in Electrical Engineering, August 1943, pp. 351-555.) describes the Niagara development and its results:

The simultaneous development of the Niagara project and the Tesla system was a fortuitous coincidence. No adequate method of handling large power was available in 1890; but

while the hydraulic tunnel was under construction, the development of polyphase apparatus justified the oficial decision of May 6, 1893, five years and five days after the issuing of Tesla's patents, to use his system. The Polyphase method brought success to the Niagara project; and reciprocally Niagara brought immediate prestige to the new electric system.

Power was delivered in August 1895 to the first customer, the Pittsburgh Reduction Company (now Aluminum Company of America) for producing aluminum by the Hall process, patented in the eventful year 1886. . . .

In 1896 transmission from Niagara Falls to Buffalo, 22 miles, was inaugurated. Compare this gigantic and universal system capable of uniting many power sources in a superpower system, with the multiplicity of Lilliputian "systems" which previously supplied electrical service. As Mr. Adams aptly explained: "Formerly the various kinds of current required by different kinds of lamps and motors were generated locally; by the Niagara-Tesla system only one kind of current is generated, to be transmitted to places of use and then changed to the desired form."

The Niagara demonstration of current for all purposes from large generators led immediately to similar power systems in New York City--for the elevated and street railways and for the subway; for steam railway electrification; and for the Edison systems, either by operating substations for converting alternating current to direct current or by changing completely to A.C. service.

The culminating year 1896 inaugurated two far reaching developments for the extension of polyphase power, one commercial and one engineering. By exchange of patent rights, the General Electric Company obtained license rights under Tesla patents, later made impregnable by nearly a score of court decisions. Also the Parsons turbine, accompanied by its foremost engineer, was transplanted to America and enabled George Westinghouse to bring to fruition by a new method the ideal of his first patent, a "rotary steam engine." The acme of the reciprocating engine came in the early 1900's; a century's development produced the great engines that drove 5,000 to 7,500 kilowatt alternators for New York's elevated and subway. But the rapidly growing steam turbine of different types soon doomed the engine to obsolescence; single units

with the capacity of a score of the largest engines are now supplying power to the metropolis. Single powerhouses now supply more power than all of the thousands of central stations and isolated plants of 1890.

Prof. Scott concludes: "The evolution of electric power from the discovery of Faraday in 1831 to the initial great installation of the Tesla polyphase system in 1896 is undoubtedly the most tremendous event in all engineering history."

Lord Kelvin, who had originally favored direct current for Niagara, later conceded, but only after the system was in operation, that alternating current had many more advantages for long-distance distribution systems, and declared, "Tesla has contributed more to electrical science than any man up to his time."

There should never have been the slightest shadow of doubt concerning the credit due to Tesla not only for discovering the rotating magnetic field but also for inventing the first practical alternating-current motor, the polyphase system of alternating currents, dynamos for generating them, a variety of motors for converting the currents into power, a system of polyphase transformers for raising and lowering voltages, and economical methods for transmitting electrical power for long distances. Nevertheless, credit for priority has unjustly been given to and taken by others. Tesla succeeded in establishing his claims; but in the meantime, however, damage was done by raising these unfair claims, and to this day the electrical engineering profession, and public service and major electrical industries, have never extended to Tesla the credit to which he is entitled. If they had done so, the name of Tesla would carry at least as much fame as the names Edison and Westinghouse.

Tesla, as we have seen, made his rotating magnetic field invention in 1882, and within two months evolved the complete power system, including all the apparatus which he later patented. In 1883 he described his invention to oficials of the Continental Edison Company. In 1884 he demonstrated his motor to the mayor of Strassburg and others. In this same year he described the invention to Thomas A. Edison. In 1885 he sought to have the promoters of the Tesla Arc Light Company develop his system. In 1887 he secured financial backing and built a series of the

dynamos and motors which were tested by Prof. Anthony of Cornell University. On October 12, 1887, the first patent applications covering his basic inventions were revealed to the Patent Ofice. The patents were granted on various dates in the early months of 1888. On May 16, 1888, he presented a demonstration and description of his basic inventions before the American Institute of Electrical Engineers in New York. So much for the record.

The first complication arose when Prof. Galileo Ferraris, a physicist in the University of Turin, presented a paper on "Rotazioni elettrodynamiche" (Electrodynamic Rotation) before the Turin Academy in March, 1888. This was six years after Tesla made his discovery, five years after he demonstrated his motor and six months after he had applied for patents on his system. Prof. Ferraris had been carrying on researches in the field of optics. The problem that particularly interested him was polarized light. In this period it was considered necessary to build mechanical models to demonstrate all scientific principles. It was not very dificult to devise models to demonstrate the nature of plane-polarized light, but circularly polarized light presented a more dificult problem.

Prof. Ferraris gave some thought to this problem in 1885, but made no progress until 1888 when he turned to alternating currents for a solution. In that period light was erroneously thought of as a continuously undulating wave in the ether. Prof. Ferraris took the continuously alternating current as an analogue of the plane-polarized light wave. For a mechanical analogue of the circularly polarized light wave he visualized a second train of waves 90 degrees out of step with the first, giving a right-angle vector to the component that should manifest itself by rotation. This paralleled the solution at which Tesla had arrived six years earlier.

In arranging a laboratory demonstration Prof. Ferraris used a copper cylinder suspended on a thread to represent the light waves, and caused two magnetic fields to operate on it at right angles to each other. When the currents were turned on, the cylinder rotated, wound up the thread on which it was suspended and raised itself. This was an excellent model of rotary polarized light waves. The model bore no resemblance to a motor, nor did the Turin scientist have any intention that it should be so considered. It was

a laboratory demonstration in optics, using an electrical analogy.

Prof. Ferraris' next experiment mounted the copper cylinder on a shaft and divided each of his two coils into two parts, placing one on either side of the copper cylinder. The device worked up to a speed of 900 revolutions per minute--and beyond this point lost power so rapidly it ceased to operate entirely. He tried iron cylinders but they did not work nearly so well as the copper ones. Prof. Ferraris predicted no future for the device as a power source, but he did predict it would find usefulness as the operating principle for a meter for measuring current.

Prof. Ferraris thus demonstrated that he failed by a wide margin to grasp the principle which Tesla developed. The Italian scientist found that the use of the magnetic iron cylinder interfered with the operations of his device, whereas Tesla, following the correct theory, utilized iron cores for the magnetic field of his motor, used an iron armature, and obtained an efficiency of about 95 per cent in his first motor, which had a rating of about a quarter horsepower. The efficiency of Ferraris' device was less than 25 per cent.

It was Prof. Ferraris' belief that he had performed an important service to science by demonstrating that the rotating magnetic field could not be used on any practical basis for producing mechanical power from alternating current. He never deviated from this conclusion, nor did he ever claim that he had anticipated Tesla's discovery of a practical means for utilizing the rotating field for producing power. Knowing that his process was entirely different from Tesla's, he never advanced a claim to independent discovery of the alternating-current motor. He even conceded that Tesla had arrived at his discovery of the rotating magnetic field entirely independently of him, and that Tesla could not in any way have known of his work before publication.

A description of Prof. Ferraris' experiments, however, was published in The Electrician, in London, May 25, 1888 (page 86). This was accompanied by the statement:

Whether the apparatus devised by Prof. Ferraris will lead to the discovery of an alternating current motor is a question we do not pretend to prophesy, but as the

principle involved may also have other applications, notably in the construction of meters for measuring the supply of electricity . . .

A year before this time Prof. Anthony had already tested Tesla's alternating-current motors in the United States and reported that they attained an order of efficiency equal to that of direct-current motors; and Tesla's U.S. patents had been publicly announced several months previously.

It was obvious that the editors of this London publication were not keeping up to date on developments in the United States.

Tesla responded quickly, informing the editors of their oversight and submitting an article describing his motors and the results obtained with them.

No great enthusiasm was exhibited by the editors of The Electrician. They receded to only the least possible extent from their stand in favor of Ferraris by publishing an editorial note:

Our issue of the 25th of May contained an abstract of a paper by Prof. Galileo Ferraris describing a method of producing a revolving resultant magnetic field by means of a pair of coils with the axes at right angles and traversed by alternating currents, and we drew attention to the possibility that the principle of the apparatus might be applied to the construction of an alternating current motor. The paper by Mr. Nikola Tesla, which appears in our columns this week, contains a description of such a motor, founded on exactly the same principle. (VoI. XX, p. 165, June 15, 1888.)

No attention was drawn to the fact that Ferraris had reached the conclusion that the principle could never be used for making a practical motor, whereas Tesla had produced such a motor.

This attitude toward the American development did not disappear from the London engineering journals. Later the Electrical Review (London: Vol. XXVIII, p. 291, March 6, 1891) published an editorial which opened with the statement:

For several years past, from the days of Prof. Ferraris' investigations, which were followed by those of Tesla and Zipernowski and a host of imitators, we have periodically heard of the question of alternating current motors being solved.

At this time the Westinghouse Company was already commercially exploiting the successful and practical Tesla polyphase system in the United States. Not one word of credit to Tesla appeared in the London engineering press.

A letter of protest dated March 17, 1891, was forwarded by Tesla, and this was published some weeks later (p. 446) by the Review. He said in part:

In all civilized countries patents have been obtained almost without a single reference to anything which would have in the least degree rendered questionable the novelty of the invention. The first published essay--an account of some laboratory experiments by Prof. Ferraris--was published in Italy six or seven months after the date of filing my application for the foundation patents. . . . yet in your issue of March 6, I read: "For several years past, from the days of Prof. Ferraris' investigations, which were followed by those of Tesla and Zipernowski and a host of imitators, we have periodically heard of the question of alternating current motors being solved.

No one can say that I have not been free in acknowledging the merit of Prof. Ferraris, and I hope that my statement of facts will not be misinterpreted. Even if Prof. Ferraris' essay would have anticipated the date of filing of my application, yet, in the opinion of all fair minded men, I would have been entitled to the credit of having been the first to produce a practical motor; for Prof. Ferraris denies in his essay the value of the invention for the transmission of power. . . .

Thus in the most essential features of the system--the generators with two or three currents of differing phase, the three wire system, the closed coil armature, the motors with direct current in the field, etc.,--I would stand alone, even had Prof. Ferraris' essay been published many years ago. . . .

Most of these facts, if not all, are perfectly well known in England; yet according to some papers, one of the

leading English electricians does not hesitate to say that I have worked in the direction indicated by Prof. Ferraris, and in your issue above referred to it seems I am called an imitator.

Now, I ask you where is that well known English fairness. I am a pioneer and I am called an imitator. I am not an imitator. I produce original work or none at all.

This letter was published; but the Electrical Review neither expressed regret for the misstatement nor extended recognition to Tesla.

Charles Proteus Steinmetz, later to achieve fame as the electrical wizard of the General Electric Company, came to the support of Tesla. In a paper presented before the American Institute of Electrical Engineers, he said: "Ferraris built only a little toy, and his magnetic circuits, so far as I know, were completed in air, not in iron, though that hardly makes any difference."(Transactions, A.I.E.E., VoI. VIII, p. 591, 1891.)

Other American engineers likewise rallied to Tesla's support.

An industrial exposition, as already mentioned, was held at Frankfurt, Germany, in 1891. The United States Navy sent Carl Hering, an electrical engineer who had done much writing for technical journals, as observer to report on any developments that would be of interest to the Navy. Hering, unfortunately, had not informed himself of the inventions embodied in the Tesla patents before going abroad.

The outstanding new development at the Frankfurt exposition was the first public application of Tesla's system. The grounds and building were lighted by electricity brought to the city by a long-distance transmission line over which electricity was carried from the hydroelectric station at Lauffen by three-phase alternating current carried at 30,000 volts. There was exhibited a two-horsepower motor operated by the three-phase current.

Hering recognized the significance of the new development, and sent back enthusiastic reports describing it as of German origin. In his article in the Electrical World

(N.Y.), he waxed enthusiastic about the work of Dolivo Dobrowolsky in designing the three-phase motor and its associated system, hailing it as an outstanding scientific discovery and of tremendous commercial importance. The impression was given that all other inventors had missed the main point, and that Dobrowolsky had achieved the grand broad accomplishment that would set the pace for future power developments. Nor was Hering the only one to whom this impression was communicated.

Ludwig Gutman, an American electrical engineer, a delegate to the Frankfurt Electrical Congress, in a paper on "The Inventor of the Rotary field System," delivered before that body, slammed back at Dobrowolsky. He stated:

As we have enjoyed in America several years' experience with this system represented by the Tesla motors I must oppose the assertion lately made by Herr von Dobrowolsky at a meeting of the Electrotechnische Zesellschaft held here in Frankfurt. The gentleman said: "I believe I am able to assert that the motor problem for large and small works has been by this completely solved." This assertion goes most likely too far. The problem was already solved, theoretically and electrically, in 1889. (Electrical World, N.Y.: Oct. 17, 1891)

Dobrowolsky, in a paper published in the Electrotechnische Zeitschrift (p. 149-150; 1891), reduced his claim to that of having produced the first practical alternating-current motor; and he asserted that in the Tesla two-phase motor there were field pulsations amounting to 40 per cent, while in his three-phase motor, in operation at the Frankfurt exposition, these were greatly reduced.

Even this reduced claim of Dobrowolsky's was quickly smashed. It drew fire from an American and an English source, and also from the chief engineer of the project of which his motor was a part.

Dr. Michael I. Pupin, of the Department of Engineering, Columbia University, analyzing Dobrowolsky's claim, (Ibid., Dec. 26, 1891) demonstrated that he had failed to comprehend the basic principles of the Tesla system, and that the three-phase system which he claimed as his own was included in Tesla's inventions.

C. E. L. Brown, the engineer in charge of the pioneering Lauffen-Frankfurt 30,000-volt transmission system and its three-phase generating system, including the Dobrowolsky motor, settled definitely and completely the question of credit for the whole system. In a letter published in the Electrical World (Nov. 7, 1891), he concluded with the statement: "The three phase current as applied at Frankfurt is due to the labors of Mr. Tesla and will be found clearly specified in his patents."

Mr. Brown wrote letters to other technical publications to this same effect, and in them criticized Mr. Hering for failing to give Tesla his due credit, and for diverting it to Dobrowolsky.

These criticisms finally brought a response from Mr. Hering. This appeared in the Electrical World, Feb. 6, 1892:

As Mr. C. E. L. Brown, in communications to the Electrical World and other journals, seems determined to insist that I have neglected the work of Mr. Tesla on rotary current I wish to state there is no one more willing than myself to give Mr. Tesla due credit for his work, and I have always considered him to be an original inventor of the rotary field system and first to reduce it to practice, and I believe I so stated in my articles. If I have at any time failed to give him credit for the extent to which he developed it, it has been because Mr. Tesla has been too modest (or perhaps prudent) to let the world know what he has accomplished. When the articles which have caused this discussion were being written Mr. Tesla's patents were not accessible to me. Just where Mr. Dobrowolsky's improvements begin I have not been able to ascertain. . . .

Dobrowolsky, though he may have been an independent inventor, admits Tesla's work is prior to his . . . The modesty of both of these gentlemen would, I feel sure, lead to a clear understanding. Regarding the subject of priority it may be of interest here to say that in a conversation with Prof. Ferraris last summer that gentleman told me with very becoming modesty that, although he had experimented with the rotary field several years before Tesla's work was published he did not think it was possible that Tesla could have known of his work and he therefore believed Tesla invented it entirely independently. He also stated that Tesla developed it much further than he (Ferraris) did.

Thus the scientists and engineers in the United States, Germany and Italy gave Tesla clear and unquestioned credit for being the sole inventor of the magnificent polyphase electrical system in all of its details. French and British journals then fell in line.

Thus, by 1892, there was universal acclaim for Tesla as the unquestioned inventor of the alternating-current motor and the polyphase system in engineering circles. There was none, therefore, to dispute his claim or to seek to rob him of credit when his fame reached the public through the operation of his system at the World's Fair in Chicago in 1893, and later when his system made possible the harnessing of Niagara Falls.

In due time, however, there came many who claimed to have made improvements on Tesla's inventions; and widespread efforts were made to exploit these "improvements." The Westinghouse Company, now owners of the Tesla patents, undertook to defend the patents and to prosecute infringers. As a result about twenty suits were carried to the courts, and, in every one of them, decisions gave a decisive victory to Tesla.

A sample of the sweeping decisions that were handed down is that of Judge Townsend in the United States Circuit Court of Connecticut in September, 1900, when, passing judgment on the first group of basic patents, he said in part:

It remained to the genius of Tesla to capture the unruly, unrestrained and hitherto opposing elements in the field of nature and art and to harness them to draw the machines of man. It was he who first showed how to transform the toy of Arago into an engine of power; the "laboratory experiment" of Bailey into a practically successful motor; the indicator into a driver; he first conceived the idea that the very impediments of reversal in direction, the contra-indications of alternations might be transformed into power-producing rotations, a whirling field of force.

what others looked upon as only invincible barriers, impassable currents and contradictory forces he seized, and by harmonizing their directions utilized in practical motors in distant cities the power of Niagara.

The resentments and antagonisms engendered by the unvarying series of successful decisions caused individuals who were adversely affected to vent their antagonisms on Tesla although he had not in ten years held any personal interests in the patents.

The situation that developed is well described by B. A. Behrend, later vice-president of the American Institute of Electrical Engineers:

It is a peculiar trait of ignorant men to go always from one extreme to another, and those who were once the blind admirers of Mr. Tesla, exalting him to an extent which can be likened only to the infatuated praise bestowed on victims of popular admiration, are now eagerly engaged in his derision. There is something deeply melancholy in the prospect, and I can never think of Nikola Tesla without warming up to my subject and condemning the injustice and ingratitude which he has received alike at the hands of the public and of the engineering profession. (Western Electrician, Sept., 1907)

With the scientific and engineering worlds, and the courts, extending to him a clear title to the honor of being the great pioneer discoverer and inventor of the principles and machines that created the modern electrical system, Tesla stands without a rival as the genius who gave the world the electrical power age that made our mass-production industrial system possible. The name Tesla should, therefore, in all right and justice, be the most famous name in the engineering world today.

RETURNING to his laboratory in March, 1893, after his European and American lectures, Tesla banished all social activities from his life program, and, bursting with energy, pitched headlong into experimental work in connection with his wireless system. He made repeated experiments in working out the refinement of his principle of tuning circuits to resonance with each other. He built more than one hundred coils covering a wide range of electrical tuning characteristics. He also built numerous oscillators for producing high-frequency currents, and condensers and inductances for tuning both sending and receiving coils to any desired frequency or wavelength.

He demonstrated that he could cause any one of hundreds of coils to respond selectively and powerfully to its particular wavelength emitted by an oscillator while all others remained inert; but he discovered that tuned electrical coils have, to a further extent, the same properties as tuned musical string, in that they vibrate not only to the fundamental note but also to a wide range of upper, and particularly lower, harmonics. This characteristic could be usefully employed in connection with the design of sending- and receiving-station antennas, but it militated against the sharp, exclusive response tuning of coils. At close range, and with the powerful currents Tesla used in his laboratory, the harmonics were a handicap--when greater distance separated sending and receiving coils, this trouble became a minor one.

It became obvious to Tesla that it was going to be dificult to arrange an early demonstration of his worldwide system of intelligence and of power, so he planned a compromise system in which he would use a smaller central transmitter and smaller relay stations at certain distances.

In an interview with Arthur Brisbane, the famous editor, Tesla announced in The world of July 22, 1894, the certainty of his plans. He said:

you would think me a dreamer and very far gone if I should tell you what I really hope for. But I can tell you that I look forward with absolute confidence to sending messages through the earth without any wires. I have also great hopes of transmitting electric force in the same way without waste. Concerning the transmission of messages through the earth I have no hesitation in predicting success. I must first ascertain exactly how many vibrations to the second are caused by disturbing the mass of electricity which the earth contains. My machine for transmitting must vibrate as often to put itself in accord with the electricity in the earth.

During the following winter he designed and built his transmitting station and a receiving station for this purpose. It worked well within the close range of the laboratory and between points in the city. Like the artist who is never willing to declare a picture finished but must continue to apply an unending series of slight improvements, Tesla continued to add refinements so that he would be assured of a perfect test in the spring, when he

planned to take his receiving set up the Hudson River on a small boat to test its response at extended distances.

with Tesla, as with Caesar, though, came tragedy on the Ides of March. For Tesla it was the unlucky 13th of March, 1895, when fire broke out during the night in the lower part of the building in which his laboratory was located and swept through the entire structure. The two floors on which his equipment was located dropped to the basement, their entire contents destroyed. Not a single article was saved. The major portion of Tesla's fortune was invested in the apparatus in that building. He carried no insurance on it. The loss was total.

The monetary loss was the least important factor in the shock which Tesla sustained. The apparatus and the countless experiments in scores of subjects with which they were associated were part of Tesla's self. His work of a lifetime was swept away. All of his records, papers, mementos, his famous world's Fair exhibit were gone. His laboratory, in which he had demonstrated his wonders to the elite and intelligentsia of New York, to the most famous men and women of the country and the world, was no more. And this tragedy had come just when he was ready to make his first distance demonstration of his wireless system.

Tesla was in a tough spot financially. The laboratory was the property of the Tesla Electric Company, owned by Tesla and A. K. Brown who had, with an associate, put up the funds to finance Tesla's demonstration of his polyphase alternating-current system prior to its sale to Westinghouse for $1,000,000. Some of that money was divided as cash among the associates, as stated; and the remainder had gone into the laboratory for further developments. The resources of the company were now wiped out and Tesla's individual resources were almost at the vanishing point. He was receiving some patent royalties from Germany on his polyphase motors and dynamos. This income would be adequate to take care of his living expenses but not suficient to enable him to maintain an experimental laboratory.

Mr. Adams, active head of the Morgan group that had developed the hydroelectric station at Niagara Falls, using Tesla's polyphase system, now came to the inventor's rescue. He proposed and arranged for the formation of a new company which would finance the continuation of Tesla's experiments, and he offered to subscribe one hundred

thousand dollars of the proposed half-million dollars of capital stock of the company.

with this support Tesla proceeded to set up a new laboratory. He secured quarters at 46 East Houston Street, and started operations there in July, 1895, four months after his South Fifth Avenue laboratory had been destroyed.

Adams paid forty thousand dollars as the first installment of his subscription. He took an active personal interest in Tesla's work, and spent a great deal of time in the laboratory. Knowing from the successful operation of the Niagara Falls plant that Tesla, technically, was extremely practical, Adams was deeply impressed by the plans for wireless transmission of intelligence and of power. He declared he was willing to go still further than his original plan of financial support, and he proposed that the plan include the taking in of his son as an active partner in Tesla's work.

Such an arrangement would amount to an alliance for Tesla with the powerful Morgan financial group. It was the support of J. P. Morgan that gave financial guidance to the formation of the General Electric Company and made possible the building of the fiaterside Station, the first big Edison powerhouse in New York, and it was a Morgan group that, by making possible the development of Niagara, had given the Tesla system a tremendous boost. The prestige that would come from a Morgan association would probably be even more potent than the actual monetary aid involved. with this alliance Tesla's financial future was assured. There would come to his aid, through it, the support of the world's greatest organizational genius and practical promotion powers. The tragedy of the fire that brought about this situation could yet prove a great blessing.

Tesla made his decision. what influenced him to reach the determination that guided him, no one ever learned. He rejected Mr. Adams' offer. From a practical point of view there is no way of explaining his action. But no one could ever successfully demonstrate that Tesla was practical in a commercial and financial sense.

with the forty thousand dollars that Adams subscribed, Tesla was able to keep actively engaged in research for about three years. He probably could have secured subscriptions of many times that amount if he had been

willing to put forth even a slight effort in that direction, but he was interested mainly in getting his experiments well under way rather than worrying about future financial needs. He had full faith that the future would bring him many millions of dollars as a token of the many billions of value he would give it through his inventions.

It took Tesla about a year to get his laboratory equipped and to build an array of experimental apparatus. Almost nothing that he used could be purchased in the market; everything had to be specially made by his workmen under his direction. In the spring of 1897 he was ready to make, on his wireless transmitter and receiver, the distance tests which had been interrupted by the fire two years before.

The success of these tests were announced by Tesla in an interview with a representative of the Electrical Review which was published in the issue of July 9, 1897, of that journal. It stated:

Nearly every telegraphic inventor has for years dreamed in his waking hours of the possibility of communicating without wires. From time to time there has appeared in the technical journals a reference to the experiments showing the almost universal belief among electricians that, some day, wires will be done away with. Experiments have been made attempting to prove the possibilities, but it has remained for Mr. Nikola Tesla to advance a theory, and experimentally prove it, that wireless communication is a possibility and by no means a distant possibility. Indeed, after six years of careful and conscientious work, Mr. Tesla has arrived at a stage where some insight into the future is possible.

A representative of the Electrical Review receives the assurance personally from Mr. Tesla who, by the way, is nothing if not conservative, that electrical communication without wires is an accomplished fact and that the method employed and the principles involved have nothing in them to prevent messages being transmitted and intelligibly received between distant points. Already he has constructed both a transmitting apparatus and an electrical receiver which at distant points is sensitive to the signals of the transmitter, regardless of earth currents or points of the

compass. And this has been done with a surprisingly small expenditure of energy.

Naturally, Mr. Tesla is averse to explaining all details of his invention, but allows it to be understood that he avails himself of what, for the present, may be termed the electrostatic equilibrium; that if this be disturbed at any point on the earth the disturbance can with proper apparatus be distinguished at a distant point and thus the means of signalling and reading signals becomes practicable once the concrete instruments are available. Mr. Tesla announced his belief in the possibilities, but he did so after having satisfied himself by actual test of apparatus designed by him. Much work has yet to be done, and he has since then given close attention and study to the problem.

Details are not yet available, for obvious reasons, and we now merely chronicle Mr. Tesla's statement that he has really accomplished wireless communication over reasonably long distances with small expenditure of energy and has only to perfect apparatus to go to any extent. Morse's 40 mile experiment in the old days was on a far less certain basis than the wireless possibilities of today.

Tesla's work with high frequency and high potential currents has been notable. As long ago as 1891 he foretold the present results, both as to vacuum tube lighting and intercommunication without wires. The former has in his hands assumed a condition capable of a public demonstration of the phenomena of the electrostatic molecular forces. Numberless experiments were carried out, and from what then was a startling frequency of 10,000 per second Mr. Tesla has advanced to what now is a moderate rate at 2,000,000 oscillations per second

This announcement recorded the birth of modern radio--radio as it is in use today--born on a boat traveling up the Hudson River, carrying the receiving set twenty-five miles from the Houston Street laboratory, a distance which was a small fraction of the range of the set but enough to demonstrate its capabilities. Such an accomplishment was worthy of a flamboyant smash announcement instead of Tesla's very modest statement and the even more conservative manner in which the Electrical Review treated the news. Tesla had to protect not only his patent rights, which would be jeopardized by premature disclosure, but also had to be on guard against invention invaders and

patent pirates, with whom he had previously had unpleasant experiences. The Electrical Review, naturally enough, was fearful of the consequences of "sticking its neck out" by too enthusiastic a reception before full details were available.

The fundamental patents on Tesla's system were issued on September 2, 1897, just two months after his announcement. They are numbered 645,576 and 649,621. In these patents he describes all the fundamental features of the radio broadcasting and receiving circuits in use today. Once patent protection was secured, Tesla did not long delay in letting the public in on his discoveries. His presentation took the form of a spectacular demonstration at Madison Square Garden.

wireless transmission of intelligence is a modern satisfaction of one of the oldest cravings of man, who has always sought the annihilation of distance by communication through space without material linkage over the intervening expanse. Early experimenters with the telephone, particularly, were enthusiastic seekers of a method of wireless electrical communication that would convey the voice through space in the manner in which the air conducted sound. David Edward Hughes had noted, in 1879, that when an electric spark was produced anywhere in his house he heard a noise in his telephone receiver. He traced the effect to the action of the carbon granules in contact with a metal disk in his telephone transmitter which acted as a detector of the space waves by sticking together slightly, reducing the resistance of the mass, and producing a click in the receiver.

Prof. A. E. Dolbear, of Tufts College, amplified this observation and set up, in 1882, a demonstration set using the principle but eliminating the telephone set. He used a spark coil for creating waves and a mass of carbon granules for detecting them. This is exactly the "wireless" system which Marconi "discovered" fourteen years later.

Edison, engaged by the Western Union Telegraph Company to break the monopoly which Bell held by his invention of the telephone, had succeeded, in 1885, in sending a message from a moving train by "wireless." A wire strung on the train paralleling a telegraph wire strung on poles along the track made it possible to bridge the intervening few feet by an inductive effect--the same effect which causes

annoyance by creating "cross talk," or a mixing of conversations over two telephone circuits located close to each other. fi. M. Preece, in England, made a similar experiment about the same time. The extremely short distances over which such systems worked prevented them from having any practical usefulness.

An entirely different type of wireless communication had been developed by Alexander Graham Bell in 1880 and 1881. This was given the name radiophone, but Bell insisted on calling it the photophone. The photophone transmitted the voice over a beam of light. The transmitter consisted of a very thin glass or mica mirror, which could be vibrated by the voice. This reflected a beam of light, usually sunlight, to a distant receiving device. The simple receiver consisted of a chemist's test tube, into which a selected material was placed. The top of the tube was closed by a cork through which two small rubber tubes were inserted, the other ends being placed in the ears. A very great variety of materials could be placed in the test tube as detectors. when the beam of light, vibrated by the voice, impinged on the material in the tube, an absorption of heat took place which set the air in the tube in vibration, thus reproducing the voice that was carried by the light beam. Bell also used selenium as a detector. It responded to the visible rays and produced an electrical effect. The experiments, obviously, were of little practical value as the basis for a system of wireless communication.

Michael Faraday, in London, had described in 1845 his theory of the relationship between light and the electromagnetic lines of force; and in 1862 James Clerk Maxwell published an analysis of Faraday's work which gave a mathematical basis for the theory that light waves were electromagnetic in nature, and that it was possible for such waves to exist very much shorter and very much longer than the known wavelength of visible light. This was a challenge to scientists to prove the existence of such waves.

Prof. Heinrich Hertz, at Bonn, Germany, from 1886 to 1888, undertook the search for the waves longer than light or heat. He produced them by the spark discharge of an induction coil and recaptured them from space, at short distances, in the form of a tiny spark that jumped the gap in a slotted ring of wire. Sir Oliver Lodge, in England,

was simultaneously seeking to measure equally small electrical waves in wire circuits.

This, then, had been the situation in the scientific world when Tesla began his work in 1889. The plan for wireless communication which he presented in 1892 and 1893, as will be described in a moment, shows how his magnificent concept and tremendously advanced knowledge towered mountain high over all contemporaries.

when Tesla left the Westinghouse plant in the fall of 1889, he had immediately turned to the next phase of his development of the alternating-current Weld--a new system of distributing energy by means of high-frequency alternating currents which would be a far more magnificent discovery than his polyphase system. within the next two years he had explored the principles by which energy could be distributed broadcast without the use of wires, and these he had demonstrated with powerful coils in his laboratory. The distribution of intelligence, later called "wireless," was but a single phase of the larger project.

Tesla described, in 1892, the first electronic tube designed for use as a detector in a radio system, and demonstrated its characteristics in his lectures in London and Paris in February and March of that year. (The tube, however, had been developed in 1890.) He described in February and March of the following year, 1893, his system of radio broadcasting, presenting its principles in detail, in lectures before the Franklin Institute in Philadelphia and at the convention of the National Electric Light Association held in St. Louis.

Tesla's electronic tube, his 1890 invention, was the ancestor of the detecting and amplifying tubes in use today. His demonstration of this tube is a matter of record in the archives of four societies before which he exhibited it in February and March of 1892--the Institute of Electrical Engineers and the Royal Society of London and the Physical Society of France and the International Society of Electrical Engineers in Paris. He stated in these lectures:

If there is any motion which is measurable going on in space, such a brush ought to reveal it. It is, so to speak, a beam of light, frictionless, devoid of inertia.

I think it may find practical applications in telegraphy. with such a brush it would be possible to send dispatches across the Atlantic, for instance, with any speed, since its sensitiveness may be so great the slightest changes will affect it.

The "brush" in Tesla's tube was a beam of electrons. The electron, however, had not yet been discovered. Nevertheless, Tesla gave an accurate description of its nature, demonstrating the remarkable accuracy of his interpretation of strange phenomena. So sensitive was this electronic beam that a small horseshoe magnet an inch wide at a distance of six feet caused movement of the electron beam in either direction, depending on the position in which the magnet was held.

If anyone approached the tube from a distance of many feet the beam, or brush, would swing to the opposite side of the tube. If one walked around the tube even at a distance of ten feet, the beam would move likewise, keeping its center end always pointed at the moving object. The slightest movement of a finger, or even the tensing of muscle, would bring a swinging response from the beam.

In the same 1892 lecture in which he described this first electronic tube, Tesla demonstrated lamps which were lighted without wire connections (wireless light) and also a motor which operated without wire connections to the energizing coils (wireless power); and he had again presented these developments at his exhibition at the Chicago Columbian Exposition early in 1893.

It was with all this experience behind him, giving him full assurance that his system was entirely practical and operative, that Tesla presented at the Franklin Institute and at the convention of the National Electric Light Association in February and March, 1893, a very cautious and conservative statement concerning his plan. Even at these 1893 lectures, Tesla could have staged a demonstration of wireless transmission of intelligence by placing one of his resonant coils, surmounted by one of his electronic "brush" tubes, or one of his low-pressure air lamps, in the lecture hall and causing it to respond to signals sent out by an energized coil of similar wavelength but located at a considerable distance from the building. The experiment was a standard procedure in his laboratory.

This, however, would be a purely local effect, whereas his radio transmission system was one planned on a world-wide basis requiring much more powerful apparatus than he had thus far built. To pass off a purely local effect as a demonstration of a world-wide system, even though the observed results would have been identical, would have been a case of intellectual dishonesty to which Tesla would not stoop; yet this demonstration of wireless would have been more spectacular and powerful than any staged by any other inventor in more than a half-dozen years following.

Describing his world-wide system at the 1893 National Electric Light Association meeting, he said:

In connection with resonance effects and the problems of transmission of energy over a single conductor, which was previously considered, I would say a few words on a subject which constantly fills my thoughts, and which concerns the welfare of all. I mean the transmission of intelligible signals, or, perhaps, even power, to any distance without the use of wires. I am becoming more convinced of the practicability of the scheme; and though I know full well that the great majority of scientific men will not believe that such results can be practically and immediately realized, yet I think that all consider the developments in recent years by a number of workers to have been such as to encourage thought and experiment in this direction. My conviction has grown so strong that I no longer look upon the plan of energy or intelligence transmission as a mere theoretical possibility, but as a serious problem in electrical engineering, which must be carried out some day.

The idea of transmitting intelligence without wires is the natural outcome of the most recent results of electrical investigations. Some enthusiasts have expressed their belief that telephony to any distance by induction through air is possible. I cannot stretch my imagination so far, but I do firmly believe that it is practical to disturb, by means of powerful machines, the electrostatic conditions of the earth, and thus transmit intelligible signals, and, perhaps, power. In fact, what is there against carrying out such a scheme?

We now know that electrical vibrations may be transmitted through a single conductor. why then not try to avail ourselves of the earth for this purpose? We need not be frightened by the idea of distance. To the weary wanderer

counting the mileposts, the earth may appear very large; but to the happiest of all men, the astronomer, who gazes at the heavens, and by their standards judges the magnitude of our globe, it appears very small. And so I think it must seem to the electrician; for when he considers the speed with which an electrical disturbance is propagated through the earth, all his ideas of distance must completely vanish.

A point of great importance would be first to know what is the capacity of the earth, and what charge does it contain if electrified. Though we have no positive evidence of a charged body existing in space without other oppositely electrified bodies being near, there is a fair probability that the earth is such a body, for by whatever process it was separated--and this is the accepted view of its origin--it must have retained a charge, as occurs in all processes of mechanical separation. . . .

If we can ever ascertain at what period the earth's charge, when disturbed, oscillates, with respect to an oppositely charged system or known circuit, we shall know a fact possibly of the greatest importance to the welfare of the human race. I propose to seek for the period by means of an electrical oscillator or a source of alternating currents.

One of the terminals of this source would be connected to the earth, as, for instance, to the city water mains, the other to an insulated body of large surface. It is possible that the outer conducting air strata or free space contains an opposite charge, and that, together with the earth, they form a condenser of large capacity. In such case the period of vibration may be very low and an alternating dynamo machine might serve for the purpose of the experiment. I would then transform the current to a potential as high as it would be found possible, and connect the ends of the high tension secondary to the ground and to the insulated body. By varying the frequency of the currents and carefully observing the potential of the insulated body, and watching for the disturbance at various neighboring points of the earth's surface, resonance might be detected.

Should, as the majority of scientific men in all probability believe, the period be extremely small, then a dynamo machine would not do, and a proper electrical oscillator would have to be produced, and perhaps it might not be possible to obtain such rapid vibrations. But

whether this be possible or not, and whether the earth contains a charge or not, and whatever may be its period of vibration, it is certainly possible--for of this we have daily evidence--to produce some electrical disturbance suficiently powerful to be perceptible by suitable instruments at any point on the earth's surface. . . .

Theoretically, then, it could not require a great amount of energy to produce a disturbance perceptible at a great distance, or even all over the surface of the globe. Now, it is quite certain that at any point within a certain radius of the sources, a properly adjusted self induction and capacity device can be set in action by resonance. But not only this can be done, but another source, s 1, similar to s, or any number of such sources, can be set to work in synchronism with the latter, and the vibration thus intensified and spread over a large area, or a flow of electricity produced to or from source s 1, if the same or of opposite phase to the source s.

I think that, beyond doubt, it is possible to operate electrical devices in a city, through the ground or pipe system, by resonance from an electrical oscillator located at a central point. But the practical solution of this problem would be of incomparably smaller benefit to man than the realization of the scheme of transmitting intelligence, or, perhaps, power, to any distance through the earth or environing medium. If this is at all possible, distance does not mean anything. Proper apparatus must first be produced, by means of which the problem can be attacked, and I have devoted much thought to this subject. I am firmly convinced it can be done, and I hope we shall live to see it done.

The lecture before the Franklin Institute contained a similar statement. An additional paragraph from it can be quoted:

If by means of powerful machinery, rapid variations of the earth's potential were produced, a grounded wire reaching up to some height would be traversed by a current which could be increased by connecting the free end of the wire to a body of some size. . . . The experiment, which would be of great scientific interest, would probably best succeed on a ship at sea. In this manner, even if it were not possible to operate machinery, intelligence might be transmitted quite certainly.

Tesla thus presented in these lectures the principles which he had learned in his laboratory experiments, during the previous three years, were necessary for successful wireless communication.

Several fundamental requirements were presented which will be understood by any non-technical person who has had even slight experience with radio receiving sets: 1. An antenna, or &aerial wire; 2. A ground connection; 3. An &aerial-ground circuit containing inductance and capacity; 4. Adjustable inductance and capacity (for tuning); 5. Sending and receiving sets tuned to resonance with each other; and 6. Electronic tube detectors. He had still earlier invented a loud speaker.

These embody the fundamental principles of radio, and are used in every sending and receiving set today.

Radio as it exists today is, therefore, the product of the genius of Nikola Tesla. He is the original inventor of the system as a whole and of all the principal electrical components. The man who, next to Tesla, is entitled to the greatest amount of credit is Sir Oliver Lodge, the great English scientist. Even Lodge, however, failed to grasp the fundamental picture that Tesla presented.

Lodge, early in 1894, had put a Hertz spark gap in a copper cylinder open at one end; and in this way he produced a beam of ultra-short-wave oscillations which could be transmitted in any direction. He did the same for the receiving set. Since the incoming waves could be received from only one direction, this receiving set was able to locate the direction from which the transmitted waves came. with this set he completely anticipated Marconi by two years. In the summer of that year, in a demonstration before the British Association for the Advancement of Science at Oxford, he sent Morse signals, with an improved set, between two buildings separated by several hundred feet.

It is little wonder, then, that Marconi, who started his studies of wireless in 1895, created no stir in the scientific circles in England when he came from Italy to London in 1896 with a wireless set that in every essential feature was the same as that demonstrated by Lodge in 1894. He used a parabolic reflector, so his set was little more

than an electrical searchlight. He did, however, bring an alternative feature to replace the parabolic beam reflector. This was a ground connection and antenna, or &aerial wire, for both sending and receiving set. This was exactly what Tesla had described in his plan published three years before.

when Hertz made his experiments to demonstrate the identical nature of light and longer electromagnetic waves, he intentionally sought to use the shortest waves it was practicable to produce. They were measured in inches--much less than a yard long. They were entirely satisfactory for his experiment. when the wireless experimenters copied his methods they took over the short-wave plan without ever asking a question as to what wavelength should be used for wireless communication; the thought seems not to have dawned on them that there were other wavelengths that could be produced and used--all except Tesla.

Tesla took the trouble, with the spirit of a real scientist to repeat exactly the experiments of Hertz; and he published his results, stating that he found a number of important differences and calling attention to the inadequacies of Hertz's experimental methods.

Having experimented with a wide gamut of wavelengths of high-frequency currents and studied the properties of each section of the spectrum, he knew that the short wavelengths were totally unsuitable for communication purposes. He knew that the useful wavelengths ranged from 100 meters to many thousands of meters. He knew that the combination of induction coil and Hertz ball-type spark-gap oscillator could never have any practical usefulness in producing the kind of electrical pulsations required. Even with the highly efficient apparatus available today, scientists have been unable to use in communication (except for special purposes) the ultra-short waves which Tesla in his wisdom condemned and Marconi, owing to his inexperience, tried to use.

The history of the succeeding years in wireless is the story of the failure of the short waves of Lodge and Marconi and their followers, and the shifting over to the longer waves described by Tesla; and the dropping of their crash method of signaling and its replacement by the refined and highly efficient method of tuning to each other the sending and receiving stations by the methods

discovered by Tesla; and adoption of Tesla's continuous waves.

In addition, these groping workers saw in wireless only a point-to-point or station-to-station method of signaling. None of them foresaw the broadcasting system which Tesla described in 1893. The system invented and discovered by Tesla is the one in use today; but who ever heard anyone giving Tesla the slightest credit?

NINE

TESLA was prolific in opening up vast new empires of knowledge. He showered his discoveries on the world at such a rapid rate and in such a nonchalant manner that he seems to have benumbed the minds of the scientists of his age. He was too busy to spend time developing the technical or commercial applications of each new discovery--there were too many other new and important revelations within his vision that must be brought to light. Discoveries were not happenstance events to him. He visualized them far in advance of their unfolding in the laboratory. He had a definite program of pioneering research in virgin fields of investigation; and when this was accomplished he would, he felt, have a long lifetime still ahead of him in which he could return to the practical utilization of those already revealed.

Meanwhile, he had found a whole new world of interesting effects in the discharges produced by his coils when energized with the currents of extremely high frequency. He built larger and larger coils and experimented with a variety of shapes as constructions. From the common cylindrical type of coil he developed the cone-shaped coil, and this development he carried still further by designing the flat helix, or pancake-shaped coil.

The extremely high-frequency currents furnished a mathematical paradise in which Tesla could develop his equations to his heart's content. Through his mathematical abilities and his strange power of visualization he could frequently make, very quickly, whole series of discoveries that it took a long time to catch up with in actual laboratory constructions. This was true of the phenomena of resonance, or tuned circuits.

Because of their relatively short wavelength, it was comparatively easy to build condensers for tuning the circuits. when a circuit is tuned the electric current that flows in it oscillates rhythmically, just as does a musical string which, when struck or plucked, vibrates and builds up loops of even lengths with motionless points between them. There may be only one of these loops, or there can be many.

Tesla did not invent the idea of electrical resonance. It was inherent in the mathematical description of the condenser discharge as developed by Lord Kelvin, and in the physical nature of alternating currents; but Tesla changed it from a buried mathematical equation to sparking physical reality. It is the analogy of acoustical resonance which is a natural property of matter. However, there were no practical circuits in which resonance could manifest itself until Tesla developed alternating currents, particularly the high-frequency currents. He put the master's touch to the research in this field by developing the principle of resonance in individual circuits through adjustment of capacity and inductance; the amplification of effects by inductive coupling of two tuned circuits, and the peculiar manifestations of resonance in a circuit tuned to a quarter of the wavelength of the energizing current. This latter development was a stroke of pure genius.

In the vibrating string, two loops measure a complete wavelength and one loop measures half a wavelength, since one of the loops is up when the other is down. Between the two loops is a nodal point which does not move. From the nodal point to the top of a loop is a quarter wavelength. Taking the quarter wavelength as a unit, one end is motionless and the other end swings through the greatest amplitude of vibration.

By tuning his coils to quarter wavelengths, one end of the coil, Tesla found, would be entirely inactive while the other end would swing through tremendous electrical activity. Here was a unique situation, one end of a small coil inert and the other end spouting a flood of sparks of hundreds of thousands or even millions of volts. In a physical analogy it seemed like the Niagara River reaching the edge of the precipice--and then its waters shooting mountain high in a gigantic fountain instead of falling into the chasm.

The quarter-wavelength coil is the electrical counterpart of the vibrating tine of the tuning fork, the ordinary clock pendulum, or the vibrating reed. Once accomplished, it was a simple thing--but its discovery was a work of genius. It was a development that could have come with certainty to a master mind working on broad principles, as Tesla was doing all his life, and only by the most improbable chance to those who without illumination were tinkering with gadgets and hoping to stumble on something out of which they could make a fortune.

A high-voltage coil with one dead end greatly simplified many problems. One of Tesla's big problems had been the finding of means to insulate the high-voltage secondary coil of transformers from the low-voltage primary which energized it. Tesla's discovery eliminated the voltage entirely from one end of the secondary so it could be connected directly to the primary or to the ground, while the other end continued to spout its lightning. It was for utilizing this situation that he developed the conical and pancake-shaped coils.

Tesla's laboratory was filled with a variety of coils. He discovered early in his researches that while operating a coil of a given wavelength, other coils in the laboratory, tuned either to this wavelength or one of its harmonics, would respond sympathetically by spouting a crown of sparks although not connected in any way to the operating coil.

Here was an example of transmission of energy to a distance through space. It was not necessary for Tesla to make a series of experiments to understand the implications of this situation. He was never lost in a new territory which he opened. His mind rose to such heights of understanding that he could survey a revealed world in a glance.

Tesla planned a spectacular demonstration of the new principle. He had his workmen string a wire on insulating supports on all four walls near the ceiling of the largest room in his laboratory. The wire was connected to one of his oscillators.

It was late at night when the installation was ready for the experiment. In order to make the test, Tesla prepared two tubes of glass about three feet long and a half-inch in

diameter. He sealed one end of each, slightly evacuated the air from the tubes and then sealed the other ends.

Tesla told the workmen he wanted the room completely darkened for the test, all lights out; and when he gave the signal he wanted the switch of his oscillator closed. "If my theory is correct," he explained, "when you close the switch these tubes will become swords of fire."

walking to the middle of the room Tesla gave orders to turn out all lights. The laboratory was in pitch darkness. A workman stood with his hand on the switch of the oscillator.

"Now!" shouted Tesla.

Instantly the great room was flooded with brilliant but weird blue-white light and the workmen beheld the tall, slim figure of Tesla in the middle of the room waving vigorously what looked like two flaming swords. The two glass tubes glowed with an unearthly radiance, and he would parry and thrust with them as if he were in a double fencing match.

To the workmen in the laboratory, it was a common experience for Tesla to perform spectacular feats; but this went beyond all limits. He had previously lighted his electric vacuum lamps but they were always connected to coils that supplied them with electricity. Now they lighted without being connected to any source of electricity.

This demonstration, made in 1890, led to Tesla's adopting the technique as the permanent method of lighting his laboratories. The loop around the ceiling was always energized; and if anyone wished a light at any position, it was only necessary to take a glass tube and place it in any convenient location.

when tesla undertook the development of a new kind of electric light, he went to the sun for his model. He saw in the photo- sphere, or outer gaseous layer of the sun, light being created by the vibration of molecules. That was the theory then prevalent; and he sought to use the same method.

In the tremendous burst of revelation which he received in the park at Budapest as he gazed into the flaming orb of

the setting sun, there had flashed into his mind, as we have seen, not only the marvelous invention of the rotary magnetic field and the many uses of multiple alternating currents, but also the grand generalization that everything in Nature operated on the principle of vibrations that corresponded to alternating currents. The host of inventions and discoveries which he made in all succeeding years had their roots, too, in that sublime experience.

In the sun, it was believed, light was created when the molecules were vibrated by heat. Tesla sought to improve on this method by vibrating the molecules by electrical forces. The sparks and electrical flames created by his high-voltage coils were associated, he believed, with molecular vibrations in the air. If he could bottle the gases of the air and set them in vibration electrically, they should produce light without heat, since the energy was supplied by cold electric currents.

Sir fiilliam Crookes, who, long before Edison, produced an incandescent electric light by sealing an electrically heated wire in a vacuum tube, had carried out an extended series of experiments in conducting electricity through the gases in glass vessels under a variety of conditions ranging from atmospheric pressure to the highest vacuum obtainable, and had produced some strange effects. Crookes used the high-voltage current produced by the old-fashioned induction coil.

Tesla expected that when he bottled the strange effects he had observed with his currents of extremely high frequency, he would produce manifestations radically different from those found by Crookes, or Geissler, who also worked in this field. In this he was not disappointed.

Four types of an entirely new kind of electric light were produced by Tesla, using electrically activated molecules of gas: 1. Tubes in which a solid body was rendered incandescent; 2. Tubes in which phosphorescent and fluorescent materials were caused to luminesce; 3. Tubes in which rarefied gases became luminous, and 4. Tubes in which luminosity was produced in gases at ordinary pressures.

Like Crookes, Tesla passed his high-frequency currents through gases at all pressures, from lowest-pressure vacuum to normal atmospheric pressure, and obtained brilliant luminous effects exceeding anything previously attained. He

substituted for air in his tubes other gases, including mercury vapor, and observed the peculiar color and other effects they yielded.

Noting the variety of colors the various gases, and even air, showed under different pressures, Tesla suspected that not all of the energy radiated was given off as visible light, but that some of it emanated as black light. Testing this hypothesis, he placed sulphide of zinc and other phosphorescent and fluorescent materials in his tubes and caused them to glow. In these experiments (they were made in 1889) Tesla laid the foundation for our most recently developed type of highly efficient lamps used in fluorescent lighting which are generally believed to have been invented in recent years. This system of utilizing the wasted ultra-violet or invisible black light by changing it to visible light by means of phosphorescent substances is Tesla's invention. Roentgen was using similar tubes, but of plain glass and the fluorescent substance on a table in his laboratory when, a half-dozen years later, he discovered X-rays. Tesla invented, also, the neon-tube type of lamp, and even bent his tubes to form letters and geometrical shapes, as is done in neon-tube signs. This is true in spite of some antecedent and concurrent laboratory experiments by Crookes and J. J. Thompson, neither of whom developed any lamps or practical applications.

Tesla had discovered early in 1890 that his high-frequency currents had properties so different from the ordinary induction-coil, or spark-coil, currents, that he was able to light his tubes just as well, and sometimes even better, with only one wire connecting them with the high-tension transformer, the return circuit being effected wirelessly through space.

In working with types of lamps consisting of tubes in the center of which there was a conducting wire, and with the tube filled with air under a partial vacuum, Tesla discovered that the gas would serve as a better conductor of the high-frequency current than the wire. From this observation he was able to develop many spectacular experiments which appeared to violate the most fundamental laws of electricity. He was able to short circuit lamps and other apparatus with heavy bars of metal which, with ordinary currents, would completely deprive the devices of electricity so they would be unable to operate. However, with his high-frequency currents, the lamps would light and

the devices operate just as if the short-circuiting bar were not present.

One of his startling experiments consisted of placing a long glass tube partially evacuated of its air inside a slightly longer copper tube with a closed end. A slit was cut in the copper tube in its central section so the tube inside would be seen. when the copper tube was connected in the high-frequency circuit, the air in the tube was brilliantly illuminated; but no evidence could be found of any current flowing through the short-circuiting copper shell. The electricity preferred to pass through the glass tube, by induction, to the enclosed partially evacuated air, pass through the low-pressure air for the full length of the tube, and then pass out the other end by induction, rather than traverse the complete metal path in the surrounding metal tube.

we have then, [said Tesla], as far as we can now see, in the gas a conductor which is capable of transmitting electric impulses of any frequency which we may be able to produce. Could the frequency be brought high enough, then a queer system of distribution, which would be likely to interest gas companies, might be realized; metal pipes filled with gas--the metal being the insulator and the gas the conductor--supplying phosphorescent bulbs, or perhaps devices not yet invented.

This remarkable conductivity of gases, including the air, at low pressures, later led Tesla to suggest, in a published statement in 1914, a system of lighting on a terrestrial scale in which he proposed to treat the whole earth, with its surrounding atmosphere, as if it were a single lamp.

The atmosphere is under the greatest pressure at the surface of the earth, owing to the weight of the overlying air. As we go higher in the air there are increasing amounts below us and less above, so, the greater the elevation, the lower is the pressure of the air.

At higher altitudes the gases in the atmosphere are in the same condition as the air in the partially evacuated tubes he prepared in his laboratory, Tesla explained, and therefore it would serve as an excellent conductor of high-frequency currents. The aurora borealis is a natural example of the effect Tesla sought, and it is produced by

Nature as Tesla planned; but this was not known when he evolved his idea.

The flow of a suficient amount of the electricity in the right form through the upper regions of the atmosphere would cause the air to become luminous. The whole earth would be transformed into a giant lamp, with the night sky completely illuminated. It would be unnecessary, he pointed out, to use any lamps along streets, roads or other outdoor areas, except during periods in which storms or low clouds prevailed. Ocean travel would be made safer and more pleasant, for the sky over the whole ocean would be illuminated, making the night as bright as day.

The methods by which Tesla intended to conduct his high-frequency currents to the upper air have not been published. when he outlined the project, he stated that the plan did not present any dificulties that could not be handled in a practical way. This meant that he had definite means for accomplishing his purpose.

The air, he stated, possesses a high degree of conductivity for high-frequency currents at an altitude of 35,000 feet, but could be used effectively at lower altitudes. The accuracy of Tesla's prediction with respect to the conductivity of the upper air is attested by one of the problems encountered today in the operation of airplanes at altitudes even lower than 25,000 feet. The ignition system, carrying high-voltage currents to the spark plugs in the airplane engines, which explodes the gas in the cylinders, has been giving trouble at the higher altitudes because the electricity escapes with a great deal of freedom into the surrounding air. At lower altitudes the air is an excellent insulator, especially for direct current and low-frequency currents, but, as Tesla discovered, at the higher altitudes where low pressures prevail it becomes an excellent conductor for the high-frequency currents. The wires leading to spark plugs become surrounded by a corona, or electrical halo, which indicates the escape of the current. This interferes with the efficiency, if it does not entirely prevent the operation, of devices employing high-frequency or high-potential currents, such as radio apparatus. (Since Tesla discovered that metal wires and rods which act as excellent conductors for direct and low-frequency currents can act as excellent insulators for his high-frequency currents, it is obvious that the common suggestion made for delivering a current to the upper air

by means of metal cables suspended from balloons is entirely impractical.)

This proposal by Tesla to transform the earth into a giant lamp was again referred to by him in the twenties. At this time he was without funds for carrying on experimental work, and, as he never announced details until after he had tested them in practice, he withheld a disclosure of his methods. He was hopeful, however, that he would soon secure money enough to permit him to test his plan.

The author bombarded Tesla with questions in an effort to learn the general plan he had in mind. Tesla was adamant.

"If I should answer three more of your questions you would know as much about my plan as I do," he replied.

"Nevertheless, Dr. Tesla," I replied, "I am going to outline in my article the only plan that appears to me to be feasible under our known physical laws, and you can deny or afirm it. your molecular bombardment tubes are prolific producers of ultra-violet and X-rays and could produce a powerful beam of this radiation which would ionize the air through great distances. when these rays pass through the air they ionize it, making it a good conductor of electricity of all kinds at suficiently high voltages. By producing such a beam on a high mountain and directing it upward this would provide a conducting path through the air to any height desired. you could then send your high-frequency currents to the upper air without leaving the ground."

"If you publish that," said Tesla, "it must appear as your plan, not mine."

The article was published with the foregoing speculation in it; but neither afirmation nor denial was forthcoming from the inventor, and nothing more can be said in its favor. Tesla may have had a simpler and more practical plan in mind. (Since completing this volume the author has learned that Tesla planned to install a bank of powerful ultra-violet lamps on top of his tower at wardencliff (cf. p. 207), and had the upper Platform designed to receive them.)

There was one other plan which Tesla discussed on a number of occasions when considering terrestrial electrical conditions, and which he may have had in mind in this

connection. He pointed out that the earth is a good conductor of electricity and the upper air is also a good conductor, while the intervening lower stratum of air is an insulator for many kinds of current. This combination provides what is known as a condenser, a device which will store and discharge electricity. By charging the earth, the upper air would become charged by induction. when our spinning earth was so transformed into a terrestrial Leyden jar, it could be alternately charged and discharged, so that a current would flow both in the upper air and in the ground, producing the electrical flow which would cause the upper air to become self-luminous. Tesla, however, never became quite so specific in applying the condenser plan to this problem as the preceding sentence indicates. His plan may still exist in his papers, which, at the present writing, are sealed against inspection except by Government oficials.

Out of the almost empty space in a six-inch vacuum tube Tesla succeeded in extracting at least five epoch-making discoveries. Tesla's lamp was more prolific in producing wonders than the Aladdin's lamp of the Arabian Nights. He gave his "magic" lamp to science fifty years ago. This magic talisman was Tesla's carbon-button lamp which, apart from the other discoveries that came of it, was in itself, just as a lamp, a brilliant scientific discovery--and still remains unused. Edison developed the practical incandescent filament electric lamp and was entitled to, and receives, a tremendous amount of credit for his accomplishment. Tesla invented an absolutely original type of lamp, the incandescent-button lamp, which gives twenty times as much light for the same amount of current consumed; and his contribution remains practically unknown.

The carbon-button type of lamp was described by Tesla in his lecture before the American Institute of Engineers in New York in May, 1891, and further developments were presented in the lectures which he gave in England and France in February and March, 1892. In his New York lecture he said:

Electrostatic effects are in many ways available for the production of light. For instance, we may place a body of some refractory material in a closed, and preferably in a more or less air exhausted, globe, connect it to a source of high, rapidly alternating potential, causing the molecules of the gas to strike it many times a second at

enormous speeds, and in this way, with trillions of invisible hammers, pound it until it gets incandescent. Or we may place a body in a very highly exhausted globe, and by employing very high frequencies and potentials maintain it at any desired degree of incandescence.

He made a vast number of experiments with this carbon-button lamp and gave a description of the most significant ones in his lecture before the English and French scientific societies in the spring of 1892. It was, however, only one of the many new types of lamps and other important developments which he included in this spectacular presentation of his work.

The carbon-button lamps were of very simple construction. Basically they consisted of a spherical glass globe three to six inches in diameter, in the center of which was a piece of solid refractory material mounted on the end of a wire which protruded through the globe and served as a single-wire connection with the source of high-frequency currents. The globe contained rarefied air.

when the high-frequency current was connected with the lamp, molecules of the air in the globe, coming in contact with the central button, became charged and were repelled at high velocity to the glass globe where they lost their charge and were then repelled back at equally high velocity, striking the button. Millions of millions of such processes each second caused the button to become heated to incandescence.

In these simple glass globes Tesla was able to produce extremely high temperatures, the upper limit of which seemed to be determined by the amount of current used. He was able to vaporize carbon directly into a gas, observing that the liquid state was so unstable it could not exist. Zirconia, the most heat-resistant substance known, could be melted instantly. He tried diamonds and rubies as buttons--and they too were vaporized. when using the device as a lamp it was not his desire to melt the substances; but he always carried experiments to their upper and lower limits. Carborundum, he observed, was so refractory that it was possible when using buttons made of this material (calcium carbide) to run the lamps at higher current densities than was possible with other substances. Carborundum did not vaporize so readily, nor did it make deposits on the inside of the globe.

Tesla thus evolved a technique in operating the lamps whereby the incandescent button transferred its heat energy to the molecules of the very small amount of gas in the tube so that they became a source of light, thus causing the lamps to function like the sun, the button being the massive body of the sun and the surrounding gas like the photosphere, or atmospheric light-emitting layer, of that body.

Tesla had a keen sense of dramatic values, but quite apart from this he undoubtedly enjoyed a unique satisfaction when he was able to light this miniature sun in the currents that he passed through his body--high-frequency currents of hundreds of thousands of volts. with one hand grasping a terminal of his high-frequency transformer and the other holding aloft this bulb containing an incandescent miniature sun which he had created--posing like the Statue of Liberty--he was able to make his new lamp radiate its brilliant illumination. Here, you might say, was the superman manifesting his ultramundane accomplishments. In addition, there was a satisfaction which was associated purely with the plane of ordinary mortals. Edison had laughed at his plan for developing the alternating-current system, and had declared that these currents were not only useless but deadly. Surely, this was an adequate answer; Tesla would let Nature make his replies.

Observing this working model of the incandescent sun which he could hold in his hand, Tesla was quick to see many of the implications of its phenomena. Every electrical wave that surged through the tiny central bead caused a shower of particles to radiate from it at tremendous velocity and strike the surrounding glass globe, only to be reflected back to the bead. The sun, Tesla reasoned, is an incandescent body that carries a high electrical charge and it, too, will emit vast showers of tiny particles, each carrying great energy because of its extremely high velocity. In the case of the sun, and other stars like it, there was no glass globe to act as a barrier, so the showers of particles continued out into the vast realms of surrounding space.

All space was filled with these particles and they were continually bombarding the earth, blasting matter wherever they struck, just as they did in his globes. He had seen this process take place in his globes, where the most

refractory carbon beads could be shattered into atomic dust by the bombardment of the electrified particles.

He sought to detect these particles striking the earth: one of the manifestations of this bombardment, he declared, was the aurora borealis. The records of the experimental methods by which he detected these rays are not available; but he published an announcement that he had detected them, measured their energy, and found that they moved with tremendously high velocities imparted to them by the hundreds of millions of volts potential of the sun.

Neither the scientists nor the general public in the early nineties were in a mood for such fantastic figures, or for any claim that the earth was bombarded by such destructive rays. It would be describing the situation in very conservative fashion to state that Tesla's report was not taken seriously.

when, however, the French physicist, Henri Becquerel, in 1896, discovered the mysterious rays emitted by uranium, and subsequent investigations, culminating with the discovery by Pierre and Marie Curie, in Paris, of radium, whose atoms were exploding spontaneously without apparent cause, Tesla was able to point to his cosmic rays as the simple cause of the radioactivity of radium, thorium, uranium and other substances. And he predicted that other substances would also be found to be made radioactive by bombardment with these rays. The victory for Tesla, however, was only temporary, for the scientific world did not accept his theory. Nevertheless, Tesla was a better prophet than he knew, or anyone else suspected.

Thirty years later Dr. Robert A. Millikan rediscovered these rays, believing them to be vibratory in character like light, and was followed by Dr. Arthur H. Compton, who proved the existence of cosmic rays consisting of high-velocity particles of matter, just as Tesla described them. They started by finding energies of ten million volts; and today the energies are far up in the billions and even trillions of electron volts. And these and other investigators describe these rays as shattering atoms of matter producing showers of debris--just as Tesla predicted.

In 1934, Frederick Joliot, son-in-law of the Curies, discovered that artificial radioactivity was produced in

ordinary materials by bombarding them with particles in just the manner which Tesla described. Joliot received the Nobel Prize for his discovery; no one gives any credit to Tesla.

Tesla's molecular-bombardment lamp was the ancestor of another very modern development--the atom-smashing cyclotron. The cyclotron, developed by E. O. Lawrence, of the University of California, during the past twenty years, is a device in which electrified particles are whirled in a magnetic field in a circular chamber until they reach a very high velocity, and are then led out of the chamber in a narrow stream. The giant machine, with a magnet as high as a house, partially completed at present writing, will emit so powerful a beam of charged particles that, according to Prof. Lawrence, if allowed to impinge on a building brick they will totally disintegrate it. The smaller models were used to bombard a variety of substances to render them radioactive, to disintegrate them or transmute their atoms into those of other elements.

The small glass globe, six inches or less in diameter, holding Tesla's molecular-bombardment lamp produced exactly this same disintegrating effect on solid matter, probably with a more intensified effect than any atom-smashing cyclotron now in existence despite their tremendous size. (Even small ones weigh twenty tons.)

In describing one of the experiments with his lamp, one in which a ruby was mounted in a carbon button, Tesla said:

It was found, among other things, that in such cases, no matter where the bombardment began, just as soon as a high temperature was reached there was generally one of the bodies which seemed to take most of the bombardment upon itself, the other, or others, being thereby relieved. This quality appeared to depend principally on the point of fusion, and on the facility with which the body was "evaporated," or, generally speaking, disintegrated--meaning by the latter term not only the throwing off of atoms, but likewise of larger lumps. The observation made was in accordance with generally accepted notions. In a highly exhausted bulb electricity is carried off from the electrode by independent carriers, which are partly atoms, or molecules, of the residual atmosphere, and partly the atoms, molecules, or lumps thrown off from the electrode. If the electrode is composed of bodies of different

character, and if one of these is more easily disintegrated than the others, most of the electricity supplied is carried off from that body, which is then brought to a higher temperature than the others, and this the more, as upon an increase of the temperature the body is still more easily disintegrated.

Substances which resisted melting in temperatures attainable in laboratory furnaces of that day were easily disintegrated in Tesla's simple-lamp disintegrator, which provided a powerful beam of disintegrating particles by having them concentrated from all directions by a spherical reflector (the globe of his lamp), a kind a three-dimension burning glass, but operating with electrified particles instead of heat rays. It accomplished the same effect as the heavy atom disintegrators of today, but much more efficiently in a globe so light in weight it almost floated off in air. Its simplicity and efficiency is further increased by the fact that it causes the substance that is being disintegrated to supply the particles by which the disintegration is effected.

There is one more very modern discovery of great importance embodied in Tesla's molecular-bombardment lamp--the point electron miscroscope, which provides magnifications of a million diameters, or ten to twenty times more powerful than the better known electron microscope which in turn is capable of magnifications up to fifty times greater than the optical microscope.

In the point electron microscope, electrified particles shoot out in straight lines from a tiny active spot on a piece of substance kept at a high potential, and reproduce on the spherical surface of a glass globe the pattern of the microscopically small area from which the particles are issuing. The size of the glass sphere furnishes the only limit to the degree of magnification that can be obtained; the greater the radius, the greater the magnification. Since electrons are smaller than light waves, objects too small to be seen by light waves can be tremendously enlarged by the patterns produced by the emitted electrons.

Tesla produced on the surface of the spherical globe of his lamp phosphorescent images of what was taking place on the disintegrating button when he used extremely high vacuum. He described this effect in his lectures in the spring of 1892, and his description will stand with hardly a change

in a word for a description of the million-magnification point electron microscope. Quoting from his lecture:

To the eye the electrode appears uniformly brilliant, but there are upon it points constantly shifting and wandering about, of a temperature far above the mean, and this materially hastens the process of deterioration. . . . Exhaust a bulb to a very high degree, so that with a fairly high potential the discharge cannot pass--that is, not a luminous one, for a weak invisible discharge occurs always, in all probability. Now raise slowly and carefully the potential, leaving the primary current no more than for an instant. At a certain point, two, three or half a dozen phosphorescent spots will appear on the globe. These places of the glass are evidently more violently bombarded than the others, this being due to the unevenly distributed electric density, necessitated, of course, by sharp projections, or, generally speaking, irregularities of the electrode. But the luminous patches are constantly changing in position, which is especially well observed if one manages to produce very few, and this indicates that the configuration of the electrode is rapidly changing.

It would be an act of simple justice if in the future scientists would extend credit to Tesla for being the one who discovered the electron microscope. There is no reduction in the glory due him because he did not specifically describe the electron, then unknown, in its operations, but assumed the effect was due to electrically charged atoms.

when Tesla studied the performance of various models of this and his other gaseous lamps, he observed that the output of visible light changed under various operating conditions. He knew they gave off both visible and invisible rays. He used a variety of phosphorescent and fluorescent substances for detecting the ultra-violet or black light. Usually, the changes in the visible and ultra-violet light about balanced each other; as one increased the other decreased, with the remainder of the energy accounted for by heat losses. In his molecular-bombardment lamp he found, he reported in his 1892 lectures, "visible black light and a very special radiation." He was experimenting with this radiation which, he reported, produced shadowgraph pictures on plates in metal containers, in his laboratory when it was destroyed by fire in March, 1895.

This "very special radiation" was not further described at that time in published articles; but when Prof. fiilhelm Konrad Roentgen, in Germany, in December, 1895, announced the discovery of X-rays, Tesla was able immediately to reproduce the same results by means of his "very special radiation," indicating that these and X-rays had very similar properties although produced in somewhat different ways. Immediately upon reading Roentgen's announcement, Tesla forwarded to the German scientist shadowgraph pictures produced by his "very special radiation." Roentgen replied: "The pictures are very interesting. If you would only be so kind as to disclose the manner in which you obtained them."

Tesla did not consider that this situation gave him any priority in the discovery of X-rays, nor did he ever advance any claims; but he immediately started an extensive series of investigations into their nature. while others were trying to coax out of the type of tube used by Roentgen enough X-rays to take shadow photographs through such thin structures as the hands and feet held very close to the bulb, Tesla was taking photographs through the skull at a distance of forty feet from the tube. He elsewhere described at this time an unidentified type of radiation coming from a spark gap, when a heavy current was passed, that was not a transverse wave like light, or Hertzian waves, and could not be stopped by interposing metal plates.

Tesla, thus, in one lecture reporting his investigations covering a period of two years, offered to the world--in addition to his new electric vacuum lamps, his highly efficient incandescent lamp, and his high-frequency and high-potential currents and apparatus--at least five outstanding scientific discoveries: 1. Cosmic rays; 2. Artificial radioactivity; 3. Disintegrating beam of electrified particles, or atom smasher; 4. Electron microscope; and 5. "Very special radiation" (X-rays).

At least four of these innovations, when "rediscovered" up to forty years later, won Nobel Prizes for others; and Tesla's name is never mentioned in connection with them.

Yet Tesla's lifetime work was hardly well started!

TEN

TESLA had a remarkable ability for carrying on simultaneously a number of widely different lines of scientific research. while pursuing his studies of high-frequency electrical oscillations with all of their ramifications from vacuum lamps to radio, he was also investigating mechanical vibrations; and he had a rare foresight into the many useful applications to which they could be put, and which have since been realized.

Tesla never did things by halves. Almost everything he attempted went off like a flash of lightning with a very satisfactory resounding clap of thunder following. Even when he did not so plan events, they appeared to fashion themselves into spectacular climaxes. In 1896 while his fame was still on the ascendant he planned a nice quiet little vibration experiment in his Houston Street laboratory. Since he had moved into these quarters in 1895, the place had established a reputation for itself because of the peculiar noises and lights that emanated from it at all hours of the day and night, and because it was constantly being visited by the most famous people in the country.

The quiet little vibration experiment produced an earthquake, a real earthquake in which people and buildings and everything in them got a more tremendous shaking than they did in any of the natural earthquakes that have visited the metropolis. In an area of a dozen square city blocks, occupied by hundreds of buildings housing tens of thousands of persons, there was a sudden roaring and shaking, shattering of panes of glass, breaking of steam, gas and water pipes. Pandemonium reigned as small objects danced around rooms, plaster descended from walls and ceilings, and pieces of machinery weighing tons were moved from their bolted anchorages and shifted to awkward spots in factory lofts.

"It was all caused, quite unexpectedly, by a little piece of apparatus you could slip in your pocket," said Tesla.

The device that precipitated the sudden crisis had been used for a long time by Tesla as a toy to amuse his

friends. It was a mechanical oscillator, and was used to produce vibrations. The motor-driven device that the barber straps on his hand to give a patron an "electric massage" is a descendant of Tesla's mechanical oscillator. There is, of course, nothing electric about an "electric massage" except the power used to produce vibrations which are transmitted through the barber's fingers to the scalp.

Tesla developed in the early nineties a mechanical-electrical oscillator for the generation of high-frequency alternating currents. The driving engine produced on a shaft simple reciprocating motion that was not changed to rotary motion. Mounted on either end of the shaft was a coil of many turns of wire that moved back and forth with high frequency between the poles of electromagnets, and in this way generated high-frequency alternating currents.

The engine was claimed by Tesla to have a very high efficiency compared to the common type of engine, which changed reciprocating to rotary motion by means of a crank shaft. It had no valves or other moving parts, except the reciprocating piston with its attached shaft and coils, so that mechanical losses were very low. It maintained such an extremely high order of constancy of speed, he stated, that the alternating current generated by the oscillator could be used to drive clocks, without any pendulum or balance-wheel control mechanisms, and they would keep time more accurately than the sun.

This engine may have had industrial possibilities but Tesla was not interested in them. To him it was just a convenient way of producing a high-frequency alternating current constant in frequency and voltage, or mechanical vibrations, if used without the electrical parts. He operated the engine on compressed air and also by steam at 320 pounds and also at 80 pounds pressure.

while perfecting this device, he had opportunity to observe interesting effects produced by vibration. These were objectionable in the engine when it was used as a dynamo, so he adopted suitable measures to eliminate or suppress them. The vibrations as such, however, interested him. Although they were detrimental to the machine, he found their physiological effects were, at times, quite pleasant. Later he built a small mechanical oscillator driven by compressed air which was designed for no other purpose than to produce vibrations. He built a platform insulated from

the floor by rubber and cork. He then mounted the oscillator on the under side of the platform. The purpose of the rubber and cork under the platform was to keep the vibrations from leaking into the building and thereby reducing the effect on the platform. Visitors found this vibrating platform one of the most interesting of the great array of fascinating and fantastic exhibits with which he dazzled the society folk who flocked to his laboratory.

Great hopes were entertained by Tesla of applying these vibrations for therapeutic and health-improving effects. He had opportunity to observe, through his own experience and that of his employees, that they produce some very definite physiological actions.

Samuel Clemens, better known to the public as "Mark Twain," and Tesla were close friends. Clemens was a frequent visitor to the Tesla laboratory. Tesla had been playing with his vibratory mechanism for some time, and had learned a good deal about the results that followed from varying doses of vibration, when one evening Clemens dropped in.

Clemens, on learning about the new mechanism, wanted to experience its vitalizing vibrations. He stood on the platform while the oscillator set it into operation. He was thrilled by the new experience. He was full of adjectives. "This gives you vigor and vitality," he exclaimed. After he had been on the platform for a while Tesla advised him: "you have had enough, Mr. Clemens. you had better come down now."

"Not by a jugfull," replied Clemens. "I am enjoying myself."

"But you had better come down, Mr. Clemens. It is best that you do so," insisted Tesla.

"you couldn't get me off this with a derrick," laughed Clemens.

"Remember, I am advising you, Mr. Clemens."

"I'm having the time of my life. I'm going to stay right up here and enjoy myself. Look here, Tesla, you don't appreciate what a wonderful device you have here to give a lift to tired humanity. . . . Clemens continued along this line for several minutes. Suddenly he stopped talking, bit

his lower lip, straightened his body and stalked stiffy but suddenly from the platform.

"Quick, Tesla! Where is it?" snapped Clemens, half begging, half demanding.

"Right over here, through that little door in the corner," said Tesla. "And remember, Mr. Clemens, I advised you to come down some time ago," he called after the rapidly moving figure.

The laxative effect of the vibrator was an old story to the members of the laboratory staff.

Tesla pursued his studies of mechanical vibrations in many directions. This was almost a virgin field for scientific research. Scarcely any fundamental research had been done in the field since Pythagoras, twenty-five hundred years before, had established the science of music through his study of vibrating strings; and many of the wonders with which Tesla had startled the world in the field of high-frequency and high-potential currents had grown out of his simple secret for tuning electrical circuits so that the electricity vibrated in resonance with its circuit. He now visualized mechanical vibrations building up resonance conditions in the same way, to produce effects of tremendous magnitude on physical objects.

In order to carry out what he expected to be some minor and very small-scale experiments, he screwed the base of one of his small mechanical oscillators to an iron supporting pillar in the middle of his laboratory and set it into oscillation. It had been his observation that it took some time to build up its maximum speed of vibration. The longer it operated the faster the tempo it attained. He had noticed that all objects did not respond in the same way to vibrations. One of the many objects around the laboratory would suddenly go into violent vibration as it came into resonance with the fundamental vibration of the oscillator or some harmonic of it. As the period of the oscillator changed, the first object would stop and some other object in resonance with the new rate would start vibrating. The reason for this selective response was very clear to Tesla, but he had never previously had the opportunity to observe the phenomenon on a really large scale.

Tesla's laboratory was on an upper floor of a loft building. It was on the north side of Houston Street, and the second house east of Mulberry Street. About three hundred feet south of Houston Street on the east side of Mulberry Street was the long, four-story red-brick building famous as Police Headquarters. Throughout the neighborhood there were many loft buildings ranging from five to ten stories in height, occupied by factories of all kinds. Sandwiched between them were the small narrow tenement houses of a densely packed Italian population. A few blocks to the south was Chinatown, a few blocks to the west was the garment-trades area, a short distance to the east was a densely crowded tenement-house district.

It was in this highly variegated neighborhood that Tesla unexpectedly staged a spectacular demonstration of the properties of sustained powerful vibrations. The surrounding population knew about Tesla's laboratory, knew that it was a place where strange, magical, mysterious events took place and where an equally strange man was doing fearful and wonderful things with that tremendously dangerous secret agent known as electricity. Tesla, they knew, was a man who was to be both venerated and feared, and they did a much better job of fearing than of venerating him.

Quite unmindful of what anyone thought about him, Tesla carried on his vibration and all other experiments. Just what experiment he had in mind on this particular morning will never be known. He busied himself with preparations for it while his oscillator on the supporting iron pillar of the structure kept building up an ever higher frequency of vibrations. He noted that every now and then some heavy piece of apparatus would vibrate sharply, the floor under him would rumble for a second or two--that a window pane would sing audibly, and other similar transient events would happen--all of which was quite familiar to him. These observations told him that his oscillator was tuning up nicely, and he probably wondered why he had not tried it firmly attached to a solid building support before.

Things were not going so well in the neighborhood, however. Down in Police Headquarters in Mulberry Street the "cops" were quite familiar with strange sounds and lights coming from the Tesla laboratory. They could hear clearly the sharp snapping of the lightnings created by his coils. If

anything queer was happening in the neighborhood, they knew that Tesla was in back of it in some way or other.

On this particular morning the cops were surprised to feel the building rumbling under their feet. Chairs moved across floors with no one near them. Objects on the oficers' desks danced about and the desks themselves moved. It must be an earthquake! It grew stronger. Chunks of plaster fell from the ceilings. A flood of water ran down one of the stairs from a broken pipe. The windows started to vibrate with a shrill note that grew more intense. Some of the windows shattered.

"That isn't an earthquake," shouted one of the oficers, "it's that blankety-blank Tesla. Get up there quickly," he called to a squad of men, "and stop him. Use force if you have to, but stop him. He'll wreck the city."

The officers started on a run for the building around the corner. Pouring into the streets were many scores of people excitedly leaving near-by tenement and factory buildings, believing an earthquake had caused the smashing of windows, breaking of pipes, moving of furniture and the strange vibrations.

without waiting for the slow-pokey elevator, the cops rushed up the stairs--and as they did so they felt the building vibrate even more strongly than did police headquarters. There was a sense of impending doom--that the whole building would disintegrate--and their fears were not relieved by the sound of smashing glass and the queer roars and screams that came from the walls and floors.

Could they reach Tesla's laboratory in time to stop him? Or would the building tumble down on their heads and everyone in it be buried in the ruins, and probably every building in the neighborhood? Maybe he was making the whole earth shake in this way! would this madman be destroying the world? It was destroyed once before by water. Maybe this time it would be destroyed by that agent of the devil that they call electricity!

Just as the cops rushed into Tesla's laboratory to tackle--they knew not what--the vibrations stopped and they beheld a strange sight. They arrived just in time to see the tall gaunt figure of the inventor swing a heavy sledge hammer and shatter a small iron contraption mounted on the post in

the middle of the room. Pandemonium gave way to a deep, heavy silence.

Tesla was the first to break the silence. Resting his sledge hammer against the pillar, he turned his tall, lean, coatless figure to the cops. He was always selfpossessed, always a commanding presence--an effect that could in no way be attributed to his slender build, but seemed more to emanate from his eyes. Bowing from the waist in his courtly manner, he addressed the policemen, who were too out of breath to speak, and probably overawed into silence by their fantastic experience.

"Gentlemen," he said, "I am sorry, but you are just a trifle too late to witness my experiment. I found it necessary to stop it suddenly and unexpectedly and in an unusual way just as you entered. If you will come around this evening I will have another oscillator attached to this platform and each of you can stand on it. you will, I am sure, find it a most interesting and pleasurable experience. Now you must leave, for I have many things to do. Good day, gentlemen."

George Scherff, Tesla's secretary, was standing nearby when Tesla so dramatically smashed his earthquake maker. Tesla never told the story beyond this point, and Mr. Scherff declares he does not recall what the response of the cops was. Imagination must finish the finale to the story.

At the moment, though, Tesla was quite sincere in his attitude. He had no idea of what had happened elsewhere in the neighborhood as a result of his experiment, but the effect on his own laboratory had been sufficiently threatening to cause him to halt it suddenly. when he learned the details, however, he was convinced that he was correct in his belief that the field of mechanical vibrations was rich with opportunities for scientific investigation. we have no records available of any further major experiments with vibration in that laboratory. Perhaps the Police and Building Departments had offered some emphatic suggestions to him concerning experiments of this nature.

Tesla's observations in this experiment were limited to what took place on the floor of the building in which his laboratory was located, but apparently very little happened there until a great deal had happened elsewhere. The

oscillator was firmly fixed to a supporting column and there were similar supporting columns directly under it on each floor down to the foundations. The vibrations were transmitted through the columns to the ground. This section of the city is built on deep sand that extends down some hundreds of feet before bed rock is reached. It is well known to seismologists that earthquake vibrations are transmitted by sand with much greater intensity than they are by rock. The ground under the building and around it was, therefore, an excellent transmitter of mechanical vibrations, which spread out in all directions. They may have reached a mile or more. They were more intense, of course, near their source and became weaker as the distance increased. However, even weak vibrations that are sustained can build up surprisingly large effects when they are absorbed by an object with which they are in resonance. A distant object in resonance can be thrown into strong vibration whereas a much nearer object not in resonance will be left unaffected.

It was this selective resonance that was, apparently, operating in Tesla's experiment. Buildings other than his own came into resonance with the increasing tempo of his oscillator long before his own building was affected. After the pandemonium was under way for some time elsewhere and the higher frequencies were reached, his immediate surroundings started to come into resonance.

when resonance is reached the effects follow instantly and powerfully. Tesla knew this, so when he observed dangerous resonance effects developing in his building he realized he had to act fast. The oscillator was being operated by compressed air supplied by a motor-driven compressor that fed the air into a tank, where it was stored under pressure. Even if the motor were shut off, there was plenty of air in the tank to keep the oscillator going for many minutes--and in that time the building could be completely wrecked and reduced to a pile of debris. with the vibrations reaching this dangerous amplitude, there was no time to try to disconnect the vibrator from the air line or to do anything about releasing the air from the tank. There was time for only one thing, and Tesla did that. He grabbed the near-by sledge hammer and took a mighty swing at the oscillator in hopes of putting it out of operation. He succeeded in his first attempt.

The device was made of cast iron and was of rugged construction. There were no delicate parts that could be easily damaged. Tesla has never published a description of the device, but its construction was principally that of a piston which moved back and forth inside a cast-iron cylinder. The only way to stop it from operating was to smash the outer cylinder. Fortunately, that is what happened from the first blow.

As Tesla turned around after delivering this lucky blow and beheld the visiting policemen, he could not understand the reason for their visit. The dangerous vibrations had developed in his building only within the preceding minute, and the policemen would not have had time to plan a visit in connection with them, he figured, so they must have come for some other less critical purpose, and therefore he proposed to dismiss them until a more opportune moment.

Tesla related this experience to me when I asked the inventor's opinion of a plan that I had suggested some time previously to Elmer Sperry, Jr., son of the famous inventor of many gyroscope devices. when a heavy gyroscope, such as is used in stabilizing ships, is forced to turn on its axis, it transmits a powerful downward thrust through the bearings in which the supporting gimbal is mounted. If a battery of such gyroscopes were mounted in regions where severe earthquakes take place it would transmit thrusts to the ground at equally timed intervals and build up resonance vibrations in the strata of the earth that would cause earthquake strains to be released while they were of small magnitude, thus producing very small earthquakes instead of letting the strains build up to large magnitudes which, when they let go, would cause devastating earthquakes.

The idea made a strong appeal to Tesla; and in his discussion, after telling me of the experience here related, he further declared that he had so far developed his study of vibrations that he could establish a new science of "telegeodynamics" which would deal not only with the transmission of powerful impulses through the earth to distant points to produce effects of large magnitude--in addition, he could use the same principles to detect distant objects. In the later thirties, before the outbreak of the war, he declared that he could apply these principles for the detection of submarines or other ships

at a distance, even though they were lying at anchor and no engines operating on them.

His system of telegeodynamics, using mechanical vibrations, Tesla declared, would make it possible to determine the physical constant of the earth and to locate ore deposits far beneath the surface. This latter prediction has since been fulfilled, for many oil fields have been discovered by studying the vibrations reflected from sub-surface strata.

"So powerful are the effects of the telegeodynamic oscillator," said Tesla in reviewing the subject in the thirties, "that I could now go over to the Empire State Building and reduce it to a tangled mass of wreckage in a very short time. I could accomplish this result with utmost certainty and without any dificulty whatever. I would use a small mechanical vibrating device, an engine so small you could slip it in your pocket. I could attach it to any part of the building, start it in operation, allow it twelve to thirteen minutes to come to full resonance. The building would first respond with gentle tremors, and the vibrations would then become so powerful that the whole structure would go into resonant oscillations of such great amplitude and power that rivets in the steel beams would be loosened and sheared. The outer stone coating would be thrown off and then the skeleton steel structure would collapse in all its parts. It would take about 2.5 (This figure may have been .25 or 2.5 horsepower. The notes are old and somewhat indistinct. Memory favors the latter figure.) horsepower to drive the oscillator to produce this effect"

Tesla developed his inventions to the point at which they were spectacular performers before they were demonstrated to the public. when presented, the performance always greatly exceeded the promise. This was the case with his first public demonstration of "wireless," but he complicated the situation by coupling with his radio invention another new idea--the robot.

Tesla staged his demonstration in the great auditorium of Madison Square Garden, then on the north side of Madison Square, in September, 1898, as part of the first annual Electrical Exhibition. He had a large tank built in the center of the arena and in this he placed an iron-hulled boat a few feet long, shaped like an ark, which he operated by remote control by means of his wireless system.

Extending upward from the center of the roof of the boat was a slender metal rod a few feet high which served as an antenna, or &aerial, for receiving the wireless wave. Near the bow and stern were two small metal tubes about a foot high surmounted by small electric lamps. The interior of the hull was packed with a radio receiving set and a variety of motor-driven mechanisms which put into effect the operating orders sent to the boat by wireless waves. There was a motor for propelling the boat and another motor for operating the servo-mechanism, or mechanical brain, that interpreted the orders coming from the wireless receiving set and translated them into mechanical motions, which included steering the boat in any direction, making it stop, start, go forward or backward, or light either lamp. The boat could thus be put through the most complicated maneuvers.

Anyone attending the exhibition could call the maneuver for the boat, and Tesla, with a few touches on a telegraph key, would cause the boat to respond. His control point was at the far end of the great arena.

The demonstration created a sensation and Tesla again was the popular hero. It was a front-page story in the newspapers. Everyone knew the accomplishment was a wonderful one, but few grasped the significance of the event or the importance of the fundamental discovery which it demonstrated. The basic aspects of the invention were obscured by the glamor of the demonstration.

The Spanish American war was under way. The success of the U.S. Navy in destroying the Spanish fleets was the leading topic of conversation. There was resentment over the blowing up of the U.S.S. Maine in Havana Harbor. Tesla's demonstration fired the imagination of everyone because of its possibilities as a weapon in naval warfare.

waldemar Kaempffert, then a student in City College and now Science Editor of the New York Times, discussed its use as a weapon with Tesla.

"I see," said Kaempffert, "how you could load an even larger boat with a cargo of dynamite, cause it to ride submerged, and explode the dynamite whenever you wished by pressing the key just as easily as you can cause the light on the bow to shine, and blow up from a distance by wireless even the largest of battleships." (Edison had

earlier designed an electric torpedo which received its power by a cable that remained connected with the mother ship.)

Tesla was patriotic, and was proud of his status, which he had acquired in 1889, as a citizen of the United States. He had offered his invention to the Government as a naval weapon, but at heart he was opposed to war.

"you do not see there a wireless torpedo," snapped back Tesla with fire flashing in his eyes, "you see there the first of a race of robots, mechanical men which will do the laborious work of the human race.

The "race of robots" was another of Tesla's original and important contributions to human welfare. It was one of the items of his colossal project for increasing human energy and improving the efficiency of its utilization. He visualized the application of the robot idea to warfare as well as to peaceful pursuits; and out of the broad principles enunciated, he developed an accurate picture of warfare as it is being carried on today with the use of giant machines as weapons--the robots he described.

"This evolution," he stated in an article in the Century Magazine of June, 1900, "will bring more and more into prominence a machine or mechanism with the fewest individuals as an element of warfare. . . . Greatest possible speed and maximum rate of energy delivery by the war apparatus will be the main object. The loss of life will become smaller. . . ."

Outlining the experiences that led him to design the robots, or automatons, as he called them, Tesla stated:

I have by every thought and act of mine, demonstrated, and do so daily, to my absolute satisfaction that I am an automaton endowed with power of movement, which merely responds to external stimuli beating upon my sense organs, and thinks and moves accordingly. . . .

with these experiences it was only natural that, long ago, I conceived the idea of constructing an automaton which would mechanically represent me, and which would respond, as I do myself, but, of course, in a much more primitive manner, to external influences. Such an automaton evidently had to have motive power, organs for locomotion, directive

organs, and one or more sensitive organs so adapted as to be excited by external stimuli.

This machine would, I reasoned, perform its movements in the manner of a living being, for it would have all of the chief elements of the same. There was still the capacity for growth, propagation, and, above all, the mind which would be wanting to make the model complete. But growth was not necessary in this case since a machine could be manufactured full-grown, so to speak. As to capacity for propagation, it could likewise be left out of consideration, for in the mechanical model it merely signified a process of manufacture.

whether the automaton be of flesh and bone, or of wood and steel, mattered little, provided it could perform all the duties required of it like an intelligent being. To do so it would have to have an element corresponding to the mind, which would effect the control of its movements and operations, and cause it to act, in any unforeseen case that might present itself, with knowledge, reason, judgement and experience. But this element I could easily embody in it by conveying to it my own intelligence, my own understanding. So this invention was evolved, and so a new art came into existence, for which the name "telautomatics" has been suggested, which means the art of controlling the movements and operations of distant automatons.

In order to give the automaton an individual identity it would be provided with a particular electrical tuning, Tesla explained, to which it alone would respond when waves of that particular frequency were sent from a control transmitting station; and other automatons would remain inactive until their frequency was transmitted. This was Tesla's fundamental radio tuning invention, the need for which other radio inventors had not yet glimpsed although Tesla had described it publicly a half-dozen years earlier.

Tesla not only used in the control of his automaton the long waves now used in broadcasting--which are very different from the short waves used by Marconi and all others; for those could be interfered with by the imposition of an intervening object--but he was explaining the use, through his system of tuning, of the spectrum of allocations for individual stations that now appears on the dials of radio receiving sets. He continued:

By the simple means described the knowledge, experience, judgement--the mind, so to speak--of the distant operator were embodied in that machine, which was thus enabled to move and perform all of its operations with reason and intelligence. It behaved just like a blindfolded person obeying directions received through the ear.

The automatons so far constructed had "borrowed minds," so to speak, as each formed merely part of the distant operator who conveyed to it his intelligent orders; but this art is only in the beginning.

I purpose to show that, however impossible it may now seem, an automaton may be contrived which will have its "own mind," and by this I mean that it will be able, independently of any operator, left entirely to itself, to perform, in response to external influences affecting its sensitive organs, a great variety of acts and operations as if it had intelligence.

It will be able to follow a course laid out or to obey orders given far in advance; it will be capable of distinguishing between what it ought and ought not to do, and of making experiences or, otherwise stated, of recording impressions which will deffinitely affect its subsequent actions. In fact I have already conceived such a plan.

Although I evolved this invention many years ago and explained it to my visitors very frequently in my laboratory demonstrations, it was not until much later, long after I had perfected it, that it became known, when, naturally enough, it gave rise to much discussion and to sensational reports.

But the true significance of this new art was not grasped by the majority, nor was the great force of the underlying principle recognized. As nearly as I could judge from the numerous comments which then appeared, the results I had obtained were considered as entirely impossible. Even the few who were disposed to admit the practicability of the invention saw in it merely an automobile torpedo, which was to be used for the purpose of blowing up battleships, with doubtful success. . . .

But the art I have evolved does not contemplate merely the change of direction of a moving vessel; it affords means of

absolutely controlling in every respect, all the innumerable translatory movements, as well as the operations of all the internal organs, no matter how many, of an individualized automaton.

Tesla, in an unpublished statement, prepared fifteen years later, recorded his experience in developing automata, and his unsuccessful effort to interest the war Department, and likewise commercial concerns, in his wirelessly controlled devices.

The idea of constructing an automaton, to bear out my theory, presented itself to me early but I did not begin active work until 1893, when I started my wireless investigations. During the succeeding two or three years, a number of automatic mechanisms, actuated from a distance by wireless control, were constructed by me and exhibited to visitors in my laboratory.

In 1896, however, I designed a complete machine capable of a multitude of operations, but the consummation of my labors was delayed until later in 1897. This machine was illustrated and described in my article in the Century Magazine of June 1900, and other periodicals of that time and, when first shown in the beginning of 1898, it created a sensation such as no other invention of mine has ever produced.

In November 1898, a basic patent on the novel art was granted to me, but only after the Examiner-in-Chief had come to New York and witnessed the performance, for what I claimed seemed unbelievable. I remember that when later I called on an oficial in Washington, with a view of offering the invention to the Government, he burst out in laughter upon my telling him what I had accomplished. Nobody thought then that there was the faintest prospect of perfecting such a device.

It is unfortunate that in this patent, following the advice of my attorneys, I indicated the control as being effected through the medium of a single circuit and a well-known form of detector, for the reason that I had not yet secured protection on my methods and apparatus for individualization. As a matter of fact, my boats were controlled through the joint action of several circuits and interference of every kind was excluded. Most generally I employed receiving circuits in the form of loops, including

condensers, because the discharges of my high tension transmitter ionized the air in the hall so that even a very small &aerial would draw electricity from the surrounding atmosphere for hours.

Just to give an idea, I found, for instance, that a bulb 12" in diamater, highly exhausted, and with one single terminal to which a short wire was attached, would deliver well on to one thousand successive flashes before all charge of the air in the laboratory was neutralized. The loop form of receiver was not sensitive to such a disturbance and it is curious to note that it is becoming popular at this late date. In reality it collects much less energy than the aerials or a long grounded wire, but it so happens that it does away with a number of defects inherent to the present wireless devices.

In demonstrating my invention before audiences, the visitors were requested to ask any questions, however involved, and the automaton could answer them by signs. This was considered magic at that time but was extremely simple, for it was myself who gave the replies by means of the device.

At the same period another larger telautomatic boat was constructed. It was controlled by loops having several turns placed in the hull, which was made entirely water tight and capable of submergence. The apparatus was similar to that used in the first with the exception of certain special features I introduced as, for example, incandescent lamps which afforded a visible evidence of the proper functioning of the machine and served for other purposes.

These automata, controlled within the range of vision of the operator, were, however, the first and rather crude steps in the evolution of the Art of Telautomatics as I had conceived it. The next logical improvement was its application to automatic mechanisms beyond the limits of vision and at great distances from the center of control, and I have ever since advocated their employments as instruments of warfare in preference to guns. The importance of this now seems to be recognized, if I am to judge from casual announcements through the press of achievements which are said to be extraordinary but contain no merit of novelty whatever.

In an imperfect manner it is practicable, with the existing wireless plants, to launch an aeroplane, have it follow a certain approximate course, and perform some operation at a distance of many hundreds of miles. A machine of this kind can also be mechanically controlled in several ways and I have no doubt that it may prove of some usefulness in war. But there are, to my best knowledge, no instrumentalities in existence today with which such an object could be accomplished in a precise manner. I have devoted years of study to this matter and have evolved means, making such and greater wonders easily realizable.

As stated on a previous occasion, when I was a student at college I conceived a flying machine quite unlike the present ones. The underlying principle was sound but could not be carried into practice for want of a prime-mover of suficiently great activity. In recent years I have successfully solved this problem and am now planning aerial machines devoid of sustaining planes, ailerons, propellers and other external attachments, which will be capable of immense speeds and are very likely to furnish powerful arguments for peace in the near future. Such a machine, sustained and propelled entirely by reaction, can be controlled either mechanically or by wireless energy. By installing proper plants it will be practicable to project a missile of this kind into the air and drop it almost on the very spot designated which may be thousands of miles away. But we are not going to stop at this.

Tesla is here describing--nearly fifty years ago--the radio-controlled rocket, which is still a confidential development of world war II, and the rocket bombs used by the Germans to attack England. The rocket-type airship is a secret which probably died with Tesla, unless it is contained in his papers sealed by the Government at the time of his death. This, however, is unlikely, as Tesla, in order to protect his secrets, did not commit his major inventions to paper, but depended on an almost infallible memory for their preservation.

"Telautomata," he concluded, "will be ultimately produced, capable of acting as if possessed of their own intelligence and their advent will create a revolution. As early as 1898 I proposed to representatives of a large manufacturing concern the construction and public exhibition of an automobile carriage which, left to itself, would perform a great variety of operations involving something akin to

judgment. But my proposal was deemed chimerical at that time and nothing came from it."

Tesla, at the Madison Square Garden demonstration in 1898 which lasted for a week, presented to the world, then, two stupendous developments, either of which alone would have been too gigantic to have been satisfactorily assimilated by the public in a single presentation. Either one of the ideas dimmed the glory of the other.

This first public demonstration of wireless, the forerunner of modern radio, in the amazing stage of development to which Tesla carried it, at this early date, was too tremendous a project to be encompassed within a single dramatization. In the hands of a competent public-relations councillor, or publicity man, as he was called in those days (but the employment of one was utterly abhorrent to Tesla), this demonstration would have been limited to the wireless aspect alone, and would have included just a simple two-way sending-and-receiving set for the transmission of messages by the Morse dots and dashes. Suitably dramatized, this would have been a suficient thrill for one show. At a subsequent show he could have brought in the tuning demonstration which would have shown the selective response of each of a series of coils, indicated by his strange-looking vacuum-tube lamps. The whole story of just the tuning of wireless circuits and stations to each other was too big for any one demonstration. An indication of its possibilities was all the public could absorb.

The robot, or automaton, idea was a new and an equally stupendous concept, the possibilities of which were not lost, however, on clever inventors; for it brought in the era of the modern labor-saving device--the mechanization of industry on a mass-production basis.

Using the Tesla principles, John Hays Hammond, Jr. developed an electric dog, on wheels, that followed him like a live pup. It was motor operated and controlled by a light beam through selenium cells placed behind lenses used for eyes. He also operated a yacht, entirely without a crew, which was sent out to sea from Boston harbor and brought back to its wharf by wireless control.

A manless airplane was developed toward the close of the First world war. It rose from the ground, flew one hundred

miles to a selected target, dropped its bombs, and returned to its home airport, all by wireless control. It was also developed so that on a signal from a distant radio station the plane would rise into the air, choose the proper direction, fly to a city hundreds of miles away and set itself down in the airport at that city. This Tesla-type robot was developed in the plant of the Sperry Gyroscope Company, where Elmer Sperry invented a host of amazing mechanical robots controlled by gyroscopes, such as the automatic pilots for airplanes and for ships.

All of the modern control devices using electronic tubes and electric eyes that make machines seem almost human and enable them to perform with superhuman activity, dependability, accuracy and low cost, are children of Tesla's robot, or automaton. The most recent development, in personalized form, was the mechanical man, a metal human monster giant, that walked, talked, smoked a cigarette, and obeyed spoken orders, in the exhibit of the Westinghouse Electric and Manufacturing Company at the New York world's Fair. Robots have been used, as well, to operate hydroelectric powerhouses and isolated substations of powerhouses.

In presenting this superabundance of scientific discovery in a single demonstration, Tesla was manifesting the superman in an additional role that pleased him greatly--that of the man magnificent. He would astound the world with a superlative demonstration not only of the profundity of the accomplishments of the superman, but, in addition, of the prolific nature of the mind of the man magnificent who could shower on the world a superabundance of scientific discoveries.

ELEVEN

TESLA was now ready for new worlds to conquer. After presenting to the public his discoveries relating to wireless signaling or the transmission of intelligence, as he called it, Tesla was anxious to get busy on the power phase: his projected world-wide distribution of power by wireless methods.

Again Tesla was faced with a financial problem or, to state the matter simply, he was broke. The $40,000 which was paid for the stock of the Nikola Tesla Company by Adams had been spent. The company had no cash on hand; but it held patents worth many millions if they had been handled in a practical way. A gift of $10,000 from John Hays Hammond, the famous mining engineer, had financed the work leading up to the Madison Square Garden wireless and robot demonstration.

Tesla had built ever larger and more powerful oscillators in his Houston Street laboratory. when he constructed one that produced 4,000,000 volts he reached beyond the limits in which high voltage could be handled within a city building. The sparks jumped to the walls, floors and ceilings. He needed a larger open space. He wanted to build vastly larger coils. He dreamed of a tremendous structure he would like to build somewhere in the open country spaces. He felt certain his wireless patents would prove tremendously valuable in a short time, and he would then have all the money he needed to build his laboratory. But he had already progressed to the point at which further advancement demanded the use of such a building--and he was broke. A loan of $10,000 offered by his friend Crawford, of the dry goods firm of Simpson and Crawford, took care of immediate needs.

Leonard E. Curtis, of the Colorado Springs Electric Company, a great admirer of Tesla, when he heard of Tesla's plan to conduct experiments on a gigantic scale, invited him to locate his laboratory at Colorado Springs, where he would provide him with the necessary land and all the electric power he needed for his work.

Col. John Jacob Astor, owner of the waldorf-Astoria, held his famous dining-room guest in the highest esteem as a personal friend, and kept in close touch with the progress of his investigations. when he heard that his researches were being halted through lack of funds, he made available to Tesla the $30,000 he needed in order to take advantage of Curtis' offer and build a temporary plant at Colorado Springs. Tesla arrived in Colorado in May, 1899, bringing with him some of his laboratory workers, and accompanied by an engineering associate, Fritz Lowenstein.

while Tesla was making experiments on natural lightning and other subjects in his mountain laboratory, the construction work on his high-power transmitting apparatus was being

rushed. He gave his personal supervision to even the finest details of every piece of apparatus. He was working in a virgin field. None had gone before him to pave the way or gain experience that would be helpful to him in designing his experiments or his machines. He was entirely on his own, working without human guidance of any kind, exploring a field of knowledge far beyond that which anyone else had reached. He had previously astonished the world in developing a system of power transmission in which pressures of tens of thousands of volts were used; now he was working with millions of volts, and no one knew what would happen when such tremendous potentials were produced. He believed, however, that he would make his own magnificent polyphase system obsolete by creating a better one.

In about three months after his arrival at Colorado Springs the building with its fantastic shapes, towers and masts was completed, and the giant oscillator with which the principal experiment was to be made was ready for operation.

The wild, rugged, mountainous terrain of Colorado, in which Tesla set up his laboratory, is a natural generator of tremendous electrical activity, producing lightning discharges of a magnitude and intensity probably not equaled anywhere else on earth. Overwhelming bolts from both earth and sky flashed with frightening frequency during the almost daily lightning storms. Tesla made a very detailed study of natural lightning while his apparatus, which would imitate it, was being constructed. He learned a great deal about the characteristics of the various kinds of discharges.

The gods of the natural lightning may have become a bit jealous of this individual who was undertaking to steal their thunder, as Prometheus had stolen fire, and sought to punish him by wrecking his fantastic looking structure. It was badly damaged, and narrowly escaped destruction, by a bolt of lightning, not one that made a direct hit but one that struck ten miles away.

The blast hit the laboratory at the exact time, to the split second, that Tesla predicted it would. It was caused by a tidal wave of air coming from a particular type of lightning discharge. Tesla tells the story in an unpublished report. He stated:

I have had many opportunities for checking this value by observation of explosions and lightning discharges. An ideal case of this kind presented itself at Colorado Springs in July 1899 while I was carrying on tests with my broadcasting power station which was the only wireless plant in existence at that time.

A heavy cloud had gathered over Pikes Peak range and suddenly lightning struck at a point just ten miles away. I timed the flash instantly and upon making a quick computation told my assistants that the tidal wave would arrive in 48.5 seconds. Exactly with the lapse of this time interval a terrific blow struck the building which might have been thrown off the foundation had it not been strongly braced. All the windows on one side and a door were demolished and much damage done in the interior.

Taking into account the energy of the electric discharge and its duration, as well as that of an explosion, I estimated that the concussion was about equivalent to that which might have been produced at that distance by the ignition of twelve tons of dynamite.

The experimental station which Tesla erected was an almost square barnlike structure nearly one hundred feet on each side. The sides were twenty-five feet high, and from them the roof sloped upward toward the center. From the middle of the roof rose a skeleton pyramidal tower made of wood. The top of this tower was nearly eighty feet above the ground. Extensions of the slanting roof beams extended outward to the ground to serve as flying buttresses to reinforce the tower. Through the center of the tower extended a mast nearly two hundred feet high, at the top of which was mounted a copper ball about three feet in diameter. The mast carried a heavy wire connecting the ball with the apparatus in the laboratory. The mast was arranged in sections so that it could be disjointed and lowered.

There were many pieces of apparatus in the building, and many forms and sizes of his Tesla coils, or high-frequency current transformers. The principal device was his "magnifying transmitter." This was merely a very large Tesla coil. A circular fence-like wall seventy-five feet in diameter was built in the large central room of the structure, and on this were wound the turns of the giant primary coil of the magnifying transmitter. The secondary

was a coil about ten feet in diameter, of about seventy-five turns of wire wound on a cylindrical skeletonized framework of wood. It had a vertical length of about ten feet and was mounted in the center of the room several feet above the floor. In the center of this coil was the bottom part of the mast. The roof above this portion of the room could be slid outward in two sections, so that no material came within a long distance of the mast and its wire conductor within the lower third of the distance above the ground.

One of the first problems Tesla sought to solve when he began his researches in the mountains of Colorado was whether the earth was an electrically charged body. Nature is usually very generous in her response when scientists ask her, in their experiments, questions of first magnitude. Tesla not only received a very satisfactory answer to his question but in addition a revelation of tremendous importance, an unveiling of a secret of Nature's operations which places in the hands of man a means of manipulating electrical forces on a terrestrial scale.

It was desirable for Tesla to learn whether the earth was electrically charged for the same reason that a violinist would want to know whether the strings of his instrument lay loose and inert across the bridge or whether they were tense and taut so that they would produce a musical note if plucked, or a football player would want to know if the pigskin were inflated or limp.

If the earth were uncharged, it would act as a vast sink into which electricity would have to be flowed in tremendous amounts to bring it to the state in which it could be made to vibrate electrically. An uncharged earth would somewhat complicate Tesla's plans. He quickly discovered that the earth is charged to an extremely high potential and is provided with some kind of a mechanism for maintaining its voltage. It was while determining this fact that he made his second big discovery.

Tesla made the first announcement of his discovery shortly after his return to New York in an amazing article in the Century of June, 1900, but the story is best told by Tesla in an article in the Electrical world and Engineer, May 5, 1904:

In the middle of June, while preparations for other work were going on, I arranged one of my receiving transformers with the view of determining in a novel manner, experimentally, the electrical potential of the globe and studying its periodic and casual fluctuations. This formed part of a plan carefully mapped out in advance

A highly sensitive, self restorative device, controlling a recording instrument, was included in the secondary circuit, while the primary was connected to the ground and the secondary to an elevated terminal of adjustable capacity. The variations of electrical potential gave rise to electrical surgings in the primary; these generated secondary currents, which in turn affected the sensitive device and recorder in proportion to their intensity.

The earth was found to be, literally, alive with electrical vibrations, and soon I was deeply absorbed in this interesting investigation. No better opportunity for such observations as I intended to make could be found anywhere.

Colorado is a country famous for the natural displays of electric force. In that dry and rarefied atmosphere the sun's rays beat on objects with fierce intensity. I raised steam to a dangerous pressure, in barrels filled with concentrated salt solution and the tinfoil coating of some of my elevated terminals shrivelled in the fiery blaze. An experimental high tension transformer, carelessly exposed to the rays of the setting sun, had most of its insulating compound melted and was rendered useless.

Aided by the dryness and rarefaction of the air, the water evaporates as in a boiler, and static electricity is generated in abundance. Lightning discharges are, accordingly, very frequent and sometimes of inconceivable violence. On one occasion approximately 12,000 discharges occurred within two hours, and all in the radius of certainly less than 50 kilometers [about 30 miles] from the laboratory. Many of them resembled gigantic trees of fire with the trunks up or down. I never saw fireballs, but as a compensation for my disappointment I succeeded later in determining the mode of their formation and producing them artificially.

In the latter part of the same month I noticed several times that my instruments were affected stronger by discharges taking place at great distances than by those

near by. This puzzled me very much. what was the cause? A number of observations proved that it could not be due to differences in the intensity of individual discharges and I readily ascertained that the phenomenon was not the result of a varying relation between the periods of my receiving circuits and those of the terrestrial disturbances.

One night as I was walking home with an assistant, meditating over these experiences, I was suddenly staggered by a thought. Years ago when I wrote a chapter of my lecture before the Franklin Institute and the National Electric Light Association, it had presented itself to me, but I dismissed it as absurd and impossible. I banished it again. Nevertheless, my instinct was aroused and somehow I felt that I was nearing a great revelation.

It was on the 3rd of July [1899]--the date I shall never forget--when I obtained the first decisive experimental evidence of a truth of overwhelming importance for the advancement of humanity.

A dense mass of strongly charged clouds gathered in the west and toward evening a violent storm broke loose which, after spending much of its fury in the mountains, was driven away with great velocity over the plains. Heavy and long persistent arcs formed almost in regular time intervals. My observations were now greatly facilitated and rendered more accurate by the experiences already gained. I was able to handle my instruments quickly and I was prepared. The recording apparatus being properly adjusted, its indications became fainter and fainter with increasing distance of the storm, until they ceased altogether.

I was watching in eager expectation. Surely enough, in a little while the indications again began, grew stronger and stronger, and, after passing through a maximum, gradually decreased and ceased once more. Many times, in regularly recurring intervals, the same actions were repeated until the storm which, as evident from simple computations, was moving with nearly constant speed, had retreated to a distance of about 300 kilometers [about 180 miles]. Nor did these strange actions stop then, but continued to manifest themselves with undiminished force.

Subsequently similar observations were also made by my assistant, Mr. Fritz Lowenstein, and shortly afterward several admirable opportunities presented themselves which

brought out, still more forcibly and unmistakably, the true nature of the wonderful phenomenon. No doubt whatever remained: I was observing stationary waves.

As the source of the disturbances moved away the receiving circuit came successively upon their nodes and loops. Impossible as it seemed, this planet, despite its vast extent, behaved like a conductor of limited dimensions. The tremendous significance of this fact in the transmission of energy by my system had already become quite clear to me.

Not only was it practicable to send telegraphic messages to any distance without wires, as I recognized long ago, but also to impress upon the entire globe the faint modulations of the human voice, far more still, to transmit power, in unlimited amounts to any terrestrial distance and almost without loss.

To get a more familiar picture of the problem that Tesla tackled in seeking to determine if the earth were charged and if it could be set into electrical vibration, one can visualize the difference between a bath tub that is empty and one that contains water. The uncharged earth would be like an empty tub; the charged earth like one containing water. It is easy to produce waves in the tub containing the water. By placing one's hand in the water and moving it back and forth, lengthwise, a short distance at the right rhythm, the water is soon rushing back and forth in a wave whose amplitude grows at a tremendously rapid rate until, if the hand motion is continued, the water may splash as high as the ceiling.

The earth can be visualized as an extremely large container holding a fluid; and in the center is a small plunger arrangement which can be moved tip and down a short distance in the proper rhythm. The waves travel to the edge of the container and are reflected back to the center, from which they again go outward re-enforced by the movement of the plunger.

The reaction between the outgoing and incoming waves, both in resonance with the medium in which they are traveling, causes stationary waves to be produced on the water, the surface having the appearance of a single series of waves frozen in a fixed position.

In Tesla's experiments the lightning discharges that played the part of the plunger causing the waves were moving rapidly to the eastward, and they carried the whole series of fixed, or stationary, waves with them. The measuring device remained fixed so the wave series, with its loops and nodes, moved past it, causing the measured potentials to rise and fall.

The experiment not only demonstrated that the earth was filled with electricity, but that this electricity could be disturbed so that rhythmic vibrations could be struck, resonance could be produced, causing effects of tremendous magnitude. Soldiers marching in unison across a bridge and wrecking it by the resulting vibration would again be a case in point.

Tesla produced the spectacular effects of extremely high potentials and high frequency by producing electrical resonance in his circuits--by tuning the electricity--and now he had discovered that he would be able to produce, easily, the same effect in the earth as if it were a single condenser and coil combined, a pure electrical resonating unit, by charging and discharging it rhythmically with his high-frequency, high-potential oscillations.

In this magnificent experiment Tesla the superman was at his best; the boldness of his undertaking fired the imagination, and the success he achieved should have earned for him undying fame.

Eventually, the giant coils with their banks of condensers and other apparatus in, the Colorado laboratory were ready for use in full-scale experiments. Every piece of equipment was thoroughly inspected and tested by Tesla and the moment had finally arrived for the critical test of the highest voltage experiment that had ever been made. He expected to top his own earlier records one hundred times over, and to produce tens of thousands of times higher voltages than ever had been produced in the high-voltage transmission lines at Niagara Falls.

There was not the faintest shadow of doubt in Tesla's mind as to whether his giant oscillator would work. He knew it would work, but he also knew that he was going to produce millions of volts and tremendously heavy currents; and neither he nor anyone else knew how these terrific explosions of electrical energy would act. He knew that he

had planned the experiment so that the first bolts of man-made lightning ever created would shoot from the top of the 200-foot-tall mast.

Tesla asked Kolman Czito, who had worked with him for many years in his laboratories in New York, to preside at the switch-board through which current was brought into the laboratory from the powerhouse of the Colorado Springs Electric Company by an overhead transmission line two miles long.

"when I give you the word," said Tesla to Czito, "you close the switch for one second--not longer."

The inventor took a position near the door of the laboratory from which he could view the giant coil in the center of the great barnlike room--but not too close to it, for a stray bolt of his own lightning might inflict a painful burn. From the point where he stood he could look upward toward the open roof and see the three-foot copper ball on top of the slender 200-foot mast that had its base in the center of the cagelike secondary coil. A quick visual survey of the situation, and Tesla gave the signal--"Now."

Czito jammed home the switch and as quickly pulled it out. In that brief interval the secondary coil was crowned with a mass of hairlike electrical fire, there was a crackling sound in various parts of the room and a sharp snap far overhead.

"Fine," said Tesla, "the experiment is working beautifully. we will try it again in exactly the same way. Now!"

Again Czito jammed home the switch for a second and opened it. Again the plumes of electrical fire came from the coil, minor sparks crackled in all parts of the laboratory and the very sharp snap came through the open roof from far overhead.

"This time," said Tesla, "I am going to watch the top of the mast from the outside. when I give you the signal I want you to close the switch and leave it closed until I give you the signal to open it." So saying, he started for the near-by open door.

Reaching a point outside from which he could see the copper ball on top of the needlelike mast, Tesla called through the door, "Czito, close the switch--Now!"

Czito again jammed the switch closed and jumped back--but held his arm extended to yank open the blades quickly should he receive an emergency signal. Nothing much had happened on the quick-contact closing, but now the apparatus would be given an opportunity to build up its full strength and no one knew what to expect. He knew that the apparatus would draw a very heavy current through a primary coil that looked like a "short circuit," and he knew that short circuits could be very destructive if the current was allowed to continue to flow. The switchboard could become a scene of interesting activity if any thing let go. Czito expected the quick flash and explosive blast of a short circuit a second or two after the switch was closed. Several seconds passed with no short circuit.

As soon as the switch was closed there came again the same crackling sound, the same snap high in the air that he had heard before. Now it was followed by a tremendous upsurge of sound. The crackling from the coil swelled into a crescendo of vicious snaps. From above the roof the original staccato snap was followed by a sharper one--and by another that was like the report of a rifle. The next was still louder. They came closer together like the rattle of a machine gun. The bang high in the air became tremendously louder; it was now the roar of a cannon, with the discharges rapidly following each other as if a gigantic artillery battle was taking place over the building. The sound was terrifying and the thunder shook the building in most threatening fashion.

There was a strange ghostly blue light in the great barnlike structure. The coils were flaming with masses of fiery hair. Everything in the building was spouting needles of flame, and the place filled with the sulphurous odor of ozone, fumes of the sparks, which was all that was needed to complete the conviction that hell was breaking loose and belching into the building.

As Czito stood near the switch he could feel and see the sparks jump from his fingers, each pricking like a needle stuck into his flesh. He wondered if he would be able to reach for the switch and turn off the power that was creating this electrical pandemonium--would the sparks

become longer and more powerful if he approached the switch? Must this head-splitting racket go on forever? It's getting worse, that tremendous ear-wrecking bang, bang, bang overhead. why doesn't Tesla stop it before it shakes down the building? Should he open the switch of his own accord? Maybe Tesla has been hit, perhaps killed, and can't give orders to open the switch!

It seemed to Czito that the demonstration had been going on for an hour but as a matter of fact it had lasted thus far for only a minute; nevertheless, a tremendous amount of activity had been crowded into that short space of time.

Outside stood Tesla, properly attired in cutaway coat and black derby hat for the auspicious occasion, his slender six-foot-two figure bearing signs of close relationship to the mastlike rod sticking out of his bizarre barnlike structure. His height was increased by a one-inch-thick layer of rubber on the soles and heels of his shoes, used as electrical insulation.

As he gave the switch-closing "Now" signal to Czito, he turned his eyes heavenward to the ball on top of the mast. He had hardly spoken when he saw a short hairlike spark dart from the ball. It was only about ten feet long, and thin. Before he had time to be pleased, there was a second and a third and a fourth spark, each longer, brighter and bluer than its predecessor.

"Ah!" ejaculated Tesla, forgetting to close his mouth that was widely opened for a shout. He clenched his hands for joy and raised them skyward toward the top of the mast.

More sparks! Longer and longer! Ten, twenty, thirty, forty, fifty, sixty, seventy, eighty feet. Brighter and bluer! Not thread-like sparks now but fingers of fire. Wriggling rods of flame that lashed viciously into the heavens. The sparks were now as thick as his arm as they left the ball.

Tesla's eyes almost popped out of his head as he saw full-fledged bolts of lightning darting into the air, accompanied by a barrage of tremendous crashes of thunder. Those lightning bolts were now half again the length of the building, more than 135 feet long, and the thunder was being heard in Cripple Creek fifteen miles away.

Suddenly--silence!

Tesla rushed into the building.

"Czito! Czito! Czito! why did you do that? I did not tell you to open the switch. Close it again quickly!"

Czito pointed at the switch. It was still closed. He then pointed at the voltmeter and ammeter on the switchboard. The needles of both of them registered zero.

Tesla sized up the situation instantly. The incoming wires carrying power to the laboratory were "dead."

"Czito," he snapped, "call up the powerhouse quickly. They must not do that. They have cut off my power".

The telephone call was put through to the powerhouse. Tesla grabbed the phone and shouted into it:

"This is Nikola Tesla. you have cut off my power! you must give me back power immediately! you must not cut off my power."

"Cut off your power, nothing," came the gruff reply from the other end of the line. "you've thrown a short circuit on our line with your blankety-blank-blank experiments and wrecked our station. you've knocked our generator off the line and she's now on fire. you won't get any more power!"

Tesla had built his apparatus substantially, so that it would be able to carry the tremendously heavy currents he expected to draw off the line. while his own equipment was able to stand what amounted to a heavy short circuit, he had overloaded the generator at the Colorado Springs Electric Company powerhouse, which tried manfully to carry the added burden--but the heavy surge of current was too much for the dynamo that was not designed to stand such heavy overloads. Its wires became hotter and hotter, and finally the insulation took fire and the copper wire in the armature coils melted like wax, opening its circuits so that it ceased to generate electricity.

The powerhouse had a second, standby, generator which was started up in a short time. Tesla was insistent that he be supplied with current from this machine as soon as it was running, but his demand was refused. In the future, he was told, he would be supplied with current from a dynamo

operated independently from the one supplying the Company's regular customers. The independent dynamo, he was told, would be the one that was already burned out--and he would get no service until it was repaired. Tesla offered to pay the cost of an extra-special rush job on the repairs if he were permitted to handle the work. Alternating-current dynamos were no mystery to him. Taking his workers from the laboratory to the powerhouse he soon had the repair job under way, and in less than a week the dynamo was again operating.

A lightning stroke produces its spectacular pyrotechnics and earthvibrating effects with less than a nickel's worth of electricity--at a five-cent-a-kilowatt hour rate, which is somewhat less than the average household rate for current. It consists of tremendously heavy currents, many thousands of amperes at millions of volts, but it lasts only a few millionths of a second. If supplied with this "nickel's worth" of current continuously, the lightning flash would last indefinitely.

Tesla, in his Colorado Springs laboratory, was pumping a steady flow of current worth, at the above rate, about $15.00 an hour into the earth. In an hour he charged the earth with several hundred times as much electrical energy as is contained in a single lightning stroke. Owing to resonance phenomena, he could build up electrical effects in the earth greatly exceeding those of lightning since it was only necessary, once resonance was established, to supply energy equal to frictional losses, in order to maintain this condition.

In describing his work with the giant oscillator, Tesla, using conservative estimates of his results, stated in his article in the Century Magazine of June, 1900:

However extraordinary the results shown may appear, they are but trifling compared with those attainable by apparatus designed on these same principles. I have produced electrical discharges the actual path of which, from end to end, was probably more than 100 feet long; but it would not be dificult to reach lengths 100 times as great.

I have produced electrical movements occurring at the rate of approximately 100,000 horsepower, but rates of one, five or ten million horsepower are easily practicable. In these

experiments effects were developed incomparably greater than ever produced by any human agencies, and yet these results are but an embryo of what is to be.

The method used by Tesla to set the earth in electrical oscillation is the electrical counterpart of the mechanical device previously described, the plunger bobbing up and down at the right rhythm that created the stationary waves in the water.

Tesla used a stream of electrons which were pumped into and drawn out of the earth at a rapid rhythmic rate. At the time the experiments were made, the electron still was not known to be the fundamental atom of electricity, so the operation was spoken of simply as the flow of electricity.

The pumping operation was carried on at a rate of 150,000 oscillations per second. These would produce electrical pulsations with a wavelength of 2,000 meters (about 6,600 feet).

when the moving waves expanded outward from Colorado Springs, they traveled in all directions in ever increasing circles until they passed over the bulge of the earth, and then in ever smaller circles and with increasing intensity converged on the diametrically opposite point of the earth, a trifle to the west of the two French Islands, Amsterdam and St. Paul, in the area between the Indian and Antarctic Oceans midway between the southern tip of Africa and the southwest corner of Australia. Here a tremendous electrical south pole was built up, marked by a wave of great amplitude that rose and fell in unison with Tesla's apparatus at its north pole in Colorado Springs. As this wave fell, it sent back an electrical echo which produced the same effect at Colorado Springs. Just as it arrived back at Colorado Springs, the oscillator was working to build up a wave that would re-enforce it and send it back more powerfully than before to the antipode to repeat the performance.

If there were no losses in this operation--if the earth were a perfect electrical conductor, and there were no other sources of resistance--this resonance phenomenon would build up to a destructive action of gigantic proportions, even with the charging source of only about 300 horsepower which Tesla used. Voltages of gigantic magnitudes would be built up. Charged particles of matter

would be hurled outward from the earth with vast energies, and eventually even the solid matter of the earth would be affected and the whole planet disintegrated. Pure resonance, however, is not attainable. Tesla frequently stressed the fortunate nature of this fact; for otherwise disastrous results could be produced by small amounts of energy. The electrical resistance of the globe would prevent the attainment of pure resonance; but practical resonance can be attained with safety by supplying continuously the amount of energy lost in resistance--and this supplies perfect control of the situation.

with the earth set in electrical oscillation, a source of energy is provided at all spots on the earth. This could be drawn off and made available for use by a suitable simple apparatus which would contain the same elements as the tuning unit in a radio set, but larger (a coil and a condenser), a ground connection and metal rod as high as a cottage. Such a combination would absorb, at any point on the earth's surface, energy from the waves rushing back and forth between the electrical north and south poles created by the Tesla oscillators. No other equipment would be needed to supply light to the home, provided with Tesla's simple vacuum-tube lamps, or to produce heating effects. (For the operation of ordinary-type motors, a frequency changer would be needed. Tesla, indeed, developed ironless motors that would operate on high-frequency currents, but they could not compete in efficiency with motors operated on low-frequency currents. Frequency transformation, however, is now a very practical operation.)

The apparatus that Tesla used to charge the earth is very simple in principle. In its elementary form it consists of a circuit containing a large coil and condenser of the correct electrical dimensions to give it the desired frequency of oscillation, a source of electric current for energizing the circuit, and a step-up transformer, also tuned, for increasing the voltage.

The current of a few hundred volts obtained from the powerhouse was stepped up by an ordinary iron box transformer to more than 30,000 volts and at this potential was fed into a condenser which, when filled, discharged into the coil connected across its terminals. The rate of the back-and-forth surge of current from condenser into coil and coil back to condenser, in endless repetition, is determined by the capacity of the condenser for holding

current and the length, or inductance, of the coil through which the discharge must travel. An arc between the joint terminals of condenser and coil completed the free oscillating path of the high-frequency current.

In an oscillating circuit the current is at zero value at the start of each cycle, rises to a high value and drops to zero again at the end of each half cycle. The voltage does the same. Both build up to high values at the midpoint of each half cycle.

The coil through which the current flows is surrounded by a magnetic field produced by the current. with heavy current flows, these fields can become very extensive and of high intensity, particularly at the midpoint in each half cycle.

The primary coil, or energizing circuit of Tesla's oscillator, consisted of a number of turns of heavy wire mounted on a circular fence eighty feet in diameter in the great hall of his laboratory. In the space within this fenced enclosure the magnetic field built up to a crescendo of intensity with each half cycle of the current in the primary coil. As the magnetic circles of force moved to the center of the enclosure, they became more concentrated and built up a high density of energy in space in this region.

Centered in this area was another coil perfectly tuned to vibrate electrically in resonance with the crescendo of energy in which it was immersed 300,000 times per second. This coil--about ten feet in diameter, consisting of nearly one hundred turns on a cagelike frame about ten feet high--in responding resonantly, built up potentials with maximum values of more than 100,000,000 volts. No scientist has ever succeeded in building up currents with even one tenth of this potential since that time.

when the first surge of magnetic energy crashed into this coil, it caused a downward avalanche of electrons from the coil into the earth, thereby inflating the earth electrically and raising its potential. The next surge of magnetic energy was of the opposite polarity and caused a tidal wave of electrons from the earth to rush through the coil and upward to the terminal of the coil, which was the metal ball mounted on the mast 200 feet high.

The downward flood of electrons was spread over the wide area of the earth but the return upward flood was

concentrated on a small metal ball on top of the mast, upon which tremendously high potentials developed. The electrons on the ball were under explosive electrical pressure and were forced to escape. They made a spearpoint of attack on the surrounding air, broke a small opening, and through this rushed uncounted billions of billions of electrons, their mad stampede rendering their path through the air incandescent for a distance of scores of feet--in other words, producing a flash of lightning.

Having thus succeeded in making the earth oscillate as if it were a piece of laboratory apparatus, Tesla would now proceed to test the practical applications of his unique method of worldwide power transmission. (In describing the mode of transmission of his oscillating currents through the earth, Tesla claimed the path of the discharge was from his station directly through the center of the earth and in a straight line to the antipode, the return being by the same route, and that the current on this straight-line path traveled at its normal velocity--the speed of light. This flow, he declared, produced an accompanying surface flow of current, which was in step at the starting point and when they rejoined at the antipode; and this necessitated higher velocities in flowing over the surface of the earth. The surface velocities would be infinite at each of the antipodes, and would decrease rapidly until at the equatorial region of this axis it would travel at the normal velocity of the currents.)

The full story of Tesla's accomplishments at Colorado Springs has never been told and never will be told. He carried the records, engraved on his almost infallible memory, with him when he died. Fritz Lowenstein, a competent electrical engineer, interested in high-frequency currents, was his assistant at Colorado Springs. Tesla, however, took neither Lowenstein nor anyone else into his confidence.

It was not necessary for Tesla to write the detailed records of experiments which scientists and engineers make, as routine, of their laboratory tests. He possessed a most remarkable memory, supplemented by his strange power of visualizing again, in their full aspects of reality, any past events. He needed no reference books, for he could quickly derive any desired formula from basic concepts; and he even carried a table of logarithms in his head. For these reasons there is a great lack of written records on

his experiments, and what is recorded is mostly of a minor nature.

Fundamental facts of great importance that he intended to develop later in a practical manner were stored in the archives of his mind to await the time when he would be able to present a practical working model of the inventions based on his discoveries. He had no fear that he would be anticipated by others because he was so far in advance of his contemporaries that he could safely bide his time for developing his ideas.

It was Tesla's intention to make the development of his discoveries a one-man job. He was completely confident, at this time, of his ability to live a century and a quarter, and to be actively engaged in creative experimental work up to at least his one-hundredth birthday, at which time he would give serious thought to the task of writing his biography and a complete record of his experimental work. Up to almost his eightieth year he adhered to this plan without doubt as to its ultimate consummation.

As a result of this most unfortunate design, technical details are lacking concerning the principal discoveries made at Colorado Springs. By piecing together the fragmentary material published in a number of publications, however, it appears evident that Tesla, in addition to experiments with his gigantic current movements, as a means of establishing world-wide broadcasts and making a number of detectors for such use, tested his power transmission system at a distance of twenty-six miles from his laboratory and was able to light two hundred incandescent lamps, of the Edison type, with electrical energy extracted from the earth while his oscillator was operating. These lamps consumed about fifty watts each; and if two hundred were used in the test bank, the energy consumed would be 10,000 watts, or approximately thirteen horsepower.

Transmission of thirteen horsepower wirelessly through the earth for a distance of twenty-six miles can be accepted as a very adequate demonstration of the practicability of Tesla's plan. He claimed an efficiency of higher than 95 per cent for this method of energy transmission; so he could, undoubtedly, with a 300 horsepower oscillator, operate more than a dozen such test demonstrations simultaneously anywhere on the globe. with respect to the latter point he stated, "In this new system it matters

little--in fact, almost nothing--whether the transmission is effected at a distance of a few miles, or of a few thousand miles."

"while I have not as yet," he stated in the Century article of June, 1900, "actually effected a transmission of a considerable amount of energy, such as would be of industrial importance, to a great distance by this new method, I have operated several model plants under exactly the same conditions which will exist in a large plant of this kind, and the practicability of the system is thoroughly demonstrated."

Tesla was insistent, in his latter decades, on the existence, the actuality, the importance and availability of many undisclosed discoveries which he made at Colorado Springs. The author urged upon Tesla two or three times the desirability of making a disclosure, against the ever present danger of an accident that might cause them to be lost to the world; and when the inventor was unimpressed by this possibility, he was asked to permit the author to do something that would bring about their practical development. Tesla was courteously appreciative of the interest manifested, but he was very emphatic in his insistence that he would handle his own affairs as he saw fit, and that he expected shortly to have adequate funds to develop his inventions.

Tesla returned to New York, in the fall of 1899, broke once more, but with the knowledge that his efforts had greatly enriched humanity with important scientific discoveries. yet even more important was the new attitude his work had made possible: man had achieved a method through which he could control his gigantic planet, could look upon this heavenly body from the godlike vantage point in which he could view it as a piece of laboratory apparatus to be manipulated as he willed.

The pictures which Tesla brought back to New York showing the gigantic electrical discharges from his oscillator, and the stories he related of his experiences, created a tremendous impression in his circle of friends. It was then that Robert Underwood Johnson, one of the editors of the Century Magazine, at whose home in Madison Avenue, in the exclusive Murray Hill section, Tesla was a frequent and informal visitor, requested the inventor to write an article telling of his accomplishments.

when the article was written, Johnson returned it, telling Tesla he had served a mess of cold philosophical stones instead of a dish of hot throbbing facts. The inventor had made but scant reference to his recent astounding accomplishments, but developed instead a philosophical system in which the progress of humanity was viewed as purely a mechanical process, activated by the sources of energy available. Three times the article went back to Tesla and was as many times rewritten, despite the high literary quality of the work on each occasion.

The article, which carried the title "The Problem of Increasing Human Energy," created a sensation. Among those whose interest it aroused was J. Pierpont Morgan--a most fortunate circumstance for Tesla. The great financier had a soft spot for geniuses, and Tesla was a perfect example of the species.

Morgan the financier was famous, but Morgan the philanthropist, a greater personality, was to the general public non-existent, so carefully guarded against publicity were his benefactions. In this he was not always completely successful for there are, of necessity, two parties to a benefficence, the giver and the receiver; and the pride and gratitude of the latter can develop into a weak spot in the shell of secrecy.

Tesla was invited to Morgan's home and quickly became a favorite with the family. His record of accomplishment which promised still greater achievements in the future, his pleasant personality, his high moral standards of conduct, his celibate manner of life and his manner of subordinating himself to his work, his boylike enthusiasm, were factors that caused him to be admired not only by Morgan but by all others who knew him well.

Morgan made inquiries of Tesla concerning his financial structure. There were, in those days, a limited number of strong financial groups who were playing a terrestrial game of chess with the world's economic resources; the discoveries of a genius like Tesla might well have a profound effect on the destinies of one or more of these groups, and it would be well for an operator in this field to know more of the inventor's commitments. Undoubtedly, it was a source of surprise and satisfaction to Morgan when he

learned that Tesla was a lone operator and now entirely without funds needed to carry on his researches.

Morgan knew well the inestimable value of Tesla's polyphase alternating-current system. The Niagara development was a Morgan enterprise, and gigantic plans were being builded on its already proven success. The man who laid the scientific and engineering foundation for this new and profitable industrial electrical era was broke and engaged in developing a new source of power distribution. He had supplanted Edison's half-mile power pygmy with a giant having a thousand-mile range, and now he was working on a system which experiments had shown could distribute power wirelessly to the ends of the earth with but a small fraction of the losses of the Edison system in distributing power by wire for half a mile, and could even send current around the earth cheaper than his own alternating-current system could distribute it at a distance of one hundred miles. The economic implications of this development staggered the imagination. what effect would it have on the chess game being played by the world's financial groups?

would the new wireless-distribution-of-power system fit into the existing economic and financial structure? Could it be usefully applied without derangements of greater magnitude than the benefits it would produce? If it were adopted for development, who would be best suited to control it? Could it be controlled in a practical way when any spot on earth would be an outlet for an unlimited reservoir of power for anyone who cared to tap it with a simple device? How could compensation be collected for the service rendered?

These were some of the most obvious aspects of Tesla's world power system that would instantly present themselves to the practical mind of Morgan. In addition, Tesla was proposing a world-wide broadcasting system for distributing news, entertainment, knowledge, and a host of other interesting items. Morgan could well understand the practical aspects of wireless communication in which a charge could be made for transmitting messages from point to point, which was a part of the Tesla system--but, to the inventor's way of thinking, only a minor part compared to the more important broadcasting and power-distribution systems.

A Morgan would understand that ingenious minds could work out some method for placing such world-wide services on a practical profit-paying basis; but this whole new Tesla development had a fantastical aspect that was upsetting to so-called "practical" minds not accustomed to thinking first-magnitude thoughts. The new system might prove more important than the polyphase system which went as a record-breaking bargain to Westinghouse for $1,000,000. Westinghouse was then the most powerful competitor of the Edison system which Morgan had backed, and particularly of the General Electric Company whose financing Morgan had arranged. Although Westinghouse secured a monopoly, means were found for causing him to share it, by a license agreement, with the General Electric Company, so the Morgan company had equal opportunities to exploit the rich market.

History might now be repeating itself with the same inventor, who now had a hypersuperpower system to supplant his own superpower system. In this case Morgan could place himself in a position to seize the monopoly of world power.

The group holding a monopoly control over such a system could develop it, or not develop it, as it saw fit; it could be developed to produce a profit by supplanting or supplementing the satisfactory wire distribution system, or it could be put on the shelf to prevent it from interfering with the existing system. A monopoly of it could prevent any other group from securing it and using it as a club to force concessions from those controlling existing enterprises. Ownership of the Tesla world-power and world-broadcasting patents might well prove an extremely profitable investment even if a very high price were paid for them.

But there was also a more subtle viewpoint. without a strong backing by a powerful source of capital, a world-wide system such as Tesla proposed could never be brought into operating existence. If a powerful group had an opportunity to get in on the ground floor and secure monopoly control and failed to do so, and let it become apparent that this was done intentionally, the effect of such a decision could easily result in scaring off any other groups and effectually preventing anyone from ever backing the system.

Morgan, however, in his contacts with Tesla, brought no commercial or practical aspects into the situation. His

interest was entirely that of a patron seeking to aid a genius to express his creative talents. He made gifts to Tesla to which there were no strings attached. The inventor could use the money as he saw fit. No definite information is available as to the amount of those contributions, but an authoritative source, close to Tesla, fixes the amount which he received within a very short period at $150,000. Later contributions, spread over a long period of years, are believed to have brought the total to double this amount.

Tesla made no secret of Morgan's support. He stated, in the article in the Electrical world and Engineer, published March 5, 1904, describing his wireless power work up to that time:

"For a large part of the work which I have done so far I am indebted to the noble generosity of Mr. J. Pierpont Morgan, which was all the more welcome and stimulating, as it was extended at a time when those, who have since promised most, were the greatest of doubters."

when Morgan made his first contribution, the rumor got into circulation that he was financially interested in the enterprise upon which Tesla now embarked. The resulting situation contained some elements of usefulness for Tesla because of the tremendous prestige of the financier. when, however, Tesla later found himself critically in need of funds, and it became apparent that Morgan was not financially involved in the project and apparently was not coming to the rescue of the inventor, then the reaction set in and the situation became distinctly and definitely unsatisfactory.

In 1900, however, Tesla had $150,000 on hand and a gigantic idea to be put into operation. The world-shaking superman, riding his tidal wave of fame and popularity, set to work.

THE year 1900 marked to Tesla not only the opening of a new century but also the beginning of the world-superpower and radio-broadcasting era. With the encouragement of J. P. Morgan to spur him on--if he could accommodate any more spurring than his own inner drive furnished--and with $150,000 in cash from the same source, he was set to embark

upon a gigantic venture, the building of a world wireless-power and a world broadcasting station.

The cash on hand would be totally inadequate to finance the project to completion, but this did not deter him from making a start. He needed a laboratory both to replace the Houston Street establishment, which had become entirely inadequate, and to include equipment of the type employed at Colorado Springs, but designed for use in the actual world-broadcasting process. The location was determined as the result of an arrangement he made with James S. Warden, manager and director of the Suffolk County Land Company, a lawyer and banker from the West who had acquired two thousand acres of land at Shoreham, in Suffolk County, Long Island, about sixty miles from New York. The land was made the basis of a real-estate development under the name Wardencliff.

Tesla visualized a power-and-broadcasting station which would employ thousands of persons. He undertook the establishment, eventually, of a Radio City, something far more ambitious than the enterprise in Rockefeller Center in New York which bears this name today. Tesla planned to have all wavelength channels broadcast from a single station, a project which would have given him a complete monopoly of the radio-broadcasting business. What an opportunity near-sighted businessmen of his day overlooked in not getting in on his project! But in that day Tesla was about the only one who visualized modern broadcasting. Everyone else visualized wireless as being useful only for sending telegraphic communications between ship and shore and across the ocean.

Mr. Warden saw possibilities of a sort in Tesla's plan, however, and offered him a tract of two hundred acres, of which twenty acres were cleared, for his power station, with the expectation that the two thousand men who would shortly be employed in the station would build homes on convenient sites in the remainder of the 2,000-acre tract. Tesla accepted.

Stanford White, the famous designer of many churches and other architectural monuments throughout the country, was one of Tesla's friends. He now disclosed to the famous architect his vision of an industrial "city beautiful" and sought his co-operation in realizing his dream. Mr. White was enthusiastic about the idea and, as his contribution to

Tesla's work, offered to underwrite the cost of designing the strange tower the inventor sketched, and all of the architectural work involved in the general plan for the city. The actual work was done by W. D. Crow, of East Orange, N. J., one of Mr. White's associates, who later became famous as a designer of hospitals and other institutional buildings.

It was a fantastic-looking tower, with strange structural limitations, which Mr. Crow found himself designing. Tesla required a tower, about 154 feet high, to support at its peak a giant copper electrode 100 feet in diameter and shaped like a gargantuan doughnut with a tubular diameter of twenty feet. (This was later changed to a hemispherical electrode.)

The tower would have to be a skeletonized structure, built almost entirely of wood, metal to be reduced to an utter minimum and any metal fixtures employed to be of copper. No engineering data were available on wood structures of this height and type.

The structure Tesla required had a large amount of "sail area," or surface exposed to wind, concentrated at the top, creating stresses that had to be provided for in a tower that itself possessed only limited stability. Mr. Crow solved the engineering problems and then the equally diffcult task of incorporating esthetic qualities in such an edifice.

When the design was completed another diffculty was encountered. None of the well-known builders could be induced to undertake the task of erecting the tower. A competent framer, associated with Norcross Bros., who were a large contracting firm in those days, finally took over the contract, although he, too, expressed fears that the winter gales might overturn the structure. (It stood, however, for a dozen years. When the Government, for military reasons decided it was necessary to remove this conspicuous landmark during the First World War, heavy charges of dynamite were necessary in order to topple it, and even then it remained intact on the ground like a fallen Martian invader out of Wells' War of the Worlds.) The tower was completed in 1902, and with it a large low brick building more than 100 feet square which would provide quarters for the powerhouse and laboratory. While the structures were being built, Tesla commuted every day

from the Waldorf-Astoria to Wardencliff, arriving at the near-by Shoreham station shortly after eleven am and remaining until three-thirty. He was always accompanied by a man servant, a Serbian, who carried a heavy hamper filled with food. When the laboratory transferred from Houston Street was in full operation at Wardencliff, Tesla rented the Bailey cottage near the Long Island Sound shore and there made his home for a year.

The heavy equipment, the dynamos and motors, that Tesla desired for his plant were of an unusual design not produced by manufacturers, and he encountered many vexatious delays in securing such material. He was able to carry on a wide range of high-frequency current and other experiments in his new laboratory, but the principal project, that of setting up the worldwide broadcasting station, lagged. Meanwhile, he had a number of glass blowers making tubes for use in transmitting and receiving his broadcast programs. This was a dozen years before De Forest invented the form of radio tube now in general use. The secret of Tesla's tubes died with him.

Tesla seemed to be entirely fearless of his high-frequency currents of millions of volts. He had, nevertheless, the greatest respect for the electric current in all forms, and was extremely careful in working on his apparatus. When working on circuits that might come "alive," he always worked with one hand in his pocket, using the other to manipulate tools. He insisted that all of his workers do likewise when working on the 60-cycle low-frequency alternating-current circuits, whether the potential was 50,000 or 110 volts. This safeguard reduced the possibility of a dangerous current finding a circuit through the arms across the body, where there was chance that it might stop the action of the heart.

In spite of the great care which he manifested in all of his experimental work, he had a narrow escape from losing his life at the Wardencliff plant. He was making experiments on the properties of small-diameter jets of water moving at high velocity and under very high pressures, of the order of 10,000 pounds per square inch. Such a stream could be struck by a heavy iron bar without the stream being disrupted. The impinging bar would bounce back as if it had struck another solid iron bar--a strange property for a mechanically weak substance like water. The cylinder holding the water under high pressure was a heavy

one made of wrought iron. Tesla was unable to secure a wrought-iron cap for the upper surface, so he used a heavier one of cast iron, a more brittle metal. One day when he raised the pressure to a point higher than he had previously used, the cylinder exploded. The cast-iron cap broke and a large fragment shot within a few inches of his face as it went on a slanting path upward and finally crashed through the roof. The high-pressure stream of water had peculiar destructive effects on anything with which it came in contact, even tough, strong metals. Tesla never revealed the purpose or the results of these high-pressure experiments.

Tesla's insistence on the utmost neatness in his laboratory almost resulted in a tragedy through a case of thoughtlessness on the part of an assistant. Arrangements were being made for installing a heavy piece of machinery which was to be lag bolted to the thick concrete floor. Holes had been drilled in the concrete. The plan called for pouring molten lead into these holes and screwing the heavy bolts into the metal when it cooled. As soon as the holes were drilled, a young assistant starting cleaning up the debris. He not only swept up the stone chips and dust: he got a mop and thoroughly washed that area of the floor, thoughtlessly letting some of the water get into the holes. He then dried the floor. In the meantime Tesla and George Scherff, who was his financial secretary but also served in any way in which he could be helpful, were melting the lead which would hold the lag screws in the holes in the floor. Scherff took the first large ladleful of lead from the furnace and started across the laboratory to where the holes had been drilled, followed shortly by Tesla bearing another ladle.

Scherff bent down--and as he poured the hot liquid metal into one of the holes an explosion followed instantly. The molten lead was blown upward into his face in a shower of searing hot drops of liquid metal. The water which the assistant used to swab the floor had settled into the holes and, when the melted lead come in contact with it, it was changed to steam which shot the lead out of the hole like a bullet out of the barrel of a rifle. Both men were showered with drops of hot metal and dropped their ladles. Tesla, being several feet away, was only slightly injured; but Scherff was very seriously burned about the face and hands. Drops of the metal had struck his eyes and so severely

burned them that it was feared for a while that his sight could not be saved.

However, despite the almost unlimited possibilities for accidents in connection with the vast variety of experiments which Tesla conducted in totally unexplored fields, using high voltages, high amperages, high pressures, high velocities and high temperatures, he went through his entire career with only one accident in which he suffered injury. In that a sharp instrument slipped, entered his palm and penetrated through the hand. The accident to Scherff was the only one in which a member of his staff was injured, with the exception of a young assistant who developed X-ray burns. He had probably been exposed to the rays from one of Tesla's tubes which, unknown to Tesla and everyone else, had been producing them even before Roentgen announced their discovery. Tesla had given them another name and had not fully investigated their properties. This was probably the first case of X-ray burns on record.

Tesla was an indefatigable worker, and it was hard for him to understand why others were incapable of such feats of endurance as he was able to accomplish. He was willing to pay unusually high wages to workers who were willing to stick with him on protracted tasks but never demanded that anyone work beyond a reasonable day's labor. On one occasion a piece of long-awaited equipment arrived and Tesla was anxious to get it installed and operating as quickly as possible. The electricians worked through twenty-four hours, stopping only for meals, and then for another twenty-four hours. The workers then dropped out, one by one, picking out nooks in the building in which to sleep. While they took from eight to twelve hours' sleep, Tesla continued to work; and when they came back to the job Tesla was still going strong and worked with them through his third sleepless twenty-four-hour period. The men were then given several days off in which to rest up; but Tesla, apparently none the worse for his seventy-two hours of toil, went through his next day of experiments, accomplishing a total of eighty-four hours without sleep or rest.

The plant at Wardencliff was intended primarily for demonstrating the radio-broadcasting phase of his "World System"; the power-distribution station was to be built at Niagara Falls.

Tesla at this time published a brochure on his "World System" which indicates the remarkable state of advancement he had projected in the wireless art, now called radio, while other experimenters were struggling to acquire familiarity with rudimentary devices. At that time, however, his promises seemed fantastic. The brochure contained the following description of his system and his objectives:

The World System has resulted from a combination of several original discoveries made by the inventor in the course of long continued research and experimentation. It makes possible not only the instantaneous and precise wireless transmission of any kind of signals, messages or characters, to all parts of the world, but also the interconnection of the existing telegraph, telephone, and other signal stations without any change in their present equipment. By its means, for instance, a telephone subscriber here many call up any other subscriber on the Globe. An inexpensive receiver, not bigger than a watch, will enable him to listen anywhere, on land or sea, to a speech delivered, or music played in some other place, however distant. These examples are cited merely to give an idea of the possibilities of this great scientific advance, which annihilates distance and makes that perfect conductor, the Earth, available for all the innumerable purposes which human ingenuity has found for a line wire. One far reaching result of this is that any device capable of being operated through one or more wires (at a distance obviously restricted) can likewise be actuated, without artificial conductors and with the same facility and accuracy, at distances to which there are no limits other than those imposed by the physical dimensions of the Globe. Thus, not only will entirely new fields for commercial exploitation be opened up by this ideal method of transmission, but the old ones vastly extended.

The World System is based on the application of the following important inventions and discoveries:

1. The Tesla Transformer. This apparatus is, in the production of electrical vibrations, as revolutionary as gunpowder was in warfare. Currents many times stronger than any ever generated in the usual ways, and sparks over 100 feet long have been produced by the inventor with an instrument of this kind.

2. The Magnifying Transmitter. This is Tesla's best invention--a peculiar transformer specially adapted to excite the Earth, which is in the transmission of electrical energy what the telescope is in astronomical observation. By the use of this marvelous device he has already set up electrical movements of greater intensity than those of lightning and passed a current, suffcient to light more than 200 incandescent lamps, around the Globe.

3. The Tesla Wireless System. This system comprises a number of improvements and is the only means known for transmitting economically electrical energy to a distance without wires. Careful tests and measurements in connection with an experimental station of great activity, erected by the inventor in Colorado, have demonstrated that power in any desired amount can be conveyed clear across the Globe if necessary, with a loss not exceeding a few per cent.

4. The Art of Individualization. This invention of Tesla is to primitive tuning what refined language is to unarticulated expression. It makes possible the transmission of signals or messages absolutely secret and exclusive both in active and passive aspect, that is, non-interfering as well as non-interferable. Each signal is like an individual of unmistakable identity and there is virtually no limit to the number of stations or instruments that can be simultaneously operated without the slightest mutual disturbance.

5. The Terrestrial Stationary Waves. This wonderful discovery, popularly explained, means that the Earth is responsive to electrical vibrations of definite pitch just as a tuning fork to certain waves of sound. These particular electrical vibrations, capable of powerfully exciting the Globe, lend themselves to innumerable uses of great importance commercially and in many other respects.

The first World System power plant can be put in operation in nine months. With this power plant it will be practical to attain electrical activities up to ten million horsepower and it is designed to serve for as many technical achievements as are possible without undue expense. Among these the following may be mentioned:

1. Interconnection of the existing telegraph exchanges of offces all over the World;

2. Establishment of a secret and non-interferable government telegraph service;

3. Interconnection of all the present telephone exchanges or offces all over the Globe;

4. Universal distribution of general news, by telegraph or telephone, in connection with the Press;

5. Establishment of a World System of intelligence transmission for exclusive private use;

6. Interconnection and operation of all stock tickers of the world;

7. Establishment of a world system of musical distribution, etc.;

8. Universal registration of time by cheap clocks indicating the time with astronomical precision and requiring no attention whatever;

9. Facsimile transmission of typed or handwritten characters, letters, checks, etc.;

10. Establishment of a universal marine service enabling navigators of all ships to steer perfectly without compass, to determine the exact location, hour and speed, to prevent collisions and disasters, etc.;

11. Inauguration of a system of world printing on land and sea;

12. Reproduction anywhere in the world of photographic pictures and all kinds of drawings or records.

Thus, more than forty years ago, Tesla planned to inaugurate every feature of modern radio, and several facilities which have not yet been developed. He was to continue, for another twenty years, to be the only "wireless" inventor who had yet visualized a broadcasting service.

While at work on his Wardencliff radio-broadcasting plant, Tesla was also evolving plans for establishing his world power station at Niagara Falls. So sure was he of the

successful outcome of his efforts that he stated in a newspaper interview in 1903 that he would light the lamps of the coming international exposition in Paris with power wirelessly transmitted from the Falls. Circumstances, however, prevented him from making good this promise. His diffculties and his plans were outlined in a statement published in the Electrical World and Engineer, March 5, 1904:

The first of these central plants would have been already completed had it not been for unforeseen delays which, fortunately, have nothing to do with its purely technical features. But this loss of time, while vexatious, may, after all, prove to be a blessing in disguise. The best design of which I know has been adopted, and the transmitter will emit a wave complex of a total maximum activity of 10,000,000 horsepower, one percent of which is amply suffcient to "girdle the globe." This enormous rate of energy delivery, approximately twice that of the combined falls of Niagara, is obtainable only by the use of certain artifices, which I shall make known in due course.

For a large part of the work which I have done so far I am indebted to the noble generosity of Mr. J. Pierpont Morgan, which was all the more welcome and stimulating, as it was extended at a time when those, who have since promised most, were the greatest of doubters. I have also to thank my friend Stanford White, for much unselfish and valuable assistance. This work is now far advanced, and though the results may be tardy, they are sure to come.

Meanwhile, the transmission of energy on an industrial scale is not being neglected. The Canadian Niagara Power Company have offered me a splendid inducement, and next to achieving success for the sake of the art, it will give me the greatest satisfaction to make their concession financially profitable to them. In this first power plant, which I have been designing for a long time, I propose to distribute 10,000 horsepower under a tension of 10,000,000 volts, which I am now able to produce and handle with safety.

This energy will be collected all over the globe preferably in small amounts, ranging from a fraction of one to a few horsepower. One of the chief uses will be the illumination of isolated homes. It takes very little power to light a dwelling with vacuum tubes operated by high frequency

currents and in each instance a terminal a little above the roof will be suffcient. Another valuable application will be the driving of clocks and other such apparatus. These clocks will be exceedingly simple, will require absolutely no attention and will indicate rigorously correct time. The idea of impressing upon the earth American time is fascinating and very likely to become popular. There are innumerable devices of all kinds which are either now employed or can be supplied and by operating them in this manner I may be able to offer a great convenience to the whole world with a plant of no more than 10,000 horsepower. The introduction of this system will give opportunities for invention and manufacture such as have never presented themselves before.

Knowing the far reaching importance of this first attempt and its effect upon future development, I shall proceed slowly and carefully. Experience has taught me not to assign a term to enterprises the consummation of which is not wholly dependent on my own abilities and exertions. But I am hopeful that these great realizations are not far off and I know that when this first work is completed they will follow with mathematical certitude.

When the great truth accidentally revealed and experimentally confirmed is fully recognized, that this planet, with all its appalling immensity, is to electric current virtually no more than a small metal ball and that by this fact many possibilities, each baffling the imagination and of incalculable consequence, are rendered absolutely sure of accomplishment; when the first plant is inaugurated, and it is shown that a telegraphic message, almost as secret and non-interferable as a thought, can be transmitted to any terrestrial distance, the sound of the human voice, with all its intonations and inflections, faithfully and instantly reproduced at any point of the globe, the energy of a waterfall made available for supplying light, heat or motive power, anywhere on sea, or land, or high in the air--humanity will be like an ant heap stirred up with a stick: See the excitement coming.

The Niagara Falls plant was never built; and diffculties, soon enough, were encountered at the Wardencliff plant not only in securing desired equipment but also finances.

Tesla's greatest oversight was that he neglected to invent, so to speak, a device for making the unlimited quantities

of money that were necessary to develop his other inventions. As we have seen, he was utterly lacking in the phase of personality that made possible the securing of financial returns directly from his inventions. An individual with his ability could have made millions out of each of a number of Tesla's minor inventions. If he had taken the trouble, for example, to collect annual royalties on twenty or more different kinds of devices put out by as many manufacturers employing his Tesla coil for medical treatments, he would have had ample income to finance his World Wireless System.

His mind, however, was too fully occupied with fascinating scientific problems. He had, at times, nearly a score of highly skilled workmen constantly employed in his laboratory developing the electrical inventions he was continuing to make at a rapid rate. Armed guards were always stationed around the laboratory to prevent spying on his inventions. His payroll was heavy, his bank balance became dangerously low, but he was so immersed in his experimental work that he continuously put off the task of making an effort to repair his finances. He soon found himself facing judgments obtained by creditors on accounts upon which he could not make payments. He was forced, in 1905, to close the Wardencliff laboratory.

The fantastic tower in front of the laboratory was never completed. The doughnut-shaped copper electrode was never built because Tesla changed his mind and decided to have a copper hemisphere 100 feet in diameter and 50 feet high built on top of the 154-foot cone-shaped tower. A skeleton framework for holding the hemispherical plates was built, but the copper sheeting was never applied to it. The 300-horsepower dynamos and the apparatus for operating the broadcasting station were left intact, but they were eventually removed by the engineering firm that installed them and had not been paid.

Tesla opened an offce at 165 Broadway, in New York, where for a while he tried to contrive some means for reviving his project. Thomas Fortune Ryan, the well-known financier, and H. O. Havemeyer, the leading sugar refiner, aided him with contributions of $10,000 and $5,000 respectively. Instead of using these to open another laboratory, he applied them to paying off the debts on his now defunct World Wireless System. He paid off every penny due to every creditor.

When it became apparent that Tesla was in financial diffculties, many who had assumed that Morgan was financially involved as an investor in his project were disillusioned. When specific inquiries revealed that the great financier held no interest whatever in the enterprise, the rumor got into circulation that Morgan had withdrawn his support; and when no reason for such action could be learned the rumor expanded to carry the story that Tesla's system was impracticable. As a matter of fact, Morgan continued to make generous personal contributions to Tesla almost up to the time of his own death; and his son did so to a lesser extent for a short time.

Tesla made no effort to combat the growing rumors.

If Tesla could have tolerated a business manager, and had placed the development of his patents in the hands of a businessman, he could have established as early as 1896 a practical ship-to-shore, and probably a trans-oceanic wireless service; and these would have given him a monopoly in this field. He was asked to rig up a wireless set on a boat to report the progress of the international yacht race for Lloyds of London in 1896, but he refused the offer, which was a lucrative one, on the grounds that he would not demonstrate his system publicly on less than a world-wide basis because it could be confused with the amateurish efforts being made by other experimenters. If he had accepted this offer--and he could have met the requirements without the least technical diffculty--he undoubtedly would have found his interests diverted to some extent into a profitable commercial channel that might have made a vast, and favorable, change in the second half of his life.

Tesla, however, could not be bothered with minor, even though profitable projects. The superman, the man magnificent, was too strong in him. The man who had put industry on an electrical power basis, the man who had set the whole earth in vibration, could not fill a minor role of carrying messages for hire. He would function in his major capacity or not at all; he would be a Jupiter, never a Mercury.

George Scherff, who was engaged by Tesla as bookkeeper and secretary when he opened his Houston Street laboratory, was a practical individual. He managed, as far as was humanly possible, to keep the inventor disentangled in his contacts

with the business world. The more he knew Tesla, the better he liked him; and the more respect he had for his genius and his ability as an inventor, the more he became conscious of the fact that this genius was totally lacking in business ability.

Scherff was understandably distressed by a situation in which an enterprise was continuously spending money but never receiving any. He sought to protect as far as possible the $40,000 which Tesla received from Adams as an investment in the enterprise; and it was stretched to cover more than three years of great activity. Scherff wanted Tesla to work out plans for deriving an income from his inventions. Each new development which Tesla produced was studied by Scherff and made the basis for a plan for manufacture and sale of a device. Tesla uniformly rejected all the suggestions. "This is all small-time stuff," he would reply. "I cannot be bothered with it."

Even when it was pointed out to him that many manufacturers were using his Tesla coils, selling great numbers of them and making plenty of money out of them, his interest could not be aroused to enter this profitable field, nor to permit Scherff to arrange to have a sideline set-up which could be conducted without interfering with his research work. Nor could he be induced to bring suits to protect his invention and seek to make the manufacturers pay him royalties. He admitted, however, "If the manufacturers paid me twenty-five cents on each coil they sold I would be a wealthy man."

When Lloyds of London made their request that he set up a wireless outfit on a boat and report the international yacht races of 1896, by his new wireless system, and offered a generous honorarium, Scherff became insistent that the offer be accepted; and he urged Tesla to drop all other work temporarily and use the publicity he would get from the exploit as a means of floating a commercial company for transmitting wireless messages between ship and shore and across the ocean, pointing out that money would be made both in manufacturing the apparatus and in transmitting messages. The company, Scherff suggested, could be operated by managers to produce an income and Tesla could return to his work of making inventions and always have plenty of money to pay for the cost of his researches.

Scherff can look back today, as he sits on the porch of his Westchester home, and decide, through a retrospect of fifty years, that his plan was basically sound, with the Radio Corporation of America, its extensive manufacturing facilities and its worldwide communication system, its tremendous capital system and earnings, as evidence in support of the claim.

Tesla's reply to the proposal was, as usual, "Mr. Scherff, that is small-time stuff. I cannot be bothered with it. Just wait until you see the magnificent inventions I am going to produce, and then we will all make millions."

Tesla's millions never came. Scherff remained with him until the Wardencliff laboratory closed, owing to the lack of income, which he had been trying to circumvent. Scherff then established a lucrative connection with the Union Sulphur Co. but he still continued, without taking compensation, to give Tesla one day a week of his time and keep his business affairs disentangled as far as possible. Tesla was meticulously careful about paying everyone who performed any service for him, but this was counterbalanced by an active faculty for contracting bills without waiting to see if he had funds on hand to meet them. Money was an annoying anchor that always seemed to be dragging and hindering his research activities--something that was too mundane to merit the time and attention he should be giving to more important things.

Scherff, tight-lipped and businesslike, cannot be induced to talk of Tesla's affairs. If he were, instead, a loquacious philosopher, he might be induced to smile over the frailties of human nature, and the strange pranks which fate can play on individuals, as he thinks of Tesla, who, on the basis of a single invention, might have become an individual Radio Corporation of America and failed to do so, and who passed up equal chances on two hundred other inventions, any one of which could have produced a fortune. And for contrast, he can recall occasions in recent decades when it was necessary to make modest loans to the great Tesla to permit him to meet the need for current personal necessities. But Scherff refuses to permit any close questions or discussion about these incidents.

THIRTEEN

WHEN his World Wireless System project crashed, Tesla turned again to a project to which he had given considerable thought at the time he was developing his polyphase alternating-current system: that of developing a rotary engine which would be as far in advance of existing steam engines as his alternating-current system was ahead of the direct-current system, and which could be used for driving his dynamos.

All of the steam engines in use in powerhouses at that time were of the reciprocating type; essentially the same as those developed by Newcomer and Watt, but larger in size, better in construction and more effcient in operation.

Tesla's engine was of a different type--a turbine in which jets of steam injected between a series of disks produced rotary motion at high velocity in the cylinder on which these disks were mounted. The steam entered at the outer edge of the disks, pursued a spiral path of a dozen or more convolutions, and left the engine near the central shaft.

When Tesla informed a friend in 1902 that he was working on an engine project, he declared he would produce an engine so small, simple and powerful that it would be a "powerhouse in a hat." The first model, which he made about 1906, fulfilled this promise. It was small enough to fit into the dome of a derby hat, measured a little more than six inches in its largest dimension, and developed thirty horsepower. The power-producing performance of this little engine vastly exceeded that of every known kind of prime mover in use at that time. The engine weighed a little less than ten pounds. Its output was therefore three horsepower per pound. The rotor weighed only a pound and a half, and its light weight and high power yield gave Tesla a slogan which he used on his letterheads and envelopes--"Twenty horsepower per pound."

There was nothing new, of course, in the basic idea of obtaining circular motion directly from a stream of moving fluid. Windmills and water wheels, devices as old as history, performed this feat. Hero, the Alexandrian writer, about 200 bc, described, but he did not invent, the first turbine. It consisted of a hollow sphere of metal mounted on an axle, with two tubes sticking out of the sphere at a tangent to its surface. When water was placed in the sphere

and the device was suspended in a fire, the reaction of the steam coming out of the tubes caused the device to rotate.

Tesla's ingenious and original development of the turbine idea probably had its origin in that amusing and unsuccessful experiment he made when, as a boy, he tried to build a vacuum motor and observed its wooden cylinder turn slightly by the drag of the air leaking into the vacuum chamber. Later, too, when as a youth he fled to the mountains to escape military service and played with the idea of transporting mail across the ocean through an underwater tube, through which a hollow sphere was to be carried by a rapidly moving stream of water, he had discovered that the friction of the water on the walls of the tube made the idea impracticable. The friction would slow down the velocity of the stream of water so that excessive amounts of power would be required to move the water at a desired speed and pressure. Conversely, if the water moved at this speed, the friction caused it to try to drag the enclosing tube along with it.

It was this friction which Tesla now utilized in his turbine. A jet of steam rushing at high velocity between disks with a very small distance separating them was slowed down by the friction--but the disks, being capable of rotation, moved with increasing velocity until it was almost equal to that of the steam. In addition to the friction factor, there exists a peculiar attraction between gases and metal surfaces; and this made it possible for the moving steam to grip the metal of the disks more effectively and drag them around at high velocities. The first model which Tesla made in 1906 had twelve disks five inches in diameter. It was operated by compressed air, instead of steam, and attained a speed of 20,000 revolutions per minute. It was Tesla's intention eventually to use oil as fuel, burning it in a nozzle and taking advantage of the tremendous increase in volume, in the change from a liquid to burned highly expanded gases, to turn the rotor. This would eliminate the use of boilers for generating steam and give the direct process proportional increased effciency.

Had Tesla proceeded with the development of his turbine in 1889 when he returned from the Westinghouse plant, his turbine might perhaps have been the one eventually developed to replace the slow, big, lumbering reciprocating engines then in use. The fifteen years, however, which he

devoted to the development of currents of high potential and high frequency, had entailed a delay which gave opportunity for developers of other turbine ideas to advance their work to a stage which now was effective in putting Tesla in the status of a very late starter. In the meantime, turbines had been developed which were virtually windmills in a box. They consisted of rotors with small buckets or vanes around the circumference which were struck by the incoming steam jet. They lacked the simplicity of the Tesla turbine; but by the time Tesla introduced his type, the others were well entrenched in the development stage.

Tesla's first tiny motor was built in 1906 by Julius C. Czito, who operated at Astoria, Long Island, a machine shop for making inventor's models. He also built the subsequent 1911 and 1925 models of the turbine, and many other devices on which Tesla worked up to 1929. Mr. Czito's father had been a member of Tesla's staff in the Houston Street laboratories, from 1892 to 1899, and at Colorado Springs.

Mr. Czito's description of the first model is as follows:

The rotor consisted of a stack of very thin disks six inches in diameter, made of German silver. The disks were one thirty-second of an inch thick and were separated by spacers of the same metal and same thickness but of much smaller diameter which were cut in the form of a cross with a circular center section. The extended arms served as ribs to brace the disks.

There were eight disks and the edgewise face of the stack was only one-half inch across. They were mounted on the center of a shaft about six inches long. The shaft was nearly an inch in diameter in the mid section and was tapered in steps to less than half an inch at the ends. The rotor was set in a casing made in four parts bolted together.

The circular chamber where the rotor turned was accurately machined to allow a clearance of one sixty-fourth of an inch between the casing and the face of the rotor. Mr. Tesla desired an almost touching fit between the rotor face and the casing when the latter was turning. The large clearance was necessary because the rotor attained tremendously high speeds, averaging 35,000 revolutions per minute. At this speed the centrifugal force generated by

the turning movement was so great it appreciably stretched the metal in the rotating disks. Their diameter when turning at top speed was one thirty-second of an inch greater than when they were standing still.

A larger model was built by Tesla in 1910. It had disks twelve inches in diameter, and with a speed of 10,000 revolutions per minute it developed 100 horsepower, indicating a greatly improved effciency over the first model. It developed more than three times as much power at half the speed.

During the following year, 1911, still further improvements were made. The disks were reduced to a diameter of 9.75 inches and the speed of operation was cut down by ten per cent, to 9,000 revolutions per minute--and the power output increased by ten per cent, to 110 horsepower!

Following this test, Tesla issued a statement in which he declared:

I have developed 110 horsepower with disks nine and three quarter inches in diameter and making a thickness of about two inches. Under proper conditions the performance might have been as much as 1,000 horsepower. In fact there is almost no limit to the mechanical performance of such a machine. This engine will work with gas, as in the usual type of explosion engine used in automobiles and airplanes, even better than it did with steam. Tests which I have conducted have shown that the rotary effort with gas is greater than with steam.

Enthusiastic over the success of his smaller models of the turbine, operated on compressed air, and to a more limited extent by direct combustion of gasoline, Tesla designed and built a larger, double unit, which he planned to test with steam in the Waterside Station, the main powerhouse of the New York Edison Company.

This was a station which had originally been designed to operate on the direct-current system developed by Edison--but it was now operating throughout on Tesla's polyphase alternating-current system.

Now Tesla, invading the Edison sanctum to test a new type of turbine which he hoped would replace the types in use, was definitely in enemy territory. The fact that he had

Morgan backing, and that the Edison Company was a "Morgan company," had no nullifying effect on the Edison-Tesla feud.

This situation was not softened in any way by Tesla's method of carrying on his tests. Tesla was a confirmed "sun dodger"; he preferred to work at night rather than in the daytime. Powerhouses, not from choice but from necessity, have their heaviest demands for current after sunset. The day load would be relatively light; but as darkness approached, the dynamos started to groan under the increasing night load. The services of the workers at the Waterside Station were made available to Tesla for the setting up and tests of his turbine with the expectation that the work would be done during the day when the tasks of the workers were easiest.

Tesla, however, would rarely show up until five o'clock in the afternoon, or later, and would turn a deaf ear to the pleas of workers that he arrive earlier. He insisted that certain of the workers whom he favored remain after their five-o'clock quitting time on the day shift to work with him on an overtime basis. Nor did he maintain a conciliatory attitude toward the engineering staff or the offcials of the company. The attitudes, naturally, were mutual.

The turbine Tesla built for this test had a rotor 18 inches in diameter which turned at a speed of 9,000 revolutions per minute. It developed 200 horsepower. The overall dimensions of the engine were--three feet long, two feet wide and two feet high. It weighed 400 pounds.

Two such turbines were built and installed in a line on a single base. The shafts of both were connected to a torque rod. Steam was fed to both engines so that, if they were free to rotate, they would turn in opposite directions. The power developed was measured by the torque rod connected to the two opposing shafts.

At a formal test, to which Tesla invited a great many guests, he issued a statement in which he said, as reported, in part:

It should be noted that although the experimental plant develops 200 horsepower with 125 pounds at the supply pipe and free exhaust it could show an output of 300 horsepower

with full pressure of the supply circuit. If the turbine were compounded and the exhaust were led to a low pressure unit carrying about three times the number of disks contained in the high pressure element, with connection to a condenser affording 28.5 to 29.0 inches of vacuum the results obtained in the present high pressure machine indicate that the compounded unit would give an output of 600 horsepower without great increase of dimensions. This estimate is very conservative.

Tests have shown that when the turbine is running at 9,000 revolutions per minute under an inlet pressure of 125 pounds to the square inch and with free exhaust 200 brake horsepower are developed. The consumption under these conditions of maximum output is 38 pounds of saturated steam per horsepower per hour, a very high effciency when we consider that the heat drop, measured by thermometers, is only 130 B.T.U. and that the energy transformation is effected in one stage. Since three times the number of heat units are available in a modern plant with superheat and high vacuum the utilization of these facilities would mean a consumption of less than 12 pounds per horsepower hour in such turbines adapted to take the full drop.

Under certain conditions very high thermal effciencies have been obtained which demonstrate that in large machines based on this principle steam consumption will be much lower and should approximate the theoretical minimum thus resulting in the nearly frictionless turbine transmitting almost the entire expansive energy of the steam to the shaft.

It should be kept in mind that all of the turbines which Tesla built and tested were single-stage engines, using about one-third of the energy of the steam. In practical use, they were intended to be installed with a second stage which would employ the remaining energy and increase the power output about two or three fold. (The two types of turbines in common use each have a dozen and more stages within a single shell.)

Some of the Edison electric camp, observing the torque-rod tests and apparently not understanding that in such a test the two rotors remain stationary--their opposed pressures staging a tug of war measured as torque--circulated the story that the turbine was a complete failure; that this turbine would not be practical if its effciency had been

increased a thousand fold. It was stories such as these that contributed to the imputation that Tesla was an impractical visionary. The Tesla turbine, however, used as a single-stage engine, functioning as a pygmy power producer, in the form in which it was actually tested, anticipated by more than twenty-five years a type of turbine which has been installed in recent years in the Waterside Station. This is a very small engine, with blades on its rotor, known as a "topping turbine," which is inserted in the steam line between the boilers and the ordinary turbines. Steam of increased pressure is supplied, and the topping turbine skims this "cream" from the steam and exhausts steam that runs the other turbines in their normal way.

The General Electric Company was developing the Curtis turbine at that time, and the Westinghouse Electric and Manufacturing Company was developing the Parsons turbine; and neither company showed the slightest interest in Tesla's demonstration.

Further development of his turbine on a larger scale would have required a large amount of money--and Tesla did not possess even a small amount.

Finally he succeeded in interesting the Allis Chalmers Manufac-

turing Company of Milwaukee, builders of reciprocating engines and turbines, and other heavy machinery. In typical Tesla fashion, though, he manifested in his negotiations such a lack of diplomacy and insight into human nature that he would have been better off if he had completely failed to make any arrangements for exploiting the turbine.

Tesla, an engineer, ignored the engineers on the Allis Chalmers staff and went directly to the president. While an engineering report was being prepared on his proposal, he went to the Board of Directors and "sold" that body on his project before the engineers had a chance to be heard. Three turbines were built. Two of them had twenty disks eighteen inches in diameter and were tested with steam at eighty pounds pressure. They developed at speeds of 12,000 and 10,000 revolutions per minute, respectively, 200 horsepower. This was exactly the same power output as had been achieved by Tesla's 1911 model, which had disks of half this diameter and was operated at 9,000 revolutions

under 125 pounds pressure. A much larger engine was tackled next. It had fifteen disks sixty inches in diameter, was designed to operate at 3,600 revolutions per minute, and was rated at 500 kilowatts capacity, or about 675 horsepower.

Hans Dahlstrand, Consulting Engineer of the Steam Turbine Department, reports, in part:

We also built a 500 kw steam turbine to operate at 3,600 revolutions. The turbine rotor consisted of fifteen disks 60 inches in diameter and one eighth inch thick. The disks were placed approximately one eighth inch apart. The unit was tested by connecting to a generator. The maximum mechanical effciency obtained on this unit was approximately 38 per cent when operating at steam pressure of approximately 80 pounds absolute and a back pressure of approximately 3 pounds absolute and 100 degrees F superheat at the inlet.

When the steam pressure was increased above that given the mechanical effciency dropped, consequently the design of these turbines was of such a nature that in order to obtain maximum effciency at high pressure, it would have been necessary to have more than one turbine in series.

The effciency of the small turbine units compares with the effciency obtainable on small impulse turbines running at speeds where they can be directly connected to pumps and other machinery. It is obvious, therefore, that the small unit in order to obtain the same effciency had to operate at from 10,000 to 12,000 revolutions and it would have been necessary to provide reduction gears between the steam turbine and the driven unit.

Furthermore, the design of the Tesla turbine could not compete as far as manufacturing costs with the smaller type of impulse units. It is also questionable whether the rotor disks, because of light construction and high stress, would have lasted any length of time if operating continuously.

The above remarks apply equally to the large turbine running at 3,600 revolutions. It was found when this unit was dismantled that the disks had distorted to a great extent and the opinion was that these disks would ultimately have failed if the unit had been operated for any length of time.

The gas turbine was never constructed for the reason that the company was unable to obtain suffcient engineering information from Mr. Tesla indicating even an approximate design that he had in mind.

Tesla appears to have walked out on the tests at this stage. In Milwaukee, however, there was no George Westinghouse to save the situation. Later, during the twenties, the author asked Tesla why he had terminated his work with the Allis Chalmers Company. He replied: "They would not build the turbines as I wished"; and he would not amplify the statement further.

The Allis Chalmers Company later became the pioneer manufacturers of another type of gas turbine that has been in successful operation for years.

While the Dahlstrand report may appear to be severely critical of the Tesla turbine and to reveal fundamental weaknesses in it not found in other turbines, such is not the case. The report is, in general, a fair presentation of the results; and the description of apparent weaknesses merely offers from another viewpoint the facts which Tesla himself stated about the turbine in his earlier test--that when employed as a single-stage engine it uses only about a third of the energy of the steam, and that to utilize the remainder, it would have to be compounded with a second turbine.

The reference to a centrifugal force of 70,000 pounds resulting from the high speed of rotation of the rotor, causing damage to the disks, refers to a common experience with all types of turbines. This is made clear in a booklet on "The Story of the Turbine," issued during the past year by the General Electric Company, in which it is stated:

It [the turbine] had to wait until engineers and scientists could develop materials to withstand these pressures and speeds. For example, a single bucket in a modern turbine travelling at 600 miles per hour has a centrifugal force of 90,000 pounds trying to pull it from its attachment on the bucket wheel and shaft. . . .

In this raging inferno the high pressure buckets at one end of the turbine run red hot while a few feet away the large buckets in the last stages run at 600 miles per hour

through a storm of tepid rain--so fast that the drops of condensed steam cut like a sand blast.

Dahlstrand reported that diffculties were encountered in the Tesla turbine from vibration, making it necessary to re-enforce the disks. That this diffculty is common to all turbines is further indicated by the General Electric booklet, which states:

Vibration cracked buckets and wheels and wrecked turbines, sometimes within a few hours and sometimes after years of operation. This vibration was caused by taking such terrific amounts of power from relatively light machinery--it some cases as much as 400 horsepower out of a bucket weighing but a pound or two. . . .

The major problems of the turbine are four--high temperatures, high pressures, high speeds and internal vibration. And their solution lies in engineering, research and manufacturing skill.

These problems are still awaiting their final solution, even with the manufacturers who have been building turbines for forty years; and the fact that they were encountered in the Tesla turbine, and so reported, is not a final criticism of Tesla's invention in the earliest stages of its development.

There have been whisperings in engineering circles during the past year or two to indicate a revival of interest in the Tesla turbine and the possibility that the makers of the Curtis and Parsons types may extend their lines to include the Tesla type for joint operation with the others. The development of new alloys, which can now almost be made to order with desired qualities of mechanical stability under conditions of high temperature and great stresses, is largely responsible for this turn of events.

It is a possibility that if the Tesla turbine were constructed with the benefft of two or more stages, thus giving it the full operating range of either the Curtis or the Parsons turbine, and were built with the same beneffts of engineering skill and modern metallurgical developments as have been lavished on these two turbines, the vastly greater simplicity of the Tesla turbine would enable it to manifest greater effciencies of operation and economies of construction.

FOURTEEN

THE highest honor which the world can confer upon its scholars is the Nobel Prize founded by Alfred B. Nobel, the Swedish scientist who gained his wealth through the invention of dynamite. Five awards are made annually, and each carries an honorarium of about $40,000 in normal times.

An announcement came from Sweden, in 1912, that Nikola Tesla and Thomas A. Edison had been chosen to share the 1912 award in physics. The awards, however, were never made; and the prize went instead to Gustav Dalen, a Swedish scientist.

The full story of what took place is not known. The correspondence on the subject is not available. It is definitely established that Tesla refused to accept the award. Tesla was very much in need of money at this time and the $20,000, which would have been his share of the divided award, would have aided him to continue his work. Other factors, however, had a more potent influence.

Tesla made a very definite distinction between the inventor of useful appliances and the discoverer of new principles. The discoverer of new principles, he stated in conversation with the author, is a pioneer who opens up new fields of knowledge into which thousands of inventors flock to make commercial applications of the newly revealed information. Tesla declared himself a discoverer and Edison an inventor; and he held the view that placing the two in the same category would completely destroy all sense of the relative value of the two accomplishments.

It is quite probable that Tesla was also influenced by the fact that the Nobel Prize in physics had been awarded to Marconi three years earlier, a situation that greatly disappointed him. To have the award go first to Marconi, and then to be asked to share the award with Edison, was too great a derogation of the relative value of his work to the world for Tesla to bear without rebelling.

Tesla was the first, and probably the only, scientist to refuse this famous prize.

One of the highest honors in the engineering world, too, is the Edison Medal, founded by unnamed friends of Thomas A. Edison, and awarded each year by the American Institute of Electrical Engineers, at its annual convention, for outstanding contribution to electrical art and science. Usually, the recipients are very happy to receive the award; but in 1917, when the committee voted to present the medal to Tesla, a different situation developed.

The chairman of the Edison Medal committee was B. A. Behrend, who had been one of the first electrical engineers to grasp the tremendous significance of Tesla's alternating-current discoveries and their far-reaching importance to every department of the electrical industry. A few outstanding engineers were able, at the beginning, to understand the intricacies of new alternating-current procedures which Tesla's discoveries made of immediate practical importance; but it was Behrend who developed a beautiful, simple mathematical technique, known as the "circle diagram," which made it possible to work out problems of designing alternating-current machinery with great ease, and also to understand the complex phenomena that were taking place within such devices. He published innumerable articles on the subject in the technical journals and wrote the standard textbook on the subject, The Induction Motor. Fame and fortune came to Behrend. He achieved recognition as one of the outstanding electrical engineers, and was later elected vice-president of the American Institute of Electrical Engineers. So important was his work to the commercial world that he was considered a probable recipient of the Edison Medal.

Behrend had started publishing articles on his circle diagram discovery in 1896 but he did not meet Tesla until 1901, when Tesla required a particular type of motor for his World Wireless plant being built at Wardencliff, L. I., and the task of designing it was assigned to the engineering department of a manufacturing company of which Behrend was in charge. After Tesla and Behrend met, a very close personal friendship developed between the two men. Behrend was one of the few who thoroughly understood Tesla's work; and the inventor, lonely in the absence of individuals with minds of his own caliber, greatly appreciated Behrend's friendship.

Behrend believed, therefore, that he was rendering Tesla a token of his highest appreciation when he managed to maneuver the award of the Edison Medal to him; and he was quite happy to carry out the mission of bearing the good news to the inventor. The announcement, however, did not make Tesla happy. He did not want the Edison Medal, he would not receive it!

Behrend, greatly surprised at Tesla's rebuff, asked him if he would not explain the situation that caused it.

"Let us forget the whole matter, Mr. Behrend. I appreciate your good will and your friendship but I desire you to return to the committee and request it to make another selection for a recipient. It is nearly thirty years since I announced my rotating magnetic field and alternating-current system before the Institute. I do not need its honors and someone else may find them useful."

It would have been impossible for Behrend to deny that the Institute had indeed failed, over this long period, to honor the man whose discoveries were responsible for creating the jobs held by probably more than three quarters of the members of the Institute, while honors had been distributed to many others for relatively minor accomplishments. Still, using the privilege of friendship, Behrend pressed for a further explanation.

"You propose," Tesla replied, "to honor me with a medal which I could pin upon my coat and strut for a vain hour before the members and guests of your Institute. You would bestow an outward semblance of honoring me but you would decorate my body and continue to let starve, for failure to supply recognition, my mind and its creative products which have supplied the foundation upon which the major portion of your Institute exists. And when you would go through the vacuous pantomime of honoring Tesla you would not be honoring Tesla but Edison who has previously shared unearned glory from every previous recipient of this medal."

Behrend, however, after several visits, finally prevailed upon Tesla to accept the medal.

Custom requires that the recipient of a medal deliver a formal address. On the occasions, a quarter of a century

earlier, when Tesla was invited to address the Institute, he had had ample laboratory facilities, and had invested a great deal of time, effort, thought and money in the preparation of his lectures. For them, however, he was awarded no honors. Now he was without laboratory facilities and without adequate financial resources, although his more mature mind was as filled with ideas and unborn inventions as it had ever been. He was not required to present a demonstration lecture. In this matter, however, Tesla was a victim of his own past performances; and there was an expectancy that he would emerge from the comparative oblivion which had enshrouded him for more than a decade, and come, like a master magician, bearing some wondrous new gifts of invention to the world.

Tesla attended some of the meetings of the convention, and Behrend, none too certain about what the medalist might do, took him in tow following the afternoon session and escorted him to the Hotel St. Regis, where Tesla now made his home, and where both donned their formal dress for the evening's ceremonies.

The first event on the evening's program was a private dinner at the Engineers' Club, tendered by the Institute to the medalist, who was the guest of honor, and attended by previous recipients of the Edison Medal, as well as members of the committee and the offcers of the Institute. It was a gala occasion and represented an unusual concentration of the world's greatest electrical engineering talent. Tesla could be relied upon to lend brilliance to any such occasion, but, while his sparkling conversation added to the gayety of the group, he was distinctly ill at ease.

The Engineers' Club, on the south side of 40th Street, between Fifth and Sixth Avenues, faces Bryant Park, the eastern third of which is occupied by the classical building of the New York Public Library, facing Fifth Avenue from 40th to 42nd Streets. The United Engineering Societies Building, an imposing structure on the north side of 39th, stands almost back-to-back with the Engineers' Club. By stepping a few feet across an alley, it is possible to go from one building to the other.

Following the dinner in the Engineers' Club, the brilliant group at the medalist's dinner made their way across the alley and proceeded through the crowded lobby of the Engineering Societies Building, which was abuzz with the

multitudinous activities associated with a convention. The party entered the elevators which carried them to the large auditorium on the fifth floor where the medal presentations were to take place.

The auditorium was crowded with an audience that had come largely from formal dinners held as part of the convention program. The floor and gallery were filled to capacity. The buzz of animated conversation died down as there filed onto the stage the outstanding figures of the electrical world, in "tails" and white ties, who were to serve as the "wax works" of the ceremonies and to take some part in the presentation.

As the wax works took their previously assigned chairs, the stage was set for the opening of the ceremonies. But the opening did not take place according to schedule. There was consternation in the group as it was discovered that the chair reserved for the chief participant in the event was empty.

Tesla was missing!

The side hall, leading off the stage, and the anterooms were searched, but there was no sign of him. Members of the committee slipped out to retrace their steps through the lobby and back to the Club dining room. A man as tall as Tesla could not be hidden in any group, yet there was not a sign of him in either building.

The delay in opening the meeting in the auditorium was embarrassing--but the ceremonies could not be started without Tesla, and where was he?

It seemed hardly possible that an imposing figure like Tesla, his height exaggerated by the streamlined contours of his swallow-tailed formal evening dress, and in the almost worshipful custody of a score of outstanding intellects, could vanish without any of them observing his going.

Behrend rushed back from the Club to the auditorium, hopeful that Tesla had preceded him; but he found that such was not the case. All the washrooms in both buildings had been searched; he was concealed in none of them. No one could offer a theory to account for his disappearance.

None but Behrend knew of Tesla's aversion to accepting the Edison Medal, yet even he had not the slightest knowledge of what had become of the famous inventor. He recalled noting the shadowy walks of Bryant Park opposite the Club as he and Tesla stepped from the taxicab earlier in the evening, and he wondered if Tesla had retreated there for some quiet meditation before the ceremony. He hurried out of the Club.

As Behrend stepped into Bryant Park, the last faint glimmerings of dusk were visible in the high sky; but in the park the shades of night were gathering and here and there could be heard the faint twitterings of birds. The twittering of the birds brought, like a flash, to Behrend's mind the scene he had observed in Tesla's apartment at the Hotel St. Regis. In the room which Tesla had arranged as a reading room and offce was a roll-top desk, and on top of this were four neat circular baskets, in two of which pigeons were nestled. Before they left the apartment Tesla went to the window, which was kept open at all times, whistled softly, and two more pigeons quickly flew into the room. Just before leaving for the dinner Tesla fed the pigeons, and having done so slipped a paper bag filled with something into his pocket. The possible significance of this latter act did not occur to Behrend until he heard the twittering of the birds in the park.

With all possible speed Behrend rushed out of the park, down 40th Street toward Fifth Avenue, and up the steps to the plaza of the Library. Here he beheld a sight that amazed him almost beyond belief in what his eyes told him. Here was the missing man. He had recalled that Tesla regularly visited the Library, St. Patrick's Cathedral, or other places to feed the pigeons.

In the center of a large thin circle of observers stood the imposing figure of Tesla, wearing a crown of two pigeons on his head, his shoulders and arms festooned with a dozen more, their white or pale-blue bodies making strong contrast with his black suit and black hair, even in the dusk. On either of his outstretched hands was another bird, while seemingly hundreds more made a living carpet on the ground in front of him, hopping about and pecking at the bird seed he had been scattering.

It was Behrend's impulse to rush in, shoo the birds away and, seizing the missing man, rush him back to the

auditorium. Something caused him to halt. Such an abrupt action seemed almost sacrilegious. As he hesitated momentarily, Tesla caught sight of him and slowly shifted the position of one hand to raise a warning finger. As he did so, however, he moved slowly toward Behrend; and as he came close, some of the birds flew from Tesla's shoulders to Behrend's. Apparently sensing a disturbing situation, though, all the birds flew to the ground.

Appealing to Tesla not to let him down, nor to embarrass those who were waiting at the meeting, Behrend prevailed upon the inventor to return to the auditorium. Little did Behrend know how much more the pigeons meant to Tesla than did the Edison Medal; and little could anyone have suspected the fantastic secret in Tesla's life, of which the outer manifestation was his faithful feeding of his feathered friends. To Behrend it was just another, and in this case very embarrassing, manifestation of the nonconformity of genius. Of this, more later.

Returning to the auditorium, Behrend explained in a quick aside to the president that Tesla had been temporarily ill, but that his condition was now quite satisfactory. The opening of the meeting had been delayed about twenty minutes.

In his presentation speech, Behrend pointed out that by an extraordinary coincidence, it was exactly 29 years ago, to the very day and hour, that Nikola Tesla presented his original description of his polyphase alternating-current system. He added:

Not since the appearance of Faraday's "Experimental Researches in Electricity" has a great experimental truth been voiced so simply and so clearly as this description of Mr. Tesla's great discovery of the generation and utilization of polyphase alternating currents. He left nothing to be done by those who followed him. His paper contained the skeleton even of the mathematical theory.

Three years later, in 1891, there was given the first great demonstration, by Swiss engineers, of the transmission of power at 30,000 volts from Lauffen to Frankfort by means of Mr. Tesla's system. A few years later this was followed by the development of the Cataract Construction Company, under the presidency of our member, Mr. Edward D. Adams, and with the aid of the engineers of the Westinghouse Company. It is

interesting to recall here tonight that in Lord Kelvin's support to Mr. Adams, Lord Kelvin recommended the use of direct current for the development of power at Niagara Falls and for its transmission to Buffalo.

The due appreciation or even enumeration of the results of Mr. Tesla's invention is neither practicable nor desirable at this moment. There is a time for all things. Suffce it to say that, were we to seize and eliminate from our industrial world the results of Mr. Tesla's work, the wheels of industry would cease to turn, our electric cars and trains would stop, our towns would be dark, our mills would be dead and idle. Yes, so far reaching is this work, that it has become the warp and woof of industry. . . . His name marks an epoch in the advance of electrical science. From that work has sprung a revolution in the electrical art.

We asked Mr. Tesla to accept this medal. We did not do this for the mere sake of conferring a distinction, or of perpetuating a name; for so long as men occupy themselves with our industry, his work will be incorporated in the common thought of our art, and the name of Tesla runs no more risk of oblivion than does that of Faraday, or that of Edison.

Nor indeed does this Institute give this medal as evidence that Mr. Tesla's work has its offcial sanction. His work stands in no need of such sanction.

No, Mr. Tesla, we beg you to cherish this medal as a symbol of our gratitude for a new creative thought, the powerful impetus, akin to revolution, which you have given to our art and to our science. You have lived to see the work of your genius established. What shall a man desire more than this? There rings out to us a paraphrase of Pope's lines on Newton:

"Nature and Nature's laws lay hid in night:

"God said, Let Tesla be, and all was light."

No record remains of Tesla's acceptance speech. He did not prepare a formal address. He had intended to make but a brief response, but instead he became involved in anecdotal narration and a preview of the future of electrical science

which, in the absence of the limiting influence of a written copy, became quite lengthy.

It is doubtful if anyone in the audience, or on the stage, grasped the full significance of Behrend's words when he said, "We asked Mr. Tesla to accept this medal." And fewer still were the members of the Institute who had any conception of the extent or importance of Tesla's contribution to their science. His major inventions had been announced thirty years before. The majority of the engineers present belonged to the younger generation; and they had been taught from textbooks that almost completely omitted mention of Tesla's work.

FIFTEEN

THE announcement by Tesla in his latter years that attracted the greatest amount of attention concerned his discovery of what has briefly, but not too accurately, been termed a death ray. Earlier reports had come from Europe of the invention of death rays, beams of radiation that would cause airships on which they impinged to burst into flame, the steel bodies of tanks to melt and the machinery of ships to stop operating, but all gave indications of being part of the game of diplomatic buncombe.

The prelude to Tesla's death-ray announcement came several years in advance, in the form of a declaration that he had made discoveries concerning a new form of power generation which, when applied, would make the largest existing turbine-dynamo units in the powerhouses look like pygmies. He made this announcement in interviews with the press in 1933, and declared that he was also working on a new kind of generator for the production of radiation of all kinds and in the greatest intensities. He made similar announcements the following year.

Both of these announcements were entitled to receive the most serious consideration, even though they were not accompanied by experimental evidence, and revealed no technical details.

When Tesla was talking as a scientist he was opposed to wars on moral, economic and all practical and theoretical grounds. But, like most scientists, when he stopped thinking as a scientist and let his emotions rule his thoughts, he found exceptions in which he felt some wars and situations were justifiable. As a scientist he was unwilling to have the discoveries of scientists applied to the purposes of war makers, but when the emotional phase of his nature took the ruling position he was willing to apply his genius to devising measures that would prevent wars by supplying protective devices.

This attitude is exemplified in the following statement, which he had prepared in the twenties but did not publish:

At present many of the ablest minds are trying to devise expedients for preventing a repetition of the awful conflict which is only theoretically ended and the duration and main issues of which I correctly predicted in an article printed in the Sun of December 20, 1914. The League is not a remedy but, on the contrary, in the opinion of a number of competent men, may bring about results just the opposite. It is particularly regrettable that a punitive policy was adopted in framing the terms of peace because a few years hence it will be possible for nations to fight without armies, ships or guns, by weapons far more terrible, to the destructive action and range of which there is virtually no limit. Any city at any distance whatever from the enemy can be destroyed by him and no power on earth can stop him from doing so. If we want to avert an impending calamity and a state of things which may transform this globe into an inferno, we should push the development of flying machines and wireless transmission of energy without an instant's delay and with all the power and resources of the nation.

Tesla saw preventive possibilities in his new invention which embodied "death-ray" characteristics, and which was made several years after the foregoing statement was written. He saw it providing a curtain of protection which any country, no matter how small, could use as a defense against invasion. While he might offer it as a defensive weapon, however, there would be nothing to stop military men from using it as a weapon of offense.

Tesla never gave the slightest hint concerning the principles under which his device operated.

There are indications, at any rate, that Tesla was working on a high-potential direct-current system for generating and transmitting electricity to long distances. Direct current at very high voltages can be transmitted much more effciently than alternating current. There has been no practical way of generating direct current at high voltages. It was because of this that Tesla's polyphase alternating-current system was adopted for our present nationwide superpower system, since it made the use of high voltages practicable. But, despite its effciencies, it entailed certain losses which could be eliminated if direct current of suffciently high voltage could be obtained. Such a system would supersede his alternating-current system but not displace it.

Direct current, perhaps at several million volts potential, would be used to transmit current for long distances, perhaps clear across the continent, providing a kind of express transmission system, to which the existing alternating-current system would be tied for local distribution. In addition to the direct-current transmission system, he appears to have worked out a high-voltage direct-current generator and a new type of direct-current motor which would operate without a commutator.

The inventions were starting to dam up in Tesla's mind like water in a reservoir to which there was no outlet.

Just as he developed his alternating-current system into the high-frequency, high-potential field of power distribution by wireless, which he demonstrated at Colorado Springs, so he appears to have carried his direct-current system forward and linked it with his alternating-current wireless distribution system, so that he could use both in a super-interlocking system. As this remained unapplied, he further evolved it and produced a plan for operating with it what appears to be a beam system of wireless transmission of energy which might involve the use of a stream of particles such as are used in the atom-smashing cyclotron.

As time passed from the latter twenties, through the latter thirties, the hints which Tesla would drop about his work became more complicated, and so ambiguous that they aroused skepticism rather than respect. He would not reveal the nature of his discoveries until he had secured patents, and

he would not apply for patents until he had made actual working models, and he could not make the working models because he had no money. Samuel Insull, the public utilities magnate, had for many years made frequent and generous contributions to Tesla. They were usually applied to outstanding debts and were not large enough to enable him to engage in laboratory research work.

Tesla, however, never exhibited the slightest outward sign of bitterness over the situation. Instead, he always appeared in the rle of confirmed optimist, always maintaining a spirit of hopefulness that he would achieve by his own efforts the money he needed to carry out his elaborated plans. This is indicated in a letter he wrote to B. A. Behrend, who had induced him to accept the Edison Medal, and who was probably in his confidence to a greater extent than anyone else:

"I am hard at work on those discoveries of mine, I told you about, from which I hope to derive a sum in eight figures (not counting the cents, of course) enabling me to erect that wireless power plant at my own expense. And what I shall accomplish by that other invention I came specially to see you about, I do not dare to tell you. This is stated in all seriousness."

The invention about which he dared not speak was probably his direct-current generating and transmitting system.

In an interview given in 1933, he said his power generator was of the simplest kind--just a big mass of steel, copper and aluminum, comprising a stationary and a rotating part, peculiarly assembled. He was planning, he said, to generate electricity and transmit it to a distance by his alternating system; but the direct-current system could also be employed if the heretofore insuperable diffculties of insulating the transmission line could be overcome.

A year later he had developed the beam-transmission plan; and he made an ambiguous statement concerning it which was reported in the press as news of a "death ray" since the description seemed to fit into the same mold as those wild and improbable statements that had come out of Europe some years before. A writer in the New York World-Telegram described Tesla's plan as "nebulous." This drew a reply from Tesla July 24, 1934) in which the following paragraphs appeared:

Still another item which has interested me is a report from Washington in the World Telegram of July 13, 1934, to the effect that scientists doubt the death ray effects. I am quite in agreement with these doubters and probably more pessimistic in this respect than anybody else, for I speak from long experience.

Rays of the requisite energy cannot be produced, and, then again, their intensity diminishes with the square of the distance. Not so the agent I employ, which will enable us to transmit to a distant point more energy than is possible by any other kind of ray.

We are all fallible, but as I examine the subject in the light of my present theoretical and experimental knowledge I am filled with deep convictions that I am giving to the world something far beyond the wildest dreams of inventors of all time.

This is the first written statement by Tesla in which he mentions his "ray"; but I had, as already noted, obtained some confidential statements from him, during the preceding year or so, concerning results he hoped to achieve through his new discovery, the nature of which he kept as a well-protected secret. Three years later, in 1937, Tesla permitted me to write a news story for the New York Herald Tribune on his new power-and-ray discovery. In it I stressed the usefulness of the discovery for delivering power to ships for travel across the ocean, thus eliminating the need for carrying fuel supplies, rather than its use as a weapon for defense or offense.

On this occasion I tried to get him to reveal some technical details, but he successfully parried every question and gave no information beyond the statement that the transmitting plant on shore was one which he would be able to erect at a cost of about $2,000,000, and the energy would be transmitted by a ray or beam of infinitesimally small cross section, one hundred thousandth of a centimeter in diameter. To other newspapers which copied my story he gave the figure as one millionth of a square centimeter.

Later, I wrote a somewhat critical review of his plan and sought to draw him out by reviewing the properties of electro-magnetic radiation in all parts of the spectrum. Finding none that possessed any known characteristics

needed to make his ray practical, I also reviewed the properties of all known particles of matter, and stated that none of these would serve his purpose with the possible exception of the unelectrified particle, the neutron. He made no revealing response to the article.

At his birthday dinner in 1938, at the Hotel New Yorker, Tesla described briefly his combination wireless-power transmission and death ray, adding little to what has already been stated; and in a later part of his speech he declared that he had developed a method for interplanetary communication, in which he would be able to transmit not only communication signals of small strength but energies involving thousands of horsepower.

On this occasion I asked him if he would be specific concerning the effects produced, and whether they would be visible from the earth; for example--could he produce an effect on the moon suffciently large to be seen by an astronomer watching the moon through a high-power telescope? To this he replied that he would be able to produce in the dark region of the thin crescent new moon an incandescent spot that would glow like a bright star so that it could be seen without the aid of a telescope.

It would appear probable that Tesla proposed to use for this purpose the beam he described in connection with his wirelesspower "death ray." The limitation of the destructive effects of the beam, which he visualized as two hundred miles, was due to the fact that the beam had a straight-line trajectory. Tesla stated that the curvature of the earth set a limit on the distance of operation, so the two-hundred-mile span of operation gave an indication of the greatest practical height of a tower from which the beam could be directed. He expected to use potentials of about 50,000,000 volts in his system, but whether of direct or alternating current is unknown.

The only written statement by Tesla on this subject is in his manuscript of the talk which was delivered, in absentia, some months later before the Institute of Immigrant Welfare in response to its honorary citation. In this was included the following paragraph:

"To go to another subject: I have devoted much of my time during the year past to perfecting of a new small and compact apparatus by which energy in considerable amounts

can now be flashed through interstellar space to any distance without the slightest dispersion. I had in mind to confer with my friend, George E. Hale, the great astronomer and solar expert, regarding the possible use of this invention in connection with his own researches. In the meantime, however, I am expecting to put before the Institute of France an accurate description of the device with data and calculations and claim the Pierre Gutzman Prize of 100,000 francs for means of communication with other worlds, feeling perfectly sure that it will be awarded to me. The money, of course, is a trifling consideration, but for the great historical honor of being the first to achieve this miracle I would be almost willing to give my life."

SELF-MADE SUPERMAN

SIXTEEN

IT WAS during a period when he was most busily occupied with his experiments with high-frequency and high-potential currents, from 1892 to 1894, that Tesla had found time to give serious thought to yet another type of problem, matter and energy; and from it he derived what he described as a new physical principle. This he developed to the point at which he was able to propound a new dynamic theory of gravity.

While this principle guided much of his thinking, he did not make any announcements concerning it until close to the end of his life. Such disclosures as have been made, however, leave this much obvious: Tesla considered his theory wholly inconsistent with the theory of relativity, and with the modern theory concerning the structure of the atom and the mutual interconversion of matter and energy. Tesla continuously attacked the validity of Einstein's work; and until two or three years before his death, he ridiculed the belief that energy could be obtained from matter.

These antagonisms were most unfortunate, as they placed Tesla in conflict with modern experimental physics. This was totally unnecessary, for Tesla could undoubtedly have adhered to his principle and interpreted it so that it was

not inconsistent with the modern theories. The antagonism was probably attributable to psychological factors rather than scientific inconsistencies.

The only statement Tesla has made concerning his principle and his theory is that contained in the lecture he prepared for delivery before the Institute of Immigrant Welfare (May 12, 1938). In this he stated:

During the succeeding two years [1893 and 1894] of intense concentration I was fortunate enough to make two far reaching discoveries. The first was a dynamic theory of gravity, which I have worked out in all details and hope to give to the world very soon. It explains the causes of this force and the motions of heavenly bodies under its influence so satisfactorily that it will put an end to idle speculation and false conceptions, as that of curved space. . . .

Only the existence of a field of force can account for the motions of the bodies as observed, and its assumption dispenses with space curvature. All literature on this subject is futile and destined to oblivion. So are all attempts to explain the workings of the universe without recognizing the existence of the ether and the indispensable function it plays in the phenomena.

My second discovery was of a physical truth of the greatest importance. As I have searched the entire scientific records in more than a half dozen languages for a long time without finding the least anticipation, I consider myself the original discoverer of this truth, which can be expressed by the statement: There is no energy in matter other than that received from the environment.

On my 79th birthday I made a brief reference to it, but its meaning and significance have become clearer to me since then. It applies rigorously to molecules and atoms as well as to the largest heavenly bodies, and to all matter in the universe in any phase of its existence from its very formation to its ultimate disintegration

Tesla's mind was inflexible in the matter of his attitude toward relativity and the modern theories. Had he published his principle and theory of gravity at the beginning of the century it would, without doubt, have then received very serious consideration and perhaps general acceptance,

although it is diffcult to make an intelligent surmise without knowledge of his postulates. If published, it might have had some influence on Einstein's thinking. The field of force which Tesla mentions as being necessary to explain the movements of the planets might have been his contribution to eliminating the need for the ether which was accomplished by Einstein's theory. The two theories might have been merged, in which case there probably would have resulted a harmonious development of the thinking of the two geniuses.

In this latter case Tesla could very well have shaped his thinking to see a consistency between his theory that there is no energy in matter other than that received from its environment, and the modern viewpoint that all matter consists of energy into which it is convertible; for when matter is converted to energy, the energy returns to the environment from whence it came when the particles were formed.

There appears to be a frustration involved in Tesla's attitude which could have been resolved by early publication of his theory. If this had taken place, Tesla's powerful intellect and his strange ability to solve problems would have been brought to bear on the problems of atomic physics and he, in turn, would have received tremendous benefits from the application of the newer knowledge in the fields in which he was supreme.

Tesla's ability to generate tremendously high voltages would have been of great assistance in the task of "smashing the atom." Other scientists, even today, are struggling to produce currents with a potential of 5,000,000 volts, whereas Tesla, forty years ago, had generated potentials of 135,000,000 volts.

The inconsistency between Tesla's principle and the picture of the atom consisting of a small complex nucleus surrounded by planetary electrons--which inconsistency was more existent in Tesla's mind than in Nature--caused him to develop an antagonism to all scientific developments which called for a picture that differed from the billiard-ball type of atom in vogue in the eighteen-eighties. To him, a smashed atom was like a smashed billiard ball.

The electron, however, had a real existence to Tesla. He accepted it as a kind of sub-atom, a fourth state of

matter, as described by Sir William Crookes, who discovered it. Tesla visualized it as associated with but not a part of the atom. The electric charge it carried was entirely distinct from the electron. Electricity, to him, was a fluid much more highly attenuated than any known form of matter, and with highly specific properties of its own for which it was not dependent upon matter. The charge on the electron was due to a surface layer of electricity covering it, and it could receive many layers, giving it multiple charges, all of which could be dissipated. These statements were similar to those which he had published a half-century before.

According to the modern theory, on the other hand, the electrical nature of the electron, described as its charge, is a characteristic inherent in the nature of the energy crystallized about a point which gives the electron its existence, and the electron is one of the particles, or units of energy, of which the atom is composed.

In discussing articles by scientists in the field of atomic physics, Tesla would register his protests that their theories were untenable and the claims unfounded; and he was particularly emphatic when experiments in which energy emissions from atoms were recorded.

"Atomic power is an illusion," he frequently declared. He furnished several written statements in which he said that with his currents of several million volts he had, countless times, smashed uncounted billions of atoms--and he knew that no emission of energy accompanied the process.

On one occasion Tesla took me to task rather severely for my failure to publish his statements. I replied: "I withheld them in order to protect your reputation. You are making too great a virtue of consistency. It is not necessary that you adhere to the theories you held as a youth, and I am convinced that deep down in your heart you hold newer theories that are in harmony with scientific developments in other fields, but because you have disagreed with, and attacked some modern theories, you feel you must be consistent and attack them all. I am convinced that in the development of your death-ray device your thinking was along the lines of the modern theory of the structure of the atom and the nature of matter and energy."

Tesla thereupon let me know in no uncertain terms that he held very definite ideas concerning efforts on the part of others to do his thinking for him. This conversation took place about 1935; and I did not hear from him for many months. I observed, however, that in his later conversations he was much less dogmatic concerning modern theories, and a few years later he stated that he was planning an apparatus which would make possible a definite testing of the modern theory of atomic structure, with the expectation that his new power system and energy beam would release atomic energy more effectively than any device then in use by physicists.

Having endorsed, finally, the belief that man will be able to smash, transmute, create or destroy atoms, and control vast amounts of energy, he waxed poetic on the subject. He extended man's control over atoms and energy to a cosmic scale, and saw him shaping the universe according to our desires. In an unpublished article, entitled "Man's Greatest Achievement," he wrote:

There manifests itself in the fully developed being--Man--a desire mysterious, inscrutable and irresistible: to imitate nature, to create, to work himself the wonders he perceives. Inspired to this task he searches, discovers and invents, designs and constructs, and covers with monuments of beauty, grandeur and awe, the star of his birth. He descends into the bowels of the globe to bring forth its hidden treasures and to unlock its immense imprisoned energies for his use. He invades the dark depths of the ocean and the azure regions of the sky. He peers into the innermost nooks and recesses of molecular structure and lays bare to his gaze worlds infinitely remote. He subdues and puts to his service the Werce, devastating spark of Prometheus, the titanic forces of the waterfall, the wind and the tide. He tames the thundering bolt of Jove and annihilates time and space. He makes the great Sun itself his obedient toiling slave. Such is his power and might that the heavens reverberate and the whole earth trembles by the mere sound of his voice.

What has the future in store for this strange being, born of a breath, of perishable tissue, yet immortal, with his powers fearful and divine? What magic will be wrought by him in the end? What is to be his greatest deed, his crowning achievement?

Long ago he recognized that all perceptible matter comes from a primary substance, or a tenuity beyond conception, filling all space, the Akasa or luminiferous ether, which is acted upon by the life-giving Prana or creative force, calling into existence, in never ending cycles, all things and phenomena. The primary substance, thrown into infinitesimal whirls of prodigious velocity, becomes gross matter; the force subsiding, the motion ceases and matter disappears, reverting to the primary substance.

Can Man control this grandest, most awe-inspiring of all processes in nature? Can he harness her inexhaustible energies to perform all their functions at his bidding, more still cause them to operate simply by the force of his will?

If he could do this, he would have powers almost unlimited and supernatural. At his command, with but a slight effort on his part, old worlds would disappear and new ones of his planning would spring into being. He could fix, solidify and preserve the ethereal shapes of his imagining, the fleeting visions of his dreams. He could express all the creations of his mind on any scale, in forms concrete and imperishable. He could alter the size of this planet, control its seasons, guide it along any path he might choose through the depths of the Universe. He could cause planets to collide and produce his suns and stars, his heat and light. He could originate and develop life in all its infinite forms.

To create and to annihilate material substance, cause it to aggregate in forms according to his desire, would be the supreme manifestation of the power of Man's mind, his most complete triumph over the physical world, his crowning achievement, which would place him beside his Creator, make him fulfill his ultimate destiny.

Tesla, in his eighties, was still manifesting the superman complex, and on even more elaborate a scale than when in his twenties. In his earlier dreams his visions were terrestrial, but in later life they were extended to embrace the entire universe.

Even on the cosmic scale, however, Tesla spoke in terms of matter and energy. These two entities, according to his reasoning, were suffcient to explain all observed

phenomena, a situation which militated against the discovery of any new agencies.

The civilizations of the ancient world knew nothing of electricity and magnetism; the controlled manifestations of these two phases of a single force-entity have provided us with a new civilization and a new cultural outlook on life, as well as broadened horizons within the life sphere. There is no reason why we should not look forward to the discovery of new forces which are as different from electricity as electricity is from the winds of the air and the waves of the ocean. If inadequate explanations of vital phenomena are accepted as satisfactory, embracing extravagant extensions of known forces, the way is closed to the discovery of unknown forces and the opening of any new realms of knowledge. This was the limitation which the science of the last quarter of the past century placed upon itself; and Tesla's philosophy was a product of that period. It was diffcult for him to reshape it in his later years.

The memory departments of most individuals' brains are like offce filing systems, an excellent dumping ground for everything that comes along--but try to find a filed item later. Tesla's powers of memorizing were prodigious. A quick reading of a page gave him a permanent record of it; he could always recall before his eyes a photographic record of it to be read, and could study at his convenience. Study, for Tesla, was a far different process than for the average person. He had no need for a reference library; he could consult in his mind any page of any textbook he had read, any formula, equation, or item in a table of logarithms, and it would flash before his eyes. He could recite scores of books, complete from memory. The saving in time which this made possible in research work was tremendous.

This strange faculty of vision was supernormal but entirely natural and was due, probably, to a structural characteristic in his brain which provided a direct channel between the memory and the visual areas of his cerebral hemispheres. It provided him with a very useful new sense.

The human brain is made up of two sections, the right and left sides, each of which, in some of its phases, is a complete brain; and both halves function together as a single unit. There are many layers in the brain parallel

with its surface, each connected to the others by complex nerve fibers, like threads sewing together the layers of an onion. The outer layer seems to be directly associated with our consciousness. The surface is divided into specialized areas, There is a band across the mid-section of each hemisphere from ear to ear over the top of the brain, devoted to the senses, and here are separate areas for the sensory faculties--sight, hearing, taste, smell--while near by are regions for the motor or muscular activities of the various parts of the body. The back lobe of the brain appears to be the home of the memory and the front lobe of some higher faculties of integration, the nature of which we do not as yet understand.

In normal processes of seeing, the eye forms a picture of an object on the retina, a screen on the back of the eyeball. The retina is supplied with thousands of nerve endings all packed together like stalks of asparagus in a bunch. The tip ends are provided with photosensitive processes, and when light strikes any one of them it transmits over the optic nerve a signal to the brain which is recorded as a visual response in the sight area of each half of the brain. By cooperation of all the nerve endings, the complete picture seen is transmitted. The actual seeing, then, is done in the brain and not in the eye. When an object is seen by the brain, a record of that visual experience is transmitted from the sight area of the brain to the memory center in the back part of the brain; and similar records are sent by all other sensory centers. Ordinarily this is a one-way process, the stimuli going in the direction of the memory and nothing coming back to the sensory area. If this were not so, our sense areas of the brain would be continuously reenacting old experiences and mixing them with the new, incoming experiences, causing annoying confusion.

The memory area contains a complete record of all sensory experiences we have had. In our thinking processes we use some little-understood mechanism for connecting together items stored in the memory area to produce useful combinations or relationships, or, in other words, new ideas. The memory appears to function on a subconscious level but we seem to be able to activate fibers that reach down to the desired strata at the right point to connect the memory level with the consciousness level. In this way we can recall experiences, but this experience of memory is

far different from the original experience of sight out of which the original memory record was made.

If, however, in this process of recollection, the nerve fiber linking the sight area of the brain and the memory area were to be activated, then we would see again by the sharp processes of vision the object which caused the memory record we are trying to recollect.

The act of creative thinking seems to consist of assembling two or more memory records of sensory experiences into a combination which possesses entirely new characteristics that were not apparent in the component parts. If the nerve linkage just referred to were to operate in a two-way process with the visual area, then we would be able to see the new creation as if it were a really existing object seen by the eye, although the whole operation was limited to the brain.

This process is hypothetically the one which took place in Tesla's brain and gave him tremendously greater powers of creative work than are possible to the ordinary individual. Was this conceivably a new in-vention made by Mother Nature and tried out by her on Tesla?

Tesla himself never understood the neurological, or physiological, processes underlying this strange faculty. To him it was an absolutely real experience to see in front of him as solid objects the subjects of his creative thoughts. He believed that the image of the thing he saw was sent back from the brain along the optic nerve to the eye, and that it existed as a picture on the retina where, by some suitable means, it could be seen by others--or that by means of adequate amplifying devices, such as are used in television, it could be projected on a screen. He even proposed such devices. (The apparent flaw in his reasoning followed on his mistake in thinking that he was doing this supernormal seeing with his eye, whereas the process was confined to his brain; and the reflex action from the memory centers stopped at the visual centers instead of, as he believed, being continued forward through the optical nerve to the retina.)

Tesla described his experience with this strange faculty in an interview with M. K. Wisehart, published under the title "Making Your Imagination Work for You" in the American Magazine, April, 1921. He stated:

During my boyhood I had suffered from a peculiar affliction due to the appearance of images, which were often accompanied by strong flashes of light. When a word was spoken, the image of the object designated would present itself so vividly to my vision that I could not tell whether what I saw was real or not. . . . Even though I reached out and passed my hand through it, the image would remain fixed in space.

In trying to free myself from these tormenting appearances, I tried to concentrate my thoughts on some peaceful, quieting scene I had witnessed. This would give me momentary relief; but when I had done it two or three times the remedy would begin to lose its force. Then I began to take mental excursions beyond the small world of my actual knowledge. Day and night, in imagination, I went on journeys--saw new places, cities, countries, and all the time I tried hard to make these imaginary things very sharp and clear in my mind. I imagined myself living in countries I had never seen, and I made imaginary friends, who were very dear to me and really seemed alive.

This I did constantly until I was seventeen, when my thoughts turned seriously to invention. Then, to my delight, I found I could visualize with the greatest facility. I needed no models, drawings, or experiments. I could picture them all in my mind. . . .

By that faculty of visualizing, which I learned in my boyish efforts to rid myself of annoying images, I have evolved what is, I believe, a new method of materializing inventive ideas and conceptions. It is a method which may be of great usefulness to any imaginative man, whether he is an inventor, businessman or artist.

Some people, the moment they have a device to construct or any piece of work to perform, rush at it without adequate preparation, and immediately become engrossed in details, instead of the central idea. They may get results, but they sacrifice quality.

Here, in brief, is my own method: After experiencing a desire to invent a particular thing, I may go on for months or years with the idea in the back of my head. Whenever I feel like it, I roam around in my imagination and think

about the problem without any deliberate concentration. This is a period of incubation.

Then follows a period of direct effort. I choose carefully the possible solutions of the problem. I am considering, and gradually center my mind on a narrowed field of investigation. Now, when I am deliberately thinking of the problem in its specific features, I may begin to feel that I am going to get the solution. And the wonderful thing is, that if I do feel this way, then I know I have really solved the problem and shall get what I am after.

The feeling is as convincing to me as though I already had solved it. I have come to the conclusion that at this stage the actual solution is in my mind subconsciously, though it may be a long time before I am aware of it consciously.

Before I put a sketch on paper, the whole idea is worked out mentally. In my mind I change the construction, make improvements, and even operate the device. Without ever having drawn a sketch I can give the measurements of all parts to workmen, and when completed all these parts will fit, just as certainly as though I had made the actual drawings. It is immaterial to me whether I run my machine in my mind or test it in my shop.

The inventions I have conceived in this way have always worked. In thirty years there has not been a single exception. My first electric motor, the vacuum tube wireless light, my turbine engine and many other devices have all been developed in exactly this way.

That Tesla believed his mental visualizations brought images from his brain to the back of his eye is indicated by some statements he made in his famous lecture before the National Electric Light Association convention at St. Louis, in March, 1893, when announcing his discovery of radio. These statements about vision had no relationship to the subject of the lecture, and the fact that he interjected them indicated that his experiences with this strange power had a powerful influence on his inventive thinking. He said:

It can be taken as a fact, which the theory of the action of the eye implies, that for each external impression, that is for each image produced on the retina, the ends of the visual nerves, concerned in the conveyance of the

impressions to the mind, must be under a peculiar stress or in a vibratory state. It now does not seem improbable that, when by the power of thought an image is evoked, a distinct reflex action, no matter how weak, is exerted upon certain ends of the visual nerves, and therefore upon the retina. Will it ever be within human power to analyze the condition of the retina, when disturbed by thought or reflex action, by the help of some optical or other means of such sensitiveness that a clear idea of its state might be obtained? If this were possible, then the problem of reading one's thoughts with precision, like the characters of an open book, might be much easier to solve than many problems belonging to the domain of positive physical science, in the solution of which many, if not the majority, of scientific men implicitly believe.

Helmholtz has shown that the fundi of the eye are themselves luminous, and he was able to see in total darkness the movements of his arm by the light of his own eyes. This is one of the most remarkable experiments recorded in the history of science, and probably only a few men could satisfactorily repeat it, for it is very likely that the luminosity of the eyes is associated with uncommon activity of the brain and great imaginative power. It is fluorescence of brain action, as it were.

Another fact having a bearing on this subject, which has probably been noted by many, since it is stated in popular expressions, but which I cannot recollect to have found chronicled as a positive result of observation is that, at times, when a sudden idea or image presents itself to the intellect, there is a painful sensation of luminosity produced in the eye observed even in broad daylight.

Forty years later Tesla was still interested in the possibility of capturing a photographic record of thoughts. He stated in interviews that if his theory were correct--that thoughts are recorded on the retina--it should be possible to photograph what is revealed on this screen in the eye, and project enlarged images of it.

There is nothing illogical about Tesla's reasoning concerning his strange faculty of visualizing and the possibility of finding a corresponding image on the retina. There is a bare possibility that in an extreme case, as was his, a reflex arc may have extended from the brain to the retina; but the probability that it did not is stronger. If

he had possessed the ability to take others into his confidence in his experiments, he would have been able to stage some simple tests in the laboratory of an ophthalmologist which would have given him some definite experimental evidence to support or dispose of his theories, as far as photographic thought images were concerned.

About 1920 tesla had prepared, although he never published, an announcement of what he declared was "An Astounding Discovery." It involved factors which he called "cosmic"; but it likewise presented situations which the practicers of voodoo in Haiti, and other intellectually unveneered portions of the human race, would receive with perfect understanding. Since Tesla, one of the most highly civilized individuals, could evolve this conception, it is probable that other supercultured individuals or groups could find it in harmony with their ideas and experiences.

It involves, however, a situation in which the soulless "matter and energy" automaton (to which status we have seen Tesla relegate human beings) is able to judge ethical values, and, like a pontiff presiding over a court of morals, inflict punishment for transgressions.

Here is Tesla's description of his "astounding discovery":

While I have failed to obtain any evidence in support of the contentions of psychologists and spiritualists, I have proved to my complete satisfaction the automatism of life, not only through continuous observation of individual actions, but even more conclusively, through certain generalizations. These amount to a discovery which I consider of the greatest moment to human society and on which I shall briefly dwell.

I got the first inkling of this astounding truth when I was still a very young man, but for many years I interpreted what I noted simply as coincidences. Namely, whenever either myself or a person to whom I was attached, or a cause to which I was devoted, was hurt by others in a particular way, which might be best popularly characterized as the most unfair imaginable, I experienced a singular and undefinable pain which, for want of a better term, I have qualified as "cosmic," and shortly thereafter, and invariably, those who have inflicted it came to grief. After many such cases I confided this to a number of

friends, who had the opportunity to convince themselves of the truth of the theory which I have gradually formulated and which may be stated in the following words.

Our bodies are of similar construction and exposed to the same external influences. This results in likeness of response and concordance of the general activities on which all our social and other rules and laws are based. We are automata entirely controlled by the forces of the medium, being tossed about like corks on the surface of the water, but mistaking the resultant of the impulses from the outside for free will.

The movements and other actions we perform are always life-preservative and though seemingly quite independent from one another, we are connected by invisible links. So long as the organism is in perfect order it responds accurately to the agents that prompt it, but the moment there is some derangement in any individual, his self-preservative power is impaired.

Everybody understands, of course, that if one becomes deaf, has his eyesight weakened, or his limbs injured, the chances for his continued existence are lessened. But this is also true, and perhaps more so, of certain defects in the brain which deprive the automaton, more or less, of that vital quality and cause it to rush into destruction.

A very sensitive and observant being, with his highly developed mechanism all intact, and acting with precision in obedience to the changing conditions of the environment, is endowed with a transcending mechanical sense, enabling him to evade perils too subtle to be directly perceived. When he comes in contact with others whose controlling organs are radically faulty, the sense asserts itself and he feels the "cosmic" pain.

The truth of this has been borne out in hundreds of instances and I am inviting other students of nature to devote attention to this subject, believing that, through combined and systematic effort, results of incalculable value to the world will be attained.

Tesla's uncommunicative nature concerning his own intimate experiences has undoubtedly deprived the world of many interesting stories. He was unquestionably an abnormal individual, and of a type that does have what are known as

"psychic experiences." He was emphatic in his denial that he ever had experiences of that sort; yet he has related incidents that clearly belong in the psychic category. He seemed to be fearful that an admission of psychic experiences would cause him to be misunderstood as supporting spiritualism, or theories that something operates in life other than matter and energy.

Whenever he was asked for his philosophy of life, he would elaborate a theory that the human body is a meat machine which responds to external forces.

One evening in New York, as Tesla and the author sat in the lobby of the Hotel Governor Clinton, the inventor discussed his meat-machine theory. It was a materialistic philosophy typical of the Victorian era. We are, he held, composed of only those things which are identified in the test tube and weighed in the balance. We have only those properties which we receive from the atoms of which our bodies are constructed. Our experiences, which we call life, are a complex mixture of the responses of our component atoms to the external forces of our environment.

Such a philosophy has the virtue of simplicity and brevity of presentation; and it lends itself readily to being propounded with a positiveness that reacts on the propounder, and transforms his attitude into one of dogmatism in which emphatically expressed opinion is often confused with and substituted for factual evidence.

"I don't believe a word of your theory," I replied to Tesla's exposition, "and, thank God, I am convinced you don't believe a word of it either. The strongest proof I have that your theory is totally inadequate is that Tesla exists. Under your theory we could not have a Tesla. Tesla possesses a creative mind and, in his accomplishments, stands high above all other men. If your theory were correct, we would either all be geniuses like Tesla or we would all be mental mediocrities living in these meat machines you describe, all responding in the same way to the uniform, inanimate and uncreative external forces."

"But we are all meat machines," replied Tesla, "and it happens that I am a much more sensitive machine than other people and I receive impressions to which they are inert, and I can both understand and interpret these impressions. I am simply a finer automaton than others," he insisted.

"This difference, which you admit between yourself and others, Dr. Tesla, completely disproves your theory, from my viewpoint," I responded. "Your sensitiveness would be a purely random incident. In the integration of this randomness, with respect to all individuals, all of us would probably once, possibly very much more frequently, rise to the height of manifesting genius as you have done all your life. Even though the strokes of genius would manifest intermittently, all such individuals would receive the permanent rating as geniuses. Genius does not manifest, even intermittently, in all of us, so your meat-machine theory appears, to me, untenable, If you were really frank with me, you would tell me of many experiences you have had, strange experiences, that you could not explain, that do not fit into your meat-machine theory, and which you have been afraid to discuss with anyone for fear they would misunderstand you and perhaps ridicule you. I, however, will not find these experiences strange and beyond understanding, and one of these days you will open up and tell me about them."

As happened whenever I disagreed with him, after that evening I did not see Tesla for a while. In due time, however, I had a great many telephone conversations with him. Our discussion seemed to have brought about a change in his attitude toward me; and the next time I saw him he confided, "Mr. O'Neill, you understand me better than anyone else in the world." I mention this to indicate the correctness of my belief that there was another Tesla hidden within that synthetic individual, the superman, which Tesla sought to pass off on the public as his real self.

I did not, at this time, know about Tesla's "astounding discovery," or of some of his experiences about which I later learned. Had I known of these, my discussion with him could have been more specific.

SEVENTEEN

ALTHOUGH Tesla thoroughly disbelieved in psychical phenomena, as previously indicated, he had many experiences which belong in this category; and he neither discredited nor disavowed their reality. Such paradoxes were common in all matters concerning him.

Tesla, for example, completely rejected telepathy as a phase of psychical phenomena, but he was firmly convinced that mind could communicate directly with mind. When asked about his belief in telepathy by a newspaper reporter in the early nineties, Tesla replied: "What is usually taken as evidence of the existence of telepathy is mere coincidence. But the working of the human mind through observation and reason interests and amazes me. And then he added the paradoxical statement: "Suppose I make up my mind to murder you. In an instant you would know it. Now, isn't that wonderful enough? By what process does the mind get at all this?"

Reduced to its simplest terms, this interview states: Psychical telepathy does not exist as a reality; but the transmission of thought from mind directly to mind is a wonderful phenomenon, worthy of scientific study.

The paradox here is due to the fact that, at the period in which Tesla was speaking, all psychical phenomena were supposed to be mediated by the intervention of spirits, or souls of the departed. Such a theory had no place in Tesla's philosophy, since he did not believe in immortality and felt that he could explain all phenomena in terms of matter and energy; and the spirit was supposed to lie beyond both of these categories. Thinking, however, was, according to Tesla's theories, something which resulted from the interaction of matter and energy in the brain; and as this process probably produced waves in the ether, there was no reason why the waves sent out by one mind should not be received by another, with resulting transfer of thought.

Tesla would not discuss anything bordering on psychical experiences outside the circle of his relatives, however. On one occasion, though, he probably saved the lives of three of his friends through a premonition; and he related the incident to his nephew, Sava N. Kosanovich, who thus retells it:

"I heard from Tesla that he had premonitions. He explained his in a mechanical way, saying he was a sensitive receiver

that registers any disturbance. He declared that each man is like an automaton which reacts to external impressions.

"He told me of one instance in which he had held a big party here in New York for some of his friends who planned to take a certain train for Philadelphia. He felt a powerful urge not to let the friends depart as planned and forcibly detained them so that they missed the train on which they had planned to travel. This train met with an accident in which there were a large number of casualties. This happened sometime in the 90's.

"When his sister Angelina was ill, and died, he sent a telegram in which he said: "I had a vision that Angelina was arising and disappearing. I sensed all is not well."

Tesla himself tells a most remarkable story of two supernormal events, in an unpublished manuscript. It records a situation in which, owing to overwork, his strange phenomenon of visualization disappeared, or died, and was reborn. In coming back, it grew up quickly by repeating the visualization of events of earliest childhood and successively re-enacting later events, until it brought him to the actual moment and capped the climax by then presenting a visualization of an event that had not yet taken place.

The story of this experience, as told by Tesla:

I will tell of an extraordinary experience which may be of interest to students of psychology. I had produced a striking phenomenon with my grounded transmitter and was endeavoring to ascertain its true significance in relation to the currents propagated through the earth. It seemed a hopeless undertaking and for more than a year I worked unremittingly but in vain. This profound study so entirely absorbed me that I became forgetful of everything else, even of my undermined health. At last, as I was on the point of breaking down, nature applied the preservative, inducing lethal sleep.

Regaining my senses, I realized with consternation that I was unable to visualize scenes from my life except those of infancy, the very first ones that had entered my consciousness. Curiously enough, these appeared before my vision with startling distinctness and afforded me welcome relief. Night after night, when retiring, I would think of

them and more and more of my previous existence was revealed. The image of my mother was always the principal figure in the spectacle that slowly unfolded, and a consuming desire to see her again gradually took possession of me.

This feeling grew so strong that I resolved to drop all work and satisfy my longing. But I found it too hard to break away from the laboratory and several months elapsed during which I succeeded in reviving all the impressions of my past life up to the spring of 1892.

In the next picture that came out of the mist of oblivion, I saw myself at the Hotel de la Paix in Paris just coming to from one of my peculiar sleeping spells caused by prolonged exertion of the brain. Imagine the pain and distress I felt when it flashed upon my mind that a dispatch was handed to me at that very moment bearing the sad news that my mother was dying.

It was especially remarkable that all during this period of partially obliterated memory I was fully alive to everything touching on the subject of my research. I could recall the smallest details and the least insignificant observations in my experiments and even recite pages of texts and complex mathematical formulae.

This was a prevision of the event which took place immediately after his Paris lecture, as described in an earlier chapter, in which he rushed home in time to see his mother just before she died.

The second incident also concerns the death of his mother, and is told in another connection in the same manuscript. He states:

For many years I have endeavored to solve the enigma of death and watched eagerly for every kind of spiritual indication. But only once in the course of my existence have I had an experience which, momentarily, impressed me as supernatural. It was at the time of my mother's death.

I had become completely exhausted by pain and long vigilance and one night was carried to a building about two blocks from our home. As I lay helpless there, I thought that if my mother died while I was away from her bedside she would surely give me a sign.

Two or three months before I was in London in company with my late friend, Sir William Crookes, when spiritualism was discussed and I was under full sway of these thoughts. I might not have paid attention to other men but was susceptible to his arguments as it was his epochal work on radiant matter, which I had read as a student, that made me embrace the electrical career.

I reflected that the conditions for a look into the beyond were most favorable, for my mother was a woman of genius and particularly excelling in the powers of intuition. During the whole night every fiber of my brain was strained in expectancy, but nothing happened until early in the morning when I fell into a sleep or perhaps a swoon, and saw a cloud carrying angelic figures of marvelous beauty, one of whom gazed upon me lovingly and gradually assumed the features of my mother. The apparition slowly floated across the room and vanished and I was awakened by an indescribably sweet song of many voices. In that instant a certitude, which no words can express, came upon me that my mother had just died. And that was true.

I was unable to understand the tremendous weight of the painful knowledge I received in advance and wrote a letter to Sir William Crookes while still under the domination of these impressions and in poor bodily health.

When I recovered I sought for a long time the external cause of this strange manifestation and to my great relief, I succeeded after many months of fruitless effort. I had seen the painting of a celebrated artist, representing allegorically one of the seasons in the form of a cloud with a group of angels which seem to actually float in the air, and this had struck me forcibly. It was exactly the same that appeared in my dream with the exception of my mother's likeness. The music came from the choir in the church nearby at the early mass of Easter morning, explaining everything satisfactorily in conformity to scientific facts.

This "scientific" explanation by Tesla is, of course, totally unscientific. It ignores the three principal facts: one, that he had what he identified at the time as a supernormal experience that brought with it a certitude that words could not describe; two, that this experience conveyed a revelation of his mother's death, which he

understood as such; and, three, that the event took place at the exact time of her death. The mechanism by which the phenomenon was produced utilized the memories stored in Tesla's mind (of the painting, for example) as the vehicle by which the information could be presented to him in understandable, though symbolic, form. In addition, there was the premonition given several months previously as the climax of an extended phenomenon involving his mother.

Tesla's efforts to explain away "scientifically" everything of a psychical or spiritual nature, and the inadequate explanations which were satisfactory to him for this purpose, are an indication of a conflict that was taking place within him in an effort to reconcile the purely materialistic "matter and energy" superman, into which he fashioned himself, with the underlying individual into which was born a great capacity for manifesting a deep spiritual insight into life, but which he suppressed.

One of the strangest luncheon parties Tesla ever staged was that given by him to a prize fighter, Fritzie Zivic. It was served in one of the private dining rooms of the Hotel New Yorker in 1940. Fritzie Zivic was scheduled to take part in a prize fight at Madison Square Garden for the welterweight championship, and the luncheon was held at noon on the day of the battle.

Fritzie was one of six brothers, all of whom were either professional prize fighters or wrestlers. They lived at Pittsburgh where their father conducted a beer saloon. They were all born in Pittsburgh, but were the sons of parents, natives of Yugoslavia, whose diffcult-to-pronounce Slavonic name was shortened to Zivic by the brothers for their professional activities.

Tesla had all six of the brothers as his guests. The only other guests were William L. Laurence, science writer of the New York Times, and the author.

Three very different types of individuals were gathered around the table. The six fighting brothers were all fine physical specimens. They averaged medium height but their powerful, chunky bodies, deep chests and broad shoulders made them seem rather short. All were clear eyed, had clear complexions and clean-cut features, were conservatively dressed in sack suits, and wore white linen collars. The two newspapermen presented an appearance in strong contrast

with the fighters, and in contrast with all the others was Tesla. Laurence, with his great mop of jet black hair combed straight back, looked more like a musician.

Tesla was seated at the head of the table. At his right sat Fritzie and next to him ranged three of his brothers. Opposite them sat two other brothers and Mr. Laurence. The author sat at the far end of the table.

Tesla did not arrange one of his famous duck dinners for this occasion--he had other plans. As soon as the party was seated, Tesla stood up. The broad, stocky Fritzie looked like a pygmy by comparison. Tesla was attired in a light-weight, tight-fitting, black, single-breasted sack suit which made him look more slender than usual. He had lost considerable weight in the preceding year, and this accentuated the sharp, bony contour which his face had taken on in his latter years. His face, of the ascetic type, now was crowned with thinning locks of silvery white hair. His long slender hands, delicately shaped, started to wave over the seated prize fighter, who smiled up at the strange figure towering above him.

"I am ordering for you a nice thick beefsteak, two inches thick, so that you will have plenty of strength tonight to win the championship by a . . . "

The fighter had both hands up, trying to interrupt the gesticulating figure of the scientist.

"No," protested Fritzie, "I am in training and I cannot eat a steak today."

"You listen to me," shouted the insistent voice of Tesla, whose swinging arms and swaying body made him appear to be going through the antics of a cheer leader at a football game. "I'll tell you how to train. You will train on beefsteak. I am going to get you a beefsteak two inches thick and dripping with blood so that you will be able to . . ."

The five brothers now joined Fritzie in his protest.

"He can't eat beefsteak today. He would lose the fight, Dr. Tesla," they chorused.

"No, he won't lose the fight," shot back Tesla. "You must think of the heroes of our national Serbian poetry. They were redblooded men and mighty fighters. You too must fight for the glory of Serbia, and you need beefsteak dripping in blood to do it!"

Tesla had worked himself into a fine frenzy and was waving his arms and punching his palms as if he were at the ringside at an exciting moment in the battle. His frenzy was lost on Fritzie and his brother pugilists. They were unmoved. Fritzie replied:

"I will win, Dr. Tesla. I will fight for the glory of Yugoslavia and when the referee gives me the decision and I speak into the microphone I will also say I fought for Dr. Tesla--but no beefsteak today, Dr. Tesla, please."

"All right, Fritzie, you can have whatever you want," Tesla agreed, "but your brothers will have their beefsteak."

"No, Dr. Tesla," replied the eldest brother, "if Fritzie cannot have beefsteak neither will we. We will eat whatever he eats."

Fritzie ordered scrambled eggs on toast, with bacon, and a glass of milk. The five brothers gave duplicate orders and the two newspapermen did likewise.

Tesla laughed heartily. "So that is what you do your fighting on today," he said between chuckles.

For himself, the blood-thirsty 83-year-old scientist ordered "A dish of hot milk"; and on this diet he managed to summon a tremendous amount of energy during the meal which he directed toward urging Fritzie to give his opponent "everything you've got" and "make it a knockout in the first round."

It was a strange dinner. Despite the greatly outnumbering pugilists with their hard set faces and chunky powerful bodies, the thin, bony faced, sharp featured, almost emaciated scientist with his sunken eyes, and his thin, silky silver hair, easily dominated the scene. Everyone was at ease despite the brothers' anticipation of Fritzie's impending battle and Tesla's enthusiasm. Yet, in spite of the fact that everyone was relaxed, there was an eerie kind of tenseness linking the peculiar assemblage. Once I became

conscious of the situation, I watched developments with interest. I had experienced such conditions previously but never under such circumstances as these.

Mr. Laurence, of the Times, was seated at my right. He began to act a bit restless while only halfway through the meal. Several times he looked under the table. He in turn rubbed his ankle, his knee, his calf. He shifted his position. He rubbed his elbow and later his forearm. I managed to catch his eye.

"Anything bothering you, Bill?" I asked, knowing full well what was happening.

"There is something strange going on here," he replied.

A couple of minutes later he again reached, and looked under the table.

"Feel anything?" I asked.

"Yes," he replied, seemingly a bit worried. "Something hot is touching me at different spots. I can feel the heat but I can't see anything that is doing it. Do you feel it, too?" he asked.

"Don't worry about it," I assured him. "I know what it is, and will tell you all about it later. Just make as close observations as you can now."

The phenomenon continued until the party broke up. On our way back to our offces, I explained to Mr. Laurence.

"You have often laughed at me for my gullibility in accepting the reality of the so-called psychic experiences," I said. "Now you have had one. As soon as that luncheon got well under way, after Dr. Tesla's fiery outburst had quieted down, I sensed a peculiar tenseness in the air around me. At times the atmosphere seemed webby to my face and hands, so I suspected something unusual might happen.

"That gathering was a perfect set-up for a psychic seance, and if it was held in the dark there is no telling what we might have observed. Here were six powerfully built men, closely in rapport with each other, all filled to the bursting point with vital energy waiting for an event that

would release an emotional outburst. In addition, we had Dr. Tesla staging an emotional outburst the like of which he probably never before exhibited throughout his life. He was supercharged with a different kind of vital energy. Just visualize Dr. Tesla as a medium acting as a co-ordinator, in some unknown way, to release these pent-up stores of vital energy which, again in an unknown manner, organized channels of conduction through which this energy was transferred from levels of high potential to levels of lower potential.

"In this case we were the levels of lower potential, for I had exactly the same experiences you had, with these energy-transfer channels in space making contact with various parts of my body and producing areas in which I, too, experienced a sensation of intense heat.

"You have read reports of seances in which the sitters reported that they experienced cool breezes. In these situations the action is the reverse of what we experienced, for in the seances energy was being drawn from the sitters to be organized by the so-called medium for the production of phenomena.

"Some kind of highly attenuated energy-bearing fluid was, in our experience today, drawn from the bodies of the fighters and fed into our bodies--and in the seances it is drawn from the bodies of the sitters and fed into that of the medium, or to a central collecting point. In a report which I have written on my seance observations, I have called this substance psynovial fluid, which is merely a convenient abbreviation for new psychic fluid.

"Now that you have had today's experience, you will understand why a few years ago I risked having Dr. Tesla figuratively massacre me when I told him he was using his meat-machine philosophy of human life to cover up a lot of strange experiences he has had, and about which he was afraid to talk. . . ."

Another strange supernormal experience came to Tesla a few days before he died, but he was probably totally unaware that the situation had any unusual aspects.

Early one morning he called his favorite messenger boy, Kerrigan, gave him a sealed envelope, and ordered him to

deliver it as quickly as possible. It was addressed to "Mr. Samuel Clemens, 35 South Fifth Ave., New York City."

Kerrigan returned in a short time with the statement that he could not deliver the message because the address was incorrect. There is no such street as South Fifth Ave., the boy reported; and in the neighborhood of that number on Fifth Ave. no one by the name of Clemens could be located.

Tesla became annoyed. He told Kerrigan: "Mr. Clemens is a very famous author who writes under the name Mark Twain, and you should have no trouble locating him at the address I gave you. He lives there."

Kerrigan reported to the manager of his office and told him of his diffculty. The manager told him: "Of course you couldn't find South Fifth Avenue. Its name was changed to West Broadway years ago, and you won't be able to deliver a message to Mark Twain because he has been dead for twenty-five years."

Armed with this information, Kerrigan returned to Tesla, and the reception accorded his announcements left him still further confused.

"Don't you dare to tell me that Mark Twain is dead," said Tesla. "He was in my room, here, last night. He sat in that chair and talked to me for an hour. He is having financial diffculties and needs my help. So you go right back to that address and deliver that envelope--and don't come back until you have done so." (The address to which he sent the messenger was that of Tesla's first laboratory!)

Kerrigan returned to his offce. The envelope, not too well sealed, was opened in the hope it would give some clue as to how the message could be delivered, The envelope contained a blank sheet of paper wrapped around twenty $5 bills! When Kerrigan tried to return the money, Tesla told him, with great annoyance, either to deliver the money or keep it.

The last two decades of Tesla's life were filled with many embarrassing situations concerning unpaid hotel bills, and it would seem that by some process of transference this situation was shifted to his perception of Mark Twain.

In view of Tesla's highly intensified abilities to see the subjects of his thoughts as materialized objects, the simpler theory would be that by his usual process he had summoned the vision of Mark Twain, Tesla and Mark Twain were very good friends, and the inventor had every reason for knowing that the heavy-thinking humorist was dead, Such being the case, how was he able to forget his death? An objective theory can be offered which may, or may not, contain the correct explanation.

Tesla's memory was filled with many recollections of Mark Twain, dating back to his early youth when he credited the reading of one of the humorist's books with having brought him out of a critical illness. Twenty years later, when Tesla related this incident, the humorist was so deeply affected he wept. A close friendship followed, filled with many pleasant incidents. Every incident concerning Mark Twain was laid down in Tesla's memory. How these records are filed in the brain we do not know, but we might assume, for the moment, that the arrangement is orderly enough, with the system based on a time sequence in which each successive incident is filed on an earlier one, the latest ones being on top. When Tesla started the process of visualizing Mark Twain in his room (and it probably operated on a subconscious level), he penetrated through the stack of memory records until he reached one that was satisfactory, and then concentrated so heavy a flow of vital energy in carrying this to the visualization center of his brain that it burned out, and destroyed, or narcotized, all later memory records that lay above it. As a result, after the visualization process was over, there was no record in Tesla's memory files of anything that happened in his relations with Mark Twain, following the pleasant record he had so strangely relived. All subsequent memory records were wiped out, including his memory of Mark Twain's death. It would then be perfectly logical for him to reach the conclusion that Mark Twain was still alive!

Several versions of this story are in circulation. They all have in common Tesla's belief that Mark Twain was still alive; that he himself had very recently been in communication with him, and sought to send him money to meet a diffcult situation.

Pirated, lied about, ignored, (Dr. W. H. Eccles concludes an obituary memorial, in Nature (London), February 13, 1943:--"Throughout his long life of 85 years Tesla seldom

directed attention to his own successes, never wrote up again his old work, and rarely claimed priority though continually pirated. Such reserve is particularly striking in a mind so rich in creative thought, so competent in practical achievement.") Tesla carried on his work during the latter decades, always hoping that he would be able to arrange matters so that he would be able to finance all the inventions he was treasuring in his mind. His pride would not permit him to admit financial embarrassment. He was forced frequently to leave hotels because of unpaid bills. His friend, B. A. Behrend, author of the book, The Induction Motor, which had clarified Tesla's theory for engineers, when visiting New York and finding the inventor moved from the hotel where he last found him, in each instance paid his bills, and caused Tesla's held baggage to be forwarded to him.

In the early thirties, when it seemed as if financial discouragements would "have him down," Tesla, however, appeared as optimistic as ever. He declared: "It is impossible for anyone to gain any idea of the inspiration I gain from my applied inventions which have become a matter of history, and of the force it supplies to urge me forward to greater achievements. I continually experience an inexpressible satisfaction from the knowledge that my polyphase system is used throughout the world to lighten the burdens of mankind and increase comfort and happiness, and that my wireless system, in all of its essential features, is employed to render a service to and bring pleasure to people in all parts of the earth."

When his wireless-power system was mentioned, he exhibited no sign of resentment over the collapse of his project but replied philosophically: "Perhaps I was a little premature. We can get along without it as long as my polyphase system continues to meet our needs. Just as soon as the need arises, however, I have the system ready to be used with complete success."

On his eightieth birthday he was asked if he expected actually to construct and operate his recently announced inventions, and in reply he quoted, in German, a stanza from Goethe's Faust:

"The God that in my bosom lives"

"Can move my deepest inmost soul,"

"Power to all my thought he gives"

"But outside he has no control."

It had been Tesla's intention to write his autobiography. He desired to have the story of his work recorded with a most meticulous regard for accuracy; and this, he felt, no one but himself could bring to it. He declared that he had no intention of starting work on this project until he had accomplished the application of all of his major discoveries. Several persons who proposed writing his biography received only a refusal of the requested co-operation. Kenneth Swezey, a writer on scientific subjects, maintained close contact with Tesla for a number of years, and it was expected that Tesla would co-operate with him in such a project. Swezey assembled seventy letters from leading scientists and engineers in all parts of the world as a surprise for Tesla on his seventy-fifth birthday, at which time the letters, bound in a memorial volume, were presented to him. These letters, reprinted in Yugoslavia, led to the establishment of the Tesla Institute in that country. Swezey was engaged in war work and expected, at the time of Tesla's death, to enter the Navy; otherwise he might have undertaken the task of writing Tesla's biography. Tesla, even up to his eighty-fourth year, expected to recover more robust health and to live beyond the century mark. It is probable, therefore, that he had not started work on his autobiography. Whether or not any parts of it have been written is impossible to ascertain at the present time. All Tesla's records were sealed by the Custodian of Alien Property, although Tesla was a citizen of the United States.

During the last half-dozen years of his life, Tesla, happily, was supplied with enough money to meet his immediate needs, thanks to the payment to him of an honorarium of $7,200 a year, by the Yugoslav government, as patron of the Tesla Institute, established in Belgrade. (The Society for the Foundation of the Tesla Institute at Belgrade was organized as Tesla neared his eightieth year. It enlisted support from the scholars, the government, commercial interests and the people as a whole. From the government and private sources an endowment was subscribed which was adequate to erect and equip a research laboratory and maintain it in operation as an institute. The Institute was opened in 1936, in commemoration of Tesla's eightieth

anniversary. A week of observance was held throughout Yugoslavia and formal celebrations were held at Belgrade on May 26, 27 and 28, at Zagreb on May 30, and at his native village, Smiljan, on June 2 and also on July 12.) Even with this income, however, and with a very limited range of activity (being confined largely to his room), during the last two years Tesla still managed to fall behind in his hotel bill. This was owing to his unlimited generosity. He was very generous in bestowing tips on all who performed the slightest service for him, and in responding to the slightest suggestion that anyone was in need of assistance.

During the latter part of 1942 he spent most of the time in bed, mentally active but physically weak. He permitted no visitors to come to his room, not even close associates of earlier years. He insisted to hotel employees that he was not ill and refused to listen to questions that he have a doctor visit him. He gave orders that even hotel employees were not to enter his room unless he summoned them.

On January 5, Tuesday morning, he permitted the maid to come to his room, and then gave orders to guard his room closely so that he would not be disturbed. This was done. It was not unusual for Tesla to give orders that he was not to be disturbed for protracted periods. Early Friday morning (January 8) a maid with a premonition, risking his displeasure, entered Tesla's room and found him dead. He looked peaceful, as if resting, with a suggestion of a smile on his gaunt bony face. The superman died as he had lived--alone.

The police were notified that Tesla had died alone and without medical attendance. The coroner declared his death due to natural causes incident to senility; and that he had died on the night of Thursday, January 7, 1943, some hours before the maid entered the room. Operatives from the Federal Bureau of Investigation came and opened the safe in his room and took the papers it contained, to examine them for a reported important secret invention of possible use in the war. The body was removed to Campbell's Funeral Parlors at Madison Avenue and 81st Street.

Funeral services were held at the Cathedral of St. John the Divine, on Tuesday, January 12, at 4 pm. Bishop Manning offered the opening sentences of the Burial Offce and Final Prayer. Following the services, the body was removed to

Ferncliff Cemetery at Ardsley, N. Y., and was later cremated.

AFTERGLOW

EIGHTEEN

DESPITE his celibate life, and his almost hermitlike existence in his own intellectual sphere, Tesla was, in his social contacts, a charming individual. The year he had spent digging ditches and doing hard manual labor, when he could get a job of any kind, and his experience during that time of sleeping in any shelter he could obtain and eating any kind of food he could manage to secure, undoubtedly made a tremendous and lasting, impression on him. The fact that he could never be induced to discuss this period would so indicate. Yet it probably softened him in a beneffcial way--by a going-through-the-mill process. But it had been a grievous insult to his personality to be valued only for the brute strength in his muscles; and this rankled ever after.

Once he had obtained funds through the founding of his laboratory and the sale of his patents to Westinghouse, he thereafter maintained an almost princely status. He knew how to wear clothes to increase the impressiveness of his appearance; his tallness gave him something of an advantage over others; his obvious physical strength brought him a respect that forbade any invasion of his attitude; his excellent English and the care he exercised to use the language correctly, and his command of a half-dozen other languages, established him as a scholar; and the first batch of his alternating-current inventions created for him in the mind of the public a reputation for outstanding scientific accomplishment. The fact that he always spoke of the value of his inventions to the world, and not of the greatness of his own accomplishment, endeared him to all who met him.

When Tesla was riding a tidal wave of popularity during the nineties, he was averse to publicity; but frequently well-known writers for the newspapers were able to break through the barriers and secure "feature" articles. An excellent description of him, keyed to the manner of the period, is contained in an article written by Franklin Chester, in the

Citizen of August 22, 1897. The portion referring to his personal appearance and activities follows:

So far as personal appearance goes no one can look upon him without feeling his force. He is more than six feet tall and very slender. Yet he possesses great physical power. His hands are large, his thumbs abnormally long, and this is a sign of great intelligence. His hair is black and straight, a deep shining black. He brushes it sharply from over his ears, so that it makes a ridge with serrated edges.

His cheekbones are high and prominent, the mark of the Slav: his skin is like marble that age has given the first searing of yellow. His eyes are blue, deeply set, and they burn like balls of fire. Those weird flashes of light he makes with his instruments seem also to shoot from them. His head is wedge shaped. His chin is almost a point.

Never was a human being filled with loftier ideals. Never did a man labor so unceasingly, so earnestly, so unselfishly for the benefft of the race. Tesla is not rich. He does not trouble himself about money. Had he chosen to follow in the footsteps of Edison he could be, perhaps, the richest man in the world, and Tesla is just 40 years old.

Tesla is, above all things, a serious man, undoubtedly the most serious man in New York. Yet he has a keen sense of humor and the most beautiful manners. He is the most genuinely modest of men. He knows no jealousy. He has never decried the accomplishments of another, never refused credit.

When he talks you listen. You do not know what he is saying, but it enthralls you. You feel the importance without understanding the meaning. He speaks the perfect English of a highly educated foreigner, without accent and with precision. He speaks eight languages equally well.

The daily life of this man has been the same, practically, ever since he has been in New York. He lives in the Gerlach, a very quiet family hotel, in 27th street, between Broadway and Sixth avenue. He starts for his laboratory before 9 o'clock in the morning, all day long he lives in his weird, uncanny world, reaching forth to capture new power to gain fresh knowledge.

No stranger ever sees him at his work. No one knows of his assistants. At rare intervals he presents some experiments in his laboratory, and there is no sacrifice that thousands of people would not make to gain admission to these.

Usually he works until 6 o'clock, but he may stay later. The absence of natural light does not trouble him. Tesla makes sunlight in his workshop.

At exactly 8 o'clock he enters the Waldorf. He is attired in irreproachable evening clothes. In the winter time he never wears an evening jacket, but always the coat with tails.

He finishes his dinner at exactly 10 o'clock, and leaves his hotel, either to go to his rooms to study or to return to his laboratory to work through the night.

Arthur Brisbane, who later became Hearst's famous editor, interviewed Tesla and published in The World, August 22, 1894, the longest story he had written on a famous person. He declared Tesla "Our Foremost Electrician--Greater Even than Edison," and included the following description of him:

He has eyes set very far back in his head. They are rather light. I asked him how he could have such light eyes and be a Slav. He told me that his eyes were once much darker, but that using his mind a great deal had made them many shades lighter. I have often heard it said that using the brain makes the eyes lighter in color. Tesla's confirmation of the theory through his personal experience is important.

He is very thin, is more than six feet tall, and weighs less than a hundred and forty pounds. He has very big hands. His thumbs are remarkably big, even for such big hands. They are extraordinarily big. This is a good sign. The thumb is the intellectual part of the hand. The apes have very small thumbs. Study them and you will notice this.

Nikola Tesla has a head that spreads out at the top like a fan. His head is shaped like a wedge. His chin is as pointed as an ice-pick. His mouth is too small. His chin, though not weak, is not strong enough. His face cannot be studied and judged like the faces of other men, for he is not a worker in practical fields. He lives his life up in

the top of his head, where ideas are born, and up there he has plenty of room. His hair is jet black and curly. He stoops--most men do when they have no peacock blood in them. He lives inside of himself. He takes a profound interest in his own work. He has that supply of self-love and self-confidence which usually goes with success. And he differs from most of the men who are written and talked about in the fact that he has something to tell.

Tesla had, to be sure, a sense of humor and enjoyed putting over a subtle joke. Before the period in which he became a regular diner at the Waldorf-Astoria, he dined nightly at Delmonico's, then the smartest hostelry in the city, and a gathering place for "The 400." Tesla was the most famous and spectacular figure among the famous patrons of the famous place, but he always dined alone. He could never be induced to join other groups and never had a guest of his own. After dining he would always return to work at his laboratory.

One evening some of his friends, believing that he was working too hard and should get some relaxation, induced him to join them in a game of billiards. They assumed he had neglected to learn how to play games, so, on arriving at the billiard room, they explained to him how to hold the cue, strike the balls, and other elements of the game. Tesla had not played billiards in a dozen years; but during his second year at Graumltz, when he was a year ahead in his studies and spent his evenings in the cafe's, he had become an expert billiardist. When the experts at Delmonico's gave him preparatory instruction, he asked some "dumb" questions, and made some intentional miscues. Taking on one of the players and still asking silly questions, he tried the most diffcult way of making shots--to demonstrate his purely amateur status--and made them, to the amazement of the experts. Several of them took him on that evening, and he defeated all of them with badly unbalanced scores. He declared the new game give him a wonderful opportunity to practice very abstract mathematical theories; and the experts at Delmonico's spread stories about the wonderful accomplishment of Scientist Tesla in mastering the game in a single evening and defeating the best players in the city. The story got into the newspapers. Tesla refused to play any more, declaring he was in danger of becoming so enthusiastic over the game that it would interfere with his researches.

This same man magnificent who graced the Waldorf-Astoria and Delmonico's was not averse, however, to visiting the Bowery, which was but a block away from his Houston Street laboratory. He repaired to a thirst-quenching emporium on that thoroughfare one afternoon shortly after a denizen of the Bowery, Steve Brodie, had achieved fame by jumping, or at least claiming to have jumped, off the Brooklyn Bridge. As Tesla raised his glass of whiskey he said to the bartender: "You know what Steve said as he was about to jump off the bridge--`Down he goes"'; and with that he downed his liquor in a gulp.

A near-by drinker, a little the worse for several, misunderstood Tesla's remark and got the impression he had heard Steve Brodie telling the final episode of his feat. He rushed up to Tesla to buy him a drink, and was joined by his friends. Tesla with a laugh shook them off and dashed out of the bar, while the misguided drinker started after him yelling, "Stop him, that's Steve." On the street the pedestrians misunderstood the thick-tongued drinker's shout and joined him in the chase, calling "Stop, thief!" Tesla's long legs rendered him a valuable service and he got a lead on the crowd, dashed into an alley, over a fence and climbed a fire escape on the back of his own building, reached his laboratory through a window, quickly donned a blacksmith's apron and started hammering a bar of metal. His pursuers, however, failed to trace him.

Tesla was idolized by the Serbians in New York. A great many of them could claim to be distant relatives through either the Tesla or Mandich side of the family, and those who could not claim this distinction revered him none the less, despite the fact he never accepted invitations to take part in their social or other functions.

One day an excited Serbian, a laborer, came to his apartment at the Waldorf-Astoria to beg his aid. He had gotten into a fight and pummeled a fellow Serbian, who had sworn out a warrant for his arrest. The visitor did not have any money but wanted to go to Chicago to escape arrest. Would Tesla please lend him the money for his railroad fare?

"So you assaulted a man and now want to run away to escape punishment," said Tesla. "You may run away from the law but you are not going to escape punishment; you are going to get it right now!" Seizing a cane and grasping the man by

the back of the neck, he ran him around the room, beating the dust out of the seat of his trousers until the man cried for mercy.

"Do you think you can be a better man in Chicago and keep out of fights?" Tesla asked him. The man was sure he could. He received the money for his railroad fare and a few dollars more.

So great was Tesla's popularity in the nineties that many persons came to dine in the Palm Room at the Waldorf just to catch a glimpse of the famous inventor. He arranged to leave his offce at six, but just before leaving he would telephone the order for his dinner to the headwaiter, always insisting that none less could serve him. The meal was required to be ready at eight o'clock. In the meantime he would go to his room and array himself in formal evening attire--white tie and tails. He dined alone, except on the rare occasions when he would give a dinner to a group to meet his social obligations.

Money was always a nuisance detail to Tesla. For about fifteen years, following 1888, he always had all he needed to meet his obligations; and he lived well. After about 1902 his financial road became quite rocky--but his fame was greater than ever, and likewise the need for maintaining his standard of living if he was to recoup his fortune. He continued to stage frequent large dinners at the Waldorf to repay his social obligations, and had diffculty in accustoming himself to a money deffciency. On one occasion, when a large party was assembled in a private dining room, the headwaiter whispered to him that a most excellent dinner was prepared and ready to serve as he had ordered it, but that the credit department insisted it could not be served until he paid for it in advance. "Get Mr. Morgan on the telephone in the manager's offce and I will be down there immediately," Tesla fumed. In a short time a more-than-adequate check was delivered to Tesla by a messenger. Many such occasions are reported to have arisen, but were always straightened out in the manager's offce, usually without any outside intervention.

The closest approach to home life which Tesla enjoyed came to him through Robert Underwood Johnson diplomat and poet, and one of the editors of the Century Magazine, whose home was in Madison Avenue in the fashionable Murray Hill district. Tesla and Johnson were very close friends. A love

of poetry was one of the several interests they had in common. Johnson wrote, and published in the Century, in April, 1895, a short poem on his visit to Tesla's laboratory. This led to a cooperative enterprise in which he paraphrased many pieces of Serbian poetry from literal translations made by Tesla, who could recite many thousands of lines of such material from memory. About forty pages of these translations, with an introductory note by Tesla, appeared in the next edition of Poems by Johnson.

Persons famous in all fields of activity were frequent guests in the Johnson home, and formal dinners were constantly being held for brilliant assemblages of personalities. Tesla was present as frequently as he could be induced to come, but he preferred to avoid all formal dinners as much as possible. He was, however, a very frequent informal visitor, arriving unexpected, and often at most unusual hours. It was not uncommon for Tesla to arrive at the Johnson home after midnight, after the family had retired, and for "Bob" and "Nick" to sit up for hours reveling in the exchange of a magnificent array of ideas. (Johnson and "Willie" K. Vanderbilt, were, as has been noted, the only individuals who rated the exchange of first names with Tesla.)

Tesla's visits to the Johnson home were always many hours long. He would arrive in a hansom cab, which he always required to wait for him to return to his hotel only a few blocks distant. The Johnson children learned to take advantage of this, and when he arrived early in the evening they would get his permission to use the cab for a drive through Central Park while he chatted at home.

Tesla enjoyed the opera and at one time attended the performances quite frequently. William K. Vanderbilt's box was always available to him, as likewise were those of many other patrons of the Metropolitan. He occasionally attended the theatre. His favorite actress was Elsie Ferguson who, he declared, knew how to dress and was the most graceful woman he had ever seen on the stage. He gradually dropped both the theatre and opera in favor of the movies, but was an infrequent attendant even at those. He would not witness a tragedy but enjoyed comedy and the lighter aspects of entertainment.

One of his close friends was Rear Admiral Richmond Pearson Hobson, the Spanish American War hero. In later years,

Hobson was the only person who was able to cajole Tesla into breaking a long vigil at his intellectual pursuits for a session at the movies.

Tesla did not subscribe to any religion. Early in life he severed his relations with the Church and did not accept its doctrines. At his seventy-fifth birthday dinner he declared that that which is called the soul is merely one of the functions of the body, and that when the activities of the body cease, the soul ceases to exist.

It is difficult for a man to appear as a hero to his secretary, but to Miss Dorothy F. Skerritt, who served Tesla in this capacity for many years until he closed his offce when he was seventy, he remained a saintly superman. Her description of Tesla, at this age, records him as possessing the same magnetic personality that so impressed writers thirty years earlier. She wrote:

As one approached Mr. Tesla he beheld a tall, gaunt man. He appeared to be an almost divine being. When about 70 he stood erect, his extremely thin body immaculately and simply attired in clothing of a subdued coloring. Neither scarf pin nor ring adorned him. His bushy black hair was parted in the middle and brushed back briskly from his high broad forehead, deeply lined by his close concentration on scientific problems that stimulated and fascinated him. From under protruding eyebrows his deepset, steel gray, soft, yet piercing eyes, seemed to read your innermost thoughts. As he waxed enthusiastic about fields to conquer and achievements to attain his face glowed with almost ethereal radiance, and his listeners were transported from the commonplaces of today to imaginative realms of the future. His genial smile and nobility of bearing always denoted the gentlemanly characteristics that were so ingrained in his soul.

Until the last, Tesla was meticulously careful about his clothes. He knew how to dress well and did so. He declared to a secretary, in 1910, that he was the best-dressed man on Fifth Avenue and intended to maintain that standard. This was not because of personal vanity. Neatness and fastidiousness in clothes were entirely in harmony with every other phase of his personality. He did not maintain a large wardrobe and he wore no jewelry of any kind. Good clothes fitted in very nicely with his courtly bearing. He observed, however, that in the matter of clothes the world

takes a man at his own valuation, as expressed in his appearance, and frequently eases his way to his objective through small courtesies not extended to less prepossessing individuals.

He was partial to the waisted coat. No matter what he wore, however, it carried an air of quiet elegance. The only type of hat he wore was the black derby. He carried a cane and wore, usually, gray suede gloves.

Tesla paid $2.50 a pair for his gloves, wore them for a week and then discarded them even though they still appeared as fresh as when they came from the maker. He standardized his style of ties and always wore the four-in-hand. The design motive was of minor importance but the colors were limited to a combination of red and black. He purchased a new tie every week, paying always one dollar.

Silk shirts, plain white, were the only kind Tesla would wear. As with other articles of his clothing, such as pajamas, his initials were always embroidered on the left chest.

Handkerchiefs he purchased in large numbers because he never sent them to the laundry. After their first use they were discarded. He liked a good quality of linen and purchased a standard package brand. His collars were never laundered, either. He never wore one more than once.

Tesla always wore high-laced shoes, except on formal occasions. He required a long narrow shoe and insisted on a last that had a neatly tapered square-toe effect. His shoes were undoubtedly made to order, for the tops extended halfway up his calf, a style that could not be purchased in merchant shoe stores. His tallness in all probability made this additional support at the ankles desirable.

The single use of articles, such as handkerchiefs and collars, extended to napkins. Tesla had a germ phobia, and it acted like so much sand in the social machinery of his life. He required that the table he used in the dining room of his hotel be not used by others. A fresh table cloth was required for every meal. He also required that a stack of two dozen napkins be placed on the left side of the table. As each item of silverware and each dish was brought to him--and he required that they be sterilized by heat before leaving the kitchen--he would pick each one up, interposing

a napkin between his hand and the utensil, and use another napkin to clean it. He could then drop both napkins on the floor. Even for a simple meal, he usually ran through the full stock of napkins. Flies were his pet abomination. A fly alighting on his table was adequate cause for removing everything from the table and making an entirely new start with the meal.

Tesla was fortunate in that the headwaiter at the Waldorf-Astoria, during the period he was living there, Mr. Peterson, was afterward headwaiter at the Hotel Pennsylvania, where he later lived for several years. A story was in circulation to the effect that both at the Waldorf and at the Pennsylvania a special chef was employed to prepare Tesla's meals, but Mr. Peterson states that this story was untrue.

In his earlier years, for dinner, he greatly enjoyed fine thick steaks, preferably the filet mignon, and it was not unusual for him to consume two or three at a sitting. Later his preference turned to lamb, and he would frequently order a roast saddle of it. While the saddle was usually large enough to serve a party of several persons, as a rule he ate of it only the central portion of the tenderloin. A crown of baby lamb chops was another favorite dish. He also relished roast squab with nut stuffng. In fowl, however, his choice was roast duck. He required that it be roasted under a smothering of celery stalks. This method of preparing the duck was of his own devising. He very often made it the central motif around which a dinner was designed when entertaining friends, and on such occasions he would go to the kitchen to superintend its preparation. Duck so prepared was nevertheless delicious. Of the duck he ate only the meat on either side of the breast bone.

With the passing decades, Tesla shifted away from a meat diet. He substituted fish, always boiled, and finally eliminated the meat entirely. He later almost entirely eliminated the fish and lived on a vegetarian diet. Milk was his main standby, and toward the end of his life it was the principal item of diet, served warm.

As a youth he drank a great deal of coffee, and, while he gradually became aware that he suffered unfavorable influences from it, he found it a diffcult habit to break. When he finally made the decision to drink no more of it, he adhered to his good intentions but was forced to

recognize the fact that the desire for it remained. He combated this by ordering with each meal a pot of his favorite coffee, and having a cup of it poured so that he would get the aroma. It required ten years for the aroma of the coffee to transform itself into a nuisance so that he felt secure in no longer having it served. Tea and cocoa he also considered injurious.

He was a heavy smoker in his youth, mostly of cigars. A sister who seemed fatally ill, when he was in his early twenties, said she would try to get better if he would give up smoking. He did so immediately. His sister recovered, and he never smoked again.

Tesla drank whiskey, for this he considered a very beneffcial source of energy and an invaluable means for prolonging life. It was responsible, he believed, for the longevity enjoyed by many of his ancestors. It would enable him, he declared early in the century, to live to one hundred and fifty. When prohibition came along with the First World War, he denounced it as an intolerable interference with the rights of citizens. Nevertheless, he promptly gave up the use of whiskey and all other beverages except milk and water. He declared, however, that the elimination of whiskey would reduce his expectation of life to one hundred and thirty years.

Stimulants were not necessary to help him to think, Tesla said. A brisk walk he found much better as an aid for concentration. He seemed to be in a dream when walking. Even one whom he knew very well he would pass at close range and not see, though he might appear to be looking directly at him. His thoughts were usually miles away from where he was. It was this practice, apparently, which was responsible for the accident, in 1937, when he was struck and severely injured by a taxicab. As a matter of fact, he had stated in an interview two years earlier that he would probably be killed by a truck or taxicab while jaywalking.

Tesla's weight, stripped, was 142 pounds, and, except during brief periods of illness, hardly varied a pound from 1888 to about 1926, when he intentionally reduced his weight five pounds.

One of Tesla's indulgences, over many years, was scalp massages. He would visit a barbershop three times a week and have the barber rub his scalp for half an hour. He was

insistent upon the barber placing a clean towel on his chair but, strangely enough, he did not object to the use of the common shaving mug and brush.

Tesla always claimed that he never slept more than two hours a night. His retiring time, he said, was five am, and he would arise at ten am after spending only two hours in sleep, three hours being too much. Once a year, he admitted, he would sleep for five hours--and that would result in building up a tremendous reserve of energy. He never stopped working, he claimed,--even when asleep. Tesla laughed at Edison's claim that he slept only four hours a night. It was a regular practice with Edison, he said, to sit down in his laboratory and doze off into a three-hour nap about twice a day. It is possible that Tesla, too, obtained some sleep in a similar fashion, perhaps without being conscious of the fact. Hotel employees have related that it was quite common to see Tesla standing transfixed in his room for hours at a time, so oblivious to his surroundings that they were able to work around his room without his being, apparently, aware of their presence.

Tesla always provided his offce with a separate washroom which no one but himself was permitted to use. He would wash his hands on the slightest pretext. When he did so, he required that his secretary hand him a freshly laundered towel each time to dry them.

He went to extremes to avoid shaking hands. He usually placed his hands behind his back when anyone approached who he feared might make an effort to shake hands, and this frequently led to embarrassing moments. If by chance a visitor to his offce should catch him off guard and shake his hand, Tesla was so upset that he would be unable to pay attention to the visitor's mission and frequently would dismiss him before it was completely stated; and immediately he would rush to the washroom and scour his hands. Workmen eating their lunch with dirty hands almost nauseated him.

Pearls, too, were one of Tesla's phobias. If a woman guest at a dinner party to which he was invited wore pearls, he was unable to eat. Smooth round surfaces, in general, were an abomination to him; it had even taken him a long time to learn to tolerate billiard balls.

Tesla never knew the experience of having a headache. In spite of a number of cases of serious illness, in his independent years he was never attended by a doctor.

There were reasons for practically all of Tesla's phobias, not all of them generally known. His germ phobia can be traced back to his two serious illnesses early in life, both of which were probably cholera, a disease constantly prevalent in his native land, caused by a germ transmitted by impure drinking water and by contact between individuals.

Tesla was not oblivious of his idiosyncrasies; he was quite aware of them and of the friction which they caused in his daily life. They were an essential part of him, however, and he could no more have dispensed with them than he could his right arm. They were probably one of the consequences of his solitary mode of life or, possibly, a contributing cause of it.

6NINETEEN

Tesla's mind always seemed to be under an explosive pressure. An avalanche of ideas was forever straining for release. He seemed to be unable to keep up with the flood of his own thoughts. He never had suffcient facilities to keep his accomplishments equal to his projects. If he had an army of adequately trained assistants, he would still be insuffciently equipped. As a result, those associated with him always experienced a sense of "drive"; yet he was a most generous employer both in the matter of wages paid and the number of hours of work required. He frequently demanded overtime work but always paid generously for it.

Nevertheless, Tesla was not an easy man to work for. He was most meticulously neat in his personal affairs and required all workers to be the same. He was an excellent mechanic and set extremely high standards, by his own accomplishments, for all work done in his shops. He greatly admired cleverness in his assistants, frequently rewarding them with extra compensation for diffcult jobs well done,

but was extremely impatient with stupidity and carelessness.

Although Tesla maintained a staff of draughtsmen, he never used them in his own design work on machines, and tolerated them only because of unavoidable contacts with other organizations. When having machines constructed for his own use, he would give individual instruction on each part. The workman scheduled to do the machinework would be summoned to Tesla's desk, where the inventor would make an almost microscopically small sketch in the middle of a large sheet of paper. No matter how detailed the piece of work, or its size, the sketch was always less than one inch in its largest dimensions. If Tesla made the slightest slip of the pencil in drawing the sketch, he would not make an erasure but would start over on another sheet of paper. All dimensions were given verbally. When the drawing was finished, the workman was not permitted to take it with him to the shop to guide him in his work. Tesla would destroy the drawing and require the machinist to work from memory. Tesla depended entirely on his memory for all details, he never reduced his mentally completed plans to paper for guidance in construction--and he believed others could achieve this ability if they would make suffcient effort. So he sought to force them to try by insisting on their working without drawings.

All those who worked with Tesla greatly admired him for his remarkable ability to keep track of a vast number of finest details concerning every phase of the many projects he had under way simultaneously. No employee was ever given any more information than was absolutely essential for completing a project. No one was ever told the purposes for which a machine or article was to be used. Tesla claimed that Edison received more ideas from his associates than he contributed, so he himself bent over backward to avoid this situation. He felt that he was the richest man in the world in the matter of ideas and needed none from anyone else; and he intended to prevent all from contributing any.

Tesla was probably very unfair to Edison in this respect. The two men were entirely different and distinct types. Tesla was totally lacking in the university type of mind; that is, the mind which is adapted to cooperate with others in acquiring knowledge and conducting research. He could neither give nor receive, but was entirely adequate to his own requirements. Edison had more of the cooperative, or

executive, type of mind. He was able to attract brilliant associates and to delegate to them major portions of his inventive research projects. He had the ability to act as a catalyzer, to stimulate them to creative mental activities, and thus multiply his own creative abilities. If Tesla had possessed this ability, his record of accomplishment would have been tremendously magnified.

The inability to work with others, the inability to share his plans, was the greatest handicap from which Tesla suffered. It completely isolated him from the rest of the intellectual structure of his time and caused the world to lose a vast amount of creative thought which he was unable to translate into complete inventions. It is a duty of a master to train pupils who will carry on after him--but Tesla refused to accept this responsibility. Had Tesla, in his most active period, associated with him a half-dozen brilliant young scientists, they would have been in a position to link him with the engineering and scientific worlds from which, despite his eminence and his outstanding accomplishments, he was to a great extent isolated because of his unusual personal characteristics. His fame was so secure that the success of his assistants could not have detracted from it; but the master would have shone more brightly in the brilliant accomplishments of his pupils. He might well have attracted some practical young men who could have aided him by assuming the burden of making practical application of some of the minor but important inventions from which he could have earned suffcient profit to pay the cost of maintaining his laboratories. Many scores of important inventions have undoubtedly been lost to the world because of Tesla's intellectual hermit characteristics. Undoubtedly, he indirectly inspired many young men to become inventors.

Tesla responded powerfully to personal idiosyncrasies in individuals with whom he worked. When his reaction was unfavorable, he was unable to tolerate the presence of the person within eyeshot. When carrying on his experimental work at the Allis Chalmers plant in Milwaukee, for example, he did not increase his popularity by insisting that certain workers be dropped from the crew working on the turbine because he did not like their looks. Since, as noted earlier, he had already antagonized the engineers in that plant by going over their heads to the president and board of directors, the turbine job went forward in something less than a cooperative atmosphere.

Tesla was thoroughly impractical throughout, too, in handling money matters. When he was working on the Union Sulphur Company turbine project, a ship was made available for his use, free, during the day; but if he worked after six pm it would cost him $20 per hour. He never showed up at the ship until six o'clock. Every night, in addition, he had to hand out $10 for suppers for the crew. In the course of a year these costs totaled about $12,000, which must have cut heavily into the retainer he received. Nor were these his only additional expenses. Almost every night he handed a $5 tip to his principal assistants among the crew, and once a week to all members of the crew. These manifestations of generosity were not, of course, a total loss to Tesla; they might rather be classed as necessities, for he was very dictatorial in directing his assistants.

Inquiries among the employees at hotels where he lived revealed that he had a reputation for acting in a most cavalier manner toward the servants. He was almost cruel in the manner in which he ordered them around, but would make immediate compensation by the generous tips he bestowed.

He was always, however, very considerate of women, and even men, on his offce staff. If any one of them did an unusually fine piece of work, everyone on the staff was informed of it. Criticism was always delivered privately to the individual involved.

Tesla had a standing rule that every messenger boy who came to his offce was to receive a tip of twenty-five cents, and he set aside a fund of $10 a week for this purpose.

If necessity required that he keep his staff of young women secretaries and typists working overtime for several hours, he would provide them with a dinner at Delmonico's. He would hire a cab for the girls and would follow them in another cab. After making arrangements to pay the bill, and paying the tip in advance, he would leave.

Tesla timed his arrival at the offce so that he entered at the stroke of noon. He required that his secretary should be standing immediately inside the door to receive him and take his hat, cane and gloves. His offces were opened by nine o'clock each morning, so all routine matters would be handled before his arrival. Before Tesla arrived, all the shades in the offce had to be drawn so that no outdoor

light was admitted and night conditions were simulated. The inventor, as remarked, was a "sun dodger." He appeared to be at his best at night and at some kind of disadvantage in daylight; at any rate, he preferred the night for work and what he called his recreation.

The only time Tesla would permit the shades of his offce to be raised was when a lightning storm was raging. The various offces he leased faced on open spaces. The 8 West 40th Street offce was on the south side of Bryant Park, in the east end of which was the low-roofed structure that housed the New York Public Library. From his windows on the twentieth floor, he could look beyond the city roof scape below him and obtain a broad view of the sky.

When the rumbles of distant thunder announced that the fireworks of the sky would presently be flashing, it was not only permissible to raise the shades--it was obligatory. Tesla loved to watch lightning flash. The black mohair couch would be drawn close to the windows so that he could lie on it, completely relaxed, while his vision commanded a full view of the northern or the western sky. He was always talking to himself, but during a lightning storm he would become eloquent. His conversation on such occasions was never recorded. He wished to be a lone observer of this gorgeous spectacle, and his secretaries were quite willing that he should be so accommodated. By finger measurements and counting seconds he was able to calculate the distance, length and voltage of each flash.

How thrilled Tesla must have been by these tremendous sparks, many times longer than he had been able to produce in his Colorado Springs laboratory! He had successfully imitated Nature's electrical fireworks, but he had not as yet exceeded her performance.

The ancient Romans sublimated their frustrations by the forces of Nature by creating the mental concept of their mightiest god, Jupiter, as one endowed with the power of creating lightning and hurling his bolts at earth. Tesla had refused to accept frustration; but, like the ancient Romans, he too set up a mental concept, a superman not inferior to the Romans' ruling god, who would control the forces of Nature. Yes, Tesla thoroughly enjoyed a lightning storm. From his mohair couch, he used to applaud the lightning; he approved of it. He may even have been a little bit jealous.

Tesla never married; no woman, with the exception of his mother and his sisters, ever shared the smallest fraction of his life. He idolized his mother and admired his sisters for their intellectual accomplishments. One of his sisters, Marica, exhibited unusual ability as a mathematician and had greater ability than his own for memorizing long passages from books. He attributed to his mother most of his abilities as an inventor, and he continuously spoke in praise of her ability to contrive useful gadgets for the household, often regretting that she had not been born into an environment in which she would have been able to manifest to a larger world her many creative talents. He was not unaware of the values which a woman could bring into a man's life, for he had ever before him the vast contributions which his mother made to his father's welfare and happiness. However, he lived instead a blueprint life, one which he had planned in his early youth, one designed along engineering lines, with all of the time and energies available to be directed to invention and none to be dissipated on emotional projects.

From the romantic point of view, Tesla as a young man was not unattractive. He was too tall and slender to pose as the physical Adonis, but his other qualifications more than compensated for this possible defect. He was handsome of face, had a magnetic personality, but was quiet, almost shy; he was soft spoken, well educated and wore clothes well in spite of inadequate funds with which to keep up a wardrobe. However, he avoided romantic encounters, or any situations that would lead up to them, just as assiduously as other young men sought them. He would not permit his thoughts to wander into romantic channels, and with thoughts successfully controlled, action control became a problem of vanishing magnitude. He did not develop an antagonism to women; he solved the problem, instead, by idealizing them.

A typical instance of how he avoided romance is furnished by an incident that occurred in Paris when he returned to that city to give a lecture on his alternating-current system after he had become world famous. His wonderful discoveries were the principal topic of conversation of the day, and he was the cynosure of all eyes wherever he went. The situation was entirely pleasant to Tesla. Less than ten years before, the executives the Continental Edison Company, in that city, had not alone rejected the

alternating-current system he had offered them but had cheated him of his just earnings. Now he was returning to that city after receiving recognition and wealth in the United States and fame throughout the world. He was in Paris as a returned hero and the world was at his feet.

As he sat in an outdoor cafe; with a young male friend, amidst a chattering, fashionably dressed crowd, a graceful, gorgeously gowned young woman, with a stylishly coiffured crown of red hair, whom he instantly recognized as Sarah Bernhardt, the famous French actress--the "divine Sarah"--swung close to his table and when a few feet away very auspiciously dropped a tiny lace handkerchief.

Tesla was on his feet in an instant. He recovered the handkerchief, and with his hat in his other hand, bowing low from the waist, he handed the wisp of lace to the beautiful tragedienne, saying: "Mademoiselle, your handkerchief." Without even an upward glance at her graciously smiling face, he returned to his chair and resumed his conversation about his experiments on a world wireless system of power transmission.

When a newspaper reporter once asked Tesla why he had not married, his reply, as contained in the published interview was:

I have planned to devote my whole life to my work and for that reason I am denied the love and companionship of a good woman; and more, too.

I believe that a writer or a musician should marry. They gain inspiration that leads to finer achievement.

But an inventor has so intense a nature, with so much in it of wild, passionate quality that, in giving himself to a woman, he would give up everything, and so take everything from his chosen field: It is a pity, too; sometimes we feel so lonely.

In my student days I have known what it was to pass forty-eight hours at a stretch at a gaming table, undergoing intense emotion, that which most people believe is the strongest that can be known, but it is tame and insipid compared with that sublime moment when you see the labor of weeks fructify in a successful experiment that proves your theories. . . .

"Many times has Nikola Tesla known that supreme happiness," said the interviewer, "and he is likely to know it often again. It is impossible that his life work can be finished at forty. It would seem that his powers are only reaching their maturity."

Tesla was not unappreciative of the activities of the many women who showed a sincere interest in his welfare, and who tried to make life tolerable and pleasant for an obviously none-too-well-adjusted scientist projected into a social world from which he would have been only too willing to escape. He spoke glowingly of the first Mrs. Clarence Mackay (e Duer), Mrs. Jordan L. Mott, and of the beauty of Lady Ribblesdale (the former Mrs. John Jacob Astor). He admired the energetic idealism of Miss Anne Morgan; but never was the situation brightened by a single tint of romance.

He was impressed by the tall, graceful and charming Miss Marguerite Merington, a talented pianist and writer on musical subjects, who was a frequent dinner guest at the Johnson home.

"Why do you not wear diamonds and jewelry like other women?" Tesla undiplomatically asked Miss Merington, one evening.

"It is not a matter of choice with me," she replied, "but if I had enough money to load myself with diamonds I could think of better ways of spending it."

"What would you do with money if you had it?" the inventor continued.

"I would prefer to purchase a home in the country, except that I would not enjoy commuting to the suburbs," Miss Merington replied.

"Ah! Miss Merington, when I start getting my millions I will solve that problem. I will buy a square block here in New York and build a villa for you in the center and plant trees all around it. Then you will have your country home and will not have to leave the city."

Tesla was most generous in the distribution of his always still-to-be-gotten millions; none of his friends would ever

have lacked anything they desired if he had had suffcient funds with which to satisfy their wishes. His promises, however, were always to be fulfilled--"When I start getting my millions."

Tesla had, as might be expected, very definite ideas about how women should dress. He also had clear-cut ideas about the feminine figure. He disliked the big "hefty" type and utterly detested fat women. The super-upholstered type, flashily dressed and heavily jeweled, that wasted time in hotel lobbies, were his pet abomination. He liked women trim, slim, graceful and agile.

One of his secretaries, well proportioned and a graceful blonde, wore to the offce one day a dress that was in the very latest style. It was a summer dress made from a pretty print. The prevailing style called for an extremely low waist line, well down on the hips, several inches below its natural location. This gave a relatively short skirt and from the neck to the hips the dress was almost a plain cylinder. The style was very new, and was enjoying an intense but brief wave of popularity. The secretary was an excellent seamstress and had made the dress herself, an accomplishment of which she was justly proud.

Tesla summoned the secretary. She breezed into his sanctum not expecting, but hoping, that he would say something nice about her new dress.

"Miss," he said, "what is that you are wearing? You cannot wear that on this errand on which I wish you to go. I wished to have you take a note to a very important banker down town, and what would he think if someone from my offce should come to him wearing such a monstrosity of a gown? How can you be such a slave to fashion? Whatever the fashion designers say is the style you buy and wear. Miss, you have good sense and good taste, so why did you let the saleslady in the store force a dress like this on you? Now if you were also very clever like my sister who makes all her own dresses you would not be forced to wear any such abominable style as this, then you too could make your own clothes and you could wear sensible gowns. You should always follow nature in the design of your clothes. Do not let a style designer deform nature for you, for then you become hideous instead of attractive. Now, Miss, you get into a cab, so not many people will see you, and go to your

home and get into a sensible dress and return as soon as you can so you can take this letter down town for me."

Tesla never addressed any of his woman employees by either their Christian names or surnames. The only form of address he used to them was "Miss." As he spoke it, it sounded like "Meese," and he could make it very expressive. When he addressed the secretary wearing the gown of which he disapproved, it sounded like "Meeeeeeesssse." It could also be an abrupt, abbreviated expletive.

When a young woman on his office staff left his employ to get married, Tesla preached this sermonette to the remaining members:

"Do not marry too young. When you marry too young, men marry you mostly for your beauty and ten years later when your beauty is gone, they tire of you and become interested in someone else."

Tesla's attitude toward woman was paradoxical; he idealized woman--put her up on a pedestal--and yet he also viewed women in a purely objective and materialistic way, as if no spiritual concepts were involved in their make-up. This was undoubtedly an outward expression of the conflict that was taking place within his own life, between the normal healthy attitude toward female companionship, and the coldly objective planning of his life under which he refused to share the smallest fraction of his life with any woman.

Only the finest type of women could approach within friendship distance of Tesla, and such individuals were idealized by him without the least diffculty; he could desex them mentally so that the vector or emotional attraction was eliminated. To the remainder he did not bother to apply this process. They had no attraction for him.

Out of the welter of human affairs, however, he visioned the rising of a superior breed of human beings, few in number but of vastly elevated intellectual status, while the remainder of the race leveled itself on a merely productive and reproductive plane, which, however, could represent a considerable improvement over existing conditions. He sought to fashion an idealism out of purely materialistic concepts of human nature. This was a hold-

over from the materialistic, agnostic views which were fashionable and prevalent among scientists in the formative period of his youth. This phase of his attitude was not particularly hard to break down in his latter years; but the phase which represented an engineering approach to the solution of problems of the human race was more firmly held, although he was willing to admit that spiritual factors had a real existence and should be considered in such planning.

His views concerning women received their only expression in published form in the article written for Collier's, in 1924, by John B. Kennedy, from an interview with Tesla. On this occasion, he said:

The struggle of the human female toward sex equality will end up in a new sex order, with the females superior. The modern woman, who anticipates in merely superficial phenomenon the advancement of her sex, is but a surface symptom of something deeper and more potent fomenting in the bosom of the race.

It is not in the shallow physical imitation of the men that women will assert first their equality and later their superiority, but in the awakening of the intellect of women.

But the female mind has demonstrated a capacity for all the mental acquirements and achievements of men, and as generations ensue that capacity will be expanded; the average woman will be as well educated as the average man, and then better educated, for the dormant faculties of her brain will be stimulated into an activity that will be all the more intense because of centuries of repose

Women will ignore precedent and startle civilization with their progress.

The acquisition of new fields of endeavor by women, their gradual usurpation of leadership, will dull and finally dissipate feminine sensibilities, will choke the maternal instinct so that marriage and motherhood may become abhorrent and human civilization draw closer and closer to the perfect civilization of the bee.

The significance of this lies in the principle dominating the economy of the bee--the most highly organized and

intelligently coordinated system of any form of non-rational animal life--the all governing supremacy of the instinct for immortality which makes divinity out of motherhood.

The center of all bee life is the queen. She dominates the hive, not through hereditary right, for any egg may be hatched into a reigning queen, but because she is the womb of the insect race.

There are vast desexualized armies of workers whose sole aim and business in life is hard work. It is the perfection of communism, of socialized, cooperative life wherein all things, including the young, are the common property of all.

Then there are the virgin bees, the princess bees, the females which are selected from the eggs of the queen when they are hatched and preserved in case an unfruitful queen should bring disappointment to the hive. And there are the male bees, few in number, unclean in habit, tolerated only because they are necessary to mate with the queen. . . .

The queen returns to the hive, impregnated, carrying with her tens of thousands of eggs--a future city of bees, and then begins the cycle of reproduction, the concentration of the teeming life of the hive in unceasing work for the birth of the new generation.

Imagination falters at the prospect of a human analogy to this mysterious and superbly dedicated civilization of the bee; but when we consider how the human instinct for race perpetuation dominates life in all its normal and exaggerated and perverse manifestations, there is ironic justice in the possibility that this instinct, with the intellectual advance of women, may be finally expressed after the manner of the bee, though it will take centuries to break down the habits and customs of peoples that bar the way to such a simply and scientifically ordered civilization.

If Tesla had been even half as well informed in the biological sciences as he was in the physical sciences, he probably would not have seen a possible solution of human problems in the social structure adapted to the limitations of an insect species which can never hope to utilize tools, and draw upon natural forces vastly exceeding their own

energy sources, to work out their destiny. And more important is the fact that the bees can never hope to use advanced intellectual powers to improve their biological status, as can the human race. With a better knowledge of biological sciences he might have discovered that the physiological processes that control perpetuation of the individual are indissolubly linked to the processes that control the perpetuation of the race, and that by utilizing as much biological knowledge and spiritual insight, in designing a superman, as he utilized materialistic engineering principles, he might have designed himself as a more complete and potent superman, better adjusted to merging his intellectual creations into the current life of the race through a better understanding of human affairs.

Tesla tried to convince the world that he had succeeded in eliminating love and romance from his life; but he did not succeed. That failure (or perhaps from another aspect it was a success), is the story of the secret chapter of Tesla's life.

TWENTY

THE most obvious outward characteristic of Tesla's life was his proclivity for feeding pigeons in public places. His friends knew he did it but never knew why. To the pedestrians on Fifth Avenue he was a familiar figure on the plazas of the Public Library at 42nd Street and St. Patrick's Cathedral at 50th Street. When he appeared and sounded a low whistle, the blue- and brown- and white-feathered flocks would appear from all directions, carpet the walks in front of him and even perch upon him while he scattered bird seed or permitted them to feed from his hand.

During the last three decades of his life, it is probable that not one out of tens of thousands who saw him knew who he was. His fame had died down and the generation that knew him well had passed on. Even when the newspapers, once a year, would break out in headlines about Tesla and his latest predictions concerning scientific wonders to come, no one associated that name with the excessively tall, very lean man, wearing clothes of a bygone era, who almost daily appeared to feed his feathered friends. He was just one of the strange individuals of whom it takes a great many of varying types to make up a complete population of a great metropolis.

When he started the practice, and no one knows just when that was, he was always dressed in the height of fashion and some of the world's most famous figures could frequently be seen in his company and joining him in scattering the bird seed, but there came a time when he paid less attention to his clothes, and those he wore became more and more old fashioned.

Fifth Avenue after midnight is a far different thoroughfare than the busy artery of human and vehicular traffic it is during the day. It is deserted. One can walk for blocks and meet no one except a policeman. On several occasions the author, by chance, met Tesla on an after-midnight walk up Fifth Avenue, going toward the library. Usually Tesla was quite willing to have one walk with him and chat upon a street encounter during the day, but on these after-midnight occasions he was definite about his desire to be left alone. "You will leave me now," he would say, bringing an abrupt end to a conversation hardly begun. The natural assumption was that Tesla was engaged on a definite line of thought and did not wish his mind to be diverted from its concentration on some knotty scientific problem. How far this was from the truth! And, as I learned much later, what a sacred significance these midnight pilgrimages to feed the pigeons--which would come to his call, even from their nocturnal roost--had for him!

It was hard for almost everyone to understand why Tesla, engaged in momentous scientific developments, working twice as many hours as the average individual, could see his way clear to spend time scattering bird seed. The Herald Tribune, in an editorial, once stated: "He would leave his experiments for a time and feed the silly and inconsequential pigeons in Herald Square."

It was a routine procedure in Tesla's offce, however, for one of his secretaries to go down town on a given day each week and purchase three pounds each of rape, hemp and canary seed. This was mixed in his offce, and each day he took a small paper bag filled with the seed and started on his rounds.

If, on any day, he was unable to make his pigeon-feeding rounds, he would call a Western Union messenger boy, pay him his fee, plus a dollar tip, and send him to feed the birds.

In addition to feeding the birds in the streets, Tesla took care of pigeons in his rooms in the various hotels in which he made his home. He usually had basket nests for from one to four pigeons in his room and kept a cask of seed on hand to feed them. The window to the room in which he kept these nests was never closed.

Tesla became quite ill in his 40th Street offce, one day in 1921. He was unable to work and lay upon his couch. As the symptoms became more alarming and there was a possibility that he might not be able to return to his room in the Hotel St. Regis, he summoned his secretary to give her an "important" message. As he spoke the important message, he required the secretary to repeat each phrase after him to make sure that no errors would be made. This required repetition was a usual procedure with him; but in this case he was so ill, practically prostrate, that he seemed hardly to have energy enough to speak the message a single time.

"Miss," he whispered, "Call Hotel St. Regis--"

"Yes sir," she responded, "Call Hotel St. Regis--"

"Get the housekeeper on the fourteenth floor--"

"Get the housekeeper on the fourteenth floor--"

"Tell her to go to Mr. Tesla's room--"

"Tell her to go to Mr. Tesla's room--"

"And feed the pigeon today--"

"And feed the pigeon today--"

"The white female with touches of light gray in its wings--"

"The white female with touches of light gray in its wings--"

"And to continue doing this--"

"And to continue doing this--"

"Until she receives further orders from me--"

"Until she receives further orders from me--"

"There is plenty of feed in Mr. Tesla's room."

"There is plenty of feed in Mr. Tesla's room."

"Miss," he pleaded, "this is very important. Will you repeat the whole message to me so I can be sure you have it correct."

"Call Hotel St. Regis; get the housekeeper on the fourteenth floor. Tell her to go to Mr. Tesla's room and feed the pigeon today, the white female with touches of light gray on its wings, and continue doing this until she receives further orders from me. There is plenty of feed in Mr. Tesla's room."

"Ah, yes," said Tesla, his eyes brightening as he spoke, "the white one with touches of light gray in its wings. And if I am not here tomorrow, you will repeat that message then and every day until you get my further orders. Do it now, Miss--it is very important."

Tesla's orders were always carried out to the letter and this one particularly, since he had placed such unusual emphasis on it. His secretary and the members of his staff felt that his illness must be more serious than it seemed to be, since at a time when he had a great many very serious problems on his hands and he appeared to be on the verge of a siege of illness, the more pressing situations were completely forgotten and his only thought was of a pigeon. He must be delirious, so they thought.

Some months later Tesla failed one day to show up at his offce, and when his secretary telephoned to his hotel, the inventor informed her that he was all right, but that his pigeon was ill and he dared not leave the room for fear she would need him. He remained in his room for several days.

About a year later Tesla came to his offce earlier than usual one day, and apparently very much disturbed. He carried a small bundle in a tender manner on his bent arm. He telephoned to Julius Czito, a machinist on whom he frequently depended to perform unusual tasks, and asked him to come to the offce. Czito lived in the suburbs. He told him briefly that the bundle contained a pigeon that had

died in his room at the hotel, and that he desired to have it properly buried on Czito's property where the grave could be cared for. Czito, in relating the incident years afterward, said he was tempted, on leaving the offce, to drop the package in the first garbage can he found; but something caused him to desist and he took it to his home. Before he could perform the burial, Tesla telephoned to his home and asked him to return the package the next morning. How Tesla disposed of it is not known.

In 1924 Tesla's financial condition fell to a very low level. He was completely broke. He was unable to pay his rent and there were some judgments against him for other unpaid bills. A deputy sheriff appeared at his offce one afternoon to seize everything in the offce to satisfy a judgment. Tesla managed to talk the sheriff into delaying seizure. When the offcial had gone he took stock of his situation. He had not paid his secretaries' wages for two weeks and he now owed them for another fraction of a week. He was entirely without funds in the bank. A search of his safe disclosed that the only object of negotiable value was the heavy gold Edison Medal presented to him by the American Institute of Electrical Engineers in 1917.

"Miss, and Miss," he said, addressing the secretaries. "This medal contains about one hundred dollars' worth of gold. I will have it cut in half and give each of you one-half, or one of you can take all of it and I will later pay the other."

The two young women, Miss Dorothy F. Skerritt and Miss Muriel Arbus, refused to permit him either to damage or part with the medal, and offered instead to aid him with the meager amounts of cash they had in their purses, which offer he refused with thanks. (A few weeks later the girls received their back salaries, at $35 per week, and an additional two weeks' salary.)

A search of the cash drawer revealed a little over $5.00--all the money he possessed.

"Ah! Miss," he said, "that will be enough to buy the bird seed. I am all out of seed, so will you go down town in the morning and purchase some and deliver it to my hotel."

Again calling his trusted aide, Czito (whom he was forced to leave unpaid to the extent of $1,000), he put up to him

the problem of vacating the offce immediately. Within a few hours the entire contents of the offces were stored in a near-by offce building.

A short time later he was forced to leave his apartment in the Hotel St. Regis. His bill had been unpaid for some time, but the immediate cause was associated with pigeons. He had been spending more time in his hotel room, which also became his offce, and devoted more time to feeding pigeons. Great flocks of them would come to his windows and into the rooms, and their dirt on the outside of the building became a problem to the management and on the inside to the maids. He sought to solve the problem by putting the birds in a hamper and having George Scherff take them to his Westchester home. Three weeks later, when first given their freedom, they returned, one making the trip in half an hour. Tesla was given his choice of ceasing to feed the pigeons or leaving the hotel. He left.

He next made his home at the Hotel Pennsylvania. He remained there a few years and the same situation, both as to bills and pigeons, developed. He moved to the Hotel Governor Clinton--and in about a year went through the same experience. He next moved to the Hotel New Yorker, in 1933, where he spent the final ten years of his life.

After midnight one night in the fall of 1937, Tesla started out from the Hotel New Yorker to make his regular pilgrimage to the Cathedral and the Library to feed the pigeons. In crossing a street a couple of blocks from the hotel an accident happened, how is unknown. In spite of his agility, he was unable to avoid contact with a moving taxicab, and was thrown heavily to the ground. He raised no question as to who was at fault, refused medical aid, and asked merely to be taken to his hotel in another cab.

Arriving at the hotel, he went to bed and had scarcely got under the covers when he telephoned for his favorite messenger boy, Kerrigan, from a near-by Western Union offce, gave him the package of bird seed and directed him to complete the task which he had started and the accident interrupted.

The next day, when it was apparent that he would be unable to take his usual daily walks for some time to come, he hired the messenger for six months to feed the pigeons every day. Tesla's back had been severely wrenched in the

accident, and three ribs broken, but the full extent of his injuries will never be known for, in keeping with his almost lifelong custom, he refused to consult a doctor. Pneumonia developed but for this he also refused medical aid. He was bedridden for some months, and was unable to carry on his practice of feeding pigeons from his window; and soon they failed to come.

In the spring of 1938 he was able to get up. He at once resumed his pigeon-feeding walks on a much more limited scale, but frequently had a messenger act for him.

This devotion to his pigeon-feeding task seemed to everyone who knew him like nothing more than the hobby of an eccentric scientist, but if they could have looked into Tesla's heart, or read his mind, they would have discovered that they were witnessing the world's most fantastic, yet tender and pathetic love affair.

Tesla, as a self-made superman, suffered from the limitations of his maker. Endowed with an intelligence above the average in both quality and quantity, and with some supernormal faculties, he was able to erect a superman higher in stature than himself; but the greater height was attained by sacrificing other dimensions, and in this diminution of breadth and thickness existed a deffciency.

When he was a youth and his mind was in its most plastic and formative stage, he adopted, as we have seen, the then prevalent agnostic and materialistic view of life. Today science has emancipated itself from slavery to either an antagonistic mysticism or materialism, and is willing to consider both as harmonious parts of a comprehensive approach to the understanding of Nature, but is conscious that it has not yet learned how to manipulate or control the more intangible factors upon which the mystics have builded their structures of knowledge. Vast realms of human experience have been rejected in all ages by scientists, of whatever name, who failed to fit them in logical arrangement in their inadequate and too simplified natural philosophies. By rejecting the phenomena that lay beyond their intellectual abilities, the scientists and philosophers did not eliminate them nor prevent their manifestations. The phenomena so rejected, however, were given an academic home by the ecclesiasts, who accepted them without understanding, or hope of understanding, and thus incarcerated them in the foundation of the religious

mysteries where they served a useful purpose, for upon an unknown it is possible to build a greater unknown.

The mystical experiences of the saints, of whatever faith, are demonstrations of forces which are natural functions of the phenomenon of life, expressed in varying degree in step with the expanding unfoldment of the individual toward an advanced state of evolution.

Tesla was an individual in an advanced state of development, and there came to him experiences which he refused to accept as experiments; accepting the benefits which came to him but which transported them. This was true, for example, in the case of the burst of revelation which came to him revealing scores of tremendously valuable inventions--while he strolled in the park at Budapest, and which differed only in degree and type, but not in fundamental nature, from the blinding light which came to Saul on the road to Damascus, and to others to whom illumination has come by similar processes.

His materialistic concepts made him intellectually blind to the strange phenomenon by which revelation, or illumination, had come to him, but made him more keenly appreciative of the value of that which was revealed. It must not be understood that this revelation was a happenstance phenomenon of the moment, for Tesla, endowed by Nature with an intellect capable of vast unfoldment, had exerted almost superhuman efforts to achieve that which was revealed to him, and the effort was not unassociated with the result.

In a contrary direction, Tesla suppressed a tremendously large or important realm of his life by the planned elimination of love and romance from his thoughts and experience. Just as his efforts to discover the physical secrets of Nature built up forces that penetrated to the plane of revelation, so did his equally tremendous effort to suppress love and romance build up forces, beyond his control, that were operating to express themselves. There was a parallel situation in his philosophy of natural phenomena, in that he suppressed all spiritual aspects of Nature and confined himself to the purely materialistic aspects.

Two forces, one of love and romance in his personal nature, and the other the spiritual aspects of Nature in his

philosophy, as applied to his work, were incarcerated in a limbo of his personality, seeking an outlet into the paradise of expression and manifestation. And they obtained that outlet, expressing their nature by the form of the manifestation; but Tesla failed to recognize them. Tesla, rejecting the love of woman and thinking that he had engineered a complete elimination of the problem of love, failed to excise from his nature the capacity to love, and when this capacity expressed itself, it did so by directing its energies through a channel he left unguarded in planning the self-made superman.

The manifestation of these united forces of love and spirituality resulted in a fantastic situation, probably without parallel in human annals. Tesla told me the story; but if I did not have a witness who assured me that he heard exactly what I heard, I would have convinced myself that I had had nothing more tangible than a dream experience. It was the love story of Tesla's life. In the story of his strange romance, I saw instantly the reason for those unremitting daily journeys to feed the pigeons, and those midnight pilgrimages when he wished to be alone. I recalled those occasions when I had happened to meet him on deserted Fifth Avenue and, when I spoke to him, he replied, "You will now leave me." He told his story simply, briefly and without embellishments, but there was still a surging of emotion in his voice.

"I have been feeding pigeons, thousands of them, for years; thousands of them, for who can tell--

"But there was one pigeon, a beautiful bird, pure white with light gray tips on its wings; that one was different. It was a female. I would know that pigeon anywhere.

"No matter where I was that pigeon would find me; when I wanted her I had only to wish and call her and she would come flying to me. She understood me and I understood her.

"I loved that pigeon.

"Yes," he replied to an unasked question. "Yes, I loved that pigeon, I loved her as a man loves a woman, and she loved me. When she was ill I knew, and understood; she came to my room and I stayed beside her for days. I nursed her back to health. That pigeon was the joy of my life. If she

needed me, nothing else mattered. As long as I had her, there was a purpose in my life.

"Then one night as I was lying in my bed in the dark, solving problems, as usual, she flew in through the open window and stood on my desk. I knew she wanted me; she wanted to tell me something important so I got up and went to her.

"As I looked at her I knew she wanted to tell me--she was dying. And then, as I got her message, there came a light from her eyes--powerful beams of light.

"Yes," he continued, again answering an unasked question, "it was a real light, a powerful, dazzling, blinding light, a light more intense than I had ever produced by the most powerful lamps in my laboratory.

"When that pigeon died, something went out of my life. Up to that time I knew with a certainty that I would complete my work, no matter how ambitious my program, but when that something went out of my life I knew my life's work was finished.

"Yes, I have fed pigeons for years; I continue to feed them, thousands of them, for after all, who can tell--"

There was nothing more to say. We parted in silence. The talk took place in a corner of the mezzanine in the Hotel New Yorker. I was accompanied by William L. Laurence, science writer of the New York Times. We walked several blocks on Seventh Avenue before we spoke.

No longer was there any mystery to the midnight pilgrimages when he called the pigeons from their niches in the Gothic tracery of the Cathedral, or from under the eaves of the Greek temple that houses the Library--pursuing, among the thousands of them . . . "For after all, who can tell . . .?"

It is out of phenomena such as Tesla experienced when the dove flew out of the midnight darkness and into the blackness of his room and flooded it with blinding light, and the revelation that came to him out of the dazzling sun in the park at Budapest, that the mysteries of religion are built. But he comprehended them not; for, if he had not suppressed the rich mystical inheritance of his ancestors

that would have brought enlightenment, he would have understood the symbolism of the Dove.

ACKNOWLEDGMENTS

MUCH valuable aid has been received from many sources in the preparation of this volume. For this helpful co-operation my thanks are due to:

Sava N. Kosanovic, Minister of State of Yugoslavia, and Tesla's nephew, for making available books, family records, transcripts of records, pictures, and for correcting the manuscript of many chapters; and to his secretary, Miss Charlotte Muzar;

Miss Dorothy Skerritt and Miss Muriel Arbus, Tesla's secretaries; and George Scherff and Julius C. Czito, business associates;

Mrs. Margaret C. Behrend, for the privilege of reading correspondence between her husband and Tesla; and to Dr. W. B. Earle, Dean of Engineering, Clemson Agricultural College, for pictures and other material from the Behrend Collection in the college library;

Mrs. Agnes Holden, daughter of the late Robert Underwood Johnson, ambassador, and editor of the Century Magazine; Miss Marguerite Merington; Mrs. Grizelda M. Hobson, widow of the late Rear Admiral Hobson; Waldemar Kaempffert, Science Editor of the New York Times; Professor Emeritus Charles F. Scott, Department of Electrical Engineering, Yale University; Hans Dahlstrand, of the Allis Chalmers Manufacturing Co.; Leo Maloney, Manager of the Hotel New Yorker; and W. D. Crow, architect of the Tesla tower, for reminiscences, data, or helpful conversations concerning their contacts with Tesla;

Florence S. Hellman, Chief of the Bibliographic Division, Library of Congress; Olive E. Kennedy, Research Librarian of the Public Information Center, National Electric Manufacturers Association; A. P. Peck, Managing Editor of

the Scientific American; Myrta L. Mason, and Charles F. Pflaging, for bibliographic aid;

G. Edward Pendray and his associates in the Westinghouse Electric and Manufacturing Co., and C. D. Wagoner and his associates in the General Electric Co., for correcting, or reading and making helpful suggestions in connection with many chapters;

William L. Laurence, science writer of the New York Times, and Bloyce Fitzgerald, for exchange of data;

Randall Warden; William Spencer Bowen, President of the Bowen Research Corp.; G. H. Clark, of the Radio Corporation of America; Kenneth M. Swezey, of Popular Science; Mrs. Mabel Fleischer and Carl Payne Tobey, who have aided in a variety of ways;

Colliers--The National Weekly; The American Magazine; the New York World-Telegram and the General Electric Co., for permission to quote copyrighted material, for which credit is given where quoted; and

Peggy O'Neill Grayson, my daughter, for extended secretarial service.

To all the foregoing I extend my sincere thanks.

John J. O'Neill

Freeport, L. I.

New York

July 15, 1944

ELECTROMAGNETIC ENGINEERING EE325

INDEX

Ampere's circuital law.....11
Ampere's law 6
angstrom 2
Avogadro's number..... 2
B Ampere's circuital law 11
Biot-Savart law 11
Boltzmann's constant..... 2
capacitance 7, 8
  between coaxial cylinders 7
  between concentric spheres 7
  between parallel plates. 7
  between two conductors 7
characteristic impedance .. 2
complex conjugate..... 1
complex notation..... 1
conductance 8
conductivity 8
  semiconductor..... 8
conservative field law..... 6
constants..... 2
continuity equation..... 8
coordinate systems 10
coordinate transformations10
coulomb 1
Coulomb's law..... 7
cross product.....10
curl 9
current 8
current density 7
D flux density 6
del 8
divergence..... 9
dot product..... 9
duality of J and D..... 8
E electric field..... 5
electric field..... 5
electron mass 2
electron volt..... 2
electrostatic
  force 5
  potential 5
electrostatics 5
elipse 8
Faraday's law 6, 12
flux density..... 6
force
  electrostatic 5
  magnetic.....11
Gauss' law..... 6
geometry..... 8
grad operator..... 8
H magnetic field intensity12
impedance
  short-circuit 2
induced voltage
  due to changing magnetic field.....13
  due to conductor motion13
  Faraday's law 12
  slider problem.....13
inductance.....12
J current density..... 7
joule 2
Laplacian 9
Lenz's law.....12
light, speed of 2
line impedance..... 3
linkage.....12
magnetic energy.....12
magnetic field 11
  at the center of a circular wire.....11
  central axis of a solenoid 11
  due to a finite straight conductor.....11
  due to an infinite straight conductor.....11
magnetic field intensity...12
magnetic flux 12
magnetic force.....11
magnetization.....13
matching transformer
  inline – reactive load.... 3
  inline – resistive load... 3
mathematics..... 8
Maxwell's equations..... 6
mutual inductance 12
nabla operator 8
permeability..... 2
permittivity..... 2
phase constant..... 2
Planck's constant 2
Poisson's equation 6
potential energy..... 7
power
  with phasor notation..... 5
reactance..... 3
reflection coefficient..... 2
resistance 8
Rydberg constant..... 2
self-inductance 12
series stub..... 4
shunt stub 4
single-stub tuning..... 4
Smith chart 4
Smith charts..... 4
space derivative 8
sphere 8
standing wave ratio 4
static magnetic field 11
stub length 4
surface charge density 6
time average power 5
vector differential equation8
volume energy density..... 7
wave
  forward-traveling 5
wave equation 2
wavelength..... 2
W_e potential energy..... 7
w_e volume energy density 7
X reactance 3
Z_{in} line impedance..... 3
Φ electrostatic potential 5
Γ reflection coefficient 2
$\mathbf{Y}$ magnetic flux 12
λ wavelength..... 2
ρ_s surface charge density. 6
σ conductivity 8
∇ del..... 8
$\nabla\times$ curl 9
$\nabla\cdot$ divergence..... 9
∇^2 Laplacian 9

COULOMB [C]

A unit of electrical charge equal to one amp second, the charge on 6.21×10^{18} electrons, or one joule per volt.

COMPLEX NOTATION

$$\boxed{ae^{jb} = (a\angle b)}$$

where b may be in radians or degrees (if noted).

COMPLEX CONJUGATES

The complex conjugate of a number is simply that number with the sign changed on the imaginary part. This applies to both **rectangular and polar notation**. When conjugates are multiplied, the result is a scalar.

$$(a + jb)(a - jb) = a^2 + b^2$$

$$(A\angle B°)(A\angle -B°) = A^2$$

Other **properties of conjugates**:

$$(ABC + DE + F)* = (A*B*C* + D*E* + F*)$$

$$(e^{-jB})* = e^{+jB}$$

TRANSMISSION LINES

G_L REFLECTION COEFFICIENT [V/V]

The **reflection coefficient** is a value from –1 to +1 which, when multiplied by the wave voltage, determines the amount of voltage reflected at one end of the transmission line.

$$\Gamma_L = \rho e^{j\psi} = \frac{Z_L - Z_0}{Z_L + Z_0} \text{ and } Z_L = Z_0 \frac{1+\Gamma_L}{1-\Gamma_L}$$

where: Z_L is the **load impedance**

Γ_L is the **load reflection coefficient**

ρ is the **reflection coefficient magnitude**

ψ is the **reflection coefficient phase**

$Z_0 = \sqrt{\frac{L}{C}}$ is the **characteristic impedance**

THE COMPLEX WAVE EQUATION

The **complex wave equation** is applicable when the excitation is sinusoidal and the circuit is under steady state conditions.

$$\frac{d^2V(z)}{dz^2} = -\beta^2 V(z)$$

where $\beta = \omega\sqrt{LC} = \frac{2\pi}{\lambda}$ is the **phase constant**

The *complex wave equation* above is a second-order ordinary differential equation commonly found in the analysis of physical systems. The general solution is:

$$V(z) = V^+ e^{-j\beta z} + V^- e^{+j\beta z}$$

where $e^{-j\beta z}$ and $e^{+j\beta z}$ represent wave propagation in the $+z$ and $-z$ directions respectively.

The same equation applies to current:

$$I(z) = I^+ e^{-j\beta z} + I^- e^{+j\beta z}$$

and

$$I(z) = \frac{V^+ e^{-j\beta z} + V^- e^{+j\beta z}}{Z_0}$$

where $Z_0 = \sqrt{L/C}$ is the **characteristic impedance** of the line. These equations represent the voltage and current **phasors**.

SHORT-CIRCUIT IMPEDANCE [Ω]

$$Z_{sc} = jZ_0 \tan(\beta l)$$

where: Z_0 is the **characteristic impedance**

$\beta = \omega\sqrt{LC} = \frac{2\pi}{\lambda}$ is the **phase constant**

l is the length of the line [m]

CONSTANTS

Avogadro's number [molecules/mole]	$N_A = 6.02\times10^{23}$
Boltzmann's constant	$k = 1.38\times10^{-23}$ J/K
	$= 8.62\times10^{-5}$ eV/K
Elementary charge	$q = 1.60\times10^{-19}$ C
Electron mass	$m_0 = 9.11\times10^{-31}$ kg
Permittivity of free space	$\varepsilon_0 = 8.85\times10^{-12}$ F/m
Permeability constant	$\mu_0 = 4\pi\times10^{-7}$ H/m
Planck's constant	$h = 6.63\times10^{-34}$ J-s
	$= 4.14\times10^{-15}$ cV-s
Rydberg constant	$R = 109{,}678$ cm^{-1}
kT @ room temperature	$kT = 0.0259$ eV
Speed of light	$c = 2.998\times10^8$ m/s
1 Å (angstrom)	10^{-8} cm = 10^{-10} m
1 μm (micron)	10^{-4} cm

1 nm = 10Å = 10^{-7} cm

1 eV = 1.6 × 10^{-19} J

1 V = 1 J/C 1 N/C = 1 V/m 1 J = 1 N· m = 1 C· V

l WAVELENGTH [m]

$$\lambda = \frac{v_p}{f}$$

v_p = velocity of propagation (2.998×10^8 m/s for a line in air)

f = frequency [Hz]

¼-WAVELENGTH INLINE MATCHING TRANSFORMER – resistive load

For use with a purely resistive load that does not match the line impedance. The load is matched to the line by inserting a ¼-wavelength segment having a characteristic impedance Z_Q.

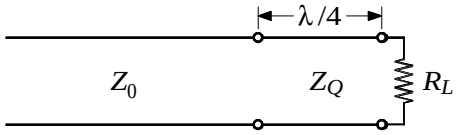

$$Z_Q = \sqrt{Z_0 R_L}$$

Z_0 = characteristic impedance of the transmission line [Ω]
λ = wavelength [meters]
R_L = resistance of the load [Ω]
Z_Q = characteristic impedance of the ¼wave matching segment [Ω]

¼-WAVELENGTH INLINE MATCHING TRANSFORMER – reactive load

For use with a reactive load. The load is matched to the line by inserting a ¼-wavelength segment having a characteristic impedance Z_Q at a distance l from the load. l is the length of transmission line required to produce the first voltage maximum—closest to the load. If the load is inductive, the first voltage maximum will be closer than the first voltage minimum, i.e. within ½wavelength.

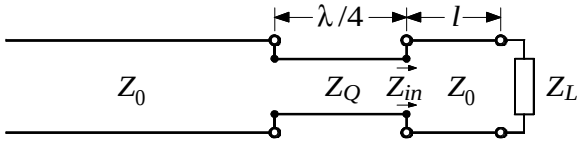

First find the reflection coefficient in order to determine the value of ψ. Then find the length l of the line that will convert the load to a pure resistance, i.e. produces the first voltage maximum. Find this resistance (Z_{in}) using the line impedance formula. Then determine the impedance Z_Q of the ¼-wavelength segment that will match the load to the line.

$$\Gamma_L = \rho e^{j\psi} = \frac{Z_L - Z_0}{Z_L + Z_0}$$

i.e. $\Gamma_L = \rho\angle\psi$ (radians)

$$l = \frac{\psi}{2\beta} = \frac{\psi\lambda}{4\pi}$$

$$Z_{in} = Z_0 \frac{Z_L + jZ_0 \tan\beta l}{Z_0 + jZ_L \tan\beta l}$$

$$Z_Q = \sqrt{Z_0 Z_{in}}$$

Γ_L is the load reflection coefficient
ψ = phase of the reflection coefficient [radians]
ρ = magnitude of the reflection coefficient [Ω]
Z_0 = characteristic impedance [Ω]
$\beta = 2\pi/\lambda$
$\lambda = v_p/f$ wavelength [m]
Z_{in} = impedance (resistive) of the load combined with the l segment [Ω]
Z_Q = line impedance of the ¼-wave matching segment [Ω]

X REACTANCE [Ω]

$$X_C = \frac{-j}{\omega C}$$

$$X_L = j\omega L$$

X_C = reactance [Ω]
X_L = reactance [Ω]
$j = \sqrt{-1}$
ω = frequency [radians]
C = capacitance [F]
L = inductance [H]

Z_{in} LINE IMPEDANCE [Ω]

$$Z_{in} = Z_0 \frac{Z_L + jZ_0 \tan\beta l}{Z_0 + jZ_L \tan\beta l}$$

l = distance from load [m]
$j = \sqrt{-1}$
β = phase constant
Z_0 = characteristic impedance [Ω]
Z_L = load impedance [Ω]

The **line impedance** of a ¼-wavelength line is the inverse of the load impedance.

Impedance is a real value when its magnitude is maximum or minimum.

$$Z_{max} = Z_0 S = Z_0 \frac{1+\rho}{1-\rho}$$

$$Z_{min} = \frac{Z_0}{S} = Z_0 \frac{1-\rho}{1+\rho}$$

Z_0 = characteristic impedance [Ω]
S = standing wave ratio
ρ = magnitude of the reflection coefficient

SMITH CHARTS

First **normalize the load** impedance by dividing by the characteristic impedance, and find this point on the chart. An **inductive load** will be located on the top half of the chart, a **capacitive load** on the bottom half.

Draw a **straight line** from the center of the chart through the normalized load impedance point to the edge of the chart.

Anchor a compass at the center of the chart and **draw an arc** through the normalized load impedance point. Points along this arc represent the normalized impedance at various points along the transmission line. **Clockwise movement** along the arc represents movement from the load toward the source with one full revolution representing **1/2 wavelength** as marked on the outer circle. The two points where the arc intersects the horizontal axis are the **voltage maxima** (right) and the **voltage minima** (left).

Points opposite the impedance (180° around the arc) are **admittance**. The reason admittance is useful is because admittances in parallel are simply added.

$$\boxed{\Gamma(z) = \Gamma_L e^{j2\beta z}}$$

$$e^{j2\beta z} = 1\angle 2\beta z$$

$$\Gamma(z) = \frac{\mathbf{Z}(z)-1}{\mathbf{Z}(z)+1}$$

$$\mathbf{Z}_L = \frac{\Gamma_L - 1}{\Gamma_L + 1} \qquad \boxed{\mathbf{Z} = \frac{Z_L}{Z_0}}$$

z = distance from load [m]

$j = \sqrt{-1}$

ρ = magnitude of the reflection coefficient

β = phase constant

Γ = reflection coefficient

$\mathbf{Z}$ = normalized impedance [Ω]

SINGLE-STUB TUNING

The basic idea is to connect a line stub in parallel (shunt) or series a distance *d* from the load so that the imaginary part of the load impedance will be canceled.

Shunt-stub: **Select *d* so that the admittance *Y* looking toward the load from a distance *d* is of the form $Y_0 + jB$. Then the stub susceptance is chosen as $-jB$, resulting in a matched condition.**

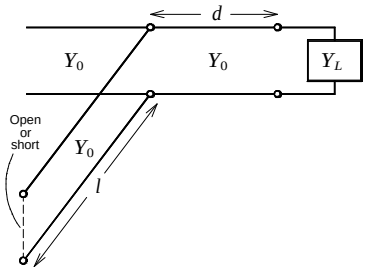

Series-stub: Select *d* so that the admittance *Z* looking toward the load from a distance *d* is of the form $Z_0 + jX$. Then the stub susceptance is chosen as $-jX$, resulting in a matched condition.

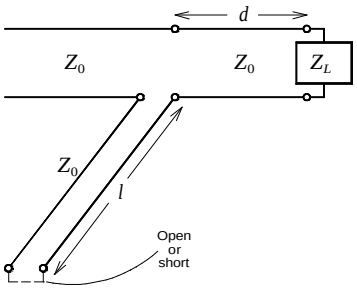

FINDING A STUB LENGTH

Example: Find the lengths of open and shorted shunt stubs to match an admittance of 1-j0.5. The admittance of an open shunt (zero length) is $Y=0$; this point is located at the left end of the Smith Chart *x*-axis. We proceed clockwise around the Smith chart, i.e. away from the end of the stub, to the +j0.5 arc (the value needed to match –j0.5). The difference in the starting point and the end point on the wavelength scale is the length of the stub in wavelengths. The length of a shorted-type stub is found in the same manner but with the starting point at $Y=\infty$.

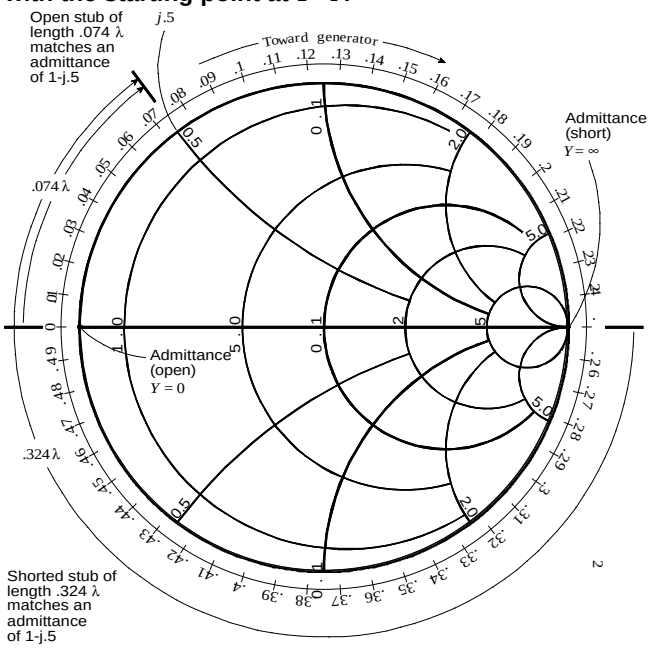

In this example, all values were in units of admittance. If we were interested in finding a stub length for a series stub problem, the units would be in impedance. The problem would be worked in exactly the same way. Of course in impedance, an open shunt (zero length) would have the value $Z=\infty$, representing a point at the right end of the *x*-axis.

SWR STANDING WAVE RATIO [V/V]

$$\boxed{\text{SWR} = \frac{|V|_{\max}}{|V|_{\min}} = \frac{|I|_{\max}}{|I|_{\min}} = \frac{1+\rho}{1-\rho}}$$

P(z) TIME-AVERAGE POWER ON A LOSSLESS TRANSMISSION LINE [W]

Equal to the **power** delivered to the load. The power delivered to the load is maximized under matched conditions, i.e. ρ = 0, otherwise part of the power is reflected back to the source. To calculate power, it may be simpler to find the input impedance and use $P = I^2R$ or $P = IV$.

$$\mathrm{P}(z) = \frac{\left|V^+\right|^2}{2Z_0}\left(1-\rho^2\right)$$

$$\mathrm{P}(z) = \frac{1}{2}\mathscr{Re}\left\{V(z)\ \ [I(z)]^*\right\}$$

V^+ = the voltage of the forward-traveling wave [V]
Z_0 = characteristic impedance [Ω]
ρ = magnitude of the reflection coefficient
$\mathscr{Re}$ = "the real part"

POWER USING PHASOR NOTATION [W]

$$\mathbf{S} = \frac{1}{2}\mathbf{V}\mathbf{I}^*$$

S = power [W]
V = volts [V]
I^* = complex conjugate of current [A]

V^+ FORWARD-TRAVELING WAVE

$$V^+ = \frac{Z_{in}V_0}{\left(Z_{in}+Z_S\right)e^{j\beta l}\left(1+\Gamma_L e^{-j2\beta l}\right)}$$

V^+ = the voltage of the forward-traveling wave [V]
V_0 = source voltage [V]
Z_{in} = input impedance [Ω]
Z_S = source impedance [Ω]
β = phase constant
l = length of the line [m]
Γ_L = load reflection coefficient

ELECTROSTATICS

F ELECTROSTATIC FORCE

$$\mathbf{F}_{12} = \frac{1}{4\pi\varepsilon_0}Q_1Q_2\frac{(\mathbf{r}_2-\mathbf{r}_1)}{\left|\mathbf{r}_2-\mathbf{r}_1\right|^3} \qquad \frac{1}{4\pi\varepsilon_0} = 9\times10^9$$

$\mathbf{F_{12}}$ = the force exerted **by** charge Q_1 **on** Q_2. [N]
$\mathbf{r_1}$ = vector from the origin to Q_1
$\mathbf{r_2}$ = vector from the origin to Q_2.

When finding the force on one charge due to multiple charges, the result can be found by summing the effects of each charge separately or by converting the multiple charges to a single equivalent charge and solving as a 2-charge problem.

E ELECTRIC FIELD

$$\mathbf{E}_p = \frac{1}{4\pi\varepsilon_0}\sum_{k=1}^{n}Q_k\frac{\mathbf{r}-\mathbf{r}_k'}{\left|\mathbf{r}-\mathbf{r}_k'\right|^3}$$

$$d\mathbf{E} = \frac{1}{4\pi\varepsilon_0}\hat{\mathbf{R}}\frac{\rho_l(r')}{\left|\mathbf{r}-\mathbf{r}'\right|^2}\,dl'$$

$$\mathbf{E} = \frac{1}{4\pi\varepsilon_0}\int\hat{\mathbf{R}}\frac{\rho_l(r')}{\left|\mathbf{r}-\mathbf{r}'\right|^2}\,dl'$$

Electric field from a potential:

$$\mathbf{E} = -\nabla\Phi$$

refer to the NABLA notes on page 8.

*NOTE: The l symbols could be replaced by a symbol for area or volume. See *Working With …* on page 9.

$\mathbf{E}_p$ = electric field at point p due to a charge Q or charge density ρ [V/m]
$d\mathbf{E}$ = an increment of electric field [V/m]
Q = electric charge [C]
ε_0 = permittivity of free space 8.85×10^{-12} F/m
ρ_l = charge density; charge per unit length* [C/m]
dl' = a small segment of line l*
$\hat{\mathbf{R}}$ = unit vector pointing from $\mathbf{r}'$ to $\mathbf{r}$, i.e. in the direction of $\mathbf{r} - \mathbf{r}'$.
$\mathbf{r}'$ = vector location of the **source** charge in relation to the origin
$\mathbf{r}$ = vector location of the point at which the value of $\mathbf{E}_p$ is observed
∇ = Del, Grad, or Nabla operator

F ELECTROSTATIC POTENTIAL [V]

$$\Phi = \frac{1}{4\pi\varepsilon_0}\sum_{k=1}^{n}\frac{Q_k}{\left|\mathbf{r}-\mathbf{r}_k'\right|}$$

$$d\Phi = \frac{1}{4\pi\varepsilon_0}\frac{\rho_l dl'}{\left|\mathbf{r}-\mathbf{r}'\right|}$$

$$\Phi = \frac{1}{4\pi\varepsilon_0}\int\frac{\rho_l}{\left|\mathbf{r}-\mathbf{r}'\right|}\,dl'$$

Potential due to an electric field:

$$\Phi_{ab} = -\int_a^b\mathbf{E}\cdot d\mathbf{l}$$

To evaluate voltage at all points.

$$\Phi(r) = -\int_\infty^r\mathbf{E}\cdot d\mathbf{l}$$

*NOTE: The l symbols could be replaced by a symbol for area or volume. See *Working With …* on page 9.

Φ = the potential [V]
$d\Phi$ = an increment of potential [V]
Φ_{ab} = the potential difference between points a and b [V]
$\mathbf{E}$ = electric field
dl' = a small segment of line l*
$d\mathbf{l}$ = the differential vector displacement along the path from a to b
ε_0 = permittivity of free space 8.85×10^{-12} F/m
Q = electric charge [C]
ρ_l = charge density along a line* [C/m]
$\mathbf{r}_k'$ = vector location of **source** charge Q_k
$\mathbf{r}'$ = vector location of the **source** charge in relation to the origin
$\mathbf{r}$ = vector location of electrostatic potential Φ in relation to the origin

MAXWELL'S EQUATIONS

Maxwell's equations govern the principles of guiding and propagation of electromagnetic energy and provide the foundations of all electromagnetic phenomena and their applications.

$$\nabla\times\bar{\mathscr{E}} = -\frac{\partial\bar{\mathscr{B}}}{\partial t}$$ Faraday's Law

$$\nabla\cdot\bar{D} = \bar{\rho}$$ Gauss' Law

$$\nabla\times\bar{\mathscr{H}} = \bar{\mathscr{J}} + \frac{\partial\bar{\mathscr{D}}}{\partial t}$$ Ampere's Law*

$$\nabla\cdot\bar{B} = 0$$ no name law, where:

$\mathscr{E}$ = electric field [V/m]
$\mathscr{B}$ = magnetic field [T]
t = time [s]
$\mathscr{D}$ = electric flux density [C/m^2]
ρ = volume charge density [C/m^3]
$\mathscr{H}$ = magnetic field intensity [A/m]
$\mathscr{J}$ = current density [A/m^2]

*Maxwell added the $\frac{\partial\bar{\mathscr{D}}}{\partial t}$ term to Ampere's Law.

POISSON'S EQUATION

$$\nabla^2\Phi = -\frac{\rho}{\varepsilon_0}$$

r_s SURFACE CHARGE DENSITY [C/m^2]

$$\rho_s = \varepsilon_0 E_n$$

$$E_n = \hat{\mathbf{n}}\cdot\mathbf{E}$$

ε_0 = permittivity of free space 8.85 × 10^{-12} F/m
E_n = electric field normal to the surface [V/m]

D FLUX DENSITY [C/m^2]

or ELECTRIC DISPLACEMENT PER UNIT AREA

$$\mathbf{D} \equiv \hat{\mathbf{r}}\frac{Q}{4\pi r^2}$$

$$\mathbf{D} = \varepsilon\mathbf{E}$$

Q = electric charge [C]
ε = dielectric constant $\varepsilon = \varepsilon_0\varepsilon_r$
E = electric field [V/m]

GAUSS'S LAW

The net flux passing through a surface enclosing a charge is equal to the charge. Careful, what this first integral really means is the surface area multiplied by the perpendicular electric field. There may not be any integration involved.

$$\oint_S \varepsilon_0\mathbf{E}\cdot d\mathbf{s} = Q_{enc} \qquad \oint_S \mathbf{D}\cdot d\mathbf{s} = \int_V \rho\, dv = Q_{enc}$$

ε_0 = permittivity of free space 8.85 × 10^{-12} F/m
E = electric field [V/m]
D = electric flux density vector [C/m^2]
$d\mathbf{s}$ = a small increment of surface S
ρ = volume charge density [C/m^3]
dv = a small increment of volume V
Q_{enc} = total electric charge enclosed by the Gaussian surface [S]

The differential version of Gauss's law is:

$$\nabla\cdot\mathbf{D} = \rho \quad \text{or} \quad \operatorname{div}(\varepsilon_0\cdot\mathbf{E}) = \rho$$

GAUSS'S LAW – an example problem

Find the intensity of the electric field at distance r from a straight conductor having a voltage V.

Consider a cylindrical surface of length l and radius r enclosing a portion of the conductor. The electric field passes through the curved surface of the cylinder but not the ends. Gauss's law says that the electric flux passing through this curved surface is equal to the charge enclosed.

$$\oint_S \varepsilon_0\mathbf{E}\cdot d\mathbf{s} = \varepsilon_0\int_0^{2\pi} E_r l r\, d\phi = Q_{enc} = \rho_l l = C_l V l$$

so $\varepsilon_0 E_r r\int_0^{2\pi} d\phi = C_l V$ and $E_r = \frac{C_l V}{2\pi\varepsilon_0 r}$

E_r = electric field at distance r from the conductor [V/m]
l = length [m]
$r\, d\mathbf{f}$ = a small increment of the cylindrical surface S [m^2]
ρ_l = charge density per unit length [C/m]
C_l = capacitance per unit length [F/m]
V = voltage on the line [V]

CONSERVATIVE FIELD LAW

$$\nabla\times\mathbf{E} = 0 \qquad \oint_S \mathbf{E}\cdot d\mathbf{l} = 0$$

E = electric field [V/m]
$d\mathbf{s}$ = a small increment of length

COULOMB'S LAW

$$\nabla\cdot\mathbf{D}=\rho \qquad \oint_S \mathbf{D}\cdot d\mathbf{s}=\int_V \rho\, dv$$

D = electric flux density vector [C/m^2]
ρ = volume charge density [C/m^3]
*d***s** = a small increment of surface *S*

W_e POTENTIAL ENERGY [J]

The energy required to bring charge *q* from infinity to a distance *R* from charge *Q*.

$$W_e = q\Phi = \frac{Qq}{4\pi\varepsilon R}$$

$$W_e = \frac{1}{2}\int_V \rho\Phi\, dv = \frac{1}{2}\int_V \mathbf{D}\cdot\mathbf{E}\, dv$$

Φ = the potential between *q* and *Q* [V]
q,*Q* = electric charges [C]
ε = permittivity of the material
R = distance [m]
ρ = volume charge density [C/m^3]
E = electric field [V/m]
D = electric flux density vector [C/m^2]

w_e VOLUME ENERGY DENSITY [J/m^3] for the Electrostatic Field

$$w_e = \frac{1}{2}\mathbf{D}\cdot\mathbf{E} = \frac{1}{2}\varepsilon E^2$$

Φ = the potential between *q* and *Q* [V]
ε = permittivity of the material
R = distance [m]
E = electric field [V/m]
D = electric flux density vector [C/m^2]

CAPACITANCE

C CAPACITANCE [F]

$$C = \frac{Q}{\Phi} \qquad C_l = \frac{\rho_l}{V}$$

Q = total electric charge [C]
Φ = the potential between *q* and *Q* [V]
C_l = capacitance per unit length [F/m]
ρ_l = charge density per unit length [C/m]
V = voltage on the line [V]

C CAPACITANCE BETWEEN TWO PARALLEL SOLID CYLINDRICAL CONDUCTORS

This also applies to a single conductor above ground, where the height above ground is *d*/2.

$$C = \frac{\pi\varepsilon}{\ln(d/a)}, \text{ where } d \gg a$$

or $$C = \frac{\pi\varepsilon}{\cosh^{-1}\frac{d}{2a}}$$

C = capacitance [F/m]
ε = permittivity of the material
d = separation (center-to-center) [m]
a = conductor radius [m]

C CAPACITANCE BETWEEN PARALLEL PLATES

$$C = \frac{\varepsilon A}{d}$$

C = capacitance [F]
ε = permittivity of the material
d = separation of the plates [m]
A = area of one plate [m^2]

C CAPACITANCE BETWEEN COAXIAL CYLINDERS

$$C = \frac{2\pi\varepsilon}{\ln(b/a)}$$

C = capacitance [F/m]
ε = permittivity of the material
b = radius of the outer cylinder [m]
a = radius of the inner cylinder [m]

C CAPACITANCE OF CONCENTRIC SPHERES

$$C = \frac{4\pi\varepsilon ab}{b-a}$$

C = capacitance [F/m]
ε = permittivity of the material
b = radius of the outer sphere [m]
a = radius of the inner sphere [m]

J CURRENT DENSITY

The amount of current flowing perpendicularly through a unit area [A/m^2]

$$\mathbf{J} = \sigma\mathbf{E} \qquad I = \oint_S \mathbf{J}\cdot d\mathbf{s}$$

In semiconductor material:

$$\mathbf{J} = n_c q_e \mathbf{v}_d$$

σ = conductivity of the material [S/m]
E = electric field [V/m]
I = current [A]
*d***s** = a small increment of surface *S*
n_c = the number of conduction band electrons
q_e = electron charge -1.602×10^{-19} C
$\mathbf{v}_d$ = a small increment of surface *S*

CONTINUITY EQUATION

$$\nabla\cdot\mathbf{J}+\frac{\partial\rho}{\partial t}=0$$

$\mathbf{J}$ = current density [A/m^2] $\mathbf{J}=\sigma\mathbf{E}$
ρ = volume charge density [C/m^3]

DUALITY RELATIONSHIP of J and D

RESISTANCE, CAPACITANCE, CURRENT, CONDUCTIVITY

Where current enters and leaves a conducting medium via two perfect conductors (electrodes) we have:

$$I=\oint_S\mathbf{J}\cdot d\mathbf{s}=\sigma\oint_S\mathbf{E}\cdot d\mathbf{s}=\frac{\sigma}{\varepsilon}\oint_S\mathbf{D}\cdot d\mathbf{s}=\frac{\sigma Q}{\varepsilon}$$

$\mathbf{J}$ = current density [A/m^2] $\mathbf{J}=\sigma\mathbf{E}$
$\mathbf{E}$ = electric field [V/m]
$\mathbf{D}$ = electric flux density vector [C/m^2] $\mathbf{D}=\varepsilon\mathbf{E}$

As a result of this, we have the following relation, useful in finding the resistance between two conductors:

$$RC=\frac{\varepsilon}{\sigma}$$

R = resistance [Ω]
C = capacitance [F]
ε = permittivity of the material
σ = conductivity of the material [S/m]

G CONDUCTANCE [Ω^{-1}]

$$G=\frac{1}{R}=\frac{I}{\Delta\Phi}=\frac{\sigma\oint_S\mathbf{E}\cdot d\mathbf{s}}{\int_+^-\mathbf{E}\cdot d\mathbf{l}}$$

R = resistance [Ω]
I = current [A]
$\Delta\Phi$ = voltage potential [V]
σ = conductivity of the material [S/m]

s SEMICONDUCTOR CONDUCTIVITY [Ω^{-1}]

$$\sigma\approx|q|\mu_e N_d$$

σ = conductivity of the material [S/m]G = conductance [Ω^{-1}]
q = electron charge -1.602×10^{-19} C
μ_e = electron mobility [m^2/(V-s)]
N_d = concentration of donors, and thereby the electron concentration in the transition region [m^{-3}]

MATHEMATICS

WORKING WITH LINES, SURFACES, AND VOLUMES

$\rho_l(\mathbf{r}')$ means "the charge density along line l as a function of $\mathbf{r}'$." This might be a value in C/m or it could be a function. Similarly, $\rho_s(\mathbf{r}')$ would be the charge density of a surface and $\rho_v(\mathbf{r}')$ is the charge density of a volume.

For example, a disk of radius a having a uniform charge density of ρ C/m^2, would have a total charge of $\rho\pi a^2$, but to find its influence on points along the central axis we might consider incremental rings of the charged surface as $\rho_s(\mathbf{r}')\,dr'=\rho_s 2\pi r'\,dr'$.

If $d\mathbf{l}'$ refers to an incremental distance along a circular contour C, the expression is $r'd\mathbf{f}$, where r' is the radius and $d\mathbf{f}$ is the incremental angle.

GEOMETRY

SPHERE

Area $A=4\pi r^2$

Volume $V=\frac{4}{3}\pi r^3$

ELLIPSE

Area $A=\pi AB$

Circumference $L\approx 2\pi\sqrt{\frac{a^2+b^2}{2}}$

Ñ NABLA, DEL OR GRAD OPERATOR [+ m^{-1}]

Compare the ∇ operation to taking the time derivative. Where $\partial/\partial t$ means to take the derivative with respect to time and introduces a s^{-1} component to the units of the result, the ∇ operation means to take the derivative with respect to distance (in 3 dimensions) and introduces a m^{-1} component to the units of the result. ∇ terms may be called ***space derivatives*** and an equation which contains the ∇ operator may be called a ***vector differential equation***. In other words $\nabla\mathbf{A}$ is how fast $\mathbf{A}$ changes as you move through space.

in rectangular coordinates: $\nabla\mathbf{A}=\hat{x}\frac{\partial A}{\partial x}+\hat{y}\frac{\partial A}{\partial y}+\hat{z}\frac{\partial A}{\partial z}$

in cylindrical coordinates: $\nabla\mathbf{A}=\hat{r}\frac{\partial A}{\partial r}+\hat{\phi}\frac{1}{r}\frac{\partial A}{\partial\phi}+\hat{z}\frac{\partial A}{\partial z}$

in spherical coordinates: $\nabla\mathbf{A}=\hat{r}\frac{\partial A}{\partial r}+\hat{\theta}\frac{1}{r}\frac{\partial A}{\partial\theta}+\hat{\phi}\frac{1}{r\sin\theta}\frac{\partial A}{\partial\phi}$

Ñ² THE LAPLACIAN [+ m^{-2}]

in **rectangular** coordinates:

$$\nabla^2 \mathbf{A} = \hat{\mathbf{x}}\nabla^2 A_x + \hat{\mathbf{y}}\nabla^2 A_y + \hat{\mathbf{z}}\nabla^2 A_z = 0$$

$$\nabla^2 \equiv \frac{\partial^2}{\partial x^2} + \frac{\partial^2}{\partial y^2} + \frac{\partial^2}{\partial z^2} = 0$$

in **spherical** and **cylindrical** coordinates:

$$\nabla^2 \mathbf{A} \equiv \nabla(\nabla\cdot\mathbf{A}) - \nabla\times\nabla\times\mathbf{A}$$

$$= \text{grad}(\text{div } \mathbf{A}) - \text{curl}(\text{curl } \mathbf{A})$$

for example, the Laplacian of electrostatic potential:

$$\nabla^2\Phi = \frac{\partial^2\Phi}{\partial x^2} + \frac{\partial^2\Phi}{\partial y^2} + \frac{\partial^2\Phi}{\partial z^2} = 0$$

Ñ· DIVERGENCE [+ m^{-1}]

The del operator followed by the dot product operator is read as "the divergence of" and is an operation performed on a vector. In rectangular coordinates, ∇· means the sum of the partial derivatives of the magnitudes in the *x*, *y*, and *z* directions with respect to the *x*, *y*, and *z* variables. The result is a scalar, and a factor of m^{-1} is contributed to the units of the result.

For example, in this form of Gauss' law, where **D** is a density per unit area, ∇·**D** becomes a density per unit volume.

$$\text{div } \mathbf{D} = \nabla\cdot\mathbf{D} = \frac{\partial D_x}{\partial x} + \frac{\partial D_y}{\partial y} + \frac{\partial D_z}{\partial z} = \rho$$

D = electric flux density vector $\mathbf{D} = \varepsilon\mathbf{E}$ [C/m^2]
ρ = source charge density [C/m^3]

In the electrostatic context, the divergence of **D** is the total outward flux per unit volume due to a source charge. The divergence of vector **D** is:

in **rectangular** coordinates:

$$\text{div } \mathbf{D} = \frac{\partial D_x}{\partial x} + \frac{\partial D_y}{\partial y} + \frac{\partial D_z}{\partial z}$$

in **cylindrical** coordinates:

$$\text{div } \mathbf{D} = \frac{1}{r}\frac{\partial}{\partial r}(rD_r) + \frac{1}{r}\frac{\partial D_\phi}{\partial\phi} + \frac{\partial D_z}{\partial z}$$

in **spherical** coordinates:

$$\text{div } \mathbf{D} = \frac{1}{r^2}\frac{\partial(r^2 D_r)}{\partial r} + \frac{1}{r\sin\theta}\frac{\partial(\sin\theta D_\theta)}{\partial\theta} + \frac{1}{r\sin\theta}\frac{\partial D_\phi}{\partial\phi}$$

Ñ× CURL [+ m^{-1}]

The circulation around an enclosed area. The curl of vector **B** is

in **rectangular** coordinates:

$$\text{curl } \mathbf{B} = \nabla\times\mathbf{B} =$$

$$\hat{x}\left(\frac{\partial B_z}{\partial y} - \frac{\partial B_y}{\partial z}\right) + \hat{y}\left(\frac{\partial B_x}{\partial z} - \frac{\partial B_z}{\partial x}\right) + \hat{z}\left(\frac{\partial B_y}{\partial x} - \frac{\partial B_x}{\partial y}\right)$$

in **cylindrical** coordinates:

$$\text{curl } \mathbf{B} = \nabla\times\mathbf{B} =$$

$$\hat{r}\left[\frac{1}{r}\frac{\partial B_z}{\partial\phi} - \frac{\partial B_\phi}{\partial z}\right] + \hat{\phi}\left[\frac{\partial B_r}{\partial z} - \frac{\partial B_z}{\partial r}\right] + \hat{z}\frac{1}{r}\left[\frac{\partial(rB_\phi)}{\partial r} - \frac{\partial B_r}{\partial\phi}\right]$$

in **spherical** coordinates:

$$\text{curl } \mathbf{B} = \nabla\times\mathbf{B} = \hat{r}\ \frac{1}{r\sin\theta}\left[\frac{\partial(B_\phi\sin\theta)}{\partial\theta} - \frac{\partial B_\theta}{\partial\phi}\right] +$$

$$\hat{\theta}\frac{1}{r}\left[\frac{1}{\sin\theta}\frac{\partial B_r}{\partial\phi} - \frac{\partial(rB_\phi)}{\partial r}\right] + \hat{\phi}\frac{1}{r}\left[\frac{\partial(rB_\theta)}{\partial r} - \frac{\partial B_r}{\partial\theta}\right]$$

The **divergence of a curl** is always zero:

$$\nabla\cdot(\nabla\times\mathbf{H}) = 0$$

DOT PRODUCT [= units^2]

The dot product is a scalar value.

$$\mathbf{A}\cdot\mathbf{B} = (\hat{\mathbf{x}}A_x + \hat{\mathbf{y}}A_y + \hat{\mathbf{z}}A_z)\cdot(\hat{\mathbf{x}}B_x + \hat{\mathbf{y}}B_y + \hat{\mathbf{z}}B_z) = A_xB_x + A_yB_y + A_zB_z$$

$$\mathbf{A}\cdot\mathbf{B} = |\mathbf{A}||\mathbf{B}|\cos\psi_{AB}$$

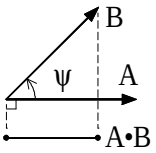

$$\hat{\mathbf{x}}\cdot\hat{\mathbf{y}} = 0, \quad \hat{\mathbf{x}}\cdot\hat{\mathbf{x}} = 1$$

$$\mathbf{B}\cdot\hat{\mathbf{y}} = (\hat{\mathbf{x}}B_x + \hat{\mathbf{y}}B_y + \hat{\mathbf{z}}B_z)\cdot\hat{\mathbf{y}} = B_y$$

Projection of **B** along **â**:

$$(\mathbf{B}\cdot\hat{\mathbf{a}})\hat{\mathbf{a}}$$

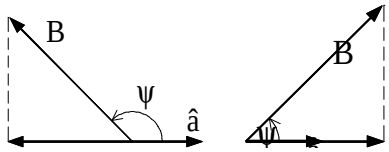

The dot product of 90° vectors is zero.

The dot product is **commutative** and **distributive**:

$$\mathbf{A}\cdot\mathbf{B} = \mathbf{B}\cdot\mathbf{A} \qquad \mathbf{A}\cdot(\mathbf{B}+\mathbf{C}) = \mathbf{A}\cdot\mathbf{B} + \mathbf{A}\cdot\mathbf{C}$$

CROSS PRODUCT

$$\mathbf{A}\times\mathbf{B} = \left(\hat{\mathbf{x}}A_x + \hat{\mathbf{y}}A_y + \hat{\mathbf{z}}A_z\right)\times\left(\hat{\mathbf{x}}B_x + \hat{\mathbf{y}}B_y + \hat{\mathbf{z}}B_z\right)$$
$$= \hat{\mathbf{x}}\left(A_yB_z - A_zB_y\right) + \hat{\mathbf{y}}\left(A_zB_x - A_xB_z\right) + \hat{\mathbf{z}}\left(A_xB_y - A_yB_x\right)$$

$$\mathbf{A}\times\mathbf{B} = \hat{\mathbf{n}}|\mathbf{A}||\mathbf{B}|\sin\psi_{AB}$$

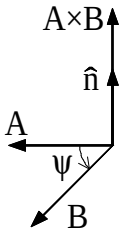

where $\hat{\mathbf{n}}$ is the unit vector normal to both **A** and **B** (thumb of right-hand rule).

$$\mathbf{B}\times\mathbf{A} = -\mathbf{A}\times\mathbf{B}$$

$$\mathbf{x}\times\mathbf{y} = \mathbf{z} \qquad \mathbf{y}\times\mathbf{x} = -\mathbf{z} \qquad \mathbf{x}\times\mathbf{x} = 0$$

$$\phi\times\mathbf{z} = \mathbf{r} \qquad \phi\times\mathbf{r} = -\mathbf{z}$$

The cross product is **distributive:**

$$\mathbf{A}\times\left(\mathbf{B}+\mathbf{C}\right) = \mathbf{A}\times\mathbf{B} + \mathbf{A}\times\mathbf{C}$$

Also, we have:

$$\mathbf{A}\times\left(\mathbf{B}\times\mathbf{C}\right) = \left(\mathbf{A}\cdot\mathbf{C}\right)\mathbf{B} - \left(\mathbf{A}\cdot\mathbf{B}\right)\mathbf{C}$$

COORDINATE SYSTEMS

Cartesian or Rectangular Coordinates:

$\mathbf{r}(x, y, z) = x\hat{x} + y\hat{y} + z\hat{z}$ $\hat{x}$ is a unit vector

$$|\mathbf{r}| = \sqrt{x^2 + y^2 + z^2}$$

Spherical Coordinates:

$\mathbf{P}(r, \theta, \phi)$ r is distance from center
θ is angle from vertical
ϕ is the CCW angle from the x-axis

$\hat{r}$, $\hat{\theta}$, and $\hat{\phi}$ are unit vectores and are functions of position—their orientation depends on where they are located.

Cylindrical Coordinates:

$\mathbf{C}(r, \phi, z)$ r is distance from the vertical (z) axis
ϕ is the CCW angle from the x-axis
z is the vertical distance from origin

COORDINATE TRANSFORMATIONS

Rectangular to Cylindrical:

To obtain: $\mathbf{A}(r, \phi, z) = \hat{r}A_r + \hat{\phi}A_\phi + \hat{z}A_z$

$$A_r = \sqrt{x^2 + y^2} \qquad \hat{r} = \hat{x}\cos\phi + \hat{y}\sin\phi$$
$$\phi = \tan^{-1}\frac{y}{x} \qquad \hat{\phi} = -\hat{x}\sin\phi + \hat{y}\cos\phi$$
$$z = z \qquad \hat{z} = \hat{z}$$

Cylindrical to Rectangular:

To obtain: $\mathbf{r}(x, y, z) = x\hat{x} + y\hat{y} + z\hat{z}$

$$x = r\cos\phi \qquad \hat{x} = \hat{r}\cos\phi - \hat{\phi}\cos\phi$$
$$y = r\sin\phi \qquad \hat{\phi} = \hat{r}\sin\phi + \hat{y}\cos\phi$$
$$z = z \qquad \hat{z} = \hat{z}$$

Rectangular to Spherical:

To obtain: $\mathbf{A}(r, \theta, \phi) = \hat{r}A_r + \hat{\theta}A_\theta + \hat{\phi}A_\phi$

$$A_r = \sqrt{x^2 + y^2 + z^2}$$
$$\hat{r} = \hat{x}\sin\theta\cos\phi + \hat{y}\sin\theta\sin\phi + \hat{z}\cos\theta$$
$$\theta = \frac{z\cos^{-1}}{\sqrt{x^2 + y^2 + z^2}}$$
$$\hat{\theta} = \hat{x}\cos\theta\cos\phi + \hat{y}\cos\theta\sin\phi - \hat{z}\sin\theta$$
$$\phi = \tan^{-1}\frac{y}{x} \qquad \hat{\phi} = -\hat{x}\sin\phi + \hat{y}\cos\phi$$

Spherical to Rectangular:

To obtain: $\mathbf{r}(x, y, z) = x\hat{x} + y\hat{y} + z\hat{z}$

$$x = r\sin\theta\cos\phi$$
$$\hat{x} = \hat{r}\sin\theta\cos\phi - \hat{\theta}\cos\theta\cos\phi - \hat{\phi}\sin\phi$$
$$y = r\sin\theta\sin\phi$$
$$\hat{y} = \hat{r}\sin\theta\sin\phi + \hat{\theta}\cos\theta\sin\phi + \hat{\phi}\cos\phi$$
$$z = r\cos\theta \qquad \hat{z} = \hat{r}\cos\theta - \hat{\theta}\sin\theta$$

THE STATIC MAGNETIC FIELD

F $\mathbf{F}_{12}$ MAGNETIC FORCE [N/m] due to a conductor

If the current in the two wires travels in opposite directions, the force will be attractive.

$$\mathbf{F}_{12} = \frac{\hat{\mathbf{x}}\mu_0 I_1 I_2}{2\pi d}$$

$\mathbf{F}_{12}$ = the force exerted **by** conductor 1 carrying current I **on** conductor 2. [N/m]
μ_0 = permeability constant $4\pi\times10^{-7}$ [H/m]
I = current [A]
d = distance between conductors [m]

$\mathbf{B}_P$ BIOT-SAVART LAW

Determines the **B** field vector at any point P identified by the position vector **r**, due to a differential current element $I\,d\mathbf{l}'$ located at vector **r'**.

$$d\mathbf{B}_P = \frac{\mu_0 I\, d\mathbf{l}'\times\hat{\mathbf{R}}}{4\pi R^2}$$

$$\mathbf{B}_P = \frac{\mu_0 I}{4\pi}\oint_C \frac{d\mathbf{l}'\times(\mathbf{r}-\mathbf{r}')}{|\mathbf{r}-\mathbf{r}'|^3}$$

$$\hat{\mathbf{R}} = \frac{\mathbf{r}-\mathbf{r}'}{|\mathbf{r}-\mathbf{r}'|}$$

$\mathbf{B}_P$ = magnetic field vector [T]
μ_0 = permeability constant $4\pi\times10^{-7}$ [H/m]
$I\,d\mathbf{l}'$ = current element [A]
$\hat{\mathbf{R}}$ = unit vector pointing from the current element to point P
R = distance between the current element and point P [m]

B AMPERE'S CIRCUITAL LAW

Ampere's law is a consequence of the **Biot-Savart law** and serves the same purpose as **Gauss's law**. Ampere's law states that the line integral of **B** around any closed contour is equal to μ_0 times the total net current I passing through the surface S enclosed by the contour C. This law is useful in solving magnetostatic problems having some degree of symmetry.

$$\oint_C \mathbf{B}\cdot d\mathbf{l} = \int_S \mu_0 \mathbf{J}\cdot d\mathbf{s} = \mu_0 I$$

B = magnetic field vector, equal to B times the appropriate unit vector [T]
μ_0 = permeability constant $4\pi\times10^{-7}$ [H/m]
$d\mathbf{l}$ = an increment of the line which is the perimeter of contour C [m]
J = current density [A/m^2] $\mathbf{J} = \sigma\mathbf{E}$
$d\mathbf{s}$ = an increment of surface [m^2]

B MAGNETIC FIELD [T or A/m] due to an infinite straight conductor

May also be applied to the magnetic field close to a conductor of finite length.

$$\mathbf{B}_P = \hat{\phi}\frac{\mu_0 I}{2\pi r}$$

$\mathbf{B}_P$ = magnetic field vector [T]
μ_0 = permeability constant $4\pi\times10^{-7}$ [H/m]
I = current [A]
r = perpendicular distance from the conductor [m]

B MAGNETIC FIELD [T] due to a finite straight conductor at a point perpendicular to the midpoint

$$\mathbf{B}_P = \hat{\phi}\frac{\mu_0 I a}{2\pi r\sqrt{r^2+a^2}}$$

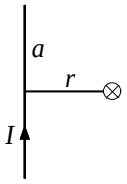

$\mathbf{B}_P$ = magnetic field vector [T]
μ_0 = permeability constant $4\pi\times10^{-7}$ [H/m]
I = current [A]
a = half the length of the conductor [m]
r = perpendicular distance from the conductor [m]

B MAGNETIC FIELD [T] at the center of a circular wire of N turns

$$B_{ctr} = \hat{\mathbf{z}}\frac{\mu_0 NI}{2a}$$

B = magnetic field [T]
μ_0 = permeability const. $4\pi\times10^{-7}$ [H/m]
N = number of turns of the coil
I = current [A]
a = radius [m]

B MAGNETIC FIELD [T] along the central axis of a solenoid

$$B(z) = \hat{\mathbf{z}}\frac{\mu_0 NI}{2l}\left[\frac{(z+l/2)}{\sqrt{a^2+(z+l/2)^2}} - \frac{(z-l/2)}{\sqrt{a^2+(z-l/2)^2}}\right]$$

and at the center of the coil: $B_{ctr} \approx \hat{\mathbf{z}}\frac{\mu_0 NI}{l}$

B = magnetic field [T]
μ_0 = permeability constant $4\pi\times10^{-7}$ [H/m]
N = number of turns
I = current [A]
l = length of the solenoid [m]
z = distance from center of the coil [m]
a = coil radius [m]

H MAGNETIC FIELD INTENSITY [A/m]

The **magnetic field intensity vector** is directly analogous to the *electric flux density vector* **D** in electrostatics in that both **D** and **H** are medium-independent and are directly related to their sources.

$$\mathbf{H} \equiv \frac{\mathbf{B}}{\mu_0} - \mathbf{M}$$

$$\nabla \times \mathbf{H} = \mathbf{J} + \frac{\partial \mathbf{D}}{\partial t}$$

H = magnetic field [A/m]
B = magnetic field vector [T]
μ_0 = permeability const. $4\pi\times10^{-7}$ [H/m]
M = magnetization [A/m]
J = current density [A/m^2] $\mathbf{J} = \sigma\mathbf{E}$
D = electric flux density vector [C/m^2]

Y, L (,lambda) MAGNETIC FLUX, LINKAGE

Flux linkage Λ is the ability of a closed circuit to **store magnetic energy**. It depends, in part, on the physical layout of the conductors. It is the total magnetic field due to circuit #1 passing through the area enclosed by the conductors of circuit #2. The text seemed to describe Ψ as the flux due to one turn and Λ as the flux due to all of the turns of the coil, but was not consistent so be careful.

$$\Psi_{12} = \int_{S_2} \mathbf{B}_1 \cdot d\mathbf{s}_2$$

$$\Lambda_{12} = N_1 \Psi_{12}$$

$$\Lambda = N \int_S \mathbf{B} \cdot d\mathbf{s}$$

Ψ_{12} = the magnetic flux passing through coil 2 that is produced by a current in coil 1 [Wb]
Λ = total flux linkage [Wb]
B = magnetic field vector [T]
N = number of turns of the coil
$d\mathbf{s}$ = an increment of surface [m^2]

LENZ'S LAW

Induced voltage causes current to flow in the direction that produces a magnetic flux which **opposes** the flux that induced the voltage in the first place. This law is useful in checking or determining the sign or polarity of a result.

L INDUCTANCE [H]

Inductance is the ability of a conductor configuration to "link magnetic flux", i.e. store magnetic energy. Two methods of calculating inductance are given below.

$$L = \frac{\Lambda}{I}$$

$$L = \frac{2W_m}{I^2}$$

Λ = flux linkage [Wb]
I = current [A]
W_m = energy stored in a magnetic field [J]

L_{11} SELF-INDUCTANCE [H]

When a current in coil 1 induces a current in coil 2, the induced current in coil 2 induces a current back in coil 1. This is self-inductance.

$$L_{11} = \frac{N_1 \Lambda_{11}}{I_1} = \frac{N_1^2 \Psi_{11}}{I_1}$$

N = number of turns of the coil
Λ_{11} = the total flux linked by a single turn of coil 1 [Wb]
I_1 = current in coil 1 [A]
Ψ_{11} = the magnetic flux produced by a single turn of coil 1 and linked by a single turn of coil 1 [Wb]

L_{12} MUTUAL INDUCTANCE [H]

The mutual inductance between two coils.

$$L_{12} = \frac{N_2 \Lambda_{12}}{I_1} = \frac{N_2 N_1 \Psi_{12}}{I_1}$$

Neumann formula:

$$L_{12} = \frac{\mu_0 N_1 N_2}{4\pi} \oint_{C_1} \oint_{C_2} \frac{d\mathbf{l}_1 \cdot d\mathbf{l}_2}{|\mathbf{r} - \mathbf{r}'|}$$

N = number of turns of the coil
Λ = flux linkage [Wb]
I = current [A]
Ψ = magnetic flux [Wb]
r = vector to the point of observation
r' = vector to source

W_m MAGNETIC ENERGY [J]

Energy stored in a magnetic field [Joules].

$$W_m = \frac{1}{2\mu_0} \int_V B^2 dv'$$

W_m = energy stored in a magnetic field [J]
μ_0 = permeability constant $4\pi\times10^{-7}$ [H/m]
B = magnetic field [T]

FARADAY'S LAW

When the magnetic flux enclosed by a loop of wire changes with time, a current is produced in the loop. The variation of the magnetic flux can result from a time-varying magnetic field, a coil in motion, or both.

$$\nabla \times \mathbf{E} = -\frac{\partial \mathbf{B}}{\partial t}$$

$\nabla\times\mathbf{E}$ = the curl of the electric field
B = magnetic field vector [T]

Another way of expressing Faraday's law is that a changing magnetic field induces an electric field.

$$V_{ind} = \oint_C \mathbf{E} \cdot d\mathbf{l} = -\frac{d}{dt} \int_S \mathbf{B} \cdot d\mathbf{s}$$

where S is the surface enclosed by contour C.

(see also Induced Voltage below)

V_{ind} INDUCED VOLTAGE

The voltage induced in a coil due to a **changing magnetic field** is equal to the number of turns in the coil times the rate at which the magnetic field is changing (could be a change in field strength or coil area normal to the field).

$$V_{ind} = -N\frac{d\Psi}{dt}$$

$$V_{ind} = \oint_C \mathbf{E}\cdot d\mathbf{l}$$

N = number of turns of the coil
Ψ = the magnetic flux produced by a single turn of the coil [Wb]

V_{ind} INDUCED VOLTAGE DUE TO MOTION

When conductors move in the presence of magnetic fields, an induced voltage is produced even if the magnetic fields do not vary in time. For the voltage produced due to both a changing magnetic field and a conductor in motion:

$$V_{ind} = -\int_S \frac{\partial \mathbf{B}}{\partial t}\cdot d\mathbf{s} + \oint_C (\mathbf{v}\times\mathbf{B})\cdot d\mathbf{l}$$

B = magnetic field vector [T]
v = velocity vector of the conductor [m/s]
d**s** = increment of the surface normal to the magnetic field vector [m^2]
d**l** = incremental length of conductor [m]

INDUCED VOLTAGE – SLIDER PROBLEM

A frictionless conducting bar moves to the right at velocity v produces a current I.

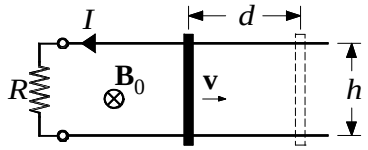

An expanding magnetic field area having a static magnetic field directed into the page produces a CCW current.

$$V_{ind} = B_0 h v$$

$$\mathbf{F}_{mag} = \hat{\mathbf{x}} B_0 I h$$

$$E = I^2 R\frac{d}{v}$$

V_{ind} = induced voltage [V]
B_0 = static magnetic field [T]
h = distance between the conductor rails [T]
v = velocity of the conductor [m/s]
$\mathbf{F}_{mag}$ = magnetic force opposing slider [N]
$\hat{\mathbf{x}}$ = unit vector in the direction against conductor movement [m/s]
I = current [A]
E = energy produced [J or W/s]
R = circuit resistance [Ω]
d = distance the conductor moves [m]

M MAGNETIZATION [A/m]

The induced magnetic dipole moment per unit volume.

$$\mathbf{M} = -\frac{Nq_e^2 a^2 \mathbf{B}}{4m_e}$$

or $$\mathbf{M} = \frac{\chi_m \mathbf{B}}{\mu_0}$$

where

$$\chi_m = -\frac{Nq_e^2 a^2 \mu_0}{4m_e}$$

N = number of turns of the coil
q_e = electron charge - 1.602×10^{-19} C
a = orbit radius of an electron [m]
B = magnetic field vector [T]
μ_0 = permeability constant $4\pi\times10^{-7}$ [H/m]
m_e = who knows?
χ_m = magnetic susceptibility

involvement in the seizing of Nikola Tesla's research papers and other documents and scientific instruments after his death on January 7, 1943.

They both explained that Tesla was a scientific genius and experimenter who was born in Yugoslavia of Serbian parents on 7/10/56, went to school later in Gratz, Austria, Prague, Czechoslovakia and Paris, France. He immigrated to the U.S. in the early 1880's, worked for Thomas Edison's laboratory for a couple of years, then started his own lab after being paid $1 million dollars for rights to his patents on his polyphase systems of alternating current dynamos, which lead to the harnessing of Niagra Falls for producing electricity and then the power system of the whole country. He was naturalized in 1889. He predicted wireless communication (radio). His later experiments in Colorado and elsewhere lead to his producing artificial lightning in the millions of volts. He also had patents on the concept of neon and flourescent lights, but he later made little money on his later inventions, although he continued to do experiments leading to devices of great potential worth, which he never patented. He became more reclusive in his later years, living in various hotels in New York City. In the 1930's he claimed he had developed the concept and method of building a "death ray", which could destroy planes at many miles distant, for defending America. Also, there are report of resonance machines or devices whereby he could shake one or many large city buildings from some distance away.

Both [redacted] and [redacted] said that Tesla donated "some" of his papers (or copies thereof) to the Tesla Institute in Belgrade, Yugoslavia; set up in the 1930's in his honor by their government. Biographies on Tesla claim that either the custodian of Alien Property and/or the FBI seized his papers and other personal effects, including a safe or safes, and other property immediately after his death in 1943. This is elaborated on in the enclosed copies of certain pages of Margaret Cheney's book, "Tesla: Man Out of Time". (b)(1) (c)

[redacted] said that after World War II Tesla's papers were shipped to the Tesla Institute in Belgrade, Yugoslavia, by his nephew, Sava Kosanovic, who had become Tito's Ambassador to the U.S. There were reports that some microfilming of Tesla's papers by government agents while they were still in storage in New York under Kosanovic's custody.

Also, the Soviet Union has allegedly had access to some of Tesla's papers, possibly in Belgrade and/or else where, which influenced their early research into directed energy weapons, and Butler feels access to much of Tesla's papers on lightning, beam weapons and/or "death rays" would give him more insight into the Soviet beam weapons program. This is Butler's area of expertise and responsibility. He has been unable to locate any Tesla papers or copies of same in the classified or unclassified libraries at WPAFB. However, there are reports that some portions of them were shipped by the Custodian of Alien Property Office in Washington, D.C. to a technical research lab at WPAFB, possibly the "Equipment Lab", now closed for some years or reorganized into another organization.

[redacted] and [redacted] are both desirous of learning the locations of such papers of Tesla as now exist in the U.S. for both intelligence and research purposes. Therefore, [redacted] would like to examine FBI files relating to Nikola Tesla and possibly any on Sava Kosanovic, his nephew who received the bulk of his papers after Tesla's death, and may possibly have been the subject of FBI investigation.

[redacted] travels to the Washington, D.C. area on FTD business periodically and can review FBI files at FBIHQ relating to Tesla and Kosanovic.

REQUEST OF THE BUREAU

The Bureau is requested to conduct full indices checks on both Nikola Tesla and Sava Kosanovic.

Should there be such files at FBIHQ, as well as at New York, it is requested that Bureau consider granting the above [redacted] of FTD, official access to same, in the interest of national security.

LEADS

NEW YORK

AT NEW YORK, NEW YORK

Will conduct same indices check as requested of Bureau and advise the Bureau and Cincinnati of results and confirm such files and references still exist there.

135

CINCINNATI

AT DAYTON, OHIO

Will maintain contact with [redacted] and (b)(7)(c) [redacted]

"A VISIONARY GENIUS AS FERTILE AS ANY IN THE MODERN HISTORY OF SCIENCE...."

Flamboyant, eccentric, almost supernaturally gifted, had he been born today he would still be ahead of his time. Called a madman by some, a genius by others, and an enigma by nearly everyone, Nikola Tesla was perhaps the greatest inventor the world has ever known.

He was a trailblazer who created astonishing, world-transforming devices, often without theoretical precedent. It was Tesla who harnessed the alternating electrical current we use today... Tesla who actually invented radio... Tesla who invented fluorescent lighting and the incredible bladeless turbine. He introduced us to the fundamentals of robotry and computer and missile science, which continue to create and transform the future.

This fascinating new biography, acclaimed by American Scientist as "excellent... a significant contribution to the recent history of science," is a riveting journey into the mind of the nineteenth-century wizard who was Edison's enemy, Mark Twain's friend, J. P. Morgan's client, and mentor to many of the twentieth-century's most famous scientists.

MARGARET CHENEY is a science writer and author of two other nonfiction books. She lives in California.

*The Sunday Times of London

0 39077
71009 00495
ISBN 0-440-39077-X

MARGARET CHENEY

A visionary genius, his discoveries radically changed—and continue to change—the world we live in. "A dramatic and poignant portrait." —Discover

TESLA: MAN OUT OF TIME

Includes eight pages of rare photographs

DELL $3.95

137

The ill-fated Wardenclyffe tower built in 1901–03. It was intended for radio broadcasting and wireless transmission of power across the Atlantic. (Courtesy L. Anderson, after photo by Lillian McChesney)

An artist's rendering of Tesla's concept of the war of the future. The towerlike structures (based on the intended final form of the Wardenclyffe tower) are directing remote-controlled defenses against robot attackers. As Hugo Gernsback wrote in *Science and Invention*, where this illustration appeared, "Machines only will meet in mortal combat. It will be a veritable war of Science." (Gernsback Publications, Inc.)

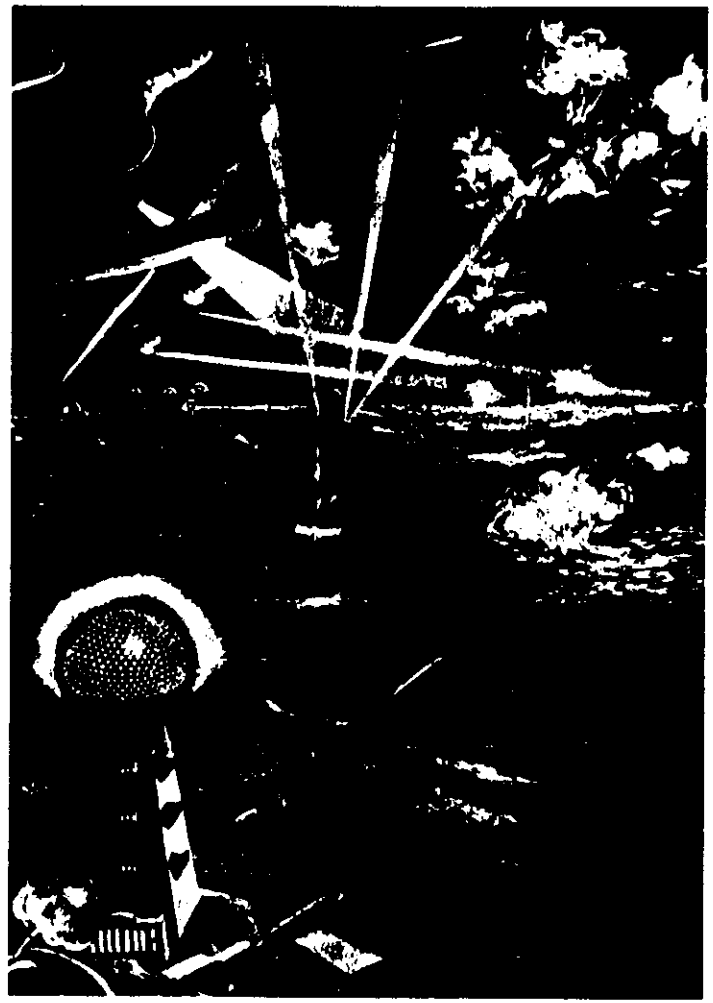

A trio of scientific greats: Albert Einstein, Nikola Tesla, and Charles Steinmetz, as they appeared in 1921 in a visit to the RCA transoceanic station at New Brunswick, N.J. At the time, Tesla was deeply involved in his patent dispute with Marconi. Only after his death would the U.S. Supreme Court uphold Tesla's claim to be the true father of radio. (RCA)

Tesla in his laboratory, 1898. The device shown is an unconnected coil illustrating the action of two resonating circuits of different frequencies—today one of the basic circuits used in computers. The pressure at the end of the coil facing the viewer (illuminated by streamers) is approximately one half million volts. (Courtesy L. Anderson)

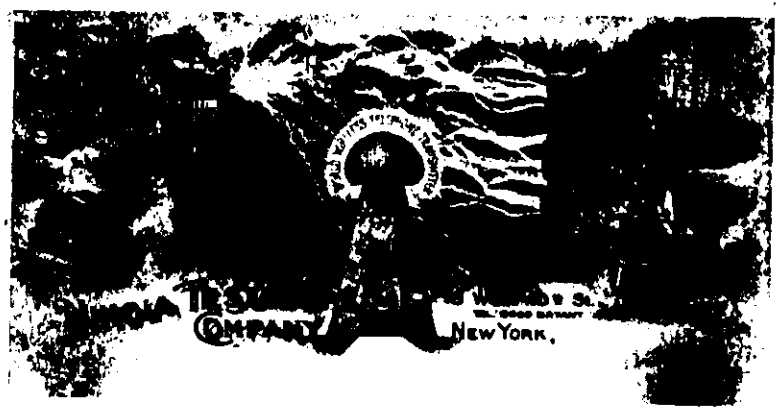

The letterhead of Tesla business stationery recalls some of his more important inventions. In the center is the Wardenclyffe tower as it was intended to look when finished. (Courtesy L. Anderson)

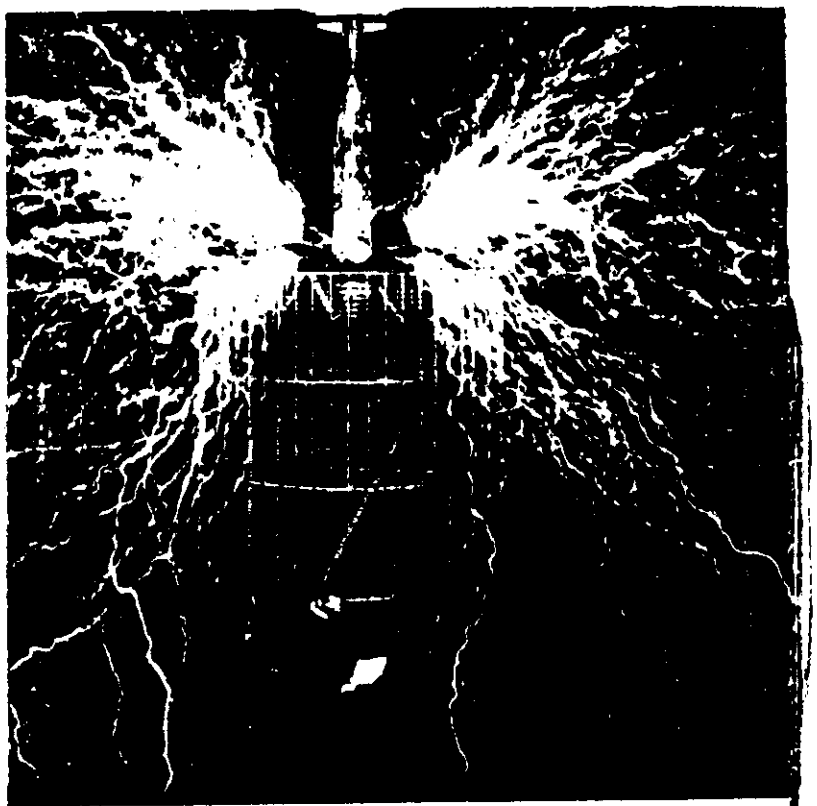

Discharge of several million volts cascading around Tesla in his Colorado Springs laboratory. The roar that accompanied such discharges could be heard ten miles away. (Burndy Library)

of low frequency, and would yield sinusoidal and continuous oscillations like those of an alternator.

"Taken in the narrowest significance of the term, however," Tesla wrote, "it is a resonant transformer which, besides possessing these qualities, is accurately proportioned to fit the globe and its electrical constants and properties, by virtue of which design it becomes highly efficient and effective in the wireless transmission of energy. Distance is then absolutely eliminated, there being *no diminution in the intensity of the transmitted impulses*. It is even possible to make the actions *increase with the distance from the point* according to an exact mathematical law."[5]

Once this powerful equipment was built and the inventor began testing he was able to emulate the electrical fireworks of even the wildest mountain storms. When the transmitter was operating, lightning arresters in a twelve-mile radius from his station were bridged with continuous fiery arcs, stronger and more persistent than those produced by natural lightning.

For the first time he kept a careful daily diary in which he recorded every aspect of his research. And because visual effects were useful as well as thrilling, he devoted many hours to photographic experiments.

The equipment Tesla was perfecting would, he hoped, one day be adaptable for commercial use. But first, thousands of observations and delicate adjustments had to be made. He no longer trusted his legendary memory to store such a volume of information. His daily notes referred constantly to experiments that had failed to turn out as expected, and he would ask himself why. This process was at sharp variance with the one he claimed to have used throughout his earlier life. Now middle-aged, he may have felt his memory waning slightly. Certainly he felt driven by the pressures of his self-imposed deadline.

In his Colorado journal his lifelong fascination with visual phenomena is underscored. The flashing lights that he had always experienced on the screen of his mind were dramatically externalized, and his descriptions, among the mass of mathematical formulas, are detailed, loving, almost erotic in their lingering portrayal of the colors and grandeur of his Colorado electrical storms.[6]

Nights when experiments were being made with the magnifying transmitter the prairie sky exploded with sound and color. Even the earth seemed alive and the crash of thunder from the spark gap could be heard for miles. Butterflies were sucked into the vortex of the

28

Death and Transfiguration

The new government of King Peter, with broad popular support, confronted the Germans and refused to ratify the compromise agreement that had been made with Hitler by Prince Paul. Almost at once reprisals began.

On Palm Sunday, 1941, three hundred Luftwaffe bombers swept over the Yugoslav capital of Belgrade. Methodically they crisscrossed the city street by street, strafing everything that breathed. By noon 25,000 civilians were dead, and the wounded lay everywhere. Most public buildings were left in ruins, including the modern laboratory known as the Tesla Institute.

The combined armed forces of Germany, Italy, Hungary, and Bulgaria invaded the doomed country. Within only days the Yugoslav Army was crushed, and King Peter was sent to England for safety. His government-in-exile would operate from London for the remainder of World War II.

This, however, was only the beginning of the war for Yugoslavs. Accustomed to successive invasions for a thousand years, the people were resilient. The remnants of the Army and Communist factions withdrew into the mountains, from which they launched guerrilla attacks on the invaders. These armed fighters, men and women, were supplied with food grown by the old people and children remaining in undefended villages.

Against them the Nazis and Fascists carried out murderous reprisals. In the fishing villages and along the stony slopes of the Adriatic, half the people in every hamlet were systematically shot.

Soon, however, it became apparent to military strategists in the United States and England that, not only were Axis forces killing Yugoslavs, but rival guerrilla factions of monarchists and Communists had begun to vie for Allied support and were shooting each other as well as the invaders.

Col. Drazha Mihailović, a Serbian army officer, led a faction called Chetniks (the "Yugoslav Army in the Fatherland"), composed mainly of Serbian and Bosnian monarchists. With close ties to King

Peter, they became the first major resistance movement in Europe.[1] The initial British aid to Yugoslavia went to the Chetniks, but it was short-lived. The National Liberation Army or Partisans, led by Josip Broz Tito of the Communist Party, was swiftly rising to prominence.

Allied strategists knew little of Tito. It was said he had been left wounded on a battlefield in 1917 and captured by the Russians. There he was trained as a Communist leader and sent to France during the Spanish Civil War to aid the Loyalists or Republicans.

A Croat, Tito had little reason to love the monarchy, for he was imprisoned after returning to Yugoslavia. On release, he became active in organizing a metal workers' union and helped to build the Yugoslav labor movement. His emergence as head of the Partisans in World War II was that of a natural leader who inspired his fighters and maintained rigorous discipline. He was looking ahead to a time when the Slavs could rebuild a free and united country without oppression either by foreigners or kings.

Tito's goal was to set up committees of popular liberation after the Russian style, while Mihailović and the Chetniks favored local administrative authorities under the monarchy. Both factions kept on killing Germans and Italians but, unfortunately, they also continued murdering each other.[2]

Prof. Bogdan Raditsa*, then director of the information service of the Yugoslav Embassy in Washington, D.C., recalls, "The situation became rather complicated when Yugoslavia collapsed in 1941 and when, at the end of that year, a Royal Yugoslav Mission came to this country." It was composed of members of King Peter's government and the Ban (Governor) of Croatia, Dr. Ivan Šubašić. Srba Kosanović, Tesla's nephew, then a member of the Democratic Party, also arrived as a minister of the exiled government.

"As soon as Kosanović came to the States," says Professor Raditsa, "he tried to reorient Tesla from the exclusive Serbian policy, and he succeeded. Tesla, even before, never felt himself a Great Serbian chauvinist. He used to say, 'I am a Serb but my fatherland is Croatia.'"[3]

The conflict between Serbs and Croats in exile intensified as the war went on, paralyzing normal Slav diplomatic activities in London, Washington, and New York.

"Kosanović, though a Serb," recalls Raditsa, "was leading the struggle for a brotherhood between the Serbs and Croats against Fotić and many other Serb members of various Yugoslav missions.

*Raditsa belonged to a family in southern Croatia that had always favored a union of Croatians and Serbs.

Thus he began using Tesla for the policy directed against the Great Serbians.

"Tesla himself ... was not aware of the deep conflict between the Serbs and Croats, and as basically a scientist and in old age, he was very candid in politics."

Raditsa said he seemed happy that he finally had a man of his own blood near him in New York and noted that Tesla began to rely upon Kosanović's opinion on everything. During this period the inventor was receiving about $500 per month from the royal government as an honorarium.

Various political messages elicited from Tesla for home consumption, says Raditsa, were actually written by Kosanović.[4]

Toward the end of 1942 the Yugoslav Information Center was opened in New York in the Royal Mission headquarters on Fifth Avenue. Raditsa and Kosanović worked together at this office, issuing bulletins and other publications. But a crisis broke out when news reached them of the fighting between Mihailović and Tito.

"Kosanović," he said, "joined Tito and began to popularize the National Liberation Movement for a new Yugoslavia. He had a terrible time to convince Tesla that monarchy was losing in Yugoslavia and that a new Yugoslavia was beginning to come out from the fratricidal civil war. As the largest majority of Serbs in Croatia were joining Tito, Kosanović convinced Tesla that he too should join the movement that was largely shared by the masses of the people, Serbs and Croats. So Tesla's message to the Serbs and Croats was written by Kosanović."[5]

On the walls of the Tesla Museum in Belgrade one may read a vastly enlarged photocopy of the words allegedly sent by Tesla to his embattled countrymen only months before his own death. American Vice-President Henry A. Wallace also had a hand in its drafting. Typewritten, it has many cross-outs and interlinings in Tesla's own handwriting yet the style is that of an ideologue, which the inventor was not:

> Out of this war ... a new world must be born, a world that would justify the sacrifices offered by humanity. This ... must be a world in which there shall be no exploitation of the weak by the strong, of the good by the evil, where there will be no humiliation of the poor by the violence of the rich; where the products of the intellect, science, and art will serve society for the betterment and beautification of life, and not the individuals for achieving wealth. This new world shall not be a world of the downtrodden and humiliated, but of free men and free nations, equal in dignity and respect for man.

The inventor's name also appeared on another message—sent to the Soviet Academy of Sciences on October 12, 1941, urging joint struggle against the Axis powers by Russia, Great Britain, and America, in aid of the revolutionary struggle of the Yugoslav people. This message is not to be seen in the Museum, however, presumably because nostalgia Russian-style has ceased to be politic.

Kosanović became chairman of the Yugoslav Economic Mission advocating a New Yugoslav federation versus the centralistic prewar royalist Yugoslavia. This new organization also began working for a new Central East European Federation. Raditsa too became a member of the Tito movement.

King Peter was desperately seeking for Mihailović the support of President Franklin Delano Roosevelt and Prime Minister Winston Churchill, as well as that of his own Uncle Bertie, who was King George VI of England. The British, at first sympathetic to the Chetnik cause, began to change as they received reports of the aggressive actions of Tito's Partisans.

In 1942 King Peter visited Washington to intercede with FDR. Yugoslav pilots were being trained in Tennessee. FDR told him that America would send airplanes to the Chetniks as soon as they could be spared from the war in the Middle East. The monarch visited New York City, attending a large reception for the American Friends of Yugoslavia at the Colony Club. The Colony, the first female socialites' club in America, had been founded at the inspiration of energetic Anne Morgan. She attended the function, as did the King's mother, Queen Marie, and Mrs. Roosevelt. It was the sort of affair Tesla himself would have delighted in had he not been weak and ill. So King Peter went to him.

In his diaries (*A King's Heritage*), under date July 8, 1942, the young Peter II writes: "I visited Dr. Nicola Tesla, the world-famous Yugoslav-American scientist, in his apartment in the Hotel New Yorker. After I had greeted him the aged scientist said: 'It is my greatest honor. I am glad you are in your youth, and I am content that you will be a great ruler. I believe I will live until you come back to a free Yugoslavia. From your father you have received his last words: 'Guard Yugoslavia.' I am proud to be a Serbian and a Yugoslav. Our people cannot perish. Preserve the unity of all Yugoslavs—the Serbs, the Croats, and Slovenes.'"

The King added that he was deeply touched and that both he and Dr. Tesla had wept. He then visited Columbia University, to be warmly welcomed by President Nicholas Murray Butler and to find another link with his own country in the Pupin Physics Laboratory.

Returning to Washington, he was assured by FDR that food, clothing, arms, and ammunition would be dropped over Yugoslavia. But he was shocked when, in 1943, the British Mission in Yugoslavia made official contact with Tito. Peter asked to be parachuted into his country, but Churchill demurred. Tito openly accused Mihailović of being a traitor.*

At the Teheran Conference in November there occurred, largely at Churchill's instance, what the King described as a "fatal change" of Allied policy. It was decided that "the basic force fighting the Germans in Yugoslavia recognized by the Allies was the National Liberation Army, under the command of Tito, and the Partisan force received full recognition as an Allied Army. Mihailović was thus denied and abandoned."†

Winston Churchill overnight became a hero of modern Yugoslavia. And when the young monarch frantically wrote to FDR for support, the ailing President replied urging him to accept Churchill's advice "as if it was my own." Within months Roosevelt died.

Tesla's nephew, Kosanović, along with certain other diplomatic representatives of King Peter, had been dismissed by the monarch at the height of the 1942 crisis. He often told Bogdan Raditsa in those days that he felt Tesla had been terribly shocked by his nephew's exclusion from the royal government. In fact, Kosanović believed that the inventor's death was actually precipitated by his own "setback."

"He thought," Kosanović repeatedly told Raditsa, "that I was punished, and that eventually I would be arrested or something of the kind, but I succeeded to convince him that it was inevitable in politics."*

During this period Kosanović was frank in saying that he tried to keep Tesla from seeing members of the royal government. Ambassador Fotić had become "the enemy" since he still favored a Great Serbian policy as opposed to the changes ahead. Tesla's relationship with this old friend became "lukewarm."

"There is no doubt," says Professor Raditsa, "that the whole internecine tragedy of Yugoslavia from 1941 to 1943 must have had a rather depressing impact upon Tesla. Very often he would ask me, could I explain to him what was going on among us, and why we cannot agree. . . ."

After the war, Mihailović would be executed by a "People's Court" for alleged collaboration with the enemy, and the Republic of Yugoslavia declared to exist, with Tito as President for life and the Communists firmly in charge.

A count of Yugoslavian casualties at the end of World War II disclosed that 2 million persons had died; tragically, many thousands had been killed by fellow Yugoslavs.

"After the war," recalls Professor Raditsa, "Kosanović became a minister in the Tito-Subašić Government, and I was his assistant in the Ministry of Information from 1944 to 1945, when I left the country, for I couldn't become a Communist. Later on in 1946, Sava Kosanović became Tito's ambassador in Washington but I never saw him again after I left Belgrade in October of 1945. Kosanović had accepted totally the Communist system in Yugoslavia and remained loyal until his death."

There had not been a time in ten centuries when the Yugoslavs had not been ruled and ransacked by invaders—by Venetians, Romans, Turks, Bulgars, Austrians, Hungarians, Germans, Italians, when they were not living under threat of torture, prison, or violent death. Now a marvelous truth began to dawn upon them: that they were free, in a manner of speaking.

Tesla would not live to see this. Whether he could ever have accepted the new government, with its Soviet-type Constitution and a Soviet alliance, whether he could ever have accepted the permanent exile of his beloved monarch, are unanswerable questions.

Unfortunately, however, all this was to have a bearing on how he would be remembered in the West. The fading of his scientific reputation, the forgetfulness of Americans in the postwar period, resulted in large degree from the disappearance of most of his scientific papers behind that new Cold War phenomenon, the Iron Curtain.

In 1948 Yugoslavia ceased to be an Iron Curtain country, declaring its independence from the Soviet doctrine of "limited sovereignty." America and her allies then were generous in sending economic and military aid to the Slavs; but the damage had been done. America had not raced to Tito's wartime support with the alacrity that Churchill had shown. In the future it would not be made easy for American scholars to draw on Yugoslav sources to document the achievements of Nikola Tesla.

The inventor became very feeble in the winter of 1942. His fear of germs was so obsessive that even his closest friends were

required to stand at a distance, like the subjects of a neurotic Tudor. (Pigeon germs did not seem to worry him.) He had heart trouble and suffered occasionally from fainting spells. No longer able to feed his beloved birds, he often relied upon a young man named Charles Hausler, who owned racing pigeons, to take care of them for him.

Hausler had worked for Tesla in this capacity from around 1928 onward, his job being to go to the New York Public Library at noon each day with grain and then to walk around the four sides of the building looking for young or injured birds on window sills or behind large statues. He would take them to Tesla's hotel for rest and recuperation. Then, he has recalled, "I would release them at the library for him." He remembered that the cages in Tesla's rooms had been built by a fine carpenter— "as Mr. Tesla was in all his doings it had to be done right." The pigeons also enjoyed a curtained shower bath.

Hausler and Tesla spent many hours together, talking mostly of pigeons. Once Tesla confided to him that "Thomas Edison could not be trusted." The boy remembered his employer as "a very kind and considerate human person," and there was one incident that stood out in his mind long afterward. "He had a large box or container in his room near the pigeon cages and he told me to be very careful not to disturb the box," said Hausler, "as it contained something that could destroy an airplane in the sky and he had hopes of presenting it to the world." He believed it probably was stored in the cellar of the hotel later.[9]

On a bitter day in early January 1943, Tesla called his other messenger boy, Kerrigan, and gave him a sealed envelope addressed to Mr. Samuel Clemens, 35 South Fifth Avenue, New York City. The boy set forth into the whipping wind and searched fruitlessly for the number. As it turned out, this had been the address of Tesla's first laboratory; but now South Fifth Avenue was West Broadway, and no one by the name of Samuel Clemens lived in the area.

Kerrigan made his way back to the Hotel New Yorker and reported to the sick man. In a weak voice, Tesla explained that Clemens was the famous Mark Twain and that everyone knew of him. He sent Kerrigan forth once more, and this time asked him also to take care of the pigeons. The perturbed messenger fed the birds and then consulted his supervisor, who told him that Mark Twain had been dead for twenty-five years. Once again Kerrigan trudged through the cold afternoon to Tesla's rooms, where he explained and tried to return the envelope.

The inventor was indignant and refused to hear that the humorist was dead. "He was in my room last night," he said. "He sat in that chair and talked to me for an hour. He is having financial difficulties and needs my help. So—don't come back until you have delivered that envelope." Once again the messenger went to his supervisor and together they opened the envelope. It contained a blank sheet of paper wrapped around twenty five-dollar bills—enough to help an old friend through a little fainting spell.

On the fourth of January, the inventor, although very weak, went to his office to make an experiment that George Scherff was interested in. Scherff dropped in to help him prepare for it. The work was interrupted, however, when Tesla felt a recurrence of some sharp pains in his chest.

Refusing medical aid, he returned to his hotel. Next day a maid came in and cleaned. As she left, he asked her to put the *Do Not Disturb* sign on his door to keep visitors away, and not to bother cleaning. The sign remained there the following day and the one after that.

Early on the morning of January 8, Alice Monaghan, a maid, ignored the sign and entered the apartment to find the inventor dead in bed, his sunken, emaciated face composed.[10] Assistant Medical Examiner H. W. Wembly examined the body, placed the time of death as 10:30 P.M. on January 7, 1943, and gave his opinion that the cause of death had been coronary thrombosis. Tesla had died in his sleep, and the examiner noted that he had found "No suspicious circumstances." The inventor was eighty-six years of age.

Kenneth Swezey was notified at once; and at ten o'clock that morning he telephoned to Dr. Rado at New York University. King Peter's headquarters, then at 745 Fifth Avenue, was advised by the professor. Tesla's nephew, Kosanović, then wartime president of the Eastern and Central European Planning Board for the Balkan countries, also was notified.

Then the FBI was called. Swezey and Kosanović summoned a locksmith and Tesla's safe was opened and the contents examined.

The body was removed to the Frank E. Campbell Funeral Home at Madison Avenue and 81st Street and a sculptor was engaged by Hugo Gernsback to prepare a death mask of the inventor.

Just before Tesla's death, Eleanor Roosevelt had tried to intercede in his behalf with President Roosevelt—perhaps with the idea of conferring some honor upon him. In the Tesla Museum at Belgrade three brief notes on White House stationery may be read. On

January 1, at the request of author Louis Adamić, Mrs. Roosevelt had promised to ask the President to write to Tesla and said that she herself would call on him on her next trip to New York. The second note is headed, "Memo for Mrs. Roosevelt" and is signed FDR: "I was having this looked into but the papers yesterday carried the story that Dr. Tesla had died. Therefore I am returning the enclosures herewith." A third note of January 11 from Eleanor Roosevelt to Adamić forwards the President's message and adds her sorrow at learning of the inventor's death.

Adamić wrote a moving eulogy to Tesla that was read by New York Mayor Fiorello H. LaGuardia over station WNYC on January 10.* Meanwhile the extreme tensions between Serb and Croat factions in the United States were making the planning of funeral services difficult. The body lay in state but, according to an unpublished letter of O'Neill's, "only twelve people, some of whom were newspaper reporters," came to view it.

When state services were held at four o'clock on January 12, in the Cathedral of St. John the Divine, however, more than two thousand people crowded in. Serbs and Croats were seated on opposing sides of the cathedral, Bishop William T. Manning having exacted from both factions a promise of no political speeches. The service was begun in English by Bishop Manning and concluded in Serbian by the Very Rev. Dusan Sukletović.

Among Balkan diplomats present were Ambassador Fotić, the Governor of Croatia, a former Prime Minister of Yugoslavia, and the Minister of Food and Reconstruction. In the front row with Kosanović, chief mourner and head of the important new trade mission, sat Swezey. Dr. Rado had been too ill to attend as an honorary pallbearer.

Figures important in American science and industry who did attend as honorary pallbearers included Professor Edwin H. Armstrong, Dr. E. F. W. Alexanderson of General Electric, Dr. Harvey Rentschler of Westinghouse, engineer Gano Dunn, and W. H. Barton, curator of the Hayden Planetarium of the American Museum of Natural History. Newbold Morris, president of the New York City Council, headed this group.

When word of Tesla's death spread abroad to war-stricken Europe, telegrams of tribute and sorrow began pouring in from scientists and governmental leaders alike. In the United States three Nobel prizewinners in physics, Millikan, Compton, and James Franck, joined in a eulogy to the inventor as "one of the outstanding intellects

of the world who paved the way for many of the important technological developments of modern times."

The President and Mrs. Roosevelt expressed their gratitude for Tesla's contributions "to science and industry and to this country." Vice-President Wallace, in the spirit of the new Yugoslavia, declared that, "In Nikola Tesla's death the common man loses one of his best friends."

Although Louis Adamić wrongly eulogized Tesla as one who had cared nothing for money, he could not have been more accurate when he said that Tesla was not really dead: "The real, important part of Tesla lives in his achievement, which is great, almost beyond calculation, and an integral part of our civilization, our daily lives, our current war effort.... His life is a triumph...."*

Among the honors that had come to Tesla in his life were many academic degrees from American and foreign universities; the John Scott Medal, the Edison Medal, and various awards from European governments. In September 1943 the Liberty ship *Nikola Tesla* was launched, an honor that would have pleased the scientist. But not until 1975 was he inducted into the National Inventors Hall of Fame.

Eight months after Tesla's death, the U.S. Supreme Court handed down the decision that he had been confident would come eventually—ruling that he was the inventor of radio.

His body was taken to Ferncliffe Cemetery at Ardsley-on-the-Hudson in the deep cold of the winter afternoon. In the car that followed the hearse rode Swezey and Kosanović. The inventor's remains were cremated and his ashes later returned to the land of his birth.*

In almost every nation in the world, the fighting and dying continued.

*Charlotte Muzar, formerly secretary to Sava N. Kosanović, carried Tesla's ashes to the Tesla Museum in Belgrade in 1957. Throughout the years Kosanović had spoken of leaving the ashes in America and had hoped an appropriate memorial to the inventor would be raised in the United States as their resting place.
—Archives, Tesla Memorial Society

541

29 The Missing Papers

In addition to his acknowledged achievements, Tesla left a legacy of riddles. To pose only three of the most major: Was his unrealized concept for the wireless transmission of energy through the Earth scientifically valid? What actually was he doing in his experimentation with death/disintegrator beam weapons? And what became of his unpatented research papers and other sensitive documents in the days immediately following his death?

In the category of subquestions, what turn of affairs rekindled the intense interest of the U.S. intelligence establishment in Tesla's work (as something surely did) in the late 1940's?

Like Einstein he had been an outsider and, like Edison, a wide-ranging generalist. As he himself had said, he had the "boldness of ignorance." Where others stopped short, aware of what could not be done, he continued. The survival of such mutants and polymaths as Tesla tends to be discouraged by modern scientific guilds. Whether either he or Edison could have flourished in today's milieu is conjectural.

The example set by Tesla has always been particularly inspiring to the lone runner. At the same time, however, his legacy to establishment science is profound for his research, although sometimes esoteric, was almost always sweeping in its potential to transform society. His contribution was major rather than incremental. His turbine failed in part because it would have required fundamental changes by whole industries. Alternating current triumphed only after it had overcome the resistance of an entire industry.

But there was an unfortunate corollary to Tesla's lone battles with the scientific-industrial establishment. Since he was part of no group or institution, he had no colleagues with whom to discuss work in progress, no formal, accessible repository for his research notes and papers. He worked not just in private, but—his love of flamboyant announcements to the press notwithstanding—in secret. Thus any inventions which he did not patent or give freely to the world were more or less shrouded in mystery. And, because of the handling of the

papers he left behind after his death, the range of his achievement continues to remain a partial mystery.

If this has been frustrating to the scientists who have succeeded Tesla, it has at least been stimulating. After a period of obscurity, the one hundredth anniversary of his birth in July 1956 brought an international reawakening to the importance of the inventor's life and genius. Interest in his work, fired by a growing awareness of the riddles surrounding it, has been escalating ever since, almost as if he had been reborn in his true psychological age.

He was honored by centennial celebrations in America and Europe. The American Institute of Electrical Engineers dedicated its fall meeting in Chicago to a review of his life and inventions. Commemorative programs were arranged by the Institute of Radio Engineers, the Chicago Museum of Science and Industry, the Franklin Institute, and various universities, the Tesla Society playing an active role in such recognition. Permanent memorials in the form of scholarships and medals were proposed and exhibits presented by science museums. Special ceremonies were conducted at Niagara Falls, and a statue was later erected in his honor on Goat Island, a gift from the people of Yugoslavia. Chicago, reminded by attorney/author Elmer Gertz that it should be eternally grateful to him for having made the Columbian Exposition of 1893 the "wonder of the globe," dedicated a new public school to Tesla's memory.

The inventor's old colleagues of the AIEE journeyed to Europe to attend more celebrations, statue unveilings, and dedications in his honor. The International Electrotechnical Commission in Munich took formal action, making his name an international scientific unit, the *tesla* joining such historic electrical symbols as farad, volt, ampere, and ohm.[1]

As the exploration of space accelerated, so did interest in Tesla, especially from the standpoint of beam weaponry and microwave work. In America, Russia, Canada, and various other countries, projects in his name or derived from his pioneering, from weather-control to nuclear fusion, began to attract scientific attention. Some were just the shoestring efforts of loners, their laboratories old Quonset huts. Some were top secret and financed by enormous budgets.

Tesla's year of secret experiments at Colorado Springs in 1899 provided the basic impetus for much of this new exploration. His *Colorado Springs Notes*,* when they appeared in English in 1978

*This book may be ordered from Nolit, Terazije, 27, Belgrade, Yugoslavia (about $40).

under the imprint of the Tesla Museum at Belgrade, were eagerly awaited by many scientists. But even this work left important questions unanswered.

The bulk of his papers having vanished from America, reliable information was harder to come by than the recurring rumors of conspiracy, espionage, and patent theft. Scientists thought it strange that some aspects of his Colorado Springs research found in scattered sources did not appear in the Yugoslav-published *Notes*. Only by piecing together fragmentary information could the magnitude of his experiments be comprehended.

Around 1928 O'Neill, by merest chance, had happened to see a legal advertisement in a New York newspaper announcing that six boxes placed in storage by Nikola Tesla would be sold by the storage warehouse for unpaid bills. Feeling that such material should be preserved, he went to the inventor and asked permission to try to obtain funds to reclaim the material.

"Tesla hit the ceiling," he recalled. "He assured me he was well able to take care of his own affairs.... He forbid me to buy them or do anything in any way about them."

Shortly after the inventor died, O'Neill got in touch with Sava Kosanović, told him about the boxes, and urged him to protect them. He was never able to get a positive statement from Kosanović that he had obtained the boxes and examined the contents. "He gave evasive assurances that there was no reason for me to worry..."

Others too were interested in the papers. A young American engineer engaged in war work consulted Tesla on a ballistics engineering problem because he could not get time on an overworked computer, and Tesla's mind was known to offer the nearest thing to it. Soon he became fascinated with Tesla's scientific papers and was allowed to take batches of them home to his hotel room where he and another American engineer pored over them each night. They were returned the next day, a procedure which continued for about two weeks prior to the Inventor's death.

Tesla had received offers to work for Germany and Russia. After the inventor died, both engineers became concerned that critical scientific information might fall into foreign hands and alerted United States security agencies and high government officials.

The relevant records that I have obtained from federal agencies under the Freedom of Information Act reveal strange twistings and inconsistencies in the handling of the Inventor's estate. Tesla left tons of papers, barrels and boxes full of them. But he left no will. He was

survived by five nieces and nephews, of whom two lived in America at the time of his death.

Curiously, the FBI released his estate to the Office of Alien Property, which promptly sealed the contents. Since Tesla was an American citizen, the OAP's concern in the matter was hard to justify. After a court hearing, however, the estate was released to Ambassador Kosanović, one of the heirs.

Sweezy, who also had hoped to write a biography of Tesla (his death intervened), received the following account in 1963 from a former aide of Ambassador Kosanović's:

"Back in 1943... when Tesla died, it was a matter of very short time when Mr. K was issued a certificate from or by the Office of Custodian of Alien Property conveying to Mr. K full rights to the Tesla papers.... he had them all packed up and sent off to the Manhattan Storage Company where they remained until ready for packing and shipping off to Yugoslavia in 1952. Mr. K paid for storage charges.... All this time the certificate from the Alien Property Office was in my possession (in case of need)...

"You will perhaps remember that a number of times Mr. K mentioned the fact that the custodian at the storage warehouse told him that some government guys were in to microfilm some of the papers.... when we opened the safe in the present museum building (in Belgrade, Yugoslavia) the bunch of keys, which was the last thing Mr. K. flung into the safe at the New Yorker Hotel before the combination was re-set to a new combination, were not found in the safe, but in an entirely different box. Also the gold medal (the Edison Medal) was missing from the safe.... Anyway, for years and years Mr. K was bothered by the fact that Tesla papers had been gone thru and just before his departure from Washington in 1949–50(?) he decided to follow my suggestion to call Edgar J. Hoover (sic) and ask him. Mr. Hoover denied categorically that the FBI had gone into the papers...."

The aide said Tesla had told his nephew that "he wished to leave his works, property, etc., to his native country." (Not only is this uncorroborated but the papers were in English.)

Immediately after Tesla's death an exchange of telegrams flew between FBI Agent Foxworth of the field division of the New York Bureau and the director of the New York Bureau of the FBI. The day following discovery of the body, Agent Foxworth reported:

"Experiments and research of Nikola Tesla, deceased. Espionage—M. Nikola Tesla, one of the world's outstanding scientists in the electrical field, died January seventh, nineteen forty three at the

Hotel New Yorker, New York City. During his lifetime, he conducted many experiments in connection with the wireless transmission of electrical power and ... what is commonly called the death ray. According to information furnished by X [name deleted], New York City, the notes and records of Tesla's experiments and formulae together with designs of machinery ... are among Tesla's personal effects, and no steps have been taken to preserve them or to keep them from falling into hands of people ... unfriendly to the war effort of the United Nations...." (The FBI was, however, advised by the office of Vice-President Henry A. Wallace that the government was "vitally interested" in preserving Tesla's papers.)

Bloyce D. Fitzgerald, "an electrical engineer who had been quite close to Tesla during his lifetime," continued Foxworth, "advised the New York office that on January seventh, nineteen forty three, Sava Kosanović, George Clark, who is in charge of the museum and laboratory for RCA, and Kenneth Swezey ... went to Tesla's rooms in the New Yorker [author's note: the correct date would have been January 8], and with the assistance of a locksmith broke into a safe which Tesla had in his rooms in which he kept some of his valuable papers.... Within the last month, Tesla told Fitzgerald that his experiments in connection with the wireless transmission of electrical power had been completed and perfected.

"Fitzgerald also knows that Tesla had conceived and designed a revolutionary type of torpedo which is not presently in use by any of the nations. It is Fitzgerald's belief that this design has not been made available to any nation up to the present time. From statements made to Fitzgerald by Tesla, he knows that the complete plans, specifications and explanation of the basic theories of these things are some place in the personal effects of Tesla. He also knows there is a working model of Tesla's, which cost more than ten thousand dollars to build, in a safety deposit box belonging to Tesla at the Governor Clinton Hotel, and Fitzgerald believes this model has to do with the so-called death ray or the wireless transmission of electrical current.

"Tesla has also told Fitzgerald in past conversations that he has some eighty trunks in different places containing transcripts and plans having to do with experiments conducted by him. Bureau is requested to advise immediately what, if any, action should be taken concerning this matter by the New York Field Division."[2]

Kosanović later reported to Walter Gorsuch of the Office of Alien Property in New York that he first went to Tesla's rooms with the other men to search for a will. After the safe was opened, Swezey took from it a book containing the testimonials sent to Tesla on his seventy-fifth birthday, while Kosanović took from the room three pictures of Tesla. According to the manager of the New Yorker Hotel and Kosanović, nothing else was removed. The safe was closed under a new combination, which combination was in Kosanović's exclusive possession.

On January 9, Gorsuch of OAP and Fitzgerald went to the New Yorker Hotel and seized all of Tesla's property, consisting of about two truckloads of material, sealed it and transferred it to the Manhattan Storage and Warehouse Company. It was added to about thirty barrels and bundles that had been there since about 1934, and these too were sealed under orders of the OAP.

In addition to the question of the legitimacy of Alien Property's involvement in the case is the question of why Kosanović was allowed to have access to the safe's combination, from which he later claimed the Edison Medal had vanished. Tesla's American naturalization papers, which he so prized that he always kept them in his safe, may now be seen at the Tesla Museum in Belgrade; but it is not known what other papers or objects were in the safe.

The Washington Bureau of the FBI went so far as to advise the New York Bureau "to discreetly take the matter up with the State's Attorney in New York City with the view to possibly taking Kosanovich into custody on a burglary charge and obtaining the various papers which Kosanovich is reported to have taken from Tesla's safe." New York was also told to contact the Surrogate Court so stops could be placed against all of Tesla's effects, so that no one could enter them without an FBI agent being present, and New York was to keep Washington advised of all developments.[3]

The idea of arresting the Yugoslav ambassador was quickly dropped. And very soon the Washington headquarters made a curious decision. Edward A. Tamm of the FBI in Washington advised D. M. Ladd of that Bureau that the whole matter was being turned over to the Custodian of Alien Property; and Tamm noted, "There appears to be no need for us to mess around in it."[4]

Soon the well-known electrical engineer Dr. John G. Trump, who was serving as a technical aide to the National Defense Research Committee of the Office of Scientific Research and Development, was asked to participate in an examination of Tesla's scientific papers. Present at the Manhattan Warehouse & Storage Company in addition

to Dr. Trump were Willis George, Office of Naval Intelligence, Third Naval District, Edward Palmer, chief yeoman, USNR, and John J. Corbett, chief yeoman, USNR.

Dr. Trump reported afterward that no examination was made of the vast amount of Tesla's property that had been in the basement of the New Yorker Hotel for ten years prior to his death, or of any of his papers except those in his immediate possession at the time of death. It should be remembered that Tesla's scientific reputation had been in eclipse for a number of years and that there had been many efforts to discredit his claims in radio, robotry, and alternating current. Dr. Trump was a busy man, just as the staff of the FBI was stretched thin by its preoccupation with investigating wartime sabotage.

"As a result of this examination," wrote Dr. Trump, "it is my considered opinion that there exist among Dr. Tesla's papers and possessions no scientific notes, descriptions of hitherto unrevealed methods or devices, or actual apparatus which could be of significant value to this country or which would constitute a hazard in unfriendly hands. I can therefore see no technical or military reason why further custody of the property should be retained."

He added: "For your records, there has been removed to your office a file of various written material by Dr. Tesla which covers typically and fairly completely the ideas with which he was concerned during his later years. These documents are enumerated and briefly abstracted in the attachment to this letter."

In closing Dr. Trump said: "It should be no discredit to this distinguished engineer and scientist, whose solid contributions to the electrical art were made at the beginning of the present century, to report that his thoughts and efforts during at least the past fifteen years were primarily of a speculative, philosophical, and somewhat promotional character—often concerned with the production and wireless transmission of power—but did not include new sound, workable principles or methods for realizing such results."

The file (of which Dr. Trump's notes were only an abstract) consisted apparently of either photostats or microfilm made by the naval officers present, and the original papers apparently remained in storage, later to be transmitted to Yugoslavia. The examination had failed to disclose any alien-owned property subject to the vesting power of the Alien Property Custodian under the Trading with the Enemy Act. Tesla's papers and personal effects were released in

February of 1943 for disposition by Kosanović, the administrator of his estate.

Dr. Trump's abstract included the following:

"*Art of Telegeodynamics, or Art of Producing Terrestrial Motions at Distance*—This document, in the form of a letter dated June 12, 1940, to the Westinghouse Electric & Manufacturing Co., proposes a method for the transmission of large amounts of power over vast distances by means of mechanical vibrations of the earth's crust. The source of power is a mechanical or electromechanical device bolted to some rocky protuberance and imparting power at a resonance frequency of the earth's crust. The proposed scheme appears to be completely visionary and unworkable. Westinghouse's reply indicates their polite rejection. . . .

"*New Art of Projecting Concentrated Non-Dispersive Energy through Natural Media*—This undated document by Tesla describes an electrostatic method of producing very high voltages and capable of very great power. This generator is used to accelerate charged particles, presumably electrons. Such a beam of high-energy electrons passing through air is the 'concentrated nondispersive' means by which energy is transmitted through natural media. As a component of this apparatus there is described an open-ended vacuum tube within which the electrons are first accelerated.

"The proposed scheme bears some relation to present means for producing high-energy cathode rays by the cooperative use of a high-voltage electrostatic generator and an evacuated electron acceleration tube. It is well known, however, that such devices, while of scientific and medical interest, are incapable of the transmission of large amounts of power in nondispersed beams over long distances. Tesla's disclosures in this memorandum would not enable the construction of workable combinations of generator and tube even of limited power, though the general elements of such a combination are succinctly described.

"*A Method of Producing Powerful Radiations*—an undated memorandum in Tesla's handwriting describing 'a new process of generating powerful rays or radiations.' This memorandum reviews the works of Lenard and Crookes, describes Tesla's work on the production of high voltages, and finally in the last paragraph gives the only description of the invention contained in the memorandum. . . . 'Briefly stated, my new simplified process of generating powerful rays consists

in creating through the medium of a high-speed jet of suitable fluid a vacuous space around a terminal of a circuit and supplying the same with currents of the required tension and volume.'"

Long afterward in a letter to a colleague, Dr. Trump told what happened when he visited the Hotel Governor Clinton to examine the "device" stored in its vault, presumably the same box remembered by the messenger boy in Tesla's room.

"Tesla had warned the management that this 'device' was a secret weapon," said Dr. Trump, "and it would detonate if opened by an unauthorized person. Upon opening the vault and indicating the package containing the secret weapon, the hotel manager and employees promptly left the scene." The federal agents who had come along also pulled back, the better to give him the sole distinction of opening the parcel.

It was wrapped in brown paper and tied with a string. He remembered hesitating, thinking how beautiful the weather was outdoors, and pondering on why he was not outside too.

He lifted the parcel onto a table and, mustering his courage, snipped the string with his pocket knife. He removed the wrapping. Inside was a handsome polished wooden chest bound with brass. It required a final effort of courage to raise the hinged lid.

Inside stood a multidecade resistance box of the type used for Wheatstone bridge resistance measurements—a common standard item to be found in every electrical laboratory before the turn of the century!

Why had Tesla seen fit to terrify the staff and management of the hotel with this harmless object for so many years? Perhaps he had become so accustomed to having his hotel bills paid behind his back (believing that the hotels, honored to have him living there, had routinely dismissed the billings), that he was insulted when the Governor Clinton brashly demanded its $400.

Although the FBI closed its Tesla file in 1943, it didn't seem to want to stay closed. It was reopened in 1957 when an informant complained that a New York couple were issuing newsletters containing "information pertaining to flying saucers and interplanetary matters" and exploiting the inventor's name and fame. They allegedly claimed that Tesla's engineers, after his death, had completed a "Tesla Set," a radio device for interplanetary communication, that the device had been placed in operation in 1950 and since then Tesla engineers had been in close touch with alien spaceships. Once again the FBI decided no action was warranted and the file was closed.

Sweasy had never put much credence in the "secret weapon" rumors and had written to an inquirer: "Because Tesla was a recluse, and himself liked to talk in mystifying terms during his later years, I think many legends have been built up about the dozens of ideas he had evolved but which were not permitted by others to see the light of day."

He said he had known the inventor well for two decades before his death: "Tesla's greatest genius flamed up during a dozen or so years just before and slightly after the turn of the century. What he did after that may have carried the germs of some of the developments we are witnessing today, but he had not carried any of them—at least on paper or in any other tangible form—to the point of practicality . . ."

Perhaps, but between 1945 and 1947 an interesting exchange of letters and cables occurred among the Air Technical Service Command at Wright Field, Ohio, in whose Equipment Laboratory much top-secret research was being performed, Military Intelligence in Washington, and the Office of Alien Property—subject, files of the late Nikola Tesla.

On August 21, 1945, the Air Technical Service Command requested permission from the commanding general of the U.S. Army Air Force in Washington, D.C., for Private Bloyce D. Fitzgerald to go to Washington for a period of seven days "for the purpose of securing property clearance on enemy impounded property."

On September 5, 1945, Colonel Holliday of the Equipment Laboratory, Propulsion and Accessories Subdivision, wrote to Lloyd L. Shaulis of the OAP in Washington, confirming a conversation with Fitzgerald and asking for photostatic copies of the exhibits annotated by Trump from the estate of Tesla. It was stated that the material would be used "in connection with projects for National Defense by this department," and that all of it would be returned in a reasonable length of time.

That was the last time that the Office of Alien Property or any other federal agency in the United States admitted to having possession of Tesla's papers on beam weaponry. Shaulis wrote to Colonel Holliday on September 11, 1945, saying, "The materials requested have been forwarded to Air Technical Service Command in care of Lt. Robert E. Houle. These data are made available to the Army Air Force by this office for use in experiments; please return them." They were never returned.

These were the full photostatic copies, not merely the abstracts. OAP has no record of *how many* copies were made by those who

150

examined the files with Dr. Trump. The Navy has no record of Tesla's papers; *no* federal archives have a record of them.

Curiously, four months after the photostats had been sent to Wright Field, Col. Ralph Doty, the chief of Military Intelligence in Washington wrote James Markham of Alien Property indicating that they had never been received: "This office is in receipt of a communication from Headquarters, Air Technical Service Command, Wright Field, requesting that we ascertain the whereabouts of the files of the late scientist, Dr. Nichola [sic] Tesla, which may contain data of great value to the above Headquarters. It has been indicated that your office might have these files in custody. If this is true, we would like to request your consent for a representative of the Air Technical Service Command to review them. In view of the extreme importance of these files to the above command, we would like to request that we be advised of *any attempt by any other agency to obtain them.* [Italics supplied.]

"Because of the urgency of this matter, this communication will be delivered to you by a Liaison Officer of this office in the hope of expediting the solicited information."

The "other" agency that had the files, or should have had them, was the Air Technical Service Command itself! Colonel Doty's letter, which was classified under the Espionage Act, was declassified on May 8, 1980.

This embarrassing contretemps goes unexplained in the records. Perhaps it was handled orally with the Liaison Officer.

However, on October 24, 1947, David L. Bazelon, assistant attorney general and director of the Office of Alien Property, wrote to the commanding officer of the Air Technical Service Command, Wright Field, Dayton, Ohio, regarding the Tesla photostats that had been sent by registered mail on or about September 11, 1945, to Colonel Holliday, at the latter's request.

"Our records do not reveal that this material has been returned," said Bazelon. He sent a description and asked that it be returned.

Obviously at least one set of Tesla's papers had reached Wright Field because on November 25, 1947, there was a response to the Office of Alien Property from Colonel Duffy, chief of the Electronic Plans Section, Electronic Subdivision, Engineering Division, Air Materiel Command, Wright Field. He replied: "These reports are now in the possession of the Electronic Subdivision and are being evaluated. . . ." He believed that the evaluation should be completed by January 1, 1948, and "At that time your office will be contacted with respect to final disposition of these papers."

There is no written record that OAP ever sought further to have the documents returned, and they were not returned.

For many years there have been rumors that these unpatented inventions or concepts of Tesla's found their way not only to the U.S. Army Air Force but to Russia and to private American defense industries, and ultimately into certain university research laboratories engaged in beam weaponry.

The Office of Alien Property experienced a very difficult problem over the years in explaining its role in connection with Tesla's papers. Between 1948 and 1978 it issued the following variations on a theme to many inquirers:

"While this Office participated in an examination of certain material owned by the late Dr. Tesla, our records do not disclose that any such material has been vested or is presently under the jurisdiction of this Office. . . ."

"This Office has never had custody . . . of any property of Nikola Tesla. . . ."

"While the Tesla papers were in our custody. . ."

"Photostatic copies of certain documents, made while the papers were under our seal. . . ."

"In 1943 this Office placed a seal on the property. . . ."

"While the Tesla papers were in our custody. . ." etc., etc., etc.

As for what is now Headquarters Aeronautical Systems Division, Wright-Patterson Air Force Base, Ohio, they state: "The organization (Equipment Laboratory) that performed the evaluation of Tesla's papers was deactivated several years ago. After conducting an extensive search of lists of records retired by that organization, *in which we found no mention of Tesla's papers, we concluded the documents were destroyed* at the time the laboratory was deactivated."[6] (Italics supplied. Response, under the Freedom of Information Act, dated July 30, 1980.)

Tesla's original papers, and the remaining models of his inventions—his magnifying transmitter, robot boats, early tube lighting, induction motors, turbine, exhibits shown at the Chicago World's Fair of 1893, such as the "Egg of Columbus," and others—left America in 1952 for Yugoslavia. His ashes were sent later. The artifacts may now be seen at the Tesla Museum in Belgrade, a dignified-looking building with a broad, well-proportioned facade at No. 51 Proleterskih

Brigada, an avenue renamed after the war, but formerly known under the monarchy as Crown Street. The museum bears a plaque on a low wall, printed in the old Cyrillic alphabet.

Here Tesla's English writings have been translated into Serbo-Croatian—except, as the archivist admits, for the "unimportant" material, which remains, just as he wrote it, in the language of his adopted country.

30 The Legacy

The fact that Tesla's research notes and papers have not been easily available for western scientists has not, of course, meant that Teslian research is dead. On the contrary, the very mystery surrounding some of his unproved claims has served to goad numerous scientists into trying to duplicate his experiments. And since his aspirations were virtually limitless, there has always been a chance that the rewards of success would not be inconsiderable. But the single greatest stimulus to try to follow in Tesla's footsteps doubtless remains the example of the man himself—his stunning record of achievement and the enduring fascination of his mind. As one admiring German writer put it, "Tesla went beyond the borders of his exact science to foretell what lies in the future ... a modern Prometheus who dared reach for the stars...."[1]

Although a comprehensive summary of the state of Tesla-inspired research today would be beyond either the scope of this book or the intent of its author, no account of the inventor's life would be complete without at least some indication of what has become of a few of his major preoccupations. The record, as one might expect, is both mixed and incomplete, but it is no less impressive for that.

To begin, then, with Tesla's experiments with ball lightning: He had no idea what ball lightning might be useful for when he first encountered it in his Colorado Springs research; to him it was a nuisance, but it demanded an explanation. And so he set about determining the mode of formation of the strange fireballs and learned to produce them artificially.

The technical explanation runs like this: In the highly resonant transformer secondary comprising his magnifying transmitter, the entire energy accumulated in the excited circuit, instead of requiring a quarter period for transformation from static to kinetic, could spend itself in less time, at hundreds of thousands of horsepower. Thus, for example, Tesla produced artificial fireballs by suddenly causing the impressed oscillations to be more rapid than free ones of the second-

ary. This shifted the point of maximum electrical pressure below the elevated terminal capacity, and a ball of fire would leap great distances.

Yet strangely enough, modern plasma physicists with the best-equipped laboratories, have failed to produce plasmoids with anything near the stability of the true ball-lightning spheres that he created.

Why the fascination with this problem? First, of course, because it is there, an unknown. But second because among other uses, it may hold a vital key in the international race to achieve controlled nuclear fusion—potentially the greatest power source in history. Among those long interested in ball-lightning research are Peter Kapitza, the great Russian physicist, Lambert Dolphin and his colleagues in the radio physics laboratory at SRI International, Dr. Robert W. Bass of Brigham Young University, and Robert Golka, with whom Bass has collaborated on research.

Golka, a Massachusetts physicist, Tesla disciple, and lightning experimenter, has pursued the ephemeral fireball with the fervor of a hunter of snarks. Like Tesla in Colorado, he has done his research alone in a remote western laboratory in the Utah salt flats, and like Tesla, he has struggled to win the kind of federal support that usually goes only to enormous institutions or corporations.

In the largest hangar at the far end of the ghost base at Wendover, Utah, which was built by the U.S. Army Air Force during World War II, big spotlights are often burning as Golka conducts lightning tests. Here, under tightest security in the 1940's, the B-29 *Enola Gay* was housed and outfitted for delivering the first atomic bombs to Hiroshima.

Golka made two trips to the Tesla Museum to pore over the inventor's then unpublished notes and concentrated on replicating as exactly as he could in the old air base hangar the magnifying transmitter that Tesla had built in 1899 when investigating the lightning storms of Pike's Peak.

"He [Tesla] was 'way ahead of anything we have today in the equipment he built," Golka says. "Such as the high-powered switches and spark gap switches. The knowledge has been lost; we don't know how he did it. Some of it was in the diaries, but he kept much of this stuff in his head."

Golka built a magnifying transmitter at his "Project Tesla" that would discharge 22 million volts, creating almost twice as powerful a chain-lightning storm as the maestro himself had produced at Colorado Springs.

The relevance of ball lightning to fusion research has to do with the problem of confining plasma. The heart of the most common type of experimental fusion reaction involves taking isotopic hydrogen gas and both accelerating and superheating it until the hydrogen nuclei fuse to make helium nuclei, releasing, in the process, staggering amounts of energy. Along the way, while the hydrogen is being charged with vast amounts of kinetic and thermal energy, it enters an imperfectly understood material state known as plasma.* In the penultimate stages of the process, before fusion begins, the besetting problem is to maintain the plasma's coherence, to confine it within some kind of invisible electromagnetic "bottle."†

Since the strongest geometric shape is a sphere, Golka believes that ball lightning offers the best potential for containment of the unstable mass. He describes the odd lightning as "a glowing sphere of a variety of colors, a half-inch in diameter or as big as a grapefruit," and resembling an onion in its "layers and layers of alternate charged particles, positive and negative." It may bounce along through buildings, fall into water and set it boiling, and sometimes, as at the Hill Air Force Base in Utah, it may knock out the most sophisticated electronic equipment. In the summer of 1978, with the use of CO-2 laser beams, he finally managed to produce "bead" lightning, which he believes to be a form of ball lightning, and to photograph it in sequential frames.

He then sought support from the U.S. Department of Energy for a major program of research for which he proposed to use a device called a pyrosphere, employing five laser beams to create thermonuclear fusion. In a "Fireball Fusion Reactor" only nonradioactive helium is created and, according to Golka, mathematical models indicate it can reach and hold temperatures above a billion degrees.

He also proposed to the Air Force another Teslian concept, a charged particle beam, but again one designed to employ laser technology. Such beam guns, he believes, would have a range of

*Until recent years plasma had no major industrial importance but was merely a laboratory curiosity. Richard L. Berstn, executive vice president of International Plasma Corp., believes that the first practical application of plasmas came in the 19th century when "the glowing plasma produced by a Tesla coil was used to locate leaks in glass vacuum flasks."

†Teslian ideas are also involved in other aspects of fusion research. Superconducting magnetic coils, cooled to a few degrees above absolute zero, are used in magnetic containment devices; and, in a newly developed rival process, hydrogen fuel pellets are being bombarded by high-energy particle beams.

6,000 miles and could melt and destroy ICBM-type missiles in the air. With a Tesla coil three times the size of his combined coils, Golka believed he could generate 200 million volts of electricity.

But he inherited the usual Teslian problems of a loner, and as he said, "The walls fall in on me when I work for corporations." His work reached a point where it could no longer progress with improvised equipment, but called for enormous investments. His competitors were large corporations and leading universities engaged in the nuclear-fusion race; and even some of the latter were being cut off from their federal grants. They too were deeply into laser technology, although Golka claims his system is different and unique. By no means the only scientist to have attempted to carry forward Tesla's work with ball lightning, he undoubtedly has been one of the most singleminded.*

Russia's Kapitza, who shared the 1978 Nobel Prize in physics with Arno Penzias and Robert W. Wilson of America for his work in magnetism and the behavior of matter at extremely low temperatures, acknowledges his debt to Tesla. "The efficient generation of super-high-frequency oscillations and their conversion back to direct-current electrical energy," he writes, "discloses possible solutions to the problem of transmitting electrical energy ... in free space. The transmission setup will, of course, be similar to that already considered but, instead of a wave guide, a highly directional beam must be used, which, as is well-known, only at short wavelengths will diverge little. Such a setup for the transmission of electrical energy, firstly thought by N. Tesla many years ago, has already been discussed.... Although ... possible in principle, it is tied up with the solution of a series of complicated engineering problems and therefore it can be implemented in practice only in such special situations in which other methods of energy transmission are inapplicable (for example, when energy must be supplied to a satellite)."[3]

In this field of wireless energy transmission, so directly concerned with the space race, there is progress nearer home. Richard Dickinson, who heads the Microwave Power Transmission project for Cal Tech's Jet Propulsion Laboratory in the desert near Barstow, California, traces his inspiration to the early work of Tesla. The concept of bringing electricity to Earth from an orbiting solar-power system via

*Lambert Dolphin says of Golka's replica of the Colorado Springs Tesla coil: "It is spectacular indeed, to either scientist or layman. I hope it ends up in a museum such as the Smithsonian where it can be appreciated." He too is a proponent of further research in ball lightning.

microwaves is daring, costly, romantic, and thoroughly in the style of the maestro.

"We beamed power from our transmitter at Goldstone a distance of one mile," Dickinson said of the NASA project initiated in the mid-seventies. "All of the microwave energy that fell within our target (of which we could only collect a portion with our existing apparatus), we converted 82.5 percent to useful direct current. Thirty-four thousand watts of direct current output carried a distance of one mile. We are well pleased. The next step is to look further into the technology and needs of the satellite power system of the future."[4]

William C. Brown of the Raytheon Company, who developed the rectenna used in this microwave-power research, also attributes the idea of sending electricity by radio waves to Tesla's pioneering in the fundamentals of radio broadcasting and wireless power transmission.

Theoretically, a city the size of New York could be supplied with five billion watts on a winter day by enormous satellite structures in the sky that would orbit synchronously with Earth at a height of 22,300 miles. But admittedly, the cost of such floating power stations would be many billions of dollars, and they would be highly vulnerable to enemy killer satellites, in the event of war.

Brookhaven National Laboratory, located just to the northeast of Tesla's old Wardenclyffe site at Shoreham, also feels a close link with the inventor through the advanced high-energy work being conducted at the laboratory. In 1976 it paid homage to him in a ceremony, and the Yugoslav government sent a plaque to be placed at the still-standing Wardenclyffe laboratory.

Canada, too, has long been a bastion of Tesla Energy System advocates, and because of the country's rich hydroelectric sources, through-the-Earth transmission—if it worked—could be a boon to areas of power shortage.

But—will it work? Several projects have been planned, and some partially implemented, in Canada, central Minnesota, and most recently in Southern California—to "pump" hydroelectric power wirelessly through the Earth to an area of need, employing the Tesla system as it is understood.[5] The U.S. Department of Energy has often been asked to fund projects based on Tesla's system.

Unfortunately, there is no evidence that the system ever worked for Tesla, and none that it could work for anyone else. One of the inventor's problems was that he improperly extended into the electromagnetic domain fluid and fluid-mechanical analogies. Tesla's patent No. 787,412 provides for the Earth to be excited by a carefully

154

valued wavelength to establish a standing wave condition. Tesla believed the propagation path fell along a diameter. But according to much knowledge developed since 1899, the propagation path would not be along a diameter but, rather, along an ellipsoidal arc somewhere between the diameter and the spherical surface.

A fundamental aspect of wave propagation of power is that *no power is transmitted if the wave is standing;* power is transmitted solely with a traveling component. Boundary layer propagation, i.e., the mode of lossless propagation of waves at the boundary of two differing media (such as earth and sky), is a viable concept. However, the boundary plane must be smooth and the waves must be properly launched. At the frequencies Tesla was using, such launching apparatus would be an enormous structure. In examining the photographs of his experimental station at Colorado Springs, it is apparent to experts that he did not employ apparatus essential to the launching of such waves.

Tesla probably was mistaken at Colorado Springs in his interpretation of the lightning storms which he observed traveling away from him (eastwardly) across the plains, producing maxima and minima effects upon his instruments. This he interpreted as standing waves being set up in the Earth by the traveling storm, with the crests of the waves passing through his location as the storms advanced. It is believed he was seeing an interference effect caused by the reradiating surface of the frontal range of mountains to the west of his station. The results would have been the same on his instruments.

Dr. Walt, formerly senior scientist at the Environmental Research Laboratories, National Oceanic and Atmospheric Administration, in Colorado, describes himself as a "firm skeptic" of the Tesla theory. "The concept that electromagnetic energy penetrates 'through the earth,'" he says, "is valid only if the frequency is sufficiently low *and* if the distances are small. It's all tied up with 'skin-effect' phenomena; that means that the field is confined to the surface of a good conductor as in metallic wave guide."[6]

Dr. Walt even goes so far as to suggest that Tesla never really accepted the fact that electromagnetic waves could transport energy through the air. "Instead he thought of the earth itself as a conveyor and also thought of the possibility of a return conductor at heights of '15 miles above sea level.' The parallel of this idea to the earth-ionosphere wave guide at extremely low frequencies is striking (see IEEE *Journals of Oceanic Engineering*, Vol. OE-2, No. 2, April 1977). Also his proposed resonance of the system might be interpreted as the first disclosure of the earth-ionosphere cavity oscillations that have

been associated from the early 1960s with W. O. Schumann, N. Christofilos, and J. Galejs, among others."[7]

With respect to wireless communication, the U.S. Navy's Project Sanguine/Seafarer of recent years has evolved from Tesla's Colorado experiments. In a thermonuclear war, conventional radio communication probably would be disrupted at certain heights and wavelengths. America's atomic submarine fleet might then be without a means of receiving messages. The U.S. Navy, seeing this danger, turned back to Tesla's nineteenth-century suggestion of employing 10 Hz signals (ELF or extra low frequency), to circle the globe and penetrate the deepest waters.

One of the headier speculations concerning Teslian science is a suggestion that Russia has been employing his theories on weather modification to interfere with the jet stream, causing droughts and extremes of hot and cold weather. However unlikely the charge, it is true that Tesla did do a good deal of theorizing (but very little experimentation) on weather control.

He wrote, for example, on the possible use of radio-controlled missiles and explosives to break up tornadoes and the use of "lightning of a certain kind" to trigger rainfall. Of the former he said, "It would not be difficult to provide special automata for this purpose, carrying explosive charges, liquid air or other gas, which could be put into action, automatically or otherwise, and which would create a sudden pressure or suction, breaking up the whirl. The missiles themselves might be made of material capable of spontaneous ignition." His proposal included a lengthy mathematical formula.[8]

As with much modern scientific exploration inspired by the maestro, the returns are still not in on weather changing. Scientist Frederic Jueneman, "Innovative Notebook" columnist for *Industrial Research* magazine, calls attention to the fact that Dr. Robert Helliwell and John Katsufrakis of Stanford University's Radio Science Laboratory, demonstrated that very low frequency radio waves can cause oscillations in the magnetosphere. With a 20-km antenna and a 5 kHz transmitter in the Antarctic, they found that the earth's magnetosphere could be modulated to cause high energy particles to cascade into our atmosphere, and by turning the signal on or off they could start or stop the energy flow.

"The theoretical implication suggested by their work," says Jueneman, "is that global weather control can be attained by the injection of relatively small 'signals' into the Van Allen belts—something like a super-transistor effect."

But Jueneman's speculations go further and are eminently

worthy of Tesla: "If Tesla's resonance effects, as shown by the Stanford team, can control enormous energies by miniscule triggering signals, then by an extension of this principle we should be able to affect the field environment of the very stars in the sky...With godlike arrogance, we someday may yet direct the stars in their courses."[9]

No biography of Tesla would be complete without mention of his bright following of amateur physicists who build Tesla coils for their personal research, endeavoring to replicate his electrical magic; and the young inventors who pore over his basic patents and still find inspiration from them.

Durlin C. Cox, a Wisconsin physicist who has pondered Tesla's published writings, has built two Tesla coils, the second of 10 million volts. The reasons: "My own personal interest in high voltage engineering, especially in the field of high frequency rf transformers; to further my studies on the laboratory production of ball lightning; and because the University of Wisconsin at Madison asked me to submit a Tesla coil in their bi-annual Engineering Exposition in the spring of 1981." He and friends built one Tesla coil for a Hollywood studio for lightning effects, which has been a common use of them.

Electrical engineer Leland Anderson has summarized the major points in design that a coil builder might gain from reading Tesla's *Colorado Springs Notes*:

1. The Q's of the primary and secondary must be as high as practicable.

2. The Q's of the primary and secondary should be equal.

3. The length of the secondary winding should be one-quarter of the effective operating wavelength.

4. The technique of using an "extra coil" tank circuit (or a variation of it) in the secondary to magnify the voltage should be used.

"With these criteria in mind," he says, "the builder will find that hundreds of turns are not necessary for the secondary winding to achieve high voltages."

Last but not least, what about Tesla's death/disintegrator rays? Were his concepts sound? If they were found useful by the U.S. Army Air Force research team, whose top-secret project was rumored to have had the code name "Project Nick," it may be safely assumed that instead of being "destroyed," as reported, his papers are still highly classified.

Dr. Trump's evaluation and Swezey's assessment of Tesla's "secret weapons" have, however, received updated concurrence by

Lambert Dolphin, assistant director of the Radio Physics Laboratory at SRI International, who has studied the inventor's work and his ball-lightning research for two decades. He points out that the fields of knowledge of both physics and electrical engineering have grown exponentially since about 1930.

"Whole libraries are now required just to keep track of all the theory and experience that have unfolded since Tesla's time," he says. "Our mathematical and practical understanding of electricity, magnetism, electromagnetic theory, and radio communications has continued to grow explosively ever since 1950, or should I say 1970!"[10]

Tesla, Dolphin believes, "may have had intuitive insight into lasers and high-energy particle beams as well as ultra-high voltage phenomena, but now that we understand all the physics much more, we can easily evaluate many of his extravagant later-life claims."[10]

In fact, there is no good evidence to suggest that Tesla anticipated lasers. His "teleforce rays" seem to have been concerned exclusively with high-energy particle beams. We still do not know precisely how he intended them to work, although, says Dolphin, the available evidence suggests that Tesla may not have paid sufficient attention to how greatly such beams may be absorbed or dispersed by molecules and atoms in the air. In any case, even if we did understand Tesla's intentions more clearly, we should be hard put to compare them to the current state of the art, much of which is hidden under high security classifications.

Nevertheless, Tesla's work with high voltages to accelerate charged particles does seem to have been decidedly in what is now the mainstream of physical research. "In this field," says Dolphin, "he anticipated modern linear and circular nuclear accelerators. Such machines today have energy levels of tens of billions of electron volts or at least 1,000 times greater energy levels than Tesla ever attained.

"I am sure his magnifying transmitters were spectacular... He probably generated some interesting arcs and sparks that were what we now study as *plasmas*. The containment of plasmas is a huge area of modern physics. For example ... to see if small amounts of matter can be turned into immense amounts of electrical power in carefully contained plasmas." But Tesla's early discoveries and inventions, he concludes, were indeed ingenious and ahead of their time.[11]

As this book goes to press, the Pentagon is studying the creation of a new branch of the armed services, to be known as the U.S. Space Command, whose primary arsenal will consist of laser and particle-beam weapons fired from "space battleships." In prose not

unlike Tesla's own, a Department of Defense fact sheet compares particle beams to "directed lightning bolts" —although without explicitly admitting that such a weapon has in fact been developed.

It is difficult to assess the current state of the beam-weapons program because virtually everything about it is heavily classified. Apparently the technology involved has proved to be complex and difficult, raising questions about the project's feasibility, but many experts nevertheless seem to be hard at work on the problem. At the same time, the activities of the other nations in this area have been monitored carefully by agencies of the federal government. Indeed the possibility of creating a family of particle-beam weapons has been a subject of serious discussion in this country for at least the past twenty-five years, and it is, in my opinion, of no little significance that as long ago as 1947 the Military Intelligence Service identified the writings about a particle-beam among Tesla's scientific papers as being "of extreme importance."

Since he had no laboratory in the later years of his life, Tesla was unable to develop his ideas. But it is undeniable that he described in general terms half a century ago what may prove to be one of the main weapons of the Space Age. And to the end of his days, Tesla the pacifist hoped that such knowledge would be used, not for war among Earthlings, but for interplanetary communication with our neighbors in space, of whose existence he felt certain.

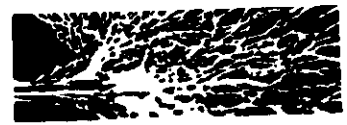

Bibliographical Essay

Some of Tesla's own writing—lectures, articles, patents, papers, and letters—is now available in the United States. His most important lectures and his brief autobiography, in bound volumes, are listed in the prologue to the reference notes.

Citation of biographies of Tesla by O'Neill, Hunt, and Draper, and others may be found in the reference notes. The O'Neill manuscript and the Swezey Collection are to be found at the Smithsonian Institution, Dibner Library.

Serious Tesla scholars will wish to consult the annotated *Dr. Nikola Tesla Bibliography* by J. T. Ratzlaff, and L. I. Anderson (San Carlos, California, Ragusan Press, 1979), for it contains some 3,000 sources of writings by and about Tesla. "Priority in the Invention of Radio, Tesla v. Marconi," by Leland Anderson may be obtained through the Antique Wireless Association, Monograph New Series No. 4.

A new means of analyzing Tesla's inventions is provided in *Dr. Nikola Tesla: Selected Patent Wrappers from The National Archives*, by J. T. Ratzlaff (Millbrae, Ca., Tesla Book Co., 1980). These "file wrappers" provide explanations and correspondence between the patentee and the Patent Office, to overcome objections raised by the examiner.

Tesla's *Colorado Springs Notes, 1899–1900*, published in 1978 by the Tesla Museum, is available through Nolit, Terazije, 27, Belgrade, Yugoslavia.

The Library of Congress Manuscripts Division contains microfilm correspondence between Tesla and George Scherff, Robert Underwood Johnson, Mark Twain, members of the Morgan family, George Westinghouse, and the Westinghouse Electric and Manufacturing Company.

In addition original correspondence and photographs may be found at the Butler Library, Rare Books and Manuscripts, Columbia University, including letters between Tesla and Johnson, Scherff, and

157

REFERENCE PAGES

96 pages

February 12, 1937

Mr. Edgar Hoover, Director,
Federal Bureau of Investigation,
Washington, D.C.

My dear Mr. Hoover:

I do not know whether or not the recent series of air crashes on the west coast has attracted the attention of your department, or whether, if investigation were indicated, the jurisdiction would be your own. An idea as to the cause of these crashes has occurred to me, however, and I thought it might bear a bit of checking up.

If you will check newspaper files as far back as 1934, I believe you will find that the earliest of the unexplained (and apparently unexplainable crashes) occurred about that time.

As I remember the events, it was during that year that three small planes exploded in the air over Texas and southwestern Kansas and Oklahoma. These crashes were not accounted for, either by subsequent investigation where the plane occupants were killed or by the experience of surviving plane occupants in one case.

Following these tragedies there came a lapse of about a year, after which there occurred (likewise without apparent reason) the series of crashes which cost the lives of a senator, of Knute Rockne, and a number of others. All crashes again occurred in the South and Southwest.

Again there was a lapse of time, this one not quite a year, and there started the worst series of air disasters the country has yet seen. One plane lost in the Southwest and not yet accounted for. One plane crashes into a mountainside within sight of its airport. And now the most recent incident, the falling of a United liner into San Francisco Bay while circling its airport, preparatory to landing.

RECORDED & INDEXED 62-47649-1

Now in this most recent incident, the experience of the radio operator at the airport seems to me to be highly illuminating. This operator reported a soft buzz interrupting his communication with the liner ... a loud roar such as produced by the worst imaginable static ... then silence. The plane had dropped into the bay like a plummet.

FEB 24 1937

[redacted] b6 b7C

159

Crack pilots do not suddenly become rank hams and bungle in handling a ship. Nor do the three motors (or even two) on the large airliners, stop simultaneously without extremely sufficient reason. Th ese things might happen once or even twice in a lifetime. They do not happen six and eight times a year. It is not logical that they should.

To digress for a moment, I recall reading an article in a magazine a year or two ago, written by Nikola Tesla, the inventor. The article dealt with a new invention of Mr. Tesla's ... a giant induction coil which would project power (high voltage) through the atmosphere without the use of transmission wires. Mr. Tesla devoted some space to the possible social benefits that would result to the public should his invention be perfected and become practical.

I have not heard of Mr. Tesla now in two or three years. Perhaps he has left the country. Perhaps he is still here. He might still be working on the invention described in the above-mentioned article. It might have been stolen from him.

In any case, his views on the ideas presented by these two unconnected subjects, would be well worth while having. And if I had the money and the time, I should certainly make an effort to smoke him out myself.

The thing is simply this: if one man can make an instrument that will project power through the air for even so short a distance as 500 yards (the then-practical limitations of Mr. Nikola's device) it is entirely possible for another to project power for several hundreds of miles. And the effect of such uncontrolled power on metallic objects in its path is entirely unpredictable.

Please do not think me a "crank" letter writer. I have never before written a letter of this type to anyone. But the idea seems to me so within the bounds of possibility that I most sincerely feel it will bear some practical study.

Yours very respectfully,

[redacted]

(b)(7)(c)

Letter Ack. + Ref
Bu. Air Commerce
cc [redacted]
2-27-37

XXXXXX
XXXXXX
XXXXXX

FEDERAL BUREAU OF INVESTIGATION
FOIPA DELETED PAGE INFORMATION SHEET

6 Page(s) withheld entirely at this location in the file. One or more of the following statements, where indicated, explain this deletion.

☒ Deletions were made pursuant to the exemptions indicated below with no segregable material available for release to you.

Section 552		Section 552a
☒ (b)(1)	☐ (b)(7)(A)	☐ (d)(5)
☐ (b)(2)	☐ (b)(7)(B)	☐ (j)(2)
☐ (b)(3)	☐ (b)(7)(C)	☐ (k)(1)
_____	☐ (b)(7)(D)	☐ (k)(2)
_____	☐ (b)(7)(E)	☐ (k)(3)
_____	☐ (b)(7)(F)	☐ (k)(4)
☐ (b)(4)	☐ (b)(8)	☐ (k)(5)
☐ (b)(5)	☐ (b)(9)	☐ (k)(6)
☐ (b)(6)		☐ (k)(7)

☐ Information pertained only to a third party with no reference to you or the subject of your request.

☐ Information pertained only to a third party. Your name is listed in the title only.

☐ Documents originated with another Government agency(ies). These documents were referred to that agency(ies) for review and direct response to you.

_____ Pages contain information furnished by another Government agency(ies). You will be advised by the FBI as to the releasability of this information following our consultation with the other agency(ies).

_____ Page(s) withheld for the following reason(s): _____

_____

☐ For your information: _____

_____

☒ The following number is to be used for reference regarding these pages:

65-30311-237

XXXXXX
XXXXXX
XXXXXX

XXXXXXXXXXXXXXXXXXXXX
X DELETED PAGE(S) X
X NO DUPLICATION FEE X
X FOR THIS PAGE X
XXXXXXXXXXXXXXXXXXXXX

FBI/DOJ

CC-287

Mr. Tolson
Mr. E.A. Tamm
Mr. Clegg
Mr. Glavin
Mr. Ladd
Mr. Nichols
Mr. Rosen
Mr. Tracy
Mr. Carson
Mr. Coffey
Mr. Hendon
Mr. Kramer
Mr. McGuire
Mr. Harbo
Mr. Quinn Tamm
Tele. Room
Mr. Nease
Miss Beahm

J. EDGAR HOOVER
DIRECTOR

Federal Bureau of Investigation
United States Department of Justice
Washington, D. C.

13818

JBL:ed

January 11, 1943

MEMORANDUM FOR MR. LADD

RE: UNKNOWN SUBJECTS;
EXPERIMENTS AND RESEARCH
OF NIKOLA TESLA (Deceased)
ESPIONAGE - M

(b)(7)(C)

In a teletype from the New York Office dated January 9, 1943, the Bureau's advice is requested as to what action should be taken in connection with this matter. It is to be noted that Tesla died January 7, 1943, and resided at the Hotel New Yorker. He was one of the world's outstanding scientists in the electrical field and has been conducting many experiments in connection with wireless transmission of electrical power and what is commonly referred to as the "Death Ray".

Sava Kosanovich, a distant relative intensely disliked by Tesla, is taking steps to get possession of these important documents and plans. Kosanovich on January 7, 1943, with George Clark, in charge of the Museum and Laboratory for RCA, and Kenneth Swezey of Brooklyn, New York, entered Tesla's rooms in the Hotel New Yorker and, with the aid of a locksmith, broke into a safe containing some of Tesla's valuable papers, including important electrical formulae, designs, et cetera.

Tesla is reported to have completed and perfected his experiments in the radio transmission of electrical power and to have conceived and designed a revolutionary type of torpedo not presently in use by any nation. It is reported that Kosanovich may possibly make this material available to the enemy.

ACTION:

I called Mr. D[redacted] of the New York Office at 12:30 P.M. and pointed out the apparent burglary violation on the part of Kosanovich. I told him this matter should be discreetly discussed with the State's Attorney in New York City with a view to locating Kosanovich and apprehending him on a burglary charge in order to determine the nature of the material he took from Tesla's safe. I pointed out the necessity for the State's Attorney keeping any action most secret in view of the highly confidential nature of the plans involved. I also suggested that the New York Office contact the Surrogate Court in order that Tesla's effects as well as the contents of his safety deposit boxes might not be entered without the presence of a Bureau Agent in order that we may endeavor to preserve the secrecy of any plans or items essential to the conduct of the war and national security.

Respectfully,

[redacted]

(b)(7)(C)

FOR VICTORY BUY UNITED STATES DEFENSE BONDS AND STAMPS

RECORDED & INDEXED

65 47753-1
F B I
1943

162

65-47953-1

[redacted] (b)(7)(c)

January 21, 1943

SAC, New York

Re: UNKNOWN SUBJECTS; SAVA KOSANOVICH; EXPERIMENTS AND RESEARCH OF NIKOLA TESLA (Deceased) ESPIONAGE (M)

Dear Sir:

Reference is made to a teletype dated January 9, 1943, from the New York Field Office and to a phone conversation between Mr. J. B. Little of the Bureau and Assistant Special Agent in Charge Donegan on January 11, 1943.

It was pointed out to Mr. Donegan that Sava Kosanovich, George Clark and Kenneth Sweeny may have committed a burglary violation by entering Tesla's rooms after his death and particularly by using a locksmith to get into a safe containing some of Tesla's valuable papers. Mr. Donegan was advised this matter should be discreetly discussed with the State's Attorney, New York City, with a view to locating Kosanovich and apprehending him on a burglary charge, in order to ascertain the nature of the material taken from the safe of Nikola Tesla. It was also suggested that the New York Office contact the Surrogate Court, in order that Tesla's effects, as well as the contents of his safety deposit boxes, might not be entered without the presence of an Agent, in order that the secrecy of any plans or items essential to the conduct of the war or national security might be preserved. It was stated that Kosanovich might possibly make certain material available to the enemy.

A review of the Bureau files reveals considerable information concerning Nikola Tesla and his inventions and it should be noted that one Nicola Tesla, who might have been identical with Nikola Tesla, made a speech at the Grange Hall, Springfield, Massachusetts, on June 4, 1922, under the auspices of the Friends of Soviet Russia.

Mr. Tolson
Mr. E. A. Tamm
Mr. Cleg
Mr. Gla
Mr. Ladd
Mr. Nich
Mr. Rose
Mr. Trac
Mr. Carson
Mr. Coffey
Mr. Hend
Mr. Kra
McGuire
Carbo
Quinn Tamm
Tease
Handy

[redacted] (b)(7)(c)

COPIES DESTROYED
148 OCT 26 1967

55 FEB 10 1943

Cat [redacted]

163

[redacted]

(6)(7)(C)

No record of Kenneth Sweezy could be located in the Bureau files from the information available.

The foregoing information is being furnished for possible future reference in connection with this case and it is desired that the Bureau be kept promptly and currently informed of all developments in this case.

Very truly yours,

John Edgar Hoover
Director

Federal Bureau of Investigation

United States Department of Justice
New York, New York

EBC:PM
65-12290

March 19, 1943

Director, FBI

Re: UNKNOWN SUBJECTS; SAVA KOSANOVICH;
EXPERIMENTS AND RESEARCH OF NIKOLA TESLA
(Deceased);
ESPIONAGE, MISCELLANEOUS

Dear Sir:

Reference is made to the Bureau letter in the above-captioned matter dated January 21, 1943, in which it is stated that it is desired that the Bureau be kept promptly and currently informed of all developments in this case.

In view of a telephone call from Mr. Little of the Bureau to Mr. T. J. Donegan, Assistant Special Agent in Charge of the New York Office, dated January 14, 1943, in which Mr. Little stated that the above-captioned matter was now being handled as an Alien Enemy Custodial Detention matter and therefore no further action should be taken in the matter by the New York Field Division, this case is being considered closed in this Office, unless advised to the contrary by the Bureau at some future time.

alien En custodian

Very truly yours,

E. E. Conroy

E. E. CONROY
Special Agent in Charge

ALL INFORMATION CONTAINED
HEREIN IS UNCLASSIFIED
DATE 4-18-89 BY SP1A
291860

ta

COPIES DESTROYED
148 OCT 26 1960

RECORDED & INDEXED

65-47953-3

(b)
(c)

FOR VICTORY
BUY
UNITED STATES DEFENSE BONDS AND STAMPS

165

FEDERAL BUREAU OF INVESTIGATION

Form No. 1
THIS CASE ORIGINATED AT NEW YORK CITY, N.Y. FILE NO. 100-8189

REPORT MADE AT	DATE WHEN MADE	PERIOD FOR WHICH MADE	REPORT MADE BY
BALTIMORE, MARYLAND	3-29-43	3-6-43	[redacted] (b)(7)(c)

TITLE	CHARACTER OF CASE
SAVA M. KOSANOVICH, with alias Sava M. Cosonovitch	INTERNAL SECURITY G. CUSTODIAL DETENTION

SYNOPSIS OF FACTS:

[redacted] SAVA [redacted]OSANOVICH, [redacted] Reported to have turned [redacted]tents and effects to Alien Property [redacted]odian, NYC, for NICK TESLA. [redacted] (b)(7)(c)

- R U C -

ALL INFORMATION CONTAINED HEREIN IS UNCLASSIFIED DATE 4-30-45 BY [illegible] 291860

REFERENCE: Letter from New York Field Division dated 2-22-43.

DETAILS: AT DOVER, DELAWARE

[redacted]

(b)(7)(c)

Mr. ABE SPANEL, President of the International Latex Corporation, advised that [redacted] He stated that he had been a very good friend of NICK TESLA who has died recently and that he believes that the subject is a third or fourth cousin of TESLA and that when TESLA died, the subject was his only close relative in this country and TESLA's effects came into his possession.

SPANEL related that the subject had recently turned over to the government the majority of the patents of NICK TESLA. SPANEL described TESLA as being one of the greatest inventors that has ever lived. He stated he had more than

APPROVED AND FORWARDED: SPECIAL AGENT IN CHARGE DO NOT WRITE IN THESE SPACES SF

COPIES DESTROYED 148 OCT 26 1960 [illegible] 65-47953 4 RECORDED

CONTESTED THIS REPORT
5 - Bureau
4 - NYC (2 G-2)
2 - Baltimore

APR 22 1943

17 [redacted] (b)(7)(c)

53 APR 22 19[illegible]

U. S. GOVERNMENT PRINTING OFFICE 7—2034

166

900 inventions and patents. SPANEL stated that at one time TESLA had an invention in which he was able to direct electrical current without the means of a conductor. He felt that this type of an invention would be of invaluable assistance to any country at war and for this reason felt that TESLA's inventions and patents should be put into the hands of proper Government officials, where they might be put to the best advantage for the United States. He does not believe the subject is engaged in any un-American activities and stated that he was more than willing to turn these patents and inventions over to the proper Government agency. He asserted that before TESLA died, he had spoken to the subject regarding his becoming a United States citizen and SPANEL believes that he is now taking the proper steps to achieve that end.

SPANEL also stated that the subject had handed all of the effects of the deceased TESLA to the Alien Property Custodian in New York City.

SPANEL advised that the day before TESLA died he had tried to get in touch with War Department officials in Washington in order that he might make available to them patents and inventions that he had developed. However, he was not able to get in touch with the proper authorities and he died the following day.

SPANEL advised that the Yugoslavian Government had been sending TESLA approximately $600.00 per month for sometime prior to his death and this was described as being a sort of pension.

SPANEL stated further that he has previously turned over information regarding the subject to Special Agent [redacted] of the New York Field Division. He also advised that WALDEMER KEMPFERT, Science Editor, New York Times and BILL LAURENZ, Science Feature Writer, New York Times and the Science Editor of the Herald Tribune would be able to elaborate on some of the accomplishments of NICK TESLA and that the June 1900 issue of the Century Magazine also contained an article relating to the inventions of TESLA.

(b)(7)(C)

SPANEL also stated that he believed BLOYCE FITZGERALD, Pierpont Hotel, Brooklyn, New York, Secretary to TESLA, has been contacted by Special Agent [redacted] and that if the New York Office wishes to contact SPANEL he may be reached at his home [redacted]

- REFERRED UPON COMPLETION TO THE OFFICE OF ORIGIN -

JOHN EDGAR HOOVER
DIRECTOR

CC-287

Mr. Tolson
Mr. E. A. Tamm
Mr. Clegg
Mr. Glavin
Mr. Ladd
Mr. Nichols
Mr. Rosen
Mr. Tracy
Mr. Carson
Mr. Coffey
Mr. Hendon
Mr. Kramer
Mr. McGuire
Mr. Harbo
Mr. Quinn Tamm
Tele. Room
Mr. Nease
Miss Beahm
Miss Gandy

Federal Bureau of Investigation
United States Department of Justice
Washington, D. C.

[redacted] (b)(7)(C)
2:45 p.m.

July 17, 1943

MEMORANDUM FOR [redacted]

RE: SAVA KOSANOVICH
INTERNAL SECURITY (G)
CUSTODIAL DETENTION

At this time SA [redacted] of the New York office telephoned, stating on the previous afternoon [redacted] telephoned that office [redacted] stated that she would like to be interviewed concerning certain information she possessed [redacted]

(b)(7)(D)

Agent [redacted] stated [redacted] two teletypes which the New York office forwarded to the Bureau under dates of January 9 and 12, 1943, in the case entitled UNKNOWN SUBJECTS, EQUIPMENT, EXPERIMENTS AND RESEARCH OF NICOLA TESLA DECEASED, ESPIONAGE (Bureau file 100-2237). Briefly, the information contained in these teletypes is that shortly after Nicola Tesla, one of the world's outstanding scientists in the electrical field, died in his hotel room at New York City on January 8, 1943, Sava Kosanovich, a distant relative, and other individuals entered his room and opened a safe, examining certain materials which he possessed. On January 8, Mr. L. M. C. Smith of the Department advised Mr. Tamm that he was concerned about the possibility of enemy agents confiscating some of the trunks of Tesla and that apparently the Alien Property Custodian was taking some action in this matter. Inasmuch as the matter was being handled by the Alien Property Custodian's office, the Bureau did not conduct any inquiries into this situation.

(b)(7)(C)

RECORDED 165-47953

[redacted]

FOR VICTORY BUY UNITED STATES SAVINGS BONDS AND STAMPS

COPIES DESTROYED
148 OCT 26 1960

ALL INFORMATION CONTAINED HEREIN IS UNCLASSIFIED DATE 4-18-89 BY SP1A 66cm
291860

57 AUG 19 1943

168

Mr. Ladd

[redacted]

ACTION:

[redacted]

There is attached for your approval a letter directed to the San Juan Field Office requesting that this interview be conducted and also instructing that she be interrogated concerning the other matter referred to above, inasmuch as the Pittsburg Office has not as yet covered this interview.

Respectfully,

[redacted]

(6) (7) (C)

Federal Bureau of Investigation
United States Department of Justice
New York 7, New York

IN REPLY, PLEASE REFER TO
FILE NO. 65-12290
HER:mhm

CONFIDENTIAL

October 17, 1945

Director, FBI

Re: UNKNOWN SUBJECTS;
SAVA KOSANOVICH;
Experiments and research of NIKOLA TESLA (deceased)
ESPIONAGE - M

Dear Sir:

Reference is made to the Bureau letter dated January 21, 1943, which bore a caption similiar to that mentioned above.

The referenced letter dealt with the death, on January 7, 1943, of the famous inventor, NIKOLA TESLA, who as well as being the inventor of Alternating Current, perfected many electrical devices. He is also credited with having developed the so called "death ray" which would safeguard any country from attack by air.

On June 9, 1945, [redacted] of New York City furnished information of a nonspecific nature indicating that it was his belief that persons sympathetic to Russia were making an effort to secure the effects of NIKOLA TESLA in order to salvage therefrom any models or designs of possible military value. [redacted] claimed that he heard that ABRAHAM N. [redacted], President of the NATIONAL LAND CORPORATION, of Dover, Delaware was the motivating influence behind this attempt to obtain TESLA'S papers which are presently held in storage at the MANHATTAN STORAGE WAREHOUSE in New York City. [redacted] promised to return to the New York Field Division shortly after his initial visit and furnish further and more specific information to support his claims.

RECORDED 47953-14

ENCLOSURE ATTACHED

He was not heard from again, however, until September 27, 1945, at which time he furnished the following additional information:

He said that a boyhood chum of his from Wichita, Kansas, BLOYCE FITZGERALD, had been TESLA'S protege and one of the inventors few confidents. According to [redacted], FITZGERALD who is now an Army Private stationed at Wright Field, Dayton, Ohio, is a brilliant 29 year old scientist who spent endless hours with TESLA prior to the latters death, during which time TESLA explained to him most secret experiments. [redacted] stated that FITZGERALD met TESLA in November 1942, but he had been corresponding with the latter since 1935. According to the informant, FITZGERALD had developed some sort of anti-tank gun, the details of which he presented to TESLA who made certai corrections in design and specifications to further perfect the weapon.

[redacted] related that sometime in December 1942, when FITZGERALD was attending a meeting of the AMERICAN SOCIETY OF MECHANICAL ENGINEERS, he made the acquaintance of ABRAHAM [redacted] who became interested in FITZGERALD'S

RETURN TO INDEXING DEPT.

170

gun. SPANEL offered financial aid to FITZGERALD and the two were in the closest contact with each other for a considerable period of time. [redacted] said that FITZGERALD had lined up a deal for the purchase of the gun by the REMINGTON ARMS COMPANY, but for some reason SPANEL blocked this deal by reaching top men in the REMINGTON COMPANY. SPANEL is then reported as having obtained a job for FITZGERALD with the HIGGENS SHIP BUILDING COMPANY in New Orleans and negotiated a contract with FITZGERALD for the purchase and manufacture of the gun in a manner which would return 80% of the profits derived to SPANEL,

[redacted] stated that in November of 1943, for some unknown reason but which he believes to be attributable to SPANEL, FITZGERALD was fired by the HIGGENS COMPANY. In September of 1944, FITZGERALD was inducted into the Army and for a considerable period of time was located at an ordinance experimental station at Elgin Field, Florida. [redacted] stated that at the present time FITZGERALD is engaged in a highly secret experimental project at Wright Field in Dayton, Ohio. In spite of his rank of Private, FITZGERALD actually is the director of this research and is working with many top young scientists who were inducted into Army from leading industrial posts.

According to [redacted], FITZGERALD is presently working on the perfection of TESLA'S "death ray" which in FITZGERALD'S opinion is the only possible defense against offensive use by another nation of the Atomic Bomb. In this connection, it is noted that the New York Times of September 22, 1940 in an article entitled "SCIENCE IN THE NEWS" by WILLIAM A. LAURENCE, Science Editor states that TESLA devulged to LAURENCE the fact that he had developed a "death ray" or "tele-force" which TESLA claimed would melt airplane motors at a distance of 250 miles, so that actually an invisible Chinese Wall would be built around a country against attack by an enemy air force.

According to the article in the TIMES, this electrical device would operate by the generation of power from a plant, a number of which might be located strategically along our coast lines and the beam from which would melt any engine within a radius of 250 miles.

[redacted] stated that during FITZGERALD'S acquaintance with SPANEL, FITZGERALD had told SPANEL of his associations with TESLA and had apparently described to SPANEL some of TESLA'S most secret work. [redacted] believes that SPANEL, who he claims is definitely pro-Russian in attitude, is now attempting through legal procedure to secure custody of TESLA'S effects which are now held by TESLA'S only heir, one SAVA KOSANOVICH, who is presently in Yugoslavia occupying some governmental post.

It will be recalled that in an article published on March 15, 1945, by the KING FEATURE SYNDICATE INCORPORATED, WESTBROOK PEGLER charged SPANEL with spreading pro-communist and pro- Russian propaganda through his full page advertisement in the newspapers, which SPANEL characterized as being published for the INTERNATIONAL LATEX CORPORATION, as a public service feature. It is also interesting to observe that in the New York Times of October 2, 1945, an article appears which states that SPANEL is suing the KING FEATURE SYNDICATE INCORPORATED for six million dollars alleging the column by PEGLER to have been libelous.

(b)(7)(C)

171

[redacted] stated that through FITZGERALD he too had met SPANEL and from this personal acquaintance he formed the opinion that SPANEL was definitely a communist and is probably one of the financial supporters of the Communist Party in this country. [redacted] stated that SPANEL was born in Russia, but is now an American citizen. He also charged that SPANEL exerted tremendous political influence in Washington, D. C., and said that one of SPANEL'S closest political friends was HENRY WALLACE.

[redacted] advised that two agents from Army Intelligence contacted and stated that in an investigation to determine the qualifications of FITZGERALD for a commission, they had developed information indicating that SPANEL was definitely endeavoring to secure possession of TESLA'S effects. [redacted] indicated that Army Intelligence was pursuing an investigation along these lines in an attempt to ascertain the complete story in this regard.

psychiatrist

[redacted] (b) (7) (C)

[redacted] stated that FITZGERALD had interested a group of young Army scientists now working with him at Wright Field in this foundation, and their ultimate goal is to secure the support of a wealthy backer in order that a foundation might be established and that a sort of "idea factory" might result. He said that they intended to contact HENRY FORD, SR., to solicit his aid in this regard.

[redacted] related that probably the greatest idea of TESLA'S was that involving the wireless transmission of electrical power. He claimed that TESLA had performed a successful experiment many years ago at Pikes Peak, at which time he harnassed local current from the sun's rays which he built up into a huge potential of electrical energy. [redacted] said that according to FITZGERALD, if this idea could be furthered, all electrical energy to operate the world's machinery might be gotten absolutely free rather than by the costly method with which electrical power is presently generated. He said that his idea was to conduct further experiments along this line in China where the need for electrical power is very great.

Inquiry was made at the MANHATTAN STORAGE WAREHOUSE in New York City, and it was determined that the effects of NIKOLA TESLA are contained in some

75 packing cases and trunks and are presently under seal by the New York State Department of Taxation. It was learned that the rental for this storage, which approximates $15 per month, is being paid by one CHARLOTTE MUZAR, 134 East 63rd Street, New York, New York, who is listed as the agent for SAVA KOSANOVICH.

Inquiry was also made at the office of the Alien Property Custodian in New York City, concerning an investigation conducted by this office at the time of TESLA'S death, and at which time the latters property was placed under seal by the United States Government. Mr. WALTER GORSUCH, Chief Investigator for the Alien Property Custodian, provided a cover letter and a summary of materials owned by TESLA at the time of his death which was examined by JOHN G. TRUMP, of the office of SCIENTIFIC RESEARCH & DEVELOPMENT. Mr. GORSUCH also stated that his file in this matter reflected that on the night TESLA died his safe was forced open by a representative of the SHORE & WALKER SAFE COMPANY. It was Mr. GORSUCH'S belief that a Mr. STEZEY who is believed to be one of the editors of the POPULAR SCIENCE MAGAZINE was present in TESLA'S room shortly after the safe was opened. These individuals were MILLIS GEORGE, EDWARD PALMER, and JOHN J. CORBETT.

There are enclosed herewith two typewritten copies of the report by Mr. TRUMP of the ALIEN PROPERTY CUSTODIAN reflecting the findings of Mr. TRUMP, following his examination of TESLA'S effects. There is also enclosed herewith a photostatic copy of a list of persons associated with NIKOLA TESLA. This latter item was furnished by [redacted] (b)(7)(C)

The above information is furnished for the Bureau's information, and no investigation is being conducted by this office.

Very truly yours,

E. P. CONROY, SAC

3 Enclosures

000004

173

13810

Address writer at:

Mass. Inst. of Tech.,
Cambridge, Mass.
January 29, 1943.

Mr. Walter Gorsuch,
Alien Property Custodian,
120 Broadway,
New York, New York.

Dear Sir:

At your request and that of Mr. Joseph T. King of the Washington office of the Alien Property Custodian, I have examined the private papers, writings, and other property of the late Dr. Nikola Tesla with the view to determining both their possible usefulness to this country in its war effort and the possible hazard attendant on their falling into unfriendly hands.

This examination was made at the Manhattan Warehouse, 52nd Street, New York City, on January 26-27, and included all of the notes and material in Dr. Tesla's immediate possession at the time of his death and now in the custody of your office. For reasons indicated below, no investigation was made of material in trunks which had remained untouched in the basement of the New Yorker Hotel for ten years prior to Dr. Tesla's death.

As a result of this examination, it is my considered opinion that there exist among Dr. Tesla's papers and possessions no scientific notes, descriptions of hitherto unrevealed methods or devices, or actual apparatus which could be of significant value to this country or which would constitute a hazard in unfriendly hands. I can therefore see no technical or military reason why further custody of the property should be retained.

For your records, there has been removed to your office a file of various written material by Dr. Tesla which covers typically and fairly completely the ideas with which he was concerned during his later years. These documents are enumerated and briefly abstracted in the attachment to this letter.

COPIES DESTROYED
148 OCT 26 1960

13811

It should be no discredit to this distinguished engineer and scientist whose solid contributions to the electrical art were made at the beginning of the present century to report that his thoughts and efforts during at least the past fifteen years were primarily of a speculative, philosophical, and somewhat promotional character--often concerned with the production and wireless transmission of power--but did not include new sound, workable principles or methods for realising such results.

Very truly yours,

JOHN G. TRUMP,
Technical Aide,
Division 14, NDRC.

Enclosure.

JGT/G

ABSTRACTS OF DR. NIKOLA TESLA'S WRITINGS
RETAINED AS EXHIBITS
FOR THE ALIEN PROPERTY CUSTODIAN

1.

On January 26 and 27, 1943, an examination was made of the technical papers of Dr. Nikola Tesla which, after his decease, had been stored in the Manhattan Warehouse in New York City. This examination was made for the purpose of determining if any ideas of significant value in the present United States war effort could be found among his possessions. Participating in this examination were Mr. John C. Newington, New York Office of the Alien Property Custodian; Mr. Charles J. Hedstniemi, Washington Office of the Alien Property Custodian; Dr. John G. Trump, Office of Scientific Research and Development, Massachusetts Institute of Technology, Cambridge, Massachusetts; Willis George, Office of Naval Intelligence, Third Naval District; Edward Palmer, Chief Yeoman, USNR; John J. Corbett, Chief Yeoman, USNR.

2.

The following papers, which are regarded as typical of Nikola Tesla's writings and thoughts in the period of 1925 to 1942, were removed for the purpose of record and are listed below in the random order in which they were found, together with a brief individual abstract.

Exhibit A

"Possibilities of Electrostatic Generators" - an undated article probably written about 1934 discussing the possibilities, as a source of high-voltage D-C power, of the Van de Graaff type of electrostatic belt generator. The article states correctly the electrostatic principles employed in this device and points out that such generators are not suitable for commercial high-power applications, though of undoubted scientific value. Tesla's wireless tower, erected in 1902 on Long Island, is stated in this memorandum to have been charged to 30 million volts.

Exhibit B

"Reactive Forces of Glycerine and Dynamite" - an undated memorandum involving some calculations of the explosive power of certain compounds and then deviating to a discussion of the possibility of transmitting power by mechanical vibrations along the earth's crust.

Exhibit C

"Process of De-Gassifying, Refining, and Purifying Metals" - a 41-page memorandum probably written about 1930 dealing with the above subject and proposing new theories of capillarity and surface tension. This correspondence indicated that this had been submitted to various industrial companies.

Exhibit D

"Reply to Amtorg re 'the generation of high-voltage and the acceleration of charged particles'" - This document, dated November 8, 1935, answers questions raised by Soviet engineers and scientists regarding Tesla's proposal of May 16, 1935. From this answer, it is deduced that the proposal concerned the generation of high voltages by electrostatic means. These means consisted of a high-voltage terminal presumably supported on an insulating column and charged by a gaseous charge conveying medium passing between ground and terminal. The ideas contained in this memorandum are fairly similar to the belt-conveyor electrostatic generator methods proposed by Van de Graaff and do not appear to offer any unusual features.

Exhibit E

"Art of Telegeodynamics, or Art of Producing Terrestrial Motions at Distance" - This document, in the form of a letter dated June 12, 1940, to the Westinghouse Electric & Manufacturing Company, proposes a method for the transmission of large amounts of power over vast distances by means of mechanical vibrations of the earth's crust. The source of power is a mechanical or electromechanical device bolted to some rocky protuberance and imparting power at a resonance frequency of the earth's crust. The proposed scheme appears to be completely visionary and unworkable. Westinghouse's reply indicates their polite rejection of this idea.

Exhibit F

"New Art of Projecting Concentrated Non-Dispersive Energy through Natural Media" - This undated document by Tesla describes an electrostatic method of producing very high voltages and capable of very great power. This generator is used to accelerate charged particles, presumably electrons. Such a beam of high-energy electrons passing through air is the "concentrated non-dispersive" means by which energy is transmitted through natural media. As a component of this apparatus there is described an open-ended vacuum tube within which the electrons are first accelerated.

Exhibit F (cont.)

The proposed scheme bears some relation to present means for producing high-energy cathode rays by the cooperative use of a high-voltage electrostatic generator and an evacuated electron acceleration tube. It is well known, however, that such devices, while of scientific and medical interest, are incapable of the transmission of large amounts of power in non-dispersed beams over long distances. Tesla's disclosures in this memorandum would not enable the construction of workable combinations of generator and tube even of limited power, though the general elements of such a combination are succinctly described.

Exhibit G

A circular by Carol Bird, dated September 10, 1938, entitled "Tremendous New Power Soon to Be Unleashed". This describes in popular style some biographical information concerning Nikola Tesla and some ideas for the transmission of power on which he is stated to be working. It appears that the method of transmission is by the mechanical resonance method outlined in Exhibit F, above.

Exhibit H

This exhibit consists of a series of letters to representatives of the British Government dated August 28, 1936; October 26, 1937; December 15, 1937; and April 5, 1938. It includes a reply dated January 7, 1938, from the British Government. These letters offer to the British Government, for a fee, the disclosure of a means for accelerating to high energies minute particles. Such beams would constitute a death ray capable of the protection of Great Britain from air attack.

The method proposed is essentially that described in Exhibit F above. Following the initial letter dated August 28, 1936, the subsequent letters attempt to clear up the "misunderstandings" of the British representatives and to expedite their acceptance of the Tesla proposal. The British reply dated January 7 is a polite expression of disinterest in the proposal.

Exhibit I

An undated memorandum written after Tesla's 79th birthday describing several discoveries which he believed he had made. The first related to a dynamic theory of gravity which is described as not yet completed. The second stated as a physical truth the belief that "there is no energy in matter other than that received from the environment". This second statement, which is discussed at length in this and other writings of Tesla, indicates his disbelief in the existence of atomic or nuclear energy.

Exhibit J

"A Method of Producing Powerful Radiations" - an undated memorandum in Tesla's handwriting describing "a new process of generating powerful rays or radiations". The memorandum reviews the works of Lenard and Crookes, describes Tesla's work on the production of high voltages, and finally in the last paragraph gives the only description of the invention contained in the memorandum. This description is as follows: "Briefly stated, my new simplified process of generating powerful rays consists in creating through the medium of a high-speed jet of suitable fluid a vacuous space around a terminal of a circuit and supplying the same with currents of the required tension and volume".

Exhibit K

A letter to prospective licensees on telegeodynamics dated December 27, 1941. This is a single-page letter with the typewritten signature of Dr. Nikola Tesla, in which he addresses himself to the prospective licensees of telegeodynamics, states that over a half million dollars was spent on this development with funds contributed by the Morgans, Crawford, J. J. Astor, and Fish, as well as commercial organizations, and states this to be a new art with which "unvelievable wonders can be achieved".

Exhibit L

Tesla's "New System of Fluid Propulsion". This is an undated memorandum of about 20 typewritten pages describing a system of fluid propulsion in which the conversion from hydraulic to rotary mechanical power is achieved by passing the fluid between flat circular disks, shaft-mounted and enclosed in a casing.

This memorandum written about 1925 describes in general terms a kind of hydraulic turbine which seems practical. There is copious evidence among the other of Tesla's papers that this idea was generally disclosed to appropriate individuals and that it received favorable comment and possibly some use. Some of these comments are contained on the last page of the exhibit.

Exhibit M

"The Power of the Future" - a memorandum apparently written by Tesla and probably in response to a request from some popular science group for an opinion as to the source of future power. This memorandum reviews the gradual evolution of power sources. It discusses in some detail the possibility of atomic power and states as his opinion that atomic power is not feasible. The discussion of atomic energy is apparently confused to some extent

Exhibit M (cont.)

with planetary energy. The article further discusses the subject of wind, tides, lightning, and water power as a source of commercial energy. The last sentence of this memorandum states: "With my wireless system, it is practicable to transmit electrical energy at a distance of twelve thousand miles with a loss not exceeding 5 per cent. I can conceive of no advances which would be more desirable at this time and more beneficial to the further progress of mankind." This memorandum constitutes an interesting generalized discussion of the various sources of power. It is qualitatively correct for the most part except probably in that portion which deals with atomic power.

Exhibit N

"The Transmission of Electric Energy Without Wires" - an article by N. Tesla in the Electric World, March 5, 1904, pages 429-431. A general, somewhat biographical article on Tesla's early work with some speculation on the possibility of long-distance wireless transmission of large amounts of energy.

Exhibit C

"World System of Wireless Transmission of Energy" - an article by N. Tesla in Telegraph and Telephone Age, October 16, 1927, pages 457 and 460. An article which traces the early work on the production and transmission of electromagnetic radiations, describes Tesla's efforts to increase the amount of power which can be transmitted without wires and concludes with a proposed "World System" for the wireless transmission of both power and communications. No workable disclosure of a means for accomplishing this is included, and such generalities as suggest the approach which Tesla had in mind do not seem capable of accomplishing the desired result.

Exhibit P

"Interview with Dr. Nikola Tesla" by Alden P. Armagnac for Popular Science Monthly, May 24, 1928. An 11-page memorandum written in popular conversational style describing an interview with Dr. Tesla and reporting his present work. This report includes statements on a new airplane, on rocket ships, on the wireless transmission of power, on a world system plan for the transmission of speech and television, on the impracticability of harnessing atomic energy, on radio activity, and on the acceleration of charged particles, such as cathode rays, by high voltages.

Exhibit Q

An agreement dated April 20, 1935, between Nikola Tesla and the Amtorg Trading Corporation, in which Tesla agreed to supply plans, specifications, and complete information on a method and apparatus for producing high voltages up to fifty million volts, for producing very small particles in a tube open to air, for increasing the charge of the particles to the full voltage of the high potential terminal, and for projecting the particles to distances of a hundred miles or more. The maximum speed of the particles was specified as not less than 350 miles per second. The receipt of $25,000 fee for this disclosure was acknowledged in this agreement, which was signed by Nikola Tesla and by A. Bartanian of the Amtorg Trading Corporation. The method referred to in this agreement is apparently that described in Exhibit F, above. It is probable that Exhibit D, above, is an effort by Tesla to clear up the questions raised by Soviet engineers after the subject disclosure had been made. There is no evidence that the inventions and information referred to in this agreement are other than those described in a number of Tesla's papers and published articles. It should therefore be expected, and it is substantiated by Exhibit D, that this disclosure subsequently proved unworkable.

3.

An examination of several items of scientific apparatus among the Tesla efforts at the Manhattan Warehouse and in a deposit box at the Governor Clinton Hotel showed those to be standard electrical measuring instruments in common use several decades ago.

JOHN G. TRUMP,
Technical Aide,
Division 14, NDRC.

Mass. Inst. of Tech.,
Cambridge, Mass.,
January 30, 1943.

JGT/G

LIST OF PERSONS ASSOCIATED WITH NIKOLA TESLA

Kerrigan, William - 89 Logan St., Brooklyn, N. Y.
Employed as building supt. Washington Market, Brooklyn. Mr. Kerrigan was the messenger boy for Postal Telegraph some years prior to Jan. 1943. At Mr. Tesla's request, he continued his services as special messenger when convenient. He had called upon Tesla the week prior to his death and has much valuable data and information concerning Tesla's contacts. I first met Mr. Kerrigan at the Frank Campbell funeral church.

Baumgarten, Charles - Room 1203, Municipal Bldg., Budget Bureau, N.Y.C.
Mr. Baumgarten was met at the funeral and Mr. William Lawrence of the New York Times and myself had lunch with him. Mr. Baumgarten knew Tesla and his connections with the Queensboro Bridge and many of his developments of Civic interest.

Skerritt, Miss Dorothy F. - Office, Biddle Purchasing Company, 107 Chambers Street, N.Y.C. - Wo. 2-5500.
Residence: Hasbrook Heights, New Jersey
Miss Skerritt was secretary to Doctor Tesla from 1912 until 1922. She is familiar with the Marconi patent suit, many of Tesla's scientific theories; knows the names of some of his friends; has witnessed demonstrations in his laboratory, then at 8 W. 40th St. N.Y.C. Miss Skerritt also knows that between 1916 and 1918, Doctor Tesla was at the Blackstone Hotel, Chicago and may have material there. She can give account of many of his deals with various firms.

Merrington, Marguerite - 46 W. 97th Street, N.Y.C. - Riverside 9-8186
Miss Merrington has known Doctor Tesla since 1893 and has been a guest of his on several occasions at the old Waldorf Hotel and at his laboratory in 1894 on Houston Street. Miss Merrington recalls the lighting effects without filaments and his radio controlled boat demonstrations. She also recalls statements regarding communication without wires by means of a small instrument. She has witnessed many laboratory experiments including power transmission without wires over short distances in the laboratory and also metallic plate suspension. He had also talked about communication with mars to her.

Holden, Mrs. Agnes J - 327 E. 52 St. N.Y.C. - Plaza 3-2341
Mrs. Holden is the daughter of Robert U. Johnson (deceased) (1936) who was a close friend of Tesla for many years. Mrs. Holden first met Mr. Tesla at her father's home when she was about 12 years old. The Johnsons were connected with the Century Magazine which published many articles regarding Tesla. Mr. Johnson wrote several poems about Tesla, one of which appeared in the April, 1895 issue of the

Century Magazine and the others appeared in "Poems of 50 years, 1880-1930 by Robert Underwood Johnson. Mrs. Holden has been in close contact with Doctor Tesla and has witnessed many of his demonstrations including that of the oscillator of 1899. She recalls the near destruction of the laboratory. Since "World II" , she has talked with Doctor Tesla with regard to instruments of war and he told her in response to her inquiry regarding tanks recently that he could stop them or the war. She recalls his discussions with her and her father regarding transmissions of power and Mars, etc. She says that she knows that Tesla has things for our Government only. Mrs. Holden witnessed many of the experiments and was present at the radio-controlled boat demonstration many years ago.

Lowenstein, Fritz (Deceased) Brother, Emil Lowenstein - 182 Bennett Ave. N.Y.C. - Wa-7-4519. Business (Artist) 420 Lexington Ave. N.Y.C. - Mu-5-8065. Mr. Fritz Lowenstein was the assistant to Dr. Tesla during his historic laboratory experiments in Colorado Springs in 1899. He was also to have appeared as a defense witness for Tesla in his Marconi patent suits during 1915, but for some reason failed to testify. The brother, Emil, address above, knows of the relatives of Mr. Fritz Lowenstein who have documents pertaining to the 1899 experiments. (Mr. G.H. Clark provided information re documents and Lowenstein) (Mr. Czito mentioned Lowenstein). Mr. Emil Lowenstein is not on friendly terms with the entire Lowenstein family and a Mr. Massey, 52 Vanderbilt Ave. can furnish additional information re Lowenstein.

Shirk, A.J. - Inventor's Model Shop, 70 West 100th St. N.Y.C. Ac-2-9466. Mr. Shirk has met Tesla on 3 occasions and appears to know quite a bit about his model work and laboratory developments, particularly within recent years. His exact status can only be determined by another call or ~~exact status~~ interview. He is attempting to determine the address of a Laboratory that existed at about 57th and 3rd Ave. and with whom a certain Dr. Walker was connected.

Arbus, Muriel, Miss - Res: 600 W. 13th St. Tel: Vanderbilt 4-9816, Bus: WPB, Chanin Building, N.Y.C. Miss Arbus has several photographs of Tesla and was a secretary to him before Miss Dorothy Skerritt, i.e. before 1912. She has not been interviewed except by phone.

Berg, Seigurd (or Sigmund) - Copenhagen, Denmark. Business: Paris, France. He has not been interviewed. See Mr. E. Fiensen of the International Latex Corp., Dover, Del. for information. Mrs Berg was a close friend of Tesla in Europe and mentioned other members of his family; Mr. Ernest and Mr. Esko Berg. are found in correspondence from Mrs. B.A. Behrend to Mr. Kenneth Sweezy in 1935 and 1934.

Behrend, Bernard, A. Mrs. - Rond Point, Aiken, S.C. Phone 136. Mr. Behrend and Mrs. Heaviside were very close friends of Dr. Tesla. Mrs. Behrend has many notes and technical data concerning Tesla's work either stored near Boston, Mass or at Aiken, S.C. Mr. Behrend was Chief Engineer for Westinghouse and supervised the construction of a great number of Tesla's motors and generators. He is author of "The Industion Motor" pub. 1921 in which a considerable portion is devoted to Tesla's work.

Boskan, Slavko, Mr. Engineer and author, Belgrade, Yugoslavia. Mr. Boskan published a book in Dresden, Germany entitled "Nikola und Ms Werk" in 1932 (Approx) Mr. Boskan was a close friend of Mr. Tesla and has considerable engineering data in his possession according to Mr. Sweezy.

Denton,Clifford, Mr. - Science Reporter.. New York Daily News, 220 E. 42nd St. N.Y.C. Mu-2-1234 Ext. 557 Mr. Denton has been present at many of Dr. Tesla's press releases and has many notes regarding the conferences. He said that he gave most of his data to Mr. Wm. Lawrence of the New York Times.

Brown Brothers (Mr. Arthur Brown) 220 W. 42 St. Bryant 9-4742. N.Y.C. Brown Brothers are photographers and have a large number of photos of Tesla and his laboratory equipment from which may be deduced mechanical construction details.

Curtis, Thomas Stanley - Address: unknown. Author "Experiments with High Frequencies currents" It is important to locate Mr. Curtis because he discussed many of Tesla's problems and appears to have technical data regarding his work.

Cramps, Shipbuilding Co. Philadelphia, Pa. Mr. Crosby, former Sec. of Commerce, and Mr. Cramps became interested in the radio controlled boat of Dr. Tesla about 35 years ago. Negotiations were carried on between Dr. Tesla and the above executives. This information was furnished by Mr. Kerr.

It may be well to contact Mr. Crosby's relatives or Mr. Cramps.

Czito, Julius - 4629 193rd St. Flushing, Long Island. Tel: Flushing 7-4711. Mr. Czito was mentioned to me first by Mr. Kosenovich and later Mr. Spanel had received his name from Mr. Wm. Lawrence. Mr. Czito is a machinest by trade and worked for Dr. Tesla as such from 1915 to 1929. He was particularly concerned with the construction of a turbin, and a fountain developed for a Mr. Hatmaker. Among other things, he worked on an extractor for sulpher from sea water and mechanical device for measuring the resistance of a ball bearing. He has little data left of Dr. Tesla's work but has a very good memory. He mentioned the Boston gear works, Mr. Bradley, Mr. Miller, the Zumbach Machinery Co. and Mr. Barney Levi. Mr. Czito's father also worked for Dr. Tesla in 1894 and was with him at his Houston St. laboratory. Mr. Czito, Sr. accompanied Dr. Tesla to Colorado Springs in 1899. Mr. Czito has a very good memory and can furnish additional information. He has discovered a photograph showing all of the employees of the old Tesla laboratory. He worked for Dr. Tesla on the development of a speedometer for the Waltham Watch Co. (This information from interview).

Clark, Mr. Geo. H. - Res: 349 E. 49th St. Tel: El-5-1603. Bus: RCA Mfg. Co. (Library) 25 Beaver St. N.Y.C. Room 314 A, Tel: Hanover 2-1829. Ext 123. Mr. G.H. Clark was contacted by virtue of a call placed in December to Mr. Oran Dunlap of the RCA Corp. Mr. Clark has a very large collection of personal data pertaining to radio pioneers, particularly Marconi. His business has been to collect such data in order to assist the prosecution of a suit of infrigment against the Marconi patents. He has never met Dr. Tesla but he knows of his work and is interested in collecting historical data for preservation. Mr. Clark is a friend of Mr. Sweezy.

Crosby, Former Sec. of Commerce, Washington, D. C. (address unknown) See Cramps and Kerr

Wetzel, Tailors - 2 E. 44th St. Murry Hill 2-6757. N.Y.C. This firm was tailor for Dr. Tesla throughout most of his life and may have information with regard to his friends, not otherwise listed.

French, Shriner, and Urner- Shoe Shops. 250 Madison Ave. Murry Hill 2-0319. N.Y.C.
Dr. Tesla purchased most all of his shoes from this firm for the past 50 years and data may be gathered from their records such as mailing addresses, etc.

Cornels, Fredrick C. F.B.I. Office Federal Court House Bldg. 12th Floor ? Regent 2-2315
Mr. Cornels was informed of the possible value of Dr. Tesla's data immediately following his death. So far as known, no action was taken.

Commercial Photostat Company, 11th Floor, Woolworth Bldg. N.Y.C.
Firm which made photostats of Tesla patents for Kerr.

Cramm, Ernest R. to contact call Mr. Clark of RCA.
Mr. Cramm knows a great deal about Dr. Tesla's relations with the RCA Company. Mr. Cramm was a former employee of RCA.

Gilder, Rodman - 108 E. 82nd St. N.Y.C. Butterfield 8-7397.
Son of Richard Watson Gilder, former Pub. of Century Magazine. Mr. Gilder knows of some old Tesla manuscripts and what has happened to his files of the Century Magazine at its dissolution. This name was received from Merrington.

Denmark, Lt. 1270 6th Ave. Room 811, Circle 6-1484 (restricted number) N.Y.C. U.S. Army Int. G2.
Lt. Denmark and his superiors were notified by Mr. Spanel and Washington with regard to Tesla devices. Lt. Denmark was interviewed personally with a group of 4 other officers including Mr. Ritchen.

Kirsch, Leon - a former draftsman for Tesla - name from Miss Dorothy Skerritt.
This party should be located because he had a lot of confidential data of Tesla's and made many drawings according to Miss Skerritt.

Drews, Lillian Married to an Austrian by name of DePree about 1914.
Miss Drews was secretary to Dr. Tesla prior to 1912. Her present address is unknown and she was not in good favor with Dr. Tesla, according to Miss Skerritt, the informant.

DosPassos, John - Attorney, and very good friend of Dr. Tesla. Address unknown.
Wanted Tesla to stop the Spanish American War. Formerly lived in New York. The Gentleman was expensively dressed and wore frocked coat similar to Tesla with bright checkered vest.

Had office in vicinity of 200 Broadway, as late as 1920. Mr. DosPassos is believed to have engineering data of Tesla's according to Thomas Byrne.

DeForrest, Dr. Lee- 6190 Hollywood Blvd. Los An[illegible]s, Calif. - Dr. DeForrest is [illegible] alive and was a friend of Dr. Tesla in the late 90 and early 1900's. There is a possibility that he may be able to assist in interpreting Tesla's works.

Dubilier, William - President of Cornell Dubilier Co., Manufacturers of CCondensers. Mr. G.H. Clark informs that Mr. Dubilier hasin his possession some of the original notes of the 1899 experiments in Colorado Springs.

Fradenburg, A.E. A reporter for the Brooklyn Eagle during 1930 who had numerous contacts with Tesla with regard to Power Transmission. His present address is unknown but he formerly resided in Brooklyn until 1934.

Fitzgerald, Francis, A. - Niagara Power Commission, Buffalo, N. Y. Mr. Fitzgerald, according to a personal interview with Dr. Tesla, was a friend of his on the A.C. power proposition for the development of Niagara. He also told me that Mr. Fitzgerald attempted to influence the Canadian Power Commission in 1927 for a project to transmit power without wires. There is a possibility that he may have some data.

Gernsback, Hugo p Publisher, Res; 230 West End Ave. Sohhler 4-2130 Bus: 25 W. Broadway, Tel: Rector 2-9690. A Friend of Tesla for about 35 years. Published many articles about Tesla during 1919 in the "Electrical Experimenter and later in Science and Invention." Has many of Tesla's original manuscripts and photos. Believes in all of Tesla's theories and has a working knowledge of them. This party was contacted several weeks prior to Dr. Tesla's death. Mr. Gernsback attempted to assist Dr. Tesla personally and appealed to Westinghouse for funds in 1933.

Hammond, John Hayes, Jr. Glochester, Mass. Tel. 2080 Mr. Hammond, Sr., financed some of Dr. Tesla's boat experiments and only 10 years ago John Hayes Hammond, Jr. operated one of Tesla's original models. The family has one of the boats in their

possession now. Much technical data can be gathered from this source.

Hassell, Eugene Floyd - Res: Belport, Long Island
Machinest, Sperry Gyroscope Company, Garden City, L.I. Employee Number 5470, Phone Vigilent 4-5400 (Restricted number) Ext. 211. Use any New York Phone. Name from Czito. This party knows of Tesla's laboratory on Long Island through the laundry driver named Tommy Wallen.

Hobbs, Octavious - Springfield Gardens, Long Island.
(Has not been contacted)

Hatmaker, (no initials) party who financed fountain built by Czito. Has not been contacted, but he lived in the St. Regis Hotel in 1920.

Kosonovich, Sava - Navarro Hotel, apt. 17B. 112 Central park south, N.Y.C. Tel: Circle 7-7900, Office- Regent 7-4662. President of the Central European Powers Association and former Minister of Yugoslavia to the U.S. Mr. K. is one of the two living nephews of Dr. Nikola Tesla (see Nikola Trbjevich) Mr. K. was present in the Hotel New Yorker on the morning following Dr. Tesla's death. Others present were K.M. Sweezy, G.H. Clark. Mr. K. knows of many blue prints that were in the rooms and a black notebook with several hundred pages containing the last notes of Dr. Tesla. Mr. K. says that some of the papers were marked "Government" and that Dr. Tesla had told him he had valuable information. Mr. K. is of the opinion that it may have been for the Yugoslav Gov't. He says that no will was found. His attorney is Mr. Wittenberg. He was appointed heir by the Surrogates Court of New York County. He said that the other nephew waived any interest. Mr. K. is not in accord with Mr. Fotich, present Ambassador of Yugloslavia to U.S., now in Washington. There is a bit of political unrest in the Yugoslav organization.

KOSANOVICH, SAVA

Kerr, John - Attorney, 233 Broadway, N.Y.C. Cooper Kerr Dunham (att. at Law) Courtland 7-9334 - also associated by Byrnes. This firm was the patent attorney for 112 of the Tesla patents. They also instituted the proceedings of the infringement suits for the Westinghouse Company. Mr. Kerr knew Tesla very well and can give considerable data. Mr. Cooper, now deceased, was however, the main instigator of the patents for Tesla. Mr. Cooper left this firm some time ago and Tesla apparently took some of his business

to the new Cooper associates. Many of the old patents of Tesla in his own handwriting are available at this office. Mr. Byrne has additional information. I am of the opinion that this firm still has a connection with Westinghouse.

Byrne, Thomas, J works for Cooper Kerr and Dunham (see John Kerr above). Mr. Byrne knew Tesla very well and also knows of the connections with the Union Sulpher Compnay and the turbine for which see Czito. There is a wealth of information in the office of this company regarding the system of Power Transmission and any patents on file which were never issued. Mr. Kerr and Mr. Byrne were contacted before Mr. Tesla's death.

Kostich (first name unknown) New York, Official photographer for the Yugoslav group. Office believed to be 235 E. 72nd St. and Residence in Long Island City. He may be reached through Regent 7-4662. He is a friend of Mr. Kosonovich.

Kulishich, Prof. Kosta Res: Belgrad, Yugoslovia at the Tesla Institute. He was a school mate of Tesla in Grotz. See the N.Y. Sun of August 27, 1931.

Gage, E. G. 111 Nassau St. N. Y. C. Engineer, works for Leon Ottinger, Courtland 7-5500.
He was a friend of Mr. J.S. Leach (deceased) formerly of Redbank, N. Y. who made electrical parts for Tesla's laboratory. He says that he can get information regarding Leach's relatives and perhaps drawings.

Levi, Bernard - Machinest, Zumbach Machinery Co. 134 W. 54 St. N.Y/C. Circle 7-1444
Received this name from Czito who said that Levi knew of other work by machinests on Tesla's equipment.

Lucan, John - address unknown - presumed to be in Manhattan. A former Western Union Messenger boy during June of 1937 who has other data regarding recent contacts by Tesla during his services as a messenger. He has not been located.

Lynch, Arthur. Lived in England. Believed to be near London, now deceased. Family had considerable correspondence with Tesla regarding transmission of power without wires.

Lawrence, William. Science Writer, New York Times. 229 W. 43 St. N.Y.C. Lackawanna 4-1000. Res: 541 E. 72nd St. Rhinelander 4-5528.

A friend of Tesla's for about 25 years. Has much old data regarding Tesla and has talked to him on many occasions regarding power transmission and the war effort. Has assisted greatly in providing information for gathering material, etc. This party was contacted before Dr. Tesla's death.

Massie, M.C. 52 Vanderbilt Ave. N.Y.C.

Maier, Ruth N. The Yugo Slow Society, 565 5th Ave. Room 807. Pl-8-0256
This is the information center and serves as the publicity agent for the group.
Miss E. Oppa also works there and has many names of Tesla's friends.

Martin, Octavo. Employee of Hotel New Yorker and friend of Tesla.

Mathews, Grenville (deceased) wife was Gana Walker, Met. Star sponsored by McCormick. The family lived in England until his eath and his wife now resides in New York. Mr. Matthews was refered to in Tesla's articles for the Telephone and Telegraph Age for Oct. 1927. Mr. Matthews had correspondence with Tesla on the so-called "Death-Ray". Gana Walker has all of her husband's data.

Mott, C.Jordan, Jr. 520 E. 90th St. N.Y.C. Bus: 6 E. 45th St.
Tel: Vanderbilt 6-0345.
The Mott family financed Tesla in various ventures. They may have some of this data.

Gossett, W. O. Ford Museum, Detroit, Mich.
Mr. Gossett is associated with a Mr. Black while he is on leave of absence to the Army. Mr. Black may be reached regarding some models of Tesla's which are understood to be on display at the Ford Museum.

Nathan, Thoma, A. 25 E. 83rd St. N.Y.C.
We do not know what connection this party had with Tesla but his name was secured.

O'Neill, John, J. Res: 209 N. Long Beach Ave. Freeport, Long Island.
Tel: Freeport 2-493.
Science editor of the New York Herald Tribune, 230 W. 41 St. N.Y.C. Pennsylvania 6-4000.
Mr. O'Neill has known Dr. Tesla for 40 years. He has had many discussions with him regarding his equipment and scientific ventures. He interested Dr. Tesla in 1934 and 1935 to present the matter of national protection devices to the U.S. Govt. Mr. O'Neill made

a few contacts and the matter was dropped. Mr. O'Neill has notes of 1938 and 1939 wherein Dr. Tesla declared he had been approached by the British Govt. through Stanley Baldwin and Neville Chamerlain to negotiate for one of his devices. Mr. O'Neill thought that the sum offered was for 30 millions of dollars. In the interview, Dr. Tesla stated that his device would operate over a range of 200-250 miles. Mr. O'Neill is of the opinion that Tesla had unusual powers. Mr. Lawrence is of the opinion that he does not know what he is talking about. O'Neill can furnish much additional information.

Pickard, Dr. Greenlief Whittier..59 Dalton St. Newton Center, Mass.
Dr. Pickard was a very good friend of Dr. Tesla. Dr. Pickard developed the vertical antenna system and has correspondence with Tesla concerning "wave propagation". This information should be valuable.

Sarony, Inc. Photographers, 362 5th Ave. N.Y.C. Wis 7-1713
They have photos of the old Tesla Laboratory and pictures of Tesla to 1914.

Page, Parker W. Attorney, Present address unknown, however he resided in Manhattan for about 40 years and was formerly associated with Cooper Kerr and Durham. He was last known to be associated with an attorney by the name of Bean in Manhattan. He worked out many of Tesla's details concerning Power Transmission and Tesla gave him many notes according to Mr. Kerr.

Radosavljevich, Paul, R. New York University, Professor, Education Dept. Tel: Spring 7- 2000.
A friend of Tesla for 35 years and knows much of his work with regard to the retina and bile chemistry.

Ritchen, (first name unknown) Anti-Trust Division, Custodian of Alien Property, 18th Floor, 120 Broadway, N.Y.C. Regent 2-3582 (restricted number). Mr. Ritchen supervised the various agents who were responsible for the sealing of the property in the Manhattan warehouse and various hotels. On Saturday eve., January 10, 1943. This office worked with Lt. Denmark.

Astor, Mrs. John Jacob (Lady Ribblesdale) now living in the U.S.
420 Park Ave., Plaza 9-6646
Lady Ribblesdale is the Mother of Vincent Astor who financed many of Tesla's developments about 1910 and their family may have data of importance.

Secor, Harry. Island Road, Ramsey, N. J. Res. Business: Model Craftsman Publication. Ramsey, New Jersey, Tel: Ramsey 519. This party knew Dr. Tesla very well and I talked to him several weeks prior to Tesla's death. He has some plans of Tesla equipment.

Sweezy, Kenneth, M. 163 Milton St. Brooklyn, N. Y. Evergreen 9-5809
Mr. Sweezy has known Dr. Tesla for approximately 15 years. He became a close confident of his on many things and did a very notable work in 1935 when he arranged for a collection of 100 letters from various scientific authorities commemorating Tesla's 75th birthday. Mr. Sweezy wrote many articles about Dr. Tesla and has some old clippings and miscellaneous data including several books detailing Tesla's work. Mr. Sweezy corresponded with Mr. Boskan and Mrs. Behrand. He is a friend of Mr. Clark. Mr. Sweezy would like to write a book of Tesla's life and had spoken to me with Dr. Tesla regarding it. I contacted Mr. Sweezy several weeks before Dr. Tesla's death. (Much information can be obtained here).

Scott, Prof. Charles F. Instructor of Electrical Engineering, Yale University, New Haven, Conn.
Prof. Scott was a friend of Tesla for about 43 years. He worked as an electrician with Tesla in the early days and knows a great deal about his work. Prof. Scott and Tesla did not enjoy close friendship during recent years because Prof. Scott could not understand in full, all of Tesla's work. More information can be obtained here.

Scherff, George, Mrs. 219 Grant Terrace, Maroneck, N. Y.
Mrs. Scherff was the auditor for Tesla for many years and has much information to give. She has information concerning Tesla's personal things and technical data and can provide much of value, including old documents.

Skerrett, John. Author- believed to be from Philadelphia, Pa. who witnessed many of Tesla's demonstrations. Miss Dorothy Skerrett can furnish additional information regarding him.

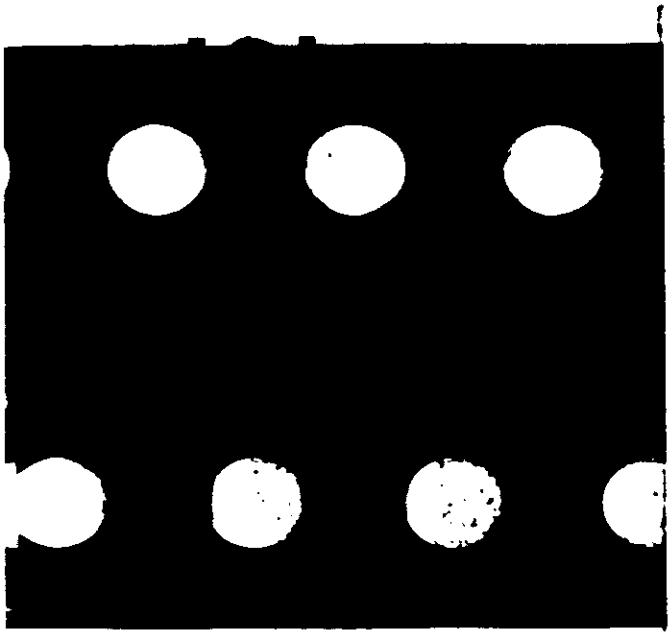

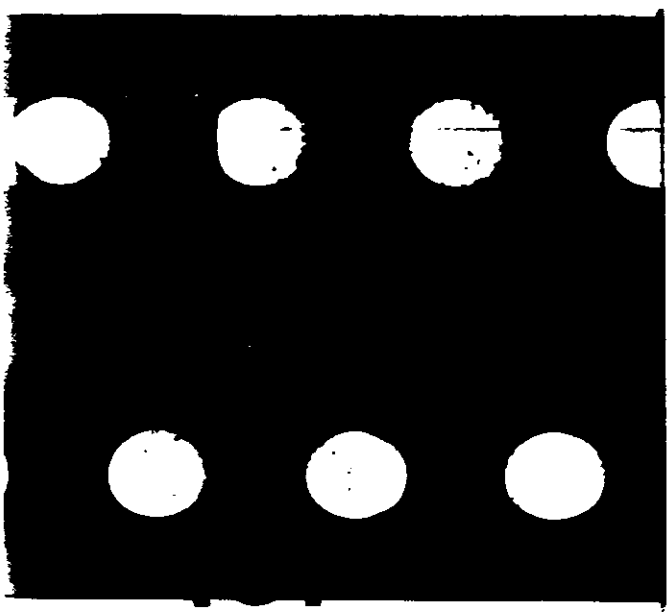

Tom -

It is my understanding that every case which is completed through disclosure is "preprocessed".

ITU's Reading Room maintains only those "preprocessed" cases which have been deemed to have sufficient public interest to warrant inclusion in the Reading Room.

The question, therefore, is: Does the Tesla material fit the criteria for inclusion in the FOIA Reading Room?

I think not. The

(b)(5)
(C)

CC-247

Mr. Tolson
Mr. Clegg
Mr. Glavin
Mr. Ladd
Mr. Nichols
Mr. Rosen
Mr. Tracy
Mr. Egan
Mr. Gurnea
Mr. Harbo
Mr. Mohr
Mr. Pennington
Mr. Quinn Tamm
Mr. Nease
Miss Gandy

June 8, 1949

MEMORANDUM FOR [redacted] (b)(7)(c)

RE: SAVA N. KOSANOVIC
YUGOSLAV AMBASSADOR TO THE US
INTERNAL SECURITY - R
(Bureau file 65-47953)

ALL INFORMATION CONTAINED
HEREIN IS UNCLASSIFIED
DATE 4-18-89 BY SP1 [illegible] #291860

PURPOSE

This memorandum is submitted to incorporate all the pertinent references in the Bureau files concerning the entitled individual who is the Yugoslav Ambassador to the United States.

A case was opened on this individual when information was received that Kosanovic had taken possession of the scientific papers of his uncle, Nikola Tesla, the internationally known inventor. Subsequent investigation determined that Kosanovic had turned over the possession of these scientific papers to the Alien Enemy Custodian in New York City.
(65-47953-X1 & Serial 3 & 4)

(b)(1)(D) [redacted]

(b)

OK

[redacted]

65-47953-21X

INDEXED 143

(b)(7)(c)

cc - Mr. Ladd
cc - [redacted]
cc - [redacted]
cc - [redacted]

CJM:jpa

THIS MEMORANDUM IS FOR ADMINISTRATIVE PURPOSES
TO BE DESTROYED AFTER ACTION IS TAKEN AND NOT SENT TO FILES

194

STANDARD FORM NO. 64

Office Memorandum • UNITED STATES GOVERNMENT

TO : The Director

DATE: April 3, 1950

FROM : D. M. Ladd

SUBJECT: SAVA N. KOSANOVIC
INTERNAL SECURITY - YU
Bureau File 65-47953

Tolson
Ladd
Clegg
Glavin
Nichols
Rosen
Tracy
Harbo
Mohr
Tele. Room
Nease
Gandy

ALL INFORMATION CONTAINED
HEREIN IS UNCLASSIFIED
DATE 4-18-89 BY SP1AGC

291860

Reference is made to my memorandum dated March 29, 1950, relating to the telephone inquiry by the Yugoslav Ambassador Sava N. Kosanovic as to the possibility of obtaining a copy of a microfilm copy of the technical papers of the late Nikola Tesla, world-famous scientist who died in New York in 1943.

Kosanovic claims to have been a nephew of Tesla and is known to have tried to obtain these papers at the time of Tesla's death. However, they were taken over at that time by the Alien Property Custodian. If any copies were made of these papers, they were made by the Office of the Alien Property Custodian which took possession of Tesla's papers in 1943 or the Department of the Army which was interested in copying Tesla's notes in 1945. The Army's interest apparently was developed by a young scientist named [redacted] who had been a protege of Tesla and one of his few confidants. [redacted], who knew that Tesla had been endeavoring to perfect the wireless transmission of electrical current, one of the basic concepts involved in the production of a "Death Ray" had subsequently entered the Army, and in October, 1945, appeared at our New York Office, together with three other members of the United States Army, to request our assistance in obtaining access to Tesla's papers which were stored in a warehouse of the Manhattan Storage Company. [redacted] and his associates were referred, at that time, to the Alien Property Custodian which was reported to have made an investigation of Tesla's belongings following the latter's death.

(b)(7)(C)

Although the Office of Alien Property or the Department of the Army might be able to furnish a copy of Tesla's papers to Kosanovic, it is not believed that the FBI should facilitate his search for this material, which although possibly of no present value from a National Defense standpoint, could still conceivably be of assistance to the Yugoslav Government.

COPIES DESTROYED
14 OCT 26 1960

[redacted] (b)(7)(C)

Attachments

RECORDED - 95

65 47953-2

(b)(7)(C) [redacted]

195

RECOMMENDATIONS:

1. That the attached letter explaining that we have never had such a copy as he requests, be sent to Mr. Kosmovic.

2. That the attached memo to the New York Office, instructing them to make further inquiry at the Manhattan Storage Company and advising that firm that we have no copy of Tesla's papers as they allegedly claim, be forwarded.

STANDARD FORM NO. 64

Office Memorandum • UNITED STATES GOVERNMENT

TO : Director, FBI

DATE: April 17, 1950

FROM : SAC, New York

SUBJECT: SAVA N. KOSANOVIC
INTERNAL SECURITY-YU
(Bufile 65-47953)

ALL INFORMATION CONTAINED
HEREIN IS UNCLASSIFIED
DATE 7-3-80 BY SP4 Jam/rte

Rebulet dated April 3 last.

On April 7, 1950 agents of this office interviewed Mr. J.V. POTTS, Vice President of the Manhattan Warehouse and Storage Company, 52nd Street & 7th Avenue, New York City, and at that time MR. POTTS advised that the rules of his firm required that all persons gaining access to goods stored by Manhattan first had to fill out an appropriate form setting forth their names, date of visit, and reason for requesting access to the goods.

In a review of the file pertaining to the storage of the effects of NIKOLA TESLA, MR. POTTS revealed that only one such visit had been made by persons outside of the management of Manhattan Storage itself. This one occassion took place on January 26 and 27, 1943, at which time representatives of the Alien Property Custodian made a thorough review of the entire effects of the TESLA estate.

The TESLA effects are stored in rooms 5J and 5L of Manhattan Storage's warehouse at 52nd Street & 7th Avenue, New York City. MR. MICHAEL KING, who stated he had been Floor Supervisor for approximately 10 years on the floor in question, stated that he could recall only one occassion in early 1943 when an examination was made of the TESLA effects. He stated that at that time numerous photographs were taken by the examiners. His description of the equipment used would tend to show that a microfilm reproduction was made of some of the papers of the deceased scientist. MR. KING added that several of the group making the examination wore U.S. Navy uniforms, and during the two days required to complete the examination the civilian assistants in the group were identified to him only as "FEDERAL AUTHORITIES". According to MR. KING, no other instance of microfilming of the records of the TESLA estate has taken place since that time.

It should be noted that the Bureau was informed of the examination mentioned above by New York letter (with attachments) dated October 17, 1945, entitled UNKNOWN SUBJECT; SAVA KOSANOVICH; Experiments & Research of NIKOLA TESLA (Deceased), Espionage-M.

UNRECORDED COPY FILED IN

RECORDED - 38
INDEXED - 38

65 47953 27
APR 18 1950
37

cc: 65-12290

(b)(7)(c)

EHC JJC
105-1391

R-435

APR 2

197

MR. POTTS stated that no inquiry had been received by Manhattan from SAVA N. KOSANOVICH, nor had Manhattan informed him, in any way, that an examination of the TESLA effects had been made by anyone. In fact, added MR. POTTS, the only correspondence relating to the TESLA estate has been in the form of bills for storage.

MR. POTTS stated that any personal inquires regarding the estate would of necessity be directed to him, and to date no such inquiries have been made.

Interviewing agents explained to MR. POTTS that the examination made, as mentioned above, was not instigated by the Bureau, nor had the Bureau taken part in that examination.

Unless advised to the contrary, this investigation is being placed in a closed status, and no further investigative action is contemplated by this office. CLOSED.

XXXXXX
XXXXXX
XXXXXX

FEDERAL BUREAU OF INVESTIGATION
FOIPA DELETED PAGE INFORMATION SHEET

4 Page(s) withheld entirely at this location in the file. One or more of the following statements, where indicated, explain this deletion.

☒ Deletions were made pursuant to the exemptions indicated below with no segregable material available for release to you.

Section 552		Section 552a
☒ (b)(1)	☐ (b)(7)(A)	☐ (d)(5)
☐ (b)(2)	☐ (b)(7)(B)	☐ (j)(2)
☐ (b)(3)	☐ (b)(7)(C)	☐ (k)(1)
_____	☐ (b)(7)(D)	☐ (k)(2)
_____	☐ (b)(7)(E)	☐ (k)(3)
_____	☐ (b)(7)(F)	☐ (k)(4)
☐ (b)(4)	☐ (b)(8)	☐ (k)(5)
☐ (b)(5)	☐ (b)(9)	☐ (k)(6)
☐ (b)(6)		☐ (k)(7)

☐ Information pertained only to a third party with no reference to you or the subject of your request.

☐ Information pertained only to a third party. Your name is listed in the title only.

☐ Documents originated with another Government agency(ies). These documents were referred to that agency(ies) for review and direct response to you.

_____ Pages contain information furnished by another Government agency(ies). You will be advised by the FBI as to the releasability of this information following our consultation with the other agency(ies).

_____ Page(s) withheld for the following reason(s): _____

_____

☐ For your information: _____

_____

☐ The following number is to be used for reference regarding these pages:

_____

XXXXXX
XXXXXX
XXXXXX

XXXXXXXXXXXXXXXXXXXXX
X DELETED PAGE(S) X
X NO DUPLICATION FEE X
X FOR THIS PAGE X
XXXXXXXXXXXXXXXXXXXXX

FBI/DOJ

OPTIONAL FORM NO. 10
JULY 1973 EDITION
GPA FPMR (41 CFR) 101-11.6

UNITED STATES GOVERNMENT

Memorandum

TO : DIRECTOR, FBI [redacted] (S) DATE: 8/20/76

FROM : SAC, BUFFALO [redacted] (S) (RUC) (b)

SUBJECT: [redacted] (S) (1) CONFIDENTIAL

(OO: NEW YORK)

Re Buffalo airtel to Bureau, dated 7/13/76.

Enclosed for the Bureau are six (6) copies of an LHM, captioned "NIKOLA TESLA MONUMENT, NIAGARA FALLS, NEW YORK," which is self-explanatory. One copy is being designated for Legat, Ottawa for information. Two copies are being furnished to New York, one to Newark for information since they had previous interest in this matter, and one copy to WFO for information because of U. S. and Yugoslav dignitaries who attended the unveiling of the monument.

Nothing adverse came to the attention of this office concerning the dedication of the Nikola Tesla Monument which was a bicentennial gift from the Yugoslav Government to the United States. Diplomatic representatives from the United States, Yugoslavia and Canada reportedly attended the affair. No further inquiries being made at Buffalo and it is closing its case administratively.

EX-113

CLASSIFIED BY 6166 REC-33 [redacted]
EXEMPT FROM GDS, CATEGORY 3 [redacted]
DATE OF DECLASSIFICATION INDEFINITE

ENCLOSURE

3 - Bureau (Encs. 6) (RM)
(1 - Legat, Ottawa) (S)
1 - Newark [redacted] (Info) (Enc.1) (RM)
2 - New York [redacted] (S) (Encs. 2) (RM)
1 - WFO [redacted] (Enc. 1) (Info) (RM)
1 - Buffalo (S)

7 AUG 25 1976 (b) (1)

CONFIDENTIAL

[redacted] (8) (b) (7) (C)

Copy to ... 1 Legat, Ottawa, 1 destroy
By routing slip for
[X] info [ ] action
date 8-2-76
by [redacted]

2-22-89
Classified by
Declassify on: OADR
#291860

SEP 10 1976

Buy U.S. Savings Bonds Regularly on the Payroll Savings Plan

5010-110

200

UNITED STATES DEPARTMENT OF JUSTICE

FEDERAL BUREAU OF INVESTIGATION

In Reply, Please Refer to File No.

Buffalo, New York
August 20, 1976

NIKOLA TESLA
MONUMENT
NIAGARA FALLS, NEW YORK

An article appeared in the "Buffalo Evening News," a daily newspaper published in Buffalo, New York, on July 24, 1976, which in part contained the following information:

The article was captioned "Dignitaries Unveil Statue of 'Genius' Tesla."

The article contained information that NIKOLA TESLA was the inventor of the alternating current and the first man to successfully transmit electric power. The background of TESLA set out in the article revealed that he arrived in New York City in 1884 with four cents in his pocket and plans for an airplane and a book of poetry. In 1888, he invented a system to make the transmission of alternating current practical, at 37 was a millionaire but died at the age of 88 in New York City alone and penniless.

The statue, approximately nine feet high, was erected on Goat Island, a site which is located on the property of the New York State Park and Recreation Department.

The article revealed that more than a thousand people listened to FRANK G. ZARB, Federal Energy Administration, representing President FORD, and Dr. IVO MARGAN, President of the Socialist Union of Croatia, representing Yugoslavian President TITO, as both pulled the cord unveiling the nine foot high statue of TESLA.

2-22-89
Classified by SDIAG/GLM
Declassify on: OADR
#241860

(b)
(1)
[redacted] (3)
ENCLOSURE

201

NIKOLA TESLA
MONUMENT
NIAGARA FALLS, NEW YORK

The sculpture was created by Yugoslavian FRANO KRSINIC and was the bicentennial gift of the Yugoslavian people to the United States. Both of the above men read official greetings from their presidents and exchanged pledges to continue good will and friendship between the two countries.

The article stated that following the unveiling, a reception-luncheon was held for several hundred persons at the Parkway-Ramada Inn, Niagara Falls, New York. Mr. ZARB toasted the Yugoslavian delegation which was answered by that country's Ambassador to the United States, DIMCE BELOVSKI.

According to the article, there was a bit of diplomatic byplay between Mr. ZARB and Ambassador BELOVSKI during the ceremonies. In his remarks at the statue unveiling, Mr. ZARB included an appeal to Yugoslavia to stop all harassment of Americans visiting that country.

In responding to Mr. ZARB's toast at the luncheon, the Ambassador gave assurance that his country wants American visitors and will welcome them.

According to the article, some observers thought that the Yugoslav release of an American held for the past seven months was timed to coincide with the unveiling of the statue.

The tribute to TESLA was sponsored by several Yugoslavian groups in cooperation with the Niagara Mohawk Power Corporation, Westinghouse, and the New York State Park and Recreation Commission.

An article appearing in the "Niagara Falls Gazette," a daily newspaper published in Niagara Falls, New York, captioned "Zarb Calls for Energy Independence for U. S." the article dealt with the unveiling of the Nikola Tesla Monument and stated that accompanying the Yugoslavian Ambassador to the ceremonies on July 23, 1976, were Dr. PAVLE SAVIC, President of the Academy of Science of Serbia,

NIKOLA TESLA
MONUMENT
NIAGARA FALLS, NEW YORK

and VASA VESKOVIC, Yugoslavian Consulate General in New York City.

An article appeared in the "Niagara Gazette" on July 24, 1976, captioned "Aide Almost Missed Event." The article in part indicated that friendship and cooperation between the United States and Yugoslavia was the theme of the day as that nation dedicated a statue of NIKOLA TESLA on July 23, 1976.

The friendship was personalized when a Yugoslavian tried to cross the border from Canada to the United States to attend the dedication without a visa.

The individual was GOJKO SEKULOVSKI, who was in Montreal, Quebec, Canada, as the Chairman of the Olympic Commission of Yugoslavia. He also happens to be the Assistant Secretary of State for Foreign Affairs in that country.

He did not have an American visa and almost missed the unveiling of the statue.

Fast thinking on the part of representatives of the Niagara Frontier State Park and Recreation Commission sent an official car to take the dignitary across the border, which saved the day.

In the "Niagara Falls Gazette" on July 24, 1976, there appeared an article concerning the unveiling of the statue which indicated that Dr. BOGDAN MAGLICH was Chairman of the Yugoslavian-American Bicentennial Committee and was a speaker at the affair. Dr. MAGLICH also serves as President of the Fusion Energy Corporation, Princeton, New Jersey. Dr. MAGLICH eulogized the inventor TESLA and stated "only America could have taken a giant of Tesla's stature, embraced him and provided him the means he needed to bring his talent to its best use of humanity."

NIKOLA TESLA
MONUMENT
NIAGARA FALLS, NEW YORK

(b)(2)

[redacted] were in a position to observe the commemoration of the Tesla Monument, stated that no adverse information came to their attention concerning the dedication of the statue on July 23, 1976.

4-750 (Rev. 12-14-88)

XXXXXX
XXXXXX
XXXXXX

FEDERAL BUREAU OF INVESTIGATION
FOIPA DELETED PAGE INFORMATION SHEET

3 Page(s) withheld entirely at this location in the file. One or more of the following statements, where indicated, explain this deletion.

☒ Deletions were made pursuant to the exemptions indicated below with no segregable material available for release to you.

Section 552		Section 552a
☒ (b)(1)	☐ (b)(7)(A)	☐ (d)(5)
☐ (b)(2)	☐ (b)(7)(B)	☐ (j)(2)
☐ (b)(3)	☐ (b)(7)(C)	☐ (k)(1)
_____	☐ (b)(7)(D)	☐ (k)(2)
_____	☐ (b)(7)(E)	☐ (k)(3)
_____	☐ (b)(7)(F)	☐ (k)(4)
☐ (b)(4)	☐ (b)(8)	☐ (k)(5)
☐ (b)(5)	☐ (b)(9)	☐ (k)(6)
☐ (b)(6)		☐ (k)(7)

☐ Information pertained only to a third party with no reference to you or the subject of your request.

☐ Information pertained only to a third party. Your name is listed in the title only.

☐ Documents originated with another Government agency(ies). These documents were referred to that agency(ies) for review and direct response to you.

_____ Pages contain information furnished by another Government agency(ies). You will be advised by the FBI as to the releasability of this information following our consultation with the other agency(ies).

_____ Page(s) withheld for the following reason(s): _____

_____

☐ For your information: _____

_____

☐ The following number is to be used for reference regarding these pages:

_____

XXXXXX
XXXXXX
XXXXXX

XXXXXXXXXXXXXXXXXXXXX
X DELETED PAGE(S) X
X NO DUPLICATE FEE X
X FOR THIS PAGE X
XXXXXXXXXXXXXXXXXXXXX

FBI/DOJ

205

July 7, 1975

[redacted] (b)(7)(c)

Dear [redacted]:

This will acknowledge your letter of June 9th.

In response to your inquiry, the papers of Dr. Nikola Tesla were impounded, after his death, by the Office of Alien Property of the Department of Justice.

Sincerely yours,

C. M. Kelley

Clarence M. Kelley
Director

~~1 - The Deputy Attorney General - Enclosure~~
~~Attention: Susan M. Hauser~~ REC 22 77-32591-20

NOTE: Bufile 100-2237 indicates that Dr. Tesla was a world famous electrical inventor, and at the time of his death his personal papers and effects were impounded by Office of Alien Property for national security reasons. Since Tesla's death in 1943 the Bureau has received numerous inquiries about the disposition of his technical papers. The above reply is forwarded in answer to these inquiries. Bufiles contain no information identifiable with requesters.

JUL 8 1975

Assoc. Dir. ___
Dep. AD Adm. ___
Dep. AD Inv. ___
Asst. Dir.
Adm. ___
Comp. Syst. ___
Ext. Affairs ___
Files & Com. ___
Gen. Inv. ___
Ident. ___
Inspection ___
Intell. ___
Laboratory ___
Plan. & Eval. ___
Spec. Inv. ___
Training ___
Legal Coun. ___
Telephone Rm. ___

[redacted]

MAILED 7
JUL 7 1975
FBI

(b)(7)(c)

[redacted]

56 JUL 29 197[redacted]

[redacted]

GPO 954-546

206

CURRENT BIOGRAPHY

WHO'S NEWS AND WHY

Vol. 4 No. 2 February 1943

The H. W. Wilson Co., New York

94-3-4-116-17

RECEIVED
FEB 19 1944
U.S. SUPERINTENDENT OF DOCUMENTS

IN THIS ISSUE

Architecture
Blomfield, Sir Reginald (Theodore) obit
Isham, Norman M(orrison) obit

Art
Ehnert, James, Baron obit
Glicenstein, Enrico obit
Groth, John (August)
Herlin, Emil obit
O'Day, Caroline Goodwin obit
Sykes, Charles H(enry) obit
Zorach, William

Aviation
Bissell, Clayton L.
Martin, Glenn L(uther)

Diplomacy
Chiang Tso-pin obit
Henderson, Sir Nevile (Meyrick) obit
Mello Franco, Afranio de obit
Murphy, Robert D(aniel)

Education
Boas, Franz obit
Bos, Lars Wilhelm, Rev. obit
Garfield, Harry A(ugustus) obit
Isham, Norman M(orrison) obit
Lodge, Gonzalez obit
Lowell, A(bbott) Lawrence obit
Reynolds, Helen Wilkinson

Engineering
Crawford, Frederick C(leveland)

Government—International
(See also Military and Naval)
Boisson, Pierre (François)
Chiang Tso-pin obit
Darlan, Jean (Louis Xavier François) obit
Ibn Saud, Abdal Aziz
Mello Franco, Afranio de obit
Noguès, Auguste (Paul)
Stresa, Emil Georg von obit

Government—United States
(See also Military and Naval)
Biddle, Francis M(yron)
Bissell, Clayton L.
Carlson, Evans F(ordyce)
Fuqua, Stephen Ogden
Gullion, Allen W(yant)
MacFarland, Francis N(ash)
Martin, Glenn L(uther)

Industry
Crawford, Frederick C(leveland)
Martin, Glenn L(uther)

Journalism
Bayer, Charles
Fawley, Frederick P(inley) obit
Fuqua, Stephen Ogden
Hebert, F(elix) E(dward) obit
Kreeger, William W(yant)

Labor
Andrews, John B(ertram) obit
Gullion, Allen W(yant)
Osborne, William Hamilton obit

Law
Gullion, Allen W(yant)
Osborne, William Hamilton obit

Literature
Fawley, Frederick P(inley) obit
Habe, Hans
Osborne, William Hamilton obit

Medicine
Crile, George (Washington) obit
Van Rensselaer, Mariana Griswold obit
Wiley, Harvey W(ashington) obit

Military and Naval
Anderson, Kenneth A(rthur)
Anderson, Nicholas E. obit
Bissell, Clayton L.
Carlson, Evans F(ordyce)
Fuqua, Stephen Ogden
Gullion, Allen W(yant)
MacFarland, Francis N(ash)
Martin, Glenn L(uther)
Mead, James M(iller)

Motion Pictures
Bayer, Charles
Eddy, Nelson
Howe, James Wong
Westley, Helen obit

Music
Eddy, Nelson

Naval
Borde, Jean (Joseph Jules Noel) de la
Carlson, Evans F(ordyce)
Zaidler, Curt Frederick obit

Radio
Eddy, Nelson
Fuqua, Stephen Ogden
Tinney, Cal(vin L.)

Religion
Bos, Lars Wilhelm, Rev. obit
Cadbury, H. Howard obit

Science
Boas, Franz obit
Carver, George Washington obit
Crile, George (Washington) obit
Howe, Harrison E(stell) obit
Ives, James E(dmund) obit
Rosenoff, Aaron J(oshua) obit
Schmeltz, Franz C(arl) obit
Tesla, Nikola obit

Social Service
Andrews, John B(ertram) obit
Carpenter, J(ulius) Henry, Rev.
O'Day, Caroline Goodwin obit
Smith, Ida B. Wise

Theatre
Behrman, S(amuel) N(athaniel)
Hibbard, Edna obit
Westley, Helen obit

Published monthly by the H. W. Wilson Company, 950 University Avenue, New York, N.Y. Subscription price $8.00 per year. Entered as second-class matter February 28, 1940, at the post office at New York, N.Y., under the act of March 3, 1879.

CURRENT BIOGRAPHY

Published monthly by The H. W. Wilson Company
950 University Avenue New York

Editor: Maxine Block Managing Editor: E. Mary Trow

Copyright, 1942, The H. W. Wilson Company. Reasonable quotation from this publication is permitted provided due credit is given to CURRENT BIOGRAPHY

Vol. 4 February 1943 No. 2

Explanations

Authorities for forms of names are the Library of Congress and the Wilson Company bibliographical indexes. Exception is made to the authorized form when the shortened form of a name is better known: e.g., Monty Woolley instead of Edgar Montillion Woolley. If the full name is not given in the heading it will be found in the sketch itself.

After the name, pronunciation is given if the name is difficult, and then the date of birth as fully as possible. The date of death is given for those who have died. The occupation of the subject follows. Next comes the sketch itself, followed by a list of references for further study. These include magazine and newspaper references (in one alphabet) and books. If the person is not living, references are made to obituaries in newspapers and magazines. Only books of an autobiographical or biographical nature are listed, including such well known reference works as *Who's Who, Who's Who in America*, etc.

The magazine articles listed under *References* are in abbreviated form (see list "Periodical and Newspaper Abbreviations" for complete title). The form of entry is as follows: Sat Eve Post 56:78-9 S '39 por. This means that an article supplementing our sketch will be found in *Saturday Evening Post*, volume 56, pages 78-9, in the September 1939 number. The abbreviation *por* means that the article is accompanied by a portrait. In the case of newspapers, the name of the paper is followed by paging and date.

When a name in a sketch is followed by '40 a biography of that person may be found in the 1940 *Current Biography* Yearbook published in December 1940; for a name followed by '41 see the 1941 *Current Biography* Yearbook; for a '42 name see index in the December 1942 *Current Biography*.

Photographs not credited to various studios and not obtained from the individuals themselves are obtained from Press Association, Inc., Rockefeller Plaza, New York City.

SMITH, IDA B. WISE—*Continued*

References

Christian-Evangelist p423-4 Ap 16 '42 por
Lit Digest 121:33 Je 13 '36 por
N Y Times IV p2 Ag 31 '41 por
Newsweek 16:40 Ag 19 '40 por
Time 29:55 Mr 1 '37 por; 39:51 Mr 2 '42 por; 39:12 Je 15 '42
Who's Who in America 1942-43

STAUSS, EMIL GEORG VON (shtous fŏn) Oct. 6, 1877—Dec.(?), 1942 German state councilor and a Vice-President of the Reichstag; former director of the Deutsche Bank in charge of its oil interests.

Obituary

N Y Times p17 D 12 '42

SYKES, CHARLES H(ENRY) Nov. 12, 1882—Dec. 19, 1942 Nationally known as the newspaper cartoonist, "Bill" Sykes; drew famous war cartoons for the First and Second World Wars; editorial cartoonist of the *Evening Public Ledger* of Philadelphia from its founding in 1914 until its suspension in January 1942.

Obituary

N Y Times p44 D 20 '42

TESLA, NIKOLA (tes'lă) July 9, 1856—Jan. 7, 1943 One of the world's greatest electrical inventors and designers; American citizen of Greek origin; worked with Edison; credited with many "epic making" inventions since he came to the United States in 1884; in his old age claimed to have invented a "death beam" powerful enough to destroy 10,000 airplanes at a distance of 250 miles and to annihilate an army of 1,000,000 soldiers instantaneously.

Obituary

N Y Times p19 Ja 8 '43 por

TINNEY, CAL(VIN L.) Feb. 2, 1908- Radio commentator

Address: b. c/o Mutual Broadcasting System, 1440 Broadway, New York City

Since August 1941 Cal Tinney's slow Texas drawl and homespun humor, with intimate, folksy interpolations, have been heard over the Mutual network in *Sizing up the News* each Monday and Wednesday evening from 8:00 to 8:15 p. m. Tinney's colloquialisms, which the folks "back home" chuckle over—his "just-between-you-and-me, ain't it the truth?" "it shore is" method—has captured many a listener bored with the formal, polished, or cut and dried comments of other newscasters.

But there has been more to Tinney than his mannerisms. Speaking usually as a representative of what the "common man" thinks about affairs at home and abroad, he has taken more than one direct and shrewd pot shot, left of center, at stuffed shirt policy, the doings of Big Business, politicians who coddle Fascism at the expense of democracy under high-sounding terms of Americanism, etc. It is not surprising that the sandy-haired young man from the West has occasionally found himself in hot water. Objections have at times been made to the FCC on the "character of the broadcaster's utterances." But Tinney has apparently survived the allegations against him, since he currently continues his bi-weekly talks.

The outspoken homespun philosopher, who has become a kind of Will Rogers columnist of the air, was born February 2, 1908 on a ranch in Pontotoc County, Oklahoma. His family, however, originally came from Texas, where his grandfather, a rugged individualist, had strange politics for those parts. "My grandfather was a Texas Republican," Tinney says sadly, "and they shot him. Seems he exploited his sentiments one Saturday night in a bar room. Ever since then my Pop has been a Democrat." So has the son and, judging by his broadcasts, a fervent New Deal-supporting one.

After attending the Oklahoma public schools Tinney enrolled at the Murray State School of Agriculture in Tishomingo, Oklahoma. There, however, his education lasted only two weeks. "I never did stay there long enough to find out whether it was a high school or college," he says. Young Tinney apparently decided he could get a better schooling by traveling and seeing the world at first hand. For some years he tramped around, often as an ordinary seaman aboard freighters off for foreign ports. He was a newspaperman of sorts, also, and found jobs in Shanghai and Paris. His work in the pre-War French capital was rewriting material found in English-printed newspapers. "It was easy," Tinney explains. "All you had to do was change words like lift to elevator, and caretaker to janitor."

After getting his education by travel, Cal Tinney settled down in Oklahoma to edit a country paper, and began to advertise it over Station KVOO at Tulsa. That was in 1932. His humorous, drawling voice soon became more popular than his gazette. So he gave up his job as an editor, but since 1934 he has written a weekly feature, "Man of the Week," for the McNaught Syndicate. He is the author, also, of a book called *Is It True What They Say about London? a Non-Partisan Portrait* (1936). When Tinney turned to radio for a living, his voice was heard, successively, on the *March of Time* (1932), the *Voice of America* (1933), and the *Maxwell House Show Boat* program (1934). From 1937 to 1939 he was on the *Vanity Fair* feature, and from 1939 to 1940 on *Youth vs. Age*. That year he originated, but did not appear on, *Stop Me If You Heard This One*.

Tinney is married to Mary Maxine Noble. The couple have two sons, David N. and Scott.

It was in 1940 that Tinney hit on the idea of a folksy newscast and tried it out in Tulsa, Oklahoma. Farm listeners chuckled, appreciated a commentator who spoke their own

Office Memorandum · UNITED STATES GOVERNMENT

TO: Director, FBI

FROM: SAC, New York

SUBJECT: "PLAIN TALK"
INFORMATION CONCERNING
Bureau File #94-36511

22925

Transmitted herewith for the information of the Bureau is the March 1948 issue of "Plain Talk".

Enc. (2)

ENCL ATTACHED

62-8845 ENCL

62 MAR 27 1948

RECORDED 94-36511-98
FBI
MAR 15 1948

INDEXED 138

EX-58

RED AMBASSADORS

Sava Kosanovich of Yugoslavia

By BOGDAN RADITSA

This is the first in a series of profiles of the Red Ambassadors who represent the several Soviet satellite governments in Washington. Others will follow shortly.

FAMILIAR as they are with the blasts of Vishinsky and Molotov, most Americans are not aware that some of the most fervid tirades against "U.S. imperialism" delivered in this country come from an officially accredited ambassador. Sava Kosanovich, a wiry, reddish-haired man in his early fifties, represents Tito in Washington and in the United Nations. He travels all over this country making speeches in praise of the "new progressive democracy" in the Balkans, denouncing "Anglo-American reaction" and helping to form front groups for Tito. Incidentally, the American ambassador in Yugoslavia cannot even move around Belgrade without special permits and a guard of secret police agents.

From Kosanovich's speeches at Lake Success and elsewhere, it would appear that everything in Yugoslavia before Tito came to power was reactionary or Fascist. Yet, when he was touring America during the war, he used to introduce himself as a "member of the democratic government of His Majesty King Peter the Second."

Kosanovich is a restless man—his face and hands seem to be always agitated and moving. He is a cultured man with a long background in liberal, democratic movements. But he is a man of strong ambitions, who was willing to betray his own past and his closest friends for those ambitions.

In an Embassy which is more of a propaganda bureau than a diplomatic office, Kosanovich is only the front man for the Cominform's schemes in America. The real power in the Embassy is held by members of the Communist Party and the secret police, OZNA, just as its real policy is directed from Moscow through Belgrade. Though Kosanovich repeats the Moscow line, he is not yet one of the inner circle.

I first met Kosanovich in the fall of 1941 in the United States, where he had come with some members of the exiled Royal Yugoslav Government, representing Croatia, Serbia and Slovenia. The tragicomic adventures of that royal mission in America centered around the battle between those who wanted Yugoslavia, after its liberation from the Nazis, to become a democratic federal union, and those who demanded a Yugoslavia which would be a Greater Serbia administered on the old prewar pattern. The grim outcome was that Tito succeeded in charming American public opinion with his sweeping promises of democracy and federation, while the exiles were quarreling among themselves—mostly for personal, rather than ideological, reasons.

KOSANOVICH dreamed for a good many years of becoming Yugoslav ambassador to Washington. His uncle, Nikola Tesla, was an important scientist

in America. He himself is descended from a long line of Serbian Orthodox ministers. His friends in politics used to tease him about his shyness toward women, his hatred of smoking and drinking. A strong and dynamic political leader, they said, should be a lady-killer, a hard drinker and a chain smoker.

In prewar Yugoslavia, Kosanovich always attached himself to some popular political leader. (It seemed to give him the feeling that he was running things himself.) In the beginning of his career he followed the tide of Svetozar Pribichevich, the leader of the Democratic Party, who sought a highly centralized Yugoslav state and drove the Communists underground through his secret police. That policy helped to reinforce communism for the present job.

Next, Kosanovich was attracted by the leaders of the Croatian peasants, Stevan Radich and Dr. Vladimir Machek, now in exile in Washington. He considered that he was Machek's "brain." Machek, however, did not always welcome the attentions of his satellite: several times he told me that he was tired of Kosanovich's "old maidish suggestions and tearful interventions." For when he is arguing any involved issue, Kosanovich's voice takes on a querulous tone which makes him sound like an adolescent.

During the war, Kosanovich defended Mihailovich and a united Yugoslavia. He took an active part in Allied meetings and the affairs of American Yugoslavs. His name often appeared in the "Letters to the Editor" column of *The New York Times*. He was a chairman of the Southeastern European Planning Board—a movement not popular with Stalin, as it threatened to block his plans for regional agreements and the artificial building up of buffer states. And he was active, with his friends Louis Adamic and the violinist, Zlatko Balokovic, in the formation and promotion of the United Committee of South-Slavic Americans, subsequently metamorphosed into an important part of the Kremlin's Pan-Slavic front.

In his speeches Kosanovich has been one of the principal promoters of an idea first advanced by Adamic—that America is a nation of nations. As such, she is not only Anglo-Saxon, but German, Italian, Negro or Slav. The Slavs of America should unite in the name of brotherhood to carry on their glorious traditions, to show other Americans the heritage they have brought to this country, and to keep in touch with their motherlands. On the surface this idea seems harmless enough, but it is the banner of Stalin's movement to divide the United States. Russia and her satellites carry the idea farther in their controlled press by openly maintaining that America cannot be progressive until it is transformed into a series of "people's republics" on the Soviet pattern, giving their national sovereignty to all the racial groups that compose the population. Behind that scheme is the desire to Balkanize the United States—to divide it into conflicting clans so that a revolution may be centralized through the only uniting force, the Communist Party.

FIORELLO LA GUARDIA was Kosanovich's greatest acquisition. He led the New York Mayor through the same political zig-zag he himself followed—first to Mihailovich, then to Tito. The speech of greeting to King Peter that La Guardia read in Serbo-Croatian on July 8, 1942, was written by Kosanovich. The Mayor read:

"Drazha Mihailovich and Vladimir Machek are the expression of the Yugo-

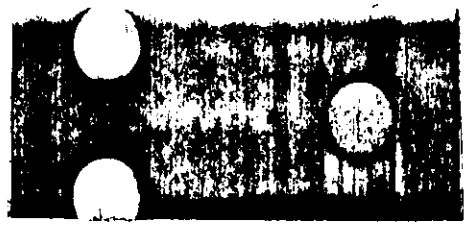

slav spirit of resistance—from Triglav to Vardar. They will go down in history. . . ."

In his own speeches Kosanovich often compared Mihailovich with MacArthur, Chiang Kai-shek and Timoshenko. For example, at a meeting of the anti-Nazi League in New York, June 8, 1942, he spoke of "the epic struggle which my people are making under the man whose name already symbolizes to mankind indomitable spiritual and physical resistance—Drazha Mihailovich."

Mihailovich was killed by a government of which Kosanovich was a member. Machek fled the country to escape the fate of Petkov, Maniu and other peasant leaders. Immediately after he became Tito's ambassador, Kosanovich quoted Count Ciano to prove that Machek had been willing to sell out Croatia for a relatively small amount of money. The former follower of Machek admitted intimately to a friend that he did not believe the accusation, but that Tito had asked him to make it.

On July 6, 1942, at a reception held in the Yugoslav delegation's mansion on New York's Fifth Avenue, Kosanovich introduced Mirko Markovich, editor of the Serbian Communist newspaper, *Slobodna Rec*, and now professor at Belgrade University. Markovich offered King Peter a check of one thousand dollars for "the Chetniks and regular army of General Mihailovich."

A week later orders arrived from Moscow that Mihailovich should be considered a traitor and Tito accepted as leader of the war for liberation. Markovich and his Serbian equivalent of the *Daily Worker* suddenly switched to attacking Mihailovich. Kosanovich did not—but his defense of the Chetniks' leader grew weaker. Shortly before he went to London in March, 1944, Kosanovich in a *New York Post* interview was quoted as follows: "Mihailovich is in the position of a General Lee. Tito is some kind of a Lincoln out to save the Union. Mihailovich was an army officer. I think he is sincere but he is surrounded by a very bad political entourage. The entourage was catastrophic. The Government, diplomats abroad, working in his name, are even more catastrophic."

Curiously, Kosanovich himself was a member of that same "catastrophic" government. When he joined the Yugoslav government-in-exile in London in the spring of 1944, it had already dismissed Mihailovich and sought an agreement with Tito's National Liberation Movement.

KING PETER was in London. Heading his government-in-exile was Dr. Ivan Subasich, the viceroy of Croatia. The group was more or less agreed that Yugoslavia should be restored on the basis of a federal union.

Kosanovich asked for a government representing all political parties, which would be strong enough to fight the Communists. He was a frequent visitor to King Peter and his mother. And when an agreement was drawn up between Subasich and Tito, Kosanovich was terribly dissatisfied with its terms. (I suspect that was because he had not taken an active part in it; he was inclined to think that everything in Yugoslav politics needed his guiding hand.)

Tito was in Belgrade. The Red Army was crossing the Danube in its push toward Vienna. On January 18, 1945, Tito's emissary, General Velebit, visited Kosanovich in Kingston House, London. Kosanovich left the interview pale and nervous. For the first time he realized that dealing with the Communists demanded fortitude.

A few days later, on January 23, King Peter dismissed Subasich's cabinet and reappointed its members only after all of them—including Kosanovich—had agreed in writing that, on their return to Yugoslavia, they would defend certain obligations the king had made concerning the Tito-Subasich agreement. The chief obligation was that the new united Yugoslav Government to be formed under Tito should guarantee all fundamental political and civil rights and freedoms to the Yugoslav people. Kosanovich took a prominent part in drafting this public statement announcing the reappointment of the previous cabinet and the obligations its members assumed. As the king's most intimate adviser, he drafted Peter's act of consent to the Regency. Before Kosanovich left London, the young king kissed him, and received his formal promises that he would defend the interests of the monarchy.

In the spring of 1945, Yugoslavia was "liberated" and the members of its London government-in-exile came back to join Tito's government with the blessing of Churchill, Roosevelt and Stalin. It was at that time that the Communists characterized Kosanovich as a "useful innocent" (*koristna budala*). In a meeting held in a swanky Belgrade apartment house—still the headquarters of the Communist Party of Yugoslavia—the ex-schoolteacher, Edward Kardelj, the Montenegrin, Milovan Gjilas, and other top Communist leaders were talking over the political characteristics of their new partners.

Gjilas said, according to a witness who reported the meeting to me: "The Anglo-Americans dream that they may influence us through someone who is not a Communist. Therefore Ivan Subasich is best fitted for the job of foreign minister. Though he sometimes wavers, he defended the agreement with Tito stubbornly in London and Washington. Milan Grol (the vice-premier and leader of the Serbian democrats) will serve as a Trojan Horse for the West. He is a reactionary politician who backed Mihailovich. If Grol declares that the Serbian people have to abandon Mihailovich, they will accept the idea. As for Kosanovich—he is not an important personality nor a politician. But he is a useful innocent, who may be of help in the United States where he is considered to be a Western-type democrat."

The only member of that London government who still survives politically is the "useful innocent." Subasich, after having been Tito's prime minister and foreign minister, is now a prisoner in Zagreb. Franc Snoj, after participating in the Communist government of Slovenia, was recently sentenced to seven years of slave labor for "espionage in favor of the Western democracies." The liberal Dr. B. Markovich of Serbia died in New York. I arrived there in time to see him before his death. After I had told him the grim story of what Yugoslavia looked like under the Communists, he said very sadly:

"How is it possible that Savitsa (the diminutive of Kosanovich's first name) could stay in such an outrageous government?"

TITO soon began to ignore all the obligations assumed in his agreement with Subasich. Even before the elections he declared that the king was never to come back. Milan Grol and others immediately left Tito's government. Everybody in Yugoslavia expected Kosanovich to do the same. But he began to yield to the Communists.

Subasich had just come back from a trip around Yugoslavia. He had seen that the people did not want commu-

212

nism; they wanted quick action by the democrats. And he had the courage to tell this to Tito. Although he was foreign minister, he was arrested.

I was with Kosanovich in his room in Belgrade's Hotel Majestic when Mrs. Subasich telephoned and asked for immediate help. Her husband was arrested and ill. Kosanovich tried to reassure her. He telephoned Lt. General Rankovich, OZNA's chief trigger-man. The Communist hangman answered coldly that nothing would happen to the foreign minister. Precautions were merely being taken to defend him from any attempt of the "Western reactionaries" upon his life.

We had just been reading Dante there in the hotel room—the part where Count Ugolino hungrily devours the brain of Archbishop Ruggieri, describing the merciless end of all traitors. The blood and turmoil of ancient fratricidal war rose before us: it seemed very near to our own Yugoslav tragedy.

Only a little later Kosanovich entered the new People's Front against the will of the Independent Democratic Party, of which he was Secretary-General. His party issued a clandestine communiqué describing his defection. Soon after that the chairman of the party, Dr. D. Boshkovich, was terribly beaten for three hours by a Communist youth mob. He was lying in a hospital the same night that Kosanovich was flying to the London conference of the Big Four, accompanying the Communist Kardelj as a "liberal and democrat." Before he left, Kosanovich had published an article in the Communist official organ, *Borba*, in which he attacked Subasich and the leadership of the party with whom he had worked closely for twenty years. The Communists wanted a proof of "betrayal." And the price was paid. From London, Kosanovich went to the Paris Peace Conference, and from there to Washington—to attack American democracy, which he had formerly praised.

I CANNOT BELIEVE Kosanovich is a happy man, though he has attained his ambition. Those who once opposed *fascism* and are now serving communism have lost all faith in themselves and in mankind. There are no more miserable people than the intelligentsia who know better—but who have been afraid to resist in the last battle for man's liberty.

Kosanovich once asked for a synthesis between political and economic democracy for the good of the people, and he is now defending the complete subjugation—economic, political and moral—of Yugoslavia to the Communists. Kosanovich once wanted Yugoslavia to be free of the influence of any big power, and he is now ambassador of a puppet state in Stalin's empire.

THE SOLUTION FOR PALESTINE

A comprehensive and authoritative discussion of the Hoover Plan (pages 32-33) and of the Lowdermilk Plan (*Palestine—Land of Promise*), offering an engineering rather than a political solution for the crisis in the Near East, will be presented in the next issue of PLAIN TALK.

213

FEDERAL BUREAU [redacted]

Case Originated At: PITTSBURGH File No. 61-128

Report Made At	Date Made	Period	Report Made By
PITTSBURGH	2/20/46	11/15,19,20, 21,26/45.	[redacted]

Title	Character
SLOBODNA REC (FREE EXPRESSION)	INTERNAL SECURITY - C REGISTRATION ACT

SYNOPSIS: SLOBODNA REC (Free Expression), Serbian communist-line tri-weekly newspaper printed at 1916 East [redacted], Pittsburgh, Pa., steadfastly adheres to the generally recognized communist line and operates, among Serbs in the U. S., as the organ for the dissemination of information on Serbian affairs in Yugoslavia. As the leading Slav communist organ it contained, during the period from 12/6/44 to 8/30/45, favorable publicity for such communist front organizations as the SWC, American Slav Congress, Vidovdan Committee and the United Committee of South Slavic Americans. It supported the TITO and STALIN governments unequivocally and denounced opposition believed to exist against these governments. Due to the leaving of the former Editor-In-Chief, MIRKO MARKOVICH, to confer with TITO and his representatives in Belgrade, Yugoslavia, the editorship has been undertaken by Reverend NIKOLA DRENOVAC. The Managing Editor is CHARLES VUICH and Business Manager is MANE [redacted]

- P -

J. A. Fletcher

1	Bureau (Encls.)	1	Milwaukee (Info.)
	Albany (Info.)	1	Newark (Info.)
	Anchorage (Info.)	1	New Haven (Info.)
	Baltimore (Info.)	1	New Orleans (Info.)
	Boston (Info.)	1	New York (Info.)
1	Buffalo (Info.)	1	Oklahoma City (Info.)
1	Butte (Info.)	1	Omaha (Info.)
1	Chicago (Info.)	1	Philadelphia (Info.)
1	Cincinnati (Info.)	1	Phoenix (Info.)
1	Cleveland (Info.)	1	Portland (Info.)
1	Denver (Info.)	1	Richmond (Info.)
1	Des Moines (Info.)	1	St. Louis (Info.)
1	Detroit (Info.)	1	St. Paul (Info.)
1	Houston (Info.)	1	Salt Lake City (Info.)
1	Indianapolis (Info.)	1	San Diego (Info.)
1	Jackson (Info.)	1	San Francisco (Info.)
1	Kansas City (Info.)	1	Savannah (Info.)
1	Little Rock (Info.)	1	Seattle (Info.)
1	Los Angeles (Info.)	1	Springfield (Info.)
1	Louisville (Info.)	1	Washington Field (Info.)
1	Memphis (Info.)	1	Pittsburgh
1	Miami (Info.)		

NO JUN 1946 5 PITTSBURGH

(Typed Entire)

SLOBODNA

39 FEB

INFORMATION CONTAINED HEREIN IS UNCLASSIFIED DATE 2- BY SP1 [redacted]

#29166

59 JUN 17 1946

b7C

97-

214

[redacted]

Translations of SLOBODNA REC as contained in this report were made at the Pittsburgh Field Office by [redacted] Serbo-Croatian translator, and [redacted] Slavonic translator.

II

ORGANIZATIONAL STRUCTURE

A - OFFICERS

In the "Statement Of The Ownership, Management, Circulation, Etc., Required By The Acts Of Congress Of August 24, 1912, and March 3, 1933," regarding newspapers utilizing the mails as a means of transmission, furnished the Pittsburgh Office by [redacted] Pittsburgh Post Office, the following are given as officers of SLOBODNA REC:

Publisher	J. KRSTOVICH
Editor	CHARLES VUICK
Managing Editor	None
Business Manager	MANE SHUSHNAR
Owner	JOHN KRSTOVICH

This statement was filed at the Pittsburgh Post Office by MANE SHUSHNAR on October 2, 1945.

"2. It is true that this year's calendars were printed too late, but we have inspite of this sold a sufficient number of calendars and some of the sellers have not sent in their money. In addition to the excellent success in advertisements for the calendar and besides the fact that the calendar was excellent, the work of the sale of the calendars is not satisfactory. Our activists should have paid more attention to this then than before selling the calendars.

"3. Soon we shall have received several hundred copies of the new book 'Guns For Tito.' We ought to do our best to sell these books as soon as possible. The book was compiled by an American Major who organized a shipment of weapons to TITO's Army and met TITO personally several times. The price of the book is $2.75.

"4. We must finish the sale of the book of NIKOLA TESLA. We should particularly interest the American engineers and unionists in it.

"5. Soon a book of MIRKO MARKOVICH will be off the press: 'That We May Understand Each Other.' Therefore it will be necessary to organize the sale of the same. The book contains 350 pages and the price of the same is $2.50.

"The working committee decided that by the end of the month of March or in April, MIRKO MARKOVICH should start for the Pacific Coast, to California, to work in the strengthening of our movement and newspaper and in building up of clubs and the apparatus. This will be discussed in detail at the meeting of the Supreme Board in Cleveland."

August 14, 1945 — "Reorganization Of Leadership Of Serbian Progressive Movement In City Of Akron Carried Out." This article, which is quoted below, indicates the then policy of SLOBODNA REC in its leadership in the Serbian Progressive Movement in the United States.

"Akron, August 10 - Last week, on Thursday evening, there was here held a special meeting of the Serbian political progressive club, which was attended by the editor-in-chief of SLOBODNA REC, MIRKO MARKOVICH, and the manager of the paper, MANE SHUSHNAR.

STANDARD FORM NO. 64

Office Memorandum • UNITED GOVERNMENT

TO : Director, FBI

DATE: November 7, 1947

FROM : SAC, Pittsburgh

SUBJECT: SLOBODNA REC
INTERNAL SECURITY - C
REGISTRATION ACT

The following article which appeared in the November 1, 1947, issue of the above captioned Communist line newspaper published at 1916 East Street, Pittsburgh, Pa., is furnished for your information:

Address of Ambassador ROSANOVICH at Banquet of 2nd Serbian Congress, October 26 in Pittsburgh, Pa.

ALL INFORMATION CONTAINED HEREIN IS UNCLASSIFIED DATE 2-22-19 BY SP1 AC/cm # 24860

Brothers and Sisters:

I come among you to extend you the greetings of the peoples and the government of the Federated People's Republic of Yugoslavia, headed by Marshal Tito and to thank you for the considerable aid which you have given your brothers in the old homeland.

By coincidence, I found myself in the period of 1943-44 in this great country where I did my best to defend the truth and contribute to the best of my ability to the thwarting of spreading untruths on the part of the official representatives of the then Yugoslav government in exile and of all those who wanted to convince public opinion of America and its official circles of the impossibility of restoring Yugoslavia. I recall your valuable help of that time. I remember a dear friend in the person of the late Rev. KRAJNOVICH and his constant struggle, as well as of so many others of that period.

You Americans of Serbian descent were hit the hardest. You were exposed to the greatest trials and the heaviest attacks. You had to exercise the greatest self-denial and perspective correctly to see the course of events because every effort was made to confuse you. The idea was that when Serbian Americans follow the wrong path, when chauvinism and national hatred get possession of them, when hatred toward the Croats and Slovenes and toward Yugoslav unity is aroused in them, then it will be easy for the same attitudes to work among Croatians and Slovenes as regards Yugoslav unity, giving chauvinism full sway and thus contributing to the weakening of the war effort in American and rendering impossible the struggle for the salvation and restoration of Yugoslavia and the Balkans.

In a letter of thanks for an honor which was shown me in February, 1944, by a great number of you who are now assembled at this Serbian

NOV 12 1947

RECORDED 77-724-175
INDEXED
EX-93
34 NOV 10 1947

(6)
(7)(C)

217

To: Director, FBI November 7, 1947
Re: SLOBODNA REC
IS - C; REGISTRATION ACT

Congress when I was elected an honorary president of the Vidovdan Congress I said:

"In an extraordinary difficult period of mankind you have with sacrifice and self-denial done your duty also toward your people from whom you sprang and toward America of which you are good citizens, and toward mankind. Since my arrival in America in 1941, in an official capacity, I found among you the best understanding and best cooperation for an ever greater unification of national forces in the struggle against all manifestations of fascism. Together we tried to be as serbs - bearers of Serbo-Croato-Sloveno-Macedonian harmony and unity at a time when the enemy banked his entire hope on disharmony and hatred. Working thus we have contributed to the correct understanding of the national-liberation struggle beset with so many obstacles and bedevilled with so much gossip. Time and events have borne out the truth thereof."

And when taking leave of Serbs in America in a letter of July 24, 1944, among other things I wrote:

"We have here been those who have defended the purity of the Serbian name at a time when it was being most degraded by the ignorant. History will show that we were right and that by our defending the unity of Serbs, Croats, Slovenes, and Macedonians we have best represented the true national Serbian interests and thus represented the interests not only of Yugoslavia but also of America and all United Nations. We have by common sacrifices of a liberation war achieved great successes in the country, but there still are great trials. Enemies will particularly seek to confuse the Serbs and destroy them with false defense of Serbian interests. I ask all my good friends to make every effort to promote harmony and unity. I ask all those who were being deceived in returning to Serbian tradition and enter the great circle of national harmony . . . I ask friends who have had the opportunity and bravery of seeing the right path from the very outset, that they forgive those who haven't seen it because they were deceived by those who thought they must be believed. The true national champion is known by his setting the errant ones on the right path. Responsible culprits who misused their positions and misused the credulity of the ignorant will answer to the people for their misdeeds. The more you will promote harmony, the better it will be for Serbdom, for Yugoslavia, and for America - toward which you have the greatest obligation."

To: Director, FBI
Re: SLOBODNA REC
IS - C; REGISTRATION ACT

November 7, 1947

That was the path to which you were called until his last days by our great countryman NIKOLA TESLA.

And you, by your moderation, have contributed to the interest of the democratic struggle of the world. You have contributed to the unification of all national forces in America in the organization of the war effort. And at the same time, as Americans of Serbian descent together with other Yugoslav Americans, you have shown your American fellow-citizens that your brothers in the old homeland are with united efforts resisting fascism and struggling for freedom and the restoration of their independent state, Yugoslavia.

In this you were able to be the best spokesmen. You and your predecessors have come to this country in search of freedom and better economic conditions.

Most of you and those before you have fled from Hapsburg serfdom because you were being oppressed both nationally and economically. You and your predecessors made valuable contributions to the development of the New World. You with your brother Slovenes and Croatians have sweated, shed blood, worn your bones, expended brains, and whatnot for the progress of this country. Long is the chain of miners, farmers, scientists, and soldiers who gave their best for the general progress and prosperity of the American Union. You have conscientiously been doing your duty and you have become good citizens of this great land. Who of us is not proud of the work, life and nobleness of NIKOLA TESLA without whose work and mind electricity would not be what it now is in the world; whose motor has harnessed the Niagara and the Dnieper, turning the wheels of industry wherever there is electricity? In every spark of electricity, shines his name. America is the greatest beneficiary of TESLA's genius. He asked for no riches.

And so, brothers and sisters, when during the war you have raised your voice for your brethren in the Balkans struggling not only for their life but also for a better and more secure existence of mankind, your voice thus had significance and importance. You were able to be the authorized spokesmen of the struggle which was going on over there.

XXXXXX
XXXXXX
XXXXXX

FEDERAL BUREAU OF INVESTIGATION
FOIPA DELETED PAGE INFORMATION SHEET

3 Page(s) withheld entirely at this location in the file. One or more of the following statements, where indicated, explain this deletion.

☒ Deletions were made pursuant to the exemptions indicated below with no segregable material available for release to you.

Section 552		Section 552a
☐ (b)(1)	☐ (b)(7)(A)	☐ (d)(5)
☐ (b)(2)	☐ (b)(7)(B)	☐ (j)(2)
☐ (b)(3)	☒ (b)(7)(C)	☐ (k)(1)
_____	☒ (b)(7)(D)	☐ (k)(2)
_____	☐ (b)(7)(E)	☐ (k)(3)
_____	☐ (b)(7)(F)	☐ (k)(4)
☐ (b)(4)	☐ (b)(8)	☐ (k)(5)
☐ (b)(5)	☐ (b)(9)	☐ (k)(6)
☐ (b)(6)		☐ (k)(7)

☐ Information pertained only to a third party with no reference to you or the subject of your request.

☐ Information pertained only to a third party. Your name is listed in the title only.

☐ Documents originated with another Government agency(ies). These documents were referred to that agency(ies) for review and direct response to you.

_____ Pages contain information furnished by another Government agency(ies). You will be advised by the FBI as to the releasability of this information following our consultation with the other agency(ies).

_____ Page(s) withheld for the following reason(s): _____

_____

☐ For your information: _____

_____

☒ The following number is to be used for reference regarding these pages:

100-10123-124

XXXXXX
XXXXXX
XXXXXX

XXXXXXXXXXXXXXXXXXXXX
X DELETED PAGE(S) X
X NO DUPLICATION FEE X
X FOR THIS PAGE X
XXXXXXXXXXXXXXXXXXXXX

FBI/DOJ

STANDARD FORM NO. 64

Office Memorandum • UNITED STATES GOVERNMENT

TO : Director, FBI

DATE: 5/8/45

FROM : SAC, Pittsburgh

SUBJECT: [redacted]

(b)7(c)

INTERNAL SECURITY - R

(b)7(D) [redacted] would-be radio repair man, advised this office that on April 29, 1945 he installed at the home of captioned subject, [redacted], a "Hammerlund H.Q. Receiver #120X". [redacted] stated that since this type receiving set is of a kind which is generally used by amateur radio experts or professionals and since the radio set itself was in such condition as to indicate that it had been purchased under a very high priority, he inquired of the subject how he happened to be in possession of such a radio set. [redacted] according to [redacted], was vague as to where he got it, saying that it had belonged at one time to NIKOLA TESLA'S son and was purchased before the war in New York City. [redacted] did not make any notation of the serial number of this radio but advised that under pretext he can review the operation of this set in the apartment of the subject and at that time get the serial number.

(b)7(D)

(b)7(D)

(b)7(D)

(b)7(c)

b7D

[redacted]

[redacted]

[redacted]

[redacted]

COPIES DESTROYED

14

ALL INFORMATION CONTAINED HEREIN IS UNCLASSIFIED DATE 4-16-89 BY SP1ALGCM # 291960

JUN 1 2 [redacted]

(b)7(c)

221

FEDERAL BUREAU OF INVESTIGATION

Form No. 1
THIS CASE ORIGINATED AT WASHINGTON, D. C.

FILE NO. 100-11980

CONFIDENTIAL

REPORT MADE AT	DATE WHEN MADE	PERIOD FOR WHICH MADE	REPORT MADE BY
WASHINGTON, D. C.	30 AUG 1946	7/8;8/2/46	[redacted] (b)(7)

TITLE: (b)(1) [redacted] (c)

CHARACTER OF CASE: (b)(1) [redacted] (c)

Confidential

SYNOPSIS OF FACTS:

The new Yugoslav Ambassador, SAVA N. KOSANOVIC, has stated to the newspaper that they do not contemplate hostilities over the Trieste question. [redacted] (b)(1) (c)

ALL INFORMATION CONTAINED HEREIN IS UNCLASSIFIED EXCEPT WHERE SHOWN OTHERWISE

NO SEP 1946 69 ...STICS

- P -

REFERENCE: Report of Special Agent [redacted] dated July 22, 1946, at Washington, D. C. (b)(7)(c)

2-16-49 Classified by SPIAGGIM
Declassify on: OADR # 291860
DEFERRED RECORDING

DETAILS: AT WASHINGTON, D. C.

GENERAL ACTIVITIES

HANDLED BY STOP DESK

The "Washington Post" for July 23, 1946, carries a headline relative to an interview had with the new Yugoslav Ambassador SAVA N. KOSANOVIC entitled "War Over Trieste Not Anticipated by Yugoslav Envoy". The article stated he had declared on the previous day that his country would not be provoked into any action in Trieste which would compromise the peace. He also stated they would not accept any solution of the problem which did not accord with their essential interests. He said his Government opposed Italian proposals for a plebecite in the disputed area because the Yugoslav population had been diminished by twenty-six years of Italian rule and the additional loss of 56,000 men in the fight against the Nazis.

APPROVED AND FORWARDED: Guy Hottel SPECIAL AGENT IN CHARGE

DO NOT WRITE IN THESE SPACES

100-32820-285

RECORDED & INDEXED 35

COPIES OF THIS REPORT
5 - Bureau
2 - Detroit
2 - Chicago
2 - Cleveland
2 - New York
2 - Pittsburgh
3 - Washington Field

F B I
37 SEP [redacted] (b)(7)(c)

EX - 14

37 SEP 18 1946

U. S. GOVERNMENT PRINTING OFFICE 16—80005-1

COPIES DESTROYED 7-30-58

CONFIDENTIAL

222

CONFIDENTIAL

[redacted] (b)(1) (C)

The article in the "Evening Star" which was referred to above appeared July 23, 1946, and was entitled "New Envoy Disclaims Any Yugoslav Plans for Coup at Trieste." This article was written by NEWBOLD NOYES, JR. The article quotes the Ambassador as saying that Yugoslavia would not be "provoked into compromising the peace." The article stated that the Ambassador had indicated his country would boycott Trieste if they did not get it. The article stated that KOSANOVIC is a nephew of NICOLA TESLA, the Yugoslav-American inventor.

[redacted] (C) (b)(1)

[redacted] (C)

[redacted] (C)

[redacted] (C)

CONFIDENTIAL

223

XXXXXX
XXXXXX
XXXXXX

FEDERAL BUREAU OF INVESTIGATION
FOIPA DELETED PAGE INFORMATION SHEET

2 Page(s) withheld entirely at this location in the file. One or more of the following statements, where indicated, explain this deletion.

☒ Deletions were made pursuant to the exemptions indicated below with no segregable material available for release to you.

Section 552		Section 552a
☒ (b)(1)	☐ (b)(7)(A)	☐ (d)(5)
☐ (b)(2)	☐ (b)(7)(B)	☐ (j)(2)
☐ (b)(3)	☒ (b)(7)(C)	☐ (k)(1)
_____	☐ (b)(7)(D)	☐ (k)(2)
_____	☐ (b)(7)(E)	☐ (k)(3)
_____	☐ (b)(7)(F)	☐ (k)(4)
☐ (b)(4)	☐ (b)(8)	☐ (k)(5)
☐ (b)(5)	☐ (b)(9)	☐ (k)(6)
☐ (b)(6)		☐ (k)(7)

☐ Information pertained only to a third party with no reference to you or the subject of your request.

☐ Information pertained only to a third party. Your name is listed in the title only.

☐ Documents originated with another Government agency(ies). These documents were referred to that agency(ies) for review and direct response to you.

_____ Pages contain information furnished by another Government agency(ies). You will be advised by the FBI as to the releasability of this information following our consultation with the other agency(ies).

_____ Page(s) withheld for the following reason(s): _____

_____

☐ For your information: _____

_____

☒ The following number is to be used for reference regarding these pages:

100-32820-461

XXXXXX
XXXXXX
XXXXXX

XXXXXXXXXXXXXXXXXXXXX
X DELETED PAGE(S) X
X NO DUPLICATION FEE X
X FOR THIS PAGE X
XXXXXXXXXXXXXXXXXXXXX

FBI/DOJ

XXXXXX
XXXXXX
XXXXXX

FEDERAL BUREAU OF INVESTIGATION
FOIPA DELETED PAGE INFORMATION SHEET

4 Page(s) withheld entirely at this location in the file. One or more of the following statements, where indicated, explain this deletion.

☒ Deletions were made pursuant to the exemptions indicated below with no segregable material available for release to you.

Section 552		Section 552a
☒ (b)(1)	☐ (b)(7)(A)	☐ (d)(5)
☐ (b)(2)	☐ (b)(7)(B)	☐ (j)(2)
☐ (b)(3)	☐ (b)(7)(C)	☐ (k)(1)
_____	☐ (b)(7)(D)	☐ (k)(2)
_____	☐ (b)(7)(E)	☐ (k)(3)
_____	☐ (b)(7)(F)	☐ (k)(4)
☐ (b)(4)	☐ (b)(8)	☐ (k)(5)
☐ (b)(5)	☐ (b)(9)	☐ (k)(6)
☐ (b)(6)		☐ (k)(7)

☐ Information pertained only to a third party with no reference to you or the subject of your request.

☐ Information pertained only to a third party. Your name is listed in the title only.

☐ Documents originated with another Government agency(ies). These documents were referred to that agency(ies) for review and direct response to you.

_____ Pages contain information furnished by another Government agency(ies). You will be advised by the FBI as to the releasability of this information following our consultation with the other agency(ies).

_____ Page(s) withheld for the following reason(s): _____

_____

☐ For your information: _____

_____

☒ The following number is to be used for reference regarding these pages:
100-32820-969

XXXXXX
XXXXXX
XXXXXX

XXXXXXXXXXXXXXXXXXXXX
X DELETED PAGE(S) X
X NO DUPLICATION FEE X
X FOR THIS PAGE X
XXXXXXXXXXXXXXXXXXXXX

FBI/DOJ

Federal Bureau of Investigation
United States Department of Justice

Form No. 1
This Case Originated At INDIANAPOLIS, INDIANA — File No. 100-4006

Report Made At	Date	Period	Report Made By
Indianapolis, Indiana	11/18/42	10/29,30/42	[redacted] (b)(7)(C)

Title: AMERICAN SLAV CONGRESS (ALL-SLAV CONGRESS)

Character of Case: INTERNAL SECURITY - C

Synopsis:

Information contained in bulletin entitled "News Flashes from Czechoslovakia under Nazi Domination" issued by Czechoslovak National Council of America, with reference to American Slav Congress, set forth herein. Includes information concerning the permanent committee set-up and a partial list of delegates to the American Slav Congress. [redacted] (b)(7)(D)

cc BR 3/29/47

- P - ALL INFORMATION CONTAINED HEREIN IS UNCLASSIFIED DATE 1-7-83 BY SP5 RTG/PMC

Reference: [redacted] (b)(7)(C) ENCLOSURE ATTACHED

Report of Special Agent [redacted] (b)(7)(C) dated May 12, 1942, at Detroit, Michigan.

Details: At Hammond, Indiana

[redacted] (b)(2) (b)(7)(D) obtained

Approved and Forwarded:	Special Agent in Charge	Do Not Write in These Spaces
		100-56614-42

5 Bureau
1 New York (Inf.)
1 Pittsburgh (Inf.)
1 Newark (Inf.)
1 Milwaukee (Inf.)
1 Washington Field (Inf.)
1 Chicago (Inf.)
1 Philadelphia (Inf.)
1 Cleveland (Inf.)
3 Detroit
3 Indianapolis

RECORDED & INDEXED

15 NOV 21 1942

[redacted] (b)(7)(C)

EX-17

FOR VICTORY BUY UNITED STATES DEFENSE BONDS AND STAMPS

60 JAN 2 7 1943

COPY IN FILE

226

a copy of a bulletin entitled "News Flashes from Czechoslovakia under Nazi Domination", published by the Czechoslovak National Council of America, 4049 West Twenty-sixth Street, Chicago, Illinois, release no. 132, dated May 11, 1942.

This bulletin contains news concerning the American Slav Congress held at Detroit, Michigan, April 25 and 26, 1942. The article contains the permanent committee set-up of the Congress and a list of men of eminence among the delegates to the Congress.

This article is being quoted below:

"AMERICAN SLAV CONGRESS FOR GREATER WAR EFFORT"

The coordination activities of all groups of Slavic extraction in America for an intensified war effort moved a long step closer to reality as a result of the American Slav Congress held in Detroit April 25 and 26 and attended by more than 2300 delegates representing church, fraternal, labor, social and cultural groups from all parts of the country. Every substantial American Slav organization in the country was represented.

Permanent Committee Set Up

A permanent committee was elected with LEO KRZYCKI, Vice-president of the Amalgamated Clothing Workers for President; Prof. J. J. ZMRHAL, of the Czechoslovak National Council, Vice-president; STEPHEN ZEMAN, JR., of the Slovak Evangelical Union, Secretary; VINKO NUK, of the Croatin Fraternal Union, Treasurer; and BLAIR F. GUNTHER, member of the Educational Committee of the Polish National Alliance, Chairman of the Board of Directors.

Participating Slavic nationality groups elected vice-presidents to the Board of Directors. Vice-presidents for the respective nationality groups elected were: EDMUND POINC, Polish; W. J. MUZIK, Czech; V. S. PLATEK, Slovak; VASIL DICOFF, Bulgarian; SAMUEL PERLINICH, Serbian; JOHN BUTKOVICH, Croatian; VINCENT CAINKAR, Slovene; PETER RATICA, Carpatho-Russian; GEORGE PIRINSKY, Macedonian; HARRY LUBESHKOFF, Russian; MICHAEL ATKATCH, Ukrainian.

The various nationality groups also elected members to the nationality committees of the Board of Directors. The National Committee of the congress held its first plenary session in Pittsburgh, May 10, to plan steps to translate the decisions of the congress into action.

Anti-Hitler Measures Adopted

Main decisions embodied in the resolutions of the congress were:

1. To make a direct appeal to American Slavs comprising more than half the workers in the war essential industries of the nation to intensify their production efforts to outproduce Hitler and the Axis.
2. To intensify vigilance against fifth-columnists operating within the various Slavic groups in this country aiming to sow division and disunity in the war effort.
3. To chart a plan to recruit 50,000 American Slav volunteers for a house-to-house campaign among American Slav families for raising the amount of war bond subscriptions to 10 per cent of income.
4. To take all measures to strengthen the bonds of solidarity among American Slav groups and between them and the Slav peoples of Europe for a concerted effort against HITLER.
5. To increase support of all war relief agencies, particularly the Russian, Yugoslavian, Polish, Czechoslovakian, British, Greek and Chinese.
6. To take steps to counteract the appeasers.
7. To set up a permanent organization to coordinate and assist in carrying out the decisions adopted by the Congress.

Response Exceeds Anticipations

The response to the first American Slav Congress ever held in America exceeded all anticipations. It revealed the depth of anti-Axis feeling that has seized hold of the Americans of Slav descent who came expressing desires to do their utmost to the end that the power of Hitlerism, arch-foe of the Slav peoples as of freedom-loving peoples everywhere shall be decisively smashed.

The delegates were mostly brawny men from coal mines, steel mills, machine shops—the men on whom the nation is counting for much of its war essential goods production and wholesome-looking women whose faces showed hardening lines of determination beneath war smiles.

Men of Eminence Among Delegates

Among the delegates most were men and women of distinction in many fields of activity—scholers, writers and clergymen, among them Rev. VINCENT BORKOVICZ, who represented the Very Rev. Bishop STEFAN S. WOZNICKI at the Congress and delivered the opening invocation; Metropolitan Bishop Benjamin, of the Russian Orthodox Church; Most Rev. JOHN BAJNOVICH of Johnstown, Pennsylvania, and Rev. RAWLOWSKI, of Buffalo, New York.

Among others present were JOSEPH WATTRAS, director of the Polish National Alliance of Pittsburgh; CHESTER A. KOZDROJ, President of the Polish Central Citizens' Committee of Detroit; Judge M. GRONKOWSKI of Hamtramck; Captain W. HETMAN, Polish War Veterans, Chicago; Dr. W. T. OSOWSKI; chairman Michigan All Slav Committee, Detroit; Mrs. M. NESTEROWICZ, dean of Polish journalists, Buffalo, New York; ZLATKO BALOKOWICH, famed Croatian violinist; FRANK GRIGORSKI, assistant district attorney of Milwaukee and president of the Pulaski Council there; VINCENT KLEIN, Secretary Chrysler Local No. 17 of UAW-CIO; Michigan State Senator, STANLEY NOWAK; Prof. J. J. ZMRHAL, President of the Czechoslovak National Council; JOSEPH MARTINEK, Executive Secretary of the Czechoslovak National Council, Chicago; KAREL ZRCHAL, President of the American Sokol Union; ADOLF HACER, President of the Czech American National Alliance; VINCENT VRDSKY, Secretary of the Czech American National Alliance; Rev. JAN S. BRADAC, Honorary President of the Slovak National Alliance; Rev. ARNOST BIZKA of the Federation of American Czechoslovaks in Texas; NICOLA TESLA, Serbian American inventor; ETBIN KRISTAN, prominent Slovenian writer; Dr. D. K. KATICH, first vice-president Michigan all-Slav Committee; SAMUEL PERLINICH, President of the Serbian National Foderation, Pittsburgh; Judge ANTHONY LUCAS, Pittsburgh; Ohio State Senator ROYD-BOICH; Judge GEORGE S. TENESY, Cleveland;

RAYMOND TRAVNIK, Slovenska Narodna Podporna Jednota; Rev. M. F[illegible]ENKO, Cleveland; W. MUZIK, President of the Czechoslovak Society of America; and Mrs. MARIE KRAL of the Nat'l Alliance of Czech Catholics.

From the serious and restrained mood of the delegates it was visible they had come for the one purpose of agreeing on a common line of action to be taken to guarantee a speedy end of HITLER and the Axis. There was a notable absence of the usual convention hilarity and abandon.

An International Event

It was a wartime meeting dominated by a wartime grimness. That the deliberations of the congress would have international repercussions was evidenced in the more than thousand telegrams from all parts of the world that reached the congress during the sessions.

One of the wires greeting it was from a Czech group in Teheran, Persia; there were many from Slavic groups in Chile, Argentina, Canada, and throughout America. Soviet writers and scientists and members of the Yugslav government in Kuibyshev wired the congress messages of greetings and good wishes.

The Congress was not only an event significant in the history of America's 15 million Slav-descended citizens but fraught with meaning for the destiny of the more than 200 millions of Slav peoples across the seas engaged in a life-and-death struggle against Nazi enslavers.

For the first time the peoples of the diverse Slavic groups in America were reaching a common understanding on a world-wide issue--a matter that gave delegates a feeling of considerable satisfaction.

Far beyond the brilliantly delivered keynote speeches and the iron note of resolve sounded in the resolutions--all of which raised the assembly to wild cheers of enthusiasm--was the vibrant sense of unity which, given expression by the congress carried to the Slav peoples

throughout the world its message of redoubled efforts to crush HITLER and guarantee a democratic victory for the world.

Keynote--Production for Victory

Production and sacrifice were the keynote motifs of the main address of the congress delivered by LEO KRZYCKI. Reminding listeners that American Slavs occupy a key position in America's war industrial pattern, he called for greater efforts this year to turn the scales of victory in favor of the democracies.

How to safeguard American war production and American morale took up the following sessions which were addressed by Prof. J. J. ZMRHAL, President of the Czechoslovak National Council of America, on fifth-column activities and measures to be taken against them; FRANK N. NISBEY, chairman of the Michigan Defense Savings Program on national morale; ELI OLIVER, of the Labor Division of the War Production Board and GEORGE ADDES, Secretary-Treasurer of the Auto Workers Union on problems facing labor in the war industries. These subjects were treated in further detail in special panel discussions later.

10,000 Hear Hon. Paul V. McNutt

Two thousand plates were served at the banquet tendered the delegates and guests by the Michigan Committee of the American Slav Congress in the Masonic Temple on April 25.

But the climax of the congress was a victory rally in the Michigan State Fair Coliseum where 10,000 persons assembled to hear the Hon. PAUL V. McNUTT, Federal Security Administrator and U. S. Government representative to the Congress who greeted the delegates and drew thunderclaps of applause by his appeal for "more tanks for TIMOSHENKO". "In this first Slav Congress you have shown the world the miracle of American unity," he declared.

A message from President ROOSEVELT was received wishing the Congress success in its work."

XXXXXX
XXXXXX
XXXXXX

FEDERAL BUREAU OF INVESTIGATION
FOIPA DELETED PAGE INFORMATION SHEET

__1__ Page(s) withheld entirely at this location in the file. One or more of the following statements, where indicated, explain this deletion.

☑ Deletions were made pursuant to the exemptions indicated below with no segregable material available for release to you.

Section 552		Section 552a
☐ (b)(1)	☐ (b)(7)(A)	☐ (d)(5)
☒ (b)(2)	☐ (b)(7)(B)	☐ (j)(2)
☐ (b)(3)	☒ (b)(7)(C)	☐ (k)(1)
_____	☒ (b)(7)(D)	☐ (k)(2)
_____	☐ (b)(7)(E)	☐ (k)(3)
_____	☐ (b)(7)(F)	☐ (k)(4)
☐ (b)(4)	☐ (b)(8)	☐ (k)(5)
☐ (b)(5)	☐ (b)(9)	☐ (k)(6)
☐ (b)(6)		☐ (k)(7)

☐ Information pertained only to a third party with no reference to you or the subject of your request.

☐ Information pertained only to a third party. Your name is listed in the title only.

☐ Documents originated with another Government agency(ies). These documents were referred to that agency(ies) for review and direct response to you.

_____ Pages contain information furnished by another Government agency(ies). You will be advised by the FBI as to the releasability of this information following our consultation with the other agency(ies).

_____ Page(s) withheld for the following reason(s): _____

_____

☐ For your information: _____

_____

☒ The following number is to be used for reference regarding these pages:

100-56674-42

XXXXXX
XXXXXX
XXXXXX

XXXXXXXXXXXXXXXXXXXXX
X DELETED PAGE(S) X
X NO DUPLICATION FEE X
X FOR THIS PAGE X
XXXXXXXXXXXXXXXXXXXXX

FBI/DOJ

4-750 (Rev. 12-14-88)

XXXXXX
XXXXXX
XXXXXX

FEDERAL BUREAU OF INVESTIGATION
FOIPA DELETED PAGE INFORMATION SHEET

4 Page(s) withheld entirely at this location in the file. One or more of the following statements, where indicated, explain this deletion.

☒ Deletions were made pursuant to the exemptions indicated below with no segregable material available for release to you.

Section 552		Section 552a
☒ (b)(1)	☐ (b)(7)(A)	☐ (d)(5)
☒ (b)(2)	☐ (b)(7)(B)	☐ (j)(2)
☐ (b)(3)	☒ (b)(7)(C)	☐ (k)(1)
_____	☒ (b)(7)(D)	☐ (k)(2)
_____	☐ (b)(7)(E)	☐ (k)(3)
_____	☐ (b)(7)(F)	☐ (k)(4)
☐ (b)(4)	☐ (b)(8)	☐ (k)(5)
☐ (b)(5)	☐ (b)(9)	☐ (k)(6)
☐ (b)(6)		☐ (k)(7)

☐ Information pertained only to a third party with no reference to you or the subject of your request.

☐ Information pertained only to a third party. Your name is listed in the title only.

☐ Documents originated with another Government agency(ies). These documents were referred to that agency(ies) for review and direct response to you.

_____ Pages contain information furnished by another Government agency(ies). You will be advised by the FBI as to the releasability of this information following our consultation with the other agency(ies).

_____ Page(s) withheld for the following reason(s): _____

_____

☐ For your information: _____

_____

☒ The following number is to be used for reference regarding these pages:

100-56674-95

XXXXXX
XXXXXX
XXXXXX

XXXXXXXXXXXXXXXXXXXXX
X DELETED PAGE(S) X
X NO DUPLICATION FEE X
X FOR THIS PAGE X
XXXXXXXXXXXXXXXXXXXXX

FBI/DOJ

233

FEDERAL BUREAU OF INVESTIGATION

Form No. 1
THIS CASE ORIGINATED AT NEW YORK FILE NO. 100-26200

REPORT MADE AT	DATE WHEN MADE	PERIOD FOR WHICH MADE	REPORT MADE BY
NEW YORK	6-23-48	7/24/47	[redacted] (b)(7)(C)

CONFIDENTIAL

TITLE	CHARACTER OF CASE
AMERICAN SLAV CONGRESS 41797	INTERNAL SECURITY - G; REGISTRATION ACT

SYNOPSIS OF FACTS:

In radio broadcast 7/27/47 ASC official asserted that first ASC Congress held 4/25,26/42, Detroit, Michigan, grew out of Tri-State All Slav Congress meeting in Pittsburgh, Pa., 12/3/38; stressed role of ASC in uniting Slavic groups for "peace, economic security and progress". [redacted]

News disseminated through quarterly magazine "The Slavic American" [redacted]

ALL INFORMATION CONTAINED HEREIN IS UNCLASSIFIED EXCEPT WHERE [redacted]

Class 10/18/80

DATE 5p/GSK/PB 7-15-80

CHARGE & EXP. BY 7-15-80
REASON FOR II. 1-2,4,5
DATE OF REVIEW 7-15-90

ENCL Behind file 9-15-48

APPROVED AND FORWARDED: Edward Scheidt SPECIAL AGENT IN CHARGE

DO NOT WRITE IN THESE SPACES

100-56674-1096 RECORDED - 111

COPIES OF THIS REPORT

5-Bureau (Encs.)
2-Chicago
2-Cleveland
2-Detroit
2-Los Angeles
2-Milwaukee
2-Pittsburgh
2-St. Louis
2-San Francisco
1-Washington Field (Inf.)
1-Newark (Inf.)
1-Boston (Inf.)
4-New York

F B I
34 JUN 25 1948

CONFIDENTIAL

COPIES DESTROYED 11-7-58

U. S. GOVERNMENT PRINTING OFFICE

CC-7-14-

61 SEP 15 1948 ENCLOSURE BEHIND FILE

1095 234

41824

NY 100-26200

[redacted]

(b)(1)
(b)(7)(C)

The first two issues of "The Slavic American", furnished by [redacted] contain the following articles: (b)(1)

Vol. 1, Fall 1947, No. 1

Articles

Henry Wallace, Champion of Peace....	3	..... by Leo Krzycki
Poland's Western Boundaries.....	5	.....by Congressman G. Sadowski
Statement on the Truman Doctrine At Senate Foreign Relations Committee Hearings.....	6	.....By George Pirinsky
As a Veteran Sees It, First in a Series of Articles.....	9	.....by Captain George Wuchinich
Spotlight on the Balkans, Statements on Balkan-Greek Question at U.N. Security Council Hearings.....	20	by Warren R. Austin, U. S. Representative and Andrei A. Gromyko, U.S.S.R. Representative
The Real Bulgaria An Answer to Life Magazine.....	50	.....by Dr. Nissim Mevorah

235

CONFIDENTIAL

Features

Story of the American Slav Congress 10 ...The Record of an Organization
Leo Krzycki,
Fifty Years a Servant of the People 18 .....by Tabitha Petran
One World Flight,
Stop-Over in Moscow..... 34 .....by Norman Corwin
Czechoslovak Sokol in America..... 40 .....The Symbol of a People
We Felt the Heartbeat of New Yugoslavia; The Rebuilding of a Country 43 .....by Zlatko Balokovic
Bright Passage,
A Review of the new book on Czechoslovakia, by Maurice Hindus 47 .....by Misko
Savo Radulovich..... 48 .....Yugoslav Artist
Highlights of Slavic American News.. 52 Notes on Rallies and Conferences
Slavic American Youth Get Together.. 54 .....Youth councils in action

Stories

My American Pilgrimage,
Excerpts from the new novel..... 38 .....by Stoyan Christowe
The Importance of Being Kobotchnick
A story of a Man and His Dog..... 42 .....by Louis Adamic

Vol. 1, Winter 1947, No. 2

Articles

Conspiracy Against Peace..... 5 .....by Louis Adamic
Deportation Laws Hit Slavic Americans..... 13 .....by Abner Green
Analysis of the Marshall Plan.... 22 .....by George Pirinsky
Program and Activities of the American Slav Congress..... 29 .....by George Pirinsky

CONFIDENTIAL

236

Features

Nikola Tesla	3	by Pauline Klopacka
Tribute to a Fighting Senator	9	ASC Testimonial Dinner
The World Youth Festival	10	by Ilona Vlahov
U.S.S.R. Thirty Years After Feudalism	14	by S. Serbuzov
Summary of a Journey	24	by Ella Winter
The Story of Geo Milev	31	by Maria Vladimirova
Prague	32	Europe's New Film Capital
Slav Saga in Pennsylvania	33	by Lyla Y. Slocum Eugene Konecky
American Clergymen See the New Yugoslavia	38	Digest of their Report
Pages from an Artist's Notebook	42	by Alvena Becker
Five Women	44	by Mario Seton

Fiction

Wedding Day	7	by Thomas Bell

[redacted]

CONTINUED

41860

NY 100-26200

CONFIDENTIAL

ENCLOSURES (5) TO BUREAU

[redacted]

b7c
b7D
0/5

Two copies of quarterly magazine "The Slavic American", Winter 1947 issue.

- P E N D I N G -

CONFIDENTIAL

238

XXXXXX
XXXXXX
XXXXXX

FEDERAL BUREAU OF INVESTIGATION
FOIPA DELETED PAGE INFORMATION SHEET

1 Page(s) withheld entirely at this location in the file. One or more of the following statements, where indicated, explain this deletion.

☒ Deletions were made pursuant to the exemptions indicated below with no segregable material available for release to you.

Section 552		Section 552a
☒ (b)(1)	☐ (b)(7)(A)	☐ (d)(5)
☒ (b)(2)	☐ (b)(7)(B)	☐ (j)(2)
☐ (b)(3)	☒ (b)(7)(C)	☐ (k)(1)
_____	☐ (b)(7)(D)	☐ (k)(2)
_____	☐ (b)(7)(E)	☐ (k)(3)
_____	☐ (b)(7)(F)	☐ (k)(4)
☐ (b)(4)	☐ (b)(8)	☐ (k)(5)
☐ (b)(5)	☐ (b)(9)	☐ (k)(6)
☐ (b)(6)		☐ (k)(7)

☐ Information pertained only to a third party with no reference to you or the subject of your request.

☐ Information pertained only to a third party. Your name is listed in the title only.

☐ Documents originated with another Government agency(ies). These documents were referred to that agency(ies) for review and direct response to you.

_____ Pages contain information furnished by another Government agency(ies). You will be advised by the FBI as to the releasability of this information following our consultation with the other agency(ies).

_____ Page(s) withheld for the following reason(s): _____

_____

☐ For your information: _____

_____

☒ The following number is to be used for reference regarding these pages:

100-56674-95

XXXXXX
XXXXXX
XXXXXX

XXXXXXXXXXXXXXXXXXXXXX
X DELETED PAGE(S) X
X NO DUPLICATION FEE X
X FOR THIS PAGE X
XXXXXXXXXXXXXXXXXXXXXX

FBI/DOJ

THE SLAVIC AMERICAN

50¢

Louis Adamic

Thomas Bell

S. Garbuzov

Abner Green

E. Konecky

Alvena Seckar

Marie Seton

Lyla Y. Slocum

M. Vladimirova

Ilene Vlahov

Ella Winter

NIKOLA TESLA - *Poet in Electricity*

ALL INFORMATION CONTAINED
HEREIN IS UNCLASSIFIED
DATE 2-14-95 BY [illegible]

WINTER 1947

240

Nikola TESLA

Whose daring imagination and concrete accomplishments are among the wonders of our age.

By PAULINE KLOPACKA

WHEN Nikola Tesla died in January of 1943 in comparative seclusion in a New York hotel, he owned no more than the few personal possessions that had become dear to him during the 86 years of his life. Yet his estate was so fabulous that its value can never be truly assessed. And his heirs were the men and women of all the world.

What price can be put on the work of a man who brought into being the electric power era? The industrial giant that the U. S. is today rests on the series of brilliant discoveries and inventions in the harnessing and transmission of electricity conceived by Nikola Tesla, who came to this country from the land of the South Slavs when he was 28 years of age.

It was at midnight between July 9 and 10 in 1856 that a son, Nikola, was born to the Rev. Milutin Tesla and Djouka, his wife, in the little Serbian village of Smiljan, in the province of Lika. Now a part of Yugoslavia, it was at that time under Austro-Hungarian rule.

Tesla's father, a Serb, was a priest of the Greek Church, and his mother of a distinguished Serbian family, came from a long line of inventors. Both father and mother gave to the child a valuable heritage and culture developed and passed on by ancestral families that had been community leaders for many generations.

It was at first planned that the son prepare for the priesthood but Nikola would have none of this. Physics and mathematics fascinated him. He would be a teacher of these favorite subjects. But then he switched to electrical engineering and at the age of 25 a graduate of Prague University—earlier training had been obtained at the Graz Polytechnic in Austria—he was set for his first job.

At that time the American Telephone System was brought to Europe and an installation set up in Budapest, where Tesla was a successful applicant for a position.

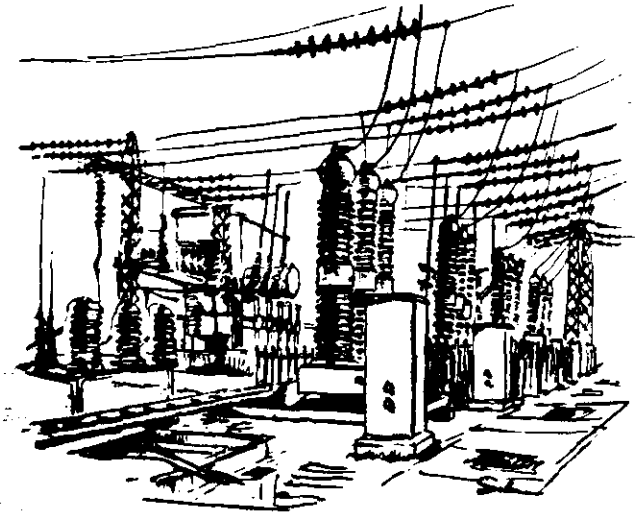

Drawings by Alvena Seckar

THREE years later, in 1884, he was U. S. bound. There were 4 cents in the young immigrant's pocket when he arrived in New York, but that did not disturb him. He had the names of friends. He would soon get to work.

His confidence was well founded, since within a few years he was counted among the ranking scientists of the country, his discoveries bringing in handsome royalties.

It is interesting to note the description of Tesla at this time by his biographer, J. J. O'Neill in the book, "Prodigal Genius": "Tesla was a

spectacular figure in New York in 1891. A tall, dark, handsome well-built individual with a flare for wearing clothes that gave him an air of magnificence, who spoke perfect English but carried an atmosphere of European culture. He was an outstanding personality to all who beheld him." One of his colleagues described him as "immaculately groomed, and of delightful courtesy and charm."

A review of Tesla's work is nothing short of amazing. To quote from J. J. O'Neill's book:

"It was Tesla's invention of the polyphase alternating current system that was directly responsible for harnessing Niagara Falls and opening the modern electric superpower era in which electricity is transported for hundreds of miles to operate the tens of thousands of mass production factories of our industrial system.

"Every one of the tall, Martian transmission lines that stalks across the earth and whose wires carry electricity to distant cities is a monument to Tesla, every dynamo and every motor that drives every machine in the country is a monument to him.

"He discovered the secret of transmitting electric power to the utmost ends of the earth without wires and demonstrated his system by which power could be drawn from the earth anywhere by making a connection to the ground; he set the entire earth in electrical vibration with a generator which sprouted lightning that rivaled the fiery artillery of the heavens. It was a minor portion of this discovery that he created the modern radio system. He planned our broadcasting methods of today 40 years ago when others saw in the wireless only the dot and dash message that might save ships in distress.

"Tesla was an inventor but he was much more than a producer of devices. He was a discoverer of new principles opening many new empires of knowledge which even today have been only partly explored. In a single burst of invention he created the world of power of today.

"He brought into being our electric power era, the rock bottom foundation on which the industrial system of the entire world is builded. He gave us our mass production system for without his motors and currents it could not exist.

"He gave us every essential of current radio. He invented radar 40 years before its use in World War II. He gave us our modern neon and other forms of gaseous tube lighting. He gave us fluorescent lighting. He gave us the high frequency currents which are performing their electronic wonders throughout the industrial and medical world. He gave us remote control by wireless."

Always proud of his national origin, Tesla spoke as follows during his visit to Belgrade in 1892 in answer to a speech of welcome by the city's mayor: "There is something in my which is only perhaps illusory . . . But if I were to be sufficiently fortunate to bring about at least some of my ideas it would be for the benefit of all humanity. If these hopes become one day a reality, my greatest joy would spring from the fact that this work would be the work of a Serb."

Tesla dedicated his life to peace, to lightening the burden of toil from the shoulders of his fellow man. As every scientist who so interprets his function in society, he was stricken when he saw the coming of World War II and his inventions being prepared for destructive purposes. He sought desperately to prevent the war and made available a device which he offered to the world, maintaining that it would make any country, no matter how small, safe within its boundaries. His offer was rejected.

But once the war was an accomplished fact, and when the people's armies rose in defense of their nations in what appeared to be an unequal fight, he did all he could to rally his countrymen to work to the limit in the war effort.

Shortly before his death he wrote as follows to his nephew, M. Sava Kosanovic, now Yugoslav Ambassador to the U. S.:

"President Roosevelt and Donald Nelson, Director of our War Production have repeatedly urged the American people, workers and employers, to meet as fully as possible the goals established for the production of war materials. . . . For that reason, my dear brothers and sisters, as the oldest Serb, Yugoslav and American in the U. S., I am addressing this letter to you, asking you to answer the call of President Roosevelt.

"The achievements of our brothers in the old country are worthy of the spirit which permeates our folklore . . . the fate of the Serbs, Croats and Slovenes is inseparable."

Tesla was not satisfied with his achievements in releasing the earth's energies so that men could work with less backbreaking effort and live more comfortably. The man who could draw up a design for a perfect motor was also concerned with drawing up a plan for a better world. When Tesla read the address of the then Vice-President, Henry A. Wallace, on The Future of the Common Man, he was fired with enthusiasm. The Yugoslav edition of the speech included a preface by Nikola Tesla written in October, 1942:

"Out of this war, the greatest since the beginning of history, a new world must be born, a world that would justify the sacrifices offered by humanity. This new world must be a world in which there shall be no exploitation of the weak by the strong, of the good by the evil; where there will be no humiliation of the poor by the violence of the rich; where the products of intellect, science and art will serve society for the betterment and beautification of life, and not individuals for the amassing of wealth. This new world shall not be a world of the downtrodden and humiliated, but of free men and free nations, equal in dignity and respect for man . . ."

This man, whose work was so advanced of his time that much of it still remains unexplored could have amassed millions, but he was so little interested in personal gain that to save his friend, Mr. Westinghouse, from bankruptcy he tore up a contract which would have brought him $12 millions in royalties. Pressed for funds during the latter part of his life, many of his inventions are lost to the world.

But though he was often short of money he would walk over to Herald Square and feed the pigeons. It was almost a sacred trust, feeding the pigeons twice a day. They had been his personal responsibility through the years, and if he could not be there to do the feeding, a Western Union messenger boy would be hired to do the job in his stead. Often he would forget an important engagement so that he might keep his "date" on Herald Square. The pigeons were a way to relaxation, a note of warmth in an otherwise rigidly disciplined life. He had few friends and never married, since he felt a scientist must keep himself free of personal relationships that would be unduly demanding.

Restless and eager to unravel every possible unknown to the very end of

(Continued on page 49)

GEO MILEV

describes only from the standpo. of his art. . . . In his attitude toward various events in the life around him, which impress him strongly, he does not take sides. He does not praise one and hurt the other; he merely describes everything he sees, describes it with the delicate, sweet colors of poetry. . . ."

Geo was fined 20,000 leva and sentenced to one year in prison. He could not believe that the court could make such a decision. With joking reference to the dullness of "their Honors," he left the courtroom believing that the decision would never be carried out.

He was right. Unable to enforce their decision legally, the government resorted to illegal means.

Next day, May 15, 1925, Geo was kidnapped from his home and killed by underlings of Prime Minister Alexander Tzankoff.

The cultural world of Europe protested Geo's death. Henri Barbusse, of France, visited Bulgaria to investigate the case. In his book "The Murderers" he made reference to the circumstances of Geo's death. Max Reinhardt protested and "regretted the loss of a very gifted theater director." Oskar Kokoshka, in Vienna, recognized the loss of "a precious critic and learned connoisseur of modern art."

Many Bulgarian writers were silent. Fearing for their lives, they did not dare to speak a word for Geo Milev or express regret for his death. The more courageous of them stated that "talent such as Geo's is born only once in a hundred years," that "He was the most cultured Bulgarian," "The most honest and courageous."

THE youth and the common people deeply mourned for Geo. They knew they had lost a sincere friend and teacher. Unable to use the Bulgarian printing presses, they copied his poems by hand and learned it by heart. Bulgarian students abroad printed it in Paris, and in Belgrade. In Prague it was translated into Czech and in Russia into Russian.

A few courageous young people in Bulgaria printed pamphlets about Geo. They were promptly tortured and imprisoned.

We, his family, searched for him for months, but we never learned exactly where and how he was killed.

There were rumors that he had been shot in the mountains, that he had been burned in the furnace of "Public Safety." These measures were used by Bulgarian Fascists long before the world knew of Hitler. Both stories, however, avowed that his spirit was not crushed.

Geo's voice was silenced forever. The murderers triumphed, but they forgot that he who speaks for the freedom of a tormented and deprived people does not die. In today's New Bulgaria, Geo Milev is honored as one of her most cherished sons. Geo's poems are celebrated especially by the youth of today, the heirs of the September Revolution of 1944, which fulfilled his prediction of a decade before that "September will be May."

TESLA

(Continued from page 4)

his life, he read a paper on the occasion of his 80th birthday on the perfection of a tube for atom smashing. As if that were not enough, he also presented a system of interplanetary communication.

Thus the fragmentary story of the life and work of a Yugoslav immigrant who, like so many tens of thousands of his fellow countrymen, left their homeland rather than live as subjects within the Austro-Hungarian empire.

He made a unique contribution to his adopted land, so ideally suited to the full scope of his genius, "the like of which in all *history* could probably be counted on the fingers of one hand."

It is to be hoped that just as he brought electrification to the U. S. in the short span of ten years, his adopted country might assist in the full electrification of the Balkans, reversing its present policy toward New Yugoslavia.

HE AMERICAN SLAV COMMITTEE
of Canton, Ohio
welcomes the new magazine
THE SLAVIC AMERICAN
and projects best wishes for its success. This organ, we know, will be a great contribution to the enlightenment of the homes of American Slavs.

Greetings to the Second Issue
of
THE SLAVIC AMERICAN
and
Best Wishes for Continued Success in the Coming Year
ALL SLAVIC COUNCIL OF NORTHERN CALIFORNIA
739 Page Street, San Francisco, Calif.

GREETINGS FROM
JIM BALANOFF

Greetings from Lodge 3052
American-Russian Fraternal Society, IWO
1010 East Foss Avenue Flint, Mich.

Greetings from
CLUB "YUGO-FORWARD"
Detroit, Mich.

THE STANLEY THEATRE
Presents
The Best Films from the U.S.S.R.
NOW! "THE GREAT GLINKA"
7th Ave. & 42nd St. New York City

Best Wishes for Success to
THE SLAVIC AMERICAN
American Russian Fraternal Society
Lodge 3069
120 Glenmore Ave. Brooklyn, N. Y.

Efficient Service Since 1919
LEON BENOFF
General Insurance Broker
391 East 149th St., New York
MElrose 5-0984
Insurance is cheaper to have than to need

243

FORM NO. 64

Office Men[illegible]dum • UNITED S[illegible] GOVERNMENT

TO : Director, FBI

DATE: April 11, 1949

FROM: SAC, New York

SUBJECT: AMERICAN SLAV CONGRESS;
INTERNAL SECURITY - C
(Bufile 100-56674)

Enclosed are two copies of the Fall, 1948 issue of "The Slavic American", a quarterly, published by the American Slav Congress.

These are being submitted for information only, not for evidence. One copy is being retained in the files of this office.

Encls. 2

[redacted]
100-26200

(b)
(7)
(C)

ALL INFORMATION CONTAINED
HEREIN IS UNCLASSIFIED
2-22-49 SP/RC

~~ENCLOSURE BEHIND FILE~~

-116

EX. 116

RECORDED - 105

INDEXED - 105

100-56674-1168

5 APR 12 1949

FILE

(b)
(7)
(C)

244

CONFID

SLAVIC AMERICAN

a Quarterly

Club Metro Dancers, Chicago

Published by The American Slav Congress

FALL 1948

245

The American Way of Life

"Why Go to War to Keep Others From Having Their Way of Life," asks Adamic

by LOUIS ADAMIC

THE opening lines of the Progressive Party's platform read: "Three years after the end of the Second World War the drums are beating for a third. Civil liberties are being destroyed. Millions cry out for relief from unbearably high prices. The American Way of Life is in danger."

The American Way of Life has been the issue in any American election ever since 1776. Every voter who goes to the polls, votes—intelligently or mistakenly; independently or under the spell of inveterate partisanship—for one or another concept of the American Way of Life.

Of course, various people, living in various circumstances, have various ideas of what constitutes the American Way of Life. I propose to state my ideas of it; also I shall presume to fit those ideas within the frame of the new Progressive Party which must continue to grow from its beginnings in 1948.

As I see the American Way of Life, its principles were born of the American Revolution. They were won in struggle; *nothing* as fundamental and deep-reaching comes easy. They are stated in the Declaration of Independence and the Constitution of the United States. Our job now is to perceive what policies and measures will safeguard the Way against decay and corruption, and will further its growth and evolution to meet successfully the problem of changing times and new conditions. The principles of 1776 are as valid as ever, but life is different today from what it was then. Fortunately growth and change are of the very essence of the American Way.

The first principle of the American Way of Life is the *right to life* itself; and this must be safeguarded against war on the one hand, and on the other against poverty, which in recent decades has taken a far heavier toll than any war in which this nation has ever so far been involved—though the "next war," if we permit it to be drummed up, will reverse the story.

The second principle of the American Way is *liberty* . . . it has always been our slogan and our pride. But we have long been cautioned that its price is eternal vigilance, and we know how to recognize those who have designs on it.

The third principle of our Way is *abundance*. When migrants from Europe first began to settle here, this was a land rich in the gifts of nature; and for all that those gifts have been abused by ignorance and irresponsibility, and particularly by exploiters and monopolists. Our resources are still great enough—if deforestation and erosion are checked in time, and if our mineral resources are properly conserved—to afford abundance, the *good* life, to all the inhabitants of These States.

And a fourth principle of the American Way is *opportunity*.

THE Progressive Party promises to safeguard the *right to life* by avoiding war—always the saddest failure of morality and now the potenial destroyer of human society and the globe itself.

Whether or not we can avoid World War III, I don't know; but I do know this—that if we don't try to avoid it, nothing else is worth trying to do nowadays. It is futile to wonder about the kind of curtains you'll hang up in your living-room . . . futile to write or read books, to go to lectures or to school . . . silly to worry about being called a Red or a Communist, or whatever, or about being hauled up before the fantastic Un-American Activities Committee . . . futile to work at your job, whatever it may be . . . silly to worry about keeping on the good side of whoever can take that job away from you.

War or peace? I don't know; but if we want any sort of future for this country, for the rest of the world, for ourselves and the Russians, for you and me personally, then we'd better work for peace . . . stand up for peace . . . stand up with our new political vehicle, the Progressive Party.

The Progressive Party further proposes to safeguard the *right to life* by abolishing poverty. Cynics, prestitutes, and generally people without hope and vision say this can't be done. They say Henry Wallace is a starry-eyed visionary. We say *it can* be done if we will jealously maintain freedom, bear in mind the limitless capabilities of Americans, and keep the grip of monopoly from arrogating the resources that should serve all, and if we will insist upon the application of the ever more marvelous discoveries and techniques of science for the common good.

The Progressive Party proposes to safeguard *liberty* — not with more lip service, but by adhering fully to the Constitution, including the Bill of Rights and all subsequent amendments, in all their vitality and integrity, and by reviving and enhancing the programs and formulations of Roosevelt's New Deal. The Progressive Party proposes to guard liberty

(Continued on page 26)

LOUIS ADAMIC

Slovenian American author and lecturer, a foremost authority on national groups, he is a prolific writer. Among his works are My Native Land, Dinner at the White House, Two-Way Passage, Nation of Nations, My America. He also edits and publishes a current affairs bulletin, Trends and Tides, issued from his home in Milford, New Jersey.

246

A HALF HOUR OF MUSIC

with

TWO DISTINGUISHED AMERICAN ARTISTS
OF SLAVIC DESCENT

in a unique

Album of Recordings

Now on Sale

ZLATKO
BALOKOVIC
Violinist

IVAN
PETROFF
Baritone

By BALOKOVIC

HYMN TO THE SUN	Rimsky-Korsakoff
CROATIAN RHAPSODY	Lhotka
FOR ONE MOMENT OF JOY	Croatian Folk Song

By PETROFF

LEGEND	Bulgarian Folk Song
PEASANT'S LAMENT	Bulgarian Folk Song
ARIA PRINCE IGOR	Borodin

By BOTH

SONGS MY MOTHER TAUGHT ME	Dvorak
ELEGIE	Massenet

Prize selections for your library long to be cherished and enjoyed

FOUR RECORDS TO EACH ALBUM

$4 the Album

postage prepaid

USE CONVENIENT ORDER BLANK ➔

AMERICAN SLAV CONGRESS
205 East 42nd Street
New York 17, N. Y.

$4 for album of 4 records

I enclose ..... for ☐ album(s)

Name .....

Address .....

City & Zone .....

State .....

(Make checks and money orders payable to
AMERICAN SLAV CONGRESS

The American Way

(*Continued from page 5*)

against that danger which most disturbed the Founding Fathers—the power of the military. And note how all these things are inter-related. Liberty is imperiled by poverty, by monopoly, by war. Every measure which the new party proposes is a measure to safeguard liberty.

By *abundance*, the new party means that our rich land—and our skills, brought here by immigrants from the Old World in the last 300 years—shall produce all that is needed to make the good life available to every law-abiding and industrious man and woman here, and their children, regardless of color, race or religion; and that these fruits of enterprise and labor shall not be so ill-divided that a few are glutted with a surfeit of luxuries while many who toil and sweat must for reasons beyond their control still go "ill-fed, ill-clothed and ill-housed."

The pioneers who first possessed the Atlantic seaboard and later pressed westward through the forests and the prairies, could win abundance by strength and industry, by the wide swing of the axe, the true aim of the flintlock, and the firm hand on the plow. There was *opportunity* galore. Almost any man could get land for the asking or for a few dollars an acre, and become

(*Continued on page 29*)

The American Way

(Continued from page 26)

an independent farmer. Any man could set up a little store in a new community and become a prosperous merchant as the town grew. Almost any man could start a paper, establish a factory or mill, or open a mine, and become an industrialist.

This is no longer true. Millions of square miles have been rendered useless for human use and habitation by irresponsible deforestation and by erosion. The number of family farms dwindles yearly; every day hundreds of independent merchants and small mining, milling and manufacturing companies are forced out of business by the power of monopoly, centered in Wall Street.

The relentless limitation of opportunity, the shrinking of abundance for millions, the violences done to liberty in defiance of the Constitution and in contempt of the tradition that began in 1776, the further threat against freedom in the ominous form of military rule, the denial of life itself to unnumbered victims of poverty, and the grave threat to all our lives in the probability of a war waged with atom bombs and bacteria —these developments, conditions and prospects now imperil the American Way of Life.

The Progressive Party proposes to restore and safeguard and extend that Way—the emphasis is on the word "extend." Nothing in nature stands still, and no more can human economic and social and political institutions. Change is the key principle of the American Way—growth, adaptation, progress. Had it not been for that principle, the USA would not exist—we would not now be debating the decisions made in an election; we would still be colonial subjects, or we wouldn't be here at all.

If we remembered more vividly what daring it took in 1776 to reject monarchy and form a republic, we would have less hesitation in rejecting the National Association of Manufacturers' notions of "free enterprise," and adopting measures more in keeping with today's facts of life. We would not hesitate to defy the greatest power on earth—that of monopoly corporations and cartels, whose agents have lately seized control of the U.S. Government.

Under Henry Wallace's leadership, the Progressive Party offers itself as a medium through which those who love their country and are also in favor of their own rightful individual interests can express themselves politically . . . in 1949 . . . 1950 . . . in 1952, assuming that the "next war," now being drummed up, won't destroy us all before then.

We know now that we have established a firm foundation for the new party under the leadership of Henry Wallace and Glen Taylor. Personally, I was not in this campaign only in reference to this year's election or because I think, as I do think, that Henry Wallace is a great American who should be in the White House in this crucial period. In the main, I was in this campaign because, like Wallace and Taylor, like many other Americans, I became convinced that neither of the old parties is fit to deal with the profound crisis which is coming to a climax in these middle years of the 20th century. I am in this movement because I want to help build a new people's party that will be capable of coping with the crisis now converging upon us and the rest of the world.

LIKE many Americans, I am foreign-born; and every once in a while I hear or read some remark to the effect that I have no right to be doing what I am doing—helping the growth of a new party which hopes to save the peace. Such remarks amuse me. It so happens that I have read rather extensively in American history, not as taught in most schools, but as it really happened; and I am impressed by this fact—that in all crucial or climactic periods in the career of this country, the so-called foreigners played important roles.

The Irish and German elements, for instance, were the big "foreign" groups around 1776, and it was they who became the backbone of General Washington's revolutionary army. The Irish and German elements also furnished the mass support to Thomas Jefferson when he started a new party 150 years ago. Jefferson did not triumph immediately (as Wallace didn't); his supporters stood it with him until he did (as I hope we will

(Continued on page 30)

Greetings From

MARY ANTONIC
BOZO BARANIC
MILO BARANIC
JOHN BEZELJ
PAUL BIAZEVICH
KAY BEGOVICH
FLORENCE FERKICH
GEORGE GELSOVICH
STEVE HROSTI
FRANK KURSOC
LJUBICA LOVRICH
ANTON PESUSICH
ERICA PETRAS
NICK PETRICH
A. PUJATCKY
LUCY LJUBENKO

Lodge 3172, A.R.F.S., Sioux City, Iowa

PETER ZAKUTONSKY
LOUIS KLYM
MARY KLYM
HELEN WONSOWIC
PAUL ROMANOV
MARY ROMANOV
BRANCH No. 14 LEMKO ASS'N, GARY, IND.
BRANCH No. 3295, IWO, CARPATHO-RUSSIANS, GARY, IND.
MILLIE KLYM
MICHAEL KLYM
ANNA SAMOZKA
WALTER IVANZOWICZ

A.S.C. of Newark, N. J.

JOHN J. KASKEVICH, M.D.
530 Summer Ave., Newark

JOHN BENKO
JOHN DOLINAJEC
MICHAEL DROBAN
STEVEN DZUROSKA
STEPHEN HRUSKA
TILLY JANOVITZ
MICHAEL KOLARIK
STEFAN LACKO
JOSEPH MATEJKA
MICHAEL MATEJKA
JOSEPH MEDVECKY
IMRO RIBAR
SHEPERO SHOE STORE
MATEJ STROMKO
STEFA TAL
JOSEPH TURZA
FRANK ZAVARTKAJ
JOSEPH ZILINEK

248

Delegates join in singing the National Anthem.

The American Way

(Continued from page 29)

with Wallace). The same was true again in the period of Andrew Jackson, when American democracy took another long step forward. When Lincoln came along and started a new party, his most steadfast backing came from the numerous new-immigrant groups—Germans, Finns, Poles, Scandinavians and others.

This was quite natural. As newcomers who came here seeking liberty, abundance and opportunity, they had a more acute sense of what America professed, and they took American principles more seriously than many of the old-line Americans who had begun to be matter-of-fact, if not smug, about the country. As newcomers, they were somewhat outside the mainstream of American life. By going behind the cause of Washington, Jefferson, Jackson and Lincoln, they became part of the mainstream. They promoted themselves from second-class citizens to first-class. It was Americanization at its very best. It made history, it enriched the traditions, it integrated the new Americans into the country as a whole.

And it is quite natural, and very fortunate, that many of us in the new-immigrant groups have joined with many old-line Negro Americans, with many white Americans of the earlier immigration waves, with Henry Wallace, in this movement to form a new party and make it competent to deal with the complex problems looming before us. Many of us Slavic Americans already in 1946 and early in 1947, sensed that Henry Wallace was right, and we became part of the growing impulse to form a new party. Regardless of what some of our opponents have said, this fact is strictly and wonderfully in the American tradition. It is part of the Americanization process. It is according to the American Way. We are promoting ourselves from second-class to first-class citizenship. This is resented by some of the Americans of the older strains, the self-styled standard Americans; but don't let that worry you too much. They, too, are being Americanized or re-Americanized as you assume your full rights and duties of citizenship. Americanism has its standards, to be sure; very high standards; but it is not anything rigid or dead; it is alive, vital, open to change and enrichment.

Slavic Americans are part of the whole immense American dynamic which is as yet little understood, and is full of promises and dangers. By coming here, we of the new immigration greatly complicated the American civilization as it was, say, 90 or 100 years ago. Most Slavic immigrants became workers in the great industries, and now their energy is integral with the American scene as a whole. Most immigrants in the last 100 years or so worked hard, many of them too hard at too little pay, and helped to create a complex industrial machine which, lest it overwhelm us, now needs intelligent handling and control. It is our duty to take an active interest in finding an approach to the immense industrial, economic and social problems facing us: for, let me repeat, our coming here and our labors in the last several decades have helped to create these problems.

Most of us who came over were ordinary people. But in the new immigration waves were also some extraordinary human beings. There was, for instance, a man of genius, Nikola Tesla. His numerous inventions now are one of the most important factors in the immense American industrial scheme which throbs with the high promises that pulsated through Tesla's brain, but which are also full of dangers. Personally, as one who happens to be proud of being of the same background as was Tesla, I feel it is my special duty to help do what is necessary to insure that Tesla's work, as well as the work of ordinary men and women, will go into the fulfillment of promises in our American Way of Life, rather than contribute to the catastrophe now threatening.

IN 1942, Henry Wallace made his famous speech on "The Century of the Common Man." Nikola Tesla, who was a very uncommon man, publicly endorsed that speech in glowing terms. And I think that I speak not only for myself, but also for Tesla, when I assert that the American Way of Life is not the way of incredibly greedy monopoly profits and prohibitive prices for the necessities of life. Look at this picture: Millions of men in their best years who fought and suffered, many of whom will carry greater or lesser disabilities to their graves—veterans to whom we said "Nothing is too good for you"—are unable to secure homes of minimum decency and convenience. Their families cannot be adequately fed with meat at 70¢ to $1.20 a pound. Whatever wage increases they may secure

(Continued on page 32)

249

comments from our readers

Dear Editor:

Our small club of eight members, from a small mining community in Pennsylvania, until recently was known as the Rural Ridge Busy Knitters Club. We are now a chapter of the Congress of American Women.

We have only fifteen dollars in our treasury and out of this we are sending you $10, because of our desire to contribute to the work you are doing.

May it help in some way towards *The Slavic American's* fight for freedom and democracy.

Anna Tominac, Pres.
Anne Kondrick, Sec'y.
Julia Pukavina, Treas.
Rural Ridge, Pa.

Dear Editor:

I send you post haste my renewal subscription for *The Slavic American.*

In all sincerity—keep up the good work for you are doing an excellent job in the struggle against fascism.

I never miss an issue.

Rev. Eliot White
New York, N. Y.

Dear Editor:

How about more profiles on Slavic American writers and scientists like Nikola Tesla? The field for this type of material is virtually endless.

Anton Markulic
Los Angeles, Calif.

(See page 13—Ed.)

The American Way

(Continued from page 30)

through their unions, increased living costs still stay one jump ahead of them.

We of the Progressive Party say this is not the American Way of Life. And "we" includes great numbers of ex-GIs and young workers, old-stock Americans and immigrants: Americans of all breeds and backgrounds.

If all Americans are employed at better than mere-existence wages or are engaged in business or professional activities at a reasonable compensation; if all Americans are well clothed and fed; if all Americans are secure instead of uncertain and worried, as the majority are today, there will be no war. The Hearsts, Peglers, Forrestals and Bullitts won't get to first base in trying to propagandize us into fear and hate of other countries which are emerging out of backwardness and, because of their different historic experiences, are attempting a different system for providing benefits and opportunities for their citizens.

Why go to war to keep others from having their way of life? We in the Wallace movement, in the Progressive Party, insist on peace in order to keep the American Way of Life. If our approach prevails in time, there will be no war and Russia will be no danger to America, to the American Way of Life. The chief danger to this country and to our institutions under the Constitution lies in our present high-level politicians and wire-pullers who have raised the cry of Communism and of the Russian menace as a smokescreen to neutralize any possible militancy on the part of labor, to scare us in the new-immigrant groups, to frighten the Negroes, and to confuse the people generally so they won't be able to figure out who or what is responsible for high living costs. Henry Wallace clearly means what he says; so he and his active supporters were smeared, lest too many voters vote for him and in their own interest.

The old-line politicians and wire-pullers and their propagandists are not afraid of Communism, but of American democracy and of the American people; of the people getting wise to themselves and demanding a return to the American Way of Life—the Way defined in the Declaration of Independence and the Constitution of the United States.

That's what *they* are afraid of . . . that's what *we* Progressives stand for . . . and that's what will prevail if you and I, all of us and all of our neighbors wherever we come from, do everything in our power to build the new party that has come into being around the personality and political philosophy of Henry Wallace. We, all of us, will have to do all we can in this post-election period to make of the Progressive Party a party capable of saving the country and helping to bring about a world in which the American Way of Life will include not warlike antagonism, but constructive interest in the ways of life in other countries.

250

SECRET

FEDERAL BUREAU OF INVESTIGATION

Form No. 1
THIS CASE ORIGINATED AT CINCINNATI, OHIO

NY FILE NO. 100-27583 MBJ

REPORT MADE AT	DATE WHEN MADE	PERIOD FOR WHICH MADE	REPORT MADE BY
NEW YORK CITY	11/13/43	10/6,7, 25-28/43	[redacted] (b)(7)(C)

TITLE [redacted] (b)(7)(C) 0/S

CHARACTER OF CASE: SECURITY MATTER - C.

SYNOPSIS OF FACTS: (S) [redacted] (S)

(b)(7)(C)
(b)(7)(D)
0/S

APPROPRIATE AGENCIES AND FIELD OFFICES ADVISED BY ROUTING SLIP(S) OF CRS DATE 9/16/82

CONTAINED ... UNCLASSIFIED ... WHERE SHOWN OTHERWISE

Lee INS - Detroit FNC 2-17-49 L-6-59 R-367

IES DESTROYED

- R U C -

REFERENCE: Bureau File #100-118061
Report of Special Agent [redacted] dated (b)(7)(C)
July 17, 1943 at Cincinnati, Ohio.

DETAILS: At New York, N. Y.

This investigation is predicated upon a request in

DECLASSIFIED ON 9-17-87
BY 3042 pwt/EAn
appeal # 87-0499

Class. & Ext. By JP-1 GSR/RDD
Reason - FCIM II, 1-2.4.2 2+3
Date of Review 7/30/92 7/30/82

APPROVED AND FORWARDED: E. E. Conroy SPECIAL AGENT IN CHARGE

DO NOT WRITE IN THESE SPACES

100- 118061 - 47

RECORDED & INDEXED

75

30 NOV 16 1943 (b)(7)(C) [redacted]

COPIES OF THIS REPORT
5 - Bureau
4 - Cincinnati (2-USA, Dayton) (#100-4083)
2 - New York

SECRET

7—2021

251

SECRET

NY 100-27583

reference report that indices of the New York office be checked against the names of the persons [redacted] (b)(7)(C)

SAVA KOSANOVICH first came to the attention of the Bureau in January, 1943, after the death of NIKOLA TESLA, one of the world's outstanding scientists in the electrical field. During his lifetime, TESLA conducted many experiments in connection with the wireless transmission of electrical power and just prior to his death, was interested in what is commonly called the "death-ray". (S) U

The notes and records of TESLA's experiments and formulae, together with designs of machinery necessary for their operation, were reported to be among TESLA's personal effects, after his death. (S) U

It was reported that KOSANOVICH claimed to be a nephew of TESLA, and he attempted to secure possession of TESLA's personal effects, and hired a private locksmith to gain access to TESLA's possessions. The Bureau was interested because of the supposedly vital importance of TESLA's inventions and the desire to keep them out of enemy hands, as one informant maintains that KOSANOVICH was pro-Axis in his sympathies. The matter was later handled as an alien enemy, custodial detention matter and no further investigation conducted by this office. (S) U

The Bureau advised by letter of January 21, 1943, that its files revealed confidential information concerning NIKOLA TESLA and his inventions and advised that one NICOLA TESLA, who might be identical with NIKOLA TESLA, made a speech in Springfield, Massachusetts on July 4, 1922 under the auspices of the Friends of Soviet Russia. (S) U

(S) [redacted] (S) U (b)(7)(C)

(S) U

SECRET

252

STANDARD FORM NO. 64

Office Memorandum • UNITED STATES GOVERNMENT

TO : MR. TOLSON

DATE: Jan. 30, 1951

FROM : L. B. NICHOLS

SUBJECT: [redacted]

(b)(7)(c)

ALL INFORMATION CONTAINED HEREIN IS UNCLASSIFIED DATE 2-22-89 BY SP1AGCom #241860

Tolson
Ladd
Clegg
Glavin
Nichols
Rosen
Tracy
Harbo
Belmont
Mohr
Tele. Room
Nease
Gandy

[redacted] called yesterday and said he would be in town for the next two or three days and wanted to see me. I told him I would be glad to see him late yesterday or today at his convenience. He is coming in today at 2:30 p.m.

I asked him if there was anything special which would require my doing any checking. He stated there were two things he wanted to discuss.

1. The case of Nicola Tesla and Abraham A. Spanel, President of International Latex Corporation, [redacted]

Our files reflect that Nicola Tesla was one of the world's outstanding scientists and in fact designed the generators installed at Niagara Falls. He died in New York on January 7, 1943, and is supposed to have left details and plans for a so-called death ray. [redacted]

(b)(7)(c)

Our files also reflect that Colonel Erskine of Military Intelligence called us on January 9, 1943, advising that Tesla had died, that A. Spanel had communicated with the War Department regarding this death, that Tesla had a nephew named Sava Kosanovich who had taken possession of Tesla's papers and Spanel thought the papers might be used against our Government.

We made an immediate inquiry in New York and the first report was that Kosanovich and others entered Tesla's room with the aid of a locksmith, broke into a safe containing some of Tesla's valuable papers including formula.

Coincident with this, on January 8, 1943 L. M. C. Smith called Mr. Tamm regarding the death of Tesla and Smith stated he was talking to the Alien Property Custodian about seizing these items.

We interviewed Spanel who expressed concern over Tesla's effects and Spanel stated that Kosanovich had turned over the effects of Tesla to the Alien Property Custodian. Spanel further stated the day before Tesla died, he tried to get in touch with the War Department to make available certain patents.

SE 2 1/00 - 346930-1

5 [redacted] 4 1951

RECORDED - 18

MAR 2 1951

COPIES DESTROYED

R94 JUL 27 1962

EX. - 8

INDEXED - 18

[redacted]

(b)(7)(c)

253

[redacted] (b)(7)(C)

In 1945, we talked to a Private Bloyce Fitzgerald, who stated he had been associated with Tesla, and that the Army believed that Tesla's "death ray" is the only defense against atom bombs.

It was very clear we had no responsibility for Tesla's effects, that the Alien Property Custodian seized them and we learned later that Naval authorities made microfilms of all his papers.

Kosanovich communicated with the Bureau on March 29, 1950, and under date of April 3, 1950, in response to his request for the microfilms of the papers of Tesla, who was a relative of Kosanovich, we advised Kosanovich that this Bureau had never been in possession of Tesla's papers.

[redacted] (b)(7)(C) (b)(7)(D)

Senator [redacted] furnished the Bureau five communications received from a [redacted] which pertained primarily to Abraham Spanel. This individual mentioned the FBI at length in these communications, pointing out that Mr. Foxworth had been called in on the Tesla case but was killed shortly thereafter. He further stated that he was associated with Fitzgerald and as such came in touch with Tesla. He stated the FBI investigated this matter but their hands were tied, that there was nothing the FBI could do as they had been stopped from a higher level, that [redacted] the FBI Agent he dealt with, resigned and requested never to discuss the matter with him again, that he had a wife and family to consider and that the last hope was Congress. These communications were furnished to the Department on September 19, 1950. (b) (7) (C)

[redacted] (b)(7)(C)

[redacted] (b)(7)(C)

We did have an Agent, [redacted] who entered on duty [redacted] resigned [redacted] The file does not indicate that we have ever interviewed [redacted] on the basis of [redacted] allegations.

I think we should see what specifics [redacted] wants. I think we can tell him on the Tesla papers that when they were reported to us, the Department stated that the Alien Property Custodian was going to seize the papers and that we learned Spanel had called the War Department about the papers falling into the wrong hands. [redacted] (b)(7)(C)

Right. H.

I agree. H.

Why wasn't he interviewed?

H. 3 -

255

STANDARD FORM NO. 64

Office Memorandum • UNITED STATES GOVERNMENT

TO : D. M. Ladd

FROM : E. G. Fitch

SUBJECT: [redacted] (b)(7)(C)

INTERNAL SECURITY - R

DATE: August 30, 1946

Mr. Tolson
Mr. E. A. Tamm
Mr. Clegg
Mr. Coffey
Mr. Glavin
Mr. Ladd
Mr. Nichols
Mr. Rosen
Mr. Tracy
Mr. Carson
Mr. Egan
Mr. Gurnea
Mr. Hendon
Mr. Pennington
Mr. Quinn Tamm
Mrs. Room
Mr. Nease
Miss Beach
Miss [illegible]

Mr. Lyon of the State Department informed Mr. Roach that he obtained a note from Colonel Grombach, Special Intelligence, War Department concerning the above mentioned individual. Mr. Lyon was of the opinion that the information supplied by Colonel Grombach may be of interest to the Bureau.

The information as obtained from Colonel Grombach by Mr. Lyon is quoted as follows:

NR [redacted] (pronounce: [redacted] and according to common saying his mistress, arrived apparently together with or shortly after [redacted] It is supposed [redacted] Nicolas Tesla the well known scientist, residing in Cleveland, Oh., (probably American citizen) [redacted]

see [redacted] (b)(7)(C)

(b)(7)(C)

RECOMMENDATION

It is suggested this memorandum be referred to the Internal Security Section for its information.

(b)(7)(C)

[redacted]

(b)(7)(C)

RECORDED & INDEXED 206

SE 26

100-348245-1

F R I

JAN 14 1947

53 JAN 23 1947

EX-16

(b)(7)(C)

5-[redacted]

256

FD-72
(1-10-49)

FEDERAL BUREAU OF INVESTIGATION

FORM NO. 1
THIS CASE ORIGINATED AT WASHINGTON FIELD

SECURITY INFORMATION - CONFIDENTIAL

REPORT MADE AT	DATE WHEN MADE	PERIOD FOR WHICH MADE	REPORT MADE BY
WASHINGTON, D. C.	JUN 1 1952	5/9,10,13,16,26/52	[redacted] SA

TITLE		CHARACTER OF CASE
[redacted] (b)(7)(C)	FOI/PA # 291860 APPEAL # CIVIL ACTION # REQUEST # 12,356	ESPIONAGE - R (b)(1)(c)

SYNOPSIS OF FACTS: DATE 2-16-89 [illegible] 6cm SI is [redacted] (b)(1)

2-16-89
Classified by SP1AAC4pn
Declassify on: OADR
291860

ALL INFORMATION CONTAIN
HEREIN IS UNCLASSIFIED
EXCEPT WHERE SHOWN
OTHERWISE

ICC by R/S as collected by Special to SIS

State OJH 7-11-52.

[redacted] (b)(1)(c)

Subject in interview and signed statement says [redacted]

(b)(1)(c)
(b)(7)(D)

Accompanied [illegible] by copy by [illegible] to AMEMB Nicosia 7-17-52 memo

photocopy

AGENCY OSI DIST OFF 4
REG. REC'D. 11-13-52
REPT. FORW. 12-1-52
BY [redacted]

DETAILS: AT WASHINGTON, D. C.: Re: [redacted] (b)(3)(A) (b)(1)(c) (b)(1)(s)

APPROVED AND FORWARDED:	SPECIAL AGENT IN CHARGE	DO NOT WRITE IN THESE SPACES
		100-356557-99 RECORDED - 19
		INDEXED 19
		JUN 26 1952 10 (b)(7)(c) SECRET

COPIES OF THIS REPORT
(6) - Bureau (100-356557)
1 - San Francisco (100-29336)(Info)
1 - Los Angeles (65-5203)(Info)
1 - New York (65-14842)(Info)
3 - Washington Field (100-19816)
E 49

E 9 AUG 1 1952

PROPERTY OF FBI - This confidential report and its con[illegible] you by the FBI and are not to be distributed outside of agency to w[illegible]

257

SECRET

[redacted]

(b)(7)(C)
(b)(7)(D)

INTERVIEW OF THE SUBJECT

(b)(7)(D) [redacted] was interviewed at the Washington Field Office by SA [redacted] and the reporting Agent, on May 9, 10, and 13, 1952, and by [redacted] and the reporting Agent, on May 26, 1952. (b)(7)(C)

History Prior to Entering United States

(b)(7)(D)

[redacted]

(b)(7)(C)

SECRET

258

[redacted]

Acquaintanceship with Officials in the Yugoslav Government

[redacted] admitted at this time he was interested in Yugoslav matters, Yugoslav progress in engineering, and their advances in equipment. He said he was also desirous of making the acquaintance of NIKOLA TESLA, who was an outstanding Yugoslav scientist and one of the founders of Westinghouse.

[redacted] (b)(2)(C)(b)(7)(D)

[redacted] He said KOSANOVIC was not a great

[redacted]

SECRET

administrator, but he has considerable respect for him in many ways. He believes that KOSANOVIC emphasized to the Yugoslav government that he (KOSANOVIC), would be especially effective as Ambassador because he was a nephew of TESLA (mentioned above) and a friend of Mayor LA GUARDIA, and other influential persons in this country.

[redacted]

(b)(7)(D)

[redacted]

SECRET

260

XXXXXX
XXXXXX
XXXXXX

FEDERAL BUREAU OF INVESTIGATION
FOIPA DELETED PAGE INFORMATION SHEET

2 Page(s) withheld entirely at this location in the file. One or more of the following statements, where indicated, explain this deletion.

☒ Deletions were made pursuant to the exemptions indicated below with no segregable material available for release to you.

Section 552		Section 552a
☒ (b)(1)	☐ (b)(7)(A)	☐ (d)(5)
☐ (b)(2)	☐ (b)(7)(B)	☐ (j)(2)
☐ (b)(3)	☐ (b)(7)(C)	☐ (k)(1)
_____	☐ (b)(7)(D)	☐ (k)(2)
_____	☐ (b)(7)(E)	☐ (k)(3)
_____	☐ (b)(7)(F)	☐ (k)(4)
☐ (b)(4)	☐ (b)(8)	☐ (k)(5)
☐ (b)(5)	☐ (b)(9)	☐ (k)(6)
☐ (b)(6)		☐ (k)(7)

☐ Information pertained only to a third party with no reference to you or the subject of your request.

☐ Information pertained only to a third party. Your name is listed in the title only.

☐ Documents originated with another Government agency(ies). These documents were referred to that agency(ies) for review and direct response to you.

_____ Pages contain information furnished by another Government agency(ies). You will be advised by the FBI as to the releasability of this information following our consultation with the other agency(ies).

_____ Page(s) withheld for the following reason(s): _____

_____

☐ For your information: _____

_____

☐ The following number is to be used for reference regarding these pages:

_____

XXXXXX
XXXXXX
XXXXXX

XXXXXXXXXXXXXXXXXXXXXX
X DELETED PAGE(S) X
X NO DUPLICATION FEE X
X FOR THIS PAGE X
XXXXXXXXXXXXXXXXXXXXXX

FBI/DOJ

Report Form
FD-263 (5-22-55)

FEDERAL BUREAU OF INVESTIGATION

Reporting Office	Office of Origin	Date	Investigative Period
WASHINGTON FIELD	BUREAU	3/28/60	2/18-3/15/60

TITLE OF CASE

[redacted] (b)(7)(c)

Applicant, Pan American Union,
Washington, D. C.

Report made by: [redacted] (b)(7)(c) Typed by: mjr

CHARACTER OF CASE

LOYALTY OF EMPLOYEES OF THE UNITED NATIONS AND OTHER PUBLIC INTERNATIONAL ORGANIZATIONS

Synopsis

REFERENCE

Bulet dated 2/15/60;
Bu airtels dated 2/25 and 3/10/60;
Seattle airtel dated 2/26/60;
Baltimore airtels dated 2/27 and 3/4/60;
Norfolk airtel dated 3/1/60;
San Francisco airtel dated 3/3/60;
New York airtels dated 2/26, 3/3,4,10/60;
Chicago airtel dated 3/5/60;
Springfield airtel dated 3/8/60;
New Haven airtel dated 3/9/60.

DC TO: 5-5-1
REQ. REC'D 3/1
MAR 14 1960
ANS. [redacted]
BY:

(b)(7)(c)

- P -

2-21-89 SP/AGGUM

291860

Approved: Special Agent In Charge

Copies made:

6 - Bureau (138-4457) (Enc 6)

1 - Washington Field (138-4085)

Do not write in spaces below

138-4457-83

MAY 24 1960

[redacted]

(b)(7)(c)

cc CSC

[redacted]

Property of FBI - This report is loaned to you by the FBI, and neither it nor its contents are to be distributed outside the agency to which loaned

☆ U. S. GOVERNMENT PRINTING OFFICE: 1955 O—344750

262

204 (Rev. 3-3-59)

CONFIDENTIAL

UNITED STATES DEPARTMENT OF JUSTICE
FEDERAL BUREAU OF INVESTIGATION

SECRET

Copy to:

Report of: [redacted] Office: Washington, D. C.
Date:

Field Office File No.: 138-4085 Bureau File No.: 138-4457

(b)
(7)
(c)

Title: [redacted]
Applicant, Pan American Union,
Washington, D. C.

2-21-89
Classified by SPIA [illegible]
Declassify [illegible]
291860

Character: LOYALTY OF EMPLOYEES OF THE UNITED NATIONS AND OTHER PUBLIC INTERNATIONAL ORGANIZATIONS

Synopsis:

[redacted]

(b)
(1)
(b)
(7)
(c)

[redacted] has been interviewed on various occasions [redacted]

(b)
(7)
(D)

- P -

CONFIDENTIAL

SECRET

This document contains neither recommendations nor conclusions of the FBI. It is the property of the FBI and is loaned to your agency; it and its contents are not to be distributed outside your agency.

263

[redacted] (c)

[redacted] (b) (1)

(c)

INTERVIEWS WITH [redacted]

On June 7, 1947, [redacted] was interviewed by SAs [redacted] and [redacted] of the Chicago Office.

[redacted] (b) (7) (D)

[redacted] (b) (7) (C)

(b)(7)(C) [redacted]

[redacted] admitted at this time he was interested in Yugoslav matters, Yugoslav progress in engineering, and their advances in equipment. He said he was also desirous of making the acquaintance of NIKOLA TESLA, who was an outstanding Yugoslav scientist and one of the founders of Westinghouse.

[redacted] He said KOSANOVIC was not a great administrator, but he has considerable respect for him in many ways. He believes that KOSANOVIC emphasized to the Yugoslav government that he (KOSANOVIC), would be especially effective as Ambassador because he was a newphew of TESLA (mentioned above) and a friend of Mayor LA GUARDIA, and other influential persons in this country.

[redacted]

(b)(7)(C)

(b)(7)(D)